Rambler

PARTS and ACCESSORIES

CATALOG

F-14063

1960 THRU 1965

AMERICAN MOTORS CORPORATION
AUTOMOTIVE PARTS DIVISION
3280 S. CLEMENT AVENUE
Milwaukee 7, Wisconsin

PRINTED IN U.S.A.

ISSUED AUG. 1, 1964



PARTS CATALOG FOR 1960 thru 1965

AMERICAN MOTORS CORPORATION
AUTOMOTIVE PARTS DIVISION
3280 S. CLEMENT AVENUE
Milwaukee 7, Wisconsin

Copyright 1963 American Motors Corp.

F-14063 Rev. 1 - 24 - 65

Printed in U.S.A.



PARTS CATALOG

FOR

1960

thru

1965

Copyright 1963 American Motors Corp.

MARLIN MODEL

65 59

FOR YOUR INFORMATION. . . . . .

PARTS LISTED IN THIS CATALOG FOR SERIES 65 10 OR FOR MODEL 65 19 CAN BE ASSUMED TO BE APPLICABLE TO THE 65 59 MARLIN UNLESS OTHERWISE NOTED IN THE SPECIFIC GROUP.

Copyright 1963 American Motors Corp.

GENERAL INFORMATION

USE OF THE AMERICAN MOTORS AUTOMOTIVE PARTS DIVISION PARTS CATALOG

This catalog is arranged in sections, indexes and groups. A complete study of the General Information section and a thorough study of the overall layout of all catalog sections will prove helpful in locating information for ordering.

A group number system of listing parts is used in this catalog and is briefly explained as follows:

Main units of the car are identified by the number preceding the decimal. Example:

ENGINE	1.
COOLING - GRILLE	2.
ELECTRICAL - INSTR. CLUSTER	3.
FUEL-EXHAUST	4.
CLUTCH	5.

Individual parts are assigned a group number. The first number identifies the main unit as shown above. A sub-group number following the decimal identifies parts within the main unit. Example:

Group 1. 059 Head, Cylinder: main group "1." indicates an engine part. Sub group ". 059" indicates the sub group within the main unit in the catalog. This combination of numbers is termed the "Primary Group." When a part is listed in a group other than its primary group, the part will have the primary group noted in the column provided for it adjacent to the part number. This "Primary Group" is the number under which the part is priced, ordered and stored. All parts should be ordered by their identifing primary group number, part number and noun name.

To locate the listing of a part, find its group number. This can be determined by using any of the following three methods:

1. Refer to the Alphabetical Index.
2. Refer to the Illustrations preceding each major group.
3. If the group is unknown and the part number is known consult the American Motors Automotive Parts Numerical Price List to find the primary group number.

EFFECTIVE POINT OF CHANGE

When chassis or body parts are superseded in production and are only used during part of a model year, reference is made to these changes by notes printed at the bottom of the same page on which the group heading appears. These notes quote the car serial number, car code number, car building sequence number, engine code number or body number at which the change became effective. When these numbers are not available or may confuse, a note containing a physical description will be used.

CAR IDENTIFICATION

Each car produced by American Motors is identified by the following description and location code:

Car serial number is located on a plate attached to the top of the right front wheelhouse panel under the hood.

Engine code number on Models 60 thru 65 01-10 (196) is stamped on a machined surface at the left front upper corner of the cylinder block. On the (199) and (232) it is stamped on the right upper side of the block. On Models 60 thru 65 20-80, 63 thru 65 10 (V8) and 65 50 (V8) the number is stamped on the generator or alternator mounting bracket.

Car code number, car building sequence number, body number, model number, trim number and paint number are stamped on a plate attached to the body pillar, visible when the left front door is open.

Copyright 1963 American Motors Corp.

CATALOG CHANGES AND REVISIONS

American Motors Automotive Parts Division Parts Catalog Change Notice, form F-1977-R, is published periodically to provide information relative to recent parts listing changes, additions, substitutions, discontinuations, corrections, etc. When possible, these change notices will include revised catalog pages provided to replace those pages on which changes have been made. Any listing, so changed, will be coded with a # in the code column adjacent to the part number. It is imperative that revised catalog pages be inserted into the catalogs affected as soon as received to reflect the current status of parts listings.

ORDERING PARTS BY TELEGRAM

In Canada and certain export countries there is an advantage in the cost of a telegram if code is used in place of part numbers. This no longer applies to Domestic telegrams since the cost of a five digit part number is the same as a five letter code word.

However, there is a decided advantage in using codes for common phrases covering shipping instructions as follows:

YANKL	Emergency order car tied up.
YAM	Ship by Parcel Post.
YANK	Ship by Parcel Post C. O. D.
YAMS	Ship by Parcel Post Special Delivery.
YAMX	Ship by Parcel Post Special Delivery C. O. D.
YAPL	Ship by Air Mail.
YAP	Ship by Air Parcel Post.
YAPLS	Ship by Air Parcel Post C. O. D.
YAPS	Ship by Air Parcel Post Special Delivery.
YAPSL	Ship by Air Parcel Post Special Delivery C. O. D.
YAPSO	Ship by Air Express.
YOPSX	Ship by Air Express C. O. D.
YAT	Ship by Air Cargo.
YATS	Ship by Air Cargo C. O. D.
YEAN	Ship by Express.
YEARN	Ship by Express C. O. D.
YORE	Ship by Freight with Carload.
YOLD	Ship by Freight.
YOLK	Ship by Freight C. O. D.
TYEAN	Ship by Truck.
TYEAL	Ship by Truck C. O. D.

EXAMPLE: YAMS BOULEVARD CHICAGO ONE EACH 311 4850 312 9543 313 2723

When decoded this telegram reads:

SHIP VIA PARCEL POST SPECIAL DELIVERY TO BOULEVARD NASH INC. CHICAGO ONE EACH PART 311 4850 312 9543 AND 313 2723

TELEGRAPHIC INQUIRIES

In the interest of economy, telegraphic inquires between the American Motors Automotive Parts Division, Zones, and Dealers, concerning parts orders, inventories and transfers, should wherever possible make use of the code words covering phrases listed below:

YEA	Refer your or our order number.....
YEB	Our records indicate open account – order specifies C. O. D. Advise.
YEC	Our records indicate C. O. D. – order specifies open account. Advise.
YED	Advise model, trim and serial number.
YEE	Advise – Right or left, front or rear required.
YEF	Advise – Part number, group number and description do not agree.
YEG	Advise – Part number and price do not agree.

Copyright 1963 American Motors Corp.

TELEGRAPHIC INQUIRIES (Continued)

YEH	Advise – No record of part number.
YEK	Advise – Right hand drive part.
YEL	Cancelled – Temporarily unavailable.
YEM	Cancelled – Refer Parts and Accessory Letter.....
YEMS	Cancelled – Refer Service Letter.....
YEN	Cancelled as requested.
YENS	Refer Parts Release and Change Notice.....Dated.....
YEO	Unable to cancel as requested – Shipped.....
YEP	Incorrect material received – check stock.
YER	Verify stock depletion.
YEV	Advise present inventory.
YEW	Advise by wire shipping information or order.....
YEX	Advise date on which following invoices were received and screened against back order file.
YEY	Return at once on Z-269 cheapest way prepaid (Quantity). (Part Number). Mail 1 and 2 cpoies Z-269 attention writer, reference this wire. Advise.
YEYS	Return at once on Z-269 cheapest way prepaid (Quantity). (Part Number). Mail 1 and 2 copies Z-269 attention writer, Reference this wire. Advise. Freight Charges will be allowed.
YEZ	Ship at once vio (Carrier), (Quantity), (Part Number) to (Destination). Advise.

When making inquiry by telegram regarding a dealer order, be sure to mention dealer name, city and state, as well as order and invoice numbers if available.

For Example: ***YEW BOULEVARD CHICAGO, 195670***

When Decoded Reads: ***ADVISE BY WIRE SHIPPING DATE OF OUR ORDER #195670 FOR BOULEVARD NASH, INC., CHICAGO, ILLINOIS***

The following are examples of codes used primarily by the American Motors, Automotive Parts Division when making inquiry to field Warehouses.

YEA 130987 BOULEVARD CHICAGO YEM 50-5 ENGINE

When Decoded Reads: ***REFER YOUR ORDER NUMBER 130987 BOULEVARD NASH, INC., CHICAGO, ILLINOIS, CANCELLED. REFER PARTS AND ACCESSORY BULLETIN 50-5 FILED UNDER ENGINE GROUP.***

YEZ YAPSO ONE 312 9543, CHICAGO

When Decoded Reads: ***SHIP AT ONCE AIR EXPRESS ONE 312 9543 TO THE CHICAGO WAREHOUSE, ADVISE.***

AMERICAN MOTORS TELEGRAPHIC NUMBER CODE

Following is the American Motors Automotive Parts Division number code which can be used in telegrams in Canada and Export Countries, where necessary, to cover model, serial, parts, service or order numbers.

	COLUMN 1	COLUMN 2
1	B	A
2	C	E
3	F	I
4	G	O
5	L	U
6	M	Y
7	P	EA

Copyright 1963 American Motors Corp.

8	R	EE
9	S	OO
0	T	OU

Explanation: The first figure of a number is represented by the consonant in column 1 shown opposite the particular figure. The second figure by the vowel or vowel combination in column 2, and so on, alternating consonant and vowel until number is completed.

An example of a telegraphic parts order using the American Motors Automotive Parts Division Telegraphic number code is given below:

YEAN ONE EACH FABORUT FACOOLOF FAFEPEF

When decoded reads: *SHIP BY EXPRESS ONE EACH 311 4850 312 9543 313 2723*

STANDARD PARTS

Since many attaching parts are available locally, American Motors does not supply them for service. The presence of an N. A. in the code column adjacent to a part number indicates that part is not available from American Motors. If it is difficult to obtain these N. A. parts because of lack of descriptive information, refer to American Motors Standard Parts Catalog F-10063 where standard parts are listed along with their size, material, finish etc.

SHEET METAL PARTS

Service replacement sheet metal parts will be serviced in prime. They are not available from the American Motors Automotive Parts Division Parts Warehouses painted in finished colors.

UPHOLSTERY PARTS

For Upholstery parts, refer seperate American Motors Automotive Parts Division Parts Upholstery Catalog F-18060, F-18061, F-18062, F-18063 and F-18064 ect.

PRICES

Suggested prices for all parts listed in this catalog are included in a separate American Motors Automotive Parts Division Price List.

SUBSTITUTED OR DISCONTINUED PARTS

The Original Catalog Entry is retained for a period of six months or more. Where applicable the part number is then removed and pertinent information transferred to the replacing parts. The substituting number lists, adjacent to the primary group number column, the number that it replaces.

The Parts Price List and substituted Parts Reference List indicates pertinent information relative to the status of "All" Catalog Listings.

PARTS NOT LISTED IN THIS CATALOG

Parts not listed in this catalog are to be considered as "Not Available" except for those parts which are listed in separate catalogs such as Upholstery, Attaching Parts ets.

Copyright 1963 American Motors Corp.

GLASS

Flat Glass item should be purchased from the Glass Vendor outlets listed below.

PITTSBURGH PLATE GLASS COMPANY GLASS BRANCHES

ALABAMA

Anniston	1319 Noble Street
Birmingham	915 North 18th Street
Dothan	207 South Foster Street
Florence	420 E. College Street
Mobile	310 South Royal Street
Montgomery 3	246 Dexter Avenue
Tuscaloosa	2008-8th Street

ALASKA

ARIZONA

Phoenix	1140 North 21st Avenue
Tucson	819 East 18th Street

ARKANSAS

Fort Smith	115 Towson Avenue
Little Rock	1500 East Washington Ave.
Texarkana	400 East 5th Street

CALIFORNIA

Berkeley 10	742 Grayson Street
Los Angeles 22	4600 Sheila Street
Portland 10	3065 N. W. Front Avenue
San Francisco 4	405 Montgomery Street

COLORADO

Colorado Springs	3120 N. El Paso Street
Denver	590 Quivas Street
Grand Junction	1250 N. Third St.
Greely	1008 Eighth Avenue
Pueblo	315 West 4th Street

CONNECTICUT

Hartford	400 Windsor Street
New Haven 13	26 Mill Street
New London	151 Jefferson Avenue

DELAWARE

Wilmington 5	1007 North Union Street

DISTRICT OF COLUMBIA

Washington 2	1545 New York Ave., N. E.

FLORIDA

Cocoa	843 N. Cocoa Boulevard
Daytona Beach	841 Volusia Avenue
Fort Lauderdale	507 N.W. First Avenue
Gainesville	724 North Main Street
Homestead	505 North Krome Avenue
Jacksonville	601 North Myrtle Avenue
Lakeland	518 East Memorial Blvd.
Miami 31	1200 Biscayne Boulevard
Ocala	214 W. Silver Springs Blv.
Orlando	617 West Central Avenue
Panama City	805 Harrison Avenue
Pensacola	221 North Palafox Street
St. Petersburg	2222-1st Avenue, South
Tallahassee	1214 North Monroe Street
Tampa 1	137 South Tampa Street
West Palm Beach	1612 South Dixie Highway

GEORGIA

Albany	23 South Flint Avenue
Atlanta	824 Memorial Drive, S. E.
Augusta	1371 Broad Street
Columbus	1330 Warren Avenue
Macon	818 Riverside Drive
Marietta	1920 Roswell Street
Rome	202 West Third Street
Savannah	Victory Drive & Bull St.

ILLINOIS

Aurora	233 Galena Boulevard
Belleville	104 West Main Street
Chicago	4850 S. Kilbourn Avenue
Danville	321 N. Vermillion Street
Decatur	234 W. Cerro Cordo Street
Joliet	165 North Joliet Street
Peoria 2	915 S. Washington Street
Quincy	812 Maine Street
Rockford	327 S. Winnebago Street
Springfield	215 N. Eighth St.

INDIANA

Anderson	South Main Street
Fort Wayne	230 East Douglas Street
Gary	1301 West Ridge Road
Indianapolis	59 South State Avenue
Kokomo	209 West Sycamore Street
Lafayette	1717 Schvyler Avenue
Marion	614 East Fourth Street
Muncie	110 W. Washington Street
Richmond	7 North Third Street
South Bend 14	1835 S. Franklin Street
Terre Haute	121 North 13th Street
Vincennes	908 South 15th Street

Copyright 1963 American Motors Corp.

IOWA

Cedar Rapids	310 Eighth Avenue, S. E.
Davenport	147 S. Sturdevant Street
Des Moines 13	700 New York Avenue
Dubuque	120 West 7th Street
Fort Dodge	521 Central Avenue
Iowa City	122 Lafayette Street
Mason City	125 South Delaware Avenue
Ottumwa	108 West Main Street
Sioux City 3	310 West 7th Street
Waterloo	818 Lafayette Street

KANSAS

Salina	204 East Iron Avenue
Topeka	1212 Kansas Avenue
Wichita 2	245 North Water Street

KENTUCKY

Bowling Green	744 31-W. By-Pass
Lexington	321 East Short Street
Louisville 1	1601 West Main Street
Paducah	128 South Third Street

LOUISIANA

Baton Rouge	1466 North Street
Lafayette	222 West Main Street
Lake Charles	417 Highway 90
Monroe	915 Louisville Avenue
New Orleans	1500 Poydras Street
Shreveport	525 Cotton Street

MARYLAND

Baltimore	400 North Holiday Street
Cumberland	317 Henderson Avenue
Hagerstown	650 Frederick Road
Salisbury	400 East Main Street

MASSACHUSETTS

Boston	300 Babcock Street
Malden 48	1000 Main Street
New Bedford	444 North Street
Pittsfield	502 East Street
Quincy 69	254 Washington Street
Springfield 5	40 Albany Street
Worchester 4	90 Shrewsbury Street

MICHIGAN

Ann Arbor	1919 Federal Boulevard
Battle Creek	50-52 East Michigan Ave.
Bay City	1126 North Water Street
Detroit	6045 John C. Lodge
Flint	2519 Branch Road
Grand Rapids	500 Grandville Ave., S. W.
Jackson	154 West Pearl Street
Kalamazoo	306 North Rose Street
Lansing	1611 E. Kalamazoo Street
Muskegon	205 Apple Avenue
Port Huron	715 Huron Avenue
Saginaw	103 Fitzhugh Street

MINNESOTA

Duluth 2	330 Garfield Avenue
Minneapolis	616 South Third Street
Rochester	11-4th Street, S. E.
St. Paul	134 East 9th Street

MISSISSIPPI

Greenville	715 Main Street
Jackson	510 North Gallatin Street

MISSOURI

Joplin	14th Street And Joplin Ave.
Kansas City	1201 Burlington Street
Springfield	428 St. Louis Street
St. Louis	3650 Market Street
St. Joseph	214 South Third Street

MONTANA

Billings	105 North 25th Street
Butte	840 Utah Avenue
Great Falls	813 25th Street-North

NEBRASKA

Hastings	322 North Street Joseph's Ave.
Lincoln	1624 South 17th Street
North Platte	403 East "B" Street
Omaha	1402 Jones Street

NEW HAMPSHIRE

Claremont	37 Main Street
Manchester	23 S. Commercial Street
Portsmouth	Main-New Hamp. By-Pass

NEW JERSEY

Asbury Park	911 First Avenue
Newark 1	290 Elizabeth Avenue
Trenton 8	340 North Broad Street

NEW MEXICO

Albuquerque	601 Haines Avenue N. W.

NEW YORK

Albany 1	47 North Ferry Street
Binghamton	279 Front Street
Buffalo	119 Erie Street
Elmira	228 West Water Street
Mineola	49 Windsor Avenue
Mt. Vernon	556 South Fulton Avenue
New York	Jay, Water & Plymouth Sts.
Poughkeepsie	107 North Hamilton Street
Utica 3	615 Eagle Street
Rochester 8	362 Exchange Street
Syracuse	838 Erie Boulevard, W.
Watertown	342 Court Street

NORTH CAROLINA

Charlotte	201 East Sixth Street
Durham	1101 West Main Street
Greensboro	340 North Greene Street
High Point	1 South Hamilton Street
Kinston	505 East Vernon Avenue
Raleigh	201 South Boylan Avenue
Winston-Salem	1105 Burke Street

Copyright 1963 American Motors Corp.

OHIO

Akron 4	674 Carroll Street
Canton	5220 W. Tuscarawas Street
Cincinnati	4955 Spring Grove Avenue
Cleveland	3849 Hamilton Avenue
Columbus 1	324 East Second Avenue
Dayton 7	1308 West Third Street
Findlay	123 E. Crawford Street
Hamilton	425 High Street
Lima	411 North Main Street
Lorain	1735 Broadway
Mansfield	217 Park Avenue, East
Newark	15 South Fourth Street
Portsmouth	930 Gallia Street
Springfield	28 West High Street
Toledo	2821 Nebraska Avenue
Warren	566 High Street, N.E.
Youngstown 1	25 North Watt Street
Zanesville	25 South Third Street

OKLAHOMA

Enid	516 North Grand Street
Oklahoma City	4301 N. Santa Fe Boulevard
Tulsa 1	301 East Archer Street

OREGON

PENNSYLVANIA

Allentown	827 North 12th Street
Altoona	3600 Beale Avenue
Beaver Falls	1012 Seventh Avenue
DuBois	25 East Park Avenue
Erie 1	19 W. Second Street
Harrisburg	611 South 17th Street
Jeannette	109 South 6th Street
Johnstown	381 Maple Avenue
Kittanning	225 Market Street
Lancaster	252 North Prince Street
Lebanon	15 South 9th Street
McKeesport	522 Fifth Avenue
New Castle	20 North Mill Street
Oil City	Route 8
Philadelphia	3034 North 16th Street
Pittsburgh	632 Fort Duquesne Blvd.
Reading	340 Morgantown Road
Scranton 9	823 Wyoming Avenue
Uniontown	62 North Mt. Vernon Avenue
Washington	90 West Chestnut Street

RHODE ISLAND

Providence	333 Harris Avenue

SOUTH CAROLINA

Charleston	804 Meeting Street
Columbia 1	1917 Laurel Street
Greenville	401 Rhett Street
Spartanburg	197 East St. John Street
Sumter	104 West Liberty Street

SOUTH DAKOTA

Sioux Falls	434 North Main Avenue

TENNESSEE

Jackson	439 Poplar Street
Knoxville 1	207 Humes Street
Memphis	435 Madison Avenue
Nashville 2	1102 Grundy Street
Oak Ridge	471 Wilson Street

TEXAS

Amarillo	801 Grant Street
Austin 3	205 West Fifth Street
Beaumont	901 Pearl Street
Corpus Christi	402 North Port Avenue
Dallas	1421 N. Industrial Blvd.
El Paso	1106 E. Overland Street
Fort Worth 1	1825 Main Street
Galveston	628 Tremont Street
Harlingen	1110 West Jackson Street
Houston	5520 Armour Drive
Lubbock	611 Twenty-Third Street
McAllen	2212 N. Tenth Street
Midland	301 South Main Street
Pasadena	1520 S. Shaver Street
Port Arthur	914 Proctor Street
San Antonio 6	1420 South Alamo Street
Waco	114 South Ninth Street
Wichito Falls	1100 Scott Avenue

UTAH

VERMONT

Burlington	151 St. Paul Street

VIRGINIA

Danville	503 Loyal Street
Hampton	2528 West Pembroke Avenue
Lynchburg	1606 Main Street
Newport News	2528 West Pembroke Avenue
Norfork 8	2314 Colonial Avenue
Richmond	302 South Seventh Street
Roanoke 5	1814 Jefferson Street S.E.

WASHINGTON

Seattle 9	120 Sixth Avenue North

WEST VIRGINIA

Bluefield	717 Raleigh Street
Charleston	600 Virginia Street, W.
Clarksburg	1807 W. Pike Street
Fairmont	310 10th Street
Huntington	525 West 19th Street
Parkersburg	424 Seventh Street
Wheeling	941 Market Street

WISCONSIN

Green Bay	509 North Monroe Street
LaCrosse	59 Copeland Avenue
Madison 1	2422 Pennsylvania Avenue
Milwaukee	620 South First Street
Oshkosh	208 Division Street
Racine	2617 Lathrop Avenue
Wausau	729 Forest Street

WYOMING

Cheyenne	2010 East 13th Street

Copyright 1963 American Motors Corp.

MODEL CHART

LICENSE APPLICATION AND SERIAL NUMBER DATA

MODEL	MODEL NUMBER	WHEEL BASE	NO CYL	BORE AND STROKE	TAX HP	NO PASS	BODY STYLE
American 6 (Deluxe)	60 02	100	6	3-1/8 x 4-1/4	23.44	5	2-Dr. Business Coupe
American 6 (Deluxe)	60 04	100	6	3-1/8 x 4-1/4	23.44	5	2-Dr. Station Wagon
American 6 (Super)	60 04-1	100	6	3-1/8 x 4-1/4	23.44	5	2-Dr. Station Wagon
American 6 (Custom)	60 04-2	100	6	3-1/8 x 4-1/4	23.44	5	2-Dr. Station Wagon
American 6 (Deluxe)	60 05	100	6	3-1/8 x 4-1/4	23.44	6	4-Dr. Sedan
American 6 (Super)	60 05-1	100	6	3-1/8 x 4-1/4	23.44	6	4-Dr. Sedan
American 6 (Custom)	60 05-2	100	6	3-1/8 x 4-1/4	23.44	6	4-Dr. Sedan
American 6 (Deluxe)	60 06	100	6	3-1/8 x 4-1/4	23.44	5	2-Dr. Club Sedan
American 6 (Super)	60 06-1	100	6	3-1/8 x 4-1/4	23.44	5	2-Dr. Club Sedan
American 6 (Custom)	60 06-2	100	6	3-1/8 x 4-1/4	23.44	5	2-Dr. Club Sedan
6 (Deluxe)	60 15	108	6	3-1/8 x 4-1/4	23.44	6	4-Dr. Sedan
6 (Super)	60 15-1	108	6	3-1/8 x 4-1/4	23.44	6	4-Dr. Sedan
6 (Custom)	60 15-2	108	6	3-1/8 x 4-1/4	23.44	6	4-Dr. Sedan
6 (Deluxe)	60 18	108	6	3-1/8 x 4-1/4	23.44	6	4-Dr. Station Wagon
6 (Super)	60 18-1	108	6	3-1/8 x 4-1/4	23.44	6	4-Dr. Station Wagon
6 (Custom)	60 18-2	108	6	3-1/8 x 4-1/4	23.44	6	4-Dr. Station Wagon
6 (Super)	60 18-3	108	6	3-1/8 x 4-1/4	23.44	8	4-Dr. Station Wagon
6 (Custom)	60 18-4	108	6	3-1/8 x 4-1/4	23.44	8	4-Dr. Station Wagon
6 (Custom)	60 19-2	108	6	3-1/8 x 4-1/4	23.44	6	4-Dr. Hard Top Sedan
Rebel V-8 (Deluxe)	60 25	108	8	3-1/2 x 3-1/4	39.2	6	4-Dr. Sedan
Rebel V-8 (Super)	60 25-1	108	8	3-1/2 x 3-1/4	39.2	6	4-Dr. Sedan
Rebel V-8 (Custom)	60 25-2	108	8	3-1/2 x 3-1/4	39.2	6	4-Dr. Sedan
Rebel V-8 (Super)	60 28-1	108	8	3-1/2 x 3-1/4	39.2	6	4-Dr. Station Wagon
Rebel V-8 (Custom)	60 28-2	108	8	3-1/2 x 3-1/4	39.2	6	4-Dr. Station Wagon
Rebel V-8 (Super)	60 28-3	108	8	3-1/2 x 3-1/4	39.2	8	4-Dr. Station Wagon
Rebel V-8 (Custom)	60 28-4	108	8	3-1/2 x 3-1/4	39.2	8	4-Dr. Station Wagon
Rebel V-8 (Custom)	60 29-2	108	8	3-1/2 x 3-1/4	39.2	6	4-Dr. Hard Top Sedan
Ambassador V-8 (Custom)	60 83-2	117	8	4 x 3-1/4	51.2	6	4-Dr. Hard Top Station Wagon
Ambassador V-8 (Deluxe)	60 85	117	8	4 x 3-1/4	51.2	6	4-Dr. Sedan
Ambassador V-8 (Super)	60 85-1	117	8	4 x 3-1/4	51.2	6	4-Dr. Sedan
Ambassador V-8 (Custom)	60 85-2	117	8	4 x 3-1/4	51.2	6	4-Dr. Sedan
Ambassador V-8 (Deluxe)	60 88	117	8	4 x 3-1/4	51.2	6	4-Dr. Station Wagon
Ambassador V-8 (Super)	60 88-1	117	8	4 x 3-1/4	51.2	6	4-Dr. Station Wagon
Ambassador V-8 (Custom)	60 88-2	117	8	4 x 3-1/4	51.2	6	4-Dr. Station Wagon
Ambassador V-8 (Super)	60 88-3	117	8	4 x 3-1/4	51.2	8	4-Dr. Station Wagon
Ambassador V-8 (Custom)	60 88-4	117	8	4 x 3-1/4	51.2	8	4-Dr. Station Wagon
Ambassador V-8 (Custom)	60 89-2	117	8	4 x 3-1/4	51.2	6	4-Dr. Hard Top Sedan

Rambler American 6	B-100001	Rambler Rebel V8	A-100001
Unassembled Export	BK-10001	Unassembled Export	AK-10001
Rambler 6	C-100001	Rambler Ambassador V8	H-100001
Unassembled Export	CK-10001	Unassembled Export	HK-10001

Copyright 1963 American Motors Corp.

1960 PAINT

Air Dry Repair Enamel and Touch Up Lacquer are available from two sources of supply: Ditzler Color Division-Pittsburgh Plate Glass Co. and E. I. Dupont DeNemours and Co.-Automotive Finishes Division. Each of these companies have their own distributors and dealers in principle cities in the U. S. A.

The American Motors Paint Code Number is stamped on the body number plate. The corresponding manufacturers source numbers and paint names may be obtained by refering to the following chart.

When ordering paint from local DuPont and Ditzler Paint Dealers furnish them with their color blend file number and name of the paint required. Also please specify enamel or lacquer.

INTERIOR COLORS

COLOR NAME	LACQUER DITZLER NO. DITZLAC
Medium Gray Metallic	DAL-32016
Medium Green Metallic	DAL-42724
Medium Blue Metallic	DAL-12260
Cinnamon Bronze	DAL-21899

EXTERIOR COLORS

COLOR NO.	COLOR NAME	BRUSH ACCY. NO.	SPRAY ACCY. NO.	ENAMEL DITZLER NO.	ENAMEL DUPONT NO.	LAC. DITZLER NO.	LAC. DUPONT NO.
All	Introductory Assortment	899 0773	899 0692	.....	.....	.....	.....
	Primer	... .	899 0451	.....	.....	.....	.....
	Leveler	... .	899 0452	.....	.....	.....	.....
	Aluminum	... .	899 0453	.....	.....	.....	.....
P-1	Classic Black	899 0757	899 0636	DQE-9000	93-005	DAL-9000	44
P-4	Alamo Beige			DQE-21491	93-83101	DAL-21491	2774
P-5	Autumn Yellow	899 0766	899 0640	DQE-21492	93-83102	DAL-21492	2775
P-8	Chatsworth Green			DQE-42463	93-83426	DAL-42463	2970
P-10	Placid Blue	899 0760	899 0645	DQE-11985	93-93428	DAL-11985	2969
P-13	Oriental Red	899 0764	899 0648	DQE-70946	93-83431H	DAL-70946	2971H
P-18	Westchester Green Med.		899 0693	DQE-42648	181-83896	DAL-42648	4111
P-19	Sovereign Blue Med.		899 0694	DQE-12220	181-83894	DAL-12220	4107
P-20	Dartmouth Gray Lt.	899 0762	899 0695	DQE-31987	93-83897	DAL-31987	4108
P-21	Harvard Gray Med.		899 0696	DQE-31988	181-83915	DAL-31988	4109
P-23	Echo Green			DQE-42692	181-83898	DAL-42692	4112
P-24	Auburn Red		899 0698	DQE-71101	181-83926H	DAL-71101	4113H
P-25	Festival Rose		899 0699	DQE-71102	93-83895	DAL-71102	4110
P-72	Frost White	899 0765	899 0653	DQE-8108	93-59814	DAL-8108	2382
P-94	Cinnamon Bronze	899 0770	899 0655	DQE-21303	181-82709H	DAL-21303	2512H

NOTE: All Exterior Colors are also used as Interior Colors on some models.

Copyright 1963 American Motors Corp.

MODEL CHART

LICENSE APPLICATION AND SERIAL NUMBER DATA

MODEL	MODEL NUMBER	WHEEL BASE	NO CYL	BORE AND STROKE	TAX HP	NO PASS	BODY STYLE
American 6 (Deluxe)	61 02	100	6	3-1/8 × 4-1/4	23.44	5	2-Dr. Business Coupe
American 6 (Deluxe)	61 04	100	6	3-1/8 × 4-1/4	23.44	5	2-Dr. Station Wagon
American 6 (Super)	61 04-1	100	6	3-1/8 × 4-1/4	23.44	5	2-Dr. Station Wagon
American 6 (Custom)	61 04-2	100	6	3-1/8 × 4-1/4	23.44	5	2-Dr. Station Wagon
American 6 (Deluxe)	61 05	100	6	3-1/8 × 4-1/4	23.44	6	4-Dr. Sedan
American 6 (Super)	61 05-1	100	6	3-1/8 × 4-1/4	23.44	6	4-Dr. Sedan
American 6 (Custom)	61 05-2	100	6	3-1/8 × 4-1/4	23.44	6	4-Dr. Sedan
American 6 (Custom)	61 05-5	100	6	3-1/8 × 4-1/4	23.44	6	4-Dr. Sedan
American 6 (Deluxe)	61 06	100	6	3-1/8 × 4-1/4	23.44	5	2-Dr. Club Sedan
American 6 (Super)	61 06-1	100	6	3-1/8 × 4-1/4	23.44	5	2-Dr. Club Sedan
American 6 (Custom)	61 06-2	100	6	3-1/8 × 4-1/4	23.44	5	2-Dr. Club Sedan
American 6 (Custom)	61 07-2	100	6	3-1/8 × 4-1/4	23.44	5	2-Dr. Convertible
American 6 (Custom)	61 07-5	100	6	3-1/8 × 4-1/4	23.44	5	2-Dr. Convertible
American 6 (Deluxe)	61 08	100	6	3-1/8 × 4-1/4	23.44	6	4-Dr. Station Wagon
American 6 (Super)	61 08-1	100	6	3-1/8 × 4-1/4	23.44	6	4-Dr. Station Wagon
American 6 (Custom)	61 08-2	100	6	3-1/8 × 4-1/4	23.44	6	4-Dr. Station Wagon
Classic 6 (Deluxe)	61 15	108	6	3-1/8 × 4-1/4	23.44	6	4-Dr. Sedan
Classic 6 (Super)	61 15-1	108	6	3-1/8 × 4-1/4	23.44	6	4-Dr. Sedan
Classic 6 (Super)	61 15-1	108	6	3-1/8 × 4-1/4	23.44	6	4-Dr. Sedan
Classic 6 (Custom)	61 15-2	108	6	3-1/8 × 4-1/4	23.44	6	4-Dr. Sedan
Classic 6 (Custom)	61 15-5	108	6	3-1/8 × 4-1/4	23.44	6	4-Dr. Sedan
Classic 6 (Deluxe)	61 18	108	6	3-1/8 × 4-1/4	23.44	6	4-Dr. Station Wagon
Classic 6 (Super)	61 18-1	108	6	3-1/8 × 4-1/4	23.44	6	4-Dr. Station Wagon
Classic 6 (Custom)	61 18-2	108	6	3-1/8 × 4-1/4	23.44	6	4-Dr. Station Wagon
Classic 6 (Super)	61 18-3	108	6	3-1/8 × 4-1/4	23.44	8	4-Dr. Station Waton
Classic 6 (Custom)	61 18-4	108	6	3-1/8 × 4-1/4	23.44	8	4-Dr. Station Wagon
Classic V8 (Deluxe)	61 25	108	8	3-1/2 × 3/14	39.2	6	4-Dr. Sedan
Classic V8 (Super)	61 25-1	108	8	3-1/2 × 3-1/4	39.2	6	4-Dr. Sedan
Classic V8 (Custom)	61 25-2	108	8	3-1/2 × 3-1/4	39.2	4	4-Dr. Sedan
Classic V8 (Custom)	61 25-5	108	8	3-1/2 × 3-1/4	39.2	4	4-Dr. Sedan
Classic V8 (Super)	61 28-1	108	8	3-1/2 × 3-1/4	39.2	6	4-Dr. Station Wagon
Classic V8 (Custom)	61 28-2	108	8	3-1/2 × 3-1/4	39.2	6	4-Dr. Station Wagon
Classic V8 (Super)	61 28-3	108	8	3-1/2 × 3-1/4	39.2	8	4-Dr. Station Wagon
Classic V8 (Custom)	61 28-4	108	8	3-1/2 × 3-1/4	39.2	8	4-Dr. Station Wagon
Ambassador V8 (Deluxe)	61 85	117	8	4 × 3-1/4	51.2	6	4-Dr. Sedan
Ambassador V8 (Super)	61 85-1	117	8	4 × 3-1/4	51.2	6	4-Dr. Sedan
Ambassador V8 (Custom)	61 85-2	117	8	4 × 3-1/4	51.2	6	4-Dr. Sedan
Ambassador V8 (Custom)	61 85-5	117	8	4 × 3-1/4	51.2	6	4-Dr. Sedan
Ambassador V8 (Super)	61 88-1	117	8	4 × 3-1/4	51.2	6	4-Dr. Station Wagon
Ambassador V8 (Custom)	61 88-2	117	8	4 × 3-1/4	51.2	6	4-Dr. Station Wagon
Ambassador V8 (Super)	61 88-3	117	8	4 × 3-1/4	51.2	8	4-Dr. Station Wagon
Ambassador V8 (Custom)	61 88-4	117	8	4 × 3-1/4	51.2	8	4-Dr. Station Wagon

STARTING SERIAL NO.

Rambler American 6	B-221001	Rambler Rebel V8	A-118001
Unassembled Export	BK-10701	Unassembled Export	AK-10001
Rambler 6	C-400001	Rambler Ambassador V8	H-125001
Unassembled Export	CK-10401	Unassembled Export	HK-10001

Copyright 1963 American Motors Corp.

Air Dry Repair Enamel and Lacquer are available from two sources of supply: Ditzler Color Division-Pittsburgh Plate Glass Co. and E. I. Dupont DeNemours and Co.-Automotive Finishes Division. Each of these companies have thier own distributors and dealers in principle cities in the U. S. A.

The American Motors Paint Code Number is stamped in the body number plate. The corresponding manufacturers source numbers and paint names may be obtained by refering to the following chart.

When ordering paint from local DuPont and Ditzler Paint Dealers furnish them with their color blend file number and name of the paint required. Also please specify enamel or lacquer.

INTERIOR COLORS

COLOR NAME	DITZLER NO. DITZLAC	DUPONT NO. DUCO
Ravine Gray Metallic	DAL-32096	95029
Fairbanks Blue Metallic	DAL-12390	95030
Del Mar Green Metallic	DAL-42830	95031
Whirlwind Tan Metallic	DAL-22000	95032

EXTERIOR COLORS

COLOR NO.	COLOR NAME	BRUSH ACCY. NO.	SPRAY ACCY. NO.	ENAMEL DITZLER NO.	ENAMEL DUPONT NO.	LAC. DITZLER NO.	LAC. DUPONT NO.
All	Introductory Assortment	899 0849	899 0839	.....	.....	.....	.....
	Primer	... .	... .	.....	.....	.....	.....
	Leveler	... .	899 0452	.....	.....	.....	.....
	Aluminum	... .	899 0453	.....	.....	.....	.....
P-1	Classic Black	899 0757	899 0636	DQE-9000	93-005	DAL-9000	44
P-4	Alamo Beige			DQE-21491	93-83101	DAL-21491	2774
P-8	Chatsworth Green			DQE-42463	93-83426	DAL-42463	2970
P-15	Aqua Mist Metallic	899 0772	899 0650	DQE-42462	181-83433	DAL-42462	2978
P-23	Echo Green Metallic			DQE-42692	181-83898	DAL-42692	4112
P-26	Valley Green Metallic			DQE-42813	181-95020	DAL-42813	4209
P-27	Sonata Light Blue	899 0851	899 0841	DQE-12360	93-95021	DAL-12360	4210
P-28	Berkeley Blue Metallic			DQE-12169	181-95022	DAL-12169	4211
P-29	Whirlwind Med. Tan Metallic			DQE-21846	181-95023	DAL-21846	4212
P-30	Briarcliff Red	899 0854	899 0844	DQE-71186	93-95024H	DAL-71186	4214H
P-31	Inca Silver Metallic	899 0855	899 0845	DQE-32087	181-95025	DAL-32087	4213
P-32	Walkiki Gold			DQE-81171	93-95026	DAL-81171	4217
P-33	Jasmine Rose	899 0857	899 0847	DQE-71071	93-95027	DAL-71071	4215
P-34	Fireglow Red Metallic			DQE-71185	.....	DAL-71185	4216H
P-72	Frost White	899 0765	899 0653	DQE-8108	93-59814	DAL-8108	2382

Copyright 1963 American Motors Corp.

6205.2 +de B489375

MODEL CHART

LICENSE APPLICATION AND SERIAL NUMBER DATA

MODEL	MODEL NUMBER	WHEEL BASE	NO CYL	BORE AND STROKE	TAX HP	NO PASS	BODY STYLE
American 6 (Deluxe)	62 02	100	6	3-1/8 × 4-1/4	23.44	5	2-Dr. Business Coupe
American 6 (Deluxe)	62 04	100	6	3-1/8 × 4-1/4	23.44	5	2-Dr. Station Wagon
American 6 (Custom)	62 04-2	100	6	3-1/8 × 4-1/4	23.44	5	2-Dr. Station Wagon
American 6 (Deluxe)	62 05	100	6	3-1/8 × 4-1/4	23.44	6	4-Dr. Sedan
American 6 (Custom)	62 05-2	100	6	3-1/8 × 4-1/4	23.44	6	4-Dr. Sedan
American 6 (400)	62 05-5	100	6	3-1/8 × 4-1/4	23.44	6	4-Dr. Sedan
American 6 (Deluxe)	62 06	100	6	3-1/8 × 4-1/4	23.44	5	2-Dr. Club Sedan
American 6 (Custom)	62 06-2	100	6	3-1/8 × 4-1/4	23.44	5	2-Dr. Club Sedan
American 6 (400)	62 06-5	100	6	3-1/8 × 4-1/4	23.44	5	2-Dr. Club Sedan
American 6 (400)	62 07-5	100	6	3-1/8 × 4-1/4	23.44	5	2-Dr. Convertible
American 6 (Deluxe)	62 08	100	6	3-1/8 × 4-1/4	23.44	6	4-Dr. Station Wagon
American 6 (Custom)	62 08-2	100	6	3-1/8 × 4-1/4	23.44	6	4-Dr. Station Wagon
American 6 (400)	62 08-5	100	6	3-1/8 × 4-1/4	23.44	6	4-Dr. Station Wagon
Classic 6 (Deluxe)	62 15	108	6	3-1/8 × 4-1/4	23.44	6	4-Dr. Sedan
Classic 6 (Custom)	62 15-2	108	6	3-1/8 × 4-1/4	23.44	6	4-Dr. Sedan
Classic 6 (400)	62 15-5	108	6	3-1/8 × 4-1/4	23.44	6	4-Dr. Sedan
Classic 6 (Deluxe)	62 16	108	6	3-1/8 × 4-1/4	23.44	6	2-Dr. Club Sedan
Classic 6 (Custom)	62 16-2	108	6	3-1/8 × 4-1/4	23.44	6	2-Dr. Club Sedan
Classic 6 (400)	62 16-5	108	6	3-1/8 × 4-1/4	23.44	6	2-Dr. Club Sedan
Classic 6 (Deluxe)	62 18	108	6	3-1/8 × 4-1/4	23.44	6	4-Dr. Station Wagon
Classic 6 (Custom)	62 18-2	108	6	3-1/8 × 4-1/4	23.44	6	4-Dr. Station Wagon
Classic 6 (Custom)	62 18-4	108	6	3-1/8 × 4-1/4	23.44	8	4-Dr. Station Wagon
Classic 6 (400)	62 18-5	108	6	3-1/8 × 4-1/4	23.44	6	4-Dr. Station Wagon
Ambassador V8 (Deluxe)	62 85	108	8	4 × 3-1/4	51.2	6	4-Dr. Sedan
Ambassador V8 (Custom)	62 85-2	108	8	4 × 3-1/4	51.2	6	4-Dr. Sedan
Ambassador V8 (400)	62 85-5	108	8	4 × 3-1/4	51.2	6	4-Dr. Sedan
Ambassador V8 (Deluxe)	62 86	108	8	4 × 3-1/4	51.2	6	2-Dr. Club Sedan
Ambassador V8 (Custom)	62 86-2	108	8	4 × 3-1/4	51.2	6	2-Dr. Club Sedan
Ambassador V8 (400)	62 86-5	108	8	4 × 3-1/4	51.2	6	2-Dr. Club Sedan
Ambassador V8 (Deluxe)	62 88	108	8	4 × 3-1/4	51.2	6	4-Dr. Station Wagon
Ambassador V8 (Custom)	62 88-2	108	8	4 × 3-1/4	51.2	6	4-Dr. Station Wagon
Ambassador V8 (400)	62 88-5	108	8	4 × 3-1/4	51.2	6	4-Dr. Station Wagon
Ambassador V8 (400)	62 88-6	108	8	4 × 3-1/4	51.2	8	4-Dr. Station Wagon

STARTING SERIAL NO.

Rambler American 6	B-375001	Rambler Ambassador V8	H-160001
Unassembled Export	BK-13001	Unassembled Export	HK-10301
Rambler 6	C-625001		
Unassembled Export	CK-11501		

CANADIAN SERIAL NO.

American	BT-100201
Classic	CT-206001

Copyright 1963 American Motors Corp.

Air Dry Repair Enamel and Lacquer are available from two sources of supply: Ditzler Color Division-Pittsburgh Plate Glass Co. and E. I. Dupont DeNemours and Co.-Automotive Finishes Division. Each of these companies have their own distributors and dealers in principle cities in the U. S. A.

The American Motors Paint Code Number is stamped on the body number plate. The corresponding manufacturers source numbers and paint names may be obtained by refering the the following chart.

When ordering paint from local DuPont and Ditzler Paint Dealers furnish them with their color blend file number and name of the paint required. Also please specify enamel or lacquer.

INTERIOR COLORS

COLOR NO.	COLOR NAME	SPRAY ACCESSORY NUMBER	LACQUER DITZLER NUMBER DITZLAC	LACQUER DUPONT NUMBER DUCO
R-210	Inca Silver Metallic	899 0995	DL-32174	4213
R-213	Aqua Mist Metallic	899 0996	DL-42962	2978
R-214	Corsican Gold Metallic	899 0997	DL-22123	4315
R-215	Baron Medium Blue Metallic	899 0998	DL-12529	4309
R-216	Elmhurst Medium Green	899 0999	DL-42963	4311
R-217	Algiers Medium Rose Copper	899 1000	DL-71260	4312H

EXTERIOR COLORS

COLOR NO.	COLOR NAME	BRUSH ACCY. NO.	SPRAY ACCY. NO.	ENAMEL DITZLER NO.	ENAMEL DUPONT NO.	LAC. DITZLER NO.	LAC. DUPONT NO.
All	Introductory Assortment	899 1001	899 0986	.....	.....	.....	.....
	Primer	... .	... .	.....	.....	.....	.....
	Leveler	... .	899 0452	.....	.....	.....	.....
	Aluminum	... .	899 0453	.....	.....	.....	.....
P-1	Classic Black	899 0757	899 0636	DQE-9000	93-005	DAL-9000	44
P-15	Aqua Mist Metallic	899 0772	899 0650	DQE-42462	181-83433	DAL-42462	2978
P-27	Sonata Light Blue	899 0851	899 0841	DQE-12360	93-95021	DAL-12360	4210
P-30	Briarcliff Red	899 0854	899 0844	DQE-71186	93-95024H	DAL-71186	4214H
P-31	Inca Silver Metallic	899 0855	899 0845	DQE-32087	181-95025	DAL-32087	4213
P-33	Jasmine Rose	899 0857	899 0847	DQE-71071	93-95027	DAL-71071	4215
P-35	Baron Medium Blue Metallic	899 1002	899 0987	DQE-12499	181-95729	DAL-12499	4309L
P-36	Glen Cove Light Green	899 1003	899 0988	DQE-42931	93-95730	DAL-42931	4310L
P-37	Elmhurst Medium Green Metallic	899 1004	899 0989	DQE-42930	181-95731	DAL-42930	4311L
P-38	Algiers Rose Copper Metallic	899 1005	899 0990	DQE-22100	.....	DAL-22100	4312LH
P-39	Villa Red Metallic	899 1006	899 0991	DQE-71240	181-95733H	DAL-71240	4313LH
P-40	Majestic Dark Blue Metallic	899 1007	899 0992	DQE-12498	181-95734	DAL-12498	4314LH
P-41	Corsican Gold Metallic	899 1008	899 0993	DQE-22099	181-95735	DAL-22099	4315L
P-42	Sirocco Beige	899 1009	899 0994	DQE-22098	93-95736	DAL-22098	4316L
P-72	Frost White	899 0765	899 0653	DQE-8108	93-59814	DAL-8108	2382

Copyright 1963 American Motors Corp.

MODEL CHART

LICENSE APPLICATION AND SERIAL NUMBER DATA

MODEL	MODEL NUMBER	WHEEL BASE	NO CYL	BORE AND STROKE	TAX HP	NO PASS	BODY STYLE
American 6 (220)	63 02	100	6	3-1/8 × 4-1/4	23.44	5	2-Dr. Business Coupe
American 5 (220)	63 04	100	6	3-1/8 × 4-1/4	23.44	5	2-Dr. Station Wagon
American 6 (330)	63 04-2	100	6	3-1/8 × 4-1/4	23.44	5	2-Dr. Station Wagon
American 6 (220)	63 05	100	6	3-1/8 × 4-1/4	23.44	6	4-Dr. Sedan
American 6 (330)	63 05-2	100	6	3-1/8 × 4-1/4	23.44	6	4-Dr. Sedan
American 6 (440)	63 05-5	100	6	3-1/8 × 4-1/4	23.44	6	4-Dr. Sedan
American 6 (220)	63 06	100	6	3-1/8 × 4-1/4	23.44	5	2-Dr. Club Sedan
American 6 (330)	63 06-2	100	6	3-1/8 × 4-1/4	23.44	5	2-Dr. Club Sedan
American 6 (440)	63 06-5	100	6	3-1/8 × 4-1/4	23.44	5	2-Dr. Club Sedan
American 6 (440)	63 07-5	100	6	3-1/8 × 4-1/4	23.44	5	2-Dr. Convertible
American 6 (220)	63 08	100	6	3-1/8 × 4-1/4	23.44	6	4-Dr. Station Wagon
American 6 (330)	63 08-2	100	6	3-1/8 × 4-1/4	23.44	6	4-Dr. Station Wagon
American 6 (440)	63 08-5	100	6	3-1/8 × 4-1/4	23.44	6	4-Dr. Station Wagon
American 6 (440)	63 09-5	100	6	3-1/8 × 4-1/4	23.44	5	2-Dr. Hard Top
American 6 (440H)	63 09-7	100	6	3-1/8 × 4-1/4	23.44	5	2-Dr. Hard Top
Classic 6 (550)	63 15	112	6	3-1/8 × 4-1/4	23.44	6	4-Dr. Sedan
Classic V8 (550)	63 15	112	8	3-3/4 × 3-1/4	45.00	6	4-Dr. Sedan
Classic 6 (660)	63 15-2	112	6	3-1/8 × 4-1/4	23.44	6	4-Dr. Sedan
Classic V8 (660)	63 15-2	112	8	3-3/4 × 3-1/4	45.00	6	4-Dr. Sedan
Classic 6 (770)	63 15-5	112	6	3-1/8 × 4-1/4	23.44	6	4-Dr. Sedan
Classic V8 (770)	63 15-5	112	8	3-3/4 × 3-1/4	45.00	6	4-Dr. Sedan
Classic 6 (550)	63 16	112	6	3-1/8 × 4-1/4	23.44	6	2-Dr. Club Sedan
Classic V8 (550)	63 16	112	8	3-3/4 × 3-1/4	45.00	6	2-Dr. Club Sedan
Classic 6 (660)	63 16-2	112	6	3-1/8 × 4-1/4	23.44	6	2-Dr. Club Sedan
Classic V8 (660)	63 16-2	112	8	3-3/4 × 3-1/4	45.00	6	2-Dr. Club Sedan
Classic 6 (770)	63 16-5	112	6	3-1/8 × 4-1/4	23.44	6	2-Dr. Club Sedan
Classic V8 (770)	63 16-5	112	8	3-3/4 × 3-1/4	45.00	6	2-Dr. Club Sedan
Classic 6 (550)	63 18	112	6	3-1/8 × 4-1/4	23.44	6	4-Dr. Station Wagon
Classic V8 (550)	63 18	112	8	3-3/4 × 3-1/4	45.00	6	4-Dr. Station Wagon
Classic 6)660)	63 18-2	112	6	3-1/8 × 4-1/4	23.44	6	4-Dr. Station Wagon
Classic V8 (660)	63 18-2	112	8	3-3/4 × 3-1/4	45.00	6	4-Dr. Station Wagon
Classic 6 (660)	63 18-4	112	6	3-1/8 × 4-1/4	23.44	8	4-Dr. Station Wagon
Classic V8 (660)	63 18-4	112	8	3-3/4 × 3-1/4	45.00	8	4-Dr. Station Wagon
Classic 6 (770)	63 18-5	112	6	3-1/8 × 4-1/4	23.44	6	4-Dr. Station Wagon
Classic V8 (770)	63 18-5	112	8	3-3/4 × 3-1/4	45.00	6	4-Dr. Station Wagon
Ambassador V8 (800)	63 85	112	8	4 × 3-1/4	51.2	6	4-Dr. Sedan
Ambassador V8 (880)	63 85-2	112	8	4 × 3-1/4	51.2	6	4-Dr. Sedan
Ambassador V8 (990)	63 85-5	112	8	4 × 3-1/4	51.2	6	4-Dr. Sedan
Ambassador V8 (800)	63 86	112	8	4 × 3-1/4	51.2	6	2-Dr. Club Sedan
Ambassador V8 (880)	63 86-2	112	8	4 × 3-1/4	51.2	6	2-Dr. Club Sedan
Ambassador V8 (990)	63 86-5	112	8	4 × 3-1/4	51.2	6	2-Dr. Club Sedan
Ambassador V8 (800)	63 88	112	8	4 × 3-1/4	51.2	6	4-Dr. Station Wagon
Ambassador V8 (880)	63 88-2	112	8	4 × 3-1/4	51.2	6	4-Dr. Station Wagon
Ambassador V8 (990)	63 88-5	112	8	4 × 3-1/4	51.2	6	4-Dr. Station Wagon
Ambassador V8 (990)	63 88-6	112	8	4 × 3-1/4	51.2	8	4-Dr. Station Wagon

STARTING SERIAL NO.

Rambler American 6	B-515001	Rambler Classic V8	Z-100001
Unassembled Export	BK-15001	Unassembled Export	ZK-10001
Rambler Classic 6	G-100001	Rambler Ambassador V8	H-210001
Unassembled Export	GK-10001	Unassembled Export	HK-11001

CANADIAN SERIAL NO.

American	BT-110001
Classic	GT-220001
Ambassador	HT-330001

Copyright 1963 American Motors Corp.

F-14063 Rev. 4 - 24 - 64

Printed in U.S.A.

The American Motors Paint Code Number is stamped on the body number plate.

A paint number having the suffix "S" indicates the car is painted in Super Enamel.

A paint number having the suffix "A" indicates the car is painted in Acrylic Enamel.

Air Dry Repair Enamel, Acrylic Lacquer and Regular Lacquer are available from two sources of supply: Ditzler Color Division of Pittsburgh Plate Glass Co. and Automotive Finishes Division of E. I. DuPont DeNemours and Co. Each of these companies have their own distributors and dealers in principle cities.

When ordering paint from local DuPont and Ditzler Paint Dealers, furnish them with their paint number and color name. Also please specify enamel, lacquer or acrylic.

INTERIOR COLORS

COLOR NO.	COLOR NAME	SPRAY ACCESSORY NUMBER	LACQUER DITZLER NUMBER DITZLAC	LACQUER DUPONT NUMBER DUCO
N-45	Satin Black	899 1123	DL-9312	*44
R-214	Corsican Gold Met.	899 0997	DL-22271	*4413
R-260	Cape Cod Medium Blue Met.	899 1124	DL-12677	*4416
R-261	Aegean Medium Aqua Met.	899 1125	DL-43100	*4418
R-262	Briarcliff Red	899 1126	DL-71328	*4411H
R-263	Concord Maroon Met.	899 1127	DL-50625	*4421H
R-278	Flat Black		DAL-9313	

* When painting Interior Colors with DuPont Interior Duco, use DuPont Flattening Compound No. 4528 to produce Semi-Gloss Finish.

EXTERIOR COLORS

COLOR NO.	COLOR NAME	ACCESSORY NUMBER BRUSH	ACCESSORY NUMBER SPRAY	DITZLER AIR DRY ENAMEL DQE	DITZLER REG. LAC. DAL	DITZLER DURARCYL ACRYLIC LAC. DDL	DUPONT AIR DRY ENAMEL DULUX	DUPONT REG. LAC. DUCO	DUPONT LUCITE ACRYLIC LAC.
All	Introductory Assortment			.....	.....	.....	.....	.....	.....
	Primer	.....	.....	.....	.....	.....	.....	.....	.....
	Leveler	.....	.....	.....	.....	.....	.....	.....	.....
	Aluminum	.....	899 0453	.....	.....	.....	.....	.....	.....
P-1	Classic Black #	899 0757	899 0636	9000	9000	9300	93-005	44	88L
P-30	Briarcliff Red #	899 0854	899 0844	71186	71186	71186	No. 2-93-96563H	4411H	None
P-40	Majestic Dk. Blue Met. #	899 1007	899 0992	12498	12498	12498	.....	.....	.....
P-41	Corsican Gold Met. #	899 1008	899 0993	22099	22099	22099	No. 2-181-96565	4413	4413L
P-43	Sceptre Silver Met.	899 1130	899 1115	32281	32281	32281	181-96555	4414	4414L
P-44	Bahama Light Blue	899 1131	899 1116	12674	12674	12674	93-96556	4415	4415L
P-45	Cape Cod Med. Blue Met.	899 1132	899 1117	12675	12675	12675	181-96557	4416	4416L
P-46	Palisade Light Green	899 1133	899 1118	43098	43098	43098	93-96558	4417	4417L
P-47	Aegean Med. Aqua Met.	899 1134	899 1119	43099	43099	43099	181-96559	4418	4418L
P-48	Calais Med. Coral Met.	899 1135	899 1120	22257	22257	22257	181-96560	4419	4419L
P-49	Valencia Ivory	899 1136	899 1121	81390	81390	81390	93-96561	4420	4420L
P-50	Concord Maroon	899 1137	899 1122	50624	50624	50624	None	4421H	None
P-72	Frost White #	899 0765	899 0653	8108	8108	8108	93-59814	2382	2382L

\# Same color names as used in 1962 but new service paints.

Copyright 1963 American Motors Corp.

MODEL CHART

LICENSE APPLICATION AND SERIAL NUMBER DATA

MODEL	MODEL NUMBER	WHEEL BASE	NO CYL	BORE AND STROKE	TAX HP	NO PASS	BODY STYLE
American 6 (220)	64 05	106	6	3-1/8 × 4-1/4	23.44	6	4-Dr. Sedan
American 6 (330)	64 05-2	106	6	3-1/8 × 4-1/4	23.44	6	4-Dr. Sedan
American 6 (440)	64 05-5	106	6	3-1/8 × 4-1/4	23.44	6	4-Dr. Sedan
American 6 (220)	64 06	106	6	3-1/8 × 4-1/4	23.44	5	2-Dr. Club Sedan
American 6 (330)	64 06-2	106	6	3-1/8 × 4-1/4	23.44	5	2-Dr. Club Sedan
American 6 (440)	64 07-5	106	6	3-1/8 × 4-1/4	23.44	5	2-Dr. Convertible
American 6 (220)	64 08	106	6	3-1/8 × 4-1/4	23.44	6	4-Dr. Station Wagon
American 6 (330)	64 08-2	106	6	3-1/8 × 4-1/4	23.44	6	4-Dr. Station Wagon
American 6 (440)	64 09-5	106	6	3-1/8 × 4-1/4	23.44	5	2-Dr. Hard Top
American 6 (440H)	64 09-7	106	6	3-1/8 × 4-1/4	23.44	5	2-Dr. Hard Top
Classic 6 (550)	64 15	112	6	3-1/8 × 4-1/4	23.44	6	4-Dr. Sedan
Classic V-8 (550)	64 15	112	8	3-3/4 × 3-1/4	45.00	6	4-Dr. Sedan
Classic 6 (660)	64 15-2	112	6	3-1/8 × 4-1/4	23.44	6	4-Dr. Sedan
Classic V-8 (660)	64 15-2	112	8	3-3/4 × 3-1/4	45.00	6	4-Dr. Sedan
Classic 6 (770)	64 15-5	112	6	3-1/8 × 4-1/4	23.44	6	4-Dr. Sedan
Classic V-8 (770)	64 15-5	112	8	3-3/4 × 3-1/4	45.00	6	4-Dr. Sedan
Classic 6 (550)	64 16	112	6	3-1/8 × 4-1/4	23.44	6	2-Dr. Club Sedan
Classic V-8 (550)	64 16	112	8	3-3/4 × 3-1/4	45.00	6	2-Dr. Club Sedan
Classic 6 (660)	64 16-2	112	6	3-1/8 × 4-1/4	23.44	6	2-Dr. Club Sedan
Classic V-8 (660)	64 16-2	112	8	3-3/4 × 3-1/4	45.00	6	2-Dr. Club Sedan
Classic 6 (770)	64 16-5	112	6	3-1/8 × 4-1/4	23.44	6	2-Dr. Club Sedan
Classic V-8 (770)	64 16-5	112	8	3-3/4 × 3-1/4	45.00	6	2-Dr. Club Sedan
Classic 6 (550)	64 18	112	6	3-1/8 × 4-1/4	23.44	6	4-Dr. Station Wagon
Classic V-8 (550)	64 18	112	8	3-3/4 × 3-1/4	45.00	6	4-Dr. Station Wagon
Classic 6 (660)	64 18-2	112	6	3-1/8 × 4-1/4	23.44	6	4-Dr. Station Wagon
Classic V-8 (660)	64 18-2	112	6	3-3/4 × 3-1/4	45.00	6	4-Dr. Station Wagon
Classic 6 (770)	64 18-5	112	6	3-1/8 × 4-1/4	23.44	6	4-Dr. Station Wagon
Classic V-8 (770)	64 18-5	112	8	3-3/4 × 3-1/4	45.00	6	4-Dr. Station Wagon
Classic 6 (770)	64 19-5	112	6	3-1/8 × 4-1/4	23.44	5	2-Dr. Hard Top
Classic V-8 (770)	64 19-5	112	8	3-3/4 × 3-1/4	45.00	5	2-Dr. Hard Top
Typhoon 6 (770)	64 19-7	112	6	3-3/4 × 3-1/2	33.75	5	2-Dr. Hard Top
Ambassador V-8 (990)	64 85-5	112	8	4 × 3-1/4	51.2	6	4-Dr. Sedan
Ambassador V-8 (990)	64 88-5	112	8	4 × 3-1/4	51.2	6	4-Dr. Station Wagon
Ambassador V-8 (990)	64 89-5	112	8	4 × 3-1/4	51.2	6	2-Dr. Hard Top
Ambassador V-8 (990H)	64 89-7	112	8	4 × 3-1/4	51.2	6	2-Dr. Hard Top

STARTING SERIAL NO.

Rambler American 6	B-650001	Rambler Classic V-8	Z-155001
Unassembled Export	BK-16001	Unassembled Export	ZK-11001
Rambler Classic 6	G-500001	Rambler Ambassador V-8	H-255001
Unassembled Export	GK-14001	Unassembled Export	HK-12001

CANADIAN SERIAL NO.

American	All	BT-115401
Classic	All	GT-239001
Ambassador	All	HT-333301

Copyright 1963 American Motors Corp.

1964 PAINT

The American Motors Paint Code Number is stamped on the body number plate.

A paint number having the suffix "A" indicates the car is painted in Acrylic Enamel.

Air Dry Repair Enamel, Acrylic Lacquer and Regular Lacquer are available from two sources of supply: Ditzler Color Division of Pittsburgh Plate Glass Co. and Automotive Finishes Division of E. I. DuPont DeNemours and Co. Each of these companies have their own distributors and dealers in principle cities.

When ordering paint from local DuPont and Ditzler Paint Dealers, furnish them with their paint number and color name. Also please specify enamel, lacquer or acrylic.

INTERIOR COLORS

COLOR NO.	COLOR NAME	SPRAY LACQUER ACCESSORY NUMBER	DITZLER DITZLAC NUMBER	DUPONT DUCO* STOCK NUMBER
	SUEDE FINISH			
	Top of Instrument Panel	01-10-80		
	Windshield Lower Finish Mouldings	10-80		
	Instrument Cluster Upper Housing	10-80		
	A/C Discharge Housing (Upper Half)	10-80		
R-326	Black Suede Finish		DIA-9325	4428L
R-391	Forum Med. Blue Met. Suede Finish		DIA-12862	4592L
R-392	Westminster Med. Green Met. Suede Finish		DIA-43250	4593L
R-393	Lancelot Med. Turquoise Met. Suede Finish		DIA-43249	4594L
R-394	Rampart Red Suede Finish		DIA-71406	4595L
R-395	Vintage Maroon Met. Suede Finish		DIA-50661	4596L
R-396	Emperor Med. Gold Met. Suede Finish		DIA-22401	4597L
	SEMI-GLOSS FINISH			**FORMULA**
	Front of Instr. Panel and Glove Box Door. For Upper and Lower Portions of Doors. Pillars, Finish Mouldings, Etc.			FILE NO.
N-45	Classic Black	899 1123	DAL Or DL-9312	88L
R-339	Forum Med. Blue Met.	899 1301	DAL Or DL-12860	9096L
R-340	Westminster Med. Green Met.	899 1302	DAL Or DL-43248	9097L
R-344	Emperor Med. Gold Met.	899 1303	DAL Or DL-22402	9098L
R-417	Sceptre Silver Met.	899 1274	DAL Or DL-32380	9099L
R-418	Sentry Light Blue Met.	899 1275	DAL Or DL-12861	9100L
R-419	Woodside Light Green Met.	899 1276	DAL Or DL-43251	9101L
R-420	Rampart Red	899 1277	DAL Or DL-71405	9102LH
R-421	Lancelot Med. Turquoise Met.	899 1278	DAL Or DL-43247	9103L
R-422	Emperor Light Gold Met.	899 1279	DAL Or DL-22400	9104L
R-423	Contessa Rose	899 1280	DAL Or DL-71404	9105L
R-424	Vintage Maroon Met.	899 1281	DAL Or DL-50660	9106L

* "DUPONT TRADEMARK"

Copyright 1963 American Motors Corp.

EXTERIOR COLORS

COLOR	COLOR NAME	ACCESSORY NUMBER BRUSH	ACCESSORY NUMBER SPRAY	DITZLER AIR DRY ENAMEL DQE	DITZLER REG. LAC. DAL	DITZLER DURARCYL ACRYLIC LAC. DDL	DUPONT AIR DRY ENAMEL DULUX* CODE NO.	DUPONT REG. LAC. DUCO* STOCK NO.	DUPONT ACRYLIC LAC. LUCITE* STOCK NO.
All	Introductory Assortment	899 1289	899 1262	.....	.....	.....	.....	.....	.....
	Primer	... .	899 0451	.....	.....	.....	.....	.....	.....
	Leveler	... .	899 0452	.....	.....	.....	.....	.....	.....
	Aluminum	... .	899 0453	.....	.....	.....	.....	.....	.....
P-1	Classic Black #	899 0757	899 0636	9000	9000	9300	93-005	44	88L
P-13A	Solar Yellow Met.	899 1518	899 1498	81483	81483	81483	93-97482	4673	4673L
P-43A	Sceptre Silver Met. #	899 1130	899 1115	.....	.....	32393	.....	.....	4414L
P-51	Rampart Red	899 1290	899 1263	71394	71394	71394	93-97016H	4541H	4541LH
P-52A	Sentry Light Blue Met.	899 1291	899 1264	12825	12825	12825	181-97017	4542	4542L
P-53	Forum Dk. Blue	899 1292	899 1265	12826	12826	12826	93-97018	4543	4543L
P-54A	Woodside Light Green Met.	899 1293	899 1266	43225	43225	43225	181-97019	4544	4544L
P-55	Westminster Dk. Green	899 1294	899 1267	43226	43226	43226	93-97020	4545	4545L
P-56	Aurora Light Turquoise	899 1295	899 1268	12827	12827	12827	93-97021	4546	4546L
P-57	Lancelot Med. Turquoise Met.	899 1296	899 1269	12828	12828	12828	181-97022	4547	4547L
P-58	Bengal Ivory	899 1297	899 1270	81442	81442	81442	93-97023	4548	4548L
P-59	Emperor Light Gold Met.	899 1298	899 1271	22362	22362	22362	181-97024	4549	4549L
P-60A	Contessa Rose Met.	899 1299	899 1272	71395	71395	71395	181-97025	4550	4550L
P-61	Vintage Maroon	899 1300	899 1273	50654	50654	50654	181-97026H	4551H	4551LH
P-72	Frost White #	899 0765	899 0653	8108	8108	8108	93-59814	2382	2382L

* "DUPONT TRADEMARK"

Paint code number with Suffix "A" car painted with Acrylic bake type enamel.

\# Same color names and paint used in 1963 for P-1 and P-72, but Acrylic paint used for P-43A in 1964.

Copyright 1963 American Motors Corp.

MODEL CHART

LICENSE APPLICATION AND SERIAL NUMBER DATA

MODEL	MODEL NUMBER	WHEEL BASE	NO CYL	CUBIC INCH DISPLACEMENT	NO PASS	BODY STYLE
American 6 (220)	65 05	106	6	196 or 199 or 232	6	4-Dr. Sedan
American 6 (330)	65 05-2	106	6	196 or 199 or 232	6	4-Dr. Sedan
American 6 (440)	65 05-5	106	6	196 or 199 or 232	6	4-Dr. Sedan
American 6 (220)	65 06	106	6	196 or 199 or 232	6	2-Dr. Club Sedan
American 6 (330)	65 06-2	106	6	196 or 199 or 232	6	2-Dr. Club Sedan
American 6 (440)	65 07-5	106	6	196 or 199 or 232	5	2-Dr. Convertible
American 6 (220)	65 08	106	6	196 or 199 or 232	6	4-Dr. Station Wagon
American 6 (330)	65 08-2	106	6	196 or 199 or 232	6	4-Dr. Station Wagon
American 6 (440)	65 09-5	106	6	196 or 199 or 232	6	2-Dr. Hard Top
American 6 (440H)	65 09-7	106	6	196 or 199 or 232	6	2-Dr. Hard Top
Classic 6 (550)	65 15	112	6	199 or 232	6	4-Dr. Sedan
Classic V-8 (550)	65 15	112	8	287 or 327	6	4-Dr. Sedan
Classic 6 (660)	65 15-2	112	6	232	6	4-Dr. Sedan
Classic V-8 (660)	65 15-2	112	8	287 or 327	6	4-Dr. Sedan
Classic 6 (770)	65 15-5	112	6	232	6	4-Dr. Sedan
Classic V-8 (770)	65 15-5	112	8	287 or 327	6	4-Dr. Sedan
Classic 6 (550)	65 16	112	6	199 or 232	6	2-Dr. Club Sedan
Classic V-8 (550)	65 16	112	8	287 or 327	6	2-Dr. Club Sedan
Classic 6 (660)	65 16-2	112	6	232	6	2-Dr. Club Sedan
Classic V-8 (660)	65 16-2	112	8	287 or 327	6	2-Dr. Club Sedan
Classic 6 (770)	65 17-5	112	6	232	5	2-Dr. Convertible
Classic V-8 (770)	65 17-5	112	8	287 or 327	5	2-Dr. Convertible
Classic 6 (550)	65 18	112	6	199 or 232	6	4-Dr. Station Wagon
Classic V-8 (550)	65 18	112	8	287 or 327	6	4-Dr. Station Wagon
Classic 6 (660)	65 18-2	112	6	232	6	4-Dr. Station Wagon
Classic V-8 (660)	65 18-2	112	8	287 or 327	6	4-Dr. Station Wagon
Classic 6 (770)	65 18-5	112	6	232	6	4-Dr. Station Wagon
Classic V-8 (770)	65 18-5	112	8	287 or 327	6	4-Dr. Station Wagon
Classic 6 (770)	65 19-5	112	6	232	6	2-Dr. Hard Top
Classic V-8 (770)	65 19-5	112	8	287 or 327	6	2-Dr. Hard Top
Classic 6 (770H)	65 19-7	112	6	232	6	2-Dr. Hard Top
Classic V-8 (770H)	65 19-7	112	8	287 or 327	6	2-Dr. Hard Top
Marlin 6	65 59-7	112	6	232	5	2-Dr. Hard Top
Marlin V-8	65 59-7	112	8	287 or 327	5	2-Dr. Hard Top
Ambassador 6 (880)	65 85-2	116	6	232	6	4-Dr. Sedan
Ambassador V-8 (880)	65 85-2	116	8	287 or 327	6	4-Dr. Sedan
Ambassador 6 (990)	65 85-5	116	6	232	6	4-Dr. Sedan
Ambassador V-8 (990)	65 85-5	116	8	287 or 327	6	4-Dr. Sedan
Ambassador 6 (880)	65 86-2	116	6	232	6	2-Dr. Club Sedan
Ambassador V-8 (880)	65 86-2	116	8	287 or 327	6	2-Dr. Club Sedan
Ambassador V-8 (990)	65 87-5	116	8	287 or 327	5	2-Dr. Convertible
Ambassador 6 (880)	65 88-2	116	6	232	6	4-Dr. Station Wagon
Ambassador V-8 (880)	65 88-2	116	8	287 or 327	6	4-Dr. Station Wagon
Ambassador 6 (990)	65 88-5	116	6	232	6	4-Dr. Station Wagon
Ambassador V-8 (990)	65 88-5	116	8	287 or 327	6	4-Dr. Station Wagon
Ambassador 6 (990)	65 89-5	116	6	232	6	2-Dr. Hard Top
Ambassador V-8 (990)	65 89-5	116	8	287 or 327	6	2-Dr. Hard Top
Ambassador V-8 (990H)	65 89-7	116	8	287 or 327	6	2-Dr. Hard Top

Copyright 1963 American Motors Corp.

MODEL CHART (Continued)

LICENSE APPLICATION AND SERIAL NUMBER DATA

MODEL	MODEL NUMBER	WHEEL BASE	NO CYL	CUBIC INCH DISPLACEMENT	NO PASS	BODY STYLE

MODEL		CUBIC INCH DISP	BORE AND STROKE	TAX HP
American	"L" Head	195.6	3-1/8 x 4-1/4	23.44
American	"OHV"	196	3-1/8 x 4-1/4	23.44
American	"OHV"	199	3-3/4 x 3	33.75
American	"OHV"	232	3-3/4 x 3-1/2	33.75
Classic	"6" Cyl.	199	3-3/4 x 3	33.75
Classic	"6" Cyl.	232	3-3/4 x 3-1/2	33.75
Classic	"8" Cyl.	287	3-3/4 x 3-1/4	45.00
Classic	"8" Cyl.	327	4 x 3-1/4	51.2
Marlin	"6" Cyl.	232	3-3/4 x 3-1/2	33.75
Marlin	"8" Cly.	287	3-3/4 x 3-1/4	45.00
Marlin	"8" Cyl.	327	4 x 3-1/4	51.2
Ambassador	"6" Cyl.	232	3-3/4 x 3-1/2	33.75
Ambassador	"8" Cyl.	287	3-3/4 x 3-1/4	45.00
Ambassador	"8" Cyl.	327	4 x 3-1/4	51.2

STARTING SERIAL NO.

Rambler American (196) 6	P-100001	Rambler Classic (327) 8	U-100001
Unassembled Export	PK-10001	Unassembled Export	UK-10001
Rambler American (199) 6	Q-100001	Rambler Marlin (232) 6	2-100001
Unassembled Export	QK-10001	Unassembled Export	2K-10001
Rambler American (232) 6	W-100001	Rambler Marlin (287) 8	3-100001
Unassembled Export	WK-10001	Unassembled Export	3K-10001
		Rambler Marlin (327) 8	4-100001
		Unassembled Export	4K-10001
Rambler Classic (199) 6	J-100001	Rambler Ambassador (232) 6	S-100001
Unassembled Export	JK-10001	Unassembled Export	SK-10001
Rambler Classic (232) 6	L-150001	Rambler Ambassador (287) 8	E-100001
Unassembled Export	LK-10001	Unassembled Export	EK-10001
Rambler Classic (287) 8	Z-275001	Rambler Ambassador (327) 8	H-300001
Unassembled Export	ZK-12001	Unassembled Export	HK-13001

CANADIAN SERIAL NO.

Rambler American "L" Head	PT-500001		
Rambler American "6 Cyl" (199)	QT-500001	Rambler American "6 Cyl" (232)	WT-500001
Rambler Classic "6 Cyl" (199)	JT-500001	Rambler Ambassador "6 Cyl" (232)	ST-500001
Rambler Classic "6 Cyl" (232)	LT-500001	Rambler Ambassador "8 Cyl" (287)	ET-500001
Rambler Classic "8 Cyl" (287)	ZT-500001	Rambler Ambassador "8 Cyl" (327)	HT-500001

Copyright 1963 American Motors Corp.

1965 PAINT

The American Motors Paint Code Number is stamped on the body number plate.

A paint number having the suffix "A" indicates the car is painted in Acrylic Enamel.

Air Dry Repair Enamel, Acrylic Lacquer and Regular Lacquer are available from two sources of supply: Ditzler Color Division of Pittsburgh Plate Glass Co. and Automotive Finishes Division of E. I. DuPont DeNemours and Co. Each of these companies have their own distributors and dealers in principle cities.

When ordering paint from local DuPont and Ditzler Paint Dealers, furnish them with their paint number and color name. Also please specify enamel, lacquer or acrylic.

INTERIOR COLORS

COLOR NO.	COLOR NAME	SPRAY ACCESSORY NUMBER	LACQUER DITZLER DITZLAC NUMBER	LACQUER DUPONT DUCO STOCK NUMBER
	SUEDE FINISH			
Instrument Panel		(220 Thru 990H)		
Glove Box Door		(220 Thru 990H)		
Instrument Panel Ash Receiver		(220 Thru 990H)		
Windshield Lower Finish Moulding		(550 And Up)		
Radio Speaker Grille		(990-990H)		
Radio Push Button Hole Cover		(550 Thru 990H)		
Instrument Cluster Visor		(550 Thru 880)		
R-6	Dark Blue		DIA-13009	9164L
R-7	Dark Green		DIA-43370	9165L
R-9	Dark Aqua		DIA-43371	9166L
R-10	Dark Maroon		DIA-50694	9167LH
R-11	Dark Cordovan		DIA-22532	9168L
R-86	Black		DIA-9331	9169L
	SEMI-GLOSS FINISH Upper and Lower Portions of doors, Quarter Panel, Pillars, Finish Mouldings, Rear Door and Quarter Ash Receiver, Ect.			FORMULA FILE NO.
N-45	Classic Black	899 1123	DAL Or DL-9312	88
R-1	Dark Blue Metallic	899 1500	DAL Or DL-13011	9159L
R-2	Dark Green Metallic	899 1501	DAL Or DL-43373	9160L
R-3	Dark Aqua Metallic	899 1502	DAL Or DL-43372	4669L
R-4	Dark Maroon Metallic	899 1503	DAL Or DL-50695	9162LH
R-5	Dark Cordovan Metallic	899 1504	DAL Or DL-22536	4672L
R-87	Off White	... .	.....	9163L

Copyright 1963 American Motors Corp.

EXTERIOR COLORS

COLOR	COLOR NAME	ACCESSORY NUMBER BRUSH	ACCESSORY NUMBER SPRAY	DITZLER AIR DRY ENAMEL DQE	DITZLER REG. LAC. DAL	DITZLER DURARCYL ACRYLIC LAC. DDL	DUPONT AIR DRY ENAMEL DULUX* CODE NO.	DUPONT REG. LAC. DUCO* STOCK NO.	DUPONT ACRYLIC LAC. LUCITE* STOCK NO.
All	Introductory Assortment	899 1506	899 1499	.....	.....	.....	.....	.....	.....
	Primer	... .	899 0451	.....	.....	.....	.....	.....	.....
	Leveler	... .	899 0452	.....	.....	.....	.....	.....	.....
	Aluminum	... .	899 0453	.....	.....	.....	.....	.....	.....
P-1A	Classic Black #	899 0757	899 0636	9000	9000	9300	93-005	44	88
P-3A	Antigua Red	899 1508	899 1488	71467	71467	71467	93-97472H	4663H	4663LH
P-4A	Mystic Gold Met.	899 1509	899 1489	22508	22508	22508	181-97473	4664	4664L
P-5A	Legion Light Blue	899 1510	899 1490	12983	12983	12983	93-97474	4665	4665L
P-6A	Viscount Med. Blue Met.	899 1511	899 1491	12984	12984	12984	181-97475	4666	4666L
P-7A	Seaside Light Aqua	899 1512	899 1492	12985	12985	12985	93-97476	4667	4667L
P-8A	Marina Med. Aqua Met.	899 1513	899 1493	12986	12986	12986	181-97477	4668	4668L
P-9A	Atlantis Dk. Aqua Met.	899 1514	899 1494	12987	12987	12987	181-97478	4669	4669L
P-10A	Montego Light Rose	899 1515	899 1495	71468	71468	71468	93-97479	4670	4670L
P-11A	Barcelona Med. Taupe Met.	899 1516	899 1496	71469	71469	71469	181-97480	4671	4671L
P-12A	Corral Cordovan Met.	899 1517	899 1497	22509	22509	22509	181-97481	4672	4672L
P-13A	Solar Yellow	899 1518	899 1498	81483	81483	81483	93-97482	4673	4673L
P-14A	Silver Met.	899 1676	899 1675	32498	32498	32498	181-97679	4697	4697L
P-54A	Woodside Light Green Met.	899 1293	899 1266	43225	43225	43225	181-97019	4544	4544L
P-72A	Frost White	899 0765	899 0653	8616	8616	8616	93-97471	4662	4662L

* "DUPONT TRADEMARK"

Paint code number with Suffix "A" car painted with Acrylic bake type enamel.

Copyright 1963 American Motors Corp.

Copyright 1963 American Motors Corp.

• INFORMATION BULLETIN •

AUTOMOTIVE PARTS DIVISION
PARTS PUBLICATIONS

ISSUED: 5-1-69

PLEASE MAKE THE FOLLOWING CHANGES TO YOUR F-14063 PARTS CATALOG:

Group No. 3.031, Page No. Gr 3 - 18; Delete All Information And Insert The Following Information In Its Place:

60 Thru 62 01 (LHE): 60 Thru 62 20-80	.....	1	320 1801
60 Thru 62 01-10 (OHV) (American Mtrs: Optional With 448 6723)	.....	1	320 2807
60 Thru 62 01-10 (OHV) (Delco-Remy: Optional With 320 2807)	.....	1	448 6723
63 Thru 65 01-10 (Six): 65 80 (OHVC-232) (American Mtrs: Optional With 448 6720)	.....	1	320 4202
63 Thru 65 01-10 (Six): 65 80 (OHVC-232) (Delco-Remy: Optional With 320 4202)	.....	1	448 6720
63 Thru 65 10-80 (V8) (American Mtrs: Optional With 448 6721)	.....	1	320 0197
63 Thru 65 10-80 (V8) (Delco-Remy: Optional With 320 0197)	.....	1	448 6721
162-63 10 (Can): 164-65 01-10-80 (Can)	.....	1	320 1801
165 01-10 (OHV-199-Can): 165 01-10-80 (OHV-232-Can).	.....	1	320 9165

Page No. IL 9 - 3; In The Alphabetical Code Explanation At The Side Of The Page, Delete (N) Part Of SHAFT 9.036.

Page No. IL 9 - 14; After The Alphabetical Code Explanation (N) Part Of NUT 9.050 At The Side Of The Page, Add Alphabetical Code And Explanation (O) Part Of BLOCK 9.039.

Page Numbers IL 9 - 3 AND IL 9 - 14; There Are Four Alphabetical Code Designations Listed For The Two Pinion Shaft Thrust Blocks And Pin. Change The Alphabetical Codes From (D)(H)(N)(O) To (D)(H)(O) For All Three Parts.

The Two Differential Shafts Have Alphabetical Code Designations Of (D)(H)(N). Change The Alphabetical Codes To (D)(H) SHAFT 9.036 For Both Parts.

Group No. 9.036, Page No. Gr 9 - 8; Change Quantity On Part Number 320 0810 From 1 To 2.

Group No. 10.055, Page No. Gr 10 - 10; On Part Number 317 1493, Change Listing To Read:

64-65 01: 65 10-50-80	.....	2	317 1493

AMERICAN MOTORS CORPORATION
3280 SOUTH CLEMENT AVENUE • MILWAUKEE, WISCONSIN 53201

AMERICAN MOTORS

• INFORMATION BULLETIN •

AUTOMOTIVE PARTS DIVISION

PARTS PUBLICATIONS

AMERICAN MOTORS

• INFORMATION BULLETIN •

PARTS AND DISTRIBUTION SERVICES DIVISION

PARTS PUBLICATIONS

American Motors

American Motors

ISSUED: 11-11-69

PLEASE MAKE THE FOLLOWING CHANGES TO YOUR F-14063 PARTS CATALOG:

Group No. 1.154, Page No. Gr 1 - 49, On Part Number 317 3406, Change Listing To Read:
60 Thru 64 01 (LES): 60 Thru 64 10 (OHVC-196-LES)... ..... 1 317 3406.

Chart Page No. Ch 4 - 2b, Adjacent To CARTER NO. 121-94, Add A.M. NO. 448 6445.

Chart Page No. Ch 4 - 4, Adjacent To CARTER NO. 121-94, Add A.M. NO. 448 6445.

Chart Page No. Ch 4 - 6, Delete CARTER NO. 75-794, A.M. NO. 320 6430 And Listing From Parts Catalog.

Chart Page No. Ch 4 - 6, Adjacent To CARTER NO. 121-94, Add A.M. NO. 448 6445.

Chart Page No. Ch 4 - 8, For KEY NO. 45, Add A.M. NO. 448 6446.

Chart Page No. Ch 4 - 8, After KEY NO. 47, Change KEY NO. 58 To Read KEY NO. 48.

Chart Page No. Ch 4 - 10, For KEY NO. 45, Add A.M. NO. 448 6446.

Chart Page No. Ch 4 - 12, For KEY NO. 27, Add A.M. NO. 448 6447.

Chart Page No. Ch 4 - 14, For KEY NO. 27, Add A.M. NO. 448 6447.

Chart Page No. Ch 4 - 16, For KEY NO. 24, Add A.M. NO. 448 6447.

Chart Page No. Ch 4 - 18, For KEY NO. 24, Add A.M. NO. 448 6447.

Chart Page No. Ch 4 - 20, For KEY NO. 24, Add A.M. NO. 448 6447.

Chart Page No. Ch 4 - 23, For KEY NO. 24, Add A.M. NO. 448 6447.

Chart Page No. Ch 4 - 25, For KEY NO. 13, Add A.M. NO. 448 6448.

Chart Page No. Ch 4 - 27, For KEY NO. 13, Add A.M. NO. 448 6448.

Chart Page No. Ch 4 - 30, Adjacent To CARTER NO. 121-78, Add A.M. NO. 448 5888.

Chart Page No. Ch 4 - 33, After CARTER NO. 118-24, Add Listing:
121-78 448 5888 #*+ Coil Housing Gasket 1

Chart Page No. Ch 4 - 35, Adjacent To CARTER NO. 121-78, Add A.M. NO. 448 5888.

Chart Page No. Ch 4 - 37, Add Prefix Letter "R" To HOLLEY NO. Changing It To Read R-2555-3.

Chart Page No. Ch 4 - 38, For KEY NO. 13, Add A.M. NO. 448 6448.

Chart Page No. Ch 4 - 38, For KEY NO. 43, Add Code Sign "#" Prior To DESCRIPTION.

Chart Page No. Ch 4 - 40, For KEY NO. 21, Add A.M. NO. 320 7190.

Chart Page No. Ch 4 - 40, For KEY NO. 26, Add A.M. NO. 320 7191.

Chart Page No. Ch 4 - 40, For KEY NO. 45, Add A.M. NO. 320 9190.

Chart Page No. Ch 4 - 40, For KEY NO. 47, Change CARTER NO. To 122-132 And A.M. NO. To 320 5855.

Chart Page No. Ch 4 - 40, For KEY NO. 48, Change CARTER NO. To 63-321 And A.M. NO. To 320 7495 And Add DESCRIPTION "Cover".

Chart Page No. Ch 4 - 42, Adjacent To CARTER NO. 121-78, Add A.M. NO. 448 5888.

Chart Page No. Ch 4 - 44, For KEY NO. 27, Add A.M. NO. 448 6447.

Chart Page No. Ch 4 - 46, For KEY NO. 27, Add A.M. NO. 448 6447.

Chart Page No. Ch 4 - 48, Adjacent To CARTER NO. 121-78, Add A.M. NO. 448 5888.

Chart Page No. Ch 4 - 50, For KEY NO. 24, Add A.M. NO. 448 6447.

Chart Page No. Ch 4 - 55, Adjacent To CARTER NO. 121-78, Add A.M. NO. 448 5888.

Chart Page No. Ch 4 - 57, Adjacent To CARTER NO. 121-78, Add A.M. NO. 448 5888.

Chart Page No. Ch 4 - 59, Adjacent To CARTER NO. 121-78, Add A.M. NO. 448 5888.

Chart Page No. Ch 4 - 62, Adjacent To CARTER NO. 121-78, Add A.M. NO. 448 5888.

Chart Page No. Ch 4 - 64, Adjacent To CARTER NO. 121-78, Add A.M. NO. 448 5888.

Chart Page No. Ch 4 - 66, For KEY NO. 45, Add A.M. NO. 320 9190.

Chart Page No. Ch 4 - 66, After KEY NO. 47, Change KEY NO. 58 To Read KEY NO. 48.

Chart Page No. Ch 4 - 68, For KEY NO. 45, Add A.M. NO. 320 9190.

Chart Page No. Ch 4 - 69, For HOLLEY NO. 85R-788, Change 2nd Line To Read:
which are coded with a #)(R-2880) 1

Chart Page No. Ch 4 - 69, Prior To HOLLEY NO. 85R-1537, Insert The Following Listing:
85R-2533 320 7116 Pep Kit (R-3199) 1

Chart Page No. Ch 4 - 69, For HOLLEY NO. 85R-1537, Change 2nd Line To Read:
which are coded with a *)(R-2880) 1

Chart Page No. Ch 4 - 69, After HOLLEY NO. 85R-1537, Insert The Following Listing:
85R-2534 320 7117 Repair Kit (R-3199) 1

Chart Page No. Ch 4 - 70, For KEY NO. 27, Add Number (R-2880) After DESCRIPTION.

Chart Page No. Ch 4 - 70, After KEY NO. 27, Repeat KEY NO. 27 With The Following Information:
27 30R-367A 320 7118 Pump Diaphragm Assembly (R-3199) 1

Chart Page No. Ch 4 - 72, For KEY NO. 13, Change HOLLEY NO. To 5R-155 And A.M. NO. To 320 3103.

Chart Page No. Ch 4 - 72, For KEY NO. 18, Change HOLLEY NO. To 9R-184.

Chart Page No. Ch 4 - 72, For KEY NO. 19, Change HOLLEY NO. To 10R-1255A.

Chart Page No. Ch 4 - 73, For A.M. No. 316 3778, Change 2nd Line To Read:
Order 316 4329 HOLLEY NO. R-2442-1 and R-2442-2

Chart Page No. Ch 4 - 74, For KEY NO. 2, Change Part Number From 320 3286 To Part Number 320 3186.

Chart Page No. Ch 4 - 74, For KEY NO. 30, Add A.M. NO. 448 6449.

Chart Page No. Ch 4 - 77, For KEY NO. 17, Add A.M. NO. 448 5887.

Chart Page No. Ch 4 - 80, For KEY NO. 35, Add A.M. NO. 448 6449.

Chart Page No. Ch 4 - 86, For KEY NO. 31, Add A.M. NO. 448 6449.

Chart Page No. Ch 4 - 89, For KEY NO. 30, Add A.M. NO. 448 6449.

Chart Page No. Ch 4 - 89, For KEY NO. 56, Add A.M. NO. 320 6269.

Chart Page No. Ch 4 - 92, For KEY NO. 30, Add A.M. No. 448 6449.

Chart Page No. Ch 4 - 95, For KEY NO. 30, Add A.M. NO. 448 6449.

Chart Page No. Ch 4 - 98, For KEY NO. 31, Add A.M. NO. 448 6449.

Chart Page No. Ch 4 - 102, For KEY NO. 35, Add A.M. NO. 448 6449.

Chart Page No. Ch 4 - 103, For KEY NO. 52, Change HOLLEY NO. To 18R-86AS And A.M. NO. To 320 3038.

Group No. 4.001, Page No. Gr 4 - 1; On Part Number 317 5902, Change Listing To Read:
(HOLLEY 2699)(Use For HOLLEY R2968) 65 10-80 (LHD-V8-WDT)..... ..... 1 317 5902

Group No. 5.065, Page No. Gr 5 - 5, On Part Number 317 2627, Change Listing To Read:
65 01-10(OHV-199): 64-65 10(OHV-232): 65 80(OHV-232). 1 317 2627

Group No. 5.065, Page No. Gr 5 - 5, On Part Number 316 9388, Change Listing To Read:
(Upper) 65 01 (196): 64 10 (OHV-196)..... ..... 1 316 9388

Group No. 5.065, Page No. Gr 5 - 5, On Part Number 316 9389, Change Listing To Read:
(Lower) 65 01 (196): 64 10 (OHV-196)..... ..... 1 316 9389

Group No. 8.420, Page No. Gr 8 - 43; After Part Number 320 3343, Insert The Following Listing:
64-65 01..... ..... 1 320 5007

Note No. 9.100-6, Page No. Gr 9 - 16, Change 53" Long To Read 55" Long.

Note No. 10.338-14, Page No. Gr 10 - 42, After Note No. 10.338-14 Insert The Following Note 10.338-15:

NOTE 10.338-15: Two Types of Steering Gear Jacket Tubes were installed on 63 10 (OHV-196-WST-WES) (OHV-196-WOD-WES). They can be identified as follows:
Type 1: The Steering Gear Jacket Tube Bushing Screws are in a horizontal position.
Type 2: The Steering Gear Jacket Tube Bushing Screws are in a vertical position.

Group No. 10.338, Page No. Gr 10 - 43, After Part Number 320 4312, Insert The Following Listing:
63-64 10 (OHV-196-WST-WES-Note 10.338-15 Type 1)(OHV-196-WOD-WES-Note 10.338-15 Type 1)..... ..... 1 448 5957

Group No. 10.338, Page No. Gr 10 - 43, On Part Number 320 4002, Change Listing To Read:
63-64 10 (OHV-196-WST-WES-Note 10.338-15 Type 2)(OHV-196-WOD-WES-Note 10.338-15 Type 2)..... ..... 1 320 4002

Group No. 23.009, Page No. Gr 23 - 10; The 7th And 8th Part Numbers May Be Illegible. They Should Read 353 9462 And 351 7261 Respectively.

Group No. 27.026, Page No. Gr 27 - 9, Change Part Number 248 7798 Listing To Read Part Number 348 7798.

Group No. 29.120, Page No. Gr 29 - 45, Change The 4th Listing Of Trim Number (T-576) On Part Number 351 8824 To Read:
(T-576)(Right)(WRS)(WIRS)..... ..... 1 351 8824

Group No. 29.120, Page No. Gr 29 - 45, Change The 4th Listing Of Trim Number (T-582) On Part Number 351 8996 To Read Part Number 351 8796.

• INFORMATION BULLETIN •

PARTS DIVISION

PARTS PUBLICATIONS

American Motors

American Motors

Issue Date: 4/9/70

PLEASE MAKE THE FOLLOWING CHANGES TO YOUR F-14063 PARTS CATALOG

Group No. 3.001, Page No. Gr 3-1; After part number 44042, insert the following information:

3.002 CONTACT SET, Ignition (Incl. Condenser)

60 Thru 65 01-10 (Six): 65 50-80..... ..... 1 448 8760
63 Thru 65 10-50-80 (V8) 1 448 8780

Group No. 4.178, Page No. Gr 4-37; On part number 316 7158, change listing to read:

(REAR) 63 18 (W3S)...(Incl. Bracket)..... ..... 1 316 7158

Group No. 8.080, Page No. Gr 8-15; On part number 304 326, change listing to read:

(FRONT) 64 10-80 (V8-Note 8.068-1 Type 2): 65 15-16-17-19 (V8-LDB-Note 8.068-2 Type 1): 63 Thru 65 10 (Heavy Duty - V8): 61 Thru 65 20-80 (Heavy Duty): 63-64 10 (Renault)..... ..... 2 304 326

Group No. 8.485, Page No. Gr 8-46; On part number 320 3362, change listing to read:

62 Thru 6501 (LHD): 62 10 (LHD): 63 Thru 65 10 (Six-LDB): 63 Thru 65 10 (LHD-V8): 62 Thru 65 80..... ..... 1 320 3362

AMERICAN MOTORS CORPORATION
3280 SOUTH CLEMENT AVENUE • MILWAUKEE, WISCONSIN 53201

American Motors

• INFORMATION BULLETIN •

PARTS AND DISTRIBUTION SERVICES DIVISION

PARTS PUBLICATIONS

American Motors

CATALOG CHANGE NOTICE SA67-6

IMPORTANT

The enclosed pages constitute:

A Special Write-in Change Notice to earlier model year Parts Catalogs, for which no revised pages are scheduled to be issued.

Please enter the write-in changes as indicated to the 1960 thru 1966 American Motors Parts Catalogs F-14063 and F-14066.

Also included are write-in changes that are to be made to the 1965 and 1966 American Motors Upholstery Parts Catalogs F-18065 and F-18066.

Please address all catalog inquiries to your Zone Parts Warehouse Manager.

American Motors

3280 SOUTH CLEMENT AVENUE • MILWAUKEE, WISCONSIN 53201

The following changes should be made to your F-14063 Parts Catalog

Group No. 1.067, Page No. Gr 1 - 28, On Part Numbers 317 3326 And 317 3064, Change Listing To Read:

BOLT, Hexagon	65 01-80 (OHV-232-2-9/16" Long): 64-65 10 (OHV-232-2-9/16" Long): 65 10 (OHV-199-2-9/16" Long)	.....	1	317 3326
BOLT, Hexagon	65 01-80 (OHV-232-1-3/16" Long-2 Req.): 64-65 10 (OHV-232-1-3/16" Long-2 Req.): 65 01-10 (OHV-199-1-3/16" Long-2 Req.)	.....	AR	317 3064

Group No. 1.130, Page No Gr 1 - 41, On Part Numbers 312 2392 And 317 5871, Change Listing To Read:

60 Thru 64 01: 65 01 (LHE-Note 1.130-5 Type 1)(OHV-196-Note 1.130-5 Type 1): 60 Thru 64 10	.....	1	312 2392
65 01 (LHE-Note 1.130-5 Type 2)(OHV-196-Note 1.130-5 Type 2))	.....	1	317 5871

Group No. 1.130, Page No. Gr 1 - 41, After Part Number 314 4447, Insert The Following Information:

CHAIN AND SPROCKET KIT, Timing (Incl. Camshaft And Crankshaft Sprocket)

65 01 (LHE-Note 1.130-5 Type 2)(OHV-196-Note 1.130-5 Type 2)	.....	1	320 8107

Group No. 1.132, Page No. Gr 1 - 41, On Part Number 312 2389, Change Listing To Read:

60 Thru 64 01: 65 01 (LHE-Note 1.130-5 Type 1)(OHV-196-Note 1.130-5 Type 1): 60 Thru 64 10 (OHVC-196)	.....	1	312 2389

Note No. 1.130-5, Page No. Gr 1 - 41, Change Note 1.130-5 To Read:

NOTE 1.130-5: Two types of Timing Chains and Sprockets were installed on 65 01 (LHE)(OHV-196). They can be identified as follows:
Type 1: The Timing Chain is 1" wide.
Type 2: The Timing Chain is 7/8" wide.

Note No. 1.130-6, Page No. Gr 1 - 41, Delete Note 1.130-6 From Parts Catalog:

Group No. 1.132, Page No. Gr 1 - 42, On Part Number 317 5870, Change Listing To Read:

65 01 (LHE-Note 1.130-5 Type 2)(OHV-196-Note 1.130-5 Type 2): 65 10 (OHVC-196-Note 1.130-5 Type 2)	.....	1	317 5870

Group No. 1.134, Page No. Gr 1 - 42, On Part Numbers 312 2388 And 317 5869, Change Listing To Read:

60 Thru 64 01: 65 01 (LHE-Note 1.130-5 Type 1)(OHV-196-Note 1.130-5 Type 1): 60 Thru 64 10 (OHVC-196)	.....	1	312 2388
65 01 (LHE-Note 1.130-5 Type 2)(OHV-196-Note 1.130-5 Type 2)	.....	1	317 5869

Group No. 1.146, Page No. Gr 1 - 46, On Part Number 647 4170, Change Listing To Read:

(Std.)(Perfect Circle) 64-65 10 (V8-327): 60 Thru 65 80 (V8)	.....	1	647 4170

Group No. 1.146, Page No. Gr 1 - 46, On Part Number 320 3996, Change Listing To Read:

(.020)(Perfect Circle) 63 Thru 65 01: 63 Thru 65 10 (OHV-196)	.....	1	320 3996

Group No. 1.146, Page No. Gr 1 - 46, On Part Number 320 4492, Change Listing To Read:

(.020)(Perfect Circle) 63 Thru 65 10 (V8-287)	.....	1	320 4492

Group No. 1.146, Page No. Gr 1 - 46, After Part Number 320 3996, Insert The Following Listing:

(.020)(Perfect Circle) 65 01-10 (OHV-199): 65 01-80 (OHV-232): 64-65 10 (OHV-232)	.....	1	320 7597

Group No. 1.151, Page No. Gr 1 - 47, On Part Number 316 9972, Change Listing To Read:

64-65 01 (LHE)(OHVC-196): 64 10 (OHVC-196) 1 316 9972

Group No. 5.160, Page Gr 5 - 12, Delete The First Eight Listings At The Top Of The Page From The Parts Catalog. The Part Numbers Are: 316 2381, 315 7648, 317 3455, 316 7615, 317 2549, 317 2570, 317 4788 And 318 1763.

Group No. 5.160, In Place Of The First Eight Deleted Listings, Add The Following Twelve Parts Listings.

61 20 (Note 5.160-2) 1 316 2381
60-61 80 ..... 1 315 7648
62 80 ..... 1 316 3459
62 10 (WST-Heavy Duty-Note 5.001-1) 1 316 4200
64 10 (V8-Note 5.160-3 Type 2, Note 5.168-5): 65 10 (OHV-232)(V8-Note 5.168-5): 64-65 80 (Note 5.168-5) 1 317 3455
63 Thru 65 10-80 (V8-WCGS-Note 5.168-6) 1 318 1763
64 10 (LHD-Six): 65 10 (OHV-199-LHD) 1 317 2549
60-61 10 (RHD) 1 314 8942
62 10 (RHD) 1 316 3680
63 10 (RHD) 1 316 7615
64 10 (RHD-SIX) 1 317 2570
65 10 (RHD-OHV-232) 1 317 4788

Group No. 5.160, Page Gr 5 - 12, After Part Number 315 8566, SEAL, Lever To Rod, Six Parts Listings Of "RODS" Were Incorrectly Inserted, Delete These Six Listings From The Parts Catalog. The Part Numbers Are: 316 4200, 318 4942, 316 3680, 315 7650, 315 7648 And 316 3459.

Group No. 6.001, Page No. Gr 6 - 1, On Part Number 320 6565, Change Listing To Read:

64-65 10 (LHD-OHV-232-WST): 65 80 (LHD-OHV-232-WST) ***(Replaces 320 5222)*** 1 320 6565

Group No. 6.001, Page No. Gr 6 - 1, After Part Number 320 6565, Insert The Following Listing:

65 10 (RHD-OHV-232-WST-WCGS) 1 320 6566

Group No. 6.001, Page No. Gr 6 - 1, On Part Number 317 6498, Change Listing And Part Number To Read:

65 10 (RHD-OHV-232-WST) ..... ***(Use 320 6566)*** 1 317 6499

Group No. 6.001, Page No. Gr 6 - 2, Part Numbers 320 6783 And 320 6753, Are Each Listed Twice: Delete All Information On All Four Listings From The Parts Catalog:

Group No. 6.001, Page No. Gr 6 - 3, On Part Number 317 6499, Change Listing And Part Number To Read:

65 10 (RHD-OHV-232-WOD) 1 317 6498

Group No. 6.005, Page No. Gr 6 - 5, On Part Number 320 6189, Change Listing To Read:

63 10 (V8-287): 64-65 10 (V8-287-WOD)(V8-287-WST-Note 6.017-2 Type 1 & 3): 64-65 10 (OHV-232-WOD)(OHV-232-WST): 65 80 (OHV-232-WOD)(OHV-232-WST)(V8-287-WOD)(V8-287-WST-Note 6.017-2 Type 3) ***(Replaces 317 1337)*** 1 320 6189

Note No. 6.017-2, Page No. Gr 6 - 6, Change The 1st. Line Of Note 6.017-2 To Read:

NOTE 6.017-2: Three Types of Transmissions were used on the 64-65 10 (WST). They can be identified as

Group No. 6.052, Page No. Gr 6 - 11, After Part Number 310 8320, Insert The Following Listing:

60 Thru 65 01-10 (Six-WOD) 6.040 1 315 6627

Group No. 6.052, Page No. Gr 6 - 11, On Part Number 312 1135, Change Listing To Read:

63 10 (V8-WST)(V8-WOD): 64 10 (V8-287-WST-Note 6.017-2 Types 1 And 3) 1 312 1135

Group No. 6.265, Page No. Gr 6 - 23, On Part Number 311 4534, Change Listing To Read:

60 Thru 65 01-10 (Six-199-WOD)	.....	1	311 4534

Group No. 6.265, Page No. Gr 6 - 23, On Part Number 312 3651, Change Listing To Read:

63 Thru 65 10 (V8-287-WOD): 60-61 20 (WOD): 65 80 (V8-287-WOD): 64-65 10 (Six-232): 65 80 (Six-232)	.....	1	312 3651

Group No. 6.275, Page No. Gr 6 - 23, On Part Number 315 6627, Change Listing To Read:

63 10 (V8-WST): 64 10 (V8-287-WST-Note 6.017-2 Types 1 And 3): 63 Thru 65 10 (V8-287-WOD): 65 80 (V8-287-WOD): 64-65 10 (Six-232): 65 80 (Six-232)	6.040	1	315 6627

Group No. 6.278, Page No. Gr 6 - 23, On Part Number 311 6072, Change Listing To Read:

(.070) 60 01 (WOD)	.....	1	311 6072

Group No. 6.282, Page No. Gr 6 - 24, On Part Number 312 1135, Change Listing To Read:

60 Thru 65 01-10 (Six-WOD): 63 10 (V8-WST)(V8-WOD): 64 10 (V8-287-WST-Note 6.017-2 Type 1 And 3): 64-65 10 (V8-287-WOD): 60-61 20 (WOD): 65 80 (V8-287-WOD): 64-65 10 (Six-232): 65 80 (232)	6.052	1	312 1135

Group No. 6.282, Page No. Gr 6 - 24, Delete Part Number 320 5846, From Parts Catalog:

Group No. 7.085, Page No. Gr 7 - 11, On Part Number 320 3141, Change Listing To Read:

61 01 (WST)(WOD): 60-61 10-20-80 (WST-Note 7.038-1 Type 2): 62 10-80 (WST-Note 7.038-3 Type 2 And 4)(WOD-Note 7.038-3 Type 2 And 4) ..... ***(Replaces 320 2581)***	.....	2	320 3141

Group No. 7.085, Page No. Gr 7 - 11, On Part Number 320 4008, Change Listing To Read:

(Low And Reverse) 64 01 (LHD-WST-WCGS-Note 7.020-3 Type 1) (LHD-WOD-WCGS-Note 7.020-3 Type 1): 63-64 10-80 (LHD-WST-WCGS-Note 7.038-1 Type 2)(LHD-WOD-WCGS-Note 7.038-1 Type 2): ***165 01 (Can-WST-WCGS-Note 7.125-6)***	.....	1	320 4008

Group No. 7.085, Page No. Gr 7 - 11, On Part Number 317 5523, Change Listing To Read:

(Low And Reverse) 65 10-80 (WST-WCGS-LAW)(WOD-WCGS-LAW): 65 01 (LHD-WST-WCGS)(LHD-WOD-WCGS): ***165 01 (Can-WOD-WCGS-Note 7.125-7)***	.....	1	317 5523

Group No. 8.008, Page No. Gr 8 - 3, On Part Number 320 1928, Change Listing To Read:

60 Thru 64 01: 65 01 (Six-196-Note 8.001-5 Type 1)(Six-199-Note 8.001-5 Type 1): ***165 01 (Can): 163-164 10 (Can-Six): 165 10 (Can-Note 8.001-5 Type 1)***	.....	8	320 1928

Group No. 8.400, Page No. Gr 8 - 42, On Part Number 320 4130, Change Listing To Read:

63 10-80 (LHD-V8-Note 8.400-1 Type 1)	.....	1	320 4130

Group No. 8.400, Page No. Gr 8 - 42, On Part Number 320 5003, Change Listing To Read:

63 10-80 (LHD-V8-Note 8.400-1 Type 2): 64 10 (V8-LHD): 65 10 (LHD-V8-Note 8.400-2): 64 80: 65 80 (Note 8.400-2)	.....	1	320 5003

Group No. 8.400, Page No. Gr 8 - 42, On Part Number 320 5902, Change Listing To Read:

65 10 (LHD-V8-LDB-Note 8.400-3): 65 80 (LDB-Note 8.400-3)	.....	1	320 5902

Note 8.400-2, Page No. Gr 8 - 42, Change Note 8.400-2 To Read:

NOTE 8.400-2: On 65 10 (V8-WPB) And 65 80 (WPB) used prior to Car Sequence No. W-010253.

Note 8.400-3, Page No. Gr 8 - 42, Change Note 8.400-3 To Read:

NOTE 8.400-3: On 65 10 (V8-WPB) And 65 80 (WPB) used beginning with Car Sequence No. W-010253.

Group No. 8.405, Page No. Gr 8 - 43, On Part Number 320 5011, Change Listing To Read:

63 10-80 (LHD-V8-Note 8.400-1 Type 2): 64 10 (LHD-V8): 65 10 (LHD-V8-Note 8.400-2): 64 80: 65 80 (Note 8.400-2) 1 320 5011

Group No. 8.405, Page No. Gr 8 - 43, On Part Number 320 5956, Change Listing To Read:

65 10 (LHD-V8-LDB-Note 8.400-3): 65 80 (LDB-Note 8.400-3) 1 320 5956

Group No. 8.480, Page No. Gr 8 - 46, On Part Number 320 5004, Change Listing To Read:

63 10-80 (LHD-V8-Note 8.400-1 Type 2): 64 10 (LHD-V8): 65 10 (LHD-V8-Note 8.400-2): 64 80: 65 80 (Note 8.400-2) 1 320 5004

Group No. 8.480, Page No. Gr 8 - 46, On Part Number 320 5903, Change Listing To Read:

65 10 (LHD-V8-LDB-Note 8.400-3): 65 80 (LDB-Note 8.400-3) 1 320 5903

Group No. 8.485, Page No. Gr 8 - 46, On Part Number 320 3362, Change Listing To Read:

62 Thru 65 01 (LHD): 62 10 (LHD): 63 Thru 65 10 (Six-LDB): 63-64 10 (LHD-V8): 62 Thru 65 80 .... 1 320 3362

Group No. 10.280, Page No. Gr 10 - 31, Change Part Number 317 2090 Listing, To Read Part Number 320 5173.

(T-492)(LHD-770-LAW)***(RHD-770-WAT)***(LHD-990-LAW)...(Incl. Canceling Pin And Spoke Trim Plate) 1 320 5173

Group No. 10.290, Page No. Gr 10 - 35, On Part Number 317 4443, Change Listing To Read:

64-65 01 (RHD-Note 10.290-1 Type 1).....(Replaces 317 0905) 1 317 4443

Group No. 10.290, Page No. Gr 10 - 35, After Part Number 317 4443, Insert The Following Listing:

64-65 01 (RHD-Note 10.290-1 Type 2)..... ..... 1 318 9130

Group No. 10.290, Page No. Gr 10 - 35, After Part Number 317 4619, Insert The Following Note:

NOTE 10.290-1: Two Types of Steering Gears were installed on 64-65 01 (RHD). They can be identified as follows:
Type 1: The Cross Shaft Roller turns on Ball Bearings.
Type 2: The Cross Shaft Roller turns on Needle Bearings.

Group No. 10.306, Page No. Gr 10 - 38, On Part Number 320 4790, Change Listing To Read:

64-65 01 (RHD-Note 10.290-1 Type 1)..... ..... 1 320 4790

Group No. 10.306, Page No. 10 - 38, After Part Number 320 4790, Insert The Following Listing:

64-65 01 (RHD-Note 10.290-1 Type 2) 1 320 8460

Group No. 10.307, Page No. Gr 10 - 38, After Part Number 320 3064, Insert The Following Listing:

64-65 01 (RHD-Note 10.290-1 Type 1)..... ..... 1 320 8457

Group No. 10.346, Page No. Gr 10 - 46, After Part Number 317 5542, Insert The Following Listing:

60-61 10-20-80 (Note 10.338-1 And 2 Type 1) 1 320 2904

Group No. 10.346, Page No. Gr 10 - 46, On Part Number 320 5789, Change Listing To Read:

65 17 (WCGS-WAW): 65 80 (WCGS-WAW)...(Incl. Bearing) 1 320 5789

Group No. 10.346, Page No. Gr 10 - 46, After Part Number 320 5789, Insert The Following Listing:

65 17 (WFGS-WAW): 65 80 (WFGS-WAW)...(Incl. Bearing) 1 320 8253

Group No. 12.001, Page No. Gr 12 - 1, On Part Number 354 2071, INSULATION, Hood, Change Listing To Read:

65 80 ..... 1 354 2071

Group No. 12.001, Page No. Gr 12 - 1, After Part Number 354 2071, INSULATION, Hood, Insert The Following Listing:

65 10 (V8) 1 354 2070

Group No. 12.175, Page No. Gr 12 - 25, On Part Number 316 9394, Change Listing And Part Number To Read:

(Inner-Left) 63 10-80 (Note 12.168-1 Type 2) 1 316 9395

Group No. 12.175, Page No. Gr 12 - 25, Following Part Number 316 6924, On Part Number 316 9395, Change Listing And Part Number To Read:

(Inner-Right) 63 10-80 (Note 12.168-1 Type 2) 1 316 9394

Group No. 15.270, Page No. Gr 15 - 13, On Part Number 899 1189, Change Listing To Read:

(Left) 64 01: 63-64 10: 63 80 ..... 1 899 1189

Group No. 15.420, Page No. Gr 15 - 29, On Part Number 320 5893, Change Listing To Read:

63 Thru 65 10-80 ..... 12 320 5893

Group No. 15.420, Page No. Gr 15 - 29, After Part Number 320 5893, Insert The Following Listing:

64-65 01 ..... 12 320 7461

Group No. 16.040, Page No. Gr 16 - 6, On Part Number 317 1964, Change Listing To Read:

64-65 01 (LHE): 64-65 01 (OHV-196): 64 10 (OHV-196) 1 317 1964

Group No. 16.040, Page No. Gr 16 - 6, On Part Number 317 2626, Change Listing To Read:

65 01 (OHV-199): 65 01 (Six-232): 64-65 10 (OHV-232): 65 10 (OHV-199): 65 80 (OHV-232)...(Less Dowels) 1 317 2626

Group No. 22.056, Page No. Gr 22 - 12, On Part Number 351 6796, BEZEL, Change Listing To Read:

65 10 (550-LHD-WAT-WCGS)(660-770-WST-LAW)(660-770-LHD-WOD-LAW) (660-770-WOD-WFGS-LAW): 65 50 (Marlin-LHD-WST-LAW) (Marlin-LHD-WOD-LAW)(Marlin-WOD-WFGS-LAW): 65 80 (LHD-WST-LAW) (LHD-WOD-LAW)(LHD-WAT-WFGS-LAW) 1 351 6796

Group No. 22.100, Page No. Gr 22 - 28, After Trim Number (T-1893)(Lower), Insert The 3 Following Listings:

(T-190)(Upper)(LAC) 1 345 5237
(T-190)(Upper)(WAC) 1 345 5238
(T-190)(Lower) 1 345 5239

Group No. 22.100, Page No. Gr 22 - 28, After Trim Number (T-1963)(Lower), Insert The 6 Following Listings:

(T-197)(Upper)(WAC)	.....	1	347 0997
(T-197)(Upper)(LAC)	.....	1	347 0996
(T-197)(Lower)	.....	1	347 0998
(T-198)(Upper)(LAC)	.....	1	347 0996
(T-198)(Upper)(WAC)	.....	1	347 0997
(T-198)(Lower)	.....	1	347 0998

ILLUSTRATION PAGE NO. IL 26 - 57, For Model 65 18 (770). Part Numbers 448 2075 Are Incorrectly Listed. Change Information On Both Listings From:

26.077	4482075	ORNAMENT
26.077	4482075	ORNAMENT

To:

26.077	4482076R - 77L	ORNAMENT
26.077	4482076R - 77L	ORNAMENT

ILLUSTRATION PAGE NO. IL 26 - 57, For Model 65 18 (770). Part Numbers 349 0337L - 36R Are Incorrectly Listed. Change Information From:

26.077	3490337L - 36R	MOULDING

To:

26.077	4480841L - 40R	MOULDING

Group No. 27.208, Page No. Gr 27 - 18, On Part Number 350 0608, Change Listing And Part Number To Read:

(Left) 64-65 08	29.208	1	350 0609

Group No. 27.208, Page No. Gr 27 - 18, Following Part Number 344 7266, On Part Number 350 0609, Change Listing And Part Number To Read:

(Right) 64-65 08	29.208	1	350 0608

The Following Changes Should Be Made To Your F-14066 Parts Catalog:

Group No. 1.058, Page No. Gr 1 - 7, Change Part Number 317 7937 Listing To Read Part Number 315 7937:

66 10-50-80 (V8-287-WST)(V8-287-WOD)(V8-287-W4ST)(V8-327-WST)(V8-327-W4ST) ...	.....	1	315 7937

Group No. 1.138, Page No. Gr 1 - 19, Change Second Listing Of Part Number 320 1232, To Read Part Number 320 1233:

(.002) 66 10-50-80 (V8) ..... ***(Replaces 320 0821)***	.....	8	320 1233

Note 3.321-1, Page No. Gr 3 - 26, Change First Line Of Note 3.321-1 To Read:

NOTE 3.321-1: It is an Ainsworth Part. The Steering Gear Jacket Tube is 3" long from the Center of the Welded

Note 3.321-2, Page No. Gr 3 - 26, Change First Line Of Note 3.321-2 To Read:

NOTE 3.321-2: It is A Douglas Part. The Steering Gear Jacket Tube is 6" long from the Center of the Welded

Chart Page No. Ch 4 - 26, Key No. Two , Add Part Number 320 8579.

2	ZIP KIT	4.001	1	320 8579

Note 7. 038-4, Page No. Gr 7 - 7, Change Type 1 And Type 2 Listing Information To Read:

Type 1: The Low And Reverse Lever is bent downward.
Type 2: The Low And Reverse Lever is bent upward.

Group No. 8. 270, Page No. Gr 8 - 19, On Part Number 318 5822, Change Listing And Part Number To Read Part Number 316 6732.

(14" x 5. 00") 66 08 (Six): 66 05-06-07-09 (Six-232): 66 15-16-17-19 (Six-LDB) 5 316 6732

Group No. 8. 270, Page No. Gr 8 - 19, After Part Number 316 6732, Insert The Following Listing.

(14" x 5. 00") 66 01 (V8-LDB) 5 318 9155

Group No. 10. 280, Page No. Gr 10 - 10, After Trim No. T-697Y, Insert The Following Listing.

(T-698)...(Incl. Canceling Pin And Trim Plate) 1 320 6591

Group No. 10. 828, Page No. Gr 10 - 29, On Part Number 320 5778, Change Listing To Read:

66 10-50-80 (WAW)(Plain) 1 320 5778

Group No. 10. 828, Page No. Gr 10 - 29, After Part Number 320 5778, Insert The Following Listing:

66 10-50-80 (WAW-Nylon-Locking) 1 320 8683

Group No. 10. 829, Page No. Gr 10 - 29, After Part Number 320 5780, Insert The Following Information.

WASHER, Steering Gear Shaft Upper Bearing Plain

66 10-50-80 (WAW) 1 320 5038

Group No. 12. 125, Page No. Gr 12 - 6, On Part Number 448 3354, PANEL, Change Listing To Read:

(Right) 66 18-88 (LVT)(WVT-L3S) 1 448 3354

Group No. 12. 125, Page No. Gr 12 - 6, On Part Number 448 3356, Change Listing To Read:

(Right) 66 18-88 (WVT-W3S) 1 448 3356

Group No. 16. 115, Page No. Gr 16 - 6, Change Part Number Listing 318 5581 To Read 316 4874:

66 01: 66 10-50-80 (Six) ..... 16. 125 AR 316 4874

Group No. 16. 125, Page No. Gr 16 - 17, Change Part Number Listing 318 5581 To Read 316 4870:

66 01: 66 10-50-80 (Six) .... AR 316 4870

Group No. 27. 208, Page No. Gr 27 - 6, On Part Number 350 0608, Change Part Number Listing To Read 350 0609.

(Left) 66 08 .... 1 350 0609

Group No. 27. 208, Page No. Gr 27 - 6, Following Part Number 355 3459, On Part Number 350 0609, Change Part Number Listing To Read 350 0608.

(Right) 66 08 .... 1 350 0608

Group No. 27. 250, Page No. Gr 27 - 7, On Trim No. T-649, Part Number 318 3689, Change Part Number Listing To Read 318 3589.

(T-649) 66 01 (WAT-WFGS) 1 318 3589

ALPHABETICAL INDEX

DESCRIPTION	GROUP NO.
– A –	
ABSORBER, Dynamic	11.900
ABSORBER KIT, Dynamic	11.390
ACTUATOR ASSEMBLY, Folding Top Manual Operating Counter Balance	28.050
ACTUATOR ASSEMBLY, Front Seat Cushion Lounge Tilt	29.140
ACTUATOR, Back-Up Lamp Switch	3.319
ACTUATOR, Electric Windshield Wiper Drive Link	22.238
ACTUATOR, Steering Wheel	10.830
ADAPTER, Air Conditioning Intermediate Pulley	13.430
ADAPTER, Clock Wire Terminal	3.378
ADAPTER, Converter Housing To Cushion	1.013
ADAPTER, Courtesy Lamp Assembly Wire	3.349
ADAPTER, E-Stick Intake Manifold	5.250
ADAPTER, Gear Shift Lever Boot	7.011
ADAPTER, Headlamp Switch Wire	3.145
ADAPTER, Hydrovac Fitting	8.595
ADAPTER KIT, Air Conditioning	15.015
ADAPTER KIT, Crankshaft Pilot Bushing	1.043
ADAPTER KIT, Power Brake	15.310
ADAPTER, Life Guard Safety Tire Pressure Check	8.270
ADAPTER, Oil Filter	1.208
ADAPTER, "Open Door" Warning Lamp At Fuse Panel	3.655
ADAPTER, Overdrive Case To Torque Tube	6.290
ADAPTER, Overdrive Housing	6.265
ADAPTER, Overdrive Rear Oil Seal	6.286
ADAPTER, Overdrive Vacuum Switch	6.368
ADAPTER, Power Brake Vacuum Nipple	8.460
ADAPTER, Rear Air Suspension Rear Leveling Valve	11.365
ADAPTER, Speedometer Driven Gear Double Drive	3.590
ADAPTER, Speedometer Wire Terminal	3.550
ADAPTER, Steering Gear Shaft Lower Bearing	10.768
ADAPTER, Steering Wheel	10.280
ADAPTER, Torque Tube	9.156
ADAPTER, Transmission To Reverse Gear Housing	6.030
ADAPTER, Transmission To Torque Tube	6.030
ADAPTER, Trunk Lamp Assembly Wire Terminal	3.660
ADJUSTER ASSEMBLY, Power Steering Gear Upper Thrust Bearing	10.635
ADJUSTER, E-Stick Servo Self	5.302
ADJUSTER, Steering Gear Worm Ball Bearing	10.326
AIR CONDITIONING KIT	15.015
ALTERNATOR	3.005
ALTERNATOR	3.016
AMMETER, Alternator	3.600
ANCHOR, Brake Pedal Return Spring	8.168
ANCHOR, Brake Shoe Hold Down Spring	8.008
ANCHOR, Clutch Beam Pull Back Spring	5.184
ANCHOR, Clutch Throwout Lever Spring	5.132
ANCHOR, Clutch Throwout Lever Spring	5.178
ANCHOR, Clutch Throwout Lever Spring	5.190
ANCHOR, Throttle Control Cable	4.024

DESCRIPTION	GROUP NO.
A - Cont.	
ANCHOR, Tow Start Control To Upper Lever.	5.360
ANTENNA, Front Fender	15.030
ANTENNA, Rear Deck	15.030
ANTI-FREEZE	15.040
ANTI-SLIP, Steering Gear Upper Jocket	10.338
ANTI-SQUEAK, Air Intake Panel To Fender.	2.051
ANTI-SQUEAK, Front Fender Cross Tie Baffle To Grille Panel	12.009
ANTI-SQUEAK, Front Fender To Body Pillar	12.075
ANTI-SQUEAK, Front Fender To Body Pillar At Side Sill	12.075
ANTI-SQUEAK, Front Fender To Grille Panel	12.075
ANTI-SQUEAK, Front Fender To Side Sill	12 075
ANTI-SQUEAK, Grille Panel To Engine Front Crossmember	2.051
ANTI-SQUEAK, Grille Panel To Fender	2.051
ANTI-SQUEAK, Grille Panel To Shroud	2.051
ANTI-SQUEAK, Grille Panel To Wheelhouse.	2.051
ANTI-SQUEAK, Instrument Panel To Cowl Side	22.056
ANTI-SQUEAK, Lower Radiator Air Baffle To Fender	2.062
ANTI-SQUEAK, Radiator Support To Wheelhouse	2.023
ANTI-SQUEAK, Side Radiator Air Baffle To Wheelhouse	2.062
ANTI-SQUEAK, Windshield Side Finish Moulding	26.001
APPEARANCE SUPPLIES	15.050
ARM AND LINK, Rear Deck Door Hinge	23.028
ARM ASSEMBLY, Front Suspension Upper Control	10.066
ARMATURE, Electric Windshield Wiper Motor	22.205
ARMATURE, Folding Top Operating Power Unit Motor	28.058
ARM, Bottom Frame Outer Hinge Adjusting	29.103
ARM, Directional Signal Switch	3.321
ARM, Distributor Advance	3.030
ARM, Front Suspension Lower Control	10.045
ARM, Front Suspension Upper Control	10.066
ARM KIT, Front Suspension Lower Control	10.045
ARMOR, Cowl Ventilator Cable	22.018
ARMOR, Overdrive Control Core	6.350
ARM, Outside Rear View Mirror Head Mounting	15.270
ARM, Power Brake Lever	8.665
ARM, Rear Deck Door Hinge	23.028
ARM, Rear Door Electric Operated Window Regulator	23.305
ARM, Rear Seat Back Center Armrest	29.232
ARMREST ASSEMBLY, Trimmed Front Seat Back Center	29.141
ARMREST ASSEMBLY, Trimmed Rear Seat Back Center	29.230
ARMREST, Door	******
ARMREST, Rear Quarter Side	******
ARM, Steering Knuckle	10.035
ARM, Steering Linkage Idler	10.108
ARM, Steering Linkage Pitman	10.104

****** Refer separate Upholstery parts catalog

Copyright 1963 American Motors Corp.

ALPHABETICAL INDEX

DESCRIPTION	GROUP NO.
A - Cont.	
ARM, Valve Rocker	1.097
ARM, Windshield Wiper	22.044
ATTACHING PARTS, Carburetor	4.010
ATTACHING PARTS, License Plate	14.108
ATTACHING PARTS, Main Bearing Cap	1.034
ATTACHING PARTS, Steering Linkage Idler Arm To Bracket Pivot	10.112
AXLE, Conventional Differential Rear	9.001
AXLE, Locking Differential Rear	9.001
– B –	
BACK ASSEMBLY, Trimmed Front Seat	29.101
BACK ASSEMBLY, Trimmed Front Seat	******
BACK ASSEMBLY, Trimmed Rear Seat	29.210
BACK ASSEMBLY, Trimmed Rear Seat	******
BACK ASSEMBLY, Trimmed Third Seat	29.250
BACK ASSEMBLY, Trimmed Third Seat	******
BAFFLE, Air Conditioning Evaporator Housing Lower	13.488
BAFFLE, Air Conditioning Expansion Valve	13.470
BAFFLE, Automatic Transmission Breather	16.100
BAFFLE, Automatic Transmission Case Breather	16.010
BAFFLE, Automatic Transmission Control Valve Deflector	16.215
BAFFLE, Brake Master Cylinder Heat	8.035
BAFFLE, Engine Breather Chamber Oil Deflector	1.020
BAFFLE, Engine Breather Chamber Oil Deflector	1.115
BAFFLE KIT, Folding Top Covering Belt Rail Water	28.062
BAFFLE, Front Fender Cross Tie	12.009
BAFFLE, Overdrive Housing Adapter Oil	6.265
BAFFLE, Power Steering Pump Oil Reservoir	10.465
BAFFLE, Radiator Air	2.062
BAFFLE, Rear Fender Fuel Tank	20.278
BAFFLE, Valve Tappet Chamber Oil	1.108
BALL, Automatic Transmission Governor Steel	16.085
BALL, Automatic Transmission Lower Control Valve Steel	16.215
BALL, Automatic Transmission Manual Valve Detent Lever Spring Steel	16.225
BALL, Automatic Transmission Speedometer Drive Gear Steel	16.248
BALL, Automatic Transmission Sun Gear Steel	16.140
BALL, Folding Top Operating Power Unit Pump Drive	28.058
BALL, Gear Shift Lower Lever Fulcrum	7.001
BALL, Gear Shift Upper Lever	7.020
BALL, Hydrovac Hydraulic Master Piston	8.575
BALL JOINT KIT, Front Suspension Lower Control Arm	10.048
BALL KIT, Power Steering Gear Rack-Piston	10.572
BALL, Speedometer Drive Gear	6.240
B - Cont.	
BALL, Throwout Lever Pivot	5.130
BAND, Air Conditioning Evaporator Housing To Duct Connector	13.488
BAND, Automatic Transmission Front Brake	16.130
BAND, Automatic Transmission Rear Brake	16.155
BAR ASSEMBLY, Radiator Grille	2.050
BAR, Bracket To Bumper Rail Cross	14.104
BAR, Clutch Beam Support	5.178
BAR, Electric Operated Window Regulator Control Master Switch Bus	23.330
BAR, Front Bumper Back	12.175
BAR, Front Seat Back Center Armrest Lock	29.142
BAR, Front Suspension Lower Control Arm Pivot	10.050
BAR, Front Suspension Upper Control Arm Pivot	10.069
BAR, Rear Bumper Back	12.178
BAR, Seat Belt Slide	15.365
BAR, Tailgate Hinge Torque	23.006
BAR, Torque Tube Stabilizer	9.140
BAR, Vertical	12.184
BAR, Windshield Header	20.160
BASE ASSEMBLY, Back-Up Lamp	3.316
BASE, Back-Up Lamp	3.316
BASEBOARD ASSEMBLY, Trimmed Cargo Platform	******
BASE, Cargo Area Lamp	3.670
BASE, Domelamp	3.346
BASE, Door Window Regulator Handle Escutcheon	23.102
BASE, Hood Medallion	12.004
BASE, Jack	14.140
BASE, Name Plate	2.050
BASE, Rear Quarter Lamp	3.675
BASE, Rear Quarter Window Regulator Handle Escutcheon	24.004
BASE, Remote Control Handle Escutcheon	23.059
BASE, Tailgate Escutcheon	23.039
BASE, Tailgate Window Regulator Handle	23.078
BASE, Tailgate Window Regulator Handle Escutcheon	23.078
BATTERY	3.080
BATTERY, Dry Charge	15.072
BATTERY, Rambler Brand	15.072
BEAM ASSEMBLY, Clutch	5.175
BEARING, Accelerator Control Shaft	4.055
BEARING, Air Conditioning Compressor Drive Pulley	13.415
BEARING, Automatic Transmission Planetary To Output Shaft Needle	16.152
BEARING, Automatic Transmission Rear Clutch Drum Needle	16.125
BEARING, Automatic Transmission Sun Gear Needle	16.145
BEARING, Carburetor Control Shaft	4.070
BEARING, Carburetor Control Shaft Bellcrank Bracket	4.060
BEARING, Carburetor Control Shaft Rod	4.065
BEARING, Connecting Rod	1.138

****** Refer separate Upholstery parts catalog

Copyright 1963 American Motors Corp.

ALPHABETICAL INDEX

DESCRIPTION	GROUP NO.
B - Cont.	
BEARING, Door Electric Operated Window Regulator Pinion Shaft End	23.308
BEARING, Front Suspension Upper Control Arm Trunnion Needle	10.042
BEARING, Front Wheel	8.292
BEARING, Gear Shift Bellcrank Shaft To Bracket	7.110
BEARING, Gear Shift Bellcrank To Bracket	7.110
BEARING, Gear Shift Upper Lever Housing	7.020
BEARING KIT, Front Wheel	8.292
BEARING KIT, Power Steering Gear Upper Thrust	10.630
BEARING KIT, Propeller Shaft Center	9.144
BEARING KIT, Power Steering Gear Lower Thrust	10.565
BEARING KIT, Rear Axle Differential Side	9.041
BEARING KIT, Rear Axle Pinion	9.052
BEARING KIT, Rear Wheel	8.300
BEARING KIT, Steering Gear Worm	10.322
BEARING KIT, Steering Knuckle Pin Thrust	10.023
BEARING, Overdrive Front Ball	6.275
BEARING, Overdrive Rear Ball	6.282
BEARING, Power Steering Gear Pitman Shaft Needle	10.595
BEARING, Power Steering Gear Upper Thrust Bearing Adjuster Needle	10.640
BEARING, Rear Axle Differential Side	9.041
BEARING, Rear Axle Drive Shaft	9.073
BEARING, Rear Axle Pinion	9.052
BEARING, Rear Quarter Electric Operated Window Regulator Pinion Shaft End	24.203
BEARING, Rear Wheel	8.300
BEARING SET, Camshaft	1.041
BEARING SET, Connecting Rod	1.138
BEARING SET, Main	1.023
BEARING, Steering Gear Jacket Tube Upper	10.344
BEARING, Steering Gear Shaft	10.827
BEARING, Steering Gear Shaft Lower	10.765
BEARING, Steering Gear Shaft Lower Ball	10.880
BEARING, Steering Gear Upper Shaft Coupling	10.722
BEARING, Steering Gear Worm	10.322
BEARING, Steering Gear Worm Ball	10.316
BEARING, Steering Knuckle Pin Thrust	10.023
BEARING, Tailgate Electric Operated Window Regulator Pinion Shaft End	23.308
BEARING, Transmission Adapter	6.030
BEARING, Transmission Front Ball	6.040
BEARING, Transmission Rear Ball	6.052
BEARING, Transmission Reverse Gear Housing Rear Ball	6.030
BELLCRANK, Accelerator Pedal Rod	4.050
BELLCRANK, Carburetor Control Shaft	4.060
BELLCRANK, Clutch Release Idler Outer	5.168
BELLCRANK, Gear Shift	7.110
BELLCRANK, Hand Operated Parking Brake	8.187
BELLCRANK, Power Brake Operating	8.430
B - Cont.	
BELLCRANK, Rear Door Locking	23.055
BELLCRANK, Rear Door Push Button Locking	23.057
BELLCRANK, Throttle Control Accelerator Pedal	4.024
BELT, Air Conditioning Compressor	13.425
BELT AND BUCKLE, Seat Belt	15.365
BELT, Fan, Generator And Alternator	2.016
BELT, Fan, Generator And Alternator	3.008
BELT, Power Steering Pump	10.455
BELT, Rear Air Suspension Compressor Drive	11.330
BELT, Seat Belt	15.365
BELT SET, Alternator	3.008
BELT SET, Fan-Alternator	2.016
BEZEL, Air Conditioning Air Discharge Grille	13.515
BEZEL ASSEMBLY, Gear Shift Lever	7.014
BEZEL ASSEMBLY, Instrument Cluster	3.510
BEZEL ASSEMBLY, Tail, Stop And Rear Directional Signal Lamp	3.303
BEZEL, Cigar Lighter Assembly Lamp	3.352
BEZEL, Door Lock Cylinder	23.081
BEZEL, Front Fender Antenna	15.030
BEZEL, Gear Shift Lever	7.014
BEZEL, Heater And Defroster Control	13.017
BEZEL, Heater-Defroster And Air Conditioning Blower Control	13.078
BEZEL, Ignition Switch	3.130
BEZEL, Instrument Cluster	3.510
BEZEL, Instrument Control Dial	3.510
BEZEL, Instrument Panel Control Overlay	22.100
BEZEL, Instrument Panel Radio And Clock Opening	22.100
BEZEL, Instrument Panel Steering Column Opening	22.100
BEZEL, Parking Brake Warning Lamp	3.650
BEZEL, Radiator Grille Medallion	2.050
BEZEL, Radio	15.320
BEZEL, Radio And Clock Opening	15.320
BEZEL, Radio Rear Speaker	15.320
BEZEL, Rear Quarter Lamp Lens Retainer	3.675
BEZEL, Tailgate Lock Cylinder	23.081
BLADE, Air Conditioner Blower Motor	13.072
BLADE, Heater And Defroster Blower Motor	13.072
BLADE, Overdrive Solenoid Contact	6.328
BLADES, Fan	2.002
BLADE, Windshield Wiper	22.043
BLEED, Carburetor Choke Heater Tube Air	4.020
BLOCK ASSEMBLY, Engine Cylinder	1.020
BLOCK, Brake Shoe Anchor Pin Guide	8.022
BLOCK, Double Terminal	3.218
BLOCK, Junction	3.213
BLOCK, Rear Axle Differential Pinion Shaft Thrust	9.039
BLOCK, Triple Terminal	3.218
BLOCK, Valve Rocker Arm Shaft	1.101
BOARD ASSEMBLY, Front Seat Back Center Armrest	29.142

****** Refer separate Upholstery parts catalog

Copyright 1963 American Motors Corp.

ALPHABETICAL INDEX

DESCRIPTION	GROUP NO.
B - Cont.	
BODY, Air Conditioning Receiver Check Valve	13.455
BODY, Air Conditioning Reciever Pressure Relief Valve	13.455
BODY ASSEMBLY, Engine Oil Pump	1.155
BODY ASSEMBLY, E-Stick Valve	5.290
BODY ASSEMBLY, Hydrovac Valve	8.555
BODY ASSEMBLY, Parking And Front Directional Signal Lamp	3.292
BODY ASSEMBLY, Tail, Stop And Rear Directional Signal Lamp	3.303
BODY, Automatic Transmission Front Servo	16.060
BODY, Automatic Transmission Rear Oil Pump	16.100
BODY, Automatic Transmission Rear Servo	16.070
BODY, E-Stick Servo	5.310
BODY, Headlamp	3.248
BODY, Power Brake Master Cylinder	8.720
BODY, Power Steering Pump	10.430
BODY, Tail, Stop And Rear Directional Signal Lamp	3.303
BODY, Water Pump	2.082
BODY, Windshield Wiper Pivot Shaft	22.047
BOLT, Brake Master Cylinder	8.050
BOLT, Brake Master Cylinder Outlet Fitting	8.040
BOLT, Brake Pedal To Link	8.156
BOLT, Cylinder Head To Block	1.063
BOLT, Folding Top Rail Stop	28.015
BOLT, Front Suspension Lower Control Arm Pivot	10.050
BOLT, Front Suspension Upper Control Arm Pivot	10.069
BOLT, Hood Lock	12.060
BOLT, Intake Manifold Hole Plug	1.067
BOLT KIT, Front Suspension Lower Control Arm Pivot	10.050
BOLT KIT, Front Suspension Upper Control Arm Pivot	10.069
BOLT KIT, Steering Gear Shaft Flange	10.870
BOLT, Power Brake Master Cylinder Piston Stop	8.515
BOLT, Rear Leaf Spring Center	11.116
BOLT, Seat Back Lock	29.105
BOLT, Shaft Assembly Spacer Lever	6.338
BOLT, Spare Wheel Carrier Lock To Wheel	8.370
BOLT, Spare Wheel Mounting Carriage	8.330
BOLT, Steering Linkage Idler Arm To Bracket Pivot	10.112
BOLT, Turning Radius Stop	10.010
BOLT, Wheel To Hub	8.288
BOOT, Automatic Transmission Solenoid	16.235
BOOT, Automatic Transmission Solenoid Cover	16.235
BOOT, Brake Master Cylinder	8.052
BOOT, Clutch Pivot To Lever	5.168
BOOT, Clutch Throwout Lever	5.125
BOOT, Distributor To Coil High Tension Wire	3.232
BOOT, Folding Top Dust	28.073

DESCRIPTION	GROUP NO.
B - Cont.	
BOOT, Gear Selector Lever	7.245
BOOT, Gear Shift Lever	7.011
BOOT, Ignition Wire To Coil	3.228
BOOT, Ignition Wire To Distributor	3.228
BOOT, Ignition Wire To Spark Plug	3.228
BOOT, Overdrive Governor	6.329
BOOT, Parking Brake Cable	8.192
BOOT, Power Brake Air Valve	8.685
BOOT, Torque Tube Trunnion Rubber	9.146
BOOT, Tow Start Cable To Trunnion	5.370
BOOT, Transmission Brake Cable	7.250
BOW, Headlining Trim	27.024
BOWL, Fuel Pump Filter	4.110
BOWL, Gasoline Filter Glass	15.190
BOWS, Folding Top	28.037
BOX, Battery	3.082
BOX, Glove	22.058
BOX, Rear Auxiliary Floor Side Compartment	20.439
BOX, Rear Compartment Ash Receiver	27.287
BOX, Rear Door Ash Receiver	23.184
BOX, Rear Quarter Side Ash Receiver	24.054
BRACE, Alternator To Cylinder Head	3.014
BRACE, Alternator To Manifold	3.014
BRACE, Battery Box	3.082
BRACE, Belt Rail To Floor	20.350
BRACE, Belt Rail To Rear Quarter Outer	20.345
BRACE, Brake Master Cylinder	8.036
BRACE, Brake Pedal Support To Dash Panel	8.164
BRACE, Clutch Pedal Support	5.152
BRACE, Cowl Top To Wheelhouse Panel	20.093
BRACE, Engine Front Support	1.004
BRACE, Exhaust Pipe	4.195
BRACE, Front Side Sill To Dash Panel	20.070
BRACE, Front Side Sill To Rear Side Sill	20.070
BRACE, Front Suspension Crossmember To Strut Rod Bracket	10.002
BRACE, Front Suspension Lower Control Arm Pivot Bar	10.051
BRACE, Hand Operated Parking Brake Lever	8.180
BRACE, Hydrovac Mounting	8.590
BRACE, Hydrovac Mounting Bracket	8.590
BRACE, Inner Uniside Panel To Dash And Side Sill	20.170
BRACE, Inner Uniside Panel To Side Sill At Front Pillar	20.170
BRACE, Instrument Panel To Dash Panel	22.056
BRACE, Lower Center Panel To Floor	20.335
BRACE, Pedal Bracket To Dash Panel	22.056
BRACE, Pillar To Floor Pan	20.205
BRACE, Pillar To Side Sill	20.205
BRACE, Power Steering Cylinder To Sill Mounting Bracket To Crossmember	10.427
BRACE, Power Steering Pump Pulley Belt Adjusting Plate To Cylinder Head	10.455
BRACE, Power Steering Pump To Block Or Compressor Mounting Bracket	10.450
BRACE, Power Steering Pump To Cylinder Head	10.450
BRACE, Power Steering Pump To Mounting Bracket	10.450

****** Refer separate Upholstery parts catalog

Copyright 1963 American Motors Corp.

DESCRIPTION	GROUP NO.
B - Cont.	
BRACE, Power Steering Pump To Water Manifold	10.450
BRACE, Radiator Support To Upper Baffle	2.023
BRACE, Rear Air Suspension Compressor Mounting Bracket To Water Pump	11.315
BRACE, Rear Bumper Splash Panel	12.245
BRACE, Rear Deck Door Hinge Support	23.028
BRACE, Rear Lower Panel To Floor	20.335
BRACE, Rear Quarter Outer Panel	12.125
BRACE, Rear Wheelhouse To Floor	20.272
BRACE, Rear Wheelhouse To Floor Pan	20.265
BRACE, Rear Wheelhouse To Rear Quarter Outer Panel	20.272
BRACE, Rear Window Opening Reinforcement	20.397
BRACE, Seat Cushion Diagonal Wire	29.103
BRACE, Side Roof Rail To Rear Window Opening Panel	20.255
BRACE, Side Sill To Floor Reinforcement Channel	20.070
BRACE, Steering Gear	10.357
BRACE, Tow Start Mounting	5.350
BRACE, Wheelhouse To Floor	20.270
BRACKET, Accelerator Cable Bracket To Cylinder Head	4.057
BRACKET, Accelerator Control Rod	4.055
BRACKET, Accelerator Pedal Rod Bellcrank Mounting	4.050
BRACKET, Air Conditioner Blower Housing Mounting Plate To Dash	13.072
BRACKET, Air Conditioning Air Discharge Duct Mounting	13.510
BRACKET, Air Conditioning Compressor Mounting	13.410
BRACKET, Air Conditioning Compressor Mounting Bracket Support	13.410
BRACKET, Air Conditioning Condenser Core Tube Support	13.450
BRACKET, Air Conditioning Evaporator To Receiver Hose Clip	13.440
BRACKET, Air Conditioning Intermediate Pulley Adapter To Cylinder Head	13.430
BRACKET, Air Conditioning Intermediate Pulley Adjusting	13.430
BRACKET, Air Conditioning Intermediate Pulley Mounting	13.430
BRACKET, Air Conditioning Intermediate Pulley To Compressor Bracket	13.430
BRACKET, Air Conditioning Opening Cover	22.100
BRACKET, Air Conditioning Receiver Clip	13.455
BRACKET, Air Conditioning Recirculating Air Damper Cable	13.013
BRACKET, Alternator	3.018
BRACKET, Alternator Ammeter Mounting	3.600
BRACKET, Alternator Mounting	3.014
BRACKET, Anchor Spring	5.178
BRACKET ASSEMBLY, Front Suspension Lower Control Arm Strut Rod To Side Sill	10.055
BRACKET ASSEMBLY, Left Front Seat Back Hinge	29.105
B - Cont.	
BRACKET ASSEMBLY, Right Front Seat Back Hinge	29.105
BRACKET, Automatic Transmission Cable	16.300
BRACKET, Automatic Transmission Lever	16.300
BRACKET, Automatic Transmission Oil Cooler Tube Clip	16.230
BRACKET, Automatic Transmission Oil Filler Tube	16.020
BRACKET, Automatic Transmission Rear Bearing Retainer To Engine Rear Crossmember Insulator	16.177
BRACKET, Automatic Transmission Solenoid Kickdown Switch	16.245
BRACKET, Automatic Transmission Vacuum Tube	16.240
BRACKET, Back-Up Lamp Housing Assembly To Bumper Rail	3.316
BRACKET, Back-Up Lamp Switch	3.319
BRACKET, Bar	5.178
BRACKET, Battery Box Rear Support	20.120
BRACKET, Battery Box Support	3.082
BRACKET, Body To Door	3.248
BRACKET, Bottom Frame Outer Hinge Adjusting Stop	29.103
BRACKET, Brace To Wheelhouse Panel	20.093
BRACKET, Brake And Gas Tube Support	8.101
BRACKET, Brake Pedal	8.164
BRACKET, Brake Pedal Stop	8.172
BRACKET, Carburetor Control Shaft	4.070
BRACKET, Carburetor Control Shaft Bellcrank Mounting	4.060
BRACKET, Carburetor Control Shaft Rod	4.065
BRACKET, Carburetor Pull Back Spring Anchor	4.080
BRACKET, Carburetor Pull-Back Spring And Ignition Wire Seperator	4.065
BRACKET, Cargo Area Lamp	3.670
BRACKET, Clutch Beam Support Or Beam	5.178
BRACKET, Clutch Pedal Stop Cushion	5.164
BRACKET, Clutch Release Idler Outer Lever	5.168
BRACKET, Condenser Hose	13.450
BRACKET, Console Housing Mounting	27.251
BRACKET, Courtesy Lamp Switch To Instrument Panel	3.145
BRACKET, Courtesy Lamp To Instrument Panel	3.349
BRACKET, Cowl Top To Wheelhouse Brace Mounting	20.150
BRACKET, Cowl Ventilator Control Cable	22.018
BRACKET, Cylinder Head Cover	1.068
BRACKET, Directional Signal Switch	3.321
BRACKET, Domelamp Base To Windshield Header Bar	3.346
BRACKET, Door Check Link	23.096
BRACKET, Duct Mounting	13.118
BRACKET, Dynamic Absorber Mounting	11.395
BRACKET, Electric Windshield Wiper Motor Lead Wire	22.254
BRACKET, Engine Front Support Mounting	1.004

****** Refer separate Upholstery parts catalog

Copyright 1963 American Motors Corp.

ALPHABETICAL INDEX

DESCRIPTION	GROUP NO.
B - Cont.	
BRACKET, Engine Rear Support Crossmember To Cushion	1.014
BRACKET, Engine Rear Support Crossmember To Torque Tube	1.010
BRACKET, E-Stick Actuator Cam	5.330
BRACKET, E-Stick Actuator Cam Stop	5.327
BRACKET, E-Stick Spring Hold Down	5.340
BRACKET, Folding Top Front Header	28.013
BRACKET, Folding Top Hydraulic Operating Cylinder Mounting	28.053
BRACKET, Folding Top Operating Power Unit Motor Mounting	28.058
BRACKET, Foot Operated Parking Brake Cable Clip	8.192
BRACKET, Fresh Air Intake Cable Mounting	13.155
BRACKET, Front Fender To Baffle	12.076
BRACKET, Front Fender To Radiator Grille Panel	12.075
BRACKET, Front License Plate	14.098
BRACKET, Front Seat Adjuster Rear Mounting	20..020
BRACKET, Front Seat Adjuster Spring	20.005
BRACKET, Front Seat Back Center Armrest	29.142
BRACKET, Front Seat Back Side Moulding	29.115
BRACKET, Front Seat Center Cushion Mounting	29.158
BRACKET, Front Seat Cushion Lounge Tilt Actuator	29.140
BRACKET, Front Seat Slide Adjuster Extension	29.129
BRACKET, Front Shock Upper Mounting	11.203
BRACKET, Front Suspension Lower Control Arm Strut Rod To Side Sill	10.055
BRACKET, Front Suspension Mounting	20.095
BRACKET, Front Suspension Sway Stabilizer Lower	10.266
BRACKET, Front Suspension Sway Stabilizer To Lower Control Arm	10.260
BRACKET, Front Suspension To Sill Mounting	10.003
BRACKET, Front Wheel Disc Brake Caliper Mounting	8.835
BRACKET, Front Wheel Disc Brake Inlet Hose	8.860
BRACKET, Fuse Panel	3.155
BRACKET, Gear Selector Cable Lower	7.240
BRACKET, Gear Selector Cable To Crossmember	7.240
BRACKET, Gear Selector Cable To Steering Column	7.240
BRACKET, Gear Selector Cable To Transmission Case	7.240
BRACKET, Gear Shift Bellcrank	7.110
BRACKET, Gear Shift Lever Mounting	7.003
BRACKET, Gear Shift Lever Pivot	7.007
BRACKET, Gear Shift Operating Shaft Bearing	7.042
BRACKET, Gear Shift Upper Lever	7.020
BRACKET, Generator Mounting	3.014
BRACKET, Generator Support	3.014
BRACKET, Grille Panel To Fender	2.051

DESCRIPTION	GROUP NO.
B - Cont.	
BRACKET, Hand Brake Cable Bellcrank	8.189
BRACKET, Hand Operated Parking Brake Cable	8.192
BRACKET, Headlamp Adjusting Screw	3.268
BRACKET, Headlamp Switch To Instrument Panel	3.145
BRACKET, Heater Air Control Cable Clamp	22.018
BRACKET, Heater Air Damper Control Diaphragm	13.020
BRACKET, Heater Air Inlet Damper Rod Pivot	13.015
BRACKET, Heater And Defroster Controls To Instrument Panel	13.017
BRACKET, Heater Core To Water Pump Tube Support	13.050
BRACKET, Heater Water Valve Mounting	13.035
BRACKET, Hood Bumper	12.001
BRACKET, Hood Lock Mounting	12.060
BRACKET, Horn To Wheelhouse Panel	3.105
BRACKET, Hydrovac Mounting	8.590
BRACKET, Ignition Coil	3.060
BRACKET, Ignition Switch To Instrument Panel	3.130
BRACKET, Instrument Cluster	3.530
BRACKET, Instrument Panel Ash Receiver Support	22.096
BRACKET, Instrument Panel To Dash Brace	22.056
BRACKET, Insulator To Transmission	1.013
BRACKET, Jack Locating	14.138
BRACKET KIT, Front Door Glass And Ventilator Division Channel Upper Pivot	23.124
BRACKET KIT, Front Door Ventilator Lock Handle Mounting	23.121
BRACKET KIT, Inside Rear View Mirror	15..270
BRACKET KIT, Rear Door Ventilator Lock Handle	23.160
BRACKET KIT, Rear Quarter Ventilator Lock Handle Mounting	24.020
BRACKET, License Plate Lamp Assembly To Bumper Rail	3.335
BRACKET, Liftgate	23.034
BRACKET, Liftgate Lower Corner	23.011
BRACKET, Oil Filter Mounting	1.208
BRACKET, Outside Rear View Mirror Mounting	15.270
BRACKET, Overdrive Control Cable Clip	6.350
BRACKET, Overdrive Control Cable To Floor Pan	6.350
BRACKET, Overdrive Control Cable To Transmission	6.350
BRACKET, Overdrive Control Shaft To Dash	6.357
BRACKET, Overdrive Control Shaft To Instrument Panel	6.357
BRACKET, Overdrive Kickdown Switch	6.370
BRACKET, Overdrive Vacuum Switch	6.368
BRACKET, Parking And Front Directional Signal Lamp To Bumper Rail	3.292
BRACKET, Parking Brake Mounting	20.155
BRACKET, Parking Brake Rear Cable Guide	8.224

****** Refer separate Upholstery parts catalog

Copyright 1963 American Motors Corp.

DESCRIPTION	GROUP NO.
B - Cont.	
BRACKET, Pillar Brace To Trim Panel Support	20..205
BRACKET, Power Brake Hose	8.460
BRACKET, Power Brake Unit Mounting	8.410
BRACKET, Power Brake Vacuum Hose At Coil	8.460
BRACKET, Power Steering Cylinder To Sill Mounting	10.427
BRACKET, Power Steering Cylinder To Sill Mounting Bracket Brace Rod To Side Sill	10.427
BRACKET, Power Steering Pump Brace To Compressor Mounting Bracket	10.450
BRACKET, Power Steering Pump Brace To Cylinder Head	10.450
BRACKET, Power Steering Pump Hose Clip	10.470
BRACKET, Power Steering Pump Hose Spring	10.470
BRACKET, Power Steering Pump Mounting	10.450
BRACKET, Radiator Air Intake Panel To Side Baffle	2.051
BRACKET, Radiator Grille Panel To Brace	2.051
BRACKET, Radiator Grille Panel To Grille	2.051
BRACKET, Radiator Grille To Hood Lock Support	2.050
BRACKET, Radiator Grille To Support	2.050
BRACKET, Radiator Grille To Upper Baffle	2.050
BRACKET, Radio Rear Speaker	15.320
BRACKET, Radio Rear Speaker Control	15.320
BRACKET, Radio Speaker Support To Instrument Panel	15.320
BRACKET, Radio To Instrument Panel Mounting	15.320
BRACKET, Rear Air Suspension Compressor Mounting	11.310
BRACKET, Rear Air Suspension Compressor To Reservoir Hose Clip	11.345
BRACKET, Rear Air Suspension Rear Leveling Valve Mounting	11.370
BRACKET, Rear Air Suspension Rear Leveling Valve To Rear Axle Link	11.382
BRACKET, Rear Axle Sway Stabilizer	9.089
BRACKET, Rear Brake Tube	8.112
BRACKET, Rear Bumper Inner Mounting	12.178
BRACKET, Rear Door Electric Operated Window Regulator Stop	23.305
BRACKET, Rear Door Push Button Locking Control	23.057
BRACKET, Rear Fender Flange	12.125
BRACKET, Rear Fender Rear Splash Guard	12.125
BRACKET, Rear Leaf Spring	11.033
BRACKET, Rear Leaf Spring Front Mounting	11.033
BRACKET, Rear Leaf Spring Front Mounting	20.043
BRACKET, Rear License Plate	14.104
BRACKET, Rear Listing Wire Support	20.400
BRACKET, Rear Motor Support Crossmember Mounting	20.074
BRACKET, Rear Muffler Support Hanger	20..070
BRACKET, Rear Quarter Lamp	3.675
BRACKET, Rear Quarter Window Electric Motor Mounting	24.205

DESCRIPTION	GROUP NO.
B - Cont.	
BRACKET, Rear Quarter Window Frame Support	24.010
BRACKET, Rear Quarter Window Lowering Pivot	25.029
BRACKET, Rear Seat Back Guide	29.219
BRACKET, Rear Seat Back Hinge	20.275
BRACKET, Rear Seat Back Support Fastening	29.220
BRACKET, Rear Shock Upper Mounting	11.224
BRACKET, Rear View Mirror	27.084
BRACKET, Rectifier Mounting	3.014
BRACKET, Regulator Panel To Lock Pillar Support	20..280
BRACKET, Rod To Cylinder Block	1.017
BRACKET, Rod To Front Crossmember	1.017
BRACKET, Rod To Generator Support Bar	1.017
BRACKET, Shock Absorber Mounting	20.085
BRACKET, Spare Tire	20.035
BRACKET, Spare Wheel Hold Down Rod	20.270
BRACKET, Spare Wheel Mounting	20.270
BRACKET, Speedometer	3.550
BRACKET, Spotlight Inside Mounting	15.370
BRACKET, Spotlight Outside Mounting	15..370
BRACKET, Stabilizer Bar	20.080
BRACKET, Steering Gear Jacket Tube To Instrument Panel	10.339
BRACKET, Steering Linkage Idler Arm	10.114
BRACKET, Sun Visor	27.010
BRACKET, Sun Visor Retaining	27.010
BRACKET, Support To Side Sill	20.282
BRACKET, Tailgate Counterbalance Spring	23.037
BRACKET, Tailgate Electric Operated Window Control Switch Mounting	23.330
BRACKET, Tailgate Hinge Mounting	20.455
BRACKET, Tailgate Hinge Torque Bar Center	23.006
BRACKET, Tailgate Latch Mounting	23.039
BRACKET, Tail Pipe Front Support	4.234
BRACKET, Tail Pipe Front Support Insulator	4.234
BRACKET, Tail Pipe Rear Support	4.234
BRACKET, Tail Pipe Support	20.070
BRACKET, Third Seat Back Stop	29.262
BRACKET, Throttle Control Cable	4.024
BRACKET, Top Operating Motor Mounting	20.035
BRACKET, Tow Start Cable	5.370
BRACKET, Tow Start Cable Lower Lever Mounting	5.390
BRACKET, Tow Start Cable Support	5.375
BRACKET, Tow Start Control Mounting	5.355
BRACKET, Transmission Cable	16.300
BRACKET, Trunk Lamp	3.660
BRACKET, Tube To Cylinder Block	1.115
BRACKET, Turning Radius Stop	10.010
BRACKET, Vacuum Door Lock Selector Valve Mounting	23.065
BRACKET, Wheelhouse To Wheelhouse Crossmember Mounting	20.085
BRACKET, Windshield Washer Reservoir Mounting	15.440
BRACKET, Windshield Wiper Motor Mounting	22.027

****** Refer separate Upholstery parts catalog

Copyright 1963 American Motors Corp.

ALPHABETICAL INDEX

DESCRIPTION	GROUP NO.
B - Cont.	
BRACKET, Windshield Wiper Vacuum Tube Support	22.050
BRAKE FLUID	15.260
BRAKE KIT, Power	15.310
BRAKE UNIT, Power	8.650
BREAKER, Circuit	3.154
BREAKER, Door Electric Operated Window Regulator Circuit	23.325
BREAKER, Electric Windshield Wiper Control Circuit	22.038
BREAKER, Folding Top Operating Circuit	28.059
BREAKER, Rear Quarter Electric Operated Window Regulator Circuit	24.218
BREAKER, Tailgate Electric Operated Window Regulator Circuit	23.325
BREATHER, Automatic Transmission Case	16.010
BREATHER, Transmission Case	6.005
BRUSH, Horn Blowing Ring Contact	3.406
BRUSH, Horn Button Contact	3.400
BRUSHES, Air Conditioning Compressor Drive Clutch	13.415
BRUSH SET, Electric Windshield Wiper Motor	22.210
BRUSH SET, Folding Top Operating Power Unit Motor	28.058
BULB	3.215
BULB, Back-Up Lamp	3.318
BULB, Cargo Area Lamp	3.670
BULB, Cigar Lighter Lamp Assembly	3.352
BULB, Clock	3.378
BULB, Courtesy Lamp Assembly	3.349
BULB, Domelamp	3.346
BULB, Gear Selector Dial Light	7.535
BULB, Glove Box Lamp	3.378
BULB, Headlamp	3.280
BULB, Instrument Cluster Illumination	3.635
BULB, Instrument Control Dial Lamp	3.510
BULB, License Plate Lamp	3.341
BULB, "Open Door" Warning Lamp	3.655
BULB, Overdrive Indicator Light	6.380
BULB, Parking And Front Directional Signal Lamp	3.292
BULB, Parking Brake Warning Lamp	3.650
BULB, Rear Quarter Lamp	3.675
BULB, Spotlight	15.370
BULB, Tail, Stop And Rear Directional Signal Lamp	3.312
BULB, Trunk Lamp Assembly	3.660
BUMPER, Air Intake Access Cover Damper	13.160
BUMPER, Bracket To Bumper Rail	14.104
BUMPER, Door	23.019
BUMPER, Foot Operated Parking Brake Lever Stop Bracket	8.180
BUMPER, Foot Operated Parking Brake Stop Rubber	8.180
BUMPER, Front Coil Spring Seat	11.075
BUMPER, Front Door Electric Operated Window Regulator	23.300
BUMPER, Front Door Glass Stop	25.054
BUMPER, Front License Plate	14.108

DESCRIPTION	GROUP NO.
B - Cont.	
BUMPER, Front Suspension Upper Control Arm	10.068
BUMPER, Gasoline Gauge	3.615
BUMPER, Glove Box Door	22.072
BUMPER, Heater And Defroster Motor Support	13.072
BUMPER, Hood	12.001
BUMPER, Horn Button Spring Contact	3.416
BUMPER, Parking Brake Equalizer Rubber	8.214
BUMPER, Power Brake Master Cylinder Piston Rubber	8.715
BUMPER, Radio Speaker Mounting Plate	15.320
BUMPER, Radio Speaker Mounting Plate	22.077
BUMPER, Rear Axle	9.086
BUMPER, Rear Axle Housing	9.004
BUMPER, Rear Deck Door	23.009
BUMPER, Rear Deck Door Hinge	23.028
BUMPER, Rear Door Electric Operated Window Regulator	23.305
BUMPER, Rear Door Glass Stop	25.054
BUMPER, Rear License	14.108
BRACKET, Rear Quarter Glass Channel Guide	25.029
BUMPER, Rear Quarter Window	25.054
BUMPER, Rear Quarter Window Anti Rattle	25.029
BUMPER, Rear Seat Back Footman Loop Stop	29.219
BUMPER, Spare Tire Cover Panel	20.450
BUMPER, Spare Wheel Carrier Support To Lock	8.370
BUMPER, Tailgate	23.006
BUMPER, Tailgate Glass Stop	25.054
BUMPER, Tailgate Support	23.036
BUMPER, Tailgate Window Regulator	23.040
BUMPER, Tailgate Window Regulator Crank	23.078
BUMPER, Third Seat Cushion Moulding	29.279
BUSHING, Accelerator Shaft	4.050
BUSHING, Automatic Transmission Case	16.010
BUSHING, Automatic Transmission Front Pump	16.080
BUSHING, Automatic Transmission Output Shaft	16.160
BUSHING, Automatic Transmission Parking Brake Toggle Release Spring	16.090
BUSHING, Automatic Transmission Rear Bearing Retainer	16.175
BUSHING, Automatic Transmission Solenoid Kickdown Switch	16.245
BUSHING, Automatic Transmission Upper Control Valve Vacuum Control Lever Pivot	16.205
BUSHING, Bottom Frame Outer Hinge	29.103
BUSHING, Brake Pedal	8.140
BUSHING, Brake Pedal To Link	8.156
BUSHING, Clutch Pedal	5.135
BUSHING, Clutch Pedal To Rod Seal	5.162
BUSHING, Cowl Ventilator Damper Rod	22.014
BUSHING, Crankshaft Pilot	1.043
BUSHING, Electric Windshield Wiper Drive Crank Eccentric	22.242
BUSHING, Engine Thrust Rod	1.017
BUSHING, E-Stick Intake Manifold	5.250

****** Refer separate Upholstery parts catalog

Copyright 1963 American Motors Corp.

ALPHABETICAL INDEX

DESCRIPTION	GROUP NO.
B - Cont.	
BUSHING, Front Door Electric Operated Window Regulator Pinion Shaft	23.300
BUSHING, Front Suspension Lower Control Arm Strut Rod To Side Sill	10.055
BUSHING, Front Suspension Lower Control Arm Trunnion	10.044
BUSHING, Front Suspension Sway Stabilizer Link	10.260
BUSHING, Front Suspension Upper Control Arm Trunnion	10.042
BUSHING, Gear Shift Bellcrank To Pivot Shaft	7.110
BUSHING, Gear Shift Levers Shaft	7.007
BUSHING, Gear Shift Upper Lever Housing	7.020
BUSHING, Oil Pressure Gauge Reducing	3.605
BUSHING, Overdrive Control	6.350
BUSHING, Overdrive Kickdown Switch	6.366
BUSHING, Overdrive Vacuum Switch Pipe	6.368
BUSHING, Rear Leaf Spring Front Eye	11.033
BUSHING, Rear Leaf Spring Shackle	11.170
BUSHING, Rear Quarter Electric Operated Window Regulator Transmission	24.203
BUSHING, Reverse Lockout Finger Grip	7.001
BUSHING, Spare Wheel Carrier Support Hinge	8.360
BUSHING, Steering Gear Housing Cross Shaft	10.307
BUSHING, Steering Gear Jacket Tube Lower	10.346
BUSHING, Steering Linkage Idler Arm	10.110
BUSHING, Tow Start Upper Lever	5.365
BUSHING, Transmission Clutch Shaft	6.064
BUSHING, Transmission Gear Selector Control	7.210
BUSHING, Transmission Rear Bearing Cap	6.028
BUSHING, Transmission Rear Bearing Cap Oil Seal	6.032
BUSHING, Transmission To Torque Tube Adapter	6.030
BUSHING, Windshield Wiper Pivot Shaft Grommet	22.047
BUTTON, Bottom Frame End Plug	29.103
BUTTON, Door Outside Handle	23.074
BUTTON, Folding Top Back Curtain Fastener	28.085
BUTTON, Folding Top Dust Boot Fastener	28.085
BUTTON, Folding Top Well Lining Fastener	28.085
BUTTON, Front Door Ventilator Lock Handle	23.121
BUTTON, Front Door Ventilator Lock Handle Release	23.121
BUTTON, Front Seat Sidewing Panel Plug	29.120
BUTTON, Horn	3.400
BUTTON, Instrument Panel Ash Receiver Tray	22.092
BUTTON, Overdrive Control	6.352
BUTTON, Overdrive Kickdown Switch Control	6.366
BUTTON, Plug	27.038
BUTTON, Radio Control Knob Opening	15.320
BUTTON, Rear Door Lock Push	23.054
BUTTON, Rear Door Ventilator Lock Handle	23.160
BUTTON, Rear Quarter Ventilator Lock Handle Release	24.020
B - Cont.	
BUTTON, Seat Back Outer Hinge Anti-Rattle	29.105
BUTTON, Tailgate Outside Handle	23.077
BUTTON, Transmission Gear Shifting Selector	7.200
BUTTON, Upholstery	******
BUTTON, Windshield Header Package Net	27.140
- C -	
CABLE, Accelerator	4.057
CABLE, Air Conditioning Damper Control	13.510
CABLE, Air Conditioning Recirculating Air Damper	13.013
CABLE, Automatic Transmission Throttle Control	16.300
CABLE, Battery Ground	3.196
CABLE, Battery Ground Jumper	3.196
CABLE, Battery To Starter	3.200
CABLE, Brake Shoe Automatic Adjusting	8.010
CABLE, Cowl Ventilator	22.018
CABLE, Defroster Damper Control	13.122
CABLE, Folding Top Side Quarter Retainer	28.072
CABLE, Foot Operated Parking Brake Lever To Equalizer	8.192
CABLE, Fresh Air Intake Control	13.155
CABLE, Front Fender Antenna Lead	15.030
CABLE, Glove Box Door Check	22.066
CABLE, Hand Operated Parking Brake Lever To Equalizer	8.192
CABLE, Heater Air Control	13.017
CABLE, Heater Air Damper Control	13.017
CABLE, Heater Water Valve Control	13.017
CABLE, Overdrive Control	6.350
CABLE, Parking Brake Equalizer To Rear Wheels	8.220
CABLE, Radio Rear Speaker	15.320
CABLE, Rear Deck Antenna Lead	15.030
CABLE, Rear Quarter Electric Operated Window Regulator Motor	24.225
CABLE, Speedometer	3.570
CABLE, Tailgate Counterbalance	23.037
CABLE, Throttle Control	4.024
CABLE, Tow Start	5.370
CABLE, Transmission Brake	7.235
CABLE, Transmission Gear Selector	7.230
CALIPER ASSEMBLY, Front Wheel Disc Brake	8.810
CAM ASSEMBLY, Overdrive Free Wheeling	6.330
CAM, Automatic Transmission Throttle Control Down Shift Valve	16.225
CAM, Directional Signal Switch Canceling	3.321
CAM, E-Stick Actuator	5.325
CAM, Rear Auxiliary Floor Side Compartment Door Lock	20.438
CAM, Rear Deck Lock Cylinder	23.081
CAMSHAFT	1.040
CAM, Tailgate Electric Operated Window Regulator Switch Cylinder	23.081
CAPACITOR ASSEMBLY, Radio	15.320

****** Refer separate Upholstery parts catalog

Copyright 1963 American Motors Corp.

ALPHABETICAL INDEX

DESCRIPTION	GROUP NO.
C - Cont.	
CAPACITOR, Radio	15.320
CAP, Air Conditioning Compressor Suction Freon Charging Valve	13.405
CAP, Air Conditioning Receiver Check Valve	13.455
CAP, Air Conditioning Receiver Pressure Relief Valve	13.455
CAP ASSEMBLY, Power Steering Pump Oil Reservoir Filler	10.465
CAP ASSEMBLY, Windshield Washer Check Valve	15.440
CAP, Automatic Transmission Oil Filler	16.020
CAP, Bottom Frame Center Post Cover	29.105
CAP, Brake Master Cylinder Filler	8.038
CAP, Carburetor Air Cleaner Top	4.088
CAP, Distributor	3.032
CAP, Engine Oil Pump Release Valve Spring	1.178
CAP, Folding Top Wire On Moulding End	28.079
CAP, Front Fender Antenna Dress	15.030
CAP, Front Seat Back Kickpanel Moulding	29.116
CAP, Front Seat Cushion Lounge Tilt Actuator Cylinder	29.140
CAP, Front Wheel Grease Retainer Outer	8.296
CAP, Gasoline Tank Filler	4.138
CAP, Gear Shift Rail	7.002
CAP, Headlining Trim Bow	27.024
CAP, Hydrovac Hydraulic Cylinder	8.560
CAP, Intake Manifold Cover Water Tube	1.065
CAP, Locking Gas	15.180
CAP, Oil Filler	1.022
CAP, Power Brake Master Cylinder Filler	8.510
CAP, Radiator Core	2.032
CAP, Rambler Brand Battery Vent Filler	15.072
CAP, Rear Fender Lower Moulding	12.128
CAP, Rear Window Finish Moulding End	26.020
CAP, Spotlight Switch	15.370
CAP, Steering Gear Housing Dirt Sheeder	10.292
CAP, Steering Wheel	10.284
CAPSULE KIT, Steering Gear Shaft Bearing Preload	10.815
CAP, Thermostat Housing	2.102
CAP, Transmission Front Bearing	6.017
CAP, Transmission Gear Shifting Selector Button	7.200
CAP, Transmission Rear Bearing	6.028
CAP, Water Pump Body	2.080
CAP, Wheel Hub	8.274
CARBURETOR	4.001
CARGO COVER	15.076
CARPET, Console Compartment Bottom	******
CARPET, Front Floor	******
CARPET, Rear Auxiliary Floor	******
CARPET, Rear Auxiliary Side Panel Top	******
CARPET, Rear Floor	******
CARPET, Rear Floor Well	******
CARPET, Rear Seat Back Pan	******
CARPET, Third Seat Back Pan	******
CARPET, Third Seat Cushion Frame	******

DESCRIPTION	GROUP NO.
C - Cont.	
CARRIER, Automatic Transmission Planetary	16.150
CARRIER KIT, Power Steering Pump	10.435
CARRIER, Luggage	15.250
CASE ASSEMBLY, Rear Axle Differential	9.021
CASE, Automatic Transmission	16.010
CASE, Console Compartment Door Lock	27.280
CASE, Door Lock Cylinder	23.081
CASE, Glove Box Lock	22.073
CASE, Overdrive	6.260
CASE, Rear Auxiliary Floor Side Compartment Door Lock	20.438
CASE, Rear Axle Differential	9.024
CASE, Rear Deck Lock Cylinder	23.081
CASE, Tailgate Electric Operated Window Regulator Lock Cylinder	23.081
CASE, Tailgate Lock Cylinder	23.081
CASE, Transmission	6.005
CASING, Front Seat Back Headrest	27.034
CATCH, Front Seat Back Headrest Post Assembly Friction	27.030
CATCH, Hood Lock Safety	12.060
CAULK, Auto	30.022
CEMENT	30.020
CEMENT, Vinyl Roof Cover To Roof	27.310
CHAIN, Spare Wheel Carrier Support Stop	8.350
CHAIN, Timing	1.130
CHANNEL, Floor Reinforcement	20.072
CHANNEL, Front Body Pillar Upper	20.190
CHANNEL, Front Door Division Channel Glass Slide	23.125
CHANNEL, Front Door Glass And Ventilator Division	23.124
CHANNEL, Front Door Lowering Glass Bottom	25.030
CHANNEL, Front Door Lowering Glass Slide	25.036
CHANNEL, Front Door Ventilator	23.118
CHANNEL, Liftgate And Rear Window Glass	25.044
CHANNEL, Oil Trough	1.185
CHANNEL, Rear Door Division Channel Glass Slide	23.167
CHANNEL, Rear Door Glass And Ventilator Division	23.165
CHANNEL, Rear Door Lowering Glass Bottom	25.032
CHANNEL, Rear Door Lowering Glass Slide	25.038
CHANNEL, Rear Door Stationary Glass	25.043
CHANNEL, Rear Door Ventilator	23.153
CHANNEL, Rear Quarter Glass And Ventilator Division	24.025
CHANNEL, Rear Quarter Lowering Glass Bottom	25.034
CHANNEL, Rear Quarter Lowering Glass Slide	25.040
CHANNEL, Rear Quarter Stationary Glass	25.042
CHANNEL, Rear Quarter Ventilator	24.016
CHANNEL, Side Front Window Glass Slide	25.037

****** Refer separate Upholstery parts catalog

Copyright 1963 American Motors Corp.

DESCRIPTION	GROUP NO.
C - Cont.	
CHANNEL, Side Rear Window Stationary Glass	25.041
CHANNEL, Tailgate Glass Bottom	25.033
CHANNEL, Tailgate Lowering Glass Slide	25.039
CHANNEL, Windshield Glass	25.002
CHECK VALVE KIT, Power Steering Gear Pressure	10.524
CHOKE, Radio	15.320
CLAMP, Air Conditioning Expansion Valve Capillary Tube	13.470
CLAMP ASSEMBLY, Exhaust Pipe To Brace.	4.195
CLAMP ASSEMBLY, Exhaust Pipe To Muffler	4.205
CLAMP ASSEMBLY, Front Exhaust Pipe To Rear Exhaust Pipe	4.178
CLAMP ASSEMBLY, Front Support To Tail Pipe	4.234
CLAMP ASSEMBLY, Intermediate Exhaust Pipe To Front And Rear Exhaust Pipes	4.178
CLAMP ASSEMBLY, Muffler To Tail Pipe	4.230
CLAMP ASSEMBLY, Rear Support To Pipe	4.234
CLAMP ASSEMBLY, Right Exhaust Pipe To Left Exhaust Pipe	4.178
CLAMP ASSEMBLY, Steering Gear Jacket Tube To Gear Housing Adapter	10.348
CLAMP, Automatic Transmission Throttle Control Cable	16.300
CLAMP, Battery Hold Down	3.084
CLAMP, Cable To Heater Box	22.018
CLAMP, Carburetor Control Shaft Bearing Washer	4.070
CLAMP, Carburetor Insulator To Ventilation Valve Hose	1.117
CLAMP, Cylinder Block To Ventilation	1.118
CLAMP, Cylinder Block Ventilation Valve Hose To Nipple And Valve	1.119
CLAMP, Distributor	3.039
CLAMP, Engine Oil Pump Inlet Tube	1.167
CLAMP, E-Stick Vacuum Hose	5.260
CLAMP, E-Stick Valve Body To Check Valve Hose	5.295
CLAMP, Exhaust Pipe To Manifold	4.186
CLAMP, Foot Operated Parking Brake Cable To Lever	8.192
CLAMP, Gasoline Hose	4.160
CLAMP, Gasoline Tank Drain Hose	4.141
CLAMP, Gasoline Tank Filler Neck To Connector	4.141
CLAMP, Gasoline Tank Filler Tube Vent Hose	4.141
CLAMP, Gasoline Tank Filler Tube Vent Hose To Tank	4.141
CLAMP, Gear Shift Rod "O" Ring	7.125
CLAMP, Heater Control Cable	22.018
CLAMP, Heater Core To Water Pump Tube To Manifold	13.050
CLAMP, Heater Hose	13.086
CLAMP, Hose	1.198
CLAMP, Hydrovac Vacuum Hose	8.600

DESCRIPTION	GROUP NO.
C - Cont.	
CLAMP, Hydrovac Vacuum Hose To Wheelhouse	8.600
CLAMP, Ignition Coil	3.058
CLAMP, Instrument Panel Clock Opening Cover	22.100
CLAMP, Instrument Panel Radio Opening Cover	22.100
CLAMP, Jack Hold Down	14.138
CLAMP, Oil Filler Cap To Air Cleaner Hose.	1.116
CLAMP, Overdrive Control Cable Lower	6.358
CLAMP, Power Brake Vacuum Check To Nipple Hose	8.460
CLAMP, Power Brake Vacuum Hose	8.475
CLAMP, Power Steering Gear Worm Ball Bearing Return Guide	10.577
CLAMP, Power Steering Pump To Cylinder Return Hose	10.470
CLAMP, Power Steering Pump To Steering Gear Return Hose	10.470
CLAMP, Radiator Hose	2.039
CLAMP, Rear Air Suspension Air Reservoir To Rear Leveling Valve Tube	11.360
CLAMP, Right Exhaust Pipe To Manifold	4.178
CLAMP, Solenoid To Vacuum Hose	5.296
CLAMP, Spare Wheel	8.330
CLAMP, Speedometer Driven Gear Sleeve	3.590
CLAMP, Steering Gear Jacket Tube	10.348
CLAMP, Steering Gear Upper Shaft To Lower Shaft	10.705
CLAMP, Steering Gear Worm Ball Bearing Return Guide	10.316
CLAMP, Steering Linkage Tie Rod Adjusting Tube	10.224
CLAMP, Thermostat Housing Cap	2.102
CLAMP, Transmission Gear Selector Cable To Bracket	7.230
CLAMP, Tube To Valve Hose	1.116
CLAMP, Upper To Lower Tube	1.115
CLAMP, Vacuum Door Lock Tubing Harness Hose	23.067
CLAMP, Valve Tappet Cover To Air Cleaner Hose	1.116
CLAMP, Valve Tappet Cover To Ventilation Valve Hose	1.116
CLAMP, Valve Tappet Cover To Tube Hose	1.116
CLAMP, Water Pump Body Cap	2.080
CLAMP, Water Pump To Cylinder Head Water By-Pass Hose	2.080
CLEANER, Carburetor Air	4.088
CLEANER, Chrome	15.050
CLEANER, Cooling System	15.100
CLEANER, Fabric	15.050
CLEANER, Plastic And Leather	15.050
CLEVIS, Accelerator Control Rod	4.055
CLEVIS, Automatic Transmission Throttle Control Cable	16.300
CLEVIS, Gear Shift Selector Lever Rod To Transmission Lever	7.125
CLEVIS, Tow Start Cable	5.370

****** Refer separate Upholstery parts catalog

Copyright 1963 American Motors Corp.

DESCRIPTION	GROUP NO.
C - Cont.	
CLEVIS, Transmission Gear Selector Cable To Gear Shift Operating Lever	7.230
CLEVIS, Transmission Gear Selector Cable To Lever	7.230
CLIP, Accessory Wire Harness To Main Wire Harness	3.318
CLIP, Air Conditioner Blower Motor To Resistor Wire	13.072
CLIP, Air Conditioning Air Discharge Grille Door Retaining	13.515
CLIP, Air Conditioning Compressor Drive Clutch Brushes Extension Wire	13.415
CLIP, Air Conditioning Condenser Core Tube	13.450
CLIP, Air Conditioning Hose	13.440
CLIP, Air Conditioning Receiver	13.455
CLIP, Air Conditioning Thermostat Capillary Tube	13.477
CLIP, Alternator Wire	3.005
CLIP, Alternator Wire Harness	3.016
CLIP, Alternator Wire Harness To Starter Solenoid Wire	3.005
CLIP, Ammeter Wire To Chassis Harness	3.600
CLIP, Automatic Transmission Oil Cooler Tube	16.230
CLIP, Automatic Transmission Solenoid Wire To Tube	16.245
CLIP, Automatic Transmission Throttle Control Cable Closed	16.305
CLIP, Back-Up Lamp Extension Wire	3.318
CLIP, Back-Up Lamp Wire	3.318
CLIP, Back-Up Lamp Wire Harness	3.318
CLIP, Battery Ground Cable To Front Suspension Bracket	3.196
CLIP, Battery Ground Cable To Right Front Wheelhouse	3.196
CLIP, Battery Ground Cable To Starter Wire	3.196
CLIP, Body Wire Harness To Dash Panel	3.163
CLIP, Body Wire Harness To Floor Pan And Side Sill	3.163
CLIP, Body Wire Harness To Rear Wheelhouse	3.163
CLIP, Body Wire Harness To Sill	3.163
CLIP, Brake Shoe Hold Down	8.008
CLIP, Brake Tube	8.101
CLIP, Brake Tube Hose Fastening	8.116
CLIP, Chassis Wire Harness To Blower Housing	3.165
CLIP, Chassis Wire Harness To Gas Tube	3.165
CLIP, Chassis Wire Harness To Sill	3.165
CLIP, Chassis Wire Harness To Wheelhouse	3.165
CLIP, Circuit Breaker Mounting	3.154
CLIP, Clock And Glove Box Wire To Instrument Panel	3.163
CLIP, Damper To Housing Pivot	13.113
CLIP, Dash Panel Ventilator Opening Filter	22.023
CLIP, Directional Signal Flasher	3.330
CLIP, Directional Signal Switch Arm To Mounting Plate	3.321
CLIP, Domelamp Wire To Roof Panel	3.163

DESCRIPTION	GROUP NO.
C - Cont.	
CLIP, Door Electric Operated Window Regulator Wiring Harness	23.320
CLIP, Door Window Regulator Handle	23.107
CLIP, E-Stick Vacuum Hose	5.255
CLIP, Floor Mat Hold Down	3.158
CLIP, Folding Top Operating Circuit Breaker Mounting	28.059
CLIP, Folding Top Power Unit To Hydraulic Cylinder Hose Support	28.056
CLIP, Folding Top Side Quarter Retainer Cord	28.072
CLIP, Front Door Switch Wire Harness To Instrument Panel	3.163
CLIP, Front Fender Ornament	12.078
CLIP, Front Seat Adjusting Slide Latch Wire Guide	29.133
CLIP, Front Seat Back Spring Reinforcement	29.106
CLIP, Front Seat Cushion Spring Reinforcement	29.162
CLIP, Front Wheel Disc Brake Tube Hose Fastening	8.855
CLIP, Fuel Pump To Carburetor And Wiper Tubes	4.124
CLIP, Fuel Pump To Carburetor Tube	4.174
CLIP, Gasoline Gauge Wire	3.615
CLIP, Gasoline Tank Filler Tube Vent Hose To Tank	4.141
CLIP, Gear Selector Lever Boot	7.245
CLIP, Headlamp Wire	3.288
CLIP, Headlamp Wire To Radiator Support Crossmember	3.288
CLIP, Heater Core To Water Pump Tube To Bracket	13.050
CLIP, Heater Hose To Heater Cover	13.050
CLIP, Heater Hose To Ignition Coil Bracket	13.050
CLIP, Heater Hose To Valve Cover	13.050
CLIP, Heater Valve To Heater Core Hose At Manifold	13.050
CLIP, Horn Blowing Ring Insulator Retainer	3.406
CLIP, Horn Button Insulator Retainer	3.400
CLIP, Hose To Pump And Tube	22.050
CLIP, Hydrovac To 5-Way Fitting Tube	8.610
CLIP, Ignition Coil	3.056
CLIP, Ignition Wire	3.230
CLIP, Instrument Cluster Voltage Regulator	3.622
CLIP, Instrument Cluster Wire	3.505
CLIP, Instrument Cluster Wiring Harness To Dash Panel	3.635
CLIP KIT, Air Conditioning Expansion Valve Capillary Tube	13.470
CLIP KIT, Rear Leaf Spring	11.086
CLIP, Master Cylinder To Hydrovac Tube	8.605
CLIP, Moulding Joint	23.198
CLIP, Oil Filter Tube To Gas Line Tube	1.198
CLIP, Overdrive Cam Retainer	6.330
CLIP, Overdrive Control	6.350
CLIP, Overdrive Control Cable	6.350
CLIP, Overdrive Control Cable To Bracket	6.350
CLIP, Overdrive Control To Bracket	6.350
CLIP, Overdrive Governor Wire To Rear Crossmember Bracket	3.210

****** Refer separate Upholstery parts catalog

Copyright 1963 American Motors Corp.

ALPHABETICAL INDEX

DESCRIPTION	GROUP NO.
C - Cont.	
CLIP, Overdrive Kickdown Switch	6.370
CLIP, Overdrive Kickdown Switch Wire	6.367
CLIP, Overdrive Vacuum Switch Tube	6.368
CLIP, Overdrive Wire Harness At Relay	3.210
CLIP, Overdrive Wire Harness To Chassis Wire Harness	3.210
CLIP, Overdrive Wire Harness To Clutch Housing	3.210
CLIP, Overdrive Wire Harness To Cylinder Head	3.210
CLIP, Overdrive Wire Harness To Floor Pan	3.210
CLIP, Overdrive Wire Harness To Ignition Coil Rear Bolt	3.210
CLIP, Overdrive Wire Harness To Kickdown Switch Bracket	3.210
CLIP, Overdrive Wire Harness To Manifold	3.210
CLIP, Overdrive Wire Harness To Right Wheelhouse	3.210
CLIP, Overdrive Wire Harness To Toeboard	3.210
CLIP, Overdrive Wire Harness To Transmission	3.210
CLIP, Parking And Front Directional Signal Lamp Wire	3.292
CLIP, Parking Brake Release Rod Attaching	8.182
CLIP, Parking Brake Release Rods Connecting	8.182
CLIP, Parking Brake Warning Lamp	3.650
CLIP, Power Brake Vacuum Hose	8.470
CLIP, Power Brake Vacuum Check Valve To Nipple Hose	8.460
CLIP, Power Steering Pump Hose	10.470
CLIP, Power Steering Pump Hose Clip To Clip On Cylinder	10.470
CLIP, Power Steering Pump Hose Pull Back Spring	10.470
CLIP, Power Steering Pump Hose To Cylinder	10.470
CLIP, Power Steering Pump Return Hose To Pressure Hose	10.470
CLIP, Radio Rear Shelf Speaker Grille	15.320
CLIP, Radio Rear Shelf Speaker	15.320
CLIP, Radio Front Speaker Mounting	15.320
CLIP, Radio Rear Speaker Cable	15.320
CLIP, Rear Air Suspension Compressor To Reservoir Hose And Tube	11.345
CLIP, Rear Air Suspension Leveling Valve Cross To Air Spring Tube	11.380
CLIP, Rear Deck Door Hinge Torque Rod	23.028
CLIP, Rear Door Push Button Locking Link Anti-Rattle	23.057
CLIP, Rear Quarter Lamp	3.675
CLIP, Rear Quarter Window Regulator Handle	24.009
CLIP, Rear Seat Cushion Spring Reinforcement	29.192
CLIP, Remote Control Handle	23.063
CLIP, Retainer To Pivot Retaining	5.168
CLIP, Reveal Moulding Corner	26.050
CLIP, Seal End	5.187
CLIP, Solenoid And Neutral Start Harness To Wheelhouse	3.130
CLIP, Solenoid And Relay Harness To Chassis Harness	3.130
CLIP, Speedometer Cable	3.570
CLIP, Speedometer Cable To Dash Panel	3.570
CLIP, Speedometer Cable To Front Floor Pan	3.570
CLIP, Speedometer Cable To Side Sill	3.570
CLIP, Speedometer Cable To Steering Column Grommet Screw	3.570
CLIP, Spotlight Wire	15.370
CLIP, Tailgate Counterbalance Cable Attaching	23.037
CLIP, Third Seat Cushion Spring Reinforcement	29.274
CLIP, To Front Suspension Mounting Bracket	3.200
CLIP, To Pinion Case Retainer	6.330
CLIP, Transmission Gear Selector Cable	7.230
CLIP, Transmission Oil Tube	16.070
CLIP, Trunk Lamp Assembly Wire	3.660
CLIP, Vacuum Tubes To Fuel And Brake Tubes	22.050
CLIP, Vacuum Tube To Front Suspension Bracket	22.050
CLIP, Valve Tappet Cover To Ventilation Valve Tube	1.116
CLIP, Ventshade	15.420
CLIP, Water Temperature Extension Wire	3.610
CLIP, Windshield Glass Channel	25.002
CLIP, Wire Harness To Radiator Support	3.166
CLIP, Wire Harness To Rear Seat	3.166
CLIP, Wire Harness To Rear Shelf	3.192
CLIP, Wire To Dash Panel	3.158
CLOCK	3.360
CLOCK KIT	3.361
CLUTCH, Air Conditioning Compressor Drive	13.415
CLUTCH ASSEMBLY, Transmission Synchronizer	6.080
CLUTCH, Automatic Transmission Planetary Carrier One Way	16.150
COIL, Air Conditioning Compressor Drive Pulley	13.415
COIL, Electric Windshield Wiper Motor Field	22.200
COIL, Folding Top Operating Power Unit Motor Field	28.058
COIL, Ignition	3.056
COLLAR, Spotlight Inside	15.370
COMPASS	15.095
COMPRESSOR, Air Conditioning	13.400
COMPRESSOR, Rear Air Suspension	11.300
CONDENSER, Distributor	3.033
CONDENSER, Radio	3.622
CONDENSOR, Radio	15.320
CONDUCTOR, Instrument Cluster	3.520
CONDUIT, Radio Cable	3.680
CONNECTION, Carburetor Control Shaft To Carburetor	4.070
CONNECTOR, Air Conditioner Blower Housing To Evaporator	13.072
CONNECTOR, Air Conditioning Evaporator Housing To Duct	13.488
CONNECTOR, Alternator Wire	3.005

****** Refer separate Upholstery parts catalog

Copyright 1963 American Motors Corp.

ALPHABETICAL INDEX

DESCRIPTION	GROUP NO.
C - Cont.	
CONNECTOR, Automatic Transmission Oil Cooler Tube	16.230
CONNECTOR, Automatic Transmission Solenoid To Kickdown Switch	16.245
CONNECTOR, Back-Up Lamp Wire	3.318
CONNECTOR, Carburetor To Fuel Pump Gasoline Tube	4.001
CONNECTOR, Cylinder Head To Booster	1.059
CONNECTOR, Duct To Evaporator Housing	13.510
CONNECTOR, Fuel Pump To Vacuum Line	4.124
CONNECTOR, Fuse Panel	3.218
CONNECTOR, Gasoline Tank Filler Neck To Tank	4.141
CONNECTOR, Horn Wire	3.192
CONNECTOR, Hose To Hose	22.050
CONNECTOR, Instrument Cluster	3.635
CONNECTOR, Instrument Cluster	3.520
CONNECTOR, License Plate Lamp Wire	3.341
CONNECTOR, Light Switch	3.218
CONNECTOR, Oil Filter Inlet And Outlet Tube	1.204
CONNECTOR, Overdrive Kickdown Switch	6.367
CONNECTOR, Printed Circuit	3.218
CONNECTOR, Rear Air Suspension Air Reservoir To Rear Leveling Valve Tube	11.360
CONNECTOR, Rear Air Suspension Compressor Oil Drain Tube	11.335
CONNECTOR, Rear Air Suspension Rear Leveling Valve Cross To Air Spring Tube	11.380
CONNECTOR, Tube To Carburetor	22.050
CONNECTOR, Tube To Head	22.050
CONNECTOR, Tube To Pump	22.050
CONNECTOR, Vacuum Harness At Manifold	23.067
CONNECTOR, Windshield Washer Reservoir To Foot Pump Hose	15.440
CONNECTOR, Wire	3.163
CONTACT ASSEMBLY, Horn	3.800
CONTACT, Distributor Cap	3.032
CONTACT, Horn Blowing Ring	3.406
CONTACT, Horn Button	3.400
CONTACT SET, Ignition	3.031
CONTACT SET, Overdrive Solenoid	6.328
CONTROL, Air Conditioning Recirculated Air	13.013
CONTROL ASSEMBLY, Radio Rear Speaker	15.320
CONTROL ASSEMBLY, Tow Start	5.350
CONTROL ASSEMBLY, Overdrive	6.350
CONTROL, Cowl Ventilator Cable	22.018
CONTROL, Distributor Vacuum	3.046
CONTROL, Front Door Lock Remote	23.056
CONTROL, Heater Air Damper	13.017
CONTROL, Heater Air Damper And Water Valve	13.017
CONTROL, Heater Air Outlet	13.017
CONTROL, Heater Water Valve	13.017
CONTROL, Heater Water Valve And Cowl Ventilator	13.017
CONTROL, Outside Rear View Remote Control Mirror	15.270
C - Cont.	
CONTROL, Radio Rear Speaker	15.320
CONTROL, Rear Door Lock Remote	23.056
CONTROL, Transmission Gear Selector	7.210
CONTROL, Windshield Wiper	22.038
CONVERTER, Automatic Transmission	16.030
COOLANT, All Season	15.040
CORD, Folding Top Side Quarter Retainer	28.072
CORE, Air Conditioning Condenser	13.450
CORE, Air Conditioning Evaporator	13.475
CORE, Heater	13.028
CORE, Overdrive Control	6.350
CORE, Radiator	2.020
CORE, Rear Air Suspension Rear Leveling Valve	11.365
CORE, Speedometer Cable	3.575
COUNTERSHAFT, Transmission	6.159
COUPLING, Air Conditioning Hose Disconnect	13.440
COUPLING ASSEMBLY, Steering Gear Shaft	10.865
COUPLING ASSEMBLY, Steering Gear Shaft To Stub Shaft	10.865
COUPLING, Door Electric Operated Window Regulator Worm	23.308
COUPLING, Propeller Shaft	9.101
COUPLING, Rear Door Electric Operated Window Regulator Motor To Transmission	23.307
COUPLING, Rear Quarter Electric Operated Window Regulator Worm	24.203
COUPLING, Steering Gear Lower Shaft To Intermediate Shaft	10.708
COUPLING, Steering Gear Lower Shaft To Upper Shaft	10.708
COUPLING, Steering Gear Upper Shaft	10.720
COUPLING, Steering Gear Upper Shaft To Intermediate Shaft	10.708
COUPLING, Tailgate Electric Operated Window Regulator Worm	23.308
COURTESY LIGHT KIT	15.105
COVER, Air Conditioner Blower Motor Resistor	13.072
COVER, Air Conditioning Evaporator Housing End	13.488
COVER, Air Conditioning Evaporator Housing Lower	13.488
COVER, Air Conditioning Evaporator Housing Upper	13.488
COVER ASSEMBLY, Air Intake Damper Access	13.160
COVER ASSEMBLY, Clutch	5.001
COVER ASSEMBLY, Cylinder Head	1.068
COVER ASSEMBLY, Instrument Panel Air Conditioning Opening	22.100
COVER ASSEMBLY, Rear Axle Housing	9.007
COVER ASSEMBLY, Timing Case	1.120
COVER, Automatic Transmission Converter Housing Front	16.040
COVER, Automatic Transmission Pressure Regulator Valve	16.025
COVER, Automotic Transmission Rear Bearing Retainer Inspection	16.175

****** Refer separate Upholstery parts catalog

Copyright 1963 American Motors Corp.

DESCRIPTION	GROUP NO.
C - Cont.	
COVER, Body Side Sill Panel Snap On	20.175
COVER, Bottom Frame Center Post	29.103
COVER, Brake Adjusting Hole	8.030
COVER, Brake Master Cylinder Access Hole	20.005
COVER, Brake Pedal Pad Rubber	8.148
COVER, Bumper Rail Back Up Lamp Hole	12.168
COVER, Clutch	5.005
COVER, Clutch Housing	5.054
COVER, Clutch Pedal Pad	5.144
COVER, Console Housing Access Hole	27.250
COVER, Console Housing Front Overlay Panel	27.261
COVER, Cylinder Head	1.068
COVER, Cylinder Head Water Outlet	1.059
COVER, Drip Moulding Joint	20.395
COVER, Drip Moulding Snap On	26.075
COVER, Engine Oil Pump	1.164
COVER, E-Stick Check Valve	5.305
COVER, E-Stick Servo Body	5.310
COVER, Flywheel Mud Pan To Clutch Housing	1.153
COVER, Foot Operated Parking Brake Lever Rubber	8.180
COVER, Front Door Belt Ledge	26.031
COVER, Front Door Electric Operated Window Regulator Transmission Housing	23.308
COVER, Front Floor Pan Louvre	20.005
COVER, Front Floor Pan Transmission Opening	20.005
COVER, Front Seat Bottom Frame	******
COVER, Front Suspension Lower Control Arm Ball Joint Dust	10.048
COVER, Front Suspension Mounting Bracket To Side Sill Reinforcement	20.095
COVER, Gasoline Tank Auxilliary Air Vent Cap And Tube	4.141
COVER, Gasoline Tank Vent Tube Protective	4.143
COVER, Gear Selector Pointer Dial	7.537
COVER, Gear Shift Lever	7.013
COVER, Gear Shift Upper Lever Housing	7.020
COVER, Heater Core	13.012
COVERING, Folding Top	28.062
COVER, Instrument Panel Air Conditioning Opening	22.100
COVER, Instrument Panel Ash Receiver	22.093
COVER, Instrument Panel Ash Receiver Opening	22.092
COVER, Instrument Panel Clock Opening	22.100
COVER, Instrument Panel Heater And Defroster Controls	22.100
COVER, Instrument Panel Heater Blower Switch	22.100
COVER, Instrument Panel Map Light Opening	22.100
COVER, Instrument Panel Radio Opening	22.100
COVER, Intake Manifold	1.066
COVER KIT, Wheel	15.450
COVER KIT, Wire Wheel	15.450
COVER, Oil By-Pass	1.184
COVER, Overdrive Control Lever	6.350
COVER, Power Brake Master Cylinder Filler	8.510
COVER, Power Steering Gear Pitman Shaft	10.610
C - Cont.	
COVER, Power Steering Pump Body	10.445
COVER, Power Steering Pump Oil Reservoir	10.465
COVER, Radio Push Button Opening	15.320
COVER, Radio Rear Shelf Speaker	15.320
COVER, Radio Speaker Opening	13.510
COVER, Rear Air Suspension Compressor Crankshaft	11.302
COVER, Rear Air Suspension Compressor Air Inlet Strainer	11.309
COVER, Rear Axle Filler	9.007
COVER, Rear Deck Door Hinge	23.028
COVER, Rear Door Electric Operated Window Regulator Transmission Housing	23.308
COVER, Rear Quarter Electric Operated Window Regulator Transmission	24.203
COVER, Rear Quarter Window Reveal	26.056
COVER, Rear Seat Back Guide Bracket Retainer	29.219
COVER, Rear Window Finish Moulding	26.020
COVER, Rear Window Reveal	26.058
COVER, Regulator Panel Access Hole	20.280
COVER, Rocker Panel Snap On	20.175
COVER, Roof Panel Front Center Joint	26.077
COVER, Roof Panel Rear Trim Moulding	26.077
COVER, Seat Belt And Retractor	15.365
COVERS, Seat And Cushion	15.350
COVER, Shock Absorber Access Hole	20.035
COVER, Spare Tire	15.107
COVER, Spare Wheel Tire	8.380
COVER, Starting Motor Neutral Safety Switch	3.022
COVER, Steering Gear Housing Cross Shaft	10.300
COVER, Steering Gear Housing Worm	10.296
COVER, Steering Linkage Cross Tube Ball Stud	10.254
COVER, Steering Linkage Cross Tube Ball Stud Dust	10.254
COVER, Steering Wheel Actuator And Directional Signal Switch	10.805
COVER, Tailgate Hinge Access Hole	20.458
COVER, Tailgate Inner Panel Access Hole	23.006
COVER, Transmission Case	6.009
COVER, Valve Tappet	1.108
COVER, Wheel	15.450
COVER, Wheel Hub	8.274
COVER, Windshield Finish Lower Moulding	26.001
COVER, Windshield Finish Upper Joint Moulding	26.001
COVER, Windshield Reveal	26.050
COVER, Windshield Wiper Motor Access Hole	22.120
CRADLE, Power Steering Pump Hose	10.470
CRANK, Brake Shoe Automatic Adjusting Link	8.009
CRANK, Electric Windshield Wiper Drive	22.238
CRANKSHAFT	1.042
CRANKSHAFT, Rear Air Suspension Compressor	11.302
CRANK, Tailgate Window Regulator Handle	23.078
CROSSARM, Front Door Electric Operated Window Regulator	23.300
CROSSARM, Front Door Window Regulator	23.098
CROSSMEMBER ASSEMBLY, Rear Shock Absorber Mounting Bracket	20.038

****** Refer separate Upholstery parts catalog

Copyright 1963 American Motors Corp.

ALPHABETICAL INDEX

DESCRIPTION	GROUP NO.
C - Cont.	
CROSSMEMBER, Engine Front Support	1.004
CROSSMEMBER, Engine Rear Support	1.010
CROSSMEMBER, Front Seat Rear	20.015
CROSSMEMBER, Front Suspension	10.002
CROSSMEMBER, Rear Seat	20.025
CROSSMEMBER, Side Sill To Side Sill	20.073
CROSSMEMBER, Wheelhouse Panel To Wheelhouse Panel	20.115
CROSS, Rear Air Suspension Rear Leveling Valve	11.375
CUP, Front Wheel Bearing	8.294
CUP, Hydrovac Hydraulic Master Piston	8.575
CUP, Hydrovac Piston	8.570
CUP, Hydrovac Relay Valve Piston	8.570
CUP, Overdrive Shift Rail Assembly "C" Washer	6.295
CUP, Power Brake Master Cylinder Primary	8.730
CUP, Rear Axle Differential Side Bearing	9.043
CUP, Rear Axle Drive Shaft Bearing	9.075
CUP, Rear Axle Pinion Bearing	9.055
CUP, Steering Gear Worm Bearing	10.324
CURB, Indicator	15.110
CURTAIN, Folding Top Back	28.068
CUP, Rear Wheel Bearing	8.302
CUSHION ASSEMBLY, Trimmed Front Seat	29.150
CUSHION ASSEMBLY, Trimmed Front Seat Center	29.151
CUSHION ASSEMBLY, Trimmed Rear Seat	29.180
CUSHION ASSEMBLY, Trimmed Third Seat	29.270
CUSHION, Brake Pedal Stop	8.172
CUSHION, Clutch Pedal Stop	5.164
CUSHION, Engine Front Support	1.009
CUSHION, Engine Rear Support	1.013
CUSHION, Engine Rear Support Crossmember To Sill	1.015
CUSHION, Folding Top Operating Power Unit Motor Mounting	28.058
CUSHION, Folding Top Operating Power Unit Reservoir Mounting	28.058
CUSHION, Front Coil Spring	11.075
CUSHION, Front Door Strainer	23.001
CUSHION, Front Suspension Sway Stabilizer	10.260
CUSHION, Gear Shift Upper Lever Anti-Rattle	7.020
CUSHION, Heater Air Inlet Damper	13.015
CUSHION. Horn Blowing Ring To Contact Plate	3.406
CUSHION, Horn Button Upper Seat To Contact Plate	3.400
CUSHION, Hydrovac Hydraulic Master Piston	8.575
CUSHION, Load Leveler Spring	11.235
CUSHION, Rear Bumper Outer Back Bar	12.178
CUSHION, Rear Coil Spring	11.126
CUSHION, Steering Gear Jacket Tube To Instrument Panel	10.339
CUSHION, Torque Tube To Adapter	9.150
C - Cont.	
CUSHION, Vibration Damper	1.049
CYLINDER ASSEMBLY, Brake Master	8.035
CYLINDER ASSEMBLY, Brake Wheel	8.068
CYLINDER ASSEMBLY, Door Lock	23.081
CYLINDER ASSEMBLY, Front Seat Cushion Lounge Tilt	29.140
CYLINDER ASSEMBLY, Liftgate Lock	23.081
CYLINDER ASSEMBLY, Power Brake Master	8.510
CYLINDER ASSEMBLY, Power Steering	10.395
CYLINDER ASSEMBLY, Rear Auxiliary Floor Side Compartment Door Lock	20.438
CYLINDER ASSEMBLY, Rear Deck Handle Lock	23.081
CYLINDER ASSEMBLY, Rear Deck Lock	23.081
CYLINDER ASSEMBLY, Spare Wheel Lock	8.375
CYLINDER ASSEMBLY, Tailgate Electric Operated Window Regulator Switch	23.081
CYLINDER ASSEMBLY, Tailgate Lock	23.081
CYLINDER, Automatic Transmission Front Clutch	16.115
CYLINDER, Console Compartment Door Lock	27.280
CYLINDER, Folding Top Hydraulic Operating	28.053
CYLINDER, Front Seat Cushion Lounge Tilt Actuator	29.140
CYLINDER, Glove Box Lock	22.073
CYLINDER, Hydrovac Vacuum	8.585
CYLINDER, Ignition Switch Lock	3.135
CYLINDER, Power Steering Cylinder Piston Rod	10.397
CYLINDER, Rear Auxiliary Floor Side Compartment Door Lock	20.438
- D -	
DAMPENER, Valve Spring	1.083
DAMPER, Air Conditioning Evaporator Defroster	13.500
DAMPER, Air Intake Access Cover	13.160
DAMPER ASSEMBLY, Air Intake Access Cover	13.160
DAMPER, Cowl Ventilator	22.023
DAMPER, Crankshaft Vibration	1.045
DAMPER, Defroster Air Duct	13.120
DAMPER, Exhaust Manifold	1.067
DAMPER, Fresh Air Intake	13.150
DAMPER, Heater Air Inlet	13.015
DAMPER KIT, Exhaust Manifold	1.067
DAMPER, Propeller Shaft	9.101
DASH ASSEMBLY	20.120
DEFLECTOR, Air Conditioner Blower Housing Air Intake	13.072
DEFLECTOR, Air Conditioning Air Outlet	13.510
DEFLECTOR, Exhaust Valve Stem Oil	1.078
DEFLECTOR, Folding Top Covering Belt Rail Water	28.062
DEFLECTOR, Heater And Defroster Damper Air	13.113
DEFLECTOR, Heater Heat	13.008

****** Refer separate Upholstery parts catalog

Copyright 1963 American Motors Corp.

DESCRIPTION	GROUP NO.
D - Cont.	
DEFLECTOR, Intake Valve Stem Oil	1.077
DEFLECTOR, Rear Bumper Stone	12.245
DEFLECTOR, Rear Quarter Window Water	25.029
DEFLECTOR, Timing Chain Oil	1.131
DIAL, Instrument Control	3.510
DE-ICER, Windshield	15.040
DETENT, Heater Damper And Water Valve Lever Positioning	13.017
DIAL, Air Conditioning Thermostat	13.480
DIAL, Gear Selector Pointer	7.537
DIAL, Instrument Control	3.510
DIAL, Instrument Panel Control	22.100
DIAL, Radio	15.320
DIAPHRAGM ASSEMBLY, E-Stick	5.280
DIAPHRAGM, Heater Air Damper Control	13.020
DIAPHRAGM, Hydrovac Relay Valve	8.555
DIAPHRAGM, Power Brake Power Piston	8.710
DIAPHRAGM, Power Brake Valve Body	8.485
DIAPHRAGM, Spotlight Mirror And Bulb Retaining	15.370
DI-NOC, Rear Roof Header	30.030
DI-NOC, Center Pillar	30.030
DI-NOC, Front Door	30.030
DI-NOC, Front Fender	30.030
DI-NOC, Rear Door	30.030
DI-NOC, Rear Fender	30.030
DI-NOC, Rear Pillar	30.030
DI-NOC, Rear Quarter Pillar	30.030
DI-NOC, Tailgate	30.030
DISC ASSEMBLY, Front Wheel Brake	8.805
DISC, Electric Windshield Wiper Motor Adjusting	22.232
DISC, E-Stick Check Valve	5.305
DISC KIT, Power Brake Master Cylinder Piston Reaction	8.505
DISC KIT, Rear Axle Differential Clutch Friction	9.035
DISC, Power Brake Master Cylinder Piston Reaction	8.505
DISC, Rear Axle Differential Clutch Friction	9.035
DISPENSER, Dry Charge Battery Electrolyte	15.072
DISPLAY KIT, Spotlight	15.370
DISTRIBUTOR	3.030
DOOR, Air Conditioning Air Discharge Grille	13.515
DOOR, Air Conditioning Air Discharge Lower	13.515
DOOR, Back-Up Lamp Base	3.316
DOOR, Console Compartment	27.270
DOOR, Front	23.001
DOOR, Glove Box	22.060
DOOR, Headlamp	3.252
DOOR, Rear	23.002
DOOR, Rear Auxiliary Floor Side Compartment	20.437
DOOR, Rear Deck	23.009
DOOR, Spotlight	15.370
DOWEL, Automatic Transmission Converter Housing	16.040
DOWEL, Clutch Housing	5.054

DESCRIPTION	GROUP NO.
D - Cont.	
DOWEL, Folding Top Front Header	28.013
DOWEL, Valve Rocker Arm Shaft To Cylinder Head	1.101
DRAIN COCK, Radiator Core	2.036
DRAIN, Folding Top Well Lining	28.083
DRAIN, Lower Deck Center Panel	20.325
DRAIN, Lower Rear Panel	20.330
DRAIN, Rear Auxiliary Floor Side Panel	20.435
DRAIN, Spare Tire Well	20.035
DRIVE, Fan	2.005
DRUM ASSEMBLY, Front Brake	8.240
DRUM ASSEMBLY KIT, Front Seat Reclining	29.105
DRUM, Automatic Transmission Rear Clutch	16.125
DRUM, Rear Brake	8.245
DUCT, Air Conditioning Evaporator Air Discharge	13.510
DUCT, Heat Distribution	13.113
DUCT, Heater And Defroster Air	13.118
- E -	
ECCENTRIC, Fuel Pump	1.134
ECCENTRIC, Fuel Pump Camshaft	4.118
ELBOW, Automatic Transmission Case Breather	16.010
ELBOW, Automatic Transmission Oil Cooler Tube	16.230
ELBOW, Carburetor To Fuel Pump Gasoline Tube	4.001
ELBOW, Carburetor Choke Heater Tube	4.020
ELBOW, Cylinder Block Ventilation Valve To Cylinder Head	1.119
ELBOW, Cylinder Head To Booster	1.059
ELBOW, E-Stick Intake Manifold	5.250
ELBOW, Fuel Pump To Gas Line	4.124
ELBOW, Fuel Pump To Vacuum Line	4.124
ELBOW, Head To Pump	22.050
ELBOW, Heater Hose Nipple	13.088
ELBOW, Hydrovac Vacuum	8.600
ELBOW, Oil Filter Inlet Tube	1.204
ELBOW, Oil Filter Outlet Tube	1.204
ELBOW, Overdrive Vacuum Switch Pipe Bushing	6.368
ELBOW, Rear Air Suspension Air Reservoir Air Outlet	11.340
ELBOW, Rear Air Suspension Compressor Oil Drain Tube	11.335
ELBOW, Rear Air Suspension Compressor Oil Feed Tube	11.335
ELBOW, Rear Air Suspension Rear Leveling Valve Cross To Air Spring Tube	11.380
ELBOW, Stop And Tail Lamp Switch	3.333
ELBOW, Tube To Head	22.050
ELBOW, Tube To Manifold	22.050
ELBOW, Tube To Pump	22.050
ELBOW, Valve Rocker Arm Oil To Tube	1.105
ELECTROLYTE, Dry Charge Battery	15.072
ELEMENT, Carburetor Air Cleaner	15.135

****** Refer separate Upholstery parts catalog

Copyright 1963 American Motors Corp.

DESCRIPTION	GROUP NO.
E - Cont.	
ELEMENT, Carburetor Dry Air Cleaner	4.088
ELEMENT, Cigar Lighter Assembly	3.352
ELEMENT, Fuel Pump	4.110
ELEMENT, Gasoline Filter	15.190
ELEMENT, Gasoline Filter Bronze	15.190
ELEMENT, Oil Filter	1.206
ELEMENT, Oil Filter	15.280
ELEMENT, Windshield Wiper Blade	22.043
EMBLEM, Hood	12.004
EMBLEM, Horn Blowing Ring	3.406
ENAMEL, Di-Noc Finish Coat	30.030
END ASSEMBLY, Steering Linkage Tie Rod	10.126
END, Carburetor Control Shaft	4.070
END, Clutch Inner Lever Rod	5.187
END, Clutch Pedal Rod	5.160
ENGINE ASSEMBLY, Short	1.002
EQUALIZER, Parking Brake	8.214
ESCUTCHEON, Air Conditioning Thermostat Dial	13.480
ESCUTCHEON, Cigar Lighter Assembly	3.352
ESCUTCHEON, Courtesy Lamp Switch	3.145
ESCUTCHEON, Defroster Damper Control	13.122
ESCUTCHEON, Door Window Regulator Handle	23.102
ESCUTCHEON, Folding Top Operating Control Switch	28.054
ESCUTCHEON, Gear Selector Push Button	7.215
ESCUTCHEON, Glove Box Door Lock	22.073
ESCUTCHEON, Headlamp Switch	3.145
ESCUTCHEON, Heater And Cowl Ventilator Control	22.018
ESCUTCHEON, Heater Control	13.017
ESCUTCHEON, Heater-Defroster And Air Conditioning Blower Control	13.078
ESCUTCHEON, Instrument Panel Control Overlay	22.100
ESCUTCHEON, Liftgate Handle	23.078
ESCUTCHEON, Parking Brake Release Rod Knob	8.182
ESCUTCHEON, Radio	15.320
ESCUTCHEON, Rear Quarter Window Regulator Handle	24.004
ESCUTCHEON, Remote Control Handle	23.059
ESCUTCHEON, Starter And Ignition Switch	3.130
ESCUTCHEON, Tailgate	23.039
ESCUTCHEON, Tailgate Electric Operated Window Switch	23.330
ESCUTCHEON, Tailgate Lock Handle	23.078
ESCUTCHEON, Tailgate Window Regulator Handle	23.078
ESCUTCHEON, Windshield Wiper Control	22.038
EXTENSION, Accelerator Pedal	4.040
EXTENSION, Body Center Pillar Lower	20.225
EXTENSION, Body Lock Pillar Lower	20.210
EXTENSION, Clutch Throwout Lever Link	5.395
EXTENSION, Cowl Ventilator Drain Hose	13.115
EXTENSION, Exhaust Pipe	15.140
EXTENSION, Floor Reinforcement Channel	20.072
EXTENSION, Folding Top Covering Side Belt Rail Retainer	28.062
E - Cont.	
EXTENSION, Folding Top Side Rear Rail Weatherseal	28.029
EXTENSION, Front Side Sill Rear	20.085
EXTENSION, Front Wheelhouse Panel Front	20.085
EXTENSION KIT, Front Seat Slide Adjuster	29.129
EXTENSION, Lower Deck Center Panel End	20.325
EXTENSION, Lower Rear Outer Panel	20.330
EXTENSION, Oil Pump Body	1.156
EXTENSION, Outside Rear View Remote Control Mirror Control	15.270
EXTENSION, Radiator Core Overflow Hose	2.020
EXTENSION, Radiator Grille	2.050
EXTENSION, Radiator Grille Panel	2.052
EXTENSION, Tire Valve	15.450
EXTENSION, Rear Auxiliary Floor	20.430
EXTENSION, Rear Corner Roof	20.412
EXTENSION, Rear Fender Moulding	12.128
EXTENSION, Rear Fender Rear	12.125
EXTENSION, Rear Floor Pan	20.035
EXTENSION, Rear Quarter Center Brace Lower	12.125
EXTENSION, Rear Quarter Panel	12.125
EXTENSION, Rear Quarter Panel Top	12.125
EXTENSION, Side Drip Moulding To Cowl Side	20.395
EXTENSION, Side Roof Rail Rear	20.255
EXTENSION, Side Roof Rail Reinforcement	20.260
EXTENSION, Speedometer Cable	3.570
EXTENSION, Speedometer Cable Core	3.575
EXTENSION, Tailgate Opening Pillar To Fender	20.315
EXTENSION, Tire Wheel	15.450
EXTENSION, Upper Air Baffle	2.062
EXTENSION, Upper Hinge Mounting	20.220
EXTENSION, Wheelhouse Panel To Wheelhouse Panel Crossmember	20.115
EYEBOLT ASSEMBLY, Clutch Pressure	5.018
EYEBOLT KIT, Seat Belt	15.365
EYELET, Back-Up Lamp Lens	3.317
EYELET, Headlamp Wire Ground	3.288
EYELET, Headlining Listing	27.026
EYELET, Parking And Front Directional Signal Lamp Lens	3.292
EYELET, Speedometer To Instrument Cluster Housing	3.550
EYELET, Tail, Stop And Rear Directional Signal Lamp Body To Plate	3.303
EYELET, Tail Stop And Rear Directional Signal Lamp Lens	3.306
- F -	
FAN, Alternator	3.010
FAN, Alternator	3.017
FAN, Generator	3.010
FASTENER, Folding Top Back Curtain Slide	28.075
FELT, Flywheel Mud Pan	1.058
FELT, Transmission Rear Bearing Cap	6.028
FELT, Transmission Rear Bearing Cap Oil	6.032

****** Refer separate Upholstery parts catalog

Copyright 1963 American Motors Corp.

DESCRIPTION	GROUP NO.
F - Cont.	
FENDER, Front	12.075
FENDER, Rear	12.125
FERRULE, Front Door Electric Operated Window Regulator Wiring Harness	23.320
FERRULE, Front Door Vacuum Lock Tubing Harness	23.067
FERRULE, Instrument Control Switch	3.510
FERRULE, Rear Door Vacuum Lock Tubing Harness	23.067
FERRULE, Rear Door Electric Operated Window Regulator Wiring Harness	23.320
FERRULE, Side Belt Rail Drain Tube	28.091
FERRULE, Windshield Wiper Control Mounting	22.038
FILLER, Cowl Top Panel To Hood	20.150
FILLER, Domelamp Base	3.346
FILLER, Folding Top Front Header Side	28.018
FILLER, Front Body Pillar Drain	23.012
FILLER, Front Body Pillar Upper	20.190
FILLER, Front Side Sill To Rear Side Sill	20.070
FILLER, Front Wheelhouse Panel To Fender	20.090
FILLER, Instrument Panel To Uniside	22.056
FILLER, Radiator Support	2.023
FILLER, Rear Cargo Seat Riser End	******
FILLER, Rear Corner Roof Extension Lower	20.412
FILLER, Rear Wheelhouse Rear	20.320
FILLER, Roof Panel Support	20.420
FILLER, Roof Rail Weatherstrip Front Retainer (Sponge)	23.012
FILLER, Shelf Panel End	20.370
FILLER, Side Front Window Glass Slide Upper Channel Rear	25.037
FILLER, Side Sill Front	20.070
FILLER, Side Sill Rear	20.070
FILTER ASSEMBLY, Gasoline	15.190
FILTER, Dash Panel Ventilator Opening	22.023
FILTER, Gasoline	3.615
FILTER, Gasoline Tank	4.134
FILTER, Heater Air	13.002
FILTER, Instrument Control Dial	3.510
FILTER KIT, Oil	15.280
FILTER, Power Brake Air	8.450
FILTER, Power Brake Air	8.680
FILTER, Rear Air Suspension Air Reservoir	11.340
FILTER, Rear Air Suspension Compressor Air Inlet	11.309
FITTING, Air Conditioning Compressor Suction Freon Charging	13.405
FITTING, Brake Master Cylinder Outlet	8.040
FITTING, Brake Pedal Lubrication	8.140
FITTING, Brake Pedal Shaft Lubrication	8.160
FITTING, Front Brake Tube	8.102
FITTING, Front Suspension Lower Control Arm Trunnion Bushing Lubrication	10.044
FITTING, Front Suspension Lower Control Arm Trunnion Lubrication	10.044
FITTING, Front Suspension Upper Control Arm Trunnion Bushing Lubrication	10.042
F - Cont.	
FITTING, Front Suspension Upper Control Arm Trunnion Lubrication	10.042
FITTING, Gasoline Filter	15.190
FITTING, Hydrovac Relay Valve	8.570
FITTING, Hydrovac Vacuum	8.600
FITTING, Hydrovac Valve Body To Tube	8.555
FITTING, Power Brake Master Cylinder Outlet	8.520
FITTING, Power Steering Cylinder Pitman Arm Valve Stud Lubrication	10.395
FITTING, Power Steering Pump Pressure Hose To Cylinder	10.470
FITTING, Power Steering Pump Return Hose To Cylinder	10.470
FITTING, Steering Gear Jacket Tube Lower Bushing Lubrication	10.346
FITTING, Steering Linkage Cross Tube Lubrication	10.252
FITTING, Steering Linkage Idler Arm To Bracket Pivot Bolt Lubrication	10.112
FITTING, Torque Tube Trunnion Lubrication	9.146
FLANGE, Gasoline Tank Filler Neck	4.141
FLANGE KIT, Steering Gear Shaft Coupling	10.867
FLANGE, Steering Gear	10.710
FLANGE, Steering Gear Intermediate Shaft	10.710
Bearing Spring	10.344
FLANGE, Steering Gear Intermediate Shaft To Flange On Lower Shaft	10.713
FLANGE, Steering Gear Lower Shaft	10.710
FLANGE, Steering Gear Lower Shaft	10.873
FLANGE, Steering Gear Lower Shaft Flange To Flange On Intermediate Shaft	10.714
FLANGE, Steering Gear Lower Shaft To Intermediate Shaft	10.712
FLANGE, Steering Gear Lower Shaft To Lower Shaft	10.712
FLANGE, Steering Gear To Shaft	10.710
FLANGE, Steering Gear Upper Shaft To Lower Shaft	10.710
FLAP, Cowl Ventilator Damper Door	22.023
FLASHER, Directional Signal	3.330
FLASHER, Emergency Signal System	3.690
FLYWHEEL ASSEMBLY, Crankshaft	1.056
FORK, Overdrive Shift	6.295
FORK, Transmission Shifter	6.198
FRAME ASSEMBLY	20.600
FRAME ASSEMBLY, Front Door Ventilator	23.112
FRAME ASSEMBLY, Front Seat Back Center Armrest	29.142
FRAME ASSEMBLY, Front Seat Bottom	29.103
FRAME ASSEMBLY, Non-Reclining Front Seat Back	29.105
FRAME ASSEMBLY, Rear Door Ventilator	23.151
FRAME ASSEMBLY, Rear Quarter Ventilator	24.012
FRAME ASSEMBLY, Rear Seat Back	29.220
FRAME ASSEMBLY, Rear Seat Back Center Armrest	29.234
FRAME ASSEMBLY, Reclining Front Seat Back	29.105

****** Refer separate Upholstery parts catalog

Copyright 1963 American Motors Corp.

DESCRIPTION	GROUP NO.
F - Cont.	
FRAME ASSEMBLY, Third Seat Back	29.258
FRAME ASSEMBLY, Third Seat Cushion	29.278
FRAME, Door Armrest	******
FRAME, Front Door Lowering Glass	25.050
FRAME, Front Door Ventilator	23.114
FRAME, Front Door Window	23.008
FRAME, Front Seat Center Cushion	25.157
FRAME, License	15.240
FRAME, License Plate	14.112
FRAME, Liftgate	23.011
FRAME, Radiator Grille	2.050
FRAME, Rear Door Lowering Glass	25.051
FRAME, Rear Door Ventilator	23.152
FRAME, Rear Door Window	23.008
FRAME, Rear Quarter Ventilator	24.014
FRAME, Rear Quarter Window	24.010
FRAME, Rear Quarter Window Glass Upper	25.048
FRAME, Rear Window	20.397
FRAME, Side Front Window Glass	25.047
FRAME, Tailgate Glass	25.049
FULCRUM, Clutch Pressure Lever	5.022
FULCRUM, Gear Shift Operating Shaft	7.044
FUSE	3.155
FUSE, Headlamp Switch	3.145
FUSE, Overdrive Kickdown Relay	6.365
- G -	
GASKET, Accelerator Cable	4.057
GASKET, Accelerator Pedal Rod Bellcrank Mounting Bracket	4.050
GASKET, Adapter To Reverse Gear Housing	6.030
GASKET, Air Conditioning Compressor Freon Charging Valve	13.405
GASKET, Air Conditioning Compressor Suction And Discharge Valve	13.405
GASKET, Air Conditioning Evaporator End Cover To Housing	13.488
GASKET, Air Conditioning Evaporator Housing To Dash Panel	13.488
GASKET, Air Conditioning Receiver Pressure Relief Valve	13.455
GASKET AND SEAL SET, Automatic Transmission Overhaul	16.005
GASKET, Automatic Transmission Converter Housing Front Cover	16.040
GASKET, Automatic Transmission Front Oil Pump	16.080
GASKET, Automatic Transmission Oil Filler Tube	16.020
GASKET, Automatic Transmission Oil Pan	16.015
GASKET, Automatic Transmission Rear Bearing Retainer	16.175
GASKET, Automatic Transmission Rear Bearing Retainer Inspection Cover	16.175
GASKET, Automatic Transmission Rear Oil Pump	16.100
GASKET, Back-Up Lamp Base	3.316
GASKET, Back-Up Lamp Base Assembly	3.316
G - Cont.	
GASKET, Back-Up Lamp Lens	3.317
GASKET, Back-Up Lamp Wire Harness	3.318
GASKET, Back-Up Lamp Wire Socket To Tail Lamp Body	3.318
GASKET, Brake Master Cylinder Access Hole Cover	20.005
GASKET, Brake Master Cylinder Filler Cap	8.038
GASKET, Brake Master Cylinder Outlet Fitting Bolt To Fitting	8.040
GASKET, Brake Master Cylinder Outlet Fitting To Cylinder	8.040
GASKET, Brake Tube Hose	8.116
GASKET, Carburetor	4.004
GASKET, Carburetor Air Cleaner To Carburetor	4.088
GASKET, Console Housing Front Overlay Panel	27.259
GASKET, Cowl Vent Air Chamber Cover Plate	20.120
GASKET, Cowl Ventilator Rod Support Plate	22.014
GASKET, Cylinder Head	1.061
GASKET, Cylinder Head Cover	1.072
GASKET, Deck Door Medallion	26.096
GASKET, Electric Windshield Wiper Motor Switch Plate	22.218
GASKET, Engine Front Support	1.003
GASKET, Engine Oil Pan	1.152
GASKET, Engine Oil Pan Drain Plug	1.151
GASKET, Engine Oil Pan To Bearing Cap	1.152
GASKET, Engine Oil Pump Body Extension	1.156
GASKET, Engine Oil Pump Cover	1.165
GASKET, Engine Oil Pump Inlet Tube Flange To Block	1.167
GASKET, Engine Oil Pump Release Valve Spring Cap	1.178
GASKET, Engine Oil Pump To Bearing Cap	1.155
GASKET, Engine Oil Pump To Cylinder Block	1.155
GASKET, E-Stick Check Valve Cover	5.305
GASKET, E-Stick Valve Body Assembly	5.290
GASKET, Exhaust Manifold Damper	1.067
GASKET, Flywheel Mud Pan	1.058
GASKET, Fresh Air Intake Damper	13.150
GASKET, Fresh Air Intake Housing To Dash Panel	13.150
GASKET, Front Coil Spring	11.075
GASKET, Fuel Pump	4.116
GASKET, Fuel Pump Filter Bowl	4.110
GASKET, Gasoline Filter Element	15.190
GASKET, Gasoline Filter Glass Bowl	15.190
GASKET, Gasoline Tank Drain Plug	4.148
GASKET, Gasoline Tank Filler Cap	4.138
GASKET, Gasoline Tank Filler Neck Flange	4.141
GASKET, Gear Shift Housing To Transmission	7.002
GASKET, Headlamp Door	3.252
GASKET, Heat Distribution Duct	13.113
GASKET, Heater And Defroster Motor Mounting Panel To Dash	13.072

****** Refer separate Upholstery parts catalog

Copyright 1963 American Motors Corp.

DESCRIPTION	GROUP NO.
G - Cont.	
GASKET, Heater Core	13.028
GASKET, Heater Core And Blower Housing	13.012
GASKET, Heater Core Cover	13.012
GASKET, Heater Core Housing	13.012
GASKET, Heater Core Tube Opening Cover Plate	20.120
GASKET, Heater-Defroster And Air Conditioner Blower Housing	13.072
GASKET, Heater Motor Opening Cover Plate	20.120
GASKET, Heater Mounting Panel Cover Plate	20.120
GASKET, Heater Valve Opening Cover	20.120
GASKET, Heater Water Valve To Dash Panel	13.035
GASKET, Housing To Dash Panel	13.113
GASKET, Hydrovac Adapter	8.610
GASKET, Hydrovac Hydraulic Cylinder Tube	8.560
GASKET, Hydrovac Valve Body	8.555
GASKET, Intake Manifold Cover	1.066
GASKET, Intake Manifold To Cylinder Head	1.067
GASKET KIT, Air Conditioning Compressor	13.400
GASKET, License Plate Lamp Assembly	3.341
GASKET, License Plate Lamp Lens	3.339
GASKET, Oil By-Pass Cover	1.184
GASKET, Oil Filter Adapter	1.208
GASKET, Oil Filter Element	1.206
GASKET, Oil Trough Channel	1.185
GASKET, Outside Rear View Mirror Mounting	15.270
GASKET, Outside Rear View Remote Control Mirror Mounting	15.270
GASKET, Outside Rear View Remote Control Mirror Trim Nut	15.270
GASKET, Overdrive Case To Torque Tube Adapter	6.290
GASKET, Overdrive Housing Adapter	6.270
GASKET, Parking And Front Directional Signal Lamp Lens	3.292
GASKET, Parking And Front Directional Signal Lamp To Fender	3.292
GASKET PASTE	15.260
GASKET, Power Brake Master Cylinder Filler Cap Or Cover	8.510
GASKET, Power Brake Master Cylinder To Power Unit	8.510
GASKET, Power Steering Pump Body To Cover	10.430
GASKET, Power Steering Pump Oil Reservoir Cover	10.465
GASKET, Power Steering Pump Oil Reservoir Filler Cap	10.465
GASKET, Power Steering Pump Oil Reservoir To Pump	10.465
GASKET, Power Steering Pump Pressure And Return Hose Fitting	10.470
GASKET, Power Steering Pump Pressure Relief Valve	10.430
GASKET, Radio Cable Conduit	3.680
GASKET, Radio Rear Speaker Grille	15.320
GASKET, Rear Air Suspension Compressor Base Plate	11.300
GASKET, Rear Air Suspension Compressor Cylinder Head	11.303
GASKET, Rear Air Suspension Compressor Valve Plate	11.308
G - Cont.	
GASKET, Rear Axle Drive Shaft Bearing	9.073
GASKET, Rear Axle Filler Plug	9.005
GASKET, Rear Axle Housing Cover	9.007
GASKET, Rear Axle Pinion Oil Seal	9.064
GASKET, Rear Deck Lock Cylinder Hole	23.081
GASKET, Rear Wheel Bearing	8.300
GASKET SET, Engine	1.060
GASKET SET, Engine Oil Pan	1.152
GASKET SET, Transmission Overhaul	6.002
GASKET SET, Valve Tappet Cover	1.110
GASKET, Shock Absorber Access Hole Cover	20.035
GASKET, Spark Plug	3.001
GASKET, Speedometer Cable	3.580
GASKET, Speedometer To Instrument Cluster Housing	3.550
GASKET, Spotlight Outside Mounting Bracket	15.370
GASKET, Steering Gear Housing Cross Shaft Cover	10.302
GASKET, Steering Gear Jacket Tube To Toeboard Support Plate	10.350
GASKET, Steering Knuckle Pin Thrust Bearing	10.023
GASKET, Tail, Stop And Rear Directional Signal Lamp Bezel Assembly	3.303
GASKET, Tail, Stop And Rear Directional Signal Lamp Lens	3.305
GASKET, Tail, Stop And Rear Directional Signal Lamp Plate To Fender	3.303
GASKET, Tail, Stop And Rear Directional Signal Lamp To Fender	3.305
GASKET, Thermostat Housing	2.102
GASKET, Thermostat To Housing	2.100
GASKET, Timing Case Cover	1.121
GASKET, Timing Case Cover Spacer	1.122
GASKET, Torque Tube To Axle	9.152
GASKET, Transmission Case Cover	6.009
GASKET, Transmission Front Bearing Cap	6.017
GASKET, Transmission Rear Bearing Cap	6.028
GASKET, Transmission To Overdrive Adapter	6.260
GASKET, Transmission To Torque Tube	6.030
GASKET, Tube Elbow To Manifold Cover	1.065
GASKET, Valve Tappet Cover	1.110
GASKET, Water Outlet Cover	1.059
GASKET, Water Outlet Manifold	2.082
GASKET, Water Pump	2.098
GASKET, Windshield Wiper Motor Access Hole	22.120
GASKET, Windshield Wiper Pivot Shaft	22.047
GAUGE, Gasoline	3.615
GAUGE, Oil Level	1.187
GAUGE, Oil Pressure	3.605
GAUGE, Water Temperature	3.610
GEAR ASSEMBLY, Overdrive Sun	6.299
GEAR ASSEMBLY, Steering	10.290
GEAR ASSEMBLY, Steering	10.500
GEAR, Automatic Transmission Output Shaft Ring	16.160
GEAR, Automatic Transmission Rear Oil Pump Drive	16.100
GEAR, Automatic Transmission Rear Oil Pump Driven	16.100

****** Refer separate Upholstery parts catalog

Copyright 1963 American Motors Corp.

ALPHABETICAL INDEX

DESCRIPTION	GROUP NO.
G - Cont.	
GEAR, Automatic Transmission Sun	16.140
GEAR, Crankshaft Flywheel Ring	1.056
GEAR, Distributor	3.042
GEAR, Electric Windshield Wiper Motor	22.226
GEAR, Engine Oil Pump Drive	1.159
GEAR, Engine Oil Pump Drive	1.162
GEAR, Engine Oil Pump Idler	1.157
GEAR, Front Door Electric Operated Window Regulator Pinion	23.308
GEAR, Overdrive Governor	6.329
GEAR, Overdrive Governor Drive	6.329
GEAR, Overdrive Ring	6.307
GEAR, Rear Axle Differential Pinion	9.031
GEAR, Rear Axle Differential Side	9.027
GEAR, Rear Door Electric Operated Window Regulator Pinion	23.308
GEAR, Rear Quarter Electric Operated Window Regulator Housing Pinion	24.203
GEAR, Rear Quarter Electric Operated Window Regulator Transmission Drive	24.203
GEAR, Rear Quarter Electric Operated Window Regulator Transmission Worm	24.203
GEAR, Seat Back Internal Ring	29.105
GEAR, Seat Back Shuttle	29.105
GEAR SET, Rear Axle Differential Pinion	9.031
GEAR SET, Rear Axle Differential Side	9.027
GEAR SET, Rear Axle Ring	9.050
GEAR, Speedometer Drive	6.240
GEAR, Speedometer Drive	16.248
GEAR, Speedometer Driven	3.590
GEAR, Spotlight Tube	15.370
GEAR, Tailgate Electric Operated Window Regulator Pinion	23.308
GASKET, Transmission Adapter To Reverse Gear Housing	6.030
GEAR, Transmission Countershaft	6.164
GEAR, Transmission First Speed	6.144
GEAR, Transmission Low And Reverse	6.144
GEAR, Transmission Reverse Idler	6.170
GEAR, Transmission Second Speed	6.120
GEAR, Transmission Third Speed	6.144
GENERATOR	3.005
GLASS ASSEMBLY, Front Door Lowering	25.014
GLASS ASSEMBLY, Rear Door Lowering	25.015
GLASS ASSEMBLY, Rear Quarter Window Lowering	25.029
GLASS ASSEMBLY, Tailgate Lowering	25.013
GLASS, Front Door Lowering	25.018
GLASS, Front Door Ventilator	25.016
GLASS, Liftgate	25.028
GLASS, Outside Rear View Mirror	15.270
GLASS, Rear Door Lowering	25.020
GLASS, Rear Door Stationary Window	25.023
GLASS, Rear Door Ventilator	25.021
GLASS, Rear Quarter Lowering	25.024
GLASS, Rear Quarter Stationary	25.026
GLASS, Rear Quarter Ventilator	25.022
GLASS, Rear Window	25.028
GLASS, Side Front Window	25.025
GLASS, Side Rear Window	25.027
GLASS, Tailgate	25.028

DESCRIPTION	GROUP NO.
G - Cont.	
GLASS, Windshield	25.001
GOVERNOR, Automatic Transmission	16.085
GLIDE, Folding Top Cam	28.015
GOVERNOR, Overdrive	6.329
GRILLE, Air Conditioning Evaporator Housing Louvers	13.488
GRILLE, Instrument Panel Radio Speaker	22.077
GRILLE, Radiator	2.050
GRILLE, Radio Rear Speaker	15.320
GRIP, Tailgate Latch Handle	23.039
GRILLE, Tail, Stop And Rear Directional Signal Lamp Lens	3.306
GRIP, Reverse Lockout Finger	7.001
GROMMET, Air Conditioning Condenser Core Mounting	13.450
GROMMET, Air Conditioning Evaporator Drain Tube	13.488
GROMMET, Air Conditioning Hose	13.440
GROMMET, Air Conditioning Thermostat Control Capillary Tube	13.477
GROMMET, Ammeter Wire	3.600
GROMMET, Back-Up Lamp Wire	3.318
GROMMET, Blower Motor Wire	13.072
GROMMET, Brake Tubes	8.106
GROMMET, Cowl Ventilator Cable	22.018
GROMMET, Cowl Ventilator Damper Rod	22.014
GROMMET, Cowl Ventilator Intake Cover Panel	22.016
GROMMET, Defroster Air Duct Damper Rod End	13.120
GROMMET, Door Electric Operated Window Regulator Wiring Harness	23.320
GROMMET, Engine Thrust Rod	1.017
GROMMET, Folding Top Well Lining Drain	28.083
GROMMET, Foot Operated Parking Brake Cable	8.192
GROMMET, Front Fender Antenna Lead Cable	15.030
GROMMET, Front Shock	11.208
GROMMET, Gasoline Gauge Wire	3.615
GROMMET, Gasoline Tank Vent Tube Hose	4.141
GROMMET, Gear Shift Operating Shaft Lever	7.088
GROMMET, Gear Shift Upper Lever	7.020
GROMMET, Glove Box Door Check	22.066
GROMMET, Hand Operated Parking Brake Lever	8.180
GROMMET, Heater Air Damper Vacuum Hose	13.020
GROMMET, Heater Air Inlet Damper Rod End	13.015
GROMMET, Heater And Defroster Blower Guard	13.072
GROMMET, Instrument Cluster Housing To Instrument Cluster	3.505
GROMMET, License Plate Lamp Wire	3.341
GROMMET, Parking And Front Directional Signal Lamp Wire	3.292
GROMMET, Parking Brake Cable Adjusting Rod	8.214
GROMMET, Parking Brake Release Rod	8.182
GROMMET, Power Brake Vacuum Hose	8.475
GROMMET, Rear Air Suspension Air Reservoir To Rear Leveling Valve Tube	11.360

****** Refer separate Upholstery parts catalog

Copyright 1963 American Motors Corp.

DESCRIPTION	GROUP NO.
G - Cont.	
GROMMET, Rear Air Suspension Compressor To Reservoir Hose Clip Bracket	11.345
GROMMET, Rear Axle Sway Stabilizer	9.090
GROMMET, Rear Door Lock Push Button	23.054
GROMMET, Rear Door Push Button Locking Link Anti-Rattle	23.057
GROMMET, Rear Shock	11.228
GROMMET, Rear Quarter Wiring Harness	24.215
GROMMET, Side Belt Rail Drain Tube	28.091
GROMMET, Spare Wheel Carrier Support Hinge	8.350
GROMMET, Steering Gear Jacket Tube To Toeboard	10.350
GROMMET, Tail, Stop And Rear Directional Signal Lamp Wire	3.312
GROMMET, Tailgate Counterbalance Spring	23.037
GROMMET, Trunk Lamp Assembly	3.660
GROMMET, Vacuum Door Lock Tubing Harness	23.067
GROMMET, Windshield Wiper Control	22.038
GROMMET, Windshield Wiper Pivot Shaft	22.047
GROMMET, Wire	2.062
GROMMET, Wire	3.163
GROMMET, Wiring	2.023
GROMMET, Wiring	3.166
GUARD, Air Conditioner Blower Fan	13.072
GUARD, Body Wire Harness	3.163
GUARD, Fan	2.013
GUARD, Front Fender Lower Splash	12.075
GUARD, Heater And Defroster Blower Fan	13.072
GUARD KIT, Front Bumper Vertical	15.194
GUARD KIT, Rear Bumper Vertical	15.190
GUARD, Power Brake Auxiliary Push Rod Rubber	8.660
GUARD, Power Brake Bellcrank To Brake Pedal Link	8.420
GUARD, Power Brake Valve Push Rod	8.480
GUARD, Power Steering Pump Hose	10.470
GUARD, Rear Fender Splash	12.125
GUARDS, Door Edge	15.120
GUIDE, Air Conditioning Receiver Check Valve	13.455
GUIDE, Air Conditioning Thermostat Capillary Tube	13.477
GUIDE AND CLAMP KIT, Steering Gear Worm Ball Bearing Return	10.316
GUIDE, Brake Shoe Automatic Adjusting Cable	8.011
GUIDE, Door Check Link	23.096
GUIDE, E-Stick Actuator Cam Pivot Spring	5.335
GUIDE, Exhaust Valve Stem	1.081
GUIDE, Front Door Glass Channel	25.052
GUIDE, Intake Valve Stem	1.080
GUIDE KIT, E-Stick Actuator Cam	5.333
GUIDE, Power Steering Cylinder Piston Rod	10.410
GUIDE, Power Steering Gear Worm Ball Bearing Return	10.575
GUIDE, Rear Brake Cable	8.224
GUIDE, Rear Door Glass Channel	25.052
GUIDE, Rear Quarter Glass Channel	25.029
GUIDE, Rear Quarter Window	25.029
G - Cont.	
GUIDE, Tailgate	23.045
GUIDE, Tailgate Counterbalance Cable	23.037
GUIDE, Transmission Gear Selector Cable	7.230
GUSSET, Floor To Side Sill	20.017
GUSSET, Frame To Side Roof Rail	20.397
GUSSET, Front Wheelhouse To Cowl Top Panel	20.085
GUSSET, Rear Spring Front Mounting	20.042
GUSSET, Rear Wheelhouse To Rear Window Frame	20.272
GUSSET, Roof Rail To Uniside	20.255
GUSSET, Shelf Panel To Wheelhouse	20.385
GUSSET, Windshield Header Bar To Side Roof Rail	20.160
- H -	
GUIDE, Steering Gear Worm Ball Bearing Return	10.316
HAIR, Hydrovac Air Cleaner	8.555
HANDLE, Air Conditioning Floor Cooling Door	13.488
HANDLE ASSEMBLY, Liftgate	23.077
HANDLE ASSEMBLY, Rear Deck Door	23.077
HANDLE ASSEMBLY, Tailgate	23.077
HANDLE, Assist	27.014
HANDLE, Door Outside	23.074
HANDLE, Door Window Regulator	23.100
HANDLE, Foot Operated Parking Brake Lever Release	8.180
HANDLE, Front Door Outside	23.074
HANDLE, Front Door Ventilator Lock	23.121
HANDLE, Glove Box	22.058
HANDLE, Jack	14.142
HANDLE, Liftgate	23.078
HANDLE, Rear Deck Door	23.078
HANDLE, Rear Door Outside	23.074
HANDLE, Rear Door Ventilator Lock	23.160
HANDLE, Rear Quarter Ventilator Lock	24.020
HANDLE, Rear Quarter Window Regulator	24.002
HANDLE, Remote Control	23.058
HANDLE, Seat Back Adjusting	29.105
HANDLE, Spotlight	15.370
HANDLE, Tailgate	23.078
HANDLE, Tailgate Latch Release	23.039
HANDLE, Tailgate Lock	23.078
HANDLE, Tailgate Lock Release	23.039
HANDLE, Tailgate Window Regulator	23.078
HANDLE, Third Seat Back	29.264
HANDLE, Third Seat Cushion	29.282
HANDLE, Tow Start Lever Assembly	5.350
HANDLE, Transmission Brake Lever	7.205
HANGER, Exhaust Pipe Support	4.195
HANGER, Gasoline Tank Mounting Strap	4.152
HANGER, Luggage Rack Strap	27.215
HANGER, Rear Leaf Spring To Sill	11.033
HANGER, Tail Pipe Front Support	4.234
HARDWARE KIT, Rear Seat Belt Attaching	15.365
HARNESS, Air Conditioning Compressor Drive Clutch Wiring	13.415
HARNESS, Air Conditioning Thermostat To Switch And Clutch Wire	13.477

****** Refer separate Upholstery parts catalog

Copyright 1963 American Motors Corp.

DESCRIPTION	GROUP NO.
H - Cont.	
HARNESS, Alternator	3.005
HARNESS, Alternator To Voltage Regulator And Junction Block	3.016
HARNESS, Automatic Transmission Solenoid Kickdown Switch Wire	16.245
HARNESS, Back-Up Lamp Wire	3.318
HARNESS, Body Wire	3.163
HARNESS, Cargo Area Lamp	3.670
HARNESS, Chassis Wire	3.165
HARNESS, Clock Wiring	3.378
HARNESS, Courtesy Lamp Assembly Switch To Connector	3.349
HARNESS, Courtesy Lamp Assembly Switch To Domelamp Harness	3.349
HARNESS, Courtesy Lamp Assembly To Courtesy Lamp Assembly	3.349
HARNESS, Courtesy Lamp Assembly Wire	3.349
HARNESS, Directional Signal Switch Extension Wire	3.321
HARNESS, Door Electric Operated Window Regulator Wiring	23.320
HARNESS, Folding Top Power Unit Wiring	28.057
HARNESS, Front Door Switch	3.163
HARNESS, Ignition Switch To Flasher	3.130
HARNESS, Instrument Cluster	3.635
HARNESS, Overdrive Wire	3.210
HARNESS, Rear Door Switch	3.163
HARNESS, Rear Quarter Electric Operated Window Regulator Wiring	24.215
HARNESS, Tailgate Electric Operated Window Regulator Wiring	23.320
HARNESS, To Solenoid And Starter Relay	3.130
HARNESS, Vacuum Door Lock Tubing	23.067
HAZE CREAM	15.050
HEAD ASSEMBLY, Cylinder	1.059
HEAD, Electric Windshield Wiper Motor Commutator End	22.210
HEAD, Electric Windshield Wiper Motor Drive End	22.215
HEADER, Folding Top Front	28.018
HEADER, Rear Opening	20.390
HEAD, Folding Top Operating Power Unit Motor	28.058
HEADLAMP ASSEMBLY	3.245
HEADLINING	******
HEADNUT, Brake Master Cylinder	8.050
HEAD, Outside Rear View Mirror	15.270
HEADPOST, Spotlight	15.370
HEAD, Rear Air Suspension Compressor Cylinder	11.303
HEADREST ASSEMBLY, Front Seat Back	15.197
HEADREST ASSEMBLY, Front Seat Back	******
HEATER	13.001
HEATER, Carburetor Choke	4.018
HEATER, Engine	15.145
HINGE, Accelerator Pedal	4.040
HINGE ASSEMBLY, Tailgate	23.006
HINGE, Bracket To Bumper Rail	14.104
HINGE, Console Compartment Door	27.276
H - Cont.	
HINGE, Front Door Lower	23.016
HINGE, Front Door Upper	23.015
HINGE, Glove Box	22.060
HINGE, Hood	12.035
HINGE, Liftgate	23.011
HINGE, Rear Auxiliary Floor Extension	20.430
HINGE, Rear Auxiliary Floor Side Compartment Door	20.437
HINGE, Rear Deck Door	23.028
HINGE, Rear Door Lower	23.018
HINGE, Rear Door Upper	23.017
HINGE, Rear Seat Back	29.221
HINGE, Spare Tire Cover Panel	20.450
HINGE, Spare Wheel Carrier Support	8.350
HINGE, Tailgate Opening Panel	20.460
HINGE, Third Seat Back	29.260
HINGE, Third Seat Cushion	29.280
HOOD	12.001
HOOD, Gear Selector Dial Light	7.535
HOOD, Overdrive Indicator Light	6.380
HOOD, Speedometer	3.550
HOOK, Automatic Transmission Upper Control Valve Vacuum Control	16.205
HOOK, Base Hold Down	14.140
HOOK, Coat	27.130
HOOK, Folding Top Front Header Latch	28.008
HOOK, Hydrovac Vacuum Cylinder	8.585
HOOK, Jack Lift Hold Down	14.138
HORN, Dual	3.105
HORN KIT	15.202
HOSE, Air Conditioning	13.440
HOSE, Air Valve Solenoid	5.270
HOSE, Automatic Transmission Oil Cooler Tube	16.230
HOSE, Battery Box Drain	3.082
HOSE, Brake Tube	8.116
HOSE, Carburetor Choke Heater Tube	4.020
HOSE, Carburetor Insulator To Ventilation Valve	1.117
HOSE, Check Valve To Hydrovac	8.600
HOSE, Cowl Ventilator Drain	13.115
HOSE, Cylinder Block To Ventilation Valve	1.118
HOSE, Cylinder Block Ventilation Valve	1.119
HOSE, Cylinder Head To Control Valve	13.050
HOSE, Defroster	13.108
HOSE, E-Stick Valve Body To Check Valve	5.295
HOSE, Folding Top Power Unit To Hydraulic Cylinder	28.056
HOSE, Front Door Link Anti-Rattle	23.055
HOSE, Front Wheel Disc Brake	8.855
HOSE, Gasoline	4.160
HOSE, Gasoline Tank Drain	4.141
HOSE, Gasoline Tank Filler Tube Vent	4.141
HOSE, Heater Air Damper Vacuum	13.020
HOSE, Heater Core To Tube	13.050
HOSE, Heater Water	13.050
HOSE, Heater Water Valve To Core	13.050
HOSE, Hydrovac To Master Cylinder	8.600
HOSE, Manifold To Check Valve	8.600
HOSE, Oil Filler Cap To Air Cleaner	1.116
HOSE, Oil Filter	1.198

****** Refer separate Upholstery parts catalog

Copyright 1963 American Motors Corp.

DESCRIPTION	GROUP NO.
H - Cont.	
HOSE, Overdrive Vacuum	6.368
HOSE, Power Brake Exhaust	8.690
HOSE, Power Brake Vacuum	8.475
HOSE, Power Brake Vacuum Check Valve To Nipple	8.460
HOSE, Power Steering Pump Pressure	10.470
HOSE, Power Steering Pump Return	10.470
HOSE, Pump To Wiper Motor	22.050
HOSE, Radiator Core Overflow	2.020
HOSE, Radiator Core To Water Pump	2.038
HOSE, Rear Air Suspension Compressor To Reservoir	11.345
HOSE, Rear Belt Rail Drain	28.090
HOSE, Solenoid To Vacuum	5.296
HOSE, Thermostat Housing To Radiator Core	2.038
HOSE, Tube To Carburetor	3.048
HOSE, Tube To Pump	22.050
HOSE, Tube To Valve	1.116
HOSE, Vacuum	5.260
HOSE, Valve Tappet Cover To Air Cleaner	1.116
HOSE, Valve Tappet Cover To Tube	1.116
HOSE, Valve Tappet Cover To Ventilation Valve	1.116
HOSE, Vibration Damper	4.234
HOSE, Water Pump To Cylinder Head Water By-Pass	2.080
HOSE, Windshield Washer	15.440
HOUSING, Air Conditioner Blower	13.072
HOUSING, Air Conditioning Evaporator	13.488
HOUSING ASSEMBLY, Back-Up Lamp	3.316
HOUSING ASSEMBLY, Clutch	5.054
HOUSING ASSEMBLY, Directional Signal Switch	3.321
HOUSING ASSEMBLY, Fresh Air Intake	13.150
HOUSING ASSEMBLY, Heater And Defroster Damper	13.113
HOUSING ASSEMBLY, Parking And Front Directional Signal Lamp	3.292
HOUSING ASSEMBLY, Power Steering Gear	10.520
HOUSING ASSEMBLY, Steering Gear	10.292
HOUSING ASSEMBLY, Tail, Stop And Rear Directional Signal Lamp	3.303
HOUSING, Automatic Transmission Converter	16.040
HOUSING, Carburetor Choke Thermostat	4.018
HOUSING, Cigar Lighter Assembly	3.352
HOUSING, Clock	3.360
HOUSING, Clutch	5.054
HOUSING, Console	27.250
HOUSING, Directional Signal Switch	3.321
HOUSING, Door Lock Striker	23.087
HOUSING, Electric Operated Window Regulator Control	23.330
HOUSING, Front Door Electric Operated Window Regulator Transmission	23.308
HOUSING, Fuel Tank Filler Neck	20.060
HOUSING, Gear Shift Upper Lever	7.020
HOUSING, Heater Core	13.012

DESCRIPTION	GROUP NO.
H - Cont.	
HOUSING, Heater Core And Blower	13.012
HOUSING, Heater Core, Defroster And Blower	13.012
HOUSING, Heater-Defroster And Air Conditioner Blower	13.072
HOUSING, Instrument Cluster	3.505
HOUSING, License Plate Lamp	3.341
HOUSING, Light Switch And Blower	3.130
HOUSING, Power Brake	8.675
HOUSING, Power Brake Power Unit	8.500
HOUSING, Rear Axle	9.003
HOUSING, Rear Door Electric Operated Window Regulator Transmission	23.308
HOUSING, Rear Quarter Electric Operated Window Regulator Control Switch	24.220
HOUSING, Rear Quarter Electric Operated Window Regulator Transmission	24.203
HOUSING, Tailgate Electric Operated Window Regulator Transmission	23.308
HOUSING, Tailgate Lock Striker	23.039
HOUSING, Thermostat	2.102
HOUSING, Transmission Converter	16.040
HOUSING, Transmission Gear Shift	7.002
HOUSING, Transmission Reverse Gear	6.031
HUB, Alternator	3.010
HUB ASSEMBLY, Overdrive Sun Gear	6.301
HUB ASSEMBLY, Rear Wheel	8.243
HUB, Automatic Transmission Front Clutch Cylinder	16.115
HUB, Power Steering Pump Pulley	10.455
HUB, Wire Wheel Spinner	15.450
HUB, Vibration Damper	1.047
HYDROVAC ASSEMBLY, Power Brake	8.550
- I -	
INDICATOR, Engine Dead Center	1.125
INHIBITOR, Cooling System	15.100
INSERT, Accelerator Pedal	4.040
INSERT, Exhaust Pipe	4.178
INSERT, Gear Shift Upper Lever Positioning	7.020
INSERT, Horn Ring	3.406
INSERT KIT, Rear Leaf Spring	11.084
INSERT, Radio Knob	15.320
INSULATION, Air Conditioning Evaporator Housing	13.488
INSULATION, Air Conditioning Hose	13.440
INSULATION, Air Conditioning Thermostat Control Capillary Tube	13.477
INSULATION, Front Seat Back	******
INSULATION, Heater Core Cover	13.012
INSULATION, Heater Core And Blower Housing To Dash	13.012
INSULATION, Heat-Defroster And Air Conditioner Blower Housing	13.072
INSULATION, Hood	12.001
INSULATION, Rear Deck Door	23.009
INSULATION, Rear Seat Back	******

****** Refer separate Upholstery parts catalog

Copyright 1963 American Motors Corp.

DESCRIPTION	GROUP NO.
I - Cont.	
INSULATION, Roof Panel	******
INSULATION, Shelf Panel	20.370
INSULATION, Tailgate	23.006
INSULATION, Underbody	******
INSULATOR, Automatic Transmission Manual Control Lever	16.225
INSULATOR, Automatic Transmission Rear Bearing Retainer To Engine Rear Crossmember	16.177
INSULATOR, Back-Up Lamp Wire	3.318
INSULATOR, Carburetor	4.004
INSULATOR, Carburetor Air Cleaner	4.088
INSULATOR, Clutch Beam To Engine Bracket	5.178
INSULATOR, Crossmember To Transmission	1.013
INSULATOR, Directional Signal Switch	3.321
INSULATOR, Exhaust Pipe Support	4.200
INSULATOR, Frame To Body	20.620
INSULATOR, Front Fender Antenna Sleeve	15.030
INSULATOR, Gear Shift Operating Shaft Lever	7.085
INSULATOR, Heater-Defroster And Air Conditioner Motor	13.072
INSULATOR, Horn Blowing Ring Brush	3.406
INSULATOR, Horn Blowing Ring Contact	3.406
INSULATOR, Horn Blowing Ring Contact Plate To Cam	3.406
INSULATOR, Horn Blowing Ring Plate Spacer	3.406
INSULATOR, Horn Blowing Ring Retainer	3.406
INSULATOR, Horn Blowing Ring Spoke	3.406
INSULATOR, Horn Button Brush	3.400
INSULATOR, Horn Button Retainer	3.400
INSULATOR, Horn Button Spacer	3.400
INSULATOR KIT, Crossmember To Transmission	1.013
INSULATOR, Muffler Support	4.219
INSULATOR, Overdrive Kickdown Switch Button	6.366
INSULATOR, Radio Rear Speaker To Hinge Rod	15.320
INSULATOR, Rear Air Suspension Compressor To Reservoir Tube	11.345
INSULATOR, Spare Wheel Mounting Bolt	8.330
INSULATOR, Tail Pipe Front Support	4.234
- J -	
JACK	14.138
JACKET, Steering Gear Jacket Tube	10.338
JOINT ASSEMBLY, Universal	9.105
- K -	
KEY, Automatic Transmission Rear Oil Pump	16.100
KEY, Camshaft Sprocket	1.134
KEY, Console Compartment Door Lock	27.280
K - Cont.	
KEY, Crankshaft Sprocket	1.132
KEY, Electric Windshield Wiper Motor Gear	22.226
KEY, Glove Box Door Lock	22.073
KEY, Ignition Switch Lock Cylinder	3.135
KEY, Lock Cylinder	23.085
KEY, Locking Gas Cap	15.180
KEY, Overdrive Governor Drive Gear	6.329
KEY, Power Brake Valve Push Rod Stop	8.480
KEY, Power Steering Pump Pulley	10.455
KEY, Power Steering Pump Pulley Hub	10.455
KEY, Rear Air Suspension Compressor Pulley	11.320
KEY, Rear Auxiliary Floor Side Compartment Door Lock	20.438
KEY, Spare Wheel Lock Cylinder	8.376
KEY, Speedometer Drive Gear	6.240
KEY, Transmission Reverse Idler Shaft And Countershaft	6.172
KEY, Vibration Damper Hub	1.047
KNOB, Air Conditioning Air Deflector Louvers	13.488
KNOB, Air Conditioning Air Discharge Lower	13.515
KNOB, Air Conditioning Recirculated Air Control	13.013
KNOB, Air Conditioning Temperature And Blower Switch	13.080
KNOB, Air Conditioning Thermostat Control	13.477
KNOB, Actuator Drive Shaft	29.140
KNOB AND BRACKET, Manual Top Hold Down	28.077
KNOB, Cigar Lighter Assembly	3.352
KNOB, Clock Reset	3.360
KNOB, Cowl Ventilator Control Lever	22.018
KNOB, Front Seat Adjusting Slide Handle	29.133
KNOB, Gear Shift Lever	7.030
KNOB, Heater Air Control	13.017
KNOB, Heater Air Damper Control	13.017
KNOB, Heater Air Outlet Control	13.017
KNOB, Heater And Defroster Control	13.017
KNOB, Heater-Defroster And Air Conditioning Switch	13.080
KNOB, Heater Water Valve Control	13.017
KNOB, Instrument Panel Courtesy Light Switch	3.145
KNOB, Instrument Panel Ash Receiver Tray	22.095
KNOB, Lighting Switch	3.150
KNOB, Outside Rear View Remote Control Mirror Control	15.270
KNOB, Overdrive Control	6.350
KNOB, Parking Brake Release Rod	8.182
KNOB, Radio Rear Speaker Control	15.320
KNOB, Radio Station Selector	15.320
KNOB, Radio Tone	15.320
KNOB, Radio Tone And Selector	15.320
KNOB, Radio Tuning	15.320
KNOB, Radio Volume	15.320
KNOB, Rear Compartment Ash Receiver	27.292

****** Refer separate Upholstery parts catalog

Copyright 1963 American Motors Corp.

K - Cont.

KNOB, Rear Door Ash Receiver 23.188
KNOB, Rear Quarter Side Ash Receiver 24.058
KNOB, Vacuum Door Lock Selector Valve ... 23.065
KNOB, Windshield Wiper Control 22.039

– L –

LACING, Cowl 12.022
LAMP ASSEMBLY, Courtesy 3.349
LAMP ASSEMBLY, License 3.335
LAMP ASSEMBLY, "Open Door" Warning ... 3.655
LAMP ASSEMBLY, Trunk 3.660
LAMP, Cargo Area 3.670
LAMP, Cigar Lighter Assembly 3.352
LAMP, Gear Selector Dial 7.535
LAMP, Glove Box 3.378
LAMP, Instrument Cluster Dial 3.635
LAMP, Instrument Control Dial 3.510
LAMP KIT, Gear Selector Dial 7.535
LAMP, Parking Brake Warning 3.650
LAMP, Rear Quarter 3.675
LATCH, Folding Top Front Header 28.008
LATCH, Liftgate 23.035
LATCH, Rear Brake Shoe Automatic Adjusting Lever 8.012
LATCH, Side Front Window 24.038
LATCH, Tailgate 23.039
LEAD, Electric Windshield Wiper Motor Wire . 22.250
LEAF, Rear Leaf Spring Main 11.104
LENS, Back-Up Lamp 3.317
LENS, Cargo Area Lamp 3.670
LENS, Cigar Lighter Assembly Lamp 3.352
LENS, Clock 3.369
LENS, Courtesy Lamp Assembly 3.349
LENS, Domelamp 3.346
LENS, Instrument Cluster 3.515
LENS, Instrument Cluster Mask 3.515
LENS KIT, Parking And Front Directional Signal Lamp 3.292
LENS KIT, Tail, Stop And Rear Directional Signal Lamp 3.306
LENS, License Plate Lamp 3.339
LENS, Overdrive Indicator Light 6.380
LENS, Parking And Front Directional Signal Lamp 3.292
LENS, Parking Brake Warning Lamp 3.650
LENS, Rear Quarter Lamp 3.675
LENS, Speedometer 3.555
LENS, Tail, Stop And Rear Directional Signal Lamp 3.306
LETTER, Rear Deck 26.039
LETTER, Rear Deck Name 23.009
LETTER, Tailgate Name 23.006
LETTERS, Hood 12.004
LETTERS, Radiator Grille 2.050
LEVER, Accelerator Pedal Rod 4.050
LEVER AND RIVET KIT, Front Door Upper Hinge Cam 23.015
LEVER ASSEMBLY, Automatic Transmission Parking Lock 16.227
LEVER ASSEMBLY, Foot Operated Parking Brake 8.180

L - Cont.

LEVER ASSEMBLY, Gear Shift 7.001
LEVER ASSEMBLY, Gear Shift Upper 7.020
LEVER ASSEMBLY, Tow Start 5.350
LEVER, Automatic Transmission Front Servo 16.060
LEVER, Automatic Transmission Manual Control 16.225
LEVER, Automatic Transmission Manual Control Valve 16.225
LEVER, Automatic Transmission Parking Brake Toggle 16.090
LEVER, Automatic Transmission Parking Brake Toggle Lift 16.090
LEVER, Automatic Transmission Parking
LEVER, Automatic Transmission Rear Servo 16.070
Brake Torsion 16.090
LEVER, Automatic Transmission Throttle Control 16.225
LEVER, Automatic Transmission Upper Control Valve Vacuum Control 16.205
LEVER, Brake Shoe Automatic Adjusting ... 8.012
LEVER, Brake Shoe Parking Brake 8.024
LEVER, Carburetor Control Shaft 4.070
LEVER, Carburetor Control Shaft Bellcrank . 4.060
LEVER, Carburetor Control Shaft To Kickdown Switch 4.070
LEVER, Clutch Release Idler Inner 5.170
LEVER, Clutch Release Idler Outer 5.168
LEVER, Clutch Pedal To Rod 5.155
LEVER, Clutch Pressure 5.014
LEVER, Clutch Throwout 5.123
LEVER, Directional Signal 3.324
LEVER, Gear Shift 7.001
LEVER, Gear Shift 7.130
LEVER, Gear Shift Operating Shaft 7.085
LEVER, Gear Shift Selector 7.080
LEVER, Gear Shift Upper 7.020
LEVER, Hand Operated Parking Brake 8.180
LEVER, Heater Air Control 13.017
LEVER, Heater Air Damper And Water Valve Control 13.017
LEVER, Heater Air Damper Idler 13.017
LEVER, Heater Defroster Control 13.017
LEVER, Heater Water Valve Control 13.017
LEVER, Kickdown Switch 4.055
LEVER, Kickdown Switch 6.370
LEVER, Overdrive Control 6.350
LEVER, Power Brake Reaction 8.705
LEVER, Rear Deck Door Handle Locking 23.078
LEVER, Steering Wheel Release 10.801
LEVER, Tailgate Electric Operated Window Control Switch 23.330
LEVER, Tow Start Cable Lower 5.385
LEVER, Tow Start Upper 5.365
LEVER, Transmission Front Servo 16.060
LEVER, Transmission Manual Control 16.225
LEVER, Transmission Manual Control Valve 16.225
LEVER, Transmission Parking Brake Toggle 16.090
LEVER, Transmission Parking Brake Toggle Lift 16.090
LEVER, Transmission Parking Brake Torsion 16.090
LEVER, Transmission Rear Servo 16.070

****** Refer separate Upholstery parts catalog

Copyright 1963 American Motors Corp.

DESCRIPTION	GROUP NO.
L - Cont.	
LEVER, Transmission Throttle Control	16.225
LEVER, Transmission Upper Control Valve Vacuum Control	16.205
LIFT, Jack	14.138
LIGHT, Back-Up	15.070
LIGHTER ASSEMBLY, Cigar	3.352
LIGHTER KIT, Cigar	3.352
LIGHT KIT, Trunk	15.400
LIGHT, Parking Brake Warning	15.195
LINING, Folding Top Well	28.082
LINING, Glove Box	22.058
LINKAGE ASSEMBLY, Steering	10.100
LINKAGE KIT, Clutch Release Idler Inner	5.180
LINKAGE KIT, Panograph Shifting	7.130
LINK, Air Damper Control To Defroster Control	13.017
LINK ASSEMBLY, Folding Top Side	28.028
LINK, Automatic Transmission Parking Brake Toggle Lever	16.090
LINK, Brake Master Cylinder	8.054
LINK, Brake Pedal To Master Cylinder	8.152
LINK, Brake Shoe Automatic Adjusting	8.009
LINK, Brake Shoe Automatic Adjusting Actuator	8.009
LINK, Brake Shoe To Cylinder Operating	8.016
LINK, Clutch Throwout Lever	5.395
LINK, Electric Windshield Wiper Drive	22.246
LINK, Folding Top Balance	28.027
LINK, Folding Top Rear Side Rail Support	28.015
LINK, Front Door Check	23.093
LINK, Front Suspension Sway Stabilizer To Crossmember	10.260
LINK, Glove Box Door Check	22.066
LINK, Heater Air Damper Idler Lever	13.017
LINK, Power Brake Bellcrank To Brake Pedal	8.420
LINK, Rear Air Suspension Rear Leveling Valve To Rear Axle	11.382
LINK, Rear Deck Lock Cylinder	23.070
LINK, Rear Door Check	23.093
LINK, Rear Door Push Button Locking Bellcrank To Lock	23.057
LINK, Remote Control To Front Door Lock	23.055
LINK, Remote Control To Rear Door Lock	23.055
LINK, Steering Linkage Center Cross	10.240
LINK, Tailgate Check	23.093
LINK, Tailgate Latch To Rod	23.039
LINK, Tailgate Electric Operated Window Control Switch To Lock	23.330
LITTER CONTAINER	15.125
LOAD LEVELER, Helper Spring And Shock Absorber	15.245
LOCK ASSEMBLY, Console Compartment Door	27.280
LOCK ASSEMBLY, Rear Auxiliary Floor Side Compartment Door	20.438
LOCK, Front Door	23.050
LOCK, Gasoline Gauge	3.615
LOCK, Glove Box	22.073
LOCK, Hood	12.060

DESCRIPTION	GROUP NO.
L - Cont.	
LOCK, Liftgate	23.070
LOCK, Rear Deck	23.070
LOCK, Rear Door	23.051
LOCK, Rear Door Safety	15.345
LOCK, Side Front Window	24.038
LOCK, Spare Wheel	8.375
LOCK, Spare Wheel Carrier	8.370
LOCK, Tailgate	23.039
LOCK, Valve Spring Retainer	1.085
LOOM, Rear Air Suspension Air Reservoir To Rear Leveling Valve Tube	11.360
LOOP, Rear Seat Back Latch Retainer	29.217
LOUVER, Air Conditioning Air Deflector	13.488
LOUVERS, Air Conditioning Air Discharge Bezel	13.550
LUBRICANT, All Purpose Chassis	15.260
LUBRICANT, Axle	15.260
LUBRICANT, Rear Axle	9.001
LUBRICANT, Silicone	15.260
LUBRICANT, Special Chassis	15.260
LUBRICANT, Upper Trunnion	15.260
LUBRIPLATE	15.260
LUBRIPLATE	30.035
LUBRIPLATE, Rear Leaf Spring	11.080
LUG, Front Door Window Frame	23.008
LUSTER SEAL	15.050
- M -	
MAGNET, Automatic Transmission Oil Screen	16.045
MAGNET, Gasoline Filter	15.190
MANIFOLD ASSEMBLY, Exhaust	1.067
MANIFOLD, Intake	1.067
MANIFOLD, Water Outlet	2.082
MASK, Gear Selector Dial	7.537
MASK, Instrument Cluster Lens	3.515
MASK, Instrument Panel Air Duct Opening	22.056
MASK, Instrument Panel Radio Speaker Grille	22.077
MAT, Air	15.020
MAT, Front Floor	******
MAT, Full Floor	15.170
MAT, Rear Auxiliary Floor	******
MAT, Rear Auxiliary Floor Extension Storage Compartment	******
MAT, Rear Floor	******
MAT, Rear Seat Back Pan	******
MAT, Rear Trunk Compartment Floor	******
MAT, Twin	15.170
MAT, Twin Floor	15.170
MECHANISM ASSEMBLY, Non-Reclining Front Seat Back	29.105
MEDALLION, Front Door "Air Conditioned"	23.001
MEDALLION, Front Fender	12.075
MEDALLION, Glove Box Door	22.056
MEDALLION, Hood	12.004
MEDALLION, Radiator Grille	2.050
MEDALLION, Rear Deck Door	23.009
MEDALLION, Rear Deck And Tailgate	26.095
MEDALLION, Rear Door "V-8"	23.002

****** Refer separate Upholstery parts catalog

Copyright 1963 American Motors Corp.

DESCRIPTION	GROUP NO.
M - Cont.	
MEDALLION, Rear Fender	12.125
MEDALLION, Rear Seat Back	29.248
MEDALLION, Side Roof Trim Panel	26.059
MEDALLION, Tailgate	23.006
MEMBER, Frame Diagonal	20.610
MEMBER, Frame Side	20.605
MIRROR ASSEMBLY, Spotlight	15.370
MIRROR, Inside Rear View	15.270
MIRROR, Inside Rear View	27.084
MIRROR, Outside Rear View	15.270
MIRROR, Outside Rear View Remote Control	15.270
MIRROR, Visor	15.270
MOTOR, Air Conditioner Blower	13.072
MOTOR, Folding Top Operating Power Unit	28.058
MOTOR, Front Door Electric Operated Window Regulator	23.310
MOTOR, Heater And Defroster	13.072
MOTOR, Heater Defroster And Air Conditioner Blower	13.072
MOTOR, Rear Door Electric Operated Window Regulator	23.310
MOTOR, Rear Quarter Electric Operated Window Regulator	24.205
MOTOR, Starting	3.020
MOTOR, Tailgate Electric Operated Window Regulator	23.310
MOTOR, Windshield Wiper	22.027
MOULDING ASSEMBLY, Radiator Grille Panel	2.051
MOULDING, Center Body Pillar	26.033
MOULDING, Console Compartment Door Opening	27.271
MOULDING, Folding Top Wire On	28.079
MOULDING, Full Front Seat Back	29.115
MOULDING, Front Body Pillar Drip	20.395
MOULDING, Front Door	26.032
MOULDING, Front Door Finish	26.010
MOULDING, Front Door Trim Panel	23.198
MOULDING, Front Drip	20.395
MOULDING, Front Fender	12.078
MOULDING, Front Pillar Side	26.073
MOULDING, Glove Box Door	22.056
MOULDING, Headlining	******
MOULDING, Headlining Side	27.026
MOULDING, Headlining Side Retainer	27.022
MOULDING, Hood	12.004
MOULDING, Instrument Panel	22.100
MOULDING, Left Front Seat Back	29.115
MOULDING, Left Front Seat Back Kickpanel	29.116
MOULDING, Luggage Rack	27.200
MOULDING, Radiator Air Intake	2.051
MOULDING, Radiator Grille Extension	2.050
MOULDING, Rear Body Pillar Belt	26.035
MOULDING, Rear Deck	26.039
MOULDING, Rear Door	26.034
MOULDING, Rear Door Finish	26.014
MOULDING, Rear Door Trim Panel	23.198
MOULDING, Rear Fender	12.128
M - Cont.	
MOULDING, Rear Floor Well Carpet	29.424
MOULDING, Rear Header Drip	20.395
MOULDING, Rear Quarter Body Belt	26.036
MOULDING, Rear Quarter Side Drip	20.395
MOULDING, Rear Quarter Side Trim Panel	24.065
MOULDING, Rear Quarter Window Finish	26.018
MOULDING, Rear Quarter Window Reveal	26.056
MOULDING, Rear Seat Back Medallion	29.249
MOULDING, Rear Shelf Panel Front	27.300
MOULDING, Rear Window Finish	26.020
MOULDING, Rear Window Reveal	26.058
MOULDING, Right Front Seat Back	29.115
MOULDING, Right Front Seat Back Kickpanel	29.116
MOULDING, Rocker Panel	26.074
MOULDING, Roof Panel Front	26.077
MOULDING, Roof Rear Side	26.077
MOULDING, Roof Side Extension Panel	26.077
MOULDING, Side Drip	20.395
MOULDING, Side Roof Rail Finish	26.028
MOULDING, Side Window Finish	26.017
MOULDING, Tailgate	26.096
MOULDING, Tailgate Carpet	23.205
MOULDING, Tailgate Window Reveal	26.100
MOULDING, Third Seat Back	29.266
MOULDING, Third Seat Cushion Support	29.279
MOULDING, Windshield Finish	26.001
MOULDING, Windshield Header Trim	28.004
MOULDING, Windshield Reveal	26.050
MOULDING, Wire On Cordless	******
MUFFLER, Ceramic Coated	4.210
MUFFLER, Not Ceramic Coated	4.210
MUFFLER, Rear Air Suspension Rear Leveling Valve	11.365
- N -	
NAMEPLATE, Front Fender	12.075
NAMEPLATE, Glove Box	22.060
NAMEPLATE, Glove Box Door	22.060
NAMEPLATE, Instrument Panel Air Conditioning Opening Cover	22.100
NAMEPLATE, Rear Fender	12.125
NAMEPLATE, Roof Side Extension	26.077
NECK, Gasoline Tank Filler	4.141
NET, Handi-Pak	27.140
NET, Windshield Header Package	27.140
NIPPLE, Cylinder Block Ventilation Valve To Cylinder Head	1.119
NIPPLE, E-Stick Intake Manifold	5.250
NIPPLE, Heater Hose To Cylinder Head	13.088
NIPPLE, Heater Hose To Water Pump	13.088
NIPPLE, Power Brake Vacuum	8.460
NIPPLE, Water Pump To Cylinder Head Water By-Pass	2.080
NOZZLE, Defroster	13.110
NOZZLE, Windshield Washer	15.440
NUMBER, Rear Deck Model Designation	23.009
NUMBER, Tailgate Model Designation	23.006

****** Refer separate Upholstery parts catalog

Copyright 1963 American Motors Corp.

DESCRIPTION	GROUP NO.
N - Cont.	
NUT, Automatic Transmission Front Servo Adjusting Screw	16.060
NUT, Automatic Transmission Rear Servo Adjusting Screw	16.070
NUT, Automatic Transmission Solenoid Jam	16.235
NUT, Brake Shoe Adjusting Screw	8.014
NUT, Brake Tube	8.130
NUT, Carburetor Choke Heater Tube	4.020
NUT, Carburetor Control Shaft End Adjusting	4.070
NUT, Carburetor Control Shaft Socket Adjusting	4.070
NUT, Carburetor Control Shaft To Kickdown Switch Lever	4.070
NUT, Cylinder Head To Block Stud	1.063
NUT, Door Electric Operated Window Regulator Worm Set Screw	23.308
NUT, Front Fender Antenna Dress	15.030
NUT, Front Seat Back Center Armrest Jam	29.142
NUT, Headlamp Adjusting Screw	3.268
NUT, Hydrovac Hydraulic Cylinder Tube Lock	8.560
NUT, Hydrovac Hydraulic Master Piston Ball Spring Retainer Speed	8.575
NUT, Hydrovac Vacuum Piston Rod	8.580
NUT, Outside Rear View Remote Control Trim	15.270
NUT, Power Steering Gear Pitman Shaft Adjusting Screw	10.600
NUT, Power Steering Gear Upper Thrust Bearing Adjuster Lock	10.637
NUT, Rear Air Suspension Air Reservoir To Rear Leveling Valve Tube	11.360
NUT, Rear Air Suspension Rear Leveling Valve Cross To Air Spring Tube	11.380
NUT, Rear Axle Pinion	9.050
NUT, Rear Quarter Electric Operated Window Regulator Housing Worm Set Screw Lock	24.203
NUT, Rear Seat Back Frame Tee	29.220
NUT, Rear View Mirror Locking	27.084
NUT, Seat Back Outer Hinge	29.105
NUT, Seat Back Outer Hinge Bolt	29.105
NUT, Steering Gear Cross Shaft Adjusting Screw	10.308
NUT, Steering Gear Shaft Roller Bearing	10.828
NUT, Steering Gear Worm Ball Bearing	10.316
NUT, Steering Gear Worm Ball Bearing Adjusting Lock	10.326
NUT, Steering Knuckle Spindle	10.007
NUT, Steering Linkage Tie Rod End To Center Cross Link	10.234
NUT, Steering Linkage Tie Rod End To Cylinder	10.234
NUT, Steering Linkage Tie Rod End To Idler Arm	10.234
NUT, Steering Linkage Tie Rod End To Idler Arm Tie Rod	10.234
NUT, Steering Linkage Tie Rod End To Pitman Arm	10.234
N - Cont.	
NUT, Steering Linkage Tie Rod End To Steering Arm	10.234
NUT, Tailgate Operated Window Regulator Worm Set Screw	23.308
NUT, Third Seat Back Frame Tee	29.258
NUT, Third Seat Cushion Tee	29.278
NUT, Turning Radius Stop	10.010
NUT, Turning Radius Stop Bolt	10.010
NUT, Wheel To Stud	8.286
NUT, Windshield Wiper Control Holding	22.041
- O -	
OIL, Automatic Transmission And Power Steering	15.210
OILER, Clutch Beam	5.175
OILER, Clutch Pedal	5.135
OILER, Clutch Pedal Shaft	5.148
OILER, Clutch Release Idler Inner Lever	5.170
OILER, Clutch Release Idler Outer Lever	5.168
OILER, Gear Shift Operating Shaft Lever	7.085
OIL, Motor	15.278
OIL REMOVER, Tar And Road	15.050
OIL, Tune-Up	15.410
ORNAMENT, Back-Up Lamp Lens	3.317
ORNAMENT, Front Fender	12.078
ORNAMENT, Gasoline Tank Filler Cap	4.138
ORNAMENT, Hood	12.004
ORNAMENT, Instrument Panel Air Conditioning Opening Cover	22.100
ORNAMENT KIT, Wheel Cover	15.450
ORNAMENT, Radiator Grille	2.050
ORNAMENT, Rear Deck And Tailgate	26.095
ORNAMENT, Rear Door Moulding	26.034
ORNAMENT, Rear Fender	12.128
ORNAMENT, Rear Quarter Side Roof Trim Panel	24.068
ORNAMENT, Roof Side Extension	26.077
ORNAMENT, Spotlight Door To Shell	15.370
ORNAMENT, Tail Stop And Rear Directional Signal Signal Lamp Lens	3.306
ORNAMENT, Wheel Cover	8.274
ORNAMENT, Wheel Cover	15.450
OVERLAY, Air Conditioning Air Discharge Duct	13.510
OVERDRIVE	6.250
OVERLAY, Air Conditioning Control	13.480
OVERLAY, Air Conditioning Control	22.100
OVERLAY, Brake Pedal Pad Rubber Cover	8.156
OVERLAY, Center Body Pillar	26.033
OVERLAY, Clutch Pedal Pad Cover	5.144
OVERLAY, Foot Operated Parking Brake Lever Cover	8.180
OVERLAY, Front And Rear Vertical Bar	12.184
OVERLAY, Front Door Trim Panel	23.203
OVERLAY, Glove Box Door	22.060
OVERLAY, Instrument Cluster	3.515

****** Refer separate Upholstery parts catalog

Copyright 1963 American Motors Corp.

DESCRIPTION	GROUP NO.
O - Cont.	
OVERLAY, Instrument Cluster Bezel Assembly	3.510
OVERLAY, Instrument Cluster Lens	3.515
OVERLAY, Instrument Control Identification.	22.100
OVERLAY, Instrument Panel	22.100
OVERLAY, Instrument Panel Glove Box Door	22.100
OVERLAY KIT, Center Pillar	15.275
OVERLAY, Radio	15.320
OVERLAY, Rear Door Trim Panel	23.210
OVERLAY, Rear Quarter Trim Panel	24.070
– P –	
PACKING, Folding Top Power Unit To Hydraulic Cylinder Hose	28.056
PACKING, Hydrovac Vacuum Piston Plate	8.580
PACKING KIT, Hydrovac Piston	8.552
PACKING, Rear Main Bearing Cap	1.032
PAD, Assist Handle	27.014
PAD, Buffer	15.260
PAD, Clutch Pressure Eyebolt Grease	5.018
PAD, Converter Housing Cover	16.040
PAD, Door Armrest	******
PAD, Door Outside Handle	23.074
PAD, Folding Top Quarter Stay	28.074
PAD, Front Door Crash	23.210
PAD, Front Door Electric Operated Window Regulator Motor Anti-Rattle	23.310
PAD, Front Fender Antenna To Fender	15.030
PAD, Front Seat Back	******
PAD, Front Seat Back Kickpad	******
PAD, Front Seat Back Kickpanel	29.111
PAD, Front Seat Cushion Cotton	******
PAD, Front Seat Cushion Foam	******
PAD, Gear Selector Pointer Dial Retaining	7.537
PAD, Gear Selector Push Button Control Escutcheon	7.215
PAD, Instrument Panel	22.100
PAD, Instrument Panel Glove Box Door	22.100
PAD, Medallion	2.050
PAD, Rear Compartment Floor	15.020
PAD, Rear Door Crash	23.210
PAD, Rear Door Electric Operated Window Regulator Motor Anti-Rattle	23.310
PAD, Rear Seat Back	******
PAD, Rear Seat Cushion Cotton	******
PAD, Rear Seat Cushion Foam	******
PAD, Rear Quarter Crash	24.075
PAD, Rear View Mirror	27.084
PAD, Tailgate Electric Operated Window Regulator Motor Anti-Rattle	23.310
PAD, Tailgate Handle	23.077
PAD, Third Seat Back	******
PAD, Third Seat Cushion	******
PAD, Third Seat Back Stop Bracket Retainer	29.262
PAD, Windshield Washer Foot Pump Lever	15.440
PAINT, Touch-Up	15.385
PAN, Air Conditioning Evaporator Drip	13.488

DESCRIPTION	GROUP NO.
P - Cont.	
PAN ASSEMBLY, Engine Oil	1.151
PAN ASSEMBLY, Front Floor	20.005
PAN ASSEMBLY, Rear Floor	20.035
PAN, Automatic Transmission Oil	16.015
PAN, Brake Pedal Splash	8.175
PAN, Clutch Pedal Splash	5.165
PANEL, Air Conditioning Control Mounting	13.480
PANEL, Air Conditioning Evaporator Housing Face	13.488
PANEL, Ash Receiver And Instrument Switch Mounting	22.098
PANEL ASSEMBLY, Front Wheelhouse	20.085
PANEL ASSEMBLY, Lower Deck Center	20.325
PANEL ASSEMBLY, Lower Rear	20.330
PANEL ASSEMBLY, Rear Quarter	20.265
PANEL ASSEMBLY, Roof	20.420
PANEL ASSEMBLY, Shelf	20.365
PANEL, Body Side Sill	20.175
PANEL, Center Pillar Trim	******
PANEL, Console Compartment Door Overlay	27.272
PANEL, Console Housing Front Overlay	27.258
PANEL, Console Housing Rear Overlay	27.266
PANEL, Cowl Side	20.155
PANEL, Cowl Top	20.150
PANEL, Cowl Trim	******
PANEL, Cowl Ventilator Intake Cover	22.016
PANEL, Dash To Sill Filler	20.125
PANEL, Front Door	26.032
PANEL, Front Door Outer	23.001
PANEL, Front Door Trim	******
PANEL, Front Door Trim Panel Kickpad	23.195
PANEL, Front Fender Finish	12.078
PANEL, Front Fender Front Extension	12.075
PANEL, Front Seat Back Kickpad Trim	29.112
PANEL, Front Seat Sidewing Trim	29.120
PANEL, Front Wheelhouse	20.085
PANEL, Front Wheelhouse Front	20.085
PANEL, Front Wheelhouse To Dash Panel	20.085
PANEL, Front Wheelhouse Rear	20.085
PANEL, Front Wheelhouse Upper Filler	20.085
PANEL, Fuel Tank Cover	20.277
PANEL, Fuse	3.155
PANEL, Glove Box Mounting	22.058
PANEL, Headlamp Mounting	2.023
PANEL, Headlamp Mounting	3.245
PANEL, Instrument	22.056
PANEL, Instrument Panel Finish	22.100
PANEL, Liftgate	23.011
PANEL, Lock Pillar Trim	******
PANEL, Radiator Air Intake	2.051
PANEL, Radiator Grille	2.051
PANEL, Rear Auxiliary Floor	20.430
PANEL, Rear Auxiliary Floor Side	20.435
PANEL, Rear Auxiliary Floor Side Panel Extension	20.445
PANEL, Rear Auxiliary Side Trim	******
PANEL, Rear Bumper Splash	12.245
PANEL, Rear Cargo Side Trim	******
PANEL, Rear Compartment Lock Pillar Trim	******
PANEL, Rear Compartment Side Trim	******

****** Refer separate Upholstery parts catalog

Copyright 1963 American Motors Corp.

DESCRIPTION	GROUP NO.
P - Cont.	
PANEL, Rear Corner Inner	20.310
PANEL, Rear Deck Overlay	26.039
PANEL, Rear Deck Upper	20.367
PANEL, Rear Door Outer	23.002
PANEL, Rear Door Overlay	26.034
PANEL, Rear Door Trim	******
PANEL, Rear Door Trim Panel Kickpad	23.195
PANEL, Rear Fender	12.128
PANEL, Rear Opening Extension	20.390
PANEL, Rear Pillar Trim	******
PANEL, Rear Quarter	20.270
PANEL, Rear Quarter Body Lock Pillar Finish	20.247
PANEL, Rear Quarter Inside Lower	20.285
PANEL, Rear Quarter Outer	12.125
PANEL, Rear Quarter Roof Extension Trim	******
PANEL, Rear Quarter Side Trim	******
PANEL, Rear Quarter Support Trim	******
PANEL, Rear Quarter Window Regulator	20.280
PANEL, Rear Seat Back Upper Trim	******
PANEL, Rear Shelf Trim	******
PANEL, Rear Wheelhouse	20.272
PANEL, Shelf	20.370
PANEL, Side Roof Extension	20.410
PANEL, Side Roof Trim	26.059
PANEL, Spare Tire Cover	20.450
PANEL, Tailgate Hinge Pillar Trim	******
PANEL, Tailgate Inner Cover	23.006
PANEL, Tailgate Opening	20.460
PANEL, Tailgate Overlay	26.096
PANEL, Uniside Inner	20.170
PANEL, Uniside Outer	20.170
PAN, Flywheel Mud	1.058
PATCH, Rear Wheelhouse	20.272
PAWL, Automatic Transmission Parking Brake	16.090
PAWL, Liftgate Handle Locking	23.078
PAWL, Overdrive Sun Gear Locking	6.305
PAWL, Tailgate Lock Handle	23.078
PEDAL, Accelerator	4.040
PEDAL, Brake	8.140
PEDAL, Clutch	5.135
PELLET, Automatic Transmission Solenoid Kickdown Switch	16.245
PELLET, Horn Button Locating	3.400
PELLET, Overdrive Kickdown Switch Cable	6.367
PELLET, Throttle Control Cable	4.024
PILLAR, Body Center	20.220
PILLAR, Body Front	20.195
PILLAR, Body Front Lower	20.195
PILLAR, Body Front Upper	20.195
PILLAR, Body Lock	20.205
PILLAR, Rear Body	20.240
PILLAR, Rear Quarter Body Lock	20.235
PILLAR, Rear Quarter Window Division	20.305
PILLAR, Tailgate Opening	20.315
PIN, Accelerator Cable To Carburetor	4.057
PIN, Air Conditioning Air Discharge Grille Door Hinge	13.515

DESCRIPTION	GROUP NO.
P - Cont.	
PIN, Automatic Transmission Case Front Brake Band Anchor	16.010
PIN, Automatic Transmission Front Servo Dowel	16.060
PIN, Automatic Transmission Front Servo Lever Pivot	16.060
PIN, Automatic Transmission Front Servo Piston	16.060
PIN, Automatic Transmission Front Servo Roll	16.060
PIN, Automatic Transmission Manual Control Outer Lever Taper	16.225
PIN, Automatic Transmission Parking Brake Pawl Anchor Dowel	16.090
PIN, Automatic Transmission Parking Brake Pawl To Toggle Lever Link	16.090
PIN, Automatic Transmission Parking Brake Toggle Lever Anchor	16.090
PIN, Automatic Transmission Parking Brake Toggle Lever Anchor Pin To Transmission Case Spring	16.090
PIN, Automatic Transmission Parking Brake Toggle Lever To Link	16.090
PIN, Automatic Transmission Parking Brake Torsion Lever Pin Spring	16.090
PIN, Automatic Transmission Parking Brake Torsion Lever Taper	16.090
PIN, Automatic Transmission Rear Servo Lever Roll	16.070
PIN, Automatic Transmission Rear Servo Pivot	16.070
PIN, Automatic Transmission Upper Control Valve Vacuum Control Lever	16.205
PIN, Bottom Frame Outer Hinge Trip Pivot	29.103
PIN, Bracket To Bumper Rail Hinge	14.104
PIN, Brake Shoe Hold Down Spring Or Clip Retaining	8.008
PIN, Clutch Pressure Eyebolt	5.018
PIN, Clutch Throwout Lever Sleeve	5.109
PIN, Cylinder Block Dowel	1.020
PIN, Cylinder Block To Clutch Housing Or Converter Housing Dowel	1.020
PIN, Cylinder Block To Cylinder Head Dowel	1.020
PIN, Cylinder Head To Block Front Dowel	1.063
PIN, Cylinder Head To Block Rear Dowel	1.063
PIN, Cylinder Head To Manifold Dowel	1.059
PIN, Directional Signal Switch Canceling	3.321
PIN, Distributor Gear	3.042
PIN, Door Lock Cylinder Pivot	23.081
PIN, Door Outside Handle Trigger Hinge	23.074
PIN, Door Window Regulator Handle	23.107
PIN, Exhaust Manifold Damper Heat Valve Spring	1.067
PIN, Front Door Hinge	23.023
PIN, Front Seat Cushion Lounge Tilt Actuator Bracket Roll	29.140
PIN, Front Seat Cushion Lounge Tilt Actuator Drive Shaft Groove	29.140

****** Refer separate Upholstery parts catalog

Copyright 1963 American Motors Corp.

DESCRIPTION	GROUP NO.
P - Cont.	
PIN, Gear Shift Lever Pivot Shaft	7.005
PIN, Gear Shift Lever Return Spring	7.001
PIN, Gear Shift Operating Shaft	7.038
PIN, Gear Shift Operating Shaft Spring	7.038
PIN, Gear Shift Selector Lever	7.080
PIN, Gear Shift Upper Lever Pivot	7.020
PIN, Gear Shift Upper Lever Pressure	7.025
PIN, Hand Operated Parking Brake Bellcrank	8.187
PIN, Horn Blowing Contact	3.400
PIN, Horn Blowing Contact	3.406
PIN, Hydrovac Hydraulic Piston	8.580
PINION, Front Door Electric Operated Window Regulator	23.308
PINION, Overdrive	6.309
PINION, Rear Door Electric Operated Window Regulator	23.308
PINION, Rear Quarter Electric Operated Window Regulator Housing	24.203
PINION, Tailgate Electric Operated Window Regulator	23.308
PIN KIT, Clutch Beam Assembly	5.175
PIN, Liftgate Handle Spring Retainer	23.078
PIN, Liftgate Hinge	23.011
PIN, Overdrive Shift Guide	6.295
PIN, Pitman Arm Stop	10.104
PIN, Pivot Shaft	7.001
PIN, Power Steering Cylinder Valve Spool To Rod End	10.398
PIN, Power Steering Pump Cam To Body Lock	10.435
PIN, Power Steering Pump Rotor Lock	10.435
PIN, Rear Air Suspension Compressor Piston	11.306
PIN, Rear Axle Differential Shaft	9.036
PIN, Rear Brake Shoe Automatic Adjusting Lever Latch	8.012
PIN, Rear Deck Lock Cylinder Pivot	23.081
PIN, Rear Door Hinge	23.023
PIN, Rear Leaf Spring Front Eye Bushing	11.033
PIN, Rear Quarter Window Regulator Handle	24.009
PIN, Remote Control Handle	23.063
PIN, Reverse Lockout Finger Grip Spring	7.001
PIN, Rod To Pedal	5.140
PIN, Seat Back Outer Hinge Stop	29.105
PIN SET, Piston	1.149
PIN, Steering Knuckle	10.013
PIN, Steering Knuckle Spindle Cotter	10.007
PIN, Steering Idler Arm Pivot	10.112
PIN, Steering Wheel Actuator Lock Shoe Retaining	10.845
PIN, Tailgate Handle Trigger Hinge	23.077
PIN, Tailgate Hinge	23.006
PIN, Tailgate Lock Cylinder Pivot	23.081
PIN, Tailgate Lock Handle Spring Retainer	23.078
PIN, Transmission Gear Selector Cable To Gear Shift Lever Clevis	7.230
PIN, Transmission Gear Selector Cable To Lever	7.230
PIN, Transmission Reverse Idler Shaft Fork	6.172
PIN, Transmission Shifter	6.198
PIN, Transmission Shifter Fork Sleeve Taper Lock	6.192
PIN, Transmission Speed Finder Interlock	6.215
PIPE, Ceramic Coated Tail	4.227
PIPE, Exhaust	4.178
PIPE, Not Ceramic Coated Tail	4.227
PIPE, Oil Filler	1.022
PISTON	1.143
PISTON ASSEMBLY E-Stick Servo	5.315
PISTON, Automatic Transmission Front Clutch Cylinder	16.115
PISTON, Automatic Transmission Front Servo	16.060
PISTON, Automatic Transmission Rear Clutch Drum	16.125
PISTON, Automatic Transmission Rear Servo	16.070
PISTON, Brake Master Cylinder	8.044
PISTON, Front Seat Cushion Lounge Tilt Actuator Cylinder	29.140
PISTON, Hydrovac	8.570
PISTON, Hydrovac Hydraulic Master	8.575
PISTON, Hydrovac Relay Valve	8.570
PISTON, Power Brake Master Cylinder	8.515
PISTON, Power Brake Master Cylinder	8.715
PISTON, Power Brake Power	8.695
PISTON, Power Steering Cylinder Valve Spool Reaction	10.398
PISTON, Rear Air Suspension Air Spring	11.387
PISTON, Rear Air Suspension Compressor	11.306
PISTON SET, Brake Wheel Cylinder	8.078
PIVOT, Accelerator Pedal	4.040
PIVOT ASSEMBLY, Clutch Throwout Lever	5.130
PIVOT, Clutch Release Idler Inner Lever	5.170
PIVOT, Clutch Release Idler Outer Lever	5.168
PIVOT, Clutch Throwout Lever	5.130
PIVOT, E-Stick Actuator Cam	5.335
PIVOT, Front Door Ventilator Upper	23.118
PIVOT, Gear Shift Lever	7.007
PIVOT, Rear Quarter Window Lowering	25.029
PLATE, Accelerator Shaft Bushing Retainer	4.050
PLATE, Air Conditioner Blower Housing Mounting	13.072
PLATE, Air Conditioning Compressor Drive Clutch	13.415
PLATE, Air Conditioning Control Identification	13.488
PLATE, Air Conditioning Control Trim	13.488
PLATE, Air Conditioning Intermediate Pulley Adjusting	13.430
PLATE, Air Conditioning Intermediate Pulley Mounting	13.430
PLATE, Alternator Ammeter Mounting	3.600
PLATE AND SWITCH, Electric Windshield Wiper Motor	22.218
PLATE ASSEMBLY, Hydrovac End	8.570
PLATE ASSEMBLY, Rear Leaf Spring To Axle U-Bolt Tie	11.136
PLATE, Automatic Transmission Converter Drive	16.035

****** Refer separate Upholstery parts catalog

Copyright 1963 American Motors Corp.

DESCRIPTION	GROUP NO.
P - Cont.	
PLATE, Automatic Transmission Converter Drive Reinforcement	16.035
PLATE, Automatic Transmission Front Clutch Cylinder Drive	16.115
PLATE, Automatic Transmission Front Clutch Cylinder Driven	16.115
PLATE, Automatic Transmission Front Clutch Cylinder Pressure	16.115
PLATE, Automatic Transmission Lower Control Valve	16.215
PLATE, Automatic Transmission Planetary To Output Shaft Needle Bearing Thrust	16.152
PLATE, Automatic Transmission Rear Clutch Drum Drive	16.125
PLATE, Automatic Transmission Rear Clutch Drum Driven	16.125
PLATE, Automatic Transmission Rear Clutch Drum Pressure	16.125
PLATE, Automatic Transmission Rear Oil Pump Body	16.100
PLATE, Automatic Transmission Upper Control Valve	16.205
PLATE, Body Side Sill Panel Reinforcement	20.180
PLATE, Bottom Frame Outer Hinge	29.103
PLATE, Brake And Clutch Pedal Opening	20.118
PLATE, Brake Master Cylinder Piston Stop	8.046
PLATE, Brake Shoe Anchor Pin Guide	8.022
PLATE, Camshaft Thrust	1.041
PLATE, Circuit Breaker Mounting	3.154
PLATE, Clutch Beam Fulcrum	5.181
PLATE, Clutch Driven	5.040
PLATE, Clutch Pressure	5.030
PLATE, Cowl Vent Air Chamber Cover	20.120
PLATE, Cowl Ventilator Damper Rod Support	22.014
PLATE, Door Electric Window Regulator Transmission Pinion Retainer	23.308
PLATE, Door Lock Striker Retainer	23.087
PLATE, Door Lock Striker Tapping	23.087
PLATE, Electric Operated Window Regulator Control Switch Mounting	23.330
PLATE, Electric Windshield Wiper Motor Switch Contact	22.222
PLATE, E-Stick Actuator Cam Locking	5.325
PLATE, Floor Channel Reinforcement Front Cover	20.072
PLATE, Floor To Front Side Sill Reinforcement Cross Tie	20.017
PLATE, Folding Top Operating Power Unit Pump Cover	28.058
PLATE, Folding Top Operating Power Unit Reservoir End	28.058
PLATE, Frame Center Cover	20.615
PLATE, Front Brake Support	8.001
PLATE, Front Door Lock Face	26.032
PLATE, Front Door Scuff	27.005
PLATE, Front Door Ventilator Friction Unit	23.123
PLATE, Front Door Window Regulator Crossarm Mounting	23.098
PLATE, Front Fender Antenna Cover	15.030
PLATE, Front Fender Sealer	12.075
PLATE, Front Inner Belt Rail Waterdam	20.345
PLATE, Front Seat Cushion Lounge Tilt Actuator Driver	29.140
PLATE, Front Seat Cushion Lounge Tilt Actuator Lock	29.140
PLATE, Gear Selector Control Push Button Backing	7.215
PLATE, Gear Shift Upper Lever Housing Lock	7.020
PLATE, Heater And Defroster Motor Mounting	13.072
PLATE, Heater Core Tube Opening Cover	20.120
PLATE, Heater Motor Opening Cover	20.120
PLATE, Heater Mounting Panel Cover	20.120
PLATE, Heater Tube Opening	13.028
PLATE, Heater Valve Opening Cover	20.120
PLATE, Hood Lock	12.060
PLATE, Horn Blowing Ring Contact	3.406
PLATE, Horn Blowing Ring Index	3.406
PLATE, Horn Button Contact	3.400
PLATE, Horn Button Index	3.400
PLATE, Horn To Wheelhouse	3.105
PLATE, Hydrovac Mounting Bracket	8.590
PLATE, Hydrovac Relay Value Diaphragm	8.555
PLATE, Hydrovac Vacuum Piston Front	8.580
PLATE, Hydrovac Vacuum Piston Rear	8.580
PLATE, Instrument Control Dial Backing	3.510
PLATE, Instrument Panel Control Backing	22.100
PLATE, Instrument Panel Name	22.103
PLATE, Instrument Panel Overlay Backing	22.100
PLATE, Insulator	5.178
PLATE KIT, Automatic Transmission Front Clutch Cylinder	16.115
PLATE, License Frame Front Ornamental	15.240
PLATE, Medallion	2.050
PLATE, Name "Ambassador"	2.050
PLATE, Name "Rambler"	2.050
PLATE, Overdrive Indicator Light Lens	6.380
PLATE, Overdrive Kickdown Switch Contact	6.366
PLATE, Overdrive Sun Gear Balk Snap Ring	6.302
PLATE, Parking Brake Cable Retaining	8.002
PLATE, Parking Brake Rear Cable Retaining	8.220
PLATE, Power Brake Master Cylinder Piston Push Rod	8.505
PLATE, Power Brake Master Cylinder Piston Reaction	8.715
PLATE, Power Brake Valve Body Diaphragm	8.485
PLATE, Power Steering Cylinder To Sill Mounting Bracket Reinforcement	10.427
PLATE, Power Steering Pump Hose Clip To Front Engine Cushion	10.470
PLATE, Power Steering Pump Mounting Bracket To Cylinder Head Support	10.450
PLATE, Power Steering Pump Oil Reservoir Reinforcement	10.465

****** Refer separate Upholstery parts catalog

Copyright 1963 American Motors Corp.

DESCRIPTION	GROUP NO.
P - Cont.	
PLATE, Power Steering Pump Pulley Belt Adjusting	10.455
PLATE, Radio Cable Conduit	3.680
PLATE, Radio Speaker Mounting Plate	15.320
PLATE, Radio Speaker Mounting Plate	22.077
PLATE, Rear Air Suspension Compressor Base	11.300
PLATE, Rear Air Suspension Rear Leveling Valve Mounting Bracket	11.370
PLATE, Rear Axle Differential Clutch Friction	9.035
PLATE, Rear Axle Locking Differential Identification	9.001
PLATE, Rear Brake Support	8.002
PLATE, Rear Compartment Ash Receiver Cover	27.290
PLATE, Rear Deck Name	23.009
PLATE, Rear Door Ash Receiver Cover	23.186
PLATE, Rear Door Ash Receiver Retainer	23.182
PLATE, Rear Door Scuff	27.007
PLATE, Rear Fender Lower Corner Reinforcement	12.125
PLATE, Rear Leaf Spring Front Bracket To Floor Pan Mounting	11.033
PLATE, Rear Leaf Spring Rear Hanger Mounting	11.033
PLATE, Rear Quarter Electric Operated Window Regulator Control Switch	24.220
PLATE, Rear Quarter Electric Window Regulator Transmission Pinion Retainer	24.203
PLATE, Rear Quarter Side Ash Receiver Cover	24.056
PLATE, Rear Quarter Window Lowering Pivot Bracket Adjusting	25.029
PLATE, Rear Seat Back Guide Bracket And Robe Rail Fastening	29.220
PLATE, Rear Seat Back Hinge Fastening	29.220
PLATE, Rear Seat Back Robe Rail Fastening	29.220
PLATE, Rear Leaf Spring Rear Hanger Mounting	20.070
PLATE, Rear View Mirror Fastening	27.084
PLATE, Reverse Gear Selector Lever Spring	7.080
PLATE, Seat Back Outer Hinge Locking	29.105
PLATE, Seat Back Ring Gear Backing	29.105
PLATE, Seat Belt Anchor Belt Backing	15.365
PLATE, Seat Belt Eyebolt Reinforcing	15.365
PLATE, Side Front Window Lock Tapping	24.038
PLATE, Side Sill Lower Front Filler	20.075
PLATE, Side Sill To Floor Pan	20.070
PLATE, Steering Gear Hole Cover	20.120
PLATE, Steering Gear Jacket Tube To Toeboard Support	10.350
PLATE, Steering Wheel And Directional Signal Actuator Support Lock	10.852
PLATE, Steering Wheel Spoke Trim	10.280
PLATE, Tailgate Guide	23.045
PLATE, Tailgate Lock Striker Retainer	23.039
PLATE, Tailgate Name	23.006
P - Cont.	
PLATE, Tail Lamp Mounting	12.125
PLATE, Tail Pipe Front Support Insulator	4.234
PLATE, Third Seat Back Hinge Fastening	29.258
PLATE, Third Seat Back Moulding Fastening	29.258
PLATE, Third Seat Back Stop Bracket Fastening	29.258
PLATE, Third Seat Back Stop Bracket Retainer Scuff	29.262
PLATE, Third Seat Back Support Fastening	29.258
PLATE, Third Seat Cushion Hinge Fastening	29.278
PLATE, Third Seat Cushion Moulding Fastening	29.278
PLATE, Tow Start Control Mounting Bracket	5.355
PLATE, Transmission Rear Oil Pump Body Separator	16.100
PLATE, Transmission Reverse Idler Shaft And Countershaft	6.172
PLATE, Transmission Synchronizer Clutch Shaft	6.100
PLATE, Turning Radius Stop	10.010
PLATE, Vacuum Door Lock Seat Shut Off Valve Actuating	23.066
PLATE, Vibration Damper	1.050
PLATE, Voltage Regulator Adapter	3.012
PLATE, Wheel Cover Ornament Reinforcement	8.274
PLATE, Windshield Wiper Motor Mounting	22.027
PLUG, Air And Defroster Controls Opening	3.505
PLUG, Air Conditioning Inspection Hole	12.009
PLUG ASSEMBLY, Power Steering Cylinder Piston Rod End	10.410
PLUG ASSEMBLY, Rear Axle Filler	9.005
PLUG, Automatic Transmission Case	16.010
PLUG, Automatic Transmission Case Pipe	16.010
PLUG, Automatic Transmission Converter Housing	16.040
PLUG, Automatic Transmission Oil Pan Pipe	16.015
PLUG, Camshaft Rear Bearing	1.041
PLUG, Carburetor Choke Heater Hole	4.020
PLUG, Cargo Light Switch Hole	20.435
PLUG, Choke Heater Hole	1.067
PLUG, Clutch Release Idler Inner Pivot	5.170
PLUG, Clutch Release Idler Outer Oiler Hole	5.168
PLUG, Cylinder Block Core Hole	1.038
PLUG, Cylinder Block Drain	1.038
PLUG, Cylinder Block Oil By-Pass	1.038
PLUG, Cylinder Block Oil Gallery	1.038
PLUG, Cylinder Block Oil Hole	1.038
PLUG, Cylinder	1.059
PLUG, Drain And Filler Magnetic	6.005
PLUG, Drain And Filler Pipe	6.005
PLUG, Drain Expansion	6.005
PLUG, Engine Oil Pan Drain	1.151
PLUG, E-Stick Valve Body Assembly Pipe	5.290
PLUG, Folding Top Operating Power Unit Reservoir Filler	28.058
PLUG, Front Suspension Lower Control Arm Ball Joint Lubrication Fitting Hole	10.048

****** Refer separate Upholstery parts catalog

Copyright 1963 American Motors Corp.

DESCRIPTION	GROUP NO.
P - Cont.	
PLUG, Front Suspension Upper Control Arm Trunnion Bushing Lubrication Fitting Hole	10.042
PLUG, Gasoline Tank Drain	4.148
PLUG, Gear Shift Lever Mounting Bracket Support Hole	7.017
PLUG, Glove Box Button	22.058
PLUG, Heater And Blower Housing Capillary Tube	13.012
PLUG, Hydrovac Vacuum Cylinder Pipe	8.585
PLUG, Instrument Panel Glove Box Light Hole	22.058
PLUG, Instrument Panel Heater And Defroster Controls Dial Opening	22.100
PLUG, Instrument Panel Heater Control Switch Hole	22.100
PLUG, Instrument Panel Thermostat Air Conditioning Hole	22.056
PLUG, Intake Manifold Cover	1.066
PLUG, Intake Manifold Pipe	1.067
PLUG KIT, Cylinder Block Core Hole	1.038
PLUG KIT, Engine Oil Pan Drain	1.151
PLUG, License Light Hole	20.325
PLUG, License Light Hole	20.330
PLUG, Oil Channel	1.185
PLUG, Overdrive Kickdown Switch Wire Contact	6.366
PLUG, Overdrive Transmission Case Drain	6.260
PLUG, Overdrive Transmission Case Filler	6.260
PLUG, Overdrive Transmission Case Oil Seal	6.260
PLUG, Parking Brake Cable Hole	8.002
PLUG, Power Brake Master Cylinder Filler	8.725
PLUG, Power Brake Vacuum Nipple	8.460
PLUG, Power Steering Cylinder Adjusting	10.395
PLUG, Power Steering Cylinder Lubrication Fitting Hole	10.395
PLUG, Power Steering Cylinder Piston Rod Inner Cylinder End	10.397
PLUG, Power Steering Gear Housing End	10.535
PLUG, Power Steering Gear Rack-Piston End	10.585
PLUG, Power Steering Pump Control Valve Retaining	10.445
PLUG, Radiator Core	2.036
PLUG, Rear Axle Filler	9.005
PLUG, Rear Deck Door Button	23.009
PLUG, Rear Door Window Frame Screw Access Hole	23.008
PLUG, Rear Fender Courtesy Light Hole	12.125
PLUG, Rear Fender Drain	12.125
PLUG, Rear Quarter Body Lock Pillar Lower Access Hole	20.235
PLUG, Regulator Panel Access Hole	20.280
PLUG, Spark	3.001
PLUG, Steering Gear Housing Expansion	10.292
PLUG, Steering Gear Housing Oil Filler Pipe	10.294
P - Cont.	
PLUG, Steering Linkage Cross Tube Adjusting	10.242
PLUG, Steering Linkage Cross Tube Safety	10.246
PLUG, Steering Linkage Tie Rod End Lubrication Fitting Hole	10.126
PLUG, Steering Linkage Tie Rod Lubrication Fitting Hole	10.234
PLUG, Tailgate Hole Button	23.006
PLUG, Timing Case Cover	1.120
PLUG, Transmission Speed Finder Taper	6.215
PLUG, Tube To Head Elbow	22.050
PLUG, Water Pump Body	2.080
PLUNGER, Automatic Transmission Lower Control Valve 2nd And 3rd Shift	16.215
PLUNGER, Automatic Transmission Upper Control Valve 2nd And 3rd Shift	16.205
PLUNGER, Console Compartment Door Lift	27.262
PLUNGER, Engine Oil Pump Release Valve	1.176
PLUNGER KIT, Engine Oil Pump Release Valve	1.176
POCKET, Tailgate Lower Hinge	20.330
POINT, Overdrive Solenoid Contact	6.328
POINTER, Gear Selector	7.536
POINTER, Heater-Defroster And Air Conditioning Switch	13.080
POINTER, Radio	15.320
POLISH AND CLEANER	15.050
POPPET, Power Steering Gear Pressure Check Valve	10.530
POPPET, Transmission Speed Finder Interlock	6.215
POPPET VALVE ASSEMBLY, Air Conditioning Hose Disconnect Coupling	13.440
POST ASSEMBLY, Front Seat Back Headrest	27.030
POST, Bottom Frame Center	29.103
POST, Luggage Rack Front	27.208
POST, Luggage Rack Rear	27.212
POWER STEERING KIT	10.360
POWER UNIT, Front Door Vacuum Door Lock	23.064
POWER UNIT, Power Brake	8.400
POWER UNIT, Rear Door Vacuum Door Lock	23.064
PROTECTOR, Brake Master Cylinder Piston Cup	8.046
PROTECTOR, Folding Top Rear Bow Slot	28.038
PROTECTOR, Front Seat Cushion Side Facing	29.156
PROTECTOR, Glove Box	22.060
PROTECTOR, Headlining Retainer Side Roof Rail	27.022
PROTECTOR, Power Brake Master Cylinder Secondary Piston Cup	8.515
PROTECTOR, Rear Seat Cushion Front Facing	29.199
PULLEY, Air Conditioning Compressor Drive	13.415
PULLEY, Air Conditioning Intermediate	13.430
PULLEY, Alternator	3.010
PULLEY, Alternator	3.017
PULLEY, Fan	2.003
PULLEY, Generator	3.010
PULLEY, Power Steering Pump	10.455

****** Refer separate Upholstery parts catalog

Copyright 1963 American Motors Corp.

DESCRIPTION	GROUP NO.
P - Cont.	
PULLEY, Rear Air Suspension Compressor	11.320
PULLEY, Rear Air Suspension Compressor Drive	11.325
PULLEY, Vibration Damper	1.046
PUMP ASSEMBLY, Engine Oil	1.154
PUMP ASSEMBLY, Power Steering	10.430
PUMP ASSEMBLY, Water	2.080
PUMP, Automatic Transmission Front Oil	16.080
PUMP, Automatic Transmission Rear Oil	16.100
PUMP, Fuel	4.110
PUMP, Windshield Washer Foot	15.440
PUTTY	30.022
– R –	
RACE, Automatic Transmission Planetary Carrier One Way Clutch	16.150
RACE, Automatic Transmission Sun Gear Needle Bearing Thrust	16.145
RACE, Steering Gear Shaft Upper Bearing	10.825
RACE, Steering Knuckle Pin Thrust Bearing	10.023
RACK KIT, Luggage	15.250
RACK KIT, Luggage	27.190
RACK-PISTON-NUT ASSEMBLY, Power Steering Gear	10.555
RADIO	15.320
RAFTER, Roof Panel	20.420
RAGBOARD, Coat Hook Backing	27.130
RAGBOARD, Front Seat Back Headrest Casing Protector	27.034
RAGBOARD, Front Seat Back Kickpad	******
RAGBOARD, Windshield Header Package Net	27.140
RAIL ASSEMBLY, Overdrive Shift	6.295
RAIL, Bumper	12.168
RAIL, Folding Top Side	28.015
RAIL, Inner Belt Front	20.345
RAIL, Inner Belt Rear	20.350
RAIL, Luggage Rack	27.203
RAIL, Overdrive Shift	6.295
RAIL, Rear Opening Header	20.390
RAIL, Rear Quarter Side Roof	20.255
RAIL, Rear Seat Back Robe	27.018
RAIL, Rear Window End	20.405
RAIL, Rear Window Upper	20.400
RAIL, Shifter Fork	6.196
RAIL, Side Roof	20.255
RECEIVER, Air Conditioning	13.455
RECEIVER ASSEMBLY, Rear Quarter Ash	24.050
RECEIVER ASSEMBLY, Tailgate Ash	23.190
RECEPTACLE, Seat Belt Buckle	15.365
RECTIFIER, Alternator	3.005
REDUCER, Rear Air Suspension Compressor Oil Feed Tube Elbow	11.335
REED VALVE KIT, Rear Air Suspension Compressor	11.308
REFLECTOR, Tail, Stop And Rear Directional Signal Lamp	3.303
REFLECTOR, Tail Stop And Rear Directional Signal Lamp Lens	3.306
REGULATOR, Alternator	3.012
REGULATOR, Alternator Voltage	3.019
REGULATOR, Front Door Electric Operated Window	23.300
REGULATOR, Front Door Window	23.098
REGULATOR, Generator Voltage	3.011
REGULATOR, Generator Voltage	3.012
REGULATOR, Instrument Cluster Voltage	3.622
REGULATOR, Rear Door Electric Operated Window	23.305
REGULATOR, Rear Door Window	23.098
REGULATOR, Rear Quarter Electric Operated Window	24.200
REGULATOR, Rear Quarter Window	24.001
REGULATOR, Tailgate Electric Operated Window	23.306
REGULATOR, Tailgate Window	23.040
REINFORCEMENT, Air Conditioning Intermediate Pulley Bracket	13.430
REINFORCEMENT, Body Center Pillar	20.230
REINFORCEMENT, Body Lock Pillar	20.215
REINFORCEMENT, Body Side Sill Panel	20.180
REINFORCEMENT, Dash Assembly To Cowl Top	20.120
REINFORCEMENT, Engine Front Support	1.009
REINFORCEMENT, Engine Rear Support Crossmember	1.010
REINFORCEMENT, Floor To Front Side Sill	20.017
REINFORCEMENT, Front Body Pillar Upper	20.190
REINFORCEMENT, Front Door Inner Panel	23.001
REINFORCEMENT, Front Member To Side Sill	20.610
REINFORCEMENT, Front Wheelhouse Dynamic Absorber	20.085
REINFORCEMENT, Front Wheelhouse Panel Front	20.085
REINFORCEMENT, Fuel Tank Mounting	20.035
REINFORCEMENT, Headlining Trim Bow	27.024
REINFORCEMENT, Heater And Defroster Blower Guard	13.072
REINFORCEMENT, Inner To Outer Uniside Panels	20.170
REINFORCEMENT KIT, Front Door Inner Panel	23.001
REINFORCEMENT KIT, Rear Shock Absorber Mounting	20.038
REINFORCEMENT, Lower Center Panel To Floor	20.335
REINFORCEMENT, Luggage Rack Front Post	27.208
REINFORCEMENT, Luggage Rack Rear Post	27.212
REINFORCEMENT, Motor Rear Support Hanger	20.072
REINFORCEMENT, Power Steering Pump Pulley Belt Adjusting Plate To Pump Brace Bracket	10.455

****** Refer separate Upholstery parts catalog

Copyright 1963 American Motors Corp.

ALPHABETICAL INDEX

DESCRIPTION	GROUP NO.
R - Cont.	
REINFORCEMENT, Radiator Air Intake Center Panel	2.051
REINFORCEMENT, Radiator Air Intake Lower Panel	2.051
REINFORCEMENT, Radiator Air Intake Panel	2.051
REINFORCEMENT, Radiator Grille	2.050
REINFORCEMENT, Rear Body Pillar	20.245
REINFORCEMENT, Rear Bumper Mounting	20.325
REINFORCEMENT, Rear Bumper Mounting	20.330
REINFORCEMENT, Rear Fender Lower Corner	12.125
REINFORCEMENT, Rear Quarter Body Lock Pillar	20.245
REINFORCEMENT, Rear Quarter Window Front	20.273
REINFORCEMENT, Rear Seat Belt Mounting	20.005
REINFORCEMENT, Rear Shock Absorber Mounting	20.038
REINFORCEMENT, Rear Sill To Cross Sill Bumper Mount	20.070
REINFORCEMENT, Rear Wheelhouse To Floor Pan	20.272
REINFORCEMENT, Rear Window Opening	20.397
REINFORCEMENT, Regulator Panel To Uniside	20.280
REINFORCEMENT, Rocker Panel	20.180
REINFORCEMENT, Side Roof Rail	20.260
REINFORCEMENT, Side Roof Rail To Rear Quarter Side Roof Rail	20.260
REINFORCEMENT, Side Sill Rear	20.070
REINFORCEMENT, Side Sill To Rear Wheelhouse Filler	20.070
REINFORCEMENT, Steering Gear Shaft Flange	10.715
REINFORCEMENT, Tailgate Opening Pillar	20.315
REINFORCEMENT, Tail, Stop And Rear Directional Signal Lamp Inner	3.303
RELAY, Horn	3.125
RELAY, Overdrive Indicator Light	6.380
RELAY, Overdrive Kickdown	6.365
RELAY, Starting Motor	3.022
REPAIR KIT, Air Conditioning Receiver Check Valve	13.455
REPAIR KIT, Brake Master Cylinder	8.048
REPAIR KIT, Brake Wheel Cylinder	8.080
REPAIR KIT, Front Wheel Disc Brake Caliper	8.820
REPAIR KIT, Fuel Pump	4.110
REPAIR KIT, Hydrovac	8.552
REPAIR KIT, Power Brake Master Cylinder	8.512
REPAIR KIT, Power Brake Power Unit	8.405
REPAIR KIT, Power Brake Unit	8.655
REPAIR KIT, Universal Joint Ball Stud	9.120
REPLACEMENT KIT, Hydrovac Poppet	8.552
RESERVOIR, Folding Top Operating Power Unit	28.058
RESERVOIR, Power Steering Pump Oil	10.465
R - Cont.	
RESERVOIR, Rear Air Suspension Air	11.340
RESERVOIR, Windshield Washer	15.440
RESISTOR, Air Conditioner Blower Motor	13.072
RESISTOR, Alternator	3.005
RESISTOR, Alternator	3.016
RESISTOR, Headlamp Switch Rheostat	3.145
RESISTOR, Ignition	3.065
RESISTOR, Overdrive Kickdown Relay	6.365
RESISTOR, Radio	15.320
RETAINER, Air Conditioning Air Discharge Grille	13.510
RETAINER, Air Conditioning Air Discharge Grille Door Hinge Spring	13.515
RETAINER, Air Conditioning Air Discharge Lower Door	13.515
RETAINER ASSEMBLY, Lower Air Baffle	2.062
RETAINER, Automatic Transmission Parking Brake Toggle Link Spring	16.090
RETAINER, Automatic Transmission Parking Brake Toggle Lever Anchor Pin	16.090
RETAINER, Automatic Transmission Parking Brake Torsion Lever Pin Spring	16.090
RETAINER, Automatic Transmission Rear Bearing	16.175
RETAINER, Automatic Transmission Rear Bearing Retainer Oil	16.175
RETAINER, Automatic Transmission Rear Clutch Drum Spring	16.125
RETAINER, Automatic Transmission Rear Servo Accumulator Spring	16.070
RETAINER, Automatic Transmission Rear Servo Piston Spring	16.070
RETAINER, Automatic Transmission Solenoid Kickdown Switch Spring	16.245
RETAINER, Automatic Transmission Throttle Control Cable	16.300
RETAINER, Brake Master Cylinder Piston Cup	8.046
RETAINER, Brake Shoe Hold Down Spring	8.008
RETAINER, Brake Shoe Parking Brake Lever Strut	8.024
RETAINER, Clutch Pedal To Rod Seal	5.162
RETAINER, Clutch Pivot To Lever Boot	5.168
RETAINER, Clutch Throwout Lever Boot	5.125
RETAINER, Console Compartment Door Lock	27.280
RETAINER, Door Electric Operated Window Regulator Pinion Grease	23.308
RETAINER, Door Electric Operated Window Regulator Worm Grease	23.308
RETAINER, Door Outside Handle Button	23.074
RETAINER, Door Trim Panel Overlay End Moulding	23.198
RETAINER, Door Trim Panel Overlay End Moulding	23.205
RETAINER, Electric Windshield Wiper Drive Crank Eccentric	22.242
RETAINER, Engine Rear Support Crossmember To Sill Cushion	1.015

****** Refer separate Upholstery parts catalog

Copyright 1963 American Motors Corp.

ALPHABETICAL INDEX

DESCRIPTION	GROUP NO.
R - Cont.	
RETAINER, Engine Thrust Rod	1.017
RETAINER, E-Stick Actuator Cam Pivot Spring	5.335
RETAINER, Folding Top Pivot Support	28.015
RETAINER, Folding Top Well Lining Drain	28.083
RETAINER, Front Door Remote Control Link	23.055
RETAINER, Front Fender Side Upper Ornament	12.078
RETAINER, Front Seat Back Center Armrest Hook	29.142
RETAINER, Front Shock Upper Grommet	11.208
RETAINER, Front Wheel Grease	8.296
RETAINER, Gasoline Filter Bowl Wire	15.190
RETAINER, Gear Shift Lever Boot	7.011
RETAINER, Gear Shift Selector Lever	7.080
RETAINER, Gear Shift Upper Lever Pressure Pin	7.025
RETAINER, Glove Box Lock	22.073
RETAINER, Grommet To Dash	3.166
RETAINER, Hand Operated Parking Brake Bellcrank Pin	8.187
RETAINER, Headlining Front	27.022
RETAINER, Headlining Rear	27.022
RETAINER, Headlining Side Moulding	27.026
RETAINER, Hood Lock Spring	12.060
RETAINER, Horn Blowing Ring	3.406
RETAINER, Horn Button Seat	3.400
RETAINER, Horn Button Spring	3.416
RETAINER, Hydrovac Air Cleaner Hair	8.555
RETAINER, Hydrovac Hydraulic Master Piston Ball Spring	8.575
RETAINER, Hydrovac Hydraulic Piston Seal	8.580
RETAINER, Hydrovac Relay Valve Piston	8.570
RETAINER, Hydrovac Vacuum Piston Plate	8.580
RETAINER, Hydrovac Relay Valve Return Spring	8.570
RETAINER, Instrument Cluster Lens	3.525
RETAINER, Instrument Panel Ash Receiver	22.096
RETAINER, Liftgate Handle Spring	23.078
RETAINER, Load Leveler Spring	11.235
RETAINER, Outside Rear View Mirror Glass	15.270
RETAINER, Outside Rear View Mirror Stud	15.270
RETAINER, Overdrive Indicator Light	6.380
RETAINER, Overdrive Kickdown Switch	6.367
RETAINER, Power Brake Air Filter	8.450
RETAINER, Power Brake Master Cylinder Primary Piston Cup	8.515
RETAINER, Power Brake Master Cylinder Secondary Piston Cup	8.515
RETAINER, Power Brake Valve Push Rod Guard	8.480
RETAINER, Power Steering Cylinder Piston Rod End Plug Wiping Ring	10.410
RETAINER, Power Steering Cylinder Piston Rod Guide Seal	10.410
RETAINER, Power Steering Cylinder Piston Rod Guide "T" Ring	10.410
R - Cont.	
RETAINER, Power Steering Cylinder Valve Spool Seal	10.398
RETAINER, Power Steering Cylinder Valve Spool Seal And Washer	10.398
RETAINER, Propeller Shaft Center Bearing	9.144
RETAINER, Propeller Shaft Oil Seal	9.101
RETAINER, Radio Cable Conduit	3.680
RETAINER, Rear Auxiliary Floor Side Compartment Door Lock	20.438
RETAINER, Rear Axle Drive Shaft	9.076
RETAINER, Rear Axle Drive Shaft Outer Seal	9.077
RETAINER, Rear Axle Pinion Oil Seal	9.064
RETAINER, Rear Compartment Ash Receiver	27.285
RETAINER, Rear Compartment Trim Panel	20.350
RETAINER, Rear Door Ash Receiver	23.182
RETAINER, Rear Door Electric Operated Window Regulator Pinion Gear	23.308
RETAINER, Rear Door Glass Stop Bumper	25.054
RETAINER, Rear Door Link	23.055
RETAINER, Rear Door Locking Bellcrank	23.055
RETAINER, Rear Door Lowering Glass Slide Channel	25.038
RETAINER, Rear Fender Side Moulding End	12.128
RETAINER, Rear Opening Header Headlining	27.022
RETAINER, Rear Quarter Electric Operated Window Regulator Housing Pinion Grease	24.203
RETAINER, Rear Quarter Electric Operated Window Regulator Housing Worm Grease	24.203
RETAINER, Rear Quarter Lamp Lens	3.675
RETAINER, Rear Quarter Lowering Glass Slide Channel	25.040
RETAINER, Rear Quarter Overlay End Moulding	24.065
RETAINER, Rear Quarter Roof Extension Trim	******
RETAINER, Rear Quarter Side Ash Receiver	24.052
RETAINER, Rear Seat Back Guide Bracket	29.217
RETAINER, Rear Seat Back Latch	29.219
RETAINER, Rear Seat Cushion	20.005
RETAINER, Rear Shock Upper Grommet	11.228
RETAINER, Rear View Mirror	27.084
RETAINER, Rear Wheel Guide	8.310
RETAINER, Rear Wheel Oil Seal	8.312
RETAINER, Roof Rail Weatherseal	23.012
RETAINER, Speedometer Driven Gear	3.590
RETAINER, Steering Gear Cross Shaft Seal	10.310
RETAINER, Steering Gear Jacket Tube To Instrument Panel Cushion	10.339
RETAINER, Steering Gear Jacket Tube To Toeboard "O" Ring	10.350
RETAINER, Steering Gear Shaft Bearing Preload Capsule Rubber Washer	10.820
RETAINER, Steering Gear Worm Bearing	10.322
RETAINER, Steering Knuckle Spindle Nut	10.007
RETAINER, Steering Shaft Seal	10.331
RETAINER, Steering Shaft To Column Seal	10.331
RETAINER, Tail, Stop And Rear Directional Signal Lamp Reflector	3.303
RETAINER, Tailgate Check Link	23.096

****** Refer separate Upholstery parts catalog

Copyright 1963 American Motors Corp.

DESCRIPTION	GROUP NO.
R - Cont.	
RETAINER, Tailgate Electric Operated Window Regulator Pinion Grease	23.308
RETAINER, Tailgate Electric Operated Window Regulator Worm Grease	23.308
RETAINER, Tailgate Lock Handle Spring	23.078
RETAINER, Tailgate Opening Panel	20.460
RETAINER, Tailgate Outside Handle Button	23.077
RETAINER, Third Seat Back Handle	29.264
RETAINER, Third Seat Back Stop Bracket	29.262
RETAINER, Third Seat Cushion Handle	29.282
RETAINER, Torque Tube Seal	9.152
RETAINER, Torque Tube To Adapter	9.150
RETAINER, Transmission Governor Spring	16.085
RETAINER, Universal Joint Bearing	9.118
RETAINER, Upper Air Baffle Seal	2.062
RETAINER, Upper Sealer To Body	23.013
RETAINER, Valve Spring	1.084
RETAINER, Windshield Wiper	22.030
RETRACTOR KIT, Front Seat Belt	15.365
RETRACTOR, Seat Belt	15.365
RHEOSTAT, Headlamp Switch	3.145
RING, Accelerator Cable To Trunnion Retaining	4.057
RING, Air Conditioning Compressor Drive Pulley Bushing Snap	13.415
RING, Air Conditioning Hose Disconnect Coupling	13.440
RING, Air Conditioning Receiver Check Valve To Body "O"	13.455
RING AND SEAL KIT, Power Steering Gear Valve	10.625
RING, Automatic Transmission Front Clutch Cylinder Oil Seal "O"	16.115
RING, Automatic Transmission Front Clutch Cylinder Plates Retaining Snap	16.115
RING, Automatic Transmission Front Clutch Cylinder Spring Bearing	16.115
RING, Automatic Transmission Front Clutch Cylinder Spring Retaining Snap	16.115
RING, Automatic Transmission Front Clutch Cylinder Square Section	16.115
RING, Automatic Transmission Front Oil Pump Seal "O"	16.080
RING, Automatic Transmission Front Oil Pump Tube "O"	16.080
RING, Automatic Transmission Front Servo Piston Oil Seal	16.060
RING, Automatic Transmission Front Servo Sleeve Oil Seal "O"	16.060
RING, Automatic Transmission Front Servo Sleeve Snap	16.060
RING, Automatic Transmission Governor Snap	16.085
RING, Automatic Transmission Manual Control Lever Oil Seal "O"	16.225
RING, Automatic Transmission Oil Collector Sleeve Oil Seal	16.170
RING, Automatic Transmission Output Shaft Oil Sealing	16.160

DESCRIPTION	GROUP NO.
R - Cont.	
RING, Automatic Transmission Output Shaft Ring Gear Snap	16.160
RING, Automatic Transmission Parking Brake Toggle Lever Anchor Pin Oil Seal "O"	16.090
RING, Automatic Transmission Parking Brake Torsion Lever Pin Oil Seal "O"	16.090
RING, Automatic Transmission Parking Lock Oil Seal "O"	16.227
RING, Automatic Transmission Planetary Carrier One Way Clutch Snap	16.150
RING, Automatic Transmission Rear Clutch Drum Oil Sealing	16.125
RING, Automatic Transmission Rear Clutch Drum Oil Seal "O"	16.125
RING, Automatic Transmission Rear Clutch Drum Plates Retaining Snap	16.125
RING, Automatic Transmission Rear Clutch Drum Spring Retaining Snap	16.125
RING, Automatic Transmission Rear Clutch Drum Square Section	16.125
RING, Automatic Transmission Rear Oil Pump Discharge Oil Seal	16.055
RING, Automatic Transmission Rear Oil Pump Inlet Oil Seal	16.050
RING, Automatic Transmission Rear Servo Piston Internal Snap	16.070
RING, Automatic Transmission Rear Servo Piston Oil Seal	16.070
RING, Automatic Transmission Rear Servo Piston Retainer Snap	16.070
RING, Automatic Transmission Solenoid Oil Seal "O"	16.235
RING, Automatic Transmission Speedometer Drive Gear Steel	16.248
RING, Automatic Transmission Sun Gear Oil Sealing	16.140
RING, Automatic Transmission Throttle Control Pin Snap	16.300
RING, Back-Up Lamp Lens Retainer	3.317
RING, Brake Pedal Shaft Lock	8.160
RING, Clutch Beam Lock	5.175
RING, Clutch Pedal Shaft Retaining	5.135
RING, Cylinder Head To Block Dowel Pin "O"	1.063
RING, Engine Oil Pump Drive Gear Lock	1.161
RING, Fan Shroud Extension	2.013
RING, Folding Top Operating Power Unit Pump Armature Shaft "O"	28.058
RING, Folding Top Operating Power Unit Reservoir End "O"	28.058
RING, Front Seat Cushion Lounge Tilt Actuator Piston Retaining	29.140
RING, Front Wheel Grease Retainer Outer Cap "O"	8.296
RING, Gear Shift Operating Shaft Retainer	7.038
RING, Gear Shift Rod "O"	7.125
RING, Gear Shift Upper Lever Ball Retaining	7.020
RING, Gear Shift Upper Lever Bracket Trim	7.020
RING, Gear Shift Upper Lever Housing "O"	7.020

****** Refer separate Upholstery parts catalog

Copyright 1963 American Motors Corp.

DESCRIPTION	GROUP NO.
R - Cont.	
RING, Headlamp Bulb Retaining	3.275
RING, Hog	30.025
RING, Horn Blowing	3.406
RING, Horn Blowing Ring Plate Lock	3.406
RING, Horn Button Contact	3.400
RING, Horn Button Contact Lock	3.400
RING, Hydrovac Hydraulic Master Piston Snap	8.575
RING, Hydrovac Hydraulic Piston Snap	8.580
RING, Hydrovac Relay Valve Piston Stop Washer Retaining	8.570
RING, Hydrovac Vacuum Piston Packing Wick	8.580
RING, Hydrovac Valve Body Snap	8.555
RING KIT, Power Steering Gear "O"	10.550
RING, Load Leveler Spring Retainer Snap	11.235
RING, Overdrive Cam Snap	6.330
RING, Overdrive Front Ball Bearing Snap	6.278
RING, Overdrive Governor Gear Retaining	6.329
RING, Overdrive Main Shaft Snap	6.336
RING, Overdrive Ring Gear Snap	6.307
RING, Overdrive Rear Ball Bearing Snap	6.284
RING, Overdrive Sun Gear Balk	6.302
RING, Overdrive Sun Gear Balk Snap	6.302
RING, Parking And Front Directional Signal Lamp Lens Retainer	3.292
RING, Power Brake Master Cylinder Piston "O"	8.715
RING, Power Brake Master Cylinder Piston Retaining	8.715
RING, Power Brake Piston Seal	8.695
RING, Power Steering Cylinder Piston Rod End Plug Wiping	10.410
RING, Power Steering Cylinder Piston Rod Piston	10.405
RING, Power Steering Cylinder Piston Rod Stop	10.405
RING, Power Steering Gear Housing End Plug Retaining	10.540
RING, Power Steering Gear Housing End Plug Seal "O"	10.537
RING, Power Steering Gear Rack-Piston	10.580
RING, Power Steering Gear Rack-Piston Back-Up Seal "O"	10.582
RING, Power Steering Pump Drive Shaft Retainer Snap	10.440
RING, Propeller Shaft Center Bearing Lock	9.144
RING, Rear Air Suspension Compressor Piston	11.307
RING, Rear Axle Differential Side Gear	9.034
RING, Rear Axle Pinion Snap	9.050
RING, Seat Back Internal Gear	29.105
RING, Transmission Adapter Bearing Snap	6.030
RING SET, Piston	1.146
RING SET, Transmission Overhaul Snap	6.004
RING SET, Transmission Synchronizer Clutch Friction	6.090
RING, Speedometer Cable "O"	3.570
RING, Speedometer Drive Gear	6.240
RING, Spotlight Adapter	15.370
R - Cont.	
RING, Steering Gear Cross Shaft Snap	10.306
RING, Steering Gear Jacket Tube To Toeboard "O"	10.350
RING, Steering Gear Shaft Bearing Preload Capsule Retaining	10.810
RING, Steering Gear Upper Shaft Coupling Seal Retainer	10.733
RING, Steering Knuckle Pin Thrust Bearing "O"	10.023
RING, Steering Wheel Cap Retaining	10.284
RING, Steering Wheel Trim	10.280
RING, To Support Lock	5.148
RING, Transmission Front Ball Bearing Lock	6.048
RING, Transmission Front Ball Bearing Snap	6.044
RING, Transmission Front Reverse Idler Gear Snap	6.172
RING, Transmission Rear Ball Bearing Lock	6.056
RING, Transmission Rear Ball Bearing Snap	6.056
RING, Transmission Rear Ball Bearing Pilot	6.058
RING, Transmission Reverse Gear Housing Rear Ball Bearing Snap	6.030
RING, Transmission Spline Shaft Snap	6.069
RING, Transmission Synchronizer Clutch Snap	6.080
RING, Transmission Third Speed Gear Snap	6.144
RING, Valve Rocker Arm Shaft Retaining	1.098
RING, Valve Tappet Snap	1.088
RISER, Rear Seat	20.025
RISOR, Rear Cargo Platform Floor	******
RIVET, Ventilator Upper Pivot	23.118
ROD, Accelerator Control	4.055
ROD, Accelerator Pedal	4.045
ROD, Air Conditioning Evaporator Defroster Damper	13.500
ROD ASSEMBLY, Clutch Inner Lever Or Beam To Throwout Lever	5.187
ROD ASSEMBLY, Connecting	1.136
ROD, Automatic Transmission Manual Control Linkage	16.225
ROD, Automatic Transmission Parking Brake Linkage	16.090
ROD, Automatic Transmission Solenoid Push	16.235
ROD, Automatic Transmission Throttle Control Cable To Control Lever	16.225
ROD, Battery Hold Down Clamp	3.095
ROD, Carburetor Control Shaft	4.065
ROD, Clutch Inner Lever Or Beam To Throwout Lever	5.187
ROD, Clutch Pedal	5.140
ROD, Clutch Pedal To Outer Lever Or Beam	5.160
ROD, Cowl Top To Wheelhouse Panel	20.093
ROD, Cowl Ventilator Damper	22.014
ROD, Defroster Air Duct Damper	13.120
ROD END ASSEMBLY KIT, Power Steering Cylinder Valve Spool	10.398
ROD, Engine Rear Support Crossmember To Torque Tube Thrust	1.010
ROD, Engine Thrust	1.017
ROD, Exhaust Pipe Support	4.195
ROD, Fresh Air Intake Damper	13.150

****** Refer separate Upholstery parts catalog

Copyright 1963 American Motors Corp.

DESCRIPTION	GROUP NO.
R - Cont.	
ROD, Front Suspension Crossmember To Strut Rod Bracket Brace	10.002
ROD, Front Suspension Lower Control Arm To Side Sill Strut	10.055
ROD, Gear Shift	7.125
ROD, Gear Shift Operating Shaft Lever To Bellcrank	7.115
ROD, Hood Brace	12.002
ROD, Hydrovac Vacuum Piston	8.580
ROD, Heater Air Inlet Damper	13.015
ROD KIT, Power Steering Cylinder Piston	10.405
ROD, Neutral Safety Switch	3.022
ROD, Parking Brake Cable Adjusting	8.214
ROD, Parking Brake Release	8.182
ROD, Power Brake Auxiliary Push	8.660
ROD, Power Brake Master Cylinder Piston Push	8.505
ROD, Power Brake Valve Push	8.480
ROD, Power Steering Cylinder Piston	10.405
ROD, Power Steering Cylinder To Sill Mounting Bracket To Crossmember Brace	10.427
ROD, Power Steering Cylinder To Sill Mounting Bracket To Side Sill Brace	10.427
ROD, Rear Air Suspension Compressor Connecting	11.305
ROD, Rear Axle Sway Stabilizer Bracket Support	9.092
ROD, Rear Axle Truss	9.134
ROD, Rear Deck Door Hinge Torque	23.028
ROD, Rear Door Push Button Locking Control	23.057
ROD, Reverse Lockout Actuating	7.001
ROD, Seat Back Adjusting	29.105
ROD, Spare Wheel Mounting	8.330
ROD, Steering Gear Jacket Tube Support	10.340
ROD, Steering Linkage Idler Arm Tie Rod To Steering Arm Tie	10.130
ROD, Steering Linkage Idler Arm To Idler Arm Tie	10.135
ROD, Steering Linkage Tie	10.122
ROD, Sun Visor End Retaining	27.012
ROD, Tailgate Lock To Latch	23.039
ROD, Valve Push	1.095
ROD, Vibration Damper Hose	4.234
ROLLER AND RIVET KIT, Front Door Upper Hinge Cam	23.015
ROLLER, Automatic Transmission Rear Servo Bearing	16.070
ROLLER, Overdrive Free Wheeling Set	6.332
ROLLER, Rear Quarter Glass Bottom Channel To Guide	25.029
ROLLER, Transmission Countershaft Gear Bearing	6.167
ROLLER, Transmission Spline Shaft Pilot Bearing	6.076
ROTOR, Distributor	3.035
ROTOR, Folding Top Operating Power Unit Pump	28.058

DESCRIPTION	GROUP NO.
- S -	
RUBBER, Steering Linkage Tie Rod End Dust Cover	10.232
RUBBER, Vibration Damper	1.049
RUST REMOVER	15.050
SAFETY GROUP, Rear Seat Belt	15.365
SAFETY GROUP, Seat Belt	15.365
SCREEN, Air Conditioning Air Discharge Grille	13.510
SCREEN, Automatic Transmission Oil	16.045
SCREEN, Clutch Housing Outlet	5.054
SCREEN, Clutch Throwout Lever Retainer Inlet	5.125
SCREEN, Cowl Ventilator	22.007
SCREEN, Engine Oil Pump	1.168
SCREEN, Flywheel Mud Pan Air Inlet	1.058
SCREEN, Hydrovac Air Cleaner	8.555
SCREEN, Instrument Panel Radio Speaker	22.077
SCREENS, Window	15.360
SCREW, Automatic Transmission Front Servo Adjusting	16.060
SCREW, Automatic Transmission Rear Servo Adjusting	16.070
SCREW, Brake Pedal Rod	8.145
SCREW, Brake Shoe Adjusting	8.014
SCREW, Brake Tube Clip	8.101
SCREW, Brake Wheel Cylinder Bleeder	8.088
SCREW, Clutch Cover To Flywheel	5.050
SCREW, Door Electric Operated Window Regulator Worm Set	23.308
SCREW, Electric Windshield Wiper Motor Adjusting	22.232
SCREW, Front Wheel Disc Brake Caliper Bleed	8.830
SCREW, Gasoline Tank Filler Tube Vent Hose Clip	4.141
SCREW, Headlamp Adjusting	3.268
SCREW, Headlamp Bulb Retaining Ring	3.275
SCREW, Hydrovac End Plate Bleeder	8.570
SCREW, Hydrovac Hydraulic Cylinder Cap Bleeder	8.560
SCREW, Oil Manifold	1.185
SCREW, Rear Axle Differential Side Bearing Cap	9.018
SCREW, Rear Axle Tube Grease Hole	9.003
SCREW, Rear Door Ventilator Friction Unit Tension	24.022
SCREW, Rear Door Ventilator Friction Unit Tension	23.163
SCREW, Rear Quarter Electric Operated Window Regulator Housing Worm End Set	24.203
SCREW, Steering Gear Cross Shaft Adjusting	10.308
SCREW, Tailgate Electric Operated Regulator Worm Set	23.308
SCREW, Tailgate Lock Cylinder To Bezel Retaining	23.081
SCREW, Thrust Bearing Groove Pin Access Hole Tapping	10.042
SCREW, Valve Rocker Arm Adjusting	1.103
SCREW, Valve Tappet Adjusting	1.093
SEAL, Accelerator Control Rod	4.055

****** Refer separate Upholstery parts catalog

Copyright 1963 American Motors Corp.

DESCRIPTION	GROUP NO.
S - Cont.	
SEAL, Accelerator Pedal Rod Bellcrank Mounting Bracket	4.050
SEAL, Accelerator Pedal Rod Opening	4.045
SEAL, Air And Defroster Controls Opening Light	3.505
SEAL, Air Conditioning Air Discharge Duct	13.510
SEAL, Air Conditioning Air Discharge Grille Bezel To Duct	13.515
SEAL, Air Conditioning Evaporator Upper Cover To Connector	13.488
SEAL, Air Intake Access Cover Damper	13.160
SEAL, Air Intake Access Cover To Cowl Panel	13.160
SEAL AND RING KIT, Power Steering Gear	10.545
SEAL, Automatic Transmission Case Oil	16.010
SEAL, Automatic Transmission Converter Housing Front Cover	16.040
SEAL, Automatic Transmission Front Oil Pump	16.080
SEAL, Automatic Transmission Oil Filler Tube	16.020
SEAL, Automatic Transmission Parking Lock Oil	16.227
SEAL, Automatic Transmission Rear Bearing Retainer Oil	16.175
SEAL, Automatic Transmission Throttle Control Cable	16.300
SEAL, Brake Moster Cylinder To Dash	8.035
SEAL, Carburetor Air Cleaner To Carburetor	4.088
SEAL, Carburetor Choke Heater Tube	4.020
SEAL, Carburetor Control Shaft	4.070
SEAL, Clutch Inner Lever Rod End	5.187
SEAL, Clutch Pedal To Rod	5.162
SEAL, Clutch Release Idler Outer Lever Oil	5.168
SEAL, Cowl Top To Dash Panel Corner	20.150
SEAL, Cowl Ventilator Air Intake Panel	22.016
SEAL, Cowl Ventilator Damper	22.023
SEAL, Distributor To Block	3.039
SEAL, Door Lock Cylinder Bezel	23.081
SEAL, Drain Hose To Evaporator	13.115
SEAL, Engine Oil Pan To Rear Bearing Cap Oil	1.152
SEAL, Engine Oil Pump Inlet Tube To Block	1.167
SEALER	30.026
SEALER, Cooling System	15.100
SEALER, Door Outside Handle Button	23.074
SEALER, Folding Top Front Header Corner	28.005
SEALER, Front Door	23.012
SEALER, Front Door Lowering Glass Bottom Channel	25.030
SEALER, Instrument Panel Overlay Backing Plate	22.100
SEALER KIT, Liftgate	23.013
SEALER, Liftgate And Tailgate	23.013
SEALER, Rear Deck Door	23.014
SEALER, Rear Door	23.012
SEALER, Rear Door Lowering Glass Bottom Channel	25.032
SEALER, Rear Quarter Lowering Glass Bottom Channel	25.034
S - Cont.	
SEALER, Rear Quarter Window Frame	24.010
SEALER, Regulator Panel Front	20.280
SEALER, Roof Rail Weatherseal Retainer To Roof Rail	23.012
SEALER, Tailgate Glass Bottom Channel	25.033
SEALER, Tailgate Lowering Glass Slide Channel	25.039
SEALER, Tailgate Outside Handle Button	23.077
SEALER, Vinyl Roof Cover To Drip Rail	27.310
SEAL, E-Stick Servo Piston Assembly	5.315
SEAL, Evaporator Core To Cover	13.475
SEAL, Exhaust Pipe To Manifold	4.186
SEAL, Fender To Floor Pan	12.125
SEAL, Flywheel Mud Pan	1.058
SEAL, Front Door Window Frame To Inner Panel	23.008
SEAL, Front Fender Antenna	15.030
SEAL, Front Fender To Body Pillar	12.075
SEAL, Front Fender To Body Pillar At Side Sill	12.075
SEAL, Front Fender To Cowl Panel	12.075
SEAL, Front Fender To Grille Panel	12.075
SEAL, Front Pillar Drip Moulding Bottom	20..395
SEAL, Front Seat Cushion Lounge Tilt Actuator Cylinder	29.140
SEAL, Front Suspension Lower Control Arm Trunnion Dirt	10.044
SEAL, Front Suspension Upper Control Arm Trunnion Dirt	10.042
SEAL, Front Wheelhouse Extension	20.085
SEAL, Gasoline Gauge Lock	3.615
SEAL, Gasoline Tank Air Vent Nipple	4.141
SEAL, Gasoline Tank Auxilliary Air Vent Tube	4.141
SEAL, Gasoline Tank Filler Cap	4.138
SEAL, Gasoline Tank Filler Tube	4.141
SEAL, Gasoline Tank Vent Tube	4.145
SEAL, Gear Selector Dial To Jacket Tube	7.537
SEAL, Gear Selector Pointor Dial	7.537
SEAL, Gear Shift Lever Boot To Floor Pan	7.011
SEAL, Gear Shift Lever Mounting Bracket Support	7.017
SEAL, Gear Shift Lever Mounting Bracket Support To Floor Pan	7.017
SEAL, Gear Shift Operating Shaft	7.038
SEAL, Gear Shift Operating Shaft Lever Dirt	7.089
SEAL, Heater And Defroster Air Duct To Damper Housing	13.118
SEAL, Heater And Defroster Air Duct To Defroster Nozzle	13.118
SEAL, Heater And Defroster Damper	13.113
SEAL, Heater Core Blower Housing To Evaporator Housing	13.012
SEAL, Heater Core Support	13.028
SEAL, Heater Core Tube	13.028
SEAL, Heater Water Valve Cable Slot	13.035
SEAL, Heater Water Valve To Dash Panel	13.035
SEAL, Housing To Blower Housing	13.113
SEAL, Hydrovac End Plate To Cylinder	8.570

****** Refer separate Upholstery parts catalog

Copyright 1963 American Motors Corp.

ALPHABETICAL INDEX

DESCRIPTION	GROUP NO.
S - Cont.	
SEAL, Hydrovac Hydraulic Cylinder Tube	8.560
SEAL, Hydrovac Hydraulic Cylinder Tube	8.570
SEAL, Hydrovac Hydraulic Piston	8.580
SEAL, Hydrovac Push Rod Leather	8.570
SEAL, Hydrovac Vacuum Piston Rod	8.580
SEAL, Hydrovac Valve Fitting	8.570
SEAL, Instrument Panel Steering Column Opening Bezel	22.056
SEAL KIT, Air Conditioning Compressor	13.400
SEAL KIT, Exhaust Valve	1.078
SEAL KIT, Front Seat Cushion Lounge Tilt Actuator Cylinder	29.140
SEAL KIT, Intake Valve	1.077
SEAL KIT, Power Steering Cylinder	10.395
SEAL KIT, Power Steering Cylinder End Plug And Guide	10.410
SEAL KIT, Power Steering Cylinder Valve Spool "O" Ring	10.398
SEAL KIT, Power Steering Gear Pitman Shaft	10.605
SEAL KIT, Power Steering Gear Upper Thrust Bearing Adjuster	10.645
SEAL KIT, Power Steering Pump	10.430
SEAL KIT, Steering Gear Upper Shaft Coupling	10.725
SEAL, Lever To Rod	5.160
SEAL, Locking Gas Cap	15.180
SEAL, Lockside At Belt Line	23.012
SEAL, Lower Air Baffle	2.062
SEAL, Lower Air Baffle Retainer	2.062
SEAL, Luggage Rack Front Post	27.208
SEAL, Luggage Rack Rear Post	27.212
SEAL, Luggage Rack Strap Hanger	27.215
SEAL, Oil Filler Pipe	1.022
SEAL, Oil Level Gauge Tube	1.187
SEAL, Overdrive Rear Oil	6.286
SEAL, Overdrive Shift Rail	6.295
SEAL, Overdrive Solenoid Pawl Operating Rod Oil	6.328
SEAL, Pillar Lower	20.205
SEAL, Pitman Arm Stud To Center Cross Link Dust	10.104
SEAL, Power Brake Master Cylinder	8.720
SEAL, Power Brake Master Cylinder Piston Secondary	8.715
SEAL, Power Brake Vacuum Check Valve	8.460
SEAL, Power Brake Valve Body Diaphragm	8.485
SEAL, Power Steering Cylinder Piston Rod Guide	10.410
SEAL, Power Steering Pump By-Pass	10.430
SEAL, Power Steering Pump Control Valve Retaining Plug	10.445
SEAL, Power Steering Pump Drive Shaft Oil	10.440
SEAL, Power Steering Pump Oil Reservoir To Pump	10.465
SEAL, Power Steering Pump Oil Reservoir To Pump Stud	10.465
SEAL, Power Steering Pump To Cylinder Hose Fittings Dirt	10.470
S - Cont.	
SEAL, Power Steering Pump To Cylinder Pressure Hose Fitting Dirt	10.470
SEAL, Propeller Shaft Oil	9.101
SEAL, Radiator Grille Panel End	2.051
SEAL, Radiator Grille Panel Lower	2.051
SEAL, Radiator Support	2.023
SEAL, Radio Cable Conduit	3.680
SEAL, Radio Plate To Instrument Panel	15.320
SEAL, Radio Speaker Mounting Plate	22.077
SEAL, Rear Air Suspension Air Reservoir Filter	11.340
SEAL, Rear Air Suspension Compressor Crankshaft	11.302
SEAL, Rear Air Suspension Compressor Crankshaft Cover	11.302
SEAL, Rear Axle Drive Shaft Inner Oil	9.072
SEAL, Rear Axle Drive Shaft Outer Oil	9.077
SEAL, Rear Axle Pinion Oil	9.064
SEAL, Rear Body Pillar Lower	20.240
SEAL, Rear Body Pillar To Fender	20.240
SEAL, Rear Bumper Splash	12.245
SEAL, Rear Deck Door Handle	23.078
SEAL, Rear Door Window Frame To Door	23.008
SEAL, Rear Leaf Spring Front Eye Bushing Pin To Side Sill	11.033
SEAL, Rear Quarter Window Belt	25.029
SEAL, Rear Quarter Window Lowering	25.029
SEAL, Rear Wheel Oil	8.312
SEAL, Shaft Assembly Oil	6.338
SEAL, Side Air Baffle	2.062
SEAL, Side Drip Moulding Front Bottom	20.395
SEAL, Side Radiator Air Baffle To Wheelhouse	2.062
SEAL, Steering Gear Cross Shaft	10.310
SEAL, Steering Gear Housing Oil	10.292
SEAL, Steering Gear Jacket Tube Lower	10.346
SEAL, Steering Gear Jacket Tube To Steering Gear Housing	10.338
SEAL, Steering Gear Jacket Tube To Toeboard	10.350
SEAL, Steering Gear Operating Shaft To Jacket	10.346
SEAL, Steering Gear Shaft Lower	10.860
SEAL, Steering Gear Shaft To Gear Shift Operating Shaft	10.346
SEAL, Steering Gear Tube Oil	10.320
SEAL, Steering Gear Shaft	10.860
SEAL, Steering Knuckle Pin Dirt	10.013
SEAL, Steering Knuckle Pin To Trunnion Dirt	10.044
SEAL, Steering Linkage Idler Arm Stud To Center Cross Link	10.108
SEAL, Steering Linkage Tie Rod End To Idler Arm Dust	10.232
SEAL, Steering Shaft	10.330
SEAL, Tailgate Inner Cover Panel	23.006
SEAL, Tailgate Inner Panel Access Hole Cover	23.006
SEAL, Tailgate Lock Cylinder Bezel	23.081

****** Refer separate Upholstery parts catalog

Copyright 1963 American Motors Corp.

DESCRIPTION	GROUP NO.
S - Cont.	
SEAL, Tailgate Lock Release Handle	23.039
SEAL, Timing Case Cover Oil	1.123
SEAL, Torque Tube	9.152
SEAL, Transmission Brake And Gear Selector Hole	7.237
SEAL, Transmission Front Bearing Cap Oil	6.021
SEAL, Transmission Rear Bearing Cap Oil	6.032
SEAL, Transmission Shifter Fork Shaft	6.194
SEAL, Tube Elbow To Manifold Cover	1.065
SEAL, Tube To Cylinder Block	1.115
SEAL, Universal Joint Bearing Neoprene	9.112
SEAL, Upper Air Baffle	2.062
SEAL, Upper Air Baffle Extension	2.062
SEAL, Vibration Damper Oil	1.047
SEAL, Windshield Defroster Opening	26.001
SEAL, Windshield Wiper Motor Deflector To Cowl Top	22.120
SEAL, Windshield Wiper Motor Mounting Bracket	22.027
SEAL, Windshield Wiper Motor To Panel	22.027
SEAT ASSEMBLY, Trimmed Front	29.100
SEAT ASSEMBLY, Trimmed Front	******
SEAT, Clutch Idler Lever Spring	5.178
SEAT, Front Coil Spring	11.075
SEAT, Horn Blowing Ring	3.406
SEAT, Horn Button	3.400
SEAT, Outside Rear View Mirror Arm	15.270
SEAT, Power Steering Gear Pressure Hose Connector	10.525
SEAT, Power Steering Gear Return Hose Connector	10.527
SEAT, Power Steering Pump Discharge	10.445
SEAT, Power Steering Pump Discharge Tube	10.430
SEAT, Rear Coil Spring	11.126
SEAT, Steering Gear Jacket Tube Upper Bearing Spring	10.344
SEAT, Steering Gear Jacket Tube Upper Bearing Spacer	10.344
SEAT, Steering Gear Shaft Bearing Preload Capsule	10.823
SEAT, Steering Gear Shaft Upper Bearing Inner Race	10.826
SEAT, Steering Linkage Cross Tube Ball	10.244
SEAT, Steering Wheel To Upper Bearing Spacer	10.283
SEPARATOR, Engine Breather Chamber Oil	1.020
SEPARATOR, Engine Breather Chamber Oil	1.115
SEPARATOR, Ignition Wire	3.230
SERVO ASSEMBLY, Automatic Transmission Rear	16.075
SERVO ASSEMBLY, E-Stick	5.300
SHACKLE KIT, Rear Leaf Spring	11.170
SHAFT ASSEMBLY, Overdrive Control	6.338
SHAFT ASSEMBLY, Power Steering Gear Pitman	10.590
SHAFT ASSEMBLY, Propeller	9.100
S - Cont.	
SHAFT, Automatic Transmission Input	16.105
SHAFT, Automatic Transmission Manual Valve Control	16.225
SHAFT, Automatic Transmission Output	16.160
SHAFT, Automatic Transmission Rear Servo Lever	16.070
SHAFT, Brake Pedal	8.160
SHAFT, Carburetor Control	4.070
SHAFT, Clutch Pedal	5.148
SHAFT, Distributor	3.030
SHAFT, Door Lock Cylinder	23.081
SHAFT, Electric Windshield Wiper Control	22.038
SHAFT, Engine Oil Pump Drive	1.161
SHAFT, Engine Oil Pump Idler Gear	1.157
SHAFT, Front Seat Cushion Lounge Tilt Actuator Cylinder	29.140
SHAFT, Front Seat Cushion Lounge Tilt Actuator Drive	29.140
SHAFT, Gear Shift Bellcrank Pivot	7.105
SHAFT, Gear Shift Lever Pivot	7.005
SHAFT, Gear Shift Operating	7.038
SHAFT, Overdrive Main	6.336
SHAFT, Overdrive Spline	6.255
SHAFT, Power Steering Pump Drive	10.440
SHAFT, Radio Control Knob Opening Button	15.320
SHAFT, Rear Axle Differential	9.036
SHAFT, Rear Axle Drive	9.068
SHAFT, Rear Deck Lock Cylinder	23.081
SHAFT, Spotlight Handle	15.370
SHAFT, Steering Gear	10.700
SHAFT, Steering Gear	10.835
SHAFT, Steering Gear Cross	10.306
SHAFT, Tailgate Lock Cylinder	23.081
SHAFT, Transmission Clutch	6.060
SHAFT, Transmission Gear Selector Control Lock	7.210
SHAFT, Transmission Idler Gear	6.168
SHAFT, Transmission Shifter Fork	6.190
SHAFT, Transmission Spline	6.068
SHAFT, Valve Rocker Arm	1.098
SHEDDER, Crankshaft Sprocket Oil	1.132
SHELL ASSEMBLY, Headlamp	3.265
SHELL, Cigar Lighter Assembly	3.352
SHELL, Spotlight Bulb Outer	15.370
SHELL, Spotlight Mirror And Bulb Outer	15.370
SHIELD, Brake Master Cylinder Dust	8.035
SHIELD, Brake Master Cylinder Heat	8.035
SHIELD, Carburetor Choke Thermostat Housing	4.015
SHIELD, Front Wheel Disc Brake Splash	8.845
SHIELD, Gasoline Tank Filler Tube	4.145
SHIELD, Gear Selector Dial Light	7.535
SHIELD, Instrument Cluster Light	3.635
SHIELD, Parking And Front Directional Signal Lamp	3.292
SHIELD, Power Brake Master Cylinder Dust	8.512
SHIELD, Rear Wheel Opening Tail Pipe	4.248

****** Refer separate Upholstery parts catalog

Copyright 1963 American Motors Corp.

DESCRIPTION	GROUP NO.
S - Cont.	
SHIELD, Rocker Panel Moulding	26.073
SHIELD, Steering Gear Housing Heat	10.292
SHIELD, Tail, Stop And Rear Directional Signal Lamp Body Splash	3.303
SHIM, Console Compartment Door Lock Striker	27.282
SHIM, Door Bumper	23.019
SHIM, Door Lock Striker	23.087
SHIM, Engine Front Support Cushion To Crossmember	1.009
SHIM, Folding Top Side Rail Front Weatherseal	28.029
SHIM, Front Door Upper Hinge	23.015
SHIM, Front Lower Hinge	23.016
SHIM, Front Wheel Disc Brake Caliper To Bracket	8.840
SHIM, Gear Shift Upper Lever Mounting	7.020
SHIM, Hood Hinge To Hood	12.035
SHIM, Hood Reinforcement	12.001
SHIM KIT, Steering Gear Cross Shaft Adjusting Screw	10.309
SHIM, Liftgate Hinge	23.011
SHIM, Liftgate Lock Striker	23.073
SHIM, Power Brake Master Cylinder To Housing	8.720
SHIM, Rear Axle Differential Side Bearing	9.045
SHIM, Rear Axle Pinion Adjusting	9.057
SHIM, Rear Axle Pinion Shaft Bearing	9.062
SHIM, Rear Deck Door Hinge Arm	23.028
SHIM, Rear Door Lower Hinge	23.018
SHIM, Rear Door Upper Hinge	23.017
SHIM, Rear Wheel Bearing	8.315
SHIM SET, Alignment	9.003
SHIM SET, Rear Axle Differential Side Bearing	9.045
SHIM SET, Rear Axle Pinion Adjusting	9.057
SHIM SET, Rear Axle Pinion Shaft Bearing	9.062
SHIM, Steering Gear Housing Worm Cover	10.298
SHIM STOCK, Front Door Glass And Ventilator Division Channel Glass Slide	23.124
SHIM STOCK, Front Door Lowering Glass Slide Channel Plastic	25.036
SHIM STOCK, Rear Door Lowering Glass Slide Channel Plastic	25.038
SHIM STOCK, Rear Quarter Lowering Glass Slide Channel Plastic	25.040
SHIM, Sun Visor Retaining Bracket	27.010
SHIM, Tailgate Cam Striker	23.039
SHIM, Tailgate Latch Striker	23.039
SHIM, Transmission Front Bearing Cap	6.024
SHOCK ASSEMBLY, Front	11.200
SHOCK ASSEMBLY, Rear	11.220
SHOE SET, Front Wheel Disc Brake	8.815
SHOE, Steering Wheel Actuator Lock	10.843
SHOE SET, Brake (Exchange)	8.003
SHOE SET, Brake (Warranty)	8.004
SHROUD, Fan	2.013
SHROUD, Gear Selector Pointer Dial	7.537
SILENCER, Air Intake Access Cover Damper	13.160

DESCRIPTION	GROUP NO.
S - Cont.	
SILENCER, Front Seat Cushion Support	29.154
SILENCER, Glove Box Door Check	22.066
SILENCER, Radiator Grille Insert	2.050
SILENCER, Rear Deck Door Hinge Torque Rod	23.028
SILENCER, Spare Tire Cover Panel Front Bracket	20.450
SILL, Front Seat Cross	20.010
SILL, Front Side	20.070
SILL, Rear Cross	20.040
SILL, Rear Side	20.070
SILL, Side	20.070
SLAT, Folding Top Center Bow	28.038
SLAT, Folding Top Rear Bow	28.038
SLEEVE, Automatic Transmission Front Servo	16.060
SLEEVE, Automatic Transmission Governor	16.085
SLEEVE, Automatic Transmission Manual Outer Control Lever	16.225
SLEEVE, Automatic Transmission Oil Collector	16.170
SLEEVE, Carburetor Air Cleaner	4.088
SLEEVE, Carburetor Choke Heater Tube	4.020
SLEEVE, Clutch Release Idler Outer Pivot	5.168
SLEEVE, Clutch Throwout Lever	5.109
SLEEVE, Gear Shift Lever	7.001
SLEEVE, Gear Shift Operating Shaft Lever	7.085
SLEEVE, Hand Operated Parking Lever	8.180
SLEEVE, Hydrovac Hydraulic Piston Seal	8.580
SLEEVE, Overdrive Main Shaft Spacer	6.336
SLEEVE, Rear Air Suspension Air Reservoir To Rear Leveling Valve Tube	11.360
SLEEVE, Rear Air Suspension Compressor To Reservoir Hose Clip Bracket Grommet	11.345
SLEEVE, Rear Air Suspension Rear Leveling Volve Cross To Air Spring Tube	11.380
SLEEVE, Rear Door Electric Operated Window Regulator Wiring Harness	23.320
SLEEVE, Rear Door Vacuum Lock Tubing Harness	23.067
SLEEVE, Speedometer Driven Gear	3.590
SLEEVE, Spotlight	15.370
SLEEVE, Steering Gear Jacket Tube	10.338
SLEEVE, Steering Gear Jacket Tube Upper Bearing	10.344
SLEEVE, Transmission Speed Finder Interlock	6.215
SLEEVE, Tube To Housing	13.113
SLIDE, Front Door Lowering Glass Bottom Channel	25.030
SLIDE, Front Seat Adjusting	29.131
SLIDE, Rear Deck Door Torque Rod	23.028
SLIDE, Rear Door Lowering Glass Bottom Channel	25.032
SLIDE, Rear Quarter Lowering Glass Bottom Channel	25.034
SLIDE, Tailgate Glass Bottom Channel	25.033
SLIDE, Transmission Gear Selector Control Park	7.210
SOCKET, Brake Shoe Adjusting Screw	8.014

****** Refer separate Upholstery parts catalog

Copyright 1963 American Motors Corp.

DESCRIPTION	GROUP NO.
S - Cont.	
SOCKET, Carburetor Control Shaft	4.070
SOCKET, Folding Top Back Curtain Fastener	28.085
SOCKET, Folding Top Dust Boot Fastener	28.085
SOCKET, Folding Top Well Lining Fastener	28.085
SOCKET, Front Door Ventilator Upper Pivot	23.114
SOCKET, Gear Selector Dial Light	7.535
SOCKET, Instrument Cluster Voltage Regulator Wiring Harness	3.635
SOCKET, License Plate Lamp	3.341
SOCKET, Parking Brake Warning Lamp	3.650
SOCKET, Steering Gear Jacket Tube Upper Bearing	10.345
SOCKET, Tail, Stop And Rear Directional Signal Lamp	3.312
SOCKET, Windshield Header Package Net	27.140
SOLENOID, Automatic Transmission	16.235
SOLENOID, E-Stick Air Valve	5.270
SOLENOID, Overdrive	6.328
SOLVENT, Windshield Washer	15.440
SPACER, Air Conditioning Air Discharge Duct To Instrument Panel	13.510
SPACER, Air Conditioning Compressor Belt Adjusting	13.425
SPACER, Air Conditioning Compressor Mounting Bracket	13.410
SPACER, Air Conditioning Condenser Core	13.450
SPACER, Alternator Pulley	3.017
SPACER, Automatic Transmission Lever Bracket	16.300
SPACER, Front Fender Antenna Dress Nut	15.030
SPACER, Automatic Transmission Converter Housing To Engine	16.042
SPACER, Bracket	5.178
SPACER, Brake Master Cylinder To Toeboard	8.036
SPACER, Brake Pedal Shaft	8.160
SPACER, Brake Tube	8.101
SPACER, Carburetor To Cylinder Head	4.007
SPACER, Cargo Area Lamp Switch	3.670
SPACER, Circuit Breaker Mounting Plate	3.154
SPACER, Clutch Housing To Engine	5.065
SPACER, Clutch Pedal Shaft	5.148
SPACER, Crash Pad To Instrument Panel	22.100
SPACER, Cushion To Support	1.013
SPACER, Distributor Advance Arm	3.030
SPACER, Door Electric Operated Window Regulator Worm End	23.308
SPACER, Engine Front Support Cushion To Engine Front Support Mounting Bracket	1.009
SPACER, Engine Oil Pump Inlet Tube Screen To Oil Pan	1.167
SPACER, Fan Blade	2.002
SPACER, Front Coil Spring	11.075
SPACER, Front Door Electric Operated Window Regulator Pinion Gear	23.308
SPACER, Front Seat Slide Adjuster	29.130
SPACER, Front Shock Lower Grommet	11.208
S - Cont.	
SPACER, Front Suspension Lower Control Arm	10.045
SPACER, Fuse Panel To Dash Panel	3.155
SPACER, Gear Shift Bellcrank	7.110
SPACER, Gear Shift Housing To Transmission	7.002
SPACER, Gear Shift Operating Shaft Lever	7.085
SPACER, Gear Shift Upper Lever	7.020
SPACER, Glove Box Door Lock Escutcheon	22.073
SPACER, Hand Operated Parking Brake Bellcrank Bracket	8.189
SPACER, Heater And Defroster Blower Wheel	13.072
SPACER, Housing To Dash Panel	13.113
SPACER KIT, Front Seat Slide Adjuster	29.130
SPACER KIT, Front Suspension Upper Control Arm	10.066
SPACER, Outside Rear View Mirror Nylon	15.270
SPACER, Overdrive Front Ball Bearing	6.282
SPACER, Overdrive Rear Ball Bearing	6.282
SPACER, Pan To Side Sill	20.005
SPACER, Parking Brake Lever To Bracket	8.180
SPACER, Power Steering Pump Return Hose Clip	10.470
SPACER, Propeller Shaft Rear Yoke	9.104
SPACER, Propeller Shaft To Pinion	9.101
SPACER, Radiator Grille Panel Extension	2.052
SPACER, Rear Air Suspension Compressor Pulley	11.320
SPACER, Rear Axle Pinion Collapsible	9.050
SPACER, Rear Axle Sway Stabilizer	9.090
SPACER, Rear Brake Drum	8.245
SPACER, Rear Coil Spring	11.126
SPACER, Rear Deck Door Handle Shaft	23.078
SPACER, Rear Quarter Electric Operated Window Regulator Housing Worm End	24.203
SPACER, Rear View Mirror	27.084
SPACER, Reverse Gear Selector Lever	7.085
SPACER, Seat Outer Hinge	29.105
SPACER, Shaft Assembly Lever	6.338
SPACER, Speedometer Bracket	3.550
SPACER, Spotlight	15.370
SPACER, Steering Gear Jacket Tube Upper Bearing Spring	10.344
SPACER, Steering Gear Shaft Stabilizer Spring Stop	10.780
SPACER, Steering Linkage Cross Tube	10.248
SPACER, Steering Gear To Side Sill	10.354
SPACER, Steering Wheel To Upper Bearing	10.283
SPACER, Tailgate Electric Operated Regulator Worm End	23.308
SPACER, Tailgate Hinge Torque Bar Bracket	23.006
SPACER, Tailgate Lock Release Handle	23.039
SPACER, Tailgate Sound Deadening	23.006
SPACER, Tailgate Window Regulator Handle	23.078
SPACER, Timing Case Cover	1.122
SPACER, Torque Tube To Adapter	9.150
SPACER, Transmission Countershaft Gear Bearing Roller	6.167
SPACER, Transmission Rear Ball Bearing	6.054

****** Refer separate Upholstery parts catalog

Copyright 1963 American Motors Corp.

DESCRIPTION	GROUP NO.
S - Cont.	
SPACER, Transmission Spline Shaft Pilot Bearing Roller	6.076
SPACER, Turning Radius Stop Adjusting	10.010
SPACER, Valve Rocker Arm Shaft	1.098
SPACER, Voltage Regulator To Support	3.012
SPACER, Windshield Wiper Pivot Shaft	22.047
SPEAKER KIT, Radio Rear Shelf	15.320
SPEAKER, Radio	15.320
SPEAKER, Radio Rear Shelf	15.320
SPEEDOMETER	3.550
SPHERE KIT, Steering Gear Shaft Centering	10.840
SPHERE, Steering Gear Shaft Centering	10.840
SPIDER ASSEMBLY, Universal Joint	9.107
SPINDLE, Steering Knuckle	10.004
SPOTLIGHT	15.370
SPRING, Accelerator Cable Overtravel	4.057
SPRING, Accelerator Overtravel	4.070
SPRING, Accelerator Pedal	4.040
SPRING, Accelerator Pedal Hinge Safety	4.040
SPRING, Adjusting Side Latch Wire Tension	29.133
SPRING, Air Conditioning Air Discharge Grille Door Hinge	13.515
SPRING, Air Conditioning Evaporator Drain Tube	13.488
SPRING, Air Conditioning Hose Retaining	13.440
SPRING AND ROD ASSEMBLY, Front Door Upper Hinge Cam	23.015
SPRING ASSEMBLY, Rear Leaf	11.100
SPRING, Automatic Transmission Front Clutch Cylinder	16.115
SPRING, Automatic Transmission Front Servo	16.060
SPRING, Automatic Transmission Lower Control Valve Rear Pump Check Valve	16.215
SPRING, Automatic Transmission Lower Control Valve 1st And 2nd Shift Valve	16.215
SPRING, Automatic Transmission Lower Control Valve 2nd And 3rd Shift Valve	16.215
SPRING, Automatic Transmission Lower Control Valve Converter Out Check	16.215
SPRING, Automatic Transmission Lower Control Valve D1 And D2 Control Valve	16.215
SPRING, Automatic Transmission Lower Control Valve Governor Valve	16.215
SPRING, Automatic Transmission Lower Control Valve Inhibitor Valve	16.215
SPRING, Automatic Transmission Lower Control Valve Modulator Valve	16.215
SPRING, Automatic Transmission Lower Control Valve Servo Check Valve	16.215
SPRING, Automatic Transmission Lower Control Valve Servo Orifice Control Valve	16.215
SPRING, Automatic Transmission Lower Control Valve Throttle Valve	16.215
SPRING, Automatic Transmission Lower Control Valve Throttle Return	16.215
SPRING, Automatic Transmission Lower Control Valve Transition Valve	16.215
S - Cont.	
SPRING, Automatic Transmission Manual Valve Detent Lever	16.225
SPRING, Automatic Transmission Parking Brake Toggle Lift Lever	16.090
SPRING, Automatic Transmission Parking Brake Toggle Release	16.090
SPRING, Automatic Transmission Pressure Regulator Primary Valve	16.025
SPRING, Automatic Transmission Pressure Regulator Secondary Valve	16.025
SPRING, Automatic Transmission Rear Clutch Drum	16.125
SPRING, Automatic Transmission Rear Servo Accumulator	16.070
SPRING, Automatic Transmission Rear Servo Piston	16.070
SPRING, Automatic Transmission Rear Servo Torsion	16.070
SPRING, Automatic Transmission Solenoid Kickdown Switch	16.245
SPRING, Automatic Transmission Throttle Control Retaining	16.300
SPRING, Automatic Transmission Upper Control Valve 1st And 2nd Valve	16.205
SPRING, Automatic Transmission Upper Control Valve 2nd And 3rd Valve	16.205
SPRING, Automatic Transmission Upper Control Valve Compensator Valve	16.205
SPRING, Automatic Transmission Upper Control Valve Reverse Inhibitor	16.205
SPRING, Automatic Transmission Upper Control Valve Throttle Modulator Valve	16.205
SPRING, Automatic Transmission Upper Control Valve Throttle Valve	16.205
SPRING, Automatic Transmission Upper Control Valve Throttle Valve Return	16.205
SPRING, Back-Up Lamp Wire Socket	3.318
SPRING, Base Hold Down	14.140
SPRING, Bottom Frame Outer Hinge	29.103
SPRING, Bottom Frame Outer Hinge Adjusting Arm Adjusting	29.103
SPRING, Bracket To Bumper Rail Hinge	14.104
SPRING, Brake Drum Anti-Squeak	8.245
SPRING, Brake Master Cylinder Check Valve	8.042
SPRING, Brake Master Cylinder Piston Return	8.046
SPRING, Brake Pedal Return	8.168
SPRING, Brake Pedal Shaft	8.160
SPRING, Brake Shoe Automatic Adjusting	8.008
SPRING, Brake Shoe Hold Down	8.008
SPRING, Brake Shoe Retaining	8.008
SPRING, Brake Shoe Return	8.008
SPRING, Brake Wheel Cylinder Piston Return	8.086
SPRING, Carburetor Pull Back	4.080
SPRING, Clutch Beam Pull Back	5.184
SPRING, Clutch Beam Support Bar	5.178
SPRING, Clutch Pedal Shaft	5.148
SPRING, Clutch Pedal To Rod	5.155

****** Refer separate Upholstery parts catalog

Copyright 1963 American Motors Corp.

DESCRIPTION	GROUP NO.
S - Cont.	
SPRING, Clutch Pressure Lever Anti-Rattle	5.026
SPRING, Clutch Release Idler Lever	5.172
SPRING, Clutch Rod To Pedal Retaining	5.160
SPRING, Clutch Throwout Lever	5.132
SPRING, Clutch Throwout Lever	5.190
SPRING, Clutch Throwout Lever Return	5.123
SPRING, Cylinder Lock Retainer	23.086
SPRING, Directional Signal Switch Arm To Mounting Plate	3.321
SPRING, Directional Signal Switch Return	3.321
SPRING, Distributor Cap Contact	3.032
SPRING, Door Outside Handle Button Return	23.074
SPRING, Door Outside Handle Trigger Return	23.074
SPRING, Door Window Regulator Handle Tension	23.100
SPRING, Electric Windshield Wiper Drive Crank Eccentric	22.242
SPRING, Engine Oil Pump Release Valve	1.176
SPRING, E-Stick Actuator Cam Pivot Compression	5.335
SPRING, E-Stick Actuator Cam Stop	5.327
SPRING, E-Stick Servo Piston Assembly	5.315
SPRING, Exhaust Manifold Damper Heat Valve Anti-Flutter	1.067
SPRING, Foot Operated Parking Brake Return	8.180
SPRING, Front Coil	11.072
SPRING, Front Door Electric Operated Window Regulator Balance	23.300
SPRING, Front Door Link Anti-Rattle	23.055
SPRING, Front Door Lock Contact Lever Return	23.050
SPRING, Front Door Lock Trip Lever Return	23.050
SPRING, Front Door Upper Hinge	23.015
SPRING, Front Door Ventilator Lock Handle Button	23.121
SPRING, Front Seat Adjusting Slide	29.138
SPRING, Front Seat Adjusting Slide Latch Wire Tension	29.133
SPRING, Front Seat Back	29.106
SPRING, Front Seat Center Cushion	29.157
SPRING, Front Seat Cushion	29.162
SPRING, Front Seat Cushion Lounge Tilt Actuator	29.140
SPRING, Front Seat Cushion Lounge Tilt Actuator Release	29.140
SPRING, Front Seat Slide Adjuster Latch Locking	29.131
SPRING, Fuel Pump Filter Bowl	4.110
SPRING, Gasoline Filter Magnet	15.190
SPRING, Gasoline Filter Magnet And Filter	15.190
SPRING, Gear Shift Lever Anti-Rattle	7.001
SPRING, Gear Shift Lever Pivot Shaft Compression	7.005
SPRING, Gear Shift Lever Return	7.001
SPRING, Gear Shift Lower Lever	7.001
SPRING, Gear Shift Operating Shaft	7.039
SPRING, Gear Shift Operating Shaft Lever Centering	7.085

DESCRIPTION	GROUP NO.
S - Cont.	
SPRING, Gear Shift Operating Shaft Lever Compression	7.085
SPRING, Gear Shift Upper Lever	7.025
SPRING, Gear Shift Upper Lever Housing Vibration Dampening	7.020
SPRING, Gear Shift Upper Lever Pressure Pin	7.025
SPRING, Gear Shift Upper Lever Pressure Pin Retainer	7.025
SPRING, Hand Operated Parking Brake Bellcrank Return	8.187
SPRING, Handle Hold Down	14.142
SPRING, Headlamp Adjusting	3.272
SPRING, Heater Air Damper Idler Lever Return	13.017
SPRING, Heater And Defroster Control	13.017
SPRING, Heater Damper And Water Valve Lever Detent	13.017
SPRING, Hood Hinge	12.048
SPRING, Hood Lock	12.060
SPRING, Horn Blowing Ring	3.406
SPRING, Horn Blowing Ring Contact	3.406
SPRING, Horn Button	3.416
SPRING, Horn Button Contact	3.400
SPRING, Hydrovac Air Cleaner Poppet Valve	8.555
SPRING, Hydrovac Hydraulic Master Piston Ball	8.575
SPRING, Hydrovac Hydraulic Piston	8.580
SPRING, Hydrovac Hydraulic Piston Seal	8.580
SPRING, Hydrovac Piston	8.570
SPRING, Hydrovac Relay Valve Return	8.570
SPRING, Jack Hold Down	14.138
SPRING KIT	14.112
SPRING KIT, Exhaust Manifold Damper Heat Valve Anti-Flutter	1.067
SPRING KIT, Foot Operated Parking Brake Lever	8.180
SPRING KIT, License Frame	15.240
SPRING KIT, Rear Axle Differential Preload	9.038
SPRING, License Plate Lamp Socket	3.341
SPRING, Liftgate Bracket	23.034
SPRING, Liftgate Handle	23.078
SPRING, Load Leveler	11.235
SPRING, Locking Gas Cap Lock Bolt Cone	15.180
SPRING, Lower Baffle Retaining	1.108
SPRING, Outside Rear View Mirror Glass	15.270
SPRING, Overdrive Kickdown Switch	6.367
SPRING, Overdrive Kickdown Switch Contact Plate	6.366
SPRING, Overdrive Kickdown Switch Retainer	6.367
SPRING, Overdrive Roller Set Retaining	6.332
SPRING, Overdrive Shift Rail Retractor	6.295
SPRING, Overdrive Shift Rail Reverse Lockup	6.295
SPRING, Parking Brake Lever Strut	8.008
SPRING, Parking Brake Rear Cable Retaining	8.220
SPRING, Parking Brake Warning Lamp	3.650
SPRING, Power Brake Air Valve Return	8.685

****** Refer separate Upholstery parts catalog

Copyright 1963 American Motors Corp.

DESCRIPTION	GROUP NO.
S - Cont.	
SPRING, Power Brake Floating Valve Return	8.700
SPRING, Power Brake Master Cylinder Piston Retainer	8.715
SPRING, Power Brake Master Cylinder Piston Return	8.735
SPRING, Power Brake Master Cylinder Residual Valve	8.517
SPRING, Power Brake Master Cylinder Secondary Piston Return	8.515
SPRING, Power Brake Valve Body Diaphragm	8.485
SPRING, Power Steering Gear Pressure Check Valve Poppet	10.532
SPRING, Power Steering Gear Valve Spool	10.620
SPRING, Power Steering Pump Control Valve Relief Valve	10.445
SPRING, Power Steering Pump Hose Clip	10.470
SPRING, Power Steering Pump Hose Pull Back	10.470
SPRING, Rear Air Suspension Air	11.385
SPRING, Rear Brake Drum Anti-Squeak	8.245
SPRING, Rear Brake Shoe Automatic Adjusting Lever Latch	8.012
SPRING, Rear Coil	11.102
SPRING, Rear Deck Door Hinge	23.028
SPRING, Rear Deck Link Retainer	23.070
SPRING, Rear Door Electric Operated Window Regulator Balance	23.305
SPRING, Rear Door Lock Contact Lever Return	23.051
SPRING, Rear Door Lock Trip Lever Return	23.051
SPRING, Rear Door Lower Hinge	23.018
SPRING, Rear Door Ventilator Lock Handle Button	23.160
SPRING, Rear Quarter Ash Receiver Cover	24.050
SPRING, Rear Quarter Electric Operated Window Regulator Balance	24.200
SPRING, Rear Quarter Electric Operated Window Regulator Control Switch To Housing	24.220
SPRING, Rear Quarter Ventilator Lock Handle Button	24.020
SPRING, Rear Quarter Window Regulator Handle Tension	24.002
SPRING, Rear Seat Back	29.222
SPRING, Rear Seat Back Center Armrest	29.236
SPRING, Rear Seat Cushion	29.192
SPRING, Remote Control Handle Tension	23.058
SPRING, Recirculating Air Damper	13.012
SPRING, Seat Back Adjusting Rod	29.105
SPRING, Seat Back Outer Hinge	29.105
SPRING SET, Clutch	5.035
SPRING SET, Electric Windshield Wiper Motor Brush	22.210
SPRING SET, Folding Top Operating Power Unit Motor Brush	28.058
SPRING, Spare Wheel Carrier Lock To Support	8.370
SPRING, Spare Wheel Carrier Lock To Wheel Bolt	8.370
SPRING, Spotlight Bulb Retaining	15.370
SPRING, Steering Gear Jacket Tube Upper Bearing	10.344
SPRING, Steering Gear Shaft Lower Bearing	10.883
SPRING, Steering Gear Shaft Stabilizer	10.770
SPRING, Steering Gear Upper Shaft Coupling	10.727
SPRING, Steering Gear Upper Shaft To Lever Shaft Preload	10.837
SPRING, Steering Linkage Cross Tube Ball Stud Cover	10.254
SPRING, Steering Linkage Cross Tube Safety Plug	10.246
SPRING, Steering Wheel Actuator Lock Shoe	10.847
SPRING, Steering Wheel Tilt Return	10.855
SPRING, Tailgate Counterbalance	23.037
SPRING, Tailgate Electric Operated Window Regulator Balance	23.306
SPRING, Tailgate Handle Trigger Return	23.077
SPRING, Tailgate Latch Link Retainer	23.039
SPRING, Tailgate Lock Handle	23.078
SPRING, Tailgate Lock Handle Lever Return	23.039
SPRING, Tailgate Lock Trip Lever Return	23.039
SPRING, Tailgate Outside Handle Button Return	23.077
SPRING, Tailgate Window Regulator Crank	23.078
SPRING, Third Seat Back	29.254
SPRING, Third Seat Cushion	29.274
SPRING, Transmission Speed Finder Interlock Poppet	6.215
SPRING, Transmission Gear Selector Control Lock Shaft Torsion	7.210
SPRING, Transmission Gear Selector Control Push Button Arm Compression	7.210
SPRING, Transmission Synchronizer Clutch Shaft Plate Retaining	6.100
SPRING, Valve	1.083
SPRING, Valve Rocker Arm Shaft Center Spacing	1.098
SPRING, Valve Rocker Arm Shaft Spacer	1.098
SPROCKET, Camshaft	1.134
SPROCKET, Crankshaft	1.132
STABILIZER, Air Conditioning Floor Cooling Handle	13.488
STABILIZER, Front Suspension Sway	10.260
STABILIZER, Rear Axle Sway	9.090
STANCHION, Rear Seat Back Robe Rail	27.018
STEM, Hydrovac Relay Valve	8.570
STEM, Rear Air Suspension Rear Leveling Valve Air Intake Valve	11.365
STICKER, Air Cleaner	14.145
STICKER, Information	14.145
STICKER, Rear Axle Locking Differential	9.001
STICKER, Valve Cover	14.145
STIFFENER, Body Side Sill Panel Reinforcement	20.180
STIFFENER, Rocker Panel	20.180

****** Refer separate Upholstery parts catalog

Copyright 1963 American Motors Corp.

DESCRIPTION	GROUP NO.
S - Cont.	
STOP, Brake Master Cylinder Secondary Piston	8.046
STOP, E-Stick Actuator Cam	5.327
STOP, Folding Top Bow	28.037
STOP, Fresh Air Intake Damper	13.150
STOP, Front Door Electric Operated Window Regulator	23.300
STOP, Front Door Glass	25.054
STOP, Front Door Upper Hinge	23.015
STOP, Front Seat Back End	29.127
STOP KIT, Clutch Pedal	5.164
STOP KIT, Foot Operated Parking Brake Lever	8.180
STOP KIT, Seat Back Center Bracket Hinge	29.105
STOP, Power Brake Master Cylinder Piston	8.515
STOP, Power Steering Cylinder Piston Rod	10.405
STOP, Rear Door Glass	25.054
STOP, Rear Quarter Window	25.054
STOP, Reverse Lockout	7.001
STOP, Seat Back Outer Hinge	29.105
STOP, Steering Gear Shaft Stabilizer Spring	10.775
STOP, Tailgate Window Regulator Arm	23.040
STORMSTRIP	******
STRAINER, Rear Air Suspension Compressor Air Inlet	11.309
STRAINER, Shelf Panel To Floor	20.375
STRAP, Accelerator Pedal Rod Bracket	4.050
STRAP, Alternator Adjusting	3.014
STRAP, Alternator Adjusting	3.018
STRAP, Assist	******
STRAP, Generator Adjusting	3.014
STRAP, Carburetor Control Shaft Bellcrank Bracket	4.060
STRAP, Gasoline Tank Mounting	4.152
STRAP KIT, Exhaust Pipe	4.195
STRAP, Luggage	15.250
STRAP, Radio Cable Conduit	3.680
STRAP, Rear Seat Back	29.220
STRAP, Third Seat Cushion Pull	29.279
STRIKER, Bottom Frame	29.103
STRIKER, Console Compartment Door Lock	27.282
STRIKER, Door Lock	23.087
STRIKER, Folding Top Front Header Latch	28.010
STRIKER, Glove Box Lock	22.073
STRIKER, Hood Lock	12.060
STRIKER, Liftgate Cam	23.039
STRIKER, Liftgate Latch	23.035
STRIKER, Liftgate Lock	23.073
STRIKER, Parking Brake Warning Lamp To Brake Lever	3.650
STRIKER, Rear Auxiliary Floor Side Compartment Door Lock	20.438
STRIKER, Rear Deck Lock	23.073
STRIKER, Side Front Window Latch	24.038
STRIKER, Tailgate Latch	23.039
STRIP, Rear Auxiliary Carpet Floor Skid	27.020
STRUT, Automatic Transmission Front Brake Band	16.130
STRUT, Automatic Transmission Rear Brake Band	16.155
STRUT, Brake Shoe Parking Brake Lever	8.024
STRUT, Crossmember To Body "A" Brace	1.010
S - Cont.	
STRUT, Front Suspension To Sill Mounting Bracket To Body "A" Brace	10.003
STUD, Accelerator Control Rod Ball	4.055
STUDBALL, Rear View Mirror	27.084
STUD, Carburetor Control Shaft	4.070
STUD, Clutch Beam Pivot	5.178
STUD, Cylinder Head To Block	1.063
STUD, Folding Top Dust Boot Fastener	28.085
STUD, Folding Top Well Lining Fastener	28.085
STUD, Front Seat Back Center Armrest Weld	29.142
STUD, Front Shock Upper Mounting Bracket Brace To Sill	11.203
STUD, Instrument Cluster Heater And A/C Switch Hole	3.510
STUD, Jack Hold Down	14.138
STUD KIT, Steering Linkage Pitman Arm	10.104
STUD, Outside Rear View Mirror Ball	15.270
STUD, Rear Air Suspension Air Spring Piston	11.387
STUD, Rear Door Electric Operated Window Regulator Stop	23.305
STUD, Rear Seat Back Strap Fastening	29.220
STUD, Steering Linkage Cross Tube Ball	10.253
STUD, Steering Linkage Pitman Arm	10.104
SUPPLIES, Maintenance And Shop	15.260
SUPPORT, Accelerator Pedal Rod Bellcrank	4.050
SUPPORT AND CUSHION SET, Front Door Inner To Outer Panel	23.001
SUPPORT AND CUSHION SET, Rear Door Inner To Outer Panel	23.002
SUPPORT ASSEMBLY, Tailgate Electric Operated Window Regulator Pinion Shaft	23.308
SUPPORT, Automatic Transmission Center	16.135
SUPPORT, Automatic Transmission Throttle Control Cable	16.305
SUPPORT, Battery Box	3.082
SUPPORT, Belt Rail To Inner Wheelhouse	20.350
SUPPORT, Body Side Sill Panel Reinforcement	20.180
SUPPORT, Brake Pedal	8.164
SUPPORT, Bumper Rail End	12.169
SUPPORT, Carburetor Control Shaft	4.060
SUPPORT, Carburetor Control Shaft	4.070
SUPPORT, Clutch Idler Inner Lever Or Beam Pivot	5.178
SUPPORT, Clutch Pedal	5.152
SUPPORT, Clutch Release Idler Bracket	5.168
SUPPORT, Domelight	20.425
SUPPORT, Dynamic Absorber Mounting	11.393
SUPPORT, Engine Front	1.003
SUPPORT, Engine Rear	1.011
SUPPORT, Exhaust Pipe Rear	4.200
SUPPORT, Folding Top Pivot Bracket	20.283
SUPPORT, Folding Top Rear Side Rail	28.015
SUPPORT, Front Coil Spring	11.075
SUPPORT, Front Door Inner To Outer Panel	23.001
SUPPORT, Front Fender Antenna	15.030
SUPPORT, Front Seat Adjuster	20.020
SUPPORT, Front Seat Adjuster	29.130
SUPPORT, Front Seat Back	29.110
SUPPORT, Front Seat Back Armrest Hinge	29.143
SUPPORT, Front Seat Cushion	29.154

****** Refer separate Upholstery parts catalog

Copyright 1963 American Motors Corp.

DESCRIPTION	GROUP NO.
S - Cont.	
SUPPORT, Front Seat Slide Adjuster Extension	29.131
SUPPORT, Front Suspension Sway Stabilizer To Strut Rod Bracket	10.260
SUPPORT, Gear Selector Dial Light	7.535
SUPPORT, Gear Shift Lever Mounting Bracket	7.017
SUPPORT, Grille Panel To Side Baffle	2.051
SUPPORT, Hand Brake Cable Bellcrank	8.189
SUPPORT, Heater And Defroster Motor Mounting	13.072
SUPPORT, Heater Core	13.028
SUPPORT, Heater Core To Water Pump Tube To Clutch Housing	13.050
SUPPORT, Hood Lock	12.060
SUPPORT, Hydrovac Mounting	8.590
SUPPORT, Ignition Coil	3.058
SUPPORT, Ignition Wire	3.226
SUPPORT, Liftgate	23.034
SUPPORT, Manual Top Hold Down Bracket	28.077
SUPPORT, Radiator	2.023
SUPPORT, Radiator Grille	2.050
SUPPORT, Radiator Grille Panel	2.052
SUPPORT, Radio Speaker Mounting Plate	15.320
SUPPORT, Rear Auxiliary Floor Side Panel	20.440
SUPPORT, Rear Auxiliary Floor Side Panel To Floor	20.435
SUPPORT, Rear Deck Door Hinge	23.028
SUPPORT, Rear Deck Upper Panel To Wheelhouse	20.367
SUPPORT, Rear Domelight	20.425
SUPPORT, Rear Door Glass Stop Bumper	25.054
SUPPORT, Rear Door Locking Bellcrank	23.055
SUPPORT, Rear Leaf Spring Front Mounting Bracket	20.043
SUPPORT, Rear Quarter Window	25.054
SUPPORT, Rear Seat Back	20.378
SUPPORT, Rear Seat Back Frame	29.220
SUPPORT, Rear Shelf Panel	20.370
SUPPORT, Rectifier Mounting Bracket	3.014
SUPPORT, Roof Panel	20.420
SUPPORT, Roof Panel And Domelight	20.420
SUPPORT, Roof Side Rail	20.255
SUPPORT, Rear Seat Back Center Armrest	29.233
SUPPORT, Side Roof Rail Reinforcement To Wheelhouse	20.265
SUPPORT, Spare Wheel Carrier	8.350
SUPPORT, Steering Linkage Anti-Roll	10.118
SUPPORT, Steering Wheel And Directional Signal Actuator	10.850
SUPPORT, Tailgate	23.036
SUPPORT, Tailgate Lowering Glass Slide Channel	25.039
SUPPORT, Tail Pipe	4.234
SUPPORT, Tail, Stop And Rear Directional Signal Lamp Body Shield	3.303
SUPPORT, Third Seat Back	29.261
SUPPORT, Windshield Header Package Net	27.140
SWITCH, Air Conditioning Blower Control	13.078
SWITCH, Air Conditioning Temperature Control	13.078
SWITCH ASSEMBLY, Door Electric Operated Window Regulator Control	23.330
S - Cont.	
SWITCH, Automatic Transmission Solenoid Kickdown	16.245
SWITCH, Back-Up Lamp	3.319
SWITCH, Cargo Area Lamp	3.670
SWITCH, Courtesy	3.145
SWITCH, Directional Signal	3.321
SWITCH, Door Electric Operated Window Regulator Control	23.330
SWITCH, Door Electric Operated Window Regulator Safety	23.330
SWITCH, E-Stick Actuator Cam	5.330
SWITCH, Folding Top Operating Control	28.054
SWITCH, Headlamp Dimmer	3.158
SWITCH, Heater-Defroster And Air Conditioner Blower Control	13.078
SWITCH, Ignition	3.130
SWITCH, Lighting	3.145
SWITCH, Overdrive Kickdown	6.367
SWITCH, Overdrive Vacuum	6.368
SWITCH, Parking Brake Warning Lamp	3.650
SWITCH, Rear Quarter Electric Operated Window Regulator Control	24.220
SWITCH, Starting Motor	3.022
SWITCH, Starting Motor Neutral Safety	3.022
SWITCH, Stop And Tail Lamp	3.333
SWITCH, Spotlight	15.370
SWITCH, Tailgate Electric Operated Window Regulator Control	23.330
SWITCH, Tailgate Electric Operated Window Regulator Control Safety	23.335
SWIVEL, Tailgate Lock Cylinder	23.081
SWIVEL, Door Lock Cylinder	23.081
SWIVEL, Rear Deck Lock Cylinder	23.081
- T -	
TACK, Folding Top Well Lining	28.082
TACKING STRIP, Folding Top Header	28.018
TAG, Brake Master Cylinder Insturction	8.038
TAILGATE	23.006
TANK ASSEMBLY, Gasoline	4.130
TANK, Power Brake Vacuum Reserve	8.440
TAPPET, Valve	1.088
TEE, Cylinder Head To Booster Tube	1.059
TEE, E-Stick Intake Manifold Adapter	5.250
TEE, E-Stick Solenoid To Vacuum Hose	5.296
TEE, E-Stick Vacuum Hose	5.265
TEE, Fuel Pump To Vacuum Line	4.124
TEE, Gasoline Tank Air Vent Hose	4.141
TEE, Head To Pump	22.050
TEE, Heater Air Damper Vacuum Hose	13.020
TEE, Oil Filter Inlet Tube	1.204
TEE, Rear Air Suspension Compressor To Reservoir Hose To Tube	11.345
TEE, Rear Brake Tube	8.122
TEE, Vacuum Door Lock Harness	23.067
TEE, Vacuum Harness At Manifold	23.067
TERMINAL, Rear Quarter Lamp	3.675
TERMINAL, Trunk Lamp Assembly Wire	3.660
THERMOSTAT, Air Conditioning Temperature Control	13.477

****** Refer separate Upholstery parts catalog

Copyright 1963 American Motors Corp.

DESCRIPTION	GROUP NO.
T - Cont.	
THERMOSTAT KIT	2.100
TISSUE DISPENSER	15.125
TOGGLE, Spotlight Switch	15.370
TOP ASSEMBLY, Folding Top	28.000
TOPPERS, Cushion	15.350
TRANSMISSION	6.001
TRANSMISSION, Automatic	16.001
TRAY, Instrument Panel Ash Receiver	22.092
TRIGGER, Front Door Outside Handle	23.074
TRIGGER, Rear Door Outside Handle	23.074
TRIGGER, Tailgate Handle	23.077
"T" RING KIT, Power Steering Cylinder Piston Rod Guide	10.410
TRUNNION, Accelerator Cable To Lever	4.057
TRUNNION, Accelerator Control Rod	4.055
TRUNNION ASSEMBLY, Front Suspension Lower Control Arm	10.044
TRUNNION ASSEMBLY, Front Suspension Upper Control Arm	10.042
TRUNNION, Carburetor Control Shaft	4.070
TRUNNION, Front Suspension Upper Control Arm	10.035
TRUNNION, Gear Selector Cable	7.255
TRUNNION, Gear Shift Rod	7.135
TRUNNION KIT, Front Suspension Lower Control Arm	10.044
TRUNNION KIT, Torque Tube	9.146
TRUNNION, Neutral Safety Switch	3.022
TRUNNION, Overdrive Control	6.350
TRUNNION, Overdrive Control	6.363
TRUNNION, Torque Tube	9.146
TRUNNION, Tow Start Cable To Lever	5.380
TUBE, Air Conditioning Air Outlet	13.510
TUBE, Air Conditioning Evaporator Drain	13.488
TUBE, Air Conditioning Jumper	13.440
TUBE AND CAP ASSEMBLY, Gasoline Tank Auxilliary Vent	4.141
TUBE ASSEMBLY, Steering Gear	10.314
TUBE ASSEMBLY, Steering Linkage Tie Rod Adjusting	10.222
TUBE ASSEMBLY, Torque	9.140
TUBE, Automatic Transmission Front Oil Pump Apply	16.080
TUBE, Automatic Transmission Front Oil Pump Converter In And Out	16.080
TUBE, Automatic Transmission Front Oil Pump Suction	16.080
TUBE, Automatic Transmission Front Servo Apply	16.060
TUBE, Automatic Transmission Front Servo Release	16.060
TUBE, Automatic Transmission Oil Collector Sleeve	16.170
TUBE, Automatic Transmission Oil Cooler	16.230
TUBE, Automatic Transmission Oil Cooler Discharge To Sump	16.230
TUBE, Automatic Transmission Oil Cooler Inlet	16.230
TUBE, Automatic Transmission Oil Filler	16.020

DESCRIPTION	GROUP NO.
T - Cont.	
TUBE, Automatic Transmission Pressure Regular Valve Compensator	16.025
TUBE, Automatic Transmission Pressure Regulator Valve Lubrication Line	16.025
TUBE, Automatic Transmission Pressure Regulator Valve Main Line	16.025
TUBE, Automatic Transmission Rear Clutch Drum	16.125
TUBE, Automatic Transmission Rear Oil Pump Discharge	16.055
TUBE, Automatic Transmission Rear Oil Pump Inlet	16.050
TUBE, Automatic Transmission Rear Servo	16.070
TUBE, Automatic Transmission Vacuum	16.240
TUBE, Back-Up Lamp Wire	3.318
TUBE, Blower Housing To Blower Motor	13.072
TUBE, Blower Motor Exhaust	13.072
TUBE, Brake Master Cylinder To Front Fitting	8.100
TUBE, Brake Master Cylinder To Rear Axle	8.100
TUBE, Brake Master Cylinder To Union	8.100
TUBE, Carburetor Choke Heater	4.020
TUBE, Choke Heater	1.067
TUBE, Cylinder Block Breather	1.115
TUBE, Cylinder Block To Ventilation Valve	1.118
TUBE, Cylinder Head To Hose	22.050
TUBE, Cylinder Head To Pump	22.050
TUBE, Diaphragm Assembly	5.280
TUBE, Distributor Vacuum Control	3.048
TUBE, Engine Oil Pump Inlet	1.167
TUBE, E-Stick Vacuum Hose	5.255
TUBE, Engine Front Support Crossmember To Front Suspension Crossmember Support	1.007
TUBE, Engine Oil Pump Release Valve Discharge	1.180
TUBE, Front Brake Fitting To Front Wheels	8.106
TUBE, Front Door Vacuum Lock Tubing Harness	23.067
TUBE, Front Fitting To Rear Axle	8.100
TUBE, Front Wheel Disc Brake Caliper To Hose	8.850
TUBE, Fuel Pump To Carburetor	4.174
TUBE, Gasoline Tank Drain Hose	4.141
TUBE, Gasoline Tank Filler Tube Air Vent	4.141
TUBE, Gasoline Tank To Fuel Pump	4.160
TUBE, Heater And Defroster Air Duct To Damper Housing	13.118
TUBE, Heater Core To Water Pump	13.050
TUBE, Housing To Defroster Duct	13.113
TUBE, Hydrovac Hydraulic Cylinder	8.560
TUBE, Hydrovac To 5-Way Fitting	8.610
TUBE, Hydrovac Vacuum	8.585
TUBE, Intake Manifold Cover Water	1.065
TUBE, Manifold To Fuel Pump	4.174
TUBE, Manifold To Pump	22.050
TUBE, Master Cylinder To Front Wheels	8.106

****** Refer separate Upholstery parts catalog

Copyright 1963 American Motors Corp.

DESCRIPTION	GROUP NO.
T - Cont.	
TUBE, Master Cylinder To Hydrovac	8.605
TUBE, Oil Filter	1.198
TUBE, Oil Level Gauge	1.187
TUBE, Overdrive Vacuum Switch	6.368
TUBE, Power Steering Cylinder Outer	10.396
TUBE, Power Steering Pump Pressure Hose To Cylinder	10.470
TUBE, Power Steering Pump Return Hose To Cylinder	10.470
TUBE, Power Steering Pump Return Hose To Steering Gear	10.470
TUBE, Rear Air Suspension Air Reservoir To Rear Leveling Valve	11.360
TUBE, Rear Air Suspension Compressor Oil	11.335
TUBE, Rear Air Suspension Compressor To Reservoir	11.345
TUBE, Rear Air Suspension Rear Leveling Valve Cross To Air Spring	11.380
TUBE, Rear Air Suspension Rear Leveling Valve To Cross	11.373
TUBE, Rear Brake	8.126
TUBE, Rear Door Vacuum Lock Tubing Harness	23.067
TUBE, Side Belt Rail Drain	28.091
TUBE, Spare Wheel Carrier Support Stop Chain	8.350
TUBE, Spotlight Inside	15.370
TUBE, Steering Gear Jacket	10.338
TUBE, Steering Linkage Center Cross	10.240
TUBE, Thermostat Housing To Heater Water Valve	13.050
TUBE, Torque	9.140
TUBE, Union To Rear Hose	8.100
TUBE, Valve Rocker Arm Oil	1.105
TUBE, Valve Tappet Cover To Ventilation Valve	1.116
TUBING, Rear Door Electric Operated Window Wiring Harness	23.320
TUNE-UP KIT	3.003
TURNBUCKLE, Accelerator Control Rod	4.055
- U -	
U-BOLT, Exhaust Pipe To Brace	4.195
U-BOLT, Rear Leaf Spring To Axle	11.132
UNION, Brake Master Cylinder To Brake Tube	8.100
UNION, Brake Master Cylinder To Rear Hose	8.100
UNION, Extension Tube	4.160
UNISIDE ASSEMBLY	20.170
UPHOLSTERY, Axle Housing	******
UPHOLSTERY, Front Seat Back	******
UPHOLSTERY, Front Seat Back Headrest	15.197
UPHOLSTERY, Front Seat Back Kickpad	******
UPHOLSTERY, Front Seat Cushion	******
UPHOLSTERY, Fuel Tank Filler	******
UPHOLSTERY, Rear Cargo Baseboard	******
U - Cont.	
UPHOLSTERY, Rear Cargo Platform Back	******
UPHOLSTERY, Rear Cargo Wheelhouse	******
UPHOLSTERY, Rear Quarter Support Trim	******
UPHOLSTERY, Rear Seat Back	******
UPHOLSTERY, Rear Seat Cushion	******
UPHOLSTERY, Rear Wheelhouse	******
UPHOLSTERY, Third Seat Back	******
UPHOLSTERY, Third Seat Cushion	******
- V -	
VALVE, Air Conditioning Compressor Suction And Discharge	13.405
VALVE, Air Conditioning Compressor Suction Freon Charging	13.405
VALVE, Air Conditioning Expansion	13.470
VALVE, Air Conditioning Receiver Pressure Relief	13.455
VALVE AND SEAL ASSEMBLY, Air Conditioning Hose Disconnect Coupling	13.440
VALVE ASSEMBLY, Automatic Transmission Control	16.195
VALVE ASSEMBLY, E-Stick Pressure Regulator	5.285
VALVE ASSEMBLY, Power Steering Gear	10.615
VALVE ASSEMBLY, Windshield Washer Check	15.440
VALVE, Automatic Transmission Lower Control Valve Front Pump Check	16.215
VALVE, Automatic Transmission Lower Control Valve Manual	16.215
VALVE, Automatic Transmission Lower Control Valve Transition	16.215
VALVE, Automatic Transmission Lower Control Valve Rear Pump Check	16.215
VALVE, Automatic Transmission Pressure Regulator	16.025
VALVE, Automatic Transmission Vacuum Bleedoff	16.240
VALVE BODY AND SPOOL KIT, Power Steering Cylinder	10.398
VALVE, Captive Air Tire Inflation	8.270
VALVE, Cylinder Block Ventilation	1.119
VALVE, Exhaust	1.078
VALVE, Front Coil Spring Support Air Vent	11.075
VALVE, Front Door Vacuum Lock Deactivator	23.068
VALVE, Heater Water	13.035
VALVE, Hydrovac Check	8.600
VALVE, Intake	1.077
VALVE PLATE KIT, Air Conditioning Compressor	13.400
VALVE, Power Brake Floating	8.700
VALVE, Power Brake Cylinder Check	8.740
VALVE, Power Brake Vacuum Check	8.460
VALVE, Power Steering Pump Control	10.445

****** Refer separate Upholstery parts catalog

Copyright 1963 American Motors Corp.

DESCRIPTION	GROUP NO.
V - Cont.	
VALVE, Power Steering Pump Pressure Relief	10.430
VALVE, Rear Air Suspension Air Check	11.300
VALVE, Rear Air Suspension Air Reservoir Emergency	11.340
VALVE, Rear Air Suspension Compressor To Reservoir Emergency Air	11.345
VALVE, Rear Air Suspension Rear Leveling	11.365
VALVE, Rear Air Suspension Rear Leveling Valve Cross Air Gauge Check	11.375
VALVE SET, Exhaust	1.078
VALVE SET, Intake	1.077
VALVE, Vacuum Door Lock Seat Shut Off	23.066
VALVE, Vacuum Door Lock Selector	23.065
VENTILATOR, Front Door	23.110
VENTILATOR, Rear Door	23.150
VENTILATOR, Rear Quarter	24.011
VENTING KIT, Gasoline Tank	4.141
VENTSHADES	15.420
VENTURI, Power Steering Pump Flow Director	10.430
VISOR, Sun	******
– W –	
WASHER, Air Conditioning Air Discharge Grille Door Hinge Pin	13.515
WASHER, Automatic Transmission Front Clutch Cylinder Hub Thrust	16.115
WASHER, Automatic Transmission Front Clutch Cylinder Thrust	16.115
WASHER, Automatic Transmission Input Shaft Thrust	16.105
WASHER, Automatic Transmission Manual Valve Detent Lever	16.225
WASHER, Automatic Transmission Output Shaft Thrust	16.160
WASHER, Automatic Transmission Parking Brake Pawl To Toggle Lever Link Pin	16.090
WASHER, Automatic Transmission Parking Brake Torsion Lever Pin	16.090
WASHER, Automatic Transmission Planetary Carrier Thrust	16.150
WASHER, Automatic Transmission Rear Servo Lever Roller Bearing Retainer	16.070
WASHER, Automatic Transmission Sun Gear Reverse Thrust	16.140
WASHER, Bottom Frame Center Hinge Bracket	29.103
WASHER, Brake Shoe Parking Brake Lever Strut Spring	8.024
WASHER, Brake Tube Hose	8.116
WASHER, Carburetor Choke Heater Tube	4.020
WASHER, Carburetor Control Shaft Bearing Felt	4.070
WASHER, Clutch Cover To Flywheel Screw	5.050
WASHER, Clutch Pedal Stop Cushion Bite	5.164
WASHER, Crankshaft And Vibration Damper Lock	1.054
WASHER, Crankshaft Thrust	1.024
WASHER, Cylinder Head To Block Bolt	1.063
WASHER, Cylinder Head To Block Stud	1.063
W - Cont.	
WASHER, Damper To Housing Pivot	13.113
WASHER, Door Window Regulator Handle	23.104
WASHER, Electric Windshield Wiper Drive Crank Eccentric Spring	22.242
WASHER, Electric Windshield Wiper Drive Crank Thrust	22.226
WASHER, Engine Oil Pump Drive Gear Thrust	1.162
WASHER, Folding Top Well Drain Fibre	28.083
WASHER, Folding Top Well Lining Fastener	28.085
WASHER, Folding Top Well Lining Fastener Stud	28.085
WASHER, Folding Top Well Lining Plastic	28.082
WASHER, Front Door Lock Remote Pin Split	23.050
WASHER, Front Fender Antenna Lead To Antenna	15.030
WASHER, Front Seat Adjuster Spacer	29.130
WASHER, Front Seat Back Center Armrest Lock	29.142
WASHER, Front Seat Cushion Lounge Tilt Actuator Piston Pressure	29.140
WASHER, Gear Shift Lever Pivot Shaft Compression Spring	7.005
WASHER, Gear Shift Lever Pivot Shaft Spring	7.005
WASHER, Gear Shift Upper Lever Housing	7.020
WASHER, Gear Shift Upper Lever Housing (Thrust)	7.020
WASHER, Gear Shift Upper Lever Housing (Wave)	7.020
WASHER, Gear Shift Upper Lever Pressure Pin Retainer Spring	7.025
WASHER, Heater Air Inlet Damper Rod End Grommet	13.015
WASHER, Hydrovac Hydraulic Master Piston Deflector	8.575
WASHER, Hydrovac Hydraulic Piston Seal	8.580
WASHER, Hydrovac Hydraulic Piston Stop	8.580
WASHER, Hydrovac Piston Cup	8.570
WASHER, Hydrovac Piston Spring	8.570
WASHER, Hydrovac Relay Valve Piston Stop	8.570
WASHER, Hydrovac Vacuum Piston Rod To Plate	8.580
WASHER, Intake Manifold Hole Plug Bolt	1.067
WASHER KIT	5.315
WASHER KIT, Windshield	15.440
WASHER, Oil Manifold Screw Lock	1.185
WASHER, Overdrive Shift Rail Assembly "C"	6.295
WASHER, Power Brake Master Cylinder Check Valve Seat	8.740
WASHER, Rear Axle Differential Pinion Thrust	9.033
WASHER, Rear Axle Differential Side Gear Thrust	9.029
WASHER, Rear Axle Pinion	9.050
WASHER, Rear Axle Pinion Lock	9.050
WASHER, Rear Door Electric Operated Window Regulator Pinion Gear	23.308
WASHER, Rear Quarter Electric Operated Window Regulator Transmission	24.203
WASHER, Rear Quarter Window Lowering Pivot	25.029

****** Refer separate Upholstery parts catalog

Copyright 1963 American Motors Corp.

DESCRIPTION	GROUP NO.
W - Cont.	
WASHER, Rear Quarter Window Regulator	24.001
WASHER, Rear Quarter Window Regulator Handle Escutcheon	24.008
WASHER, Rear Quarter Window Regulator Shaft	24.001
WASHER, Remote Control Handle Escutcheon	23.060
WASHER, Remote Control Handle To Control	23.058
WASHER, Reverse Lockout Stop Plain	7.001
WASHER, Reverse Lockout Stop Spring	7.001
WASHER SET, Load Leveler	15.245
WASHER, Steering Gear Cross Shaft Adjusting Screw Thrust	10.308
WASHER, Steering Gear Cross Shaft Thrust	10.306
WASHER, Steering Gear Shaft Bearing Preload Capsule	10.812
WASHER, Steering Gear Shaft Bearing Preload Capsule	10.817
WASHER, Steering Gear Housing	10.292
WASHER, Steering Gear Jacket Tube Upper Bearing	10.344
WASHER, Steering Gear Jacket Tube Upper Bearing Spring	10.344
WASHER, Steering Gear Shaft Stabilizer	10.773
WASHER, Steering Gear Shaft Stabilizer Spring	10.773
WASHER, Steering Gear Shaft Upper Bearing Lock Tab	10.829
WASHER, Steering Gear Upper Shaft Coupling Bearing Retainer	10.730
WASHER, Steering Knuckle Pin Thrust Bearing	10.023
WASHER, Steering Knuckle Spindle	10.007
WASHER, Steering Shaft Seal Retainer	10.332
WASHER, Steering Linkage Cross Tube	10.250
WASHER, Steering Shaft To Column Seal Retainer	10.332
WASHER, Tailgate Window Regulator Handle	23.078
WASHER, Tailgate Window Regulator Shaft Sealing	23.040
WASHER, Transmission Countershaft Gear Bearing Roller	6.167
WASHER, Transmission Countershaft Gear Thrust	6.166
WASHER, Transmission Front Ball Bearing	6.040
WASHER, Transmission Front Ball Bearing Oil Retaining	6.040
WASHER, Transmission Rear Ball Bearing	6.054
WASHER, Turning Radius Stop Adjusting Shim Nut	10.010
WASHER, Valve Rocker Arm Shaft Retaining	1.098
WASHER, Valve Rocker Arm Shaft Spring	1.098
WATERDAM, Electric Operated Window Regulator Control Switch	23.330
WATERDAM, Rear Quarter Electric Operated Window Regulator Control Switch	24.220
WATERDAM, Rear Quarter Window	25.030
WATERDAM, Regulator Panel To Rear Quarter Panel	20.280
WATERDAM, Roof Rail To Rear Quarter Panel	20.255

DESCRIPTION	GROUP NO.
W - Cont.	
WATERSHIELD, Rear Quarter Ash Receiver Retainer	24.052
WAX REMOVER	15.260
WEATHERSEAL, Folding Top Front Header	28.005
WEATHERSEAL, Folding Top Side Rail	28.029
WEATHERSEAL, Front Body Pillar Upper	23.012
WEATHERSEAL, Front Door Window Frame	23.012
WEATHERSEAL, Rear Door Window Frame	23.012
WEATHERSEAL, Roof Rail	23.012
WEATHERSTRIP, Folding Top Header	28.003
WEATHERSTRIP, Front Door Glass And Ventilator Division Channel	23.117
WEATHERSTRIP, Front Door Glass Body Side	25.058
WEATHERSTRIP, Front Door Glass Moulding Side	25.055
WEATHERSTRIP, Front Door Ventilator	23.116
WEATHERSTRIP, Rear Door Division Channel	23.166
WEATHERSTRIP, Rear Door Glass Body Side	25.059
WEATHERSTRIP, Rear Door Glass Moulding Side	25.056
WEATHERSTRIP, Rear Door Ventilator	23.154
WEATHERSTRIP, Rear Door Window Frame Front	25.090
WEATHERSTRIP, Rear Quarter Glass Inner	25.061
WEATHERSTRIP, Rear Quarter Glass Outer	25.062
WEATHERSTRIP, Rear Quarter Ventilator	24.018
WEATHERSTRIP, Rear Quarter Window Frame Front	25.090
WEATHERSTRIP, Tailgate Glass Inner	25.065
WEATHERSTRIP, Tailgate Glass Outer	25.066
WEDGE, Door Bumper Contact	23.019
WEDGE, Spotlight Handle Housing	15.370
WEIGHT, Wheel Balance	8.280
WELL, Fuel Tank	20.035
WELL, Rear Floor Pan Seat	20.035
WELL, Spare Tire	20.035
WELT, Folding Top Header Pinch	28.018
WELT, Windshield Finish Side Moulding	26.001
WHEEL, Air Conditioner Blower Motor	13.072
WHEEL, Heater And Defroster Blower Motor	13.072
WHEEL, Road	8.270
WHEEL, Steering	10.280
WICK, Clutch Throwout Lever Pivot Assembly	5.130
WICK, Hydrovac Vacuum Piston Packing	8.580
WING NUT, Spare Tire Cover Panel Hold Down	20.450
WIRE, Air Conditioning Compressor Drive Clutch Extension	13.415
WIRE, Air Conditioning Compressor Drive Clutch Brushes Extension	13.415
WIRE, Air Conditioning Harness Extension	13.477
WIRE, Air Conditioning Thermostat Temperature Control	13.477
WIRE, Alternator Ground	3.005
WIRE, Altemator To Ammeter	3.005
WIRE, Altemator To Rectifier	3.005
WIRE, Altemator To Starter Solenoid	3.016

****** Refer separate Upholstery parts catalog

Copyright 1963 American Motors Corp.

DESCRIPTION	GROUP NO.
W - Cont.	
WIRE, Alternator To Voltage Regulator	3.005
WIRE, Ammeter To Ignition Switch	3.600
WIRE, Ammeter To Starter Solenoid	3.600
WIRE, Ammeter To Voltage Regulator	3.600
WIRE, Automatic Transmission Kickdown Switch To Solenoid	16.245
WIRE, Automatic Transmission Solenoid Connector To Kickdown Switch	16.245
WIRE, Automatic Transmission Solenoid Kickdown Switch Jumper	16.245
WIRE, Automatic Transmission Solenoid Kickdown Switch To Chassis Wiring Harness	16.245
WIRE, Automatic Transmission Solenoid Kickdown Switch To Junction Block	16.245
WIRE, Back-Up Lamp	3.318
WIRE, Back-Up Lamp Extension	3.318
WIRE, Back-Up Lamp Switch To Body Wire Harness	3.318
WIRE, Back-Up Lamp Switch To Circuit Breaker	3.318
WIRE, Back-Up Lamp Switch To Connector	3.318
WIRE, Back-Up Lamp Switch To Junction Block	3.318
WIRE, Back-Up Lamp To Body Wire Harness	3.318
WIRE, Back-Up Lamp To Connector	3.318
WIRE, Back-Up Lamp Wire Harness Extension	3.318
WIRE, Blower Motor Ground	13.072
WIRE, Body Wire Harness To Gasoline Gauge	3.163
WIRE, Center Domelamp	3.163
WIRE, Cigar Lighter Assembly	3.352
WIRE, Cigar Lighter To Ignition Switch	3.352
WIRE, Circuit Breaker To Back-Up Lamp Switch	3.154
WIRE, Circuit Breaker To Top Switch	28.057
WIRE, Clock	3.378
WIRE, Clock Feed	3.378
WIRE, Control Switch To Blower Motor	13.072
WIRE, Courtesy Lamp Assembly	3.349
WIRE, Distributor To Coil High Tension	3.232
WIRE, Distributor To Coil Low Tension	3.235
WIRE, Distributor To Ignition	3.232
WIRE, E-Stick Actuator Cam Switch Ground	5.330
WIRE, Folding Top Operating Control Switch Extension	28.054
WIRE, Front Domelamp	3.163
WIRE, Front Seat Adjusting Slide Latch	29.133
WIRE, Front Seat Upholstery	29.113
WIRE, Gasoline Gauge Extension	3.615
WIRE, Gasoline Gauge To Body Wire Harness	3.615
WIRE, Gear Selector Dial Light	7.535
WIRE, Generator To Voltage Regulator	3.005
WIRE, Glove Box Lamp	3.378
WIRE, Headlamp	3.288
WIRE, Headlining Listing	27.026
WIRE, Horn Contact	3.192
WIRE, Horn To Chassis Wire Harness	3.192
WIRE, Horn Ground	3.192
W - Cont.	
WIRE, Horn To Horn	3.192
WIRE, Horn To Relay	3.192
WIRE, Ignition Coil To Junction Block	3.056
WIRE, Ignition Coil To Voltage Regulator	3.056
WIRE, Ignition Switch To Blower Switch	3.130
WIRE, Ignition Switch To Circuit Breaker	3.130
WIRE, Ignition Switch To Circuit Breaker	28.057
WIRE, Ignition Switch To Flasher	3.130
WIRE, Ignition Switch To Neutral Safety Switch	3.130
WIRE, Ignition Switch To Starting Motor	3.130
WIRE, Ignition Switch To Voltage Regulator	3.130
WIRE, Ignition Switch To Windshield Wiper Switch Circuit Breaker	3.130
WIRE, Instrument Cluster Voltage Regulator To Temperature Gauge To Gasoline Gauge	3.635
WIRE, Junction Block To Ignition Switch	3.213
WIRE, License Plate	3.341
WIRE, License Plate Lamp	3.341
WIRE, Neutral Safety Switch Ground	3.022
WIRE, Neutral Safety Switch To Ignition Switch	3.022
WIRE, Neutral Safety Switch To Junction Block	3.022
WIRE, Overdrive Indicator Light	6.380
WIRE, Overdrive Kickdown Relay To Junction Block	6.365
WIRE, Overdrive Kickdown Switch	6.366
WIRE, Overdrive Kickdown Switch	6.367
WIRE, Overdrive Relay To Junction Block	3.210
WIRE, Overdrive Solenoid Extension	6.328
WIRE, Overdrive Wire Harness To Governor	3.210
WIRE, Parking And Front Directional Signal Lamp	3.292
WIRE, Parking Brake Warning Lamp Switch To Circuit Breaker	3.650
WIRE, Parking Brake Warning Lamp Switch To Fuse Panel	3.650
WIRE, Parking Brake Warning Lamp To Switch	3.650
WIRE, Radio Capacitor	15.320
WIRE, Radio Capacitor Jumper	15.320
WIRE, Rear Domelamp	3.163
WIRE, Rear Seat Upholstery	29.114
WIRE, Rectifier To Ground	3.005
WIRE, Rectifier To Voltage Regulator	3.005
WIRE, Relay To Extension Wire	3.192
WIRE, Relay To Neutral Safety Switch	3.022
WIRE SET, Ignition	3.228
WIRE, Tailgate Electric Window Regulator	23.320
WIRE, Tail, Stop And Rear Directional Signal Lamp	3.312
WIRE, Temperature Gauge Resistor	3.610
WIRE, Temperature Sending Unit Extension	3.165
WIRE, Trunk Lamp Assembly Extension	3.660
WIRE, Voltage Regulator "A" Terminal To Armature Terminal	3.012
WIRE, Voltage Regulator To Alternator	3.012

****** Refer separate Upholstery parts catalog

Copyright 1963 American Motors Corp.

DESCRIPTION	GROUP NO.
W - Cont.	
WIRE, Voltage Regulator To Ammeter	3.012
WIRE, Voltage Regulator To Ignition Coil	3.012
WIRE, Voltage Regulator To Ignition Resistor	3.012
WIRE, Voltage Regulator To Junction Block	3.012
WIRE, Voltage Regulator To Starting Motor	3.005
WIRE, Voltage Regulator To Starter Solenoid	3.012
WIRE, Water Temperature Gauge Extension	3.610
WORM, Door Electric Operated Window Regulator	23.308
WORM, Rear Quarter Electric Operated Window Regulator Housing	24.203
WORM, Tailgate Electric Operated Window Regulator	23.308
- Y -	
YOKE, Gear Shift Operating Shaft	7.038
YOKE, Universal Joint	9.104
YOKE, Universal Joint Ball Stud	9.106
YOKE, Universal Joint Link	9.106

****** Refer separate Upholstery parts catalog

Copyright 1963 American Motors Corp.

ILLUSTRATIONS INDEX

GROUP 1 ENGINE

CONNECTING ROD, PISTON, RINGS AND BEARINGS 60 THRU CURRENT ALL MODELS ..... IL 1 - 17
CRANKSHAFT AND CAMSHAFT 60 THRU CURRENT 01: 60 THRU CURRENT 10 (OHV-196)..... IL 1 - 11
CRANKSHAFT AND CAMSHAFT 64 10 (OHV-232): 65 ALL MODELS (OHV-232): 65 10 (OHV-199) . IL 1 - 29
CRANKSHAFT AND CAMSHAFT 60 THRU CURRENT 10-20-80 (V8) ..... IL 1 - 12
ENGINE CYLINDER BLOCK 60 THRU CURRENT 01 (LHE)..... IL 1 - 7
ENGINE CYLINDER BLOCK 60 THRU CURRENT 01 (OHV-196): 60 THRU 64 10 (OHVC-196) .... IL 1 - 8
ENGINE CYLINDER BLOCK 61 THRU 64 10 (OHVA) ..... IL 1 - 9
ENGINE CYLINDER BLOCK 64 10 (OHV-232): 65 ALL MODELS (OHV-232): 65 10 (OHV-199)..... IL 1 - 23
ENGINE CYLINDER BLOCK 60 THRU CURRENT 10-20-80 (V8) ..... IL 1 - 10
ENGINE CYLINDER HEAD 60 THRU 64 01-10 (OHV-196): 65 01 (OHV-196) ..... IL 1 - 13
ENGINE CYLINDER HEAD 64 10 (OHV-232): 65 ALL MODELS (OHV-232): 65 10 (OHV-199) ..... IL 1 - 24
ENGINE CYLINDER HEAD 60 THRU CURRENT 10-20-80 (V8)..... IL 1 - 14
ENGINE FRONT SUPPORT 60 THRU 62 10 ..... IL 1 - 3
ENGINE FRONT SUPPORT 60 THRU 62 20-80..... IL 1 - 3
ENGINE FRONT AND REAR SUPPORT 60 THRU 63 01 ..... IL 1 - 1
ENGINE FRONT AND REAR SUPPORT 64-65 01 (LHE)(OHV-196)..... IL 1 - 2
ENGINE FRONT AND REAR SUPPORT 63-64 10 (OHV-196) ..... IL 1 - 5
ENGINE FRONT AND REAR SUPPORTS 64 10 (OHV-232): 65 ALL MODELS (OHV-232): 65 10 (OHV-199) ..... IL 1 - 28
ENGINE FRONT AND REAR SUPPORT 63-64 10-80 (V8) ..... IL 1 - 6
ENGINE FRONT AND REAR SUPPORT 65 10-80 (V8)..... IL 1 - 31
ENGINE OIL FILTER 60 THRU 64 01 (LHE) ..... IL 1 - 21
ENGINE OIL FILTER 60 THRU 63 01-10 (OHVC) ..... IL 1 - 21
ENGINE OIL FILTER 64 01-10 (OHVC-196) ..... IL 1 - 22
ENGINE OIL FILTER 64 10 (OHV-232): 65 ALL MODELS (OHV-232): 65 10 (OHV-199) ..... IL 1 - 27
ENGINE OIL FILTER 60 THRU CURRENT 10-20-80 (V8) ..... IL 1 - 22
ENGINE OIL PUMP 60 THRU CURRENT 10-20-80 (V8) ..... IL 1 - 20
ENGINE OIL PUMP 62 THRU 64 01: 62 THRU 64 10 (OHVC-196)..... IL 1 - 18
ENGINE OIL PUMP 64 10 (OHV-232): 65 ALL MODELS (OHV-232): 65 10 (OHV-199)..... IL 1 - 26
ENGINE OIL PUMP AND FILTER 61 THRU 64 10 (OHVA)..... IL 1 - 19
ENGINE OIL PUMP AND FILTER 65 01 (LHE)(OHV-196)..... IL 1 - 30
ENGINE REAR SUPPORT 60 THRU 62 10..... IL 1 - 4
ENGINE REAR SUPPORT 60 THRU 62 20-80..... IL 1 - 4
INTAKE AND EXHAUST MANIFOLD 60 THRU 64 10 (OHV-196): 60 THRU 65 01 (OHV-196)..... IL 1 - 15
INTAKE AND EXHAUST MANIFOLD 64 10 (OHV-232): 65 ALL MODELS (OHV-232): 65 10 (OHV-199)..... IL 1 - 25
INTAKE AND EXHAUST MANIFOLD 60 THRU CURRENT 10-20-80 (V8)..... IL 1 - 16
WATER HEATED INTAKE AND EXHAUST MANIFOLD 60 Thru 65 01 (OHV-196-LDT)..... IL 1 - 32

GROUP 2 COOLING - GRILLE

ENGINE COOLING SYSTEM 60 01-10..... IL 2 - 1
ENGINE COOLING SYSTEM 61-62 01-10 ..... IL 2 - 2
ENGINE COOLING SYSTEM 60 THRU 62 20-80 ..... IL 2 - 3
ENGINE COOLING SYSTEM 64-65 01 (LHE)(OHV-196) ..... IL 2 - 4
ENGINE COOLING SYSTEM 65 01 (OHV-232)..... IL 2 - 17
ENGINE COOLING SYSTEM 64 10 (OHV-196) ..... IL 2 - 5
ENGINE COOLING SYSTEM 65 10-80 (OHV-232)..... IL 2 - 15
ENGINE COOLING SYSTEM 65 10-80 (V8) ..... IL 2 - 16
ENGINE COOLING SYSTEM 64 10-80 (V8)..... IL 2 - 6
GRILLE AND GRILLE PANEL 63 01..... IL 2 - 10
GRILLE AND GRILLE PANEL 63 10-80 ..... IL 2 - 11
GRILLE AND GRILLE PANEL 64 01..... IL 2 - 7
GRILLE AND GRILLE PANEL 65 01..... IL 2 - 12
GRILLE AND GRILLE PANEL 65 10..... IL 2 - 13
GRILLE AND GRILLE PANEL 65 80..... IL 2 - 14
GRILLE AND GRILLE PANEL 64 10-80 ..... IL 2 - 8
GRILLE MOULDINGS 65 10..... IL 2 - 9
GRILLE PANEL MOULDINGS 64-65 01 (220) ..... IL 2 - 9
GRILLE PANEL MOULDINGS 64-65 01 (330)(440)(440-H)..... IL 2 - 9

GROUP 3 ELECTRICAL - INSTRUMENT CLUSTER

ALTERNATOR FAN, PULLEY AND MOUNTING (MOTOROLA) 63-64 01-10 (OHV-196): 65 01 (OHV-196) ..... IL 3 - 18

Copyright 1963 American Motors Corp.

GROUP 3 ELECTRICAL - INSTRUMENT CLUSTER (Continued)

ALTERNATOR FAN, PULLEY AND MOUNTING (MOTOROLA) 64-65 ALL MODELS (OHV-199) (OHV-232) ..... IL 3 - 19
ALTERNATOR FAN, PULLEY AND MOUNTING (MOTOROLA) 63 THRU CURRENT 10-80 (V8) ..... IL 3 - 20
ALTERNATOR FAN, PULLEY AND MOUNTING (LEECE-NEVILLE)(60 AMP.) 63 THRU CURRENT 10-80 (V8) ..... IL 3 - 21
BACK-UP LAMP ASSEMBLY 63 THRU CURRENT 10-80: TYPICAL OF 64 01 FACTORY INSTALLATION ..... IL 3 - 34
BACK-UP LAMP KIT (FIELD INSTALLATION) 64-65 01 ..... IL 3 - 35
BATTERY BOX 60 01 ..... IL 3 - 23
BATTERY BOX 60-61 10 ..... IL 3 - 23
BATTERY BOX 60-61 20 ..... IL 3 - 24
BATTERY BOX 60-61 80 ..... IL 3 - 24
BATTERY BOX 62-63 01 ..... IL 3 - 9
BATTERY BOX 64 01 ..... IL 3 - 9
BATTERY BOX 60 THRU CURRENT 10 (SIX): 65 80 (SIX) ..... IL 3 - 10
BATTERY BOX 63 THRU CURRENT 10-80 (V8) ..... IL 3 - 10
CARGO AREA LAMP 61 THRU 65 08-18-88 ..... IL 3 - 50
CIGAR LIGHTER 60 THRU 65 01 ..... IL 3 - 50
COURTESY AND GLOVE BOX LAMP KIT 64-65 10-80 ..... IL 3 - 32
DIRECTIONAL SIGNAL LEVER 60 10-20-80 ..... IL 3 - 5
DOME LAMP 63 THRU CURRENT 08-18-88 ..... IL 3 - 52
GENERATOR FAN, PULLEY AND MOUNTING 63-64 01 (LAC) ..... IL 3 - 17
GENERATOR FAN, PULLEY AND MOUNTING 63 10 (LAC) ..... IL 3 - 17
HEADLAMP ASSEMBLY 60 01 ..... IL 3 - 25
HEADLAMP 60 10-20-80 ..... IL 3 - 2
HEADLAMP ASSEMBLY 61 THRU 63 01 ..... IL 3 - 26
HEADLAMP 61 10-20: 62 10-80: TYPICAL OF 61 80 ..... IL 3 - 1
HEADLAMP ASSEMBLY 63 10-80 ..... IL 3 - 27
HEADLAMP ASSEMBLY 64 10-80 ..... IL 3 - 37
HEADLAMP ASSEMBLY 64-65 01 ..... IL 3 - 33
HEADLAMP ASSEMBLY 65 10 ..... IL 3 - 38
HEADLAMP ASSEMBLY 65 80 ..... IL 3 - 39
IGNITION SWITCH 60 THRU 62 ALL MODELS: 63 01 ..... IL 3 - 25
IGNITION WIRING 60 THRU CURRENT 01-10 (OHV) ..... IL 3 - 22
INSTRUMENT CLUSTER 60 01 ..... IL 3 - 30
INSTRUMENT CLUSTER 61 THRU 63 01: 60-61 10-20-80 ..... IL 3 - 31
INSTRUMENT CLUSTER 64-65 01 ..... IL 3 - 11
INSTRUMENT CLUSTER 63-64 10-80 ..... IL 3 - 12
INSTRUMENT CLUSTER 65 10 (EXCEPT MARLIN) ..... IL 3 - 48
INSTRUMENT CLUSTER 65 50 (MARLIN): 65 80 ..... IL 3 - 49
LUGGAGE COMPARTMENT LAMP ASSEMBLY 64-65 ALL MODELS ..... IL 3 - 32
PARKING AND FRONT DIRECTIONAL SIGNAL LAMP 60 01 ..... IL 3 - 3
PARKING AND FRONT DIRECTIONAL SIGNAL LAMP 60 10-20-80 ..... IL 3 - 3
PARKING AND FRONT DIRECTIONAL SIGNAL LAMP 63 THRU CURRENT 10-80: 64-65 01 ..... IL 3 - 40
REAR LICENSE PLATE LAMP 60 02-05-06 (WWC) ..... IL 3 - 6
REAR LICENSE PLATE LAMP 60 04 ..... IL 3 - 7
REAR LICENSE PLATE LAMP 60-61 02-05-06 (LWC): 60-61 10-20-80 ..... IL 3 - 8
REAR LICENSE PLATE LAMP 61 THRU 63 01 ..... IL 3 - 43
REAR LICENSE PLATE LAMP 64 01: 65 ALL MODELS ..... IL 3 - 43
REAR LICENSE PLATE LAMP 63-64 10-80 ..... IL 3 - 44
REAR QUARTER LAMP 65 09 ..... IL 3 - 53
REAR QUARTER LAMP 65 19 (EXCEPT MARLIN) ..... IL 3 - 51
REAR QUARTER LAMP 65 59-7 (MARLIN) ..... IL 3 - 53
REAR QUARTER LAMP 65 89 ..... IL 3 - 51
REAR QUARTER LAMP 63-64 09 ..... IL 3 - 52
STEERING WHEEL AND HORN BUTTON 60 01 ..... IL 3 - 8
STEERING WHEEL AND HORN BUTTON 64 01 ..... IL 3 - 45
STEERING WHEEL AND HORN BUTTON 63 10-80: 64-65 10 ..... IL 3 - 47
STEERING WHEEL AND HORN RING 60 THRU 62 10-20-80: 61 THRU 63 01 ..... IL 3 - 28
STEERING WHEEL AND HORN RING 64 01 ..... IL 3 - 46
STEERING WHEEL AND HORN RING 63-64 10-80 ..... IL 3 - 29
TAIL, STOP AND REAR DIRECTIONAL SIGNAL LAMP 60 01 ..... IL 3 - 4
TAIL, STOP AND REAR DIRECTIONAL LAMP 63 01 ..... IL 3 - 13
TAIL, STOP AND REAR DIRECTIONAL SIGNAL LAMP 64 02-05-06-07-09 ..... IL 3 - 14
TAIL, STOP AND REAR DIRECTIONAL SIGNAL LAMP 64 08 ..... IL 3 - 13
TAIL, STOP AND REAR DIRECTIONAL SIGNAL LAMP 65 05-06-07-09 ..... IL 3 - 40

Copyright 1963 American Motors Corp.

GROUP 3 ELECTRICAL - INSTRUMENT CLUSTER (Continued)

TAIL, STOP AND REAR DIRECTIONAL SIGNAL LAMP 65 08 ..... IL 3 - 41
TAIL, STOP AND REAR DIRECTIONAL SIGNAL LAMP 60-61 10-20 ..... IL 3 - 4
TAIL, STOP AND REAR DIRECTIONAL SIGNAL LAMP 60 80 ..... IL 3 - 5
TAIL, STOP AND REAR DIRECTIONAL SIGNAL LAMP 63 15-16-85-86 ..... IL 3 - 15
TAIL, STOP AND REAR DIRECTIONAL SIGNAL LAMP 63 18-88 ..... IL 3 - 15
TAIL, STOP AND REAR DIRECTIONAL SIGNAL LAMP 64 15-16-19-85-89 ..... IL 3 - 16
TAIL, STOP AND REAR DIRECTIONAL SIGNAL LAMP 64 18-88 ..... IL 3 - 16
TAIL, STOP AND REAR DIRECTIONAL SIGNAL LAMP 65 15-16-17-19 (EXCEPT MARLIN) ..... IL 3 - 41
TAIL, STOP AND REAR DIRECTIONAL SIGNAL LAMP 65 59-7 (MARLIN) ..... IL 3 - 54
TAIL, STOP AND REAR DIRECTIONAL SIGNAL LAMP 65 18 ..... IL 3 - 42
TAIL, STOP AND REAR DIRECTIONAL SIGNAL LAMP 65 80 ..... IL 3 - 42

GROUP 4 FUEL - EXHAUST

ACCELERATOR LINKAGE 60 THRU 63 01 (LHD-LHE) ..... IL 4 - 1
ACCELERATOR LINKAGE 63 01 (OHV-WST-LDT) ..... IL 4 - 2
ACCELERATOR LINKAGE 64-65 01 (LHE) ..... IL 4 - 3
ACCELERATOR LINKAGE 64-65 01 (LHD-OHV-196) ..... IL 4 - 4
ACCELERATOR LINKAGE 60-61 01-10 (LHD-OHV) ..... IL 4 - 5
ACCELERATOR LINKAGE 60-61 20-80 (LHD) ..... IL 4 - 6
ACCELERATOR LINKAGE 63 10 (1 st TYPE-LHD-OHV) ..... IL 4 - 7
ACCELERATOR LINKAGE 63 10 (2nd TYPE-LHD-OHV-196): 64 10 (LHD-OHV-196) ..... IL 4 - 8
ACCELERATOR LINKAGE 64-65 ALL MODELS (LHD-OHV-199)(LHD-OHV-232) ..... IL 4 - 35
ACCELERATOR LINKAGE 63-64 10-80 (V8) ..... IL 4 - 9
ACCELERATOR LINKAGE 65 10-80 (LHD-V8) ..... IL 4 - 43
CARBURETOR FUEL AND VACUUM LINES 64-65 01 (LHE) ..... IL 4 - 51
CARBURETOR FUEL AND VACUUM LINES 65 01-10 (OHV-199)(WEW) ..... IL 4 - 50
CARBURETOR FUEL AND VACUUM LINES 65 01-10 (196-LDT) ..... IL 4 - 52
CARBURETOR FUEL AND VACUUM LINES 65 10 (232-LDT) ..... IL 4 - 53
CARBURETOR FUEL AND VACUUM LINES 65 10 (232-WDT) ..... IL 4 - 54
CARBURETOR FUEL AND VACUUM LINES 65 10-80 (287-V8) ..... IL 4 - 55
CARBURETOR FUEL AND VACUUM LINES 65 10-80 (327-V8) ..... IL 4 - 56
EXHAUST SYSTEM 60 01 (LHE) ..... IL 4 - 17
EXHAUST SYSTEM 60 10 ..... IL 4 - 18
EXHAUST SYSTEM 60 20-80 (LDE) ..... IL 4 - 19
EXHAUST SYSTEM 62 01 (LHE) ..... IL 4 - 20
EXHAUST SYSTEM 62 01-10 (OHV) ..... IL 4 - 21
EXHAUST SYSTEM 63 01 (LHD-LHE) ..... IL 4 - 22
EXHAUST SYSTEM 63 02-04-05-06-08 (OHV) ..... IL 4 - 23
EXHAUST SYSTEM 61 THRU 63 07 (OHV) ..... IL 4 - 24
EXHAUST SYSTEM 64-65 02-05-06-09 (LHE) ..... IL 4 - 25
EXHAUST SYSTEM 64 02-05-06-09 (OHV) ..... IL 4 - 27
EXHAUST SYSTEM 64-65 08 (LHE) ..... IL 4 - 26
EXHAUST SYSTEM 64 07-08 (OHV) ..... IL 4 - 28
EXHAUST SYSTEM 65 05-06-09 (OHV) ..... IL 4 - 45
EXHAUST SYSTEM 65 07-08 (OHV) ..... IL 4 - 46
EXHAUST SYSTEM 63-64 10 (OHV-196-L3S) ..... IL 4 - 29
EXHAUST SYSTEM 63-64 10-80 (V8-L3S) ..... IL 4 - 32
EXHAUST SYSTEM 64 10 (OHV-232-L3S) ..... IL 4 - 36
EXHAUST SYSTEM 65 10-80 (SIX-L3S) ..... IL 4 - 47
EXHAUST SYSTEM 65 10-80 (V8-L3S) ..... IL 4 - 48
EXHAUST SYSTEM 63 18 (1st TYPE-OHV-196-W3S) ..... IL 4 - 30
EXHAUST SYSTEM 63 18 (2nd TYPE-OHV-196-W3S): 64 18 (OHV-196-W3S) ..... IL 4 - 31
EXHAUST SYSTEM 64 18 (OHV-232-W3S): 65 18-88 (SIX-W3S) ..... IL 4 - 37
EXHAUST SYSTEM 63 18-88 (1st TYPE-V8-W3S) ..... IL 4 - 33
EXHAUST SYSTEM 63 18 (2nd TYPE-V8-W3S): 64 18-88 (V8-W3S) ..... IL 4 - 34
EXHAUST SYSTEM 65 10-80 (V8-W3S) ..... IL 4 - 49
GASOLINE TANK AND LINES 60-61 ALL MODELS ..... IL 4 - 10
GASOLINE TANK AND LINES 62 ALL MODELS ..... IL 4 - 11
GASOLINE TANK AND LINES 63 01 ..... IL 4 - 12
GASOLINE TANK AND LINES 64-65 05-06-07-09 ..... IL 4 - 13
GASOLINE TANK AND LINES 64-65 08 ..... IL 4 - 14
GASOLINE TANK AND LINES 63-64 10-80 (L3S) ..... IL 4 - 15
GASOLINE TANK AND LINES 63 THRU CURRENT 18-88 (W3S) ..... IL 4 - 16
GASOLINE TANK AND LINES 65 10-80 (L3S) ..... IL 4 - 44
HAND THROTTLE CONTROL 64-65 01 (FLEET SALES) ..... IL 4 - 39

Copyright 1963 American Motors Corp.

GROUP 4 FUEL - EXHAUST (Continued)

HAND THROTTLE CONTROL 63-64 10 (SIX-FLEET SALES) ..... IL 4 - 39
HAND THROTTLE CONTROL 63-64 10-80 (V8-FLEET SALES) ..... IL 4 - 40
HAND THROTTLE CONTROL 65 10-80 (V8-FLEET SALES) ..... IL 4 - 41

GROUP 5 CLUTCH - E-STICK

CLUTCH AND BRAKE PEDAL LINKAGE 60 01 (WST)(WOD) ..... IL 5 - 4
CLUTCH COVER AND HOUSING 60 THRU CURRENT ALL MODELS (LES-WST)(LES-WOD) ..... IL 5 - 1
CLUTCH COVER AND HOUSING 62 THRU 64 01-10 (WES-WST)(WES-WOD) ..... IL 5 - 2
CLUTCH LINKAGE 60 01 (WST)(WOD) ..... IL 5 - 3
CLUTCH LINKAGE 61 THRU 63 ALL MODELS (LHD-LES-WST)(LHD-LES-WOD) ..... IL 5 - 5
CLUTCH PEDAL AND LINKAGE 64-65 01 (LHD-WST)(LHD-WOD) ..... IL 5 - 6
CLUTCH PEDAL AND LINKAGE 64-65 10 (LHD-196) ..... IL 5 - 7
CLUTCH PEDAL AND LINKAGE 64-65 10 (OHV-232-WST)(OHV-232-WOD): 64-65 10-80 (V8-WST) (V8-WOD) ..... IL 5 - 8
E-STICK TOW START 62 01 (WST)(WOD) ..... IL 5 - 12
E-STICK TOW START 63 01 (WST)(WOD): 63-64 10 (WST)(WOD) ..... IL 5 - 13
E-STICK TOW START 64 01 (WST)(WOD) ..... IL 5 - 14
E-STICK VALVE, SERVO AND SWITCH 62 01 (WST)(WOD) ..... IL 5 - 9
E-STICK VALVE, SERVO AND SWITCH 63 01-10 (1st TYPE)(WST)(WOD) ..... IL 5 - 10
E-STICK VALVE, SERVO AND SWITCH 63 01-10 (2nd TYPE)(WST)(WOD): 64 01-10 (WST)(WOD) .. IL 5 - 11

GROUP 6 STANDARD - OVERDRIVE TRANSMISSION

OVERDRIVE 60 THRU CURRENT ALL MODELS ..... IL 6 - 8
OVERDRIVE ELECTRICAL ACTUATING SYSTEM 60 THRU 63 ALL MODELS ..... IL 6 - 9
TRANSMISSION 60 THRU 63 01 (WST) ..... IL 6 - 1
TRANSMISSION 64-65 01 (WST) ..... IL 6 - 2
TRANSMISSION 60 THRU CURRENT 10 (196-WST) ..... IL 6 - 4
TRANSMISSION 64-65 (OHV-232-WST): 65 80 (OHV-232-WST) ..... IL 6 - 7
TRANSMISSION 63 10 (V8-WST): 64 10 (1st TYPE-V8-WST) ..... IL 6 - 5
TRANSMISSION 64 10 (2nd TYPE-V8-WST): 65 10 (V8-WST) ..... IL 6 - 10
TRANSMISSION 60 THRU CURRENT 80 (WST) ..... IL 6 - 6

GROUP 7 SHIFTING

COLUMN GEAR SHIFT LINKAGE (LOWER) 60 01 (WST)(WOD) ..... IL 7 - 13
COLUMN GEAR SHIFT LINKAGE (UPPER) 60 01 (WST)(WOD) ..... IL 7 - 13
COLUMN GEAR SHIFT LINKAGE 60 01 (WAT) ..... IL 7 - 14
COLUMN GEAR SHIFT SHAFT AND SHAFT AND STEERING TUBE 61 THRU 63 01 ..... IL 7 - 15
COLUMN GEAR SHIFT SHAFT AND STEERING TUBE 60 THRU 62 10-80 (WST)(WOD) ..... IL 7 - 16
COLUMN GEAR SHIFT SHAFT AND STEERING TUBE 63 10-80 (WAT) ..... IL 7 - 17
COLUMN GEAR SHIFT SHAFT AND STEERING TUBE 63-64 10 (WES-LAW): 63-64 10-80 (WST-LAW)(WOD-LAW) ..... IL 7 - 3
COLUMN GEAR SHIFT SHAFT AND STEERING TUBE 64 01 (LHD-WST-LES)(LHD-WOD-LES) .. IL 7 - 5
COLUMN GEAR SHIFT SHAFT AND STEERING TUBE 64 10-80 (LHD-WAT-LAW) ..... IL 7 - 4
COLUMN GEAR SHIFT SHAFT AND STEERING TUBE 64-65 10-80 (WAT-WAW) ..... IL 7 - 1
COLUMN GEAR SHIFT SHAFT AND STEERING TUBE 65 01 (WST)(WOD) ..... IL 7 - 7
COLUMN GEAR SHIFT SHAFT AND STEERING TUBE 65 01 (WAT) ..... IL 7 - 8
COLUMN GEAR SHIFT SHAFT AND STEERING TUBE 65 10-80 (WST-LAW)(WOD-LAW) ..... IL 7 - 9
COLUMN GEAR SHIFT SHAFT AND STEERING TUBE 65 10-80 (LHD-WAT-LAW) ..... IL 7 - 10
FLOOR GEAR SHIFT 63 THRU CURRENT ALL MODELS (WOD) ..... IL 7 - 12
FLOOR GEAR SHIFT 64-65 10-80 (V8-WAT) ..... IL 7 - 2
FLOOR GEAR SHIFT 65 10-80 (V8-W4ST) ..... IL 7 - 11
PUSH BUTTON SHIFTING 60 THRU 62 10-80 (WAT) ..... IL 7 - 18
TRANSMISSION GEAR SELECTOR CABLE 63 THRU CURRENT 10 (RHD-WAT) ..... IL 7 - 6

GROUP 8 BRAKES - WHEELS

BRAKE LINES AND ATTACHING PARTS 60-61 01 ..... IL 8 - 26
BRAKE LINES AND ATTACHING PARTS 60-61 10-20-80 ..... IL 8 - 27
BRAKE LINES AND ATTACHING PARTS 64-65 01 ..... IL 8 - 13
BRAKE LINES AND ATTACHING PARTS 63-64 10-80 (LDB) ..... IL 8 - 14
BRAKE MASTER CYLINDER 60-61 ALL MODELS (LPB) ..... IL 8 - 8
BRAKE MASTER CYLINDER (DELCO-MORAINE) 62 ALL MODELS (LHD-LPB) ..... IL 8 - 9

Copyright 1963 American Motors Corp.

GROUP 8 BRAKES - WHEELS (Continued)

BRAKE MASTER CYLINDER (BENDIX) 62 ALL MODELS (LPB) ..... IL 8 - 10
BRAKE MASTER CYLINDER 63 THRU 65 ALL MODELS (LPB) ..... IL 8 - 17
BRAKE PEDAL AND SUPPORT 63 THRU 65 10-80 ..... IL 8 - 28
BRAKE SHIMS, RETAINER AND SEAL 60-61 20: 60 THRU 62 80 ..... IL 8 - 33
BRAKE WHEEL CYLINDER 60 THRU CURRENT ALL MODELS ..... IL 8 - 25
CALIPER DISC FRONT BRAKE 65 10-80 (WDB) ..... IL 8 - 15
FRONT BRAKE 61-62 20-80 ..... IL 8 - 21
FRONT BRAKE 62-63 10 (WAB) ..... IL 8 - 20
FRONT BRAKE 60-61 10 (LAB) ..... IL 8 - 19
FRONT BRAKE AND WHEEL 64-65 01 (LHE)(OHV-196)(OHV-199) ..... IL 8 - 1
FRONT BRAKE AND WHEEL 65 01 (OHV-232): 64-65 10 (SIX-LDB) ..... IL 8 - 2
FRONT BRAKE AND WHEEL 63 THRU CURRENT 10 (V8-LDB): 63 THRU CURRENT 80 (LDB) .. IL 8 - 3
FRONT WHEEL 60-61 ALL MODELS ..... IL 8 - 32
HAND OPERATED PARKING BRAKE 64-65 01 ..... IL 8 - 7
PARKING BRAKE LINKAGE (PEDAL TO YOKE) 60 THRU 62 10-80 (LHD) ..... IL 8 - 30
PARKING BRAKE LINKAGE (YOKE TO DRUM) 60 THRU 62 10-80 (LHD) ..... IL 8 - 30
PARKING BRAKE LINKAGE 61 THRU 63 01 ..... IL 8 - 29
PARKING BRAKE LINKAGE 63 10-80 ..... IL 8 - 31
PARKING BRAKE LINKAGE 65 10-80 ..... IL 8 - 18
POWER BRAKE HYDROVAC 60 THRU 62 10-80 (RHD-WPB): 63 THRU 65 10-80 (V8-RHD-WPB-LDB) ..... IL 8 - 37
POWER BRAKE MASTER CYLINDER 63-64 ALL MODELS (WPB) ..... IL 8 - 36
POWER BRAKE MASTER CYLINDER (BENDIX) 62 ALL MODELS (LHD-WPB) ..... IL 8 - 35
POWER BRAKE POWER UNIT 62 THRU 65 ALL MODELS (LHD-WPB) ..... IL 8 - 34
POWER BRAKE UNIT 61 01 (LHD-WPB): 60-61 ALL MODELS (LHD-WPB) ..... IL 8 - 38
REAR BRAKE 61-62 20-80 ..... IL 8 - 24
REAR BRAKE 60-61 10 (LAB) ..... IL 8 - 22
REAR BRAKE 62-63 10 (WAB) ..... IL 8 - 23
REAR BRAKE AND WHEEL 64-65 01 (LHE)(OHV-196)(OHV-199) ..... IL 8 - 4
REAR BRAKE AND WHEEL 65 01 (OHV-232): 64-65 10 (SIX-LDB) ..... IL 8 - 5
REAR BRAKE AND WHEEL 63 THRU CURRENT 10 (V8-LDB): 63 THRU CURRENT 80 (LDB) ..... IL 8 - 6
REAR BRAKE AND WHEEL 65 10-80 (WDB) ..... IL 8 - 16
REAR HUB AND DRUM 60-61 20-80 ..... IL 8 - 32
SPARE WHEEL CARRIER SUPPORT 60 01 (WWC) ..... IL 8 - 33
SPARE WHEEL MOUNTING 60 THRU CURRENT ALL MODELS ..... IL 8 - 11

GROUP 9 REAR AXLE - PROPELLER SHAFT

PROPELLER SHAFT 60 THRU CURRENT 01 ..... IL 9 - 5
REAR AXLE 60 THRU 64 ALL MODELS (LLD) ..... IL 9 - 1
REAR AXLE 65 ALL MODELS (LLD) ..... IL 9 - 12
REAR AXLE 60 THRU 64 01-10 (WLD-SIX): 65 01 (WLD): 65 10 (OHV-196-WLD)(OHV-199-WLD) ..... IL 9 - 2
REAR AXLE 65 10-80 (OHV-232-WLD) ..... IL 9 - 13
REAR AXLE 60 THRU 64 10-20-80 (V8-WLD) ..... IL 9 - 3
REAR AXLE 65 10-80 (V8-WLD) ..... IL 9 - 14
SWAY STABILIZER AND TRUSS RODS 62 THRU CURRENT 10-20-80 ..... IL 9 - 4
TORQUE TUBE AND PROPELLER SHAFT 60-61 10 (WST)(WOD) ..... IL 9 - 6
TORQUE TUBE AND PROPELLER SHAFT 61 10 (WAT): 62 10 (9/34) OR (13/43) RATIO ..... IL 9 - 7
TORQUE TUBE AND PROPELLER SHAFT 62 10 (8/35) OR (9/37) RATIO: 61-62 20-80 (WST)(WOD) ..... IL 9 - 8
TORQUE TUBE AND PROPELLER SHAFT 61-62 20-80 (WAT) ..... IL 9 - 9
TORQUE TUBE AND PROPELLER SHAFT 63 THRU CURRENT 10-80 (SIX) ..... IL 9 - 10
TORQUE TUBE AND PROPELLER SHAFT 63 THRU CURRENT 10-80 (V8) ..... IL 9 - 11

GROUP 10 FRONT SUSPENSION - STEERING GEAR

ADJUSTING STEERING WHEEL COLUMN 64 10-80 (WAT-WAW) ..... IL 10 - 9
ADJUSTING STEERING WHEEL COLUMN 64 10-80 (WFGS-WAW-WPS) ..... IL 10 - 20
ADJUSTING STEERING WHEEL COLUMN 65 10 (LCV-WCGS-WAW) ..... IL 10 - 21
ADJUSTING STEERING WHEEL COLUMN 65 17 (WCGS-WAW): 65 80 (WCGS-WAW) ..... IL 10 - 22
ADJUSTING STEERING WHEEL COLUMN 65 10 (LCV-WFGS-WAW) ..... IL 10 - 23
ADJUSTING STEERING WHEEL COLUMN 65 17 (WFGS-WAW): 65 80 (WFGS-WAW) ..... IL 10 - 24
FRONT SUSPENSION 60 THRU 63 01 ..... IL 10 - 1

Copyright 1963 American Motors Corp.

GROUP 10 FRONT SUSPENSION - STEERING GEAR (Continued)

FRONT SUSPENSION 64-65 01 ..... IL 10 - 2
FRONT SUSPENSION 62-63 10-80 ..... IL 10 - 3
FRONT SUSPENSION 64-65 10-80 ..... IL 10 - 4
FRONT SUSPENSION CROSSMEMBER AND MOUNTING 60-61 10-20-80 ..... FIG. 10.002 - 3
FRONT SUSPENSION SWAY STABILIZER 60-61 80 ..... FIG. 10.260 - 7
FRONT SUSPENSION SWAY STABILIZER 63 THRU CURRENT 10-80 (V8) ..... IL 10 - 5
LOWER CONTROL ARM 60-61 10-20-80 ..... FIG. 10.045 - 3
POWER STEERING HOSES - TYPICAL ..... FIG. 10.470 - 1
POWER STEERING POWER CYLINDER 60-61 ALL MODELS (WPS) ..... FIG. 10.395 - 3
POWER STEERING POWER CYLINDER AND LINKAGE 63 ALL MODELS (WPS) ..... IL 10 - 10
POWER STEERING POWER CYLINDER MOUNTING 63 10-80 (1st. TYPE) ..... IL 10 - 17
POWER STEERING POWER CYLINDER MOUNTING 63 10-80 (2nd. TYPE) ..... IL 10 - 18
POWER STEERING PUMP AND RESERVOIR 61 01-10 (OHV-WPS-LAC) ..... FIG. 10.430 - 2
POWER STEERING PUMP AND RESERVOIR 61 01 (LHE-WPS-LAC) ..... FIG. 10.430 - 1
POWER STEERING PUMP, RESERVOIR AND HOSES 62 THRU CURRENT 01 (LHE-LAC) ..... IL 10 - 11
POWER STEERING PUMP, RESERVOIR AND HOSES 62 THRU CURRENT 01 (OHV-196-LAC): 62 THRU 64 10 (OHV-196-LAC) ..... IL 10 - 12
POWER STEERING PUMP, RESERVOIR AND HOSES 62 THRU 64 10 (OHVA-WAC) ..... IL 10 - 13
POWER STEERING PUMP, RESERVOIR AND HOSES 62 THRU CURRENT 01 (OHVC-WAC): 62 THRU 64 10 (OHVC-196-WAC) ..... IL 10 - 14
POWER STEERING PUMP, RESERVOIR AND HOSES 65 ALL MODELS (199)(232) ..... IL 10 - 29
POWER STEERING PUMP, RESERVOIR AND PULLEY 63 THRU 65 10-80 (V8) ..... IL 10 - 16
POWER STEERING PUMP (EATON) 60 THRU 62 20-80 (WPS) ..... FIG. 10.430 - 7
POWER STEERING PUMP RESERVOIR (EATON) 60 THRU 62 20-80 (WPS) ..... FIG. 10.465 - 5
STEERING GEAR 60-61 01 ..... FIG. 10.290 - 1
STEERING GEAR 62-63 01 (LHD) ..... FIG. 10.290 - 2
STEERING GEAR 64-65 01 (LPS) ..... IL 10 - 6
STEERING GEAR 60-61 80 (LHD) ..... FIG. 10.290 - 7
STEERING GEAR 60-61 10-20: 62-63 80 ..... FIG. 10.290 - 3
STEERING GEAR 64-65 10-80 (LPS) ..... IL 10 - 19
STEERING GEAR 64-65 ALL MODELS (WPS) ..... IL 10 - 7
STEERING GEAR SHAFT 64 01-10-80 (WPS-LAW) ..... IL 10 - 8
STEERING GEAR SHAFT 65 80 (LAW)(1st Type) ..... IL 10 - 25
STEERING GEAR SHAFT 65 07-17 (LAW): 65 80 (LAW)(2nd Type) ..... IL 10 - 26
STEERING KNUCKLE SPINDLE AND PIN 60-61 10-20-80 ..... FIG. 10.013 - 3
STEERING LINKAGE 60-61 10 (LHD-LPS) ..... FIG. 10.100 - 3
STEERING LINKAGE 60-61 20 ..... FIG. 10.100 - 4
STEERING LINKAGE 62-63 10-80 (LHD-LPS) - (REFER IL 10-15) ..... FIG. 10.100 - 5
STEERING LINKAGE 62-63 10-80 (LPS): 64-65 ALL MODELS ..... IL 10 - 15
STEERING LINKAGE CROSS TUBE 60-61 80 (LPS) ..... FIG. 10.100 - 6
STEERING LINKAGE TIE ROD 60-61 01-10-20: 60-61 80 (LPS) ..... FIG. 10.122 - 1
STEERING WHEEL COLUMN 65 01 (WFGS) ..... IL 10 - 27
STEERING WHEEL COLUMN 65 10-80 (WFGS-LAW) ..... IL 10 - 28
UPPER CONTROL ARM 60-61 10-20-80 ..... FIG. 10.066 - 3

GROUP 11 ROAD SPRINGS - SHOCK ABSORBERS

FRONT COIL SPRING 60 THRU CURRENT 01 ..... IL 11 - 8
FRONT COIL SPRING 60 THRU CURRENT 10-80 ..... IL 11 - 8
FRONT SHOCK 60 THRU 63 01 ..... IL 11 - 9
FRONT SHOCK 64 01: 62 THRU CURRENT 10-80 ..... IL 11 - 9
REAR AIR SUSPENSION 60 10-20-80 ..... IL 11 - 10
REAR AIR SUSPENSION COMPRESSOR 60 10-20-80 ..... IL 11 - 11
REAR AIR SUSPENSION LEVELING VALVE 60 10-20-80 ..... IL 11 - 12
REAR COIL SPRING AND SHOCK 62 THRU CURRENT 10-20-80 (LLL) ..... IL 11 - 6
REAR COIL SPRING AND SHOCK 62 THRU CURRENT 10-80 (WLL) ..... IL 11 - 7
REAR LEAF SPRING AND SHOCK 60 THRU 62 01 ..... IL 11 - 1
REAR LEAF SPRING AND SHOCK 64-65 01 (LLL) ..... IL 11 - 5
REAR LEAF SPRING AND SHOCK 64-65 01 (WLL) ..... IL 11 - 4

GROUP 12 HOOD - FENDERS - BUMPERS

FRONT BUMPER 60 01 ..... IL 12 - 30
FRONT BUMPER 60 10-20-80 ..... IL 12 - 31

Copyright 1963 American Motors Corp.

GROUP 12 HOOD - FENDERS - BUMPERS (Continued)

FRONT BUMPER 63 01 ..... IL 12 - 38
FRONT BUMPER 63-64 10-80: 64-65 01 ..... IL 12 - 33
FRONT BUMPER 65 10-80 ..... IL 12 - 42
FRONT FENDER 64 01 ..... IL 12 - 7
FRONT FENDER 63-64 10-80 ..... IL 12 - 8
FRONT FENDER 65 10 ..... IL 12 - 34
FRONT FENDER 65 80 ..... IL 12 - 34
FRONT FENDER MOULDINGS 60 01 ..... IL 12 - 9
FRONT FENDER MOULDINGS 61-62 01: 63 04 (330): 63 05-06-08 (330)(440) ..... IL 12 - 9
FRONT FENDER MOULDINGS 63 07-09 (440) ..... IL 12 - 10
FRONT FENDER MOULDINGS 60 10-20 (SUPER) ..... IL 12 - 10
FRONT FENDER MOULDINGS 60 10-20 (CUSTOM) ..... IL 12 - 11
FRONT FENDER MOULDINGS 61 10-20 (SUPER) ..... IL 12 - 11
FRONT FENDER MOULDING 61 10-20 (CUSTOM)(400) ..... IL 12 - 12
FRONT FENDER MOULDINGS 62 10 (CUSTOM)(400) ..... IL 12 - 12
FRONT FENDER MOULDINGS 63 10 (660)(770) ..... IL 12 - 13
FRONT FENDER MOULDINGS 60 80 (SUPER) ..... IL 12 - 13
FRONT FENDER MOULDINGS 60 80 (CUSTOM) ..... IL 12 - 13
FRONT FENDER MOULDINGS 61 80 (SUPER)(CUSTOM) ..... IL 12 - 14
FRONT FENDER MOULDINGS 62 80 (CUSTOM)(400) ..... IL 12 - 14
FRONT FENDER MOULDINGS 63 80 (880) ..... IL 12 - 14
FRONT FENDER MOULDINGS 63 80 (990) ..... IL 12 - 15
FRONT FENDER MOULDINGS 64 05-06-08 (330): 64 05-07-09 (440): 64 09 (440-H) ..... IL 12 - 16
FRONT FENDER MOULDINGS 64 15-16-18 (550) ..... IL 12 - 16
FRONT FENDER MOULDINGS 64 15-16-18 (660) ..... IL 12 - 16
FRONT FENDER MOULDINGS 64 15-16-18-19 (770) ..... IL 12 - 17
FRONT FENDER MOULDINGS 64 85-88-89 (990) ..... IL 12 - 17
FRONT FENDER MOULDINGS 65 05-06-08 (220) ..... IL 12 - 45
FRONT FENDER MOULDINGS 65 05-06-08 (330) ..... IL 12 - 45
FRONT FENDER MOULDINGS 65 05-07-09 (440): 65 09 (440-H) ..... IL 12 - 45
FRONT FENDER MOULDINGS 65 15-16-18 (550) ..... IL 12 - 46
FRONT FENDER MOULDINGS 65 15-16-18 (660) ..... IL 12 - 46
FRONT FENDER MOULDINGS 65 15-17-18-19 (770): 65 19 (770-H)(EXCEPT MARLIN) ..... IL 12 - 46
FRONT FENDER MOULDINGS 65 59-7 (MARLIN) ..... IL 12 - 54
FRONT FENDER MOULDINGS 65 85-86-88 (880) ..... IL 12 - 47
FRONT FENDER MOULDINGS 65 85-87-88-89 (990-LWO): 65 89 (990-H) ..... IL 12 - 47
FRONT FENDER MOULDINGS 65 88 (990-WWO) ..... IL 12 - 47
HOOD MOULDINGS 64-65 01 ..... IL 12 - 44
HOOD MOULDINGS 65 10 ..... IL 12 - 44
HOOD MOULDINGS 65 80 ..... IL 12 - 44
HOOD TOP, HINGE AND LOCK 60 01 ..... IL 12 - 1
HOOD TOP, HINGE AND LOCK 61 THRU 63 01 ..... IL 12 - 37
HOOD TOP, HINGE AND LOCK 64 01 ..... IL 12 - 4
HOOD TOP, HINGE AND LOCK 60 10-20-80 ..... IL 12 - 2
HOOD TOP, HINGE AND LOCK 64 10-80 ..... IL 12 - 6
HOOD TOP, HINGE AND LOCK 65 10 ..... IL 12 - 40
HOOD TOP, HINGE AND LOCK 65 80 ..... IL 12 - 41
REAR BUMPER 60 10-20-80 ..... IL 12 - 31
REAR BUMPER 63 01 ..... IL 12 - 39
REAR BUMPER 64-65 01 ..... IL 12 - 35
REAR BUMPER 63-64 10-80 ..... IL 12 - 36
REAR BUMPER 65 10-80 ..... IL 12 - 43
REAR FENDER MOULDINGS 61 01 (SUPER) 2 Dr. ..... IL 12 - 18
REAR FENDER MOULDINGS 61 01 (SUPER) 4 Dr. ..... IL 12 - 18
REAR FENDER MOULDINGS 61-62 01 (CUSTOM)(400) 2 Dr.: 63 06 (330)(440) ..... IL 12 - 18
REAR FENDER MOULDINGS 63 07-09 (440) ..... IL 12 - 19
REAR FENDER MOULDINGS 61-62 01 (CUSTOM)(400) 4 Dr.: 63 01 (330)(440) 4 Dr. ..... IL 12 - 19
REAR FENDER MOULDINGS 60 10-20 (SUPER) ..... IL 12 - 19
REAR FENDER MOULDINGS 60 10-20 (CUSTOM) ..... IL 12 - 20
REAR FENDER MOULDINGS 61 10-20 (SUPER) ..... IL 12 - 20
REAR FENDER MOULDINGS 61 10-20 (CUSTOM)(400) ..... IL 12 - 20
REAR FENDER MOULDINGS 62 10 (CUSTOM)(400) 2 Dr. ..... IL 12 - 21
REAR FENDER MOULDINGS 62 10 (CUSTOM)(400) 4 Dr. ..... IL 12 - 21

Copyright 1963 American Motors Corp.

GROUP 12 HOOD - FENDERS - BUMPERS (Continued)

REAR FENDER MOULDINGS 60 80 (SUPER)..... IL 12 - 23
REAR FENDER MOULDINGS 60 80 (CUSTOM)..... IL 12 - 23
REAR FENDER MOULDINGS 61 80 (SUPER)(CUSTOM)..... IL 12 - 23
REAR FENDER MOULDINGS 62 80 (400) 2 Dr. AND 4 Dr. ..... IL 12 - 24
REAR FENDER MOULDINGS 62 80 (CUSTOM) 2 Dr. AND 4 Dr. ..... IL 12 - 24
REAR QUARTER OUTER PANEL MOULDINGS 63 10 (660) 4 Dr. ..... IL 12 - 21
REAR QUARTER OUTER PANEL MOULDINGS 63 10 (770) 2 Dr. ..... IL 12 - 22
REAR QUARTER OUTER PANEL MOULDINGS 63 10 (660) 2 Dr. ..... IL 12 - 22
REAR QUARTER OUTER PANEL MOULDINGS 63 10 (770) 4 Dr. ..... IL 12 - 22
REAR QUARTER OUTER PANEL MOULDINGS 63 80 (880) 2 Dr. ..... IL 12 - 25
REAR QUARTER OUTER PANEL MOULDINGS 63 80 (990) 2 Dr. ..... IL 12 - 25
REAR QUARTER OUTER PANEL MOULDINGS 63 80 (880) 4 Dr. ..... IL 12 - 26
REAR QUARTER OUTER PANEL MOULDINGS 63 80 (990) 4 Dr. ..... IL 12 - 26
REAR QUARTER OUTER PANEL MOULDINGS 64 05-06-08 (220)(330): 64 05-07-09 (440)..... IL 12 - 27
REAR QUARTER OUTER PANEL MOULDINGS 64 09 (440-H) ..... IL 12 - 27
REAR QUARTER OUTER PANEL MOULDINGS 64 15-16-18 (550)..... IL 12 - 27
REAR QUARTER OUTER PANEL MOULDINGS 64 16 (660) ..... IL 12 - 28
REAR QUARTER OUTER PANEL MOULDINGS 64 15-18 (660)..... IL 12 - 28
REAR QUARTER OUTER PANEL MOULDINGS 64 16-19 (770)..... IL 12 - 28
REAR QUARTER OUTER PANEL MOULDINGS 64 15-18 (770)..... IL 12 - 29
REAR QUARTER OUTER PANEL MOULDINGS 64 89 (990) ..... IL 12 - 29
REAR QUARTER OUTER PANEL MOULDINGS 64 85-88 (990)..... IL 12 - 29
REAR QUARTER OUTER PANEL MOULDINGS 65 06 (330) ..... IL 12 - 48
REAR QUARTER OUTER PANEL MOULDINGS 65 05-08 (330) ..... IL 12 - 48
REAR QUARTER OUTER PANEL MOULDINGS 65 05 (440)..... IL 12 - 48
REAR QUARTER OUTER PANEL MOULDINGS 65 07-09 (440): 65 09 (440-H) ..... IL 12 - 49
REAR QUARTER OUTER PANEL MOULDINGS 65 15 (550) ..... IL 12 - 49
REAR QUARTER OUTER PANEL MOULDINGS 65 16 (550)..... IL 12 - 49
REAR QUARTER OUTER PANEL MOULDINGS 65 18 (550)(660)..... IL 12 - 50
REAR QUARTER OUTER PANEL MOULDINGS 65 16 (660)..... IL 12 - 50
REAR QUARTER OUTER PANEL MOULDINGS 65 15 (660)..... IL 12 - 50
REAR QUARTER OUTER PANEL MOULDINGS 65 17-19 (770): 65 19 (770-H)(EXCEPT MARLIN).. IL 12 - 51
REAR QUARTER OUTER PANEL MOULDINGS 65 59-7 (MARLIN) ..... IL 12 - 54
REAR QUARTER OUTER PANEL MOULDINGS 65 15 (770)..... IL 12 - 51
REAR QUARTER OUTER PANEL MOULDINGS 65 18 (770) ..... IL 12 - 51
REAR QUARTER OUTER PANEL MOULDINGS 65 85 (880) ..... IL 12 - 52
REAR QUARTER OUTER PANEL MOULDINGS 65 86 (880) ..... IL 12 - 52
REAR QUARTER OUTER PANEL MOULDINGS 65 88 (880)..... IL 12 - 52
REAR QUARTER OUTER PANEL MOULDINGS 65 85 (990)..... IL 12 - 53
REAR QUARTER OUTER PANEL MOULDINGS 65 87-89 (990): 65 89 (990-H) ..... IL 12 - 53
REAR QUARTER OUTER PANEL MOULDINGS 65 88 (990-LWO) ..... IL 12 - 53
REAR QUARTER OUTER PANEL MOULDINGS 65 88 (990-WWO) ..... IL 12 - 54

GROUP 13 HEATER - AIR CONDITIONING

AIR CONDITIONING BLOWER AND FRESH AIR INTAKE 61-62 10-80..... FIG. 13.072 - 3
AIR CONDITIONING BLOWER AND HEATER CORE HOUSING 64-65 01 (WAC) ..... IL 13 - 3
AIR CONDITIONING COMPRESSOR AND CONDENSER CORE 61 THRU 63 01-10-20-80.... FIG. 13.400 - 1
AIR CONDITIONING COMPRESSOR MOUNTING 61 01 (LHE-WPS)..... FIG. 13.410 - 2
AIR CONDITIONING COMPRESSOR MOUNTING 61 01 (LHE-LPS)..... FIG. 13.410 - 1
AIR CONDITIONING COMPRESSOR MOUNTING 61 10 (OHVA)..... FIG. 13.410 - 4
AIR CONDITIONING COMPRESSOR MOUNTING 61 01 (OHV): 61 10 (OHVC)..... FIG. 13.410 - 3
AIR CONDITIONING COMPRESSOR MOUNTING 64 10 (OHV-232): 65 10 (OHV-199): 65 10-80 (OHV-232)..... IL 13 - 6
AIR CONDITIONING COMPRESSOR MOUNTING 64-65 10-80 (V8-LPS) ..... IL 13 - 6
AIR CONDITIONING CONDENSER AND RECEIVER 64-65 ALL MODELS (WAC) ..... IL 13 - 4
AIR CONDITIONING CONTROLS 63 10-80..... FIG. 13.013 - 3
AIR CONDITIONING CONTROLS 64 10-80 (WAC) ..... IL 13 - 5
AIR CONDITIONING EVAPORATOR CORE HOUSING AND DUCTS 63 10-80..... FIG. 13.488 - 5
AIR CONDITIONING EVAPORATOR HOUSING AND CONTROLS 61 THRU 63 01 ..... FIG. 13.488 - 1
AIR CONDITIONING EVAPORATOR HOUSING AND CONTROLS 61-62 10-20-80..... FIG. 13.488 - 3
AIR CONDITIONING EVAPORATOR HOUSING AND DUCTS 65 10-80 (WAC)..... IL 13 - 10
AIR CONDITIONING EVAPORATOR HOUSING AND DUCTS 64-65 01 (WAC) ..... IL 13 - 2
AIR CONDITIONING INTERMEDIATE PULLEY AND BRACKETS 61 20-80 (LPS)..... FIG. 13.430 - 5

Copyright 1963 American Motors Corp.

GROUP 13 HEATER - AIR CONDITIONING (Continued)

HEATER 60 01 (LHE)(FIRST TYPE) ..... FIG. 13.001 - 1
HEATER AND BLOWER HOUSING 63-64 10-80 ..... FIG. 13.001 - 7
HEATER 62 10-80 ..... FIG. 13.001 - 6
HEATER 63 10-80 ..... FIG. 13.001 - 7
HEATER 61 10-20-80 ..... FIG. 13.001 - 5
HEATER 64-65 01 ..... IL 13 - 1
HEATER AND AIR CONDITIONING BLOWER HOUSING 63 THRU CURRENT 10-80 (WAC) FIG. 13.072 - 1
HEATER AND BLOWER HOUSINGS 65 10-80 ..... IL 13 - 7
HEATER AND FRESH AIR INTAKE 61 THRU 63 01 ..... FIG. 13.001 - 2
HEATER CONTROLS 60 10-20-80 ..... FIG. 13.001 - 3
HEATER CONTROLS 65 10-80 (LAC) ..... IL 13 - 8
HEATER AND AIR CONDITIONING CONTROLS 65 10-80 (WAC) ..... IL 13 - 9
HEATER CORE HOUSING 63 THRU CURRENT 10-80 (WAC) ..... FIG. 13.028 - 3
HEATER DUCTS, CORE AND COVER 60 10-20-80 ..... FIG. 13.001 - 4

GROUP 14 CHASSIS MISCELLANEOUS

BUMPER JACK 63 ALL MODELS: 64-65 ALL MODELS (1st TYPE) ..... IL 14 - 1
BUMPER JACK 64-65 ALL MODELS (2nd TYPE) ..... IL 14 - 1

GROUP 15 ACCESSORIES

A.M. RADIO 64 10-80 ..... IL 15 - 3
GASOLINE FILTER 60 THRU CURRENT ALL MODELS ..... IL 15 - 1
MANUAL ANTENNA 60-61 01-10-20-80 ..... FIG. 15.030 - 4
MANUAL ANTENNA 64-65 01: 63 THRU 65 10-80 ..... IL 15 - 8
OUTSIDE REAR VIEW MIRROR 60 01 ..... FIG. 15.270 - 1
OUTSIDE REAR VIEW MIRROR 60 10-20-80 ..... FIG. 15.270 - 3
REAR DECK ANTENNA 60-61 10-20-80 ..... FIG. 15.030 - 3
DUO-COUSTIC REAR SHELF SPEAKER 64-65 15-16-19-85-89 (EXCEPT MARLIN) ..... IL 15 - 4
REMOTE CONTROL MIRROR ASSEMBLY 64 ALL MODELS ..... IL 15 - 6
SEAT BELT PACKAGE 60-61 10-20-80 ..... FIG. 15.365 - 3
SEAT BELT 64-65 ALL MODELS ..... IL 15 - 7
SPOTLIGHT 63 10-80: 64 ALL MODELS ..... IL 15 - 2
VIBRA-TONE REAR SHELF SPEAKER 64-65 15-16-19-85-89 (EXCEPT MARLIN) ..... IL 15 - 5
WINDSHIELD WASHER 60 THRU 63 01: 60 10-20-80: 62 80 ..... FIG. 15.440 - 1
WIRE WHEEL COVER KIT 64-65 ALL MODELS ..... IL 15 - 6

GROUP 16 AUTOMATIC TRANSMISSION

CONVERTER AND HOUSING 60 THRU CURRENT ALL MODELS ..... IL 16 - 3
FRONT PUMP, CLUTCHES AND CARRIER 62 THRU CURRENT ALL MODELS ..... IL 16 - 7
FRONT SERVO AND BAND 60 THRU CURRENT ALL MODELS ..... IL 16 - 4
LOWER VALVE BODY 60-61 01-10 ..... IL 16 - 11
LOWER VALVE BODY 60-61 20-80 ..... IL 16 - 12
OIL COOLER TUBES 60 THRU CURRENT 10-80 (V8) ..... IL 16 - 15
PARKING LOCK AND MANUAL CONTROL 60-61 01 ..... IL 16 - 8
PARKING LOCK AND MANUAL CONTROL 60-61 10-20-80 ..... IL 16 - 9
PARKING LOCK AND MANUAL CONTROL 62 THRU CURRENT ALL MODELS ..... IL 16 - 10
PRESSURE REGULATOR VALVE 60-61 01-10 (SIX): 60 THRU CURRENT 10-20-80 (V8) ..... IL 16 - 2
REAR SERVO 60-61 ALL MODELS ..... IL 16 - 5
REAR SERVO AND BAND 62 THRU 64 01-10 (SIX-1st. TYPE): 62 THRU CURRENT 10-80 (V8) ... IL 16 - 6
REAR SERVO AND BAND 62 THRU 64 01-10 (SIX-2nd. TYPE): 65 01-10-80 (SIX) ..... IL 16 - 6
SOLENOID 60-61 01-10-20: 60 THRU 64 10-80 (V8) ..... IL 16 - 16
THROTTLE CONTROL CABLE 64-65 01 (LHE) ..... IL 16 - 20
THROTTLE CONTROL CABLE 64-65 ALL MODELS (OHV-SIX) ..... IL 16 - 21
THROTTLE CONTROL CABLE 65 10-80 (V8) ..... IL 16 - 22
TRANSMISSION CASE, REAR PUMP AND RETAINER 60 THRU CURRENT ALL MODELS ..... IL 16 - 1
UPPER VALVE BODY 60-61 01-10 ..... IL 16 - 11
UPPER VALVE BODY 60-61 20-80 ..... IL 16 - 12
VALVE ASSEMBLY 62-63 01-10 (SIX) ..... IL 16 - 13
VALVE ASSEMBLY 62 THRU 64 10-80 (V8-WCGS) ..... IL 16 - 14

Copyright 1963 American Motors Corp.

GROUP 16 AUTOMATIC TRANSMISSION (Continued)

VALVE ASSEMBLY 64 01-10 (SIX): 65 ALL MODELS (SIX) ..... IL 16 - 17
VALVE ASSEMBLY 64-65 10-80 (V8-WCGS) ..... IL 16 - 18
VALVE ASSEMBLY 64-65 10-80 (V8-WFGS) ..... IL 16 - 19

GROUP 20 BODY SHEET METAL

AUXILIARY FLOOR PANELS 63 THRU 65 18-88 (L3S) ..... FIG. 20.430 - 5
AUXILIARY FLOOR PANELS 60 THRU 62 10-20-80 WAGON (L3S) ..... FIG. 20.430 - 3
AUXILIARY FLOOR PANELS 60 THRU 62 10-20-80 WAGON (W3S) ..... FIG. 20.430 - 4
BODY SIDE SHEET METAL 61 THRU 63 02-06 ..... FIG. 20.175 - 1
BODY SIDE SHEET METAL 61 THRU 63 05 ..... FIG. 20.175 - 1a
BODY SIDE SHEET METAL 61 THRU 63 04 ..... FIG. 20.175 - 1b
BODY SIDE SHEET METAL 61 THRU 63 08 ..... FIG. 20.175 - 1c
BODY SIDE SHEET METAL 61 THRU 63 07 ..... FIG. 20.175 - 1d
DASH AND FRONT WHEELHOUSE PANEL 64-65 01 ..... IL 20 - 1
DASH ASSEMBLY AND WHEELHOUSE PANEL 61 THRU 63 01 ..... FIG. 20.120 - 1
DASH ASSEMBLY AND WHEELHOUSE PANEL 63 THRU 65 10-80 ..... FIG. 20.120 - 4
DASH ASSEMBLY AND WHEELHOUSE PANEL 60 THRU 62 10-20-80 ..... FIG. 20.120 - 3
FRAME ASSEMBLY 61 THRU 63 07 ..... FIG. 20.600 - 1
REAR QUARTER PANEL 60 THRU 62 10-20-80 SEDAN ..... FIG. 20.270 - 3
REAR QUARTER PANEL ASSEMBLY 60 THRU 62 10-20-80 WAGON ..... FIG. 20.265 - 3
REAR QUARTER PANELS 63-64 10-80 SEDAN ..... FIG. 20.272 - 3
REAR QUARTER PANELS 63-64 10-80 WAGON ..... FIG. 20.272 - 4
REAR QUARTER PANELS 64-65 05-08 ..... IL 20 - 12
REAR QUARTER PANELS 64-65 07-09 ..... IL 20 - 7
REAR QUARTER PANELS 65 15-16-17-19 (EXCEPT MARLIN) ..... IL 20 - 10
REAR QUARTER PANELS 65 59-7 (MARLIN) ..... IL 20 - 10
ROOF PANEL AND REAR SHELF PANEL 63-64 10-80 SEDAN ..... FIG. 20.420 - 5
ROOF PANEL AND REAR SHELF PANEL 61 THRU 63 02-05-06-09 ..... FIG. 20.420 - 1
ROOF PANEL AND SUPPORTS 63 THRU 65 10-80 WAGON ..... FIG. 20.420 - 6
ROOF PANEL AND SUPPORTS 61 THRU 63 04-08 ..... FIG. 20.420 - 2
ROOF PANEL AND SUPPORTS 60 THRU 62 10-20-80 WAGON ..... FIG. 20.420 - 4
ROOF PANEL, SUPPORTS AND SHELF PANEL 60 THRU 62 10-20-80 SEDAN ..... FIG. 20.420 - 3
ROOF PANEL, SUPPORTS AND REAR SHELF PANEL 65 15-16-85-86 ..... IL 20 - 9
ROOF PANEL, SUPPORTS AND REAR SHELF PANEL 65 19-89 (EXCEPT MARLIN) ..... IL 20 - 9
ROOF PANEL, SUPPORTS AND REAR SHELF PANEL 65 59-7 (MARLIN) ..... IL 20 - 12
UNDERBODY PANELS 60 01 ..... FIG. 20.005 - 1
UNDERBODY PANELS 61 THRU 63 01 ..... FIG. 20.005 - 2
UNDERBODY PANELS 63 10-80 - (REFER IL 20-8) ..... FIG. 20.005 - 5
UNDERBODY PANELS 60 THRU 62 10-20-80 (L3S) ..... FIG. 20.005 - 3
UNDERBODY PANELS 60 THRU 62 10-20-80 (W3S) ..... FIG. 20.005 - 4
UNDERBODY PANELS 64-65 02-05-06-08-09 ..... IL 20 - 6
UNDERBODY PANELS 64-65 07 ..... IL 20 - 5
UNDERBODY PANELS 63 THRU 65 10-80 ..... IL 20 - 8
UNISIDE 63 THRU CURRENT 16-86: 64-65 02-06 ..... IL 20 - 2
UNISIDE 64-65 07: 65 17-87 ..... IL 20 - 3
UNISIDE 64-65 09-19-89 (EXCEPT MARLIN) ..... IL 20 - 4
UNISIDE 65 59-7 (MARLIN) ..... IL 20 - 11
UNISIDE ASSEMBLY 60 THRU 62 15-18-25-28-85-88 ..... FIG. 20.170 - 3
UNISIDE ASSEMBLY 63 THRU 65 15-18-85-88: 64-65 05-08 ..... FIG. 20.170 - 4

GROUP 22 WINDSHIELD WIPER - COWL VENT - INSTRUMENT PANEL

ELECTRIC WINDSHIELD WIPER 64-65 ALL MODELS ..... IL 22 - 3
ELECTRIC WINDSHIELD WIPER 63 10-80 ..... FIG. 22.027 - 3
INSTRUMENT PANEL, GLOVE BOX AND LOCK ASSEMBLY 60-61 10-20-80 ..... FIG. 22.056 - 3
INSTRUMENT PANEL, GLOVE BOX AND LOCK ASSEMBLY 62-63 10-80 ..... FIG. 22.056 - 4
INSTRUMENT PANEL, GLOVE BOX AND LOCK ASSEMBLY 63 10-80 (WAC) ..... FIG. 22.056 - 5
INSTRUMENT PANEL, GLOVE BOX AND LOCK ASSEMBLY 64-65 01 ..... IL 22 - 5
INSTRUMENT PANEL, GLOVE BOX AND LOCK ASSEMBLY 65 10 (EXCEPT MARLIN) ..... IL 22 - 6
INSTRUMENT PANEL, GLOVE BOX AND LOCK ASSEMBLY 65 80 ..... IL 22 - 7
INSTRUMENT PANEL OPENING COVERS 65 10-80 ..... IL 22 - 8
VACUUM WINDSHIELD WIPER 64-65 01 ..... IL 22 - 1
VACUUM WINDSHIELD WIPER 63 THRU CURRENT 10-80 ..... IL 22 - 2
WINDSHIELD WIPER 60 THRU 62 01-10-20-80: 63 01 ..... FIG. 22.027 - 1

Copyright 1963 American Motors Corp.

GROUP 23 DOORS - HARDWARE

DOOR ELECTRIC OPERATED WINDOW REG. HARNESS AND SWITCHES 60 (2nd. TYPE) THRU 63 10-20-80 ..... IL 23 - 15
DOOR LOCK CYLINDER AND KEYS 60 THRU CURRENT ALL MODELS..... FIG. 23.081 - 1
ELECTRIC OPERATED WINDOW REGULATOR HARNESS AND SWITCHES 64-65 10-80..... IL 23 - 17
ELECTRIC OPERATED WINDOW REGULATOR SWITCHES 60 (1st. TYPE) 10-20-80..... IL 23 - 14
ELECTRIC OPERATED WINDOW REGULATOR TRANS. AND MOTOR 60 THRU CURRENT 10-20-80..... IL 23 - 14
FRONT DOOR GLASS AND CHANNELS 60 19-23-29-83-89 ..... FIG. 23.100 - 4
FRONT DOOR GLASS AND CHANNELS 60-61 15-18-25-28-85-88 ..... FIG. 23.100 - 3
FRONT DOOR GLASS AND CHANNELS 60 THRU 62 02-04-06..... FIG. 23.100 - 1
FRONT DOOR GLASS AND CHANNELS 63-64 05-06-08-15-16-18-85-86-88 ..... IL 23 - 20
FRONT DOOR GLASS AND CHANNELS 64-65 07-09-19-89 (LER): 65 17-87 ..... IL 23 - 13
FRONT DOOR GLASS AND CHANNELS 65 05-08-15-18-85-88..... IL 23 - 16
FRONT DOOR, HARDWARE AND SEALERS 60 THRU 63 02-04-06..... FIG. 23.001 - 1
FRONT DOOR, HARDWARE AND SEALERS 60 THRU 62 15-18-25-28-85-88..... FIG. 23.001 - 3
FRONT DOOR, HARDWARE AND SEALERS 63-64 15-18-85-88: 64-65 05-08 ..... IL 23 - 5
FRONT DOOR, HARDWARE AND SEALERS 63-64 16: 63 86: 64-65 06..... IL 23 - 6
FRONT DOOR, HARDWARE AND SEALERS 64 19-89: 64-65 07-09 ..... IL 23 - 7
FRONT DOOR, HARDWARE AND SEALERS 65 15-18-85-88..... IL 23 - 18
REAR DECK DOOR, HINGE AND LOWER CENTER PANEL 60 THRU 62 15-19-25-29-85-89..... FIG. 23.009 - 3
REAR DECK DOOR, HINGE AND LOWER CENTER PANEL 63-64 15-16-19-85-86-89..... IL 23 - 9
REAR DECK DOOR, HINGE AND LOWER CENTER PANEL 64-65 02-05-06-07-09 ..... IL 23 - 8
REAR DECK DOOR, HINGE AND LOWER CENTER PANEL 65 59 (MARLIN) ..... IL 23 - 19
REAR DOOR GLASS AND CHANNELS 60 THRU 62 15-18-25-28-85-88 ..... FIG. 23.150 - 3
REAR DOOR GLASS AND CHANNELS 60 19-23-29-83-89..... FIG. 23.150 - 4
REAR DOOR, HARDWARE AND SEALERS 60 THRU 63 05-08 ..... FIG. 23.002 - 1
REAR DOOR, HARDWARE AND SEALERS 60 THRU 62 19-23-29-83-89 ..... FIG. 23.002 - 4
REAR DOOR, HARDWARE AND SEALERS 60 THRU 62 15-18-25-28-85-88 ..... FIG. 23.002 - 3
REAR DOOR, HARDWARE AND SEALERS 64-65 05-08: 63-64 15-18-85-88..... IL 23 - 12
TAILGATE AND LIFTGATE 60 THRU 63 04-08 ..... FIG. 23.006 - 1
TAILGATE ELECTRIC WINDOW REGULATOR 64-65 08 (WER) ..... IL 23 - 4
TAILGATE GLASS AND CHANNELS 60 THRU 62 18-28-83-88 (WVT)..... FIG. 23.040 - 4
TAILGATE GLASS AND CHANNELS 60 THRU 62 18-28-83-88 (LVT)..... FIG. 23.040 - 3
TAILGATE, HARDWARE AND SEALERS 60 THRU 62 18-28-83-88 (LVT) ..... FIG. 23.006 - 3
TAILGATE, HARDWARE AND SEALERS 60 THRU 62 18-28-83-88 (WVT) ..... FIG. 23.006 - 4
TAILGATE, HARDWARE AND SEALERS 63-64 18-88 (LVT-LER)..... IL 23 - 1
TAILGATE, HARDWARE AND SEALERS 63-64 18-88 (WVT-LER)..... IL 23 - 10
TAILGATE, HARDWARE AND SEALERS 63-64 18-88 (WVT-WER)..... IL 23 - 11
TAILGATE, HARDWARE AND SEALERS 64-65 08 (LER) ..... IL 23 - 2
TAILGATE, HARDWARE AND SEALERS 64-65 08 (WER) ..... IL 23 - 3

GROUP 24 REAR QUARTER HARDWARE

REAR QUARTER ELECTRIC OPERATED WINDOW REGULATOR CONTROL SWITCH 62 16-86: 64-65 19-89..... FIG. 24.220 - 3
REAR QUARTER ELECTRIC OPERATED WINDOW REGULATOR TRANS. AND MOTOR 62 16-86: 64-65 19-89..... FIG. 24.203 - 3
REAR QUARTER ELECTRIC WINDOW REGULATOR TRANS. AND MOTOR 65 17-87: 65 59-7 (MARLIN) ..... IL 24 - 5
REAR QUARTER LOWERING GLASS AND CHANNELS 60-61 02-06..... FIG. 24.000 - 1
REAR QUARTER LOWERING GLASS AND CHANNELS 64-65 06: 63 THRU CURRENT 16-86 (LER) IL 24 - 3
REAR QUARTER LOWERING GLASS AND CHANNELS 64 07: 65 07-17-87 ..... IL 24 - 4
REAR QUARTER LOWERING GLASS AND CHANNEL 64-65 09-19-89 (EXCEPT MARLIN) ..... IL 24 - 1
REAR QUARTER LOWERING GLASS AND CHANNELS 65 59-7 (MARLIN) ..... IL 24 - 6

GROUP 25 GLASS - CHANNELS

REAR QUARTER STATIONARY GLASS AND CHANNELS 60 THRU 62 02-06..... FIG. 25.026 - 1
REAR QUARTER STATIONARY WINDOW AND FINISH MLDGS. 60 THRU 62 18-28-83-88.. FIG. 25.026 - 3
REAR WINDOW GLASS AND CHANNEL 60 THRU CURRENT 01 SEDAN..... FIG. 25.028 - 1
REAR WINDOW GLASS, CHANNEL AND FINISH MOULDINGS 60 THRU 62 10-20-80 SEDAN..... FIG. 25.028 - 3
TAILGATE GLASS AND CHANNELS 63 THRU CURRENT 18-88 (WVT) ..... IL 25 - 2

Copyright 1963 American Motors Corp.

GROUP 25 GLASS - CHANNELS (Continued)

TAILGATE GLASS AND CHANNELS 64-65 08: 63-64 18-88 (LVT) ..... IL 25 - 1
WINDSHIELD GLASS, CHANNEL AND FINISH MOULDINGS 60 THRU 63 01 ..... FIG. 25.001 - 1
WINDSHIELD GLASS, CHANNEL AND FINISH MOULDINGS 60 THRU 62 10-20-80 ..... FIG. 25.001 - 3
WINDSHIELD GLASS, CHANNEL AND FINISH MOULDINGS 64 01 (LCV) ..... IL 25 - 3
WINDSHIELD GLASS, CHANNEL AND FINISH MOULDINGS 64 07 ..... IL 25 - 3
WINDSHIELD GLASS, CHANNEL AND FINISH MOULDINGS 63 THRU CURRENT 10-80 ..... IL 25 - 4

GROUP 26 BODY MOULDINGS

DOOR MOULDINGS 60 01 (SUPER)(CUSTOM) 2 Dr. ..... IL 26 - 1
DOOR MOULDINGS 60 01 (SUPER)(CUSTOM) 4 Dr. ..... IL 26 - 1
DOOR MOULDINGS 61-62 01 (SUPER)(CUSTOM)(400) 2 Dr.: 63 04 (330): 63 06 (330)(440)) ..... IL 26 - 1
DOOR MOULDINGS 63 07-09 (440) ..... IL 26 - 2
DOOR MOULDINGS 61-62 01 (SUPER)(CUSTOM)(400) 4 Dr.: 63 01 (330)(440) 4 Dr. ..... IL 26 - 2
DOOR MOULDINGS 60 10-20 (DELUXE) ..... IL 26 - 2
DOOR MOULDINGS 60 10-20 (SUPER) ..... IL 26 - 3
DOOR MOULDINGS 60 15-18-25-28 (CUSTOM) ..... IL 26 - 3
DOOR MOULDINGS 60 19-29 (CUSTOM) ..... IL 26 - 4
DOOR MOULDINGS 61 10-20 (DELUXE) ..... IL 26 - 4
DOOR MOULDINGS 61 10-20 (SUPER) ..... IL 26 - 5
DOOR MOULDINGS 61 10-20 (CUSTOM)(400) ..... IL 26 - 5
DOOR MOULDINGS 62 10 (CUSTOM)(400) 2 Dr. ..... IL 26 - 6
DOOR MOULDINGS 62 10 (CUSTOM)(400) 4 Dr. ..... IL 26 - 6
DOOR MOULDINGS 63 10 (660) 2 Dr. ..... IL 26 - 7
DOOR MOULDINGS 63 10 (770) 2 Dr. ..... IL 26 - 7
DOOR MOULDINGS 63 10 (660) 4 Dr. ..... IL 26 - 7
DOOR MOULDINGS 63 10 (770) 4 Dr. ..... IL 26 - 8
DOOR MOULDINGS 60 80 (DELUXE) ..... IL 26 - 8
DOOR MOULDINGS 60 80 (SUPER) ..... IL 26 - 9
DOOR MOULDINGS 60 85-88 (CUSTOM) ..... IL 26 - 9
DOOR MOULDINGS 60 83-89 (CUSTOM) ..... IL 26 - 10
DOOR MOULDINGS 61 80 (DELUXE) ..... IL 26 - 10
DOOR MOULDINGS 61 80 (SUPER)(CUSTOM) ..... IL 26 - 11
DOOR MOULDINGS 62 80 (CUSTOM) 2 Dr. AND 4 Dr. ..... IL 26 - 11
DOOR MOULDINGS 62 80 (400) 2 Dr. AND 4 Dr. ..... IL 26 - 12
DOOR MOULDINGS 63 80 (880) 2 Dr. ..... IL 26 - 12
DOOR MOULDINGS 63 80 (990) 2 Dr. ..... IL 26 - 12
DOOR MOULDINGS 63 80 (880) 4 Dr. ..... IL 26 - 13
DOOR MOULDINGS 63 80 (990) 4 Dr. ..... IL 26 - 13
DOOR MOULDINGS 64 06 (330) ..... IL 26 - 14
DOOR MOULDINGS 64 05-08 (330) ..... IL 26 - 14
DOOR MOULDINGS 64 07-09 (440): 64 09 (440-H) ..... IL 26 - 14
DOOR MOULDINGS 64 05 (440) ..... IL 26 - 15
DOOR MOULDINGS 64 16 (550) ..... IL 26 - 15
DOOR MOULDINGS 64 15-18 (550) ..... IL 26 - 15
DOOR MOULDINGS 64 16 (660) ..... IL 26 - 16
DOOR MOULDINGS 64 15-18 (660) ..... IL 26 - 16
DOOR MOULDINGS 64 16 (770) ..... IL 26 - 16
DOOR MOULDINGS 64 19 (770) ..... IL 26 - 17
DOOR MOULDINGS 64 15 (770) ..... IL 26 - 17
DOOR MOULDINGS 64 18 (770) ..... IL 26 - 17
DOOR MOULDINGS 64 89 (990) ..... IL 26 - 18
DOOR MOULDINGS 64 85 (990) ..... IL 26 - 18
DOOR MOULDINGS 64 88 (990) ..... IL 26 - 18
DOOR MOULDINGS 65 06 (330) ..... IL 26 - 45
DOOR MOULDINGS 65 05-08 (330) ..... IL 26 - 45
DOOR MOULDINGS 65 07 (440) ..... IL 26 - 45
DOOR MOULDINGS 65 09 (440)(440-H) ..... IL 26 - 46
DOOR MOULDINGS 65 05 (440) ..... IL 26 - 46
DOOR MOULDINGS 65 16 (550)(660) ..... IL 26 - 46
DOOR MOULDINGS 65 15-18 (550)(660) ..... IL 26 - 47
DOOR MOULDINGS 65 17 (770) ..... IL 26 - 47
DOOR MOULDINGS 65 19 (770)(770-H)(EXCEPT MARLIN) ..... IL 26 - 47
DOOR MOULDINGS 65 59-7 (MARLIN) ..... IL 26 - 51
DOOR MOULDINGS 65 15 (770) ..... IL 26 - 48

Copyright 1963 American Motors Corp.

GROUP 26 BODY MOULDINGS (Continued)

DOOR MOULDINGS 65 18 (770) ..... IL 26 - 48
DOOR MOULDINGS 65 86 (880) ..... IL 26 - 48
DOOR MOULDINGS 65 85 (880) ..... IL 26 - 49
DOOR MOULDINGS 65 88 (880) ..... IL 26 - 49
DOOR MOULDINGS 65 87 (990) ..... IL 26 - 49
DOOR MOULDINGS 65 89 (990)(990-H) ..... IL 26 - 50
DOOR MOULDINGS 65 85 (990) ..... IL 26 - 50
DOOR MOULDINGS 65 88 (990-LWO) ..... IL 26 - 50
DOOR MOULDINGS 65 88 (990-WWO) ..... IL 26 - 51
REAR MOULDINGS 60 01 (SEDAN) ..... IL 26 - 19
REAR MOULDINGS 60 01 (WAGON) ..... IL 26 - 19
REAR MOULDINGS 61-62 01 (CUSTOM)(400) SEDAN: 63 05-06 (220)(330)(440) SEDAN ..... IL 26 - 20
REAR MOULDINGS 63 07-09 (440) SEDAN) ..... IL 26 - 20
REAR MOULDINGS 63 01 (220)(330)(440) WAGON ..... IL 26 - 21
REAR MOULDINGS 60 10 SEDAN ..... IL 26 - 21
REAR MOULDINGS 60 10 WAGON (L3S) ..... IL 26 - 22
REAR MOULDINGS 60 10 WAGON (W3S) ..... IL 26 - 22
REAR MOULDINGS 61 10-20 (CUSTOM) SEDAN ..... IL 26 - 23
REAR MOULDINGS 61 10-20 (DELUXE)(SUPER) WAGON ..... IL 26 - 23
REAR MOULDINGS 61 10-20 (CUSTOM) WAGON ..... IL 26 - 24
REAR MOULDINGS 62 10 (CUSTOM) SEDAN ..... IL 26 - 24
REAR MOULDINGS 62 10 (400) SEDAN ..... IL 26 - 25
REAR MOULDINGS 62 10 (DELUXE) WAGON ..... IL 26 - 25
REAR MOULDINGS 62 10 (CUSTOM) WAGON ..... IL 26 - 26
REAR MOULDINGS 62 10 (400) WAGON ..... IL 26 - 26
REAR MOULDINGS 63 10 (550) SEDAN ..... IL 26 - 27
REAR MOULDINGS 63 10 (660) SEDAN ..... IL 26 - 27
REAR MOULDINGS 63 10 (770) SEDAN ..... IL 26 - 28
REAR MOULDINGS 63 10 (550) WAGON ..... IL 26 - 28
REAR MOULDINGS 63 10 (660) WAGON ..... IL 26 - 29
REAR MOULDINGS 63 10 (770) WAGON ..... IL 26 - 29
REAR MOULDINGS 60 80 SEDAN ..... IL 26 - 30
REAR MOULDINGS 60 80 WAGON ..... IL 26 - 30
REAR MOULDINGS 61 80 (SUPER) SEDAN ..... IL 26 - 31
REAR MOULDINGS 61 80 (CUSTOM) SEDAN ..... IL 26 - 31
REAR MOULDINGS 61 80 (SUPER) WAGON ..... IL 26 - 32
REAR MOULDINGS 61 80 (CUSTOM) WAGON ..... IL 26 - 32
REAR MOULDINGS 62 80 (CUSTOM)(400) SEDAN ..... IL 26 - 33
REAR MOULDINGS 62 80 (CUSTOM)(400) WAGON ..... IL 26 - 33
REAR MOULDINGS 63 80 (800) SEDAN ..... IL 26 - 34
REAR MOULDINGS 63 80 (880) SEDAN ..... IL 26 - 34
REAR MOULDINGS 63 80 (990) SEDAN ..... IL 26 - 35
REAR MOULDINGS 63 80 (800) WAGON ..... IL 26 - 35
REAR MOULDINGS 63 80 (880) WAGON ..... IL 26 - 36
REAR MOULDINGS 63 80 (990) WAGON ..... IL 26 - 36
REAR MOULDINGS 64 05-06 (220) ..... IL 26 - 37
REAR MOULDINGS 64 05-06 (330): 64 05 (440) ..... IL 26 - 37
REAR MOULDINGS 64 07 (440) ..... IL 26 - 37
REAR MOULDINGS 64 09 (440)(440-H) ..... IL 26 - 38
REAR MOULDINGS 64 08 (220) ..... IL 26 - 38
REAR MOULDINGS 64 08 (330) ..... IL 26 - 38
REAR MOULDINGS 64 15-16 (550) ..... IL 26 - 39
REAR MOULDINGS 64 15-16 (660) ..... IL 26 - 39
REAR MOULDINGS 64 15-16 (770) ..... IL 26 - 39
REAR MOULDINGS 64 19 (770) ..... IL 26 - 40
REAR MOULDINGS 64 18 (550) ..... IL 26 - 40
REAR MOULDINGS 64 18 (660) ..... IL 26 - 40
REAR MOULDINGS 64 89 (990) ..... IL 26 - 41
REAR MOULDINGS 64 85 (990) ..... IL 26 - 41
REAR MOULDINGS 64 18 (770) ..... IL 26 - 41
REAR MOULDINGS 64 88 (990) ..... IL 26 - 42
REAR MOULDINGS 65 05-06 (220) ..... IL 26 - 52
REAR MOULDINGS 65 05-06 (330) ..... IL 26 - 52

Copyright 1963 American Motors Corp.

GROUP 26 BODY MOULDINGS (Continued)

REAR MOULDINGS 65 05 (440) ..... IL 26 - 52
REAR MOULDINGS 65 07 (440) ..... IL 26 - 53
REAR MOULDINGS 65 09 (440) ..... IL 26 - 53
REAR MOULDINGS 65 09 (440-H) ..... IL 26 - 53
REAR MOULDINGS 65 08 (220) ..... IL 26 - 54
REAR MOULDINGS 65 08 (330) ..... IL 26 - 54
REAR MOULDINGS 65 15-16 (550) ..... IL 26 - 54
REAR MOULDINGS 65 15-16 (660) ..... IL 26 - 55
REAR MOULDINGS 65 15 (770) ..... IL 26 - 55
REAR MOULDINGS 65 17 (770) ..... IL 26 - 55
REAR MOULDINGS 65 19 (770)(770-H)(EXCEPT MARLIN) ..... IL 26 - 56
REAR MOULDINGS 65 59-7 (MARLIN) ..... IL 26 - 60
REAR MOULDINGS 65 18 (550) ..... IL 26 - 56
REAR MOULDINGS 65 18 (660) ..... IL 26 - 56
REAR MOULDINGS 65 18 (770) ..... IL 26 - 57
REAR MOULDINGS 65 85-86 (880) ..... IL 26 - 57
REAR MOULDINGS 65 85 (990) ..... IL 26 - 58
REAR MOULDINGS 65 87 (990) ..... IL 26 - 58
REAR MOULDINGS 65 89 (990)(990-H) ..... IL 26 - 58
REAR MOULDINGS 65 88 (880) ..... IL 26 - 59
REAR MOULDING 65 88 (990-LWO) ..... IL 26 - 59
REAR MOULDINGS 65 88 (990-WWO) ..... IL 26 - 60
WINDSHIELD MOULDINGS 64-65 01 ..... IL 26 - 43
WINDSHIELD MOULDINGS 65 15-16-18 (550)(660): 65 15-18 (770) ..... IL 26 - 43
WINDSHIELD MOULDINGS 65 17-19 (770): 65 19 (770-H) ..... IL 26 - 43
WINDSHIELD MOULDINGS 65 85-86-88 (880): 65 85-88 (990) ..... IL 26 - 44
WINDSHIELD MOULDINGS 65 87-89 (990): 65 89 (990-H) ..... IL 26 - 44

GROUP 27 BODY HARDWARE

FLOOR CONSOLE 63 ALL MODELS ..... FIG. 27.250 - 1
FLOOR CONSOLE 64-65 ALL MODELS ..... IL 27 - 3
FRONT AND REAR DOOR SCUFF PLATE 64-65 ALL MODELS ..... IL 27 - 4
HEADREST ASSEMBLY 60 THRU 64 ALL MODELS ..... FIG. 27.030 - 1
HEADREST ASSEMBLY 65 ALL MODELS ..... IL 27 - 5
LUGGAGE RACK 60 04 ..... FIG. 27.200 - 3
LUGGAGE RACK 61 THRU CURRENT 04-08 ..... IL 27 - 1
LUGGAGE RACK 60 THRU CURRENT 18-28-88 ..... IL 27 - 2
SUN VISOR AND INSIDE MIRROR 64-65 ALL MODELS ..... IL 27 - 4

GROUP 28 CONVERTIBLE TOP

FOLDING TOP COVERING AND HEADER 61 THRU 63 07 ..... FIG. 28.062 - 1
FOLDING TOP COVERING AND HEADER 64 07 ..... IL 28 - 2
FOLDING TOP CYLINDER AND POWER UNIT 61 THRU 63 07 ..... FIG. 28.053 - 1
FOLDING TOP HYDRAULIC CYLINDER AND POWER UNIT 64-65 07: 65 17-87 ..... IL 28 - 3
FOLDING TOP RAILS, LINKS AND WEATHERSEALS 61 THRU 63 07 ..... FIG. 28.015 - 1
FOLDING TOP RAILS, LINKS AND WEATHERSEALS 64 07 (1st TYPE) ..... IL 28 - 1
FOLDING TOP RAILS, LINKS AND WEATHERSEALS 64 07 (2nd TYPE): 65 07-17-87 ..... IL 28 - 4

GROUP 29 SEATS AND SEAT HARDWARE

FRONT SEAT 60 THRU 64 ALL MODELS (WFS) ..... IL 29 - 1
FRONT SEAT 60 THRU 64 ALL MODELS (WRS) ..... IL 29 - 2
FRONT SEAT 60 THRU 64 ALL MODELS (WNRS) ..... IL 29 - 3
FRONT SEAT 64 01: 63-64 10-80 (WIRS-LTS)(WBS-LTS) ..... IL 29 - 4
FRONT SEAT 65 ALL MODELS (WIRS-WBS)(WRS) ..... IL 29 - 7
FRONT SEAT 65 01-10-80 (WFS) ..... IL 29 - 8
FRONT SEAT 65 ALL MODELS (WNRS) ..... IL 29 - 8
FRONT SEAT CENTER CUSHION AND ARMREST 64-65 80 (WBS) ..... IL 29 - 5
FRONT SEAT TILT LOUNGE ASSEMBLY 62-63 ALL MODELS ..... FIG. 29.103 - 4
INDIVIDUAL RECLINING FRONT SEATS 60 THRU 62 10-20-80 ..... FIG. 29.103 - 3

Copyright 1963 American Motors Corp.

ABBREVIATION

To conserve space the following abbreviations may appear in one place or another in this American Motors Automotive Parts Division Parts Catalog.

Accel.....Accelerator
Adj.....Adjustable
Amp.....Ampere
AR.....As Required
Assy.....Assembly
Beg.....Beginning
Brg.....Bearing
Brkt.....Bracket
C.....Hundred
Can.....Canadian
CP.....Complete
Carb.....Carburetor
Comp.....Compressor
Cond.....Condensor
Conn.....Connecting
Ctr.....Center
Cyl.....Cylinder
Defr.....Defroster
Dia.....Diameter
Diaph.....Diaphragm
Diff.....Differential
D/S.....Directional Signal
Dist.....Distributor
Doz.....Dozen
Evap.....Evaporator
Flex.....Flexible
Gal.....Gallon
Gas.....Gasoline
Gskt.....Gasket
Gen.....Generator
Gov.....Governor
Hd.....Head
Hdlng.....Headlining
Hdlp.....Headlamp
Hsg.....Housing
Hydra.....Hydramatic
I.D.....Inside Diameter
Ign.....Ignition
Imit.....Imitation
Incl.....Includes
Instr.....Instrument
Inter.....Intermediate
L/.....Less
LAB.....Less Self Adjusting Brakes
LAC.....Less Air Conditioning
LAE.....Less Alternator Equipment
LAF.....Less Automatic Fan
LAS.....Less Air Suspension
LAT.....Less Automatic Transmission
LAW.....Less Adjusting Steering Wheel
LBS.....Less Bucket Seats
LCGS.....Less Column Gear Shift
LCV.....Less Convertible
LDB.....Less Disc. Brakes
LDC.....Less Dual Carburetors
LDE.....Less Dual Exhaust
LDJ.....Less Dual Jet
LDS.....Less Directional Signal
LDT.....Less Dual Throat Carburetor
LER.....Less Electric Regulator
LES.....Less "E" Stick Transmission
LFC.....Less Floor Console
LFFC.....Less Filter Oil Filler Cap
LFG.....Less Fender Guard
LFGS.....Less Floor Gear Shift
LFI.....Less Fuel Injection
LFS.....Less Full Seat
LHE.....With Six Cylinder "L" Head Engine
LHDC.....Less Heavy Duty Cooling
LHD.....Left Hand Drive
LHR.....Less Horn Ring
LHT.....Less Hydramatic Transmission
LIRS.....Less Individual Reclining Seats
LLD.....Less Locking Differential
LLL.....Less Load Leveler
LN.....Lock Nut
LOD.....Less Overdrive
LPB.....Less Power Brake
LPS.....Less Power Steering
LPV.....Less Positive Ventilation
LRC.....Less Roof Cover
LRS.....Less Reclining Seats
LSFC.....Less Sealed Oil Filler Cap
LTS.....Less Tilt Seat
LUT.....Less Ultramatic Transmission
LVL.....Less Vacuum Door Lock
LVT.....Less Vertical Hinged Tailgate
LW.....Lockwasher
LWC.....Less Wheel Carrier
L3S.....Less Third Seat
Mldg.....Moulding
Mtg.....Mounting
N.A.....Not Available
No.....Number
OAC.....Optional Air Conditioning
O.D.....Outside Diameter
OHV.....With Six Cylinder Overhead Valve Engine
OHVA.....With Six Cylinder Overhead Valve Aluminum Engine
OHVC.....With Six Cylinder Overhead Valve Cast Iron Engine
Pkg.....Package
Prop.....Propeller
PW.....Plain Washer
QT.....Quart
Qtr.....Quarter
Rad.....Radiator
RD.....Round
Reg.....Regulator
Reinf.....Reinforcement
Req.....Required
Ret.....Retainer
Rev.....Reverse
RHD.....Right Hand Drive
Sed.....Sedan
Six.....Six Cylinder Engine
Speedo.....Speedometer
Stab.....Stabilizer
Std.....Standard
Strg.....Steering
Supt.....Support
Susp.....Suspension
Synchro.....Synchronizer
Temp.....Temperature
Therm.....Thermostat
Trans.....Transmission
U.....Universal
V-8.....Eight Cylinder Overhead Valve Engine

Copyright 1963 American Motors Corp.

Vac .....Vacuum
Vent.....Ventilator
W/ .....With
WAB.....With Self Adjusting Brakes
WAC.....With Air Conditioning
WAE.....With Alternator Equipment
WAF.....With Automatic Fan
WAS .....With Air Suspension
WAT.....With Automatic Transmission
WAW.....With Adjusting Steering Wheel
WBS .....With Bucket Seats
WCC.....With Center Cushion
WCGS.....With Column Gear Shift
WDB.....With Disc. Brakes
WDC.....With Dual Carburetors
WDE.....With Dual Exhaust
WDJ .....With Dual Jet
WDS .....With Directional Signal
WDT.....With Dual Throat Carburetor
WER.....With Electric Regulator
WES .....With "E" Stick Transmission
WEW.....With Electric Wiper
WFC.....With Floor Console
WFFC.....With Filter Oil Filler Cap
WFG.....With Fender Guard
WFGS.....With Floor Gear Shift
WFI .....With Fuel Injection
196.....195.6 Cubic Inch Displacement
199 .....199 Cubic Inch Displacement
232.....232 Cubic Inch Displacement
287.....287 Cubic Inch Displacement
327.....327 Cubic Inch Displacement

WFS .....With Full Seat
W/H .....Wheelhouse
WHDC .....With Heavy Duty Cooling
WHR.....With Horn Ring
WHT.....With Hydramatic Transmission
WIRS .....With Individual Reclining Seats
WLD.....With Locking Differential (Applies To Powr-Lok And Twin Grip Differential)
WLL.....With Load Leveler
WNRS.....With Non-Reclining Seat
W/O .....Without
WOD.....With Overdrive
WPB.....With Power Brakes
WPS .....With Power Steering
WPV.....With Positive Ventilation
WRC.....With Roof Cover
WRS .....With Reclining Seat
W/S .....Windshield
WSFC.....With Sealed Oil Filler Cap
WST .....With Standard Transmission
WTS .....With Tilt Seat
WUT.....With Ultramatic Trans.
WVL.....With Vacuum Door Lock
WVT .....With Vertical Hinged Tailgate
WVW.....With Vacuum Wiper
WWC.....With Wheel Carrier
WWO.....With Wood Overlay
W3S .....With Third Seat
W4B .....With Four Barrel Carburetor
W4ST .....With 4 Speed Transmission

Copyright 1963 American Motors Corp.

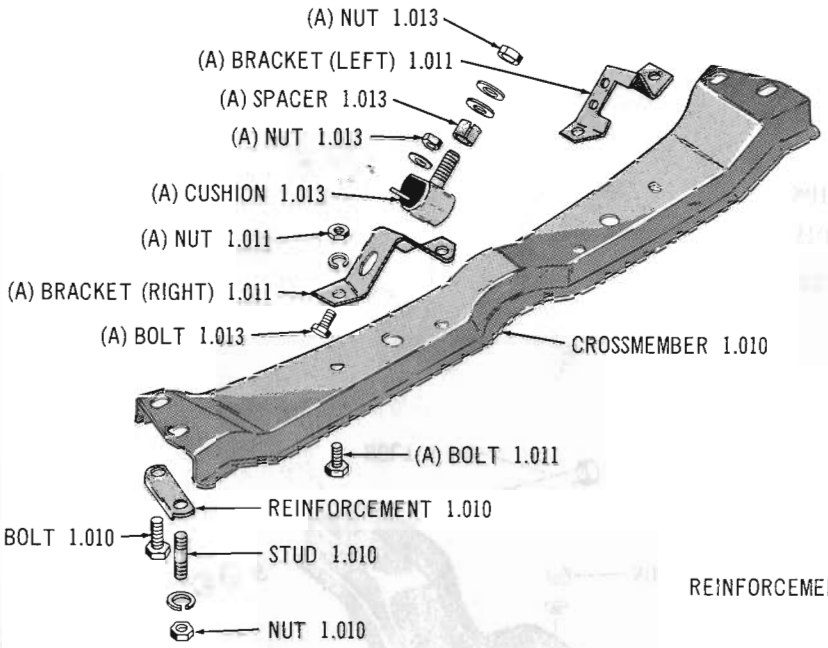

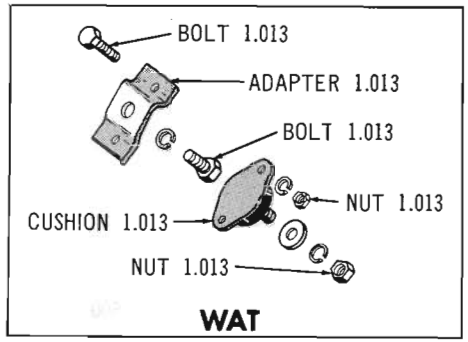

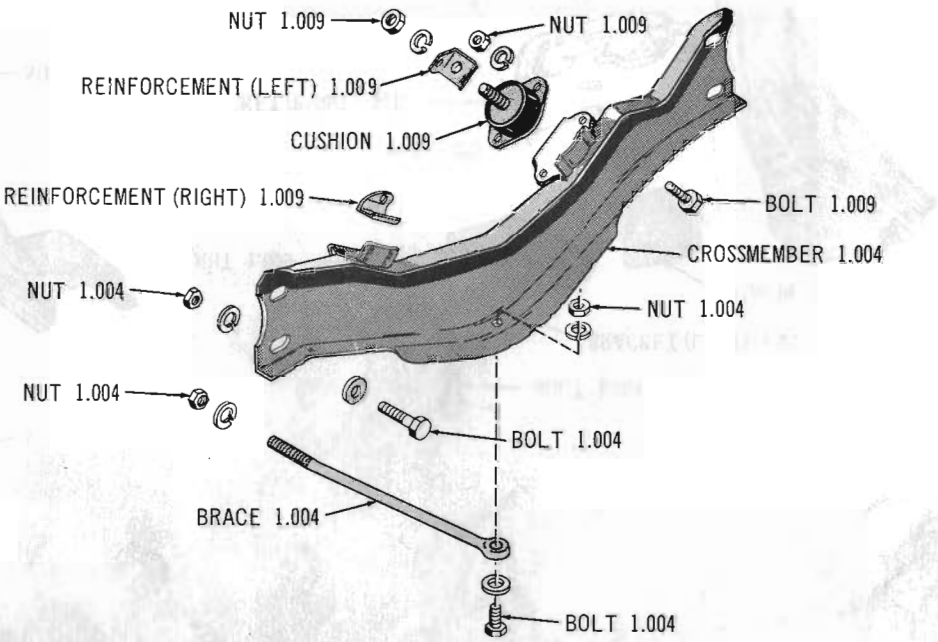

(A) Used only on WST or WOD

F-14063 Rev. 8 - 24 - 64

Copyright 1963 American Motors Corp.

Printed in U.S.A.

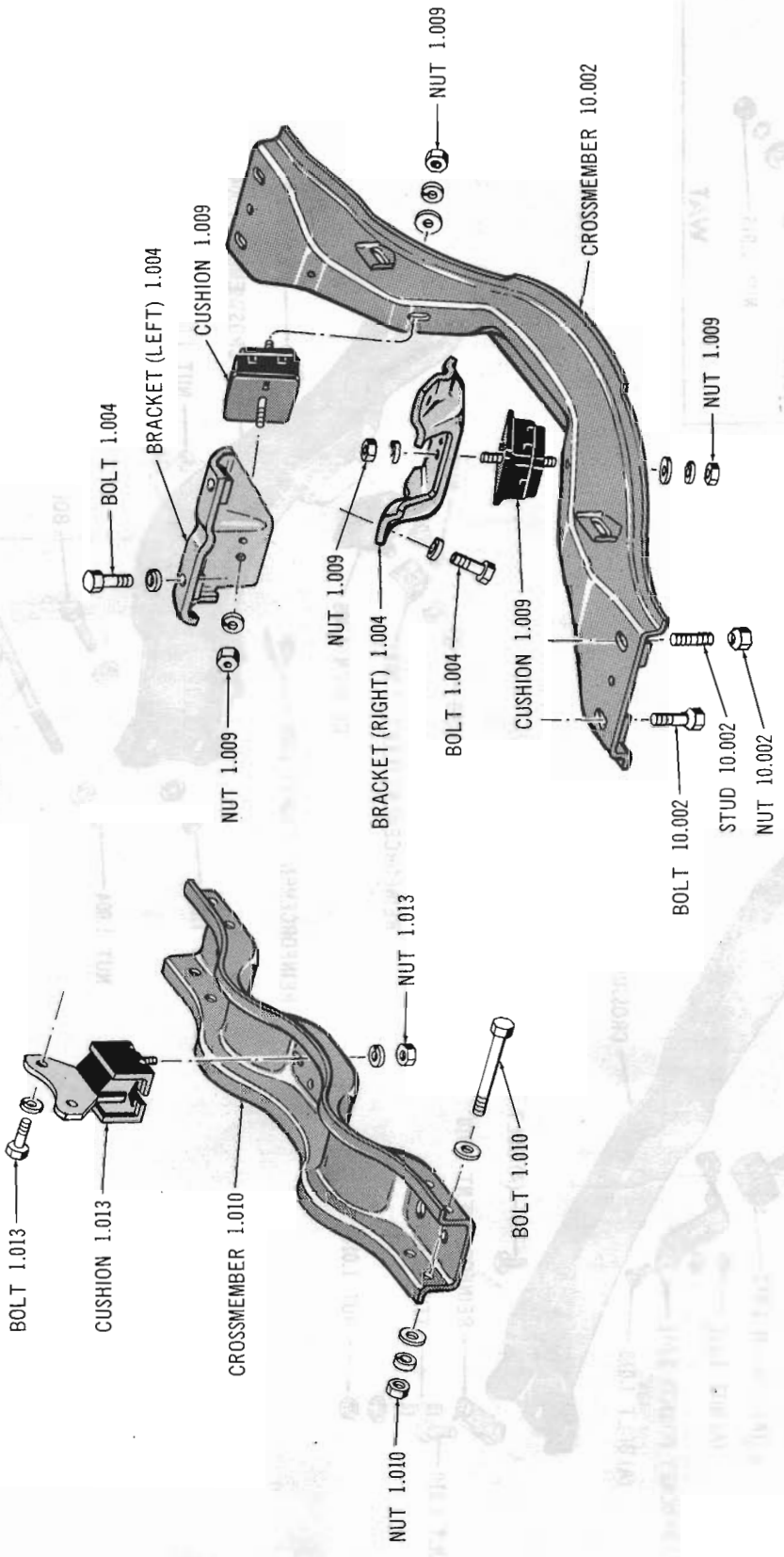

ENGINE FRONT AND REAR SUPPORT 64-65 01 (LHE)(OHV-196)

Copyright 1963 American Motors Corp.

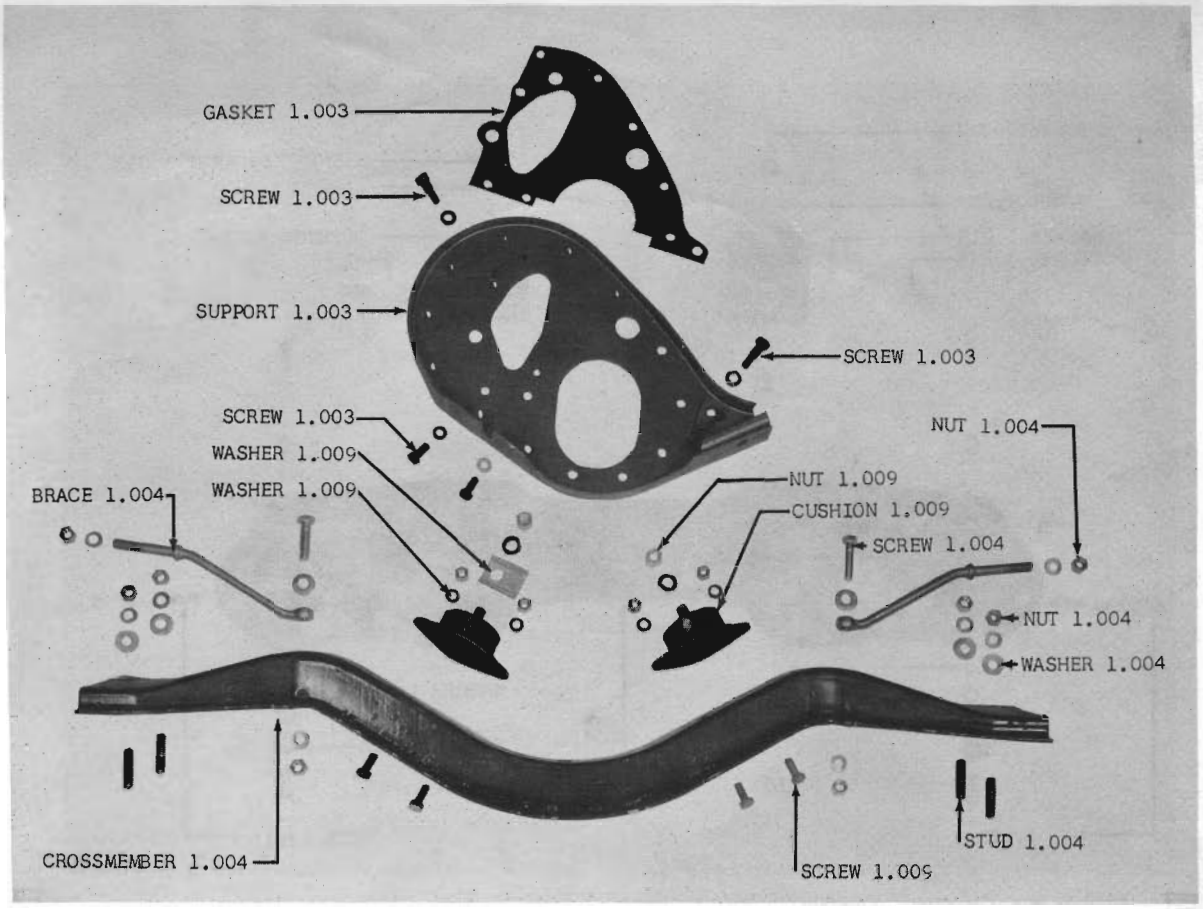

ENGINE FRONT SUPPORT 60 thru 62 10

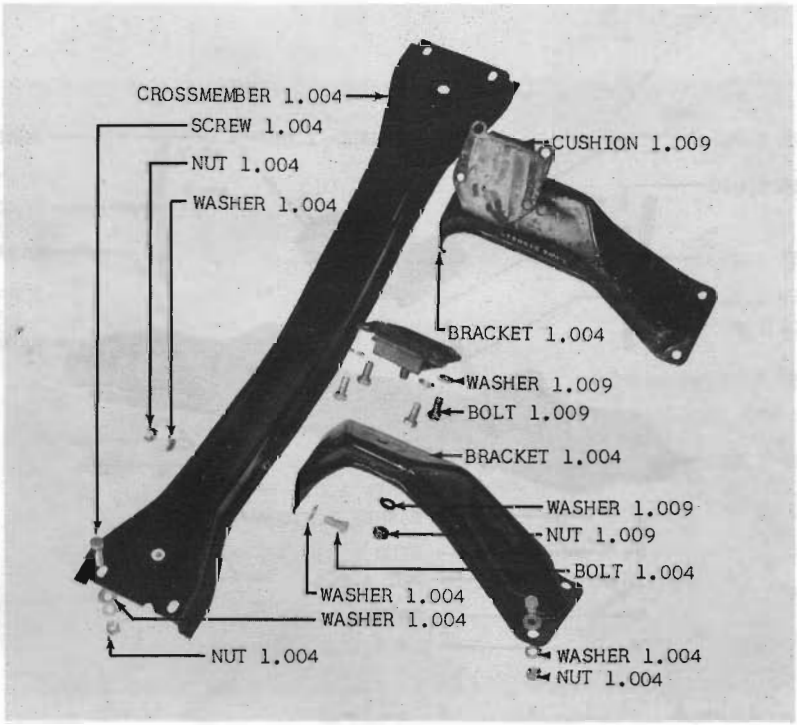

ENGINE FRONT SUPPORT 60 thru 62 20-80

Copyright 1963 American Motors Corp.

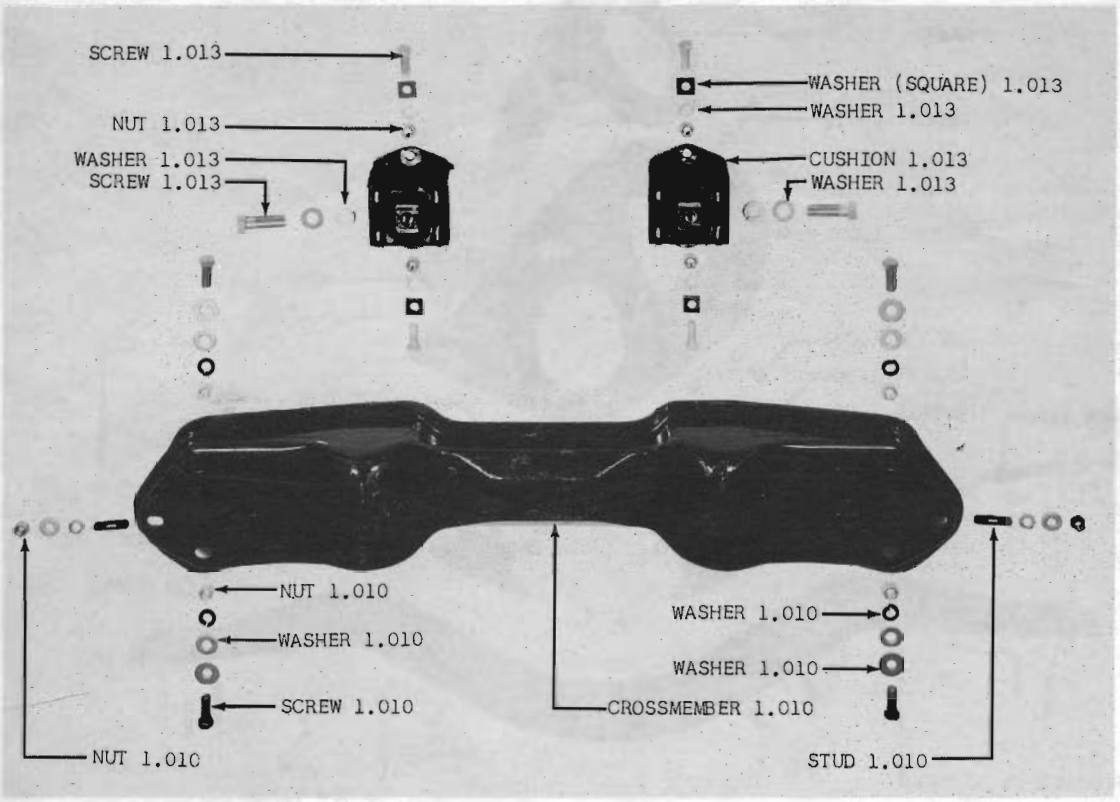

ENGINE REAR SUPPORT 60 thru 62 10

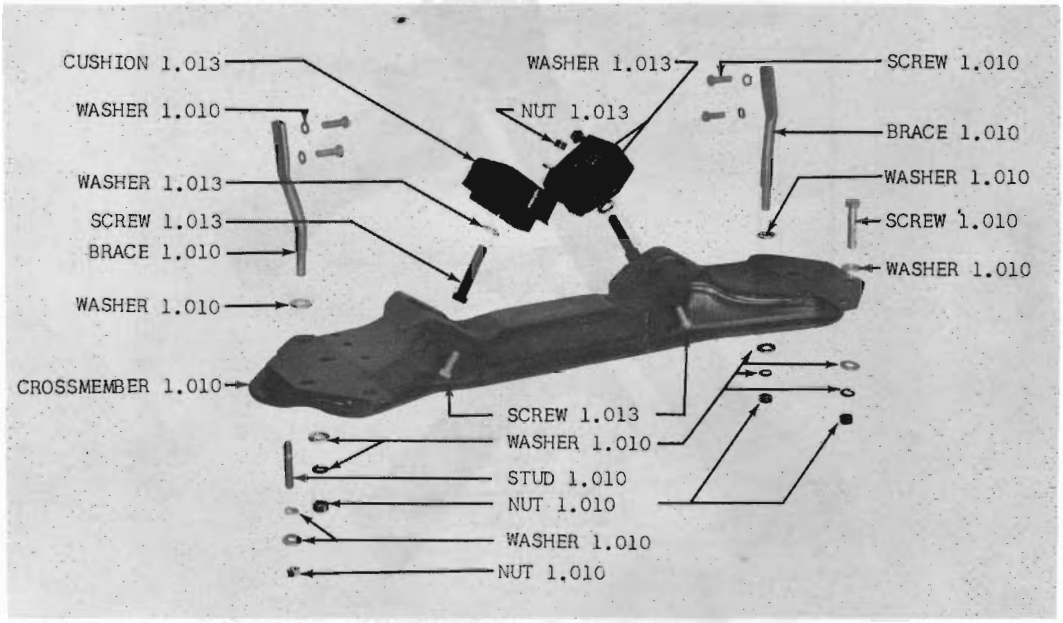

ENGINE REAR SUPPORT 60 thru 62 20-80

Copyright 1963 American Motors Corp.

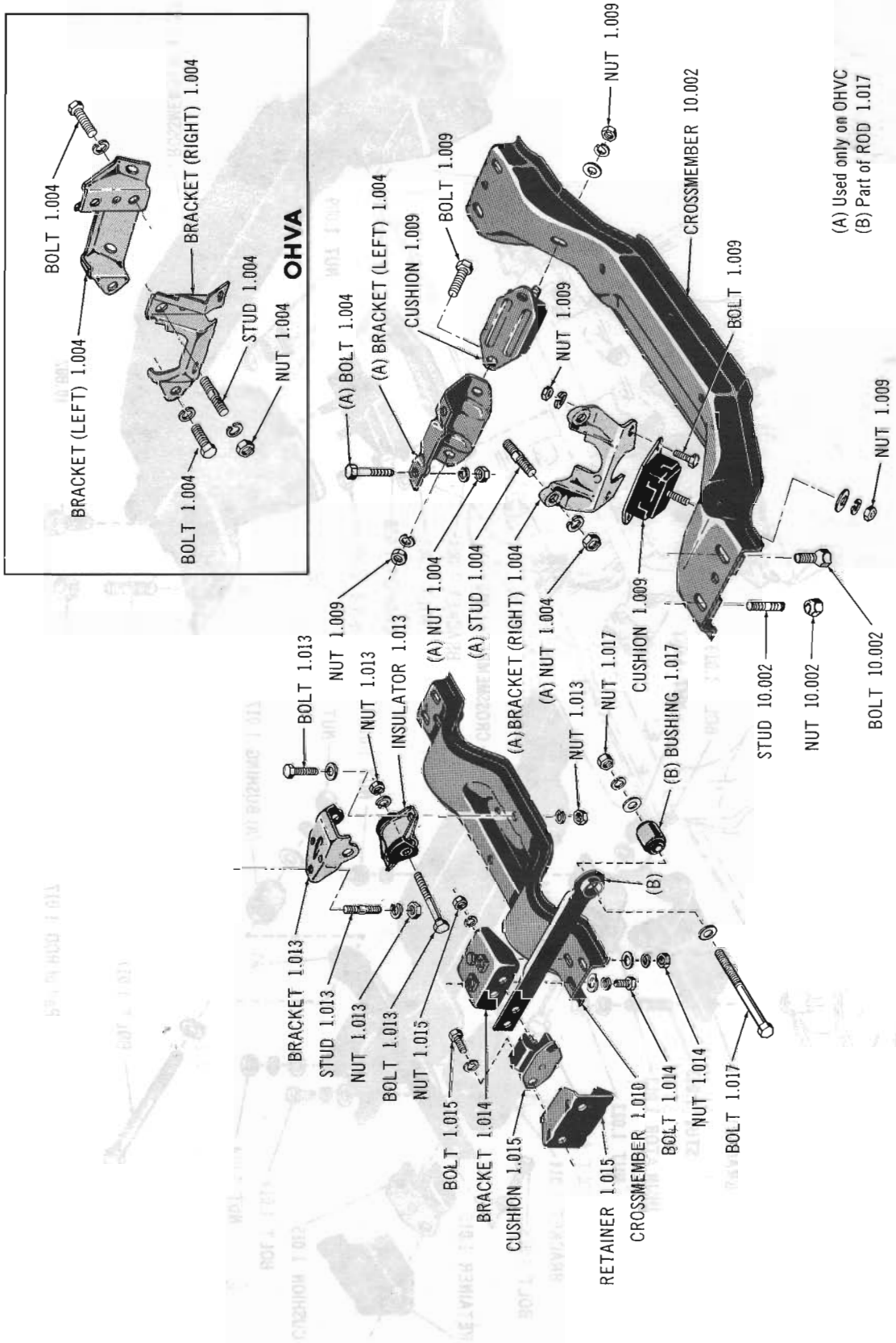

ENGINE FRONT AND REAR SUPPORT 63-64 10 (OHV-196)

Copyright 1963 American Motors Corp.

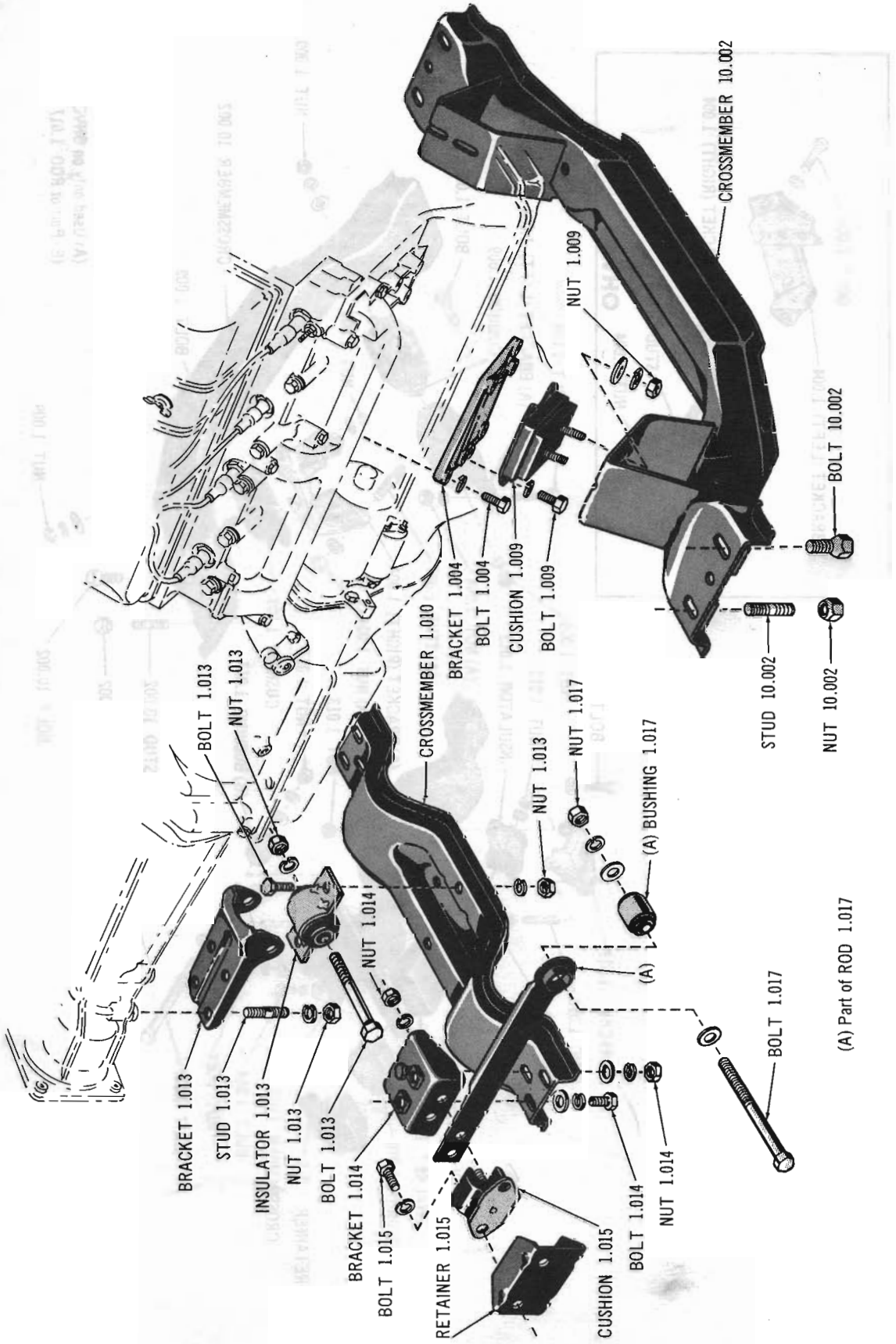

ENGINE FRONT AND REAR SUPPORT 63-64 10-80 (V8)

Copyright 1963 American Motors Corp.

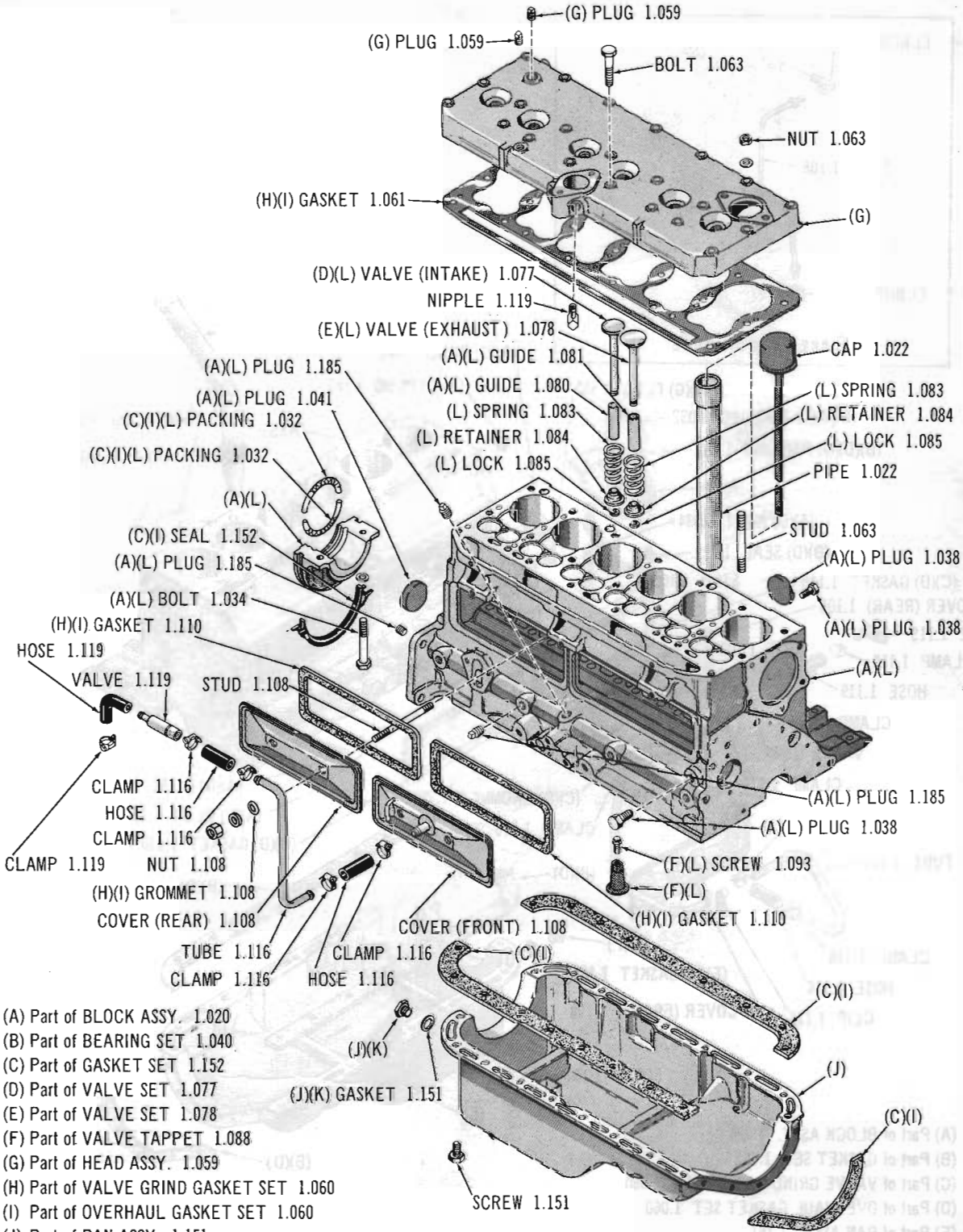

(A) Part of BLOCK ASSY. 1.020
(B) Part of BEARING SET 1.040
(C) Part of GASKET SET 1.152
(D) Part of VALVE SET 1.077
(E) Part of VALVE SET 1.078
(F) Part of VALVE TAPPET 1.088
(G) Part of HEAD ASSY. 1.059
(H) Part of VALVE GRIND GASKET SET 1.060
(I) Part of OVERHAUL GASKET SET 1.060
(J) Part of PAN ASSY. 1.151
(K) Part of PLUG ASSY. 1.151
(L) Part of ENGINE ASSY. 1.002

ENGINE CYLINDER BLOCK 60 thru Current 01 (LHE)

Copyright 1963 American Motors Corp.

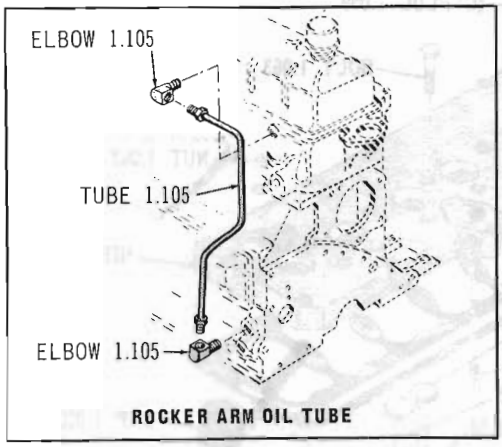

ROCKER ARM OIL TUBE

(A) Part of BLOCK ASSY. 1.020
(B) Part of GASKET SET 1.152
(C) Part of VALVE GRIND GASKET SET 1.060
(D) Part of OVERHAUL GASKET SET 1.060
(E) Part of PAN ASSY. 1.151
(F) Part of PLUG ASSY. 1.151
(G) Part of ENGINE ASSY. 1.002

ENGINE CYLINDER BLOCK 60 thru Current 01 (OHV-196): 60 thru 64 10 (OHVC-196)

Copyright 1963 American Motors Corp.

(A) Part of BLOCK ASSY. 1.020
(B) Part of GASKET SET (OVERHAUL) 1.060
(D) Part of SEAL KIT 1.032
(E) Part of PLUG KIT 1.038
(F) Part of OIL PAN ASSY. 1.151
(G) Part of GASKET SET 1.152
(H) Part of ENGINE ASSY. 1.002

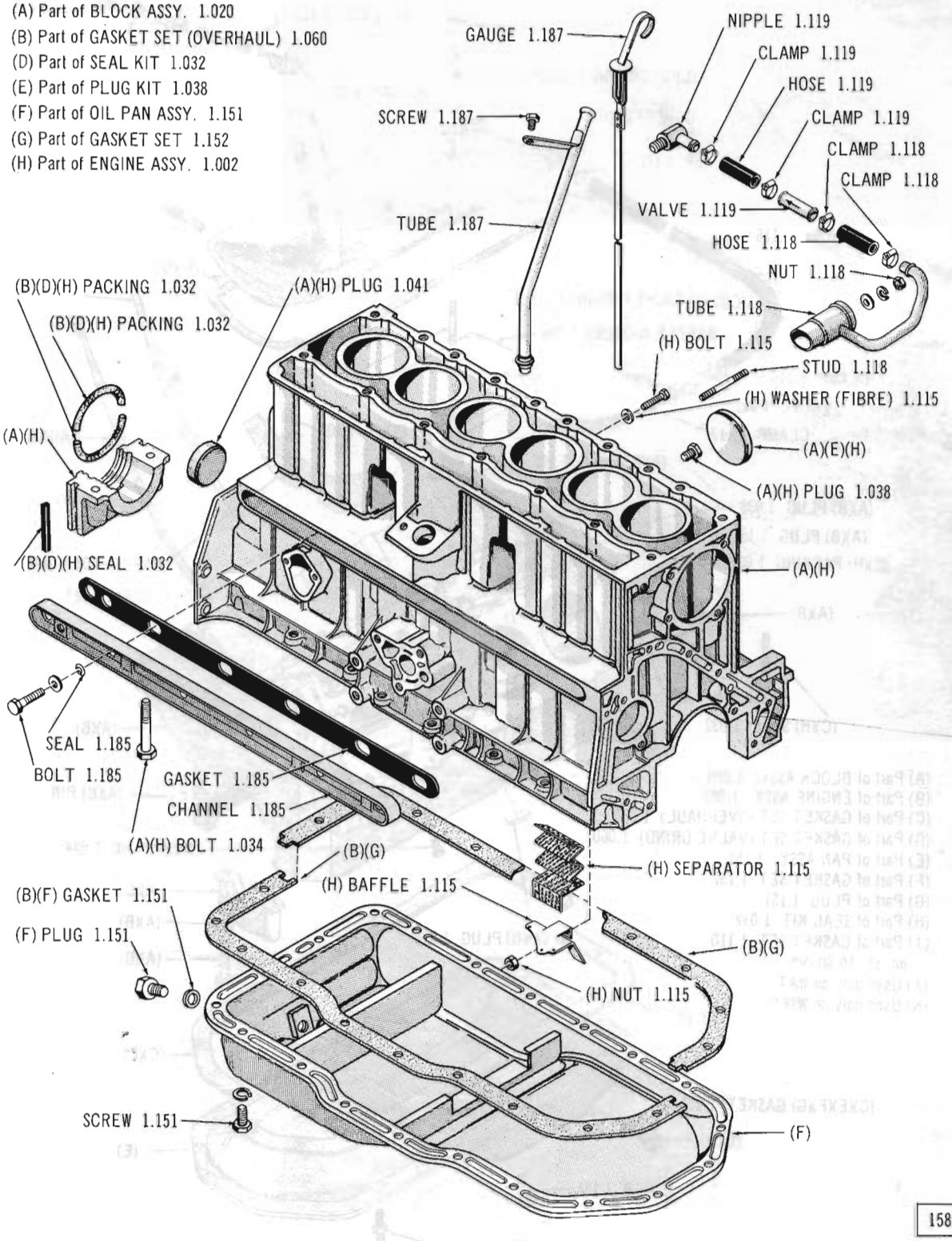

ENGINE CYLINDER BLOCK 61 thru 64 10 (OHVA)

Copyright 1963 American Motors Corp.

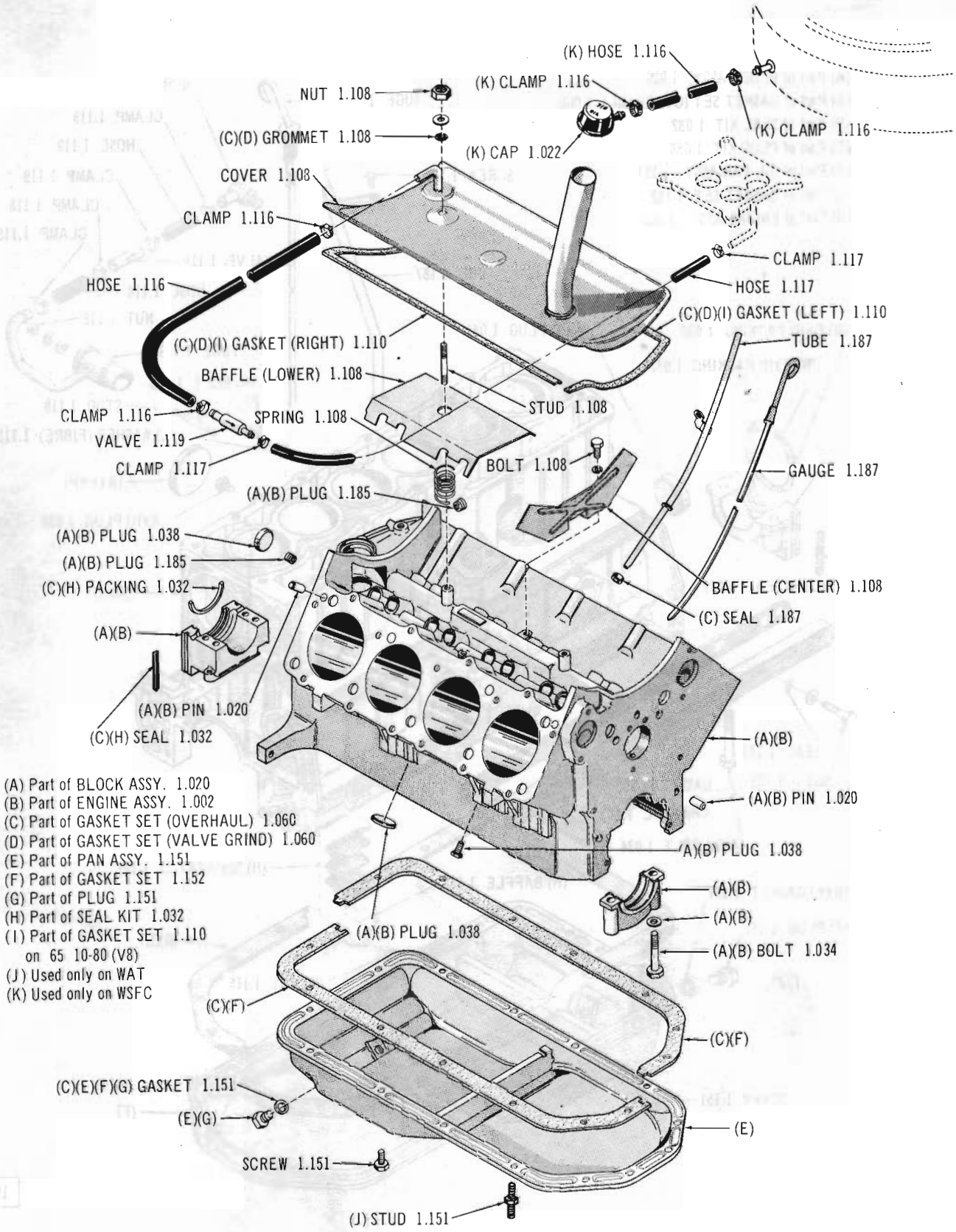

(A) Part of BLOCK ASSY. 1.020
(B) Part of ENGINE ASSY. 1.002
(C) Part of GASKET SET (OVERHAUL) 1.060
(D) Part of GASKET SET (VALVE GRIND) 1.060
(E) Part of PAN ASSY. 1.151
(F) Part of GASKET SET 1.152
(G) Part of PLUG 1.151
(H) Part of SEAL KIT 1.032
(I) Part of GASKET SET 1.110 on 65 10-80 (V8)
(J) Used only on WAT
(K) Used only on WSFC

ENGINE CYLINDER BLOCK 60 thru Current 10-20-80 (V8)

Copyright 1963 American Motors Corp.

CRANKSHAFT AND CAMSHAFT 60 thru Current 01: 60 thru Current 10 (OHV-196)

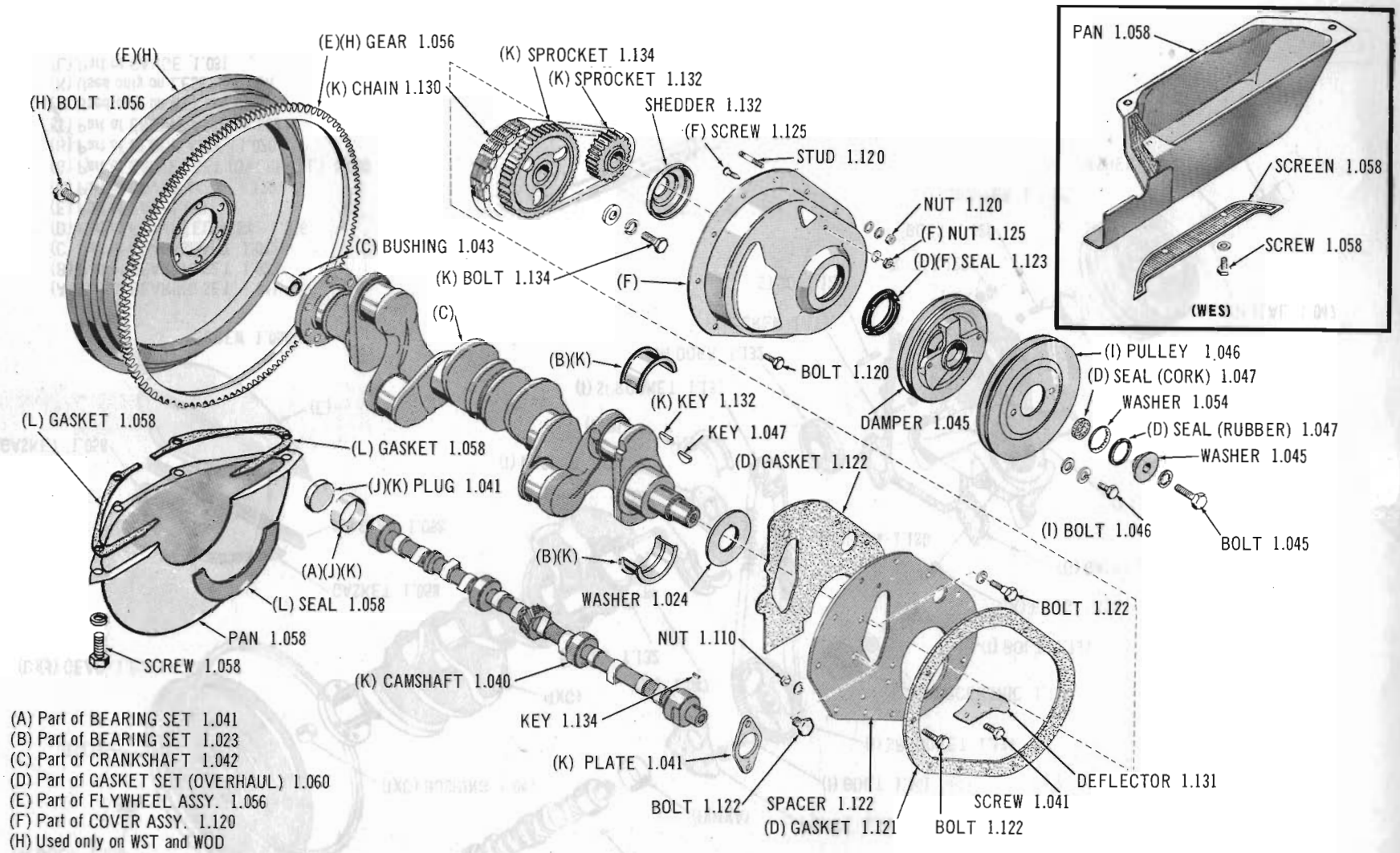

(A) Part of BEARING SET 1.041
(B) Part of BEARING SET 1.023
(C) Part of CRANKSHAFT 1.042
(D) Part of GASKET SET (OVERHAUL) 1.060
(E) Part of FLYWHEEL ASSY. 1.056
(F) Part of COVER ASSY. 1.120
(H) Used only on WST and WOD
(I) Used only on WPS and WAC
(J) Part of BLOCK ASSY. 1.020
(K) Part of ENGINE ASSY. 1.002
(L) Used on 60 thru 6301 (WST)(WOD): 6201 (WAT)
60 thru 6210 (OHVC-WST)(OHVC-WOD)

Copyright 1963 American Motors Corp.

Printed in U.S.A.

CRANKSHAFT AND CAMSHAFT 60 thru Current 10-20-80 (V8)

Copyright 1963 American Motors Corp.

Printed in U.S.A.

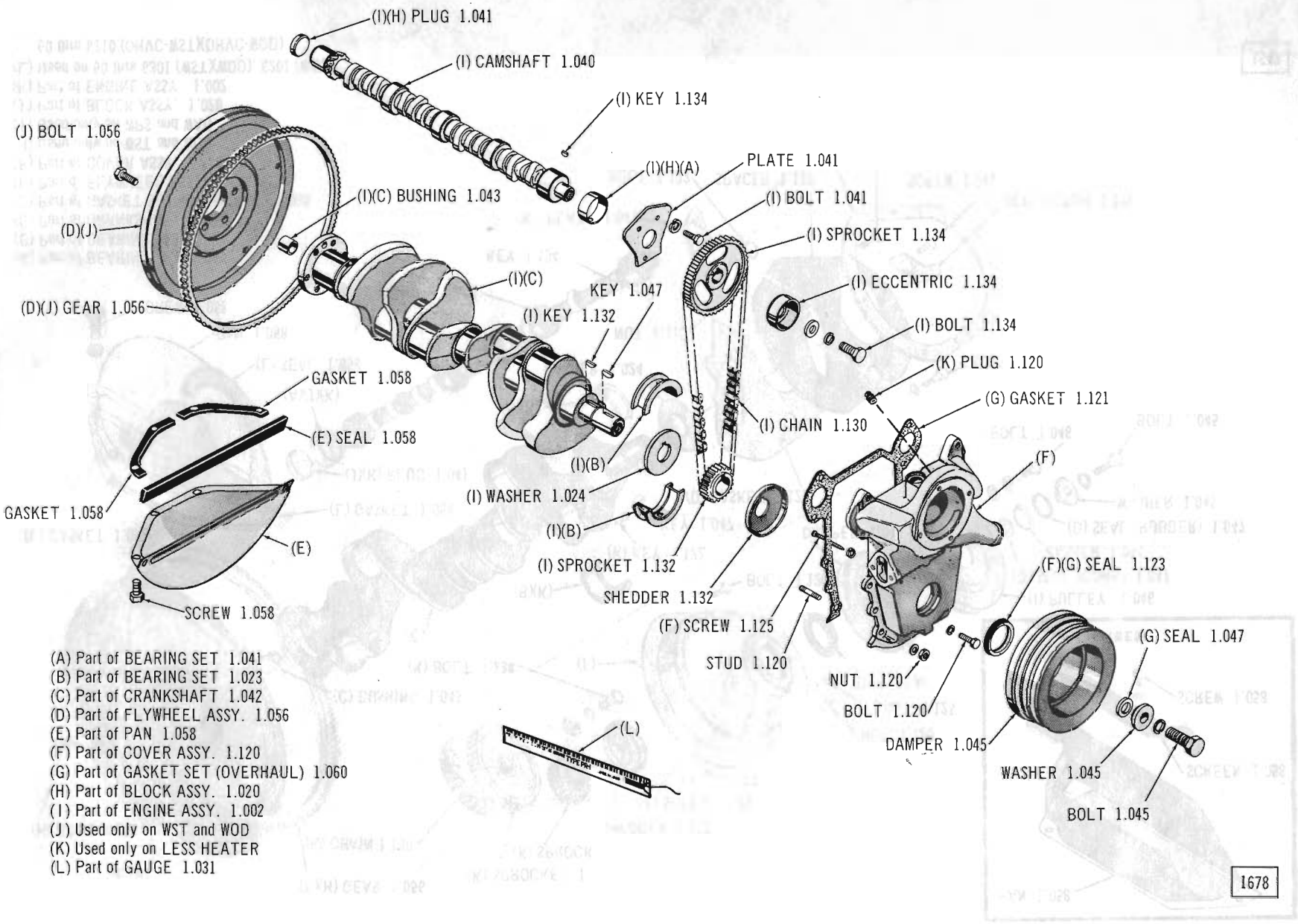

(A) Part of BEARING SET 1.041
(B) Part of BEARING SET 1.023
(C) Part of CRANKSHAFT 1.042
(D) Part of FLYWHEEL ASSY. 1.056
(E) Part of PAN 1.058
(F) Part of COVER ASSY. 1.120
(G) Part of GASKET SET (OVERHAUL) 1.060
(H) Part of BLOCK ASSY. 1.020
(I) Part of ENGINE ASSY. 1.002
(J) Used only on WST and WOD
(K) Used only on LESS HEATER
(L) Part of GAUGE 1.031

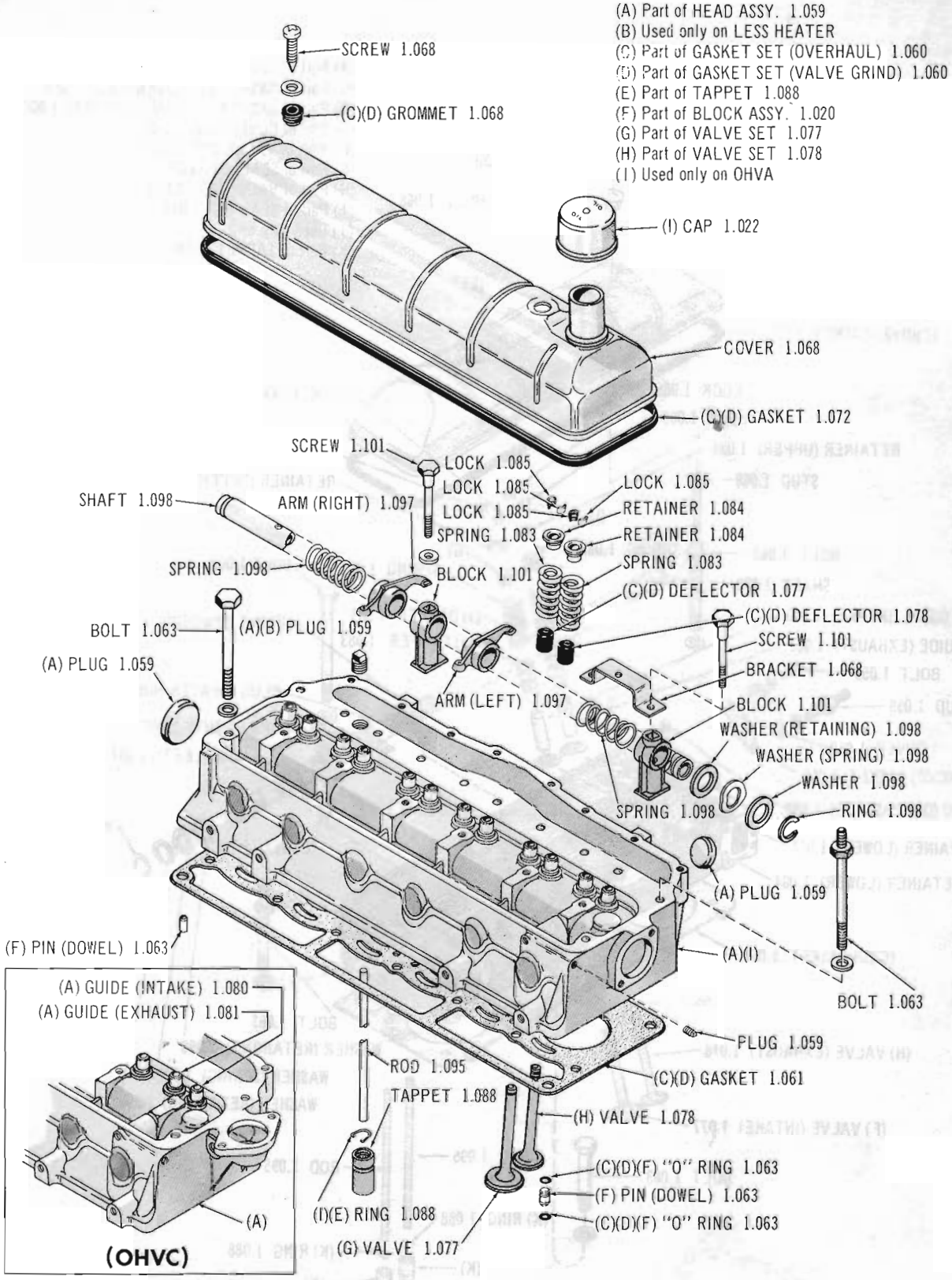

ENGINE CYLINDER HEAD 60 thru 64 01-10 (OHV-196): 65 01 (OHV-196)

Copyright 1963 American Motors Corp.

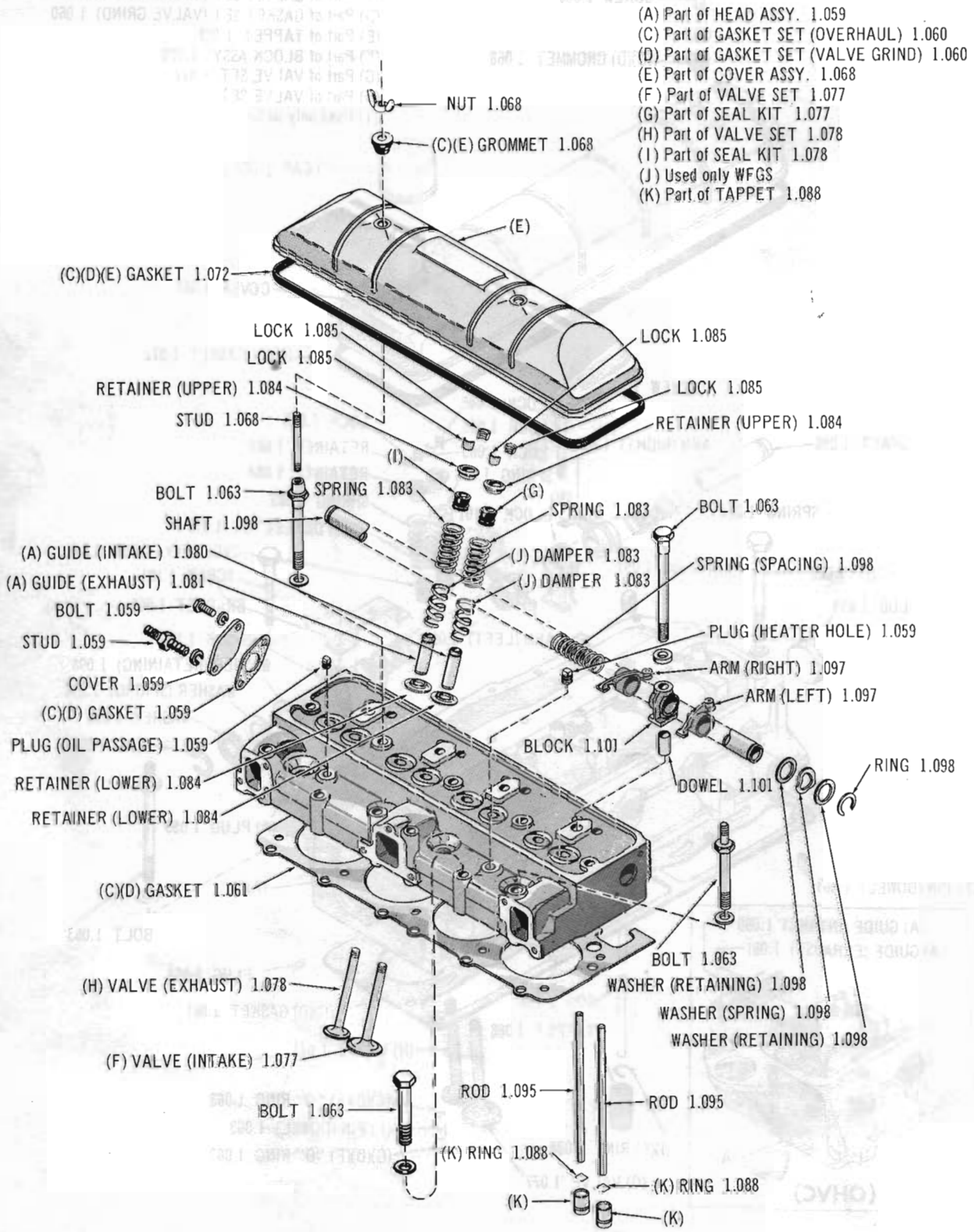

ENGINE CYLINDER HEAD 60 thru Current 10-20-80 (V8)

Copyright 1963 American Motors Corp.

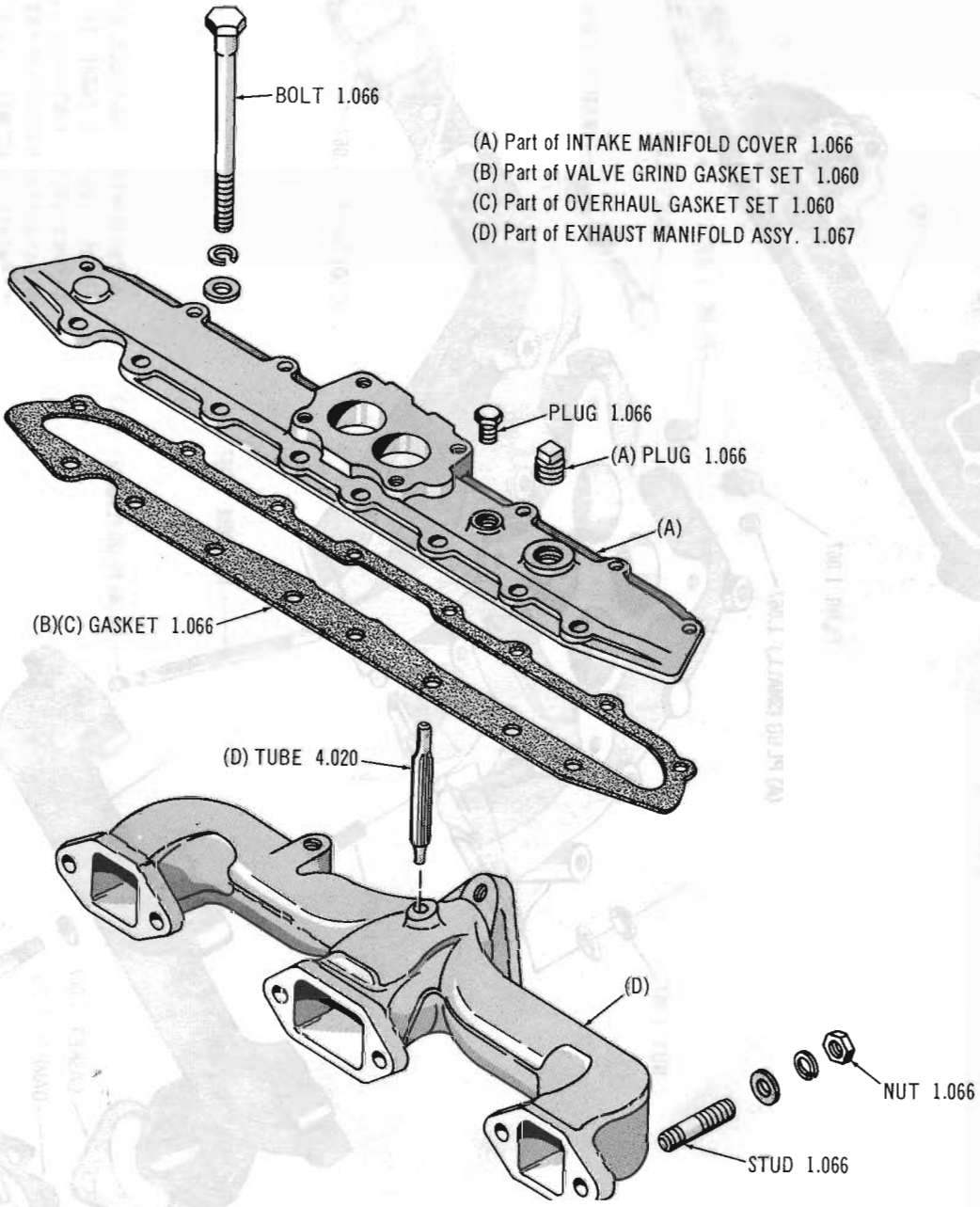

INTAKE AND EXHAUST MANIFOLD 60 thru 64 10 (OHV-196): 60 thru 65 01 (OHV-196)

Copyright 1963 American Motors Corp.

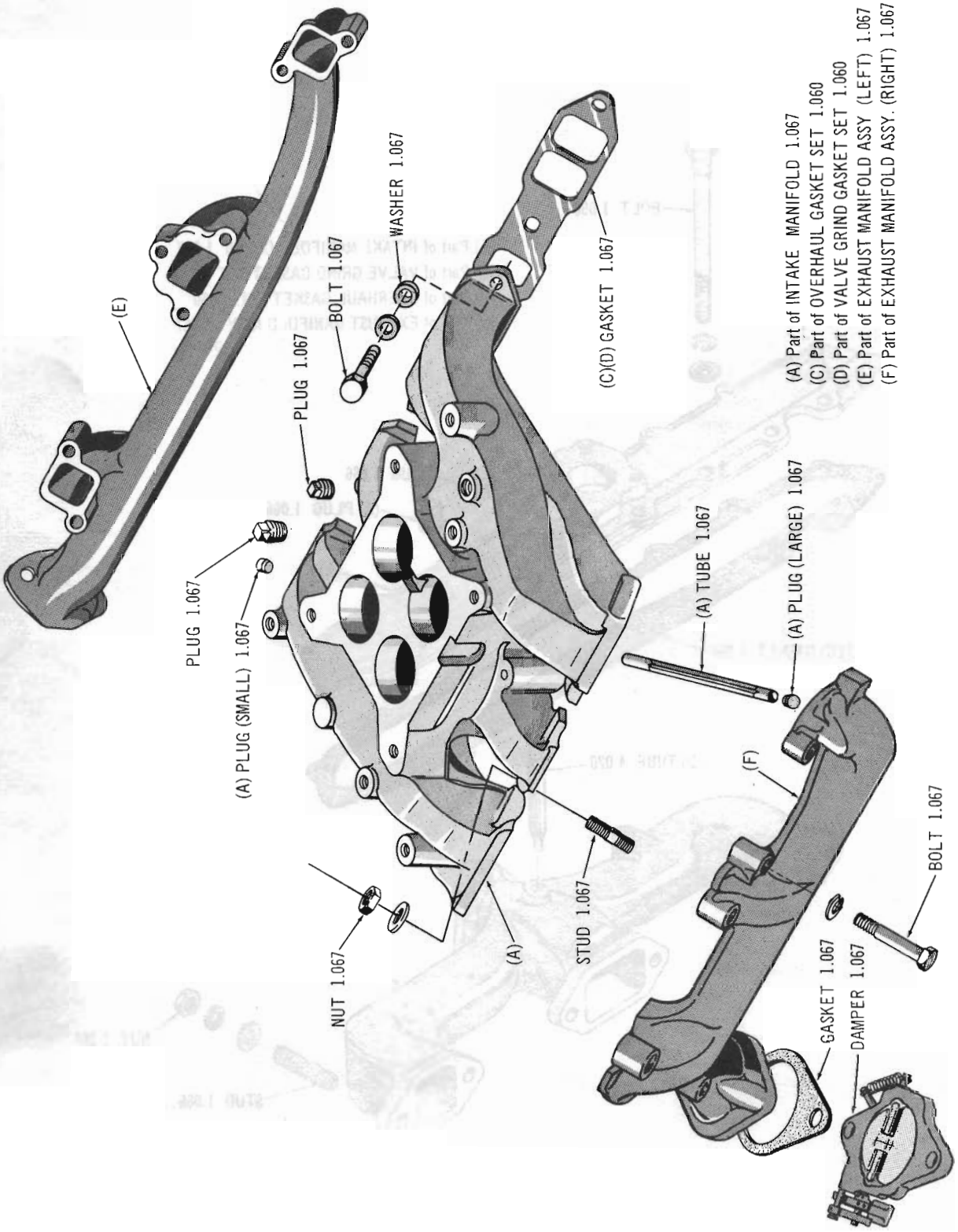

INTAKE AND EXHAUST MANIFOLD 60 thru Current 10-20-80 (V8)

Copyright 1963 American Motors Corp.

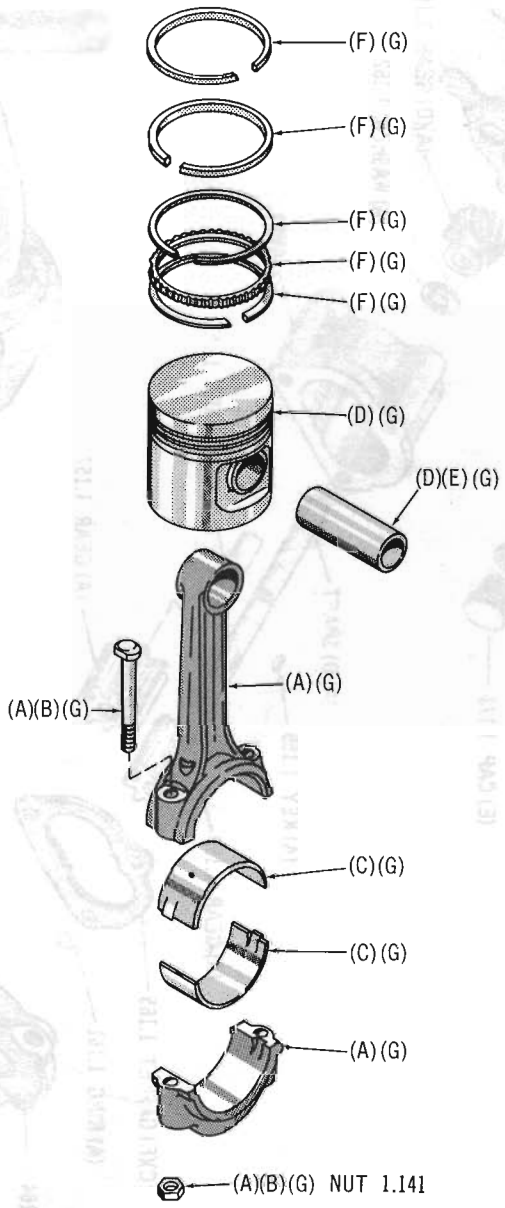

(A) Part of ROD ASSY. 1.136
(B) Part of BOLT KIT 1.136
(C) Part of BEARING and BEARING SET 1.138
(D) Part of PISTON 1.143
(E) Part of PIN SET 1.149
(F) Part of RING SET 1.146
(G) Part of ENGINE ASSY. 1.002

CONNECTING ROD, PISTON, RINGS AND BEARINGS 60 thru Current ALL MODELS

Copyright 1963 American Motors Corp.

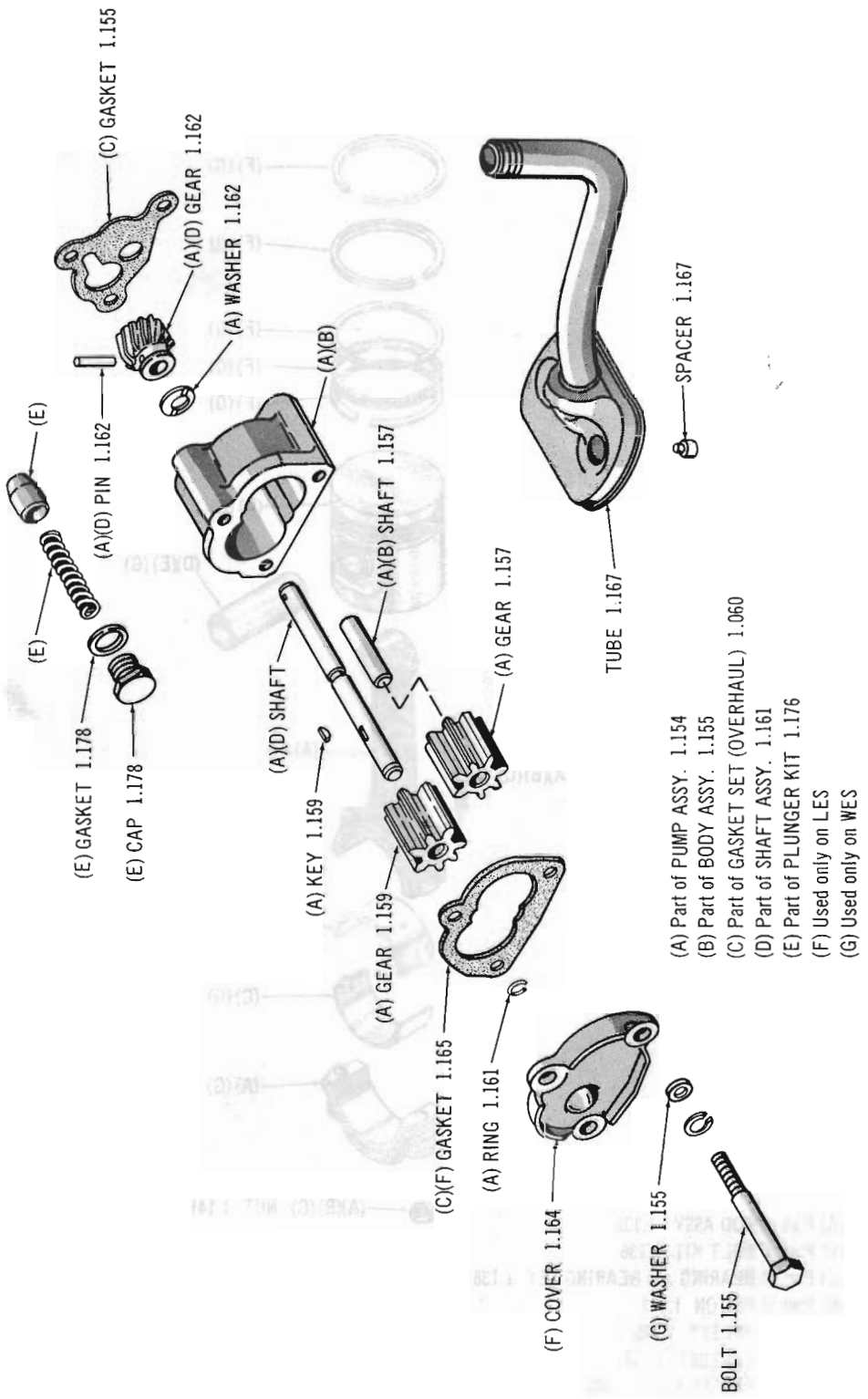

ENGINE OIL PUMP 62 thru 64 01: 62 thru 64 10 (OHVC-196)

Copyright 1963 American Motors Corp.

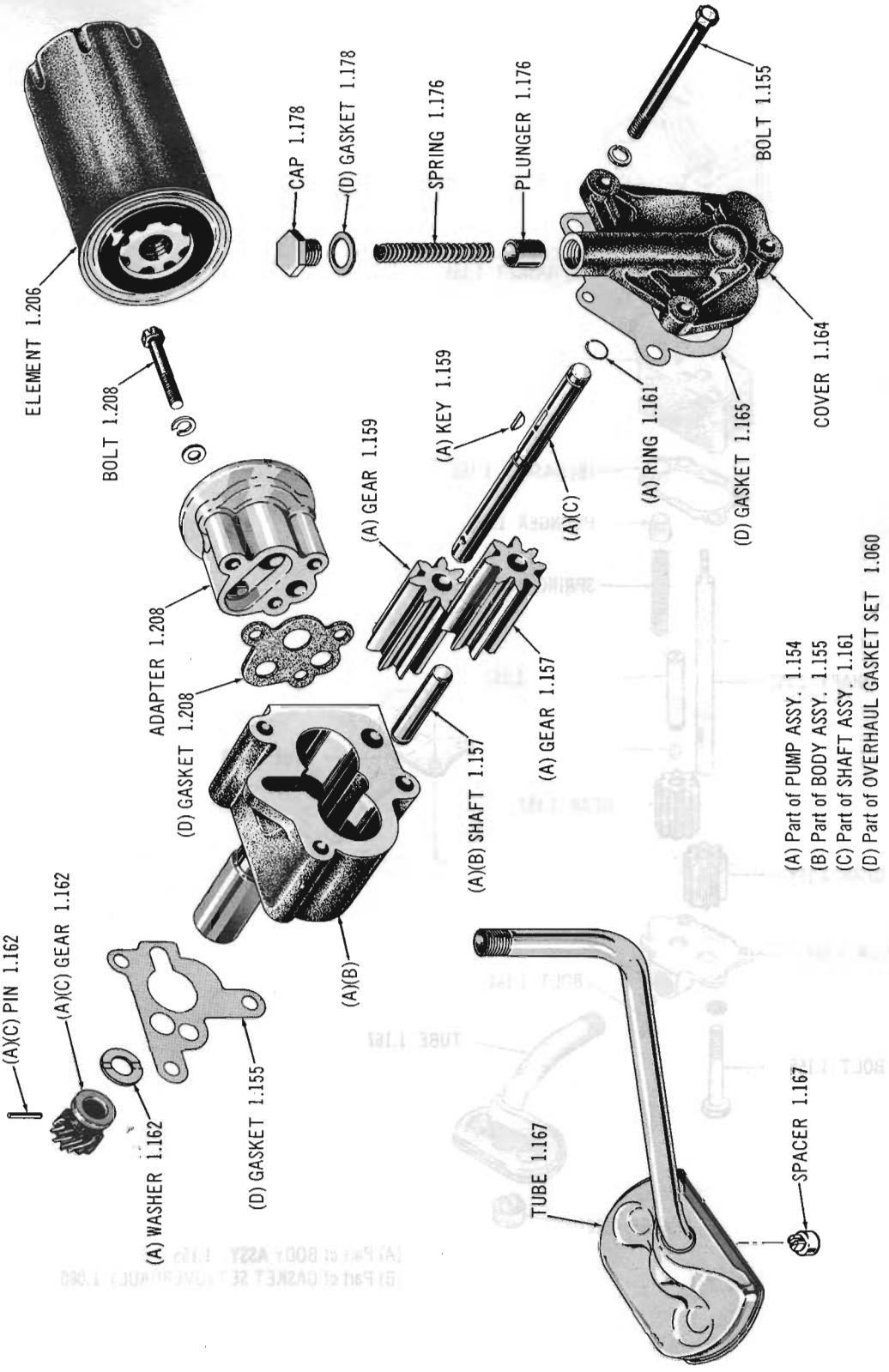

ENGINE OIL PUMP AND FILTER 61 thru 64 10 (OHVA)

Copyright 1963 American Motors Corp.

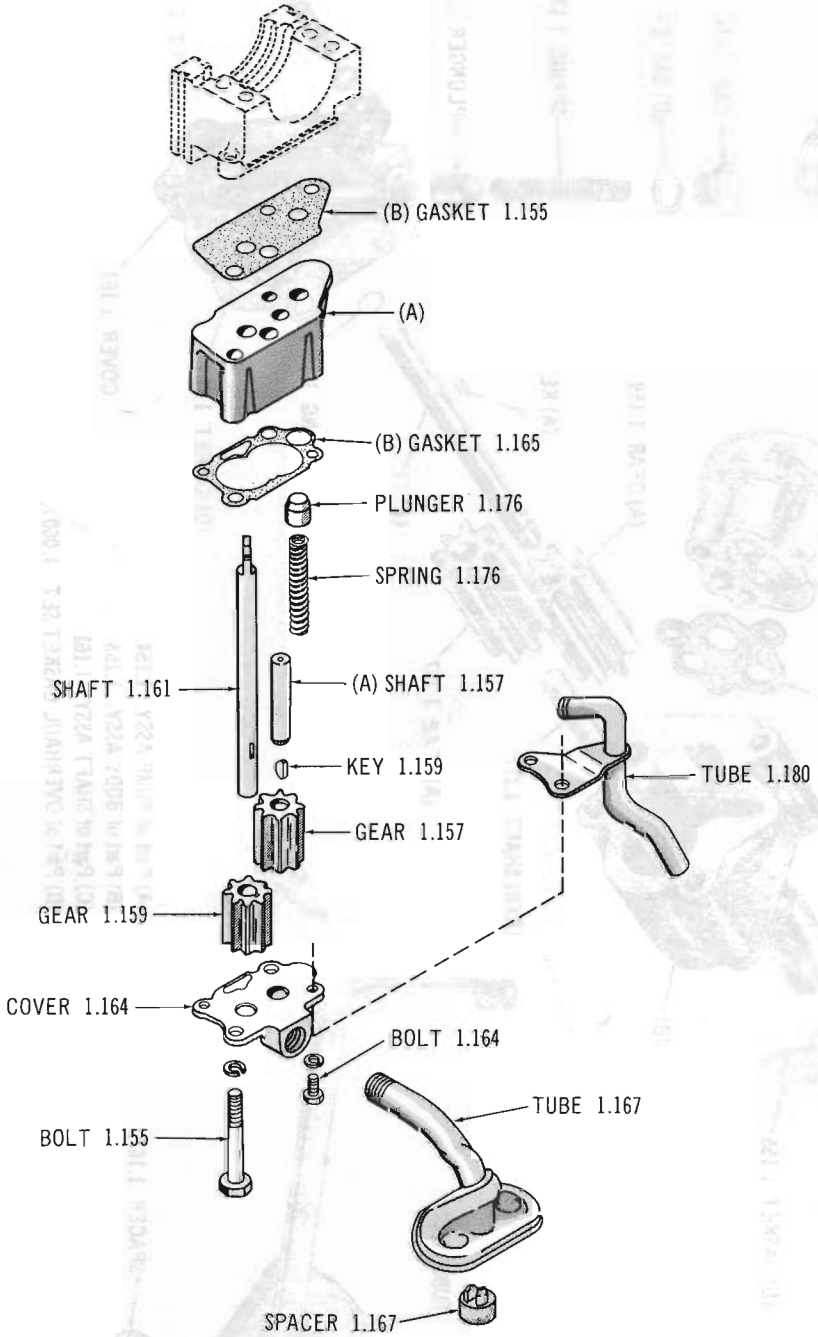

(A) Part of BODY ASSY. 1.155
(B) Part of GASKET SET (OVERHAUL) 1.060

1681

ENGINE OIL PUMP 60 thru Current 10-20-80 (V8)

Copyright 1963 American Motors Corp.

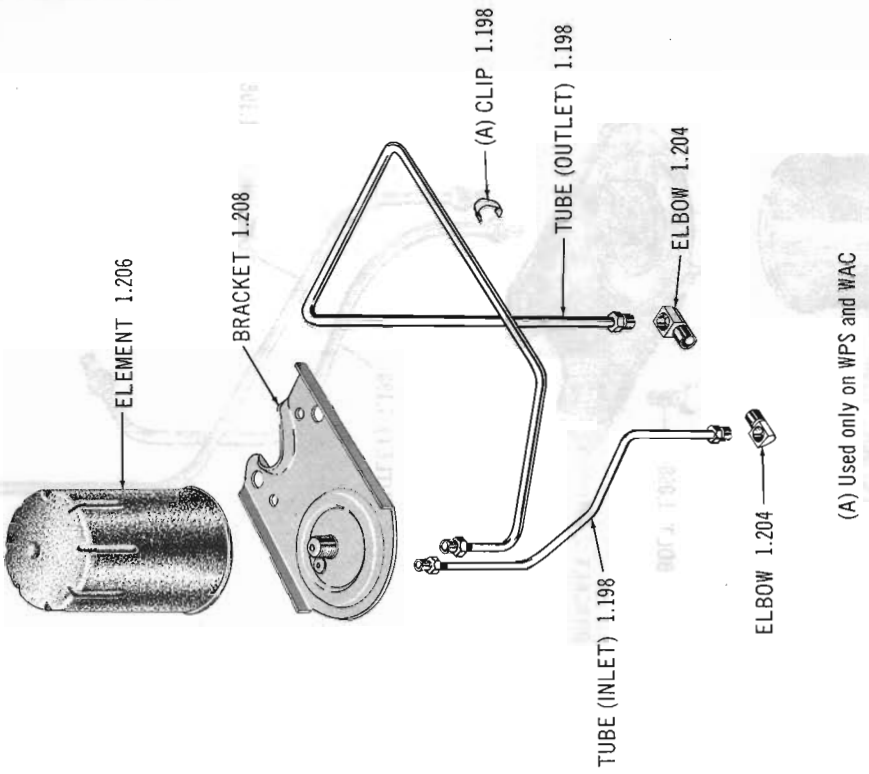

ENGINE OIL FILTER 60 thru 64 01 (LHE)

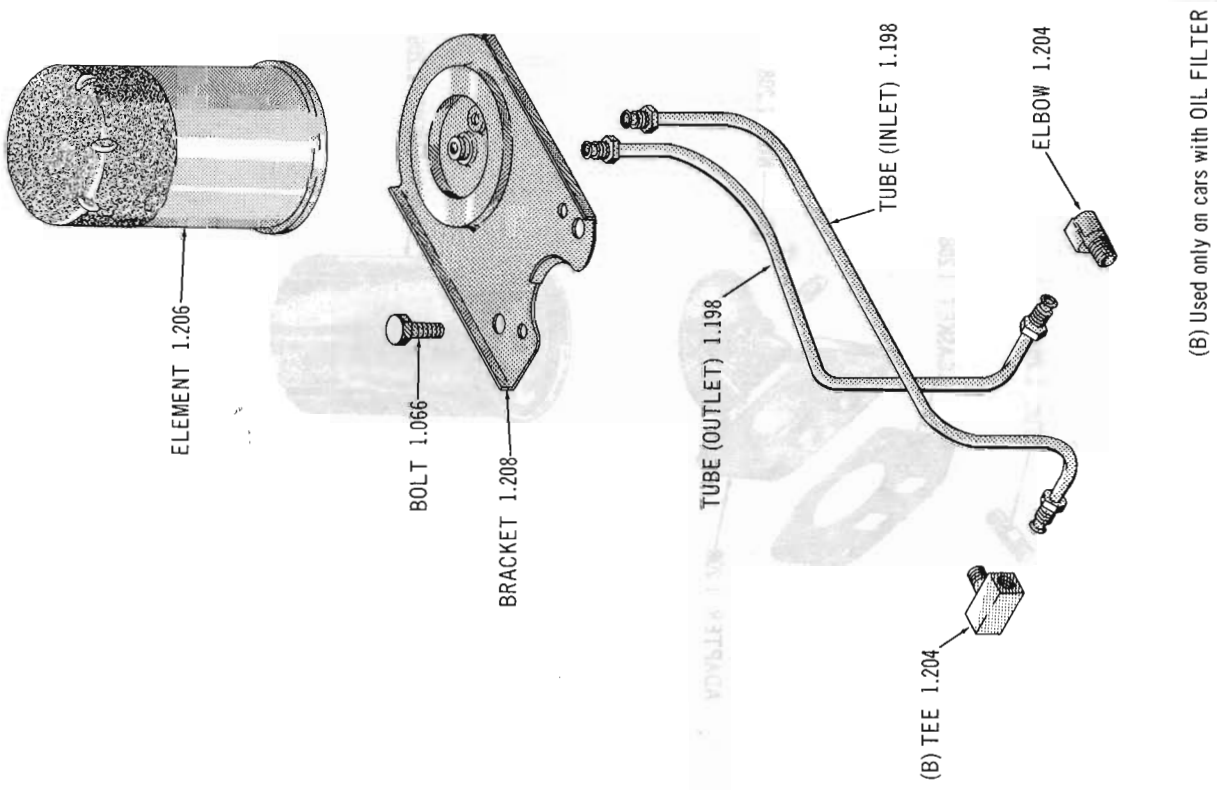

ENGINE OIL FILTER 60 thru 63 01-10 (OHVC)

Copyright 1963 American Motors Corp.

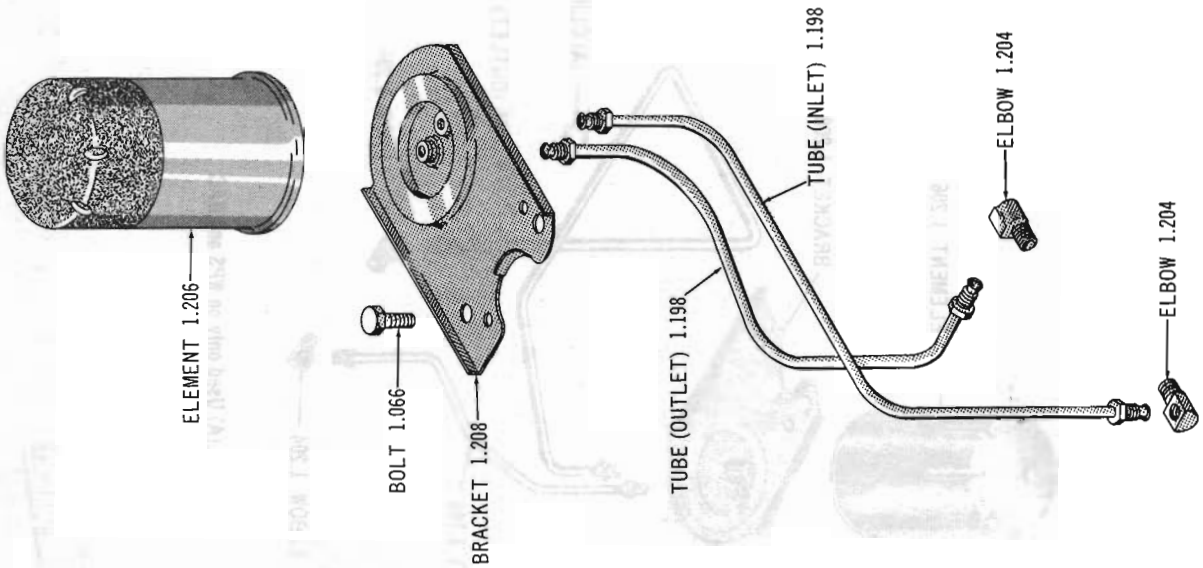

ENGINE OIL FILTER 64 01-10 (OHVC-196)

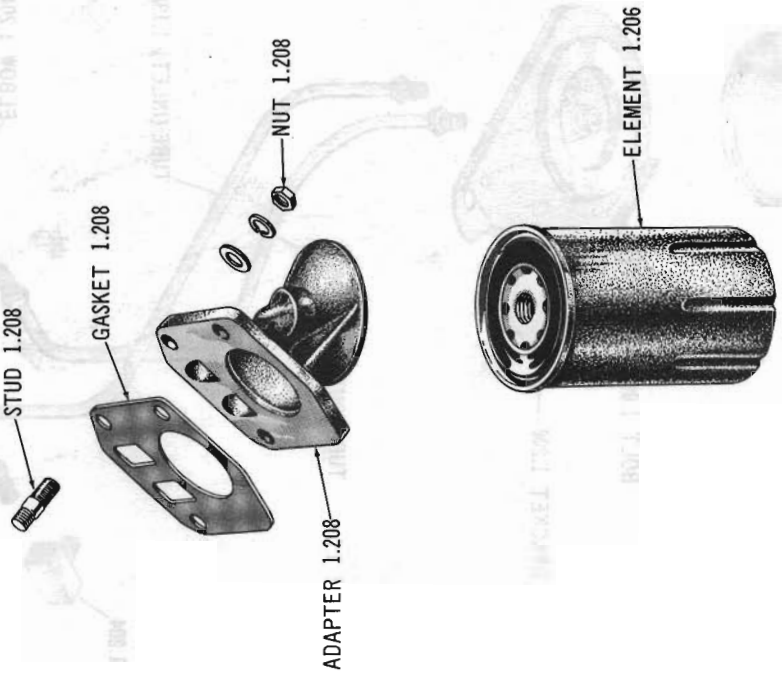

ENGINE OIL FILTER 60 thru Current 10-20-80 (V8)

Copyright 1963 American Motors Corp.

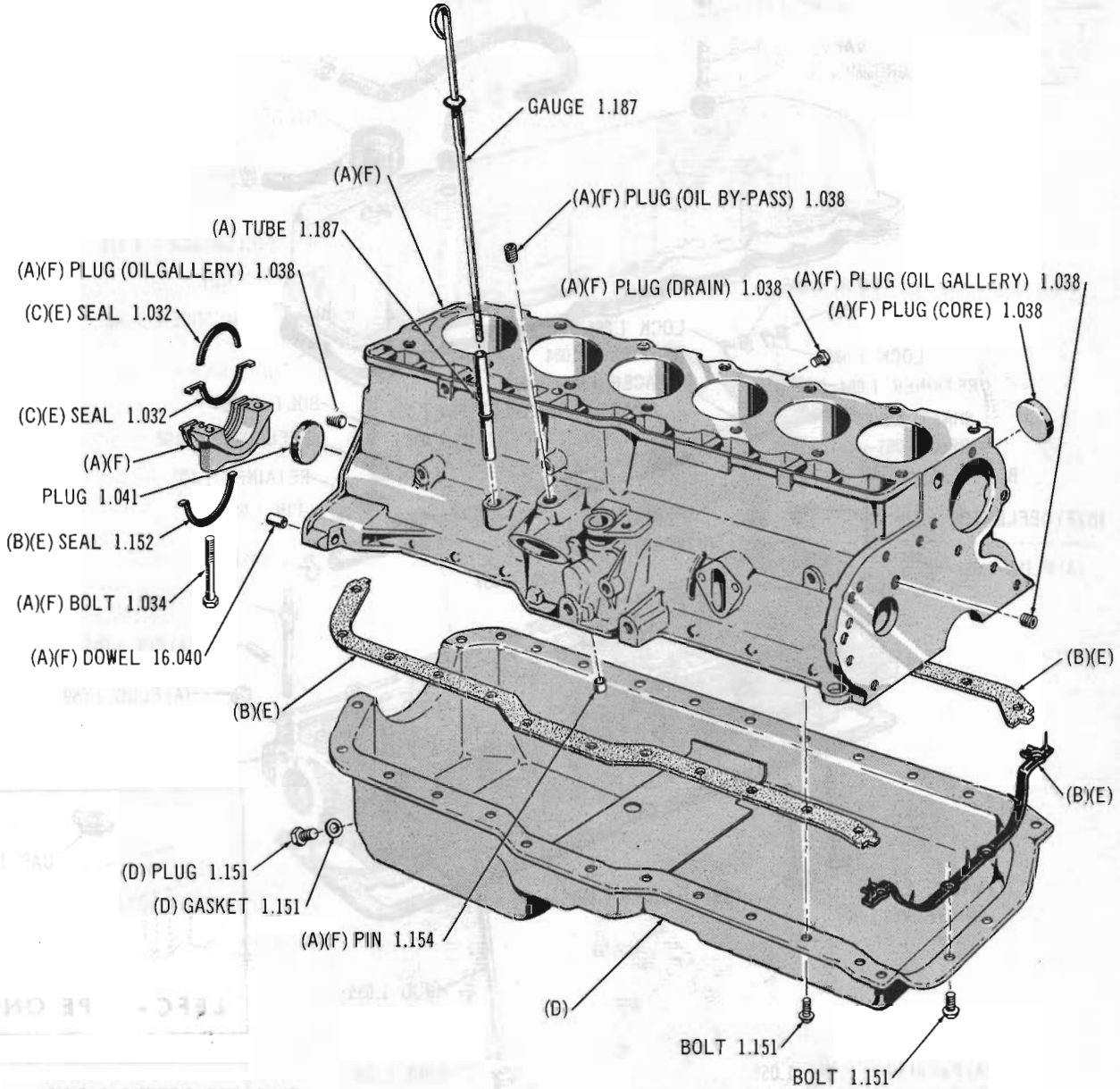

(A) Part of BLOCK ASSY. 1.020
(B) Part of GASKET SET 1.152
(C) Part of SEAL KIT 1.032
(D) Part of PAN ASSY. 1.151
(E) Part of GASKET SET (OVERHAUL) 1.060
(F) Part of ENGINE ASSY. 1.002

1838

ENGINE CYLINDER BLOCK 64 10 (OHV-232): 65 ALL MODELS (OHV-232): 65 10 (OHV-199)

Copyright 1963 American Motors Corp.

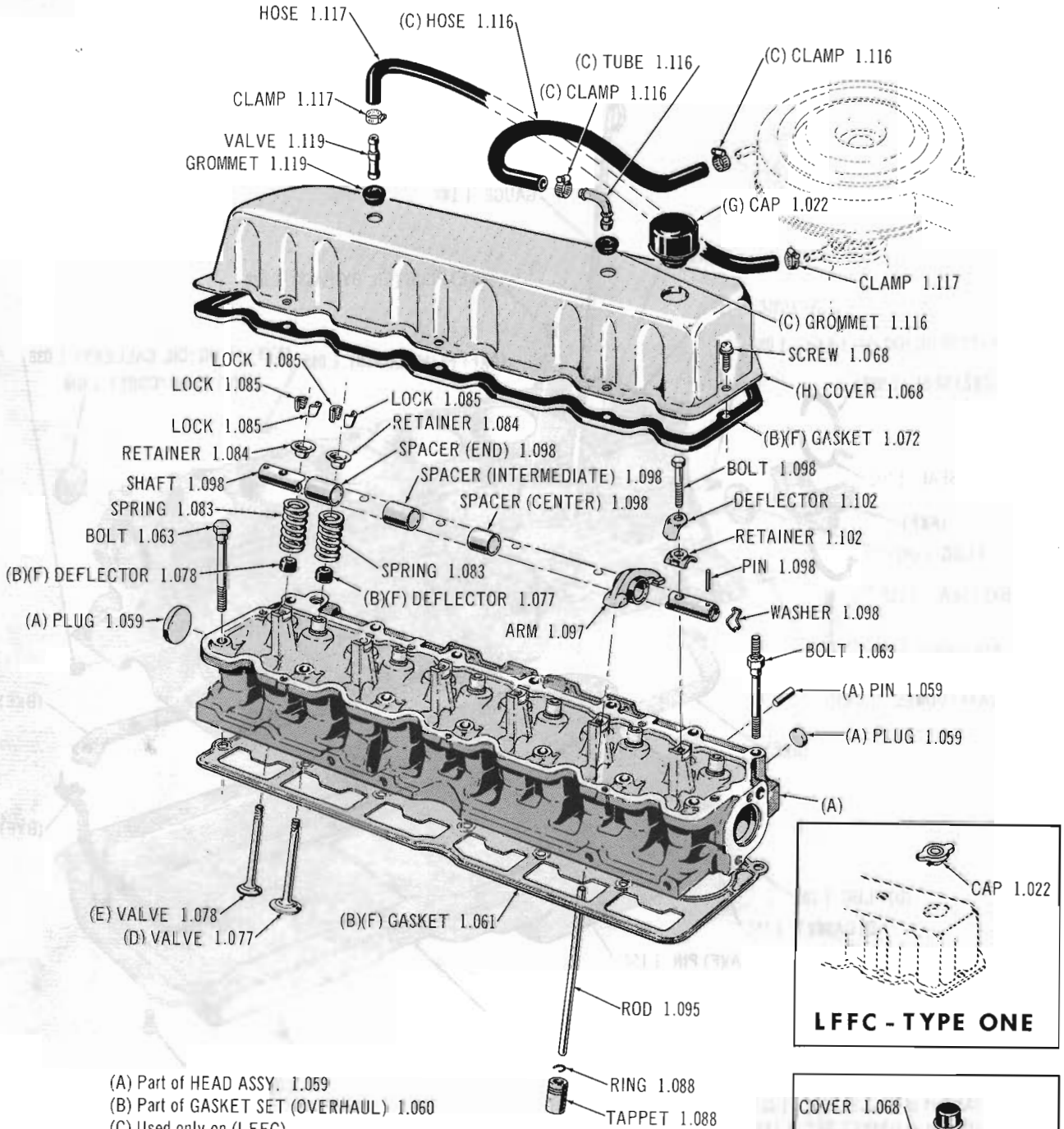

(A) Part of HEAD ASSY. 1.059
(B) Part of GASKET SET (OVERHAUL) 1.060
(C) Used only on (LFFC)
(D) Part of VALVE SET 1.077
(E) Part of VALVE SET 1.078
(F) Part of GASKET SET (VALVE GRIND) 1.060
(G) Used only on (WFFC-TYPE ONE)
(H) Used only on (TYPE ONE)

1839

ENGINE CYLINDER HEAD 64 10 (OHV-232): 65 ALL MODELS (OHV-232): 65 10 (OHV-199)

Copyright 1963 American Motors Corp.

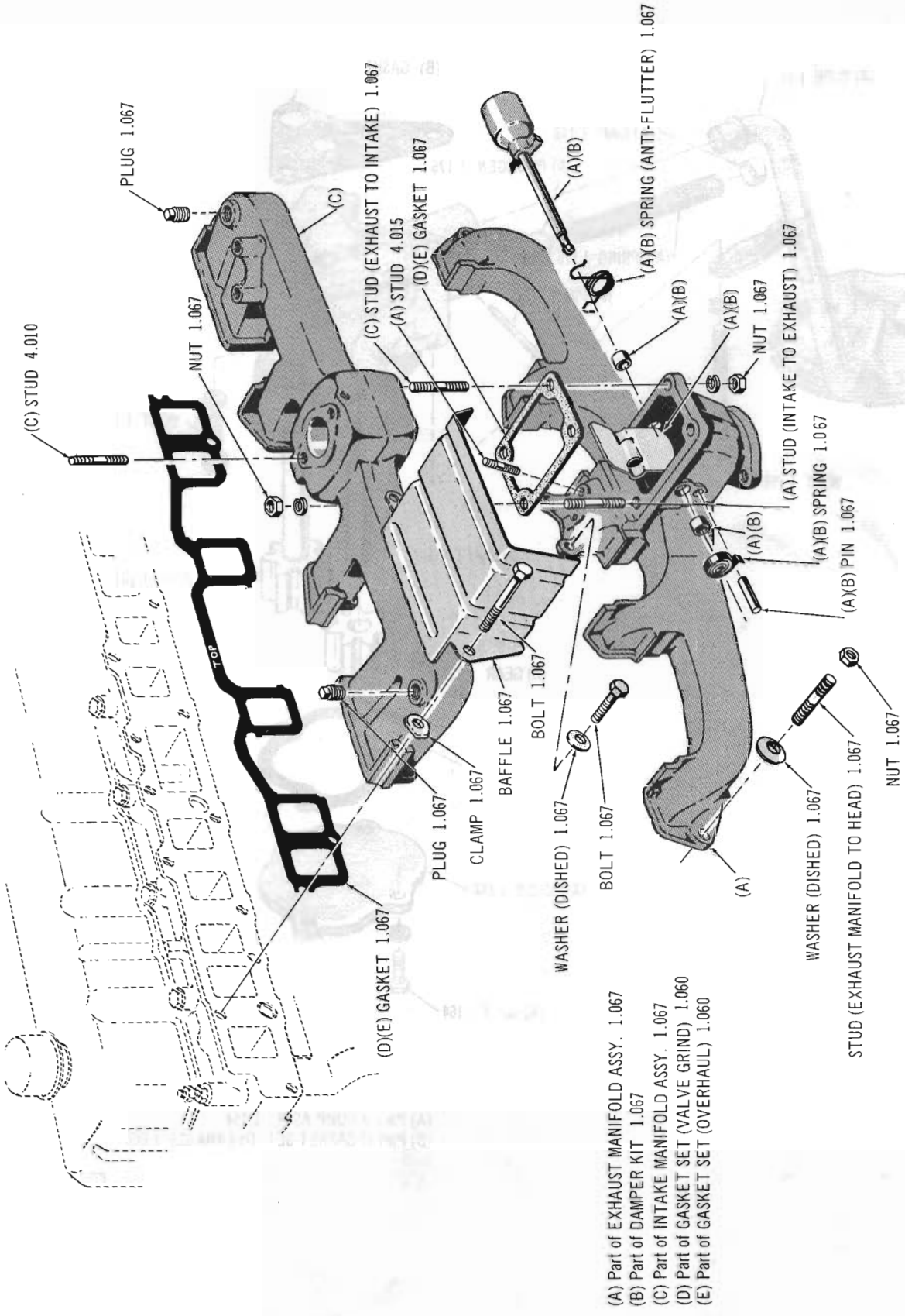

INTAKE AND EXHAUST MANIFOLD 64 10 (OHV-232): 65 ALL MODELS (OHV-232): 65 10 (OHV-199)

Copyright 1963 American Motors Corp.

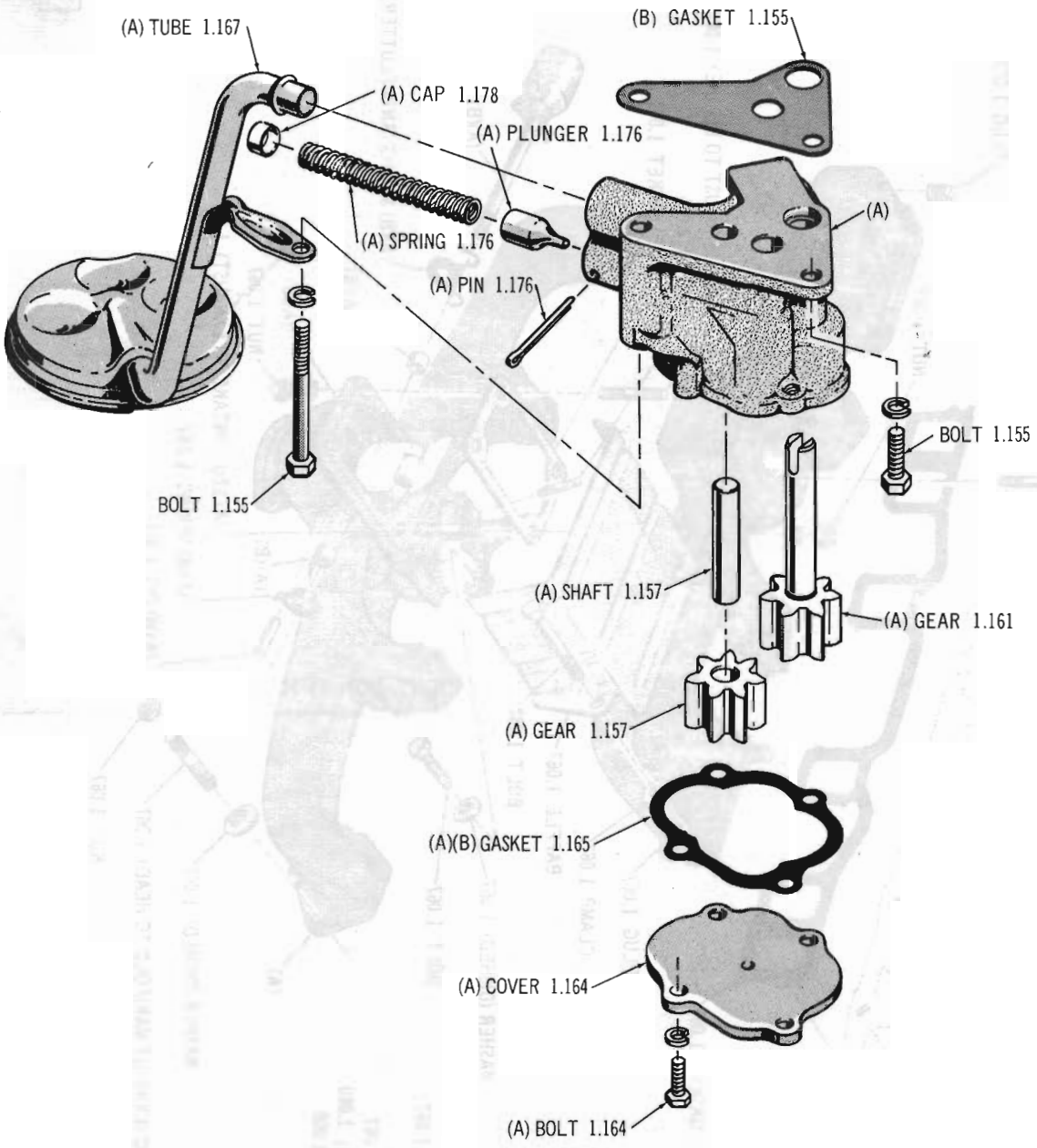

(A) Part of PUMP ASSY. 1.154
(B) Part of GASKET SET (OVERHAUL) 1.060

1915

ENGINE OIL PUMP 64 10 (OHV-232): 65 ALL MODELS (OHV-232): 65 10 (OHV-199)

Copyright 1963 American Motors Corp.

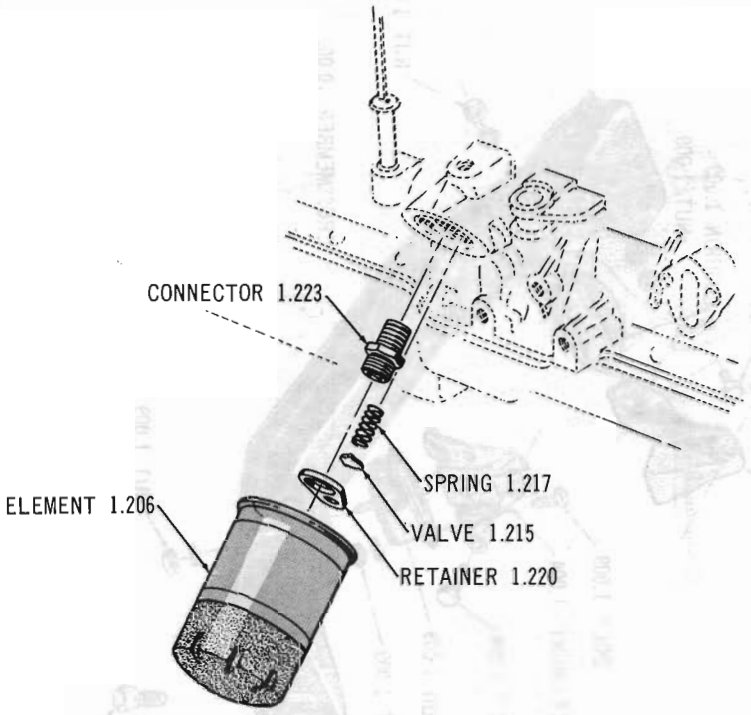

ENGINE OIL FILTER 64 10 (OHV-232): 65 ALL MODELS (OHV-232): 65 10 (OHV-199)

Copyright 1963 American Motors Corp.

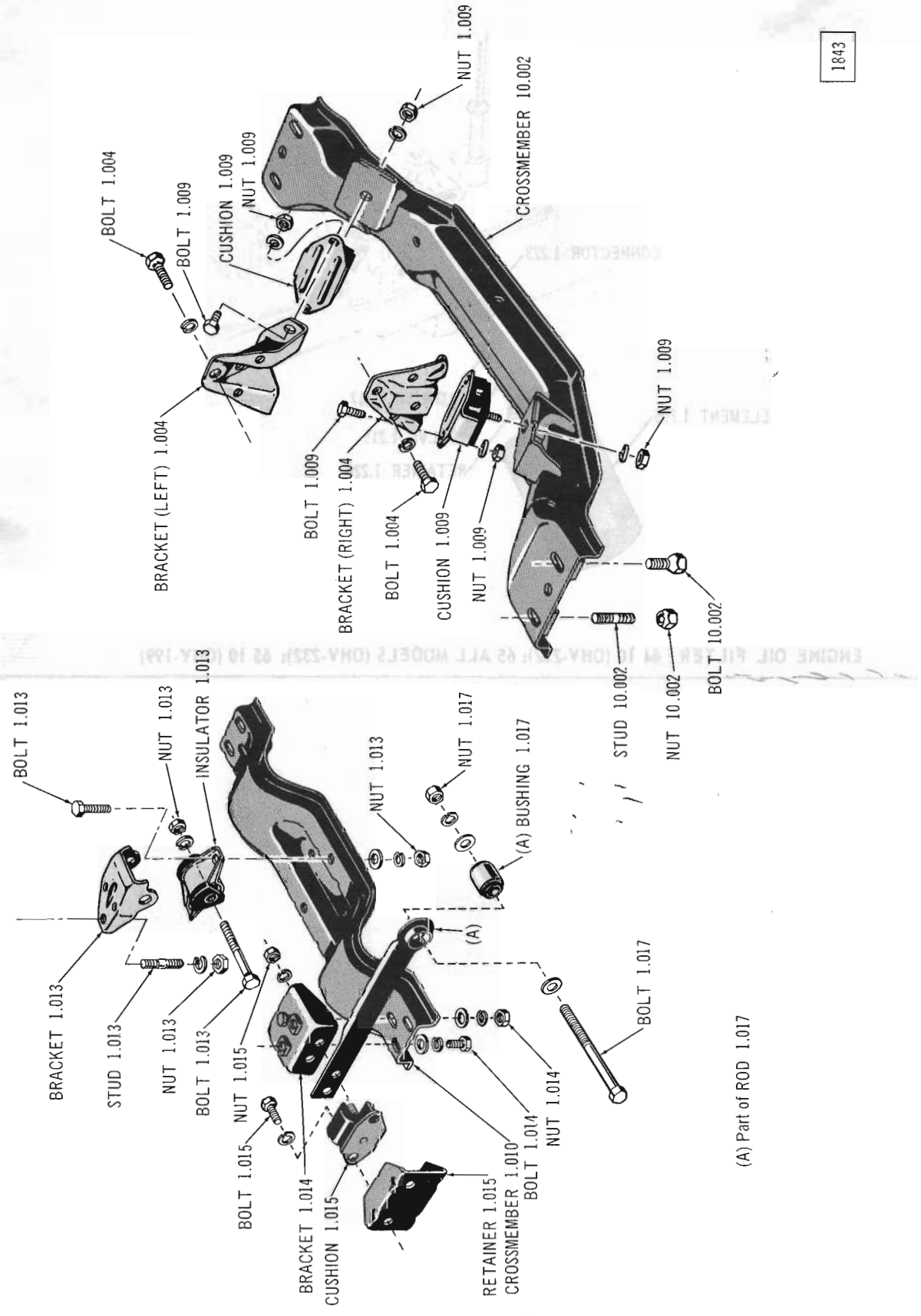

ENGINE FRONT AND REAR SUPPORTS 64 10 (OHV-232): 65 ALL MODELS (OHV-232): 65 10 (OHV-199)

Copyright 1963 American Motors Corp.

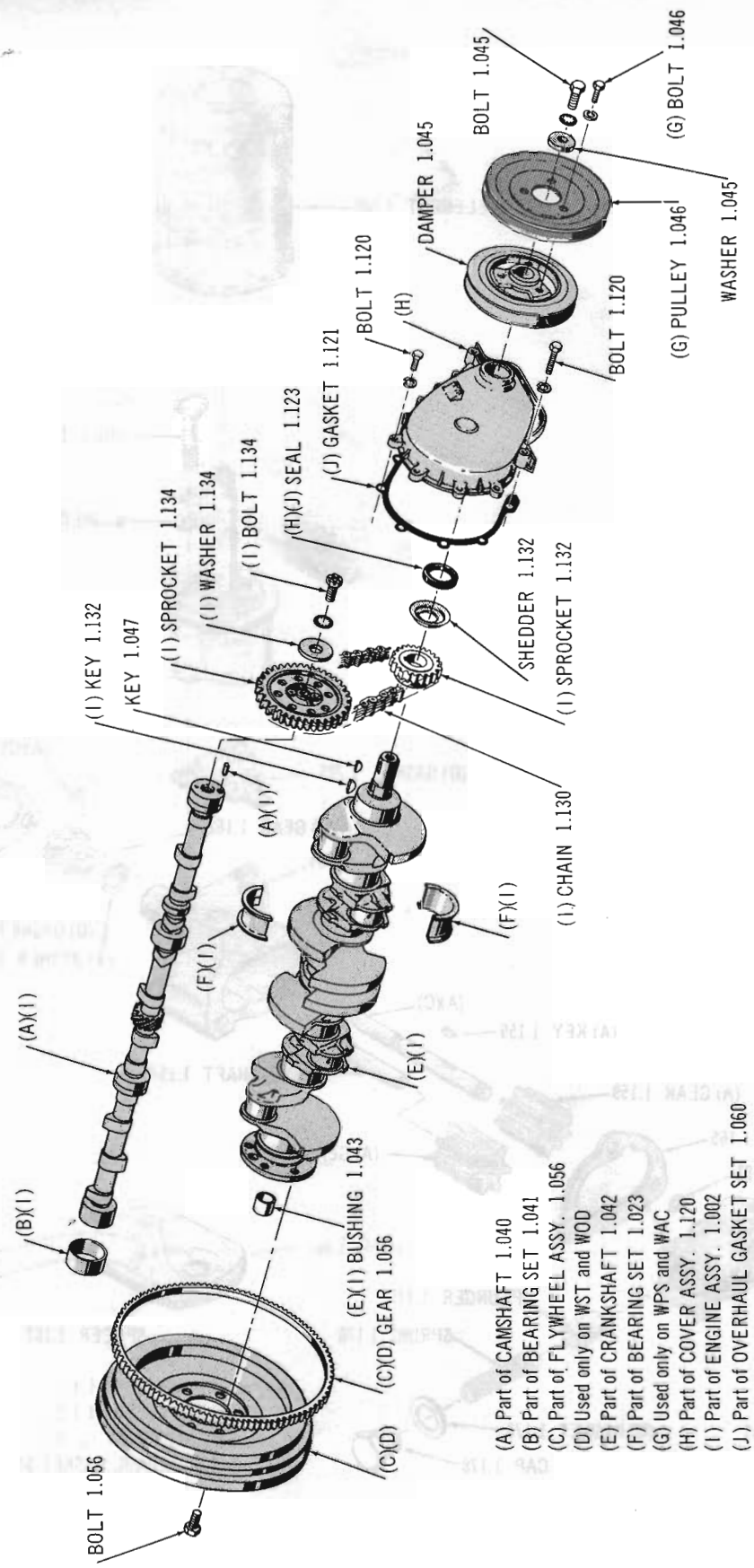

CRANKSHAFT AND CAMSHAFT 64 10 (OHV-232): 65 ALL MODELS (OHV-232): 65 10 (OHV-199)

Copyright 1963 American Motors Corp.

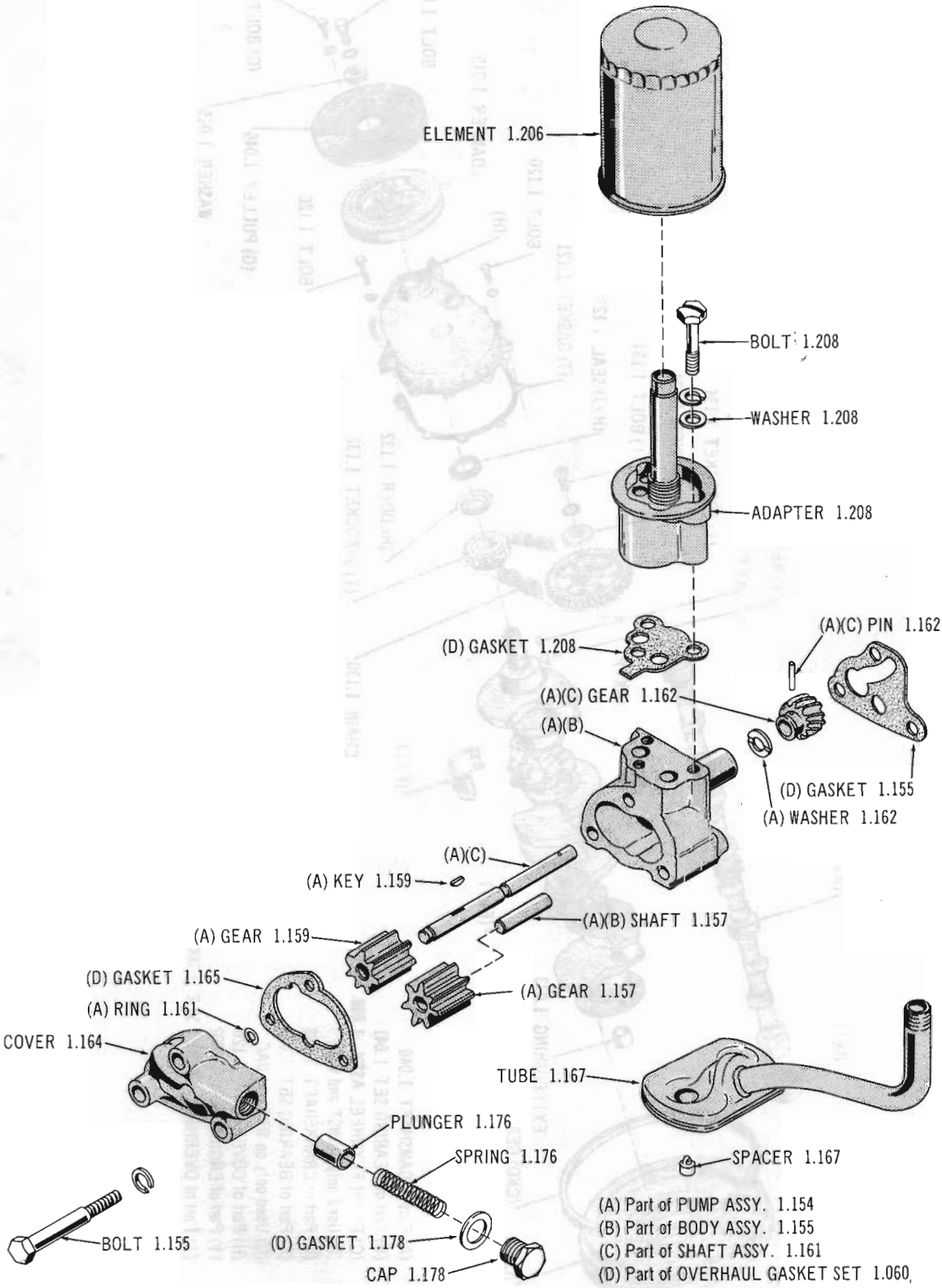

ENGINE OIL PUMP AND FILTER 65 01 (LHE)(OHV-196)

Copyright 1963 American Motors Corp.

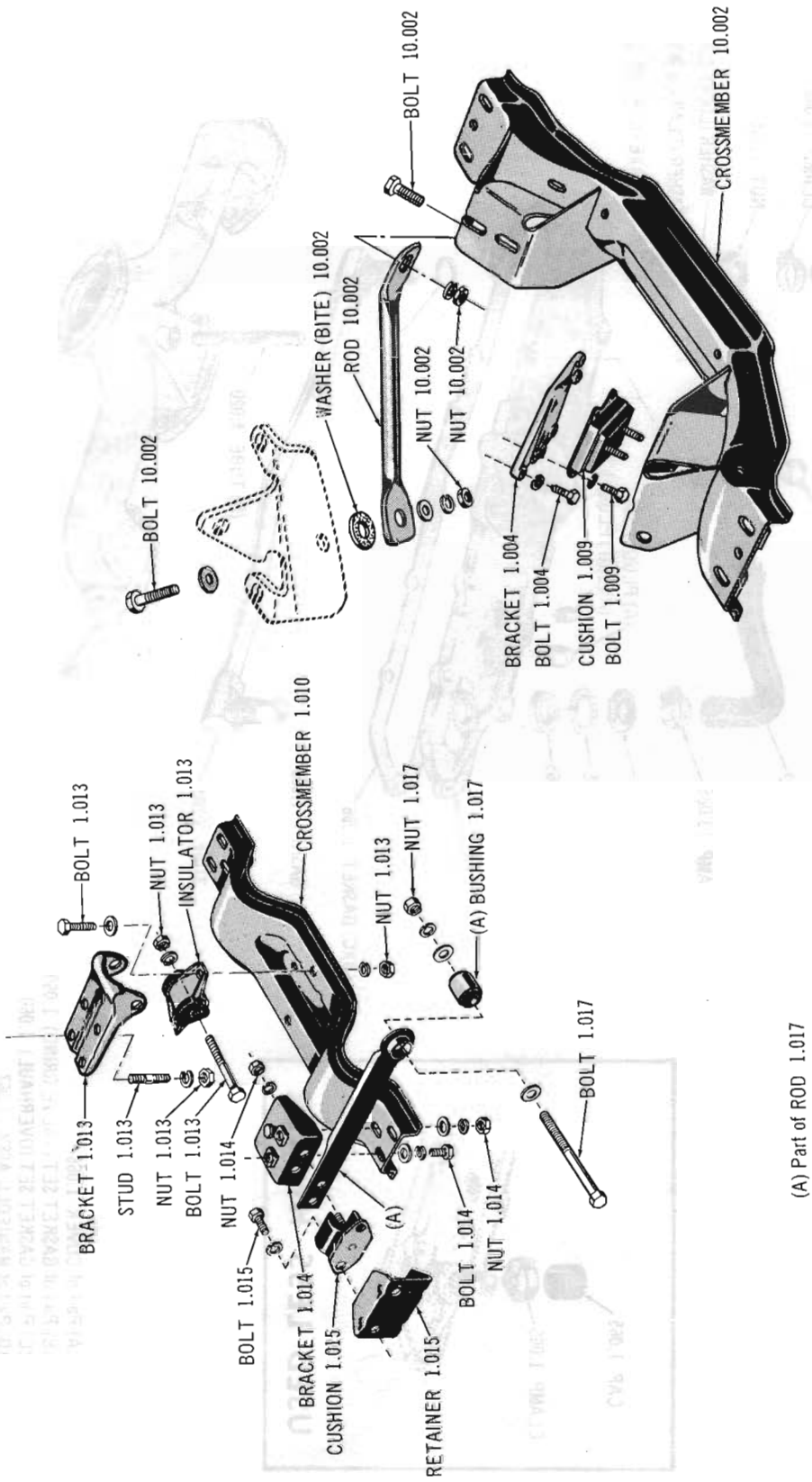

ENGINE FRONT AND REAR SUPPORT 65 10-80 (V8)

Copyright 1963 American Motors Corp.

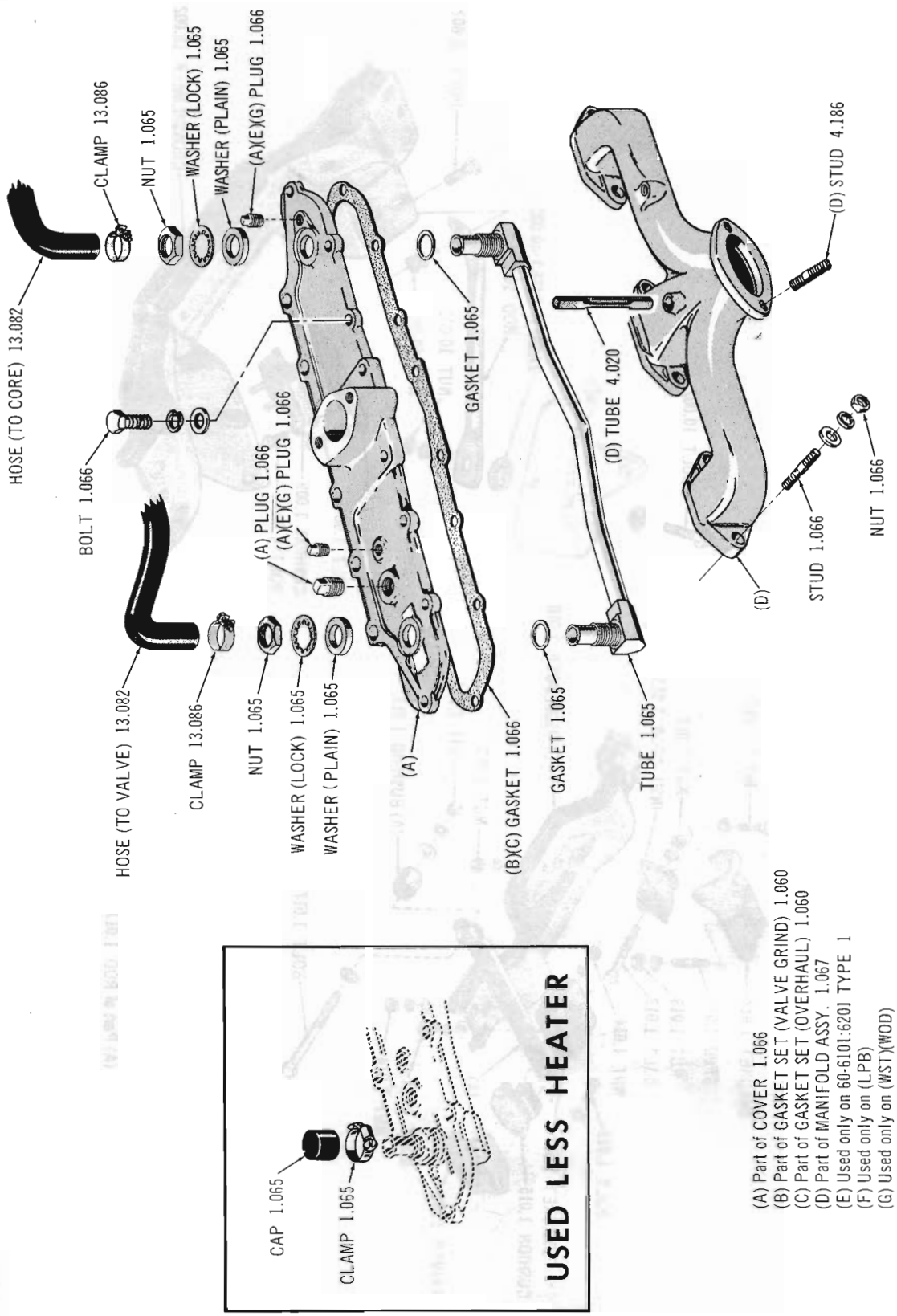

(A) Part of COVER 1.066
(B) Part of GASKET SET (VALVE GRIND) 1.060
(C) Part of GASKET SET (OVERHAUL) 1.060
(D) Part of MANIFOLD ASSY. 1.067
(E) Used only on 60-6101:6201 TYPE 1
(F) Used only on (LPB)
(G) Used only on (WST)(WOD)

WATER HEATED INTAKE AND EXHAUST MANIFOLD 60 thru 65 01 (OHV-196-LDT)

Copyright 1963 American Motors Corp.

GROUP NO. — DESCRIPTION — YEAR and MODEL	PRIMARY GROUP NO.	PER CAR	PART NO.	CODE
1.002 ENGINE ASSEMBLY, Short (Incl. Cylinder Block, Pistons, Pins, Rings, Connecting Rods, Main Bearings, Crankshaft, Camshaft, Camshaft Bearing, Valve Lifters (On 01 And 10 (OHVC) Only), Valves (On 01 (LHE) Only), Timing Gears And Timing Chain).				
60 Thru 62 01 (LHE-WST)(LHE-WOD): 63 01 (LHE-WST-Note 1.002-3)(LHE-WOD-Note 1.002-3)***(Replaces 320 0906, 320 2589, 320 3315)***	.....	1	320 3901	
60 Thru 63 01 (LHE-WAT): 63 01 (LHE-WST-Note 1.002-4) (LHD-WOD-1.002-4) ***(Replaces 320 0907, 320 2590)***	.....	1	320 3902	
60 01 (OHV-WST)(OHV-WOD) ***(Use 320 2512)***	.....	1	320 2411	
60 01 (OHV-WAT) ***(Use 320 2513)***	.....	1	320 2412	
61 01 (OHV-WST)(OHV-WOD)	.....	1	320 2512	
61 01 (OHV-WAT)	.....	1	320 2513	
61-62 01 (LHE-WST Export 3-3/4" Stroke)(LHE-WOD Export 3-3/4" Stroke)	.....	1	320 2932	
64 01 (LHE)	.....	1	320 4683	
62-63 01 (OHV-WST-Note 1.002-3)(OHV-WOD-Note 1.002-3): 60 Thru 63 10 (OHVC-196-WST-Note 1.002-3) (OHVC-WOD-Note 1.002-3) ***(Replaces 320 2017, 320 2875, 320 3320)***	.....	1	320 3907	
62-63 01-10 (OHVC-196-WAT): 63 01-10 (OHVC-196-WST-Note 1.002-4) (OHVC-196-WOD-Note 1.002-4): 60-61 10 (OHVC-WAT): ***63 10 (OHVC-WST-Heavy Duty-Note 1.002-4 And 1.002-2)*** ***(Replaces 320 2018, 320 2876)***	.....	1	320 3908	
64 01-10 (OHVC-196)	.....	1	320 4686	
65 01 (LHE)	.....	1	320 5597	
65 01 (OHV-196)	.....	1	320 5600	
65 01 (OHV-199)	.....	1	320 5583	
60-61 10 (WST-Heavy Duty-Note 1.002-1): 62 10 (OHVC-WST-Heavy Duty-Note 1.002-2): 63 10 (OHVC-196-WST-Heavy Duty-Note 1.002-2 And Note 1.002-3) ***(Replaces 320 2884)***	.....	1	320 4065	
61 Thru 64 10 (OHVA): ***63 10 (OHVA-WST-Heavy Duty-Note 1.002-2 And 1.002-4)***	.....	1	****	

**** Order 320 6875 Engine plus one or more of the following Kits required for proper installation. If orginial equipment is:

- 61 (WAT) ..... Order 320 6975
- 62 (WAT) ..... Order 320 6977
- 61 Thru 64 (WPS-LAC) ..... Order 320 9177
- 61 Thru 64 (WAC-LPS)(WAC-WPS) ..... Order 320 6976
- 63-64 (All) ..... Order 320 6978
- 61-62 (WPV): 63-64 (All) ..... Order 320 6979
- 63-64 (WAE) ..... Order 320 6985
- 61 Thru 64 (WDT) ..... Order 320 1498 and 315 8679
- 163 10 (Can-WAE) ..... Order 316 5926

63 10 (OHVA-WST-Heavy Duty-Note 1.002-2 And Note 1.002-3)	.....	1	320 4068	
65 01-80 (OHV-232): 64-65 10 (OHV-232)	.....	1	320 5399	

NOTE 1.002-1: On 60-61 10 (WST) Cars having a production installed Heavy Duty Package can be identified in the following way:
The Trunnion at the Transmission end of the Torque Tube is Welded instead of Threaded to the Torque Tube.

NOTE 1.002-2: On 62-63 10 (WST) Cars having a production installed Heavy Duty Package can be identified in the following way:
The Transmission Case Cover is mounted to the Transmission with 6 Bolts instead of 4.

NOTE 1.002-3: On 63 01 used priar Engine Code No. 408A22 (LHE-WFGS). 409A13 (LHE-WST-LES), 409A07 (LHE-WOD-WES), 410A04 (LHE-WST-WES), 410A15 (LHE-WOD-LES), 408C21 (OHV-WFGS), 409C11 (OHV-WOD-LES), 409C07 (OHV-WOD-WES), 409C07 (OHV-WST-WES): On 63 07 used prior to Engine Code No. 409C07 (WST-WES), 409C07 (WOD): On 63 10 used prior to Engine Code No. 408C22 (OHV-WST-WES)· 408C31 (OHVC-WST), 409C15 (OHVC-WOD-WES), 408B31 (OHVA-WST), 409B15 (OHVA-WOD).

NOTE 1.002-4: On 63 01 used beginning with Engine Code No. 408A22 (LHE-WFGS), 409A13 (LHE-WST-LES), 409A07 (LHE-WOD-WES), 410A04 (LHE-WST-LES), 410A15 (LHE-WOD-LES), 408C21 (OHV-WFGS), 409C11 (OHV-WOD-LES), 409C07 (OHV-WOD-WES), 409C07 (OHV-WOD-WES), On 63 07 used beginning with Engine Code No. 409C07 (WST-WES), 409C07 (WOD): On 63 10 used beginning with Engine Code No. 408C22 (OHV-WST-WES), 408C31 (OHVC-WST), 409C15 (OHVC-WOD-WES), 408B31 (OHVA-WST), 409B15 (OHVA-WOD).

Copyright 1963 American Motors Corp.

GROUP NO. — DESCRIPTION — YEAR and MODEL		PRIMARY GROUP NO.	PER CAR	PART NO.	CODE
63 Thru 65 10 (V8-287): 65 80 (V8-287)		.....	1	320 4556	
64-65 10 (V8-327-WDT): 63 Thru 65 80 (V8-327-WDT)		.....	1	320 3944	
64-65 10 (V8-327-W4B): 63 Thru 65 80 (V8-327-W4B)		.....	1	320 3947	
65 10 (OHV-199)		.....	1	320 5583	
60-61 20		.....	1	320 0542	
60 Thru 62 80 (W4B)		.....	1	320 0544	
60 Thru 62 80 (WDT)		.....	1	320 1780	
1.003 SUPPORT, Engine Front (Spacer, Timing, Case Cover)					
60 Thru 63 01 (LHE)		.....	1	312 5044	
62-63 01 (OHV): 60 Thru 62 10 (OHVC)		.....	1	315 6138	
61-62 10 (OHVA)		.....	1	315 9802	
ATTACHING PARTS					
Support To Block					
SCREW, Machine	60 Thru 63 01: 60 Thru 62 10 (OHVC)	17.626	2	G187527	NA
BOLT, Dowel (Upper)	60 Thru 63 01: 60 Thru 62 10 (OHVC)	.....	1	310 5765	
BOLT, Dowel (Lower)	60 Thru 63 01: 60 Thru 62 10 (OHVC)	.....	1	312 7088	
BOLT, Hexagon	61-62 10 (OHVA-7/8" Long)	17.038	1	G179817	NA
BOLT, Hexagon	61-62 10 (OHVA-1" Long)	17.038	1	G179818	NA
WASHER, Lock	60 Thru 63 01: 60 Thru 62 10 (OHVC)	17.820	2	G120382	NA
WASHER, Lock	61-62 10 (OHVA)	17.820	2	G120214	NA
PIN, Dowel	61-62 10 (OHVA)	1.063	2	316 0072	
GASKET, Engine Front Support					
60 Thru 63 01: 60 Thru 62 10 (OHVC)	***(Replaces 310 5768)***	.....	1	317 0743	
61-62 10 (OHVA)		.....	1	316 0064	
1.004 CROSSMEMBER, Engine Front Support (Note: For 64-65 01 And 63 Thru 65 10-80 Crossmember Refer Group 10.002)					
60-61 01: 62-63 01 (LHE-LAC)		.....	1	315 7804	
62-63 01 (LHE-WAC)		.....	1	316 5777	
62-63 01 (OHV)		.....	1	316 4927	
60-61 10		.....	1	315 6139	
62 10 (OHVC)		.....	1	316 3888	
62 10 (OHVA)		.....	1	316 3087	
60-61 20-80		.....	1	315 3122	
62 80		.....	1	316 3194	
ATTACHING PARTS					
Crossmember To Side Sill					
BOLT, Hexagon	60 Thru 63 01 (WPS-1-1/2" Long)	17.038	2	G181643	NA
BOLT, Hexagon	60 Thru 63 01 (LPS-4 Req. 1-1/4" Long)(WPS-2 Req. 1-1/4" Long)	17.038	AR	G181639	NA
BOLT, Hexagon	62 10-80	17.038	4	G181698	NA
STUD	60-61 10-20-80	.....	4	314 6716	
STUD	62 10-80	1.010	2	316 3046	
WASHER, Bite	60 Thru 62 01	10.002	8	29 686	
WASHER, Plain	62-63 01 ***(Replaces 800 0169)***	17.814	4	400 1107	
WASHER, Plain	60-61 10-20-80 ***(Replaces 800 0165)***	17.814	4	400 1104	
WASHER, Plain	62 10-80 ***(Replaces 800 0183)***	17.814	2	400 1120	
WASHER, Lock	60 Thru 63 01: 60-61 10-20-80	17.820	4	G120382	NA
WASHER, Lock	62 10-80 (7/16" I.D.)	17.820	2	G131100	NA

NOTE 1.004-1: **Two Types of Engine Front Susport Mounting Brackets were installed on 65 01 (OHV-232) (OHV-199): They can be identified as follows:**

Type 1: The Bracket is a casting and is used prior to car Serial Nos. QT-503258 on 165 01 (OHV-199-Can); WT-501097 on 165 01 (OHV-232-Can).

Type 2: The Bracket is a stamping and is used beginning with car Serial Nos. QT-503258 on 165 01 (OHV-199-Can); WT-501097 on 165 01 (OHV-232-Can).

Copyright 1963 American Motors Corp.

GROUP NO. — DESCRIPTION — YEAR and MODEL	PRIMARY GROUP NO.	PER CAR	PART NO.	CODE
WASHER, Lock ..... 62 10-80 (7/8" I. D.)	17.820	4	G120384	NA
NUT, Hexagon..... 60 Thru 63 01: 60-61 10-20-80	17.406	4	G120369	NA
NUT, Hexagon..... 62 10-80	17.406	2	G120370	NA
BRACKET, Engine Front Support Mounting				
60-61 80	.....	2	315 3194	
(Left) 64-65 01 (LHE)(OHV-196)	.....	1	316 9781	
(Left) 65 01 (OHV-232-Note 1.004-1 Type 1)(OHV-199-Note 1.004-1 Type 1)	.....	1	317 8350	#
(Left) 65 01 (OHV-232-Note 1.004-1 Type 2)(OHV-199-Note 1.004-1 Type 2)	.....	1	318 0556	#
(Left) 63-64 10 (OHVA)	.....	1	316 6780	
(Left) 63-64 10 (OHVC-196)	.....	1	316 6779	
(Left) 64-65 10 (OHVC-232): 65 10 (OHV-199): 65 80 (OHV-232)	.....	1	317 3589	
(Left) 60-61 20	.....	1	315 0416	
(Left) 63 Thru 65 10-80 (V8)	.....	1	316 6775	
(Right) 64-65 01 (LHE)(OHV-196) ***(Replaces 316 9737)***	.....	1	317 3375	
(Right) 65 01 (OHV-232-Note 1.004-1 Type 1)(OHV-199-Note 1.004-1 Type 1)	.....	1	317 8351	#
(Right) 65 01 (OHV-232-Note 1.004-1 Type 2)(OHV-199-Note 1.004-1 Type 2)	.....	1	318 0557	#
(Right) 63-64 10 (OHVA)	.....	1	316 6781	
(Right) 63-64 10 (OHVC-196)	.....	1	316 6817	
(Right) 64-65 10 (OHV-232): 65 10 (OHV-199): 65 80 (OHV-232)	.....	1	317 3590	
(Right) 60-61 20	.....	1	315 0417	
(Right) 63 Thru 65 10-80 (V8)	.....	1	316 6776	
ATTACHING PARTS				
Bracket To Crossmember				
BOLT, Hexagon ..... 60-61 20 (8 Req.): 60-61 80 (4 Req.)	17.038	AR	G181639	NA
WASHER, Plain..... 60-61 20 (8 Req.): 60-61 80 (4 Req.)	17.814	AR	G120393	NA
WASHER, Lock..... 60-61 20 (8 Req.): 60-61 80 (4 Req.)	17.820	AR	G120382	NA
NUT, Hexagon..... 60-61 20 (8 Req.): 60-61 80 (4 Req.)	17.406	AR	G120369	NA
Bracket To Cylinder Block				
STUD..... 63-64 10 (OHVA)	.....	1	316 6783	
STUD (Right)..... 63 10 (OHVC-196)	.....	2	316 6778	
BOLT, Hexagon (Right). 64-65 01 (LHE)(OHV-196)	17.038	2	G179833	NA
BOLT, Hexagon (Right). 64 10 (OHVC-196)	17.038	2	G179885	NA
BOLT, Hexagon ..... 63-64 10 (OHVA)	17.038	5	G180146	NA
BOLT, Hexagon ..... 63 Thru 65 10-80 (V8)	17.038	6	G179840	NA
BOLT, Hexagon (Left).. 64-65 01 (LHE)(OHV-196): 63-64 10 (OHVC-196)	17.038	2	G181672	NA
BOLT, Hexagon ..... 65 01 (OHV-232-Note 1.004-1 Type 1) (OHV-199-Note 1.004-1 Type 1)	17.038	6	G180122	#
BOLT, Hexagon ..... 65 01 (OHV-199-Note 1.004-1 Type 2) (OHV-199-Note 1.004-1 Type 2): 65 10-80 (OHV-232): 65 10 (OHV-199)	17.038	6	G180120	#
WASHER, Lock ..... 63-64 10 (OHVA)	17.820	6	G131100	NA
WASHER, Lock..... 65 01-80 (OHV-232): 63 Thru 65 10-80 (V8): 64-65 10 (OHV-232): 65 01-10 (OHV-199)	17.820	6	G120382	NA
WASHER, Lock (Right) . 64-65 01 (LHE)(OHV-196): 63-64 10 (OHVC-196)	17.820	2	G120384	NA
WASHER, Lock (Left) .. 64-65 01 (LHE)(OHV-196): 63-64 10 (OHVC-196)	17.820	2	G131100	NA
NUT, Jam..... 63-64 10 (OHVA)	17.410	1	G272123	NA
NUT, Hexagon (Right) .. 63-64 10 (OHVC-196)	17.406	2	G120371	NA
NUT, Hexagon (Left) ... 63-64 10 (OHVC-196)	17.406	2	G120370	NA
ROD, Engine Front Brace				
60 01	.....	1	315 4279	
61 Thru 63 01	.....	1	316 0326	
60-61 10	.....	2	314 5544	

Copyright 1963 American Motors Corp.

GROUP NO. — DESCRIPTION — YEAR and MODEL	PRIMARY GROUP NO.	PER CAR	PART NO.	CODE
ATTACHING PARTS				
Brace To Crossmember				
BOLT, Hexagon..... 61 Thru 63 01.....	17.038	1	G181596	NA
BOLT, Hexagon..... 60-61 10.....	17.038	2	G181639	NA
WASHER, Plain..... 60 01 .....*(Replaces 800 0153)*	17.814	2	400 1093	
WASHER, Plain..... 60-61 10 .....*(Replaces 800 0165)*	17.814	2	400 1104	
WASHER, Lock..... 60 Thru 63 01.....	17.820	2	G120214	NA
WASHER, Lock..... 60-61 10.....	17.820	2	G120382	NA
NUT, Hexagon..... 60 Thru 63 01.....	17.406	3	G120368	
NUT, Hexagon..... 60-61 10.....	17.406	2	G120369	NA
Brace To Side Sill				
WASHER, Lock..... 60 01.....	17.820	2	G120214	NA
WASHER, Lock..... 60-61 10.....	17.820	2	G120382	NA
WASHER, Plain..... 60-61 10 .....*(Replaces 800 0165)*	17.814	2	400 1104	
NUT, Hexagon..... 60 01.....	17.406	2	G120368	
NUT, Hexagon..... 60-61 10.....	17.406	2	G120369	NA
Brace To Pivot Bar				
WASHER, Lock..... 61 Thru 63 01.....	17.820	2	G120214	NA
NUT, Hexagon..... 61 Thru 63 01.....	17.406	2	G120368	

1.007 TUBE, Engine Front Support Crossmember To Front Suspension Crossmember Support

62 80 (Left).....	.....	1	316 3287	
62 80 (Right).....	.....	1	316 3288	
ATTACHING PARTS				
Tube To Engine Front Crossmember				
BOLT, Hexagon..... 62 80 (LPS-4 Req. 1" Long)(WPS-3 Req. 1" Long)	17.038	AR	G181666	NA
BOLT, Hexagon..... 62 80 (WPS-1-3/4" Long).....	17.038	1	G181672	NA
WASHER, Plain..... 62 80 .....*(Replaces 800 0179)*	17.814	4	400 1116	
WASHER, Lock..... 62 80.....	17.820	4	G131100	NA
NUT, Hexagon..... 62 80.....	17.406	4	G120370	NA
Tube To Front Suspension Crossmember				
BOLT, Hexagon..... 62 80.....	17.038	4	G181637	NA
WASHER, Plain..... 62 80 .....*(Replaces 800 0163)*	17.814	4	400 1102	
WASHER, Lock..... 62 80.....	17.820	4	G120382	NA
NUT, Hexagon..... 62 80.....	17.406	4	G120369	NA

1.009 CUSHION, Engine Front Support

60 Thru 63 01: 60-61 10 .....*(Replaces 314 7568)*	.....	2	316 3608	
64 01 (LCV): 65 05-06-08-09 (LHE)(OHV-196).....	.....	2	316 9738	
64 07: 65 07 (OHV-196).....	.....	2	317 5831	
62 10.....	.....	2	316 3539	
63-64 10 (OHV-196).....	.....	2	316 6782	
65 01-80 (OHV-232): 64-65 10 (OHV-232): 65 01-10 (OHV-199).....	.....	2	317 3681	

Copyright 1963 American Motors Corp.

GROUP NO. — DESCRIPTION — YEAR and MODEL		PRIMARY GROUP NO.	PER CAR	PART NO.	CODE
60-61 20: 62 80		.....	2	315 3202	
60-61 80		.....	2	315 3190	
63-64 10-80 (V8): 65 10 (V8)		.....	2	316 6774	
65 80 (V8)		.....	2	317 6909	
ATTACHING PARTS					
Cushion To Crossmember					
BOLT, Hexagon	60 Thru 63 01: 60-61 10	17.038	4	G181595	NA
WASHER, Plain	64-65 01: 63-64 10 (OHV-196) ***(Replaces 800 0165)***	17.814	2	400 1122	
WASHER, Lock	60 Thru 63 01: 60-61 10	17.820	4	G120214	NA
WASHER, Lock	64-65 01: 65 10-80 (OHV-232): 65 10 (OHV-199): 62 Thru 64 10 (OHV)	17.820	4	G131100	NA
NUT, Hexagon	60 Thru 63 01: 60-61 10	17.406	4	G120368	NA
NUT, Hexagon	64-65 01: 62 Thru 64 10 (OHV): 65 10-80 (OHV-232): 65 01-10 (OHV-199)	17.406	2	G120370	NA
Cushion To Engine Front Support Bracket					
WASHER, Lock	60 Thru 64 01: 65 01 (LHE)(OHV-196): 60 Thru 62 10	17.820	2	G131100	NA
WASHER, Lock	60-61 20-80	17.820	2	G131100	NA
NUT, Hexagon	60 Thru 64 01: 65 01 (LHE)(OHV-196): 60 Thru 62 10	17.406	2	G120370	NA
NUT, Hexagon	60-61 20-80	17.406	2	G120370	NA
Cushion To Mounting Bracket					
BOLT, Hexagon	63-64 10 (OHV): 65 80 (OHV-232)	17.038	4	G181636	NA
BOLT, Hexagon	65 01 (OHV-232-4 Req.): 65 01 (OHV-199-4 Req.): 63 Thru 65 10-80 (V8-8 Req.)	17.038	AR	G180120	NA
BOLT, Hexagon	65 01 (OHV-199-Left-3/8-24 x 1-2 Req.) (OHV-199-Right-3/8-24 x 1-1 Req.) (OHV-232-Left-3/8-24 x 1-2 Req.) (OHV-232-Right-3/8-24 x 1-1 Req.): 65 10 (OHV-199-4 Req.)(OHV-232-4 Req.)	17.038	AR	G181637	NA#
BOLT, Hexagon	65 01 (OHV-199-Right-3/8-24 x 3/4) (OHV-232-Right-3/8-24 x 3/4)	17.038	1	G181635	NA#
WASHER, Plain	64 01: 65 01 (LHE)(OHV-196) ***(Replaces 800 0185)***	17.814	2	400 1122	
WASHER, Lock	64 01: 65 01 (LHE)(OHV-196)	17.820	2	G131100	NA
WASHER, Lock	65 01-10-80 (OHV-232-4 Req.): 65 01-10 (OHVC-199-4 Req.): 63-64 10 (OHV-4 Req.): 63 Thru 65 10-80 (V8-8 Req.)	17.820	AR	G120382	NA
NUT, Hexagon	64 01: 65 01 (LHE)(OHV-196)	17.406	2	G120370	NA
NUT, Hexagon	65 01 (OHV-199-3 Req.)(OHV-232-3 Req.): 63-64 10 (OHV-4 Req.): 65 10-80 (OHV-232-4 Req.): 65 10 (OHV-199-4 Req.)	17.406	AR	G120369	NA#
Cushion To Engine Front Crossmember Support Tube					
WASHER, Plain	62 80 ***(Replaces 800 0185)***	17.814	2	400 1122	
WASHER, Lock	62 80	17.820	2	G131100	NA
NUT, Hexagon	62 80	17.406	2	G120370	NA
Cushion To Crossmember Bracket					
WASHER, Plain	63 Thru 65 10-80 (V8) ***(Replaces 800 0185)***	17.814	4	400 1122	
WASHER, Lock	63 Thru 65 10-80 (V8)	17.820	4	G131100	NA
NUT, Hexagon	63-64 10-80 (V8): 63 Thru 65 10-80 (V8)	17.406	4	G120370	NA
Cushion To Cylinder Block					
BOLT, Hexagon	60 Thru 62 20-80	17.038	8	G180120	NA
WASHER, Lock	60 Thru 62 20-80	17.820	8	G120382	NA
REINFORCEMENT, Engine Front Support					
(Right) 60 Thru 63 01: 60 Thru 62 10 (OHVC)		.....	1	312 4598	
(Right) 61-62 10 (OHVA)		1.003	1	315 9803	
(Left) 60 Thru 63 01		.....	1	312 7094	

Copyright 1963 American Motors Corp.

GROUP NO. — DESCRIPTION — YEAR and MODEL	PRIMARY GROUP NO.	PER CAR	PART NO.	CODE
SHIM, Engine Front Support Cushion To Crossmember				
61 10 (OHVA)	.....	1	316 0202	
SPACER, Engine Front Support Cushion To Engine Front Support Mounting Bracket				
64-65 10 (OHV-232-WAC): 65 10 (OHV-199-WAC)	.....	2	317 6290	
1.010 CROSSMEMBER, Engine Rear Support				
60 01 (WST) (WOD): 61 Thru 63 07 (WST) (WOD)	.....	1	315 4167	
60 01 (WAT): 61 Thru 63 07 (WAT)	.....	1	315 6143	
61 Thru 63 01 (LCV-WST) (LCV-WOD)	.....	1	316 3890	
61 01 (LCV-WAT)	.....	1	316 0821	
62-63 01 (LCV-WAT)	.....	1	316 4039	
64 01 (LHD): 65 01 (LHD-WST)(LHD-WOD)(WAT)	.....	1	316 9735	
64-65 01 (RHD-WST)(RHD-WOD)	.....	1	317 4555	
60-61 10 (WST) (WOD)	.....	1	314 5380	
60-61 10 (WAT)	.....	1	315 6140	
60-61 10 (WST-Heavy Duty-Note 1.001-1): 60-61 80 (WST) (WOD)	.....	1	315 0064	
62 10 (LHD-WST) (LHD-WOD)	.....	1	316 4137	
62 10 (RHD-WST) (RHD-WOD)	.....	1	316 5979	
62 10 (WST-Heavy Duty-Note 1.002-2)	.....	1	316 4075	
62 10 (LHD-WAT)	.....	1	316 3038	
62 10 (RHD-WAT)	.....	1	316 6227	
63 10 (Six): 64 10 (LHD-Six): 65 10 (LHD-OHV-232-WST)(LHD-OHV-232-WOD) (OHV-232-WAT): 65 10 (OHV-199): 65 80 (OHV-232)	.....	1	316 6769	
64 10 (RHD-WST)(RHD-WOD): 65 10 (RHD-OHV-232-WST)(RHD-OHV-232-WOD)	.....	1	317 4556	
165 10-80 (V8-WST-Can)(V8-WOD-Can)	.....	1	318 1837	
60-61 20 (WST) (WOD)	.....	1	315 3608	
60-61 20 (WAT)	.....	1	315 3607	
60-61 80 (WAT)	.....	1	315 3284	
62 80 (WST) (WOD)	.....	1	316 3189	
62 80 (WAT)	.....	1	316 3190	
63 Thru 65 10-80 (V8)	.....	1	316 6770	
ATTACHING PARTS				
Crossmember To Sill				
STUD — 62-63 01	.....	2	314 4481	
STUD — 62 10-80	.....	6	316 3046	
BOLT, Hexagon — 62-63 01	17.038	2	G181669	NA
BOLT, Hexagon — 64-65 01	17.038	4	G189330	NA
WASHER, Plain — 62 10-80 ***(Replaces 800 0183)***	17.814	6	400 1120	
WASHER, Plain — 64 01 (LHD-8 Req.): ***65 01 (RHD-6 Req.)(LHD-8 Req.)*** ***(Replaces 800 0165)***	17.812	AR	400 1104	
WASHER, Lock — 62-63 01 (4 Req.): 62 10-80 (6 Req.)	17.820	AR	G131100	NA
WASHER, Lock — 64-65 01	17.820	4	G120382	NA
NUT, Hexagon — 62-63 01 (2 Req.: 62 10-80 (6 Req.)	17.406	AR	G120370	NA
NUT, Hexagon — 64-65 01	17.406	4	G120369	NA
Crossmember And Strut To Sill				
BOLT, Hexagon Head. — 60-61 10: 60-61 20-80 (WST-1-1/4" Long) (WOD-1-1/4" Long)	17.038	AR	G181668	NA
BOLT, Hexagon Head. — 60-61 20 (WST) (WOD): 60 80 (WST-1-1/2" Long) (WOD-1-1/2" Long)	17.038	2	G181670	NA
BOLT, Hexagon Head — 60-61 20-80 (WAT-1-3/4" Long)	17.038	4	G181672	NA
STUD — 60-61 01	.....	4	314 4481	

Copyright 1963 American Motors Corp.

GROUP NO. — DESCRIPTION — YEAR and MODEL		PRIMARY GROUP NO.	PER CAR	PART NO.	CODE
STUD	60-61 10: 60-61 20-80 (WST) (WOD)	1.004	2	314 6716	
STUD	60-61 20-80 (WAT)	.....	2	314 8125	
WASHER, Plain	60-61 10-20-80 (1-1/8" O. D.) *(Replaces 800 0185)*	17.814	8	400 1122	
WASHER, Plain	60-61 10-20-80 (7/8" O. D.) *(Replaces 800 0165)*	17.814	2	400 1104	
WASHER, Lock	60-61 01-10-20-80 (7/16" I. D)	17.820	4	G131100	NA
WASHER, Lock	60-61 10-20-80 (3/8" I. D.)	17.820	2	G120382	NA
NUT, Hexagon	60-61 01-10-20-80 (7/16-20)	17.406	4	G120370	NA
NUT, Hexagon	60-61 10-20-80 (3/8-24)	17.406	2	G179137	NA
REINFORCEMENT, Engine Rear Support Crossmember					
60 Thru 63 01		.....	2	315 4163	
STRUT, Crossmember To Body "A" Brace					
(Left) 60-61 20 (WST) (WOD)		.....	1	315 9351	
(Right) 60-61 20 (WST) (WOD)		.....	1	315 9352	
ATTACHING PARTS Strut To Body "A" Brace					
BOLT, Hexagon	60-61 20 (WST)(WOD)	17.038	2	G181639	NA
WASHER, Bite	60-61 20 (WST) (WOD)	10.003	4	310 8995	
WASHER, Plain	60-61 20 (WST)(WOD)	17.814	4	G120394	NA
WASHER, Lock	60-61 20 (WST)(WOD)	17.820	2	G120382	NA
NUT, Hexagon	60-61 20 (WST)(WOD)	17.406	2	G120369	NA
ROD, Engine Rear Support Crossmember To Torque Tube Thrust					
63-64 10 (Six-WST-L3S)(Six-WOD-L3S)		.....	1	320 5288	
ATTACHING PARTS Rod To Bracket (At Torque Tube And Crossmember)					
BOLT, Hexagon	63-64 10 (Six-WST-L3S)(Six-WOD-L3S)	17.038	2	G181639	NA
WASHER, Lock	63-64 10 (Six-WST-L3S)(Six-WOD-L3S)	17.820	2	G120382	NA
NUT, Hexagon	63-64 10 (Six-WST-L3S)(Six-WOD-L3S)	17.406	2	G120369	NA
WASHER, Bite	63-64 10 (Six-WST-L3S)(Six-WOD-L3S)	10.003	2	310 8995	
WASHER, Plain	63-64 10 (Six-WST-L3S)(Six-WOD-L3S)	17.814	1	400 1104	
BRACKET, Engine Rear Support Crossmember To Torque Tube Thrust Rod (At Crossmember)					
63-64 10 (Six-WST-L3S)(Six-WOD-L3S)		.....	1	320 5289	
ATTACHING PARTS Bracket To Crossmember					
WASHER, Lock	63-64 10 (Six-WST-L3S)(Six-WOD-L3S)	17.820	2	G120214	NA
BOLT, Hexagon	63-64 10 (Six-WST-L3S)(Six-WOD-L3S)	17.038	2	G181596	NA
NUT, Hexagon	63-64 10 (Six-WST-L3S)(Six-WOD-L3S)	17.406	2	G120368	
BRACKET, Engine Rear Support Crossmember To Torque Tube Thrust Rod (At Torque Tube)					
63-64 10 (Six-WST-L3S)(Six-WOD-L3S)		.....	1	320 5290	
ATTACHING PARTS Bracket To Torque Tube					
BOLT, Hexagon	63-64 10 (Six-WST-L3S)(Six-WOD-L3S)	17.038	1	G181457	
WASHER, Lock	63-64 10 (Six-WST-L3S)(Six-WOD-L3S)	17.820	1	G120898	NA
WASHER, Bite	63-64 10 (Six-WST-L3S)(Six-WOD-L3S)	9.134	3	312 5060	

Copyright 1963 American Motors Corp.

GROUP NO. — DESCRIPTION — YEAR and MODEL		PRIMARY GROUP NO.	PER CAR	PART NO.	CODE
1.011 SUPPORT, Engine Rear					
(Left) 60 Thru 63 01 (WST) (WOD)		.....	1	312 9586	
(Right) 60 Thru 63 01 (WST) (WOD)		.....	1	312 9587	
ATTACHING PARTS					
Support To Crossmember					
BOLT, Hexagon.....	60 Thru 63 01 (WST)(WOD).....	17.038	4	G181637	NA
WASHER, Lock.....	60 Thru 63 01 (WST)(WOD).....	17.820	4	G120382	NA
NUT, Hexagon.....	60 Thru 63 01 (WST)(WOD).....	17.406	4	G120369	NA
1.013 CUSHION, Engine Rear Support					
60-61 01 (WST) (WOD): 62-63 01 (WST-Less South Africa) (WOD-Less South Africa).....		.....	2	313 0385	
60 Thru 63 01 (WAT): 60 Thru 62 10 (WAT): ***62-63 10 (WST-Heavy Duty-Note 1.002-2)***	***(Replaces 314 7568)***	1.009	2	316 3608	
62-63 01 (WST-South Africa) (WOD-South Africa)		.....	2	316 4784	
64-65 01		.....	1	316 9736	#
60-61 10 (WST) (WOD).....		.....	2	313 4444	
60-61 10 (WST-Heavy Duty-Note 1.002-1): 60-61 20: 60 Thru 62 80 (WAT).....		.....	2	315 4617	
62 10 (WST) (WOD)		.....	2	316 4073	
60 Thru 62 80 (WST) (WOD)		.....	2	315 4616	
ATTACHING PARTS					
Cushion To Crossmember					
BOLT, Hexagon.....	60 Thru 63 01 (WST-4 Req.) (WOD-4 Req.): 60-61 10 (WST-4 Req.) (WOD-4 Req.): 60-61 20 (2 Req.): 60 Thru 62 80 (4 Req.).....	17.038	AR	G181637	NA
BOLT, Hexagon.....	62 10 (WST)(WOD).....	17.038	4	G181608	NA
BOLT, Hexagon.....	60-61 20.....	17.038	2	G181636	NA
WASHER, Bite.....	60 Thru 63 01 (WAT): 60 Thru 62 10 (WAT).....	10.003	1	310 8995	
WASHER, Plain.....	60 01 (WST)(WOD) ..... ***(Replaces 800 0179)***	17.814	2	400 1116	
WASHER, Plain.....	61 10 (WST) (WOD): 60-61 20: 60 Thru 62 80.....	.....	4	314 1126	
WASHER, Lock.....	60 Thru 63 01 (WST) (WOD): 60-61 10 (WST) (WOD): 60-61 20: 60 Thru 62 80.....	17.820	4	G120382	NA
WASHER, Lock.....	60 Thru 63 01 (WAT): 60 Thru 62 10 (WAT): ***62 10 (WST-Heavy Duty-Note 1.002-1)***.....	17.820	2	G131100	NA
WASHER, Lock.....	64-65 01 (2 Req.): 62 10 (WST-4 Req.) (WOD-4 Req.)	17.820	AR	G120214	NA
NUT, Hexagon.....	60 Thru 63 01 (WST) (WOD): 60-61 10 (WST) (WOD): 60-61 20: 60 Thru 62 80.....	17.406	4	G120369	NA
NUT, Hexagon.....	60 Thru 63 01 (WAT): 60 Thru 62 10 (WAT): ***62 10 WST-Heavy Duty-Note 1.002-1)***.....	17.406	4	G120370	NA
NUT, Hexagon.....	64-65 01 (2 Req.): 62 10 (WST-4 Req.) (WOD-4 Req.)	17.406	AR	G120368	
Cushion To Transmission					
BOLT, Hexagon	64-65 01	17.038	2	G180146	NA
WASHER, Lock.....	64-65 01	17.820	2	G131100	NA
Cushion To Adapter					
BOLT, Hexagon	60 Thru 63 01 (WAT): 60 Thru 62 10 (WAT).....	17.038	4	G181596	NA
WASHER, Lock.....	60 Thru 63 01 (WAT): 60 Thru 62 10 (WAT).....	17.820	4	G120214	NA
NUT, Hexagon.....	60 Thru 63 01 (WAT): 60 Thru 62 10 (WAT).....	17.406	4	G120368	

NOTE 1.013-1: Two Types of Insulators and Three Types of Transmission Brackets were installed on 63 10-80 Series. They can be identified as follows:

Type 1: The Bracket is mounted to the Transmission with a 3/8" Diameter Stud and the Cushion on Insulator is 2-7/8" Long.

Type 2: The Bracket is mounted to the Transmission with a 7/16" Diameter Stud and the Cushion on Insulator is 2-7/8" Long.

Type 3: The Bracket is mounted to the Transmission with a 7/16" Diameter Stud and the Cushion on Insulator is 3-1/8" Long.

Copyright 1963 American Motors Corp.

Printed in U.S.A.

GROUP NO. — DESCRIPTION — YEAR and MODEL		PRIMARY GROUP NO.	PER CAR	PART NO.	CODE
Cushion To Engine					
BOLT, Hexagon.....	60-61 20: 60 Thru 62 80.....	.....	2	313 7142	
WASHER, Lock.....	60-61 20: 60 Thru 62 80.....	17.820	2	G120384	NA
Cushion To Clutch Housing					
BOLT, Hexagon.....	***60-61 10 (WST-Heavy Duty-Note 1.002-1)***.....	.....	2	313 7142	
BOLT, Hexagon.....	60-61 10 (WST)(WOD).....	17.038	2	G181702	NA
WASHER, Plain.....	61 Thru 63 01 (WST)(WOD).....***(Replaces 800 0179)***	17.814	4	400 1116	
WASHER, Plain.....	60-61 10 (WST)(WOD).....***(Replaces 800 0190)***	17.814	2	400 1129	
WASHER, Plain.....	62 10 (WST)(WOD).....***(Replaces 800 0177)***	17.814	2	400 0482	
WASHER, Lock.....	62-63 01 (WST)(WOD).....	17.820	2	G131100	NA
WASHER, Lock.....	60 Thru 62 10 (WST)(WOD).....	17.820	2	G120384	NA
NUT, Hexagon.....	61 Thru 63 01 (WST)(WOD): 62 10 (WST)(WOD).....	17.406	2	G120370	NA
ADAPTER, Converter Housing To Cushion					
60 Thru 63 01 (WAT): 60 Thru 62 10 (WAT).....		.....	2	315 6232	
62 10 (WST-Heavy Duty-Note 1.002-2).....		.....	2	316 4074	
ATTACHING PARTS					
Adapter To Converter Housing					
BOLT, Hexagon.....	60 Thru 63 01 (WAT): 60 Thru 62 10 (WAT).....	17.038	2	G179883	NA
WASHER, Lock.....	60 Thru 63 01 (WAT): 60 Thru 62 10 (WAT).....	17.820	2	G120384	NA
Adapter To Cushion					
BOLT, Hexagon.....	***62 10 (WST-Heavy Duty-Note 1.002-2)***.....	17.038	4	G181608	NA
WASHER, Lock.....	***62 10 (WST-Heavy Duty-Note 1.002-2)***.....	17.820	4	G120214	NA
NUT, Hexagon.....	***62 10 (WST-Heavy Duty-Note 1.002-2)***.....	17.406	4	G120368	
SPACER, Cushion To Support					
60 Thru 63 01 (WST)(WOD): 62 10 (WST)(WOD).....		.....	2	313 6051	
INSULATOR, Crossmember To Transmission					
63 10-80 (Note 1.013-1 Types 1 And 2).....***(Ref. Pr. List)***		.....	1	316 6937	
63 10-80 (Note 1.013-1 Type 3): 64 10 (OHV-196)(V8): 64 80.....		.....	1	317 1099	
64 10 (OHV-232): 65 10-80.....		.....	1	317 3691	
ATTACHING PARTS					
Insulator To Bracket					
BOLT, Hexagon	63 10-80 (Note 1.013-1 Types 1 And 2).....	17.038	1	G180843	NA
BOLT, Hexagon	63 Thru 65 10-80 (Note 1.013-1 Type 3).....	17.038	1	G189346	NA
WASHER, Lock.....	63 Thru 65 10-80.....	17.820	1	G120384	NA
NUT, Hexagon.....	63 Thru 65 10-80.....	17.406	1	G120371	NA
Insulator To Rear Crossmember					
BOLT, Hexagon	63 Thru 65 10-80.....	17.038	2	G181666	NA
WASHER, Plain.....	63 Thru 65 10-80 (Note 1.013-1 Type 3).....***(Replaces 800 0183)***	17.814	2	400 1120	
WASHER, Lock.....	63 Thru 65 10-80.....	17.820	2	G131100	NA
NUT, Hexagon.....	63 Thru 65 10-80.....	17.406	2	G120370	NA

Copyright 1963 American Motors Corp.

GROUP NO. — DESCRIPTION — YEAR and MODEL	PRIMARY GROUP NO.	PER CAR	PART NO.	CODE
INSULATOR KIT, Crossmember To Transmission				
63 10 (OHV-196-Note 1.013-1 Types 1 And 2)...(Incl. 1-Insulator, 1-Bracket, 2-Bolt)	.....	1	320 4537	
63 10-80 (V8-Note 1.013-1 Type 1 And 2)...(Incl. 1-Insulator, 1-Bracket, 2-Bolt)	.....	1	320 4538	
BRACKET, Insulator To Transmission				
63-64 10 (Six-Note 1.013-1 Type 3): 65 10-80 (OHV-232): 65 10 (OHV-199) ...	.....	1	317 1184	
63 80 (Note 1.013-1 Type 1)	.....	1	316 6500	
63-64 10-80 (V8-Note 1.013-1 Type 2) ...*(Ref. Pr. List)*	.....	1	317 0239	
63 Thru 65 10-80 (V8-Note 1.013-1 Type 3)	.....	1	317 1185	
ATTACHING PARTS — **Bracket To Transmission**				
STUD — 63 10 (Six-3 Req. -3/8" Dia.): 63 80 (4 Req. -3/8" Dia.)	.....	AR	316 9430	
STUD — 63 Thru 65 10 (Six-3 Req. -7/16" Dia.): 63 Thru 65 10-80 (V8-4 Req. -7/16" Dia.)	.....	AR	316 9998	
WASHER, Lock — 63 10 (Six-3 Req. -3/8 I. D.): 63 80 (4 Req. -3/8 I. D.)	17.820	AR	G120382	NA
WASHER, Lock — 63 Thru 65 10 (Six-3 Req. -7/16 I. D.): 63 Thru 65 10-80 (V8-4 Req. -7/16 I. D.)	17.820	AR	G103328	NA
NUT, Hexagon — 63 10 (Six-3 Req. -3/8 I. D.): 63 80 (4 Req. -3/8 I. D.)	17.406	AR	G120369	NA
NUT, Hexagon — 63 Thru 65 10 (Six-3 Req. -7/16 I. D.): 63 Thru 65 10-80 (V8-4 Req. -7/16 I. D.)	17.406	AR	G120370	NA
1.014 BRACKET, Engine Rear Support Crossmember To Cushion				
63 Thru 65 10-80	.....	2	316 6823	
ATTACHING PARTS — **Bracket To Crossmember**				
BOLT, Hexagon — 63 Thru 65 10-80	17.038	4	G181635	NA
WASHER, Lock — 63 10-80 (Spring-6 Req.): 64-65 10-80 (Spring-2 Req.)	17.820	AR	G120382	NA#
WASHER, Lock — 64-65 10-80 (External)	17.822	4	G114606	NA
WASHER, Plain — 63 Thru 65 10-80 ...*(Replaces 800 0165)*	17.814	6	400 1104	
NUT, Hexagon — 63 Thru 65 10-80	17.406	2	G120369	NA
Bracket To Cushion				
NUT, Hexagon — 63 10-80	17.406	4	G120369	NA
WASHER, Lock — 63 10-80	17.820	4	G120382	NA
1.015 CUSHION, Engine Rear Support Crossmember To Sill				
63 Thru 65 10-80: *165 10 (Can-OHV-199): 165 80 (Can-OHV-232): 165 80 (Can-OHV-232)* ...*(Replaces 316 6936)*	.....	2	317 2968	#
ATTACHING PARTS — **Cushion To Side Sill**				
BOLT, Hexagon — 63 Thru 65 10-80	17.038	4	G181636	NA
WASHER, Lock — 63 Thru 65 10-80	17.820	4	G120382	NA

Copyright 1963 American Motors Corp.

GROUP NO. — DESCRIPTION — YEAR and MODEL	PRIMARY GROUP NO.	PER CAR	PART NO.	CODE
Cushion To Bracket				
WASHER, Lock ..... 63 Thru 65 10-80	17.820	4	G120382	NA
NUT, Hexagon ..... 63 Thru 65 10-80	17.406	4	G120369	NA
RETAINER, Engine Rear Support Crossmember To Sill Cushion				
63-64 10 (OHV-196): 63-64 10-80 (V8)	.....	2	316 6729	
64 10 (OHV-232): 65 10-80	.....	2	317 5746	
1.017 ROD, Engine Thrust				
60 10 (WAT): 61 10 (OHVC-WAT)	.....	1	315 6229	
61 10 (OHVA-WAT)	.....	1	316 0733	
62 10 (OHVA)	.....	1	316 3081	
62 10 (OHVC)	.....	1	316 4040	
63 10 (Six)...(Incl. Bushing) ***(Ref. Pr. List)***	.....	2	316 6916	
64-65 10 (OHV-232-WOD): 65 80 (OHV-232-WOD): 63 Thru 65 10-80 (V8)...(Incl. Bushing)	.....	2	316 6917	#
(Right) 64 10 (OHV-196): 64-65 10 (OHV-232-WST)(OHV-232-WAT): 65 10 (OHV-199): 65 80 (OHV-232-WST)(OHV-232-WAT)...(Incl. Bushing)	.....	1	317 0586	#
(Left) 64 10 (OHV-196): 64-65 10 (OHV-232-WST)(OHV-232-WAT): 65 10 (OHV-199): 65 80 (OHV-232-WST)(OHV-232-WAT)...(Incl. Bushing)	.....	1	317 0587	#
ATTACHING PARTS				
Rod To Bracket				
NUT, Lock ..... 60-61 10 (WAT): 62 10	17.416	2	G442828	NA
Rod To Side Sill				
BOLT, Hexagon ..... 63 Thru 65 10-80	17.038	2	G272498	NA
WASHER, Plain ..... 63 Thru 65 10-80	.....	4	316 6768	
WASHER, Lock ..... 63 Thru 65 10-80	17.820	2	G121574	NA
NUT, Hexagon ..... 63 Thru 65 10-80	17.406	2	G121358	NA
BRACKET, Rod To Generator Support Bar				
60 10 (WAT): 61 10 (OHVC-WAT): 62 10 (OHVC)	.....	1	315 6230	
ATTACHING PARTS				
Bracket To Generator Support Bar				
BOLT, Hexagon ..... 60 10 (WAT): 61 10 (OHVC-WAT): 62 10 (OHVC)	17.038	2	G181650	NA
WASHER, Lock ..... 60 10 (WAT): 61 10 (OHVC-WAT): 62 10 (OHVC)	17.820	2	G120382	NA
NUT, Hexagon ..... 60 10 (WAT): 61 10 (OHVC-WAT): 62 10 (OHVC)	17.406	2	G120369	NA
BRACKET, Rod To Front Crossmember				
60 10 (WAT): 61 10 (OHVC)	.....	1	315 6231	
61 10 (OHVA-WAT)	.....	1	316 0726	
62 10 (OHVC)	.....	1	316 4041	
ATTACHING PARTS				
Bracket To Front Crossmember				
BOLT, Hexagon ..... 60 10 (WAT-3 Req.): 61 10 (1 Req.): 62 10 (OHVC-3 Req.)	17.038	AR	G181636	NA
BOLT, Hexagon ..... 61 10 (WAT)	17.038	2	G181639	NA
WASHER, Plain ..... 60-61 10 (WAT) ***(Replaces 800 0468)***	17.814	2	400 1180	
WASHER, Lock ..... 60-61 10 (WAT): 62 10 (OHVC)	17.820	3	G120382	NA
NUT, Hexagon ..... 60-61 10 (WAT): 62 10 (OHVC)	17.406	3	G120369	NA

Copyright 1963 American Motors Corp.

GROUP NO. — DESCRIPTION — YEAR and MODEL	PRIMARY GROUP NO.	PER CAR	PART NO.	CODE
BRACKET, Rod To Cylinder Block				
61 10 (OHVA-WAT)	.....	1	316 1244	
62 10 (OHVA)	.....	1	316 3082	
ATTACHING PARTS				
Bracket To Cylinder Block				
BOLT, Hexagon..... 61 10 (OHVA-WAT 1-3/8" Long)	17.038	1	G179861	NA
BOLT, Hexagon..... 61 10 (OHVA-WAT 1-3/4" Long)	17.038	1	G179864	NA
BOLT, Hexagon..... 62 10 (OHVA 1-1/8" Long)	17.038	2	G179859	NA
WASHER, Lock..... 61 10 (OHVA-WAT): 62 10 (OHVA)	17.820	2	G131100	NA
GROMMET, Engine Thrust Rod				
60-61 10 (WAT): 62 10 (OHVC)	.....	4	315 6228	
62 10 (OHVA-At Cylinder Block)	.....	2	315 6228	
62 10 (OHVA-At Front Crossmember)	10.260	2	315 2909	
RETAINER, Engine Thrust Rod Grommet				
(Inner) 60-61 10 (WAT): 62 10 (OHVC)	11.228	2	314 6809	
(Inner) 62 10 (OHVA-At Cylinder Block)	11.228	1	314 6809	
(Inner) 62 10 (OHVA-At Front Crossmember)	11.208	1	316 3079	
(Outer) 60 10 (WAT)	11.208	2	313 6432	
(Outer) 61 10 (WAT): 62 10 (OHVC)	11.208	2	316 1146	
(Outer) 62 10 (OHVA-At Cylinder Block)	11.208	1	316 1146	
(Outer) 62 10 (OHVA-At Front Crossmember)	.....	1	316 3501	
(Center) 62 10 (OHVA-At Front Crossmember)	.....	1	316 3498	
BUSHING, Engine Thrust Rod				
63 Thru 65 10-80	.....	2	316 6918	
1.020 BLOCK ASSEMBLY, Engine Cylinder (Less Pistons, Rings, And Bearings) (Note 1.020-1)				
60 01 (LHE): 61 01 (LHE-Note 1.020-2)	.....	1	320 2001	
60 01-10 (OHV): 61 01 (OHV-Note 1.020-4)	.....	1	320 2024	
61 01 (LHE-Note 1.020-3)	.....	1	320 2440	
61 01 (OHV-Note 1.020-5): 61-62 10 (OHVC)	.....	1	320 2441	

NOTE 1.020-1: In machining Engine Blocks and Crankshafts, it is common practice if necessary to machine the Bores oversize .010 and the Main Bearings and Connecting Rod Bearings undersize .010. On Engine having other than Standard Sizes it is necessary to order Pistons, Rings, Main Bearings and Connecting Rod Bearings to fit. These Engines are marked with a Three Letter Code. The Code is on the machined surface located on the left side in the front upper Corner except for 61 10 (OHVA) located on the left front or rear upper Corner.

1st Letter - Size of Bore	A-Standard
2nd Letter - Size of Main Brg.	B-Undersize .010
3rd Letter - Size of Con. Rod Brg.	C-Oversize .010

Example: An Engine having an oversize .010 Bore, Standard Main Bearings and undersize .010 Connecting Rod Bearings will be coded CAB.

NOTE 1.020-2: On 61 01 (LHE) used prior to Engine Code No. 20830.
NOTE 1.020-3: On 61 01 (LHE) used beg. with Engine Code No. 20830.
NOTE 1.020-4: On 61 01 (OHV) used prior to Engine Code No. 20908.
NOTE 1.020-5: On 61 01 (OHV) used beg. with Engine Code No. 20908.

Copyright 1963 American Motors Corp.

GROUP NO. — DESCRIPTION — YEAR and MODEL	PRIMARY GROUP NO.	PER CAR	PART NO.	CODE
61-62 01 (LHE-WST Export 3-3/4" Stroke)(LHE-WOD Export 3-3/4" Stroke)	.....	1	320 2936	
62 01 (LHE)	.....	1	320 3319	
62 01 (OHV)	.....	1	320 3324	
63 01 (LHE)	.....	1	320 3979	
63 01-10 (OHVC)	.....	1	320 3929	
64 01 (LHE)	.....	1	320 4681	
64 01-10 (OHVC-196)	.....	1	320 4682	
65 01 (LHE)	.....	1	320 5603	
65 01 (OHV-196)	.....	1	320 5604	
65 01-80 (OHV-232): 64-65 10 (OHV-232): 65 01-10 (OHV-199)	.....	1	320 5432	
61-62 10 (OHVA) ***(Use 320 3980)***	.....	1	320 2543	
63-64 10 (OHVA)	.....	1	320 3980	
63 Thru 65 10 (V8-287): 65 80 (V8-287)	.....	1	320 4559	
60-61 20	.....	1	320 0557	
60 Thru 62 80	.....	1	320 2146	
64-65 10 (V8-327): 63 Thru 65 80 (V8-327)	.....	1	320 3950	
PIN, Cylinder Block To Clutch Housing Or Converter Housing Dowel				
65 01-80 (OHV-232): 65 01-10 (OHV-199): 64-65 10 (OHV-232): 60 Thru 65 10-20-80 (V8)	.....	2	314 5091	#
60 Thru 65 10-20-80 (V8)	.....	2	314 4842	
PIN, Cylinder Block To Timing Case Cover Dowel				
60 Thru 65 10-20-80 (V8)	.....	2	314 4842	#
PIN, Cylinder Block To Cylinder Head Dowel				
60 Thru 65 10-20-80 (V8)	.....	4	314 4842	
BAFFLE, Engine Breather Chamber Oil Deflector				
61 Thru 63 10 (OHVA)	1.115	1	316 2016	
ATTACHING PARTS Baffle To Block				
BOLT, Hexagon..... 61 Thru 63 10 (OHVA)	17.038	1	G180020	NA
WASHER, Fibre..... 61 Thru 63 10 (OHVA)	1.115	1	316 1263	
NUT, Lock..... 61 Thru 63 10 (OHVA)	17.416	1	G442823	NA
SEPARATOR, Engine Breather Chamber Oil				
61 Thru 63 10 (OHVA)	1.115	1	316 2017	
1.022 PIPE, Oil Filler				
60 Thru 63 01 (LHE)	.....	1	310 6489	
60-61 01-10 (OHVC): 62-63 01 (OHV-LPB): 62 Thru 64 10 (OHVC-196-LPB-Note 1.022-3 Type 1)	.....	1	315 2734	
62-63 01-10 (LHD-OHVC-WPB)	.....	1	316 4768	
64-65 01 (LHE)	.....	1	317 2622	
64-65 01 (OHVC-196): 64 10 (OHVC-196-Note 1.022-4)	.....	1	317 1080	
64 10 (OHVC-WPB-Note 1.022-3)	.....	1	317 1927	
ATTACHING PARTS Pipe To Block				
SCREW, Machine..... 60 Thru 65 01 (OHVC-196): 60 Thru 64 10 (OHVC) ***(Replaces 800 0068)***	17.626	1	400 0987	

NOTE 1.022-1: On 63 01 (OHV-LDT) used prior to Car Sequence No. 40006.
NOTE 1.022-2: On 63 01 (OHV-LDT) used beginning with Car Sequence No. 40006.
NOTE 1.022-3: On 64 10 (OHVC-196) used prior to Engine Code No. 604-C-12.
NOTE 1.022-4: On 64 10 (OHVC£196) used beginning with Engine Code No. 604-C-12.

Copyright 1963 American Motors Corp.

GROUP NO. — DESCRIPTION — YEAR and MODEL	PRIMARY GROUP NO.	PER CAR	PART NO.	CODE
CAP, Oil Filler				
60-61 01 (LHE): ***62-63 01 (RHD)***...(Incl. Gauge)	.....	1	312 1952	
60-61 01-10 (OHVC)...(Incl. Gauge)	.....	1	315 5533	
62 01 (LHD-LHE)...(Incl. Gauge)	.....	1	316 3391	
62 01-10 (OHVC-LPB)...(Incl. Gauge) ***(Replaces 316 3392)***	.....	1	316 5891	
62 01-10 (LHD-OHVC-WPB)...(Incl. Gauge) ***(Replaces 316 4770)***	.....	1	316 5890	
63 01 (LHD-LHE)...(Incl. Gauge)	.....	1	316 7838	
63 01-10 (LHD-OHVC-WPB-Note 1.022-1)...(Incl. Gauge)	.....	1	316 6751	
63 01 (OHV-LDT-WPB-Note 1.022-2)	.....	1	316 9355	
63 01-10 (OHVC-LPB-Note 1.022-1)...(Incl. Gauge)	.....	1	316 6752	
63 01 (OHV-LDT-LPB-Note 1.022-2)...(Incl. Gauge)	.....	1	316 9356	
61 Thru 63 10 (OHVA): 60 Thru 63 10-20-80 (V8) ...(Less Gauge) ***(Use 317 2621)***	.....	1	314 4546	
64-65 01 (LHE)...(Incl. Gauge)	.....	1	317 2624	
64-65 01 (OHVC-196-LDT)	.....	1	317 2043	
64-65 01 (OHVC-196-WDT): 64 10 (OHVC-196-Note 1.022-4) ...(Incl. Gauge)	.....	1	317 1088	
64 10 (OHVC-196-WPB-Note 1.022-3)...(Incl. Gauge)	.....	1	317 1998	
64 10 (OHVC-196-LPB-Note 1.022-3)...(Incl. Gauge)	.....	1	317 2635	
65 01-80 (OHV-232-LFFC-Note 1.068-1 Type 1): 64-65 10 (OHV-232-LFFC-Note 1.068-1 Type 1)	.....	1	317 4645	
65 01-10-80 (OHV-232-LFFC-Note 1.068-1 Type 2)	.....	1	317 9998	
65 01-10-80 (OHV-232-WFFC-Note 1.068-1 Type 1): 65 01-10 (OHV-199-Note 1.068-1 Type 1): 64 10 (OHV-232-WFFC) ***(Replaces 317 3092, 317 7025)***	.....	1	317 7626	
65 01-10-80 (OHV-232-WFFC-Note 1.068-1 Type 2): 65 01-10 (OHV-199-Note 1.068-1 Type 2): 64 10 (OHVA): 65 10-80 (V8-LSFC)	.....	1	317 2621	
64 10 (OHV-232-WFFC) ***(Use 317 7626)(Replaces 317 3092)***	.....	1	317 7025	
64 10 (V8-287-LSFC)...(Less Gauge)	.....	1	317 2620	
64 10 (V8-327-LSFC): 64 80 (LSFC)...(Less Gauge)	.....	1	317 2619	
64-65 10-80 (V8-WSFC)...(Less Gauge)	.....	1	317 4215	
SEAL, Oil Filler Pipe				
60 Thru 65 01 (OHVC-196): 60 Thru 64 10 (OHVC)	.....	1	313 6326	

1.023 BEARING SET, Main

(Std.) 60 Thru 65 01 (LHE)(OHV-196): 60 Thru 64 10 (OHVC-196) ***(Replaces 311 2785, 320 3781)***	.....	1	320 4414	
(Std.) 65 01-80 (OHV-232): 64-65 10 (OHV-232): 65 01-10 (OHV-199)	.....	1	320 5098	
(Std.) 61 Thru 64 10 (OHVA) ***(Replaces 320 3776)***	.....	1	320 2666	
(Std.) 60 Thru 65 10-20-80 (V8)	.....	1	311 9149	
(-.001) 60 Thru 65 01 (LHE)(OHV-196): 60 Thru 64 10 (OHVC-196) ***(Replaces 311 9096, 320 3782)***	.....	1	320 4415	#
(-.001) 65 01-80 (OHV-232): 64-65 10 (OHV-232): 65 01-10 (OHV-199)	.....	1	320 5099	
(-.001) 61 Thru 64 10 (OHVA) ***(Replaces 320 3777)***	.....	1	320 2667	
(-.001) 60 Thru 65 10-20-80 (V8)	.....	1	311 9620	
(-.002) 60 Thru 65 01 (LHE)(OHV-196): 60 Thru 64 10 (OHVC-196) ***(Replaces 311 2793, 320 3783)***	.....	1	320 4416	
(-.002) 65 01-80 (OHV-232): 64-65 10 (OHV-232): 65 01-10 (OHV-199)	.....	1	320 5100	
(-.002) 61 Thru 64 10 (OHVA) ***(Replaces 320 3778)***	.....	1	320 2668	
(-.002) 60 Thru 65 10-20-80 (V8)	.....	1	311 9621	
(-.010) 60 Thru 65 01 (LHE)(OHV-196): 60 Thru 64 10 (OHVC-196) ***(Replaces 311 2789, 320 3784)***	.....	1	320 4417	
(-.010) 65 01-80 (OHV-232): 64-65 10 (OHV-232): 65 01-10 (OHV-199)	.....	1	320 5101	
(-.010) 61 Thru 64 10 (OHVA) ***(Replaces 320 3779)***	.....	1	320 2669	
(-.010) 60 Thru 65 10-20-80 (V8)	.....	1	311 9622	
(-.012) 60 Thru 62 01: 60 Thru 62 10 (OHVC) ***(Replaces 320 3785)(Use 320 4418)***	.....	1	311 3186	
(-.012) 63 Thru 65 01 (LHE)(OHVC-196): 63-64 10 (OHVC-196)	.....	1	320 4418	
(-.012) 65 01-80 (OHV-232): 64-65 10 (OHV-232): 65 01-10 (OHV-199)	.....	1	320 5102	
(-.012) 61 Thru 64 10 (OHVA) ***(Replaces 320 3780)***	.....	1	320 2670	
(-.012) 60 Thru 65 10-20-80 (V8)	.....	1	311 9623	

Copyright 1963 American Motors Corp.

GROUP NO. — DESCRIPTION — YEAR and MODEL	PRIMARY GROUP NO.	PER CAR	PART NO.	CODE
1.024 WASHER, Crankshaft Thrust				
60 Thru 65 (LHE)(OHVC-196)	.....	1	310 5393	
60 Thru 65 10-20-80 (V8)	.....	1	314 4431	
1.031 GAUGE, Bearing (Contains 12 Sticks)				
60 Thru 65 01-10-20-80 (.002 To .006)	.....	AR	311 2650	
60 Thru 65 01-10-20-80 (.001 To .003)	.....	AR	320 5410	
1.032 SEAL KIT, Rear Main Bearing Cap				
60 Thru 63 01: 60 Thru 63 10 (OHVC)...(Incl. 2-3139033, 2-3106499)	.....	1	311 6540	
65 01-80 (OHV-232): 64-65 10 (OHV-232): 65 01-10 (OHV-199)(Incl. 1-3173098, 1-3172073)	.....	1	320 5331	
61 Thru 64 10 (OHVA)...(Incl. 2-3160071, 2-3106499)	.....	1	320 2325	
60 Thru 65 10-20-80 (V8)...(Incl. 2-3106499, 2-3146391)	.....	1	320 5645	
SEAL, Rear Main Bearing Cap				
60 Thru 63 01 (1-1/4" Long at Chamfer End): 60 Thru 63 10 (OHVC-1-1/4" Long at Chamfer End)	.....	2	313 9033	
63 01 (15/16" Long at Chamfer End): 63 10 (OHVC-15/16" Long at Chamfer End)	.....	2	317 0896	
(Side) 61 Thru 64 10 (OHVA)	.....	2	316 0071	
(Side) 60 Thru 65 10-20-80 (V8)	.....	2	314 6391	
(Upper) 65 01-10 (OHV-199): 65 01-80 (OHV-232): 64-65 10 (OHV-232)	.....	1	317 3098	
(Lower) 65 01-10 (OHV-199): 65 01-80 (OHV-232): 64-65 10 (OHV-232)	.....	1	317 2073	
PACKING, Rear Main Bearing Cap				
60 Thru 64 01-10: 65 01 (LHE)(OHV-196): 60 Thru 65 10-20-80 (V8)	.....	2	310 6499	
1.034 ATTACHING PARTS, Main Bearing Cap				
BOLT, Hexagon ..... 60 Thru 65 01 (LHE)(OHVC-196)(Front And Rear): 60 Thru 64 10 (OHVC)(Front And Rear)	.....	4	310 5769	
BOLT, Hexagon ..... 60 Thru 65 01 (LHE)(OHVC-196)(Intermediate): 60 Thru 64 10 (OHVC-196)(Intermediate)	.....	4	314 8821	
BOLT, Hexagon ..... 65 01-80 (OHV-232): 64-65 10 (OHV-232): 65 01-10 (OHV-199)	.....	14	317 3011	
BOLT, Hexagon..... 61 Thru 64 10 (OHVA)	.....	8	316 0295	
BOLT, Hexagon ..... 60 Thru 65 10-20-80 (V8)(Front And Intermediate)	.....	8	314 9289	
BOLT, Hexagon ..... 60 Thru 65 10-20-80 (V8)(Rear)	1.004	2	314 4433	
WASHER, Plain..... 60 Thru 65 01 (LHE)(OHVC-196): 64 10 (OHVC-196)	.....	8	24 545	
WASHER, Plain..... 60 Thru 64 10 (OHVA-8 Req.): 60 Thru 65 10-20-80 (V8-10 Req.)	.....	AR	314 4434	
1.038 PLUG, Cylinder Block Core Hole				
60 Thru 65 01 (LHE-3 REQ.): 60 Thru 65 01 (OHV-196-2 REQ.): 60 Thru 65 10-20-80 (V8-5 Req.-2" Dia.): 65 01-80 (OHV-232-4 Req.): 63-64 10 (OHVA-1 Req.): 60 Thru 64 10 (OHVC-196-2 Req.): 64-65 10 (OHV-232-4 (Req.): 65 01-10 (OHV-199-4 Req.)	.....	AR	310 5394	
60 Thru 65 10-20-80 (V8-1-1/2" Dia.)	.....	3	314 4641	

Copyright 1963 American Motors Corp.

GROUP NO. — DESCRIPTION — YEAR and MODEL	PRIMARY GROUP NO.	PER CAR	PART NO.	CODE
PLUG KIT, Cylinder Block Core Hole				
61 Thru 64 10 (OHVA)...(Incl. Plug And Screws)	.....	2	320 2905	
PLUG, Cylinder Block Drain				
60 Thru 65 01 (LHE)(OHVC-196): 60 Thru 64 10 (OHV-196)	17.514	1	G444612	NA
65 01-80 (OHV-232-1 Req.): 60 Thru 65 10-20-80 (V8-2 Req.): 64-65 10 (OHV-232-1 Req.): 65 01-10 (OHV-199)	17.514	AR	G444618	NA
PLUG, Cylinder Block Oil Hole				
60 Thru 62 01: 60 10 (LAS): 61 10 (OHVC)	17.514	1	G444612	NA
PLUG, Cylinder Block Distributor Boss				
60 Thru 65 01 (OHVC-196): 60 Thru 64 10 (OHVC-196)	.....	1	315 5076	
PLUG, Cylinder Block Oil By-Pass				
61 10: 62 Thru 64 10 (OHVA): 64 10 (OHVC-232)	17.516	1	G444660	NA
65 01-10-80 (OHV-232): 65 01-10 (OHV-199)	17.490	2	G444782	NA
1.040 CAMSHAFT				
60 01 (LHE): 61 01 (LHE-Note 1.020-2)	.....	1	313 8895	
60 01-10 (OHVC): 61 01 (OHV-Note 1.020-4)	.....	1	314 9258	
61 01 (LHE-Note 1.020-3): 62 Thru 65 01 (LHE)	.....	1	316 0134	
61 01 (OHV-Note 1.020-5): 62 01: 61-62 10 (OHVC)	.....	1	316 0135	
63 Thru 65 01 (OHVC-196): 63-64 10 (OHVC-196)	.....	1	316 7628	
65 01-80 (OHV-232): 64-65 10 (OHV-232): 65 01-10 (OHV-199)	.....	1	317 1242	
61 Thru 64 10 (OHVA) ***(Replaces 315 9613, 316 7629)***	.....	1	316 2946	
60-61 20	.....	1	315 1299	
60 Thru 65 10-80 (V8)	.....	1	314 4439	
1.041 BEARING SET, Camshaft				
60 01-10: 61 01 (LHE-Note 1.020-2): 61 01 (OHV-Note 1.020-4)	.....	1	311 9946	
61 01 (LHE-Note 1.020-3): 61 01 (OHV-Note 1.020-5): 62 Thru 65 01 (LHE) (OHV-196): 61 Thru 64 10 (OHV-196) ***(Replaces 320 2665)***	.....	1	320 4034	
65 01-80 (OHV-232): 65 01-10 (OHV-199): 64-65 10 (OHV-232) ***(Replaces 320 4976)***	.....	1	320 5711	#
60 Thru 65 10-20-80 (V8)	.....	1	311 9148	
PLATE, Camshaft Thrust				
60 Thru 65 01 (LHE)(OHVC-196): 60 Thru 62 10: 63-64 10 (OHVC-196)	.....	1	314 4589	
63-64 10 (OHVA)	.....	1	316 7593	
60 Thru 65 10-20-80 (V8)	.....	1	314 4446	
ATTACHING PARTS				
Thrust Plate To Cylinder Block				
SCREW, Machine..... 60 Thru 65 01 (LHE-2 Req.)(OHVC-196-2 Req.) 60 Thru 64 10 (OHVC-2 Req.): 60-61 20-80 (3 Req.)	17.626	AR	G187527	NA
SCREW, Machine..... 61 Thru 64 10 (OHVA)	17.626	2	G187993	NA
BOLT, Hexagon ..... 62 Thru 65 10-80 (V8)	17.038	3	G179814	NA
WASHER, Lock..... 62 Thru 65 10-80 (V8)	17.822	3	G138485	NA

Copyright 1963 American Motors Corp.

GROUP NO. — DESCRIPTION — YEAR and MODEL	PRIMARY GROUP NO.	PER CAR	PART NO.	CODE
PLUG, Camshaft Rear Bearing				
60 01-10: 61 01 (LHE-Note 1.020-2): 61 01 (OHV-Note 1.020-4)	.....	1	310 5390	
61 01 (LHE-Note 1.020-3): 61 01 (OHV-Note 1.020-5): 62 Thru 65 01 (LHE)(OHVC-196): 61 Thru 64 10 (OHV-196)	.....	1	316 0136	
65 01-80 (OHV-232): 64-65 10 (OHV-232): 65 01-10 (OHV-199)	.....	1	317 2313	
60 Thru 65 10-20-80 (V8)	.....	1	314 4643	
1.042 CRANKSHAFT, (Less Flywheel And Vibration Damper)(Balanced)				
60 01-10 (WST)(WOD): 61-62 01 (LHE-WST)(LHE-WOD): 63 01 (LHE-WST-Note 1.002-3)(LHE-WOD-Note 1.002-3)	.....	1	316 0110	
60 01-10 (WAT): 61 Thru 63 01 (LHE-WAT): 63 01 (LHE-WST-Note 1.002-4) (LHE-WOD-Note 1.002-4) ***(Use 320 6161)***	.....	1	320 3082	#
61-62 01 (LHE-WST Export 3-3/4" Stroke)(LHE-WOD Export 3-3/4" Stroke)	.....	1	315 5818	
61 Thru 63 01-10 (OHV-WAT): 63 01-10 (OHV-WST-Note 1.002-4) (OHV-WOD-Note 1.002-4): 64-65 01 (OHV-196): 64 10 (OHV-196): ***63 10 (Six-WST-Heavy Duty-Note 1.002-2)***	.....	1	320 2852	
61 01-10 (OHVC-WST)(OHVC-WOD): 62 01-10 (OHV-WST)(OHV-WOD): 63 01-10 (OHV-WST-Note 1.002-3)(OHV-WOD-Note 1.002-3)	.....	1	316 2396	
64-65 01 (LHE) ***(Use 320 6161)***	.....	1	320 4904	#
65 01 (OHV-232-WAT): 64-65 10 (OHV-232): 65 80 (OHV-232) . ***(Use 320 7019)***	.....	1	317 2217	
60-61 10 (WST-Heavy Duty-Note 1.002-1): 62 10 (WST-Heavy Duty-Note 1.002-2) ***(Replaces 315 9653, 316 0205)***	.....	1	316 2702	
65 01-10 (OHV-199)	.....	1	317 3430	
63 Thru 65 10 (V8-287): 65 80 (V8-287)	.....	1	320 5577	
60-61 20	.....	1	320 0302	
60 Thru 65 10-80 (V8-327)	.....	1	320 0303	
1.043 BUSHING, Crankshaft Pilot (Bearing, Clutch Shaft Front)				
60 Thru 62 01-10 (WST)(WOD): 63 01-10 (WST-Note 1.002-3)(WOD-Note 1.002-3) ***(Replaces 310 6507)***	.....	1	316 8006	
60 Thru 63 01-10 (WAT)(WST-Note 1.002-4)(WOD-Note 1.002-4): ***63 10 (WST-Heavy Duty-Note 1.002-2):*** 64 01: 65 01 (LHE)(OHVC-196): 64 10 (OHV-196)	.....	1	315 1388	
60-61 10 (WST-Heavy Duty-Note 1.002-1): 62 10 (WST-Heavy Duty-Note 1.002-2): 60 Thru 64 10-20-80 (V8-WST)(V8-WOD): 65 10-80 (V8)	.....	1	59 789	
65 01-80 (OHV-232): 64-65 10 (OHV-232): 65 01-10 (OHV-199)	.....	1	317 4730	
ADAPTER KIT, Crankshaft Pilot Bushing (Incl. Bushing)				
60 Thru 63 01-10	.....	1	320 5895	
1.045 DAMPER, Crankshaft Vibration (Balanced)				
61 01 (WST-LAC-Replaceable Hub)(WOD-LAC-Replaceable Hub): 61 10 (WST-Replaceable Hub)(WOD-Replaceable Hub) ***(Ref. Pr. List)***	.....	1	314 1021	
63-64 10-80 (V8-Heavy Duty-60 Amp. Alt. And Dual Belt Drive): 65 10-80 (V8-Heavy Duty-60 Amp. Alt. And Dual Belt Drive)	.....	1	317 0384	
60 Thru 65 01 (LHE-Non-Replaceable Hub)(OHVC-196-Non-Replaceable Hub): 60 Thru 64 10 (OHV-196-Non-Replaceable Hub) ***(Replaces 315 8526)***	.....	1	316 6550	
64 10 (OHVC-232-Note 1.045-1 Type 1) ***(Replaces 317 3202)***	.....	1	317 3281	
65 01-80 (OHV-232): 64-65 10 (OHV-232-Note 1.045-1 Type 2): 65 01-10 (OHV-199)	.....	1	317 7345	

NOTE 1.045-1: Two Types of Vibration Dampers and Timing Chain Covers were used on 64 10 (OHVC-232). They can be identified as follows:

Type 1: The Timing Case Cover Oil Seal cannot be removed without removing the Cover. It is removed from the back side.

Type 2: The Timing Case Cover Oil Seal can be removed without removing Cover. It is removed from the front side.

NOTE 1.046-1: Used on Models WAC and/or WPS in addition to Damper (Incl. Pulley) 3158526.

NOTE 1.046-2: Used on Models WAC and/or WPS in addition to Damper (Incl. Pulley) 3166550.

Copyright 1963 American Motors Corp.

GROUP NO. — DESCRIPTION — YEAR and MODEL		PRIMARY GROUP NO.	PER CAR	PART NO.	CODE
60 Thru 64 01 (Non-Replaceable Hub): 60 Thru 64 10 (OHV-196-Non-Replaceable Hub)...(Incl. 1-3166550, 1-3158582, 2-G180120 Bolt, 2-G120382 L'Washer)		.....	1	320 2452	
60 Thru 65 10-20-80 (V8)		.....	1	315 8527	
ATTACHING PARTS					
Vibration Damper To Crankshaft					
BOLT, Hexagon	60 Thru 65 01-10 (Six): 65 80 (OHV-232).....	17.038	1	G181698	NA
BOLT, Hexagon	60 Thru 65 10-20-80 (V8)	17.038	1	G271584	NA
WASHER, Plain.....	60 Thru 65 01 (LHE)(OHVC-196): 60 Thru 64 10 (OHV-196)	1.047	1	310 5392	
WASHER, Plain	65 01-80 (OHVC-232): 64-65 10 (OHV-232): 65 01-10 (OHV-199)	.....	1	317 3075	
WASHER, Plain.....	60 Thru 65 10-20-80 (V8)	1.052	1	314 5136	
WASHER, Lock	60 Thru 65 01-10 (Six): 65 80 (OHV-232).....	17.824	1	G115551	NA
WASHER, Lock	60 Thru 65 10-20-80 (V8)	17.820	1	G121574	NA

1.046 PULLEY, Vibration Damper

60 01 (OAC)(WPS): 60 10 (WAC)(WPS): 61-62 01-10 (WPS-Used With Non-Replaceable Hub-Note 1.046-1)(WAC-Used With Non-Replaceable Hub-Note 1.046-1): 63 01-10 (WPS-Note 1.046-2)(WAC-Note 1.046-2): 64 01 (WAC)(WPS): 65 01 (LHE-WAC)(LHE-WPS)(OHV-196-WAC) (OHV-196-WPS): 64 10 (OHV-196-WAC)(OHV-196-WPS)		.....	1	315 8582	
61 01 (WST-LAC-Used With Replaceable Hub)(WOD-LAC-Used With Replaceable Hub).....	***(Ref. Pr. List)***	.....	1	313 9793	
64 01 (Heavy Duty-60 Amp. Alt. And Dual Belt Drive): 65 01 (Heavy Duty-60 Amp. Alt.): 63-64 10 (OHVC-196-Heavy Duty-60 Amp. Alt. And Dual Belt Drive)		.....	1	316 9412	
65 01-80 (OHV-232-WPS)(OHV-232-WAC): 64-65 10 (OHV-232-WAC) (OHV-232-WPS): 65 01-10 (OHV-199-WAC)(OHV-199-WPS)		.....	1	317 3097	
64-65 10 (OHVC-232-Heavy Duty-60 Amp. Alt. And Dual Belt Drive): 65 10 (OHV-199-Heavy Duty-60 Amp. Alt.).....		.....	1	317 4696	
ATTACHING PARTS					
Pulley To Vibration Damper					
BOLT, Hexagon.....	60 01 (OAC)(WPS): 60 10 (WAC)(WPS): 61 01-10 (WAC-Used With Non-Replaceable Hub) (WPS-Used With Non-Replaceable Hub): 62 Thru 65 01 (WAC)(WPS): ***64 01 (Heavy Duty-60 Amp. Alt. And Dual Belt Drive): 65 01 (Heavy Duty-60 Amp. Alt):*** 62 Thru 64 10 (OHV-196-WAC) (OHV-196-WPS): ***63-64 10 (Six-Heavy Duty-60 Amp. Alt. And Dual Belt Drive):*** 65 10-80 (Six-WPS) (Six-WAC)***(Six-Heavy Duty-60 Amp. Alt. And Dual Belt Drive)***	17.038	2	G180120	NA
BOLT, Hexagon	64-65 10 (OHV-232-WAC)(OHV-232-WPS) ***(OHV-232-Heavy Duty-60 Amp. Alt. And Dual Belt Drive):*** 65 01 (OHV-199-WAC) (OHV-199-WPS): 65 01 (OHV-232-WAC) (OHV-232-WPS): 65 10-80 (Six-WPS)(Six-WAC) ***(Six-Heavy Duty-60 Amp. Alt.)***.....	17.038	2	G180073	NA
WASHER, Plain	60 01 (OAC)(WPS): 60 10 (WAC)(WPS): 61 01-10 (WAC-Used With Non-Replaceable Hub) (WPS-Used With Non-Replaceable Hub): 62 Thru 65 01 (WAC)(WPS): ***65 01 (Heavy Duty-60 Amp. Alt.): 64 01 (Heavy Duty-60 Amp. Alt. And Dual Belt Drive):*** 62 Thru 64 10 (OHV-196-WAC) (OHV-196-WPS): ***63-64 10 (Six-Heavy Duty-60 Amp. Alt. And Dual Belt Drive)***	12.038	2	313 8231	

Copyright 1963 American Motors Corp.

GROUP NO. — DESCRIPTION — YEAR and MODEL	PRIMARY GROUP NO.	PER CAR	PART NO.	CODE
WASHER, Lock..... 60 01 (OAC)(WPS): 60 10 (WAC)(WPS): 61 01-10 (WAC-Used With Non-Replaceable Hub)(WPS-Used With Non-Replaceable Hub): 62 Thru 64 01 (WAC)(WPS): ***64 01 (Heavy Duty-60 Amp. Alt. And Dual Belt Drive): 65 01 (Heavy Duty-60 Amp. Alt.):*** 62 Thru 64 10 (OHV-196-WAC)(OHV-196-WPS): ***63-64 10 (Six-Heavy Duty-60 Amp. Alt. And Dual Belt Drive)***	17.820	2	G120382	NA
WASHER, Lock..... 64-65 10 (OHVC-232-WAC)(OHVC-232-WPS) ***(OHVC-232-Heavy Duty-60 Amp. Alt. And Dual Belt Drive):*** 65 01-80 (OHV-232-WPS)(OHV-232-WAC): 65 01-10 (OHV-199-WPS)(OHV-199-WAC): ***65 10-80 (OHV-232-Heavy Duty-60 Amp. Alt): 65 10 (OHV-199-Heavy Duty-60 Amp. Alt.)***	17.820	3	G120214	

1.047 HUB, Vibration Damper

61 01 (WST-LAC-Used With Damper 3141021)(WOD-LAC-Used With Damper 3141021): 61 10 (WST-Used With Damper 3141021)(WOD-Used With Damper 3141021)	.....	1	312 9602	

ATTACHING PARTS

Hub To Pulley

BOLT, Hexagon..... 61 01 (WST-LAC-Used With Replaceable Hub)(WOD-LAC-Used With Replaceable Hub): 61 10 (WST-Used With Replaceable Hub)(WOD-Used With Replaceable Hub)	.....	2	28 574	
WASHER, Plain..... 61 01 (WST-LAC-Used With Replaceable Hub)(WOD-LAC-Used With Replaceable Hub): 61 10 (WST-Used With Replaceable Hub)(WOD-Used With Replaceable Hub)	.....	2	28 575	
WASHER, Lock..... 61 01 (WST-LAC-Used With Replaceable Hub)(WOD-LAC-Used With Replaceable Hub): 61 10 (WST-Used With Replaceable Hub)(WOD-Used With Replaceable Hub)	17.820	2	G120382	NA
NUT, Hexagon..... 61 01 (WST-LAC-Used With Replaceable Hub)(WOD-LAC-Used With Replaceable Hub): 61 10 (WST-Used With Replaceable Hub)(WOD-Used With Replaceable Hub)	17.406	2	G120369	

KEY, Vibration Damper Hub

60 Thru 65 01-10-20-80	1.132	1	310 7234	

SEAL, Vibration Damper Oil

60 Thru 65 01 (LHE-Rubber)(OHV-196-Rubber): 60 Thru 64 10 (OHV-196)	.....	1	310 7556	
60 Thru 65 01 (LHE-Cork)(OHVC-196-Cork): 60 Thru 64 10 (OHV-196-Cork)	.....	1	311 1396	
60 Thru 65 10-20-80 (V8)	.....	1	315 3682	

1.049 CUSHION, Vibration Damper

61 01 (WST-LAC-Used With Replaceable Hub)(WOD-LAC-Used With Replaceable Hub): 61 10 (WST-Used With Replaceable Hub)(WOD-Used With Replaceable Hub)	.....	2	28 576	

Copyright 1963 American Motors Corp.

GROUP NO. — DESCRIPTION — YEAR and MODEL	PRIMARY GROUP NO.	PER CAR	PART NO.	CODE
RUBBER, Vibration Damper (Friction)				
61 01 (WST-LAC-Used With Replaceable Hub)(WOD-LAC-Used With Replaceable Hub): 61 10 (WST-Used With Replaceable Hub)(WOD-Used With Replaceable Hub)	.....	1	314 9749	
1.050 PLATE, Vibration Damper (Friction Dics.)(Fabric)				
61 01 (WST-LAC-Used W/Replaceable Hub)(WOD-LAC-Used W/Replaceable Hub): 61 10 (WST-Used W/Replaceable Hub)(WOD-Used W/Replaceable Hub)	.....	1	311 0580	
1.054 WASHER, Crankshaft And Vibration Damper Lock				
60 Thru 65 01 (LHE)(OHVC-196): 60 Thru 64 10 (OHV-196)	.....	1	18 054	
1.056 FLYWHEEL ASSEMBLY, Crankshaft (Incl. Ring Gear)(Balanced)(For Cars Having Automatic Trans. Ref. Group 16.030 And 16.035)				
60-61 01-10 (WST)(WOD): 62-63 01 (WST-LES)(WOD-LES): 62 10: 63 10 (WST-LES)(WOD-LES)	.....	1	314 6987	
64 01 (WST-Note 1.056-1 Type 2)(WOD-Note 1.056-1 Type 2): 65 01 (LHE-WST)(LHE-WOD)(OHVC-196-WST)(OHVC-196-WOD): 64 10 (OHV-196-WST-Note 1.056-1 Type 2)(OHV-196-WOD-Note 1.056-1 Type 2).	.....	1	317 2282	
62-63 01 (WST-WES)(WOD-WES): 64 01 (LHD-WST-LES-Note 1.056-1 Type 1) (LHD-WOD-LES-Note 1.056-1 Type 1): ***60-61 10 (WST-Heavy Duty-Note 1.002-1): 62-63 10 (Six-Heavy Duty-Note 1.002-2):*** 63 10 (Six-WST-WES) (Six-WOD-WES): 64 10 (LHD-Six-WST-LES-Note 1.056-1 Type 1) (LHD-Six-WOD-LES-Note 1.056-1 Type 1):	.....	1	315 5767	
64-65 10 (OHV-232-WST)(OHV-232-WOD): 65 01-10 (OHV-199-WST) (OHV-199-WOD): 65 80 (OHV-232-WST)(OHV-232-WOD)	.....	1	317 2415	
60 Thru 65 10-20-80 (V8-WST)(V8-WOD) ***(Ref. Pr. List)***	.....	1	314 6988	#
ATTACHING PARTS				
Flywheel To Crankshaft				
BOLT, Hexagon — 60 01-10 (WST)(WOD): 60 Thru 65 10-20-80 (V8-WST) (V8-WOD)	1.057	6	312 8700	#
BOLT, Hexagon — 61-62 01-10 (Used With Lockplate) ***(Ref. Pr. List)***	.....	6	313 2937	
BOLT, Hexagon — 62-63 01-10 (WST)(WOD)(Used With Lock Washer).	17.038	6	G181696	
BOLT, Hexagon — 64-65 01 (WST) (WOD): 64 10 (OHV-196-WST) (OHV-196-WOD): 64-65 10 (OHV-232-WST) (OHV-232-WOD): 65 01-10 (OHV-199-WST) (OHV-199-WOD): 65 80 (OHV-232-WST) (OHV-232-WOD)	.....	6	317 0524	
LOCKPLATE — 60 Thru 62 01-10 (WST-2-3/4" Long)(WOD-2-3/4" Long)	1.057	2	313 2898	
LOCKPLATE — 60 Thru 63 20-80 (WST-2-3/4" Long)(WOD-2-3/4" Long)	1.057	2	314 6810	
LOCKPLATE — 60 Thru 62 01-10 (WST-2-39/64" Long)(WOD-2-Long) ***(Ref. Pr. List)***	1.057	2	313 2898	
LOCKPLATE — 60 Thru 63 20-80 (WST-2-5/8" Long)(WOD-2-5/8" Long)	1.057	1	314 6798	
WASHER, Plain — 61 10 (WST)(WOD) ***(Replaces 800 0190)***	17.814	6	400 1129	
WASHER, Lock — 62-63 01-10 (WST)(WOD)	17.820	6	G103323	NA

NOTE 1.056-1: Two Types of Flywheels were installed on 64 01 (LHD-WST-LES)(LHD-WOD-LES) and 64 10 (LHD-Six-LES)(LHD-Six-WOD-LES). They can be identified as follows:
Type 1: The Flywheel Ring Gear is 7/16" wide.
Type 2: The Flywheel Ring Gear is 3/8" wide.

Copyright 1963 American Motors Corp.

GROUP NO. — DESCRIPTION — YEAR and MODEL	PRIMARY GROUP NO.	PER CAR	PART NO.	CODE
GEAR, Crankshaft Flywheel Ring				
60 Thru 63 01-10 (WST) (WOD)	.....	1	314 5388	
64-65 01 (LHE-WST)(LHE-WOD)(OHVC-196-WST)(OHVC-196-WOD): 64 10 (OHVC-196-WST)(OHVC-196-WOD)	.....	1	317 2524	
64-65 10 (OHV-232-WST)(OHV-232-WOD): 65 01-10 (OHV-199-WST) (OHV-199-WOD): 65 80 (OHV-232-WST)(OHV-232-WOD)	.....	1	317 2419	
60 Thru 65 10-20-80 (V8-WST)(V8-WOD)	.....	1	314 4492	#
1.058 PAN, Flywheel Mud				
60-61 01 (WAT): 60-61 10 (OHVC-WAT)	.....	1	315 0159	
60 Thru 63 01 (WST) (WOD): 60 Thru 62 10 (OHVC-WST) (OHVC-WOD) ...(Incl. Gasket And Felt)	.....	1	314 6091	
62-63 01 (WAT): 62-63 10 (OHVC-WAT) ...(Incl. Gasket)	16.040	1	316 3230	
64 01 (WST-LES)(WOD-LES): 63-64 10 (OHV-196-WST-LES) (OHV-196-WOD-LES): 65 01 (LHE-WST)(LHE-WOD) (OHVC-196-WST) (OHVC-196-WOD)	.....	1	316 6511	
64 01 (WES): 63-64 10 (OHV-196-WES)	.....	1	316 8842	
60-61 10 (WST-Heavy Duty-Note 1.002-1): 62 10 (WST-Heavy Duty-Note 1.002-2)	.....	1	315 5804	
61-62 10 (OHVA-WST) (OHVA-WOD)	.....	1	315 9820	
61 10 (OHVA-WAT)	.....	1	315 9823	
62 10 (OHVA-WAT): 63 10 (LHD-OHVA-WAT)	16.040	1	316 3169	
63 10 (RHD-OHVA-WAT)	16.040	1	316 8969	
60-61 20 (WST) (WOD) ...(Incl. Seal)	.....	1	320 1669	
60 Thru 65 10-20-80 (V8-WST)(V8-WOD)...(Incl. Seal)	.....	1	320 1668	#
ATTACHING PARTS				
Pan To Cylinder Block				
SCREW, Tapping..... 60 Thru 65 01 (LHE-WST-4 Req.) (OHV-196-WST-4 Req.)(OHV-196-WOD-4 Req.): 60 Thru 64 10 (OHV-196-WST-4 Req.) (OHV-196-WOD-4 Req.): ***62 10 (WST-Heavy Duty-5 Req. -Note 1.002-2):*** 60 Thru 65 10-20-80 (V8-WST-6 Req.)(V8-WOD-6 Req.)	17.670	AR	G172427	NA
SCREW, Tapping..... 60 Thru 63 01-10 (WAT)	17.670	4	G448423	NA
GASKET, Flywheel Mud Pan				
60 Thru 63 01 (WST) (WOD): 60 Thru 62 10 (OHVC-WST) (OHVC-WOD)	.....	2	313 0002	
60-61 10 (WST-Heavy Duty-Note 1.002-1): 62 10 (WST-Heavy Duty-Note 1.002-2)	.....	2	314 2680	
61-62 10 (OHVA-WST) (OHVA-WOD)	.....	2	316 0308	
62 01 (WAT)	.....	1	313 6797	
60 Thru 65 10-80 (V8-WST)(V8-WOD)	.....	2	314 5183	#
FELT, Flywheel Mud Pan				
60 Thru 63 01 (WST) (WOD): 60 Thru 62 10 (OHVC-WST) (OHVC-WOD)	.....	1	311 0602	
60-61 10 (WST-Heavy Duty-Note 1.002-1): 62 10 (WST-Heavy Duty-Note 1.002-2)	.....	1	314 2590	
SEAL, Flywheel Mud Pan				
60 Thru 65 10-20-80 (V8-WST)(V8-WOD)	.....	1	315 7937	

Copyright 1963 American Motors Corp.

GROUP NO. — DESCRIPTION — YEAR and MODEL	PRIMARY GROUP NO.	PER CAR	PART NO.	CODE
SCREEN, Flywheel Mud Pan Air Inlet				
64 01 (WES): 63-64 10 (WES)	.....	1	316 8198	
ATTACHING PARTS Air Inlet Screen To Pan				
SCREW, Tapping..... 63 10 (WES)	17.670	2	G172429	NA
SCREW, Tapping..... 64 01-10 (WES)	17.670	2	G172427	NA
WASHER, Plain..... 64 01-10 (WES)	17.814	2	G120392	NA
1.059 HEAD ASSEMBLY, Cylinder				
60 Thru 64 01 (LHE) ***(Replaces 320 2360, 320 3493, 315 4796)***	.....	1	320 3978	
60 Thru 64 01-10 (OHVC-196)...(Incl. Valve Guides) ***(Replaces 320 2361)***	.....	1	320 4443	
65 01 (LHE)	.....	1	320 5606	
65 01 (OHV-196)	.....	1	320 5605	
65 01-80 (OHV-232): 64-65 10 (OHV-232): 65 01-10 (OHV-199) ***(Replaces 317 0718)***	.....	1	320 5586	
61 10 (OHVA): 62-63 10 (OHVA-Note 1.059-3)...(Incl. Valve Guides) ***(Replaces 320 2433)(Ref. Pr. List)***	.....	1	320 3622	
63-64 10 (OHVA-Note 1.059-4)	.....	1	320 4444	
60 Thru 62 20-80...(Incl. Valve Guides)	.....	2	315 6161	
63 80 (Note 1.059-1)...(Incl. Valve Guides)	.....	2	316 6623	
63 Thru 65 10-80 (V8-Note 1.059-2)...(Incl. Valve Guides)	.....	2	317 0859	
COVER, Cylinder Head Water Outlet				
60 Thru 65 10-20-80 (V8)	.....	2	315 0596	
ATTACHING PARTS Cover To Cylinder Head				
BOLT, Hexagon ..... 63 Thru 65 10 (LHD-V8-287-4 Req.) ***(RHD-V8-287-WAT-3 Req.):*** 60 Thru 65 80 (V8-4 Req.)	17.038	AR	G180120	NA
STUD..... ***64-65 10 (RHD-V8-287-WAT)***	9.007	1	316 8196	
WASHER, Lock..... 60 Thru 65 10-20-80 (V8)	17.820	4	G120382	NA
GASKET, Water Outlet Cover				
60 Thru 65 10-20-80 (V8)	.....	2	314 4683	
ELBOW, Cylinder Head To Booster				
60 01 (LHE-WST)(LHE-WOD): 61-62 01 (LHD-LHE-WST)(LHD-LHE-WOD).....	17.218	1	G137421	
60 Thru 63 01-10 (OHV): 64 01 (LHE-LES): 64 01 (OHV): 64 10 (OHV-196-WVW)(OHVC-196-WES)	17.218	1	G137422	
TEE, Cylinder Head To Booster Tube				
60-61 01 (LHE-WAT)	17.754	1	G143482	
PIN, Cylinder Head To Manifold Dowel				
65 01-80 (OHV-232): 64-65 10 (OHV-232): 65 01-10 (OHV-199)	.....	2	317 2318	
TUBE, Cylinder Head Heater Outlet (In Head)				
65 01-80 (OHV-232): 64-65 10 (OHV-232): 65 01-10 (OHV-199)	.....	1	318 4331	#

NOTE 1.059-1: On 63 80 used prior to Engine Code No. 411E02.
NOTE 1.059-2: On 63 80 used beginning with Engine Code No. 411E02.
NOTE 1.059-3: On 63 10 (OHVA) used prior to Engine Code No. 502B05 (LDT) and 502B06 (WDT).
NOTE 1.059-4: On 63 10 (OHVA) used beginning with Engine Code No. 502B05 (LDT) and 502B06 (WDT).

Copyright 1963 American Motors Corp.

GROUP NO. — DESCRIPTION — YEAR and MODEL	PRIMARY GROUP NO.	PER CAR	PART NO.	CODE
CONNECTOR, Cylinder Head To Booster				
63 01 (LHD-LHE)	17.160	1	G137405	
PLUG, Cylinder Head				
(Heater Hole) 60 Thru 65 01 (LHE-1 Req. -Less Heater)(OHVC-196-1 Req. -Less Heater): 60 10 (1 Req. -Less Heater): 61 Thru 64 10 (OHVA-1 Req. -Less Heater): 60 Thru 65 10-20-80 (V8-2 Req. -Less Heater)(V8-1 Req. -With Heater)	17.486	AR	G103867	NA
(Intake Manifold) 60-61 01: 62 Thru 65 01 (LHE-LPB)	17.486	1	G103867	NA
(Cylinder Block Vent Valve) 60 01-10: 61-62 01-10 (LPV): 63 Thru 65 01 (OHVC-196-LDT)	17.486	1	G219189	NA
(Oil Passage) 60 Thru 65 01 (OHVC-196): 60 Thru 64 10 (OHVC-196)	.....	2	400 0239	
(Oil Passage) 61 10: 62 Thru 64 10 (OHVA)	17.486	2	G103865	NA
(Oil Passage) 60 Thru 65 10-20-80 (V8)	17.518	1	G444691	NA
(Core) 60 Thru 65 01 (OHV-196-2-1/8" Dia.): 65 01-80 (OHV-232-2-1/8" Dia.): 60 Thru 64 10 (OHV-196-2-1/8" Dia.): 64-65 10 (OHV-232-2-1/8" Dia.): 65 01-10 (OHV-199-2-1/8" Dia.)	1.038	1	310 5394	
(Core) 61 Thru 64 10 (OHVA)	.....	2	316 1088	
(Core) 65 01-80 (OHV-232-7/8" Dia.) 64-65 10 (OHV-232-7/8" Dia.): 65 01-10 (OHV-199-7/8" Dia.)	.....	3	317 2319	
1.060 GASKET SET, Engine				
(Overhaul) 60 Thru 63 01 (LHE) ***(Replaces 320 1824)***	.....	1	320 4504	
(Overhaul) 64 01 (LHE)	.....	1	320 4690	
(Overhaul) 60 01-10 (OHV) ***(Replaces 320 1823)***	.....	1	320 4511	
(Overhaul) 61 Thru 63 01-10 (OHVC) ***(Replaces 320 2600)***	.....	1	320 4505	
(Overhaul) 64 01-10 (OHVC-196)	.....	1	320 4689	
(Overhaul) 65 01 (LHE)	.....	1	320 5611	
(Overhaul) 65 01 (OHV-196)	.....	1	320 5612	
(Overhaul) 61 Thru 64 10 (OHVA) ***(Replaces 320 2540)***	.....	1	320 4526	
(Overhaul) 64 10 (OHVC-232)	.....	1	320 5119	
(Overhaul) 65 01-10-80 (OHV-232): 65 01-10 (OHV-199)	.....	1	320 5613	
(Overhaul) 60-61 20	.....	1	320 1819	
(Overhaul) 60 Thru 65 10-80 (V8)	.....	1	320 1821	
(Valve Grind) 60 Thru 65 01 (LHE)	.....	1	320 0912	
(Valve Grind) 60 Thru 65 01 (OHVC-196): 60 Thru 64 10 (OHVC-196) ***(Replaces 320 1161)***	.....	1	320 4521	
(Valve Grind) 61 Thru 64 10 (OHVA)	.....	1	320 2539	
(Valve Grind) 64 10 (OHVC-232)	.....	1	320 5118	
(Valve Grind) 65 01-10-80 (OHV-232): 65 01-10 (OHV-199)	.....	1	320 5614	
(Valve Grind) 60-61 20	.....	1	320 1820	
(Valve Grind) 60 Thru 65 10-80 (V8)	.....	1	320 1822	
1.061 GASKET, Cylinder Head				
60 Thru 65 01 (LHE)	.....	1	315 4311	
60 Thru 65 01 (OHV-196-.090 Thick): 60 Thru 64 10 (OHVC-196-.090 Thick)	.....	1	320 3981	#
60 Thru 65 01 (OHV-196-.120 Thick): 60 Thru 64 10 (OHVC-196-.120 Thick)	.....	1	320 6934	#
60 Thru 65 01 (OHV-196): 60 Thru 64 10 (OHVC-196) ***(Replaces 314 8195)***	.....	1	317 0927	
65 01 (OHV-199-Export-Low Compression): 65 10 (OHV-232-Export-Low Compression)	.....	1	317 9287	
61 Thru 64 10 (OHVA) ***(Replaces 316 5616)***	.....	1	316 5655	
65 01-80 (OHV-232): 64-65 10 (OHV-232): 65 01-10 (OHV-199)	.....	1	317 4627	
60-61 20	.....	2	314 4784	
60 Thru 65 10-80 (V8)	.....	2	314 4783	
1.063 STUD, Cylinder Head To Block				
60 Thru 62 01 (LHE-LPS-19 Req. -3-1/16" Long): 60 Thru 62 01 (LHE-WPS-16 Req. -3-1/16" Long): 63 Thru 65 01 (LHE-17 Req. -3-1/16" Long)	.....	AR	310 5772	
60 Thru 65 01 (LHE-3 Req. -3-5/8" Long): 60 Thru 65 01 (LHE-WPS-LAC-6 Req. -3-5/8" Long): 60-61 01 (OAC-4 Req. -3-5/8" Long): 62-63 01 (LHE-WAC-LPS-4 Req. -3-5/8" Long)	.....	AR	313 4405	

Copyright 1963 American Motors Corp.

GROUP NO. — DESCRIPTION — YEAR and MODEL	PRIMARY GROUP NO.	PER CAR	PART NO.	CODE
BOLT, Cylinder Head To Block				
60 Thru 65 01 (OHVC-196-6 Req. -5-7/16" Long): 60 10 (LAS-6 Req. -5-7/16" Long): 60 10 (WAS-5 Req. -5-7/16" Long): 61 Thru 64 10 (OHVC-196-6 Req. -5-7/16" Long)	.....	AR	315 1414	
63 Thru 65 01 (LHE-2-3/8" Long)	.....	2	316 7135	
60 Thru 65 01 (OHVC-196-3-9/32" Long): 60 Thru 64 10 (OHVC-196-3-9/32" Long)	.....	5	315 1415	
60 Thru 65 01 (OHVC-196-4-17/32" Long): 60 Thru 64 10 (OHVC-196-4-17/32" Long)	.....	2	315 1413	
60 Thru 65 01 (OHVC-196-2 Req. -5-3/4" Long): 60 10 (LAS-2Req. -5-3/4" Long): .61 10 (WAS-1 Req. -5-3/4" Long): 61 Thru 64 10 (OHVC-196-2 Req. -5-3/4" Long)	.....	AR	315 1412	
60 10 (WAS-5-1/4" Long)	.....	1	315 5367	
60 10 (WAS-6-3/8" Long)	.....	1	315 5365	
61 Thru 64 10 (OHVA-5-9/16" Long)	.....	8	316 0298	
61 Thru 64 10 (OHVA-4-5/16" Long)	.....	5	316 0296	
61 Thru 64 10 (OHVA-5" Long)	.....	2	316 0297	
61 Thru 64 10 (OHVA-5-3/4" Long)	.....	2	316 0299	
60 Thru 65 10-20-80 (V8-4-1/4" Long)	.....	6	314 4505	
60 Thru 65 10-20-80 (V8-3" Long)	.....	4	314 4504	
65 01-80 (OHV-232-4-7/16" Long): 64-65 10 (OHV-232-4-7/16" Long): 65 01-10 (OHV-199-4-7/16" Long)	.....	12	317 2330	
65 01-80 (OHV-232-5-3/4" Long): 64-65 10 (OHV-232-5-3/4" Long): 65 01-10 (OHV-199-5-3/4" Long)	.....	2	317 33 57	
60 Thru 62 20-80 (7 Req. -3-15/16" Long): 63 10-80 (V8-6 Req. -3-15/16" Long): 64-65 10-80 (LHD-V8-6 Req. -3-15/16" Long): ***64-65 10 (RHD-V8-7 Req. -3-15/16" Long)***	.....	AR	314 4506	
60 Thru 62 20-80 (1 Req. -4-53/64" Long): 63 10-80 (V8-2 Req. -4-53/64" Long): 64-65 10-80 (LHD-V8-2 Req. -4-53/64" Long): ***64-65 10 (RHD-V8-1 Req. -4-53/64" Long)***	.....	AR	314 6597	
60 Thru 65 10-20-80 (V8-5" Long)	.....	4	315 2363	
60 Thru 65 10-20-80 (V8-Plain-6-3/8" Long)	.....	6	314 4502	
60 Thru 65 10-20-80 (V8-Hollow-6-3/8" Long)	.....	2	314 4503	
WASHER, Cylinder Head To Block Stud				
60 Thru 65 01 (LHE)	1.034	AR	24 545	
WASHER, Cylinder Head To Block Bolt				
60 Thru 64 01-10 (OHV-196): 65 01 (LHE-21 Req.)(OHVC-196-15 Req.): 60 Thru 65 10-20-80 (V8-5/64" Thick-21 Req.)	1.034	AR	24 545	
60 Thru 65 10-20-80 (V8-3/16" Thick)	.....	8	314 4507	
NUT, Cylinder Head To Block Stud				
60 Thru 65 01 (LHE) ***(Replaces 800 0292)***	17.406	20	400 1247	
PIN, Cylinder Head To Block Front Dowel				
61 Thru 64 10 (OHVA)	.....	1	316 4362	

Copyright 1963 American Motors Corp.

GROUP NO. — DESCRIPTION — YEAR and MODEL	PRIMARY GROUP NO.	PER CAR	PART NO.	CODE
PIN, Cylinder Head To Block Rear Dowel				
61 Thru 64 10 (OHVA)	.....	1	316 0072	
RING, Cylinder Head To Block Dowel Pin "O"				
61 Thru 64 10 (OHVA)	.....	2	316 4047	
1.065 TUBE, Intake Manifold Cover Water				
60-61 01 (OHV): 62 01 (OHV-Note 1.066-1 Type 1)	.....	1	316 0024	
62 01 (OHV-Note 1.066-1 Type 2): 63 Thru 65 01 (OHVC-196-LDT)	.....	1	316 5555	
ATTACHING PARTS Tube Elbow To Manifold Cover				
WASHER, Plain ..... 60 Thru 62 01 (OHV): 63 Thru 65 01 (OHVC-196-LDT)	.....	2	316 0022	
WASHER, Lock ..... 60 Thru 62 01 (OHV): 63 Thru 65 01 (OHVC-196-LDT)	17.824	2	G125700	
NUT, Hexagon ..... 60 Thru 62 01 (OHV): 63 Thru 65 01 (OHVC-196-LDT)	.....	2	316 0021	
SEAL, Tube Elbow To Manifold Cover ("O" Ring)				
60 01 (OHV)	10.460	2	313 7267	
61 01 (OHB): 62 01 (OHV-Note 1.066-1 Type 1)	.....	2	316 5558	
GASKET, Tube Elbow To Manifold Cover				
62 01 (OHV-Note 1.066-1 Type 2): 63 Thru 65 01 (OHVC-196-LDT)	.....	2	316 5529	
CAP, Intake Manifold Cover Water Tube				
61-62 01 (OHV-Less Heater): 63 Thru 65 01 (OHVC-196-LDT-Less Heater): 64 10 (Six-Less Heater)	2.080	2	316 0337	
ATTACHING PARTS Cap To Tube				
CLAMP ..... 61-62 01 (OHV-Less Heater): 63 Thru 65 01 (OHVC-196-LDT-Less Heater)	13.086	2	315 5795	
1.066 COVER, Intake Manifold				
60 01 (OHV) ..... *(Use 320 2421)*	.....	1	320 2419	
61 01 (OHV-Note 1.066-2): 62 01 (OHV-Note 1.066-1 Type 1)	.....	1	320 2421	
62 01 (OHV-Note 1.066-1 Type 2): 63 Thru 65 01 (OHVC-196-LDT)	.....	1	320 3507	
61 01 (OHV-Export-Less Heater-Note 1.066-3): 60 10 (LDT): 61 Thru 64 10 (OHVC-196-LDT)	.....	1	320 1497	
63 Thru 65 01 (OHVC-196-WDT): 60 10 (WDT): 61 Thru 64 10 (OHVC-196-WDT)	.....	1	320 1498	#
61 Thru 64 10 (OHVA-LDT)	.....	1	320 2504	
61 Thru 64 10 (OHVA-WDT)	.....	1	320 2505	

NOTE 1.066-1: Two Types of Intake Manifold Covers were used on the 62 01 (OHV) Series. They can be identified as follows:
Type 1: The Intake Manifold Cover Water Tube Elbow to Manifold Cover has as "O" Ring.
Type 2: The Intake Manifold Cover Water Tube Elbow to Manifold Cover has a Flat Gasket.
NOTE 1.066-2: Used with Water Tube.
NOTE 1.066-3: Used less Water Tube.

Copyright 1963 American Motors Corp.

GROUP NO. — DESCRIPTION — YEAR and MODEL	PRIMARY GROUP NO.	PER CAR	PART NO.	CODE	
ATTACHING PARTS					1.066
Manifold Cover To Cylinder Head					1.066
BOLT, Hexagon ..... 60 Thru 62 01 (OHV-1-1/8" Long): 63 Thru 65 01 (OHVC-196-LDT-1-1/8" Long): 60 Thru 64 10 (OHV-196-LDT-1-1/8" Long)	17.038	2	G179819	NA	1.066mh 1.066mh 1.066ch
BOLT, Hexagon ..... 60 Thru 65 01 (OHVC-196-1" Long): 60 10 (LAS-1" Long): 61 10 (LDT-1" Long): 62 10 (OHV-1" Long): 63-64 10 (OHV-196-1" Long) ..	17.038	6	G180022	NA	1.066mh 1.066mh 1.066mh
BOLT, Hexagon..... 60 10 (WAS-1" Long)	17.038	4	G180022	NA	1.066ch
BOLT, Hexagon ..... 64-65 01 (OHVC-196-1-1/8" Long)	17.038	2	G180023	NA	1.066mh
BOLT, Hexagon..... 60 10 (WAS-1-1/2" Long)	17.038	2	G180034	NA	1.066ch
SPACER ..... 60 01 (OHV)	.....	2	316 0042		1.066ch
WASHER, Plain..... 60 Thru 62 01 (OHV-11/32" O.D.): 63 Thru 65 01 (OHVC-196-LDT-11/32" O.D.): 60 Thru 64 10 (OHV-196-LDT-11/32" O.D.)	17.814	2	G120393	NA	1.066ch 1.066ch 1.066ch
WASHER, Plain..... 60 Thru 65 01 (OHVC-196-5/8" O.D.): 60 10 (LAS-5/8" O.D.): 61 Thru 63 10 (OHV-196)	17.814	6	G120392	NA	1.066ch 1.066ch
WASHER, Plain..... 60 10 (WAS)	17.814	2	G120393	NA	1.066ch
WASHER, Lock..... 60 Thru 62 01 (OHV-19/32" O.D.): 63 Thru 65 01 (OHVC-196-LDT-19/32" O.D.): 60 Thru 64 10 (OHV-196-LDT-19/32" O.D.)	17.820	2	G120214	NA	1.066ch 1.066ch 1.066ch
WASHER, Lock..... 60 Thru 65 01 (OHVC-196-1/2" O.D.): 60 10 (LAS-1/2" O.D.): 61 Thru 63 10 (OHV-196)	17.820	6	G103319	NA	1.066ch 1.066ch
GASKET, Intake Manifold Cover					1.066
60 Thru 65 01 (OHVC-196): 60 Thru 64 10 (OHVC-196)	.....	1	315 8679		1.066ga
61 Thru 64 10 (OHVA)	.....	1	316 0104		1.066ga
PLUG, Intake Manifold Cover					1.066
61-62 01-10 (OHV-WST-2 Req.)(OHV-WOD-2 Req.): 62 01 (OHV-LES-3 Req.): 62 01 (OHV-WES-1 Req.): 62 10 (2 Req.): 63-64 10 (OHV-196-WST-1 Req.)(OHV-196-WOD-1 Req.)	17.486	AR	G103865	NA	1.066pl 1.066pl 1.066pl
60 Thru 65 01 (OHVC-196-LPB)) 60 Thru 64 10 (OHV-196-LPB)	17.486	1	G103867	NA	1.066pl
1.067 MANIFOLD ASSEMBLY, Intake					
65 01-10 (OHV-199)	.....	1	317 6465		1.067
63 Thru 65 10 (V8-287): 65 10 (V8-327-WDT): 60 Thru 65 20-80 (V8-327-WDT): 65 80 (V8-287)	.....	1	320 1779		
64 10 (OHV-232): 65 10 (OHV-232-LDT)	.....	1	317 3083		1.067
64-65 10 (V8-327-W4B): 60 Thru 65 20-80 (V8-327-W4B)	.....	1	320 1173		
65 01-10-80 (OHV-232-WDT)	.....	1	317 5991		1.067
ATTACHING PARTS					1.067
Intake Manifold To Cylinder Head					1.067
CLAMP ..... 65 01-80 (OHV-232): 64-65 10 (OHV-232): 65 01-10 (OHV-199)	.....	8	317 3187		1.067 1.067
BOLT, Hexagon ..... 65 01-80 (OHV-232): 64-65 10 (OHV-232): 65 01-10 (OHV-199)	.....	8	317 3326		1.067 1.067
BOLT, Hexagon ..... 60 Thru 65 10-20-80 (V8)	17.038	4	G179840	NA	1.067ih
STUD..... 60 Thru 65 10-20-80 (V8)	4.190	4	313 5884		1.067ih
WASHER, Plain..... 60 Thru 65 10-20-80 (V8-1-1/16" O.D.) ..... ***(Replaces 800 0163)***	17.814	4	400 1102		1.067ih 1.067ih
WASHER, Plain..... 60 Thru 65 10-20-80 (V8-1-1/8" O.D.)	.....	4	314 4571		1.067ih
NUT, Hexagon..... 60 Thru 65 10-20-80 (V8)	17.406	4	G120369	NA	1.067ih

NOTE 1.067-1: Two Types of Exhaust Manifolds were installed on 65 01-10-80 (OHV-232) and 65 01-10 (OHV-199): They can be identified as follows: 1.067 1.067

Type 1: The Exhaust Manifold does not have a Anti-Flutter Spring and is used prior to Car Sequence No. E-107166 and W-102109. 1.067

Type 2: The Exhaust Manifold has a Anti-Flutter Spring (.051 Dia. Wire) and is used beginning with Car Sequence No. E-107166 and W-102109.

Copyright 1963 American Motors Corp.

GROUP NO. — DESCRIPTION — YEAR and MODEL	PRIMARY GROUP NO.	PER CAR	PART NO.	CODE
Intake Manifold To Exhaust Manifold				
STUD..... 65 01-80 (OHV-232): 64-65 10 (OHV-232): 65 01-10 (OHV-199)	.....	2	317 3063	
WASHER, Lock..... 65 01-80 (OHV-232): 64-65 10 (OHV-232): 65 10 (OHV-199)	17.820	2	G103321	NA
NUT, Hexagon..... 65 01-80 (OHV-232): 64-65 (OHV-232): 65 10 (OHV-199)	.....	2	314 9892	
GASKET, Intake Manifold To Cylinder Head				
60 Thru 65 10-20-80 (V8)	.....	2	314 6632	
65 01-80 (OHV-232): 64-65 10 (OHV-232): 65 01-10 (OHV-199)	.....	1	317 4490	
GASKET, Intake Manifold To Exhaust Manifold				
65 01-80 (OHV-232): 64-65 10 (OHV-232): 65 01-10 (OHV-199)	.....	1	317 3649	
BAFFLE, Intake Manifold (Heat Deflector)				
65 01-80 (OHV-232): 64-65 10 (OHV-232): 65 01-10 (OHV-199)	.....	1	317 4459	
TUBE, Choke Heater				
60 Thru 65 10-20-80 (V8)	.....	1	315 5604	#
PLUG, Choke Heater Hole				
(Large) 60 Thru 65 10-20-80 (V8)	4.020	1	315 0265	
(Small) 60 Thru 65 10-20-80 (V8).....	4.020	1	315 0266	
PLUG, Intake Manifold				
60 Thru 65 10-20-80 (V8-WST)(V8-WOD)	17.486	1	G103865	NA
65 01-10-80 (OHV-232-LPB)(OHV-232-WFGS)(OHV-232-WST)(OHV-232-WOD): 60 Thru 64 10-20-80 (V8-LPB): 65 10-80 (V8-LPB)(V8-WFGS): 64 10 (OHV-232-LPB)(OHV-232-WST)(OHV-232-WOD): 65 01-10 (OHV-199-WST) (OHV-199-WOD)(OHV-199-LPB)(OHV-199-WFGS).....	17.486	1	G103867	NA
65 01-10-80 (OHV-232-WCGS): 65 01-10 (OHV-199-WCGS).....	17.514	1	G444612	NA
BOLT, Intake Manifold Hole Plug				
60 Thru 62 20-80.....	17.038	1	G180116	NA
WASHER, Intake Manifold Hole Plug Bolt				
60 Thru 62 20-80.....	8.116	1	310 7540	
MANIFOLD ASSEMBLY, Exhaust				
60 Thru 64 01-10 (OHV-196)...(Incl. Tube And Pipe Studs)	.....	1	315 6283	
65 01 (OHV-196)	.....	1	317 5885	
64 10 (OHV-232): 65 10 (OHV-232-LDT-Note 1.067-1 Type 1)	.....	1	317 3237	
65 01-10-80 (OHV-232-WDT-Note 1.067-1 Type 1): 65 01-10 (OHV-199-LDT Note 1.067-1 Type 1): ***165 01-10 (OHV-199-Can-Note 1.067-1 Type 1): 165 01-10-80 (OHV-232-Can-Note 1.067-1 Type 1) .....(Replaces 320 6251)***	.....	1	317 6466	
65 01-10-80 (OHV-232-WDT-Note 1.067-1 Type 2): 65 01-10 (OHV-199-LDT-Note 1.067-1 Type 2): ***165 01-10 (OHV-199-Can-Note 1.067-1 Type 2): 165 01-10-80 (OHV-232-Can-Note 1.067-1 Type 2).....(Replaces 320 6106)***	.....	1	320 6251	
65 10 (OHV-232-LDT-Note 1.067-1 Type 2).....	.....	1	320 6107	
(Left) 60 Thru 62 20-80...(Incl. Pipe Studs)..... ***(Replaces 315 5171)***	.....	1	320 3407	
(Left) 63 Thru 65 10-80 (V8)...(Incl. Pipe Studs).....	.....	1	316 6824	
(Right) 63 Thru 65 10-80 (V8)...(Incl. Pipe Studs).....	.....	1	316 6825	
(Right) 60 Thru 62 80...(Less Pipe Studs) .....***(Replaces 315 5172)***	.....	1	315 0360	

Copyright 1963 American Motors Corp.

GROUP NO. — DESCRIPTION — YEAR and MODEL	PRIMARY GROUP NO.	PER CAR	PART NO.	CODE
ATTACHING PARTS				
Exhaust Manifold To Cylinder Head				
CLAMP ..... 65 01-80 (OHV-232): 64-65 10 (OHV-232): 65 01-10 (OHV-199)	.....	8	317 3187	
STUD ..... 60 Thru 65 01 (OHVC-196-1-13/16" Long): 60 Thru 64 10 (OHVC-196-1-13/16" Long)	17.718	2	G192426	
STUD ..... 60 Thru 65 01 (OHVC-196-1-9/16" Long-4 Req.): 60 Thru 64 10 (OHV-196-1-9/16" Long-1 Req.): 64-65 10 (OHV-232-2 Req.): 65 01-80 (OHV-232-2 Req.): 65 01-10 (OHV-199-2 Req.) .	17.718	AR	G103196	
BOLT, Hexagon ..... 65 01-80 (OHV-232-1-3/16" Long): 64-65 10 (OHV-232-1-3/16" Long): 65 10 (OHV-199-1-3/16" Long)	.....	8	317 3326	
BOLT, Hexagon ..... 65 01-80 (OHV-232-2-9/16" Long-2 Req.): 64-65 10 (OHV-232-2-9/16" Long-2 Req.): 65 01-10 (OHV-199-2-9/16" Long-2 Req.)	.....	AR	317 3064	
BOLT, Hexagon ..... 60 Thru 65 10-20-80 (V8-3-3/4" Long)	.....	2	315 0375	
BOLT, Hexagon ..... 60 Thru 62 20-80 (7 Req. -1-5/8" Long): 63 Thru 65 10-80 (V8-1-5/8" Long-8 Req.)	.....	AR	314 5572	
BOLT, Hexagon ..... 60 Thru 62 20-80 (2 Req. -2" Long): 63 Thru 65 10-80 (V8-2" Long-4 Req.)	.....	AR	314 5573	
BOLT, Hexagon ..... 60 Thru 62 20-80 (2-1/4" Long)	.....	3	315 0374	
WASHER, Plain ..... 60 Thru 65 01 (OHV-196): 60 Thru 64 10 (OHV-196) .	17.814	4	400 1181	NA
WASHER, Dished ..... 65 01-80 (OHV-232): 64-65 10 (OHV-232): 65 01-10 (OHV-199)	.....	4	317 3077	
WASHER, Lock ..... 60 Thru 65 01 (OHV-196-6 Req.): 60 Thru 64 10 (OHVC-196-6 Req.): 64-65 10-80 (V8-14 Req.) .	17.820	AR	G103321	NA
NUT, Hexagon ..... 60 Thru 65 01 (OHVC-196-6 Req.): 60 Thru 64 10 (OHV-196-6 Req.): 65 01-80 (OHV-232-2 Req.): 64-65 10 (OHVC-232-2 Req.): 65 01-10 (OHV-199-2 Req.)	.....	AR	314 9892	
Exhaust Manifold To Intake Manifold				
STUD ..... 65 01-80 (OHV-232): 64-65 10 (OHV-232): 65 01-10 (OHV-199)	.....	2	317 3324	
WASHER, Lock ..... 65 01-80 (OHV-232): 64-65 10 (OHV-232): 65 10 (OHV-199)	17.820	2	G103321	NA
NUT, Hexagon ..... 65 01-80 (OHV-232): 64-65 10 (OHV-232): 65 10 (OHV-199)	.....	2	314 4892	
DAMPER KIT, Exhaust Manifold				
65 01-10-80 (OHV-232-Note 1.067-1 Type 1): 65 01-10 (OHV-199 -Note 1.067-1 Type 1)(Incl. Counter Weight Assy., Valve, Spring, Bushings And Spring Pin)	.....	1	320 5576	
65 01-10-80 (OHV-232-Note 1.067-1 Type 2): 65 01-10 (OHV-199-Note 1.067-1 Type 2)(Incl. Counter Weight Assy., Valve, Springs, Bushings & Spring Pin)	.....	1	320 6108	
DAMPER, Exhaust Manifold				
60 Thru 65 10-20-80 (V8)	.....	1	314 6323	
GASKET, Exhaust Manifold Damper				
60 Thru 65 10-20-80 (V8)	4.178	1	314 6322	
SPRING, Exhaust Manifold Damper Heat Valve				
64 10 (OHVC-232)	.....	1	317 2720	
65 01-10-80 (OHV-232): 65 01-10 (OHV-199) ..... ***(Replaces 317 2720)***	.....	1	317 7358	

Copyright 1963 American Motors Corp.

GROUP NO. — DESCRIPTION — YEAR and MODEL	PRIMARY GROUP NO.	PER CAR	PART NO.	CODE
SPRING KIT, Exhaust Manifold Damper Heat Valve Anti-Flutter				
65 01-10-80 (OHV-232-Note 1.067-1 Type 1): 65 01-10 (OHV-199-Note 1.067-1 Type 1)	.....	1	320 6707	
SPRING, Exhaust Manifold Damper Heat Valve Anti-Flutter				
65 01-10-80 (OHV-232-Note 1.067-1 Type 2): 65 01-10 (OHV-199-LDT-Note 1.067-1 Type 2)	.....	1	317 9129	
PIN, Exhaust Manifold Damper Heat Valve Spring				
65 01-80 (OHV-232): 64-65 10 (OHV-232): 65 01-10 (OHV-199)	17.468	1	G443023	
1.068 COVER, Cylinder Head				
60 Thru 62 01-10 (OHVC): 63 01-10 (OHVC-Note 1.022-1 Type 1): 64-65 01 (OHVC-196-WDT): 64 10 (OHVC-196)...(Incl. Gasket And Grommets)	.....	1	314 4749	
63 01 (OHV-LDT-Note 1.022-2)...(Incl. Gasket And Grommets)	.....	1	316 9352	
64-65 01 (OHVC-196-LDT)...(Incl. Gasket And Grommets)	.....	1	317 2650	
61 Thru 64 10 (OHVA)...(Incl. Gasket And Grommets)	.....	1	316 2049	
60 Thru 65 10-20-80 (V8) ...(Incl. Gasket And Grommets)	.....	2	315 1693	
65 01-80 (OHV-232-LFFC-Note 1.068-1 Type 1): 64-65 10 (OHV-232-LFFC-Note 1.068-1 Type 1). ***(Replaces 317 3295)(Use 320 6206)***	.....	1	317 7348	#
65 01-10-80 (OHV-232-LFFC-Note 1.068-1 Type 2)...(Incl. Cap)	.....	1	320 6206	
65 01-80 (OHV-232-WFFC-Note 1.068-1 Type 1): 65 01-80 (OHV-199-Note 1.068-1 Type 1): 64-65 10 (OHV-232-WFFC-Note 1.068-1 Type 1).....***(Replaces 317 3667)***	.....	1	317 7349	
65 01-10-80 (OHV-232-WFFC-Note 1.068-1 Type 2): 65 01-10 (OHV-199-Note 1.068-1 Type 2)...(Incl. Cap)	.....	1	320 6205	
BRACKET, Cylinder Head Cover				
60 Thru 65 01 (OHVC-196): 60 Thru 64 10 (OHVC-196)	.....	2	314 9112	
61 Thru 64 10 (OHVA)	.....	2	315 9810	
ATTACHING PARTS — Cylinder Head Cover				
SCREW, Machine..... 60 Thru 65 01 (OHVC-196): 60 Thru 64 10 (OHV-196)	1.071	2	314 5053	
SCREW, Machine..... 65 01-80 (OHV-232): 64-65 10 (OHV-232): 65 01-10 (OHV-199)	.....	7	400 0765	
STUD..... 60 Thru 65 10-20-80 (V8)	1.071	4	315 2364	
GROMMET ..... 60 Thru 65 01 (OHV-196-2 Req.): 60 Thru 64 10 (OHV-196-2 Req.): 60 Thru 65 10-20-80 (V8-4 Req.)	1.071	AR	312 7945	
NUT, Wing..... 60 Thru 65 10-20-80 (V8)	1.071	4	315 2715	
1.072 GASKET, Cylinder Head Cover				
60 Thru 63 01-10 (OHVC-196) ..... ***(Use 317 2083)***	.....	1	314 4745	
64-65 01 (OHVC-196): 64 10 (OHVC-196)	.....	1	317 2083	
61 Thru 64 10 (OHVA) ..... ***(Replaces 317 2084)(Use 317 2084)***	.....	1	316 0092	
65 01-80 (OHV-232): 64-65 10 (OHV-232): 65 01-10 (OHV-199)	.....	1	317 2304	
60 Thru 65 10-20-80 (V8)	.....	2	314 4532	

NOTE 1.068-1: Two Types of Cylinder Head covers were installed on 65 01-10-80 (OHV-232) and 65 01-10 (OHV-199). They can be identified as follows:

Type 1: The Cylinder Head Cover uses a Oil Filler Cap that is turned into the Cover and is used prior to Engine Code No. 701-J-28 on 65 01-10-80 (OHV-232-WFFC); 701-L-28 on 65 01-10 (OHV-199-WFFC); on 65 01-10-80 (OHV-232-LFFC)(OHV-199-LFFC) used prior to Car Sequence No. E-106024 and W-100798.

Type 2: The Cylinder Head Cover has a Oil Filler Tube and uses a Oil Filler Cap that is pressed on and is used beginning with Engine Code No. 701-J-28 on 65 01-10-80 (OHV-232-WFFC);701-L-28 on 65 01-10 (OHV-199-WFFC); on 65 01-10-80 (OHV-232-LFFC)(OHV-199-LFFC) used beginning with Car Sequence No. E-106024 and W-100798.

Copyright 1963 American Motors Corp.

GROUP NO. — DESCRIPTION — YEAR and MODEL	PRIMARY GROUP NO.	PER CAR	PART NO.	CODE
1.077 VALVE, Intake				
60 Thru 65 01 (LHE)...*(Replaces 320 1611)*	.....	6	315 7608	
60 Thru 65 10-20-80 (V8)...*(Replaces 320 1204, 320 5207)*	.....	8	315 6156	
(Std.) 60 Thru 65 01 (OHVC-196): 60 Thru 64 10 (OHV-196)...	.....	6	315 7641	
(Std.) 65 01-80 (OHV-232): 64-65 10 (OHV-232): 65 01-10 (OHV-199)...	.....	6	315 6156	
(.003) 61 Thru 64 10 (OHVA)...	.....	AR	316 2127	
(.003) 65 01-80 (OHV-232): 64-65 10 (OHV-232): 65 01-10 (OHV-199)...	.....	AR	317 5122	
(.015) 61 Thru 64 10 (OHVA)...	.....	AR	320 2774	
(.015) 65 01-80 (OHV-232): 64-65 (OHV-232): 65 01-10 (OHV-199)...	.....	AR	320 5163	
(.030) 61 Thru 64 10 (OHVA)...	.....	AR	320 2775	
(.030) 65 01-80 (OHV-232): 64-65 10 (OHV-232): 65 01-10 (OHV-199)...	.....	AR	320 5164	
SEAL KIT, Intake Valve				
60 Thru 65 01 (OHVC-196): 60 Thru 64 10 (OHV-196)...(Incl. 12 Seals)...*(Ref. Pr. List)*	.....	1	320 2898	#
65 01-80 (OHV-232): 64-65 10 (OHV-232): 65 01-10 (OHV-199): 60 Thru 63 20-80 (Note 1.059-1)...(Incl. 16 Seals)...*(Ref. Pr. List)*	.....	1	320 2899	#
63 Thru 65 10-80 (V8-Note 1.059-2)...(Incl. 8 Seals)...*(Ref. Pr. List)*	.....	1	320 4513	#
DEFLECTOR, Intake Valve Stem Oil (Rubber)				
60 Thru 65 01 (OHVC-196): 60 Thru 64 10 (OHV-196)...*(Replaces 314 7307)*	.....	6	316 6332	
65 01-80 (OHV-232): 64-65 10 (OHV-232): 65 10 (OHV-199)...	.....	6	317 2320	
60 Thru 62 20-80: 63 80 (WCGS-Note 1.059-1)...*(Replaces 315 6159)(Use 317 2320)*	.....	8	316 6334	
63 80 (WFGS-Note 1.059-1)...	.....	8	316 9306	
1.078 VALVE, Exhaust				
60 Thru 65 01 (LHE)...*(Replaces 320 1551)*	.....	6	315 7276	
60-61 01-10 (OHVC): 62 01-10 (OHVC-Note 1.078-1)...*(Replaces 315 7278)(Ref. Pr. List)*	.....	6	316 0754	
62 01-10 (OHVC-Note 1.078-2): 63-64 01-10 (OHVC-196)...	.....	6	316 5644	
65 01 (OHV-196)...*(Replaces 320 5419, 320 3248)*	.....	6	317 5874	#
60 Thru 64 10-20-80 (V8)...*(Use 317 2328)*	.....	8	315 6155	
65 10-80 (V8)...*(Replaces 320 4977, 320 5277)*	.....	8	317 2328	
(Std.) 65 01-80 (OHV-232): 64-65 10 (OHV-232): 65 01-10 (OHV-199)...*(Replaces 320 4977)*	.....	6	317 2328	
(Std.) 61-62 10 (OHVA-Note 1.078-1)...*(Ref. Pr. List)*	.....	6	320 3090	
(Std.) 62 10 (OHVA-Note 1.078-2): 63 10 (OHVA-Note 1.059-3)...*(Replaces 320 3249)*	.....	6	316 5643	
(Std.) 63-64 10 (OHVA-Note 1.059-4)...*(Replaces 320 4460)*	.....	6	317 0431	
(.003) 61-62 10 (OHVA-Note 1.078-1)...*(Ref. Pr. List)*	.....	AR	320 3092	
(.003) 62 10 (OHVA-Note 1.078-2): 63 10 (OHVA-Note 1.059-3)...	.....	AR	316 5753	
(.003) 65 01-80 (OHV-232): 64-65 10 (OHV-232): 65 01-10 (OHV-199)...	.....	AR	317 5123	
(.003) 63-64 10 (OHVA-Note 1.059-4)...	.....	AR	317 0483	
(.015) 61-62 10 (OHVA-Note 1.078-1)...*(Ref. Pr. List)*	.....	AR	320 3093	
(.015) 62 10 (OHV-Note 1.078-2): 63 10 (OHVA-Note 1.059-3)...	.....	AR	320 3252	
(.015) 63-64 10 (OHVA-Note 1.059-4)...	.....	AR	320 4458	
(.015) 65 01-80 (OHV-232): 64-65 10 (OHV-232): 65 01-10 (OHV-199)...	.....	AR	320 5166	1
(.030) 61-62 10 (OHVA-Note 1.078-1)...*(Ref. Pr. List)*	.....	AR	320 3094	
(.030) 62 10 (OHVA-Note 1.078-2): 63 10 (OHVA-Note 1.059-3)...	.....	AR	320 3253	
(.030) 63-64 10 (OHVA-Note 1.059-4)...	.....	AR	320 4459	
(.030) 65 01-80 (OHV-232): 64-65 10 (OHV-232): 65 01-10 (OHV-199)...	.....	AR	320 5167	

NOTE 1.078-1: On 62 01-10 (OHVC) used prior to Engine Code No. G-31208; on 62 10 (OHVA) used prior to Engine Code No. B-31130.

NOTE 1.078-2: On 62 01-10 (OHVC) used beginning with Engine Code No. C-31208; on 62 10 (OHVA) used beginning with Engine Code No. B-31130.

Copyright 1963 American Motors Corp.

GROUP NO. — DESCRIPTION — YEAR and MODEL	PRIMARY GROUP NO.	PER CAR	PART NO.	CODE
VALVE SET, Exhaust				
60-61 01-10 (OHVC): 62 01-10 (OHVC-Note 1.078-1)...(Incl. 6) ...*(Ref. Pr. List)*	.....	1	320 2491	
62 01-10 (OHVC-Note 1.078-2): 63-64 01-10 (OHVC-196)...(Incl. 60 Thru 64 10-20-80 (V8)...(Incl. 8) ...*(Use 8-317 2328)*	.....	1	320 1203	
(Std.) 61-62 10 (OHVA-Note 1.078-1)...(Incl. 6) ...*(Ref. Pr. List)*	.....	1	320 3091	
SEAL KIT, Exhaust Valve				
60 Thru 65 01 (OHVC-196): 60 Thru 64 10 (OHV-196)...(Incl. 12 Seals).....	1.077	1	320 2898	
65 01-80 (OHV-232): 64-65 10 (OHV-232): 65 01-10 (OHV-199): 60 Thru 63 20-80 (Note 1.059-1)...(Incl. 16 Seals)	.....	1	320 2899	
63 Thru 65 10-80 (V8-Note 1.059-2)...(Incl. 8 Seals)	1.077	1	320 4513	
DEFLECTOR, Exhaust Valve Stem Oil (Rubber)				
60 Thru 65 01 (OHVC-196): 60 Thru 64 10 (OHV-196).....*(Replaces 314 7307)*	1.077	6	316 6332	
65 01-10 (OHV-199): 65 01-80 (OHV-232): 64-65 10 (OHV-232)	.....	6	317 2320	
60 Thru 62 20-80: 63 80 (WCGS-Note 1.059-1) .....*(Replaces 315 6159)*	1.077	8	316 6334	
63 80 (WFGS-Note 1.059-1)	1.077	8	316 9306	
1.080 GUIDE, Intake Valve Stem (Finished Reamed)				
60 Thru 65 01 (LHE).....	.....	6	313 4425	
60 Thru 65 01 (OHVC-196): 60 Thru 64 10 (OHVC-196).....	.....	6	320 2147	
60 Thru 63 20-80 (Note 1.059-1).....	.....	8	320 2148	
63 Thru 65 10-80 (V8-Note 1.059-2).....	.....	8	320 4487	
1.081 GUIDE, Exhaust Valve Stem (Finished Reamed)				
60 Thru 65 01 (LHE).....	.....	6	313 4425	
60 Thru 65 01 (OHVC-196): 60 Thru 64 10 (OHVC-196)	1.080	6	320 2147	#
60 Thru 63 20-80 (Note 1.059-1).....	1.080	8	320 2148	
63 Thru 65 10-80 (V8-Note 1.059-2).....	1.080	8	320 4487	
1.083 SPRING, Valve				
60 Thru 65 01 (LHE).....	.....	12	313 1856	
60 Thru 65 01 (OHVC-196): 60 Thru 64 10 (OHVC-196)	.....	12	314 4934	
61 Thru 64 10 (OHVA).....	.....	12	316 3019	
65 01-80 (OHV-232-12 Req.): 60 Thru 65 10-20-80 (V8-16 Req.): 64-65 10 (OHV-232-12 Req.): 65 01-10 (OHV-199-12 Req.)	.....	AR	314 4936	
DAMPENER, Valve Spring				
63 Thru 65 10-80 (V8-WFGS)	.....	16	316 9304	

Copyright 1963 American Motors Corp.

GROUP NO. — DESCRIPTION — YEAR and MODEL	PRIMARY GROUP NO.	PER CAR	PART NO.	CODE
1.084 RETAINER, Valve Spring				
(Upper) 60 Thru 65 01 (LHE)		12	313 3709	
(Upper) 60 Thru 65 01 (OHVC-196): 60 Thru 64 10 (OHV-196)		12	314 4975	
(Upper) 65 01-80 (OHV-232): 64-65 10 (OHV-232): 65 01-10 (OHV-199)		12	317 3235	
(Upper) 60 Thru 65 10-20-80 (V8-WCGS) ***(Use 316 9307)***		16	315 6158	
(Upper) 63 Thru 65 10-80 (V8-WFGS)		16	316 9307	
(Lower) 60 Thru 63 20-80 (Seat)		16	315 0567	
1.085 LOCK, Valve Spring Retainer (Keepers)				
60 Thru 65 01 (LHE)		12	15 007	
60-61 01-10 (OHV-24 Req.): 62 01-10 (OHV-24 Req. -Note 1.078-1) (OHV-12 Req. -Note 1.078-2): 63 Thru 65 01 (OHV-196-For Intake Valve-12 Req.): 63-64 10 (OHV-196-For Intake Valve-12 Req.)		AR	314 4974	
60 Thru 65 10-20-80 (V8-32 Req.) 64-65 10 (OHV-232-24 Req.): 65 01-80 (OHV-232-24 Req.): 65 01-10 (OHV-199-24 Req.)		AR	315 6157	
62 01-10 (OHV-Note 1.078-2): 63 Thru 65 01 (OHVC-196-For Exhaust Valve): 63-64 10 (OHV-196-For Exhaust Valve)		12	316 5735	
1.088 TAPPET, Valve				
60 Thru 65 01 (LHE)		12	310 5783	
60 Thru 65 01 (OHV-196): 60 Thru 64 10 (OHVC-196) ***(Replaces 314 4933)***		12	316 4048	
61 Thru 64 10 (OHVA-12 Req.): 61 Thru 64 10-80 (V8-16 Req.): 64-65 10 (OHV-232-12 Req.): 65 01-80 (OHV-232-12 Req.): 65 01-10 (OHV-199-12 Req.)		AR	316 0304	
65 10-80 (V8)		16	317 2303	
60-61 20		16	315 1444	
60 80		16	314 4537	
RING, Valve Tappet Snap (In Tappet)				
61 Thru 64 10 (OHVA-12 Req.): 64-65 10 (OHV-232-12 Req.): 65 10 (OHV-199-12 Req.): 65 80 (OHV-232-12 Req.): 64-65 10-80 (V8-16 Req.)		AR	644 0614	
1.093 SCREW, Valve Tappet Adjusting				
60 Thru 65 01 (LHE)		12	310 7745	
1.095 ROD, Valve Push				
60 Thru 65 01-10 (OHVC-196): 60 Thru 64 10 (OHVC-196)		12	315 3977	
61 Thru 64 10 (OHVA)		12	316 0303	
65 01-80 (OHV-232): 64-65 10 (OHV-232): 65 01-10 (OHV-199)		12	317 2317	
65 01 (OHV-199-Export-Low Compression): 65 10 (OHV-232-Export-Low Compression)		12	317 9742	
60-61 20		16	315 3978	
60 80		16	315 3979	
61 Thru 65 10-80 (V8)		16	316 1258	
1.097 ARM, Valve Rocker				
65 01-80 (OHV-232): 64-65 10 (OHV-232): 65 01-10 (OHV-199)		12	317 2302	
(Left) 60 Thru 65 01 (OHVC-196): 60 Thru 64 10 (OHVC)		6	314 4669	
(Left) 60-62 10 (OHVA)		6	316 0305	
(Left) 63-64 10 (OHVA)		6	316 7146	
(Left) 60-61 20		8	315 1452	
(Left) 60 80		8	314 4525	
(Left) 61 Thru 65 10-80 (V8)		8	316 1260	
(Right) 60 Thru 65 01 (OHVC-196): 60 Thru 64 10 (OHVC)		6	314 4670	

Copyright 1963 American Motors Corp.

GROUP NO. — DESCRIPTION — YEAR and MODEL	PRIMARY GROUP NO.	PER CAR	PART NO.	CODE
(Right) 61-62 10 (OHVA)	.....	6	316 0306	
(Right) 63-64 10 (OHVA)	.....	6	316 7147	
(Right) 60-61 20	.....	8	315 1453	
(Right) 60 80	.....	8	314 4526	
(Right) 61 Thru 65 10-80 (V8)	.....	8	316 1261	

1.098 SHAFT, Valve Rocker Arm

60 Thru 65 01 (OHVC-196): 60 Thru 64 10 (OHVC-196)	.....	1	314 5998	
61 Thru 64 10 (OHVA)	.....	1	316 0103	
65 01-80 (OHV-232): 64-65 10 (OHV-232): 65 01-10 (OHV-199)	.....	1	317 2301	
60 Thru 65 10-20-80 (V8)	.....	2	314 4405	

ATTACHING PARTS

Shaft To Cylinder Head

BOLT, Hexagon ..... 65 01-80 (OHVC-232-1-7/8" Long): 64-65 10 (OHV-232-1-7/8" Long): 65 01-10 (OHV-199-1-7/8" Long)	17.038	5	G180129	
BOLT, Hexagon ..... 65 01-80 (OHV-232-2-3/4" Long): 64-65 10 (OHV-232-2-3/4" Long): 65 01-10 (OHV-199-2-3/4" Long)	17.038	1	G180137	NA

SPACER, Valve Rocker Arm Shaft

61-62 10 (OHVA): 63 10 (OHVA-Note 1.098-1)	.....	2	316 1468	
(Center) 65 01-80 (OHV-232): 64-65 10 (OHV-232): 65 01-10 (OHV-199)	.....	1	317 3079	
(Intermediate) 65 01-80 (OHV-232): 64-65 10 (OHV-232): 65 01-10 (OHV-199)	.....	2	317 3080	
(End) 65 01-80 (OHV-232): 64-65 10 (OHV-232): 65 01-10 (OHV-199)	.....	2	317 3081	

SPRING, Valve Rocker Arm Shaft Spacer

60 Thru 62 01-10 (OHV-5 Req.): 63 01-10 (OHV-5 Req.-Note 1.098-1)(3 Req.-Note 1.098-2): 64-65 01 (OHVC-196-5 Req.): 64 10 (OHVC-196-5 Req.): 64 10 (OHVA-3 Req.)	.....	AR	314 4760	
63-64 10 (OHVA-Note 1.098-2)	.....	2	316 9637	
60 Thru 65 10-20-80 (V8)	.....	4	314 4527	

PIN, Valve Rocker Arm Shaft Plug

65 01-80 (OHV-232): 64-65 10 (OHV-232): 65 01-10 (OHV-199)	17.472	2	G273937	

SPRING, Valve Rocker Arm Shaft Center Spacing

60 Thru 65 10-20-80 (V8)	.....	2	314 4528	

WASHER, Valve Rocker Arm Shaft Spring

60 Thru 65 01 (OHVC-196-2 Req.): 60 Thru 64 10 (OHV-196-2 Req.): 60 Thru 65 10-20-80 (V8-4 Req.)	.....	AR	312 7942	
65 01-80 (OHV-232): 64-65 10 (OHV-232): 65 01-10 (OHV-199)	.....	2	317 2311	

WASHER, Valve Rocker Arm Shaft Retaining

60 Thru 65 01 (OHV-196-4 Req.): 60 Thru 64 10 (OHV-196-4 Req.): 60 Thru 65 10-20-80 (V8-8 Req.)	.....	AR	312 7943	

RING, Valve Rocker Arm Shaft Retaining

60 Thru 65 01 (OHVC-196-2 Req.): 60 Thru 64 10 (OHV-196-2 Req.): 60 Thru 65 10-20-80 (V8-4 Req.)	.....	AR	312 7954	

NOTE 1.098-1: On 63 10 (OHVA) used prior to Engine Code No. 410B22.
NOTE 1.098-2: On 63 10 (OHVA) used beginning with Engine Code No. 410B22.

Copyright 1963 American Motors Corp.

GROUP NO. — DESCRIPTION — YEAR and MODEL	PRIMARY GROUP NO.	PER CAR	PART NO.	CODE
1.101 BLOCK, Valve Rocker Arm Shaft				
60 Thru 62 01-10 (OHVC)	.....	6	314 4668	
63 Thru 65 01 (OHVC-196): 63-64 10 (OHV-196)	.....	6	316 6800	
61-62 10 (OHVA)	.....	6	316 0095	
60 Thru 65 10-20-80 (V8)	.....	8	314 9908	
ATTACHING PARTS				
Block To Shaft And Cylinder Head				
SCREW, Machine..... 60 Thru 65 01 (OHV-196): 60 Thru 64 10 (OHV-196) .....***(Replaces 314 4758)***	.....	6	316 6905	
WASHER, Plain..... 60 Thru 65 01 (OHVC-196): 60 Thru 64 10 (OHV-196) .....***(Replaces 800 0331)***	17.814	2	400 1161	
DOWEL, Valve Rocker Arm Shaft To Cylinder Head				
60 Thru 65 10-20-80 (V8)	.....	4	314 9568	
1.102 DEFLECTOR, Valve Rocker Arm Shaft Oil				
65 01-80 (OHVC-232-#1 Cyl.): 64-65 10 (OHV-232-#1 Cyl.): 65 01-10 (OHV-199-#1 Cyl.)	.....	1	317 3392	
RETAINER, Valve Rocker Arm Shaft				
65 01-80 (OHV-232): 64-65 10 (OHV-232): 65 01-10 (OHV-199)	.....	6	317 2310	
1.103 SCREW, Valve Rocker Arm Adjusting				
60 Thru 65 01 (OHVC-196): 60 Thru 64 10 (OHVC-196)	.....	12	314 4770	
60-61 20	.....	16	315 1454	
1.105 TUBE, Valve Rocker Arm Oil				
60 Thru 64 01-10 (OHVC-196-Note 1.105-1)	.....	1	314 7715	
64 01-10 (OHVC-196-Note 1.105-2): 65 01 (OHVC-196)	.....	1	317 3642	
ELBOW, Valve Rocker Arm Oil Tube				
60 Thru 63 01-10 (OHVC-196-1 Req.-At Oil Channel-Note 1.105-2): 64-65 01 (OHVC-196-2 Req.): 64 10 (OHVC-2 Req.)	17.218	1	G137420	
60-61 01-10 (OHVC-Less Oil Filter-At Cylinder Head)	.....	1	G137420	
1.108 COVER, Valve Tappet				
60 Thru 62 80 (LPV) .....***(Replaces 320 1361)***	.....	1	316 3147	
61-62 20-80 (WPV): 63 10-80 (V8) .....***(Replaces 320 2391)(Use 320 5056)***	.....	1	320 3081	
64-65 10-80 (V8)	.....	1	320 5056	
(Front) 60 Thru 62 01 (LHD-LES-LPV): 60 10 (LHD): 61-62 10 (LHD-OHVC-LPV)	.....	1	314 7223	

NOTE 1.105-1: On 64 01-10 (OHVC-196) used prior to Engine Code No. 508C05.

NOTE 1.105-2: On 64 01-10 (OHVC-196) used beginning with Engine Code No. 508C05.

NOTE 1.108-1: On 65 01 (LHE) used prior to Engine Code No. 610A06 and beginning with 610A07 and prior to 611A12; on 65 01 (LHE-Can) used prior to Engine Code No. 609A30. On 65 01 (OHV-196-WDT) used prior to Engine Code No. 611C04.

NOTE 1.108-2: On 65 01 (LHE) used beginning with Engine Code No. 610A06 and prior to 610A07 and beginning with 611A12; on 65 01 (LHE-Can) used beginning with Engine Code No. 609A30. On 65 01 (OHV-196-WDT) used with Engine Code No. 611C04.

Copyright 1963 American Motors Corp.

GROUP NO. — DESCRIPTION — YEAR and MODEL		PRIMARY GROUP NO.	PER CAR	PART NO.	CODE
(Front) ***61-62 01 (RHD)***		.....	1	316 2103	
(Front) 61 01 (LHD-WPV): 62 01 (LHD-LES-WPV): 63 01 (OHV-LDT-LES-Note 1.022-1)(OHV-LDT-WAT-Note 1.022-1)(LHE-LES)(LHE-WAT) (OHV-WDT-LES)(OHV-WDT-WAT): 61-62 10 (LHD-OHVC-WPV): 63-64 10 (OHVC-196-LES)(OHVC-196-WAT): 64 01 (LHE-LES)(LHE-WAT) (OHV-WDT-LES)(OHV-WDT-WWT): 65 01 (LHE-Note 1.108-1) (OHV-196-WDT-Note 1.108-1)		.....	1	315 9946	
(Front) 62 01 (LHD-WES-LPV)		.....	1	316 5592	
(Front) 62 01 (LHD-WES-WPV): 63 01 (WES-Note 1.022-1): 64 01 (LHE-WES)(OHV-WDT-WES): 63-64 10 (OHVC-196-WES)		.....	1	316 5543	
(Front) 63-64 01 (OHV-196-LDT-LES-Note 1.022-2)(OHV-196-LDT-WAT-Note 1.022-2): 65 01 (OHV-196-LDT)		.....	1	316 9361	
(Front) 63-64 01 (OHV-LDT-WES-Note 1.022-2)		.....	1	316 9362	
(Front) 65 01 (LHE-Note 1.108-2)(OHV-196-WDT-Note 1.108-2)		.....	1	317 8724	
(Front) ***60 10 (RHD)***		.....	1	315 8469	
(Rear) 60 Thru 65 01 (LHE)(OHVC-196): 60 Thru 64 10 (OHVC-196)		.....	1	312 5138	
ATTACHING PARTS					
Valve Tappet Cover To Block					
STUD	60 Thru 65 01 (LHE)(OHVC-196): 60 Thru 64 10 (OHVC-196)	1.112	4	312 5738	
STUD	60 Thru 65 10-20-80 (V8) ***(Replaces 314 5138)***	1.112	2	315 0832	
GROMMET	60 Thru 65 01 (LHE-4 Req.)(OHVC-196-4 Req.): 60 Thru 64 10 (OHVC-4 Req.): 60 Thru 65 10-20-80 (V8-2 Req.)	1.112	AR	312 5739	
WASHER, Plain	60 Thru 65 01 (LHE-4 Req.)(OHVC-196-4 Req.): 60 Thru 63 10 (OHVC-196-4 Req.): 60 Thru 65 10-20-80 (V8-2 Req.) ***(Replaces 800 0153)***	17.814	AR	400 1093	
NUT, Hexagon	60 Thru 65 01 (LHE-4 Req.)(OHVC-196-4 Req.): 60 Thru 64 10 (OHVC-196-4 Req.): 60 Thru 65 10-20-80 (V8-2 Req.)	17.406	AR	G120368	
BAFFLE, Valve Tappet Chamber Oil					
(Center) 60 Thru 65 10-20-80 (V8)		.....	1	315 4783	
(Lower) 60 Thru 65 10-20-80 (V8)		.....	1	314 8198	
ATTACHING PARTS					
Baffle To Cylinder Block					
BOLT, Hexagon	60 Thru 65 10-20-80 (V8)	17.038	2	G179812	NA
WASHER, Lock	60 Thru 65 10-20-80 (V8)	17.820	2	G103320	NA
SPRING, Lower Baffle Retaining					
60 Thru 65 10-20-80 (V8)		1.098	1	314 4760	
1.110 GASKET, Valve Tappet Cover					
60 Thru 65 01 (LHE)(OHVC-196): 60 Thru 64 10 (OHVC-196) ***(Replaces 310 5775)***		.....	2	316 8896	#
(Left) 63 10 (V8): 60 Thru 63 20-80 ***(Replaces 314 4798)(Use 317 2998)***		.....	1	317 0780	#
(Left) 64 10-80 (V8) ***(Ref. Pr. List)***		.....	1	317 2998	
(Right) 63-64 10 (V8): 60 Thru 64 20-80 ***(Replaces 314 4799, 317 0781)(Ref. Pr. List)***		.....	1	317 2999	
GASKET SET, Valve Tappet Cover					
65 10-80 (V8)...(Incl. Left And Right Gasket)		.....	1	320 5962	
1.115 TUBE, Cylinder Block Breather					
61-62 10 (OHVA-LPV)		.....	1	316 5066	
(Rubber) 60 Thru 62 20-80 (LPV)		.....	1	314 6560	

Copyright 1963 American Motors Corp.

GROUP NO. — DESCRIPTION — YEAR and MODEL	PRIMARY GROUP NO.	PER CAR	PART NO.	CODE
ATTACHING PARTS				
Breather Tube To Cylinder Block				
STUD	61-62 10 (OHVA-LPV)	17.718	1	G103180	
WASHER, Plain	61-62 10 (OHVA-LPV)	17.814	1	G9414321	NA
WASHER, Lock	61-62 10 (OHVA-LPV)	17.820	1	G120214	NA
NUT, Hexagon	61-62 10 (OHVA-LPV)	17.406	1	G120368	
Breather Tube Bracket To Oil Pan				
STUD	61-62 10 (OHVA-LPV)	5.178	1	312 2698	
WASHER, Lock	61-62 10 (OHVA-LPV)	17.820	1	G120214	NA
NUT, Hexagon	61-62 10 (OHVA-LPV)	17.406	1	G120368	
SEAL, Tube To Cylinder Block				
61-62 10 (OHVA-LPV)			1	316 1105	
BRACKET, Tube To Cylinder Block				
60 Thru 62 20-80 (LPV)			1	314 9725	
CLAMP, Upper To Lower Tube				
60-61 20-80 (LPV)			1	313 5122	
62 80 (LPV)		17.108	1	320 3077	
BAFFLE, Engine Breather Chamber Oil Deflector				
61 Thru 64 10 (OHVA)			1	316 2016	
ATTACHING PARTS				
Baffle To Cylinder Block				
BOLT, Hexagon	61 Thru 64 10 (OHVA)	17.038	1	G180020	NA
WASHER, Fiber	61 Thru 64 10 (OHVA)		1	316 1263	
NUT, Lock	61 Thru 64 10 (OHVA)	17.416	1	G442823	NA
SEPARATOR, Engine Breather Chamber Oil				
61 Thru 64 10 (OHVA)			1	316 2017	

1.116 TUBE, Valve Tappet Cover To Ventilation Valve

63 Thru 65 01 (LHE-Note 1.108-1)			1	316 7981	
63 01 (OHV-Note 1.022-1 Type 1): 64 01 (OHV-WDT): 63-64 10 (OHVC-196)			1	316 7945	
65 01 (OHV-196-WDT-Note 1.108-1)			1	317 7261	
65 01 (OHV-196-WDT-Note 1.108-2)			1	317 8725	
TUBE, Cylinder Head Cover To Carburetor Air Cleaner (On Cover)				
65 01-80 (OHV-232-LFFC): 64-65 10 (OHV-232-LFFC)			1	317 5559	
GROMMET, Cylinder Head Cover To Carburetor Air Cleaner Tube (On Cover)				
64 10 (OHV-232-LFFC)			1	317 5558	
65 01-10-80 (OHV-232-LFFC)			1	317 8622	
HOSE, Valve Tappet Cover To Ventilation Valve				
61-62 01 (LHE-WPV)			1	315 9933	
61-62 01-10 (OHVC-WPV)			1	315 9934	
61-62 20-80 (WPV)	*(Ref. Pr. List)*		1	315 9935	
63 10-80 (V8)			1	316 7914	
65 01 (LHE-Note 1.108-1-Bulk Order In Feet)(OHV-196-Note 1.108-1-Bulk Order In Feet): 64-65 10-80 (V8-Bulk Order In Feet)			AR	320 4181	
65 01 (LHE-Note 1.108-2)			1	317 8714	

Copyright 1963 American Motors Corp.

GROUP NO. — DESCRIPTION — YEAR and MODEL	PRIMARY GROUP NO.	PER CAR	PART NO.	CODE
HOSE, Valve Tappet Cover To Air Cleaner (Bulk-Order In Feet)				
63 01 (OHV-LDT-Note 1.022-2)	.....	1	316 9363	
64-65 01 (OHVC-196-LDT-Bulk-Order In Feet)	.....	AR	320 4668	
HOSE, Valve Tappet Cover To Tube				
63 01 (Note 1.022-1): 63 10 (OHVC)	1.118	1	316 7913	
64 01: 64 10 (OHVC-196-Bulk-Order In Feet)	.....	AR	320 4181	
65 01 (OHV-196-WDT-Note 1.108-2)	.....	1	317 8714	
HOSE, Tube To Valve				
63 01 (Note 1.022-1): 63 10 (OHVC)	1.118	1	316 7913	
64 01: 64 10 (OHV-196-Bulk-Order In Feet)	.....	AR	320 4181	
HOSE, Oil Filler Cap To Air Cleaner (Bulk-Order In Feet)				
64-65 10-80 (V8-WSFC)	.....	AR	320 4181	
HOSE, Cylinder Head Cover To Carburetor Air Cleaner (Bulk-Order In Feet)				
65 01-80 (OHV-232-LFFC): 64-65 10 (OHV-232-LFFC)	.....	AR	320 4181	
CLAMP, Valve Tappet Cover To Ventilation Valve Hose				
61-62 01 (WPV): 61-62 10 (OHVC-WPV): 61 Thru 65 10-20-80 (V8)	17.108	2	320 3076	
CLAMP, Valve Tappet Cover To Tube Hose				
63-64 01 (Note 1.022-1): 65 01 (LHE)(OHV-196): 63-64 10 (OHV-196)	17.108	2	320 3076	
CLAMP, Tube To Valve Hose				
63-64 01 (Note 1.022-1): 65 01 (LHE)(OHVC-196): 63-64 10 (OHVC-196)	17.108	2	320 3076	
CLAMP, Valve Tappet Cover To Air Cleaner Hose				
63 Thru 65 01 (OHVC-196-LDT-Note 1.022-1)	17.108	2	320 3077	
CLAMP, Oil Filler Cap To Air Cleaner Hose				
64-65 10-80 (V8-WSFC)	17.108	2	320 3076	
CLAMP, Cylinder Head Cover To Carburetor Air Cleaner Hose				
65 01-80 (OHV-232): 64-65 10 (OHV-232-LFFC)	.....	2	320 3076	
CLIP, Valve Tappet Cover To Ventilation Valve Tube				
63 01 (OHV-Note 1.022-1): 64-65 01 (OHV-196-WDT-Note 1.108-1): 63-64 10 (OHVC-196)	.....	1	316 9249	
65 01 (OHV-196-WDT-Note 1.108-2)	.....	1	317 8717	
ATTACHING PARTS Tube Clip To Cylinder Head				
BOLT, Hexagon ..... 63 01 (OHV-Note 1.022-1): 64-65 01 (OHVC-196-WDT): 63-64 10 (OHVC-196)	17.038	1	G180118	NA
WASHER, Lock ..... 63 01 (OHV-Note 1.002-1): 64-65 01 (OHVC-196-WDT): 63-64 10 (OHVC-196)	17.820	1	G120382	NA

Copyright 1963 American Motors Corp.

GROUP NO. — DESCRIPTION — YEAR and MODEL	PRIMARY GROUP NO.	PER CAR	PART NO.	CODE
1.117 HOSE, Carburetor Insulator To Ventilation Valve				
65 01-80 (OHV-232): 64-65 10 (OHV-232): 65 01-10 (OHV-232)	8.460	1	315 3670	
61-62 20-80 (WPV-Bulk-Order In Feet)	1.116	AR	320 4181	
63 Thru 65 10-80 (V8-Bulk-Order In Feet)	1.118	AR	320 4182	
CLAMP, Carburetor Insulator To Ventilation Valve Hose				
65 01-80 (OHV-232): 61 Thru 65 10-20-80 (V8-WPV): 64-65 10 (OHV-232): 65 01-10 (OHV-199)	17.108	2	320 3076	
1.118 TUBE, Cylinder Block To Ventilation Valve				
61-62 10 (OHVA-WPV)...(Incl. Adapter)	.....	1	316 0315	
63-64 10 (OHVA-WPV)...(Incl. Adapter)	.....	1	316 8102	
ATTACHING PARTS				
Tube Adapter To Cylinder Block				
STUD..... 61 Thru 64 10 (OHVA-WPV).....	17.718	1	G103180	
WASHER, Plain..... 61 Thru 64 10 (OHVA-WPV).....	17.814	1	400 1093	
WASHER, Lock..... 61 Thru 64 10 (OHVA-WPV).....	17.820	1	G120214	NA
NUT, Hexagon..... 61 Thru 64 10 (OHVA-WPV).....	17.406	1	G120368	
HOSE, Cylinder Block To Ventilation Valve To Tube				
61-62 10 (OHVA-WPV-Bulk-Order In Feet): 64 10 (OHVA-Bulk-Order In Feet)..	1.116	AR	320 4181	
63 10 (OHVA).....	.....	1	316 7913	
65 01 (OHV-196-WDT-Note 1.108-2).....	.....	1	317 8718	
HOSE, Cylinder Block To Ventilation Valve (Valve To Nipple)				
64 10 (OHVA-Bulk-Order In Feet).....	.....	AR	320 4182	
CLAMP, Cylinder Block To Ventilation Valve Hose				
61 Thru 64 10 (OHVA-WPV).....	17.108	2	320 3076	
1.119 VALVE, Cylinder Block Ventilation				
61-62 01-10 (WPV).....	.....	1	316 5552	
63 01-10 (Six-Note 1.022-1): 64 01 (LHE)(OHV-WST): 65 01 (LHE-Note 1.108-1)(OHV-196-WDT-Note 1.108-1): 65 01-80 (OHV-232): 65 01-10 (OHV-199-Note 1.119-2 Type 1): 64 10 (OHV-196): 64-65 10 (OHV-232) .....***(Replaces 316 7481, 317 3364, 317 0541, 316 8877)***	.....	1	317 5470	#
65 01 (LHE-Note 1.108-2)(OHV-196-WDT-Note 1.108-2): 65 01-10 (OHV-199-Note 1.119-2 Type 2).....	.....	1	317 8706	
61-62 20-80 (WPV).....	.....	1	316 0222	
63 10-80 (V8) .....***(Replaces 316 7948)***	.....	1	316 9567	
64-65 10-80 (V8).....	.....	1	317 3365	

NOTE 1.119-1: Two Types of Ventilation Valves were used on 64 01 (LHE)(OHV-WDT) and 64 10 (OHV-196). They can be identified as follows:
Type 1: The Valve has part number 316 7481, 316 8877 or 317 0541 Stamped.
Type 2: The Valve has part number 317 3364 Stamped.

NOTE 1.119-2: Two Types of Cylinder Block Ventilation Valves were used on 65 01-10 (OHV-199). They can be identified as follows:
Type 1: The Valve has a part number 317 5470 or 317 6790 stamped.
Type 2: The Valve has a part number 317 8706 or 317 8789 stamped.

Copyright 1963 American Motors Corp.

GROUP NO. — DESCRIPTION — YEAR and MODEL	PRIMARY GROUP NO.	PER CAR	PART NO.	CODE
HOSE, Cylinder Block Ventilation Valve To Nipple				
63 Thru 65 01 (LHE-Note 1.108-1)	1.116	1	316 8045	
65 01 (LHE-Note 1.108-2)	.....	1	317 8719	
63 Thru 65 01 (OHV-196-WDT-Note 1.108-1 Bulk Order In Feet): 63-64 10 (OHVC-196 Bulk Order In Feet) ***(Replaces 316 7484)***	1.118	AR	320 4182	
65 01 (OHV-196-WDT-Note 1.108-2)	.....	1	317 8716	
ELBOW, Cylinder Block Ventilation Valve To Cylinder Head				
61-62 01 (OHV-WPV): 61-62 10 (WPV)	.....	1	316 2185	
NIPPLE, Cylinder Block Ventilation Valve To Cylinder Head				
63 01-10 (Six-Note 1.022-1): 64-65 01 (LHE-Note 1.108-1) (OHV-196-WDT-Note 1.108-1): 64 10 (OHV-196)	.....	1	316 7477	
65 01 (LHE-Note 1.108-2)	.....	1	317 8712	
65 01 (OHV-196-WDT-Note 1.108-2)	.....	1	317 8715	
CLAMP, Cylinder Block Ventilation Valve Hose To Nipple And Valve				
63 01-10-80: 63-64 01-10 (Six): 65 01-10 (LHE)(OHVC-196): 63 10-80 (V8)	17.108	2	320 3076	
GROMMET, Cylinder Block Ventilation Valve To Cylinder Head Cover				
64 10 (OHV-232): 65 01-10 (OHV-199-Note 1.119-2 Type 1)	.....	1	317 5558	#
65 01-10-80 (OHV-232)	.....	1	317 8622	
65 01-10 (OHV-199-Note 1.119-2 Type 2)	.....	1	317 8991	#
1.120 COVER ASSEMBLY, Timing Case (Cover, Engine Front)(Incl.. Seal And Indicator)				
60-61 01: 60 10: 61 10 (OHVC): 62 01 (Note 1.120-1 Type 1): 62 10 (OHVC-Note 1.120-1 Type 1)	.....	1	320 2086	
62 01 (Note 1.120-1 Type 2): 63 Thru 65 01 (LHE)(OHVC-196): 62 10 (OHVC-Note 1.102-1 Type 2): 63-64 10 (OHVC-196)	.....	1	320 3786	
61 Thru 64 10 (OHVA): ***(Replaces 320 2434)***	.....	1	320 3787	
64 10 (OHV-232-Note 1.045-1 Type 1) ***(Replaces 320 5246)***	.....	1	320 5892	
65 01-80 (OHV-232): 64-65 10 (OHV-232-Note 1.045-1 Type 2): 65 01-10 (OHV-199)	.....	1	320 5644	
60 Thru 65 10-20-80 (V8) ***(Replaces 320 2087)***	.....	1	320 3682	
ATTACHING PARTS				
Cover To Cylinder Block				
STUD..... 60 Thru 62 01 (1 Req.): 63 Thru 65 01 (LHE-2 Req.) (OHV-196-2 Req.): 60 Thru 62 10 (OHVC-1 Req.): 63-64 10 (OHVC-196-2 Req.)	17.718	AR	G456025	
STUD..... 61-62 10 (OHVA)	2.098	1	316 0287	
STUD..... 63-64 10 (OHVA)	.....	1	316 6536	
STUD..... 60 Thru 65 10-20-80 (V8)	17.718	3	G103195	
SCREW, Machine..... 60 Thru 62 01 (4 Req.): 60 Thru 62 10 (OHVC-4 Req.) ***(Replaces 800 0068)***	17.626	AR	400 0987	
SCREW, Machine..... 63 Thru 65 01 (LHE-3/4" Long)(OHV-196-3/4" Long): 63-64 10 (OHVC-196-3/4" Long)	1.151	3	316 2258	
BOLT, Hexagon ..... 60 Thru 62 01 (3 Req. -5/8" Long): 64-65 01 (LHE-5/8" Long-3 Req.)(OHVC-196-5/8" Long-3 Req.): 60 10 (LAE-3 Req. -5/8" Long): 60 10 (WAE-2 Req. -5/8" Long): 61 10 (3 Req. -5/8" Long): 62 10 (2 Req. -5/8" Long): 63-64 10 (OHVA-3 Req. -5/8" Long): 64 10 (OHVC-196-3 Req.)	17.038	AR	G181593	NA

NOTE 1.120-1: Two Types of Cover Assembly were used on the 62 01-10 Series. They can be identified as follows:
Type 1: The Mounting Flange does not have Embossed Ribs.
Type 2: The Mounting Flange has Embossed Ribs.

Copyright 1963 American Motors Corp.

GROUP NO. — DESCRIPTION — YEAR and MODEL	PRIMARY GROUP NO.	PER CAR	PART NO.	CODE
BOLT, Hexagon ..... 60 Thru 62 01 (5 Req.-3/4" Long): 63 01 (8 Req.): 64-65 01 (LHE-3/4" Long-5 Req.) (OHVC-196-3/4" Long-5 Req.): 60-61 10 (OHVC-5 Req.-3/4" Long): 62 10 (OHVC-6 Req.-3/4" Long): 63 10 (OHVC-196-8 Req.-3/4" Long): 63 10 (OHVA-1 Req.-3/4" Long): 64 10 (OHVC-196-LPS-5 Req.-3/4" Long) (OHVC-196-WPS-4 Req.)	17.038	AR	G181595	NA
BOLT, Hexagon..... 60 10 (WAE)	17.038	1	G181596	NA
BOLT, Hexagon..... 61-62 10 (OHVA).....	17.038	6	G179818	NA
BOLT, Hexagon ..... 63-64 10 (OHVA).....	17.038	6	G179817	NA
BOLT, Hexagon ..... 65 01-80 (OHVC-232-3/4" Long): 64-65 10 (OHV-232-3/4" Long): 65 01-10 (OHV-199-3/4" Long).....	17.038	7	G180020	NA
BOLT, Hexagon ..... 65 01-80 (OHV-232-1-1/4" Long): 64-65 10 (OHV-232-1-1/4" Long): 65 01-10 (OHV-199-1-1/4" Long)	17.038	2	G180024	NA
BOLT, Hexagon ..... 60 Thru 65 10-20-80 (V8-1-1/8" Long)	17.038	2	G179840	NA
BOLT, Hexagon ..... 60 Thru 65 10-20-80 (V8-7/8" Long)	17.038	3	G180121	NA
WASHER, Plain..... 60 Thru 63 01 (13/16" O.D.): 60 Thru 62 10 (OHVC-13/16" O.D.)	17.814	1	G120394	NA
WASHER, Plain..... 63 01 (7 Req.): 62 10 (11/16" O.D.-1 Req.): 63 10 (OHVA-11/16" O.D.-1 Req.): 63 10 (OHVC-196-11/16" O.D.-7 Req.)	17.814	AR	G120393	NA
WASHER, Plain..... 64-65 01 (LHE) (OHVC-196): 64 10 (OHVC-196)	17.814	7	G9414321	NA
WASHER, Lock ..... 63 Thru 65 01 (LHE)(OHVC-196)	17.820	10	G103320	NA
WASHER, Lock ..... 60 Thru 62 01 (9 Req.): 61-62 10 (OHVC-9 Req.): 61 Thru 64 10 (OHVA-10 Req.): 63-64 10 (OHVA-10 Req.): 63-64 10 (OHVC-196-10 Req.)	17.820	AR	G120214	NA
WASHER, Lock ..... 65 01-80 (OHV-232): 64-65 10 (OHV-232): 65 01-10 (OHV-199)	17.820	9	G120380	NA
WASHER, Lock ..... 60 Thru 65 10-20-80 (V8)	17.820	8	G120382	NA
NUT, Hexagon..... 60 Thru 62 01-10 (4 Req.): 63 Thru 65 01 (LHE-5 Req.)(OHVC-196-5 Req.): 63-64 10 (OHV-196-5 Req.)	17.406	AR	G120368	
NUT, Hexagon..... 60 Thru 65 10-20-80 (V8)	17.406	3	G120369	NA

PLUG, Timing Case Cover

PLUG, Pipe..... 60 Thru 65 10-20-80 (V8)	17.486	1	G103867	NA

1.121 GASKET, Timing Case Cover

60 Thru 65 01 (LHE)(OHVC-196): 60 Thru 64 10 (OHVC-196) ..... ***(Replaces 312 5048)***	.....	1	317 0693	
61 Thru 64 10 (OHVA) ..... ***(Replaces 316 0065)***	.....	1	317 0684	
65 01-80 (OHV-232): 64-65 10 (OHV-232): 65 01-10 (OHV-199)	.....	1	317 2847	
60 Thru 65 10-20-80 (V8) ..... ***(Use 317 0779)***	.....	1	314 4839	

1.122 SPACER, Timing Case Cover (For 63 01 And Prior Models Refer Group 1.003)

64-65 01 (LHE)(OHV-196): 64 10 (OHVC-196)	.....	1	317 0875	
63 10 (OHVC)	.....	1	316 6538	
63-64 10 (OHVA).....	.....	1	316 6537	

Copyright 1963 American Motors Corp.

GROUP NO. — DESCRIPTION — YEAR and MODEL	PRIMARY GROUP NO.	PER CAR	PART NO.	CODE
ATTACHING PARTS				
Spacer To Block				
BOLT, Hexagon..... 64 01: 63 10 (OHVC).....	17.038	1	G179817	NA
BOLT, Hexagon..... 63-64 10 (OHVA).....	17.038	2	G180077	NA
BOLT, Dowel ..... 64-65 01 (LHE)(OHVC-196): 63-64 10 (OHVC-196)..	1.003	1	310 5765	
PIN, Dowel ..... 63-64 10 (OHVA).....	1.063	2	316 0072	
SCREW, Machine..... 64-65 01 (LHE)(OHVC-196): 63-64 10 (OHVC-196)..	17.626	2	G187527	NA
WASHER, Lock ..... 64-65 01 (LHE)(OHVC-196): 63-64 10 (OHVC-196) .	17.820	3	G103321	NA
WASHER, Lock ..... 63-64 10 (OHVA).....	17.820	2	G120214	NA
GASKET, Timing Case Cover Spacer				
64-65 01 (LHE)(OHVC-196): 63-64 10 (OHVC-196) .....***(Replaces 316 6625)***	.....	1	317 0690	
63-64 10 (OHVA).....***(Replaces 316 6540)***	.....	1	317 0691	
1.123 SEAL, Timing Case Cover Oil				
60 Thru 65 01-10 (Six): 65 80 (OHV-232).....	.....	1	315 5002	
60 Thru 65 10-20-80 (V8)	.....	1	314 4651	
1.125 INDICATOR, Engine Dead Center				
SCREW, Machine..... 60 Thru 64 01-10 (Six): 65 01 (LHE) (OHV-196) .....***(Replaces 800 0081)***	17.814	1	400 1011	
SCREW, Tapping..... 60 Thru 65 10-20-80 (V8)	17.664	1	G177036	NA
WASHER, Lock ..... 60 Thru 64 01-10 (Six): 65 01 (LHE)(OHV-196)	17.820	1	G122158	NA
WASHER, Lock ..... 60 Thru 65 10-20-80 (V8)	17.824	1	G138526	NA
NUT, Hexagon..... 60 Thru 64 01-10 (Six): 65 01 (LHE)(OHV-196)	17.412	1	G120614	NA
1.130 CHAIN, Timing				
60 Thru 64 01: 65 01 (LHE-Note 1.130-6)(OHV-196-Note 1.130-6): 60 Thru 64 10.....	.....	1	312 2392	
65 01 (LHE-Note 1.130-5)(OHV-196-Note 1.130-5)	.....	1	317 5871	
61 10 (OHVA): 62 10 (OHVA-Note 1.130-1): 63 10 (OHVA-Note 1.130-3)	.....	1	316 0328	
62 10 (OHVA-Note 1.130-2): 63 10 (OHVA-Note 1.130-4): 64 10 (OHVA)	.....	1	316 3838	
65 01-80 (OHV-232): 64-65 (OHV-232): 65 01-10 (OHV-199)	.....	1	317 2307	
60 Thru 65 10-20-80 (V8)	.....	1	314 4447	
1.131 DEFLECTOR, Timing Chain Oil (On Camshaft Front Bearing)				
60 Thru 63 01: 60 Thru 63 10 (OHVC)..... ***(Use 316 9670)***	.....	1	310 6468	
64-65 01 (LHE)(OHVC-196): 64 10 (OHVC-196)	.....	1	316 9670	
61 Thru 64 10 (OHVA).....	.....	1	315 9943	
1.132 SPROCKET, Crankshaft				
60 Thru 64 01: 60 Thru 64 10 (OHVC-196): 65 01 (LHE-Note 1.130-6) (OHV-196-Note 1.130-6).....	.....	1	312 2389	

NOTE 1.130-1: On 62 10 (OHVA) Used prior to Engine Code No. 40424.

NOTE 1.130-2: On 62 10 (OHVA) Used beginning with Engine Code No. 40424.

NOTE 1.130-3: On 63 10 (OHVA) Used prior to Engine Code No. 410B31.

NOTE 1.130-4: On 63 10 (OHVA) Used beginning with Engine Code No. 410B31.

NOTE 1.130-5: On 65 01 (LHE) Used prior to Engine Code No. 608A03 and beginning with Engine Code No. 608A14; on 65 01 (OHV-196) Used prior to Engine Code No. 608C03 and beginning with Engine Code No. 608C14.

NOTE 1.130-6: On 65 01 (LHE) Used beginning with Engine Code No. 608A03 and prior to Engine Code No. 608A14; on 65 01 (OHV-196) Used beginning with Engine Code No. 608C03 and prior to Engine Code No. 608C14.

Copyright 1963 American Motors Corp.

GROUP NO. — DESCRIPTION — YEAR and MODEL	PRIMARY GROUP NO.	PER CAR	PART NO.	CODE
65 01 (LHE-Note 1.130-5)(OHV-196-Note 1.130-5)	.....	1	317 5870	
61 10 (OHVA): 62 10 (OHVA-Note 1.130-1): 63 10 (OHVA-Note 1.130-3)	.....	1	316 0817	
62 10 (OHVA-Note 1.130-2): 63 10 (OHVA-Note 1.130-4): 64 10 (OHVA)	.....	1	316 3840	
65 01-80 (OHV-232): 64-65 10 (OHV-232): 65 01-10 (OHV-199)	.....	1	317 3205	
60 Thru 65 10-20-80 (V8)	.....	1	314 4448	
KEY, Crankshaft Sprocket				
60 Thru 65 01 (LHE)(OHVC-196): 60 Thru 64 10 (OHV-196): 60-61 20: 60 Thru 65 10-20-80 (V8)	.....	1	310 7234	
65 01-80 (OHV-232): 64-65 10 (OHV-232): 65 01-10 (OHV-199)	.....	1	310 7002	
SHEDDER, Crankshaft Sprocket Oil				
60 Thru 65 01 (LHE)(OHVC-196): 60 Thru 64 10 (OHV-196)	.....	1	310 2770	
65 01-80 (OHV-232): 64-65 10 (OHV-232): 65 01-10 (OHV-199)	.....	1	317 3076	
62 Thru 65 10-80 (V8)	.....	1	316 5660	

1.134 SPROCKET, Camshaft

60 Thru 64 01: 65 01 (LHE-Note 1.130-6)(OHV-196-Note 1.130-6): 60 Thru 64 10 (OHVC-196)	.....	1	312 2388	
65 01 (LHE-Note 1.130-5)(OHV-196-Note 1.130-5): 64 10 (OHVC-196)	.....	1	317 5869	
61 10 (OHVA): 62 10 (OHVA-Note 1.130-1): 63 10 (OHVA-Note 1.130-3)	.....	1	316 0819	
62 10 (OHVA-Note 1.130-2): 63 10 (OHVA-Note 1.130-4): 64 10 (OHVA)	.....	1	316 3839	
65 01-80 (OHV-232): 64-65 10 (OHV-232): 65 01-10 (OHV-199) ***(Replaces 317 2306)***	.....	1	320 6693	#
60 Thru 65 10-80 (V8) ***(Replaces 314 4451)***	.....	1	316 5079	

ATTACHING PARTS
Sprocket To Camshaft

BOLT, Hexagon	60 Thru 65 01 (LHE)(OHVC-196): 60 Thru 64 10 (OHV-196)	.....	1	310 9944	
BOLT, Hexagon	65 01-80 (OHV-232): 64-65 10 (OHV-232): 65 01-10 (OHV-199)	.....	1	317 2308	
WASHER, Plain.....	60 Thru 65 01 (LHE)(OHVC-196): 60 Thru 64 10 (OHV-196)	.....	1	310 9945	
WASHER, Plain.....	65 01-80 (OHV-232): 64-65 10 (OHV-232): 65 01-10 (OHV-199)	.....	1	317 3284	
WASHER, Spring	60 Thru 65 01 (LHE)(OHVC-196): 60 Thru 64 10 (OHV-196)	17.820	1	G103323	NA

ECCENTRIC, Fuel Pump

60 Thru 65 10-20-80 (V8)		4.118	1	314 4449	

ATTACHING PARTS
Eccentric To Camshaft

BOLT, Hexagon	60 Thru 65 10-20-80 (V8)	4.118	1	314 4704	
WASHER, Plain.....	60 Thru 65 10-20-80 (V8)	4.118	1	314 4702	
WASHER, Lock	60 Thru 65 10-20-80 (V8)	17.820	1	G120384	NA

KEY, Camshaft Sprocket

60 Thru 63 01-10-20-80: 64-65 01 (LHE) (OHVC-196): 64 10 (OHVC-196): 64-65 10-80 (V8)	1.135	1	310 7002	

Copyright 1963 American Motors Corp.

GROUP NO. — DESCRIPTION — YEAR and MODEL	PRIMARY GROUP NO.	PER CAR	PART NO.	CODE
1.136 ROD ASSEMBLY, Connecting (Incl. Cap, Bolts And Nuts)				
60 Thru 64 01 (Note 1.136-1 Type 1): 60 Thru 64 10 (OHV-196-Note 1.136 Type 1)	.....	6	314 5611	
64 01 (Note 1.136-1 Type 2): 65 01 (LHE)(OHVC-196): 64 10 (OHV-196-Note 1.136-1 Type 2)	.....	6	317 4474	
65 01-80 (OHV-232): 64-65 10 (OHV-232)	.....	6	317 2341	
65 01-10 (OHV-199)	.....	6	317 3210	
60 Thru 65 10-20-80 (V8)	.....	8	314 5296	
ATTACHING PARTS				
Connecting Rod Bearing Cap To Rod				
BOLT, Kit ..... 60 Thru 65 01 (LHE)(OHVC-196): 60 Thru 64 10 (OHV-196)...(Incl. Nut)	1.141	12	311 2743	
BOLT, Kit ..... 65 01-80 (OHV-232): 65 01-10 (OHV-199): 64-65 10 (OHV-232)...(Incl. Nut)	.....	12	320 6253	
BOLT, Kit ..... 60 Thru 65 10-20-80 (V8)...(Incl. Nut)	1.141	16	320 6252	
BOLT, Hexagon ..... 65 01-80 (OHV-232): 64-65 10 (OHV-232): 65 01-10 (OHV-199)	.....	12	317 2326	
BOLT, Hexagon ..... 60 Thru 65 10-20-80 (V8) ..... ***(Use 320 6252)***	1.141	16	314 5535	
NUT, Hexagon..... 60 Thru 65 01-10 (Six): 65 80 (OHV-232)	1.141	12	314 9556	
NUT, Hexagon..... 60 Thru 65 10-20-80 (V8)	1.141	16	314 9590	
1.138 BEARING, Connecting Rod (Incl. Upper And Lower)				
(Std.) 60 Thru 65 01 (LHE)(OHVC-196): 60 Thru 64 10 (OHVC-196)	.....	6	320 3879	
(Std.) 61 Thru 64 10 (OHVA)	.....	6	320 3889	
(Std.) 65 01-80 (OHV-232): 64-65 10 (OHV-232): 65 01-10 (OHV-199)	.....	6	320 4978	
(Std.) 60-61 20	.....	8	311 9606	
(Std.) 60 Thru 65 10-80 (V8)	.....	8	320 1231	
(-.001) 60 Thru 65 01 (LHE)(OHVC-196): 60 Thru 64 10 (OHVC-196) ***(Replaces 311 7201)***	.....	6	320 3880	
(-.001) 61-62 10 (OHVA)	.....	6	320 2672	
(-.001) 63-64 10 (OHVA)	.....	6	320 3890	
(-.001) 65 01-80 (OHV-232): 64-65 10 (OHV-232): 65 01-10 (OHV-199)	.....	6	320 4979	
(-.001) 60-61 20	.....	8	311 9612	
(-.001) 60 Thru 65 10-80 (V8)	.....	8	320 1232	
(-.002) 60 Thru 62 01: 60 Thru 62 10 (OHVC)	.....	6	311 4603	
(-.002) 63 Thru 65 01 (LHE)(OHVC-196): 63-64 10 (OHVC-196)	.....	6	320 3881	
(-.002) 61-62 10 (OHVA)	.....	6	320 2673	
(-.002) 63-64 10 (OHVA)	.....	6	320 3891	
(-.002) 65 01-80 (OHV-232): 64-65 10 (OHV-232): 65 01-10 (OHV-199)	.....	6	320 4980	
(-.002) 60-61 20	.....	8	311 9614	
(-.002) 60 Thru 65 10-80 (V8) ***(Use 320 1233)***	.....	8	320 0821	
(-.010) 60 Thru 65 01 (LHE)(OHVC-196): 60 Thru 64 10 (OHVC-196) ***(Replaces 311 4604)***	.....	6	320 3882	
(-.010) 61 Thru 64 10 (OHVA) ***(Replaces 320 2674)***	.....	6	320 3892	
(-.010) 65 01-80 (OHV-232): 64-65 10 (OHV-232): 65 01-10 (OHV-199)	.....	6	320 4981	
(-.010) 60-61 20	.....	8	311 9616	
(-.010) 60 Thru 65 10-80 (V8)	.....	8	320 1234	
(-.012) 60 Thru 65 01 (LHE-OHVC-196): 60 Thru 64 10 (OHVC-196) ***(Replaces 320 3187)***	.....	6	320 3883	
(-.012) 61-62 10 (OHVA)	.....	6	320 2675	
(-.012) 63-64 10 (OHVA)	.....	6	320 3893	
(-.012) 65 01-80 (OHV-232): 64-65 10 (OHV-232): 65 01-10 (OHV-199)	.....	6	320 4982	
(-.012) 60-61 20	.....	8	311 9618	

NOTE 1.136-1: **Two Types of Connecting Rods were installed on 64 01 and 64 10 (OHV-196). They can be identified as follows:**
Type 1: The Connecting Rod at Piston End is 13/16" wide.
Type 2: The Connecting Rod at Piston End is 1-7/64" wide.

Copyright 1963 American Motors Corp.

GROUP NO. — DESCRIPTION — YEAR and MODEL	PRIMARY GROUP NO.	PER CAR	PART NO.	CODE
BEARING SET, Connecting Rod				
(Std.) 60 Thru 65 01 (LHE)(OHVC-196): 60 Thru 64 10 (OHVC-196) ***(Replaces 311 7412)(Ref. Pr. List)***	.....	1	320 3884	#
(Std.) 61 Thru 64 10 (OHVA) ***(Replaces 320 2676)***	.....	1	320 3894	
(Std.) 65 01-80 (OHV-232): 64-65 10 (OHV-232): 65 01-10 (OHV-199)	.....	1	320 4983	
(Std.) 60-61 20	.....	1	311 9607	
(Std.) 60 Thru 65 10-80 (V8)	.....	1	320 1235	
(-.001) 60 Thru 65 01 (LHE)(OHV-196): 60 Thru 64 10 (OHVC-196) ***(Replaces 311 7413)(Ref. Pr. List)***	.....	1	320 3885	#
(-.001) 61 Thru 64 10 (OHVA) ***(Replaces 320 2677)***	.....	1	320 3895	
(-.001) 65 01-80 (OHV-232): 64-65 10 (OHV-232): 65 01-10 (OHV-199)	.....	1	320 4984	
(-.001) 60-61 20	.....	1	311 9613	
(-.001) 60 Thru 65 10-80 (V8) ***(Replaces 320 0825)***	.....	1	320 1236	
(-.002) 60 Thru 65 01 (LHE)(OHV-196): 60 Thru 64 10 (OHVC-196) ***(Replaces 311 7415)(Ref. Pr. List)***	.....	1	320 3886	#
(-.002) 61-62 10 (OHVA)	.....	1	320 2678	
(-.002) 63-64 10 (OHVA)	.....	1	320 3896	
(-.002) 65 01-80 (OHV-232): 64-65 10 (OHV-232): 65 01-10 (OHV-199)	.....	1	320 4985	
(-.002) 60-61 20	.....	1	311 9615	
(-.002) 60 Thru 65 10-80 (V8) ***(Replaces 320 0826)***	.....	1	320 1237	#
(-.010) 60 Thru 65 01 (LHE)(OHVC-196): 60 Thru 64 10 (OHVC-196) ***(Ref. Pr. List)***	.....	1	320 3887	#
(-.010) 61 Thru 64 10 (OHVA) ***(Replaces 320 2679)***	.....	1	320 3897	#
(-.010) 65 01-80 (OHV-232): 64-65 10 (OHV-232): 65 01-10 (OHV-199)	.....	1	320 4986	
(-.010) 60-61 20 ***(Use 8-311 9616)***	.....	1	311 9617	
(-.010) 60 Thru 65 10-80 (V8)	.....	1	320 1238	
(-.012) 60 Thru 65 01 (LHE)(OHVC-196): 60 Thru 64 10 (OHVC-196) ***(Replaces 311 7536)***	.....	1	320 3888	
(-.012) 61-62 10 (OHVA)	.....	1	320 2680	
(-.012) 63-64 10 (OHVA)	.....	1	320 3898	
(-.012) 65 01-80 (OHV-232): 64-65 10 (OHV-232): 65 01-10 (OHV-199)	.....	1	320 4987	
(-.012) 60-61 20	.....	1	311 9619	
1. 143 PISTON (Incl. Pin)				
(Std.) 60 Thru 62 01 (LHE)	.....	6	320 0879	
(Std.) 63 01 (LHE): 64 01 (LHE-Note 1. 136-1 Type 1) ***(Replaces 320 3874)***	.....	6	320 4029	
(Std.) 64 01 (LHE-Note 1. 136-1 Type 2): 65 01 (LHE)	.....	6	320 5240	
(Std.) ***61-62 01 (LHE-WST-Export 3-3/4" Stroke)(LHE-WOD-Export 3-3/4" Stroke)***	.....	6	320 1100	
(Std.) 60 Thru 62 01-10 (OHV)	.....	6	320 0309	
(Std.) 63 01-10 (OHV): 64 01-10 (OHV-196-Note 1. 136-1 Type 1) ***(Replaces 320 3793)***	.....	6	320 4024	
(Std.) 64 01-10 (OHV-196-Note 1. 136-1 Type 2): 65 01 (OHVC-196)	.....	6	320 5235	
(Std.) 65 01-80 (OHV-232): 64-65 10 (OHV-232)	.....	6	320 4957	
(Std.) 65 01-10 (OHV-199)	.....	6	320 5445	
(Std.) 63 Thru 65 10 (V8-287): 65 80 (V8-287)	.....	8	320 4494	
(Std.) 60-61 20	.....	8	320 0112	
(Std.) 64-65 10 (V8-327-WDT): 60 Thru 65 80 (V8-327-WDT) ***(Replaces 320 1774)***	.....	8	320 2315	
(Std.) 64-65 10 (V8-327-W4B): 60 Thru 65 80 (V8-327-W4B)	.....	8	320 0313	
(.002) 60 Thru 62 01 (LHE)	.....	6	320 0880	
(.002) 63 01 (LHE): 64 01 (LHE-Note 1. 136-1 Type 1)	.....	6	320 4030	
(.002) 64 01 (LHE-Note 1. 136-1 Type 2): 65 01 (LHE)	.....	6	320 5241	

Copyright 1963 American Motors Corp.

GROUP NO. — DESCRIPTION — YEAR and MODEL	PRIMARY GROUP NO.	PER CAR	PART NO.	CODE
(.002) 60 Thru 62 01-10 (OHV)	.....	6	320 0310	
(.002) 63 01-10 (OHV): 64 01-10 (OHV-196-Note 1.136-1 Type 1)	.....	6	320 4025	
(.002) 64 01-10 (OHV-196-Note 1. 136-1 Type 2): 65 01 (OHVC-196)	.....	6	320 5236	
(.002 65 01-80 (OHV-232): 64-65 10 (OHV-232)	.....	6	320 4958	
(.002) 65 01-10 (OHV-199)	.....	6	320 5446	
(.002) 63 Thru 65 10 (V8-287): 65 80 (V8-287)	.....	8	320 4495	
(.002) 60-61 20	.....	8	320 0113	
(.002) 64-65 10 (V8-327-WDT): 60 Thru 65 80 (V8-327-WDT) ***(Replaces 320 2316)***	.....	8	320 1775	
(.002) 64-65 10 (V8-327-W4B): 60 Thru 65 80 (V8-327-W4B)	.....	8	320 0314	
(.005) 60 Thru 62 01 (LHE)	.....	6	320 0904	
(.005) 63 01 (LHE): 64 01 (LHE-Note 1.136-1 Type 1)	.....	6	320 4031	
(.005) 64 01 (LHE-Note 1. 136-1 Type 2): 65 01 (LHE)	.....	6	320 5242	
(.005) ***61-62 01 (LHE-WST-Export 3-3/4" Stroke)(LHE-WOD-Export 3-3/4" Stroke)***	.....	6	320 1102	
(.005) 60 Thru 62 01-10 (OHV)	.....	6	320 0311	
(.005) 63 01-10 (OHV): 64 01-10 (OHV-196-Note 1. 136-1 Type 1)	.....	6	320 4026	
(.005) 64 01-10 (OHV-196-Note 1. 136-1 Type 2): 65 01 (OHVC-196)	.....	6	320 5237	
(.005) 65 01-80 (OHV-232): 64-65 10 (OHV-232)	.....	6	320 4959	
(.005) 65 01-10 (OHV-199)	.....	6	320 5447	
(.005) 63 Thru 65 10 (V8-287): 65 80 (V8-287)	.....	8	320 4496	
(.005) 60-61 20	.....	8	320 0114	
(.005) 60 80 (WDT)	.....	8	320 1776	
(.005) 64-65 10 (V8-327-WDT): 61 Thru 65 80 (V8-327-WDT)	.....	8	320 2317	
(.005) 64-65 10 (V8-327-W4B): 60 Thru 65 80 (V8-327-W4B)	.....	8	320 0315	
(.010) 60 Thru 62 01 (LHE)	.....	6	320 0905	
(.010) 63 01 (LHE): 64 01 (LHE-Note 1. 136-1 Type 1) ***(Use 320 5243)***	.....	6	320 4032	#
(.010) 60 Thru 62 01-10 (OHV)	.....	6	320 0312	
(.010) 63 01-10 (OHV): 64 01-10 (OHV-196-Note 1. 136-1 Type 1)	.....	6	320 4027	
(.010) 64 01 (LHE-Note 1. 136-1 Type 2): 65 01 (LHE)	.....	6	320 5243	
(.010) 64 01-10 (OHV-196-Note 1. 136-1 Type 2): 65 01 (OHVC-196)	.....	6	320 5238	
(.010) 65 01-80 (OHV-232): 64-65 10 (OHV-232)	.....	6	320 4960	
(.010) 65 01-10 (OHV-199)	.....	6	320 5448	
(.010) 63 Thru 65 10 (V8-287): 65 80 (V8-287)	.....	8	320 4497	
(.010) 60-61 20	.....	8	320 0115	
(.010) 64-65 10 (V8-327-WDT): 60 Thru 65 80 (V8-327-WDT) ***(Replaces 320 1777)***	.....	8	320 2318	
(.010) 64-65 10 (V8-327-W4B): 60 Thru 65 80 (V8-327-W4B)	.....	8	320 0316	
(.020) 60 Thru 62 01 (LHE)	.....	6	320 0921	
(.020) 63 01 (LHE): 64 01 (LHE-Note 1. 136-1 Type 1) ***(Replaces 320 3878)***	.....	6	320 4033	
(.020) 64 01 (LHE-Note 1. 136-1 Type 2): 65 01 (LHE)	.....	6	320 5244	
(.020) 60 Thru 62 01-10 (OHV)	.....	6	320 0914	
(.020) 63 01-10 (OHV): 64 01-10 (OHV-196-Note 1. 136-1 Type 1) ***(Replaces 320 3797)(Use 320 5239)***	.....	6	320 4028	
(.020) 64 01-10 (OHV-196-Note 1. 136-1 Type 2): 65 01 (OHVC-196)	.....	6	320 5239	
(.020) 65 01-80 (OHV-232): 64-65 (OHV-232)	.....	6	320 4961	
(.020) 65 01-10 (OHV-199)	.....	1	320 5449	
(.020) 63 Thru 65 10 (V8-287): 65 80 (V8-287)	.....	8	320 4498	
(.020) 60-61 20	.....	8	311 9628	
(.020) 64-65 10 (V8-327-WDT): 60 Thru 65 80 (V8-327-WDT) ***(Replaces 320 1778)***	.....	8	320 2319	
(.020) 64-65 10 (V8-327-W4B): 60 Thru 65 80 (V8-327-W4B)	.....	8	320 0481	
(.030) 60-61 20	.....	8	311 9629	

Copyright 1963 American Motors Corp.

GROUP NO. — DESCRIPTION — YEAR and MODEL	PRIMARY GROUP NO.	PER CAR	PART NO.	CODE
1.146 RING SET, Piston				
(Std.)(Sealed Power) 60 Thru 62 01-10	.....	1	320 1898	
(Std.)(Sealed Power) ***61-62 01 (LHE-WST-Export-3-3/4" Stroke) (LHE-WOD-Export 3-3/4" Stroke)***	.....	1	320 1897	
(Std.)(Sealed Power) 63-64 01: 63-64 10 (OHV-196)	.....	1	320 3997	
(Std.)(Sealed Power) 65 01 (LHE)(OHV-196)	.....	1	320 5938	
(Std.)(Sealed Power) 65 01-10-80 (OHV-232): 65 01-10 (OHV-199)	.....	1	320 5939	
(Std.)(Sealed Power) 64 10 (OHV-232)	.....	1	320 5097	
(Std.)(Sealed Power) 63-64 10 (V8-287)	.....	1	320 4576	
(Std.)(Sealed Power) 65 10-80 (V8-287)	.....	1	320 5940	
(Std.)(Sealed Power) 60-61 20	.....	1	320 1900	
(Std.)(Sealed Power) 64 10 (V8-327): 60 Thru 64 80 (V8)	.....	1	320 1901	
(Std.)(Sealed Power) 65 10-80 (V8-327)	.....	1	320 5941	
(Std.)(Ramco) 60 Thru 62 01-10	.....	1	320 0564	
(Std.)(Ramco) ***61-62 01 (LHE-WST-Export 3-3/4" Stroke)(LHE-WOD-Export 3-3/4" Stroke)***	.....	1	320 0563	
(Std.)(Ramco) 63-64 01: 63-64 10 (OHV-196)	.....	1	320 4035	
(Std.)(Ramco) 64 10 (OHV-232)	.....	1	320 5202	
(Std.)(Ramco) 63-64 10 (V8-287) ***(Ref. Pr. List)***	.....	1	320 4575	
(Std.)(Ramco) 60-61 20	.....	1	320 0565	
(Std.)(Ramco) 64 10 (V8-327): 60 Thru 64 80 (V8)	.....	1	320 0569	
(Std.)(McQuay Norris) 60 Thru 62 01-10 ***(Ref. Pr. List)***	.....	1	320 1554	
(Std.)(McQuay Norris) ***61-62 01 (LHE-WST-Export 3-3/4" Stroke) (LHE-WOD-Export 3-3/4" Stroke)***	.....	1	320 1553	
(Std.)(McQuay Norris) 63-64 01: 63-64 10 (OHV-196)	.....	1	320 4104	
(Std.)(McQuay Norris) 64 10 (OHV-232)	.....	1	320 5171	
(Std.)(McQuay Norris) 63-64 10 (V8-287)	.....	1	320 4566	
(Std.)(McQuay Norris) 60-61 20	.....	1	320 1556	
(Std.)(McQuay Norris) 64 10 (V8-327): 60 Thru 64 80 (V8)	.....	1	320 1557	
(Std.)(Perfect Circle) 60 Thru 62 01-10	.....	1	320 0079	
(Std.)(Perfect Circle) ***61-62 01 (LHE-WST-Export 3-3/4" Stroke) (LHE-WOD-Export 3-3/4" Stroke)***	.....	1	320 0087	
(Std.)(Perfect Circle) 63-64 01: 63-64 10 (OHV-196)	.....	1	320 3995	
(Std.)(Perfect Circle) 65 01 (LHE)(OHV-196)	.....	1	320 5942	
(Std.)(Perfect Circle) 65 01-10-80 (OHV-232): 65 01-10 (OHV-199)	.....	1	320 5943	
(Std.)(Perfect Circle) 64 10 (OHV-232)	.....	1	320 5172	
(Std.)(Perfect Circle) 63-64 10 (V8-287)	.....	1	320 4491	
(Std.)(Perfect Circle) 65 10-80 (V8-287)	.....	1	320 5944	
(Std.)(Perfect Circle) 60-61 20	.....	1	311 9698	
(Std.)(Perfect Circle) 64 10 (V8-327): 60 Thru 64 80 (V8)	.....	1	647 4170	
(Std.)(Perfect Circle) 65 10-80 (V8-327)	.....	1	320 5945	
(.020)(Perfect Circle) ***61-62 01 (LHE-WST-Export 3-3/4" Stroke) (LHE-WOD-Export 3-3/4" Stroke)***	.....	1	320 0088	
(.020)(Perfect Circle) 63-64 01: 63-64 10 (OHV-196)	.....	1	320 3996	
(.020)(Perfect Circle) 63-64 10 (V8-287)	.....	1	320 4492	
(.020)(Perfect Circle) 64 10 (V8-327): 60 Thru 64 80 (V8)	.....	1	647 4171	
(.020)(Ramco) 60 Thru 62 01-10	.....	1	320 0652	
(.020)(Ramco) ***61-62 01 (LHE-WST-Export 3-3/4" Stroke)(LHE-WOD-Export 3-3/4" Stroke)***	.....	1	320 0655	
(.020)(Ramco) 60-61 20	.....	1	320 0658	
(.020)(Ramco) 64 10 (V8-327): 60 Thru 64 80 (V8)	.....	1	320 0657	
(.030)(Perfect Circle) 64 10 (V8-327): 60 Thru 64 80 (V8)	.....	1	647 4172	
1.149 PIN SET, Piston				
(Std.) 60 Thru 65 01 (LHE)(OHVC-196): 60 Thru 64 10 (OHV-196)	.....	1	311 9217	
(Std.) 60 Thru 65 10-20-80 (V8)	.....	1	320 0318	
(Std.) 65 01-80 (OHV-232) 64-65 10 (OHV-232): 65 01-10 (OHV-199)	.....	1	320 5433	
(.003) 60 Thru 65 01 (LHE)(OHVC-196): 60 Thru 64 10 (OHV-196)	.....	1	311 9218	
(.003) 60 Thru 65 10-20-80 (V8)	.....	1	320 0319	
(.003) 65 01-80 (OHV-232): 64-65 10 (OHV-232): 65 01-10 (OHV-199)	.....	1	320 5434	
(.005) 60 Thru 65 01 (LHE)(OHVC-196): 60 Thru 64 10 (OHV-196)	.....	1	311 9219	
(.005) 60 Thru 65 10-20-80 (V8)	.....	1	320 0320	
(.005) 65 01-80 (OHV-232): 64-65 10 (OHV-232): 65 01-10 (OHV-199)	.....	1	320 5435	

Copyright 1963 American Motors Corp.

GROUP NO. — DESCRIPTION — YEAR and MODEL	PRIMARY GROUP NO.	PER CAR	PART NO.	CODE
1.151 PAN ASSEMBLY, Engine Oil (Incl. Drain Plug)				
60-61 01: ***62-63 01 (RHD):*** 60-61 10 (OHVC)	.....	1	314 6234	#
62 01 (LHD-LHE): 62 01-10 (OHVC)	.....	1	316 3475	
63 01 (LHD-LHE-Note 1.151-1): 63 01-10 (OHVC-Note 1.151-1) ***(Ref. Pr. List)***	.....	1	316 6371	
63 01 (LHD-LHE-Note 1.151-2): 63 01-10 (OHVC-Note 1.151-2)	.....	1	316 9379	
64-65 01 (LHE)(OHVC-196): 64 10 (OHV-196)	.....	1	316 9972	
61 Thru 64 10 (OHVA) ***(Replaces 315 9814, 316 2189)***	.....	1	316 7366	
65 01-80 (OHV-232): 64-65 10 (OHV-232): 65 01-10 (OHV-199)	.....	1	317 2074	
60-61 20 ***(Replaces 315 3675)***	.....	1	315 3681	
60-61 80	.....	1	315 3680	
62 Thru 65 10-80 (V8)	.....	1	316 3611	
ATTACHING PARTS				
Pan To Engine				
SCREW, Hexagon ..... 60 Thru 63 01: 64-65 01 (LHE-4 Req. -5/16-18 x 5/8) (OHVC-196-4 Req. -5/16-18 x 5/8): 60 Thru 64 20-80: 60 Thru 64 10 (OHVC-196): 63 Thru 65 10-80 (V8-2 Req. -5/16-18 x 5/8... (Incl. Lockwasher) ***(Replaces 800 0068)***	17.626	AR	400 0987	
BOLT, Hexagon ..... 64-65 01 (LHE-14 Req. -5/16-18 x 3/4) (OHVC-196-14 Req. -5/16-18 x 3/4): 61 Thru 64 10 (OHVA-19 Req.): 64-65 10 (OHVC-232-4 Req. -5/16-18 x 3/4): 65 01-10 (OHVC-199-4 Req. -5/16-18 x 3/4): 65 01-80 (OHVC-232-4 Req. -5/16-18 x 3/4): 65 10-80 (V8-WST-12 Req. -5/16-18 x 3/4)(V8-WOD-12 Req. -5/16-18 x 3/4)(V8-WAT-11 Req. -5/16-18 x 3/4) (V8-W4ST-12. - Req. -5/16-18 x 3/4)	.....	AR	316 2258	
BOLT, Hexagon ..... 65 01-80 (OHV-232-1/4-20x1/2): 64-65 10 (OHV-232): 65 01-10 (OHVC-199-1/4-20x1/2)	.....	22	317 2721	
BOLT, Hexagon..... ***61 10 (RHD-WST-For Clutch Beam Bracket) (RHD-WOD-For Clutch Beam Bracket)***	17.038	1	G180081	NA
STUD..... 60 01 (WST-For Clutch Beam Bracket)(WOD-For Clutch Beam Bracket)	.....	2	315 4657	
STUD..... 62 Thru 64 01 (WST-WES-For Tow Start Cable Clip Bracket)(WOD-WES-For Tow Start Cable Clip Bracket)	5.178	1	312 2698	
STUD..... 61 Thru 64 10 (OHVA-For Breather Tube)	5.178	1	312 2698	
STUD..... 65 01 (LHE-WPS-2 Req.)(OHV-196-WPS-2 Req.): 60 Thru 65 10-20-80 (V8-1 Req.)(WAT): ***65 10 (RHD-V8-287-WCGS-1 Req.):*** 65 10 (OHV-199-1 Req.)	5.178	AR	312 2698	
STUD..... 65 01 (OHV-199-2 Req.): 64 10 (OHV-232-2 Req.): 65 10 (OHV-199-2 Req.)***(OHV-199-WAT-Heavy Duty-3 Req.):*** 65 10-80 (OHV-232-2 Req.)***(OHV-232-WAT-Heavy Duty-3 Req.)***	10.470	AR	317 6335	
SPACER ..... ***61 10 (RHD-WST-For Clutch Beam Bracket), (RHD-WOD-For Clutch Beam Bracket)***	3.039	1	315 6252	
WASHER, Plain..... 65 01 (OHV-199-2 Req.)(OHV-232-2 Req.): 64 10 (OHV-232-2 Req.): 65 10 (OHV-199-2 Req.) ***(OHV-232-WAT-Heavy Duty-3 Req.):*** 65 10-80 (OHV-232-2 Req.)***(OHV-232-Heavy Duty-3 Req.)***	17.814	AR	G120392	NA
WASHER, Lock..... 62 Thru 64 01 (WST-WES)(WOD-WES): 61 Thru 64 10 (OHVA): ***65 10 (OHVC-199-Heavy Duty-WAT-for Oil Cooler Tube)(OHVC-232-Heavy Duty-WAT-For Oil Cooler Tube)***	17.824	1	G138538	NA

NOTE 1.151-1: On 63 01 (LHD-LHE) used prior to Engine Code No. 408A18.
On 63 01-10 (OHVC) used prior to Engine Code No. 408C18.

NOTE 1.151-2: On 63 01 (LHD-LHE) used beginning with Engine Code No. 408A18.
On 63 01-10 (OHVC) used beginning with Engine Code No. 408C18.

Copyright 1963 American Motors Corp.

GROUP NO. — DESCRIPTION — YEAR and MODEL	PRIMARY GROUP NO.	PER CAR	PART NO.	CODE
PLUG KIT, Engine Oil Pan Drain (Magnetic)(Incl. Gasket)				
60 Thru 65 01 (LHE-Special Equipment)(OHV-196-Special Equipment): 60 Thru 63 10 (OHVC-196-Special Equipment): 60 Thru 65 10-20-80 (V8-Special Equipment) .....(Replaces 315 5898)	.....	1	320 6695	#
61 Thru 64 10 (OHVA-Special Equipment): 64-65 10 (OHV-232-Special Equipment): 65 01-10 (OHV-199-Special Equipment): 65 01-80 (OHV-232-Special Equipment) .....(Replaces 316 0902)	.....	1	320 6696	#
PLUG KIT, Engine Oil Pan Drain (Non-Magnetic)(Incl. Gaskets)				
60 Thru 65 01 (LHE)(OHVC-196): 60 Thru 65 10-20-80 (V8): 60 Thru 64 10 (OHVC-196)	.....	1	314 6316	
61 Thru 64 10 (OHVA): 64-65 10 (OHV-232): 65 01-10 (OHV-199): 65 01-10 (OHV-232)	.....	1	316 5787	#
PLUG, Engine Oil Pan Drain (Non-Magnetic)(Less Gasket)				
61 Thru 64 10 (OHVA): 64-65 10 (OHV-232): 65 01-10 (OHV-199): 65 01-80 (OHV-232)	.....	1	315 9817	
GASKET, Engine Oil Pan Drain Plug				
60 Thru 65 01 (LHE)(OHV-196): 60 Thru 64 10 (OHVC-196): 60 Thru 65 10-20-80 (V8) .....***(Replaces 314 6289)***	.....	1	316 7984	
65 01-80 (OHV-232): 61 Thru 64 10 (OHVA): 64-65 10 (OHV-232): 65 01-10 (OHV-199) .....***(Replaces 317 0271)***	.....	1	316 1126	
1.152 GASKET SET, Engine Oil Pan				
60 Thru 63 01: 60 Thru 63 10 (OHVC)	.....	1	320 4493	
64-65 01 (LHE)(OHVC-196): 64 10 (OHVC-196)	.....	1	320 4679	
61 Thru 64 10 (OHVA)	.....	1	320 4525	
60 Thru 65 10-20-80 (V8)	.....	1	320 1164	
65 01-80 (OHV-232) 64-65 10 (OHV-232): 65 01-10 (OHV-199)	.....	1	320 4974	
GASKET, Engine Oil Pan (Front)(Rubber)				
65 01-80 (OHV-232): 64-65 10 (OHV-199): 65 01-10 (OHV-199)	.....	1	317 2848	
SEAL, Engine Oil Pan To Rear Bearing Cap Oil				
65 01-80 (OHV-232): 64-65 10 (OHV-232): 65 01-10 (OHV-199)	.....	1	317 2071	
GASKET, Engine Oil Pan To Bearing Cap (Rear)				
60 Thru 63 01: 60 Thru 63 10 (OHVC)	.....	1	313 9742	
64-65 01 (LHE)(OHVC-196): 64 10 (OHVC-196)	.....	1	317 1730	
1.153 COVER, Flywheel Mud Pan To Clutch Housing				
60-61 10 (OHVA-WST-Heavy Duty-Note 1.002-1: 62 10 (OHVC-WST-Heavy Duty-Note 1.002-2)	.....	1	316 1237	
ATTACHING PARTS				
Cover To Clutch Housing				
SCREW, Tapping..... ***60-61 10 (WST-Heavy Duty-Note 1.002-1): 62 10 (OHVC-WST-Heavy Duty-Note 1.002-2) .....***	17.670	2	G172429	NA
Cover To Flywheel Mud Pan				
SCREW, Tapping..... ***60-61 10 (WST-Heavy Duty-Note 1.002-1): 62 10 (OHVC-WST-Heavy Duty-Note 1.002-2) .....***	17.671	2	G9411563	

Copyright 1963 American Motors Corp.

GROUP NO. — DESCRIPTION — YEAR and MODEL	PRIMARY GROUP NO.	PER CAR	PART NO.	CODE
1. 154 PUMP ASSEMBLY, Engine Oil (Incl. Body Shafts And Gears)				
60 Thru 64 01 (LES): 64 10 (OHVC-196-LES) ***(Replaces 315 4154)***	.....	1	317 3406	#
63 Thru 64 01 (WST-WES)(WOD-WES): 63-64 10 (OHVC-196-WST-WES) (OHVC-196-WOD-WES) ***(Replaces 317 3427)***	.....	1	316 3706	
65 01 (LHE)(OHVC-196)	.....	1	317 6659	
61 Thru 64 10 (OHVA)	.....	1	316 0578	
65 01-80 (OHV-232): 64-65 10 (OHV-232): 65 01-10 (OHV-199)	.....	1	317 3403	
PIN, Oil Pump To Cylinder Block Dowel				
65 01-80 (OHV-232): 64-65 10 (OHV-232): 65 01-10 (OHV-199)	.....	1	317 3090	
1. 155 BODY ASSEMBLY, Engine Oil Pump (Incl. Idler Gear Shaft)				
60-61 01: 62 Thru 63 01 (LES): 60 Thru 62 10 (OHVC): 63 10 (OHVC-LES-196)	.....	1	314 5404	
64 01 (LES): 64 10 (OHVC-196-LES)	.....	1	317 2389	
62 Thru 64 01 (WST-WES)(WOD-WES): 63-64 10 (OHVC-196-WST-WES) (OHVC-196-WOD-WES) ***(Replaces 317 2391)***	.....	1	316 3707	
65 01 (LHE)(OHVC-196)	.....	1	317 6041	
61 Thru 64 10 (OHVA)	.....	1	315 9951	
60 Thru 65 10-20-80 (V8)	.....	1	314 9804	
ATTACHING PARTS				
Body To Cylinder Block				
BOLT, Hexagon..... 60-61 01: 62 Thru 64 01 (LES): 60 Thru 62 10 (OHVC): 63-64 10 (OHVC-LES)	.....	3	310 6487	
BOLT, Hexagon..... 62 Thru 64 01 (WST-WES)(WOD-WES): 63-64 10 (OHVC-196-WST-WES)(OHVC-196-WOD-WES)	.....	3	316 3714	
BOLT, Hexagon ..... 65 01 (LHE)(OHVC-196)	17.038	3	G186270	
BOLT, Hexagon ..... 65 01-80 (OHV-232): 64-65 10 (OHV-232-7/8" Long): 65 01-10 (OHV-199-7/8" Long)	17.038	1	G179817	NA
BOLT, Hexagon ..... 65 01-80 (OHV-232-2-1/2" Long): 64-65 10 (OHV-232-2-1/2" Long): 65 01-10 (OHV-199-2-1/2" Long)	17.038	1	G179828	NA
BOLT, Hexagon..... 61 Thru 64 10 (OHVA-3-3/4" Long)	17.038	2	G186271	NA
BOLT, Hexagon..... 61 Thru 64 10 (OHVA-4" Long)	17.038	1	G186272	NA
WASHER, Plain..... 62 Thru 64 01 (WST-WES)(WOD-WES): 63-64 10 (OHVC-196-WES)	.....	3	316 5761	
WASHER, Lock ..... 60 Thru 64 01-10 (Six-3 Req.): 65 01 (LHE-3 Req.) (OHV-196-3 Req.): 65 01-80 (OHV-232-2 Req.): 65 01-10 (OHV-199-2 Req.): 64-65 10 (OHV-232-2 Req.)	17.820	AR	G103320	NA
Body To Bearing Cap				
BOLT, Hexagon 60-61 20-80	1.161	2	314 9809	
BOLT, Hexagon ..... 62 Thru 65 10-80 (V8)	17.038	2	G179851	NA
WASHER, Lock..... 60 Thru 65 10-20-80 (V8)	17.820	2	G103321	NA
GASKET, Engine Oil Pump To Cylinder Block				
60 Thru 64 01: 60 Thru 64 10 (OHVC-196) ***(Replaces 312 7849)***	.....	1	316 5659	
65 01 (LHE)(OHVC-196)	.....	1	317 6069	
65 01-80 (OHV-232): 64-65 10 (OHV-232): 65 01-10 (OHV-199)	.....	1	317 2332	
61 Thru 64 10 (OHVA)	.....	1	316 0078	

Copyright 1963 American Motors Corp.

GROUP NO. — DESCRIPTION — YEAR and MODEL	PRIMARY GROUP NO.	PER CAR	PART NO.	CODE
GASKET, Engine Oil Pump To Bearing Cap				
60 Thru 65 10-20-80 (V8)	9.024	1	315 4368	
1.156 EXTENSION, Oil Pump Body				
61 10 (RHD-OHVA)	.....	1	316 1409	
ATTACHING PARTS Extension To Pump Body				
BOLT, Hexagon..... ***61 10 (RHD-OHVA)***	17.038	3	G180082	NA
WASHER, Lock..... ***61 10 (RHD-OHVA)***	17.820	3	G103320	NA
GASKET, Engine Oil Pump Body Extension				
61 10 (RHD-OHVA)	1.208	1	316 0077	
1.157 GEAR, Engine Oil Pump Idler				
60-61 01: 62 Thru 64 01 (LES): 65 01 (LHE)(OHVC-196): 60 Thru 62 10 (OHVC): 63-64 10 (OHVC-196-LES)	.....	1	314 5406	
62 Thru 64 01 (WST-WES)(WOD-WES): 63-64 10 (OHVC-196-WST-WES) (OHVC-196-WOD-WES)	.....	1	316 3710	
61 Thru 64 10 (OHVA)	.....	1	316 0085	
65 01-80 (OHV-232): 64-65 10 (OHV-232): 65 01-10 (OHV-199)	.....	1	317 2333	
60 Thru 65 10-20-80 (V8)	.....	1	314 5244	
SHAFT, Engine Oil Pump Idler Gear				
60-61 01: 62 Thru 64 01 (LES): 65 01 (LHE)(OHVC-196): 60 Thru 62 10 (OHVC): 63-64 10 (OHVC-196-LES)	.....	1	314 5402	
62 Thru 64 01 (WST-WES)(WOD-WES): 63-64 10 (OHVC-196-WST-WES) (OHVC-196-WOD-WES)	.....	1	316 3709	
61 Thru 64 10 (OHVA)	.....	1	315 9950	
65 01-80 (OHV-232): 64-65 10 (OHV-232): 65 01-10 (OHV-199)	.....	1	317 1956	
60 Thru 65 10-20-80 (V8)	.....	1	314 5383	
1.159 GEAR, Engine Oil Pump Drive (In Pump)				
60-61 01: 62 Thru 64 01 (LES): 65 01 (LHE)(OHVC-196): 60 Thru 62 10 (OHVC): 63-64 10 (OHVC-196-LES)	1.157	1	314 5406	#
62 Thru 64 01 (WST-WES)(WOD-WES): 63-64 10 (OHVC-196-WST-WES) (OHVC-196-WOD-WES)	.....	1	316 3711	
61 Thru 64 10 (OHVA)	1.157	1	316 0085	#
69 Thru 65 10-20-80 (V8)	1.157	1	314 5244	#
ATTACHING PARTS Drive Gear To Shaft				
KEY, Woodruff..... 60 Thru 64 01-10-20-80: 65 01 (LHE)(OHVC-196): 65 10-80 (V8)	17.344	1	G106749	
1.161 SHAFT, Engine Oil Pump Drive				
60 01: 61 Thru 65 01 (LHE)...(Incl. Gear And Pin)	.....	1	315 4104	
61 Thru 65 01 (OHVC-196): 60 Thru 64 10 (OHVC-196)...(Incl. Gear And Pin)	.....	1	314 5408	
65 01-80 (OHV-232): 65 01-10 (OHV-199): 64-65 10 (OHV-232)...(Incl. Gear)	.....	1	317 2334	
61 Thru 64 10 (OHVA)...(Incl. Gear And Pin)	.....	1	316 0081	
60 Thru 65 10-20-80 (V8)	.....	1	314 5243	

Copyright 1963 American Motors Corp.

GROUP NO. — DESCRIPTION — YEAR and MODEL	PRIMARY GROUP NO.	PER CAR	PART NO.	CODE
RING, Engine Oil Pump Drive Gear Lock				
60 Thru 65 01 (LHE)(OHVC-196): 60 Thru 64 10 (OHV-196)	.....	1	310 6361	
1.162 GEAR, Engine Oil Pump Drive (Meshes With Camshaft)				
60 Thru 65 01 (LHE)(OHV-196): 60 Thru 64 10 (OHV-196)	.....	1	315 4103	
ATTACHING PARTS				
Engine Oil Pump Drive Gear To Shaft				
PIN, Straight ..... 60 Thru 65 01 (LHE)(OHVC-196): 60 Thru 64 10 (OHV-196)	.....	1	310 5412	
WASHER, Engine Oil Pump Drive Gear Thrust				
60 Thru 65 01 (LHE)(OHVC-196): 60 Thru 64 10 (OHV-196)	.....	1	310 6436	
1.164 COVER, Engine Oil Pump				
60 Thru 64 01 (LES): 60 Thru 64 10 (OHVC-196-LES).....***(Replaces 317 1198)***	.....	1	314 5563	
65 01 (LHE)(OHV-196)	.....	1	317 6215	
61 Thru 64 10 (OHVA)	.....	1	315 9956	
65 01-80 (OHV-232): 64-65 10 (OHV-232): 65 01-10 (OHV-199)	.....	1	317 2336	
60 Thru 65 10-20-80 (V8)	.....	1	315 8512	
ATTACHING PARTS				
Cover To Pump				
BOLT, Hexagon ..... 65 01-80 (OHV-232): 64-65 10 (OHV-232): 65 01-10 (OHV-199)	17.038	4	G179793	NA
BOLT, Hexagon ..... 60 Thru 65 10-20-80 (V8)	17.038	2	G179817	NA
WASHER, Lock ..... 65 01-80 (OHV-232): 64-65 10 (OHV-232): 65 01-10 (OHV-199)	17.820	4	G120380	NA
WASHER, Lock ..... 60 Thru 65 10-20-80 (V8)	17.820	2	G103320	NA
1.165 GASKET, Engine Oil Pump Cover				
60 Thru 64 01 (LES): 60 Thru 64 10 (OHVC-196-LES)	.....	1	310 6444	
65 01 (LHE)(OHV-196)	.....	1	317 6068	
61 Thru 64 10 (OHVA).....***(Replaces 316 0125)***	.....	1	317 3350	
65 01-80 (OHV-232): 64-65 10 (OHV-232): 65 01-10 (OHV-199)	.....	1	317 2337	
60 Thru 65 10-20-80 (V8)	.....	1	314 4710	
1.167 TUBE, Engine Oil Pump Inlet (Incl. Screen And Retainer)				
60-61 01 (LHE-Note 1.167-1 Type 1)...(Incl. Screen And Retainer)	.....	1	313 9096	
60-61 01 (LHE-Note 1.167-1 Type 2)...(Incl. Screen And Retainer)	.....	1	315 7505	
60-61 01 (Note 1.167-1 Type 3): ***62 01 (RHD-LHE): 63 01 (RHD):*** 60-61 10 (OHVC)	.....	1	315 8511	

NOTE 1.167-1: Three Types of Oil Pump Inlet Tubes were installed on the 61-62 01 (LHE) Series. They can be identified as follows:

Type 1: Has a welded Flange on end of Tube and is fastened to the Block with two Screws.

Type 2: The Tube is inserted in the Block using an "O" Ring Seal and is held by a Fork type Clamp with one Screw.

Type 3: The Tube is threaded and is screwed into the Block.

Copyright 1963 American Motors Corp.

GROUP NO. — DESCRIPTION — YEAR and MODEL	PRIMARY GROUP NO.	PER CAR	PART NO.	CODE
62 01 (LHD-LHE): 62 01-10 (OHVC)	.....	1	316 3351	
63 01 (LHD-LHE-Note 1..151-1): 63 01-10 (OHVC-Note 1.151-1)	.....	1	316 6514	
63 01 (LHD-LHE-Note 1.151-2): 63 01-10 (OHVC-Note 1.151-2): 64-65 01 (LHE)(OHV-196): 64 10 (OHVC-196)	.....	1	316 9382	
61 Thru 64 10 (OHVA) ***(Replaces 316 0097)***	.....	1	317 0572	
64 10 (OHVC-232)	.....	1	317 1955	
65 01-10-80 (OHV-232): 65 01-10 (OHV-199)	.....	1	317 7070	
60-61 20	.....	1	315 8515	
60-61 80	.....	1	315 8516	
62 Thru 65 10-80 (V8)	.....	1	316 3743	
ATTACHING PARTS				
Tube Flange To Cylinder Block				
SCREW, Machine..... 60-61 01 (LHE-Note 1.167-1 Type 1)	.....	2	313 4424	
WASHER, Lock..... 60-61 01 (LHE-Note 1.167-1 Type 1)	.....	2	315 4533	
Tube Brace To Bearing Cap				
SCREW, Machine..... 60-61 01 (LHE-Note 1.167-1 Type 2) ***(Replaces 800 0068)***	17.626	1	400 0987	
SPACER, Engine Oil Pump Inlet Tube Screen To Oil Pan				
63 Thru 65 01 (LHE)(OHV-196): 63-64 10 (OHV-196): 65 10-80 (V8)	.....	1	316 7541	
GASKET, Engine Oil Pump Inlet Tube Flange To Block				
60-61 01 (LHE-Note 1.167-1 Type 1)	.....	1	313 4928	
SEAL, Engine Oil Pump Inlet Tube To Block ("O" Ring)				
60-61 01 (LHE-Note 1..167-1 Type 2)	.....	1	315 7506	
CLAMP, Engine Oil Pump Inlet Tube				
60-61 01 (LHE-Note 1.167-1 Type 2)	.....	1	315 7504	
ATTACHING PARTS				
Clamp To Block				
BOLT, Hexagon..... 60-61 01 (LHE-Note 1.167-1 Type 2)	17.038	1	G179818	NA
WASHER, Lock..... 60-61 01 (LHE-Note 1.167-1 Type 2)	17.820	1	G120214	NA
1.168 SCREEN, Engine Oil Pump (Incl. Retainer)				
60-61 01 (LHE-Note 1.167-1 Types 1 And 2)	.....	1	313 9085	
1.176 PLUNGER KIT, Engine Oil Pump Release Valve (Incl. Plunger, Spring And Cap)				
60-61 01: 62 Thru 64 01 (LES): 60 Thru 62 10 (OHVC): 63-64 10 (OHVC-196-LES)	.....	1	311 2400	
62 Thru 64 01 (WES): 63-64 10 (OHVC-196-WES)	.....	1	320 3340	
PLUNGER, Engine Oil Pump Release Valve				
65 01 (LHE)(OHV-196): 61 Thru 64 10 (OHVA)	.....	1	316 2202	
65 01-80 (OHV-232): 64-65 10 (OHV-232): 65 01-10 (OHV-199)	.....	1	317 1951	#
60 Thru 65 10-20-80 (V8)	.....	1	312 4011	

Copyright 1963 American Motors Corp.

GROUP NO. — DESCRIPTION — YEAR and MODEL		PRIMARY GROUP NO.	PER CAR	PART NO.	CODE
SPRING, Engine Oil Pump Release Valve					
65 01 (LHE)(OHV-196)		.....	1	317 6760	
61 Thru 64 10 (OHVA)		.....	1	316 2200	
65 01-80 (OHV-232): 64-65 10 (OHV-232): 65 01-10 (OHV-199)		.....	1	317 1954	
60 Thru 65 10-20-80 (V8)		.....	1	312 4007	
PIN, Engine Oil Pump Release Valve Spring Retainer					
PIN, Cotter	65 01-80 (OHV-232): 64-65 10 (OHV-232): 65 01-10 (OHV-199)	17.460	1	G108635	NA#
1.178 CAP, Engine Oil Pump Release Valve Spring					
60 Thru 65 01 (LHE)(OHV-196): 60 Thru 64 10 (OHV-196)		.....	1	312 4735	
65 01-80 (OHV-232): 64-65 10 (OHV-232): 65 01-10 (OHV-199)		.....	1	317 1958	
GASKET, Engine Oil Pump Release Valve Spring Cap					
60 Thru 65 01 (LHE)(OHV-196): 60 Thru 64 10 (OHV-196)		.....	1	310 5561	
1.180 TUBE, Engine Oil Pump Release Valve Discharge					
60 Thru 65 10-20-80 (V8)		.....	1	314 9802	
1.184 COVER, Oil By-Pass					
60 20		.....	1	315 3086	
ATTACHING PARTS					
Cover To Cylinder Block					
STUD	60 20 (1-23/32" Long)	4.190	2	313 5884	
STUD	60 20 (1-7/16" Long)	17.718	1	G103195	
WASHER, Plain	60 20 ***(Replaces 800 0163)***	17.814	2	400 1102	
NUT, Hexagon	60 20	17.416	2	G443336	NA
GASKET, Oil By-Pass Cover					
60 20		.....	1	315 3087	
1.185 CHANNEL, Oil Trough					
61 Thru 64 10 (OHVA)		.....	1	316 0056	
ATTACHING PARTS					
Oil Trough Channel To Cylinder Block					
BOLT, Hexagon	61 Thru 64 10 (OHVA)	17.038	6	G180085	NA
SEAL	61 Thru 64 10 (OHVA)	1.063	6	316 4047	
WASHER, Plain	61 Thru 64 10 (OHVA)	17.814	6	G9414321	NA
GASKET, Oil Trough Channel					
61 Thru 64 10 (OHVA)		.....	1	316 0057	

Copyright 1963 American Motors Corp.

GROUP NO. — DESCRIPTION — YEAR and MODEL	PRIMARY GROUP NO.	PER CAR	PART NO.	CODE
PLUG, Oil Channel				
(Square Head) 60 Thru 65 01 (LHE-1/4-18-1 Req.)(OHV-196-1/4-18-1 Req.): 60 Thru 64 10 (OHV-196-1/4-18-1 Req.): 60 Thru 64 10-20-80 (V8-2 Req.)-1/4-18)	17.486	AR	G219189	NA
(Square Head) 60-61 01) 1/8-27-2 Req.): 62 Thru 63 01 (LES-1/8-27-2 Req.) (WES-1/4-27-1 Req.): 64 01 (LHE-LES-1/8-27-3 Req.)(OHV-LES-1/8-27-1 Req.)(WES-1/8-27-1 Req.): 65 01 (LHE-1/8-27-3 Req.)(OHV-1/8-27-3 Req.): 60 10 (LAS-1/8-27-2 Req.)(WAS-1/8-27-1 Req.): 61 Thru 64 10 (OHV-196-1/8-27-2 Req.)	17.486	AR	G103865	NA
(Square Head) 60 20-80 (LAS-3/8-18): 61-62 20-80 (3/8-18)	17.486	1	G103867	NA
(Automotive Hexagon Head) 62 Thru 64 01 (WES-1/8-27): 63-64 10 (OHVC-196-WES)...(Incl. Stud)	.....	1	316 5635	
(Automotive Hexagon Head) 60-61 01 (LHE-Less Oil Filter-1/8-27)	17.514	1	G444612	NA
(Automotive Hexagon Socket) 60 Thru 65 01 (LHE)(OHV-196): 60 Thru 64 10 (OHV-196)	17.518	1	G444691	NA
(Automotive Hexagon Socket) 63 10 (OHVC): 64 10 (OHVC-196-Note 1.105-1)	17.518	1	G444687	NA
(Automotive Hexagon Socket Drain) 60 Thru 65 10-20-80 (V8)	17.526	1	G444872	NA
(Automotive Square Socket Pipe) 60 Thru 65 10-20-80 (V8)	17.516	2	G444660	NA#
(Automotive Square Socket Drain) 65 01-80 (OHV-232): 64 10 (OHV-232): 65 01-10 (OHV-199	17.490	2	G444782	NA#
SCREW, Oil Manifold (Timing Case Cover Spacer Screw)				
60 Thru 65 01 (LHE)(OHV-196): 60 Thru 64 10 (OHV-196)	.....	1	310 6712	
WASHER, Oil Manifold Screw Lock				
60 Thru 65 01 (LHE)(OHV-196): 60 Thru 64 10 (OHV-196)	17.820	1	G103323	
1.187 GAUGE, Oil Level (Dip Stick)				
61 Thru 64 10 (OHVA)	.....	1	316 0058	
65 01-80 (OHV-232): 64-65 10 (OHV-232): 65 01-10 (OHV-199)	.....	1	317 3366	
63 Thru 65 10-80 (V8) ***(Replaces 316 9171)***	.....	1	317 2039	
60 20-80 (23-1/4" Long From Felt Pad To Gauge End)	.....	1	315 5893	
60-61 20-80 (19-1/4" Long From Felt Pad To Gauge End)	.....	1	315 9966	
62 80 ***(Replaces 316 3766)***	.....	1	316 6210	
TUBE, Oil Level Gauge				
61 Thru 64 10 (OHVA) ***(Replaces 316 0063)***	.....	1	317 0284	
65 01-80 (OHV-232): 65 01-10 (OHV-199): 64-65 10 (OHV-232) ***(Replaces 317 3091)***	.....	1	317 6846	
63 Thru 65 10-80 (V8) ***(Replaces 316 6532)***	.....	1	316 9334	
60 20-80 (20" Long)	.....	1	315 2698	
60 Thru 62 20-80 (17" Long)	.....	1	315 9965	
ATTACHING PARTS Tube To Manifold				
SCREW, Machine..... 61 Thru 64 10 (OHVA) ***(Replaces 800 0068)***	17.626	1	400 0987	
BOLT, Hexagon..... 60 Thru 62 20-80	17.038	1	G179812	NA
WASHER, Lock..... 60 Thru 62 20-80	17.820	1	G103320	NA

Copyright 1963 American Motors Corp.

GROUP NO. — DESCRIPTION — YEAR and MODEL	PRIMARY GROUP NO.	PER CAR	PART NO.	CODE
SEAL, Oil Level Gauge Tube				
60 Thru 62 20-80	.....	1	314 5044	
63 Thru 65 10-80 (V8)	.....	1	316 6548	
1.198 TUBE, Oil Filter				
(Inlet) 60 Thru 64 01 (LHE-LPS)(LHE-LAC)	.....	1	315 5662	
(Inlet) 60 01 (LHE-OAC)(LHE-WPS): 61-62 01 (LHE-WAC)(LHE-WPS)	.....	1	315 7198	
(Inlet) 63-64 01 (LHE-WAC)(LHE-WPS)	.....	1	316 7815	
(Inlet) 60 01 (OHV): 61 Thru 63 01-10 (OHVC): 60 10 (LAS)	.....	1	315 5658	
(Inlet) 64 01-10 (OHVC-196)	.....	1	317 3060	
(Inlet) 60 10 (WAS)	.....	1	315 5482	
(Inlet) ***61 10 (RHD-OHVA-Metal)***	.....	1	316 1411	
(Outlet) 60 Thru 64 01 (LHE-LPS)(LHE-LAC)	.....	1	315 4717	
(Outlet) 60 01 (LHE-OAC)(LHE-WPS): 61 Thru 63 01 (LHE-WAC)(LHE-WPS)	.....	1	315 7199	
(Outlet) 64 01 (LHE-WPS)(LHE-WAC)	.....	1	317 3050	
(Outlet) 60 Thru 64 01 (OHV): 60 10 (LAS): 61 Thru 64 10 (OHVC-196) ***(Replaces 315 5572)***	.....	1	316 8963	
(Outlet) 60 10 (WAS)	.....	1	315 5481	
(Outlet) ***61 10 (RHD-OHVA-Metal)***	.....	1	316 1412	
HOSE, Oil Filter (Flex)				
(Inlet) 60-61 01-10 (OHVC)	.....	1	320 1037	
(Inlet) ***61 10 (RHD-OHVA)***	.....	1	316 2842	
(Outlet) 60-61 01-10 (OHVC)	.....	1	320 1039	
(Outlet) ***61 10 (RHD-OHVA)***	.....	1	316 2843	
CLIP, Oil Filter Tube To Gas Line Tube				
64 01 (LHE) ***(Replaces 316 8851)***	23.028	1	400 0021	
64 01-10 (OHVC-196)	8.101	1	316 8875	
CLAMP, Hose				
60-61 01-10 (OHVC-Used With Flex Hose)...(Incl. Screw, Washer And Nut)	.....	1	320 1040	
1.204 ELBOW, Oil Filter Inlet Tube				
60 Thru 64 01 (LHE): 64 01-10 (OHVC-196-Note 1.105-1)	17.218	1	G137420	
61 10 (RHD-OHVA)	17.218	1	G137425	
ELBOW, Oil Filter Outlet Tube				
60 Thru 62 01 (Used With Metal Tube): 60 10 (LAS-Used With Metal Tube) 61-62 10 (OHVA-Used With Metal Tube)	17.218	1	G137421	
63-64 01: 63-64 10 (OHVC)	4.020	1	315 3879	
60 01 (LHE-OAC-Used With Metal Tube)	17.218	1	G137420	
60-61 01-10 (OHVC-Used With Flex Hose)	17.420	1	G444038	
TEE, Oil Filter Inlet Tube				
64 01-10 (OHVC-196-Note 1.105-2)	17.160	1	G137404	
60 10 (WAS)	1.185	1	312 9545	
CONNECTOR, Oil Filter Inlet Tube				
64 01-10 (OHVC-196)	17.160	1	G137404	

Copyright 1963 American Motors Corp.

GROUP NO. — DESCRIPTION — YEAR and MODEL	PRIMARY GROUP NO.	PER CAR	PART NO.	CODE
CONNECTOR, Oil Filter Inlet And Outlet Tube				
61 10 (RHD-OHVA)	17.160	3	G431538	
1.206 ELEMENT, Oil Filter				
60 Thru 64 01: 60 Thru 64 10 (OHVC-196)	15.280	1	899 0508	
61 10 (OHVA)	15.280	1	899 0873	
62 Thru 64 10 (OHVA): 64 10 (OHV-232): 62 Thru 64 10-20-80 (V8): 65 01-10-80	15.280	1	899 1072	
60-61 20-80	15.280	1	899 0688	
GASKET, Oil Filter Element				
60 Thru 65 01: 60 Thru 64 10 (OHVC-196): 62 Thru 64 10 (OHVA): 64 10 (OHV-232): 62 Thru 64 10-20-80 (V8): 65 10-20-80 (Used With Walker Oil Filter Element)(2-3/4" O. D. x 3/16" Thick)	.....	1	320 6276	
62 Thru 64 10 (OHVA): 64 10 (OHV-232): 62 Thru 64 10-20-80 (V8): 65 01-10-50-80 (Used With Purolator Oil Filter Element)(2-5/8" O. D. x 3/8" Thick)	.....	1	320 6952	#
1.208 BRACKET, Oil Filter Mounting				
60 Thru 64 01: 60 10 (LAS): 61 Thru 64 10 (OHVC) ***(Replaces 316 0236)***	.....	1	317 1857	
60 10 (WAS)	.....	1	315 5478	
61 10 (RHD-OHVA)	.....	1	316 1410	
ATTACHING PARTS				
Bracket To Intake Manifold Cover				
BOLT, Hexagon ..... 60 01 (OHV): 60 10 (LAS)	17.038	2	G180022	NA
BOLT, Hexagon ..... 60 10 (WAS)	17.038	2	G180034	NA
WASHER, Plain..... 60 Thru 63 01-10 (OHVC-5/8" O. D.)	17.814	2	G120392	NA
WASHER, Plain..... 60 10 (WAS-11/16" O. D.)	17.814	1	G120393	NA
WASHER, Lock..... 60 01-10 (OHV)	17.820	2	G120380	NA
Bracket To Cylinder Head				
BOLT, Hexagon ..... ***61 10 (RHD-OHVA)***	17.038	2	G180125	NA
SPACER ..... ***61 10 (RHD-OHVA)***	.....	2	315 3390	
WASHER, Lock..... ***61 10 (RHD-OHVA)***	17.820	2	G120382	NA
ADAPTER, Oil Filter				
65 01 (LHE)(OHV-196) ***(Replaces 317 6337)***	.....	1	320 6137	#
61 Thru 64 10 (OHVA)	.....	1	316 0088	
60 Thru 65 10-20-80 (V8)	.....	1	315 7846	
ATTACHING PARTS				
Adapter To Oil Pump Body				
BOLT, Hexagon ..... 65 01 (LHE)(OHV-196): 61 Thru 64 10 (OHVA)	17.040	3	G175188	NA
WASHER, Plain..... 65 01 (LHE)(OHV-196): 61 Thru 64 10 (OHVA) ***(Replaces 800 0151)***	17.814	2	400 1091	
WASHER, Copper ..... 65 01 (LHE)(OHV-196)	1.185	2	49 369	
WASHER, Lock ..... 65 01 (LHE)(OHV-196): 61 Thru 64 10 (OHVA)	17.820	2	G103320	NA
Adapter To Cylinder Block				
STUD..... 60 Thru 65 10-20-80 (V8)	4.178	3	315 6257	
WASHER, Plain..... 60 Thru 65 10-20-80 (V8)	17.814	3	G120394	
WASHER, Lock ..... 60 Thru 65 10-20-80 (V8)	17.820	3	G103321	NA
NUT, Hexagon..... 60 Thru 65 10-20-80 (V8)	17.406	3	G120369	NA
GASKET, Oil Filter Adapter				
65 01 (LHE)(OHV-196): 61 Thru 64 10 (OHVA)	.....	1	316 0077	
60 Thru 65 10-20-80 (V8)	.....	1	315 3143	

Copyright 1963 American Motors Corp.

GROUP NO. — DESCRIPTION — YEAR and MODEL	PRIMARY GROUP NO.	PER CAR	PART NO.	CODE
1.215 VALVE, Oil Filter By-Pass				
65 01-80 (OHV-232): 64-65 10 (OHV-232): 65 01-10 (OHV-199)	.....	1	317 3203	# 1.215
1.217 SPRING, Oil Filter By-Pass Valve				
65 01-80 (OHV-232): 64-65 10 (OHV-232): 65 01-10 (OHV-199)	.....	1	317 3224	# 1.217
1.220 RETAINER, Oil Filter By-Pass Valve				
65 01-80 (OHV-232): 64-65 10 (OHV-232): 65 01-10 (OHV-199)	.....	1	317 3225	# 1.220
1.223 CONNECTOR, Oil Filter				
65 01-80 (OHV-232): 64-65 10 (OHV-232): 65 01-10 (OHV-199)	.....	1	317 3226	# 1.223

Copyright 1963 American Motors Corp.

GROUP NO. — DESCRIPTION — YEAR and MODEL	PRIMARY GROUP NO.	PER CAR	PART NO.	CODE

Copyright 1963 American Motors Corp.

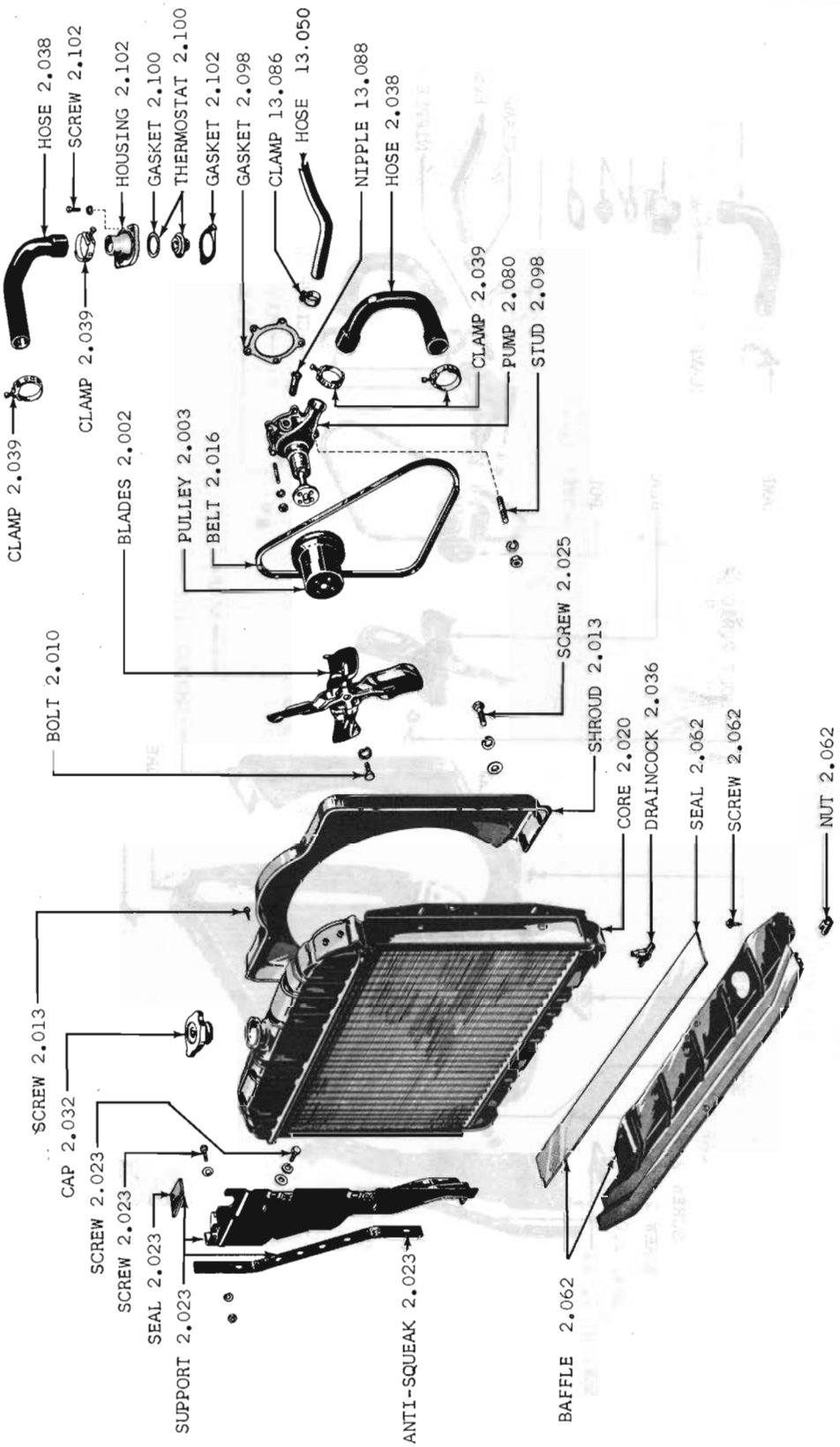

ENGINE COOLING SYSTEM 60 01-10

Copyright 1963 American Motors Corp.

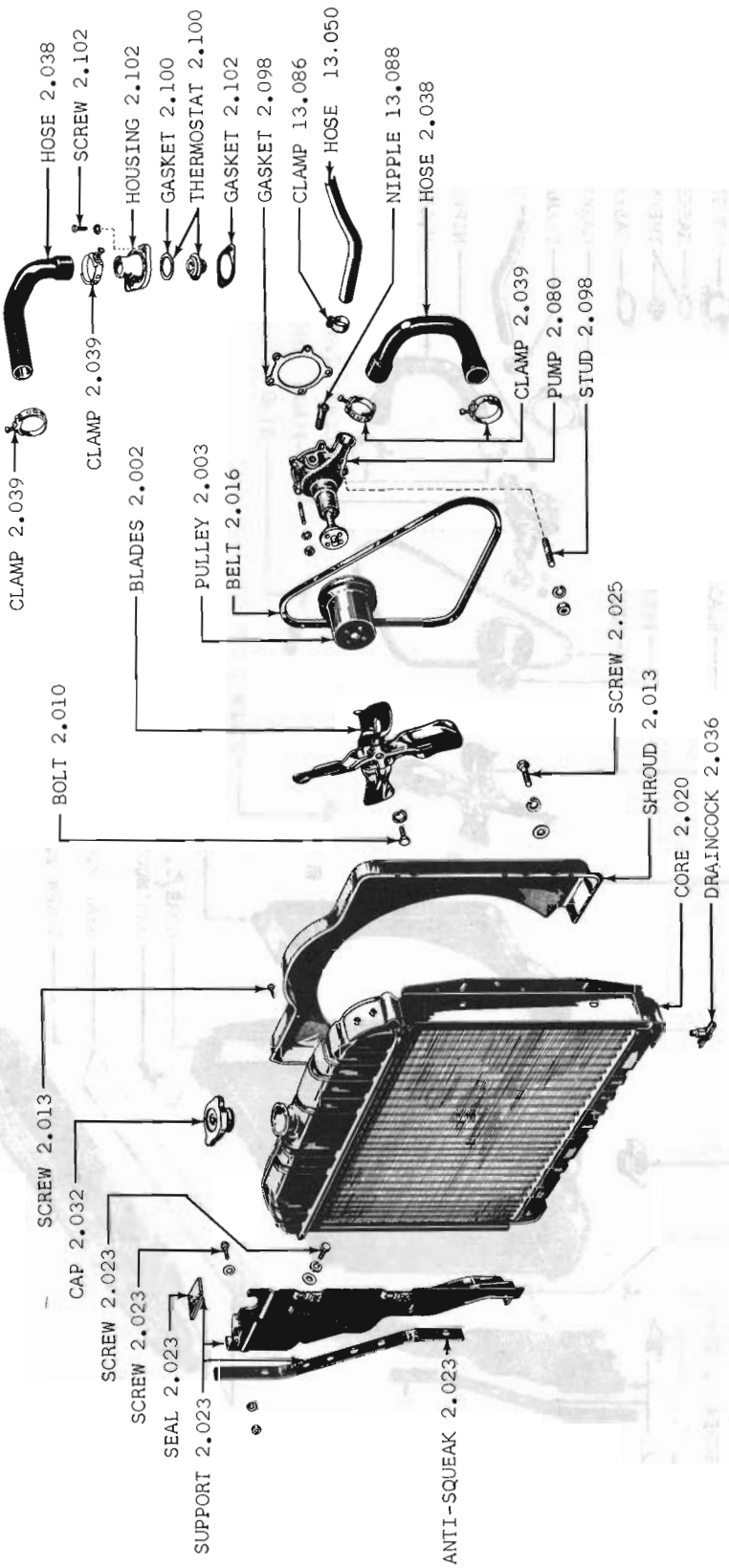

ENGINE COOLING SYSTEM 61-62 01-10

Copyright 1963 American Motors Corp.

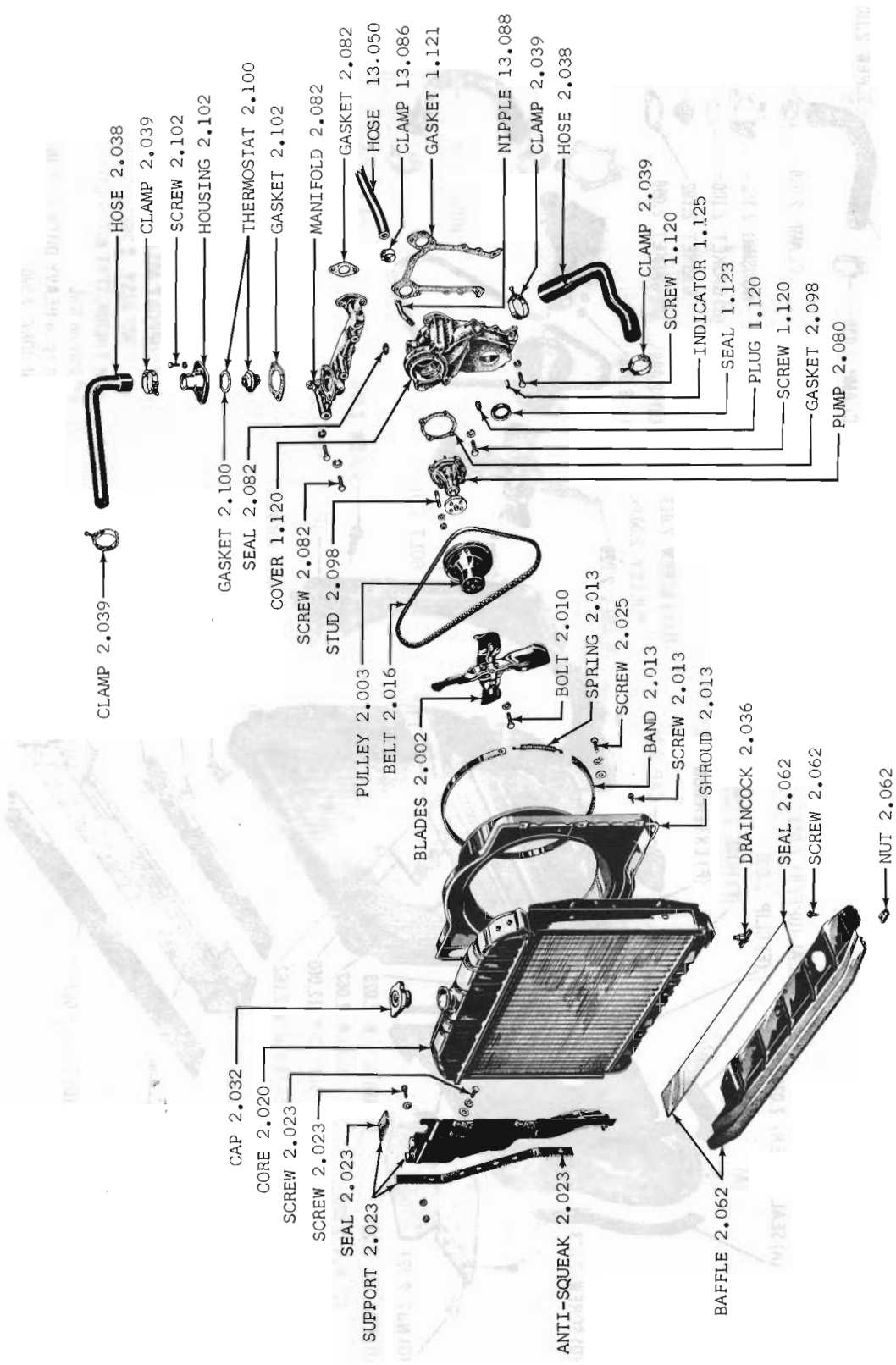

ENGINE COOLING SYSTEM 60 thru 62 20-80

Copyright 1963 American Motors Corp.

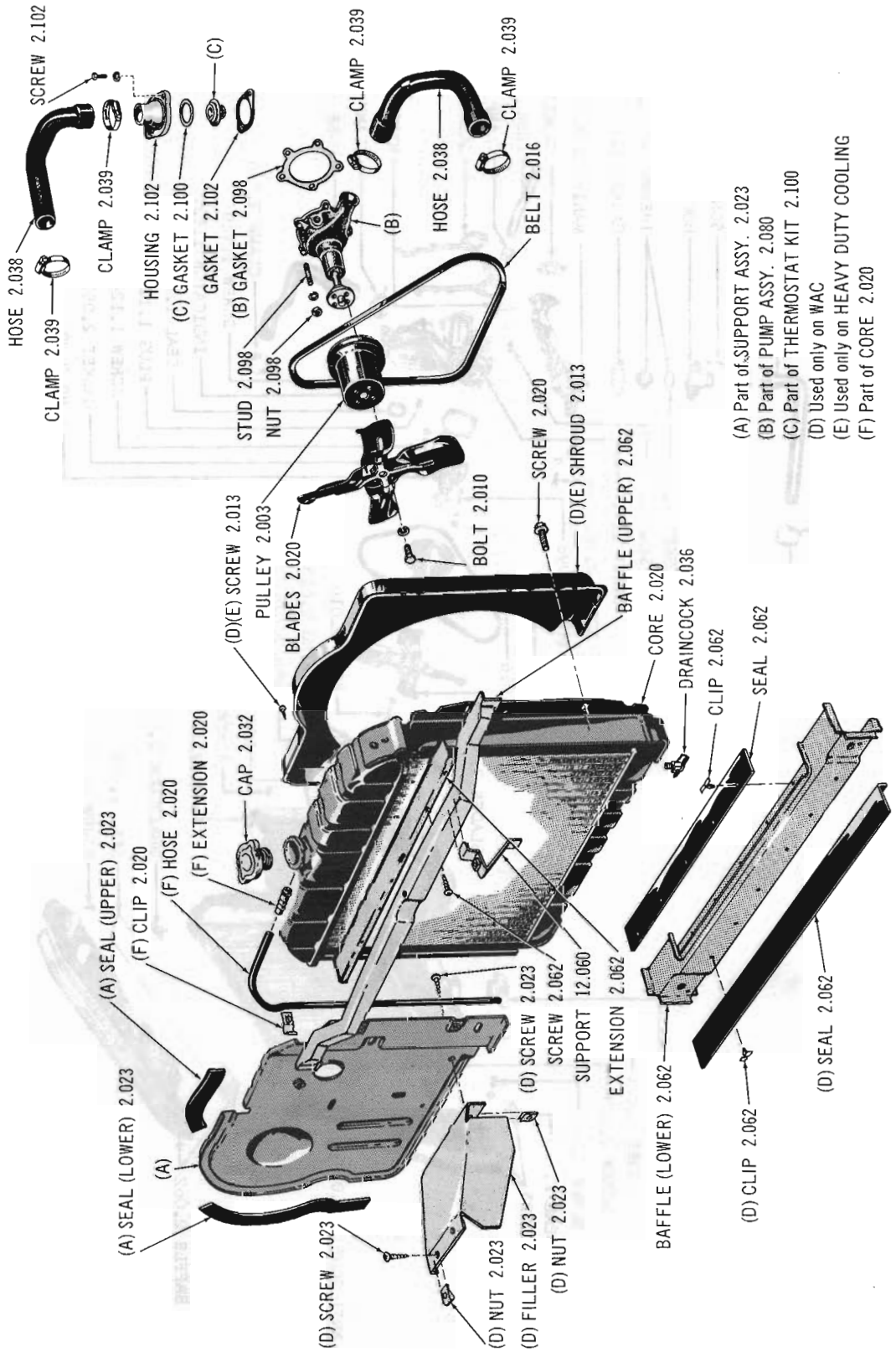

ENGINE COOLING SYSTEM 64-65 01 (LHE)(OHV-196)

Copyright 1963 American Motors Corp.

Copyright 1963 American Motors Corp.

Printed in U.S.A.

ENGINE COOLING SYSTEM 64 10 (OHV-196)

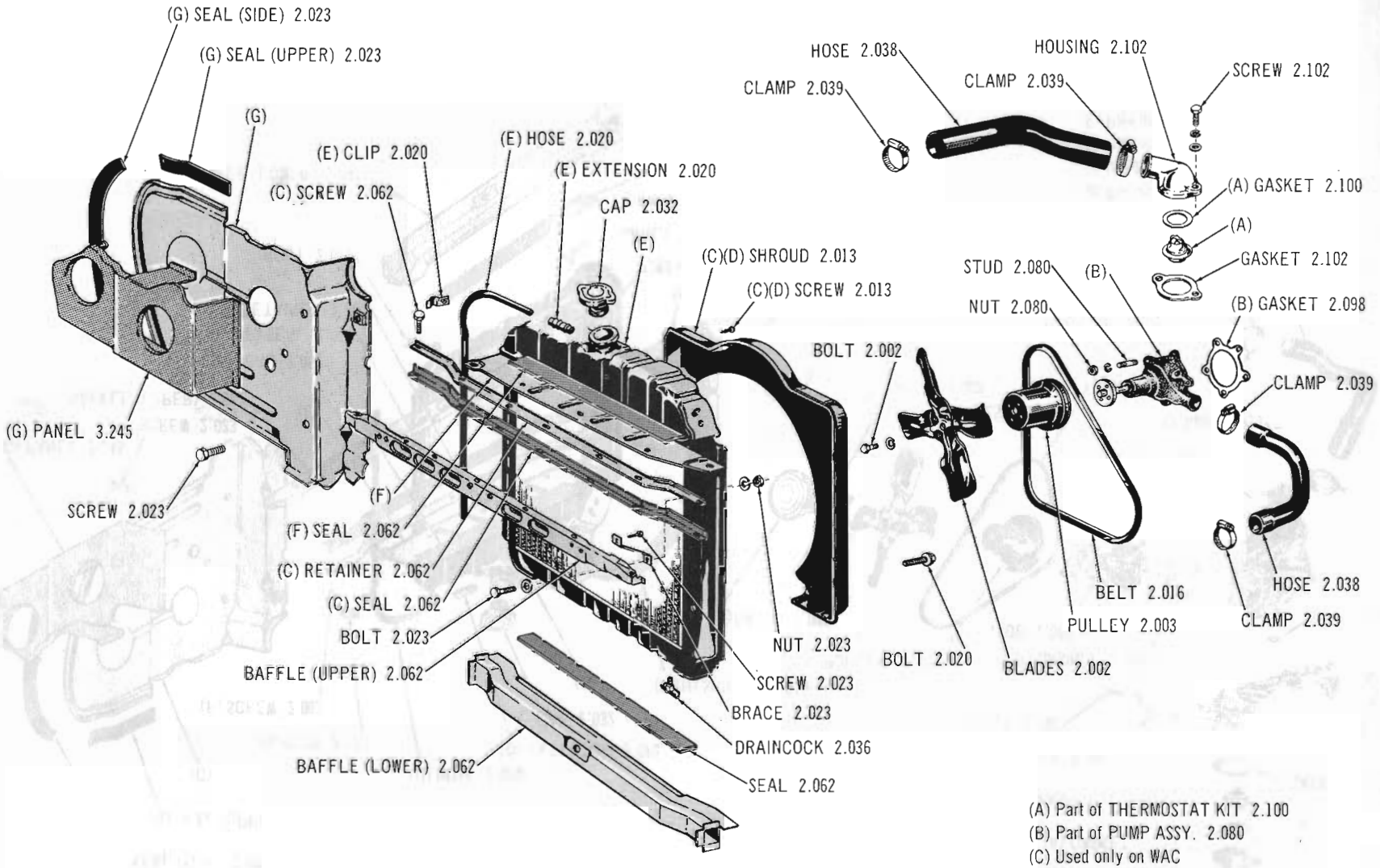

(A) Part of THERMOSTAT KIT 2.100
(B) Part of PUMP ASSY. 2.080
(C) Used only on WAC
(D) Used only on HEAVY DUTY COOLING
(E) Part of CORE 2.020
(F) Part of EXTENSION 2.062
(G) Part of SUPPORT 2.023

Copyright 1963 American Motors Corp.

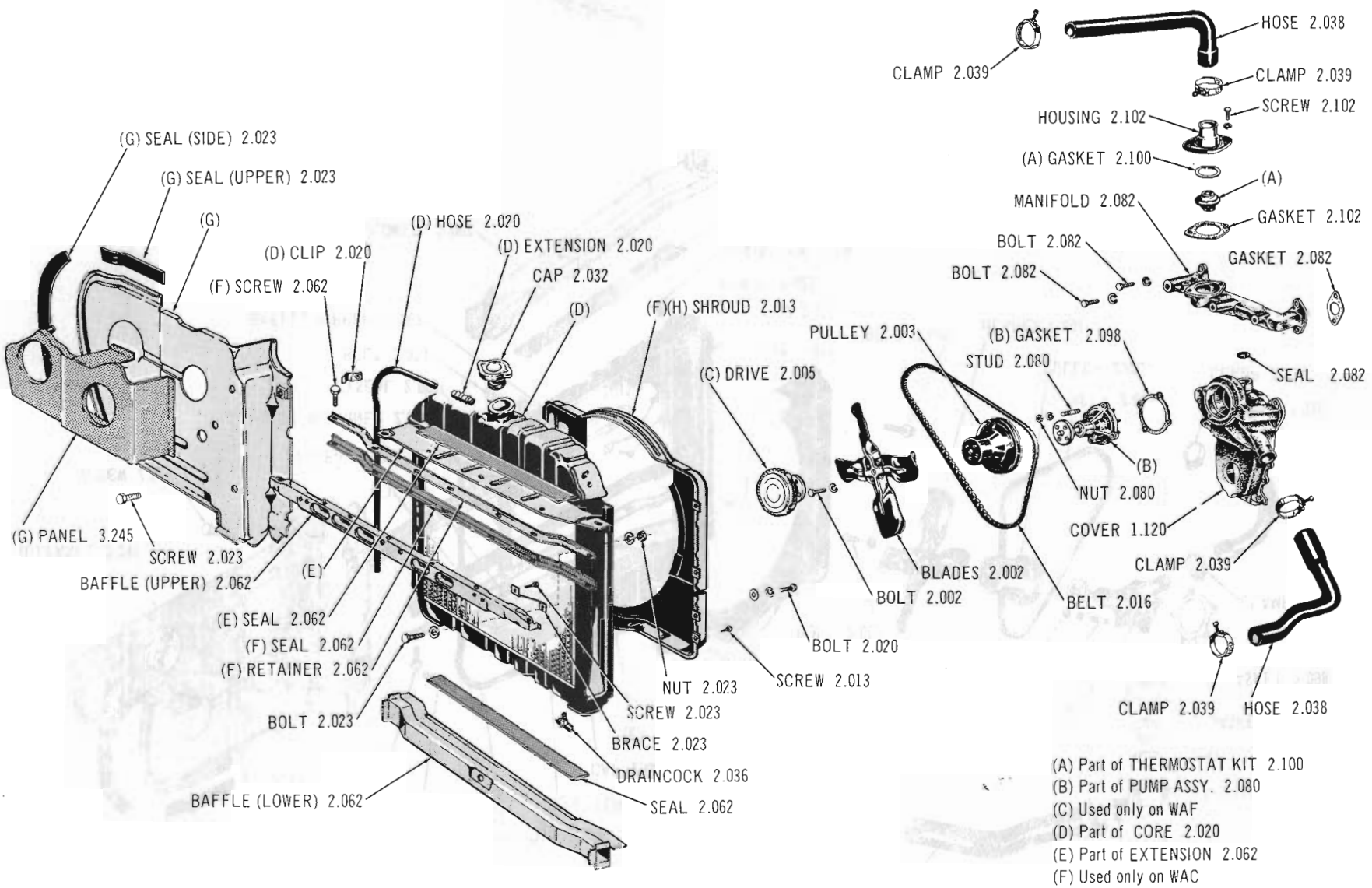

(A) Part of THERMOSTAT KIT 2.100
(B) Part of PUMP ASSY. 2.080
(C) Used only on WAF
(D) Part of CORE 2.020
(E) Part of EXTENSION 2.062
(F) Used only on WAC
(G) Part of SUPPORT 2.023
(H) Used only on HEAVY DUTY

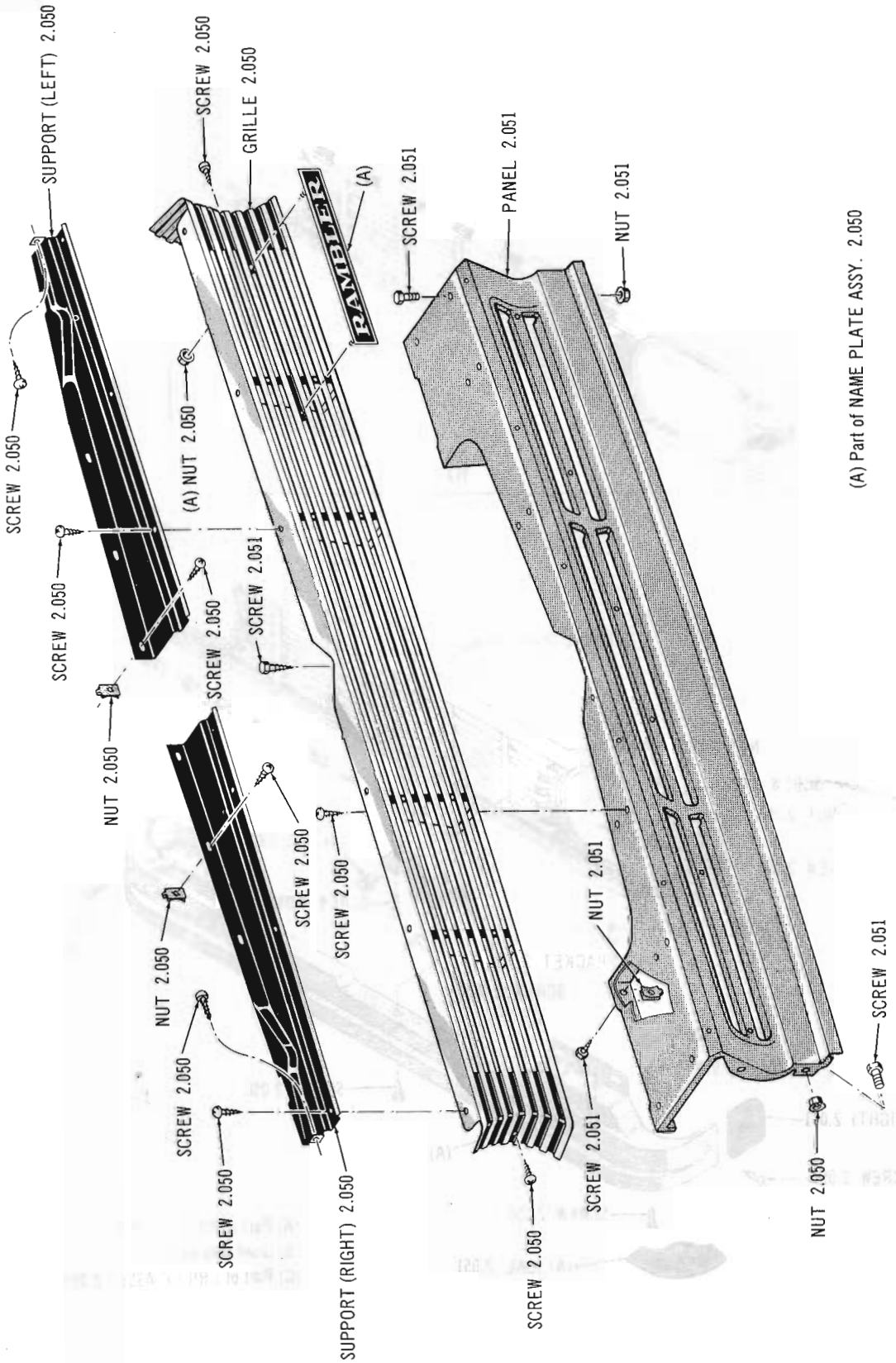

GRILLE AND GRILLE PANEL 64 01

Copyright 1963 American Motors Corp.

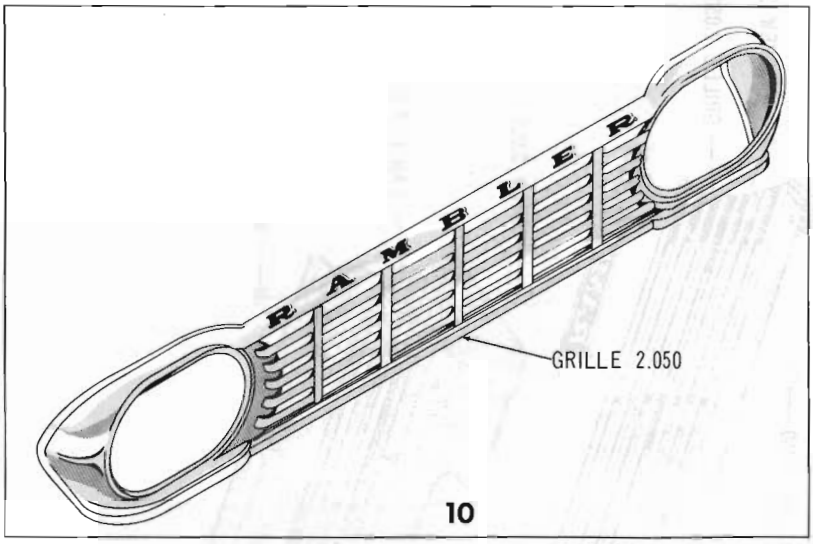

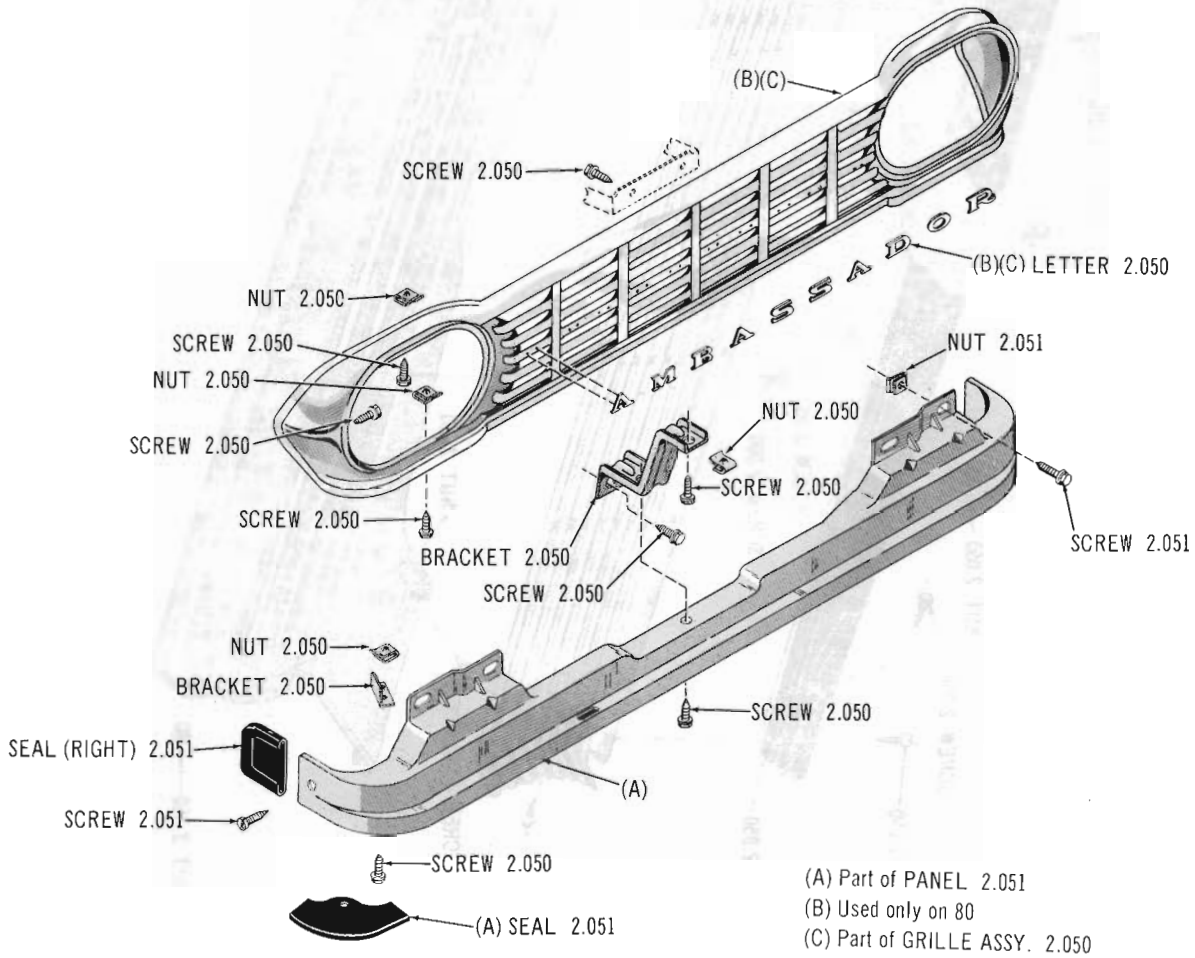

(A) Part of PANEL 2.051
(B) Used only on 80
(C) Part of GRILLE ASSY. 2.050

GRILLE AND GRILLE PANEL 64 10-80

Copyright 1963 American Motors Corp.

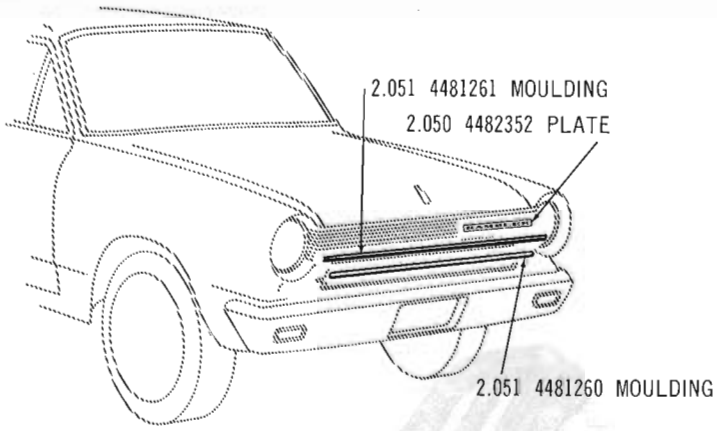

ATTACHING PARTS, WHEN REQUIRED, INCLUDED WITH ALL PARTS SHOWN

GRILLE PANEL MOULDINGS 64-65 01 (220)

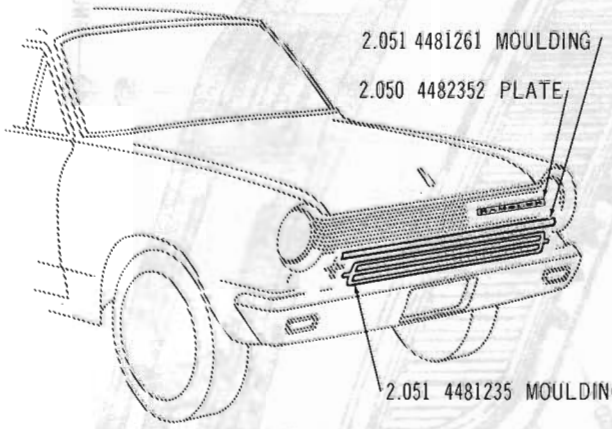

ATTACHING PARTS, WHEN REQUIRED, INCLUDED WITH ALL PARTS SHOWN

GRILLE PANEL MOULDINGS 64-65 01 (330)(440)(440-H)

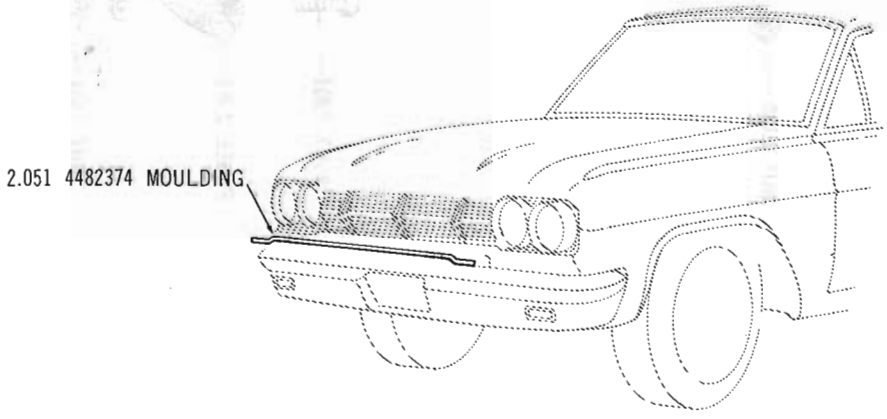

ATTACHING PARTS, WHEN REQUIRED, INCLUDED WITH ALL PARTS SHOWN

GRILLE MOULDINGS 65 10

Copyright 1963 American Motors Corp.

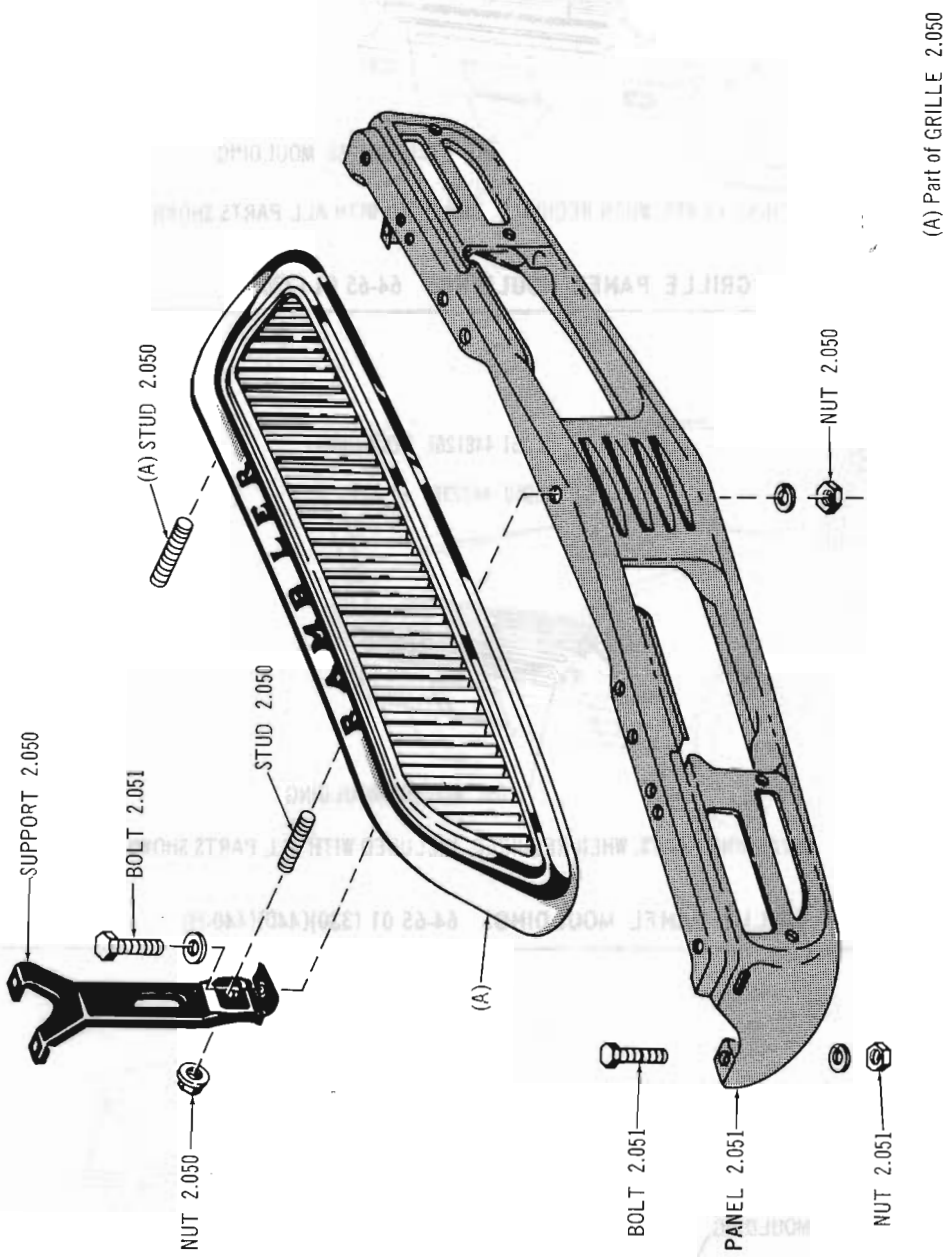

GRILLE AND GRILLE PANEL 63 01

Copyright 1963 American Motors Corp.

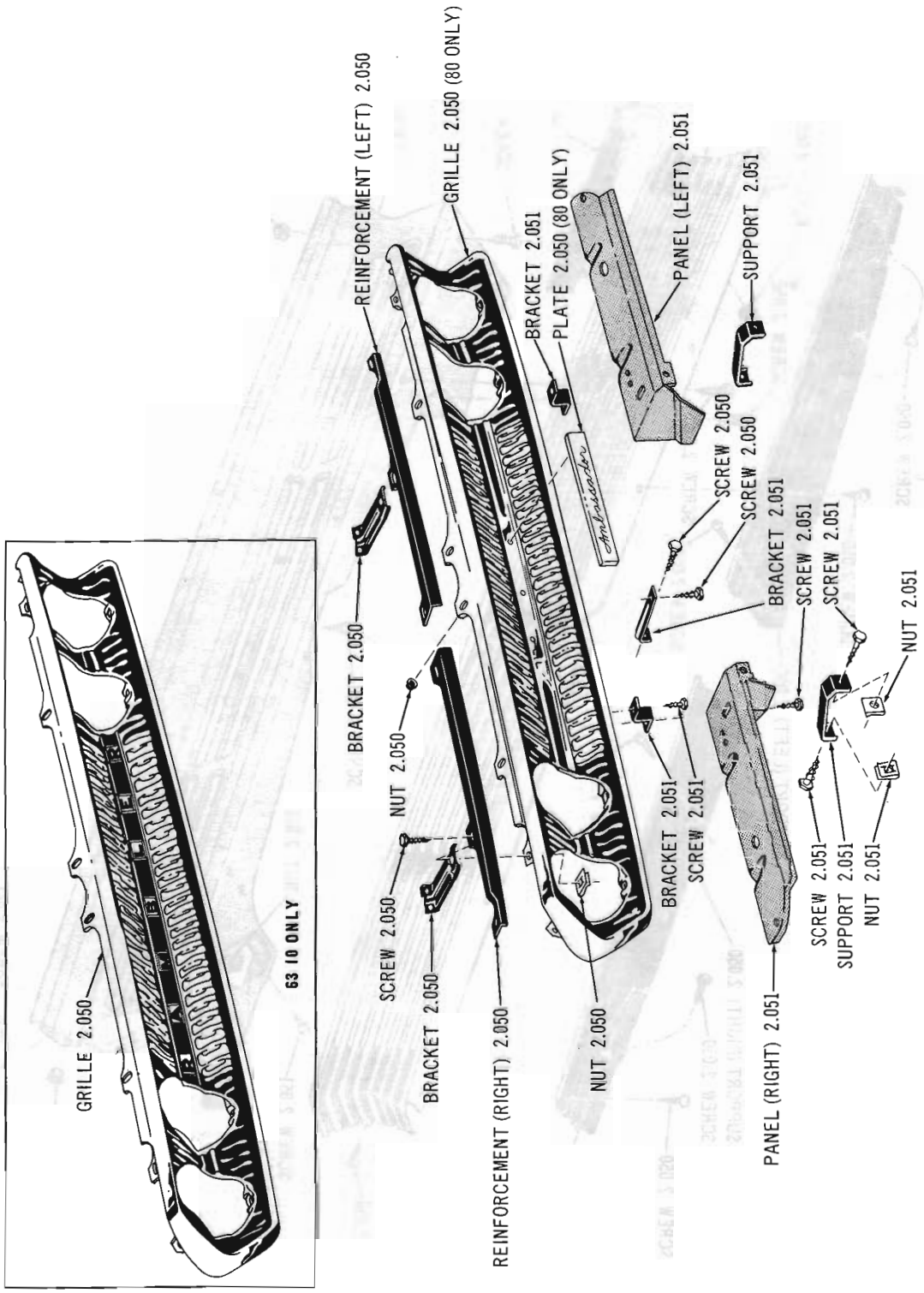

GRILLE AND GRILLE PANEL 63 10-80

Copyright 1963 American Motors Corp.

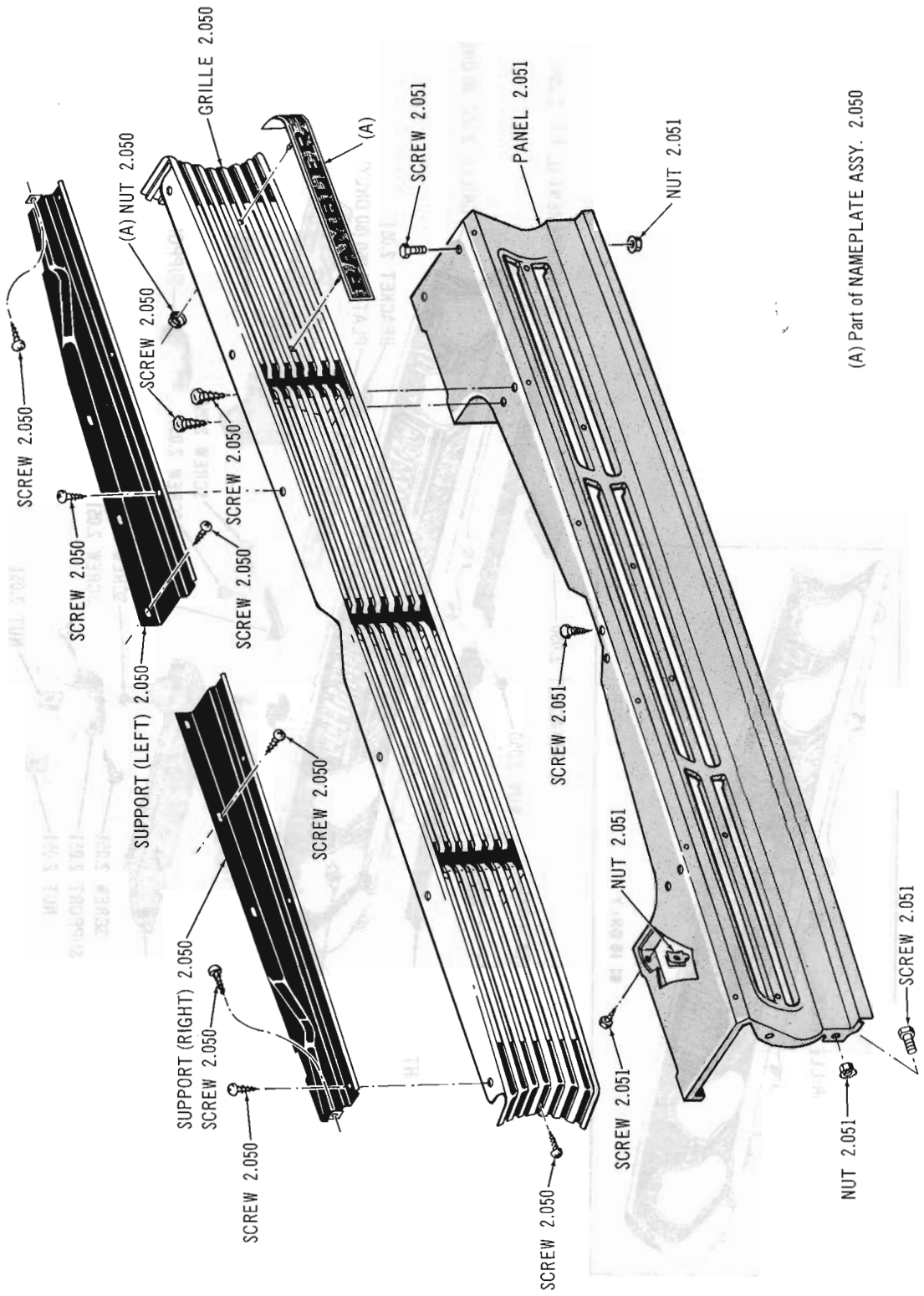

GRILLE AND GRILLE PANEL 65 01

Copyright 1963 American Motors Corp.

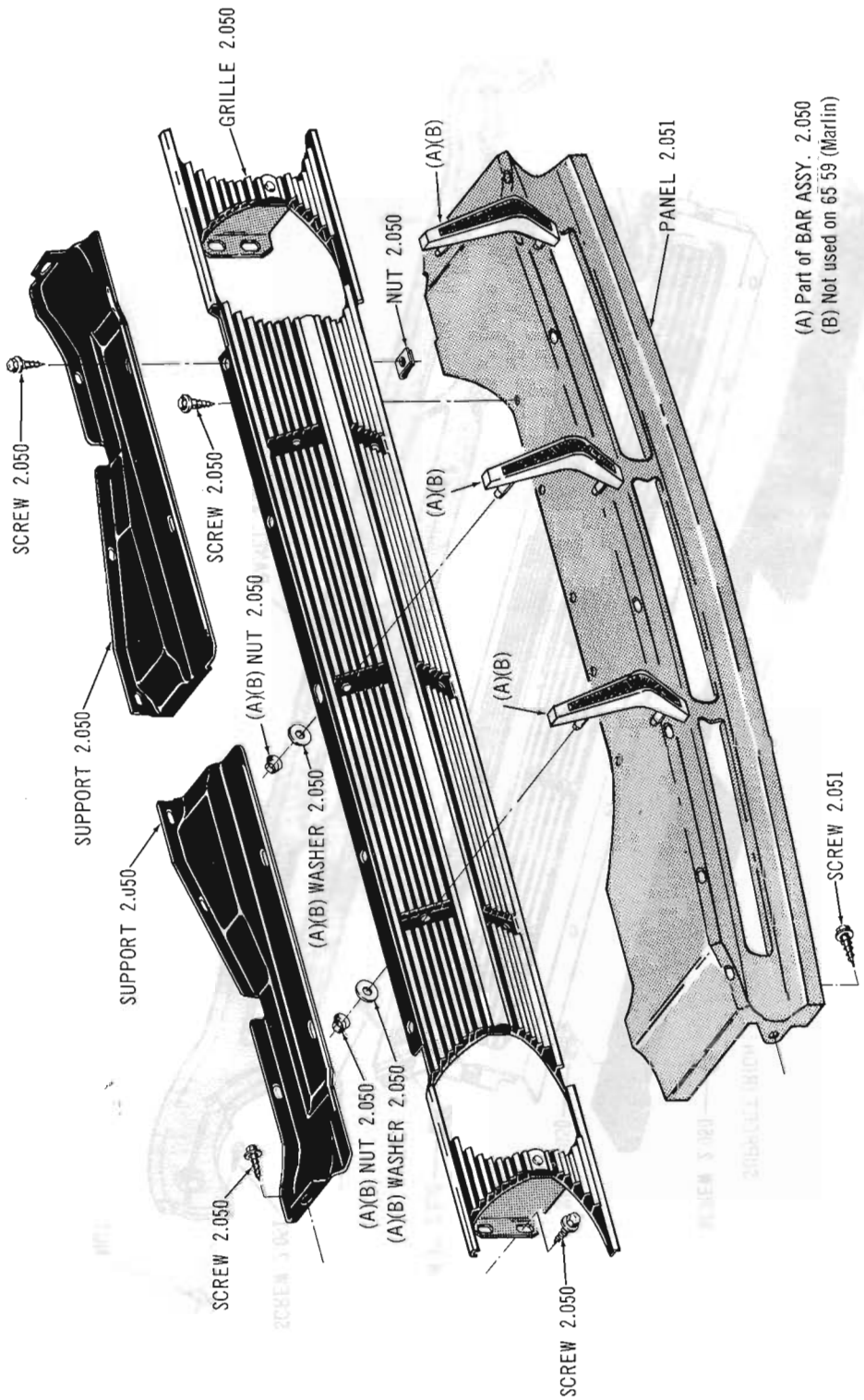

GRILLE AND GRILLE PANEL 65 10

Copyright 1963 American Motors Corp.

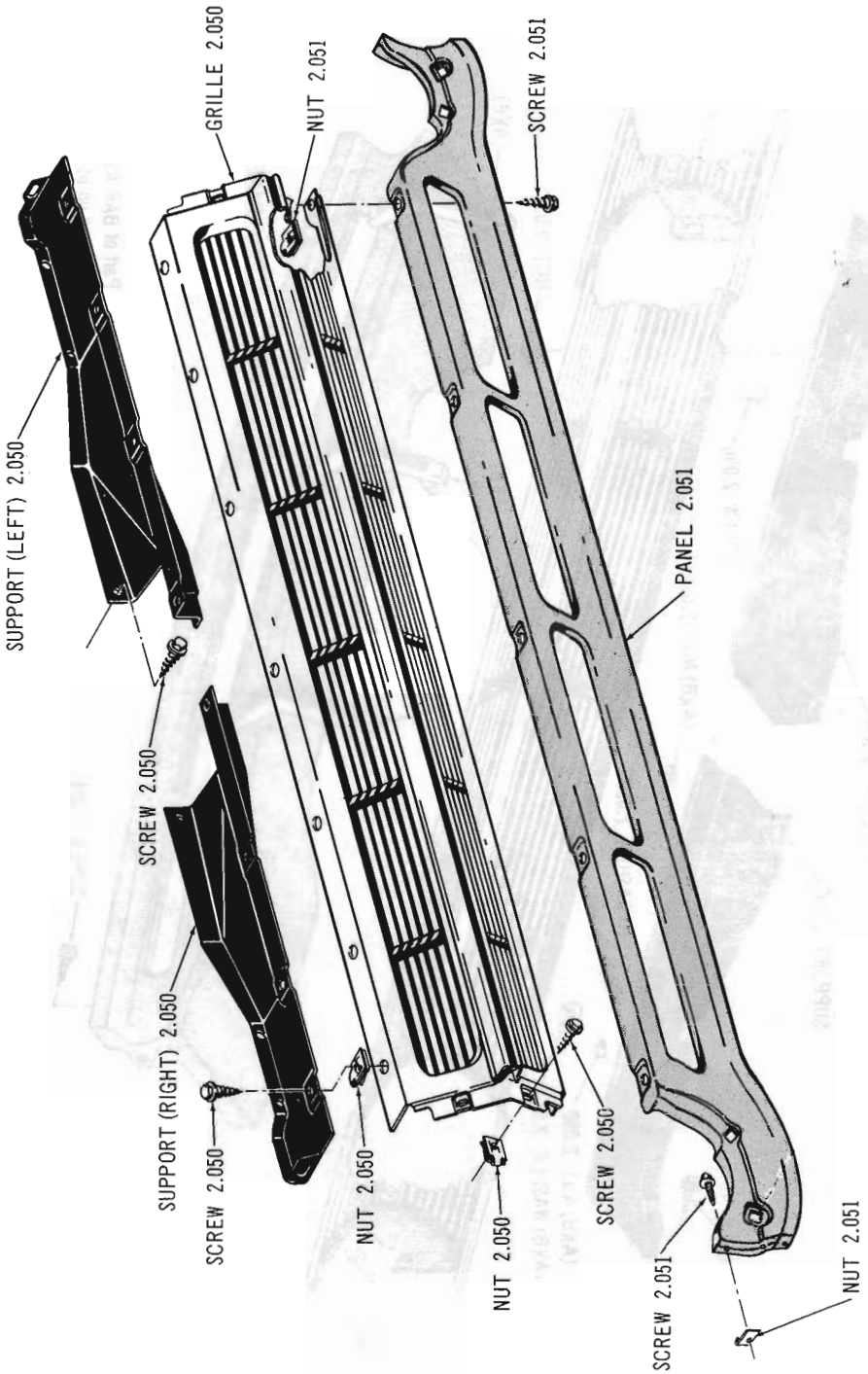

GRILLE AND GRILLE PANEL 65 80

Copyright 1963 American Motors Corp.

Copyright 1963 American Motors Corp.

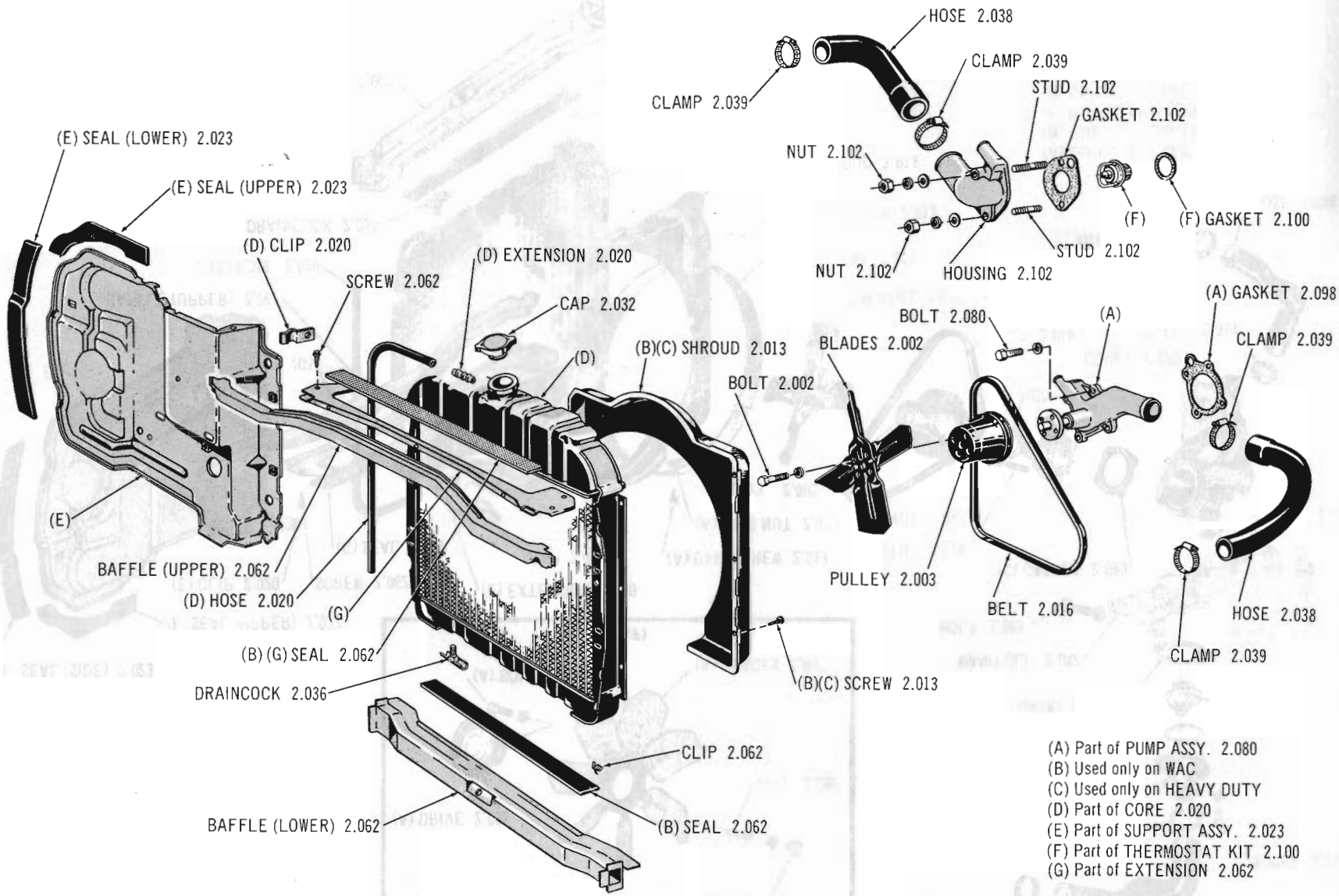

(A) Part of PUMP ASSY. 2.080
(B) Used only on WAC
(C) Used only on HEAVY DUTY
(D) Part of CORE 2.020
(E) Part of SUPPORT ASSY. 2.023
(F) Part of THERMOSTAT KIT 2.100
(G) Part of EXTENSION 2.062

Printed in U.S.A.

Copyright 1963 American Motors Corp.

Printed in U.S.A.

ENGINE COOLING SYSTEM 65 10-80 (V8)

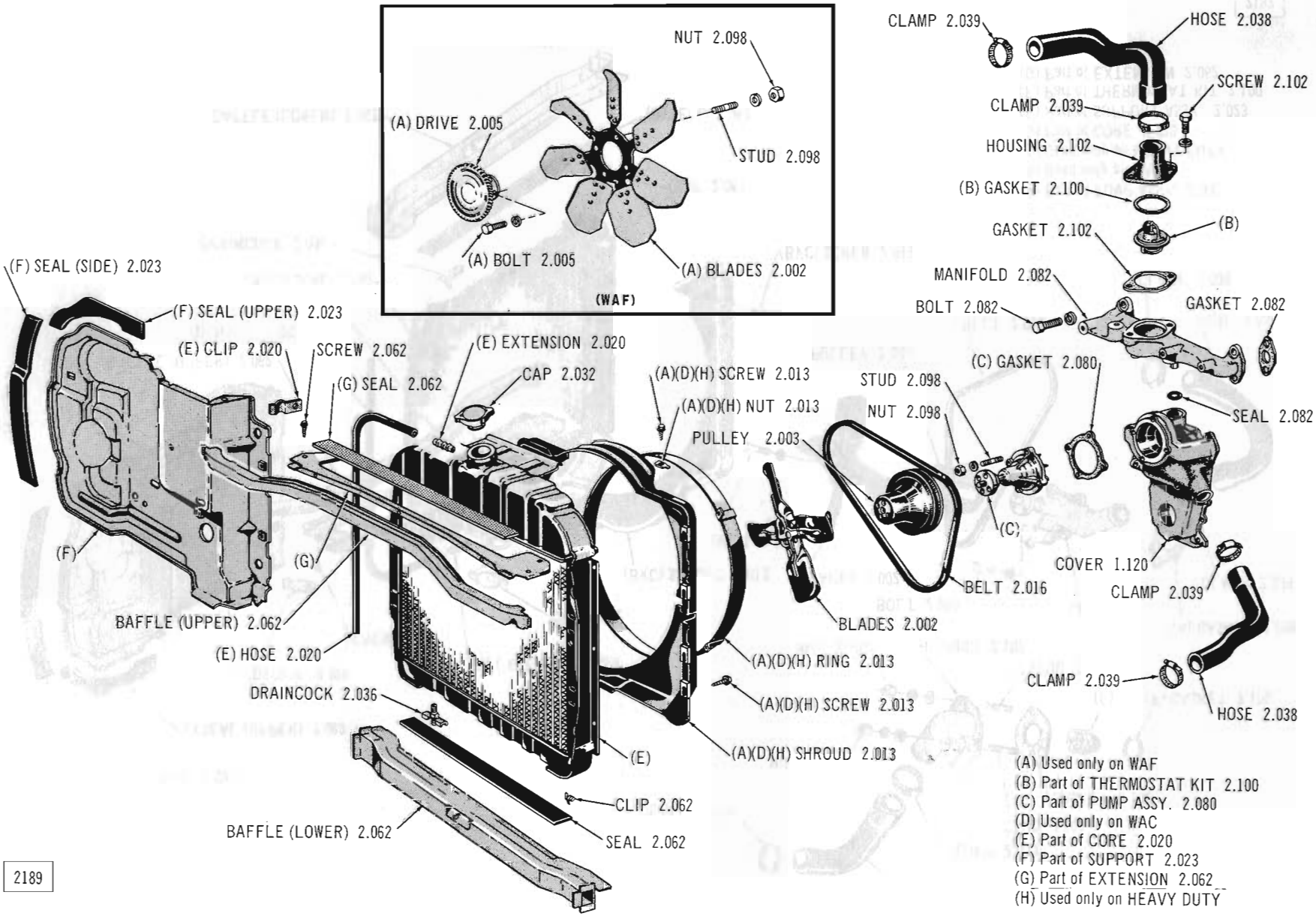

(A) Used only on WAF
(B) Part of THERMOSTAT KIT 2.100
(C) Part of PUMP ASSY. 2.080
(D) Used only on WAC
(E) Part of CORE 2.020
(F) Part of SUPPORT 2.023
(G) Part of EXTENSION 2.062
(H) Used only on HEAVY DUTY

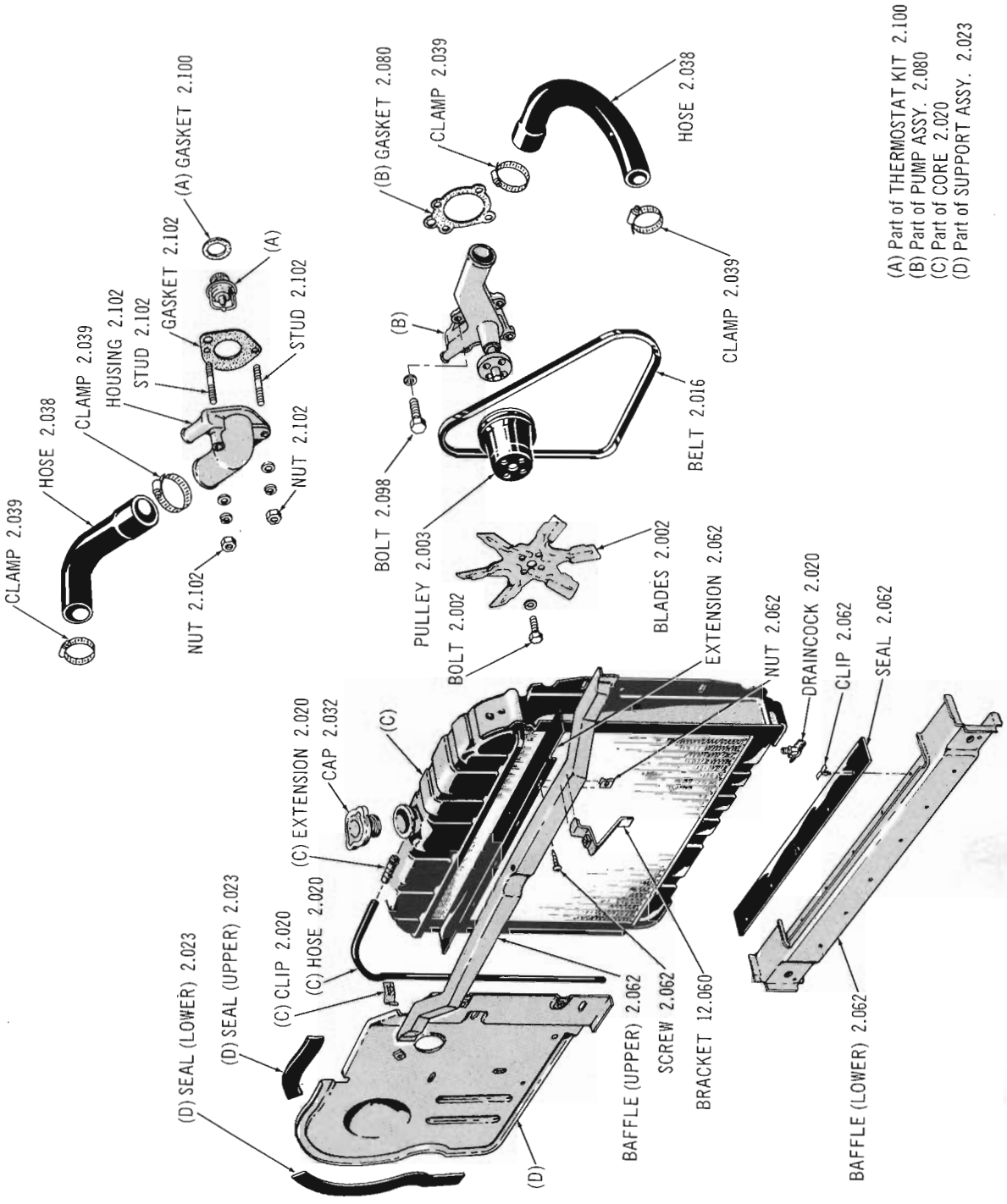

ENGINE COOLING SYSTEM 65 01 (OHV-232)

Copyright 1963 American Motors Corp.

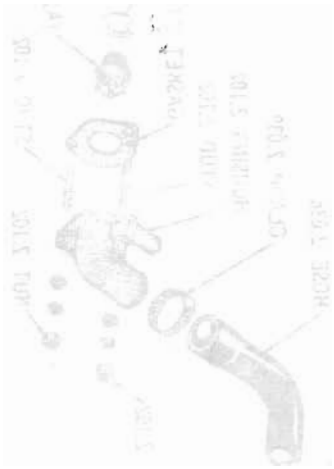

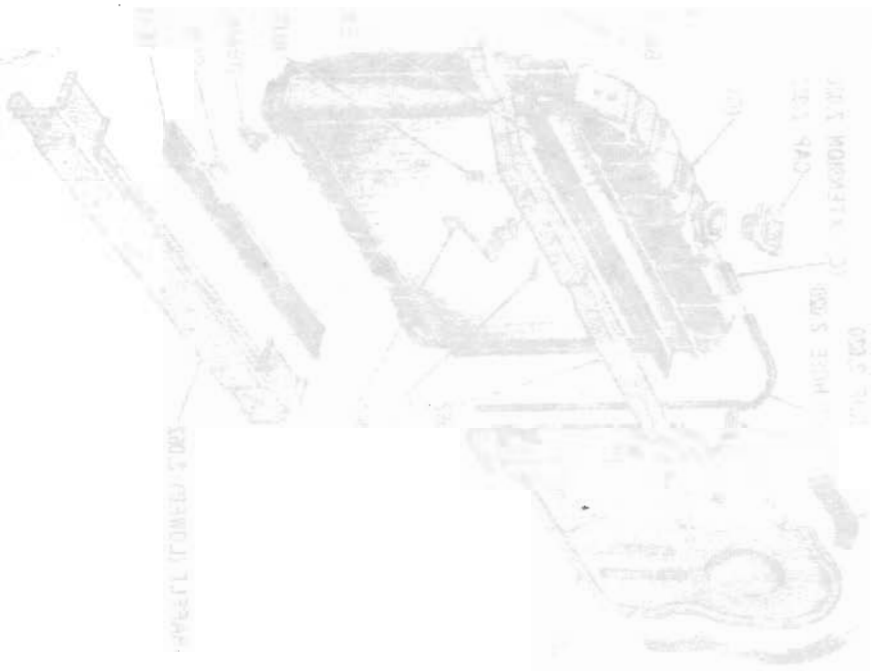

Copyright 1963 American Motors Corp.

GROUP NO. — DESCRIPTION — YEAR and MODEL	PRIMARY GROUP NO.	PER CAR	PART NO.	CODE
2.002 BLADES, Fan				
(4 Blades) 60 Thru 63 01-10 (Six-LAC): 64-65 01 (OHV-196-LAC): 64 10 (OHV-196-LAC)	.....	1	320 0959	
(4 Blade) 64 01 (LHE-LAC): 64 10 (OHV-232): 65 01 (LHE)(OHV-196-WAC) ***(Heavy Duty):*** 65 10 (Six-LAC): 65 80 (OHV-232-LAC-LAF)	.....	1	317 4446	
(4 Blade) 63 Thru 65 10-80 (V8-LAF): 60 Thru 62 80 (LAC)(LAF)	.....	1	530 5153	
(5 Blade) 61 Thru 64 01 (WAC)***(Heavy Duty):*** 60 Thru 64 10 (Six-WAC) ***(Six-Heavy Duty)***	.....	1	316 1264	
(5 Blade) 65 10 (Six-WAC)***(Six-Heavy Duty):*** 65 80 (OHV-232-WAC-LAF)***(OHV-232-Heavy Duty)***	.....	1	317 8522	
(5 Blade) 60-61 20 (WAC)***(Heavy Duty):*** 60 Thru 62 80 (OAC)***(Heavy Duty)*** ***(Use 316 8007)***	.....	1	315 2275	
(5 Blade) 60-61 80 (WAF)	.....	1	315 5140	
(5 Blade) 62 80 (WAF)	.....	1	316 5962	
(5 Blade) ***63 10-80 (V8-LAE-Heavy Duty): 64-65 10-80 (V8-Heavy Duty)***	.....	1	316 8007	
(6 Blade) 65 01 (OHV-199)(OHV-232)	.....	1	317 8785	
(6 Blade) 60 01 (OAC)***(Heavy Duty)***	.....	1	315 7036	
(7 Blades) 65 10-80 (Six-WAC)***(Six-Heavy Duty)*** ***(Replaces 318 0155)***	.....	1	318 2708	#
(7 Blades) 63 Thru 65 10-80 (V8-WAF)	.....	1	316 7113	
ATTACHING PARTS Blades To Pulley				
BOLT, Hexagon ..... 60 Thru 65 01-10: 60 Thru 64 80 (LAF)	17.038	4	G181593	NA
BOLT, Hexagon ..... 60-61 20 (WAC)	17.038	4	G181591	NA
BOLT, Hexagon ..... 62 Thru 64 10-80 (V8-WAF): 65 80 (OHV-232)	17.038	4	G181620	NA
BOLT, Hexagon 65 80 (V8)	17.038	4	G189322	
WASHER, Lock ..... 60 Thru 65 01-10-80	17.820	4	G120214	NA
NUT, Hexagon ..... 60-61 80 (WAF)	17.406	4	G120368	
SPACER, Fan Blade				
65 80 (OHV-232-LAF)	.....	1	317 5107	
65 80 (V8-LAF)	.....	1	317 5106	
2.003 PULLEY, Fan				
60 01: 61 01 (LAC-Note 2.080-1 Type 1)	.....	1	315 4194	
61 01 (LAC-Note 2.080-1 Type 2)(WAC) ***(Heavy Duty):*** 62 Thru 64 01: 65 01 (LHE)(OHV-196)	.....	1	316 1246	
64-65 01 (OHV-WAE-Note 2.016-9)	.....	1	317 4728	
65 01 (OHV-199)(OHV-232)	.....	1	317 6815	
60 Thru 64 10 (OHV-196)	.....	1	315 5894	
64 10 (OHV-232): 65 10 (Six): 65 80 (OHV-232)	.....	1	317 3223	
63 10 (WAE-Notes 2.016-9 And 2.003-3 Type 2): 64 10 (OHV-196-WAE-Note 2.016-9)	.....	1	316 9399	
64 10 (OHV-232-WAE-Note 2.016-9): 65 10 (Six-WAE-Note 2.016-9): 65 80 (OHV-232-WAE-Note 2.016-9)	.....	1	317 4697	
60-61 20: 60 Thru 65 10-80 (V8-LAF)	.....	1	315 3566	

NOTE 2.003-1: Two Types of Fan Pulleys were used on the 61 80 (WAF) Model. They can be identified as follows:
- Type 1: The outer diameter of Pulley is 7-15/32.
- Type 2: The outer diameter of Pulley is 6-5/8.

NOTE 2.003-2: Two Types of Fan Pulleys were used on the 63 80 (WAF) Model. They can be identified as follows:
- Type 1: Pulley Depth is 2-7/32" measuring from the center of the Belt Groove to the point where it is attached to the Water Pump.
- Type 2: Pulley Depth is 1-29/32" measuring from the center of the Belt Groove to the point where it is attached to the Water Pump.

NOTE 2.003-3: Two Types of 60 AMP Alternator Pulleys were used on the 63 Thru 65 10-80 series. They can be identified as follows:
- Type 1: The Pulley has a single Belt Groove with one Belt and one Fan Pulley used.
- Type 2: The Pulley has a Double Groove. A Belt Set and Two Fan Pulleys are also used.

Copyright 1963 American Motors Corp.

GROUP NO. — DESCRIPTION — YEAR and MODEL	PRIMARY GROUP NO.	PER CAR	PART NO.	CODE
60-61 80 (WAF-Note 2.003-1 Type 1)	.....	1	315 7849	
61 80 (WAF-Note 2.003-1 Type 2)	.....	1	316 2340	
62 80 (WAF)	.....	1	316 5577	
63 80 (WAF-Note 2.003-2 Type 1)	.....	1	316 7112	
63 Thru 65 10 (V8-WAF): 63 80 (WAF-Note 2.003-2 Type 2): 64-65 80 (V8-WAF)	.....	1	317 0281	
63 Thru 65 10-80 (V8-WAE-Notes 2.003-3 Type 2 And 2.016-9)	.....	1	317 0383	

2.005 DRIVE, Fan

60-61 80 (WAF)	.....	1	315 5139	
62 Thru 64 10-80 (V8-WAF) ***(Replaces 316 5570, 316 7606)***	.....	1	317 3394	
65 10 (V8-WAF): 65 80 (WAF)	.....	1	317 3394	

ATTACHING PARTS

Drive To Pulley

BOLT, Hexagon	60-61 80 (WAF)	17.038	4	G181595	NA
STUD.....	62 Thru 65 10-80 (V8-WAF)	.....	4	316 5574	
WASHER, Plain.....	60-61 80 (WAF)	17.814	4	800 0153	
WASHER, Lock.....	60 Thru 65 10-80 (V8-WAF)	17.820	4	G120214	NA
NUT, Hexagon.....	60 Thru 65 10-80 (V8-WAF)	17.406	4	G120368	

2.013 SHROUD, Fan

60 01 (OAC)**(Heavy Duty)**	.....	1	315 7533	
61-62 01 (LHE-WAC-LPS): **61 Thru 63 01 (LHE-Heavy Duty)**	.....	1	316 1247	
64 01 (WAC)**(Heavy Duty)**	.....	1	317 0292	
65 01 ***(LHE-Heavy Duty)***(OHV-196-WAC)***(OHV-196-Heavy Duty)***	.....	1	317 7196	
62 10 (WAC)***(Heavy Duty):*** 60 Thru 62 10 (WAC) ***(Heavy Duty)*** ***(Replaces 315 1402, 316 0513)***	.....	1	316 3332	
63 10-80 (V8-WAC)***(V8-Heavy Duty)*** ***(Ref. Pr. List)***	.....	1	316 7380	
63-64 10 (OHV-196-WAC)***(OHV-196-Heavy Duty)*** ***(Use 317 0292)***	.....	1	316 6643	
64 10 (OHV-232-WAC)***(OHV-232-Heavy Duty)***	.....	1	317 3484	
65 10-80 (Six-WAC)***(Six-Heavy Duty)*** ***(Replaces 317 8520)***	.....	1	317 7104	
60-61 20 (WAC)***(Heavy Duty)***	.....	1	315 3235	
60 80	.....	1	315 5885	
61 80	.....	1	316 0463	
62 80 (WAC)**(Heavy Duty)**	.....	1	316 6319	
(Left) 61-62 01 (LHE-WAC-WPS)(OHV-WAC): **61 Thru 63 01 (OHV-Heavy Duty):** 63 01 (WAC)	.....	1	316 1366	
(Right) 61-62 01 (LHE-WAC-WPS)(OHV-WAC): **61 Thru 63 01 (OHV-Heavy Duty):** 63 01 (WAC)	.....	1	316 1367	
65 80 (V8-WAC)***(V8-Heavy Duty)***	.....	1	317 4792	
(Upper) 64 10-80 (V8-WAC)***(Heavy Duty):*** 65 10 (V8-WAC)***(V8-Heavy Duty)***	.....	1	317 0575	
(Lower) 64 10-80 (V8-WAC)***(Heavy Duty):*** 65 10 (V8-WAC)***(V8-Heavy Duty)***	.....	1	317 0577	

ATTACHING PARTS

Shroud To Core

SCREW, Tapping.....	60 Thru 63 01: 60-61 10-20-80 ***(Replaces 800 0091)***	17.671	6	400 1031	
SCREW, Tapping	64-65 01 (LHE)(OHV-196): 64-65 10-80	3.165	6	400 0478	
SCREW, Tapping.....	62-63 10-80	17.671	6	G456766	

Shroud To Extension Ring

SCREW, Tapping.....	65 80 (V8)	.....	5	G274773	
NUT, Speed	65 80 (V8)	3.505	5	400 0895	

RING, Fan Shroud Extension

65 80 (V8-WAC)(V8-WAF)***(V8-Heavy Duty)***	.....	1	317 5109	

GUARD, Fan

62 80 (LAC)	.....	1	316 3868	

ATTACHING PARTS

Guard To Upper Crossmember

SCREW, Tapping.....	62 80 (LAC)	17.671	4	G9414012	NA

Copyright 1963 American Motors Corp.

GROUP NO. — DESCRIPTION — YEAR and MODEL	PRIMARY GROUP NO.	PER CAR	PART NO.	CODE
2.016 BELT, FAN, GENERATOR AND ALTERNATOR				
60 Thru 64 01 (Regular-LAE): 64-65 01 (LHE-WAE-Note 2.016-5) (OHV-196-WAE-Note 2.016-5): 60 Thru 63 10 (Regular-LAE): 64 10 (OHVC-196-Regular): ***60 01-10 (Heavy Duty-Notes 2.016-2 And 2.016-4)***	.....	1	316 0720	
60-61 01-10 (Heavy Duty-Note 2.016-3): 62 01 (Heavy Duty-Note 2.016-3): 62 10 *(OHV-Heavy Duty-Note 2.016-3)*: 62 10 (OHVA-Notes 2.016-3 And 2.016-6): ***163 01-10 (CAN)*** .....***(Replaces 315 2643)***	.....	1	315 5477	
60 01-10 (WAE-LAC-Note 2.016-9): 61-62 01 (WAE-LAC): 62 10 (WAE-OHVC-Note 2.016-6): 63 01 (WAE-Note 2.016-9)	.....	1	314 8781	
60 01 (WAE-LAC-Note 2.016-10)	.....	1	316 1394	
63 01 (WAE-Note 2.016-7): 63 10 (OHVC-WAE-Note 2.016-7): 64 10 (OHVA) ..	.....	1	314 4018	
63 01-10 (WAE-Note 2.016-5): 63 10 (OHVA-WAE-Note 2.016-7).....***(Replaces 313 7211)***	.....	1	314 0218	
61 10 (WAE-LAC): 62-63 10 (WAE-Notes 2.016-9 And 2.003-3 Type 1).....	.....	1	316 1179	
60 20-80 (Regular)***(Heavy Duty-Notes 2.016-1, 2.016-2 and 2.016-4):*** 61 20: 61 80 (LAF)(WAF-Note 2.003-1 Type 1): 62 80 (LAE)	.....	1	315 4207	
64-65 10-80 (V8-WAE-Note 2.016-5): 63 10-80 (V8-WAE-Notes 2.016-5 And 2.016-7)	.....	1	316 7228	
65 01 (OHV-199-Regular)(OHV-232-Regular): 64 10 (OHV-232-Regular): 65 10-80 (Six-Regular).....	.....	1	317 3222	
60-61 20-80 (Heavy Duty-Note 2.016-3).....	.....	1	315 2655	
61 80 (WAF-Note 2.003-1 Type 2).....	.....	1	316 2738	
63-64 10-80 (V8-WAE-Note 2.016-9 And 2.003-3 Type 1): 62 80 (WAE): 65 10-80 (V8-WAE-Notes 2.016-9 And 2.003-3 Type 1): ***163 Thru 165 10-80 (V8-Can)***	.....	1	314 4686	
BELT SET, Fan-Alternator				
64-65 01 (OHV-WAE-Note 2.016-9): 63-64 10 (OHV-196-WAE-Notes 2.016-9 & 2.003-3 Type 2)	.....	1	316 9418	
63-64 10-80 (OHV-232-WAE-Note 2.016-9): 65 10-80 (Six-WAE-Note 2.016-9).	.....	1	317 4727	
63 Thru 65 10-80 (V8-WAE-Notes 2.003-3 Type 2 And 2.016-9)	.....	1	317 0385	
2.020 CORE, Radiator				
60 01 (Regular And Heavy Duty).....	.....	1	315 7038	
61 Thru 63 01 (Regular And Heavy Duty)	.....	1	316 0551	
64 02 (LAC)..... ***(Use 317 7428)***	.....	1	317 4701	#
64-65 01 (LHE-Heavy Duty)(OHV-196-WAC)***(OHV-196-Heavy Duty)(Use 317 4703)***	.....	1	316 9929	
65 01 (LHE)(OHV-196-LAC).....	.....	1	317 7428	
65 01 (OHV-199)(OHV-232).....	.....	1	317 7291	
60 10 (Regular And Heavy Duty).....***(Replaces 315 6662)***	.....	1	315 8742	
61-62 10 (Regular And Heavy Duty).....	.....	1	316 0553	
63 10 (Regular And Heavy Duty).....***(Replaces 316 8160)***	.....	1	317 2732	
64 10 (OHV-196-Regular and Heavy Duty).....	.....	1	317 2732	
64 10 (OHV-232-Regular And Heavy Duty): 65 10 (Six-Regular And Heavy Duty)	.....	1	317 4711	
60 20 (Regular And Heavy Duty)..... ***(Use 320 4939)***	.....	1	315 6665	
61 20 (Regular And Heavy Duty).....***(Replaces 316 0556)***	.....	1	320 4939	
60 80 (Regular And Heavy Duty).....	.....	1	315 6668	

NOTE 2.016-1: Used on Cars with a Delco Remy 35 AMP Generator
NOTE 2.016-2: Used on Cars with an Autolite 35 AMP Generator
NOTE 2.016-3: Used on Cars with an Autolite 40 AMP low cut in Generator
NOTE 2.016-4: Used on Cars with an Autolite 45 AMP not low cut in Generator
NOTE 2.016-5: Used on Cars with Motorola 35, 40 And 55 AMP Alternator.
NOTE 2.016-6: Used on Cars with an Autolite 40 AMP Alternator
NOTE 2.016-7: Used on Cars with a Delco Remy 42 AMP Alternator
NOTE 2.016-8: Used on Cars with a Leece Neville 50 AMP Alternator
NOTE 2.016-9: Used on Cars with a Leece Neville 60 AMP Alternator
NOTE 2.016-10: Used on Cars with Delco Remy 60 AMP Alternator

Copyright 1963 American Motors Corp.

GROUP NO. — DESCRIPTION — YEAR and MODEL	PRIMARY GROUP NO.	PER CAR	PART NO.	CODE
61 80 (Regular And Heavy Duty)	.....	1	316 0559	
62 80 (Regular And Heavy Duty)	.....	1	316 3972	
63 10-80 (V8-Regular And Heavy Duty) ***(Use 320 5065)***	.....	1	316 7210	
64 10-80 (V8-Regular And Heavy Duty): 65 10 (V8-Regular And Heavy Duty)	.....	1	320 5065	
65 80 (OHV-232-Regular And Heavy Duty)	.....	1	317 5999	
65 80 (V8-Regular And Heavy Duty)	.....	1	320 5631	#
ATTACHING PARTS Core To Support				
BOLT, Hexagon ..... 60 Thru 63 01: 60 Thru 62 10-20-80	17.038	4	G181596	NA
BOLT, Hexagon ..... 64-65 01 (4 Req.): 64 10-80 (1/2" Long-3 Req.) 65 10-80 (4 Req.)	.....	AR	400 0715	
BOLT, Hexagon ..... 64 10-80 (1" Long)	.....	1	400 0704	
SCREW, Machine..... 63 10-80	17.629	4	G9413571	NA
SCREW, Tapping..... 63 10-80	17.671	1	G9411563	
WASHER, Plain..... 60 Thru 63 01 (4 Req. -1"): 60 Thru 62 10-20-80 (4 Req. -1"): 63 80 (1 Req. -1") ***(Replaces 800 0183)***	17.814	AR	400 1120	
WASHER, Plain..... 60 Thru 63 01 (7/8"): 60 Thru 62 10-20-80 (7/8") ***(Replaces 800 0153)***	17.814	4	400 1093	
WASHER, Lock..... 60 Thru 63 01: 60 Thru 62 10-20-80	17.820	4	G120214	NA
NUT, Hexagon..... 63 10-80	17.406	1	G120368	
HOSE, Radiator Core Overflow (Bulk-Order Per Foot)				
60 Thru 65 01-10-20-80	22.050	AR	320 2250	
ATTACHING PARTS Hose To Core				
CLIP ..... 60 Thru 65 01-10-20-80	.....	2	320 2648	
EXTENSION, Radiator Core Overflow Hose				
60 Thru 65 01-10-20-80	.....	1	320 2647	

2.023 SUPPORT, Radiator (Baffle, Radiator Air)

(Left) 60 Thru 63 01	.....	1	315 7186	
(Left) 64-65 01...(Incl. Seals)	.....	1	350 5521	
(Left) 60 Thru 62 10-20: 62 80...(Incl. Anti-Squeak And Seal)	.....	1	315 8333	
(Left) 63 10-80...(Incl. Seals)	.....	1	348 2413	
(Left) 64 10-80...(Incl. Seals) ***(Replaces 350 1215)***	.....	1	448 1557	
(Left) 65 10...(Incl. Seal)	.....	1	351 5893	
(Left) 60 80...(Incl. Anti-Squeak And Seal)	.....	1	315 8334	
(Left) 61 80...(Incl. Anti-Squeak And Seal)	.....	1	345 8215	
(Left) 65 80...(Incl. Seal)	.....	1	351 5939	
(Right) 60 Thru 63 01	.....	1	315 7187	
(Right) 64-65 01...(Incl. Seals)	.....	1	350 5520	
(Right) 60 Thru 62 10-20 (LAC): 62 80 (LAC)...(Incl. Anti-Squeak)	.....	1	315 8317	
(Right) 60 Thru 62 10-20 (WAC): 62 80 (WAC)...(Incl. Anti-Squeak And Seal)	.....	1	315 8325	
(Right) 63 10-80...(Incl. Seals)	.....	1	348 2412	
(Right) 64 10-80...(Incl. Seals) ***(Replaces 350 1214)***	.....	1	448 1556	
(Right) 65 10...(Incl. Seal)	.....	1	351 5892	
(Right) 60 80 (LAC)...(Incl. Anti-Squeak)	.....	1	315 8323	
(Right) 60 80 (WAC)...(Incl. Anti-Squeak And Seal)	.....	1	315 8335	
(Right) 61 80 (LAC)...(Incl. Anti-Squeak)	.....	1	345 8212	
(Right) 61 80 (WAC)...(Incl. Anti-Squeak And Seal)	.....	1	345 8209	
(Right) 65 80...(Incl. Seal)	.....	1	351 5938	

Copyright 1963 American Motors Corp.

GROUP NO. — DESCRIPTION — YEAR and MODEL		PRIMARY GROUP NO.	PER CAR	PART NO.	CODE
ATTACHING PARTS					
Support To Lower Bracket					
SCREW, Machine	60 01 *(Replaces 800 0317)*	17.626	4	400 0991	
WASHER, Plain	60 01	.....	4	311 8380	
NUT, Hexagon	60 01	17.406	4	G120375	
Support To Wheelhouse					
BOLT, Hexagon	60-61 01	17.038	4	G180020	NA
BOLT, Hexagon	60-61 10-20-80	17.038	8	G181608	NA
SCREW, Tapping	62 10-80	17.670	7	G172475	NA
SCREW, Tapping	62-63 01	17.626	8	G274825	NA
WASHER, Plain	60-61 01	17.814	4	G118773	NA
WASHER, Plain	60 Thru 62 10-80	17.814	8	G120393	NA
WASHER, Lock	60 Thru 62 10-20-80	17.820	8	G120214	NA
NUT, Hexagon	60 01	17.406	12	G120375	
NUT, Lock	60 Thru 63 01	17.417	8	G273801	NA
Support To Crossmember					
BOLT, Hexagon	62 10-80	17.038	4	G181595	NA
WASHER, Plain	62 10-80	17.814	4	G120393	NA
WASHER, Lock	62 10-80	17.820	4	G120214	NA
NUT, Hexagon	62 10-80	17.406	4	G120368	
Support To Grille Panel					
SCREW, Tapping	63-64 10-80	12.075	6	400 0424	
NUT, Spring	63-64 10-80	17.426	6	G447026	
Support To Grille Panel Support					
SCREW, Tapping	63 10-80	17.426	2	G9411563	
NUT, Spring	63-64 10-80	17.426	6	G447026	
SCREW, Tapping	64 10-80	12.075	2	400 0424	
SEAL, Radiator Support					
(Upper) 60 Thru 62 10-20-80		2.062	2	342 1545	
(Upper) 63-64 10-80		.....	2	348 2426	
(Upper) 65 10		.....	2	351 5884	
(Upper) 65 80		.....	2	351 5885	
(Side) 63-64 10-80		.....	2	348 2428	
(Upper-Side) 64 01		.....	2	350 0204	
(Lower-Side) 64 01		.....	2	350 0205	
(Lower) 65 10-80		.....	2	351 5886	
FILLER, Radiator Support					
(Left) 64-65 01 (WAC)		.....	1	350 9385	
(Right) 64-65 01 (WAC)		.....	1	350 9384	
ATTACHING PARTS					
Filler To Radiator Support					
SCREW, Tapping	64-65 01 (WAC)	3.165	8	400 0478	
NUT, Speed	64-65 01 (WAC)	17.426	8	G445435	NA
Filler To Radiator Grille Panel					
SCREW, Tapping	64-65 01 (WAC)	17.666	4	G161631	NA
NUT, Speed	64-65 01 (WAC)	17.426	4	G445435	NA

Copyright 1963 American Motors Corp.

GROUP NO. — DESCRIPTION — YEAR and MODEL	PRIMARY GROUP NO.	PER CAR	PART NO.	CODE
PANEL, Headlamp Mounting (Welded To Support)				
(Left) 64 10-80	3.245	1	350 9273	
(Right) 64 10-80	3.245	1	350 9272	
BRACE, Radiator Support To Upper Baffle				
63-64 10-80	.....	1	350 5661	
ATTACHING PARTS Brace To Radiator Upper Baffle				
SCREW, Tapping..... 63 10-80 ***(Replaces 800 0103)***	17.671	1	G9411563	
SCREW, Tapping..... 64 10-80	17.671	1	400 1040	
BOLT, Hexagon..... 63 10-80	2.020	1	400 0704	
SCREW, Machine..... 64 10-80	17.629	1	G274683	NA
WASHER, Lock..... 63-64 10-80	17.820	1	G120214	NA
WASHER, Plain..... 64 10-80	17.814	1	G120393	NA
NUT, Hexagon..... 63-64 10-80	17.406	1	G120368	NA
ANTI-SQUEAK, Radiator Support To Wheelhouse				
60 Thru 62 10-80	2.062	2	342 1719	
GROMMET, Wiring (In Left Support)				
60 10-20-80 (1" O.D.)	3.288	1	55 350	
60 10-20-80 (1-5/16" O.D.)	3.166	1	312 7192	
2.032 CAP, Radiator Core				
60 01-10-20-80	.....	1	314 1371	
61 01-10-20-80	.....	1	316 0667	
62-63 01-10-80 ***(Use 317 8646)***	.....	1	316 5718	#
64 01-10-80 ***(Use 317 8646)***	.....	1	317 2581	#
65 01-10-80	.....	1	317 8646	
163 Thru 165 01-10-80 (Can)	.....	1	2 010	
63 Thru 65 10-80 (Renault)	.....	1	314 2965	
2.036 DRAIN COCK, Radiator Core				
60 Thru 62 01-10-20-80	.....	1	310 9415	
63 Thru 65 01-10-80	.....	1	316 6547	
PLUG, Radiator Core				
60 Thru 62 20-80	17.486	1	G219189	NA
2.038 HOSE, Thermostat Housing To Radiator Core				
60 01 (LHE): 60 10	.....	1	315 4272	
60 01 (OHV)	.....	1	315 9850	
61 Thru 63 01 (LHE)	.....	1	316 0699	
64-65 01 (LHE)	.....	1	316 9931	
61 Thru 63 01 (OHV)	.....	1	316 0698	
64-65 01 (OHV-196)	.....	1	316 9930	
65 01 (OHV-199)(OHV-232)	.....	1	317 6814	
61 10 (OHVC)	.....	1	316 2326	
61 10 (OHVA)	.....	1	316 0645	
62 10 (OHVC)	.....	1	316 3638	
62 10 (OHVA)	.....	1	316 3641	

Copyright 1963 American Motors Corp.

GROUP NO. — DESCRIPTION — YEAR and MODEL	PRIMARY GROUP NO.	PER CAR	PART NO.	CODE
63-64 10 (OHVC-196)	.....	1	316 6629	
63-64 10 (OHVA)	.....	1	316 6630	
64 10 (OHVC-232): 65 10 (Six)	.....	1	317 2683	
60-61 20 ***(Replaces 315 3212)***	.....	1	315 7562	
60 80	.....	1	315 3147	
61 80	.....	1	316 0577	
62 80	.....	1	316 3639	
63 10-80 (V8): 64 10-80 (V8-WPS)(V8-LPS-LAC) ***(Replaces 316 6632)***	.....	1	317 3121	#
64 10-80 (V8-WAC-LPS): 65 10 (V8)	.....	1	317 3121	
65 80 (OHV-232)	.....	1	317 5102	
65 80 (V8)	.....	1	317 5103	

HOSE, Radiator Core To Water Pump

60 01: 61-62 01 (LAE): 60 10: 61 10 (OHVC) ***(Replaces 315 8728)***	.....	1	316 4649	
61 01 (WAE-LAC): ***60-61 01-10 (Heavy Duty-Note 2.016-3):*** 60 01-10 (WAE-Note 2.016-9)	.....	1	316 0293	
62 01 (WAE): 62 10 (WAE-Note 2.016-6): ***62 01-10 (Heavy Duty-Note 2.016-3):*** 63 01	.....	1	316 5571	
64 01: 65 01 (LHE)(OHV-196)	.....	1	316 9932	
65 01 (OHV-199)(OHV-232)	.....	1	317 6813	
61 10 (OHVA)	.....	1	316 0644	
62 10 (LAE)(WAE-Note 2.016-9)	.....	1	316 3642	
63-64 10 (OHV-196) ***(Replaces 316 6631)***	.....	1	317 0749	#
64 10 (OHV-232): 65 10 (Six)	.....	1	317 2688	
60-61 20	.....	1	315 8730	
60 80	.....	1	315 8731	
61 80	.....	1	316 0543	
62 80 (LAC)	.....	1	316 3640	
62 80 (WAC)(WAF)***(Heavy Duty)***	.....	1	316 3933	
63 10-80 (V8)	.....	1	316 6633	
64 10-80 (V8): 65 10 (V8)	.....	1	317 1659	
65 80 (OHV-232)	.....	1	317 5105	
65 80 (V8-LPS)	.....	1	317 5104	
65 80 (V8-WPS)	.....	1	317 9117	

2.039 CLAMP, Radiator Hose

60 Thru 62 01-10-20-80	.....	AR	311 4518	
63 Thru 65 01-10-80	17.108	AR	320 3079	

2.050 GRILLE, Radiator

60 01 (Inner)	.....	1	342 9037	
61 01 (Inner)	.....	1	344 7250	
62 01	.....	1	346 2641	
63 01	.....	1	348 2601	
64 01	.....	1	350 5809	
65 01	.....	1	352 3406	
61 10-20	.....	1	344 7636	
62 10-80...(Incl. Extensions)	.....	1	346 2700	
63 10	.....	1	347 2610	
64 19 (Typhoon)	.....	1	353 0649	
64 10 (Except Typhoon)	.....	1	350 1216	
65 10 (Except Marlin)	.....	1	351 5961	
65 50 (Marlin)	.....	1	353 0527	
61 80	.....	1	344 7639	
63 80...(Less Nameplate)	.....	1	347 2611	
64 80...(Incl. Letters)	.....	1	350 1217	
65 80	.....	1	351 5981	

Copyright 1963 American Motors Corp.

GROUP NO. — DESCRIPTION — YEAR and MODEL		PRIMARY GROUP NO.	PER CAR	PART NO.	CODE
(Left) 60 10 20...(Incl. Studs)		.....	1	344 3475	
(Left) 60 80...(Incl. Studs)		.....	1	344 3485	
(Right) 60 10-20...(Incl. Studs)		.....	1	344 3474	
(Right) 60 80...(Incl. Studs)		.....	1	344 3484	
ATTACHING PARTS					
Grille To Panel					
STUD	60 01 (10 Req.): 62-63 01 (1" Long-6 Req.)	.....	AR	342 1965	
STUD	62-63 01 (3/4" Long)	.....	1	400 0253	
SCREW, Tapping	61-62 10-20: 62 80	17.669	AR	800 0274	NA
SCREW, Tapping	64 01 (4 Req.): 65 01 (5 Req.): 65 10 (6 Req.)	.....	AR	400 0190	
SCREW, Tapping	60 80	17.670	3	G443923	NA
SCREW, Tapping	64 10-80 (5/8" Long)	3.165	2	400 0478	
SCREW, Tapping	64 10-80 (3/8" Long)	17.671	1	400 1031	
SCREW, Tapping	61 80	17.666	6	G161711	NA
NUT, Stamped	60 01 (10 Req.): 62-63 01 (7 Req.)	17.428	7	G273329	NA
NUT, Speed	61-62 10-20: 62 80	.....	10	345 8271	
NUT, Speed	64-65 10 (4 Req.) 64 80 (2 Req.)	23.110	AR	400 0196	
NUT, Hexagon	62 10-80	17.412	1	G271169	NA
NUT, Machine	62 10-80	17.416	1	G447121	NA
NUT, Spring	60 80	17.424	3	G445407	
WASHER, Plain	62-63 01 ***(Replaces 800 0141)***	17.814	1	400 1081	
Grille To Upper Baffle Reinforcement					
SCREW, Tapping	64 01	.....	6	400 0190	
NUT, Speed	64 01	17.426	2	G445435	
Grille To Hood Lock Bracket					
SCREW, Tapping	64 10-80	3.165	2	400 0478	
NUT, Speed	64 10-80	23.110	1	400 0196	
Grille To Hood Lock					
SCREW, Tapping	64 10-80 (3/4" Long)	22.056	2	400 0032	
SCREW, Tapping	64 10-80 (5/8" Long)	.....	2	400 0738	
Left To Right Grille					
BOLT, Hexagon	60 10-20-80	17.038	2	G180020	NA
WASHER, Plain	60 10-20-80	17.814	2	G120392	NA
WASHER, Lock	60 10-20-80	17.820	2	G120380	NA
NUT, Hexagon	60 10-20-80	17.406	2	G120375	
Grille To Upper Baffle Bracket					
SCREW, Tapping	63 10-80 ***(Replaces 800 0095)***	17.671	6	G456766	
NUT, Spring	63 10-80	17.426	2	G445446	
Grille To Hood Lock Support					
SCREW, Tapping	64 01	.....	1	400 0190	
SCREW, Machine	63 10-80 ***(Replaces 800 0110)***	17.598	2	400 1008	
WASHER, Plain	63 10-80 ***(Replaces 800 0141)***	17.814	6	400 1081	
SCREW, Tapping	65 10 (1 Req.): 65 80 (2 Req.)	3.165	AR	400 1701	#
Grille To Hood Lock Support Bracket					
SCREW, Tapping	63 10-80 (5/8" Long) ***(Replaces 800 0095)***	17.671	1	G456766	
SCREW, Tapping	63 10-80 (3/8" Long) ***(Replaces 800 0091)***	17.671	1	400 1031	
Grille To Fender Extension					
SCREW, Tapping	63 10-80 ***(Replaces 800 0095)***	17.671	6	G456766	
WASHER, Plain	63 10-80 ***(Replaces 800 0141)***	17.814	6	400 1081	
NUT, Snap	63 10-80	14.108	6	400 0141	
Grille To Fender					
SCREW, Tapping	64-65 01	.....	2	400 0190	
SCREW, Tapping	64 10-80	17.670	6	400 1054	
SCREW, Tapping	65 10-80	.....	2	400 0424	
NUT, Plastic	64 10-80	14.108	6	400 0141	
NUT, Stamped	60 10-20 (4 Req.): 60 80 (2 Req.)	17.428	AR	G273329	NA
WASHER, Plain	64 10-80 ***(Replaces 800 0141)***	17.671	6	400 1081	

Copyright 1963 American Motors Corp.

GROUP NO. — DESCRIPTION — YEAR and MODEL	PRIMARY GROUP NO.	PER CAR	PART NO.	CODE
Grille To Radiator Support				
SCREW, Tapping..... 65 10	3.165	4	400 0478	
Grille To Support Bracket				
NUT, Hexagon..... 60 10-20	17.406	2	G120375	
WASHER, Lock..... 60 10-20	17.820	2	G120380	NA
WASHER, Plain..... 60 10-20	17.814	2	G120392	NA
Inner Grille To Frame				
SCREW, Tapping..... 61 01	17.671	11	G451658	NA
WASHER, Plain..... 61 01 ***(Replaces 800 0141)***	17.814	11	400 1081	
Grille To Air Intake Panel				
BOLT, Hexagon 60 10-20-80	17.038	5	G180020	NA
WASHER, Lock..... 60 10-20-80	17.820	5	G120380	NA
WASHER, Plain..... 60 10-20-80	17.814	5	G120392	NA
FRAME, Radiator Grille				
60 01...(Incl. Studs)	.....	1	342 9035	
61 01...(Incl. Studs)	.....	1	344 6711	
60 80	.....	1	344 3491	
ATTACHING PARTS				
Frame To Panel				
STUD..... 61 01	.....	7	342 1965	
WASHER, Plain..... 60 80	17.814	4	G120392	NA
WASHER, Plain..... 61 01 ***(Replaces 800 0141)***	17.814	1	400 1081	
WASHER, Lock..... 60 80	17.820	4	G120380	NA
NUT, Stamped..... 61 01	17.428	7	G273329	NA
NUT, Hexagon..... 60 80	17.406	4	G120375	
REINFORCEMENT, Radiator Grille (Under Top Section Of Grille)				
(Left) 63 10-80	.....	1	349 0414	
(Right) 63 10-80	.....	1	349 0415	
EXTENSION, Radiator Grille (Between Inner And Outer Headlamps)				
(Left) 62 10-80	.....	1	320 3993	
(Right) 62 10-80	.....	1	320 3994	
ORNAMENT, Radiator Grille (Lower End)				
(Left) 61 10-20 ***(Replaces 345 8217)***	.....	1	448 0219	
(Right) 61 10-20 ***(Replaces 345 8216)***	.....	1	448 0218	
ATTACHING PARTS				
Ornament To Fender				
STUD..... 61 10-20	12.078	6	342 6343	
WASHER, Angle 61 10-20	12.128	6	400 0422	
NUT, Washer..... 61 10-20	.....	6	345 8265	
MOULDING, Radiator Grille Extension (On Fender)				
(Left) 61 80 ***(Replaces 345 8149)***	.....	1	448 0221	
(Right) 61 80 ***(Replaces 345 8148)***	.....	1	448 0220	
ATTACHING PARTS				
Moulding To Front Fender				
BOLT, Tee 61 80	.....	6	316 1333	
CLIP..... 61 80	.....	6	316 1331	

Copyright 1963 American Motors Corp.

GROUP NO. — DESCRIPTION — YEAR and MODEL	PRIMARY GROUP NO.	PER CAR	PART NO.	CODE
MEDALLION, Radiator Grille				
60 01	12.004	1	341 7437	
ATTACHING PARTS Medallion To Grille				
NUT, Stamped ..... 60 01 ..... *(Replaces 342 2456)*	17.428	2	G274999	
BEZEL, Radiator Grille Medallion				
60 01	.....	1	314 5755	
PLATE, Medallion				
60 01	.....	1	341 7438	
PAD, Medallion				
60 01	.....	1	315 1191	
PLATE, Name "Ambassador"				
61 80 ..... *(Replaces 344 7825)*	.....	1	448 0235	
63 80...(Incl. Nuts)	23.009	1	448 0206	
ATTACHING PARTS Name Plate To Grille				
FASTENER 61 80	.....	6	316 2376	
NUT, Stamped 63 80	17.428	1	G274999	
PLATE ASSEMBLY, Name "Rambler"				
64 01...(Incl. Nuts)	.....	1	448 1231	
65 01 ...(Incl. Nuts)	.....	1	448 2352	
ATTACHING PARTS Name Plate To Grille				
NUT, Stamped 64 01	.....	2	400 0721	
NUT, Speed 65 01	12.128	2	400 0392	
BAR ASSEMBLY, Radiator Grille (Incl. Nuts)				
(Outer) 65 10	.....	2	448 2347	
(Center) 65 10	.....	1	448 2346	
ATTACHING PARTS Bar To Grille				
NUT, Stamped 65 10	17.428	6	320 9553	#
WASHER, Angle 65 10	.....	6	400 0791	#
LETTERS, Radiator Grille				
"R" 60 10-20	.....	1	344 3602	
"A" 60 10-20	.....	1	344 3604	
"M" 60 10-20	.....	1	344 3605	
"B" 60 10-20	.....	1	344 3606	
"L" 60 10-20	.....	1	344 3607	
"E" 60 10-20	.....	1	344 3608	

Copyright 1963 American Motors Corp.

GROUP NO. — DESCRIPTION — YEAR and MODEL	PRIMARY GROUP NO.	PER CAR	PART NO.	CODE
"R" 60 10-20	.....	1	344 3602	
"R" 61-62 10-20: 62 80	.....	1	448 0184	
"A" 61-62 10-20: 62 80 *(Replaces 344 7912)*	.....	1	4480185	
"M" 61-62 10-20: 62 80 *(Replaces 344 7913)*	.....	1	448 0186	
"B" 61-62 10-20 (Prong Type): 62 80 (Prong Type) *(Replaces 344 7914)*	.....	1	320 3258	
"B" 61-62 10-20 (Pedestal Type): 62 80 (Pedestal Type) *(Replaces 316 2742)*	.....	1	448 0187	
"L" 61-62 10-20: 62 80 *(Replaces 344 7915)*	.....	1	448 0188	
"E" 61-62 10-20: 62 80 *(Replaces 344 7916)*	.....	1	448 0189	
"R" 61-62 10-20: 62 80 *(Replaces 344 7911)*	.....	1	448 0184	
"A" 60 80	.....	2	344 3612	
"A" 64 80	23.009	3	350 9511	
"M" 60 80	.....	1	344 3614	
"M" 64 80	23.009	1	350 9512	
"B" 60 80	.....	1	344 3615	
"B' 64 80	23.009	1	350 9513	
"S" 60 80	.....	1	344 3616	
"S" 64 80	23.009	2	350 9514	
"S" 60 80	.....	1	344 3617	
"A" 60 80	.....	1	344 3613	
"D" 60 80	.....	1	344 3618	
"D" 64 80	23.009	1	350 9515	
"O" 60 80	.....	1	344 3619	
"O" 64 80	23.009	1	350 9516	
"R" 60 80	.....	1	344 3620	
"R" 64 80	23.009	1	350 9517	
ATTACHING PARTS				
Letters To Grille				
SCREW, Tapping..... 60 10-20	17.670	7	G445656	NA
Letters To Air Intake Panel				
SCREW, Tapping..... 60-61 10-20: 62 80 *(Replaces 800 0095)*	17.671	7	G456766	
FASTENER ..... 61 10-20 (For Prong Type "B")	.....	2	316 2376	
WASHER, Lock ..... 61 10-20 (6 Req.): 62 10-80 (7 Req.)	17.826	AR	G178378	NA
Letters To Frame				
NUT, Stamped..... 60 80	17.614	10	G274999	NA
BASE, Name Plate				
61 80	.....	1	344 8427	
BRACKET, Radiator Grille To Support				
60 10-20	.....	1	344 3492	
BRACKET, Radiator Grille To Upper Baffle				
63 10-80	.....	2	348 2438	
BRACKET, Radiator Grille To Hood Lock Support				
63 10-80	.....	1	347 2624	
64 10-80	.....	1	350 1206	

Copyright 1963 American Motors Corp.

GROUP NO. — DESCRIPTION — YEAR and MODEL	PRIMARY GROUP NO.	PER CAR	PART NO.	CODE
ATTACHING PARTS				
Bracket To Grille				
SCREW, Tapping..... 64 10-80	3.165	1	400 0478	
NUT, Speed..... 64 10-80	23.110	1	400 0196	
Bracket To Hood Lock Support				
SCREW, Tapping..... 64 10-80	3.165	1	400 0478	
NUT, Speed..... 64 10-80	23.110	1	400 0196	
Bracket To Grille Panel				
SCREW, Tapping..... 64 10-80	3.165	1	400 0478	
SUPPORT, Radiator Grille				
61 Thru 63 01	.....	1	344 6719	
60 10-20-80	.....	2	344 0974	
61 10-20	.....	1	344 8490	
62 10-80	.....	1	346 2698	
61 80	.....	1	344 7640	
(Left) 64 01	.....	1	350 9173	
(Left) 65 01	.....	1	352 3205	
(Left) 65 10	.....	1	351 5963	
(Left) 65 80	.....	1	351 5979	
(Right) 64 01	.....	1	350 9172	
(Right) 65 01	.....	1	352 3204	
(Right) 65 10	.....	1	351 5962	
(Right) 65 80	.....	1	351 5978	
ATTACHING PARTS				
Support To Bracket				
BOLT, Hexagon..... 60 10-20	17.038	2	G180018	NA
WASHER, Plain..... 60 10-20	17.814	2	G120392	NA
WASHER, Lock..... 60 10-20	17.820	2	G120380	NA
NUT, Hexagon..... 60 10-20	17.406	2	G120375	
Support To Air Intake Panel				
SCREW, Machine..... 61 Thru 63 01...(Incl. Retainer)	12.245	1	345 2316	
BOLT, Hexagon..... 61-62 10-20-80	17.038	1	G180020	NA
BOLT, Hexagon..... 60 10-20	17.038	2	G180018	NA
WASHER, Plain..... 60 Thru 63 01: 61-62 10-20-80	17.814	1	G120392	NA
WASHER, Lock..... 61 Thru 63 01: 60 Thru 62 10-20-80	17.820	1	G120380	NA
NUT, Lock..... 61 Thru 63 01	17.417	1	G273801	NA
NUT, Hexagon..... 60 10-20-80	17.406	2	G120375	
Support To Grille				
SCREW, Tapping..... 64-65 01 (6 Req.): 65 80 (7 Req.)	.....	AR	400 0190	
SCREW, Tapping..... 65 10	3.165	5	400 0478	
NUT, Speed..... 65 01 (4 Req.): 65 10 (5 Req.)	17.426	4	G445435	
Support To Upper Baffle Reinforcement				
SCREW, Tapping..... 64 01 (6 Req.): 65 01 (4 Req.)	.....	AR	400 0190	
SCREW, Tapping..... 65 10	3.165	8	400 0478	#
NUT, Spring..... 65 80	17.426	7	G447022	
Support To Fender Reinforcement				
SCREW, Tapping..... 65 01	.....	2	400 0190	
SCREW, Tapping..... 65 80	3.165	2	400 0478	
Support To Fender				
SCREW, Tapping..... 65 10	3.165	2	400 0478	
Support To Upper Baffle				
SCREW, Tapping..... 65 10	3.165	6	400 0478	

Copyright 1963 American Motors Corp.

GROUP NO. — DESCRIPTION — YEAR and MODEL	PRIMARY GROUP NO.	PER CAR	PART NO.	CODE
SILENCER, Radiator Grille Insert				
61 01	8.214	2	312 8677	
2.051 PANEL, Radiator Grille				
60 01	.....	1	314 3008	
64 01	.....	1	350 0872	
65 01	.....	1	448 2170	
64 10-80...(Incl. Lower Seal)	.....	1	350 9269	
65 10 ***(Replaces 354 2031)***	.....	1	351 5900	#
65 80	.....	1	351 5911	
(Left) 63 10-80	.....	1	347 2621	
(Right) 63 10-80	.....	1	347 2620	
ATTACHING PARTS				
Grille Panel To Shroud				
SCREW, Tapping..... 60 01 ***(Replaces 800 0061)***	17.626	6	400 0980	
WASHER, Plain..... 60 01	17.814	6	G120392	NA
Grille Panel To Fender				
SCREW, Machine..... 60 01 ***(Replaces 800 0317)***	17.626	8	400 0991	
SCREW, Tapping..... 64-65 10-80	.....	2	400 1418	
SCREW, Tapping..... 65 80	.....	6	400 1321	
WASHER, Plain..... 60 01	17.814	8	G120392	NA
NUT, Hexagon..... 60 01	17.406	8	G120375	
Reinforcement To Engine Front Crossmember				
BOLT, Hexagon 63 01	17.038	1	G180018	NA
WASHER, Plain..... 63 01	17.814	2	G120392	NA
WASHER, Lock..... 63 01	17.820	1	G120380	NA
NUT, Hexagon..... 63 01	17.406	1	G120375	
Grille Panel To Fender Extension (Upper)				
SCREW, Machine..... 64-65 01	.....	4	400 0724	
NUT, Hexagon..... 64-65 01 ***(Replaces 400 0508)***	17.412	4	G271172	
Grille Panel To Fender Reinforcement (Lower)				
SCREW, Machine..... 64-65 01	.....	4	400 0724	
SCREW, Tapping..... 65 10	.....	2	400 1321	
NUT, Hexagon..... 64-65 01 ***(Replaces 400 0508)***	17.412	4	G271172	
Grille Panel To Hood Lock Support				
SCREW, Tapping..... 64-65 01	.....	1	400 0190	
NUT, Speed 65 01	17.426	1	G445435	
Grille Panel To Fender Extension				
SCREW, Tapping..... 63 10 ***(Replaces 800 0103)***	17.671	2	G9411563	
NUT, Spring..... 63 10	17.426	2	G447026	
Grille Panel To Grille Bracket				
SCREW, Tapping..... 63 10-80 ***(Replaces 800 0095)***	17.671	4	G456766	
Grille Panel To Side Baffle Support				
SCREW, Machine..... 64-65 01	17.671	4	400 1040	
SCREW, Machine..... 65 10	12.075	4	400 0484	
SCREW, Tapping..... 63 10-80	17.671	2	G9411563	
SCREW, Tapping..... 64 10-80: 65 59 (Marlin)	12.075	2	400 0424	
NUT, Spring..... 64-65 01 (4 Req.): 63-64 10-80 (2 Req.): 65 10 (4 Req.)	17.426	4	G447026	
NUT, Speed 65 10	.....	2	400 1321	
BRACKET, Grille Panel To Fender				
64 10-80	12.076	2	350 9428	

Copyright 1963 American Motors Corp.

GROUP NO. — DESCRIPTION — YEAR and MODEL	PRIMARY GROUP NO.	PER CAR	PART NO.	CODE
ATTACHING PARTS				
Bracket To Fender				
SCREW, Tapping..... 64 10-80	3.165	2	400 0478	
NUT, Speed..... 64 10-80	23.110	2	400 0196	
MOULDING ASSEMBLY, Radiator Grille Panel				
(Upper) 64-65 01	.....	1	448 1261	
(Lower) 64-65 01 (220)	.....	1	448 1260	
(Lower) 64-65 01 (330)(440)	.....	1	448 1235	
65 10	.....	1	448 2374	
ATTACHING PARTS				
Moulding To Grille Panel				
CLIP..... 64-65 01 (220)	.....	6	400 0810	
CLIP (Nylon)..... 65 10	26.032	6	400 0131	
CLIP (Metal)..... 65 10	.....	4	400 1586	
BOLT, Tee..... 64-65 01 (330)(440)	12.004	2	400 0811	
SCREW, Tapping..... 64-65 01 (330)(440)	.....	4	400 0736	
NUT, Stamped..... 64-65 01 (330-6-32)(440-6-32)	17.428	4	G273287	NA
NUT, Stamped..... 64-65 01 (330-10-24)(440-10-24)	17.428	2	320 9548	
PANEL, Radiator Air Intake				
(Lower) 61 Thru 63 01	.....	1	344 6788	
(Lower) 60 10-20-80	.....	1	344 3459	
(Lower) 61 10-20	.....	1	344 7923	
(Lower) 62 10-80	.....	1	348 1748	
(Lower-Left) 61 80	.....	1	346 3727	
(Lower-Right) 61 80	.....	1	346 3726	
(Center) 61 80...(Incl. Clinch Nuts)	.....	1	346 0294	
(Upper) 61 80	.....	1	316 1024	
ATTACHING PARTS				
Air Intake Panel To Fender				
BOLT, Hexagon..... 61 01 (4 Req.): 60 10-20-80 (2 Req.): 61 10-20 (6 Req.): 61 80 (8 Req.)	17.038	AR	G180020	NA
BOLT, Hexagon..... 62-63 01: 62 10-80	17.038	4	G180022	NA
SCREW, Tapping..... 61 01: 63 01	17.671	2	G455702	NA
SCREW, Tapping..... 62 01-10-80	17.670	2	G443923	NA
WASHER, Plain..... 61 01 (1/2" O. D. -4 Req.): 61 10-20 (1/2" O. D. -6 Req.): 61 80 (1/2" O. D. -8 Req.)	17.814	AR	G120392	NA
WASHER, Plain..... 60 10-20-80 (7/8" O. D. -2 Req.): 61 80 (7/8" O. D. -4 Req.) ***(Replaces 800 0149)***	17.814	2	400 1089	
WASHER, Lock..... 61 Thru 63 01: 62 10-80	17.820	4	G120380	NA
NUT, Hexagon..... 61 Thru 63 01: 62 10-80	17.406	4	G120375	
NUT, Spring..... 61 01	17.424	6	G446726	
NUT, Spring..... 63 01 (2 Req.): 61 10-20 (4 Req.)	17.426	AR	G447026	
NUT, Speed..... 62 10-80	12.125	2	400 0340	
NUT, Spring..... 60 10-20-80	17.424	2	G445407	
Air Intake Panel To Fender (Bottom)				
BOLT, Hexagon..... 60 10-20-80	17.038	2	G180020	NA
WASHER, Plain..... 60 10-20-80 ***(Replaces 800 0149)***	17.814	2	400 1089	
WASHER, Lock..... 60 10-20-80	17.820	2	G120380	NA
NUT, Hexagon..... 60 10-20-80	17.406	2	G120375	

Copyright 1963 American Motors Corp.

GROUP NO. — DESCRIPTION — YEAR and MODEL	PRIMARY GROUP NO.	PER CAR	PART NO.	CODE
Air Intake Panel To Fender (End)				
SCREW, Tapping..... 61 10-20	17.670	2	G443923	NA
NUT, Speed..... 61 10-20	12.125	4	400 0340	
WASHER, Plain..... 61 10-20 ***(Replaces 800 0149)***	17.814	2	400 1089	
Air Intake Panel To Side Panel Bracket				
NUT, Speed..... 61-62 10: 61 20: 62 80 ***(Replaces 800 0103)***	17.671	4	G9411563	
SCREW, Tapping..... 61-62 10: 61 20: 62 80	12.125	4	400 0340	
Air Intake Panel To Headlamp Mounting Plate				
BOLT, Hexagon 61 10-20	17.038	6	G180020	NA
BOLT, Hexagon 62 10-80	17.038	6	G180022	NA
WASHER, Plain..... 61 10-80 (6 Req.) ***(Replaces 800 0484)***	17.814	AR	800 0451	
WASHER, Lock 60-61 10: 61 20: 62 80	17.820	6	G120380	NA
NUT, Hexagon..... 62 10-80	17.406	6	G120375	
Air Intake Panel To Fender Extension Panel				
BOLT, Hexagon 61 80	17.038	4	G180020	NA
WASHER, Plain..... 61 80	17.814	4	G120392	NA
WASHER, Lock 61 80	17.820	4	G120380	NA
NUT, Spring..... 61 80	17.424	4	G445497	NA
Air Intake Panel To Lower Baffle				
SCREW, Tapping..... 61 80 ***(Replaces 800 0103)***	17.671	5	G9411563	
NUT, Spring..... 61 80	17.424	5	G445407	
Air Intake Panel To Radiator Support				
SCREW, Tapping..... 61 80 ***(Replaces 800 0103)***	17.671	2	G9411563	
NUT, Spring..... 61 80	17.424	2	G445407	
Air Intake Panel To Lower Center Reinforcement				
SCREW, Tapping..... 61 80 ***(Replaces 800 0103)***	17.671	2	G9411563	
NUT, Spring..... 61 80	17.424	2	G445407	
Air Intake Panel To Wheelhouse				
SCREW, Tapping..... 61 Thru 63 01	17.671	6	G445702	NA
SCREW, Tapping..... 61-62 10: 61 20: 62 80	17.671	4	G9411563	
BOLT, Hexagon..... 60 10-20-80	17.038	4	G180018	NA
WASHER, Plain..... 61-62 01 (6 Req.): 60 Thru 62 10 (4 Req.): 60-61 20 (4 Req.): 60 80 (4 Req.): 62 80 (4 Req.)	17.814	AR	G120392	NA
WASHER, Plain..... 63 01	17.814	6	400 0486	
WASHER, Lock 60-61 10-20: 60 80	17.820	4	G120380	NA
NUT, Speed..... 61 01	17.424	6	G446721	NA
NUT, Spring..... 62-63 01 (6 Req.): 61-62 10 (4 Req.): 61 20 (4 Req.): 62 80 (4 Req.)	17.426	AR	G447026	
Air Intake Panel To Side Baffle				
SCREW, Tapping..... 60 10-20 ***(Replaces 800 0103)***	17.671	4	G9411563	
NUT, Spring..... 60 10-20	17.424	4	G445407	
REINFORCEMENT, Radiator Air Intake Panel				
61 Thru 63 01	.....	1	316 2045	

Copyright 1963 American Motors Corp.

GROUP NO. — DESCRIPTION — YEAR and MODEL	PRIMARY GROUP NO.	PER CAR	PART NO.	CODE
REINFORCEMENT, Radiator Air Intake Center Panel				
61 80	.....	1	344 7783	
REINFORCEMENT, Radiator Air Intake Lower Panel				
61 80	.....	1	344 7780	
BRACKET, Radiator Air Intake Panel To Side Baffle				
60 Thru 62 10-20	.....	2	344 3464	
BRACKET, Radiator Grille Panel To Grille				
63 10-80	.....	2	348 2414	
BRACKET, Radiator Grille Panel To Brace				
61 01	.....	1	313 6649	#
SUPPORT, Grille Panel To Side Baffle				
63 10-80	.....	2	347 2788	
MOULDING, Radiator Air Intake				
62 10-80 ***(Replaces 346 2690)***	.....	1	448 0225	
(Left 61 80 ***(Replaces 344 7633)***	.....	1	448 0223	
(Right) 61 80 ***(Replaces 344 7632)***	.....	1	448 0222	
(Center) 61 80 ***(Replaces 344 7631)***	.....	1	448 0224	
ATTACHING PARTS				
Center Moulding To Intake Panel				
CLIP ..... 61 80 ***(Replaces 343 0792)***	.....	4	346 4507	
BOLT, Tee ..... 61 80 ***(Replaces 344 8493)***	2.050	1	400 0237	
NUT, Stamped ..... 61 80 ***(Replaces 315 1489)***	.....	1	400 0060	
Lower End Moulding To Intake Panel				
CLIP (Left) 61 80	.....	1	316 1405	
CLIP (Right) 61 80	.....	1	316 1406	
SPACER 61 80	.....	2	316 1475	
SCREW, Tapping 61 80	.....	2	316 2283	
Moulding To Intake Panel				
CLIP 62 10-80	.....	6	400 0115	
BOLT, Tee ..... 62 10-80 ***(Replaces 400 0237)***	2.050	2	344 8493	
NUT, Hexagon 62 10-80	17.412	2	G271166	NA
ANTI-SQUEAK, Grille Panel To Shroud				
60 01	.....	12.009	1	343 1654
ANTI-SQUEAK, Grille Panel To Fender				
(Top) 60 01	.....	12.075	1	343 1647
(Side-Upper) 60 01	.....	12.075	1	343 1648
(Side-Lower) 60 01	.....	12.075	1	343 1646

Copyright 1963 American Motors Corp.

GROUP NO. — DESCRIPTION — YEAR and MODEL	PRIMARY GROUP NO.	PER CAR	PART NO.	CODE
ANTI-SQUEAK, Grille Panel To Wheelhouse				
60 01	2.062	1	314 3517	
ANTI-SQUEAK, Grille Panel To Engine Front Crossmember				
60 01	.....	1	313 6649	
ANTI-SQUEAK, Air Intake Panel To Fender				
61 01	.....	2	316 1319	
60 10-20-80 (Wedge Shape 1 Hole)	2.060	2	342 1590	
60 10-20-80 (Curved 2 Holes)	.....	2	345 2902	
61-62 10-20 (3-23/32" Long): 62 80 (3-23/32" Long)	.....	2	344 7565	
61-62 10-20 (7-1/4" Long): 62 80 (7-1/4" Long)	.....	2	316 1086	
SEAL, Radiator Grille Panel Lower				
64 10-80	.....	2	352 0963	
SEAL, Radiator Grille Panel End				
(Black) 64 10-80	.....	1	351 9870	
(Blue-Light) 64 10-80	.....	1	351 9878	
(Blue-Dark) 64 10-80	.....	1	351 9880	
(Gold) 64 10-80	.....	1	351 9892	
(Rose) 64 10-80	.....	1	351 9894	
(Silver) 64 10-80	.....	1	351 9874	
(Red) 64 10-80	.....	1	351 9876	
(Turquoise-Medium) 64 10-80	.....	1	351 9888	
(Green-Dark) 64 10-80	.....	1	351 9884	
(Green-Light) 64 10-80	.....	1	351 9882	
(Ivory) 64 10-80	.....	1	351 9890	
(Maroon) 64 10-80	.....	1	351 9896	
(Turquoise-Light) 64 10-80	.....	1	351 9886	
(White) 64 10-80	.....	1	351 9872	
2.052 SUPPORT, Radiator Grille Panel				
60 01	.....	1	315 4727	
ATTACHING PARTS				
Support To Grille Panel				
BOLT, Hexagon 60 01	17.038	2	G180023	NA
WASHER, Lock 60 01	17.820	2	G120380	NA
WASHER, Plain 60 01	17.814	2	G120392	NA
NUT, Hexagon 60 01	17.406	2	G120375	
Support To Shroud				
BOLT, Hexagon 60 01	17.038	2	G180018	NA
WASHER, Plain 60 01	17.814	2	G120392	NA
WASHER, Lock 60 01	17.820	2	G120380	NA
Support To Grille Panel Extension				
BOLT, Hexagon 60 01	17.038	2	G181595	NA
WASHER, Lock 60 01	17.820	2	G120214	NA

Copyright 1963 American Motors Corp.

GROUP NO. — DESCRIPTION — YEAR and MODEL	PRIMARY GROUP NO.	PER CAR	PART NO.	CODE
EXTENSION, Radiator Grille Panel				
60 01	.....	1	314 2949	
SPACER, Radiator Grille Panel Extension				
60 01 (OAC)	.....	1	315 7196	
2.062 BAFFLE, Radiator Air (Lower)				
60 01	.....	1	314 0429	
61 Thru 63 01 (WAC)...(Incl. Seal)	.....	1	316 2057	
64 01	.....	1	350 5513	#
65 01	.....	1	353 0599	#
61-62 10 (WAC)...(Incl. Seal)	.....	1	316 2255	
63-64 10 (Six)	.....	1	349 2474	
63-64 10-80 (V8): 65 10	.....	1	349 2475	
61 20 (WAC)	.....	1	316 2257	
60 80...(Incl. Seal)	.....	1	315 8094	
61 80...(Incl. Seal)	.....	1	344 7823	
65 80	.....	1	353 8981	
ATTACHING PARTS				
Lower Baffle To Grille Panel				
SCREW, Tapping..... 60 01 ..... ***(Replaces 800 0103)***	17.671	4	G9411563	
NUT, Speed..... 60 01	12.125	4	400 0340	
Lower Baffle To Extension				
BOLT, Hexagon 60 01	17.038	2	G180018	NA
WASHER, Plain..... 60 01	17.814	2	G120392	NA
WASHER, Lock..... 60 01	17.820	2	G120380	NA
NUT, Hexagon..... 60 01	17.406	2	G120375	
Lower Baffle To Air Intake Panel				
SCREW, Tapping..... 61 Thru 63 01 (WAC-#10-14 Dia.) ..... ***(Replaces 800 0095)***	17.671	2	G456766	
SCREW, Tapping..... 61 Thru 63 01 (WAC-#14-10 Dia.): 61-62 01 (WAC-2 Req. -#10-14 Dia.): 61 20 (WAC-2 Req. -#14-10 Dia.): 60-61 80 (5 Req. -#14-10 Dia.)..... ***(Replaces 800 0103)***	17.671	AR	G9411563	
BOLT, Hexagon..... 61 10-20 (WAC)	17.038	2	G180016	NA
WASHER, Plain..... 61 10-20 (WAC)	17.814	2	G120392	NA
WASHER, Lock..... 61 10-20 (WAC)	17.820	2	G120380	NA
NUT, Speed..... 61 Thru 63 01 (WAC): 61-62 10-20 (WAC)	12.125	2	400 0340	
NUT, Spring..... 60-61 80	17.424	5	G445407	
Lower Baffle To Side Baffle				
SCREW, Tapping..... 60 80 ..... ***(Replaces 800 0103)***	17.671	2	G9411563	
WASHER, Plain..... 60 80 ..... ***(Replaces 800 0149)***	17.814	2	400 1089	
NUT, Spring..... 60 80	17.424	2	G445407	
BAFFLE, Radiator Air (Upper)(Support To Support)				
64-65 01	.....	1	350 5512	

Copyright 1963 American Motors Corp.

GROUP NO. — DESCRIPTION — YEAR and MODEL	PRIMARY GROUP NO.	PER CAR	PART NO.	CODE
BAFFLE, Radiator Air (Upper)(CROSSMEMBER, Wheelhouse To Wheelhouse)				
64 10-80 ... *(Replaces 349 2473)(Use 352 4775)*	.....	1	349 2472	
65 10	.....	1	353 6299	
65 80	.....	1	353 6437	
BAFFLE, Radiator Air (Side)(Radiator Support)				
(Left) 60 Thru 63 01	2.023	1	315 7186	
(Left) 64-65 01...(Incl. Seal)	2.023	1	350 5521	
(Left) 60 Thru 62 10: 60-61 20: 62 80...(Incl. Anti-Squeak And Seal)	2.023	1	315 8333	
(Left) 63 10-80...(Incl. Seals)	2.023	1	348 2413	
(Left) 65 10...(Incl. Seal)	2.023	1	351 5893	
(Left) 60 80...(Incl. Anti-Squeak And Seal)	2.023	1	315 8334	
(Left) 64 10-80 ... *(Replaces 350 1215)*	2.023	1	448 1557	
(Left) 61 80...(Incl. Anti-Squeak And Seal)	2.023	1	345 8215	
(Left) 65 80...(Incl. Seal)	2.023	1	351 5939	
(Right) 60 Thru 63 01	2.023	1	315 7187	
(Right) 64-65 01...(Incl. Seal)	2.023	1	350 5520	
(Right) 60 Thru 62 10-20 (LAC): 62 80 (LAC)...(Incl. Anti-Squeak And Seal)	2.023	1	315 8317	
(Right) 60 Thru 62 10 (WAC): 60-61 20 (WAC): 62 80 (WAC)...(Incl. Anti-Squeak And Seal)	2.023	1	315 8325	
(Right) 63 10-80...(Incl. Seals)	2.023	1	348 2412	
(Right) 64 10-80...(Incl. Seals) ... *(Replaces 350 1214)*	.....	1	448 1556	
(Right) 65 10...(Incl. Seal)	2.023	1	351 5892	
(Right) 60 80 (LAC)...(Incl. Anti-Squeak)	2.023	1	315 8323	
(Right) 60 80 (WAC)...(Incl. Anti-Squeak And Seal)	2.023	1	315 8335	
(Right) 61 80 (LAC)...(Incl. Anti-Squeak)	2.023	1	345 8212	
(Right) 61 80 (WAC)...(Incl. Anto-Squeak And Seal)... *(Replaces 345 8207)*	2.023	1	345 8209	
(Right) 65 80...(Incl. Seal)	2.023	1	351 5938	
ATTACHING PARTS				
Side Baffle To Lower Bracket				
SCREW, Machine..... 60 01 ... *(Replaces 800 0317)*	17.626	4	400 0991	
NUT, Hexagon..... 60 01	17.406	4	G120375	NA
Side Baffle To Wheelhouse				
BOLT, Hexagon 60-61 01	17.038	4	G180020	NA
BOLT, Hexagon 60-61 10-20-80	17.038	8	G181608	NA
SCREW, Tapping..... 62 10-80	17.670	6	G172475	NA
SCREW, Machine..... 62-63 01	17.626	8	G274825	NA
WASHER, Plain 60-61 01	17.814	4	G118773	NA
WASHER, Plain..... 60 Thru 62 10-80	17.814	8	G120393	NA
WASHER, Lock ..... 60 Thru 62 10-80	17.820	8	G120214	NA
NUT, Hexagon 60 01	17.406	12	G120375	NA
NUT, Lock..... 60 Thru 63 01	17.417	8	G273801	NA
Side Baffle To Front Upper Crossmember				
BOLT, Hexagon 62 10-80	17.038	4	G181595	NA
WASHER, Plain..... 62 10-80	17.814	4	G120393	NA
WASHER, Lock..... 62 10-80	17.820	4	G120214	NA
NUT, Hexagon..... 62 10-80	17.406	4	G120368	NA
Side Baffle To Front Wheelhouse Reinforcement				
SCREW, Tapping..... 60 10-20-80	17.670	6	G172473	NA
SCREW, Tapping..... 61 10-20-80	17.670	6	G172475	NA
WASHER, Lock 60-61 10-20-80	17.820	6	G120214	NA
WASHER, Plain..... 60-61 10-20-80	17.814	5	G120393	NA

Copyright 1963 American Motors Corp.

GROUP NO. — DESCRIPTION — YEAR and MODEL	PRIMARY GROUP NO.	PER CAR	PART NO.	CODE
Side Baffle To Grille Panel				
SCREW, Tapping..... 63 10-80	12.075	6	400 0424	
NUT, Spring..... 63 10-80	17.426	6	G447026	
Side Baffle To Grille Panel Support				
SCREW, Tapping..... 63 10-80	17.671	2	G9411563	
NUT, Spring..... 63 10-80	17.426	6	G447026	
SEAL, Side Radiator Air Baffle To Wheelhouse				
(Upper) 64-65 01	.....	2	350 0204	
(Lower) 64-65 01	2.023	2	350 0205	
ANTI-SQUEAK, Side Radiator Air Baffle To Wheelhouse				
60 Thru 62 10-20-80	.....	2	342 1719	
EXTENSION, Upper Air Baffle (Metal)				
64-65 01 (LHE)(OHV-196)	.....	1	317 4334	#
63-64 10 (OHV-196)...(Incl. Seal)	.....	1	348 2437	
63-64 10-80 (V8)...(Incl. Seal): 64 10 (OHVC-232)...(Incl. Seal)	.....	1	316 9977	
65 10...(Incl. Seal)	.....	1	351 5995	
65 80...(Incl. Seal)	.....	1	351 5997	
ATTACHING PARTS				
Upper Air Baffle Extension To Upper Baffle				
SCREW, Tapping..... 64-65 01	17.666	4	G161631	NA
SCREW, Tapping..... 63 10 ***(Replaces 800 0105)***	17.671	5	400 1042	
SCREW, Tapping..... 63 80 ***(Replaces 800 0103)***	17.671	5	G9411563	
SCREW, Tapping..... 64 10-80	17.671	5	400 1040	
SCREW, Tapping..... 65 10 (6 Req.): 65 80 (8 Req.)	3.165	AR	400 0478	
SEAL, Upper Air Baffle Extension				
65 10-80 (V8)	.....	1	348 2430	
SEAL, Lower Air Baffle				
61 Thru 63 01 (WAC)	.....	1	316 2053	
64-65 01 (WAC)	.....	1	350 0197	
61-62 10 (WAC): 61 20 (WAC)	.....	1	316 2254	
64 01: 63-64 10 (Six)	.....	1	348 2430	
61 80	.....	1	316 0631	
63-64 10-80 (V8): 65 10 (WAC): 65 80	.....	1	348 2431	#
ATTACHING PARTS				
Seal To Lower Baffle				
CLIP..... 64 01	12.022	11	400 0085	
CLIP..... 65 01	.....	6	400 1523	
CLIP..... 63 Thru 65 10-80	12.022	5	400 0085	#
RETAINER ASSEMBLY, Lower Air Baffle (Incl. Seal)				
65 01 (LHE)(OHV-196)	.....	1	353 0567	
ATTACHING PARTS				
Retainer To Lower Baffle				
SCREW, Tapping..... 65 01 (LHE)(OHV-196)	17.671	5	G274627	#
SEAL, Lower Air Baffle Retainer				
65 01 (LHE)(OHV-196)	.....	1	348 2430	

Copyright 1963 American Motors Corp.

GROUP NO. — DESCRIPTION — YEAR and MODEL	PRIMARY GROUP NO.	PER CAR	PART NO.	CODE
SEAL, Side Air Baffle				
60 Thru 62 10-20-80	.....	2	342 1545	
(Side) 63-64 10-80	2.023	2	348 2428	
(Upper) 63-64 10-80	2.023	2	348 2426	
SEAL, Upper Air Baffle				
64 01	.....	1	350 0196	
63-64 10 (Six-26" Long)	.....	1	348 2430	
63-64 10-80 (V8-26" Long)	.....	1	348 2431	
63-64 10-80 (47-5/8" Long)	.....	1	348 2427	
ATTACHING PARTS Upper Seal To Retainer				
SCREW, Tapping..... 63-64 10-80 (WAC)	17.671	5	G455702	NA
RETAINER, Upper Air Baffle Seal (Metal)				
62-64 10-80 (WAC)	.....	1	348 2429	
GROMMET, Wire				
60-61 10-20-80 (1-5/16" O.D.)	3.166	1	312 7192	
61 10-20-80 (1" O.D.)	3.288	1	55 350	
2.080 PUMP ASSEMBLY, Water				
60 01 (LAE): 61 01 (LAC-Note 2.080-1)	.....	1	320 5594	
60 01 (WAE-LAC)***(Heavy Duty-Note 2.016-3)***	.....	1	320 1269	
61 01 (WAC)***(Heavy Duty)***(LAC-Note 2.080-2): 62 01 (LAE)(WAE-Note 2.080-3): 63 01 (LAE)(WAE-Notes 2.016-5 & 2.016-7): 64 01	.....	1	320 2644	
61 01 (WAE-LAC): ***61-62 01 (Heavy Duty-Note 2.016-3):*** 62 01 (WAE-Note 2.080-3 Type 1): 63 01 (WAE-Note 2.016-9)	.....	1	320 2972	

NOTE 2.080-1: Used Prior to Car Code No. 21119.

NOTE 2.080-2: Used beginning with Car Code No. 21119.

NOTE 2.080-3: Two Types of Water Pumps were used on the 62 01 and 62 10 OHVC built with an Autolite 40 AMP Alternator. They can be identified as follows:

Type 1: The Alternator Bracket is "L" shaped and Steel Bar Stock. The Adjusting Strap is 5-1/2" long with Two 13/32" I.D. Mounting Holes.

Type 2: The Bracket is Cast Iron and the Adjusting Strap is 3-3/4" long with One 13/32" I.D. Hole.

Copyright 1963 American Motors Corp.

GROUP NO. — DESCRIPTION — YEAR and MODEL		PRIMARY GROUP NO.	PER CAR	PART NO.	CODE
65 01 (LHE)(OHV-196)		.....	1	320 5554	
65 01 (OHV-199)(OHV-232)		.....	1	320 5620	
60 10 (LAE): 61 10 (OHVC): 62 10 (OHVC-LAE)(OHVC-WAE-Note 2.016-9): 63-64 10 (OHVC-196)		.....	1	320 1686	
61 10 (OHVA): 62 10 (OHVA-LAE) (OHVA-WAE-Note 2.016-9): 63-64 10 (OHVA)		.....	1	320 2447	
64 10 (OHVC-232): 65 10 (Six): 65 80 (OHVC-232-LAF)		.....	1	320 5287	
60 10 (WAE-LAC)(Heavy Duty-Note 2.016-3): 61-62 10 (OHVC-Heavy Duty-Note 2.016-3): 62 10 (OHVC-WAE-Note 2.080-3 Type 1)		.....	1	320 1267	
61-62 10 (OHVA-Heavy Duty-Note 2.016-3): 62 10 (OHVA-WAE-Note 2.016-6)		.....	1	320 2645	
60-61 20: 60 Thru 65 10-80 (V8-LAF): 63-64 80 (WAE-Notes 2.016-9 & 2.003-3 Type 1)		.....	1	320 1265	
60-61 80 (WAF)		.....	1	320 1268	
62 80 (WAF)		.....	1	320 3138	
63 80 (WAF-Note 2.003-2 Type 1)		.....	1	320 3873	
63 10 (V8-WAF): 63 80 (WAF-Note 2.003-2 Type 2): 64-65 10-80 (V8-WAF)		.....	1	320 4437	
63 Thru 65 10-80 (V8-WAE-Notes 2.016-9 & 2.003-3 Type 2)		.....	1	320 4476	
ATTACHING PARTS					
Water Pump To Block					
STUD	61 Thru 64 10 (OHVA)	.....	3	316 0287	
STUD	60 Thru 65 01 (LHE-4 Req. -1 5/16" Long) (OHV-196-4 Req. -1 5/16" Long) : 60 10 (3 Req.): 62 Thru 64 10 (OHVC-196-4 Req.)	17.718	AR	G456025	NA
STUD	***60 Thru 62 01 (3 Req. -Heavy Duty-Note 2.016-3):*** 60 10 (1 Req.): ***61-62 10 (1 Req. OHVC-Heavy Duty-Note 2.016-3)***	17.718	AR	G103175	NA
STUD	65 01 (LHE-2-1/8" Long)(OHV-196-2-1/8" Long)	4.010	1	315 0831	
STUD	65 01 (LHE-2-3/8" Long)(OHV-196-2-3/8" Long)	4.010	1	315 0832	
STUD	64 10 (OHVC-232)	17.718	1	G191991	NA
BOLT, Hexagon	***61-62 01 (Heavy Duty-Note 2.016-3): 61-62 10 (OHVC-Heavy Duty-Note 2.016-3)***	17.038	1	G180121	NA
BOLT, Hexagon	65 01 (OHV-199)(OHV-232): 64 10 (7/8"-OHV-232): 65 10 (Six): 65 80 (OHV-232)	17.038	3	G180078	NA
BOLT, Hexagon	64 10 (1-1/4-OHVC-232)	17.038	1	G180008	NA
NUT, Hexagon	61 01-10 (OHVC): 60 Thru 65 01 (LHE)(OHV-196): 62 Thru 64 10 (196)	17.406	4	G120368	
WASHER, Plain	62 Thru 64 01-10 (OHVA)	17.814	3	G120393	NA
WASHER, Lock	62 Thru 65 01-10 (Six-Spring-5/16" x 19/32"): 65 80 (OHVC-232)	17.820	4	G120214	NA
WASHER, Lock	***61-62 01 (External 5/16 x 19/32-Heavy Duty-Note (External 5/16 x 19/32-OHVC-Heavy Duty. Note 2.016-3).***	17.822	1	G138485	NA
WASHER, Lock	***61-62 01 (11/16" O.D. -Heavy Duty-Note 2.016-3): 62 10 (11/16" O.D. -OHVC-Heavy Duty-Note 2.016-3)***	17.820	1	G120382	NA
Water Pump To Engine Front Cover					
STUD	60 Thru 65 10-80 (V8)	.....	4	314 9615	
WASHER, Plain	60 Thru 65 10-80 (V8)	1.185	4	49 369	
NUT, Hexagon	60 Thru 65 10-80 (V8)	17.406	4	G120368	
Water Pump To Generator Adjusting Strap					
STUD	60 Thru 63 01: 60 10: 62-63 10 (OHVC)	17.718	1	G192426	
STUD	61 10: 62-63 10 (OHVA)	3.014	1	316 0301	
WASHER, Lock	60 Thru 63 01-10	17.820	1	G120382	NA
NUT, Hexagon	60 Thru 63 01-10	17.406	1	G120369	NA

Copyright 1963 American Motors Corp.

GROUP NO. — DESCRIPTION — YEAR and MODEL	PRIMARY GROUP NO.	PER CAR	PART NO.	CODE
CAP, Water Pump Body (Less Heater)				
64 01 (OHV-196-LDT-2 Req.): 65 01 (OHV-199-1 Req.)(OHV-232-1 Req.): 61 Thru 63 10 (OHVA-1 Req.): 64 10 (2 Req.): 65 10 (Six-2 Req.): 65 50 (Six-1 Req.): 65 80 (OHVC-232-2 Req.)	.....	AR	316 0337	
CLAMP, Water Pump Body Cap (Less Heater)				
64 01 (OHV-LDT-2 Req.): 65 01 (OHV-199-1 Req.)(OHV-232-1 Req.): 61 Thru 63 10 (OHV-1 Req): 64 10 (2 Req.)	17.108	AR	320 3077	
65 10-80 (Six)	17.108	1	G272851	
CLAMP, Water Pump To Cylinder Head Water By-Pass Hose				
65 01 (LHE)(OHV-196)	17.108	2	G272851	
PLUG, Water Pump Body (Less Heater)				
60 Thru 64 01: 65 01 (LHE)(OHV-196): 61 Thru 64 10 (OHV)	17.486	1	G103867	NA
HOSE, Water Pump To Cylinder Head Water By-Pass (With Heater)				
65 01 (LHE)	.....	1	317 6484	
65 01 (OHV-196)(Bulk-Order in Feet)	13.050	AR	375 0497	
NIPPLE, Water Pump To Cylinder Head Water By-Pass Hose				
65 01 (LHE)(OHV-196)	.....	2	317 6328	
2.082 BODY, Water Pump (Cover, Engine Front)				
60-61 20-80: 63-65 10-80 (V8) ***(Replaces 320 2087)***	1.121	1	320 3682	
MANIFOLD, Water Outlet				
60 Thru 65 10-20-80 (V8)	.....	1	315 2931	
ATTACHING PARTS				
Manifold To Cylinder Head				
BOLT, Hexagon ..... 60 20-80 (WAS-1" Long-4 Req.)(LAS-1" Long-3 Req.): 61-62 20-80 (4 Req.)	17.038	AR	G179839	NA
BOLT, Hexagon ..... 60 20-80 (WAS-1-3/8" Long)	17.038	1	G179842	NA
BOLT, Hexagon ..... 63 Thru 65 10-80 (V8)	17.038	4	G180122	NA
WASHER, Plain..... 61 Thru 65 10-20-80 (V8) ***(Replaces 800 0163)***	17.814	4	400 1102	
WASHER, Lock 60 20-80: 65 50 (V8)	17.820	4	G120382	NA
GASKET, Water Outlet Manifold				
60 Thru 65 10-20-80 (V8)	1.059	2	314 4683	
SEAL, Water Outlet Manifold				
60 Thru 65 10-20-80 (V8)	.....	1	314 4684	
2.098 GASKET, Water Pump				
60 Thru 65 01 (LHE)(OHVC-196): 60 Thru 64 10 (OHVC-196)	.....	1	315 0214	
61 Thru 64 10 (OHVA)	.....	1	316 0302	
65 01 (OHV-199)(OHV-232): 64 10 (OHV-232): 65 10 (Six): 65 80 (OHV-232)	.....	1	317 3204	
64-65 10-80 (V8)	.....	1	317 0778	
60 Thru 63 20-80 ***(Replaces 314 4579)***	.....	1	317 0778	
2.100 THERMOSTAT KIT (Incl. Gasket)				
Dole (150 Deg.) 60-61 01: 60 10: 61 10 (OHVC) ***(Use 320 3468)***	.....	1	320 1251	
Dole (150 Deg.) ***65 01 (OHV-199-Export Only)(OHV-232-Export Only): 61 Thru 64 10 (OHVA-Export Only): 64 10 (OHVC-232-Export Only): 65 10 (Six-Export Only): 65 80 (OHVC-232-Export Only)***	.....	1	320 3467	

Copyright 1963 American Motors Corp.

GROUP NO. — DESCRIPTION — YEAR and MODEL	PRIMARY GROUP NO.	PER CAR	PART NO.	CODE
Dole (150 Deg.) ***61 Thru 64 01 (Export Only): 61 Thru 64 10 (OHVC-196-Export Only):*** 65 01 (LHE)(OHV-196) ***(Replaces 320 4600)***	.....	1	320 3468	
Dole (167-172 Deg.) 60-61 01 (OHV): 60 10: 61 10 (OHVC): 60-61 20-80 ***(Use 320 3273)***	.....	1	320 1255	
Dole (167-173 Deg.) 60-61 01: 60 10: 61 10 (OHVC) ***(Use 320 3273)***	.....	1	320 1249	
Dole (177-182) Deg.) 60-61 01: 60 10: 61 10 (OHVC)	.....	1	320 3273	
Dole (177-182 Deg.) 60-61 20-80 ***(Use 320 3273)***	.....	1	320 1254	
Dole (192-197 Deg.) 60 Thru 64 01: 65 01 (LHE)(OHV-196): 61 Thru 64 10 (OHVC-196)	.....	1	320 5798	
Dole (192-197 Deg.) 65 01 (OHV-199) (OHV-232): 61 Thru 64 10 (OHVA): 64 10 (OHV-232): 65 10 (Six): 65 80 (OHV-232) ***(Replaces 320 2646)***	.....	1	320 3275	
Dole (192-197 Deg.) 62 Thru 65 10-80 (V8) ***(Replaces 320 3274)***	.....	1	320 4586	
Thompson (177-182 Deg.) 60-61 20-80: 60 10	.....	1	320 1252	
Thompson (177-183 Deg.) 60-61 01 (LHE)	.....	1	320 1253	

GASKET, Thermostat To Housing

60 Thru 64 01: 65 01 (LHE)(OHV-196): 60 Thru 64 10 (OHVC): 60 Thru 65 10-20-80 (V8)	.....	1	310 8869	
61 Thru 64 10 (OHVA)	.....	1	316 0163	

2.102 HOUSING, Thermostat

60 Thru 64 01: 65 01 (LHE)(OHV-196): 60 Thru 62 10 (OHVC): 60 Thru 65 10-80 (V8)	.....	1	314 4687	
61 Thru 64 10 (OHVA)	.....	1	315 9948	
63-64 10 (OHVC-196)	.....	1	316 6619	
65 01 (OHV-199)(OHV-232): 64 10 (OHV-232): 65 10 (Six): 65 80 (OHV-232)	.....	1	317 2305	

ATTACHING PARTS

Thermostat Housing To Cylinder Head

SCREW, Machine	60 Thru 64 01: 65 01 (LHE)(OHVC-196): 60 Thru 62 10 (OHVC) ***(Replaces 800 0068)***	17.626	1	400 0987	
STUD	65 01 (2-5/8" OHV-199)(2/5/8" OHV-232): 64 10 (2-5/8"-OHV-232): 65 10 (2-5/8"-Six): 65 80 (2-5/8"-OHV-232)	.....	1	317 2316	#
STUD	65 01 (1-1/2"-OHV-199)(1-1/2"-OHV-232): 64 10 (1-1/2"-OHV-232): 65 10 (1-1/2"-Six): 65 80 (1-1/2-OHV-232)	.....	1	317 2315	
BOLT, Hexagon	65 10 (Six-WAE-Notes 2.016-9 And 2.003-3)	17.038	1	G180079	NA
WASHER, Plain	65 01 (OHV-199)(OHV-232): 61-62 10 (OHVA): 63-64 10 (OHV-196): 65 10 (Six): 65 80 (OHV-232)	17.814	2	G120393	NA
WASHER, Lock	65 01 (OHV-199)(OHV-232): 61-62 10 (OHV): 63-64 10 (OHV-196): 65 10 (Six): 65 80 (OHV-232)	17.820	2	G120214	
WASHER, Lock	65 10 (Six-WAE-Notes 2.016-9 And 2.003-3)	17.822	1	G138485	NA
NUT, Hexagon	65 01 (OHV-199)(OHV-232): 64 10 (OHV-232): 65 10 (Six): 65 80 (OHV-232)	17.406	2	G120368	

Thermostat Housing To Manifold

SCREW, Machine	60 Thru 65 10-20-80 ***(Replaces 800 0068)***	17.626	2	400 0987	

GASKET, Thermostat Housing

60 Thru 62 01: 60 Thru 62 10 (OHVC): 60 Thru 62 20-80	.....	1	312 8233	
61 Thru 64 10 (OHVA)	.....	1	316 0164	
63-64 01: 63 Thru 65 10-80 (V8): 65 01 (LHE)(OHV-196): 63-64 10 (OHVC-196)	.....	1	317 1856	
65 01 (OHV-199)(OHV-232): 64 10 (OHV-232): 65 10 (Six): 65 80 (OHV-232)	.....	1	317 2314	

CAP, Thermostat Housing (Less Heater)

65 01 (OHV-199)(OHV-232): 64 10 (OHVC-232): 65 10 (Six): 65 80 (OHV-232)	.....	1	316 0337	

CLAMP, Thermostat Housing Cap (Less Heater)

65 01 (OHV-199)(OHV-232): 64 10 (OHVC-232): 65 10 (Six): 65 80 (OHV-232)	17.108	1	320 3077	

Copyright 1963 American Motors Corp.

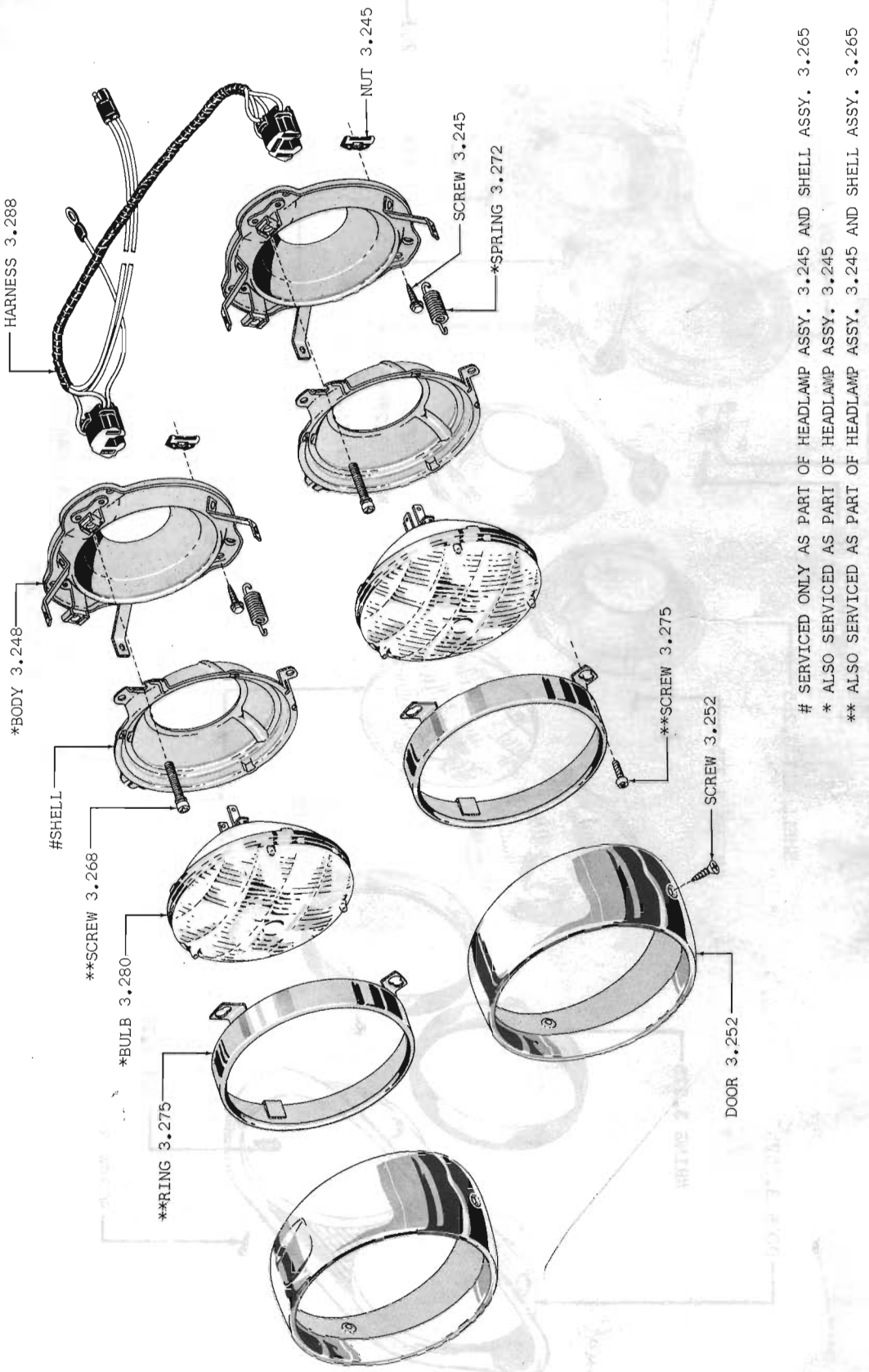

SERVICED ONLY AS PART OF HEADLAMP ASSY. 3.245 AND SHELL ASSY. 3.265
* ALSO SERVICED AS PART OF HEADLAMP ASSY. 3.245
** ALSO SERVICED AS PART OF HEADLAMP ASSY. 3.245 AND SHELL ASSY. 3.265

HEADLAMP 61 10-20: 62 10-80: Typical of 61 80

Copyright 1963 American Motors Corp.

Copyright 1963 American Motors Corp.

HEADLAMP 60 10-20-80

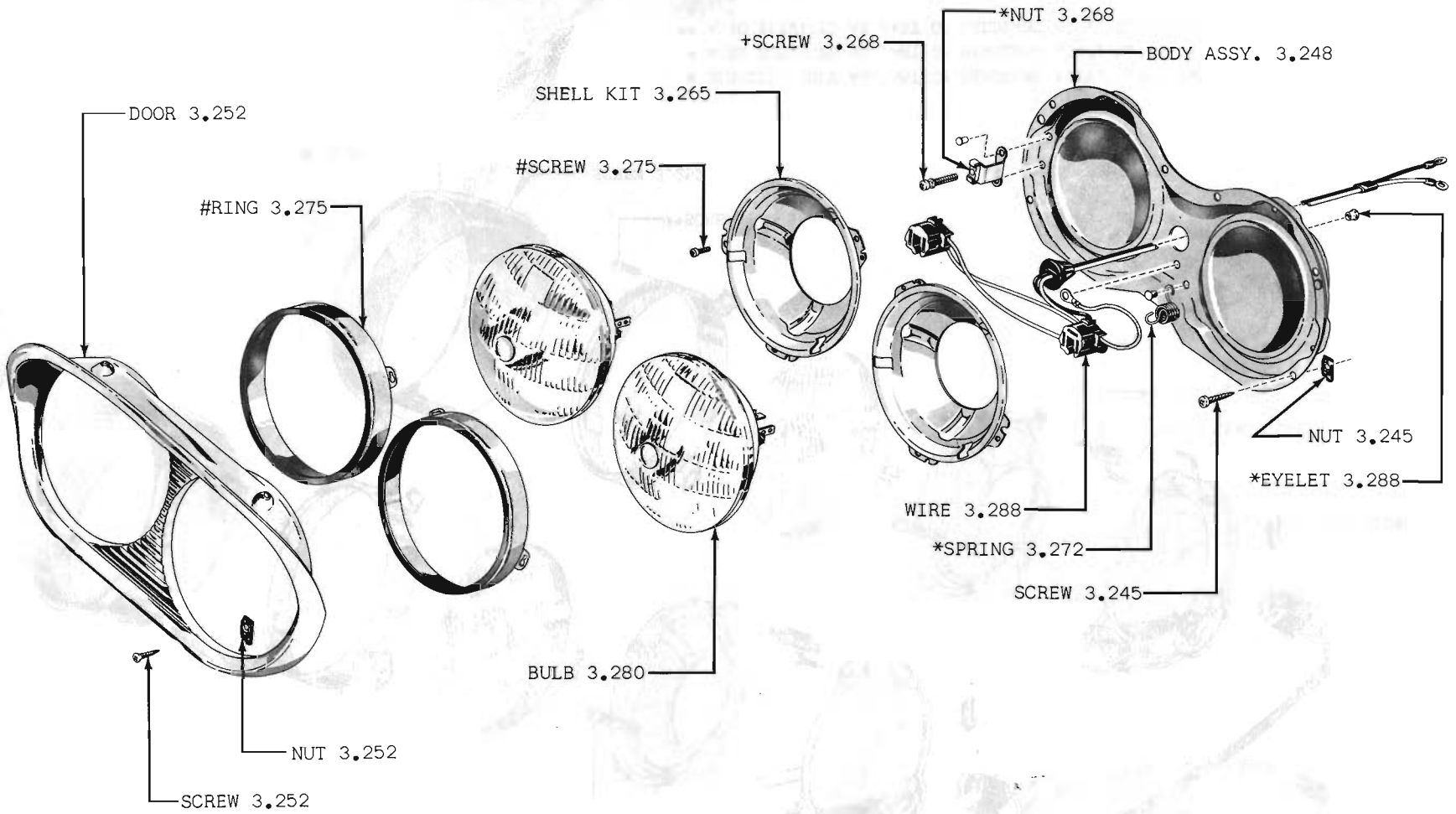

* ALSO SERVICED AS PART OF BODY ASSY. 3.248

\# ALSO SERVICED AS PART OF SHELL KIT 3.265

\+ ALSO SERVICED AS PART OF BODY ASSY. 3.248 AND SHELL KIT 3.265

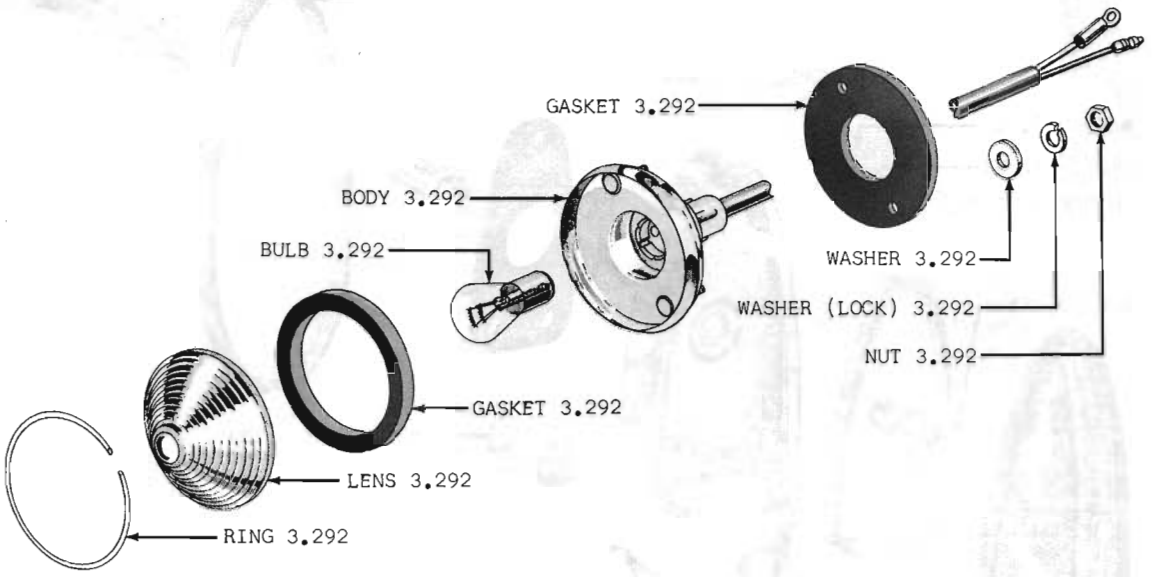

PARKING AND FRONT DIRECTIONAL SIGNAL LAMP 60 01

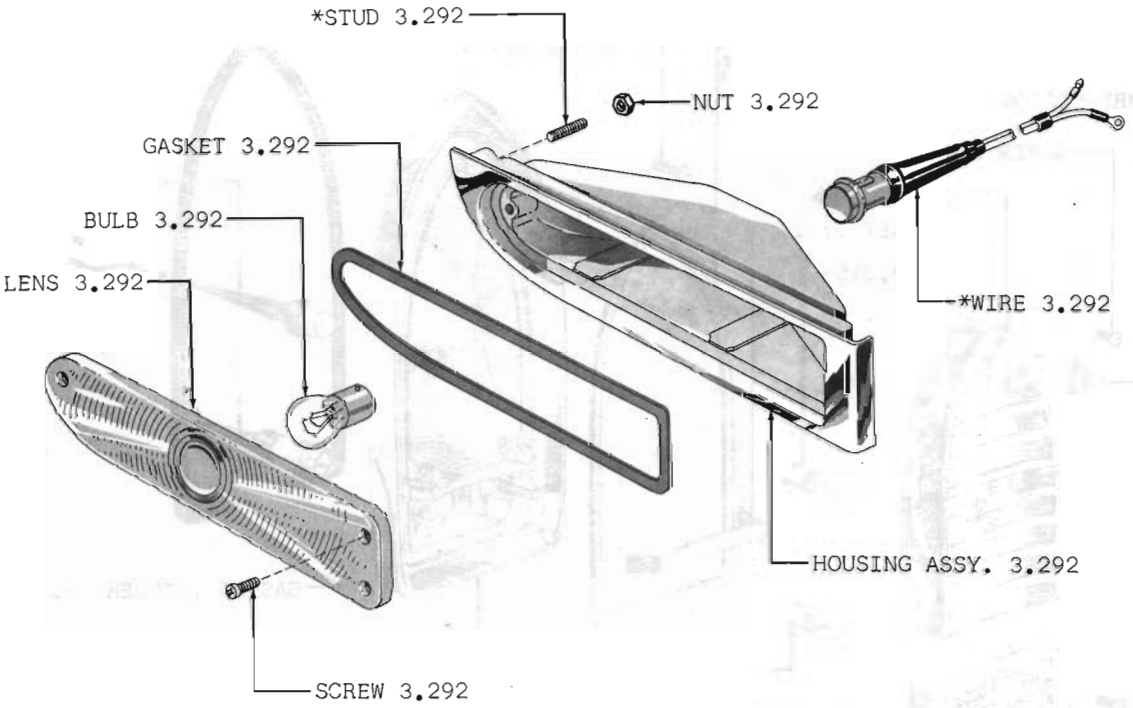

PARKING AND FRONT DIRECTIONAL SIGNAL LAMP 60 10-20-80

Copyright 1963 American Motors Corp.

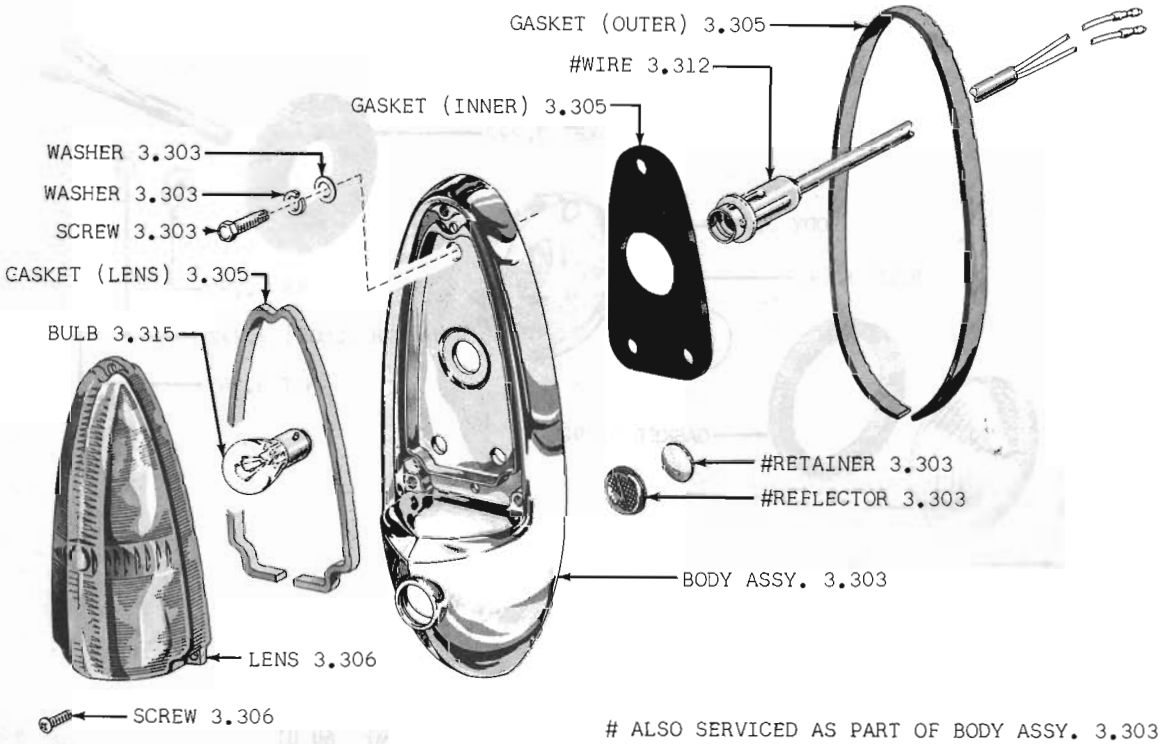

ALSO SERVICED AS PART OF BODY ASSY. 3.303

TAIL, STOP AND REAR DIRECTIONAL SIGNAL LAMP 60 01

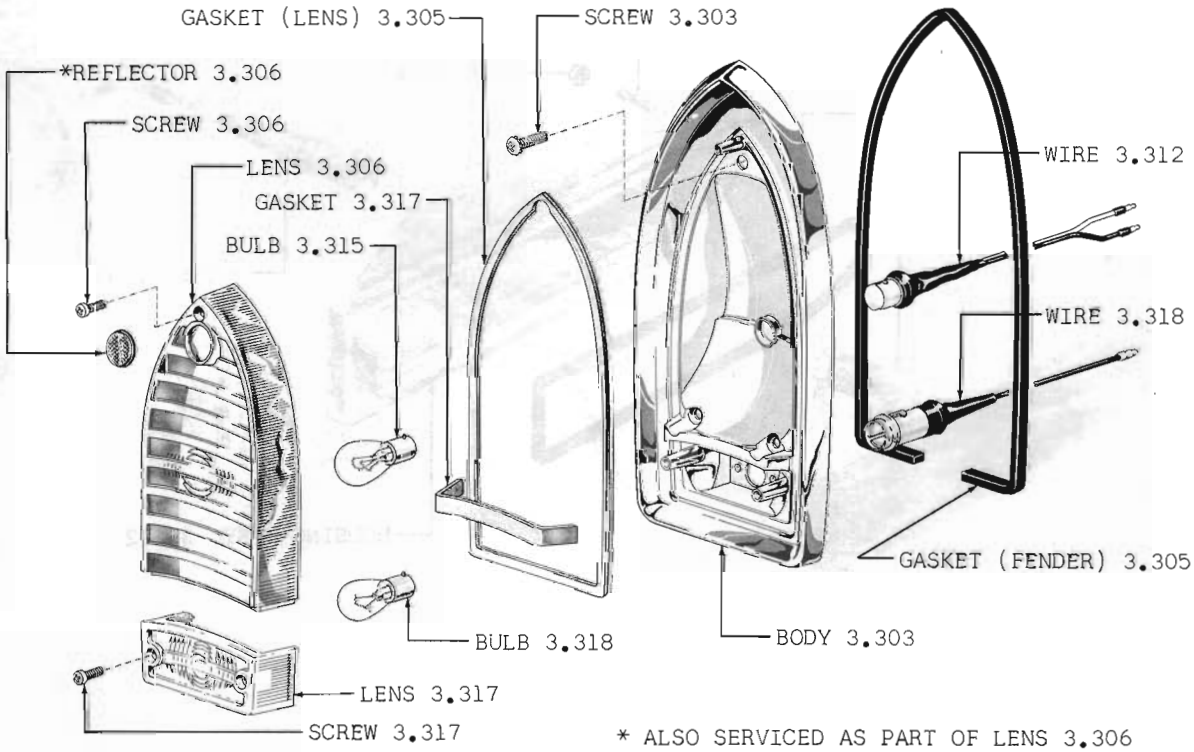

* ALSO SERVICED AS PART OF LENS 3.306

TAIL, STOP AND REAR DIRECTIONAL SIGNAL LAMP 60-61 10-20

Copyright 1963 American Motors Corp.

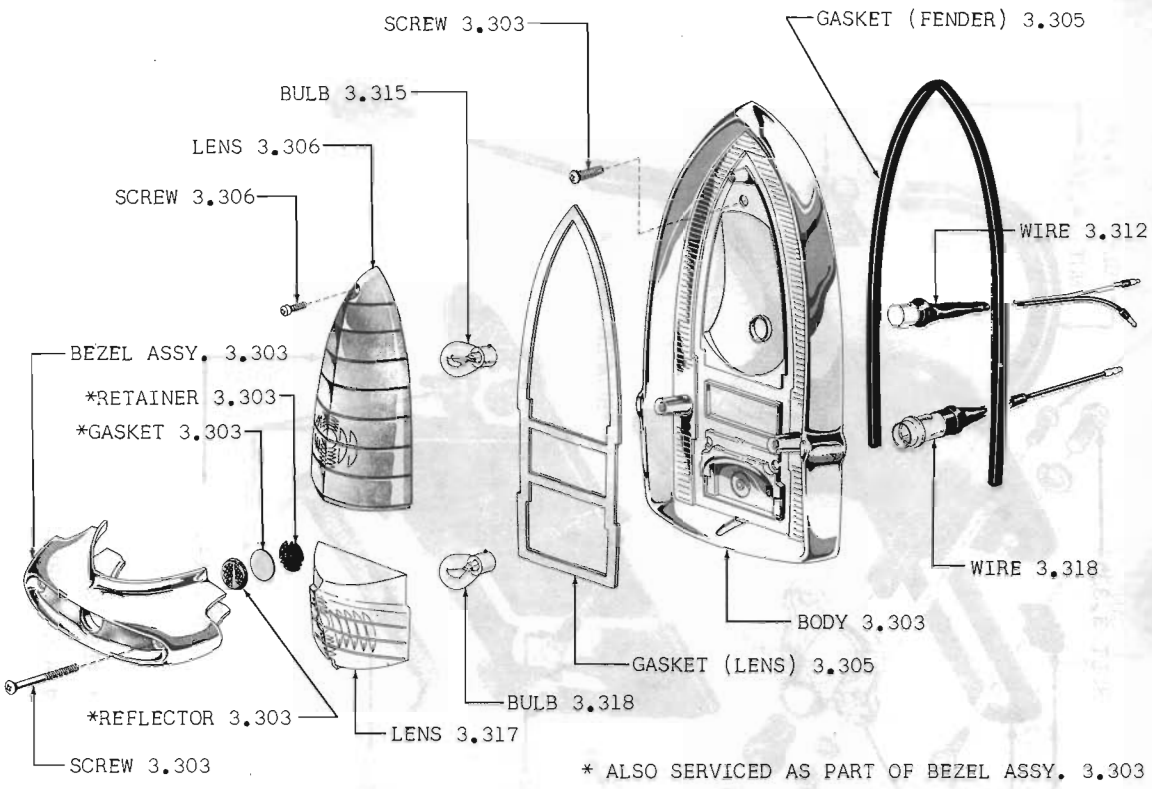

TAIL, STOP AND REAR DIRECTIONAL SIGNAL LAMP 60 80

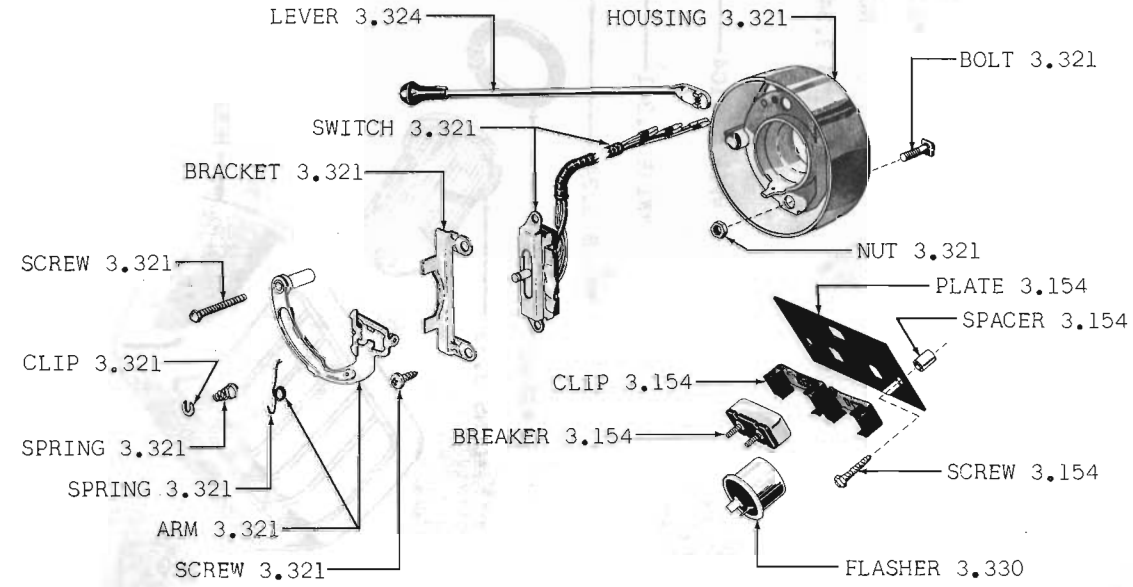

DIRECTIONAL SIGNAL LEVER 60 10-20-80

Copyright 1963 American Motors Corp.

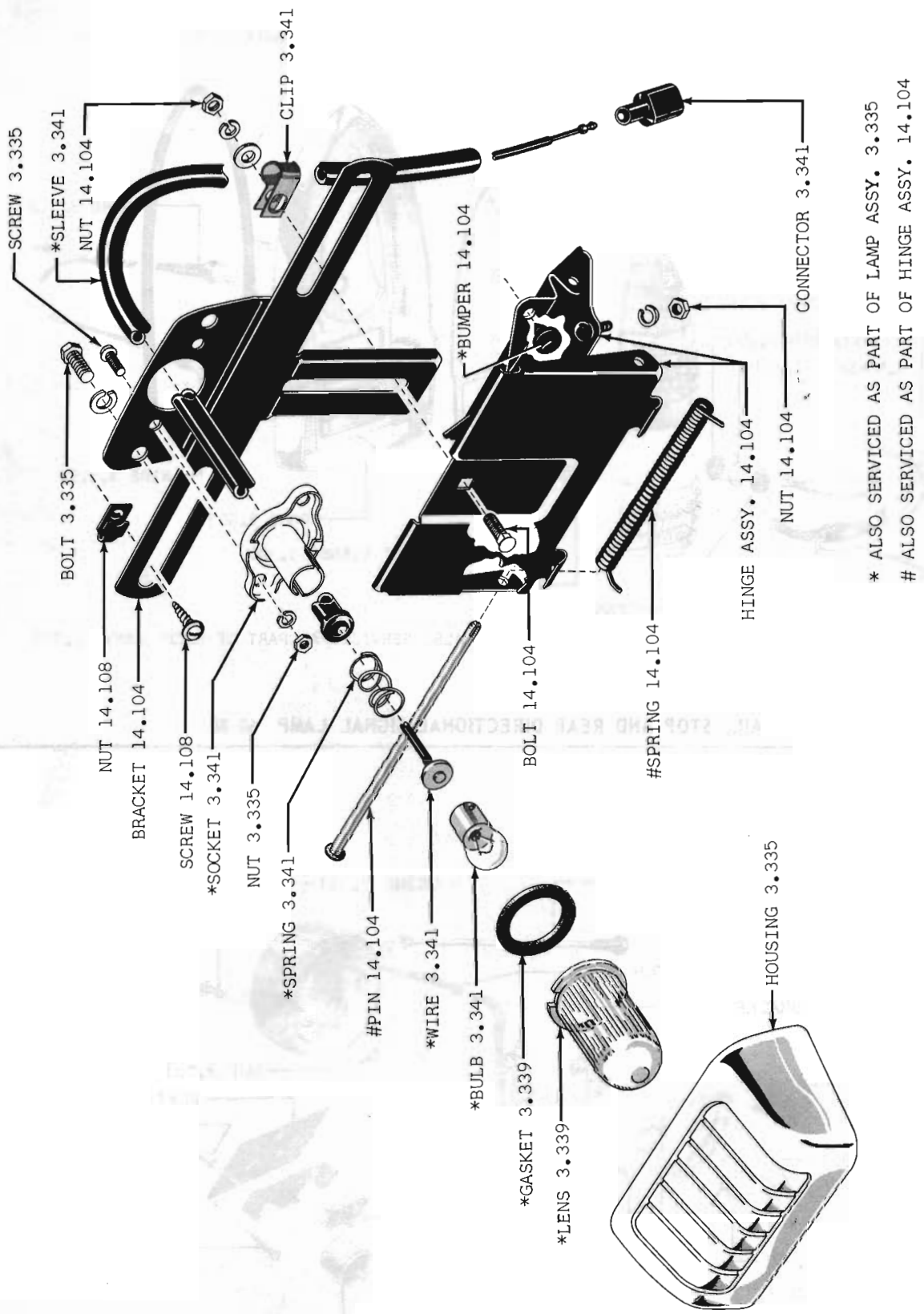

REAR LICENSE PLATE LAMP 60 02-05-06 (WWC)

Copyright 1963 American Motors Corp.

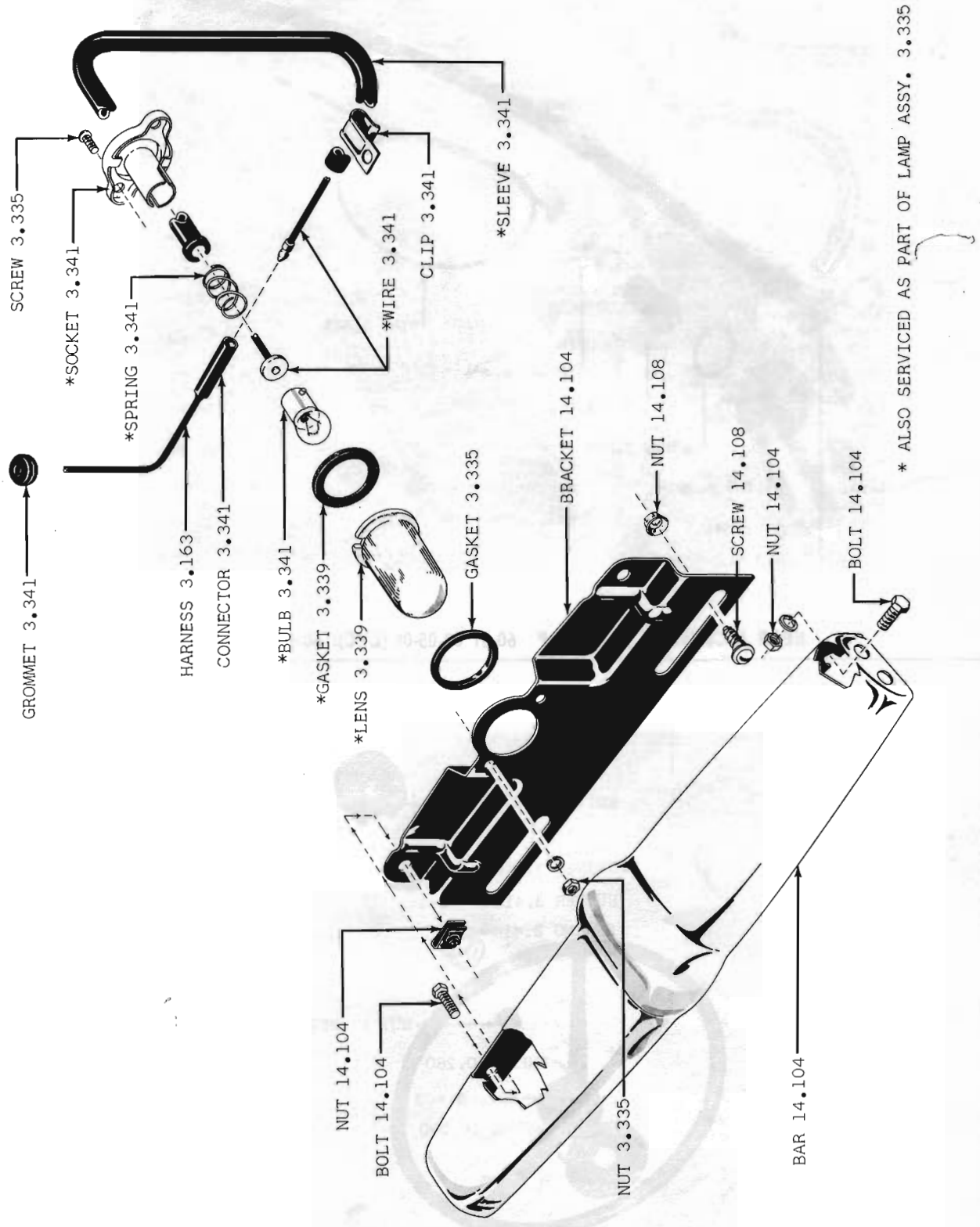

REAR LICENSE PLATE LAMP 60 04

Copyright 1963 American Motors Corp.

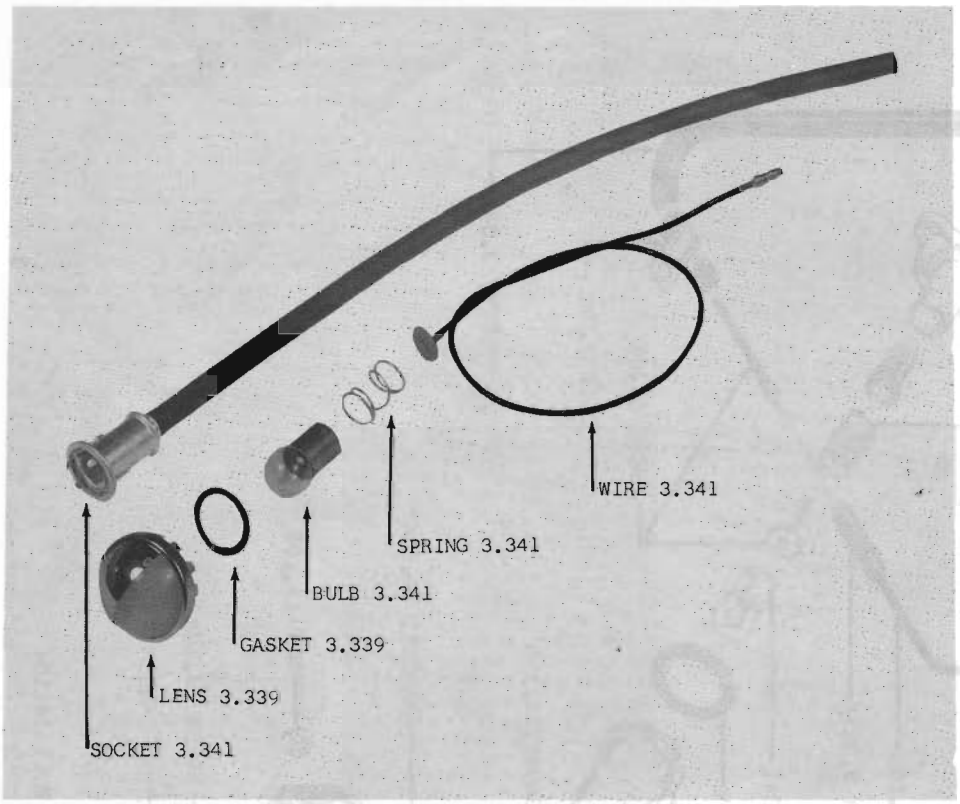

REAR LICENSE PLATE LAMP 60-61 02-05-06 (LWC): 60-61 10-20-80

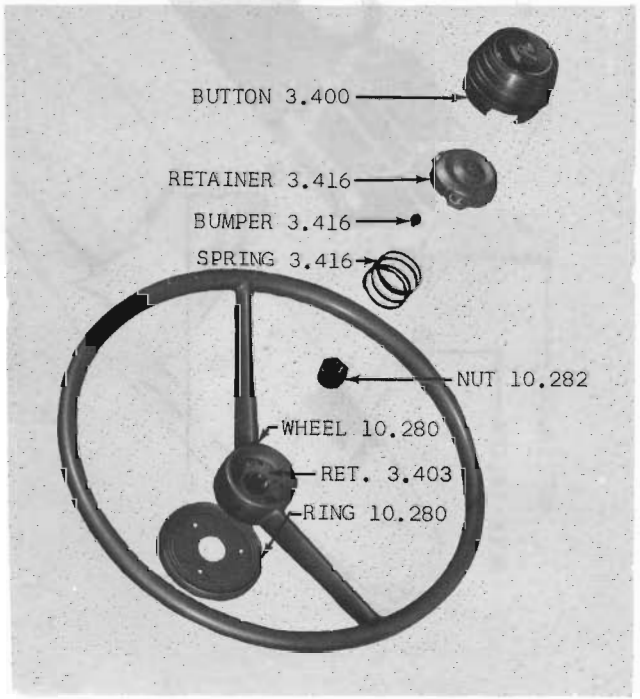

STEERING WHEEL AND HORN BUTTON 60 01

Copyright 1963 American Motors Corp.

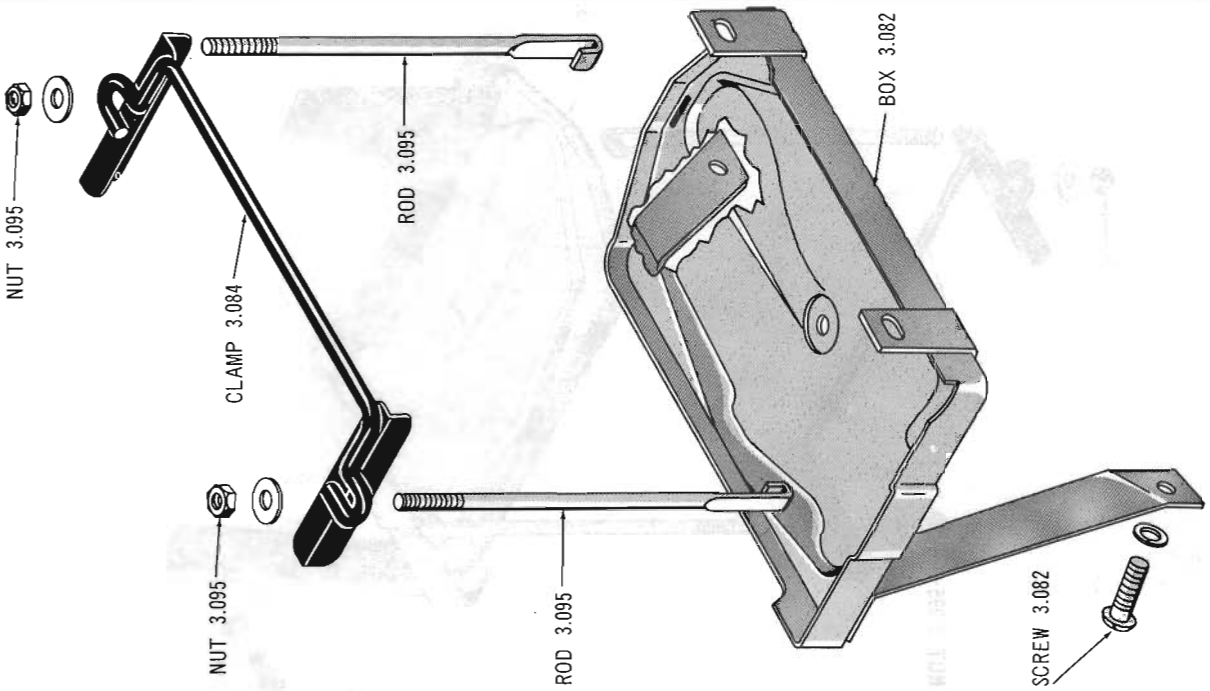

BATTERY BOX 62-63 01

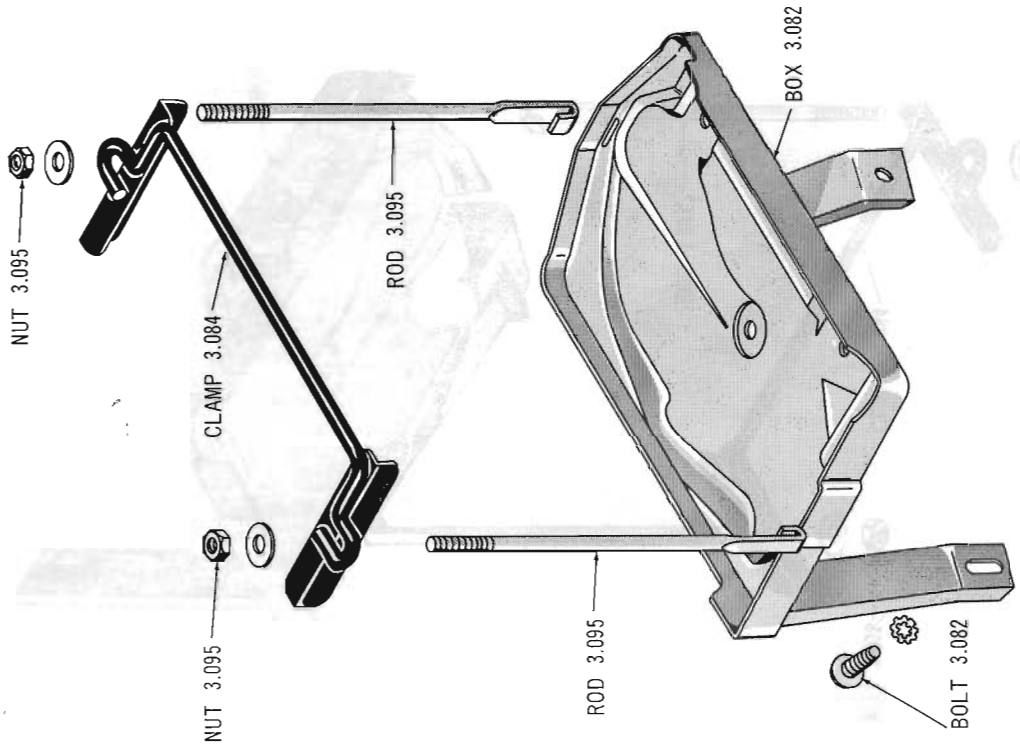

BATTERY BOX 64 01

Copyright 1963 American Motors Corp.

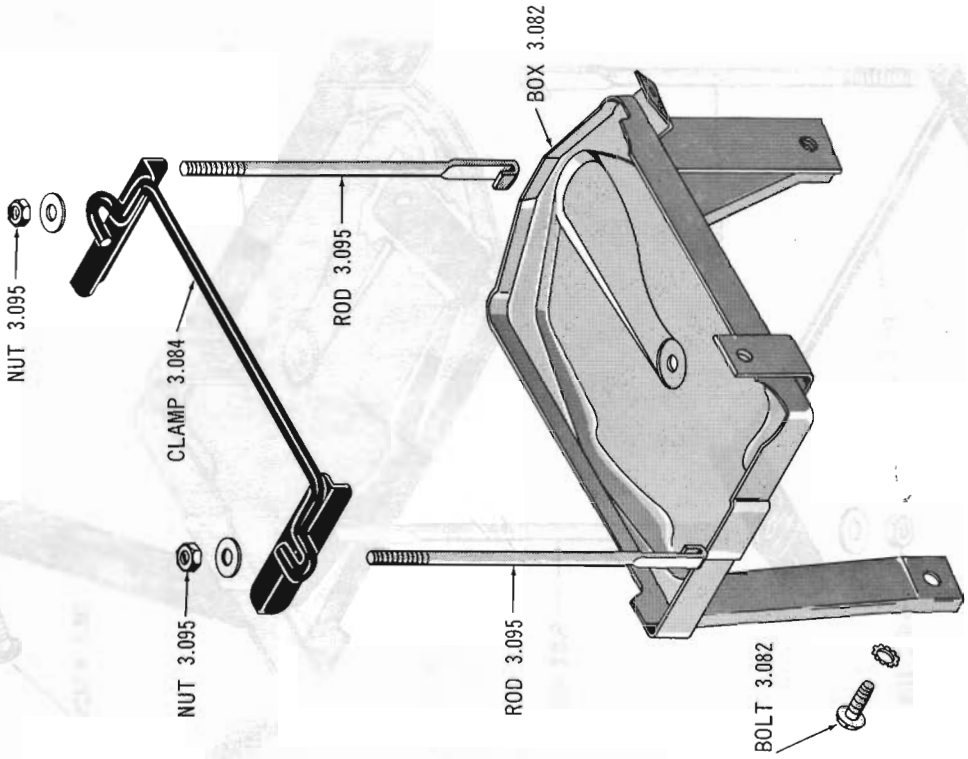

BATTERY BOX 60 thru Current 10 (Six): 65 80 (Six)

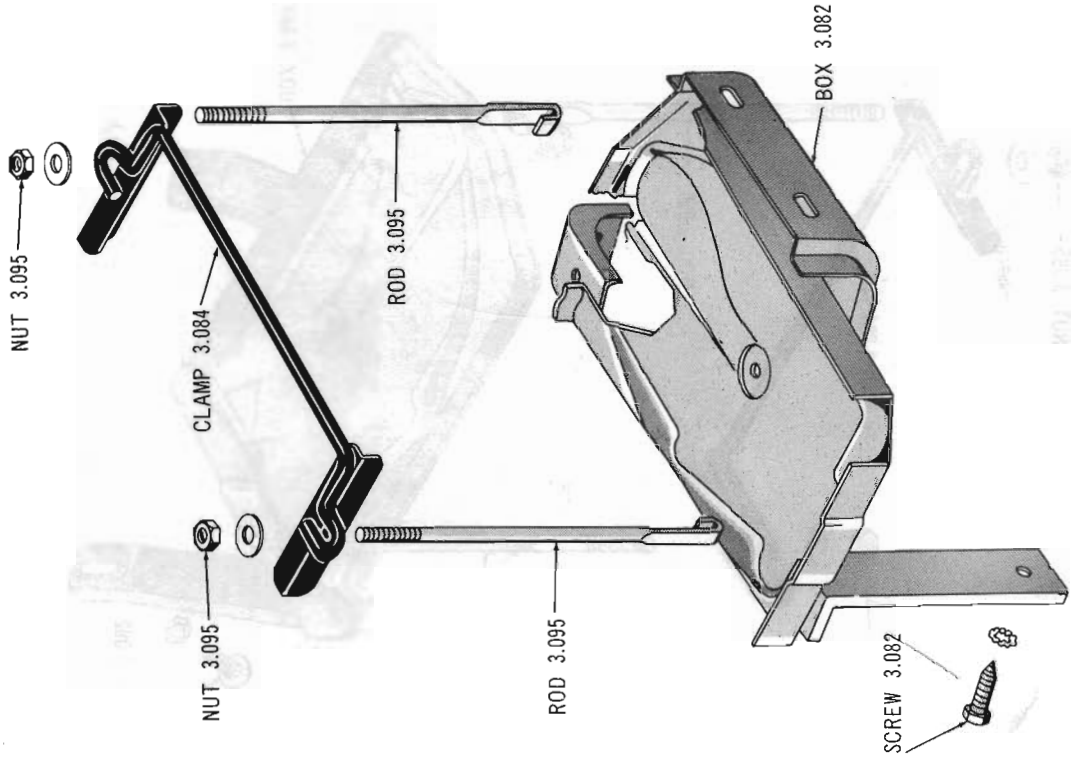

BATTERY BOX 63 thru Current 10-80 (V8)

Copyright 1963 American Motors Corp.

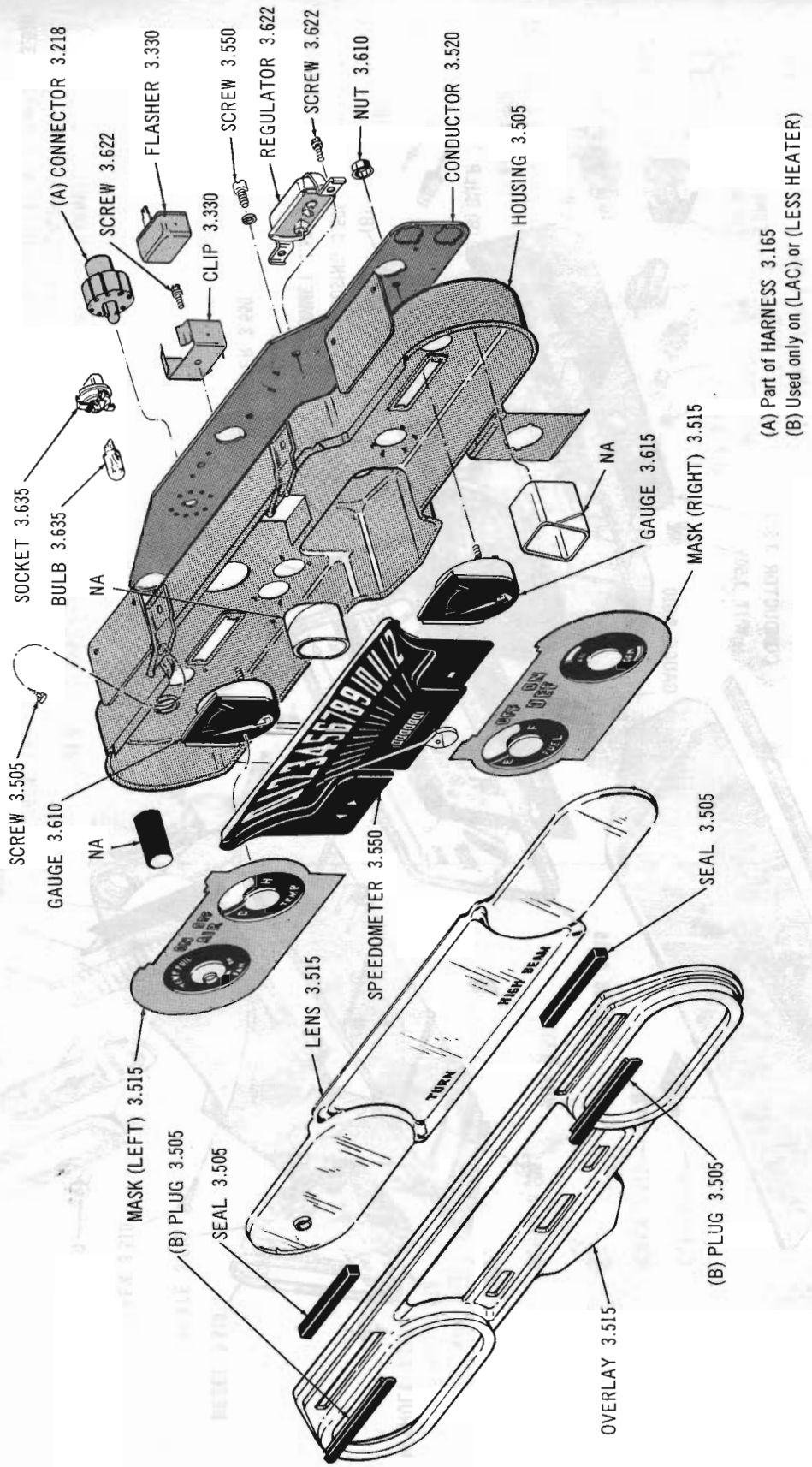

INSTRUMENT CLUSTER 64-65 01

Copyright 1963 American Motors Corp.

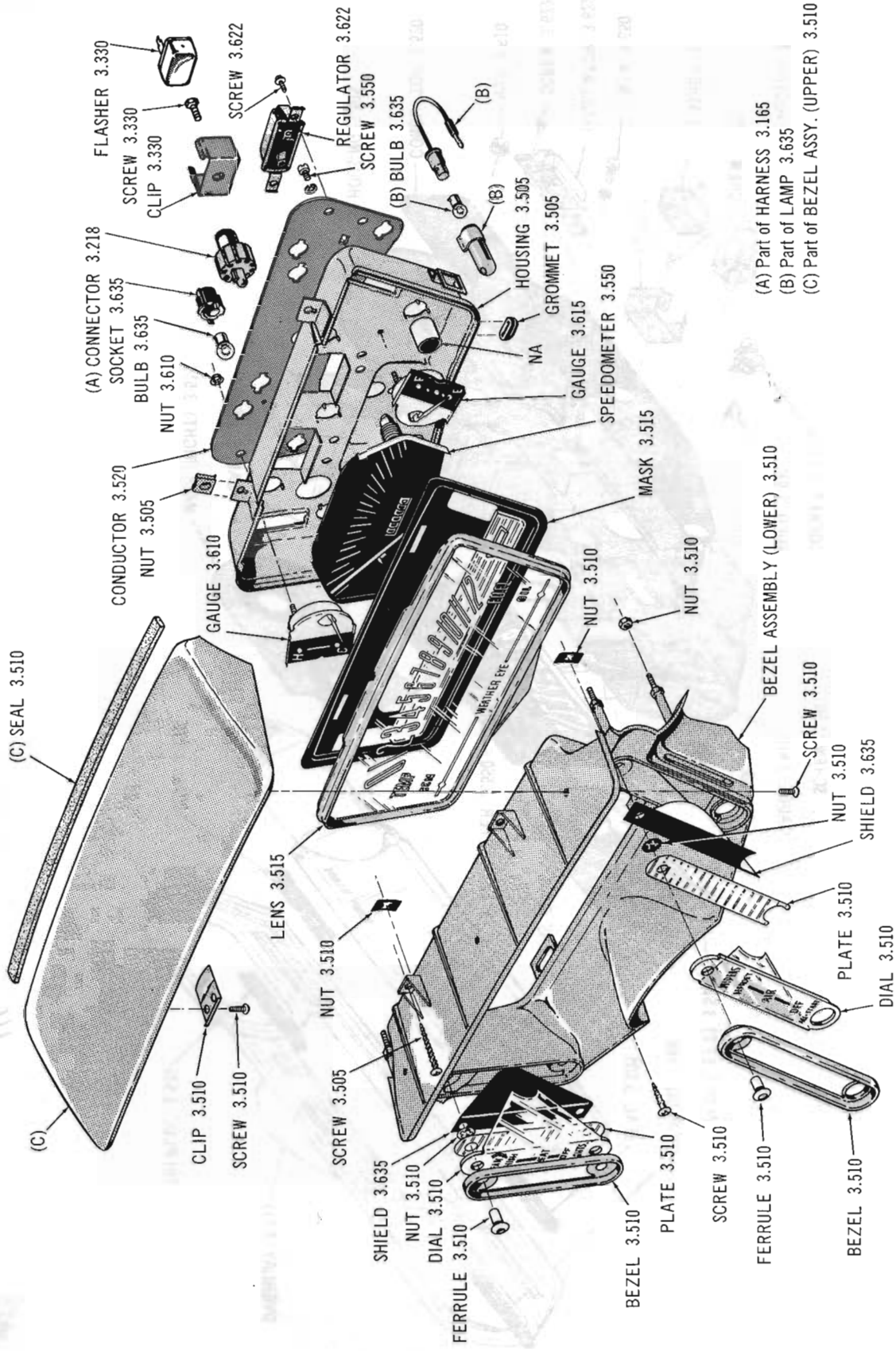

INSTRUMENT CLUSTER 63-64 10-80

Copyright 1963 American Motors Corp.

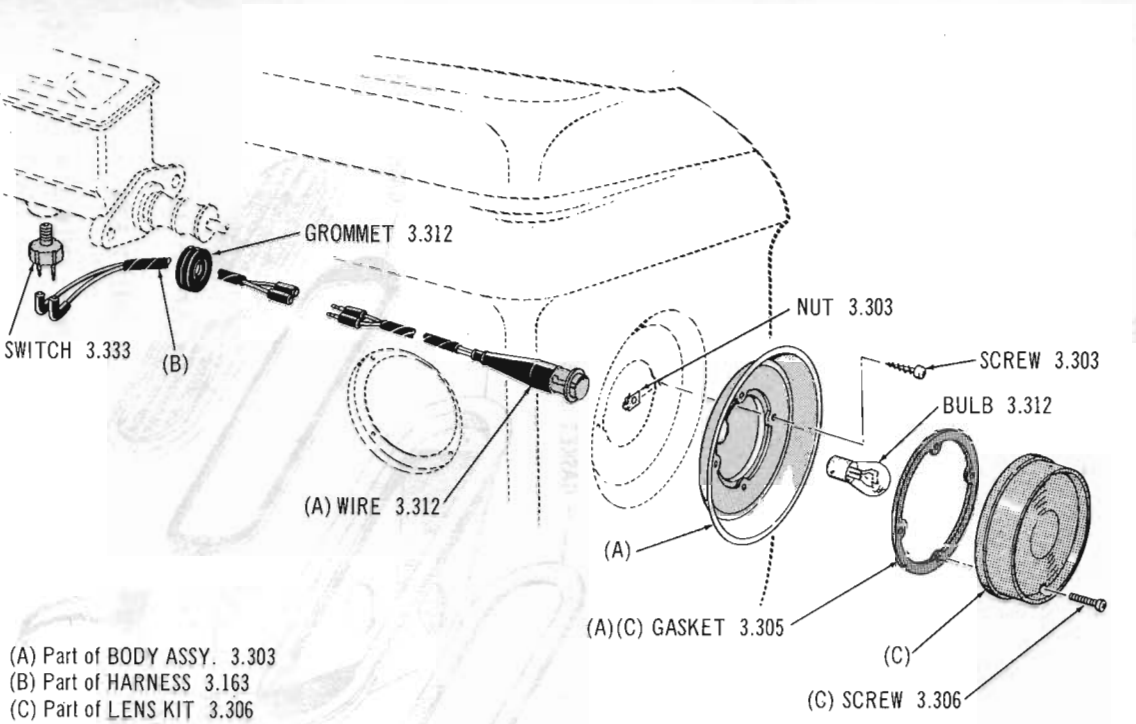

TAIL, STOP AND REAR DIRECTIONAL SIGNAL LAMP 63 01

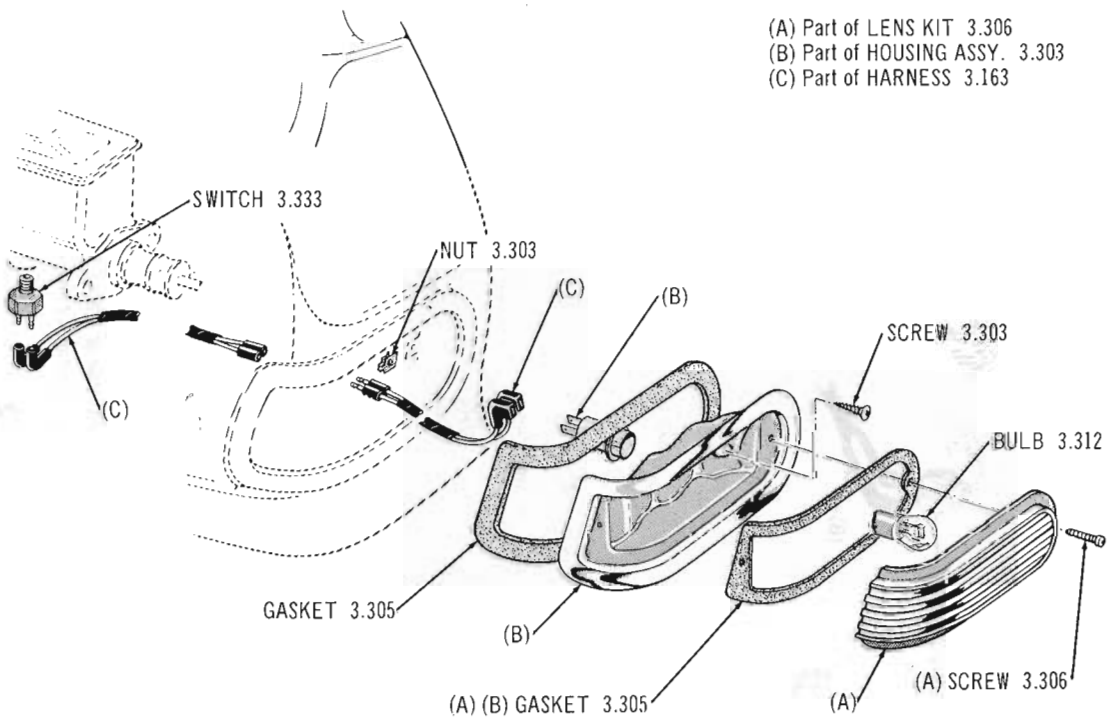

TAIL, STOP AND REAR DIRECTIONAL SIGNAL LAMP 64 08

Copyright 1963 American Motors Corp.

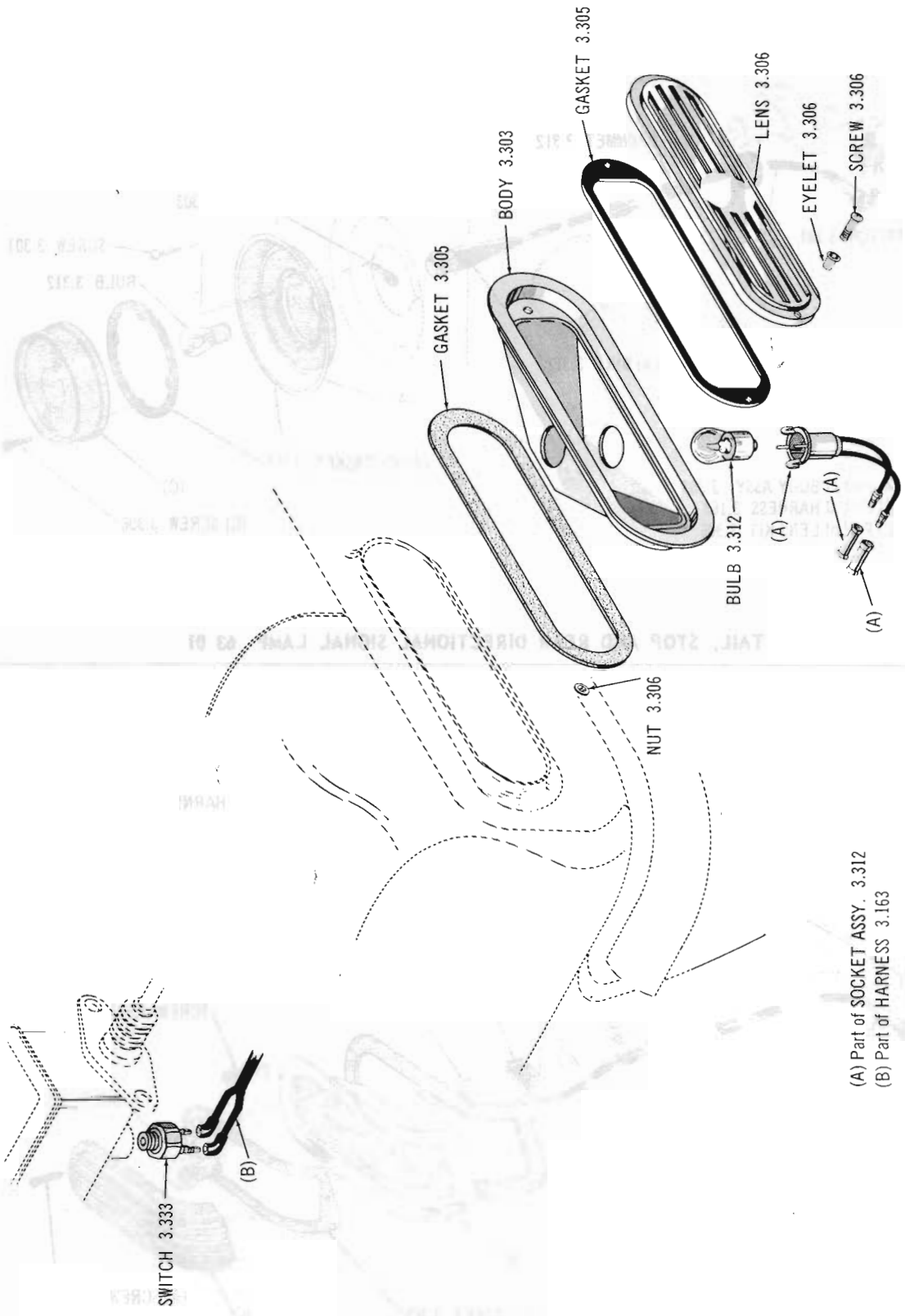

TAIL, STOP AND REAR DIRECTIONAL SIGNAL LAMP 64 02-05-06-07-09

Copyright 1963 American Motors Corp.

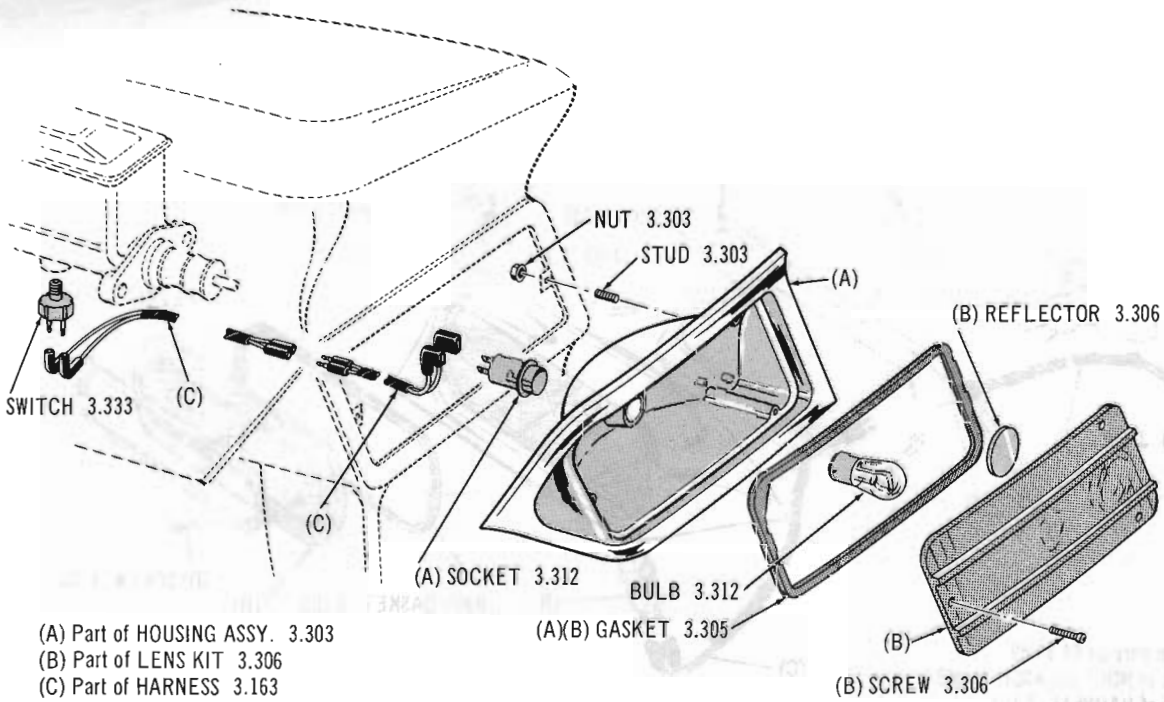

(A) Part of HOUSING ASSY. 3.303
(B) Part of LENS KIT 3.306
(C) Part of HARNESS 3.163

TAIL, STOP AND REAR DIRECTIONAL SIGNAL LAMP 63 15-16-85-86

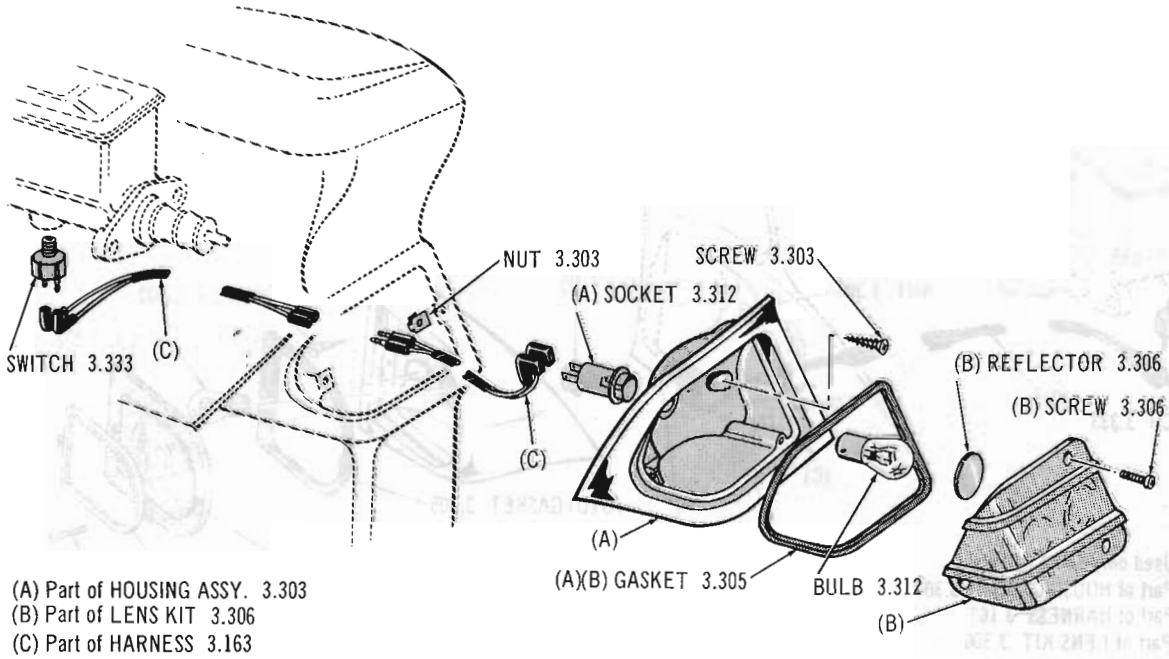

(A) Part of HOUSING ASSY. 3.303
(B) Part of LENS KIT 3.306
(C) Part of HARNESS 3.163

TAIL, STOP AND REAR DIRECTIONAL SIGNAL LAMP 63 18-88

Copyright 1963 American Motors Corp.

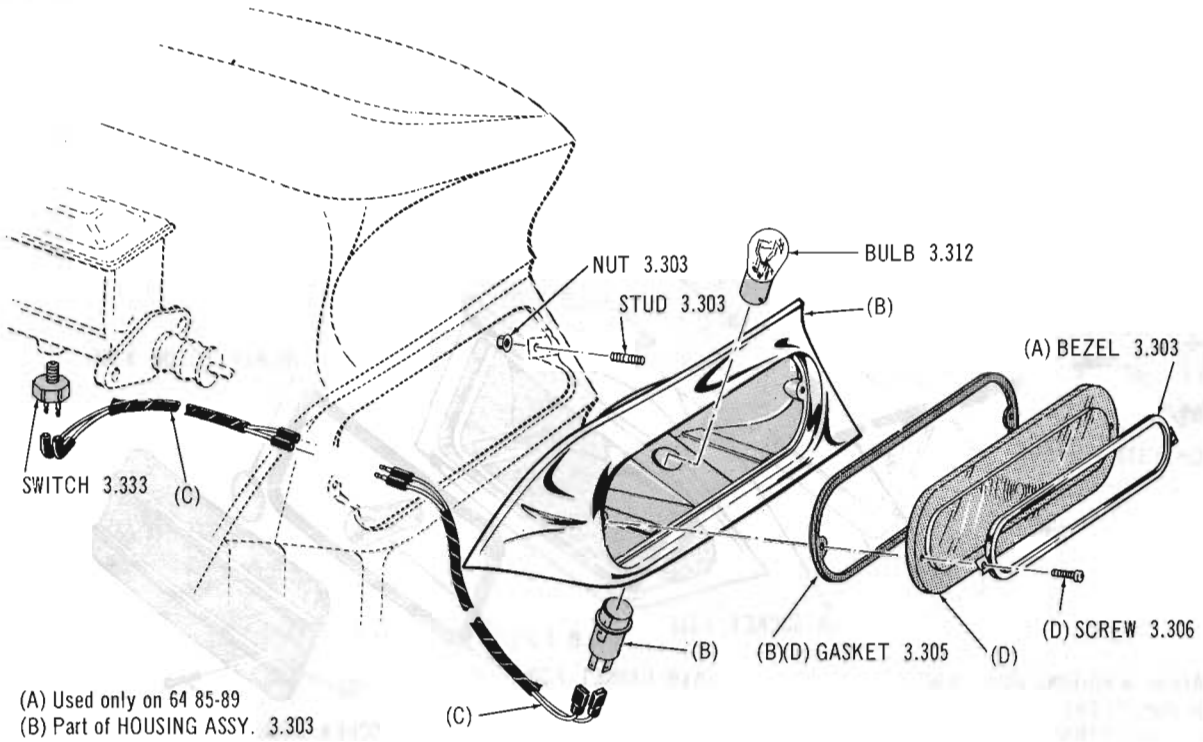

(A) Used only on 64 85-89
(B) Part of HOUSING ASSY. 3.303
(C) Part of HARNESS 3.163
(D) Part of LENS KIT 3.306

TAIL, STOP AND REAR DIRECTIONAL SIGNAL LAMP 64 15-16-19-85-89

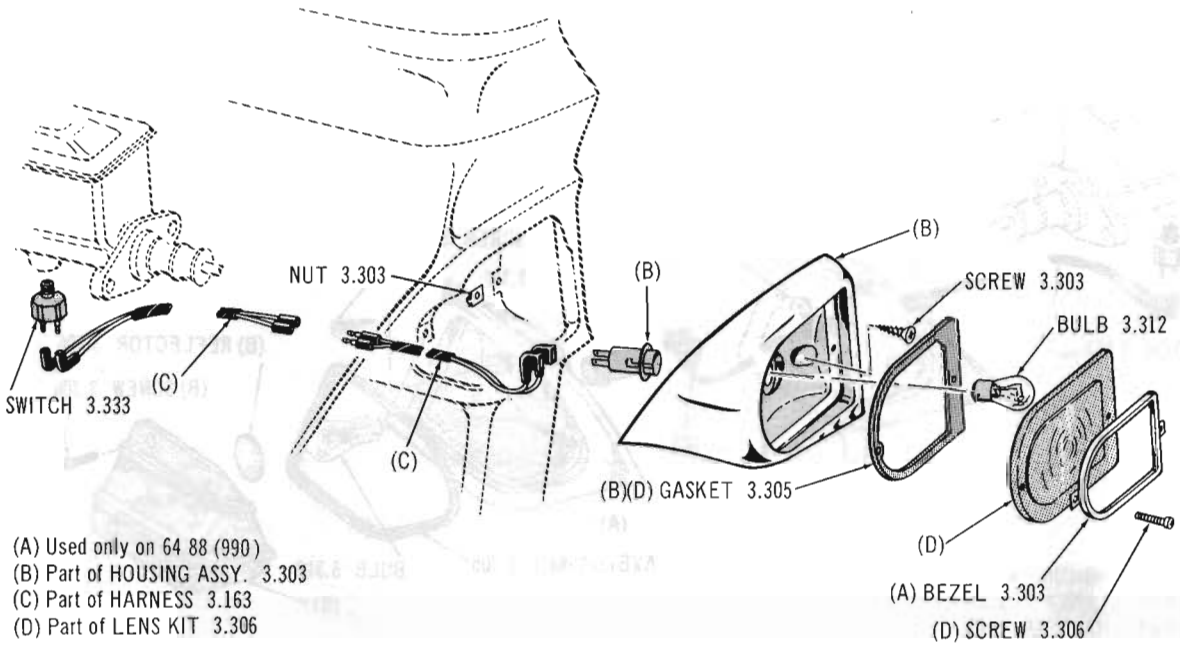

(A) Used only on 64 88 (990)
(B) Part of HOUSING ASSY. 3.303
(C) Part of HARNESS 3.163
(D) Part of LENS KIT 3.306

TAIL, STOP AND REAR DIRECTIONAL SIGNAL LAMP 64 18-88

Copyright 1963 American Motors Corp.

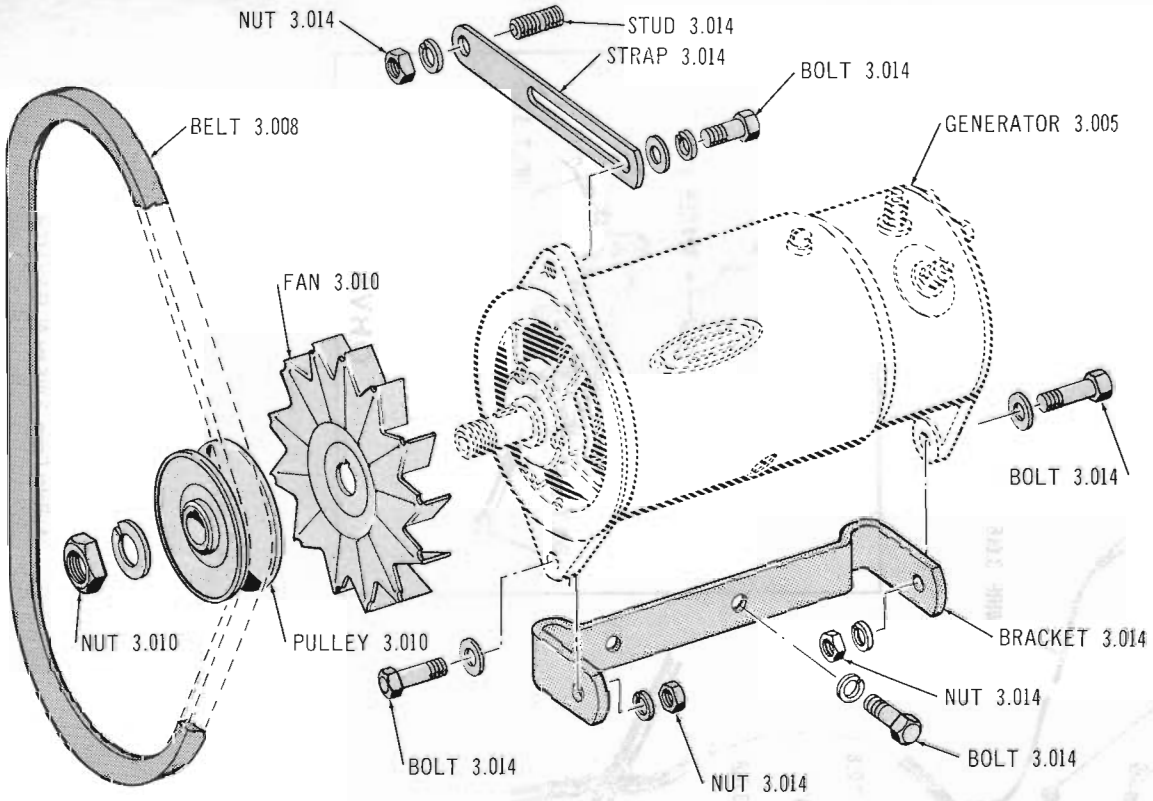

GENERATOR FAN, PULLEY AND MOUNTING 63 10 (LAC)

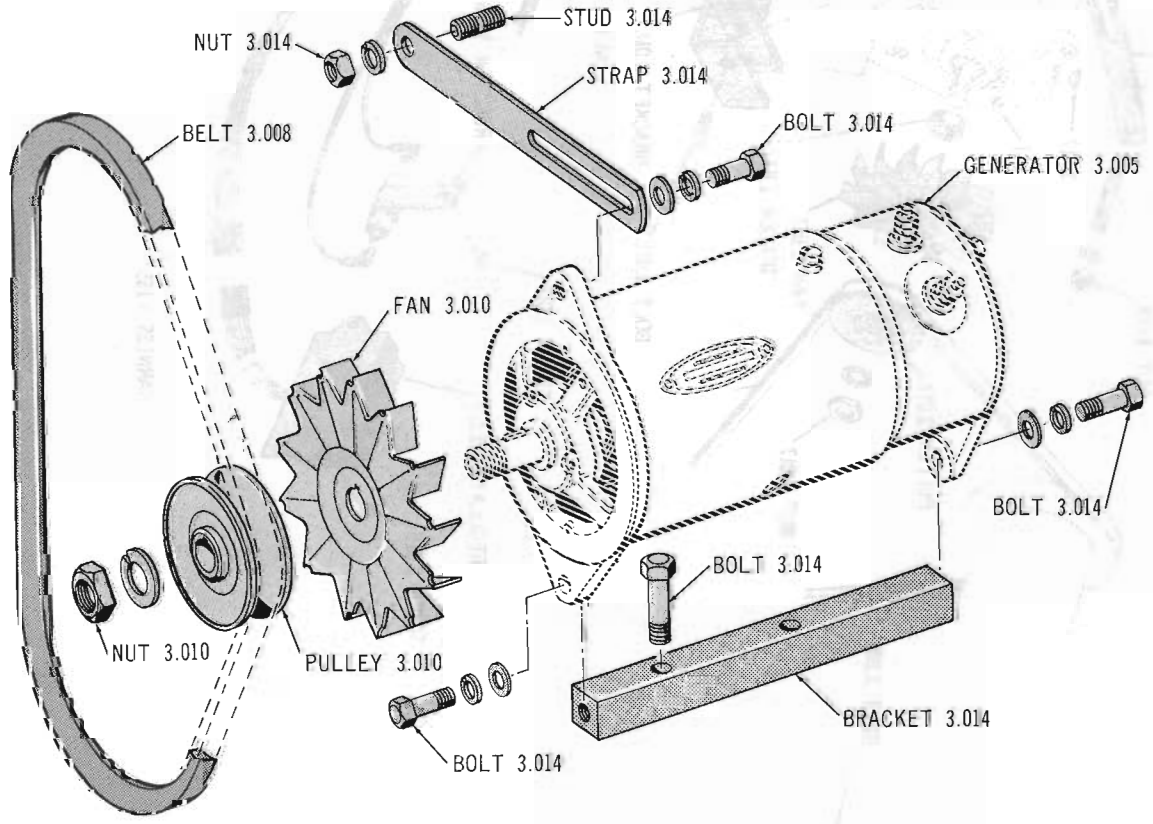

GENERATOR FAN, PULLEY AND MOUNTING 63-64 01 (LAC)

Copyright 1963 American Motors Corp.

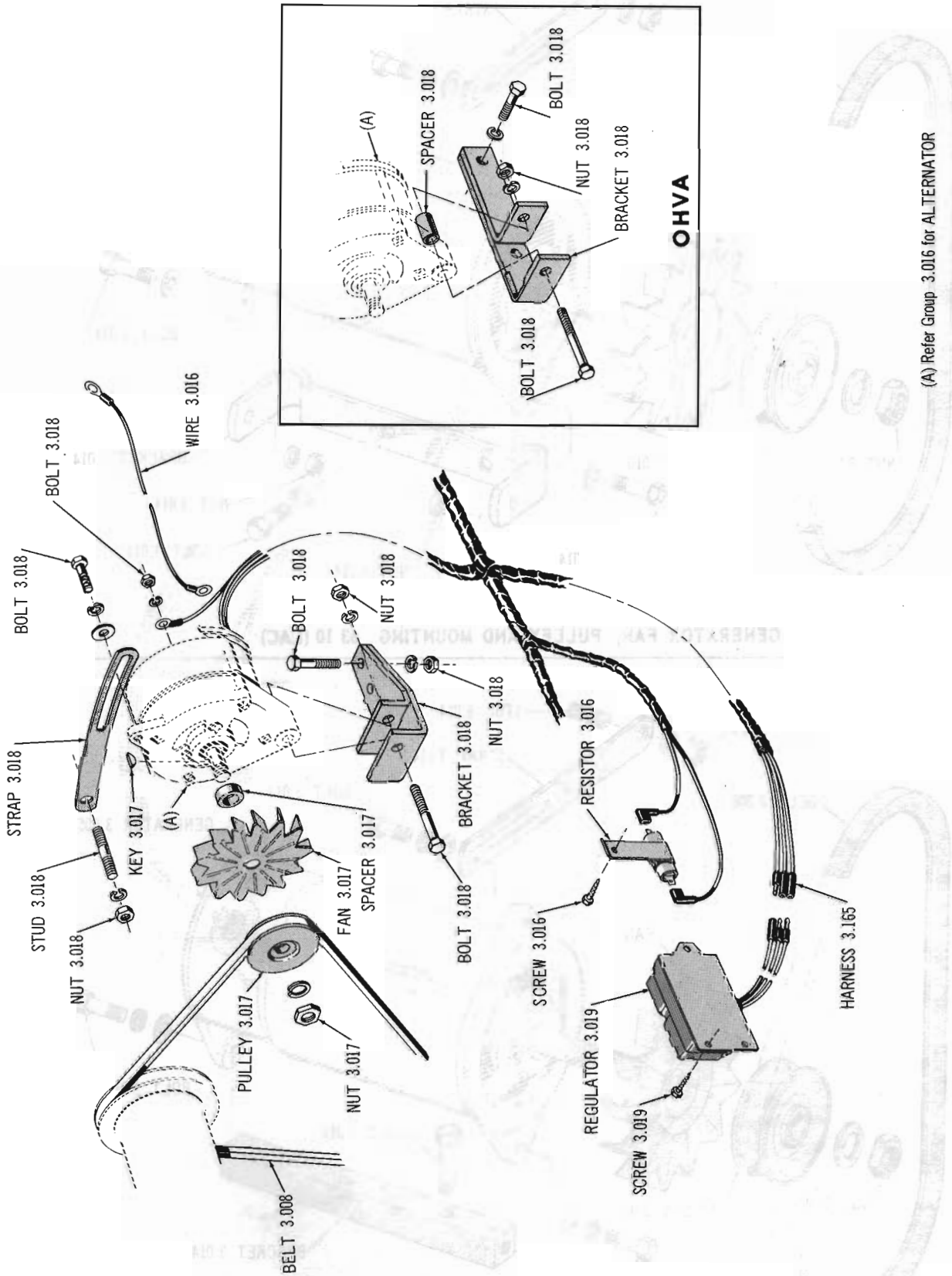

ALTERNATOR FAN, PULLEY AND MOUNTING (MOTOROLA) 63-64 01-10 (OHV-196): 65 01 (OHV-196)

Copyright 1963 American Motors Corp.

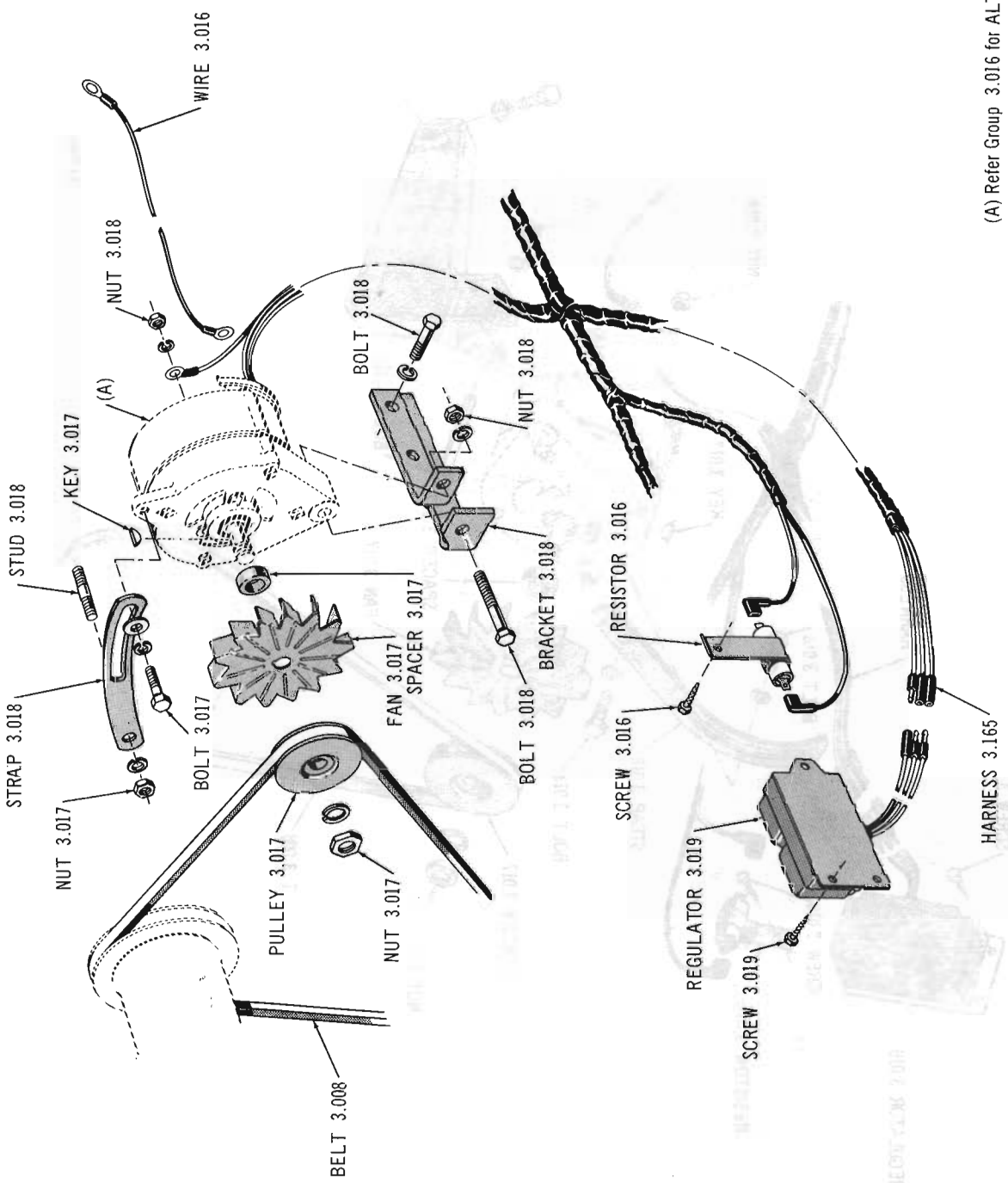

ALTERNATOR FAN, PULLEY AND MOUNTING (MOTOROLA) 64-65 ALL MODELS (OHV-199)(OHV-232)

Copyright 1963 American Motors Corp.

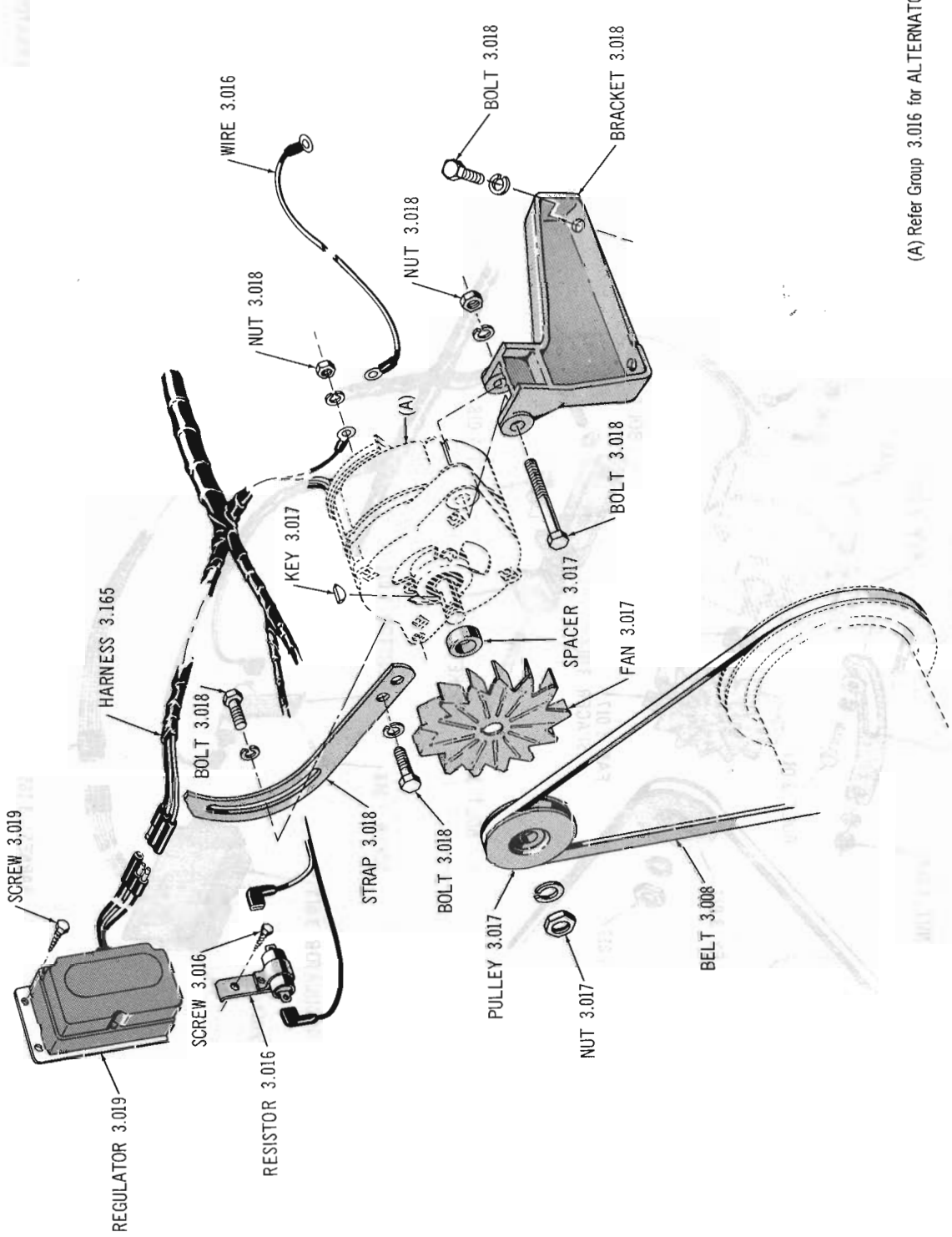

ALTERNATOR FAN, PULLEY AND MOUNTING (MOTOROLA) 63 thru Current 10-80 (V8)

Copyright 1963 American Motors Corp.

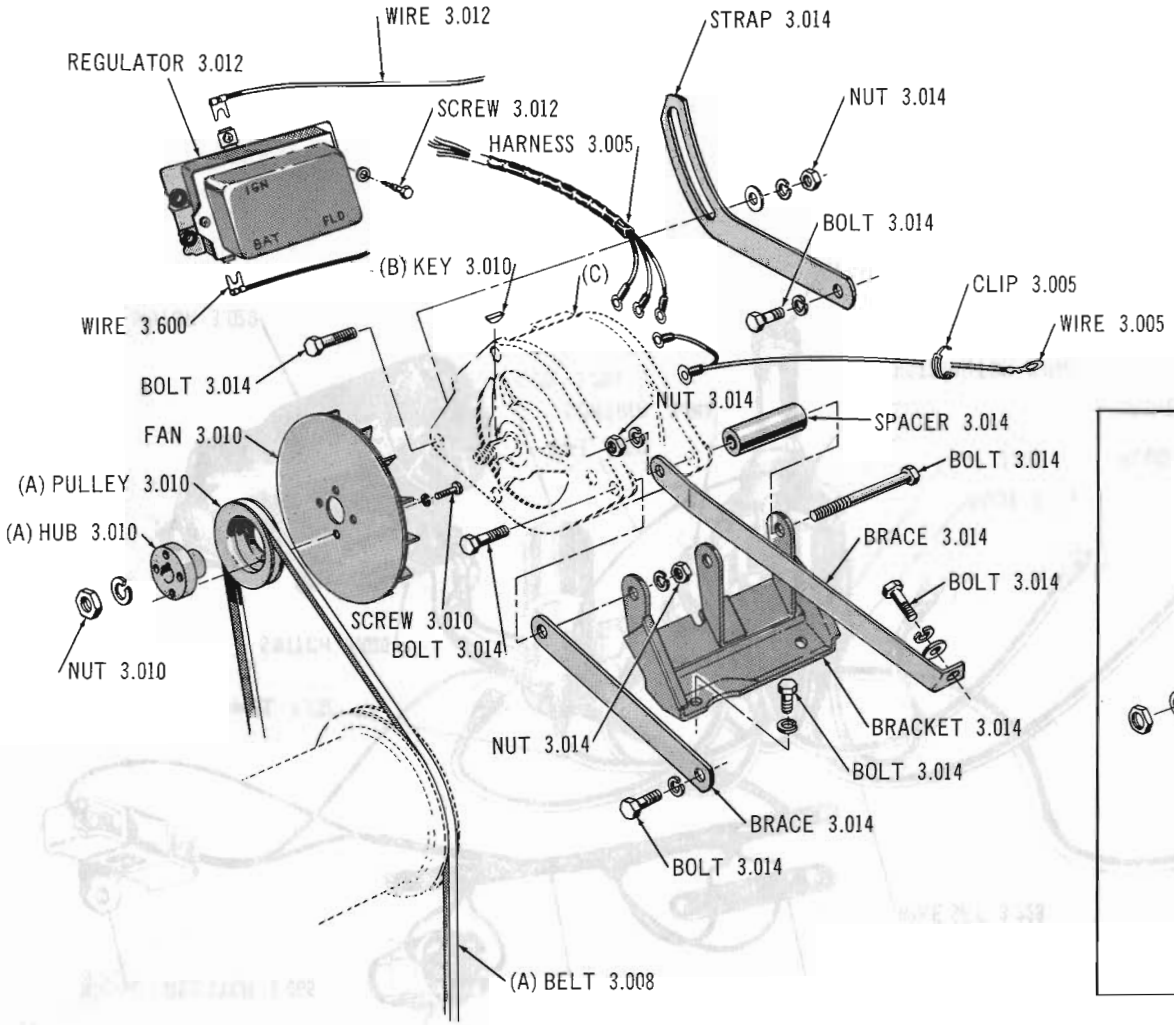

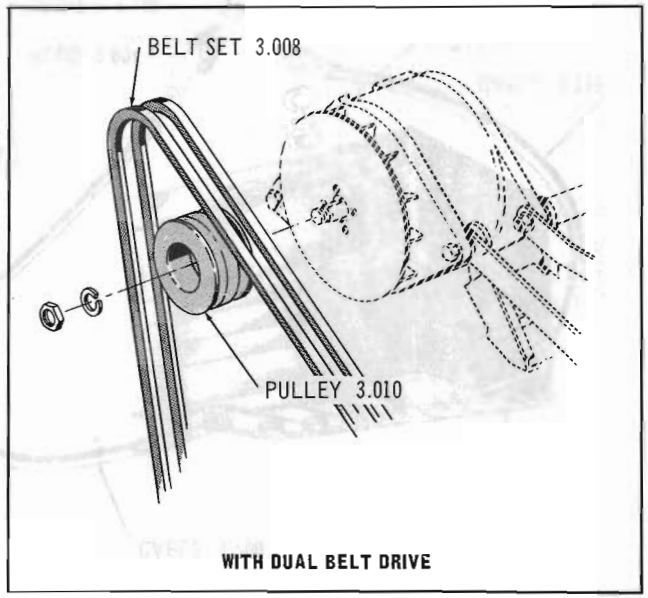

WITH DUAL BELT DRIVE

(A) Used only on SINGLE BELT DRIVE
(B) Part of ALTERNATOR 3.005
(C) Refer Group 3.005 for ALTERNATOR

Copyright 1963 American Motors Corp.

Printed in U.S.A.

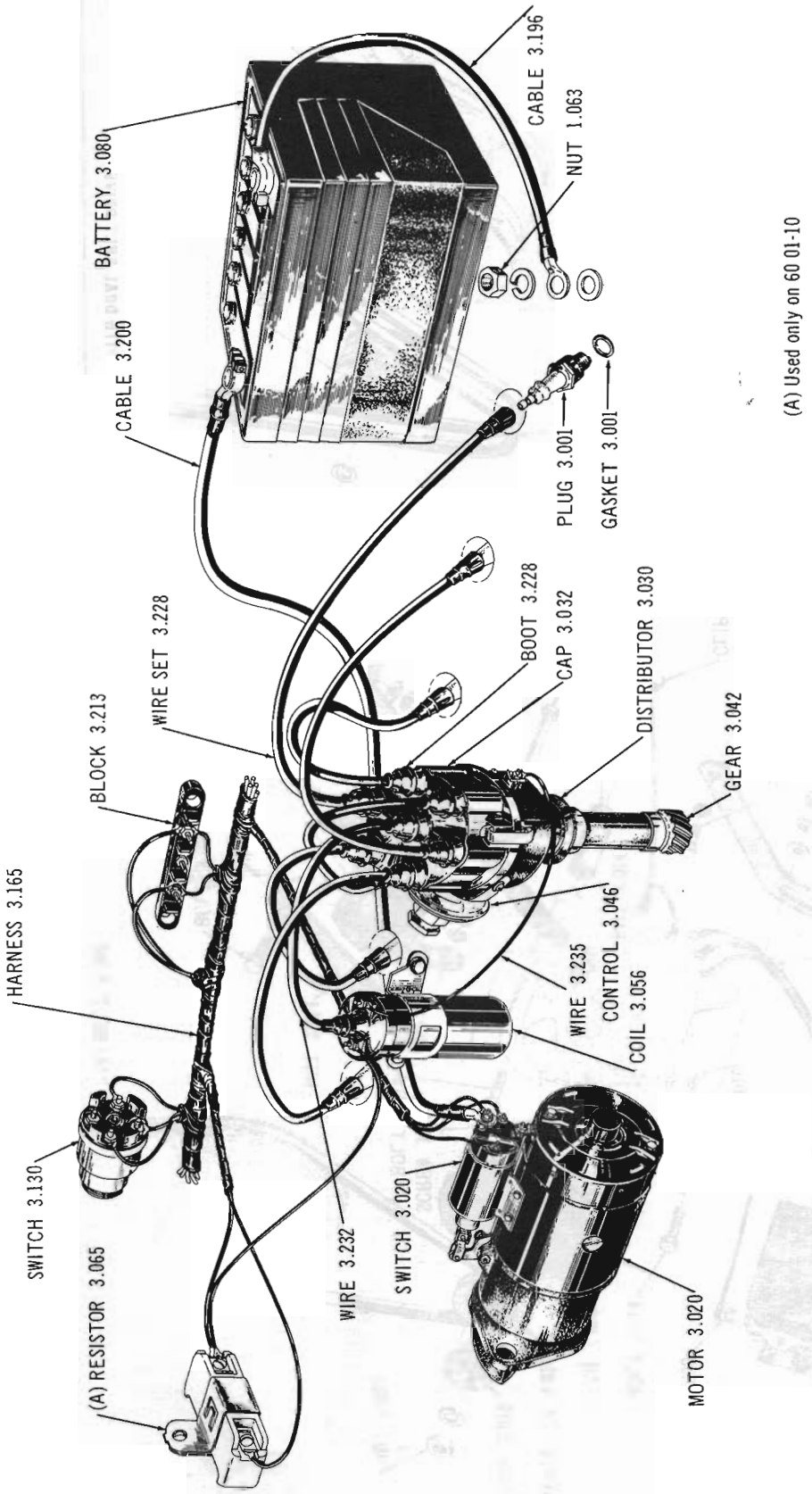

IGNITION WIRING 60 thru Current 01-10 (OHV)

Copyright 1963 American Motors Corp.

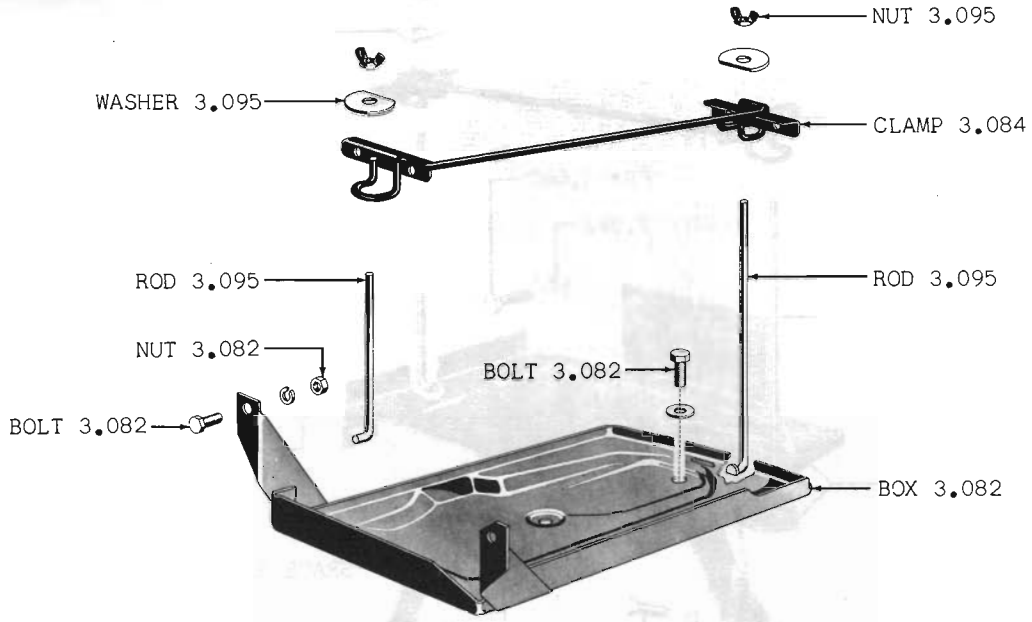

BATTERY BOX 60 01

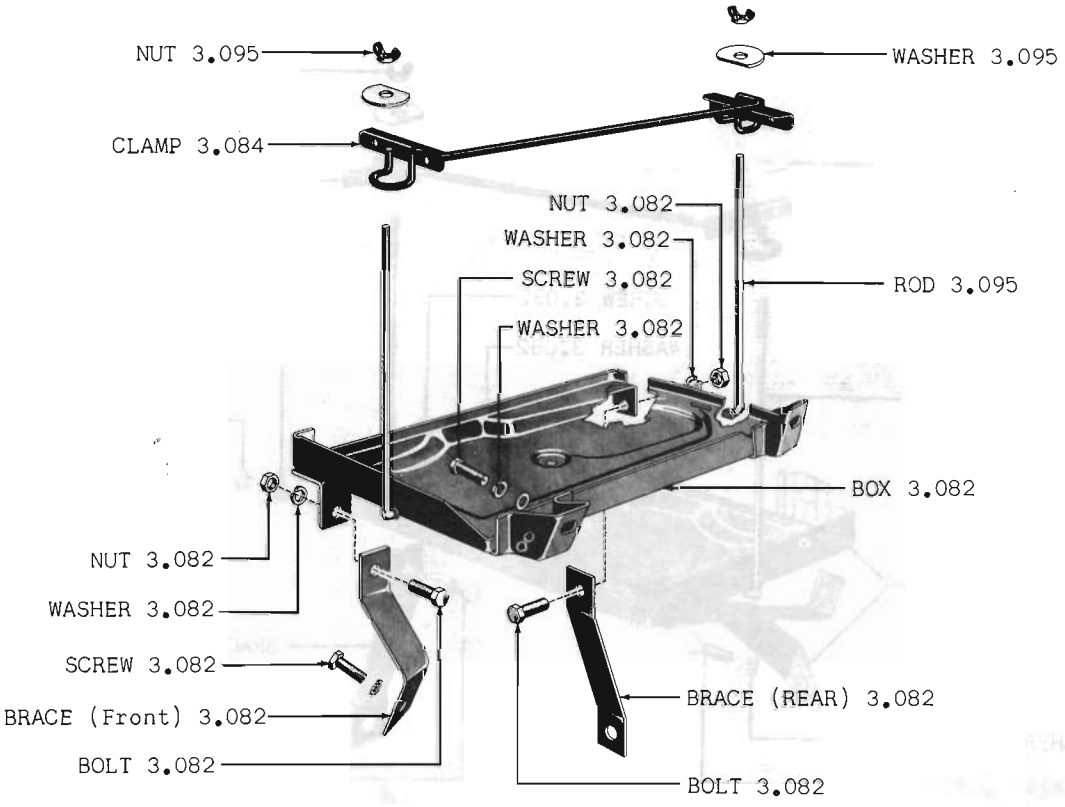

BATTERY BOX 60-61 10

Copyright 1963 American Motors Corp.

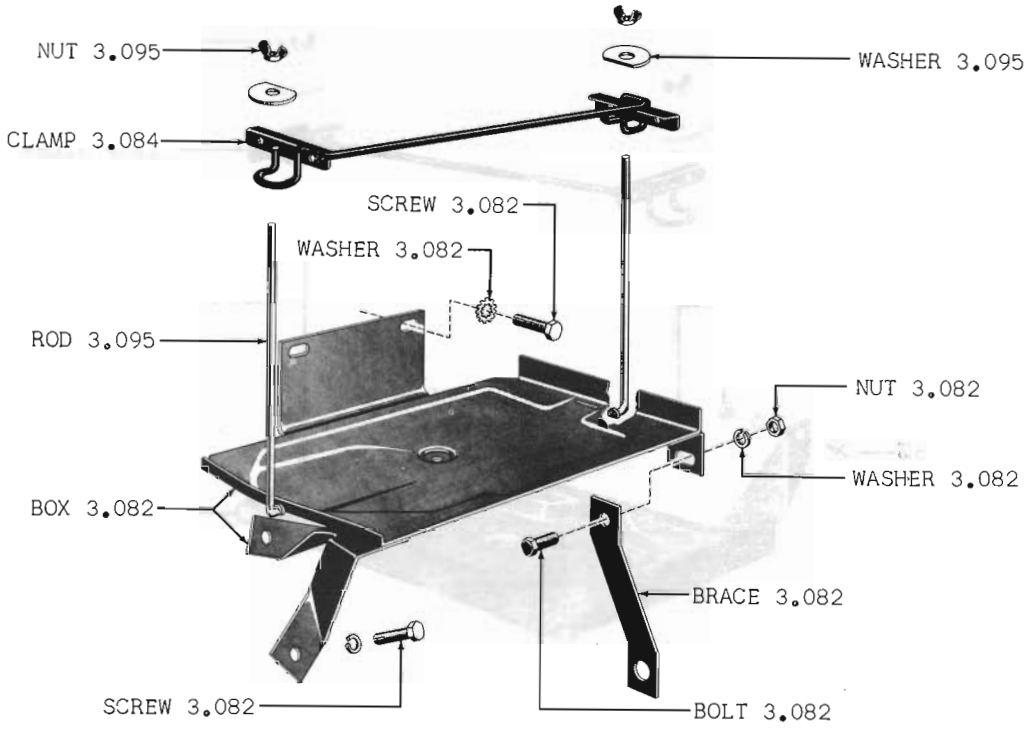

BATTERY BOX 60-61 20

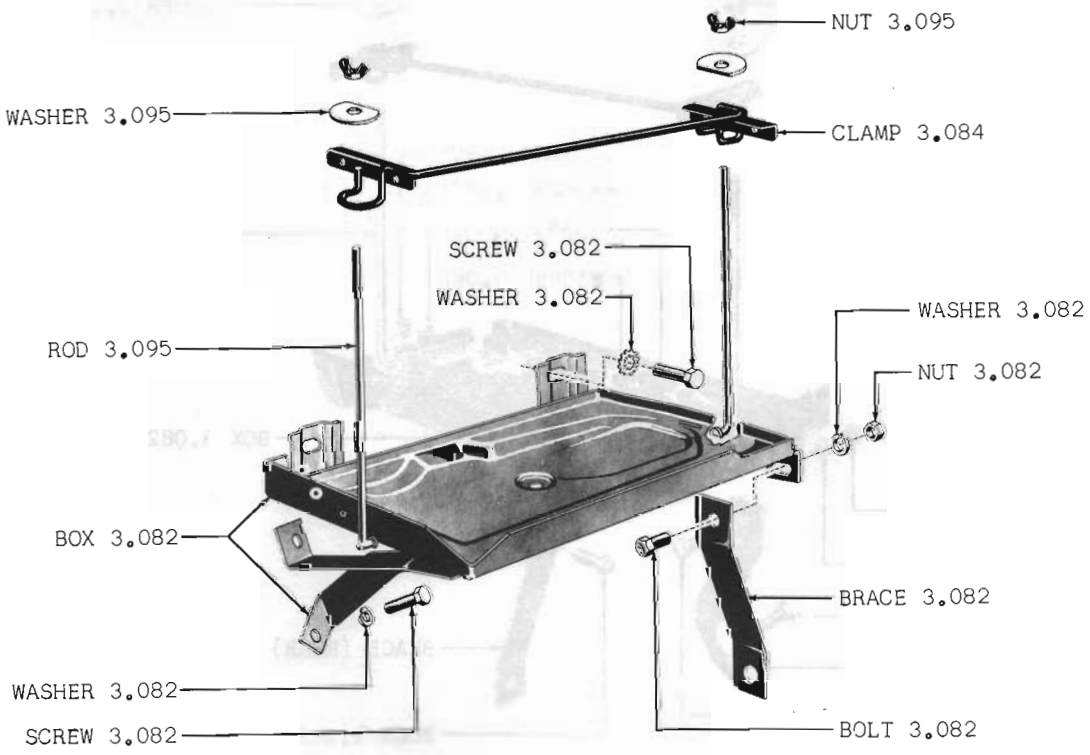

BATTERY BOX 60-61 80

Copyright 1963 American Motors Corp.

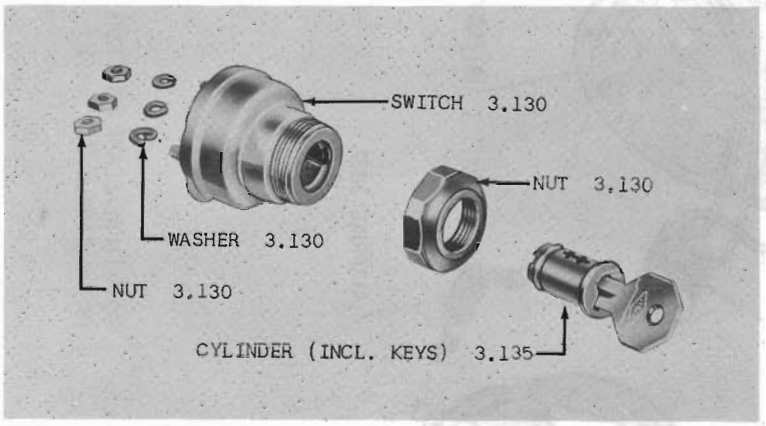

IGNITION SWITCH 60 thru 62 ALL MODELS: 63 01

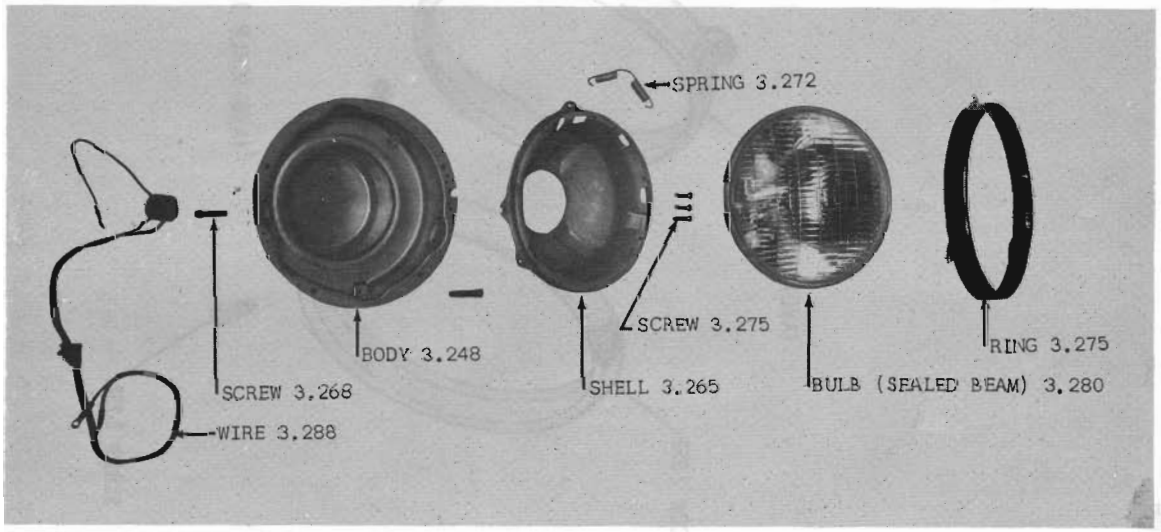

HEADLAMP ASSEMBLY 60 01

Copyright 1963 American Motors Corp.

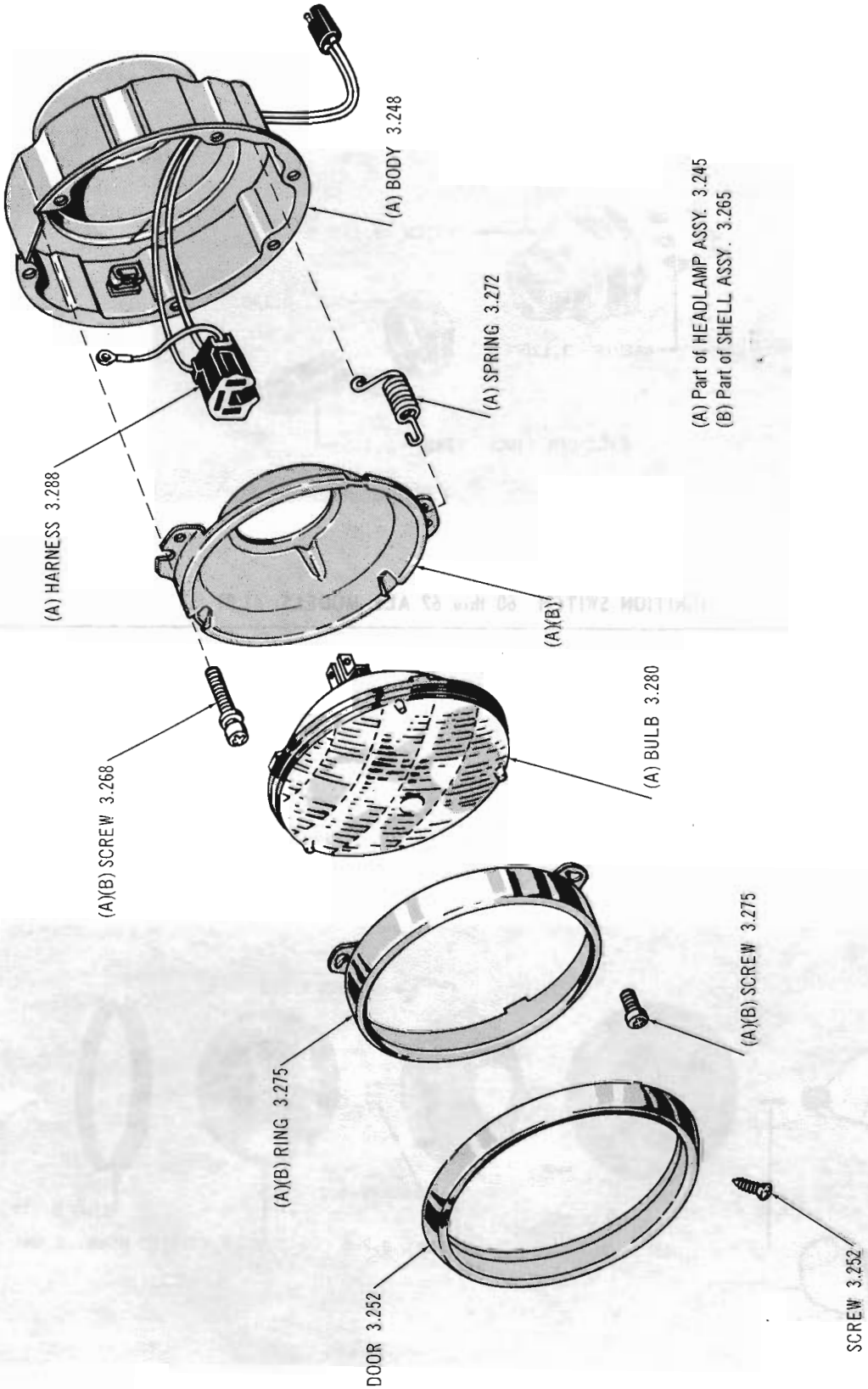

HEADLAMP ASSEMBLY 61 thru 63 01

Copyright 1963 American Motors Corp.

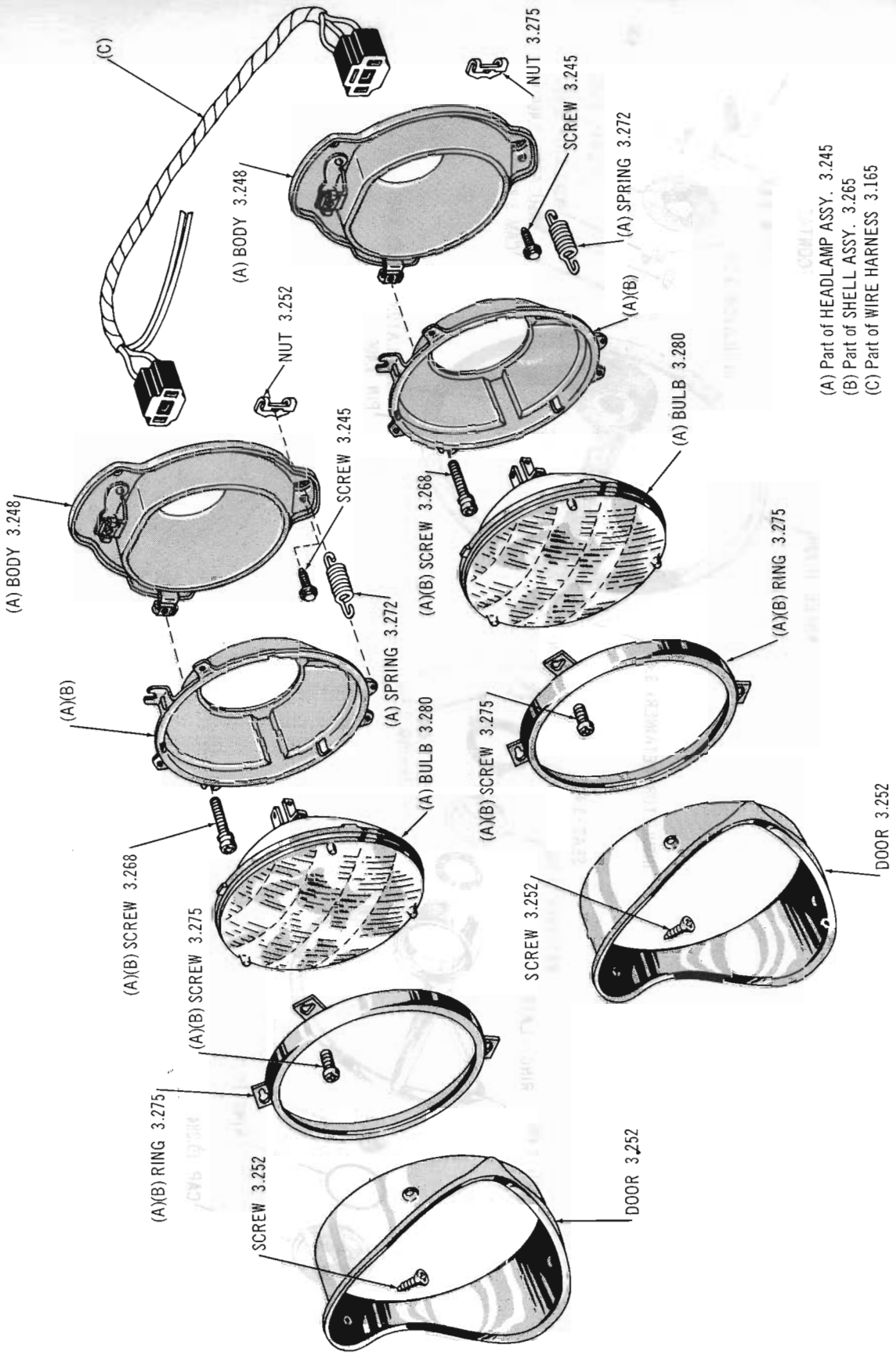

(A) Part of HEADLAMP ASSY. 3.245
(B) Part of SHELL ASSY. 3.265
(C) Part of WIRE HARNESS 3.165

HEADLAMP ASSEMBLY 63 10-80

Copyright 1963 American Motors Corp.

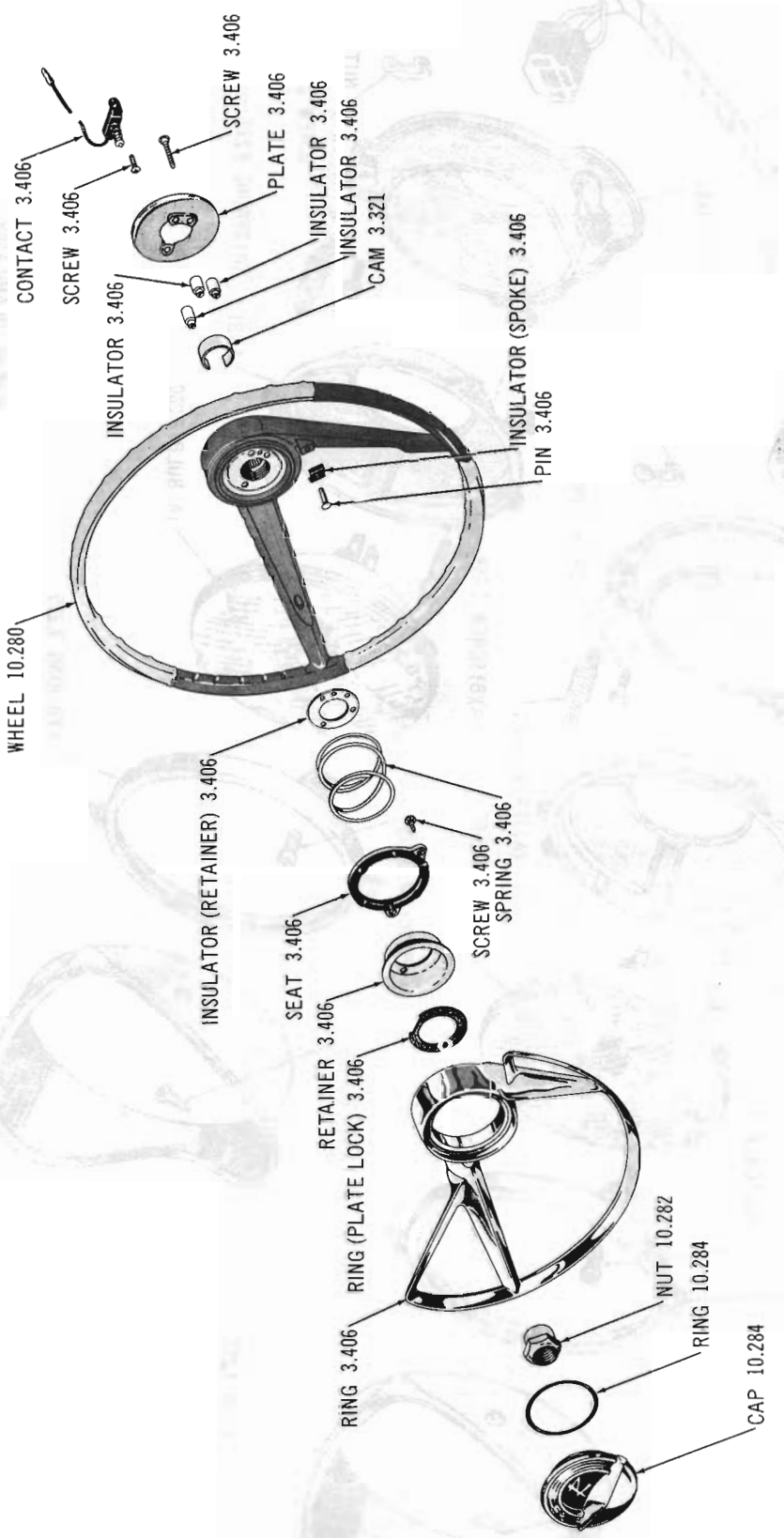

STEERING WHEEL AND HORN RING 60 thru 62 10-20-80: 61 thru 63 01

Copyright 1963 American Motors Corp.

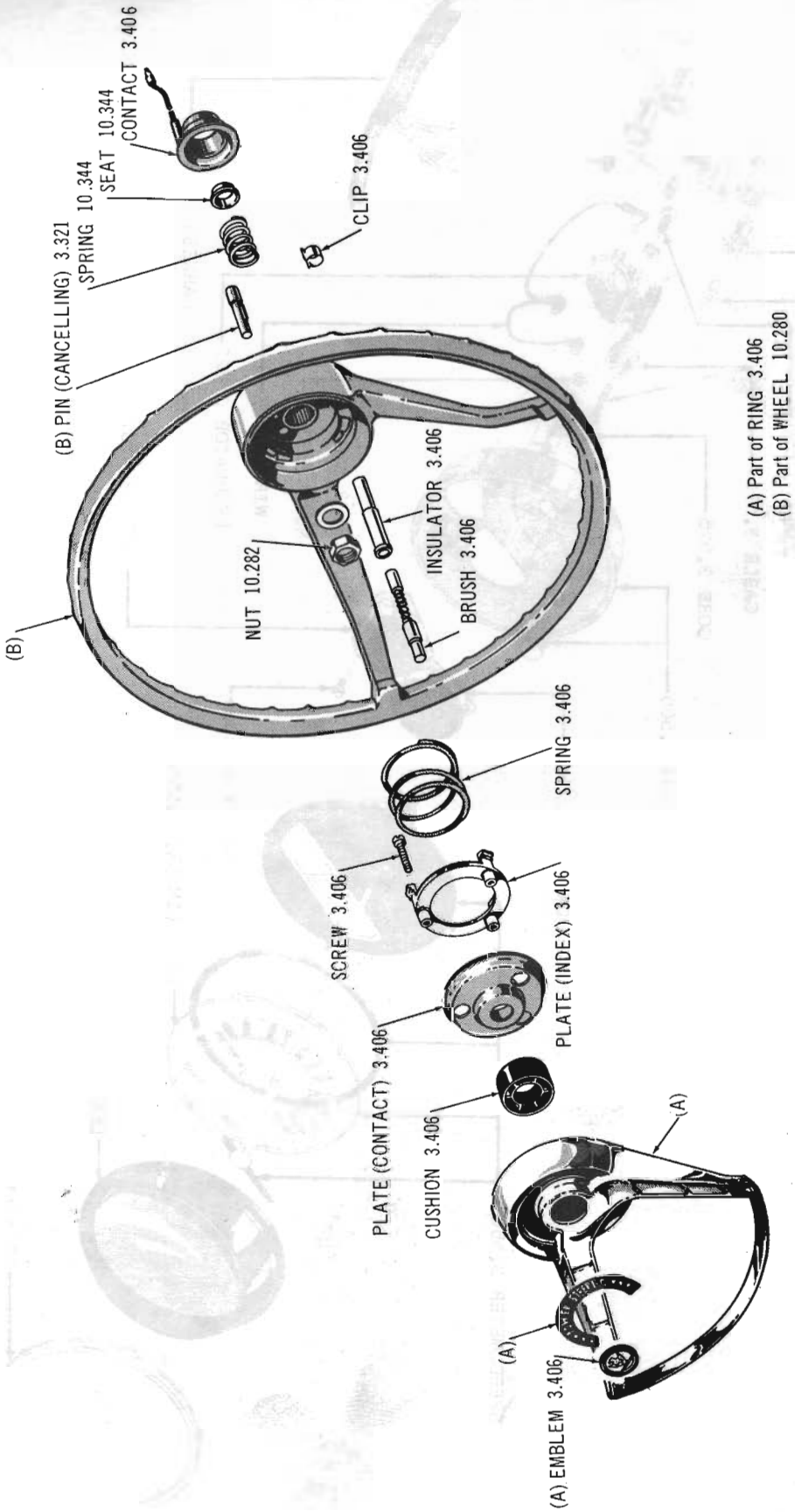

STEERING WHEEL AND HORN RING 63-64 10-80

Copyright 1963 American Motors Corp.

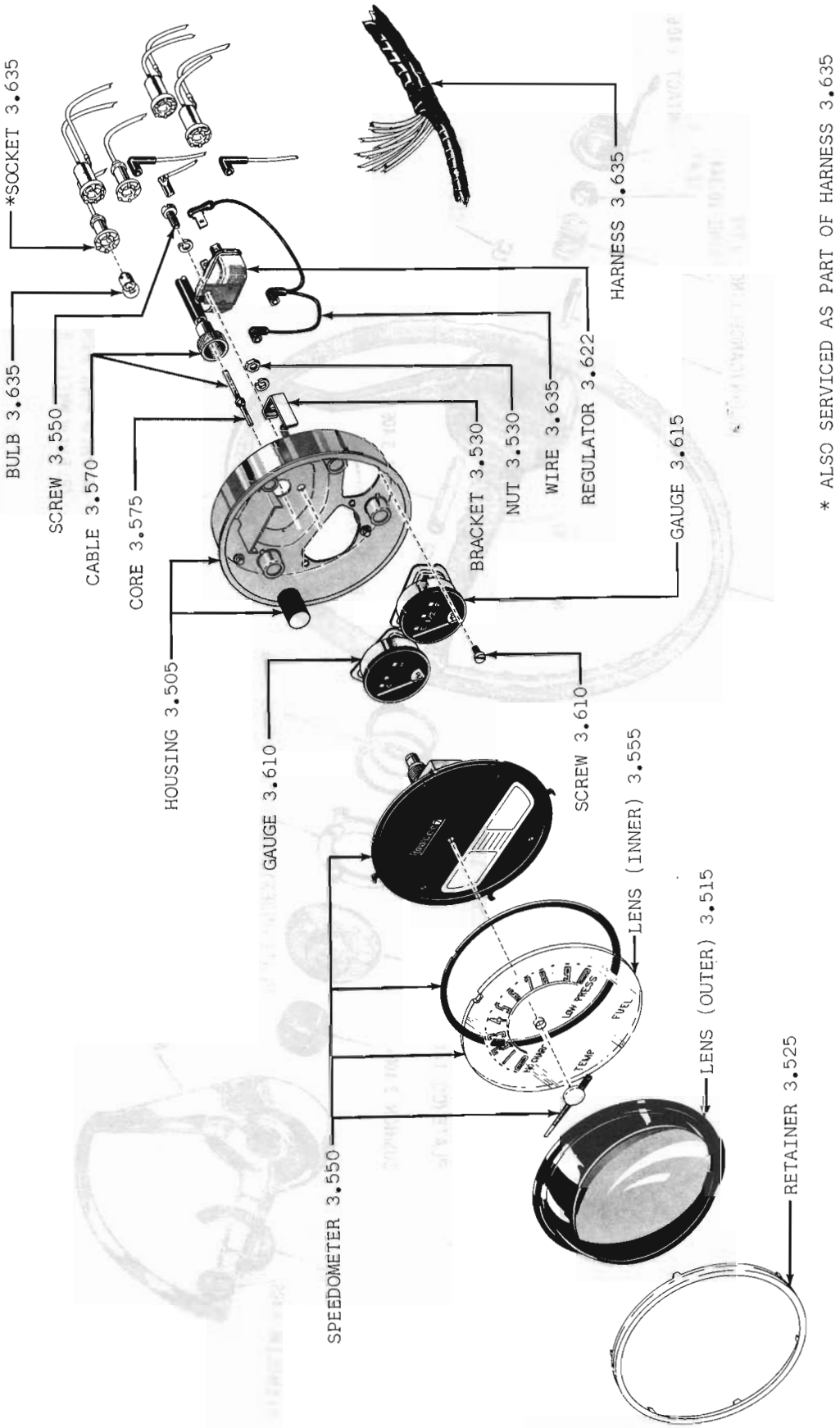

INSTRUMENT CLUSTER 60 01

Copyright 1963 American Motors Corp.

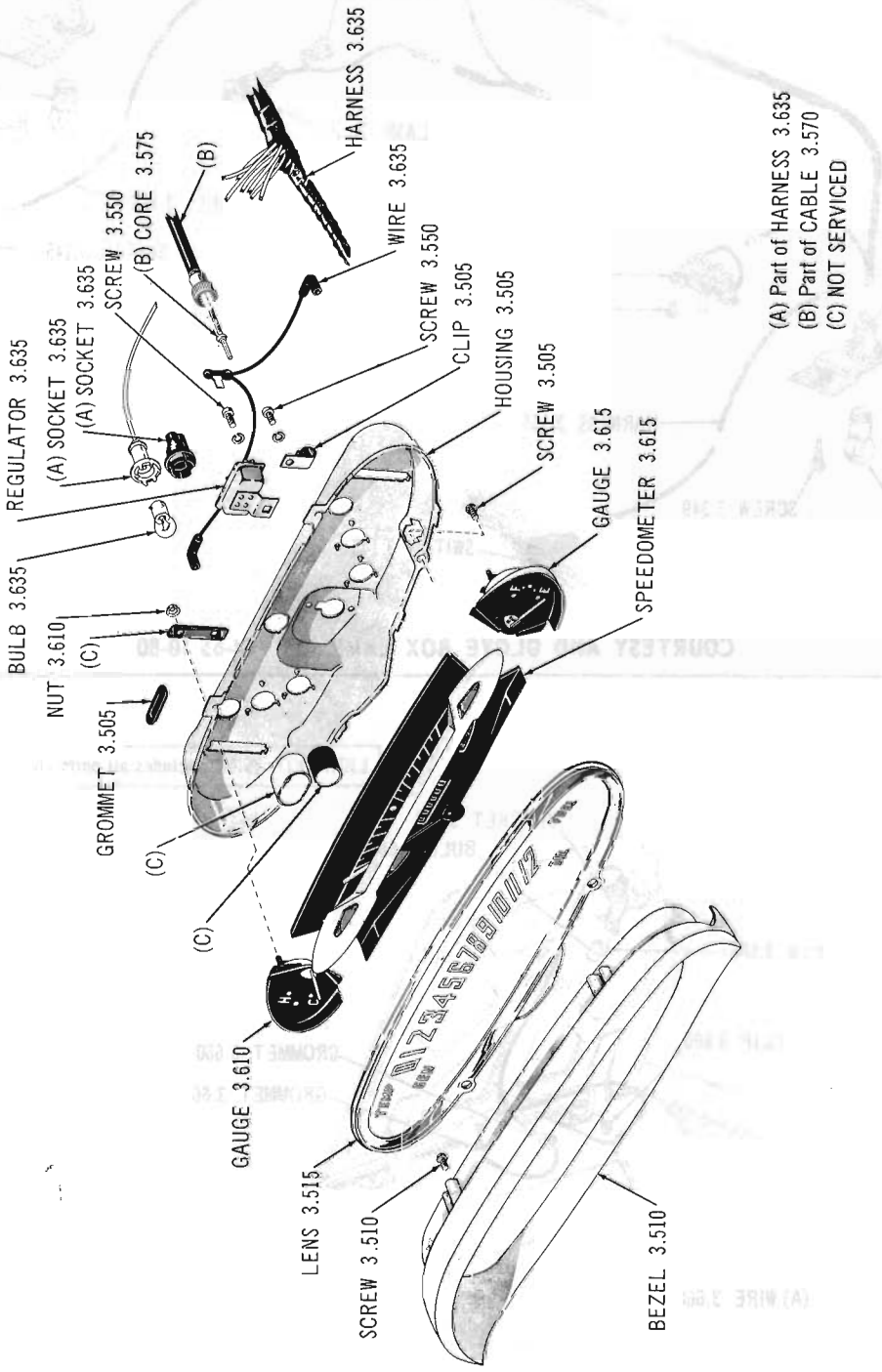

INSTRUMENT CLUSTER 61 thru 63 01: 60-61 10-20-80

Copyright 1963 American Motors Corp.

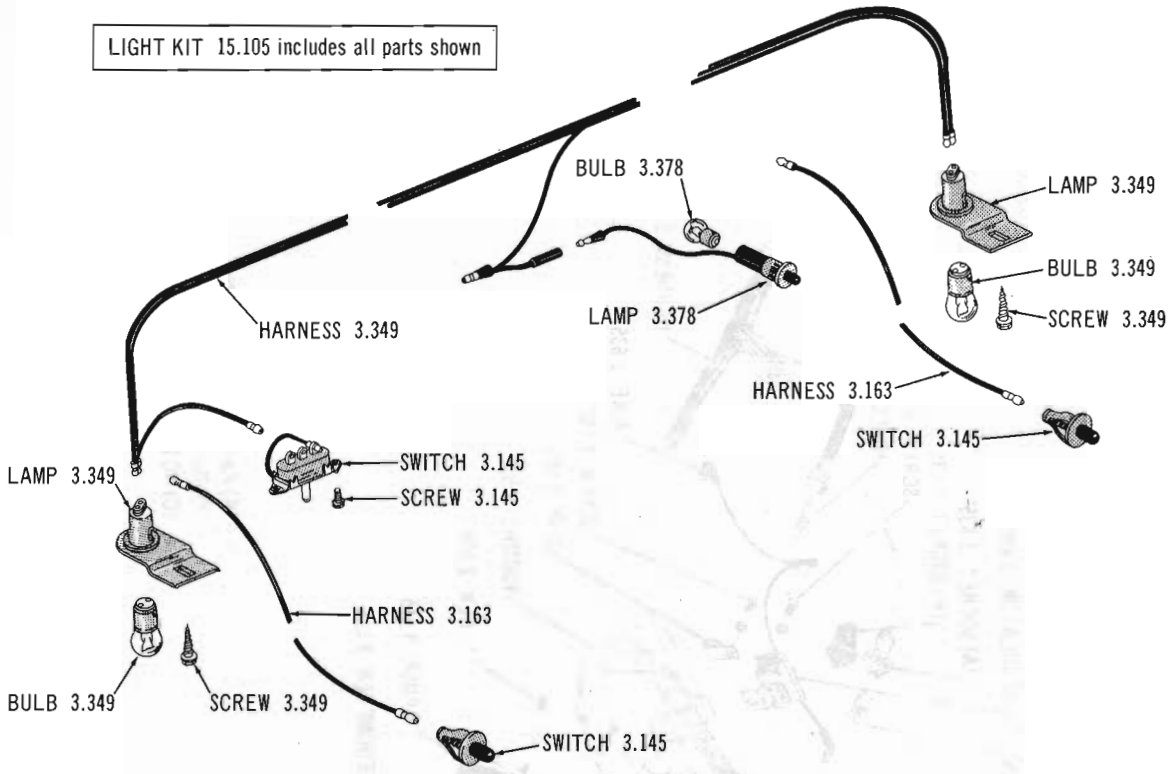

COURTESY AND GLOVE BOX LAMP KIT 64-65 10-80

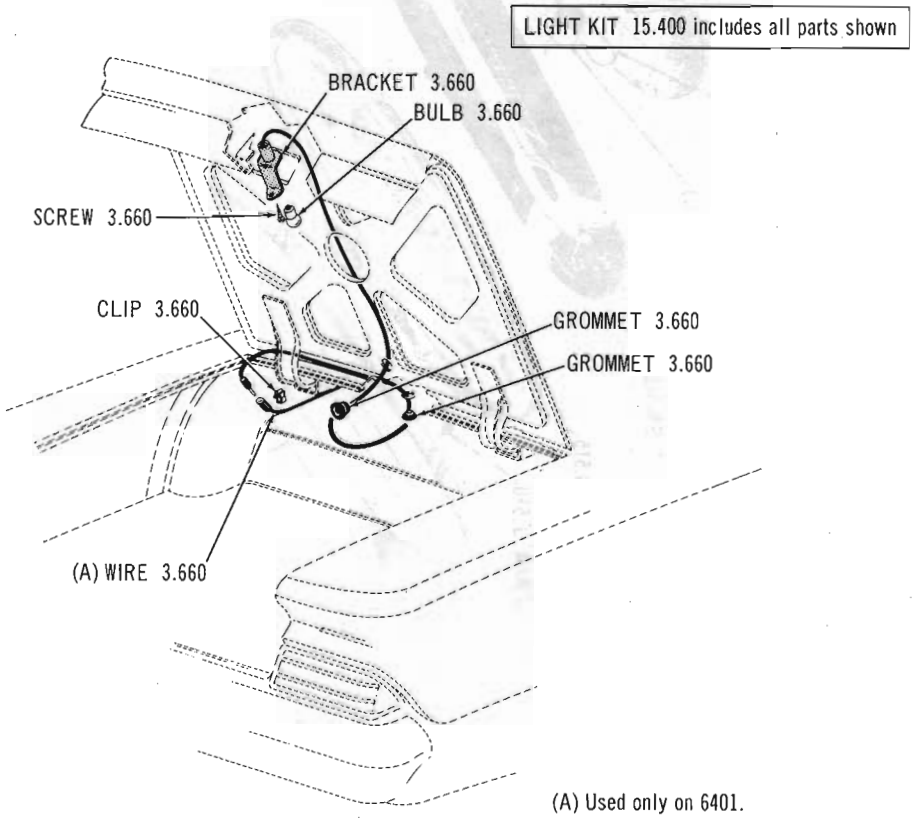

(A) Used only on 6401.

LUGGAGE COMPARTMENT LAMP ASSEMBLY 64-65 ALL MODELS

Copyright 1963 American Motors Corp.

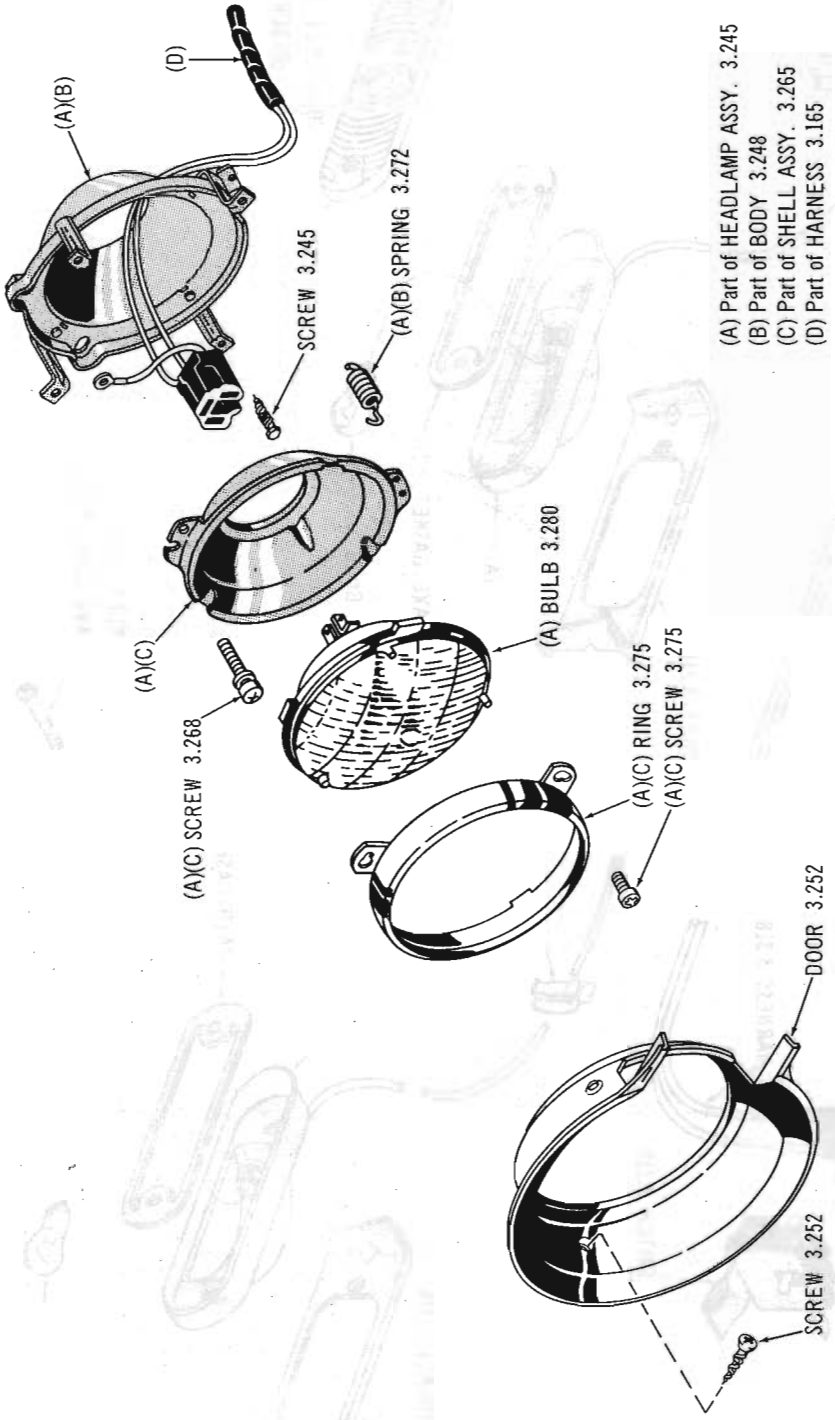

HEADLAMP ASSEMBLY 64-65 01

Copyright 1963 American Motors Corp.

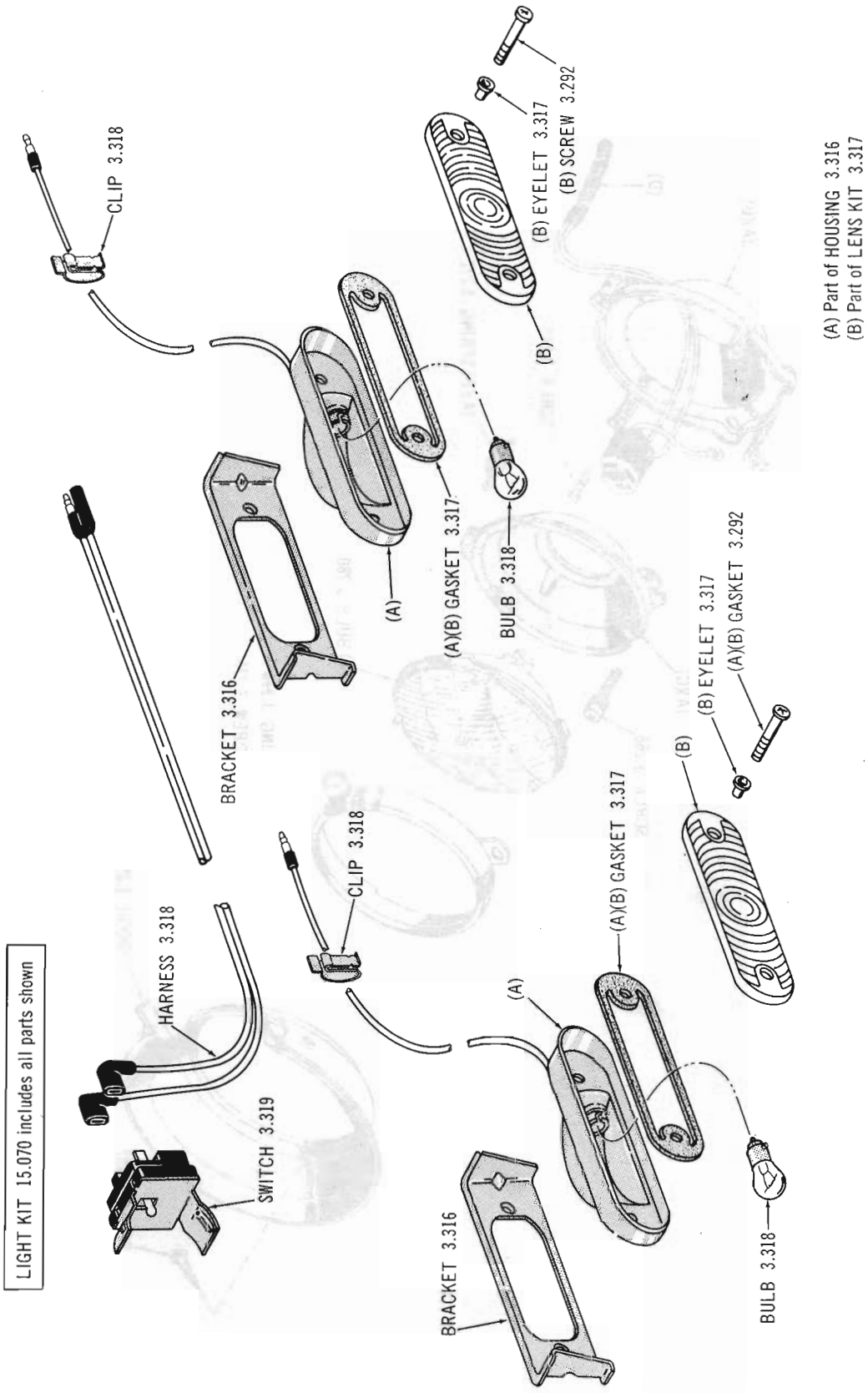

BACK-UP LAMP ASSEMBLY 63 thru Current 10-80: Typical of 64 01 Factory Installation

Copyright 1963 American Motors Corp.

Copyright 1963 American Motors Corp.

Printed in U.S.A.

BACK-UP LAMP KIT (Field Installation) 64-65 01

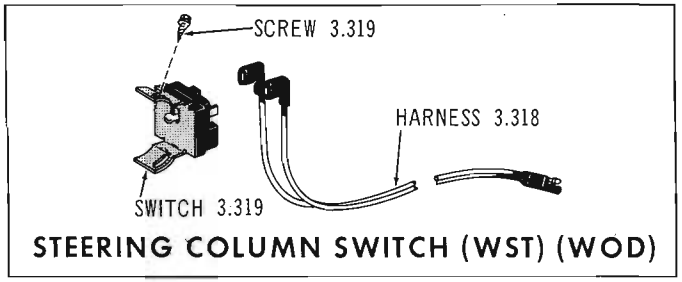

STEERING COLUMN SWITCH (WST) (WOD)

LIGHT KIT 15.070 includes all parts shown

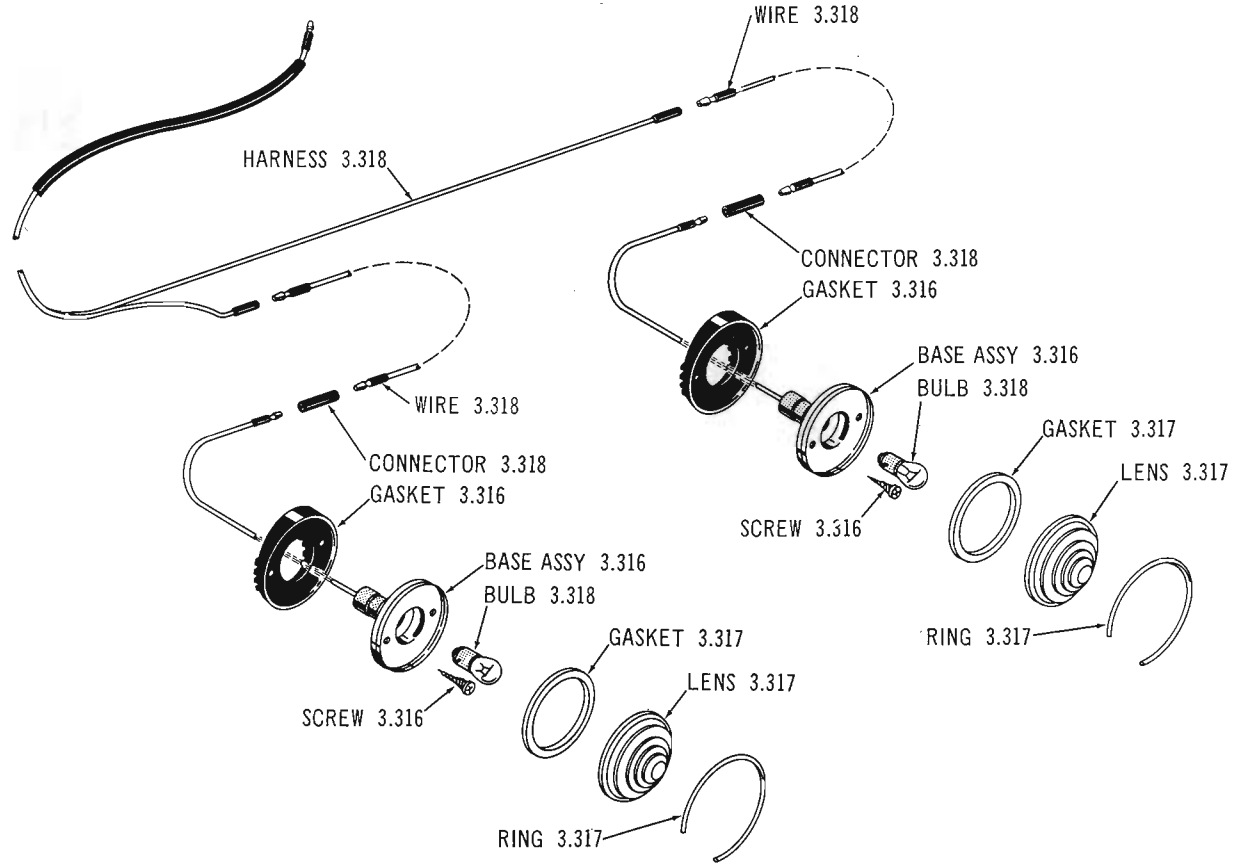

Copyright 1963 American Motors Corp.

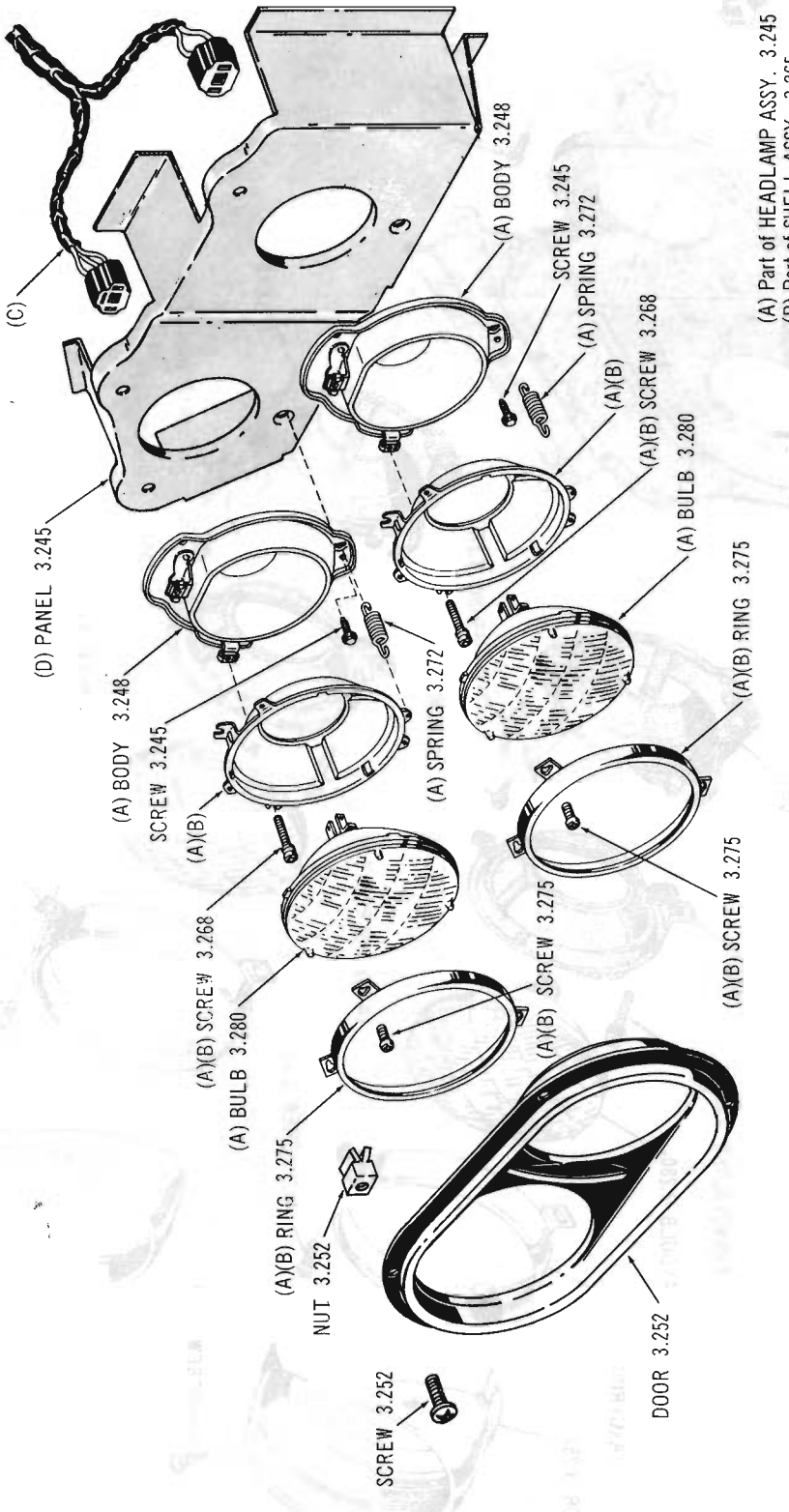

HEADLAMP ASSEMBLY 64 10-80

Copyright 1963 American Motors Corp.

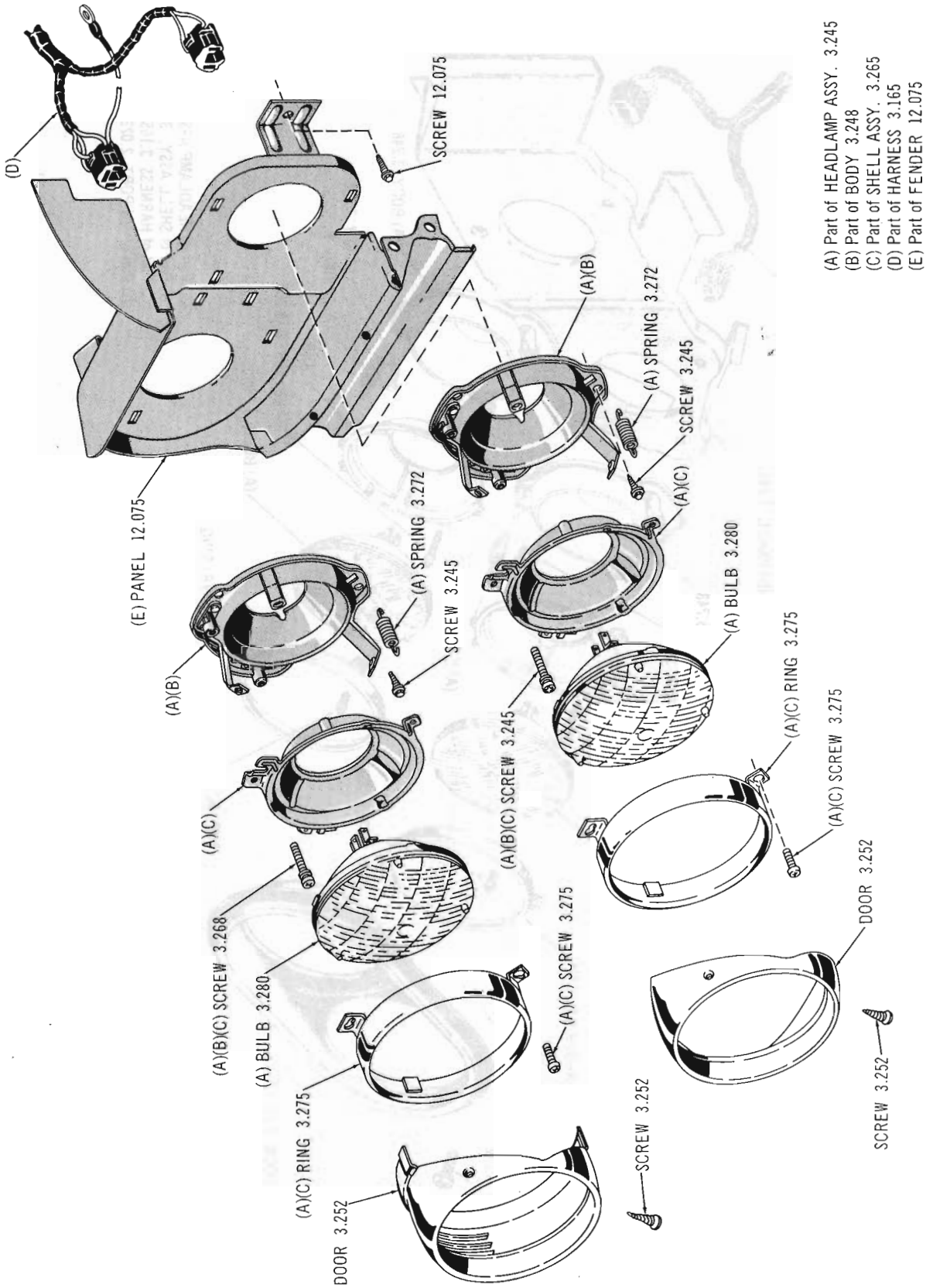

HEADLAMP ASSEMBLY 65 10

Copyright 1963 American Motors Corp.

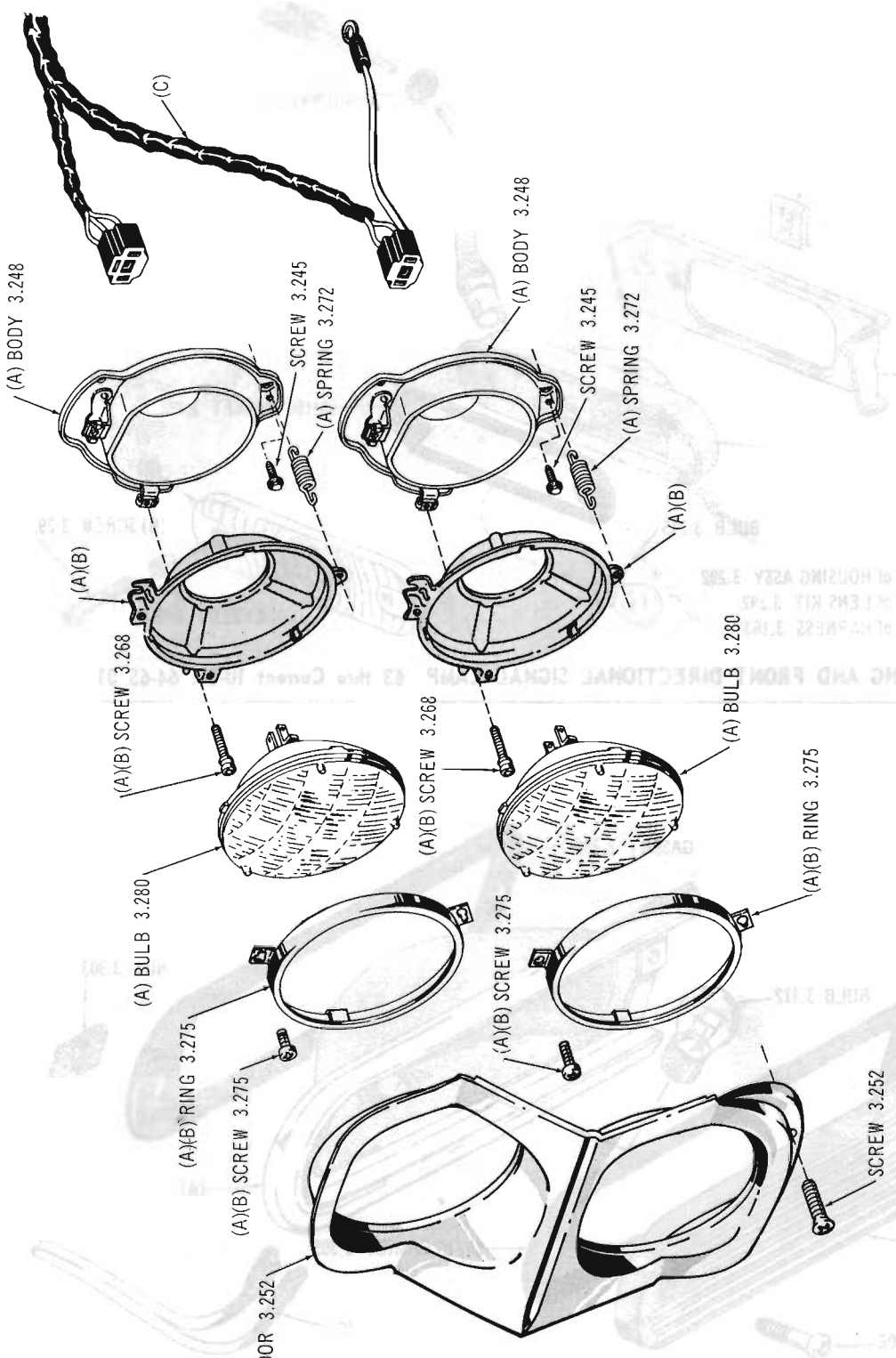

HEADLAMP ASSEMBLY 65 80

Copyright 1963 American Motors Corp.

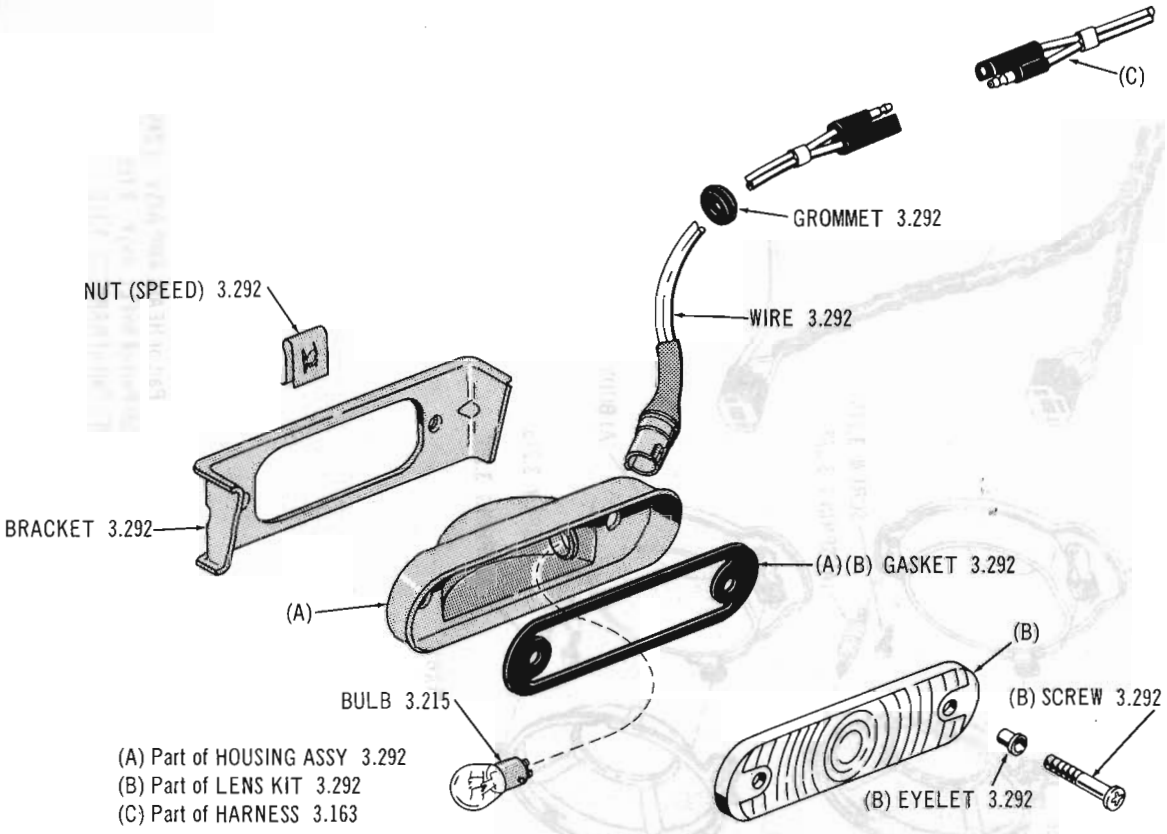

PARKING AND FRONT DIRECTIONAL SIGNAL LAMP 63 thru Current 10-80: 64-65 01

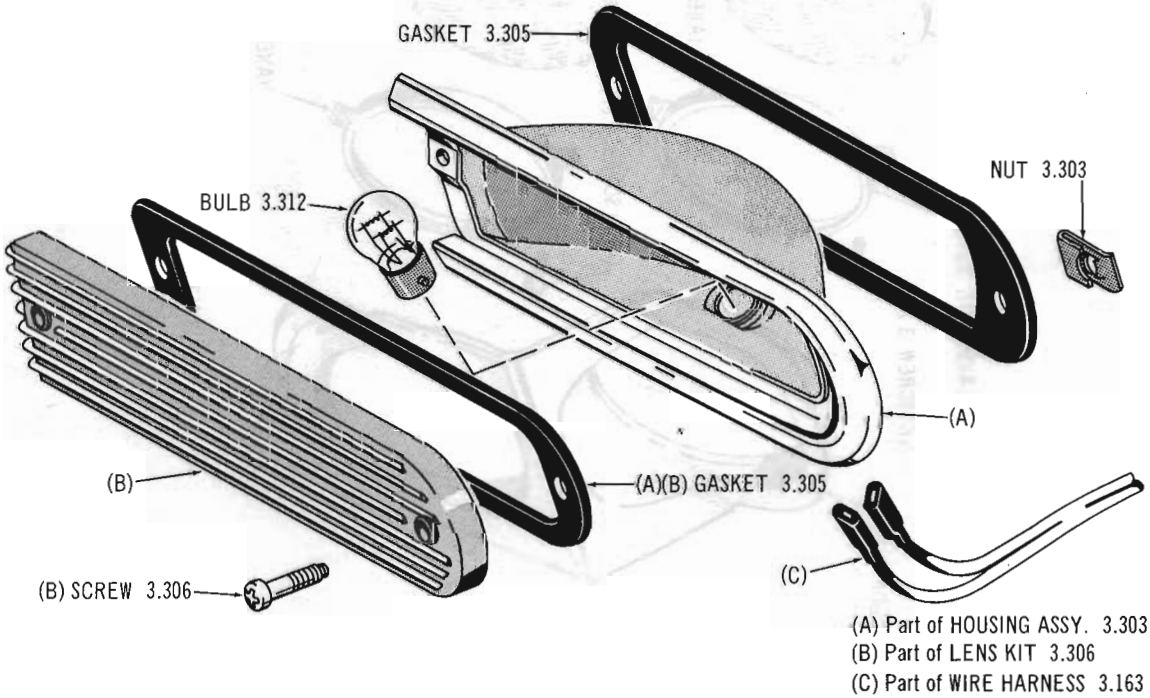

TAIL, STOP AND REAR DIRECTIONAL SIGNAL LAMP 65 05-06-07-09

Copyright 1963 American Motors Corp.

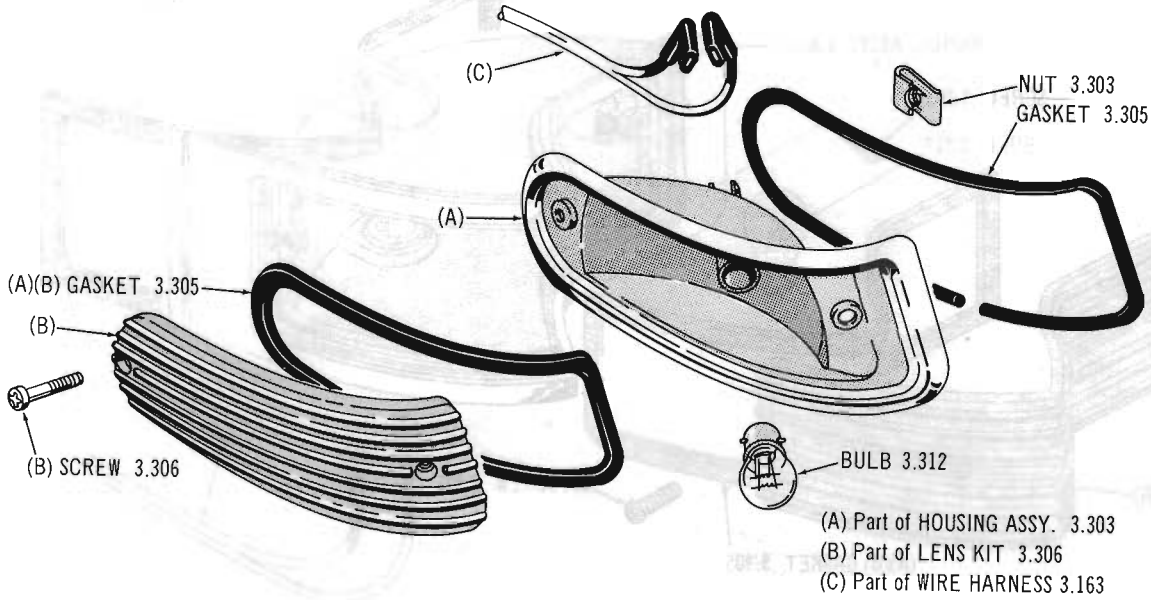

TAIL, STOP AND REAR DIRECTIONAL SIGNAL LAMP 65 08

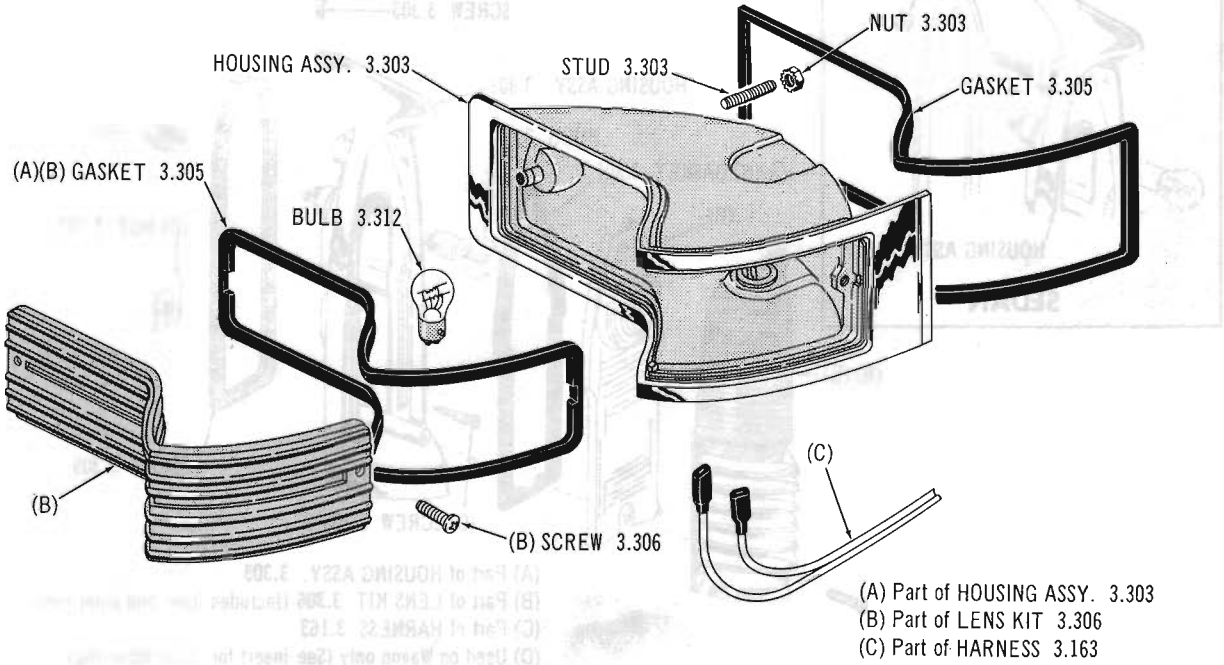

TAIL, STOP AND REAR DIRECTIONAL SIGNAL LAMP 65 15-16-17-19 (Except Marlin)

Copyright 1963 American Motors Corp.

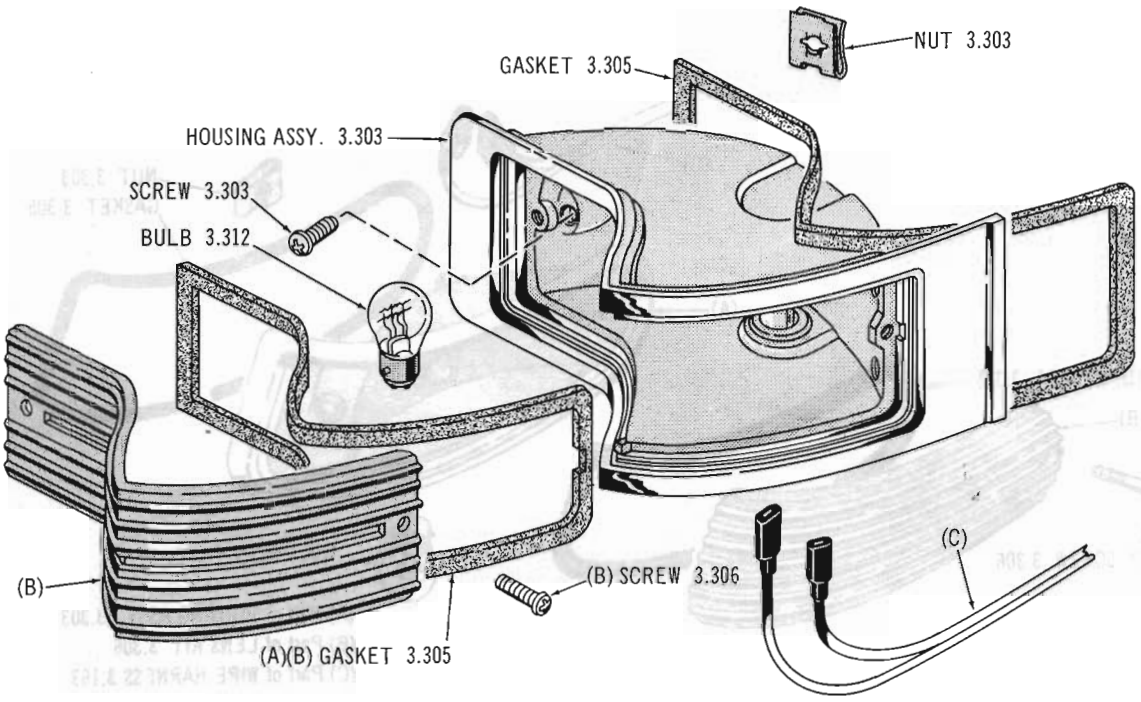

(A) Part of HOUSING ASSY. 3.303
(B) Part of LENS KIT 3.306
(C) Part of HARNESS 3.163

TAIL, STOP AND REAR DIRECTIONAL SIGNAL LAMP 65 18

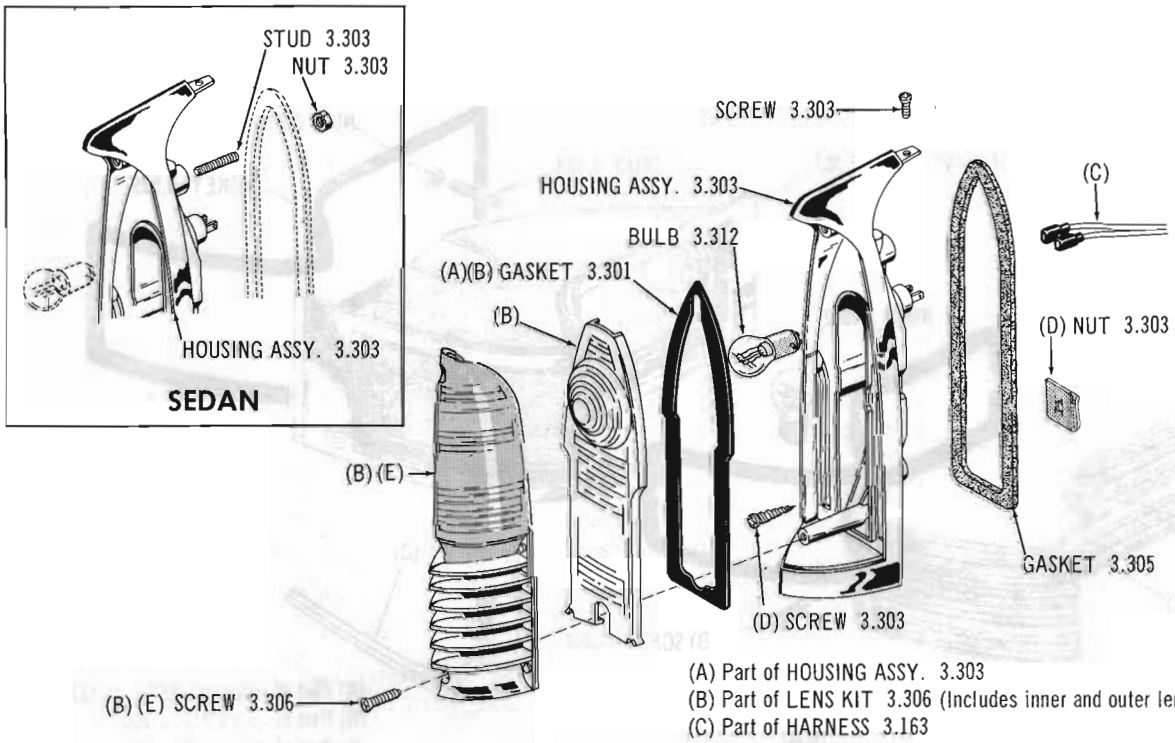

(A) Part of HOUSING ASSY. 3.303
(B) Part of LENS KIT 3.306 (Includes inner and outer lens)
(C) Part of HARNESS 3.163
(D) Used on Wagon only (See insert for Sedan Mounting)
(E) Part of LENS KIT 3.306 (Includes outer lens)

TAIL, STOP AND REAR DIRECTIONAL SIGNAL LAMP 65 80

Copyright 1963 American Motors Corp.

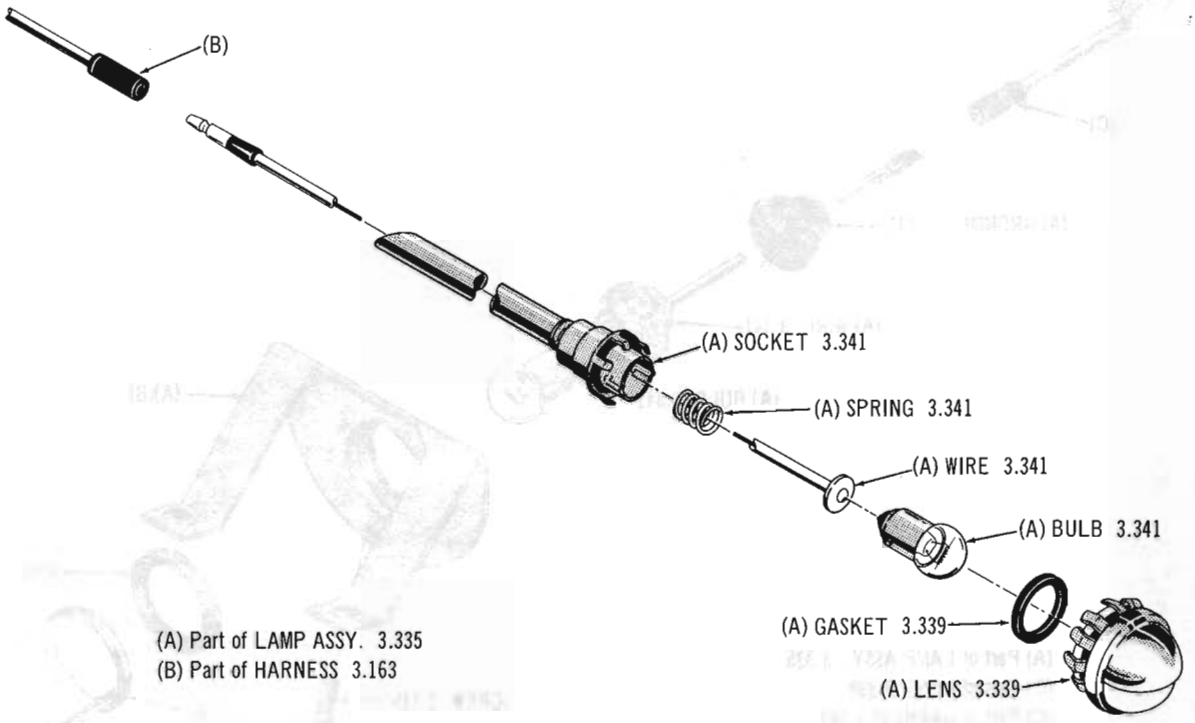

(A) Part of LAMP ASSY. 3.335
(B) Part of HARNESS 3.163

REAR LICENSE PLATE LAMP 61 thru 63 01

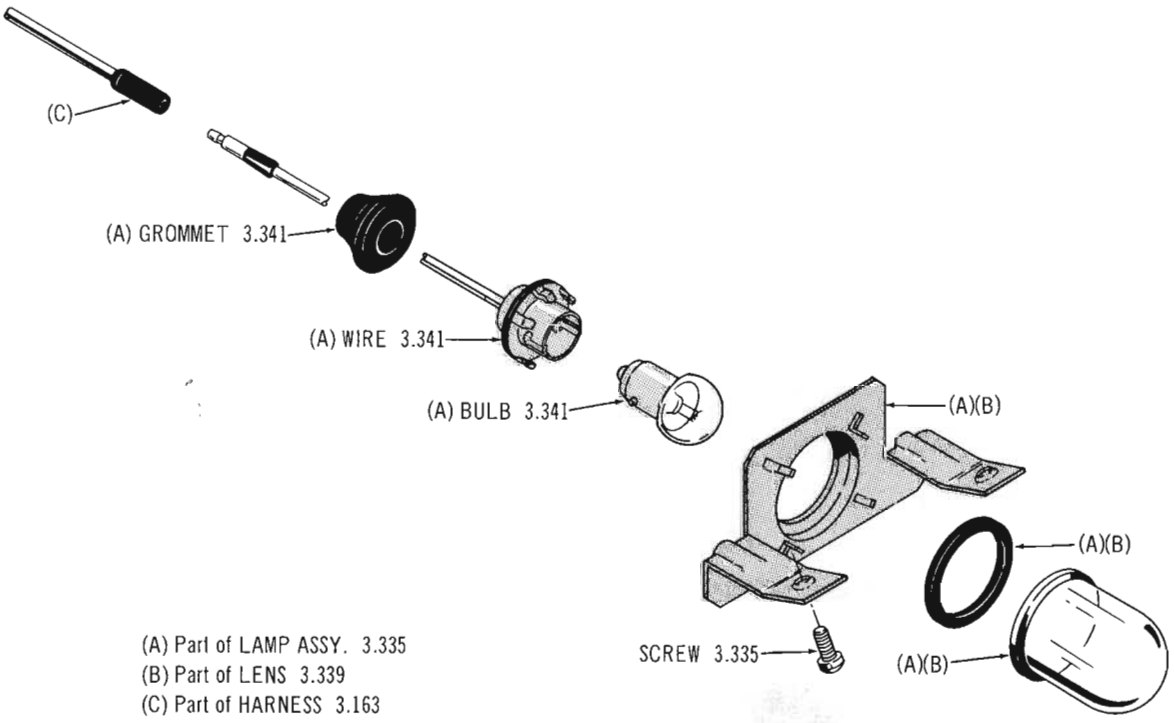

(A) Part of LAMP ASSY. 3.335
(B) Part of LENS 3.339
(C) Part of HARNESS 3.163

REAR LICENSE PLATE LAMP 64 01: 65 ALL MODELS

Copyright 1963 American Motors Corp.

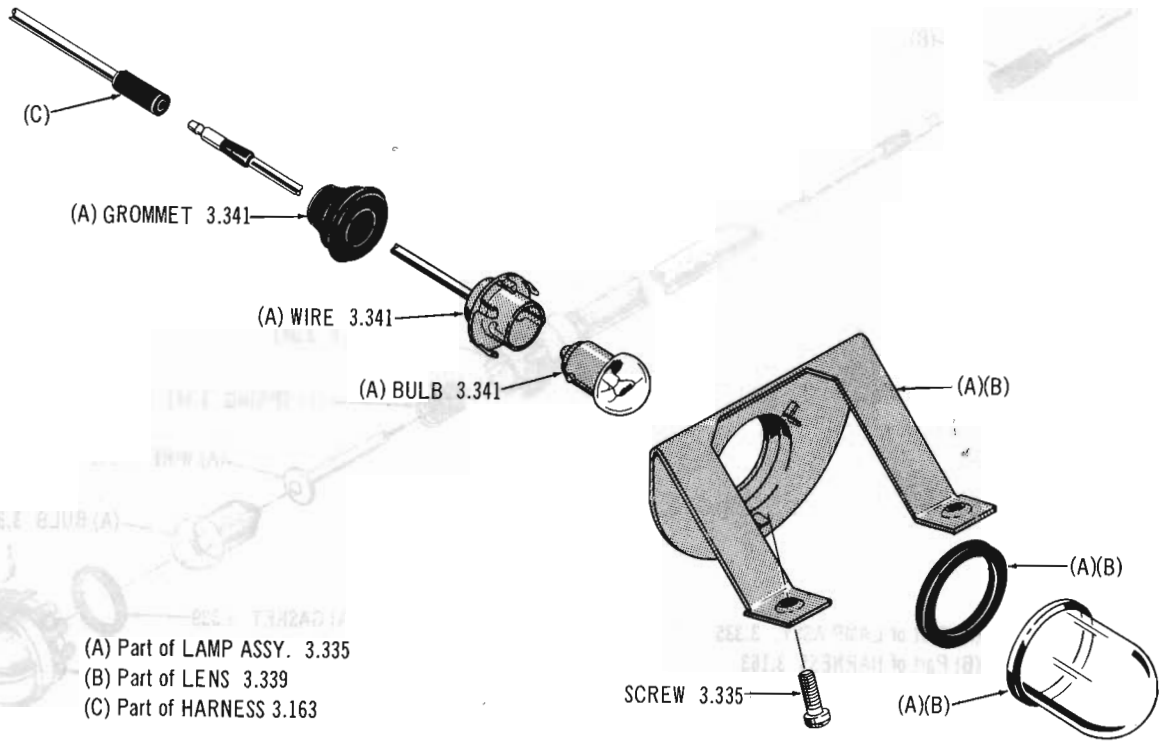

(A) Part of LAMP ASSY. 3.335
(B) Part of LENS 3.339
(C) Part of HARNESS 3.163

REAR LICENSE PLATE LAMP 63-64 10-80

Copyright 1963 American Motors Corp.

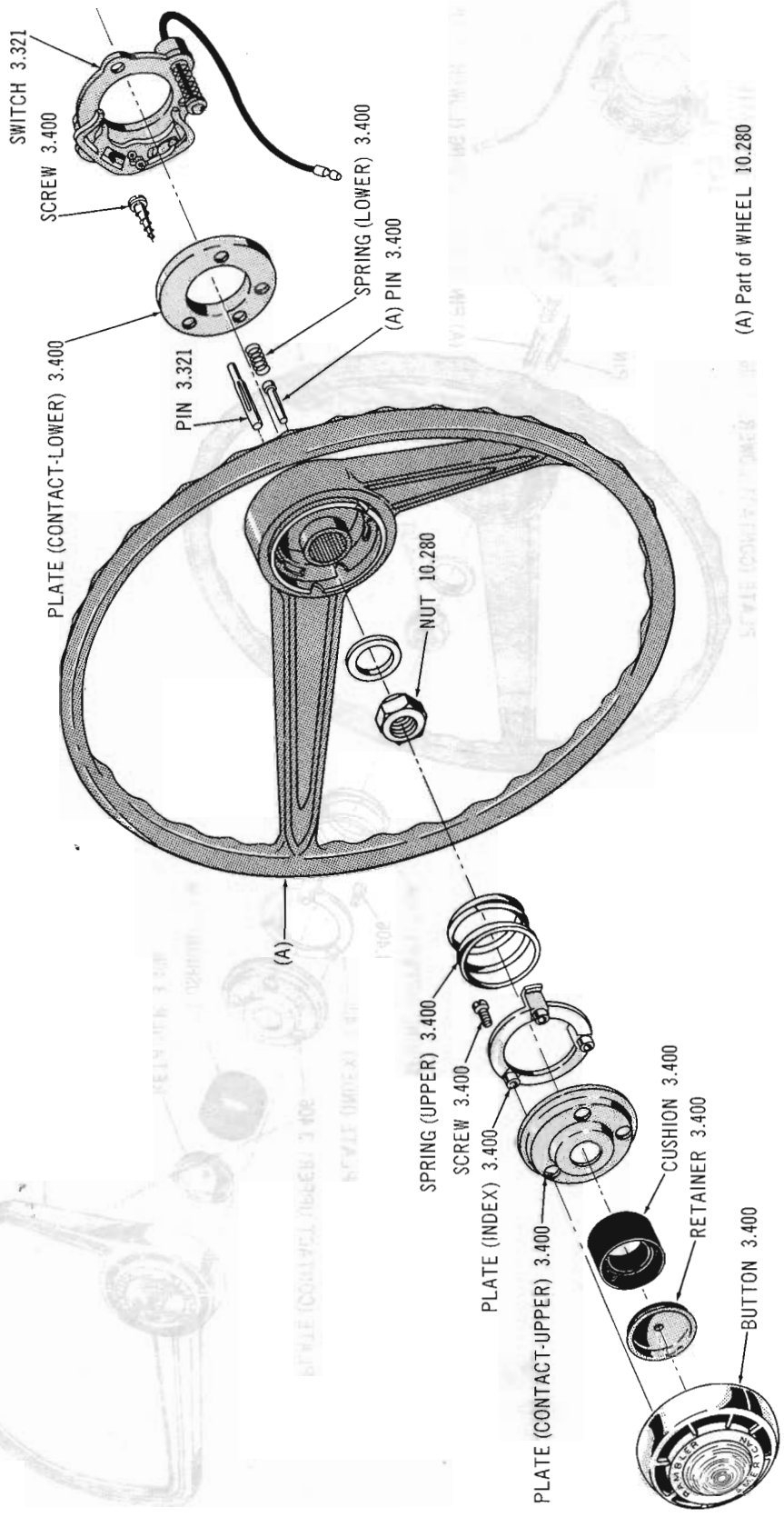

STEERING WHEEL AND HORN BUTTON 64 01

Copyright 1963 American Motors Corp.

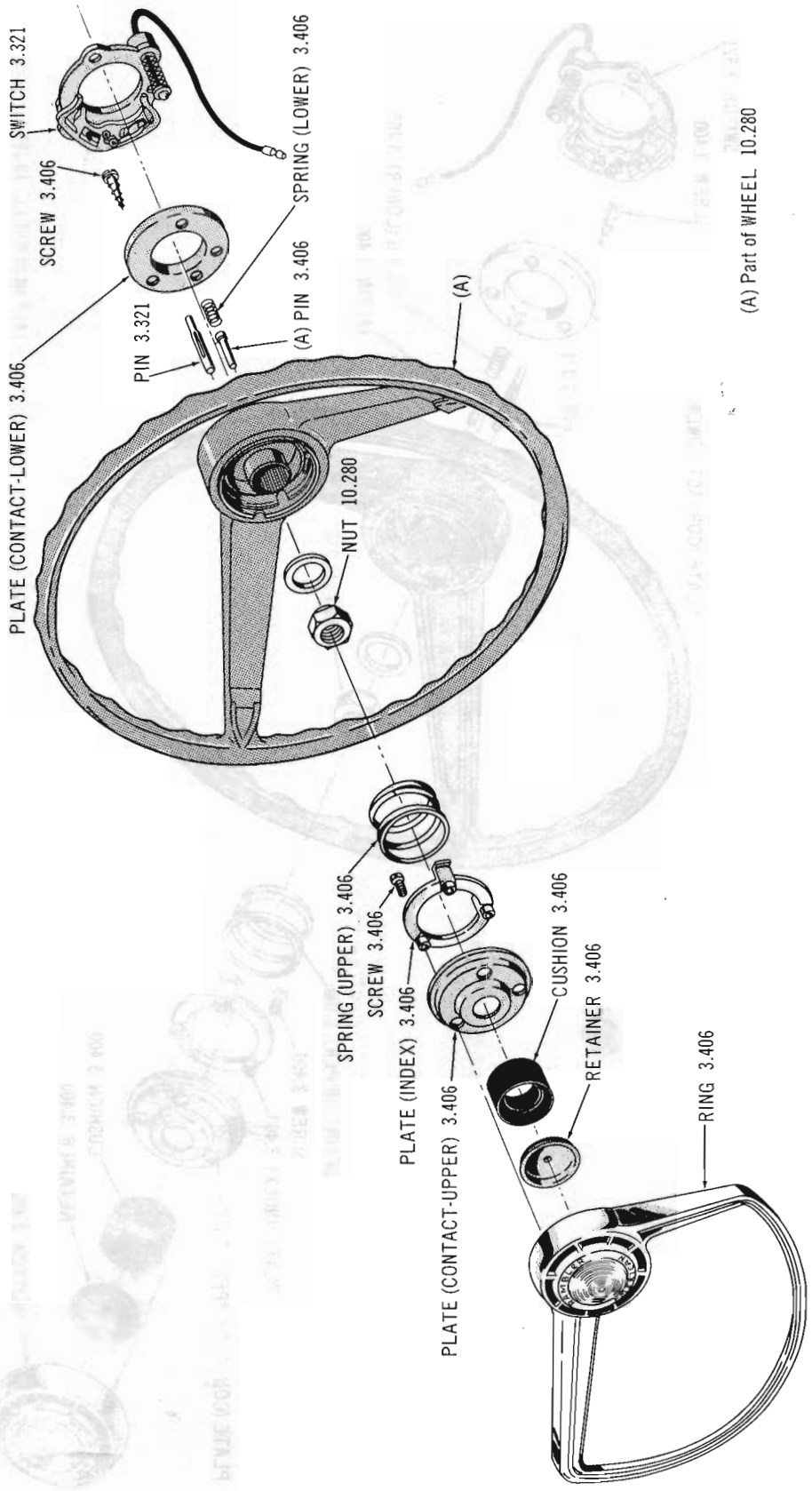

STEERING WHEEL AND HORN RING 64 01

Copyright 1963 American Motors Corp.

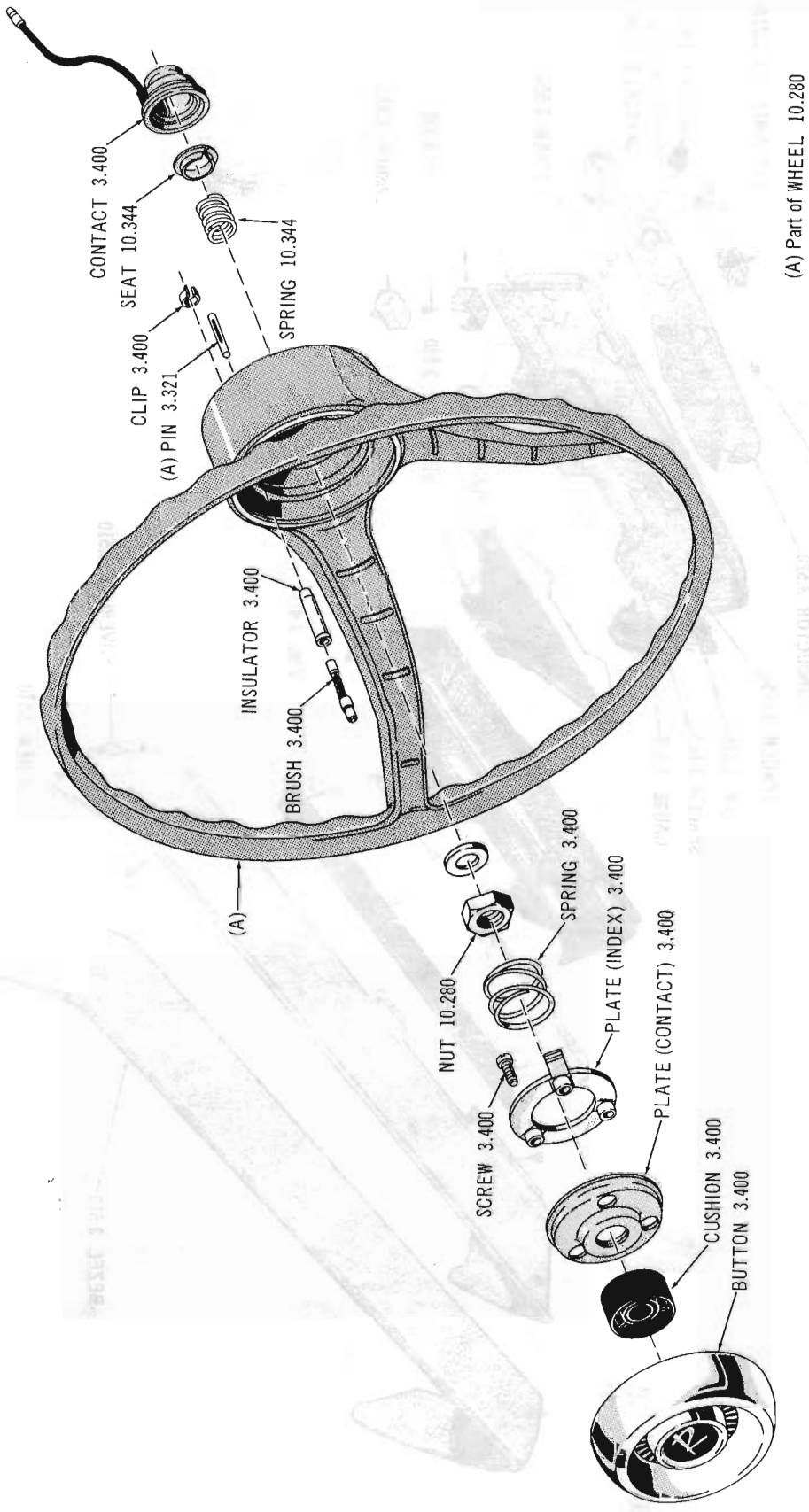

STEERING WHEEL AND HORN BUTTON 63 10-80: 64-65 10

Copyright 1963 American Motors Corp.

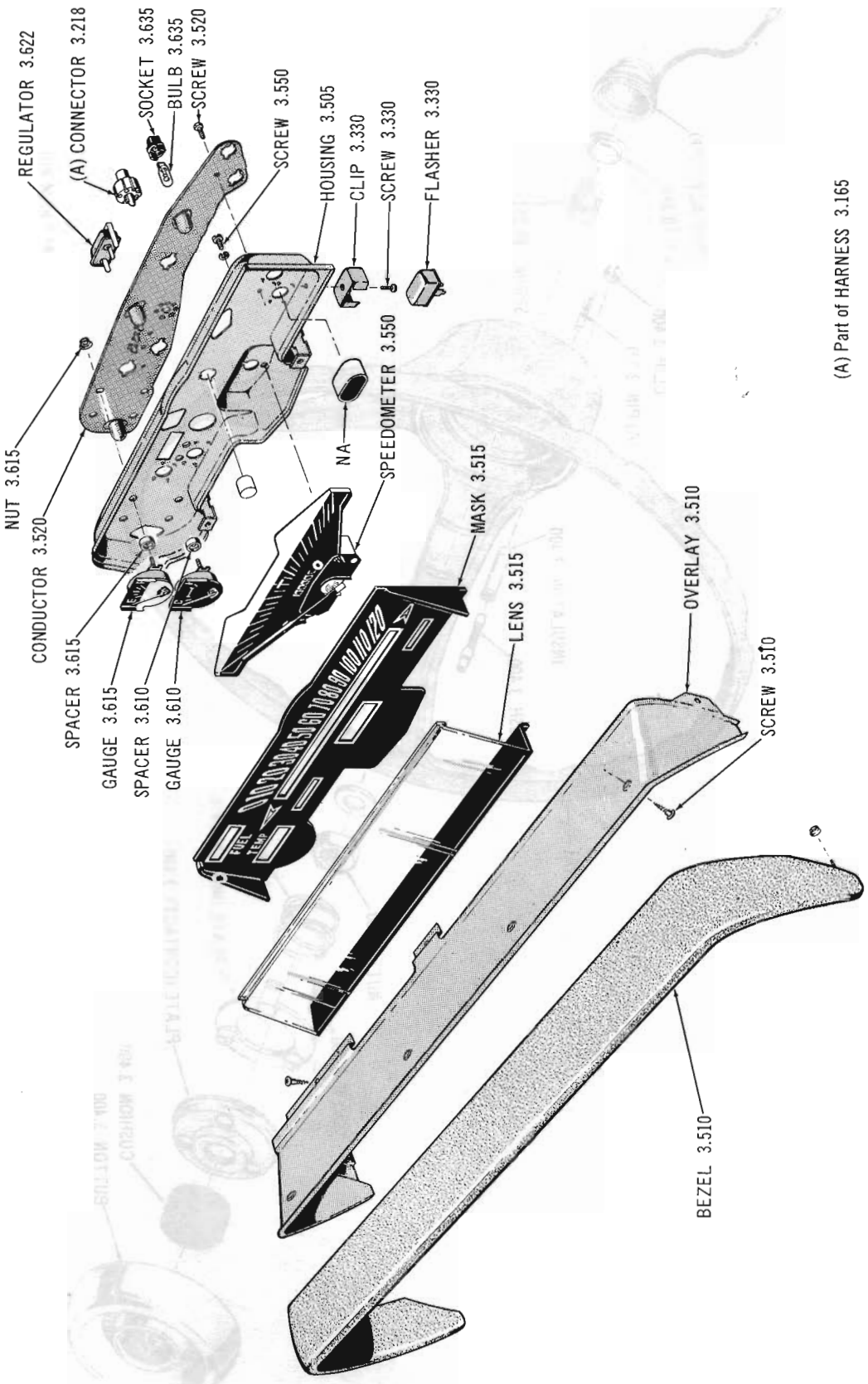

INSTRUMENT CLUSTER 65 10 (Except Marlin)

Copyright 1963 American Motors Corp.

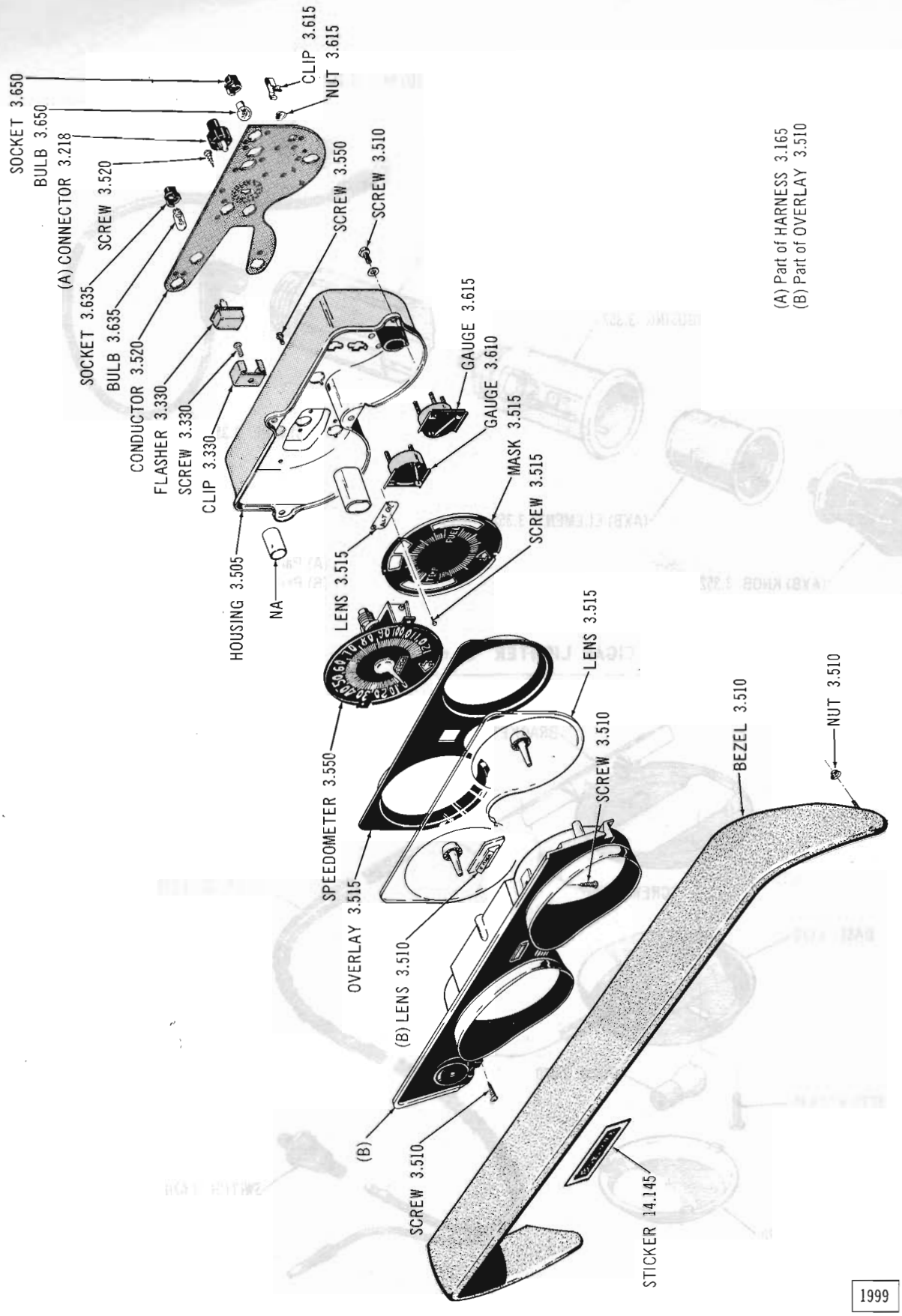

INSTRUMENT CLUSTER 65 50 (Marlin): 65 80

Copyright 1963 American Motors Corp.

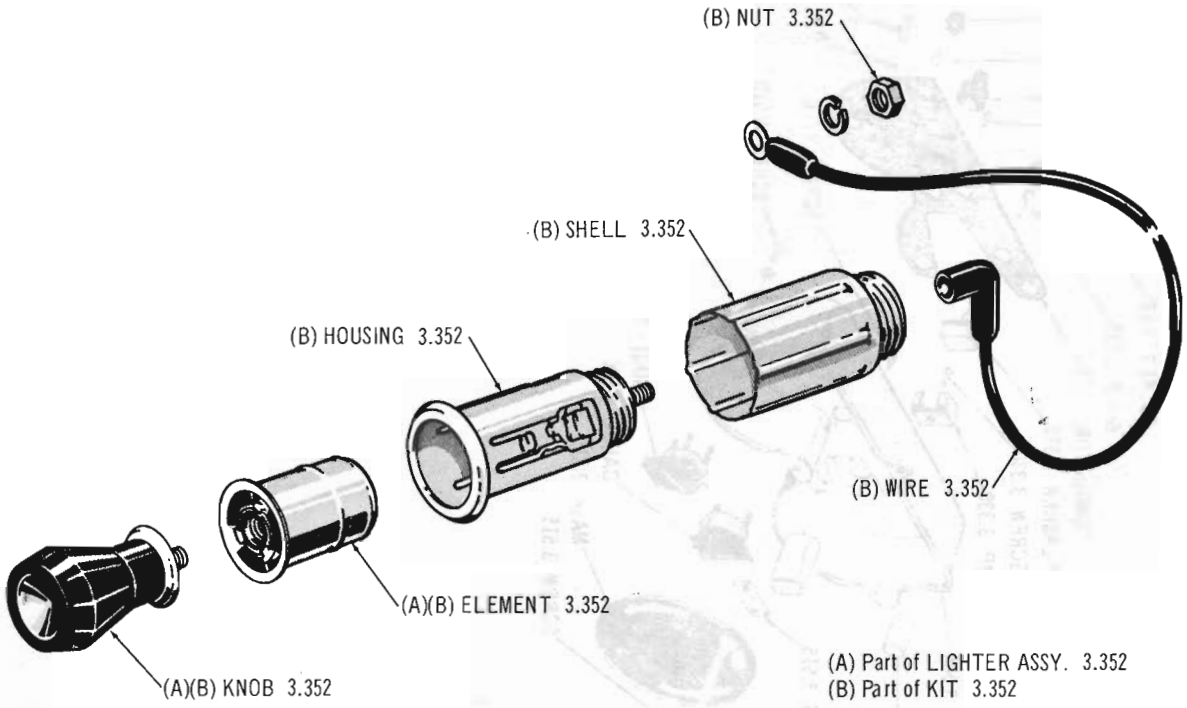

CIGAR LIGHTER 60 thru 65 01

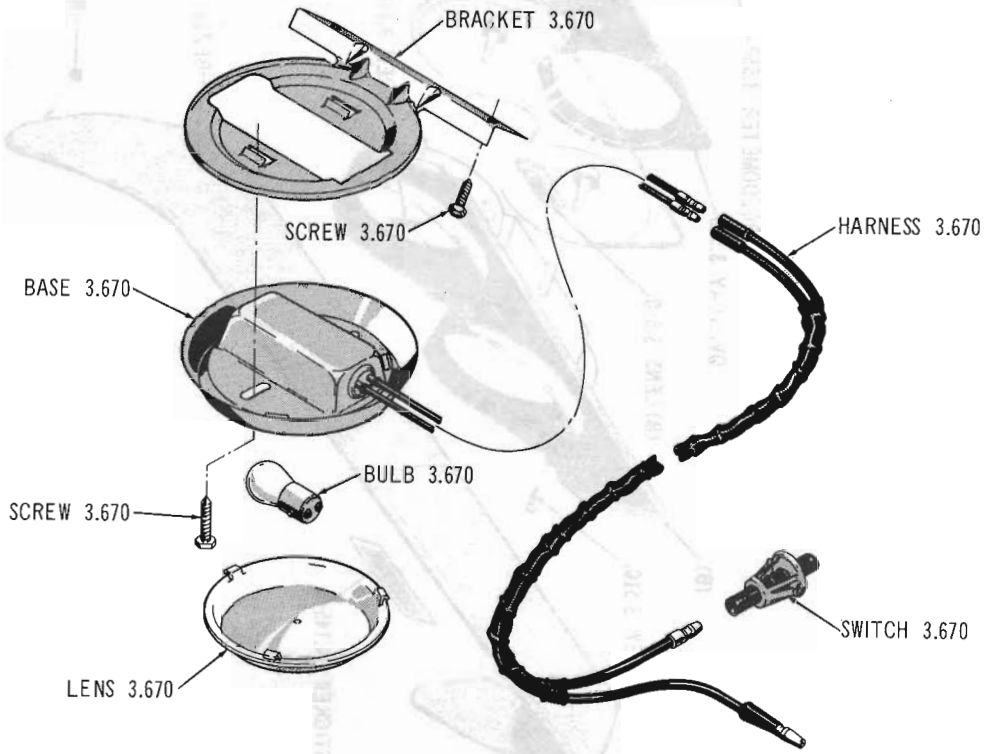

CARGO AREA LAMP 61 thru 65 08-18-88

Copyright 1963 American Motors Corp.

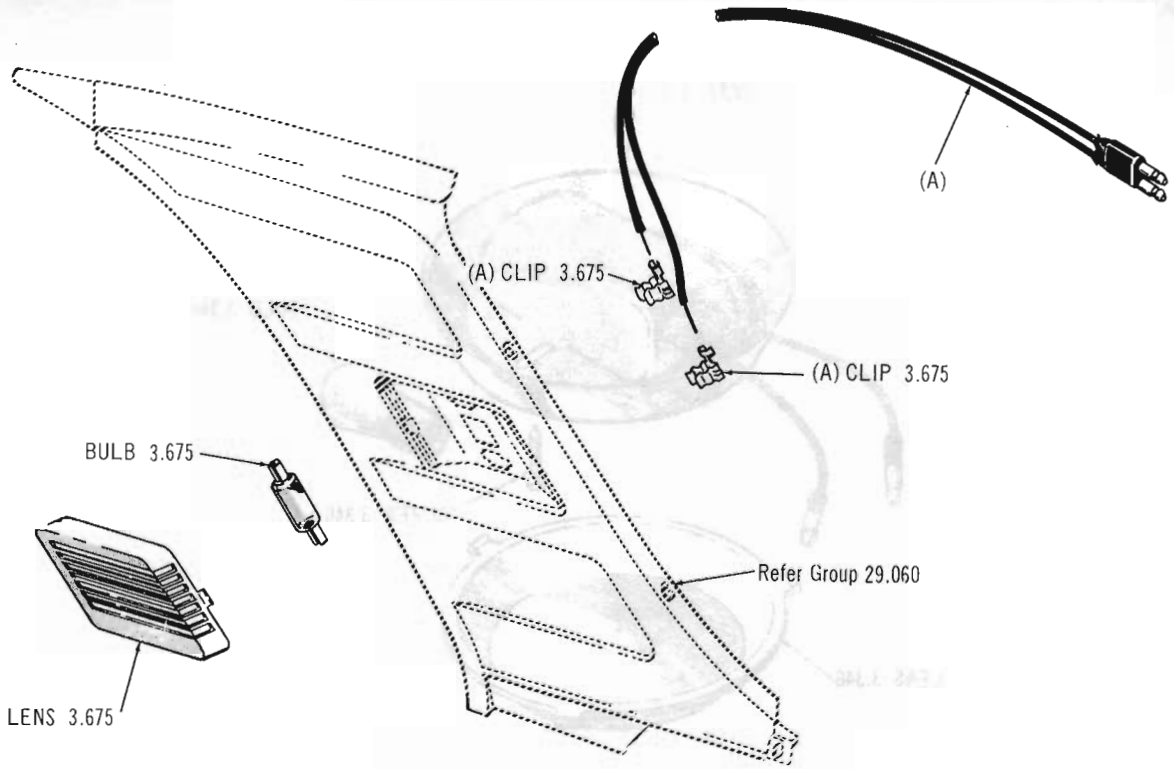

REAR QUARTER LAMP 65 19 (Except Marlin)

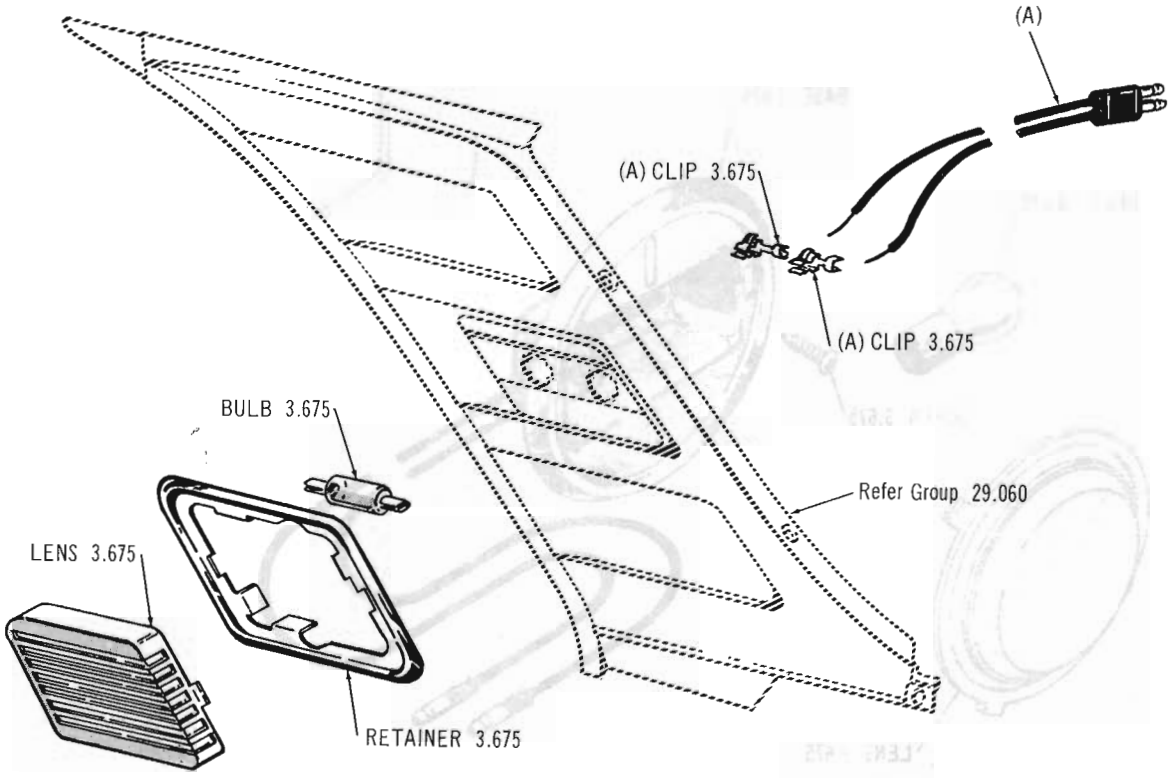

REAR QUARTER LAMP 65 89

Copyright 1963 American Motors Corp.

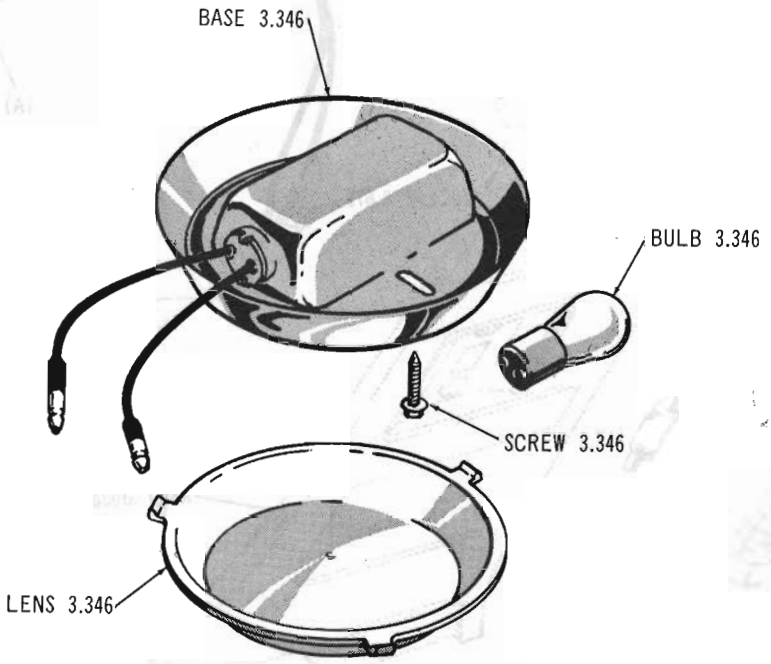

DOME LAMP 63 THRU CURRENT 08-18-88

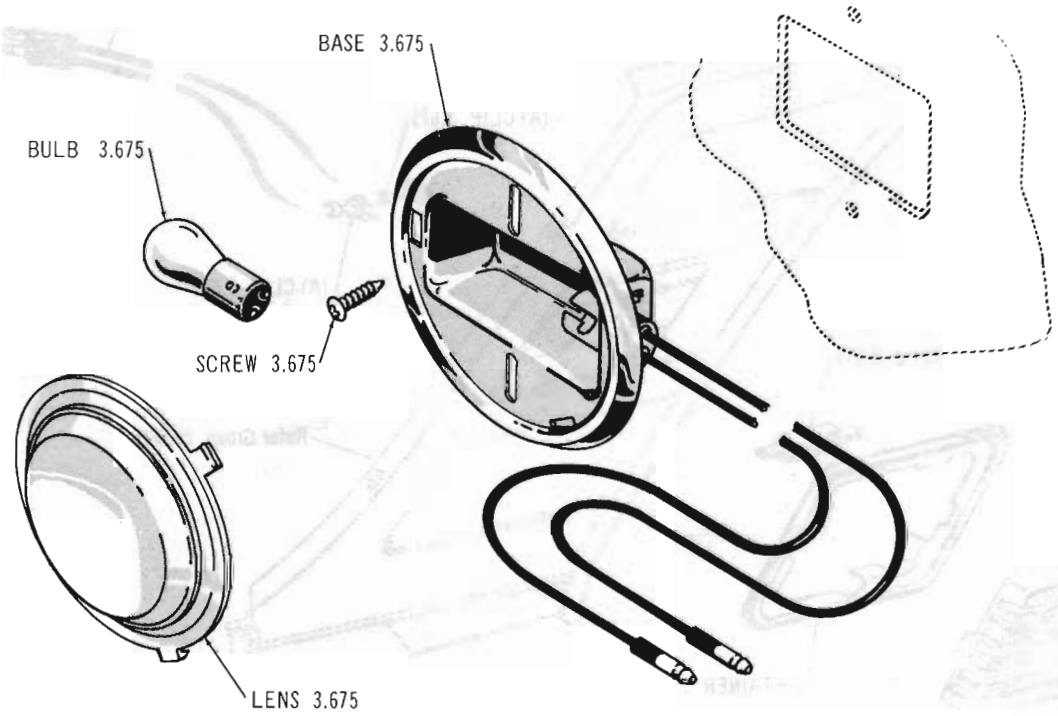

REAR QUARTER LAMP 63-64 09

Copyright 1963 American Motors Corp.

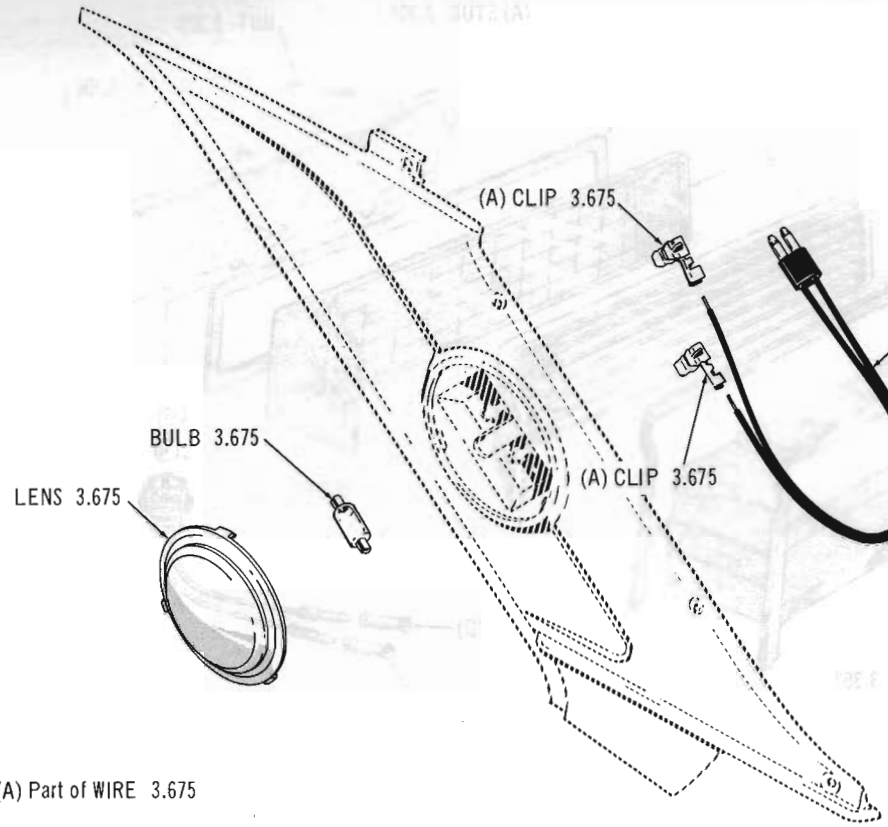

(A) Part of WIRE 3.675

2147

REAR QUARTER LAMP 65 09

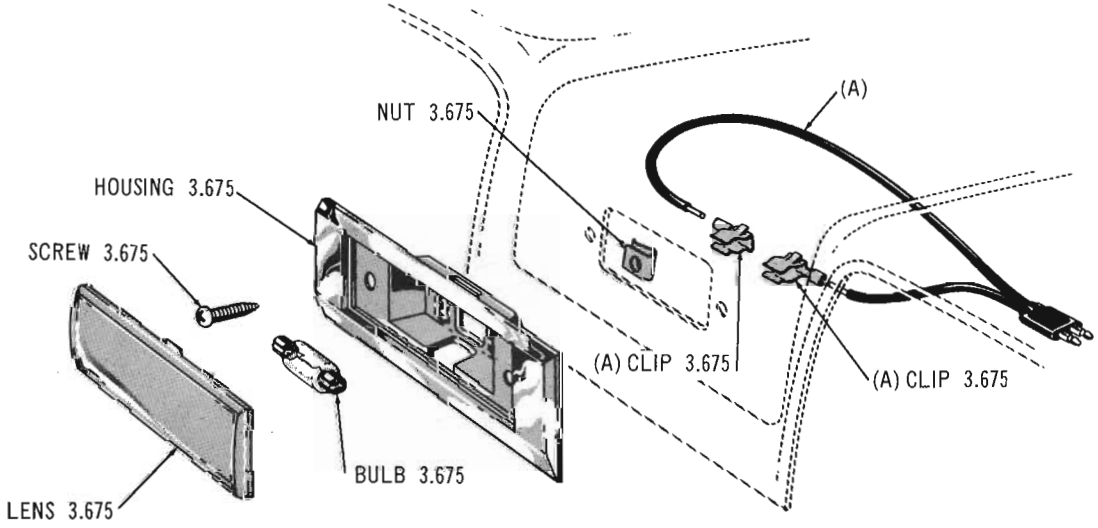

(A) Part of WIRE 3.675

2235

REAR QUARTER LAMP 65 59-7 (Marlin)

Copyright 1963 American Motors Corp.

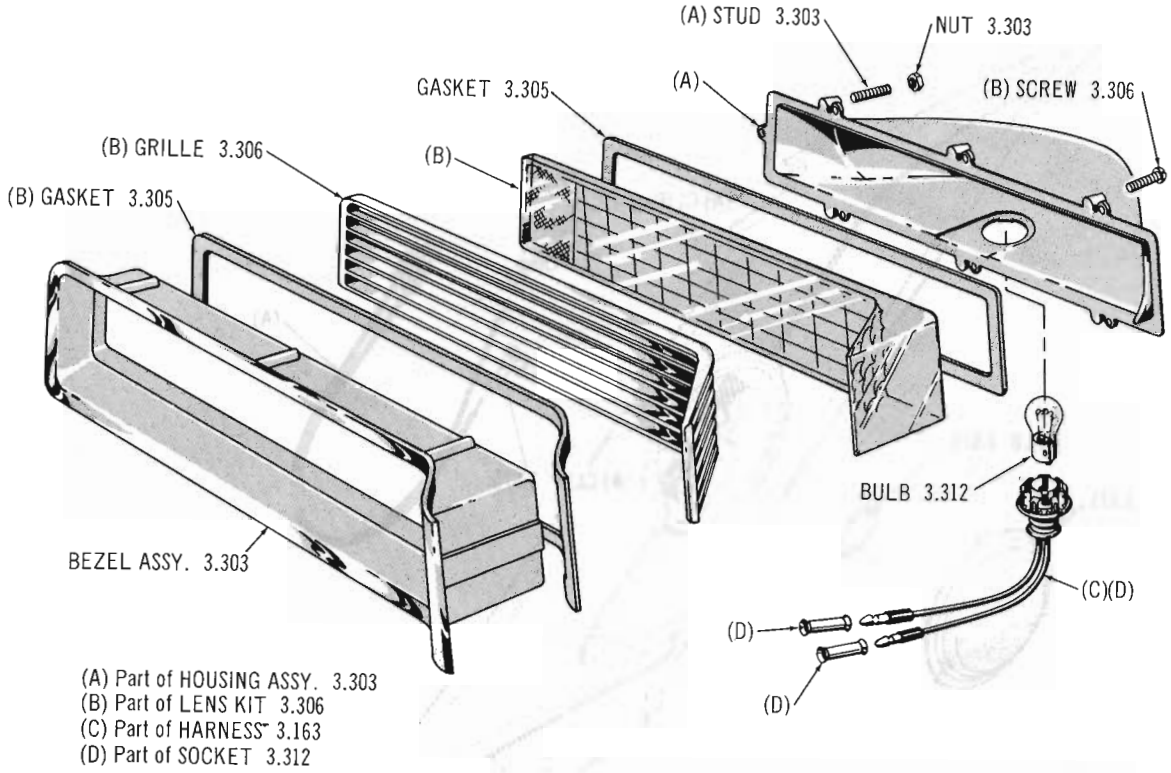

TAIL, STOP AND REAR DIRECTIONAL SIGNAL LAMP 65 59-7 (Marlin)

Copyright 1963 American Motors Corp.

GROUP NO. — DESCRIPTION — YEAR and MODEL	PRIMARY GROUP NO.	PER CAR	PART NO.	CODE
3.001 PLUG, Spark				
(Auto-Lite-AL-7) 60 Thru 65 01-10 (Six-6 Req.): 60 Thru 65 10-20-80 (V8-8 Req.)	.....	AR	314 1020	
(Champion H-10) 60 Thru 65 01 (LHE-6 Req.): 60 Thru 63 10 (Six-6 Req.): 60 Thru 64 10-20-80 (V8-8 Req.)	.....	AR	157 055	
(Champion H-14Y) 64 10 (OHV-196-6 Req.): 64-65 10-80 (V8-8 Req.)	.....	AR	317 5863	
(Champion H-18Y) 60 Thru 65 01 (OHV-196)	.....	6	320 0787	
(Champion N-14Y) 65 01-10 (OHV-199): 65 01-10-80 (OHV-232): 64 10 (OHV-232)	.....	6	317 2329	
(Champion XH-10) 62 Thru 65 01-10 (Six-6 Req.): 62 Thru 65 10-80 (V8-8 Req.)	.....	AR	316 7538	
(Champion XH-14Y) 65 01 (OHV-196-6 Req.): 65 10-80 (V8-8 Req.)	.....	AR	318 0258	
(Champion XN-14Y) 65 01-10 (OHV-199): 65 01-10-80 (OHV-232)	.....	6	318 0257	
(Champion-F-11Y) Other Make Cars	.....	AR	320 3069	
(Champion-F-14Y) Other Make Cars	.....	AR	320 3070	
(Champion-J-12Y) Other Make Cars	.....	AR	320 3068	
GASKET, Spark Plug				
60 Thru 65 01-10 (Six-6 Req.): 60 Thru 65 10-20-80 (V8-8 Req.)	.....	AR	44 042	
3.003 TUNE-UP KIT (Includes Spark Plugs, Contact Set And Condenser)				
60 Thru 62 01 (LHE)	.....	1	320 3964	
60 Thru 62 01 (OHV)	.....	1	320 3963	
63 01-10 (Six): 64-65 01 (LHE)	.....	1	320 4377	
64 01-10 (OHV-196)	.....	1	320 5394	
65 01 (OHV-196)	.....	1	320 5887	
65 01-10 (OHV-199): 65 01-10-80 (OHV-232): 64 10 (OHV-232)	.....	1	320 5376	
60 Thru 62 10	.....	1	320 3965	
63 10-80 (V8): 64 10-80 (V8-Note 3.003-1 Type 1)	....	1	320 3968	
64 10-80 (V8-Note 3.003-1 Type 2): 65 10-80 (V8)	.....	1	320 5589	
60 Thru 62 20-80	.....	1	320 3966	
162 Thru 163 01-10 (Can): 164-165 01 (LHE-Can) ***(Use 320 9092)***	.....	1	320 9070	#
164 01 (OHV-Can): 164 10 (Six-Can): 165 01 (OHV-196-Can)	.....	1	320 9090	
165 01 (OHV-232-Can): 165 10-80 (Six-Can)	.....	1	320 9160	
163 10-80 (Can-V8)	.....	1	320 9071	
164-165 10-80 (Can-V8)	.....	1	320 9091	
3.005 GENERATOR (Less Pulley)(For Components Refer To Group 3 Charts)				
(25 AMP-Auto-Lite GJO-7101A; GJO-7101S) 60-61 01 (LHE): 60-61 20 (LAC)	.....	1	320 1812	
(25 AMP-Auto-Lite GJO-7402A; GJO7402S) 62 01 (LHE): ***162 01-10 (Can-Note 3.005-13)***	.....	1	320 3587	

NOTE 3.003-1: Two Types of Tune-Up Kits were used for the 64 10-80 (V8) Models. They can be identified as follows:
Type 1: Contains Champion Spark Plug No. H-10 (A.M.C. Part No. 157055).
Type 2: Contains Champion Spark Plug No. H-14Y (A.M.C. Part No. 3175863).

NOTE 3.005-1: Used on Cars with an Auto-Lite 35 AMP Generator.
NOTE 3.005-2: Used on Cars with a Delco Remy 35 AMP Generator.
NOTE 3.005-3: Used on Cars with an Auto-Lite 40 AMP Low Cut in Heavy Duty Generator.
NOTE 3.005-4: Used on Cars with a Delco Remy 45 AMP not Low Cut in Heavy Duty Generator.
NOTE 3.005-5: Used on Cars with an Auto-Lite 40 AMP Alternator.
NOTE 3.005-6: Used on Cars with a Delco Remy 42 AMP Alternator.
NOTE 3.005-7: Used on Cars with a Delco Remy 60 AMP Alternator.
NOTE 3.005-8: Used on Cars with a Leece Neville 50 AMP Alternator.
NOTE 3.005-9: Used on Cars with a Leece Neville 60 AMP Alternator.
NOTE 3.005-10: Used on Cars with a Motorola 35 AMP Alternator.
NOTE 3.005-11: Used on Cars with a Motorola 40 AMP Alternator.
NOTE 3.005-12: Used on Cars with a Motorola 55 AMP Alternator.
NOTE 3.005-13: For Components refer to page Ch 3-7. All parts identical except when ordering Coil Set, order 320 1815 (Auto-Lite GJO-1005A) in place of 320 4461 (Auto-Lite GJO-1005B).

Copyright 1963 American Motors Corp.

GROUP NO. — DESCRIPTION — YEAR and MODEL	PRIMARY GROUP NO.	PER CAR	PART NO.	CODE
(25 AMP-Delco Remy 1100326; 1100324) 61 01 (OHV-LAC): 60-61 10 (LAC)....	.....	1	320 2796	
(25 AMP-Delco Remy 1100416; 1100421)(Use For 1100313 & 1100304) 60 01 (OHV): 60 10)LAC): 62 01-10 (OHV-LAC).....***(Replaces 320 0235)***	.....	1	320 3564	
(30 AMP-Delco Remy 1102113; 1102096) 61 01 (OHV-WAC): 60-61 10 (WAC) ...	.....	1	320 2797	
(30 AMP-Delco Remy 1102299; 1102312) 62 01-10 (OHV-WAC): 63 01-10 (LAC): 64 01 (LAC).....	.....	1	320 3565	
(35 AMP-Auto-Lite GJP-7101A; GJP-7101S) ***60-61 10-20 (Heavy Duty):*** 60-61 20 (WAC): 60-61 80.....	.....	1	320 1811	
(35 AMP-Auto-Lite GJP-7405A; GJP-7405S) ***62 10 (Heavy Duty):*** 62 80.....	.....	1	320 3588	
(35 AMP-Delco Remy 1112055; 1102055)(Use For 1102018) ***60 10-20 (Heavy Duty):*** 60 10 (WAC) .....***(Replaces 320 0236)***	.....	1	320 0237	
(40 AMP-Auto-Lite GGA-6001SN) ***60 Thru 62 01-10-20-80 (Heavy Duty)***.....	.....	1	314 9528	
(45 AMP-Delco Remy 1102123) ***60 Thru 62 01-10-20-80 (Heavy Duty)***.....	.....	1	315 5796	
ALTERNATOR (For Components Refer To Group 3 Charts)(For Motorola Alternator Refer To Group 3.016)				
(34 AMP-Auto-Lite ALK-5101) ***163-164 01-10-80 (Can)***.....	.....	1	316 9168	
(34 AMP-Auto-Lite ALK-64 02) ***165 01-10 (OHV-199-Can): 165 01-10-80 (OHV-232-Can)***.....	.....	1	317 8915	
(34 AMP-Prestolite ALK-5001C) ***165 01-10-80 (Can)***.....	.....	1	317 9288	
(34 AMP-Prestolite ALK-6302) ***165 01-10-80 (Can)***.....	.....	1	317 6579	
(40 AMP-Auto-Lite ALD-5005) 62 01-10-80...(Incl. Pulley).....	.....	1	316 3761	
(40 AMP-Auto-Lite ALE-5101A) ***163-164 01-10-80 (Can): 165 01 (LHE-Can) (OHV-196-Can): 165 10-80 (V8-Can)***.....	.....	1	316 9474	
(40 AMP-Auto-Lite ALE-6009) ***165 01-10 (OHV-199-Can): 165 01-10-80 (OHV-232-Can)***.....	.....	1	318 0083	
(40 AMP-Prestolite ALE-6303) ***165 01-10-80 (Can)***.....	.....	1	318 0110	
(42 AMP-Delco Remy 1100629; 1100647) 63 01-10-80 (Less Pulley).....	.....	1	320 4215	
(50 AMP-Leece Neville 5428-G6) 60 20-80...(Less Pulley).....	.....	1	315 6484	
(55 AMP-Prestolite ALH-6303) ***165 01-10-80 (Can)***.....	.....	1	318 0081	
(55 AMP-Prestolite OE-6002) ***165 01-10-80 (Can)***.....	.....	1	318 0074	
(60 AMP-Delco Remy 1117070) 60 10...(Less Pulley).....	.....	1	316 1485	
(60 AMP-Leece Neville A0012036AA) 60-61 01-10-20-80...(Less Pulley).....	.....	1	315 9384	
(60 AMP-Leece Neville A001-2182AA) 65 80 (Six-232)...(Less Pulley).....	.....	1	318 3643	
(60 AMP-Leece Neville 2074AB) 62 Thru 65 01-10-80...(Less Pulley).....	.....	1	316 3773	
RECTIFIER, Alternator				
60 20-80 (Note 3.005-8).....	.....	1	314 9242	
RESISTOR, Alternator (For Motorola Resistor Equipment Refer To Group 3.016)				
63 01-10-80 (Note 3.005-6).....	.....	1	316 9311	
HARNESS, Alternator				
63 01 (Note 3.005-6).....	.....	1	316 9312	
64 01 (LHD-Note 3.005-9): 63-64 10-80 (Note 3.005-9).....	.....	1	316 8153	
65 01-10-80 (Note 3.005-9).....	.....	1	317 6565	
63 10 (Note 3.005-6).....	.....	1	316 9313	
63 80 (Note 3.005-6).....	.....	1	316 9314	
WIRE, Generator To Voltage Regulator				
60-61 20-80 (Heavy Duty-Note 3.005-4).....	.....	1	315 8280	
WIRE, Voltage Regulator To Starting Motor				
60-61 20-80 (Heavy Duty-Note 3.005-4).....	3.012	1	315 8281	
WIRE, Alternator To Voltage Regulator				
62-63 01 (Note 3.005-9).....	.....	1	316 4095	
62 01-10 (Note 3.005-5).....	.....	1	316 4902	

Copyright 1963 American Motors Corp.

GROUP NO. — DESCRIPTION — YEAR and MODEL	PRIMARY GROUP NO.	PER CAR	PART NO.	CODE
60 10 (Note 3.005-9-Alternator)	.....	1	315 9375	
62 10 (Note 3.005-9-Alternator)	.....	1	316 4099	
62 10 (Note 3.005-9-Field)	.....	1	316 4096	
62 10 (Note 3.005-9-Ground)	.....	1	316 4101	
60 20-80 (Note 3.005-8)	.....	1	315 2663	
60-61 80 (Note 3.005-9)	.....	1	316 0108	
62 80 (Note 3.005-9)	.....	1	316 4102	
62 80 (Note 3.005-5)	3.012	1	316 4776	
WIRE, Alternator Ground				
60 Thru 65 01-10-20-80 (Note 3.005-9)	.....	1	315 9374	
WIRE, Alternator To Ammeter				
65 01 (Note 3.005-9)	.....	1	317 6567	
65 10-80 (Note 3.005-9)	.....	1	317 6568	
WIRE, Alternator To Rectifier				
60 20-80 (Note 3.005-8)	.....	3	315 2659	
WIRE, Rectifier To Voltage Regulator				
60 80 (Note 3.005-8)	.....	1	315 2660	
WIRE, Rectifier To Ground				
60 20-80 (Note 3.005-8)	.....	1	314 9233	
CLIP, Alternator Wire				
62 Thru 64 01-10-80: 65 01-10-80 (Six)	3.210	AR	63 045	
CLIP, Alternator Wire To Main Wire Harness At Wheelhouse				
63-64 01-10 (Note 3.005-9): 65 01-10-80	.....	AR	79 394	
CLIP, Alternator Wires To Main Wire Harness At Dash				
(Wire) 64 01-10 (Note 3.005-9)	.....	4	63 045	
(Steel) 64-65 01 (Note 3.005-9)	.....	1	312 3849	
ATTACHING PARTS				
Clip To Dash				
SCREW, Tapping ..... 64-65 01 (Note 3.005-9)	17.671	2	400 1031	

Copyright 1963 American Motors Corp.

GROUP NO. — DESCRIPTION — YEAR and MODEL	PRIMARY GROUP NO.	PER CAR	PART NO.	CODE
FASTENER, Alternator Wires At Right Suspension Mounting Bracket				
64-65 01 (Note 3.005-9)	.....	2	316 0984	
3.008 BELT, Generator And Alternator Fan				
60 01 (WAE-LAC-Note 3.005-7)	2.016	1	316 1394	
60 Thru 63 01 (LAE-Regular): 64 01 (Regular)(WAE-Note 3.005-10): 60 Thru 63 10 (LAE-Regular)(WAE-Note 3.005-10): 64 10 (OHVC-196-Regular): ***60 01-10 (Heavy Duty-Notes 3.005-1, 3.005-2 And 3.005-4)***	2.016	1	316 0720	
60 01-10 (WAE-LAC-Note 3.005-9): 61-62 01 (WAE-LAC): 63 01 (WAE-Note 3.005-9): 62 10 (WAE-OHVC-Note 3.005-5)	2.016	1	314 8781	
60-61 01-10 (Heavy Duty-Note 3.005-3): 62 01 (Heavy Duty-Note 3.005-3): 62 10 (OHVA-Heavy Duty-Note 3.005-3 And 3.005-5)....(Replaces 315 2643)	2.016	1	315 5477	
63 01 (WAE-Note 3.005-6): 63 10 (OHVC-WAE-Note 3.005-6)	2.016	1	314 4018	
63 01-10 (WAE-Note 3.005-10): 63 10 (OHVA-WAE-Note 3.005-6) ***(Replaces 313 7211)***	2.016	1	314 0218	
61 10 (WAE-LAC): 62-63 10 (WAE-Note 3.005-9 And 3.010-1 Type 1)	2.016	1	316 1179	
62 10 (OHVC-Heavy Duty-Note 3.005-3)	2.016	1	314 4018	
63 10-80 (V8-WAE-Note 3.005-10)	2.016	1	316 7228	
63 Thru 65 10-80 (V8-WAE-Notes 3.005-9 And 3.010-1 Type 2): ***163-164 10-80 (V8-CAN):*** 62 80 (WAE)	.....	1	314 4686	
64 10 (OHVC-232-Notes 3.005-10, 3.005-11 And 3.005-12)	2.016	1	317 3222	
60 20-80 (Regular)***(Heavy Duty-Notes 3.005-1, 3.005-2 And 3.005-3):*** 61 20: 61 80 (LAF)(WAF-Note 3.008-1 Type 1): 62 80 (LAE-Regular)	2.016	1	315 4207	
60-61 20-80 (Heavy Duty-Note 3.005-3)	2.016	1	315 2655	
61 80 (WAF-Note 3.008-1 Type 2)	2.016	1	316 2738	
BELT SET, Alternator				
64-65 01 (Note 3.005-9): 63-64 10 (OHV-196-Notes 3.005-9 And 3.010-1 Type 2)	2.016	1	316 9418	
63 Thru 65 10-80 (V8-Notes 3.005-9 And 3.010-1 Type 2)	2.016	1	317 0385	
64 10 (OHVC-232-Note 3.005-9): 65 10-80 (Six)	2.016	1	317 4727	#
3.010 PULLEY, Generator				
60 Thru 62 01-10 (OHV-Regular)...(Incl. Fan) ***(Replaces 311 9536)(Use 320 5837)***	.....	1	320 3410	
60 Thru 62 01-10 (Heavy Duty-Note 3.005-3): 60-61 20-80 (Heavy Duty-Note 3.005-3)...(Incl. Fan)	.....	1	315 2644	
62 01 (LHE-Regular): ***62 10 (Heavy Duty-Note 3.005-1):*** 62 80 (Regular)...(Incl. Fan)	.....	1	320 3589	
63 01-10 (LAC): 64 01 (LAC)...(Less Fan)	.....	1	320 4347	
60 Thru 62 10-20-80 (Heavy Duty-Note 3.005-4): 60 10-20 (3-3/16" O. D. -Heavy Duty-Note 3.005-2)...(Incl. Fan)	.....	1	320 0242	
60 Thru 62 10-20-80 (2-5/8" O. D. -Heavy Duty-Note 3.005-4)...(Less Fan)	.....	1	315 5798	

NOTE 3.008-1: Two Types of Fan Pulleys were used on the 61 80 (WAF) Model. They can be identified as follows:
Type 1: The Outer Diameter of Pulley is 7-15/32.
Type 2: The Outer Diameter of Pulley is 6-5/8.

NOTE 3.010-1: Two Types of 60 AMP Alternator Pulleys were used on the 63 10-80 Series. They can be identified as follows:
Type 1: The Pulley has a Single Belt Groove with one Belt and one Fan Pulley.
Type 2: The Pulley has a Double Groove. A Belt Set and 2 Fan Pulleys are used.

Copyright 1963 American Motors Corp.

GROUP NO. — DESCRIPTION — YEAR and MODEL	PRIMARY GROUP NO.	PER CAR	PART NO.	CODE
FAN, Generator (Less Pulley)				
63 01-10 (LAC)	.....	1	315 5797	
64 01 (LAC): ***60 Thru 62 10-20-80 (Heavy Duty-Note 3.005-4)***	.....	1	320 4348	
PULLEY, Alternator (Less Fan) (For Motorola Pulley Equipment Refer To Group 3.017)				
60 Thru 62 01-10 (Note 3.005-9): 64 01: 65 01-10-80 (Note 3.005-9): 63 10 (Notes 3.005-9 And 3.010-1 Type 1): 60-61 20-80 (Note 3.005-9)	.....	1	314 6065	
62 01-10-80 (Note 3.005-5)	.....	1	320 3645	
63-64 01-10-80 (WAE-Note 3.005-6)	.....	1	320 4230	
163-164 01-10-80 (Can): 165 01 (LHE-Can) (OHV-196-Can): 165 10-80 (V8-Can)	.....	1	320 9041	
64 01-10 (OHV-196-Note 3.005-9): 65 01 (Note 3.005-9): 63 10 (Six-Note 3.005-9 And 3.010-1 Type 2)	.....	1	316 9414	
63 Thru 65 10-80 (V8-Notes 3.005-9 And 3.010-1 Type 2)	.....	1	317 0375	
64 10 (OHVC-232-Note 3.005-9): 65 10-80 (Six-Note 3.005-9)	.....	1	317 4689	
62 80 (Notes 3.005-9)	.....	1	316 3772	
63 Thru 65 10-80 (V8-Note 3.005-9 And 3.010-1 Type 1)	.....	1	316 3772	
FAN, Alternator (Less Pulley) (For Motorola Fan Equipment Refer To Group 3.017)				
62 01-10-80 (Note 3.005-5)	.....	1	320 3644	
63-64 01-10-80 (Note 3.005-6)	.....	1	315 5797	
60 Thru 65 01-10-80 (Note 3.005-9) ***(Replaces 314 1346)***	.....	1	315 2718	
165 01-10 (OHV-199-Can): 165 01-10-80 (OHV-232-Can)	.....	1	320 9174	
HUB, Alternator				
62 01-10-80 (Note 3.005-9)	.....	1	316 3771	
63 Thru 65 01 (Note 3.005-9): 63 10-80 (Notes 3.005-9 And 3.010-1 Type 1): 64-65 10-80 (V8-Note 3.005-9)	.....	1	316 3771	
3.011 REGULATOR, Generator Voltage (Service Replacement)				
60-61 01 (LHE): ***60-61 10 (Heavy Duty-Note 3.005-1):*** 60-61 20-80 ***(Replaces 315 7207, 315 7221, 316 1271, 316 2211)***	.....	1	320 3660	#
60-61 01 (OHV): 62 01-80: 60 Thru 62 10: 63 01-10 (LAC): 64 01 (LAC)	.....	1	320 3659	
3.012 REGULATOR, Generator Voltage (Original Equipment - Warranty)				
60 Thru 62 01-10-20-80 (Heavy Duty-Note 3.005-3)	.....	1	314 9526	
60 Thru 62 01-10 (OHV-Regular): 63-64 01 (LAC-Regular): ***65 01 (RHD): 60 10-20 (Heavy Duty-Note 3.005-2):*** 63 10 (LAC-Regular) ***(Replaces 314 5335)***	.....	1	314 6142	

NOTE 3.012-1: Two Types of Voltage Regulators were used on the 61 20-80 Models. They can be identified as follows:

Type 1: Mounting Bracket has 4 Screw Holes.

Type 2: Mounting Bracket has 3 Screw Holes.

NOTE 3.012-2: Two Types of Regulators were used on the 165 01-10-80 (Can) Series. They are identified as follows:

Type 1: Used with Prestolite Alternator ALE-5101A, ALE-6009, ALK-5000C, ALK-6402 or OE-6002 and prior to these Engine Serial Nos., on the 165 01 (Can) PT-502499, QT-500951 and WT-500438, on the 165 10 (Can) JT-500053, LT-503933 and ZT-501843, and on the 165 80 (Can) ST-500487, ET-501215 and HT-501397.

Type 2: Used with Prestolite Alternator ALE-6303, ALH-6303, or ALK-6302 and beginning with these Engine Serial Nos., on the 165 01 (Can) PT-502499, QT-500951 and WT-500438, on the 165 10 (Can) JT-501153, LT-503933 and ZT-501843, and on the 165 80 (Can) ST-500487, ET-501215 and 501397.

Copyright 1963 American Motors Corp.

GROUP NO. — DESCRIPTION — YEAR and MODEL	PRIMARY GROUP NO.	PER CAR	PART NO.	CODE
62 01 (LHE-LAC-Regular)	.....	1	316 5082	
62 01 (LHE-WAC-Regular): ***162 10 (CAN)***	.....	1	316 5083	
60 10 (WAE-Note 3.005-7)	.....	1	316 1395	
62 10 (Heavy Duty-Note 3.005-2): 62 80 (Regular)	.....	1	316 5084	
60 Thru 62 10-20-80 (Heavy Duty-Note 3.005-4)	.....	1	315 5799	
REGULATOR, Alternator Voltage (For Motorola Regulator Equipment Refer To Group 3.019)				
60 Thru 64 01-10-20-80 (WAE-Note 3.005-9)	.....	1	315 9383	
62 01-10-80 (Note 3.005-5): ***163 Thru 165 01-10-80 (Can-Note 3.012-2 Type 1)*** ***(Replaces 316 4778, 316 9166)***	.....	1	320 3971	
63 01-10-80 (Note 3.005-6)	.....	1	316 7669	
64-65 01-10-80 (Notes 3.005-8 And 3.005-9)	.....	1	317 3374	
165 01-10-80 (Can-Note 3.012-2 Type 2)	.....	1	317 8581	
60 20-80 (Note 3.005-8)	.....	1	315 6485	
ATTACHING PARTS				
Voltage Regulator To Wheelhouse				
SCREW, Tapping..... 60 Thru 65 01-10-20-80 ***(Replaces 800 0129)**	17.671	3	400 1066	
WASHER, Plain..... 60 Thru 63 01 (Note 3.005-9): 60 20-80 (Note 3.005-8): 63 10-80 (Note 3.005-9) ***(Replaces 800 0155)***	17.814	2	400 1095	
Voltage Regulator To Support				
BOLT, Hexagon..... 60 10 (WAE-Note 3.005-7 1-1/2" Long)	17.038	1	G121926	NA
BOLT, Hexagon ..... 60 10 (WAE-Note 3.005-7 3/4" Long)	17.038	1	G180020	NA
WASHER, Plain..... 60 10 (WAE-Note 3.005-7)	17.814	1	G120392	NA
WASHER, Lock ..... 60 10 (WAE-Note 3.005-7)	17.820	1	G103319	NA
NUT, Hexagon..... 60 10 (WAE-Note 3.005-7)	17.406	1	G120375	
PLATE, Voltage Regulator Adapter				
62 01-10-80 (WAE-Note 3.005-5)	.....	1	316 4937	
60-61 10-20-80 (Heavy Duty-Note 3.005-3): 62 10 (Heavy Duty-Note 3.005-3)	.....	1	315 2641	
ATTACHING PARTS				
Voltage Regulator Adapter Plate To Wheelhouse				
SCREW, Tapping..... 60-61 01 (WAE-Note 3.005-9): ***61 10-20-80 (Heavy Duty-Note 3.005-3): 62 10 (Heavy Duty-Note 3.005-3)*** ***(Replaces 800 0129)***	17.671	3	400 1066	
SCREW, Tapping..... 62 01-10-80 (WAE-Note 3.005-5)	17.664	3	G107394	NA
SPACER, Voltage Regulator To Support				
60 10 (WAE-Note 3.005-7)	3.014	1	314 6123	
WIRE, Voltage Regulator To Ignition Coil				
60 01 (WAE-Note 3.005-9)	.....	1	315 9369	
62 Thru 64 01 (WAE-Note 3.005-9)	.....	1	316 2097	
65 01 (OHV-196-Note 3.005-9): 65 10-80 (WAE-Note 3.005-9)	.....	1	316 2094	

Copyright 1963 American Motors Corp.

GROUP NO. — DESCRIPTION — YEAR and MODEL	PRIMARY GROUP NO.	PER CAR	PART NO.	CODE
62 10 (WAE-Note 3.005-9)	.....	1	316 4100	
63 10 (WAE-Note 3.005-9)	3.056	1	316 8149	
60 20-80 (WAE-Note 3.005-8)	.....	1	315 5087	
WIRE, Voltage Regulator To Junction Block				
60-61 10-20 (WAE-Note 3.005-9)	.....	1	315 9369	
WIRE, Voltage Regulator To Ignition Resistor				
61 01-10-20-80 (WAE-Note 3.005-9)	.....	1	316 2097	
62 80 (WAE-Note 3.005-9)	.....	1	316 4100	
63-64 10-80 (V8-WAE-Note 3.005-9)	.....	1	315 9369	
WIRE, Voltage Regulator To Ammeter				
62 01-10 (WAE-Notes 3.005-5 And 3.005-9): 63 01 (WAE-Note 3.005-9)	.....	1	316 4097	
64-65 01 (WAE-Note 3.005-9): 63 10 (WAE-Note 3.005-9)	3.600	1	316 8151	
61 10 (WAE-Note 3.005-9)	3.600	1	315 9386	
WIRE, Voltage Regulator "A" Terminal To Armature Terminal				
62 80 (Heavy Duty-Note 3.005-4)	.....	1	316 4776	
WIRE, Voltage Regulator To Alternator				
62 01-10-80 (WAE-Note 3.005-5)	.....	1	316 4912	
3.014 STRAP, Generator Adjusting				
60 Thru 62 01: 63-64 01 (LAC): 60 10: 61-62 10 (OHVC): 63 10 (OHVC-LAC)	.....	1	315 0213	
61-62 10 (OHVA): 63 10 (OHVA-LAC)	.....	1	316 0073	
60 Thru 62 20-80	.....	1	315 0276	
60 Thru 62 01 (Heavy Duty-Note 3.005-3): 60 10 (Heavy Duty-Note 3.005-3)	.....	1	315 2639	
61-62 10 (OHVA-Heavy Duty-Note 3.005-3)	.....	1	316 1030	
60-61 20-80 (Heavy Duty-Note 3.005-3)	.....	1	315 2656	

NOTE 3.014-1: Two Types of Alternator Brackets were used on the 62 01 and 62 10. They can be identified as follows:

Type 1: The Bracket is "L" shaped and Steel Bar Stock. The Adjusting Strap is 5-1/2" long with two 13/32" I. D. Mounting Holes.

Type 2: The Bracket is Cast Iron and the Adjusting Strap is 3-3/4" long with one 13/32" Mounting Hole.

NOTE 3.014-2: Two Types of Generator Support Brackets were used on the 63 01 (LAC) Model. They can be identified as follows:

Type 1: The Support Bracket is made of Bar Stock and is internally threaded at both ends.

Type 2: The Support Bracket is a stamping with "L" shaped ends.

Copyright 1963 American Motors Corp.

GROUP NO. — DESCRIPTION — YEAR and MODEL	PRIMARY GROUP NO.	PER CAR	PART NO.	CODE
ATTACHING PARTS				
Generator Adjusting Strap To Water Pump				
STUD..... 60 Thru 62 01: 63-64 01 (LAC): 60 10: 61-62 10 (OHVC): 63 10 (LAC).....	17.718	1	G192426	
STUD..... 61 Thru 64 10 (OHVA).....	.....	1	316 0301	
BOLT, Hexagon ..... ***60 01-10 (Heavy Duty-Note 3.005-3)***.....	.....	1	G180121	NA
WASHER, Lock..... 60 Thru 62 01-10: 63 01-10 (LAC): 64 01 (LAC)....	17.820	1	G120382	NA
WASHER, Plain..... 64 01.....	.....	1	400 1104	
NUT, Hexagon..... 60 Thru 62 01-10: 63 01-10 (LAC): 64 01 (LAC)....	17.406	1	G120369	NA
Generator Adjusting Strap To Generator				
BOLT, Hexagon ..... 60 Thru 62 01-10-20-80: 63 01-10 (LAC): 64 01 (LAC).....	17.038	1	G180077	NA
BOLT, Hexagon ..... ***60 Thru 62 01-10 (Heavy Duty-Note 3.005-3): 60-61 20-80 (Heavy Duty-Note 3.005-3)***.....	17.038	1	G179839	NA
WASHER, Plain..... 60 Thru 62 01-10-20-80: 63 01-10 (LAC): 64 01 (LAC).....	17.814	1	400 1095	
WASHER, Plain..... ***60 Thru 62 01-10 (Heavy Duty-Note 3.005-3)***.....	17.814	1	G120394	NA
WASHER, Plain..... ***60-61 20-80 (Heavy Duty-Note 3.005-3)***.....	17.820	1	400 1102	
WASHER, Lock..... 60 Thru 62 01-10-20-80: 63 01-10 (LAC): 64 01 (LAC).....	17.820	1	G120214	NA
WASHER, Lock..... ***62 01-10 (Heavy Duty-Note 3.005-3)***.....	17.820	1	G120382	NA
Generator Adjusting Strap To Manifold				
BOLT, Hexagon ..... 60 Thru 62 20-80.....	17.038	1	G180077	NA
WASHER, Lock..... 60 Thru 62 20-80.....	17.820	1	G120214	NA
STRAP, Alternator Adjusting (For Motorola Strap Equipment Refer To Group 3.018)				
60 Thru 63 01 (Note 3.005-9): 60 10 (Note 3.005-9).....	.....	1	315 2673	
62 01-10 (OHVC-Note 3.005-5 & 3.014-1 Type 1): 62 10 (OHVA)..... ***(Use 317 7713)***	.....	1	316 1178	
62 01-10 (OHVC-Notes 3.005-5 And 3.014-1 Type 2): ***163 01 (CAN)***.....	.....	1	316 5925	
63 01-10 (Six-OHVC-Note 3.005-6).....	.....	1	316 7723	
64 01 (Note 3.005-9): 61 10 (Note 3.005-9): 63-64 10 (OHV-196-Note 3.005-9).....	.....	1	316 1178	
65 01 (OHV-196-Note 3.005-9).....	.....	1	317 7713	
63 10 (OHVA-Note 3.005-6): ***163 10 (CAN)***.....	.....	1	316 7354	
64 10 (OHVC-232-Note 3.005-9).....	.....	1	317 4688	
63-64 10-80 (V8-WAE-Note 3.005-9): 63 10-80 (V8-Note 3.005-6): 62 80 (WAE-Note 3.005-9).....	.....	1	316 3827	
65 10-80 (Six-Note 3.005-9).....	.....	1	317 7716	
65 10-80 (V8-Note 3.005-9).....	.....	1	317 7717	
60-61 20-80 (WAE-Notes 3.005-8 And 3.005-9).....	.....	1	315 2684	
164 01-10 (Six-196-Can).....	.....	1	317 4461	
165 01-10-80 (Can-OHV-232): 165 10 (Can-OHV-199).....	3.018	1	317 7715	
164-165 10-80 (Can-V8).....	3.018	1	317 7720	
ATTACHING PARTS				
Strap To Alternator				
BOLT, Hexagon ..... 60 Thru 65 01-10 (Note 3.005-9): 65 80 (Six-Note 3.005-9).....	17.038	1	G181643	NA
BOLT, Hexagon ..... 60 Thru 63 01-10 (WAE-Note 3.005-5 And 3.005-6): 64 10 (OHVC-Six).....	17.038	1	G179817	NA
BOLT, Hexagon ..... 62 Thru 65 10-80 (V8-WAE-Note 3.005-9).....	17.038	1	G181639	NA
WASHER, Lock..... 60 Thru 65 01-10-20-80 (Note 3.005-9).....	17.820	1	G120382	NA
WASHER, Lock..... 63 01-10 (Note 3.005-6): 62 80 (Note 3.005-5).....	17.820	1	G120214	NA
WASHER, Plain ..... 64-65 01 (Note 3.005-9): 62 Thru 65 10-80 (Six-Note 3.005-9)..... ***(Replaces 800 0165)***	17.814	3	400 1104	

Copyright 1963 American Motors Corp.

GROUP NO. — DESCRIPTION — YEAR and MODEL	PRIMARY GROUP NO.	PER CAR	PART NO.	CODE
WASHER, Plain..... 60-61 01-10: 62 Thru 65 01 (Six-196-Note 3.005-9-1/8" Thick) ***.....(Replaces 800 0331)***	17.814	1	400 1161	
WASHER, Plain..... 63 01-10 (Six-Note 3.005-6): 62 10 (Note 3.005-5)..	17.814	1	400 1095	
WASHER, Plain ..... 63 Thru 65 10-20-80 (V8-Note 3.005-9).....	17.814	1	G120394	NA
NUT, Hexagon..... 60 Thru 65 01-10-20-80 (WAE-Note 3.005-9)	17.406	1	G120369	NA
Strap To Timing Cover				
BOLT, Hexagon ..... 62 Thru 64 10 (OHV-196-Notes 3.005-9): 64-65 01 (OHV-WAE-Note 3.005-9)	17.038	1	G181596	NA
WASHER, Lock..... 64 10 (OHVC-Six).....	17.820	1	G120214	NA
Strap To Block				
BOLT, Hexagon..... 64 10 (OHVC-232-Note 3.005-9): 65 10-80 (Six)....	17.038	1	G180122	NA
WASHER, Lock..... 64 10 (OHVC-232-Note 3.005-9): 65 10-80 (Six)....	17.820	1	G120382	NA
BRACKET, Generator Mounting				
61-62 10 (OHVA): 63 10 (OHVA-LAC).....	.....	1	316 0083	
60 Thru 62 20-80.....	.....	1	315 0275	
60 Thru 62 01 (Heavy Duty-Note 3.005-3): 60 10 (Heavy Duty-Note 3.005-3): 61-62 10 (OHVC-Heavy Duty-Note 3.005-3)	.....	1	315 6238	
61-62 10 (OHVA-Heavy Duty-Note 3.005-3)	.....	1	316 0956	
60-61 20-80 (Heavy Duty-Note 3.005-3).....	.....	1	315 2658	
ATTACHING PARTS				
Generator Mounting Bracket To Cylinder Block				
BOLT, Hexagon ..... 61-62 10 (OHVA): 63 10 (OHVA-LAC).....	17.038	1	G180122	NA
BOLT, Hexagon ..... 60 Thru 62 20-80.....	17.038	2	G180120	NA
WASHER, Lock..... 61-62 10 (OHVA-1 Req.): 63 10 (OHVA-LAC 1 Req.): 60 Thru 62 20-80 (2 Req.).....	17.820	AR	G120382	NA
Generator Mounting Bracket To Generator				
SPACER..... ***60 10 (Heavy Duty-Notes 3.005-1 And 3.005-2): 60-61 20 (Heavy Duty-Note 3.005-1 And 3.005-2): 61 10 (OHVA-Heavy Duty-Note 3.005-1):*** 60-61 20 (WAC): 60-61 80.....	.....	1	315 7899	
SPACER..... 61 10 (OHVA-WAC): ***61-62 10 (OHVA-Heavy Duty-Note 3.005-4): 60 Thru 62 20-80 (Heavy Duty-Note 3.005-4):*** 63 10 (OHVA-LAC).....	.....	1	315 0277	
SPACER..... ***60-61 20-80 (Heavy Duty-Note 3.005-3)***.....	.....	1	315 2652	
STUD..... ***60-61 20-80 (Heavy Duty-Note 3.005-3)***.....	.....	1	315 2653	
BOLT, Hexagon ..... ***60 Thru 62 01 (Heavy Duty-Note 3.005-3): 60 10 (Heavy Duty-Note 3.005-3): 62 10 (OHVC-Heavy Duty-Note 3.005-3)***	3.020	1	315 8193	
BOLT, Hexagon ..... ***60 Thru 62 01-10 (7/16-14 x 1-1/2-OHVC-Heavy Duty -Note 3.005-3)***	17.038	1	G180149	NA
BOLT, Hexagon ..... 61 10.....	17.038	2	G181638	NA
BOLT, Hexagon ..... 61 10 (WAC-5/16-24 x 7/8): 60-61 20-80	17.038	1	G181596	NA
BOLT, Hexagon ..... 61 10 (WAC-5/16-24 x 1-3/8): 60-61 20 (WAC): ***60-61 20 (Heavy Duty-Notes 3.005-4 And 3.005-2):*** 60-61 80: ***62 80 (Heavy Duty-Note 3.005-4)***.....	17.038	1	G181614	NA
BOLT, Hexagon ..... 61 10 (5/16-24 x 2 OHVA-LAC-Notes 3.005-4 And 3.005-3): 63 10 (OHVA-LAC-5/16-24 x 2).....	17.038	1	G181620	NA
BOLT, Hexagon ..... 62 10 (OHVA): 63 10 (OHVA-LAC-5/16-24 x 1-1/8).	17.038	2	G181004	NA
BOLT, Hexagon ..... ***62 10 (OHVA-Heavy Duty-Note 3.005-1):*** 62 80 (5/16-24 x 1-3/4).....	17.038	1	G181618	NA

Copyright 1963 American Motors Corp.

GROUP NO. — DESCRIPTION — YEAR and MODEL		PRIMARY GROUP NO.	PER CAR	PART NO.	CODE
BOLT, Hexagon	62 80 (5/16-24 x 1-1/4)	17.038	1	G181610	NA
WASHER, Lock	***60-61 01-10-20-80 (Heavy Duty-Note 3.005-3)***	17.820	2	G120383	NA
WASHER, Lock	62 10 (OHVA): 63 10 (OHVA-LAC): 60 20-80: 62 80	17.820	2	G120214	NA
NUT, Hexagon	62 10 (OHVA): 63 10 (OHVA-LAC): 60 20-80: 62 80	17.406	2	G120368	NA
NUT, Hexagon	***60-61 20-80 (Heavy Duty-Note 3.005-3)***	17.406	2	G120370	NA
NUT, Jam	***60-61 20-80 (Heavy Duty-Note 3.005-3)***	17.410	1	G124929	NA
Generator Wires To Terminals					
WASHER, Lock	63 01-10: 64 01 (LAC)	17.820	AR	G120380	NA
NUT, Hexagon	63 01-10: 64 01 (LAC)	17.412	2	G121743	NA
BRACKET, Alternator Mounting (For Motorola Bracket Equipment Refer To Group 3.018)					
62 01-10 (OHVC-Note 3.005-5 And 3.014-1 Type 1)		.....	1	316 4065	
62 01-10 (OHVC-Notes 3.005-5 & 3.014-1 Type 2): ***163 Thru 165 01 (Can-OHV-196): 163-164 10 (Can-OHVC-196)***		.....	1	316 5926	
62-63 01 (Note 3.005-9)		.....	1	316 3841	
63 01-10 (OHVC-Note 3.005-6)		.....	1	316 7726	
64 01-10 (OHV-196-Note 3.005-9): 65 01 (OHV-196-Note 3.005-9): 62-63 10 (Note 3.005-9)		.....	1	316 3842	
61 10-20 (Note 3.005-9)		.....	1	316 1176	
62 10 (OHVA-Note 3.005-5): ***163-164 10 (Can-OHVA)***		.....	1	316 4061	
62 Thru 65 10-80 (V8-Note 3.005-9)		.....	1	316 3863	
63 10 (OHVA-Note 3.005-6)		.....	1	316 7729	
64 10 (OHVC-232-Note 3.005-9): 65 10-80 (Six-Note 3.005-9)		.....	1	317 4694	#
60-61 20-80 (WAE-Notes 3.005-8 And 3.005-9)		.....	1	315 2687	
63 10-80 (V8-Note 3.005-6)		.....	1	316 8180	
65 80 (Six-Note 3.005-9)		.....	1	320 7115	
164-165 01 (Can-LHE-Note 3.012-3)(Can-OHV-196-Note 3.012-3)		.....	1	317 2372	
165 01 (Can-OHV-232): 165 10-80 (Can-Six)		.....	1	317 3493	
165 01 (LHE-Can-Note 3.012-2)(OHV-196-Can-Note 3.012-2)		3.018	1	317 1724	
164-165 10-80 (Can-V8): 62 80 (Note 3.005-5)		.....	1	316 3989	
ATTACHING PARTS					
Bracket To Cylinder Block					
BOLT, Hexagon	63-64 01 (WAE-LAC-Note 3.005-6): 63 10 (OHVC-WAE-LAC-Note 3.005-6)	17.038	2	G181648	NA
BOLT, Hexagon	64 01-10 (OHV-Note 3.005-9): 62 10 (WAE-Note 3.005-9): 65 01 (Note 3.005-9)	17.038	2	G180121	NA
BOLT, Hexagon	62 01 (WAE-Note 3.005-5): 62 10 (OHVC-WAE-Note 3.005-5)	17.038	2	G181646	NA
BOLT, Hexagon	61 10 (Note 3.005-9): 65 10-80 (Six)	17.038	2	G180122	NA
BOLT, Hexagon	65 10-80 (Six)	17.038	1	G180123	NA
BOLT, Hexagon	65 10-80 (V8)	17.038	2	G180120	NA
WASHER, Lock	60 01-10 (Note 3.005-9): 64 01 (Note 3.005-9): 64 01-10 (OHV-Note 3.005-9)	17.820	4	G120382	NA
WASHER, Lock	65 01 (2 Req.): 65 10-80 (Six-3 Req.)(V8-2 Req.)	17.820	AR	G120382	NA
NUT, Hexagon	64 01 (WAE-Note 3.005-6)	17.406	2	G120369	NA
Bracket To Alternator					
SPACER	63 01-10 (WAE-Note 3.005-6)	.....	1	316 7766	
SPACER	65 10-80 (Note 3.005-9)	.....	1	316 3878	
SPACER	62 Thru 64 10-80 (V8-Note 3.005-9)	.....	1	316 3878	
SPACER	60-61 20-80 (WAE-Notes 3.005-8 And 3.005-9)	3.005	1	315 2682	
SPACER	62 80 (WAE-Note 3.005-5)	.....	1	316 3988	
BOLT, Hexagon	60-61 01: 60 10	17.038	2	G181671	NA
BOLT, Hexagon	62-63 01 (Note 3.005-9)	17.038	2	G181645	NA
BOLT, Hexagon	62 01-10 (Note 3.005-5)	17.038	2	G181643	NA
BOLT, Hexagon	63 01-10 (WAE-LAV-Note 3.005-6)	17.038	1	G187044	NA
BOLT, Hexagon	64-65 01 (Note 3.005-9): 62 Thru 64 10 (Six-196-Note 3.005-6): 65 10-80 (Six)	17.038	2	G181639	NA
BOLT, Hexagon	61 10	17.038	2	G181670	NA

Copyright 1963 American Motors Corp.

GROUP NO. — DESCRIPTION — YEAR and MODEL		PRIMARY GROUP NO.	PER CAR	PART NO.	CODE
BOLT, Hexagon	63 Thru 65 10-80 (V8-4" Long-Note 3.005-9): 62 80 (4" Long)	17.038	1	G189331	NA
BOLT, Hexagon	63 Thru 65 10-80 (V8-1-1/4" Long-Note 3.005-9): 62 80 (1-1/4" Long)	17.038	1	G181639	NA#
BOLT, Hexagon	63 10-80 (V8-Note 3.005-6)	17.038	1	G189329	NA
BOLT, Hexagon	60-61 20-80 (1-1/4" Long)	17.038	1	G181668	NA
BOLT, Hexagon	60-61 20-80 (2-1/8" Long)	17.038	1	G189344	NA
WASHER, Lock	60-61 01-10-20-80	17.820	2	G131100	NA
WASHER, Lock	62 01-10-80: 63 01-10 (Six-Note 3.005-6): 63 Thru 65 01-10-80 (Note 3.005-9)	17.820	2	G120382	NA#
WASHER, Plain	62 80 (Note 3.005-5)	17.814	1	400 1104	
WASHER, Plain	62 80 (Note 3.005-9)	17.814	1	400 1161	
NUT, Hexagon	60-61 01-10-20-80	17.406	2	G120370	NA
NUT, Hexagon	63 Thru 65 01-10-80	17.406	2	G120369	NA#

BRACE, Alternator To Manifold

63 Thru 65 10-80 (V8-Note 3.005-9)		.....	1	317 1774	

ATTACHING PARTS
Alternator Brace To Manifold

BOLT, Hexagon	63 Thru 65 10-80 (V8-Note 3.005-9)	17.038	2	G180121	NA#
WASHER, Lock	63 Thru 65 10-80 (V8-Note 3.005-9)	17.820	2	G120382	NA#
WASHER, Plain	63 Thru 65 10-80 (V8-Note 3.005-9) ***(Replaces 800 0165)***	17.814	1	400 1104	

BRACE, Alternator To Cylinder Head

63 Thru 65 10-80 (V8-Note 3.005-9)		.....	1	317 1775	

ATTACHING PARTS
Alternator Brace To Cylinder Head

BOLT, Hexagon	63 Thru 65 10-80 (V8-Note 3.005-9)	17.038	2	G180121	NA#
WASHER, Plain	63 Thru 65 10-80 (V8-Note 3.005-9) ***(Replaces 800 0165)***	17.814	1	400 1104	#

BRACKET, Generator Support

60 01: 61-62 01 (LHE) (OHV-LAC): ***60 10 (Heavy Duty-Note 3.005-1):*** 61-62 10 (OHVC-LAC): ***61 10 (OHVC-Heavy Duty-Note 3.005-1)***		.....	1	315 7896	
61-62 01 (OHVC-WAC): 63-64 01 (LAC): 60 Thru 62 10 (OHVC-WAC): 63 10 (OHV-LAC) ***(Replaces 317 1488)***		.....	1	315 6227	
60 10 (Heavy Duty-Notes 3.005-4 And 3.005-2): 61-62 10 (OHVC-Heavy Duty-Note 3.005-4)		.....	1	315 6227	

ATTACHING PARTS
Generator Support Bracket To Cylinder Block

BOLT, Hexagon	60-61 01 (LHE): 60 01-10 (OHV-WST) (OHV-WOD): 62 01: 63-64 01 (LAC-Note 3.014-2 Type 1): 61 10 (OHVC)	17.038	2	G181649	NA
BOLT, Hexagon	63-64 01 (LAC-Note 3.014-2 Type 2)	17.038	2	G181647	NA
BOLT, Hexagon	60-61 01-10 (OHV-WAT): 62 10 (OHVC): 63 10 (OHVC-LAC)	17.038	2	G181650	NA
WASHER, Spring	60 Thru 62 01: 63-64 01 (LAC): 60 10: 61-62 10 (OHVC)	17.820	2	G120382	NA
NUT, Hexagon	60 Thru 62 01: 63-64 01 (LAC): 60 10: 61-62 10 (OHVC)	17.406	2	G120369	NA

Copyright 1963 American Motors Corp.

GROUP NO. — DESCRIPTION — YEAR and MODEL		PRIMARY GROUP NO.	PER CAR	PART NO.	CODE
	Generator Support Bracket To Generator				
BOLT, Hexagon.....	60 Thru 62 01: 63-64 01 (LAC-Note 3.014-2 Type 1): 61-62 10 (OHVC): 63 10 (OHVC-LAC).....	17.038	2	G181596	NA
BOLT, Hexagon	63-64 01 (LAC-Note 3.014-2 Type 2)	17.038	2	G181004	NA
WASHER, Lock.....	60 Thru 62 01: 63-64 01 (LAC): 60 10: 61-62 10 (OHVC): 63 10 (OHV-LAC).....	17.820	2	G120214	NA
WASHER, Plain.....	60 Thru 62 01: 63-64 01 (LAC-Note 3.014-2 Type 1): 60 10: 61-62 10 (OHVC): 63 10 (OHVC-LAC)....	17.814	2	G120393	NA
NUT, Hexagon.....	63-64 01 (LAC-Note 3.014-2 Type 2).....	17.406	2	G120368	
	SUPPORT, Rectifier Mounting Bracket				
60 20-80 (WAE-Note 3.005-8)		3.005	1	315 2683	
	ATTACHING PARTS				
	Alternator Rectifier Mounting Bracket Support To Manifold				
BOLT, Hexagon	60 20-80 (WAE-LAC-Note 3.005-8)	17.038	2	G180126	NA
WASHER, Lock	60 20-80 (WAE-LAC-Note 3.005-8)	17.820	2	G120382	NA
	BRACKET, Rectifier Mounting				
60 20-80 (WAE-Note 3.005-8)		3.005	1	314 9231	
	ATTACHING PARTS				
	Alternator Rectifier Mounting Bracket To Support				
BOLT, Hexagon	60 20-80 (WAE-LAC-Note 3.005-8)	17.038	2	G180120	NA
WASHER, Lock	60 20-80 (WAE-LAC-Note 3.005-8)	17.820	2	G103319	NA
NUT, Hexagon.....	60 20-80 (WAE-LAC-Note 3.005-8)	17.406	2	G120375	
3.016	**ALTERNATOR (Less Pulley) (Motorola) (For Auto-Lite, Delco Remy or Leece Neville Alternators Refer Group 3.005)**				
(35 AMP) 63 Thru 65 01-10-80		.....	1	320 4159	
(40 AMP) 64-65 01-10-80		.....	1	320 5050	
(55 AMP) 64-65 01-10-80		.....	1	320 5226	
	HARNESS, Alternator To Voltage Regulator And Junction Block				
63 01 (Note 3.005-10)		.....	1	316 7904	
64 01 (Notes 3.005-10, 3.005-11 And 3.005-12)		.....	1	317 1133	
63 10 (Note 3.005-10)		.....	1	316 8145	
	WIRE, Alternator To Starter Solenoid				
64-65 01-10-80 (Six-Notes 3.005-11 And 3.005-12): 65 01-10 (Six-WAC).....		.....	1	317 2455	#
64 10-80 (V8-Notes 3.005-11 And 3.005-12): ***65 10 (V8-RHD-Notes 3.005-11 And 3.005-12)***		.....	1	317 2456	#
	RESISTOR, Alternator (Motorola) (For Auto-Lite, Delco Remy or Leece Neville Refer To Group 3.005)				
63 Thru 65 01-10-80.....		.....	1	316 8108	
	ATTACHING PARTS				
	Resistor To Panel				
SCREW, Tapping.....	63 Thru 65 01-10-80.....***(Replaces 800 0091)***	17.671	1	400 1031	

Copyright 1963 American Motors Corp.

GROUP NO. — DESCRIPTION — YEAR and MODEL	PRIMARY GROUP NO.	PER CAR	PART NO.	CODE
CLIP, Alternator Wire Harness To Starter Solenoid Wire				
64-65 01: 63 10: 65 10-80 (Six)***(RHD-V8)***	3.312	1	79 394	
3.017 FAN, Alternator (Less Pulley)(Motorola)(For Auto-Lite, Delco Remy or Leece Neville Fan Equipment Refer To Group 3.010)				
63 Thru 65 01-10-80	.....	1	320 4140	
PULLEY, Alternator (Less Fan)(Motorola)(For Auto-Lite, Delco Remy or Leece Neville Pulley Equipment Refer To Group 3.010)				
63 Thru 65 01-10-80	.....	1	320 4139	
SPACER, Alternator Pulley (Motorola)				
63 Thru 65 01-10-80	.....	1	320 4141	
ATTACHING PARTS				
Fan And Pulley To Alternator				
KEY, Woodruff ..... 63 Thru 65 01-10-80	17.344	1	G103905	
WASHER, Lock ..... 63 Thru 65 01-10-80	17.820	1	G103325	
NUT, Hexagon ..... 63 Thru 65 01-10-80	3.017	1	320 4160	
3.018 BRACKET, Alternator (Motorola)(For Auto-Lite, Delco Remy or Leece Neville Bracket Equipment Refer To Group 3.014)				
63 01: 63 10 (Six-OHVC)	.....	1	316 7349	
64 01: 65 01 (LHE)(OHV-196): 64 10 (OHV-196-Note 3.005-11)	.....	1	317 1724	
65 01-10 (OHV-199): 65 01-10-80 (OHV-232): 64 10 (OHV-232)	.....	1	317 3493	
63 10 (Six-OHVA)	.....	1	316 7353	
63-64 10-80 (V8-Note 3.005-10 And 3.005-11): 65 10-80 (V8)	.....	1	316 7134	
64 10 (OHV-196-Note 3.005-12): 6480 (Note 3.005-12)	.....	1	317 1724	
64 10 (Six-OHVA-Note 3.005-10 And 3.005-11)	.....	1	317 1771	
ATTACHING PARTS				
Bracket To Alternator				
SPACER ..... 63 10 (Six-OHVA-Note 3.005-10)	.....	1	316 7386	
BOLT, Hexagon ..... 63 01-80 (Note 3.005-10): 63 10 (OHVC-Note 3.005-10): 65 10-80 (V8)	17.038	1	G451971	NA
BOLT, Hexagon ..... 64 01-10-80: 65 01 (LHE)(OHV-196)	17.038	1	G181648	NA
BOLT, Hexagon ..... 65 01-10 (OHV-199): 65 01-10-80 (OHV-232)	17.038	1	G181649	
BOLT, Hexagon ..... 63 10 (OHVA-Note 3.005-10)	17.038	1	G181652	NA
BOLT, Hexagon 64 10 (V8-Note 3.005-10)	17.038	1	G181648	NA
WASHER, Lock ..... 63 Thru 65 01-10-80	17.820	1	G120382	NA
WASHER, Plain ..... 63 01-80 (Note 3.005-10): 63 10 (OHVC-Note 3.005-10) ***(Replaces 800 0165)***	17.814	1	400 1104	
WASHER, Plain 64 10 (V8-Note 3.005-10)	17.814	1	G120392	NA
NUT, Hexagon ..... 63 Thru 65 01-10-80	17.406	1	G120369	NA
Bracket To Cylinder Block				
BOLT, Hexagon ..... 63-64 01-10-80: 65 01 (LHE)(OHV-196)	17.038	2	G181648	NA
BOLT, Hexagon ..... 65 01-10 (OHV-199): 65 01-10-80 (OHV-232)	17.038	2	G180123	
BOLT, Hexagon ..... 63-64 10-80 (V8-Note 3.005-10): 65 10-80 (V8)	17.038	2	G180122	NA
WASHER, Lock ..... 63 Thru 65 01-10-80	17.820	2	G120382	NA
NUT, Hexagon ..... 63-64 01-10-80: 65 01 (LHE)(OHV-196)	17.406	2	G120369	NA

Copyright 1963 American Motors Corp.

GROUP NO. — DESCRIPTION — YEAR and MODEL		PRIMARY GROUP NO.	PER CAR	PART NO.	CODE
STRAP, Alternator Adjusting (For Auto-Lite, Delco Remy or Leece Neville Strap Equipment Refer To Group 3.014)					
63 01: 63 10 (OHVC)		.....	1	316 7350	
64 01-10 (OHVC-196)		.....	1	317 0791	
65 01 (LHE)(OHV-196)		.....	1	317 7712	
63 10 (OHVA)		.....	1	316 7354	
63-64 10-80 (V8-9-5/8" Long)		.....	1	315 0276	
64 10-80 (V8-9" Long)		.....	1	317 7720	
64 10 (OHVA-196)		.....	1	317 0687	
64 10 (OHVC-232)		.....	1	317 3231	
65 01-10-80 (OHV-232): 65 10 (OHV-199)		.....	1	317 7715	
64 10-80 (V8-9" Long): 65 10-80 (V8)		.....	1	317 7720	
ATTACHING PARTS					
Strap Tp Water Pump					
STUD	64-65 01 (LHE)(OHV-196)	17.718	1	G192426	
STUD	65 01-10-80 (OHV-232): 64 10 (OHV-232): 65 10 (OHV-199)	17.718	1	G191991	NA
STUD	64 10 (OHVA-196)	.....	1	316 0301	
WASHER, Lock	64-65 01 (LHE)(OHV-196): 64 10 (OHV-196)	17.820	1	G120382	NA
WASHER, Lock	65 01-10-80 (OHV-232): 64 10 (OHV-232): 65 10 (OHV-199)	17.820	1	G120214	NA
WASHER, Plain	64 01-10 (OHV-196)	17.814	1	400 1104	
WASHER, Plain	64 10 (OHVC-232)	17.814	1	400 1095	
NUT, Stud	64-65 01 (LHE)(OHV-196): 64 10 (Six)	17.406	1	G120369	NA
NUT, Hexagon	65 01-10-80 (OHV-232): 64 10 (OHV-232): 65 10 (OHV-232)	17.406	1	G120368	
Strap To Alternator					
BOLT, Hexagon	63 01-10 (Note 3.005-10): 64 01 (LHE)(OHV-196): 64 10 (Six-196)	17.038	1	G179817	NA
BOLT, Hexagon	63-64 10-80 (V8-Note 3.005-10): 65 10-80 (V8)	17.038	1	G180078	NA
BOLT, Hexagon	64 10 (OHV-232)	17.038	1	G180077	NA
WASHER, Lock	63 Thru 64 01-10-80: 65 10-80	17.820	1	G120214	NA
WASHER, Plain	63 01-10 (13/32")...***(Replaces 800 0165)***	17.814	1	400 1104	
WASHER, Plain	63 Thru 64 01-10-80 (11/32"): 65 10-80...***(Replaces 800 0153)***	17.814	1	400 1095	
Strap To Manifold					
BOLT, Hexagon	64-65 10-80 (V8-1" Long)	17.038	1	G180079	NA#
BOLT, Hexagon	63 Thru 65 10-80 (V8-3/4" Long)	17.038	1	G180077	NA#
WASHER, Lock	63 Thru 65 10-80 (V8)	17.820	1	G120214	NA
WASHER, Plain	64 10-80 (V8-#11)	17.814	1	400 1095	#
WASHER, Plain	65 10-80 (V8-#14)	17.814	1	400 1093	#
Alternator Wire Harness To Terminal					
WASHER, Lock	63 Thru 65 01-10-80 (#10)	17.820	2	G131096	NA
WASHER, Lock	63 Thru 65 01-10-80 (1/4")	17.820	1	G120380	NA
NUT, Hexagon	63 Thru 65 01-10-80 (1/8")	17.412	2	G120361	NA
NUT, Hexagon	63 Thru 65 01-10-80 (7/32")	17.406	1	G120375	
3.019 REGULATOR, Alternator Voltage (For Auto-Lite Del co Remy or Leece Neville Regulator Equipment Refer To Group 3.012)					
63 01-10-80		.....	1	316 7360	
64-65 01-10-80		.....	1	317 1141	
ATTACHING PARTS					
Voltage Regulator To Wheelhouse					
SCREW, Tapping	63 01-10-80...***(Replaces 800 0095)***	17.671	2	G456766	
SCREW, Tapping	64-65 01-10-80	3.165	3	400 0478	

Copyright 1963 American Motors Corp.

GROUP NO. — DESCRIPTION — YEAR and MODEL	PRIMARY GROUP NO.	PER CAR	PART NO.	CODE
3.020 MOTOR, Starting (For Components Refer To Group 3 Charts)				
(Auto-Lite MDY-6002) 60-61 80	.....	1	315 7222	
(Auto-Lite MDY-6009) 61-62 80	.....	1	316 2209	
(Auto-Lite MDY-6105)(For Components Refer To CAN. Chart CH 3-5): ***163 80 (CAN)***	.....	1	316 9673	
(Auto-Lite MDY-6108): ***164-165 10-80 (V8-CAN)***	.....	1	317 4521	
(Auto-Lite MEC-6001) 60-61 20	.....	1	315 7217	
(Auto-Lite MEC-6002) 60 Thru 62 01 (LHE): ***162 01-10 (CAN-Note 3.020-1)***	.....	1	315 7208	
(Auto-Lite MEC-6003) 61 20	.....	1	316 2210	
(Auto-Lite MEC-6101)(For Components Refer To CAN. Chart CH 3-3): ***162-163 01-10 (CAN)***	.....	1	320 9078	
(Auto-Lite MEC-6102): ***164 01 (CAN-LHE): 165 01 (CAN): 164 10 (CAN-OHV-196)***	.....	1	317 4522	
(Auto-Lite MEC-6103) ***165 01-10 (Can-Six-199)***	.....	1	317 8993	#
(Delco Remy 1107201) 61-62 01 (OHV): 63 01: 61 Thru 63 10	.....	1	316 1142	
(Delco Remy 1107282) 63 Thru 65 10-80 (V8)	.....	1	316 8961	
(Delco Remy 1107317) 64 01-10 (Six-196): 65 01 (LHE)(OHV-196)	.....	1	317 3151	
(Delco Remy 1107331) 65 01-10-80 (OHV-232): 64 10 (OHV-232)	.....	1	317 3236	
(Delco Remy 1107349) 65 10 (OHV-199)	.....	1	317 4483	
(Delco Remy 1107731) 60-61 01-10 (OHV)	.....	1	315 6116	
(Prestolite MDY-6110) ***165 01-10-80 (OHV-232-Can)***	.....	1	317 9095	
(Prestolite MDY-6111) ***164-165 10-80 (Can-V8)***	.....	1	318 1801	#
(Prestolite MEC-6103) ***165 10 (OHV-199-Can)***	.....	1	317 8993	
ATTACHING PARTS				
Starting Motor To Housing				
BOLT, Hexagon ..... 60 Thru 63 01-10 (Six-OHV-1-5/16" Long-1 Req.): 64-65 01-10 (Six-1-5/16" Long-2 Req.): 65 80 (Six-2 Req.)	.....	AR	315 8193	
BOLT, Hexagon ..... 60 Thru 63 01-10 (Six-1-1/2" Long)	.....	1	315 8194	
BOLT, Hexagon ..... 60 Thru 65 10-20-80 (V8-1-1/8" Long)	17.038	1	G179859	NA
BOLT, Hexagon ..... 60 Thru 65 10-20-80 (V8-3" Long)	17.038	1	G181678	NA
WASHER, Lock ..... 60 Thru 65 01-10-80 (Six-7/16" I.D.)	17.822	1	G114607	NA
WASHER, Lock ..... 60 Thru 65 01-10-80 (Six-3/8" I.D.)	17.820	1	G103321	NA
WASHER, Lock ..... 60 Thru 65 10-20-80 (V8)	17.820	2	G103328	NA
WASHER, Plain ..... 60 Thru 63 20-80: 65 10-80 (V8)	17.814	1	400 1156	
NUT, Hexagon ..... 60 Thru 64 01-10 (Six): 65 01-10-80 (Six)	17.406	1	G219422	NA
NUT, Hexagon ..... 60 Thru 65 10-20-80 (V8)	17.406	1	G120370	NA
Wire To Terminal				
NUT, Machine 60-61 01	17.414	1	G103092	NA
WASHER, Lock ..... 60 Thru 65 01-10-20-80 (3/8" I.D.)	17.820	1	G120382	NA
WASHER, Lock ..... 60 Thru 65 01-10-20-80 (#10-13/32")	17.820	1	G138479	NA
WASHER, Lock ..... 60 Thru 65 01-10-20-80 (#10-23/64")	17.820	1	G131096	NA
NUT, Hexagon ..... 60 Thru 65 01-10-20-80	17.412	1	G120622	NA
NUT, Hexagon ..... 64-65 10-80 (V8-#10)	17.412	1	G120614	NA
NUT, Jam ..... 60 Thru 65 01-10-20-80	17.410	1	G124829	NA
3.022 SWITCH, Starting Motor Neutral Safety				
60 01 (WAT)	.....	1	314 3998	
61 01 (WAT)	.....	1	320 2684	

NOTE 3.020-1: For Components refer to Chart CH 3-39. All parts identical.

NOTE 3.022-1: Two Types of Switches were used on the 61 10-20-80 (WAT). They can be identified as follows:
- Type 1: The Switch Wires are attached to the Starter Relay and Junction Block with a separate Wire from Junction Block to Neutral Switch.
- Type 2: The Switch Wires are attached to the Starter Relay and Neutral Safety Switch. The Junction Block is eliminated.

NOTE 3.022-2: Two Types of Relays were used on the 62 01 (WES). They can be identified as follows:
- Type 1: The Relay has 3 Screw Type Terminals.
- Type 2: The Relay has 2 Screw Type Terminals and 1 Male Arcless Type.

Copyright 1963 American Motors Corp.

GROUP NO. — DESCRIPTION — YEAR and MODEL		PRIMARY GROUP NO.	PER CAR	PART NO.	CODE
62 Thru 65 01 (WAT): 63 10-80 (WAT): 64 10-80 (WAT-WCGS-WAW) (WAT-LAW): 65 10-80 (WAT-LAW-WCGS)		.....	1	320 3293	
60 Thru 62 10-20-80 (WAT)	***(Replaces 320 1826)***	.....	1	315 7963	
65 01-10-80 (OHV-232-WAT-WFGS): 64-65 10-80 (V8-WAT-WFGS)		.....	1	317 3329	
ATTACHING PARTS					
Neutral Safety Switch To Operating Shaft Bracket					
SCREW, Machine.....	60 01 (WAT)	17.626	2	G425498	NA
WASHER, Lock.....	60 01 (WAT)	17.820	2	G131096	NA
NUT, Hexagon.....	60 01 (WAT)	17.412	2	G142212	NA
Neutral Safety Switch To Steering Column					
SCREW, Tapping.....	61 Thru 65 01 (WAT): 63 Thru 65 10-80 (WAT)	17.660	1	G9405916	NA
SCREW, Tapping.....	***64-65 01 (RHD-WAT)***	17.671	2	G274105	NA
SCREW, Tapping.....	65 10-80 (WAT-WCGS-LAW)	17.671	2	G451658	NA
BOLT, Hexagon.....	64 10-80 (V8-WAT-WFGS)	17.038	2	G181561	NA
WASHER, Lock.....	64 10-80 (V8-WAT-WFGS)	17.820	2	G120380	NA
WIRE, Neutral Safety Switch Ground					
64 10-80 (V8-WAT-WFGS)		.....	1	320 4988	
ATTACHING PARTS					
Wire To Switch					
WASHER, Lock.....	64-65 01 (WAT): 64-65 10-80	17.820	2	G131096	NA
NUT, Hexagon.....	64-65 01 (WAT): 64-65 10-80	17.412	2	G120614	NA
SWITCH, Starting Motor (On Gear Selector-Incl. Wires)					
60 10-80 (RHD-WAT): 61 10-80 (RHD-WAT-Note 3.022-1 Type 1)		.....	1	320 1827	
60-61 10-20-80 (LHD-WAT)		.....	1	320 3007	
61 10-80 (RHD-WAT-Note 3.022-1 Type 2)		.....	1	320 3008	
62 10-80 (LHD-WAT)		.....	1	320 3570	
62 10-80 (RHD-WAT)		.....	1	320 3571	
RELAY, Starting Motor					
62 01 (WES-Note 3.022-1 Type 1): 60 Thru 62 10-20-80 (WAT)		.....	1	315 6115	
62 01 (WES-Note 3.022-2 Type 2): 63-64 01 (WES): 65 01-10-80 (WAT-WFGS): 64 10-80 (WAT-WFGS)		.....	1	316 5763	
ATTACHING PARTS					
Relay To Wheelhouse					
SCREW, Tapping.....	62 Thru 64 01 (WES): 65 01 (WAT-WFGS): 63-64 10 (WES)	17.671	1	G274773	NA
SCREW, Tapping.....	60 10-20-80	17.671	2	800 0093	NA
SCREW, Tapping.....	61-62 10-20-80 ***(Replaces 800 0105)***	17.671	2	400 1042	
WIRE, Relay To Neutral Safety Switch					
65 01 (LHD-WAT-WFC): 65 10-80 (LHD-WAT-WFGS)		.....	1	317 6541	
64 10-80 (LHD-WAT-WFGS)		.....	1	317 3356	
65 10 (RHD-WAT-WFGS): 64 80 (RHD-WAT-WFGS)		.....	1	317 3381	

Copyright 1963 American Motors Corp.

GROUP NO. — DESCRIPTION — YEAR and MODEL	PRIMARY GROUP NO.	PER CAR	PART NO.	CODE
ROD, Neutral Safety Switch				
60 01 (WAT)	.....	1	315 4776	
ATTACHING PARTS				
Rod To Lever				
PIN, Cotter ..... 60 01 (WAT)	17.460	1	G103361	NA
WASHER, Plain ..... 60 01 (WAT)	17.814	1	G120391	NA
TRUNNION, Neutral Safety Switch				
60 01 (WAT)	.....	1	314 3995	
ATTACHING PARTS				
Trunnion To Rod				
NUT, Hexagon ..... 60 01 (WAT)	17.412	2	G142212	NA
WASHER, Plain ..... 60 01 (WAT)	17.814	1	G446188	NA
WIRE, Neutral Safety Switch To Junction Block				
60 10-20-80 (WAT)	.....	1	315 7924	
61 10-20-80 (WAT-Note 3.022-1 Type 1)	.....	1	316 1345	
ATTACHING PARTS				
Wire To Heater Hose				
CLIP ..... 61 10 (LHD-WAT)	8.192	1	313 0165	
Wire To Wire Harness				
CLIP ..... 61 10-20-80 (WAT-Note 3.022-1 Type 1)	3.210	2	63 045	
WIRE, Neutral Safety Switch To Ignition Switch				
64-65 01 (LHD-WAT): 64-65 10-80 (WAT-WCGS-WAW)	.....	1	317 1137	
COVER, Starting Motor Neutral Safety Switch				
62 10-80 (WAT)	.....	1	316 5840	
3.030 DISTRIBUTOR (For Components Refer To Group 3 Charts)				
(Auto-Lite IAT-4402-1) 60-61 01 (LHE)	.....	1	315 7209	
(Auto-Lite IAT-4407) 62 01 (LHE)	.....	1	316 4149	
(Auto-Lite IAT-4408): ***162 10 (CAN)***	.....	1	316 5688	
(Auto-Lite IAT-4414): ***163 10 (CAN)***(For Components Refer To CAN. Chart CH 3-9) ***(Use 317 3162)***	.....	1	316 9407	
(Auto-Lite IAT-4414A): ***165 01 (OHV-CAN): 164 10 (OHV-196-CAN)***	.....	1	317 3162	
(Auto-Lite IAT-4415): ***163 01 (CAN-LHE)***(For Components Refer To CAN. Chart CH 3-7)	.....	1	316 9406	
(Auto-Lite IAT-4415A): ***164-165 01 (CAN-LHE)***	.....	1	317 3161	
(Auto-Lite IBP-4104) 60 80	.....	1	315 7223	
(Auto-Lite IBP-4104A) 60 20	.....	1	315 7218	

NOTE 3.030-1: For Components refer to page CH 3-75. All parts identical except, when ordering Key No. 32. Order IAT-100 in place of GAR-98A.
Lower Thrust Washer, IG-313 (Not Illustrated) is included on CAN distributor.

Copyright 1963 American Motors Corp.

GROUP NO. — DESCRIPTION — YEAR and MODEL	PRIMARY GROUP NO.	PER CAR	PART NO.	CODE
(Auto-Lite IBP-4107) 61 20-80	.....	1	316 2037	
(Auto-Lite IBP-4109) 62 80: ***163 80 (CAN-Note 3.030-1)***	.....	1	316 4150	
(Auto-Lite IBP-4109A): ***164-165 10-80 (V8-CAN)***	.....	1	317 3163	
(Auto-Lite IDC-4601) ***165 01-10 (OHV-199-Can): 165 01-10-80 (OHV-232-Can)***	.....	1	317 9094	
(Delco Remy 1110289)(Use For Delco Remy 1110308) 63 Thru 65 01 (Six-196): 63-64 10 (Six-196) ***(Replaces 317 0250)***	.....	1	316 7666	#
(Delco Remy 1110299) 63 Thru 65 01 (LHE)	.....	1	316 7665	
(Delco-Remy 1110320) 65 01-10 (OHV-199): 65 01-10-80 (OHV-232): 64 10 (OHV-232) ***(Use 318 0070)***	.....	1	317 3220	
(Delco Remy 1111025) 63 Thru 65 10-80 (V8)	.....	1	316 7667	
(Delco Remy 1112434) 60-61 01-10 (OHV) ***(Use 316 4204)***	.....	1	315 7914	
(Delco Remy 1112435) 62 01-10 (OHV)	.....	1	316 4204	
(Prestolite IDC-4601-A) ***165 01-10-80 (OHV-199-Can)(OHV-232-Can)***	.....	1	318 0286	
ARM, Distributor Advance				
60 Thru 62 01 (LHE): ***163 Thru 165 01 (CAN)***	.....	1	315 9547	
SPACER, Distributor Advance Arm				
60 Thru 62 01 (LHE): ***163 Thru 165 01 (CAN)***	.....	1	315 9548	
SHAFT, Distributor				
(Auto-Lite IAT-3086LA): ***162 01-10-80 (CAN)***...(Incl. Governor And Cam)	.....	1	320 9067	
3.031 CONTACT SET, Ignition				
60 Thru 62 01 (LHE): ***164-165 01-10-80 (Can):*** 60 Thru 62 20-80: ***162 10 (Can)***	.....	1	320 1801	
60 Thru 62 01-10 (OHV-Pre Assembled)	.....	1	320 2807	
63 Thru 65 01-10 (Six): 65 80 (OHVC-232)	.....	1	320 4202	
165 01-10 (OHV-199-Can): 165 01-10-80 (OHV-232-Can)	.....	1	320 9165	
63 Thru 65 10-80 (V8)	.....	1	320 0197	
3.032 CAP, Distributor				
60 Thru 62 01 (LHE): ***162 10 (CAN)***	.....	1	320 3937	
60 Thru 62 01-10 (OHV)	.....	1	314 1430	
63 Thru 65 01-10 (Six): 65 80 (OHVC-232) ***(Use 320 6903)***	.....	1	320 4197	
163 01 (LHE-Can): 164-165 01 (Can): 163 Thru 165 10-80 (Six-Can)	.....	1	320 9053	
164-165 10-80 (V8-Can): 60 Thru 62 20-80 ***(Replaces 320 1796)***	.....	1	320 2808	#
63 Thru 65 10-80 (V8)	.....	1	320 0192	
CONTACT, Distributor Cap				
60 Thru 62 01 (LHE): ***164-165 01-10-80 (Can):*** 61-62 20-80	.....	1	320 1798	
60 20-80	.....	1	311 8871	
SPRING, Distributor Cap Contact				
60 Thru 62 01 (LHE): ***164-165 01-10-80 (Can):*** 60 Thru 62 20-80	.....	1	311 8872	
3.033 CONDENSER, Distributor				
60 Thru 62 01 (LHE): 60 Thru 65 10-20-80 (V8). ***(Replaces 320 1800, 320 0198)***	.....	1	320 4585	
60 Thru 62 01-10 (OHV): 63 Thru 65 01-10 (Six): 65 80 (OHV-232) ***(Replaces 311 8585)***	.....	1	320 4584	
162 Thru 165 01-10-80 (Can)	.....	1	320 9088	
165 01-10 (OHV-199-Can): 165 01-10-80 (OHV-232-Can)	.....	1	320 9166	

Copyright 1963 American Motors Corp.

GROUP NO. — DESCRIPTION — YEAR and MODEL	PRIMARY GROUP NO.	PER CAR	PART NO.	CODE
3.035 ROTOR, Distributor				
60 Thru 62 01 (LHE): ***162 10 (Can)*** ..... ***(Replaces 311 9571)***	.....	1	320 3871	
60 Thru 62 01-10 (OHV)	.....	1	311 8583	
63 Thru 65 01-10 (Six): 65 80 (OHVC-232)	.....	1	320 4198	
163 Thru 165 01-10-80 (Can-Six)	.....	1	320 9056	#
63 Thru 65 10-80 (V8)	.....	1	320 4216	
164-165 10-80 (Can-V8): 60 Thru 62 20-80	.....	1	320 1799	#
3.039 CLAMP, Distributor				
63 Thru 65 01 (LHE)	.....	1	316 8088	
63-64 01-10 (OHV-196): 65 01 (OHV-196)	.....	1	316 9129	
164-165 01 (OHV-Can): 162-163 10 (Can): 164 10 (Can-Six-196)	.....	1	316 5817	
65 01-10 (OHV-199): 65 01-10-80 (OHV-232): 64 10 (OHV-232)	.....	1	317 3227	
60 Thru 65 10-20-80 (V8)	.....	1	314 4690	
ATTACHING PARTS				
Clamp To Block				
SCREW, Machine..... 60 Thru 62 01 (LHE) ..... ***(Replaces 800 0065)***	17.626	1	400 0984	
SCREW, Machine..... 60 Thru 62 01-10 (OHV) ..... ***(Replaces 800 0068)***	17.626	1	400 0986	
BOLT, Hexagon ..... 63-64 01-10 (Six-196): 65 01 (LHE)(OHV-196)	17.038	1	G180079	NA
BOLT, Hexagon ..... 65 01-10 (OHV-199): 65 01-10-80 (OHV-232): 64 10 (OHV-232)	17.038	1	G180080	NA
BOLT, Hexagon ..... 63 Thru 65 10-80 (V8)	17.038	1	G180081	NA
WASHER, Lock ..... 60 Thru 65 01-10-20-80	17.820	1	G120214	
SEAL, Distributor To Block				
60 Thru 62 01 (LHE): ***163 Thru 165 01 (Can)***	.....	1	313 2516	
63 Thru 65 01-10 (Six): 65 80 (OHVC-232)	3.030	1	314 5118	
60 Thru 65 10-20-80 (V8)	3.030	1	314 4689	
3.042 GEAR, Distributor				
60-61 01-10 (OHV)	.....	1	320 1924	
62 01-10 (OHV)	.....	1	320 3413	
63-64 01-10 (OHV-196): 65 01 (OHV-196) ..... ***(Replaces 320 4212)***	.....	1	320 4499	
164-165 01 (OHV-196-Can): 164 10 (Six-Can)	.....	1	320 9062	
165 01-10 (OHV-199-Can): 165 01-10-80 (OHV-232-Can)	.....	1	320 9170	
63 Thru 65 10-80 (V8)	.....	1	320 4222	
64 10 (OHVC-232): 65 10-80 (Six)	.....	1	320 5387	
60 Thru 62 20-80: ***164-165 10-80 (V8)***	.....	1	320 2015	
PIN, Distributor Gear				
60-61 01-10 (OHV)	.....	1	311 8591	
62 01-10 (OHV)	.....	1	320 3414	
63 Thru 65 01 (LHE)	.....	1	320 4205	
63 Thru 65 01-10 (OHV-Six): 65 80 (OHVC-232)	.....	1	320 4213	
165 01-10-80 (Six-Can)	.....	1	320 9183	
164-165 10-80 (V8-Can)	.....	1	320 9203	
60-61 20-80: ***162 Thru 164 10-80 (Six-Can)***	.....	1	320 2016	
62 80: ***163 80 (V8-Can)***	.....	1	320 3204	
63 80	.....	1	320 4233	

Copyright 1963 American Motors Corp.

GROUP NO. — DESCRIPTION — YEAR and MODEL	PRIMARY GROUP NO.	PER CAR	PART NO.	CODE
3.046 CONTROL, Distributor Vacuum				
60 Thru 62 01 (LHE): ***164 01 (Can): 165 01 (LHE-Can)***	.....	1	320 1808	
60 Thru 62 01 10 (OHV)	.....	1	315 7915	
63 Thru 65 01 (LHE)	.....	1	320 4204	
63 Thru 65 01 (OHV-196): 63 10 (Note 3.046-1 Type 1): 64 10 (OHVC-232): 65 10-80 (OHVC-232)	.....	1	320 4211	
165 01 (OHV-Can): 163-164 10 (Six-196-Can)	.....	1	320 9061	
165 01-10 (OHV-199-Can): 165 01-10-80 (OHV-232-Can)	.....	1	320 9168	
162 10 (CAN)	.....	1	320 9001	
63-64 10 (OHV-196-Note 3.046-1 Type 2)	.....	1	320 4488	
63 Thru 65 10-80 (V8)	.....	1	320 4221	
164-165 10-80 (V8-CAN): 60 Thru 62 80	.....	1	320 1803	
60-61 20 ***(Replaces 320 1804)***	.....	1	320 2699	
3.048 TUBE, Distributor Vacuum Control				
60-61 01 (LHE): 62 01 (LHE-Note 3.058-1 Type 1)	.....	1	315 8158	
60 01-10 (OHV-LHD-LDT)	.....	1	315 8189	
61-62 01 (OHV): 61-62 10 (LHD-WST-LDT)(LHD-WOD-LDT): ***61 10 (RHD-LDT)*** ***(Replaces 316 2962)***	.....	1	316 1174	
61 01 (RHD-WST-LDT)(RHD-WOD-LDT): 62 10 (RHD-WST-LDT)(RHD-WOD-LDT)	.....	1	316 2286	
62 01 (LHE-Note 3.058-1 Type 2): ***163 01 (CAN)***	.....	1	316 5886	
63 01 (LHE)	.....	1	315 7938	
63 01 (OHV-LDT): 63 10 (Six-WST-LDT)(Six-WOD-LDT)	.....	1	316 7878	
63 01-10 (OHV-WDT)	.....	1	316 7941	
64-65 01 (LHE)	.....	1	317 2098	
64-65 01 (OHV-196-LDT)	.....	1	317 3497	
64-65 01 (OHV-196-WDT): 64 10 (OHV-196-WDT)	.....	1	317 3465	
164-165 01 (OHV-CAN): 64 10 (OHV-196-LDT)	.....	1	317 2843	
65 01-10-80 (OHVC-232-WDT)	.....	1	317 6997	
65 01 (OHV-199-LDT): 64 10 (OHVC-232): 65 10 (Six-LDT)	.....	1	317 4331	
60 10 (LHD-WDT)	.....	1	315 8290	
60 10 (RHD-LDT)	.....	1	315 9443	
60 10 (RHD-WDT)	.....	1	315 9448	
61-62 10 (LHD-WAT-LDT): ***162 10 (CAN-LDT)*** ***(Replaces 316 1141)***	.....	1	316 2964	
61-62 10 (WDT): ***163 10 (CAN-WDT)*** ***(Replaces 316 1047)***	.....	1	316 2966	
163 10 (CAN)	.....	1	316 7946	
63 10 (Six-WAT-LDT)	.....	1	316 7940	
63 10-80 (V8) ***(Ref. Pr. List)***	.....	1	316 7964	
64 10-80 (V8): 65 10 -80 (V8-327)	.....	1	317 0321	
60 Thru 62 80: ***163 10-80 (V8-CAN)***	.....	1	315 8313	
ATTACHING PARTS				
Tube To Gasoline Tube				
CLIP ..... 60 Thru 64 01-10 (OHV-Six-3 Req.): 65 01 (OHV-196-3 Req.)(OHV-199-4 Req.)(OHV-232-4 Req.): 65 10-80 (Six-4 Req.)	.....	AR	313 7319	
CLIP ..... 63 01 (LHE-1 Req.): 65 01 (OHV-199-3 Req.) (OHV-232-3 Req.): 65 10-80 (Six-3 Req.) ***(Replaces 316 8851)***	23.028	AR	400 0021	
Tube To Carburetor				
CONNECTOR ..... 62 01 (LHE): 60 10: 61 10 (WDT): 60 Thru 65 10-20-80 (V8-327)	17.160	1	G137404	
ELBOW ..... 61 01: 62-63 01-10 (OHV): 64 01 (WDT): 65 01 (LHE)(OHV-196-WDT)(OHV-232): 60 10: 64 10: 65 10-80 (OHVC-232)	17.218	1	G137420	NA

NOTE 3.046-1: **Two Types of Distributor Vacuum Controls were used on the 63 10. They can be identified as follows:**
Type 1: Used in Distributor Delco Remy 1110289.
Type 2: Used in Distributor Delco Remy 1110308.

Copyright 1963 American Motors Corp.

GROUP NO. — DESCRIPTION — YEAR and MODEL		PRIMARY GROUP NO.	PER CAR	PART NO.	CODE
ELBOW	64 01 (LDT): 65 01 (OHV-196-LDT)(OHV-199-LDT): 65 10 (OHV-199-LDT)	17.216	1	G127829	
Tube To Ignition Coil Bracket					
CLIP	63 01 (LHE)	17.134	1	G120520	
CLIP	64-65 01 (LHE): ***164 10-80 (CAN-V8)***	3.022	1	313 0379	
Tube To Wheelhouse					
CLIP	65 10 (OHV-199)(OHV-232): 65 80 (OHV-232)	4.152	1	47 272	
HOSE, Tube To Carburetor (Bulk-Order Per Foot)					
63 Thru 65 01-10: 64-65 80		5.260	AR	320 3440	
3.056 COIL, Ignition					
60 Thru 62 01 (LHE)		.....	1	320 3951	
60 01-10 (OHV)...(Incl. Clamp)		.....	1	314 5125	
61 Thru 65 01-10 (Six): 65 80 (OHVC-232)...(Incl. Clamp)	***(Replaces 320 2202, 316 1081)***	.....	1	317 0249	#
162 Thru 165 01 (Can): 162 Thru 165 10 (Six-Can): 165 80 (OHVC-232-Can)	***(Replaces 316 5828)***	.....	1	320 9077	
65 01 (LHE)	***(Use 317 0249)***	.....	1	317 3687	
63 Thru 65 10-80 (V8)	***(Replaces 315 1499)***	.....	1	317 3292	
60 Thru 62 20-80: ***164-165 10 (CAN-V8): 163 Thru 165 80 (V8-CAN)***		.....	1	320 2197	
ATTACHING PARTS					
Ignition Coil To Support					
BOLT, Hexagon	60 Thru 63 01 (LHE)	17.038	2	G180018	NA
WASHER, Lock	60 Thru 63 01 (LHE)	17.820	2	G120380	NA
WASHER, Plain	60 Thru 63 01 (LHE) ***(Replaces 800 0149)***	17.814	2	400 1089	
NUT, Hexagon	60 Thru 63 01 (LHE)	17.406	2	G120375	
Ignition Coil To Cylinder Head					
SCREW, Machine	60 Thru 64 01-10 (OHV): 65 01 (OHV-196)	17.629	2	G273890	NA
SCREW, Machine	65 01 (OHV-199): 65 01-10-80 (OHV-232): 64 10 (OHV-232-3/4" Long): 65 10 (OHV-199)	17.629	2	G274644	NA
Ignition Coil To Bracket					
BOLT, Hexagon	64-65 01 (LHE): 65 80 (V8)	17.038	2	G180018	NA
BOLT, Hexagon	60 Thru 65 10-20 (V8)	17.038	2	G180020	NA
WASHER, Plain	64-65 01 (LHE) ***(Replaces 800 0149)***	17.814	2	400 1089	
WASHER, Plain	60 Thru 65 10-20-80 (V8)	17.814	2	G120392	NA
WASHER, Lock	64-65 01 (LHE): 60 Thru 65 10-20-80 (V8)	17.820	2	G120380	
NUT, Hexagon	64-65 01 (LHE): 60 Thru 65 10-20-80 (V8)	17.406	2	G120375	
CLIP, Ignition Coil					
65 01-10 (OHV-199): 65 01-10-80 (OHV-232): 64 10 (OHV-232)		.....	1	317 4342	
ATTACHING PARTS					
Clip To Body					
SCREW, Hexagon	65 01-10 (OHV-199): 65 01-10-80 (OHV-232): 64 10 (OHV-232)	17.038	1	G180076	NA
WASHER, Lock	65 01-10 (OHV-199): 65 01-10-80 (OHV-232): 64 10 (OHV-232)	17.820	1	G120214	NA
WASHER, Plain	65 01-10 (OHV-199): 65 01-10-80 (OHV-232): 64 10 (OHV-232)	17.814	1	G120393	NA
WIRE, Ignition Coil To Junction Block					
63 01 (LHE-WAE-Note 3.005-9 Type 1)		.....	1	316 8110	
63 01-10 (OHV-WAE-Note 3.005-9 Type 1)		.....	1	316 8109	

Copyright 1963 American Motors Corp.

GROUP NO. — DESCRIPTION — YEAR and MODEL	PRIMARY GROUP NO.	PER CAR	PART NO.	CODE
WIRE, Ignition Coil To Voltage Regulator				
63-64 10 (Six-WAE-Note 3.005-9)	.....	1	316 8149	
65 01-10-80 (Note 3.005-9)	3.012	1	316 2094	
3.058 SUPPORT, Ignition Coil				
60-61 01 (LHE): 62 01 (LHE-Note 3.058-1 Type 1)	.....	1	312 5157	
61 01 (LHE-Heavy Duty-Note 3.005-3)(LHE-WAE): 62 01 (LHE-WAE-Note 3.014-1 Type 1)	.....	1	316 0490	
62 01 (LHE-Note 3.058-1 Type 2): 63 01 (LHE)	.....	1	316 6206	
CLAMP, Ignition Coil (Fits Around Coil)				
60 Thru 62 01 (LHE): ***164-165 10-80 (CAN-V8):*** 60 Thru 62 20-80	3.056	1	320 2198	
3.060 BRACKET, Ignition Coil				
64-65 01 (LHE)	.....	1	317 2230	
60 Thru 65 10-20-80 (V8) ***(Replaces 315 1406)***	.....	1	315 5117	
ATTACHING PARTS Bracket To Manifold				
BOLT, Hexagon ..... 60 Thru 65 10-20-80 (V8)	17.038	1	G180018	NA
WASHER, Lock..... 60 Thru 65 10-20-80 (V8)	17.820	1	G120382	NA
3.065 RESISTOR, Ignition				
60 01-10 (OHV): 63 10-80 (V8) ***(Replaces 314 5124)***	.....	1	316 7752	
64-65 10-80 (V8)	.....	1	317 3293	
60 Thru 62 20-80: ***164-165 10 (CAN-V8): 163 Thru 165 80 (V8-CAN)***	.....	1	315 7215	
ATTACHING PARTS Resistor To Panel				
SCREW, Tapping..... 60 01-10 (OHV): 60 Thru 65 10-20-80 (V8)	17.671	1	G274773	NA
3.080 BATTERY (Refer To Group 15.072)				
3.082 BOX, Battery				
60 01 (LHE)	.....	1	315 4206	
60 01 (OHV)	.....	1	315 9860	
60 01 (WAE-LAC)(Heavy Duty-Note 3.005-4)	.....	1	315 6217	
61 Thru 63 01 ***(Replaces 316 0401)***	.....	1	316 3564	
64-65 01	.....	1	316 9953	
60-61 10	.....	1	315 3217	
62 10	.....	1	316 3537	
63-64 10 (Six): 65 10-80 (Six)	.....	1	316 6354	
63-64 10-80 (V8)	.....	1	316 6590	
65 10-80 (V8)	.....	1	317 5642	
60-61 20	.....	1	315 3305	
60-61 80	.....	1	315 3352	
62 80	.....	1	316 3865	

NOTE 3.058-1: Two Types of Ignition Coil Supports were used on the 62 01 (LHE). They can be identified as follows:

Type 1: The Ignition Wire Support is attached to the Ignition Coil Support. A Metal Clip is used to hold the Wires to the Support.

Type 2: The Ignition Wire Support is separated from the Ignition Coil Support and a Nylon Separator attached to a Bracket is used to hold the Wires.

Copyright 1963 American Motors Corp.

GROUP NO. — DESCRIPTION — YEAR and MODEL		PRIMARY GROUP NO.	PER CAR	PART NO.	CODE
ATTACHING PARTS					
	Battery Box To Front Crossmember				
SPACER	60 01 (WAE-LAC-1" Long): ***60 01 (Heavy Duty-1" Long-Note 3. 005-4)***	.....	2	315 6212	
BOLT, Hexagon	60 01 (LHE)	17. 038	2	G181593	NA
BOLT, Hexagon	***60 01 (Heavy Duty-Note 3. 005-4)***	17. 038	2	G181614	NA
BOLT, Hexagon	***60 01 (WAE-LAC)(Heavy Duty-Note 3. 005-4)***	17. 038	2	G181649	NA
BOLT, Hexagon	***60 01 (Heavy Duty-Note 3. 005-4)***	17. 038	1	G181637	NA
SCREW, Machine	***60 01 (Heavy Duty-Note 3. 005-4)***	17. 671	2	G445615	NA
WASHER, Lock	60 01	17. 820	2	G120214	NA
WASHER, Lock	***60 01 (WAE-LAC)(Heavy Duty-Note 3. 005-4)***	17. 820	2	G120380	NA
WASHER, Plain	60 01 (WAE-LAC): ***60 01 (Heavy Duty-Note 3. 005-4).***	1. 067	1	314 4571	
NUT, Hexagon	60 01	17. 412	2	G271187	NA
NUT, Hexagon	***60 01 (WAE-LAC)(Heavy Duty-Note 3. 005-4)***	17. 412	2	G271193	NA
	Battery Box To Wheelhouse				
BOLT, Hexagon	60 01 (1 Req. -7/8" Long): 61 01 (2 Req.): 60-61 20-80 (2 Req.): 60-61 10 (3 Req.)	17. 038	AR	G181636	NA
BOLT, Hexagon	60 01 (WAE-LAC-3/8-24 x 1-1/2" Long)	17. 038	1	G181643	NA
BOLT, Hexagon	60 01 (WAE-LAC-5/16-24 x 1-1/2" Long)	17. 038	1	G181614	NA
SCREW, Machine	62 01: 64-65 01: 65 10-80 ***(Replaces 800 0112)***	17. 610	2	400 0971	
SCREW, Machine	63 01 ***(Replaces 800 0243)***	17. 610	4	400 1231	
SCREW, Tapping	62 10 (4 Req.): 64 10-80 (4 Req.): 62 80 (5 Req.)	17. 670	AR	G172475	NA
SCREW, Tapping	63 Thru 65 10-80	23. 020	3	400 0608	
WASHER, Lock	63 01 (5/16 x 29/32"-2 Req.): 64 10-80 (4 Req.): 60 20-80 (2 Req.)	17. 826	AR	G178532	NA
WASHER, Lock	63 01 (5/16 x 19/32")	17. 820	3	G103320	NA
WASHER, Lock	60 10: 60-61 20-80	17. 820	3	G120214	NA
WASHER, Plain	60 01	17. 814	1	G120394	NA
WASHER, Plain	60 10	17. 814	2	G120393	NA
BRACE, Battery Box					
(Front) 60 Thru 62 10		.....	1	315 4038	
(Rear) 60-61 10		.....	1	315 3214	
(Rear) 60-61 20		.....	1	315 3940	
(Rear) 60-61 80		.....	1	315 3536	
ATTACHING PARTS					
	Battery Box Brace To Bracket (On Battery Box)				
BOLT, Hexagon	60 Thru 62 10: 60-61 20-80	17. 038	1	G181636	NA
WASHER, Lock	60 Thru 62 10: 60-61 20-80	17. 820	1	G120382	NA
NUT, Hexagon	60 Thru 62 10: 60-61 20-80	17. 412	1	G271193	NA
SUPPORT, Battery Box (Front)					
60 01 (OHV)		.....	1	315 9858	
HOSE, Battery Box Drain					
60 01 (OHV)		.....	1	313 4939	

Copyright 1963 American Motors Corp.

GROUP NO. — DESCRIPTION — YEAR and MODEL	PRIMARY GROUP NO.	PER CAR	PART NO.	CODE
3.084 CLAMP, Battery Hold Down				
60-61 01-10-20-80	.....	1	315 3833	
62 Thru 65 01-10-80	.....	1	316 3463	
3.095 ROD, Battery Hold Down Clamp				
60 01 (4-3/8" Long)	.....	1	315 4202	
60-61 01-10-20-80 (8-3/16" Long)	.....	1	315 3839	
61 01 (LHE-3-5/8" Long)	.....	1	316 0767	
62 01 (LHE-5" Long)	.....	1	316 3744	
62 Thru 64 01-10-80 (9-3/8" Long-1 Req.): 65 01-10-80 (2 Req.)	.....	AR	316 3434	
ATTACHING PARTS				
Battery Hold Down Clamp Rod To Battery Box				
NUT, Hexagon ..... 62 Thru 65 01-10-80	17.406	2	G120368	
NUT, Wing 60-61 01-10-20-80	17.432	2	G126177	
WASHER, Plain ..... 60-61 01-10-20-80 ***(Replaces 800 0149)***	17.814	2	400 1089	
WASHER, Plain ..... 62-63 01-10-80 ***(Replaces 800 0159)***	17.814	2	400 1098	
WASHER, Plain 64-65 01-10-80	17.814	2	400 1098	
3.105 HORN, Dual				
(Low Tone) 60 01 (LHE-Note 3.105-1 Type 1): 60 20-80	.....	1	315 8406	
(Low Tone) 60 01 (LHE-Note 3.105-1 Type 2)	.....	1	315 8714	
(Low Tone) 60 01-10 (OHV)	.....	1	315 3956	
(Low Tone) 61 01 ***(Replaces 316 1039)***	.....	1	316 1250	
(Low Tone-Auto-Lite) 62-63 01 ***(Use 316 9522)***	.....	1	316 3993	
(Low Tone-Auto-Lite) 64 01	.....	1	317 1146	
(Low Tone-Auto-Lite) ***164 01 (Can):*** 62 10-80: ***163-164 10-80 (Can)***	.....	1	316 3945	
(Low Tone-Spartan) 65 01	.....	1	317 8673	
(Low Tone) 61 10-20-80 (Note 3.105-3 Type 1)	.....	1	316 1041	
(Low Tone) 61 10-20-80 (Note 3.105-3 Type 2)	.....	1	316 1252	
(Low Tone-Delco Remy) 62-63 10-80	.....	1	316 3947	
(Low Tone-Spartan) 63 10-80	.....	1	316 7544	
(Low Tone-Spartan) 64 10-80	.....	1	320 5510	
(Low Tone-Spartan) 65 10-80	.....	1	317 7625	
(High Tone) 60 01 (LHE-Note 3.105-2): ***60 05 (Govt. Cars)***	.....	1	320 2123	
(High Tone) 60 01-10 (OHV)	.....	1	315 3957	
(High Tone) 61 01	.....	1	316 1251	
(High Tone) 62-63 01 ***(Use 316 9521)***	.....	1	316 3994	
(High Tone-Auto-Lite) 64 01	.....	1	317 1147	
(High Tone-Spartan) 65 01	.....	1	317 8672	
(High Tone-Auto-Lite) ***164 01 (Can):*** 62 10-80: ***163-164 10-80 (Can)***	.....	1	316 3946	
(High Tone) 61 10-20-80 (Note 3.105-3 Type 1) ***(Replaces 316 1042)***	.....	1	316 3946	#
(High Tone) 61 10-20-80 (Note 3.105-3 Type 2)	.....	1	316 1253	
(High Tone-Delco Remy) 62-63 10-80	.....	1	316 3948	
(High Tone-Spartan) 63 10-80	.....	1	316 7545	
(High Tone-Spartan) 64 10-80	.....	1	320 5511	
(High Tone-Spartan) 65 10-80	.....	1	317 7624	
(High Tone) 60 20-80	.....	1	315 8407	

NOTE 3.105-1: Twp Types of Horns were used on the 60 01 Series. They can be identified as follows:
Type 1: Horn is mounted on the Hood Top Rear Reinforcement.
Type 2: Horn is mounted on the Radiator Support Crossmember.

NOTE 3.105-2: Used in High Tone Horn Accessory Kit.

NOTE 3.105-3: Two Types of Horns were used on the 61 10-20-80 Series. They can be identified as follows:
Type 2: This is an Auto-Lite Horn with Adjustable Bracket.
Type 2: This is a Spartan Horn with a Bracket Welded to Horn.

Copyright 1963 American Motors Corp.

GROUP NO. — DESCRIPTION — YEAR and MODEL		PRIMARY GROUP NO.	PER CAR	PART NO.	CODE
ATTACHING PARTS					
Horn To Hood Top					
SCREW, Tapping.....	60 01 (LHE-Note 3.105-1 Type 1).....	17.670	1	G172431	NA
Horn To Crossmember					
BOLT, Hexagon.....	60 01 (LHE-Note 3.105-1 Type 2): 60 01 (OHV)	17.038	2	G181593	NA
WASHER, Lock.....	60 01 (OHV).....	17.820	2	G120214	NA
WASHER, Lock.....	60 01 (LHE-Note 3.105-2)***(Govt. Cars)***	17.820	1	G120380	NA
NUT, Hexagon.....	60 01 (LHE-Note 3.105-1 Type 2).....	17.406	1	G120368	
Horn To Bracket					
BOLT, Hexagon	60-61 10 (WAE-LAC-3/4" Long).....	17.038	2	G180020	NA
BOLT, Hexagon	60 Thru 62 10-20-80 (1 Req. Single Horn-5/8" Long) (2 Req. Dual Horn).....	17.038	AR	G181593	NA
SCREW, Tapping.....	63 Thru 65 10-80 (1 Req. Single Horn) (2 Req. Dual Horn-1/2" Long).....	17.629	AR	G9412076	
SCREW, Tapping.....	65 10 (Dual Horn-3/4" Long).....	22.056	1	400 0032	
WASHER, Lock.....	64 01 (1 Req.): 60-61 10 (WAE-LAC-1/2" I.D.-4 Req.).....	17.820	AR	G120380	NA
WASHER, Lock	65 01.....	17.826	1	G178518	NA
WASHER, Lock.....	60 Thru 62 10-20-80 (1 Req. Single Horn-19/32" I.D.)(2 Req. Dual Horn).....	17.820	AR	G120214	NA
NUT, Hexagon.....	60-61 10 (WAE-LAC).....	17.406	4	G120375	
Horn To Wheelhouse					
SCREW, Tapping.....	61 Thru 63 01 (1 Req. Single Horn)(2 Req. Dual Horn).....***(Replaces 800 0103)***	17.671	AR	G9411563	
BRACKET, Horn To Wheelhouse Panel (Welded To Panel)					
60 01 (OHV): ***164 01 (Can):*** 60 Thru 63 10-20-80.....		.....	1	343 9352	
PLATE, Horn To Wheelhouse					
60 10 (WAE-LAC).....		3.115	1	315 9412	
3.125 RELAY, Horn					
60 Thru 63 01: 60 Thru 62 10-80.....***(Replaces 315 3958)***		.....	1	316 3943	
64-65 01: 63 Thru 65 10-80.....		.....	1	316 7374	
ATTACHING PARTS					
Relay To Panel					
SCREW, Tapping.....	60 Thru 63 01: 60 Thru 65 10-80***(Replaces 800 0105)***	17.671	2	400 1042	
SCREW, Tapping.....	64 01.....	17.671	2	G274773	
3.130 SWITCH, Ignition					
60 Thru 63 01: 60 Thru 62 10-20-80 (WST)(WOD).....***(Replaces 314 6191)***		.....	1	315 8414	
64-65 01.....		.....	1	350 0726	
60 Thru 62 10-20-80 (WAT).....		.....	1	315 8613	
63 10-80..... ***(Use 350 9174)***		.....	1	348 2524	#
64 10-80: ***65 10 (RHD)***.....		.....	1	350 9174	
65 10-80 (LHD).....		.....	1	351 6584	
ATTACHING PARTS					
Switch To Instrument Panel					
NUT, Hexagon.....	60 Thru 63 01: 60 Thru 62 10-20-80.....	.....	1	400 0064	

Copyright 1963 American Motors Corp.

GROUP NO. — DESCRIPTION — YEAR and MODEL	PRIMARY GROUP NO.	PER CAR	PART NO.	CODE
Switch To Bracket				
SCREW, Tapping..... 63 10-80	13.017	2	400 0616	
BEZEL, Ignition Switch				
64-65 01	.....	1	350 0727	
65 10 (550)(Except Marlin)	.....	1	351 6735	
65 10 (660)(770): 65 80	.....	1	351 6736	
ATTACHING PARTS				
Bezel To Lower Instrument Panel				
NUT, Speed..... 65 10 (550-2 Reg.)(660-3 Req.)(770-3 Req.)	22.060	AR	400 1352	
NUT, Speed..... 65 80	22.060	3	400 1352	
ESCUTCHEON, Starter And Ignition Switch				
65 10 (LHD)	.....	1	351 6585	
65 50 (Marlin): 65 80	.....	1	353 0329	
BRACKET, Ignition Switch To Instrument Panel				
63-64 10-80: ***65 10 (RHD)***	.....	1	348 2641	
ATTACHING PARTS				
Bracket To Instrument Panel				
SCREW, Tapping..... 63 10-80	17.660	2	G161869	NA
CLIP, Solenoid And Relay Harness To Chassis Harness				
63 10 (WES)	3.210	5	63 045	
CLIP, Solenoid And Neutral Start Harness To Wheelhouse				
63 10 (WFGS)	3.210	3	312 3849	
WIRE, Ignition Switch To Flasher (Shielded)				
60-61 10-20-80 (Heavy Duty)(Taxicabs And Police Cars) ...(Replaces 342 3076)	.....	1	345 5671	
64-65 01 (Heavy Duty)(Taxicabs And Police): 63 10-80 (Heavy Duty)(Taxicabs And Police): 65 10-80 (Heavy Duty)(Taxicabs And Police)	.....	3	316 9541	
WIRE, Ignition Switch To Blower Switch (Incl. Fuse Holder)				
60 01 (OAC)	.....	1	320 1989	
60 10 (WAE-Note 3.005-7)	3.130	1	316 1435	
WIRE, Ignition Switch To Starting Motor				
62 01-10 (WAE-Note 3.005-8)	3.206	1	314 3933	
62 80 (WAE-Note 3.005-8)	.....	1	316 4906	
WIRE, Ignition Switch To Voltage Regulator				
62 01-10 (WAE-Note 3.005-8)	.....	1	316 4910	
HARNESS, Ignition Switch To Flasher (Shielded)(3 Wire)				
62-63 01 (Heavy Duty)(Taxicabs And Police Cars): 60 Thru 62 10-20-80 (Heavy Duty)(Taxicabs And Police Cars)	.....	1	345 5671	

Copyright 1963 American Motors Corp.

GROUP NO. — DESCRIPTION — YEAR and MODEL	PRIMARY GROUP NO.	PER CAR	PART NO.	CODE
HARNESS, To Solenoid And Starter Relay				
62 01 (WES-Note 3.022-1 Type 2): 63 01 (WES)	.....	1	316 5764	
64 01 (LHD-WES)	.....	1	317 1123	
63-64 10 (WES) ***(Replaces 317 2486)***	.....	1	316 8175	
WIRE, Ignition Switch To Neutral Safety Switch				
63 Thru 65 10 (WAT-LAW)(WES-LAW): 63 Thru 65 80 (V8-WAT-LAW)	.....	1	316 8125	
64-65 10-80 (WAT-WCGS-WAW)	3.022	1	317 1137	
WIRE, Ignition Switch To Circuit Breaker				
64 01 (Accessory Side)	23.320	1	317 1131	
64 01 (Battery Side)	23.230	1	317 1134	
65 01-10-80 (Accessory Side)	.....	1	317 6543	
65 01-10-80 (Battery Side)	.....	1	317 6542	
WIRE, Ignition Switch To Windshield Wiper Switch Circuit Breaker				
64-65 01 (WEW): 65 10-80 (LHD-WEW-Has A Female Angle Bullet Terminal)	.....	1	317 2457	#
63 Thru 65 10-80 (WEW-Has Two Eyelet Terminals)	.....	1	317 0536	
64 10-80 (WEW-Has One Eyelet And One Female Terminal)	.....	1	317 2479	
ATTACHING PARTS				
Wire To Ignition Switch Terminals				
WASHER, Lock ..... 60 Thru 65 01-10-20-80	17.820	4	G131096	NA
NUT, Hexagon ..... 60 Thru 65 01: 60 Thru 62 10-20-80: 64 10-80	17.412	4	G120614	NA
NUT, Hexagon 63 10-80	17.412	4	G271169	
3.135 CYLINDER, Ignition Switch Lock (Incl. Keys)(Regular)				
60 Thru 63 01: 60 Thru 62 10-20-80 (Note 3.135-1)	.....	1	447 8584	
64-65 01: 63 10-80 (Note 3.135-1): 64 10-80: ***64 15-85 (Taxi)***	.....	1	448 0462	
65 10-80	.....	1	448 2829	
CYLINDER, Ignition Switch Lock (Incl. Keys)(Special)(Specify Key No.)				
60 Thru 63 01: 60 Thru 62 10-20-80 (Note 3.135-1)	.....	1	447 8585	
64-65 01: 63 10-80 (Note 3.135-1): ***64 15-85 (Taxi)***	.....	1	448 0463	
65 10-80	.....	1	448 2830	
KEY, Ignition Switch Lock Cylinder (Blank)				
60 Thru 65 01-10-20-80: ***64 15-85 (Taxi)***	23.085	2	344 5763	
KEY, Ignition Switch Lock Cylinder (Coded)(Specify Key No.)				
60 Thru 65 01-10-20-80	23.085	2	447 8592	
3.145 SWITCH, Lighting (Headlamps And Instruments)				
60-61 01: 60-61 10-20-80 ***(Replaces 344 0854)***	.....	1	320 2495	
62-63 01	.....	1	347 3247	
64 01: 63-64 10-80 ***(Replaces 348 2826)***	.....	1	320 4955	
65 01-10-80	.....	1	353 0559	
62 10-80	.....	1	346 2107	

NOTE 3.135-1: **Special indicates Cylinder is set to match specified Key No.**
Regular indicates Cylinder is not set to any specified Key No.

Copyright 1963 American Motors Corp.

GROUP NO. — DESCRIPTION — YEAR and MODEL	PRIMARY GROUP NO.	PER CAR	PART NO.	CODE
ATTACHING PARTS				
Headlamp Switch To Instrument Panel				
SCREW, Tapping..... 64 10-80	.....	2	400 0616	
NUT, Round..... 60 Thru 63 01: 60 Thru 62 10-20-80	.....	1	400 0056	
NUT, Hexagon..... 63-64 10-80: ***65 10 (RHD)***	.....	1	400 0146	
NUT, Spring..... 63 10-80: ***65 10 (RHD)*****.....(Replaces 400 0156)**	13.017	1	400 0130	
FERRULE ..... 63-64 10-80: ***65 10 (RHD)***	.....	1	400 0145	
Headlamp Switch To Bracket				
SCREW, Tapping..... 63 10-80	.....	2	400 0616	
Headlamp Switch To Shaft				
NUT, Sleeve 64-65 01	.....	1	350 0725	
NUT, Sleeve ..... 65 10 (Except Marlin)	.....	1	351 7116	
NUT, Sleeve ..... 65 50 (Marlin): 65 80	.....	1	351 6613	
HOUSING, Light Switch And Blower				
65 50 (Marlin): 65 80	.....	1	351 6647	
SWITCH, Courtesy (Door Operated)				
60 Thru 65 01-10-20-80	.....	AR	344 5741	
ADAPTER, Headlamp Switch Wire				
63 10-80 (Red)	.....	1	320 4944	
63 10-80 (Brown)	.....	1	320 4943	
SWITCH, Courtesy (On Instrument Panel)				
61 Thru 65 01: 60 Thru 64 10-20-80: 64 10: ***65 10 (RHD): 164 80 (CAN)***	.....	1	344 3822	
64 80	.....	1	352 0960	
65 10-80 (LHD)	.....	1	351 6753	
ATTACHING PARTS				
Courtesy Lamp Switch To Instrument Panel				
SCREW, Machine..... 64-65 01: 60 Thru 63 10-20-80	17.610	2	G451603	NA
SCREW, Machine..... 64 10: ***65 10 (RHD)***	17.610	2	G273434	NA
NUT, Round..... 65 10-80	.....	1	400 0056	
NUT, Round..... 64 80	.....	1	400 0880	
Courtesy Lamp Switch To Bracket				
SCREW, Machine..... 61 Thru 63 01 (Note 3.349-1 Type 1)	17.610	2	G451603	NA
ESCUTCHEON, Courtesy Lamp Switch (On Instrument Panel)				
65 10 (LHD)(Except Marlin)	.....	1	351 6387	
64 80	.....	1	352 0961	
65 50 (Marlin): 65 80 (LHD)	.....	1	351 6755	
ESCUTCHEON, Headlamp Switch				
60-61 10-20-80	22.100	1	344 0788	
64-65 01	.....	1	350 9537	
65 15-16-18 (LHD)	.....	1	351 6593	
65 17-19 (LHD)(Except Marlin)	.....	1	351 6597	
65 50 (Marlin): 65 80 (LHD)	.....	1	351 6595	
KNOB, Instrument Panel Courtesy Light Switch				
65 10-80 (LHD)	.....	1	351 6757	

Copyright 1963 American Motors Corp.

GROUP NO. — DESCRIPTION — YEAR and MODEL	PRIMARY GROUP NO.	PER CAR	PART NO.	CODE
FUSE, Headlamp Switch				
62-63 01: 62 10-80	17.300	1	G455640	
BRACKET, Courtesy Lamp Switch To Instrument Panel				
61 Thru 63 01 (Note 3.349-1 Type 1)	3.349	1	346 0651	
ATTACHING PARTS Courtesy Lamp Switch Bracket To Instrument Panel				
SCREW, Tapping..... 63 01 (Note 3.349-1 Type 1)	17.660	2	G161901	NA
NUT, Spring..... 63 01 (Note 3.349-1 Type 1)	17.422	2	G455138	NA
BRACKET, Headlamp Switch To Instrument Panel				
63-64 10-80: ***65 10 (RHD)***	.....	1	348 2827	
ATTACHING PARTS Headlamp Switch Bracket To Instrument Panel				
SCREW, Tapping..... 63 10-80	13.017	2	400 0616	
RESISTOR, Headlamp Switch Rheostat				
60 01	.....	1	320 2456	
60 10-20-80	.....	1	320 2455	
RHEOSTAT, Headlamp Switch				
61 Thru 63 01: 61-62 10-20-80	.....	1	320 3011	
64-65 01: 63 Thru 65 10-80	.....	1	320 4440	
3.150 KNOB, Lighting Switch				
60 01	.....	1	343 2301	
61 01 (Gray)	.....	1	346 0252	
61 Thru 63 01 (Black)	.....	1	341 6978	
64-65 01	.....	1	350 9449	
60 Thru 62 10-20-80	.....	1	344 0595	
63 10-80	.....	1	348 2941	
64 10-80: ***65 10 (RHD)***	.....	1	350 9548	
65 10 (LHD)(Except Marlin)	.....	1	351 6592	
65 50 (Marlin): 65 80	.....	1	351 6591	
3.154 BREAKER, Circuit				
(15 AMP) 60 Thru 65 10-20-80	23.325	1	344 1432	
(20 AMP) 62-63 01: 62 10-80	.....	1	316 5820	
(20 AMP) 65 10-80	23.325	1	353 0349	
(25 AMP) 63 Thru 65 18-88: 64-65 08	23.325	1	349 0464	
(30 AMP) 60 Thru 63 01: 60 Thru 62 10-20-80: 63 10-80 (WER)	.....	1	439 0679	
(30 AMP) 64 01-10-80: 65 07 (WPT): 65 10-80	23.325	1	317 1130	
PLATE, Circuit Breaker Mounting				
61 Thru 63 01: 60 Thru 62 10-20-80	.....	1	344 4036	

Copyright 1963 American Motors Corp.

GROUP NO. — DESCRIPTION — YEAR and MODEL	PRIMARY GROUP NO.	PER CAR	PART NO.	CODE
ATTACHING PARTS				
Circuit Breaker Mounting Plate To Dash Panel				
SCREW, Tapping..... 60-61 01: 60 Thru 62 10-20-80 ***.(Replaces 800 0099)***	17.671	2	400 0479	
SCREW, Tapping..... 62-63 01	17.660	2	G161930	NA
SCREW, Tapping..... 64-65 01 (LHD-WPT): 65 18-88	17.660	1	G161897	NA
SCREW, Tapping..... ***64-65 01 (RHD-WPT)***	17.671	1	G274773	NA
NUT, Speed..... 64-65 01 (LHD-WPT)	2.050	1	345 8271	
Circuit Breaker To Instrument Panel				
SCREW, Tapping..... 65 10-80	17.660	1	G181860	NA
NUT, Speed..... 65 10-80	.....	1	400 1444	
SPACER, Circuit Breaker Mounting Plate				
60 Thru 63 01: 60 Thru 62 10-20-80	13.035	2	313 0316	
CLIP, Circuit Breaker Mounting				
60 Thru 65 01-10-20-80 ***.(Replaces 439 4982)***	.....	1	439 0686	
WIRE, Circuit Breaker To Back-Up Lamp Switch				
61 Thru 63 01 (LHD-WCGS)	.....	1	316 1343	
61 Thru 63 01 (RHD)	.....	1	316 2044	
ATTACHING PARTS				
Wire To Circuit Breaker Terminal				
WASHER, Lock..... 60 Thru 64 01-10-20-80: 65 10-80	17.820	2	G131096	NA
NUT, Hexagon..... 60 Thru 64 01-10-20-80: 65 10-80	17.412	2	G120614	NA
3.155 PANEL, Fuse (Less Fuses)				
64-65 01-10-80	.....	1	317 1140	
63 10-80 ***.(Replaces 316 7578)***	.....	1	317 0282	
ATTACHING PARTS				
Fuse Panel To Dash Panel				
SCREW, Tapping..... 64-65 01: 63-64 10-80 (LHD): 65 10-80 (LHD-5/8" Long)	3.155	2	400 0478	#
SCREW, Tapping..... 65 10-80 (LHD-3/4" Long)	17.660	2	G443946	NA#
SCREW, Tapping..... ***64-65 01 (RHD): 63 Thru 65 10-80 (RHD)***	17.660	1	G161930	NA#
BRACKET, Fuse Panel				
64-65 01 (LHD)	.....	1	350 6849	
SPACER, Fuse Panel To Dash Panel				
64-65 01 (RHD): 63 10-80: ***65 10 (RHD)***	13.035	2	313 0316	
FUSE				
(4 AMP) 64-65 01: 63 Thru 65 10-80	17.300	1	G147682	
(6 AMP) 64-65 01: 63 Thru 65 10-80	17.300	1	G147683	
(9 AMP) 64-65 01: 63 Thru 65 10-80	17.300	2	G147684	
(20 AMP) 64-65 01 (LAC): 63 Thru 65 10-80 (LAC)	17.300	1	G106653	
(30 AMP) 64-65 01 (WAC): 63 Thru 65 10-80 (WAC)	17.300	1	G120114	
3.158 SWITCH, Headlamp Dimmer				
60 Thru 65 01-10-80 (LHD) ***.(Replaces 315 6124)***	.....	1	316 0926	
60 Thru 62 10-80 (RHD)	.....	1	315 3766	

Copyright 1963 American Motors Corp.

GROUP NO. — DESCRIPTION — YEAR and MODEL	PRIMARY GROUP NO.	PER CAR	PART NO.	CODE
ATTACHING PARTS				
Switch To Toeboard				
SCREW, Machine..... ***60 Thru 62 10-80 (RHD).....(Replaces 800 0110)***	17.598	2	400 1008	
SCREW, Tapping..... 60 Thru 65 01.....	17.660	2	G161901	NA
SCREW, Tapping..... 60 Thru 62 10-20-80 (LHD): 63 Thru 65 10-80.....	17.660	2	G443946	NA
CLIP, Wire To Dash Panel				
60 01.....	4.152	1	47 272	
CLIP, Floor Mat Hold Down				
60 01-10-20-80.....	29.294	2	345 2892	
3.163 HARNESS, Body Wire (Refer To Group 3.165 For Chassis Wiring Harness And Group 3.635 For Instrument Cluster Wiring Harness)				
60 01.....	.....	1	343 2399	
61 Thru 63 02-05-06-07-09.....***(Replaces 347 4563)***	.....	1	345 3516	
61 Thru 63 04-08.....***(Replaces 347 4732)***	.....	1	345 3517	
64 02-05-06 (Less Trunk Light)(Less Back Up Lights).....	.....	1	317 1109	
64 02-05-06 (With Trunk Light)(With Back Up Lights).....	.....	1	317 1110	
64 07 (LHD-WPT).....	.....	1	317 1115	
64 07 (RHD-WPT).....	.....	1	317 3320	
64 07 (LPT).....	.....	1	317 3671	
64 08 (Less Cargo Light)(Less Back Up Lights).....	.....	1	317 1111	
64 08 (With Cargo Light)(With Back Up Lights).....	.....	1	317 1112	
64 09.....	.....	1	317 1113	
65 05-06 (Less Trunk Lights)(Less Back Up Lights).....	.....	1	317 6519	
65 05-06 (With Trunk Lights)(With Back Up Lights).....	.....	1	317 6520	
65 07 (LHD-WPT).....	.....	1	317 6525	
65 07 (LPT).....***(Discontinued)***	.....	1	317 6524	#
65 08 (Less Cargo Area Lamp)(Less Back Up Lights).....	.....	1	317 6521	
65 08 (With Cargo Area Lamp)(With Back Up Lights).....	.....	1	317 6522	
65 09.....	.....	1	317 6523	
60 15-19-28-29-85-89.....	.....	1	345 1752	
60 18-28-83-88 (Less Cargo Area Lamp).....	.....	1	344 5777	
60 18-28-83-88 (With Cargo Area Lamp).....	.....	1	345 1311	
61 15-25-85.....	.....	1	345 5287	
61 18-28-88.....***(Replaces 345 5299)***	.....	1	345 5300	
62 15-16-85-86.....	.....	1	347 7578	
62 18-28-88 (Less Cargo Area Lamp).....	.....	1	347 7579	
62 18-28-88 (With Cargo Area Lamp).....	.....	1	347 7580	
63 15-85.....	.....	1	316 7722	
63 16-86.....	.....	1	317 1949	
63 18-88.....	.....	1	316 8846	
64 15-16-85.....	.....	1	317 2468	
64 18-88.....	.....	1	317 2469	
64 19-89.....	.....	1	317 2470	
65 15-16-85-86.....	.....	1	317 6526	
65 17-87.....	.....	1	317 6529	
65 18-88.....	.....	1	317 6527	
65 19-89 (Except Marlin).....	.....	1	317 6528	
65 59 (Marlin).....	.....	1	317 6530	
HARNESS, Front Door Switch				
60 01.....	.....	1	343 2405	
61 Thru 63 01.....	.....	1	346 3111	
64 01.....	.....	1	317 1117	
65 01-10-80.....	.....	1	317 6534	
60 Thru 62 10-20-80.....	.....	1	344 5780	
63-64 10-80.....	.....	1	316 7821	

Copyright 1963 American Motors Corp.

GROUP NO. — DESCRIPTION — YEAR and MODEL	PRIMARY GROUP NO.	PER CAR	PART NO.	CODE
HARNESS, Rear Door Switch				**3.163**
60 10-20-80 (142" Long-2 Bullet And 1 Female Terminals)	.....	1	344 5783	3.163hr
60 10-20-80 (2 Spade, 2 Female And 2 Bullet Terminals)	.....	1	345 1919	3.163hr
63 15-18-85-88	.....	1	316 7831	3.163hr
64 15-16-18	.....	1	317 2472	3.163hr
65 15-18: 65 85-88 (880)	.....	1	317 6532	3.163
64 85-88	.....	1	317 2473	3.163hr
65 85-88 (990)	.....	1	317 6536	3.163
WIRE, Center Domelamp				**3.163**
61 01	.....	1	346 3110	3.163wi
62 02-04-05-06-08	.....	1	347 4784	3.163wi
60 15-18-25-28-85-88	.....	1	344 5778	3.163wi
61 10-20-80 (Used On Cars Less Rear Door Switches): 62 15-16-18-85-86-88 ***(Replaces 345 7805)***	.....	1	347 7581	3.163wi 3.163wi
61-62 10-20-80 (Used On Cars With Rear Door Switches)	.....	1	345 7806	3.163wi
63 15-18-85-88	.....	1	316 7831	3.163wi
63 16-86	.....	1	316 8921	3.163wi
64 15-16-18	.....	1	317 2472	3.163wi
65 15-18	.....	1	317 6532	3.163
WIRE, Front Domelamp (On Windshield Header Bar)				**3.163**
64 02-05-06-08 (Heavy Duty): 65 05-06-08 (Heavy Duty)	.....	1	317 2458	3.163
61-62 10-20-80 (Police)	.....	1	345 7808	3.163wf
63 Thru 65 10-80 (Police)	.....	1	316 8197	3.163
WIRE, Rear Domelamp (With Cargo Area Lamp)				**3.163**
61 Thru 63 04-08	3.670	1	346 4721	3.163wr
64 02-05-06-08: 65 05-06-08	.....	1	317 1114	3.163
60 18-28-83-88	3.670	1	345 1312	3.163wr
61-62 18-28-88	3.670	1	345 7807	3.163wr
63 18-88	3.670	1	316 8843	3.163wr
WIRE, Body Wire Harness To Gasoline Gauge (Tank Unit)				**3.163**
63-64 10-80	.....	1	316 8845	3.163wb
GUARD, Body Wire Harness (On Rear Wheelhouse)				**3.163**
60-61 10-20-80	.....	1	341 0862	3.163gw
CLIP, Front Door Switch Wire Harness To Instrument Panel				**3.163**
61 Thru 63 01	17.134	1	G105245	3.163cl
CLIP, Domelamp Wire To Roof Panel				**3.163**
60 Thru 62 01	3.346	1	343 1949	3.163cd
64-65 02-05-06-08	.....	3	316 6312	3.163
61-62 10-20-80	.....	1	437 0520	cd3.163
CLIP, Body Wire Harness To Floor Pan And Side Sill (Snap On)				**3.163**
61 Thru 63 01-10-80 ***(Replaces 344 5684)***	13.488	4	400 0438	3.163cb

Copyright 1963 American Motors Corp.

GROUP NO. — DESCRIPTION — YEAR and MODEL	PRIMARY GROUP NO.	PER CAR	PART NO.	CODE
CLIP, Body Wire Harness To Rear Wheelhouse				
60-61 10-20-80: 62 15-85	3.192	3	47 740	
ATTACHING PARTS Clip To Wheelhouse				
SCREW, Tapping..... 60 01	17.669	3	800 0272	NA
SCREW, Tapping..... 61 10-20-80 ***(Replaces 800 0107)***	17.671	3	400 1044	
SCREW, Tapping..... 62 10-80	17.671	3	G9414261	NA
CLIP, Clock And Glove Box Wire To Instrument Panel				
61 10-20-80 ***(Replaces 346 5949, 400 0473)***	.....	1	400 1598	
CLIP, Body Wire Harness To Dash Panel (Snap-In)(Nylon)				
63 01	3.165	5	400 0305	
64-65 01 (Has 1/2" I. D.)	.....	1	312 3849	
64-65 01 (LHD-Has 11/16" I. D.)	.....	3	310 7341	
64-65 01 (RHD-Has 13/16" I. D.)	13.440	2	400 0443	
ATTACHING PARTS Clip To Dash				
SCREW, Tapping..... 64-65 01 (3/8" Long)	17.671	2	400 1031	
SCREW, Tapping..... 64-65 01 (3/4" Long)	17.671	1	400 1037	
CLIP, Body Wire Harness To Sill (Under Door)				
63-64 10-80	.....	7	400 0637	
CONNECTOR, Wire (2 Wire)				
61-62 01-10-20-80: 64 10-80 (V8-WST)(V8-WOD)	13.170	1	312 7171	
GROMMET, Wire				
62-63 01 (For 27/32" Hole)	3.288	AR	55 350	
62 Thru 64 01 (For 1" Hole): 65 01-10-80: 62 10-80	3.166	AR	400 0346	
62 10-80	3.166	AR	400 0337	
3.165 HARNESS, Chassis Wire (Refer To Group 3.163 For Body Wiring Harness And Group 3.635 For Instrument Cluster Wiring Harness And Group 3.218 For Connectors and Blocks)				
60 01 (LHE-Note 3.165-1)	.....	1	343 2402	
60 01 (OHV-Note 3.165-1)	.....	1	315 9867	
61 01 (LHD-LHE) ***(Replaces 316 1082, 316 1073)***	.....	1	346 8503	
61 01 (RHD-Note 3.165-1)	.....	1	316 2074	
62 01 (LHD-Note 3.165-1)	.....	1	316 4377	
62 01 (RHD-Note 3.165-1)	.....	1	316 3793	
63 01 (LHD)	.....	1	316 7875	
163 01 (CAN-LHD)	.....	1	316 9408	
63 01 (RHD)	.....	1	316 7895	
163 01 (CAN-RHD)	.....	1	317 1245	
64 01 (LHD-LHE)	.....	1	317 1105	
64 01 (LHD-OHV)	.....	1	317 1104	

NOTE 3.165-1: Also includes Instrument Cluster Wiring Harness.

NOTE 3.165-2: Two Types of Harnesses were used on the 165 01-10-80 (Can) Series. They are identified as follows:

Type 1: Used with Prestolite Alternator ALE-5101A, ALE-6009, ALK-5001C, ALK-6402 or OE-6002 and prior to these Engine Serial Nos., on the 165 01 (Can) PT-502499, QT-500951 and WT-500438, on the 165 10 (Can) JT-501153, LT-503933 and ZT-501843, and on the 165 80 (Can) St-500487, ET-501215 and HT-501397.

Type 2: Used with Prestolite Alternator ALE-6303, ALH-6303 or ALK-6302 and beginning with these Engine Serial Nos., on the 165 01 (Can) PT-502499, QT-500951 and WT-500438, on the 165 10 (Can) JT-501153, LT-503933 and ZT-501843, and on the 165 80 (Can) ST-500487, ET-501215 and HT-501397.

Copyright 1963 American Motors Corp.

GROUP NO. — DESCRIPTION — YEAR and MODEL	PRIMARY GROUP NO.	PER CAR	PART NO.	CODE
164-165 01 (LHE-Can-Note 3. 165-2 Type 1)(OHV-196-Can-Note 3. 165-2 Type 1)	.....	1	317 1106	
164-165 01 (Can-OHV-196-RHD)	.....	1	317 1108	
64 01 (RHD-OHV)	.....	1	317 1107	
64 01 (RHD-WFGS-WOD)	.....	1	317 3438	
65 01 (LHE-LHD): ***165 01 (Can-LHE-LHD-Note 3. 165-2 Type 2)***	.....	1	317 6500	
65 01 (OHV-196-LHD)	.....	1	317 6501	
65 01 (OHV-199-LHD)(OHV-232-LHD): ***165 01 (OHV-199-LHD-Can-Note 3. 165-2 Type 2)(OHV-232-LHD-Can-Note 3. 165-2 Type 2)***	.....	1	317 6502	
65 01 (OHV-196-RHD)	.....	1	317 6513	
65 01 (OHV-199-RHD): 165 01 (OHV-199-RHD-Can) ..... ***(Discontinued)***	.....	1	317 9889	
165 01 (OHV-199-Can-Note 3. 165-2 Type 1)(OHV-232-Can-Note 3. 165-2 Type 1)	.....	1	317 9257	
60 10 (LHD-Note 3. 165-1)	.....	1	344 5968	
60 10 (RHD-Note 3. 165-1)	.....	1	344 5971	
61 10 (LHD-Note 3. 165-1)	.....	1	316 1068	
62 10 (LHD-Note 3. 165-1)	.....	1	348 6168	
62 10 (RHD-Note 3. 165-1)	.....	1	347 6676	
63 10 (Six-LHD)	.....	1	316 7642	
63 10-80 (V8-LHD)	.....	1	316 7733	
63 10 (Six-RHD)	.....	1	316 9136	
163 10 (CAN-LHD)	.....	1	316 9409	
163 10 (CAN-RHD)	.....	1	317 1246	
63 10-80 (V8-RHD)	.....	1	316 9135	
64 10 (OHV-196-LHD)	.....	1	317 2460	
64 10 (OHVC-232-LHD)	.....	1	317 4278	
64-65 10 (OHV-196-RHD)	.....	1	317 2462	
164 10 (Can-Six-196-LHD)	.....	1	317 2464	
164 10 (Can-OHV-196-RHD)	.....	1	317 2466	
64 10-80 (V8-LHD)	.....	1	317 2461	
164 10-80 (V8-Can-LHD)	.....	1	317 2465	
164 10 (Can-V8-RHD): 164 80 (Can-RHD)	.....	1	317 2467	
64 10 (V8-RHD)	.....	1	317 2463	
65 10 (Six-LHD)(Except Marlin): ***165 10 (Can-Six-LHD-Note 3. 165-2 Type 2)***	.....	1	317 6503	
65 10 (OHV-232-RHD): 165 10 (OHV-232-RHD-Can-Note 3. 165-2 Type 2)	.....	1	317 6514	
165 10 (Six-Can-LHD-Note 3. 165-2 Type 1)	.....	1	317 6509	
165 10 (Can-Six-RHD-Note 3. 165-2 Type 1)	.....	1	317 6517	
65 10 (V8-LHD)(Except Marlin): ***165 10 (Can-V8-LHD-Note 3. 165-2 Type 2)***	.....	1	317 6504	
65 10 (V8-RHD): 165 10 (Can-V8-RHD-Note 3. 165-2 Type 2)	.....	1	317 6515	
165 10 (V8-Can-LHD-Note 3. 165-2 Type 1)	.....	1	317 6510	
165 10 (Can-V8-RHD-Note 3. 165-2 Type 1)	.....	1	317 6518	
65 50 (Marlin-OHV-232)	.....	1	317 9256	
65 50 (Marlin-V8-LHD)	.....	1	317 6505	
60 20 (LHD-Note 3. 165-1)	.....	1	344 5969	
61 20 (LHD-Note 3. 165-1)	.....	1	316 1145	
60 80 (LHD-Note 3. 165-1)	.....	1	344 5970	
60 80 (RHD-Note 3. 165-1)	.....	1	344 5972	
61 80 (LHD-Note 3. 165-1)	.....	1	316 1269	
61 80 (RHD-Note 3. 165-1)	.....	1	316 2046	
62 80 (LHD-Note 3. 165-1)	.....	1	348 6169	
62 80 (RHD-Note 3. 165-1)	.....	1	347 6677	
163 80 (CAN-LHD)	.....	1	316 9410	
163 80 (CAN-RHD)	.....	1	317 1247	
65 80 (OHV-232-LHD): ***165 80 (Can-OHV-232-LHD-Note 3. 165-2 Type 2)***	.....	1	317 6506	
165 80 (Six-Can-Note 3. 165-2 Type 1)	.....	1	317 6511	
65 80 (V8-LHD): ***165 80 (Can-V8-LHD-Note 3. 165-2 Type 2)***	.....	1	317 6507	
165 80 (V8-Can-Note 3. 165-2 Type 1)	.....	1	317 6512	

ATTACHING PARTS

Harness To Instrument Panel Mounting Bracket

SCREW, Tapping	63 Thru 65 10-80	17.671	2	400 0478	
CLIP, Metal	63 Thru 65 10-80	.....	1	400 0305	
CLIP, Wire	63 Thru 65 10-80	.....	2	400 0443	

Harness To Dash

SCREW, Tapping	***64-65 01 (RHD):*** 63-64 10-80	13.440	1	400 0443	
CLIP	64-65 01 (LHD)	.....	2	310 7341	
CLIP	63-64 10-80	17.671	2	G274773	NA
CLIP	65 10-80	.....	1	400 1704	

Copyright 1963 American Motors Corp.

GROUP NO. — DESCRIPTION — YEAR and MODEL	PRIMARY GROUP NO.	PER CAR	PART NO.	CODE
Harness To Motor Ground Wire				
SCREW, Tapping..... 63 Thru 65 10-80.....	17.670	1	G172327	NA
WASHER, Lock..... 63 Thru 65 10-80.....	17.820	1	G131096	NA
CLIP..... 64-65 01.....	.....	1	312 3849	
Harness To Wheelhouse				
CLIP..... 65 10-80.....	.....	AR	400 0305	#
WIRE, Temperature Sending Unit Extension				
61 01 (OHV-Bullet And Female Arkless Terminals): 61 10 (Bullet And Female Arkless Terminals).....	.....	1	316 2385	
164-165 01 (OHV-CAN).....	.....	1	351 4969	
61 10 (OHVC-Male And Female Arkless Terminals).....	.....	1	346 6117	
CLIP, Chassis Wire Harness To Blower Housing				
63 01: 63 Thru 65 10-80.....	13.440	2	400 0443	
CLIP, Chassis Wire Harness To Sill (Under Door)				
63 10-80.....	.....	7	400 0544	
CLIP, Chassis Wire Harness To Wheelhouse				
60 01-20-80.....	3.210	3	312 3849	
60 01-10 ((OHV).....	3.163	2	310 7341	
61-62 01 (3 Req.): 64-65 01 (5 Req.): 61 Thru 64 10-20-80 (10 Req.).....	.....	AR	400 0305	
CLIP, Chassis Wire Harness To Gas Tube				
65 01 (OHV-196).....	3.210	1	63 045	#
3.166 GROMMET, Wiring (In Radiator Support)				
61 01 (1" O.D.): 60-61 10-20-80 (1" O.D.).....	3.288	2	55 350	
61 01 (1-5/16" O.D.): 60-61 10-20-80 (1-5/16" O.D.).....	.....	2	312 7192	
GROMMET, Wiring (In Dash)				
61 Thru 63 01: 60 Thru 62 10-20-80..... ***(Replaces 342 4467)***	.....	1	346 6150	
64-65 01.....	.....	1	350 5374	
63 10-80 (LHD).....	.....	1	349 2012	
63 Thru 65 10-80 (RHD).....	.....	1	313 4873	
64-65 10-80 (LHD).....	.....	1	317 3369	
ATTACHING PARTS				
Grommet To Dash				
SCREW, Hexagon..... 64-65 01.....	17.671	2	400 1031	
SCREW, Tapping..... ***63-64 10-80 (RHD)***.....	17.671	2	400 0478	#
GROMMET, Wiring (In Lower Deck Panel)				
60-61 01.....	3.163	1	436 5163	
GROMMET, Wiring (In Deck Door Inner Panel)				
64 01.....	.....	1	400 0649	
GROMMET, Wiring (In Rear Wheelhouse)				
61 02-06-07: 62-63 01: 62 10-80..... ***(Replaces 344 5761)***	.....	1	400 0347	
61 04-08.....	.....	2	345 3554	
62-63 01: 62 10-80.....	.....	1	400 0347	

Copyright 1963 American Motors Corp.

GROUP NO. — DESCRIPTION — YEAR and MODEL	PRIMARY GROUP NO.	PER CAR	PART NO.	CODE
GROMMET, Wiring (In Cowl Panel)				
61-62 10-20-80	.....	1	400 0337	
GROMMET, Wiring (In Rear Seat Riser)				
61 05-08: 61-62 10-20-80	.....	1	400 0346	
GROMMET, Wiring (In Rear Floor Pan)				
62-63 01	3.163	2	436 5163	
GROMMET, Wiring (In Rear Shelf)				
62-63 01	3.288	1	55 350	
GROMMET, Wiring (In Floor Pan)				
63 01	3.163	2	436 5163	
62 15-16-85	3.615	1	400 0336	
62 18-88	27.038	1	400 0331	
CLIP, Wire Harness To Radiator Support (Top)				
64 01: 65 01 (OHV-196)	.....	3	400 0713	
65 01 (OHV-232)	.....	4	312 3849	
ATTACHING PARTS Clip To Radiator Support				
SCREW 65 01 (OHV-232)	17.671	4	400 1031	
CLIP, Wire Harness To Rear Seat				
64 07 (13/16" I.D.)	.....	AR	313 8580	
64-65 07 (1/2" I.D.)	.....	AR	312 3849	
ATTACHING PARTS Clip To Rear Seat Area				
SCREW, Tapping..... 64-65 07	17.671	9	400 1031	
CLIP, Wire Harness To Rear Shelf				
64-65 02-05-06 (1 Req.): 64-65 07 (2 Req.): 64-65 09 (4 Req.)	4.141	AR	316 6312	
RETAINER, Grommet To Dash				
61 Thru 63 01: 60 Thru 62 10-20-80	.....	1	342 4466	
64-65 01	.....	1	350 5902	
63 Thru 65 10-80 (LHD)	.....	1	349 2013	
63 Thru 65 10 (RHD): 63 80 (RHD)	.....	1	312 8912	
3.192 WIRE, Horn Contact (In Steering Column)				
60 01 (Deluxe)	.....	1	314 7598	
60 01 (Super And Custom): 61 Thru 63 01	.....	1	314 7392	
WIRE, Horn To Horn (With Dual Horns)				
60 01	.....	1	315 8715	
61 01	.....	1	316 1230	
62 01	.....	1	316 4320	
63 01	.....	1	316 7880	
64-65 01 (LHE)	.....	1	317 1129	

Copyright 1963 American Motors Corp.

GROUP NO. — DESCRIPTION — YEAR and MODEL	PRIMARY GROUP NO.	PER CAR	PART NO.	CODE
WIRE, Horn To Relay				
60 01 (Note 3.105-1 Type 1)	.....	1	315 8534	
WIRE, Horn Ground				
64 01 (RHD): 64 01-10-80 (WPS)	.....	1	320 4850	
65 80 (LPS)(LAW)	.....	1	320 5802	
WIRE, Relay To Extension Wire				
60 10 (WAE-LAC)	.....	1	315 9411	
WIRE, Horn To Chassis Wire Harness				
60 01 (LHE-Note 3.105-1 Type 2)	.....	1	315 8725	
60 01 (OHV)	.....	1	315 9875	
CONNECTOR, Horn Wire				
60 01-10	13.170	1	312 7171	
3.196 CABLE, Battery Ground				
60 01 (LHE)	.....	1	315 4628	
60 01 (OHV)	.....	1	315 9879	
61 01: 64-65 01: 60 Thru 65 10 (Six): 60 20	.....	1	314 7396	
62-63 01	.....	1	316 4376	
62 Thru 64 10-80 (V8): 61 20	.....	1	316 1181	
65 10-80 (V8): 65 80 (OHV-232)	.....	1	317 8602	
60 80	.....	1	314 7733	
61 80	.....	1	316 1180	
CABLE, Battery Ground Jumper				
60 Thru 65 01-10-20-80 (8-3/4" Long)	.....	1	315 4270	
ATTACHING PARTS				
Cable To Cylinder Head				
BOLT, Hexagon ..... 64-65 01 (LHE)(OHV-196): 65 10: 65 80 (OHV-232)	17.038	1	G181666	NA
WASHER, Lock ..... 60 Thru 64 01-10 (Six): 65 01-10-80 (Six)	17.820	1	G131100	NA
WASHER, Lock ..... 64 01: 60 Thru 65 10-20-80 (V8)	17.820	1	G120214	NA
NUT, Hexagon ..... 60 Thru 64 01-10 (Six): 65 01-10-80 (Six)	17.406	1	G120370	NA
NUT, Hexagon ..... 64 01: 60 Thru 65 10-20-80 (V8)	17.406	1	G120368	
Cable To Side Sill				
SCREW, Tapping ..... 60 10-20-80 (Note 3.550-2) ***....(Replaces 800 0127)***	17.671	1	400 1064	
Cable To Timing Case Cover				
WASHER, Plain ..... 60 Thru 63 01-10	17.814	1	G120393	NA
Cable To Crossmember				
BOLT, Hexagon 62 10	17.038	1	G181637	NA
BOLT, Hexagon ..... 65 01: 63 Thru 65 10-80	17.038	1	G181666	NA
WASHER, Lock ..... 64-65 01: 63 Thru 65 10-80	17.820	1	G131100	NA
WASHER, Lock 62 10	17.820	1	G120382	NA
WASHER, Plain 63 10-80: 64 10-80 (V8)	17.814	1	G120394	NA
NUT, Hexagon ..... 64-65 01: 63 Thru 65 10-80	17.406	1	G120370	NA
NUT, Hexagon 62 10	17.406	1	G120369	NA
Cable To Floor Pan				
SCREW, Tapping 63 10-80	17.670	1	G172475	NA
WASHER, Lock 63 10-80	17.820	1	G120214	NA
WASHER, Plain 63 10-80	17.814	1	G120393	NA

Copyright 1963 American Motors Corp.

GROUP NO. — DESCRIPTION — YEAR and MODEL	PRIMARY GROUP NO.	PER CAR	PART NO.	CODE
CLIP, Battery Ground Cable To Starter Wire				
60 Thru 64 10-20-80 (V8): 65 01-10-80 (Six)	3.210	1	63 045	#
65 10-80 (V8)	3.312	2	79 394	
CLIP, Battery Ground Cable To Front Suspension Bracket				
63 Thru 65 10 (OHV): 64 80	3.165	1	400 0305	
CLIP, Battery Ground Cable To Right Front Wheelhouse				
60 01 (OHV-1 Req.): 60 20 (2 Req.): 60 80 (3 Req.)	3.210	AR	312 3849	
ATTACHING PARTS				
Clip To Wheelhouse				
SCREW, Tapping ..... 60 01 (OHV-1 Req.): 60 20-80 (2 Req.)	17.671	AR	800 0093	NA
3.200 CABLE, Battery To Starter (Positive)				
60 01 (LHE): 60 Thru 63 01	.....	1	315 4629	
60 01 (OHV)	.....	1	315 9876	
64-65 01	.....	1	317 1148	
60 Thru 64 10 (Six) ***(Replaces 314 7395, 314 7089)***	.....	1	316 7953	
63-64 10-80 (V8): 60-61 20: 62 80	.....	1	315 3367	
65 10 (Six)	.....	1	317 6550	
65 10-80 (V8)	.....	1	317 8601	
60 80 ***(Replaces 315 1698)***	.....	1	315 3938	
61 80	.....	1	316 1182	
65 80 (Six)	.....	1	317 6552	
CLIP, To Front Suspension Mounting Bracket				
64-65 01 (1 Req.): 63-64 10-80 (V8-2 Req.)	3.165	2	400 0305	
65 10-80 (V8)	3.163	2	310 7341	
ATTACHING PARTS				
Clip To Body				
SCREW, Tapping 65 10-80 (V8)	17.671	2	400 1042	
3.210 HARNESS, Overdrive Wire				
60 01 (LHE)	.....	1	315 6125	
61 01 (LHD-LHE)	.....	1	316 1025	
62 01 (LHD-LHE)	.....	1	316 4279	
62 01 (LHD-OHV)	.....	1	316 4272	
63 01 (LHD-LHE-WCGS)	.....	1	316 7893	
63 01 (LHD-OHV-WCGS)	.....	1	316 7894	
63 01 (WFGS)	.....	1	316 8957	
63 01 (RHD)	.....	1	316 7879	
64-65 01 (LHD-LHE-WCGS)	.....	1	317 1121	
64-65 01 (OHV-196-WCGS)	.....	1	317 1122	
64 01 (WFGS): 65 01 (OHV-196-WFGS)	.....	1	317 1124	
65 01 (OHV-199-LHD-WCGS)	.....	1	317 8912	
65 01 (OHV-199-LHD-WFGS)	.....	1	317 8919	
60 10 (LHD)	.....	1	314 7415	
61 10	.....	1	316 1051	
62 10	.....	1	316 3949	
63 10 (WCGS)	.....	1	316 8182	
63 10-80 (WFGS)	.....	1	316 8958	
64 10 (LHD-OHV-196-WCGS)***(RHD-196)***	.....	1	317 2484	
64 10-80 (LHD-WFGS)	.....	1	317 2483	

Copyright 1963 American Motors Corp.

GROUP NO. — DESCRIPTION — YEAR and MODEL		PRIMARY GROUP NO.	PER CAR	PART NO.	CODE
65 01 (OHV-199-RHD-WCGS): 65 10 (OHV-232-RHD-WCGS)		.....	1	317 6559	
64 10 (OHVC-232-WCGS)		.....	1	317 4235	
64-65 10 (OHVC-232-WFGS)		.....	1	317 4271	
64 10-80 (V8-WCGS)		.....	1	317 2485	
64 10 (OHV-196-RHD-WFGS): ***65 10 (RHD-WFGS)***		.....	1	317 3439	
65 10-80 (Six-LHD-WCGS)		.....	1	317 6557	
65 10 (Six-LHD-WFGS)		.....	1	317 6560	
65 10 (LHD-V8-WFGS)		.....	1	317 6561	
65 10-80 (V8-LHD-WCGS)		.....	1	317 6558	
60-61 20-80 ***(Replaces 315 4312)***		.....	1	315 4313	
62 80		.....	1	316 4361	
63 80 (WCGS)		.....	1	316 8183	
65 80 (Six-LHD-WFGS)		.....	1	317 6562	
65 80 (V8-LHD-WFGS)		.....	1	317 6563	
ATTACHING PARTS					
Overdrive Wire Harness To Body					
CLIP	65 01 (OHV-199-LHD-WCGS): ***65 10 (RHD-Six-232)***	.....	1	400 0788	#
CLIP	64-65 10-80 (WFGS)	13.440	2	400 0443	
SCREW, Hexagon	64-65 10-80 (WFGS)	17.038	2	G180016	NA
WASHER, Lock	64-65 10-80 (WFGS)	17.820	2	G120380	NA
NUT, Hexagon	64-65 10-80 (WFGS)	17.406	2	G120375	
WIRE, Overdrive Relay To Junction Block					
60 10-20-80 ***(Replaces 315 6185)***		.....	1	315 6186	
WIRE, Overdrive Wire Harness To Governor					
64 01: 65 01-10-80 (WFGS): 63-64 10: 64 80		.....	1	314 7515	
CLIP, Overdrive Wire Harness To Transmission					
60 Thru 63 01-10-20-80: 64 01		6.367	1	315 1713	
65 01-10-80 (WCGS)		13.415	1	317 7208	
CLIP, Overdrive Wire Harness To Chassis Wire Harness (Wrap-A-Round)					
65 01-10-80: 61 Thru 64 10-80		.....	AR	63 045	
CLIP, Overdrive Wire Harness To Clutch Housing					
63-64 01 (WFGS)		3.165	1	99 477	
65 01-10-80 (WCGS)		13.415	1	317 7208	
CLIP, Overdrive Wire Harness To Right Wheelhouse					
63 Thru 65 10-80 (WFGS)		.....	3	312 3849	
CLIP, Overdrive Wire Harness To Kickdown Switch Bracket					
63-64 10 (OHV-196)		3.163	1	99 478	
CLIP, Overdrive Wire Harness To Toeboard					
63 01 (RHD)		8.330	2	313 5224	
CLIP, Overdrive Wire Harness To Cylinder Head					
65 10-80 (V8-WCGS)		13.415	1	317 7208	
CLIP, Overdrive Wire Harness To Ignition Coil Rear Bolt					
65 01 (LHE-WCGS)		29.294	1	316 9685	
CLIP, Overdrive Wire Harness To Manifold					
65 01 (OHV-196-WCGS)		29.294	1	316 9685	

Copyright 1963 American Motors Corp.

GROUP NO. — DESCRIPTION — YEAR and MODEL		PRIMARY GROUP NO.	PER CAR	PART NO.	CODE
ATTACHING PARTS					
Clip To Toeboard					
SCREW, Tapping.....	***62 Thru 64 01 (RHD).....(Replaces 800 0091)***	17.671	2	400 1031	
CLIP, Overdrive Wire Harness To Floor Pan					
64-65 01 (WFGS)		.....	2	400 0443	
ATTACHING PARTS					
Clip To Floor Pan					
SCREW, Hexagon	64-65 01 (WFGS)	17.038	2	G180016	NA
WASHER, Lock	64-65 01 (WFGS)	17.820	2	G120380	NA
NUT, Hexagon.....	64-65 01 (WFGS)	17.406	2	G120375	
CLIP, Overdrive Governor Wire To Rear Crossmember Bracket					
63-64 10-80		3.615	1	310 8634	
CLIP, Overdrive Wire Harness At Relay					
65 01 (OHV-196-WFGS).....		.....	1	312 3849	
3.213 BLOCK, Junction (On Wheelhouse)					
60 01-10-20-80		.....	1	312 6915	
61 01: ***64-65 01 (RHD-WST)(RHD-WOD):*** 61 10-20-80 (Note 3.022-1 Type 1): 62 10-80 (LHD-WST)(LHD-WOD): 60 20-80 (WAC-LAC).....		.....	1	313 0664	
63 01-10-80 (Note 3.005-9 Types 1 And 2): 64 10-80 (Notes 3.005-9 Types 1 And 2, 3.005-10 And 3.005-12).....		.....	1	316 7379	
ATTACHING PARTS					
Block To Wheelhouse					
SCREW, Tapping.....	60 01-10-20-80 .....***(Replaces 800 0105)***	17.671	2	400 1042	
SCREW, Tapping.....	61 01: 61 10-20-80 (Note 3.022-1 Type 1): 62 10-80 (LHD-WST) (LHD-WOD) .....***(Replaces 800 0091)***	17.671	2	400 1031	
SCREW, Tapping.....	63 01-10-80 (Note 3.005-9 Type 1 And 2) .....***(Replaces 800 0129)***	17.672	2	400 1066	
SCREW, Tapping.....	64 01 (Note 3.005-9 Types 1 And 2)..... ***(Replaces 800 0095)***	17.671	3	G456766	
SCREW, Tapping.....	64 01-10-80 (Notes 3.005-9 Type 1, 3.005-10 And 3.005-12)	3.165	2	400 0478	
SCREW, Tapping.....	***64-65 01 (RHD-WST)(RHD-WOD)***	17.671	2	G274773	NA
Block To Terminal					
WASHER, Lock	63 01-10-20-80 (Note 3.005-9 Type 1): 64-65 01-10-80 (Notes 3.005-9 Type 1, 3.005-10 And 3.005-12)	17.820	2	G131096	NA
NUT, Hexagon.....	63 01-10-20-80 (Note 3.005-9 Type 1): 64-65 01-10-80 (Notes 3.005-9 Type 1, 3.005-10 And 3.005-12)	17.412	2	G120614	NA
BLOCK, Junction (on Dash Panel)					
60 01-10-20-80.....		.....	1	439 0714	
ATTACHING PARTS					
Block To Dash Panel					
SCREW, Tapping.....	60 01-10-20-80 .....***(Replaces 800 0105)***	17.671	2	400 1042	
BLOCK, Junction (On Clutch Bracket)					
61 Thru 63 01 (LHD-WST)(LHD-WOD): ***65 01 (RHD-WST)(RHD-WOD)***		.....	1	313 0664	
ATTACHING PARTS					
Block To Clutch Bracket					
SCREW, Tapping.....	61 Thru 63 01 (LHD-WST) (LHD-WOD) .....***(Replaces 800 0091)***	17.671	2	400 1031	

Copyright 1963 American Motors Corp.

GROUP NO. — DESCRIPTION — YEAR and MODEL	PRIMARY GROUP NO.	PER CAR	PART NO.	CODE
WIRE, Junction Block To Ignition Switch				
60 20-80 (WAE-LAC)	.....	1	315 6467	
3.215 BULB				
(GE 53)(12-16V)(1 C. P.)(Miniature Bayonet Type) 60 Thru 63 01-10-20-80	.....	AR	G131282	
(GE 57)(12-16V)(2 C. P.)(Miniature Bayonet Type) 60 Thru 65 01-10-20-80	.....	AR	G127934	
(GE67)(12-16V)(3 C. P.)(Single Contact Bayonet Type) 60 Thru 63 01-10-20-80: 65 01-10-80	.....	AR	G142450	
(GE 89)(12-16V)(6 C. P.)(Single Contact Bayonet Type) 60 Thru 65 01-10-20-80	.....	AR	G142452	
(GE 90)(12-16V)(6 C. P.)(Double Contact Bayonet Type) 62-63 01	.....	AR	G142453	
(GE 158)(12-16V)(Wedge Base) 64-65 01-10-80 ***(Replaces G9415969)***	.....	AR	320 9541	
(GE 211-1)(12-16V)(12 C. P.)(Cap Adapter Type) 64-65 01-10-80 ***(Use 320 9536)***	.....	AR	G9414045	NA
(GE 256)(12-16V)(Flasher Type) 63-64 10-80: 65 10	.....	1	320 4467	
(GE 257)(12-16V)(Flasher Type) 61 Thru 63 01: 60 Thru 62 10-20-80 ***(Replaces 320 1474, G9412348)***	.....	AR	320 9534	
(GE 1003)(12-16V)(15 C. P.)(Single Contact Bayonet Type) 60 Thru 63 01-10-20-80	.....	AR	G455490	
(GE 1004)(12-16V)(15 C. P.)(Double Contact Bayonet Type) 64-65 01: 60 Thru 64 10-20-80: 65 10	.....	AR	G455136	
(GE 1034)(12-16V)(4-32 C. P.)(Double Contact Bayonet Type)(Clear) 60 Thru 63 01-10-20-80: 65 01-10-80	.....	AR	G454645	
(GE 1034A)(12-16V)(4-32 C. P.)(Double Contact Bayonet Type)(Amber) 60 Thru 62 01-10-20-80 ***(Replaces G9418772)***	.....	AR	320 9546	
(GE 1073)(12-16V)(32 C. P.)(Single Contact Bayonet Type) 60 Thru 64 01-10-20-80	.....	AR	G454646	
(GE 1156)(12-16V)(32 C. P.)(Single Contact Bayonet Type) 64-65 01-10-80 ***(Replaces G9417866)***	.....	AR	320 9543	
(GE 1157)(12-16V)(32 C. P.)(Double Contact Index Type): 64 01-10-80 ***(Replaces G9417867)***	.....	AR	320 9544	
(GE 1445)(18V) 63 Thru 65 10-80	.....	AR	320 4552	
(GE 1816)(13V)(3 C. P.)(Miniature Bayonet Type) 64-65 10-80 (V8)	.....	AR	G454626	
(GE 1891)(12-16V)(2 C. P.)(Single Contact Bayonet Type) 60 Thru 65 01-10-80	.....	AR	G456985	
(GE 1893)(12-16V)(2 C. P.)(Single Contact Type) 60 Thru 63 10-20-80 (WAT)	.....	AR	345 1933	
(GE 4001)(12-16V)(Dual Headlamp)(High Beam) 60 Thru 64 10-80: 65 10	.....	AR	320 0160	
(GE 4001-A)(12V)(Dual Headlamp)(High Beam)(Amber) 64-65 10-80	.....	AR	320 6877	
(GE 4002)(12-16V)(Dual Headlamp)(High And Low Beam) 60 Thru 64 10-80 (LHD): 65 10	.....	AR	320 0159	
(GE 4002-A)(12V)(Dual Headlamp)(High And Low Beam)(Amber) 64-65 10-80	.....	AR	320 6878	
(GE 4003)(12-16V)(Dual Headlamp)(High And Low Beam) ***60 Thru 65 10-80 (RHD)***	.....	AR	320 0414	
(GE 4405)(12-16V)(Spotlight) 60 Thru 63 01-10-80	.....	AR	311 9856	
(GE 5402)(12-16V)(Single Headlamp)(Clear) ***60 Thru 65 01 (RHD): 60 Thru 63 10 (RHD)*** ***(Replaces 311 9716)***	.....	AR	320 4788	
(GE 6012)(12-16V)(Single Headlamp) 60 Thru 63 01 (LHD): 60 10-20 (LHD)	.....	AR	320 2092	
(GE 6012-A)(Single Headlamp)(Amber) ***64-65 01 (RHD)***	.....	AR	320 5966	
3.218 CONNECTOR, Printed Circuit				
63 Thru 65 10-80	.....	1	320 4867	
CONNECTOR, Light Switch				
63 Thru 65 10-80 ***(Replaces 320 4868)***	.....	1	320 5596	
CONNECTOR, Fuse Panel				
63 Thru 65 10-80	.....	1	320 4869	

Copyright 1963 American Motors Corp.

GROUP NO. — DESCRIPTION — YEAR and MODEL	PRIMARY GROUP NO.	PER CAR	PART NO.	CODE
BLOCK, Double Terminal				
63 Thru 65 10-80	.....	2	320 4870	
BLOCK, Triple Terminal				
63 Thru 65 10-80	.....	2	320 4871	
3.226 SUPPORT, Ignition Wire				
60-61 01 (LHE): 62 01 (LHE-Note 3.058-1 Type 1)	.....	1	313 9076	
60 Thru 64 10-20-80 (V8)	.....	1	314 9792	
3.228 WIRE SET, Ignition				
60 Thru 63 01 (LHE) ***(Replaces 311 4740, 320 2598)(Use 320 4648)***	.....	1	320 3485	
60 Thru 65 01-10 (OHV-196) ***(Replaces 320 2418, 311 9187, 320 2599)***	.....	1	320 5079	
64-65 01 (LHE)	.....	1	320 4648	
63 Thru 65 10-80 (V8) ***(Replaces 320 4925)***	.....	1	320 5078	
64 10 (OHVC-232): 65 10-80 (OHV-199)(OHV-232)	.....	1	320 5368	#
60 Thru 62 20-80	.....	1	320 2628	
BOOT, Distributor To Spark Plug (Plug End)				
61 Thru 63 01-10 (Six-6 Req.): 60 10 (6 Req.): 60 20-80 (8 Req.)	3.001	AR	313 1614	#
(Straight) 60 01	3.230	5	311 2652	#
(Curved) 60 01	3.001	1	313 1614	#
BOOT, Distributor To Ignition Coil (Coil End)				
60 Thru 65 01-10 (Six-6 Req.): 60 Thru 65 10-20-80 (V8-8 Req.)	3.232	AR	313 1513	#
BOOT, Distributor To Spark Plug (Distributor End)				
60 Thru 63 01-10 (Six-6 Req.): 60 Thru 62 20-80 (8 Req.)	3.230	AR	311 2652	#
3.230 CLIP, Ignition Wire (Metal)				
60-61 01 (LHE): 62 01 (LHE-3.058-1 Type 1)	3.226	2	310 6713	
60 Thru 64 10-20-80 (V8)	.....	4	314 7595	
SEPARATOR, Ignition Wire				
62 Thru 65 01 (LHE-Nylon)...(Less Bracket)	.....	1	316 6208	
62 Thru 65 01 (LHE-Note 3.058-1 Type 2)...(Incl. Bracket)	.....	1	316 6209	
60 Thru 65 10-20-80 (V8-Nylon)...(Less Bracket)	.....	2	314 6685	
64-65 10-80 (V8)...(Incl. Bracket)	.....	2	317 5426	
3.232 WIRE, Distributor To Coil High Tension (Copper)				
60 20-80	.....	1	315 1702	

Copyright 1963 American Motors Corp.

GROUP NO. — DESCRIPTION — YEAR and MODEL	PRIMARY GROUP NO.	PER CAR	PART NO.	CODE
WIRE, Distributor To Coil High Tension (Carbon Core)				
60 Thru 63 01-10 (OHV-196): 61-62 01 (LHE): 61-62 20-80 ***(Replaces 316 1108, 315 8561)***	.....	1	315 7581	
63 01 (LHE): 60 20-80	.....	1	315 7572	
64-65 01 (LHE)	.....	1	317 3514	
64 01-10 (OHV-196): 65 01 (OHV-196)	.....	1	317 3509	
65 01-10 (OHV-199): 65 01-10-80 (OHV-232): 64 10 (OHV-232)	.....	1	317 4260	
63 10-80 (V8)	.....	1	316 9493	
64-65 10-80 (V8)	.....	1	317 3505	
WIRE, Distributor To Ignition				
(#1) 63 01 (LHE)	.....	1	315 8557	
(#1) 63 01 (OHV-196)	.....	1	315 7577	
(#1) 64-65 01 (LHE)	.....	1	317 3510	
(#1) 64-65 01 (OHV-196): 64 10 (OHV-196)	.....	1	317 3506	
(#1) 65 01-10 (OHV-199): 65 01-10-80 (OHV-232): 64 10 (OHV-232)	.....	1	317 4261	
(#1) 63 10-80 (V8)	.....	1	316 8129	
(#1) 64-65 10-80 (V8)	.....	1	317 3501	
(#2) 63 01 (LHE)	.....	1	316 4942	
(#2) 63 01-10 (OHV-196)	.....	1	315 7578	
(#2) 64-65 01 (LHE)	.....	1	317 3511	
(#2) 64-65 01-10-80 (OHV-Six)	.....	1	317 3507	
(#2) 63 10-80 (V8)	.....	1	316 8128	
(#2) 64-65 10-80 (V8)	.....	1	317 3502	
(#3) 63 01 (LHE)	.....	1	316 7917	
(#3) 63 01-10 (OHV-196)	.....	1	315 7580	
(#3) 64-65 01 (LHE)	.....	1	317 3512	
(#3) 64 01-10 (OHV-196): 65 01 (OHV-196)	.....	1	317 3508	
(#3) 65 01-10 (OHV-199): 65 01-10-80 (OHV-232): 64 10 (OHV-232)	.....	1	317 4262	
(#3) 63 10-80 (V8)	.....	1	316 8128	
(#3) 64-65 10-80 (V8)	.....	1	317 3502	
(#4) 63 01 (LHE)	.....	1	316 4942	
(#4) 63 01-10 (OHV-196)	.....	1	315 7580	
(#4) 64-65 01 (LHE)	.....	1	317 3511	
(#4) 64-65 01 (OHV-196): 64 10 (OHV-196)	.....	1	317 3508	
(#4) 65 01-10 (OHV-199): 65 01-10-80 (OHV-232): 64 10 (OHV-232)	.....	1	317 4262	
(#4) 63 10-80 (V8)	.....	1	316 8127	
(#4) 64-65 10-80 (V8)	.....	1	317 3503	
(#5) 63 01 (LHE)	.....	1	316 4942	
(#5) 63 01-10 (OHV-196)	.....	1	315 7578	
(#5) 64-65 01 (LHE)	.....	1	317 3511	
(#5) 64-65 01-10-80 (OHV-Six)	.....	1	317 3507	
(#5) 63 10-80 (V8)	.....	1	316 8128	
(#5) 64-65 10-80 (V8)	.....	1	317 3502	
(#6) 63 01 (LHE)	.....	1	315 8557	
(#6) 63 01-10 (OHV-196)	.....	1	315 7577	
(#6) 64-65 01 (LHE)	.....	1	317 3510	
(#6) 64-65 01 (OHV-196): 64 10 (OHV-196)	.....	1	317 3506	
(#6) 65 01-10 (OHV-199): 65 01-10-80 (OHV-232): 64 10 (OHV-232)	.....	1	317 4261	
(#6) 64-65 10-80 (V8)	.....	1	317 3504	
(#7) 63 10-80 (V8)	.....	1	316 8129	
(#7) 64-65 10-80 (V8)	.....	1	317 3501	
(#8) 63 10-80 (V8)	.....	1	316 8128	
(#8) 64-65 10-80 (V8)	.....	1	317 3502	

Copyright 1963 American Motors Corp.

GROUP NO. — DESCRIPTION — YEAR and MODEL	PRIMARY GROUP NO.	PER CAR	PART NO.	CODE
BOOT, Distributor To Coil High Tension Wire (Distributor End)				
60 Thru 63 01-10 (Six-6 Req.): 60 Thru 62 20-80 (8 Req.)	3.230	1	311 2652	#
3.235 WIRE, Distributor To Coil Low Tension				
60 Thru 62 01 (LHE)	3.030	1	320 2010	
60 01-10 (OHV)	.....	1	314 6636	
61-62 01-10 (OHV)	.....	1	316 1112	
63 01-10 ***(Replaces 320 4214)***	3.030	1	320 4206	
60 Thru 62 20-80	3.030	1	320 2011	
63 80	3.030	1	320 4220	
3.245 HEADLAMP ASSEMBLY				
60 01 (LHD)	.....	2	315 8695	
60 01 (RHD)	.....	2	315 5896	
61 01 (RHD)	.....	2	315 8765	
61 Thru 63 01 (LHD) ***(Replaces 344 6618)***	.....	2	316 4374	
62-63 01 (RHD)	.....	2	316 4783	
64-65 01 (LHD)	.....	2	350 0854	
64-65 01 (RHD)	.....	2	317 0961	
(Amber) ***64-65 01 (RHD)***	.....	2	317 5686	
(Amber-Inner) ***64 10-80 (LHD-Export)***	.....	2	317 5683	
(Amber-Inner) ***65 10 (LHD-Export)***	.....	2	317 9933	
(Amber-Outer) ***64 10-80 (LHD-Export)***	.....	2	317 5682	
(Amber-Outer) ***65 10 (LHD-Export)***	.....	2	317 9934	
(Amber-Lower) ***65 80 (LHD-Export)***	.....	2	317 5682	
(Amber-Upper) ***65 80 (LHD-Export)***	.....	2	317 5683	
(Single Headlamp) 60 10-20 (LHD)	.....	2	315 8693	
(Single Headlamp) ***60 10 (RHD)***	.....	2	315 4095	
(Dual Headlamp-Left) 60 10-20-80 (LHD)	.....	1	315 5443	
(Dual Headlamp-Left) ***60 10-80 (RHD)***	.....	1	315 4579	
(Dual Headlamp-Right) 60 10-20-80 (LHD)	.....	1	315 5444	
(Dual Headlamp-Right) ***60 10-80 (RHD)***	.....	1	315 4580	
(Inner) 61 10-20: 62 10-80	.....	2	344 8371	
(Inner) 63-64 10-80	.....	2	348 2640	
(Inner) 65 10	.....	2	351 5944	
(Inner-Left) 61 80	.....	1	344 8375	
(Inner-Right) 61 80	.....	1	344 8374	
(Outer) ***61 10 (RHD): 62 10-80 (RHD)***	.....	2	316 1276	
(Outer) 61 10-20 (LHD): 62 10-80 (LHD) ***(Replaces 316 1280)***	.....	2	344 8370	
(Outer) 63-64 10-80 (LHD)	.....	2	348 2642	
(Outer) ***63-64 10-80 (RHD): 65 80 (RHD)***	.....	2	316 6526	
(Outer) 65 10 (LHD)	.....	2	351 5946	
(Outer) ***65 10 (RHD)***	.....	2	317 5879	
(Outer-Left) 61 80 (LHD)	.....	1	344 8373	
(Outer-Left) ***61 80 (RHD)***	.....	1	316 1277	
(Outer-Right) 61 80 (LHD)	.....	1	344 8372	
(Outer-Right) ***61 80 (RHD)***	.....	1	316 1278	
(Lower) 65 80	.....	2	348 2640	
(Upper) 65 80	.....	2	348 2642	

NOTE 3.245-1: Three Types of Headlamps were used on the 60 Thru 63 10-20-80 Series. They can be identified as follows:

Type 1: Part can be identified by the name Great Lakes stamped in body.
Type 2: Part can be identified by the name Hall Lamp stamped in body.
Type 3: Part can be identified by the name Auto-Lite stamped in body.

Copyright 1963 American Motors Corp.

GROUP NO. — DESCRIPTION — YEAR and MODEL	PRIMARY GROUP NO.	PER CAR	PART NO.	CODE
ATTACHING PARTS				
Headlamp To Fender				
SCREW, Tapping..... 60 01 (10 Req.): 60 10-20-80 (10 Req.-Single Headlamp)(8 Req. Dual Headlamp).....	17.666	AR	G161651	NA
SCREW, Tapping..... 61 Thru 63 01-10-20-80..... ***(Replaces 800 0095)***	17.671	12	G456766	
SCREW, Tapping..... 64-65 01 (8 Req.): 64-65 10-80 (12 Req. -10-12 x 5/8)	.....	AR	400 0478	
SCREW, Tapping..... 65 10 (12-11 x 1/2).....	17.671	12	400 1042	
NUT, Spring..... 60 01	.....	10	312 3436	
NUT, Spring ..... 60 10-20-80 (10 Req.-Single Headlamp)(8 Req.-Dual Headlamp): 61-62 10-20-80 (12 Req.)	.....	AR	310 2850	
Headlamp To Mounting Plate				
SCREW, Tapping..... 64 10.....	17.671	12	400 1031	
Adapter To Fender (Single Headlamp)				
60 10-20.....	.....	1	342 1794	
ATTACHING PARTS				
Adapter To Fender				
SCREW, Tapping..... 60 10-20-80 .....***(Replaces 800 0095)***	17.671	8	G456766	
WASHER, Plain..... 60 10-20-80.....	17.814	8	G120391	NA
NUT, Spring..... 60 10-20-80.....	.....	8	310 2850	
PANEL, Headlamp Mounting				
(Left) 64 10-80	.....	1	350 9273	
(Left) 65 10	12.075	1	351 5719	
(Right) 64 10-80	.....	1	350 9272	
(Right) 65 10	12.075	1	351 5718	
ATTACHING PARTS				
Headlamp Mounting Panel To Grille Panel				
SCREW, Hexagon..... 64 10-80	12.075	4	400 0424	
3.248 BODY, Headlamp				
60 01	.....	2	320 0895	
61 Thru 63 01.....	.....	2	320 2471	
64 01	.....	2	320 5363	
61-62 10-20: 61 80 (Note 3.245-1 Type 1): 62 80.....***(Replaces 320 2711, 320 2759)***	.....	4	320 2702	
61 80 (Note 3.245-1 Type 2).....	.....	4	320 2765	
63-64 10-80 (Note 3.245-1 Type 1): 65 80 (Note 3.245-1 Type 1)	.....	4	320 4074	
63-64 10-80 (Note 3.245-1 Type 2): 65 80 (Note 3.245-1 Type 2)	.....	4	320 4306	
65 10.....	.....	2	320 5610	
(Single Headlamp) 60 10-20.....	.....	2	311 8663	
(Dual Headlamp) 60 10 (Note 3.245-1 Type 1): 60 20-80	.....	2	320 0997	
(Dual Headlamp) 60 10 (Note 3.245-1 Type 2).....	.....	2	320 1147	
BRACKET, Body To Door				
61 10-20 (Note 3.245-1 Type 1): 62 10-80 (Note 3.245-1 Type 1).....	.....	12	320 2757	
61 80 (Note 3.245-1 Type 1).....	.....	12	320 2764	
3.252 DOOR, Headlamp				
60 01	.....	2	313 6399	
61 Thru 63 01.....	.....	2	344 6617	
64 01	.....	2	350 0852	

Copyright 1963 American Motors Corp.

GROUP NO. — DESCRIPTION — YEAR and MODEL	PRIMARY GROUP NO.	PER CAR	PART NO.	CODE
65 01	.....	2	352 3402	
64 10-80	.....	2	350 1270	
(Single Headlamp) 60 10-20	.....	2	343 0574	
(Dual Headlamp) 60 10-20-80	.....	2	343 0573	
(Left) 63 10-80	.....	2	348 2157	
(Left) 61 80	.....	1	344 7747	
(Left) 65 80	.....	1	351 7403	
(Left-Inner) 61-62 10-20: 62 80 ***(Replaces 346 0313)***	.....	1	316 4785	
(Left-Inner) 65 10	.....	1	351 5953	
(Left-Outer) 61-62 10-20: 62 80 ***(Replaces 344 7697)***	.....	1	316 4787	
(Left-Outer) 65 10	.....	1	351 5951	
(Right) 63 10-80	.....	2	348 2156	
(Right) 61 80	.....	1	344 7746	
(Right) 65 80	.....	1	351 7402	
(Right-Inner) 61-62 10-20: 62 80 ***(Replaces 346 0312)***	7.240	1	316 4786	
(Right-Inner) 65 10	.....	1	351 5952	
(Right-Outer) 61-62 10-20: 62 80 ***(Replaces 344 7696)***	.....	1	316 4788	
(Right-Outer) 65 10	.....	1	351 5950	

ATTACHING PARTS

Headlamp Door To Fender

SCREW, Tapping	60 01	17.654	2	G162459	NA
SCREW, Tapping	61 Thru 63 01	.....	2	315 9440	
SCREW, Tapping	64 01 (1 Req.): 63 10-80 (2 Req.)	.....	AR	400 0264	
SCREW, Tapping	65 01	.....	6	400 1709	#
SCREW, Tapping	60 10-20: 60-61 80 (Chromium Finish)	17.654	8	G162474	NA
SCREW, Tapping	61-62 10: 61 20: (5/8" Long): 62 80	.....	12	400 0223	
SCREW, Tapping	65 10	26.077	12	400 0073	
SCREW, Tapping	61 20-80 (Plain Finish-3/4" Long)	17.655	8	G188954	NA
SCREW, Tapping	65 80 (Upper)	.....	4	400 1332	
SCREW, Tapping	65 80 (Lower)	27.005	4	400 1407	
SCREW, Oval	64 01-10-80	.....	8	400 0747	
SCREW, Round	64 01 (2 Req.): 64 10-80 (8 Req.)	2.050	8	400 0190	
NUT, Spring	60 01	.....	2	313 1501	
NUT, Spring	60 10-20-80	3.245	8	310 2850	
NUT, Spring	64 10-80	17.424	8	G445388	
NUT, Spring	61 20-80	17.424	8	G446764	NA
NUT, Speed	64-65 01 (6 Req.): 63 10-80 (2 Req.)	2.050	AR	345 8271	
NUT, Speed	65 80	3.505	4	400 0895	
NUT, Plastic	64 10-80: 65 80	14.108	8	400 0141	

GASKET, Headlamp Door

65 80	.....	2	356 1764	

3.265 SHELL ASSEMBLY, Headlamp (Incl. Shells, Adjusting Screws, Retaining Rings And Retaining Ring Screws)

60 01	.....	2	320 0899	
61 Thru 63 01	.....	2	320 2476	
64 01	.....	2	320 5366	
(Single Headlamp) 60 10-20	.....	2	311 8676	
(Dual Headlamp-Left) 60 10 (Note 3.245-1 Type 1): 60 20-80	.....	1	320 1008	
(Dual Headlamp-Left) 60 10 (Note 3.245-1 Type 2)	.....	1	320 1157	
(Dual Headlamp-Right) 60 10 (Note 3.245-1 Type 1): 60 20-80	.....	1	320 1046	
(Dual Headlamp-Right) 60 10 (Note 3.245-1 Type 2)	.....	1	320 1158	
(Left-Inner) 61 Thru 64 10-20-80 (Note 3.245-1 Type 2): 61-62 10-20-80 (Note 3.245-1 Type 3): 65 10 ***(Replaces 320 2715)***	.....	1	320 2708	
(Left-Inner) 63-64 10-80 (Note 3.245-1 Type 1)	.....	1	320 4117	
(Left-Outer) 61 Thru 64 10-20-80 (Note 3.245-1 Type 2): 65 10	.....	1	320 2705	
(Left-Outer) 61-62 10-20-80 (Note 3.245-1 Type 3)	.....	1	320 2714	
(Left-Outer) 63-64 10-80 (Note 3.245-1 Type 1)	.....	1	320 4118	
(Left-Inner And Outer) 61-62 10-20-80 (Note 3.245-1 Type 1)	.....	1	320 2763	
(Left-Inner And Outer) 61 80 (Note 3.245-1 Type 2)	.....	1	320 2769	
(Right-Inner) 61 Thru 64 10-20-80 (Note 3.245-1 Type 2): 61-62 10-80 (Note 3.245-1 Type 3): 65 10	.....	1	320 2708	

Copyright 1963 American Motors Corp.

GROUP NO. — DESCRIPTION — YEAR and MODEL	PRIMARY GROUP NO.	PER CAR	PART NO.	CODE
(Right-Inner) 63-64 10-80 (Note 3.245-1 Type 1)	.....	1	320 4117	
(Right-Outer) 61 Thru 64 10-20-80 (Note 3.245-1 Type 2): 65 10	.....	1	320 2705	
(Right-Outer) 61-62 10-20-80 (Note 3.245-1 Type 3)	.....	1	320 2714	
(Right-Outer) 63-64 10-80 (Note 3.245-1 Type 1)	.....	1	320 4118	
(Right-Inner And Outer) 61 80 (Note 3.245-1 Type 2)	.....	1	320 2768	
(Right-Inner And Outer) 61-62 10-20-80 (Note 3.245-1 Type 1)	.....	1	320 2762	
(Left-Lower) 65 80 (Note 3.245-1 Type 1)	.....	1	320 4117	
(Left-Lower) 65 80 (Note 3.245-1 Type 2)	.....	1	320 2708	
(Left-Upper) 65 80 (Note 3.245-1 Type 1)	.....	1	320 4118	
(Left-Upper) 65 80 (Note 3.245-1 Type 2)	.....	1	320 2705	
(Right-Lower) 65 80 (Note 3.245-1 Type 1)	.....	1	320 4117	
(Right-Lower) 65 80 (Note 3.245-1 Type 2)	.....	1	320 2708	
(Right-Upper) 65 80 (Note 3.245-1 Type 1)	.....	1	320 4118	
(Right-Upper) 65 80 (Note 3.245-1 Type 2)	.....	1	320 2705	
(Right-Inner) 63-64 10-80 (Note 3.245-1 Type 1)	....	1	320 4117	
(Right-Outer) 61 Thru 64 10-20-80 (Note 3.245-1 Type 2): 65 10	.....	1	320 2705	
(Right-Outer) 61-62 10-20-80 (Note 3.245-1 Type 3)	.....	1	320 2714	
(Right-Outer) 63-64 10-80 (Note 3.245-1 Type 1)	.....	1	320 4118	
(Right-Inner And Outer) 61 80 (Note 3.245-1 Type 2)	.....	1	320 2768	
(Right-Inner And Outer) 61-62 10-20-80 (Note 3.245-1 Type 1)	.....	1	320 2762	
3.268 SCREW, Headlamp Adjusting				
60 Thru 64 01 (4 Req.): 60 10-20 (4 Req.-Single Headlamp): 61 Thru 65 10-20-80 (8 Req.-Note 3.245-1 Type 2): 61-62 10-20 (8 Req.-Note 3.245-1 Type 3): 62 80 (8 Req.-Note 3.245-1 Type 3)	.....	AR	311 8667	
60 10-20-80 (Dual Headlamp)	.....	8	320 0156	
61 Thru 64 10-20-80 (Note 3.245-1 Type 1): 65 80 (Note 3.245-1 Type 1)	.....	8	320 2758	
BRACKET, Headlamp Adjusting Screw				
61 Thru 65 10-20-80 (Note 3.245-1 Type 1)	.....	8	320 2760	
NUT, Headlamp Adjusting Screw				
60 Thru 63 01: 60 10-20 (Single Headlamp)	.....	4	311 8664	
60 10-20-80 (Dual Headlamp)	.....	8	320 0164	
3.272 SPRING, Headlamp Adjusting				
60 01: 60 10-20 (Single Headlamp)	.....	2	311 6420	
61 Thru 63 01	.....	2	320 2477	
64 01	.....	2	320 5364	
60 10 (Dual Headlamp-Note 3.245-1 Type 1): 60 20-80	.....	4	320 1001	
60 10 (Dual Headlamp-Note 3.245-1 Type 2)	.....	4	320 1155	
61 Thru 65 10-20-80 (Note 3.245-1 Type 1)	.....	4	320 2756	
61 Thru 65 10-20-80 (Note 3.245-1 Type 2)	.....	4	320 2703	
61 10-20 (Note 3.245-1 Type 3)	.....	4	320 2713	
3.275 RING, Headlamp Bulb Retaining				
60 01	.....	2	320 0898	
61 Thru 63 01	.....	2	320 2474	
64-65 01	.....	2	320 5361	#
60 10-20 (Single Headlamp) ***(Replaces 311 8668)***	.....	2	320 0898	
60 10 (Dual Headlamp-Note 3.245-1 Type 1): 61 Thru 65 10-20-80 (Note 3.245-1 Type 1): 60 20-80 ***(Replaces 320 1000)***	.....	4	320 2716	
60 10 (Dual Headlamp-Note 3.245-1 Type 2)	.....	4	320 1156	
61 Thru 65 10-20-80 (Note 3.245-1 Type 2): 61 10-20 (Note 3.245-1 Type 3): 62 10-80 (Note 3.245-1 Type 3) ***(Replaces 320 2712)***	.....	4	320 2704	
SCREW, Headlamp Bulb Retaining Ring				
60 Thru 64 01: 60 10-20 (6 Req.-Single Headlamp) (12 Req.-Dual Headlamp): 61 Thru 65 10-80 (12 Req.-Note 3.245-1 Types 2 And 3)	.....	AR	320 0748	
61 Thru 65 10-20-80 (Note 3.245-1 Type 1)	.....	12	320 2761	

Copyright 1963 American Motors Corp.

GROUP NO. — DESCRIPTION — YEAR and MODEL	PRIMARY GROUP NO.	PER CAR	PART NO.	CODE
3.280 BULB, Headlamp				
(GE 4001) 60 Thru 65 10-20-80 (High Beam-Dual Headlamp)	3.215	2	320 0160	
(GE 4001-A)(Amber)(High Beam-Dual Headlamp) ***64-65 10-80 (LHD-Export)***	3.215	2	320 6877	
(GE 4002) 60 Thru 65 10-20-80 (LHD-High And Low Beam-Dual Headlamp)	3.215	2	320 0159	
(GE-4002-A)(Amber)(High And Low Beam-Dual Headlamp) ***64-65 10-80 (LHD-Export)***	3.215	2	320 6878	
(GE 4003) ***60 Thru 65 10-20-80 (RHD-High And Low Beam-Dual Headlamp)***	3.315	2	320 0414	
(GE 5402) ***61 Thru 65 01 (RHD-Single Headlamp): 60 Thru 63 10 (RHD-Single Headlamp)....(Replaces 311 9716)***	3.215	2	320 4788	
(GE 6012) 60 Thru 65 01 (LHD): 60 10-20 (LHD-Single Headlamp)	3.215	2	320 2092	
(GE 6012-A) ***64-65 01 (RHD- Amber Single Headlamp)***	3.215	2	320 5966	
3.288 WIRE, Headlamp				
61 01	.....	2	320 2473	
62-63 01	.....	2	320 3521	
61-62 10: 61 20: 62 80	.....	2	316 1273	
(Left) 60 01	.....	1	320 0896	
(Left) 60 10-20 (Single Headlamp)	.....	1	320 0746	
(Left) 60 10 (Dual Headlamp-Note 3.245-1 Type 1): 60 20-80	.....	1	320 0998	
(Left) 60 10 (Dual Headlamp-Note 3.245-1 Type 2)	.....	1	320 1148	
(Left) 61 80	.....	1	316 1470	
(Right) 60 01	.....	1	320 0897	
(Right) 60 10-20 (Single Headlamp)	.....	1	320 0747	
(Right) 60 10 (Dual Headlamp-Note 3.245-1 Type 1): 60 20-80	.....	1	320 0999	
(Right) 60 10 (Dual Headlamp-Note 3.245-1 Type 2)	.....	1	320 1149	
(Right) 61 80	.....	1	316 1471	
ATTACHING PARTS Headlamp Wire To Ground Stud				
WASHER, Lock ..... 61-62 10 (1/2" O.D.): 61 20 (1/2" O.D.): 62 80 (1/2" O.D.)	17.820	2	G120380	NA
WASHER, Lock ..... 61-62 10 (11/16" O.D.): 61 20 (11/16" O.D.): 62 80 (11/16" O.D.)	17.826	2	G454763	NA
NUT, Hexagon 61-62 10: 61 20: 62 80	17.406	2	G120375	NA
EYELET, Headlamp Wire Ground				
60 10-20-80	.....	2	320 1150	
CLIP, Headlamp Wire To Radiator Support Crossmember				
60 01	4.160	2	314 2844	
61 01	3.615	1	310 8634	
CLIP, Headlamp Wire (Wrap-A-Round)				
61 01	3.210	2	63 045	
3.292 BODY ASSEMBLY, Parking And Front Directional Signal Lamp (Incl. Studs, Socket And Wire)				
60 01 (LHE)	.....	2	320 0926	
(Left) 60 01 (OHV)	.....	1	320 0926	
(Right) 60 01 (OHV)	.....	1	320 2196	
ATTACHING PARTS Body Assembly To Fender				
WASHER, Lock 60 01	17.820	4	G131096	NA
WASHER, Plain ..... 60 01 ***(Replaces 800 0139)***	23.039	4	400 0481	
NUT, Stamped 60 01	17.428	4	G440491	NA

NOTE 3.292-1: Two Types of Wires were used on the 60 10-20-80 Series. They can be identified as follows:
Type 1: Socket is a Peened over type.
Type 2: Socket is a Push-In type.

Copyright 1963 American Motors Corp.

GROUP NO. — DESCRIPTION — YEAR and MODEL		PRIMARY GROUP NO.	PER CAR	PART NO.	CODE
HOUSING ASSEMBLY, Parking And Front Directional Signal Lamp					
64-65 01: 63 Thru 65 10-80...(Incl. Socket, Wire And Lens Gasket)		.....	2	320 4244	
62 10-80...(Incl. Socket And Wire)		.....	2	320 3072	
(Left) 61 01...(Incl. Studs, Socket And Wire)		.....	1	315 9572	
(Left) 62-63 01...(Incl. Studs, Socket And Wire)		.....	1	316 4404	
(Left) 60 10-20-80...(Incl. Studs, Socket And Wire)		.....	1	344 3845	
(Left) 61 10-20-80...(Incl. Studs, Socket And Wire)		.....	1	316 0533	
(Right) 61 01...(Incl. Studs, Socket And Wire)	***(Use 316 4405)***	.....	1	315 9573	
(Right) 62-63 01...(Incl. Studs, Socket And Wire)		.....	1	316 4405	
(Right) 60 10-20-80...(Incl. Studs, Socket And Wire)		.....	1	344 3844	
(Right) 61 10-20-80...(Incl. Studs, Socket And Wire)		.....	1	316 0534	
ATTACHING PARTS Housing Assembly To Air Intake Panel					
STUD	61 Thru 63 01: 60-61 10-20-80	2.050	4	313 4266	
SCREW, Tapping	62 10-80 ***(Replaces 400 0112)***	.....	4	400 0260	
NUT, Hexagon	61 01: 60-61 10-20-80	17.406	4	G120375	
NUT, Stamped	62-63 01	17.428	4	G440491	NA
NUT, Speed	64-65 01: 62 10-80	.....	4	400 0113	
LENS KIT, Parking And Front Directional Signal Lamp (Incl. Lens, Lens Gasket and Attaching Parts)					
64-65 01: 63 Thru 65 10-80	***(Replaces 348 2646)***	.....	2	320 5332	#
62 10-80	***(Replaces 320 3074)***	.....	2	320 5333	
(Left) 61-62 01: 60-61 10-20-80	***(Replaces 344 3847)***	.....	1	320 5337	
(Left) 63 01	***(Replaces 316 6478)***	.....	1	320 5335	
(Right) 61-62 01: 60-61 10-20-80	***(Replaces 344 3846)***	.....	1	320 5336	
(Right) 63 01	***(Replaces 316 6479)***	.....	1	320 5334	
LENS, Parking And Front Directional Signal Lamp					
60 01		.....	2	312 8952	
ATTACHING PARTS Lens To Housing					
SCREW, Machine	61 Thru 63 01: 60-61 10-20-80	.....	6	344 3839	
SCREW, Machine	64-65 01: 63 Thru 65 10-80 ***(Use 320 4705)***	.....	4	320 4248	
SCREW, Tapping	62 10-80	17.666	4	G161651	NA
WIRE, Parking And Front Directional Signal Lamp (Incl. Socket)(Less Bulb)					
61 Thru 63 01	***(Replaces 315 9567)***	.....	2	316 4375	
64-65 01: 63 Thru 65 10-80		.....	2	320 4245	
61 10-20-80		.....	2	316 0535	
62 10-80		.....	2	320 3073	
(Left) 60 10-20-80 (Note 3.292-1 Type 1)		.....	1	344 3829	
(Left) 60 10-20-80 (Note 3.292-1 Type 2)		.....	1	320 2948	
(Right) 60 10-20-80 (Note 3.292-1 Type 1)		.....	1	344 3828	
(Right) 60 10-20-80 (Note 3.292-1 Type 2)		.....	1	320 2947	
RING, Parking And Front Directional Signal Lamp Lens Retainer					
60 01		.....	2	311 4028	
GASKET, Parking And Front Directional Signal Lamp Lens					
60 01		.....	2	311 4027	
61 Thru 63 01: 60-61 10-20-80		.....	2	344 3849	
64-65 01: 63 Thru 65 10-80		.....	2	320 4246	
62 10-80		.....	2	320 3075	
GASKET, Parking And Front Directional Signal Lamp To Fender					
60 01		.....	2	313 2916	

Copyright 1963 American Motors Corp.

GROUP NO. — DESCRIPTION — YEAR and MODEL	PRIMARY GROUP NO.	PER CAR	PART NO.	CODE
SHIELD, Parking And Front Directional Signal Lamp				
61 Thru 63 01	.....	2	346 0686	
BULB, Parking And Front Directional Signal Lamp				
(Clear) 60 Thru 65 01-10-20-80	3.215	2	G454645	
(Amber) 60 Thru 62 01-10-20-80	3.215	2	G9418772	
GROMMET, Parking And Front Directional Signal Lamp Wire (In Baffle)				
60 Thru 65 10-20-80	3.288	2	55 350	
BRACKET, Parking And Front Directional Signal Lamp To Bumper Rail				
64 01: 63-64 10-80	.....	2	348 2639	
65 01-10-80	.....	2	351 7228	
ATTACHING PARTS Bracket To Bumper Rail				
NUT, Speed 64 01	.....	8	400 0113	
NUT, Speed 63 10-80	.....	4	400 0152	
EYELET, Parking And Front Directional Signal Lamp Lens				
64-65 01: 63 Thru 65 10-80	.....	4	320 4247	
CLIP, Parking And Front Directional Signal Lamp Wire				
61-62 01 (Wrap-A-Round)	3.210	2	63 045	
61 Thru 63 01 (Snap-On)	3.615	1	310 8634	
60 10-20-80	3.163	1	99 478	
65 10-80	3.166	2	400 0713	
3.303 BODY, Tail, Stop And Rear Directional Signal Lamp (Less Socket And Wire)				
64 02-05-06-07-09	.....	2	350 0844	
60-61 10-20	.....	2	344 3431	
60 80	.....	2	344 3441	
61 80 ..... *(Replaces 345 8140)*	.....	2	320 2980	
(Left) 62 10	.....	1	346 2653	
(Left) 62 80 ...(Incl. Reflector)	.....	1	320 3607	
(Right) 62 10	.....	1	346 2652	
(Right) 62 80...(Incl. Reflector)	.....	1	320 3606	
BODY ASSEMBLY, Tail, Stop And Rear Directional Signal Lamp (Incl. Socket And Wire)				
60 01	.....	2	343 6124	
61 Thru 63 01	.....	2	344 6851	
ATTACHING PARTS Body, Tail, Stop And Rear Directional Signal Lamp To Fender				
SCREW, Machine..... 60-61 10-20-80	17.616	6	G442435	NA
SCREW, Tapping..... 60 01	17.670	6	G172431	NA
SCREW, Tapping..... 61-62 01 (1/4-20)	17.680	4	G168005	NA

NOTE 3.303-1: Two Types of Reflectors were used on the 60 01 Series Tail Lamps. They can be identified as follows:
Type 1: Reflector is 7/8" in diameter.
Type 2: Reflector is 1" in diameter.

Copyright 1963 American Motors Corp.

GROUP NO. — DESCRIPTION — YEAR and MODEL		PRIMARY GROUP NO.	PER CAR	PART NO.	CODE
SCREW, Tapping.....	62-63 01 (#10-12) ..... ***(Replaces 400 0112)***	3.292	4	400 0260	
SCREW, Tapping.....	62 10 (1" Long).....	17.648	4	G161447	NA
SCREW, Tapping.....	62 10 (2-1/4" Long).....	.....	2	400 0402	
SCREW, Tapping.....	62 80.....	27.140	2	400 0455	
WASHER, Lock.....	61 10-20-80.....	17.820	6	G120380	NA
NUT, Speed.....	62 Thru 64 01.....	3.292	4	400 0113	
NUT, Speed.....	62 10.....	.....	6	400 0421	
HOUSING ASSEMBLY, Tail, Stop And Rear Directional Signal Lamp (Incl. Socket)					
65 85-86-87-89...(Incl. Lens Gasket).....		.....	2	351 6234	
65 88 ...(Incl. Lens Gasket) ..... ***(Use 354 3519)***		.....	2	320 5634	#
(Left) 64 08...(Incl. Lens Gasket) ..... ***(Replaces 320 0849)***		.....	1	320 5121	
(Left) 65 05-06-07-09...(Incl. Lens Gasket).....		.....	1	351 7183	
(Left) 65 08...(Incl. Lens Gasket).....		.....	1	351 7173	
(Left) 63 15-16-85-86...(Incl. Lens Gasket) ..... ***(Replaces 348 2805)***		.....	1	348 2807	
(Left) 63 18-88...(Incl. Lens Gasket).....		.....	1	320 4243	
(Left) 64 15-16-19-85-89...(Incl. Lens Gasket).....		.....	1	320 5123	
(Left) 64 18-88...(Incl. Lens Gasket).....		.....	1	320 5117	
(Left) 65 15-16-17-19 (Except Marlin)...(Incl. Lens Gasket)		.....	1	351 6225	
(Left) 65 18...(Incl. Lens Gasket).....		.....	1	320 5637	
(Left) 65 59 (Marlin)		.....	1	351 7497	
(Right) 64 08...(Incl. Lens Gasket) ..... ***(Replaces 350 0848)***		.....	1	320 5120	
(Right) 65 05-06-07-09...(Incl. Lens Gasket).....		.....	1	351 7182	
(Right) 65 08...(Incl. Lens Gasket).....		.....	1	351 7172	
(Right) 63 15-16-85-86...(Incl. Lens Gasket) ..... ***(Replaces 348 2804)***		.....	1	348 2806	
(Right) 63 18-88...(Incl. Lens Gasket).....		.....	1	320 4242	
(Right) 64 15-16-19-85-89...(Incl. Lens Gasket).....		.....	1	320 5122	
(Right) 64 18-88...(Incl. Lens Gasket).....		.....	1	320 5116	
(Right) 65 15-16-17-19 (Except Marlin)...(Incl. Lens Gasket)		.....	1	351 6224	
(Right) 65 18...(Incl. Lens Gasket).....		.....	1	320 5636	
(Right) 65 59 (Marlin)		.....	1	351 7496	
ATTACHING PARTS					
Housing Assembly, Tail, Stop And Rear Directional Signal Lamp To Fender					
STUD.....	63 15-16-85-86: 64 15-16-19-85-89.....	.....	4	400 0526	
STUD.....	65 15-16-17-19.....	.....	6	400 1337	
STUD.....	65 85-86-87-89	17.718	4	G103175	
SCREW, Tapping.....	64 08	.....	4	400 0733	
SCREW, Tapping.....	65 08	3.306	4	400 1330	
SCREW, Tapping.....	63 18-88	17.648	4	G161503	NA
SCREW, Tapping.....	64 18-88	17.648	4	G161511	NA
SCREW, Tapping.....	65 10 (10-24 x 1/2).....	26.077	4	400 0516	
SCREW	65 15-16-17-19 (10-24 x 9/16).....	17.670	4	400 1482	
SCREW, Tapping.....	65 18 (10-12 x 1-1/4).....	17.592	6	G162484	NA
SCREW, Tapping.....	65 18 (10-12 x 1-1/2).....	17.654	6	G162487	NA
SCREW, Tapping.....	65 88.....	17.660	2	G161860	NA
SCREW, Machine.....	65 88.....	.....	4	400 1342	
NUT, Acorn	65 59 (Marlin).....	.....	4	400 1632	
NUT, Hexagon.....	63 15-16-85-86..... ***(Replaces 400 0508)***	17.412	4	G271172	NA
NUT, Hexagon.....	64 15-16-19.....	17.412	4	G271172	
NUT, Hexagon.....	65 59 (Marlin).....	26.039	8	400 0517	
NUT, Hexagon.....	65 85-86-87-89.....	.....	4	400 1457	
NUT, Lock.....	65 15-16-17-19 (Except Marlin)	25.052	2	439 0742	
NUT, Speed.....	65 01 ("J" Shaped).....	3.292	8	400 0113	
NUT, Speed.....	63-64 18-88 ..... ***(Replaces 400 0148)***	17.426	4	G447026	
NUT, Speed.....	65 18.....	23.110	4	400 0196	
NUT, Speed.....	65 88.....	.....	4	400 1341	
NUT, Spring.....	65 08 ("U" Shaped)	17.426	2	G445446	
BEZEL ASSEMBLY, Tail, Stop And Rear Directional Signal Lamp					
60 80...(Incl. Reflector).....		.....	2	344 3853	
64 85-89.....		.....	2	350 1268	

Copyright 1963 American Motors Corp.

GROUP NO. — DESCRIPTION — YEAR and MODEL	PRIMARY GROUP NO.	PER CAR	PART NO.	CODE
64 88	.....	2	350 9090	
(Left) 65 59 (Marlin)	.....	1	353 0553	
(Right) 65 59 (Marlin)	.....	1	353 0552	
ATTACHING PARTS Bezel To Tail, Stop And Rear Directional Signal Lamp Body				
SCREW, Machine..... 60 80	.....	4	344 3447	
REFLECTOR, Tail, Stop And Rear Directional Signal Lamp				
60 01 (Note 3.303-1 Type 1)	.....	2	313 2809	
60 01 (Note 3.303-1 Type 2): 60 10-20-80 ..... *(Replaces 320 2642)*	.....	2	344 3855	
62 80	.....	2	320 3608	
RETAINER, Tail, Stop And Rear Directional Signal Lamp Reflector				
60 01 (Note 3.303-1 Type 1)	.....	1	313 2810	
60 01 (Note 3.303-1 Type 2)	.....	1	320 2641	
60 10-20-80	.....	2	344 3856	
62 80	.....	2	320 3609	
GASKET, Tail, Stop And Rear Directional Signal Lamp Bezel Assembly (Under Reflector)				
60 80	.....	2	344 3857	
GASKET, Tail, Stop And Rear Directional Signal Lamp Plate To Fender (On Lamp)				
61 80	3.305	2	345 8803	
SHIELD, Tail, Stop And Rear Directional Signal Lamp Body Splash (Under Lamp Body)				
61 80	.....	2	346 3697	
SUPPORT, Tail, Stop And Rear Directional Signal Lamp Body Shield				
61 80	.....	2	346 3698	
ATTACHING PARTS Shield And Support To Fender				
SCREW, Tapping..... 61 80	17.669	4	800 0272	
WASHER, Plain..... 61 80	17.814	2	G446188	NA
REINFORCEMENT, Tail, Stop And Rear Directional Signal Lamp Inner				
65 10	.....	2	354 3962	
ATTACHING PARTS Reinforcement To Lamp				
NUT, Speed..... 65 18	.....	2	400 1474	
3.305 GASKET, Tail, Stop And Rear Directional Signal Lamp To Fender				
61-62 01	.....	2	344 6860	
64 02-05-06-07-09	.....	2	352 2723	
65 05-06-07-09 ..... *(Replaces 351 7009)*	.....	1	351 7008	
65 08	.....	2	351 7176	
60 10-20-80 ..... *(Replaces 344 3434)*	3.303	2	344 0538	
62 10	.....	2	347 6781	
65 15-16-17-19 (Except Marlin)	.....	2	351 6216	
65 18	.....	2	351 6252	
65 80	.....	2	351 6243	
(Inner) 60 01	.....	2	313 1278	
(Outer) 60 01	.....	2	313 1276	
(Upper) 61 80	.....	2	345 8581	
(Lower) 61 80	.....	2	345 8592	
(Left) 64 08	.....	1	352 2725	
(Left) 64 15-16-19-85-86-89	.....	1	352 7269	
(Left) 64 18-88	.....	1	352 7271	

Copyright 1963 American Motors Corp.

GROUP NO. — DESCRIPTION — YEAR and MODEL	PRIMARY GROUP NO.	PER CAR	PART NO.	CODE
(Left) 65 59 (Marlin)	.....	1	356 2163	
(Left) 62 80	.....	1	348 7391	
(Right) 64 08	.....	1	352 2724	
(Right) 64 15-16-19-85-86-89	.....	1	352 7268	
(Right) 64 18-88	.....	1	352 7270	
(Right) 65 59 (Marlin)	.....	1	356 2162	
(Right) 62 80	.....	1	348 7390	

GASKET, Tail, Stop And Rear Directional Signal Lamp Lens

60 01	.....	2	342 5837	
61 Thru 63 01	.....	2	344 6856	
64 02-05-06-07-09	.....	2	350 9092	
65 05-06-07-09	.....	2	351 7006	
60-61 10-20 ***(Replaces 344 3435)***	.....	2	346 5424	
62 10	.....	2	346 2666	
64 15-16-19-85-89	.....	2	350 1269	
64 18-88	.....	2	350 1202	
65 15-16-17-19 (Except Marlin) ***(Replaces 351 6228)***	.....	2	351 6229	
65 18 ***(Replaces 351 6320)***	.....	2	351 6321	
60 80	.....	2	344 3443	
62 80	.....	2	347 1112	
65 80	.....	2	351 6238	
(Left) 64 08	.....	1	350 9095	
(Left) 65 08	.....	1	351 7175	
(Left) 63 15-16-85-86	.....	1	349 2609	
(Left) 63 18-88	.....	1	349 2611	
(Right) 64 08	.....	1	350 9094	
(Left) 65 59 (Marlin)	.....	1	351 7467	
(Right) 65 08	.....	1	351 7174	
(Right) 63 15-16-85-86	.....	1	349 2608	
(Right) 63 18-88	.....	1	349 2610	
(Right) 65 59 (Marlin)	.....	1	351 7466	

3.306 LENS KIT, Tail Stop And Rear Directional Signal Lamp (Incl. Lens, Lens Gasket And Attaching Parts)

61 Thru 63 01 ***(Replaces 344 6853)***	.....	2	320 5352	
64 15-16-19-85-89 ***(Replaces 350 1258)***	.....	2	320 5339	
65 15-16-17-19 (Except Marlin)...(Incl. Lens Gasket & Attaching Parts) ***(Replaces 448 2344)***	.....	2	448 2345	
65 18...(Incl. Lens Gasket & Attaching Parts) ***(Replaces 448 2342)***	.....	2	448 2343	#
65 80...(Incl. Inner And Outer Lens, Lens Gasket And Attaching Parts) ***(Replaces 448 2857)***	.....	2	448 2341	#
(Left) 64 08 ***(Replaces 350 5909)***	.....	1	320 5341	
(Left) 65 05-06-07-09...(Incl. Lens Gasket & Attaching Parts)	.....	1	448 2349	
(Left) 65 08...(Incl. Lens Gasket & Attaching Parts)	.....	1	448 2351	
(Left) 62 10...(Incl. Reflector) ***(Replaces 346 2657)***	.....	1	320 5355	
(Left) 63 15-16...(Incl. Reflector) ***(Replaces 348 2793)***	.....	1	320 5345	
(Left) 63 18...(Incl. Reflector) ***(Replaces 348 2797)***	.....	1	320 5347	
(Left) 64 18-88 ***(Replaces 350 9439)***	.....	1	320 5343	
(Left) 65 50 (Marlin)...(Incl. Lens Gasket, Grille & Attaching Parts)	.....	1	448 2859	
(Left) 62 80 ***(Replaces 347 1115)***	.....	1	320 5357	
(Left) 63 85-86...(Incl. Reflector) ***(Replaces 348 2795)***	.....	1	320 5349	
(Left) 63 88...(Incl. Reflector) ***(Replaces 348 2799)***	.....	1	320 5351	
(Right) 64 08 ***(Replaces 350 5908)***	.....	1	320 5340	
(Right) 65 05-06-07-09...(Incl. Lens Gasket & Attaching Parts)	.....	1	448 2348	
(Right) 65 08...(Incl. Lens Gasket & Attaching Parts)	.....	1	448 2350	
(Right) 62 10...(Incl. Reflector) ***(Replaces 346 2656)***	.....	1	320 5354	
(Right) 63 15-16...(Incl. Reflector) ***(Replaces 348 2792)***	.....	1	320 5344	
(Right) 63 18...(Incl. Reflector) ***(Replaces 348 2796)***	.....	1	320 5346	
(Right) 64 18-88 ***(Replaces 350 9438)***	.....	1	320 5342	
(Right) 65 50 (Marlin)...(Incl. Lens Gasket, Grille & Attaching Parts)	.....	1	448 2858	

Copyright 1963 American Motors Corp.

GROUP NO. — DESCRIPTION — YEAR and MODEL	PRIMARY GROUP NO.	PER CAR	PART NO.	CODE
(Right) 62 80 ...(Replaces 347 1114)	.....	1	320 5356	
(Right) 63 85-86...(Incl. Reflector) ...(Replaces 348 2794)	.....	1	320 5348	
(Right) 63 88...(Incl. Reflector) ...(Replaces 348 2798)	.....	1	320 5350	
LENS, Tail, Stop And Rear Directional Signal Lamp				
60 01	.....	2	313 1279	
64 02-05-06-07-09	.....	2	350 0838	
60-61 10-20...(Incl. Reflector)	.....	2	344 3834	
60 80	.....	2	344 3442	
61 80...(Incl. Reflector)	.....	2	345 8452	
ATTACHING PARTS				
Lens To Tail, Stop And Rear Directional Signal Lamp				
SCREW, Machine..... 60 01	.....	6	342 5969	
SCREW, Machine..... 61 Thru 63 01	.....	4	400 0277	
SCREW, Machine..... 60-61 10-20 (2 Req.): 60 80 (2 Req.): 61 80 (4 Req.) ...(Replaces 344 3439)	28.062	AR	400 0229	
SCREW, Machine..... 62 10 (3/8" Long)	.....	2	400 0412	
SCREW, Machine..... 62 10 (1-1/4" Long)	.....	4	400 0116	
SCREW, Machine..... 63 15-16-85-86	.....	6	320 4207	
SCREW, Machine..... 63 18-88	.....	6	400 0548	
SCREW, Machine..... 64 18-88	.....	4	400 0830	
SCREW, Machine..... 62 80	17.616	4	G273785	
SCREW, Tapping..... 64 01	.....	4	400 0702	
SCREW, Tapping..... 65 05-06-07-09	.....	4	400 1329	
SCREW, Tapping..... 65 08	.....	4	400 1330	
SCREW, Tapping..... 64 10-80	.....	4	320 5115	
SCREW, Tapping..... 65 10 (Except Marlin)	.....	4	400 1338	
SCREW, Tapping..... 65 50 (Marlin)	17.666	4	G166620	
SCREW, Tapping..... 65 80	.....	4	400 1558	
NUT, Speed..... 64 01	3.292	4	400 0113	
GRILLE, Tail, Stop and Rear Directional Signal Lamp Lens				
(Left) 65 59 (Marlin)	.....	1	351 7499	
(Right) 65 59 (Marlin)	.....	1	351 7498	
REFLECTOR, Tail Stop And Rear Directional Signal Lamp Lens				
60-61 10-20	3.303	2	344 3855	
62 10	3.303	2	320 3608	
63 10-80: 61 80	.....	2	345 8453	
ORNAMENT, Tail Stop And Rear Directional Signal Lamp Lens				
(Left) 62 80	.....	1	347 1323	
(Right) 62 80	.....	1	347 1322	

Copyright 1963 American Motors Corp.

GROUP NO. — DESCRIPTION — YEAR and MODEL	PRIMARY GROUP NO.	PER CAR	PART NO.	CODE
EYELET, Tail, Stop And Rear Directional Signal Lamp Lens				
64 02-05-06-07-09	.....	4	350 0841	
3.312 WIRE, Tail, Stop And Rear Directional Signal Lamp (Incl. Socket)				
60 01	.....	2	343 6125	
61 Thru 63 01	.....	2	344 6855	
60 10-20-80 (L3S)	.....	2	344 3433	
60 10-20-80 (W3S): 61-62 10-20-80	.....	2	345 1295	
SOCKET, Tail, Stop And Rear Directional Signal Lamp				
64 02-05-06-07-09	.....	1	320 5473	
65 50 (Marlin)	.....	2	320 6902	
(Push-In) 63 10-80	.....	2	348 2808	
(Peened Over) 63 10-80	.....	2	348 7837	
BULB, Tail, Stop And Rear Directional Signal Lamp				
60 Thru 63 01-10-20-80	3.215	2	G454645	
64-65 01-10-80 ***(Use 320 9544)***	3.215	2	G9417867	
GROMMET, Tail, Stop And Rear Directional Signal Lamp Wire				
62-63 04-08	.....	2	345 3554	
63 02-05-06-07-09: 62 10-80	.....	2	400 0347	
3.316 BASE, Back-Up Lamp				
60 01	15.070	2	311 6312	
ATTACHING PARTS Back-Up Lamp Base To Fender				
SCREW, Tapping..... 60 01	17.654	4	G162517	NA
BASE ASSEMBLY, Back-Up Lamp (Incl. Socket And Wire)				
61 Thru 63 01	.....	2	320 2611	
64-65 01 (On Fender)	.....	2	320 5066	
ATTACHING PARTS Back-Up Lamp Base Assembly To Fender				
SCREW, Tapping..... 61 Thru 63 01	17.660	4	G161895	NA
SCREW, Tapping 64-65 01	17.660	4	G161903	
DOOR, Back-Up Lamp Base				
60 01	15.070	2	311 5993	
HOUSING ASSEMBLY, Back-Up Lamp (Incl. Socket, Wire And Lens Gasket)				
64-65 01 (On Bumper Rail): 63 Thru 65 10-80	.....	2	320 4250	
ATTACHING PARTS Back-Up Lamp Housing Assembly To Bumper Rail				
NUT, Speed..... 64-65 01: 63 Thru 65 10-80	3.292	4	400 0152	

NOTE 3.316-1: Two Types of Gaskets were used on the Field Installed Back-Up Light Kits: They are identified as follows:
Type 1: Is used on Cars less Moulding in rear of Car.
Type 2: Is used on Cars with Moulding in rear of Car.

Copyright 1963 American Motors Corp.

GROUP NO. — DESCRIPTION — YEAR and MODEL	PRIMARY GROUP NO.	PER CAR	PART NO.	CODE
GASKET, Back-Up Lamp Base				
60 01	.....	2	315 8639	
GASKET, Back-Up Lamp Base Assembly				
61 Thru 63 01	.....	2	345 2926	
64 01 (Note 3.316-1 Type 1)	.....	2	320 4646	
64 01 (Note 3.316-1 Type 2)	.....	2	320 4645	
BRACKET, Back-Up Lamp Housing Assembly To Bumper Rail				
64 01: 63-64 10-80	3.292	2	348 2639	
65 01-10-80	3.292	2	351 7228	
ATTACHING PARTS Back-Up Lamp Housing Assembly Bracket To Bumper Rail				
NUT, Speed 64-65 01	3.292	8	400 0113	
NUT, Speed 63 10-80	3.292	4	400 0152	
3.317 LENS KIT, Back Up Lamp (Incl. Lens, Lens Gasket And Attaching Parts)				
(On Fender) 61 Thru 64 01 ***(Replaces 320 2612)***	.....	2	320 5358	
(On Bumper Rail) 64-65 01: 63 Thru 65 10-80 ***(Replaces 348 2647)***	.....	2	320 5353	
LENS, Back-Up Lamp				
60 01	15.070	2	311 5991	
60-61 10-20	.....	2	344 3436	
60 80	.....	2	344 3446	
61 80	.....	2	345 8142	
(Left) 62 80	.....	1	347 1117	
(Right) 62 80	.....	1	347 1116	
ATTACHING PARTS Back-Up Lamp Lens To Base				
SCREW, Machine..... 60 01	15.070	4	311 5994	
SCREW, Machine 64 01	17.616	4	320 4705	
SCREW, Machine..... 64 01: 63 Thru 65 10-80	3.292	4	320 4248	
SCREW, Machine..... 60-61 10-20: 61 80 ***(Replaces 344 3439)***	3.306	4	400 0225	
SCREW, Machine..... 60 80	3.303	4	344 3447	
SCREW, Machine..... 62 80	17.616	4	G273785	
GASKET, Back-Up Lamp Lens				
60 01	15.070	2	311 5992	
60 10-20 ***(Use 346 5424)***	.....	2	344 3438	
60 80	3.305	2	344 3443	
61 80	.....	2	345 8579	
(On Fender) 61 Thru 64 01	3.292	2	311 4027	
(On Bumper Rail) 64-65 01: 63 Thru 65 10-80	3.292	2	320 4246	
RING, Back-Up Lamp Lens Retainer				
61 Thru 64 01 (On Fender)	3.292	2	311 4028	
ORNAMENT, Back-Up Lamp Lens				
(Left) 62 80	3.306	1	347 1323	
(Right) 62 80	3.306	1	347 1322	

Copyright 1963 American Motors Corp.

GROUP NO. — DESCRIPTION — YEAR and MODEL	PRIMARY GROUP NO.	PER CAR	PART NO.	CODE
EYELET, Back-Up Lamp Lens				
64-65 01: 63 Thru 65 10-80	3.292	4	320 4247	
3.318 HARNESS, Back-Up Lamp Wire				
61 Thru 63 01 (LHD-WCGS)	.....	1	346 3511	
61 Thru 63 01 (RHD-WCGS)	.....	1	346 3733	
63 01 (WFGS)	.....	1	316 8925	
64 01	.....	1	320 4952	
61-62 10-20-80 (WST)(WOD)	.....	1	316 1339	
63 10-80 (WCGS)	.....	1	316 8163	
64 10-80 (LHD-WCGS-LAW)	.....	1	317 2477	
64 10-80 (LHD-WCGS-WAW)	.....	1	317 2478	
65 10-80 (LHD-WCGS)	.....	1	317 1135	
CLIP, Back-Up Lamp Wire Harness				
65 10-80 (WAT-WFGS)	29.294	1	316 9685	
WIRE, Back-Up Lamp To Connector				
60 Thru 63 10-20-80	.....	1	341 0795	
(Left) 60 01	.....	1	311 6003	
(Right) 60 01	.....	1	311 6004	
WIRE, Back-Up Lamp (Incl. Socket)				
61 Thru 63 01	.....	2	320 2613	
64-65 01: 63 Thru 65 10-80	.....	2	320 4249	
60-61 10-20-80	15.070	2	320 2150	
62 10: 61-62 80	.....	2	345 8624	
GROMMET, Back-Up Lamp Wire				
64-65 10-80 (L3S)	3.615	2	400 0336	
CLIP, Accessory Wire Harness To Main Wire Harness				
63-64 10-80	.....	1	79 394	
WIRE, Back-Up Lamp Switch To Circuit Breaker				
60 01	.....	1	315 8562	
64-65 01 (LHD-WCGS)	.....	1	317 1135	
WIRE, Back-Up Lamp Switch To Connector				
60 01 (198" Long)	15.070	1	311 6005	
WIRE, Back-Up Lamp Switch To Junction Block				
60 01	15.070	1	311 7190	
60 10-20-80	.....	1	315 8190	

Copyright 1963 American Motors Corp.

GROUP NO. — DESCRIPTION — YEAR and MODEL	PRIMARY GROUP NO.	PER CAR	PART NO.	CODE
WIRE, Back-Up Lamp Switch To Body Wire Harness				
60 10-20-80	.....	1	315 8191	
WIRE, Back-Up Lamp To Body Wire Harness				
63 10-80: 64 18-88	.....	1	316 8876	
WIRE, Back-Up Lamp Extension				
63 01 (WAT)	.....	1	320 4338	
BULB, Back-Up Lamp				
60 Thru 63 01-10-20-80	3.215	2	G454646	
64 01-10-80: 65 01	3.215	2	G9417866	
SPRING, Back-Up Lamp Wire Socket				
60 01	15.070	2	311 3278	
GASKET, Back-Up Lamp Wire Socket To Tail Lamp Body				
60-61 10-20-80	15.070	2	320 2151	
TUBE, Back-Up Lamp Wire (Rubber)				
60 04-08	.....	1	315 8564	
GASKET, Back-Up Lamp Wire Harness				
61 Thru 63 02-05-06-07	.....	2	345 2927	
61 Thru 63 04-08	.....	2	345 3606	
CONNECTOR, Back-Up Lamp Wire				
60 01: 62 01: 61 Thru 63 10-20-80 (3 Wire)	3.218	1	99 883	
61-62 10-20-80 (2 Wire)	13.170	1	312 7171	
WIRE, Back-Up Lamp Wire Harness Extension				
64 01	.....	2	316 7821	
INSULATOR, Back-Up Lamp Wire				
60 10-20-80: 61 10-20 (WST)(WOD)	.....	1	314 9122	
CLIP, Back-Up Lamp Wire				
60 04-08	17.132	2	G274281	
64-65 01: 63 Thru 65 10-80	3.615	2	310 8634	
65 01 (LHE-WFGS)(OHV-196-WFGS)(OHV-199-WFGS)	17.134	2	G105245	
ATTACHING PARTS Clip To Body				
SCREW, Tapping..... 65 01 (LHE-WFGS)(OHV-196-WFGS)(OHV-199-WFGS)	17.671	2	400 1031	

Copyright 1963 American Motors Corp.

GROUP NO. — DESCRIPTION — YEAR and MODEL	PRIMARY GROUP NO.	PER CAR	PART NO.	CODE
3.319 SWITCH, Back-Up Lamp				
60 01 (Note 3.319-1 Type 1): 63 01-10-80 (WFGS-Note 3.319-3 Type 1): 60 Thru 62 10-20-80 (WST)(WOD)	.....	1	314 7682	
60 01 (Note 3.319-1 Type 2)	15.070	1	320 1583	
61 01 (WAT)	3.022	1	320 2684	
61-62 01 (WST)(WOD)	.....	1	316 1057	
62-63 01 (WAT): 63 10-80 (WAT): 64 10-80 (WAT-WCGS-WAW)(WAT-LAW): 65 10-80 (WAT-WCGS)	.....	1	320 3293	
63-64 01-10-80 (WFGS-Note 3.319-3 Type 2): 65 01-10-80 (WOD-WFGS)	.....	1	317 1244	
63 Thru 65 01-10-80 (WST-WCGS)(WOD-WCGS)	.....	1	316 7977	
64 01-10 (RHD-WST)(RHD-WOD): 63-64 10-80 (RHD-WST)(RHD-WOD): 65 10 (RHD-WAT)	.....	1	316 9017	
65 01-10-80 (OHV-232-WAT-WFGS): 64-65 10-80 (V8-WAT-WFGS)	3.022	1	317 3329	
60-61 10-20-80 (WAT)	.....	1	320 0840	
62 10-80 (LHD-WAT-Note 3.319-2 Type 1)	.....	1	320 3568	
62 10-80 (LHD-WAT-Note 3.319-2 Type 2)	.....	1	348 4670	
62 10-80 (RHD-WAT)	.....	1	320 3569	
ATTACHING PARTS				
Switch To Steering Column Jacket Tube				
SCREW, Tapping..... 61 01	17.671	2	G456865	NA
SCREW, Tapping..... 62 Thru 64 01 (WAT): 63-64 10-80 (WAT)	17.660	2	G9405916	NA
SCREW, Tapping..... 62 Thru 65 01 (WST)(WOD): 63 Thru 65 10-80 (WST)(WOD)	17.671	2	G451658	NA
BOLT, Hexagon 64 10-80 (V8-WAT-WFGS)	17.038	2	G181561	NA
WASHER, Lock..... 6410-80 (V8-WAT-WFGS)	17.820	2	G120380	NA
Switch To Bracket				
WASHER, Lock..... 60 01 (WST)(WOD): 64-65 01 (WFGS): 60 Thru 62 10-80 (WST)(WOD): 63 Thru 65 10-80 (WFGS)	17.822	1	G114607	NA
NUT, Jam..... 64-65 01 (WFGS): 60 Thru 62 10-80 (WST)(WOD): 63 Thru 65 10-80 (WFGS)	17.410	1	G272123	NA
BRACKET, Back-Up Lamp Switch				
60 01 (WST)(WOD)	.....	1	320 1585	
60 01 (WAT)	.....	1	320 1584	
60 Thru 62 10-20-80 (LHD-WST)(LHD-WOD)	.....	1	315 7839	
60 Thru 62 10-80 (RHD-WST)(RHD-WOD)	.....	1	314 9493	
ATTACHING PARTS				
Bracket To Bearing Bracket				
SCREW, Tapping..... 60 Thru 62 10-20-80 (LHD-WST)(LHD-WOD)	17.671	1	G453113	NA
SCREW, Tapping..... ***60 Thru 62 10-20-80 (RHD-WST)(RHD-WOD)***	17.670	1	G445656	NA
Bracket To Operating Shaft Bracket				
SCREW, Tapping..... 60 01	17.671	2	G455380	NA

NOTE 3.319-1: Twp Types of Back-Up Lamp Switches were used on the 60 01 Model. They can be identified as follows:
Type 1: The Switch has Push-On type Terminals.
Type 2: The Switch has Screw type Terminals.

NOTE 3.319-2: Two Types of Back-Up Lamp Switches were used on the 62 10-80 (WAT). They can be identified as follows:
Type 1: The Switch is attached with four Tabs.
Type 2: The Switch is attached with a Center Mounted Spring Clip.

NOTE 3.319-3: Two Types of Back-Up Lamp Switches were used on the 63 01-10-80 (WFGS) Models. They can be identified as follows:
Type 1: The Switch has two Male Terminals riveted directly to the Switch.
Type 2: The Switch has two 5 inch Wires with the Male Terminals attached to them.

Copyright 1963 American Motors Corp.

GROUP NO. — DESCRIPTION — YEAR and MODEL	PRIMARY GROUP NO.	PER CAR	PART NO.	CODE
3.321 SWITCH, Directional Signal (Incl. Wire Harness)				
60 01...(Incl. Arm)	.....	1	315 7880	
60 01...(Less Arm)	.....	1	320 1767	
61 Thru 63 01	.....	1	320 2533	
64 01: ***65 01 (RHD)***	.....	1	320 4968	
65 01 (LHD)	.....	1	320 5643	
60 10-20-80 (Note 3.321-1 Type 1)...(Less Arm)	.....	1	320 1941	
60 10-20-80 (LHD-Note 3.321-1 Type 2)...(Less Arm)	.....	1	320 2449	
61-62 10-20-80	.....	1	320 2632	
63 10-80; 64 10-80 (LAW): ***65 10 (RHD)***	.....	*1	320 4050	#
64-65 10-80 (WAW)	.....	1	317 2954	
65 10-80 (LHD-LAW)	.....	1	317 5549	

NOTE 3.321-1: Two Types of Directional Signal Switches were used on the 60 10-20-80 Series. They can be identified as follows:
- Type 1: Harness on Switch is 13" long with 6 exposed single Wires 3.5" long.
- Type 2: Harness on Switch is 15-3/4" long with 6 exposed single Wires at various lengths.

NOTE 3.321-2: Two Types of Steering Gear Jacket Tubes were used on the 61 10-20-80. They can be identified as follows:
- Type 1: Has a Zinc Die Cast Bushing located at the bottom of the Jacket Tube and is fastened with two Screws and is replaceable.
- Type 2: Has a Nylon Bearing spun into a Metal Bushing that is welded to the bottom of the Jacket Tube and is not replaceable.

NOTE 3.321-3: Two Types of Steering Gear Jacket Tubes were installed on 62 10-80 (LHD-WST)(LHD-WOD). They can be identified as follows:
- Type 1: The Low and Reverse Shift Lever is removable from Gear Shift Operating Shaft and the Second and High Shift Lever is Brazed to the Shaft.
- Type 2: The Low and Reverse and the Second and High Shift Levers are removable from the Gear Shift Operating Shaft.

NOTE 3.321-4: Two Types of Steering Gear Jacket Tubes were installed on 62 10-80 (WAT). They can be identified as follows:
- Type 1: The Steering Gear Jacket Tube lower Bushing fastening Hole on Tube is located 3/8" from bottom of Tube and is round.
- Type 2: The Steering Gear Jacket Tube lower Bushing fastening Hole on Tube is located 15/16" from bottom of Tube and is slotted.

NOTE 3.321-5: Three Types of Steering Gear Jacket Tubes were installed on 63 10-80 (WAT). They are identified as follows:
- Type 1: Manufactured by Ainsworth. The Gear Shift Lever is brazed to the Gear Shift Operating Shaft and is not removable and the Lever is 1-5/16" wide.
- Type 2: Manufactured by Douglas. The Gear Shift Lever is removable from the Gear Shift Operating Shaft and the Lever is 7/8" wide.
- Type 3: Manufactured by Douglas. The Gear Shift Lever is brazed to the Gear Shift Operating Shaft and is not removable and is 7/8" wide.

NOTE 3.321-6: Two Types of Gear Shift Lever Housings were used on the 64 01 (WAT)(LHD-WST-WCGS-LES) (LHD-WOD-WCGS-LES). They can be identified as follows:
- Type 1: It is Douglas Part: The Steering Gear Jacket Tube is 6 inches long from the center of the Welded Bracket to the center of the slot for Mounting the Back-up Lamp Switch.
- Type 2: It is Ainsworth Part. The Steering Gear Jacket Tube is 3 inches long from the center of the Welded Bracket to the center of the slot for Mounting the Back-up Lamp Switch.

Copyright 1963 American Motors Corp.

GROUP NO. — DESCRIPTION — YEAR and MODEL	PRIMARY GROUP NO.	PER CAR	PART NO.	CODE
ATTACHING PARTS				
Directional Signal Switch To Mounting Plate				
SCREW, Machine..... 60 01	17.614	2	G132892	NA
Directional Signal Switch To Housing				
SCREW, Machine..... 62 10-80	17.660	2	G9405916	NA
SCREW, Machine..... 63 10-80: 64 10-80 (LAW): ***65 10 (RHD)***	17.598	2	G273876	NA#
SCREW, Self Threading . ***64-65 01 (RHD)***	.....	3	320 4969	
SCREW, Square Head ... 65 10-80 (WCGS-LAW)	.....	2	400 1318	#
SCREW, Tapping..... 61 01-10-20-80	17.672	2	G172111	NA
SCREW, Tapping..... 62-63 01	17.614	2	G132696	NA
SCREW, Tapping..... 64-65 01 (LHD): 65 10-80 (WCGS-LAW)	17.660	3	G166985	NA
SCREW, Tapping..... 60 10-20-80	17.660	2	G167156	NA
SCREW, Tapping..... 65 10-80 (WAW)	17.670	2	G271137	NA
WASHER, Lock..... 64-65 10-80 (LAW)	17.820	2	G131044	NA
NUT, Lock..... 65 10-80 (WCGS-LAW)	.....	2	400 1319	
HOUSING, Directional Signal Switch				
60 01	10.280	2	315 8341	
64-65 01 (LHD-Note 3.321-6 Type 1): ***64-65 01 (RHD-WFGS)***	.....	1	320 5155	NA
64-65 01 (LHD-Note 3.321-6 Type 2)	.....	1	320 5210	
64-65 01 (WAT-Note 3.321-6 Type 1)	.....	1	320 5209	
64-65 01 (WAT-Note 3.321-6 Type 2)	.....	1	320 5214	
63 10-80 (WST)(WOD)	.....	1	320 4051	
63 10-80 (WAT-Note 3.321-5 Type 1)	.....	1	320 4910	
63 10-80 (WAT-Note 3.321-5 Types 2 And 3)	.....	1	320 4048	
64 10-80 (WAT-LAW)	.....	1	320 5231	
64 10-80 (WST-LAW)(WOD-LAW)	.....	1	320 5232	
64-65 10-80 (WAW)	10.830	1	320 5048	
65 10-80 (LAW-WST-WCGS)(LAW-WOD-WCGS)(LAW-WFGS)(LAW-WAT-WCGS)	.....	1	317 5547	
65 10 (RHD-WAT-WCGS)	.....	1	320 4048	#
65 10 (RHD-WFGS)(RHD-Six-232-WST-WCGS)(RHD-Six-232-WOD-WCGS)	.....	1	320 5232	#
ATTACHING PARTS				
Housing To Steering Column Tube				
BOLT, Square..... 64-65 01: 63 10-80: 64 10-80 (LAW): ***65 10 (RHD)***	.....	2	400 1318	#
NUT, Hexagon..... 64-65 01: 63 10-80: 64 10-80 (LAW): ***65 10 (RHD)***	.....	2	320 1946	#
Housing To Steering Column Jacket				
SCREW, Fillister ..... 64-65 01: 63-64 10-80 (LAW)	.....	2	320 6755	
SCREW, Pan ..... 64-65 01: 63-64 10-80 (LAW)	.....	2	320 6756	
Housing To Cable Assembly				
SCREW, Tapping..... 64-65 10-80 (WAW)	3.800	1	320 5161	
HOUSING ASSEMBLY, Directional Signal Switch (Incl. Tube Upper Bearing)				
61 Thru 63 01 (WST)(WOD): 61 10-20-80 (Note 3.321-2 Type 2): 62 10-80 (Note 3.321-3 Type 2 And 3.321-4 Type 2)	.....	1	320 2686	
61 Thru 63 01 (WAT)	.....	1	320 2685	
60 10-20-80 (Note 3.321-1 Type 1)	.....	1	320 1940	
60 10-20-80 (LHD-Note 3.321-1 Type 2)	.....	1	320 2582	
61 10-20-80 (Note 3.321-2 Type 1): 62 10-20-80 (Note 3.321-3 Type 1 And 3.321-4 Type 1)	.....	1	320 2601	
ATTACHING PARTS				
Directional Signal Switch Housing To Steering Column Jacket				
BOLT, Hexagon ..... 61 Thru 63 01: 60 Thru 62 10-20-80	.....	2	320 1945	
NUT, Hexagon..... 61 Thru 63 01: 60 Thru 62 10-20-80	.....	2	320 1946	

Copyright 1963 American Motors Corp.

GROUP NO. — DESCRIPTION — YEAR and MODEL	PRIMARY GROUP NO.	PER CAR	PART NO.	CODE
CAM, Directional Signal Switch Canceling				
60 01	.....	1	314 6253	
61 Thru 63 01: 61-62 10-20-80	.....	1	316 1330	
60 10-20-80	.....	1	315 7884	
PIN, Directional Signal Switch Canceling (In Steering Wheel)				
64-65 01	.....	1	317 0335	
63 Thru 65 10-80 (LAW)	.....	1	316 8867	
64-65 10-80 (WAW)	.....	1	317 2949	
INSULATOR, Directional Signal Switch				
61-62 10-20-80	3.406	1	316 1370	
BRACKET, Directional Signal Switch				
60 10-20-80	.....	1	320 1943	
ARM, Directional Signal Switch (Incl. Return Spring)				
60 01	.....	1	320 1766	
60 10-20-80 (Note 3.321-1 Type 1)	.....	1	320 1948	
60 10-20-80 (Note 3.321-1 Type 2)	.....	1	320 2816	
SPRING, Directional Signal Switch Return				
60 01	.....	1	320 0421	
60 10-20-80	.....	1	320 1949	
SPRING, Directional Signal Switch Arm To Mounting Plate				
60 01	.....	1	320 0587	
60 10-20-80	.....	1	320 1951	
CLIP, Directional Signal Switch Arm To Mounting Plate				
60 01	.....	1	320 0588	
60 10-20-80	.....	1	320 1950	
HARNESS, Directional Signal Switch Extension Wire				
64 10-80 (WAW)	.....	1	317 2487	
65 10-80 (WAW)	.....	1	317 6537	
3.324 LEVER, Directional Signal				
60 01	.....	1	315 2223	
61 01-10-20-80 (Gray)	.....	1	316 0641	
61 Thru 63 01 (Black): 61-62 10-20-80 (Black)	.....	1	316 2303	
64-65 01	.....	1	317 1813	
60 10-20-80	.....	1	315 7669	
63 10-80 (WST)(WOD)	.....	1	316 7115	
63 10-80 (WAT)	.....	1	316 7717	
64-65 10-80 (LAW)	.....	1	317 2911	
64-65 10-80 (WAW)	.....	1	317 2938	
ATTACHING PARTS				
Directional Signal Switch Lever To Switch				
SCREW, Machine..... 61 Thru 63 01-10-20-80: 64-65 10-80 (LAW) ..... ***(Replaces 316 0745)***	3.321	2	316 9148	
SCREW, Machine..... 60 10-20-80	17.626	1	G425575	NA
WASHER, Lock..... 64 10 (LAW): 65 10-80 (LAW)	17.820	2	G131095	NA

Copyright 1963 American Motors Corp.

GROUP NO. — DESCRIPTION — YEAR and MODEL	PRIMARY GROUP NO.	PER CAR	PART NO.	CODE
3.330 FLASHER, Directional Signal				
60 Thru 63 01-10-20-80	.....	1	314 6721	
64-65 01-10-80	.....	1	317 2700	
CLIP, Directional Signal Flasher				
60 Thru 63 01-10-20-80 (On Circuit Breaker)	3.154	1	439 0686	
64-65 01-10-80 (On Instrument Cluster) ***(Replaces 320 4892)***	.....	1	439 0690	
3.333 SWITCH, Stop And Tail Lamp				
60 Thru 65 01-10-20-80	.....	1	314 5198	
ELBOW, Stop And Tail Lamp Switch				
60 01: ***61 Thru 64 01 (RHD)***	17.230	1	G9409927	
61-62 10 (RHD-WAT)	17.232	1	G9409931	
3.335 LAMP ASSEMBLY, License				
60 01 (WWC)	.....	2	315 5577	
60 02-05-06 (LWC)	.....	2	314 7064	
60 04	.....	1	314 5757	
61 Thru 63 01	.....	1	316 0514	
64 01 : 65 01-10-80	.....	1	350 1390	
60 10-20-80	.....	2	315 8157	
61 10-20: 62 18-88	.....	1	316 0896	
62 15-16-85-86	.....	1	346 2113	
63-64 10-80	.....	1	348 2636	
61 80	.....	1	316 2143	
ATTACHING PARTS				
License Plate Lamp Assembly To License Plate Bracket				
SCREW, Machine..... 60 01	17.584	2	G189618	NA
WASHER, Lock..... 60 01	17.820	2	G131096	NA
NUT, Hexagon..... 60 01	17.412	2	G120614	NA
License Plate Lamp Assembly To Rear Deck Door				
SCREW, Tapping..... 62 15-16-85-86	17.670	2	G172300	NA
License Plate Lamp Assembly To Bumper Rail				
SCREW, Tapping..... 64-65 01 : 63 Thru 65 10-80	17.660	2	G161895	NA
BRACKET, License Plate Lamp Assembly To Bumper Rail				
61 10-20: 62 18-88	.....	1	344 7929	
ATTACHING PARTS				
License Plate Lamp Assembly Bracket To Bumper Rail				
SCREW, Tapping..... 61 10-20: 62 18-88	17.660	2	G161860	NA
3.339 LENS, License Plate Lamp				
60 01 (WWC): 60 04	.....	1	311 4033	
60 02-05-06 (LWC): 61 Thru 63 01	.....	2	311 8758	
64 01 : 65 01-10-80...(Incl. Bracket And Gasket)	.....	2	320 5326	
60 10-20-80	.....	2	320 2895	
61 10-20: 62 18-88	.....	1	320 2682	
61 80	.....	2	320 2900	
62 15-16-85-86	.....	1	320 3054	
63-64 10-80...(Incl. Bracket)	.....	1	320 4357	

Copyright 1963 American Motors Corp.

GROUP NO. — DESCRIPTION — YEAR and MODEL	PRIMARY GROUP NO.	PER CAR	PART NO.	CODE
GASKET, License Plate Lamp Lens				
60 01 (WWC): 60 04	.....	1	311 4034	
60 02-05-06 (LWC-1 Req.): 61 Thru 63 01 (1 Req.): 60 10-20-80 (2 Req.): 61 80 (2 Req.)	.....	AR	311 8761	
62 15-16-85-86	.....	1	320 3055	
3.341 WIRE, License Plate (Less Socket)				
60 01 (WWC)	.....	1	320 1424	
60 02-05-06 (LWC): 60 10-20-80	.....	2	311 9960	
60 04	.....	1	311 9735	
61 Thru 63 01 (1 Req.): 61 80 (2 Req.)	.....	AR	320 2750	
WIRE, License Plate Lamp (Incl. Socket)				
64 01: 65 01-10-80	.....	1	320 5328	
61 10-20: 62 18-88	.....	1	320 2681	
62 15-16-85-86	.....	1	316 4944	
63-64 10-80	.....	1	320 4356	
SOCKET, License Plate Lamp (Less Wire)				
60 01 (WWC): 60 04	.....	1	311 4035	
60 02-05-06 (LWC): 60 10-20-80	.....	2	311 8759	
61 Thru 63 01 (1 Req.): 61 80 (2 Req.)	.....	AR	320 2751	
SPRING, License Plate Lamp Socket				
60 01 (WWC)	.....	1	320 1425	
60 02-05-06 (LWC-1 Req.): 61 Thru 63 01 (1 Req.): 60 10-20-80 (2 Req.): 61 80 (2 Req.)	.....	AR	311 8762	
HOUSING, License Plate Lamp				
60 01 (WWC)	.....	1	313 8921	
62 15-16-85-86	.....	1	320 3053	
ATTACHING PARTS				
License Plate Lamp Housing To License Plate Bracket				
BOLT, Hexagon ..... 60 01 (WWC)	17.038	2	G106319	NA
WASHER, Lock ..... 60 01 (WWC)	17.820	2	G120380	NA
GASKET, License Plate Lamp Assembly				
60 01 (WWC)	.....	2	312 8893	
GROMMET, License Plate Lamp Wire				
60 01	3.163	2	436 5163	
64-65 01: 63 Thru 65 10-80	22.018	1	438 8864	
62 15-16-85-86	3.288	1	55 350	
CONNECTOR, License Plate Lamp Wire				
60 01-10-20-80	.....	1	99 883	
61 10-20 (1 Wire) ..... *(Ref. Pr. List)*	.....	1	346 5211	
61-62 10-20 (2 Wire): 61 80	.....	1	346 5210	
BULB, License Plate Lamp				
60 Thru 65 01-10-20-80	3.215	AR	G142450	

Copyright 1963 American Motors Corp.

GROUP NO. — DESCRIPTION — YEAR and MODEL	PRIMARY GROUP NO.	PER CAR	PART NO.	CODE
3.346 BASE, Domelamp (Incl. Socket)				
60 01-10-20-80	.....	1	344 0850	
60 01-10-20-80 (Police)	.....	2	344 0850	
61 Thru 65 01-10-20-80	.....	1	345 8179	
61 Thru 65 01-10-20-80 (Police)	.....	2	345 8179	
ATTACHING PARTS Domelamp Base To Bracket				
SCREW, Tapping..... 60 Thru 62 01: 60 10-20-80	17.660	2	G443946	NA
SCREW, Tapping..... 63 Thru 65 01	17.660	2	G161903	NA
SCREW, Tapping..... ***63 Thru 65 01 (Police)***	17.660	2	G161903	NA
SCREW, Tapping..... ***63 Thru 65 01 (Police)***	17.660	2	G161895	NA
SCREW, Tapping..... ***60 10-20-80 (Police)***	17.660	4	G443946	NA
SCREW, Tapping..... 61 Thru 65 10-20-80 ***(Replaces 346 6066)***	.....	2	400 0472	
LENS, Domelamp				
60 01-10-20-80	.....	1	344 0851	
60 01-10-20-80 (Police)	.....	2	344 0851	
61-62 01-10-20-80	.....	1	345 8178	
61-62 01-10-20-80 (Police)	.....	2	345 8178	
63 Thru 65 01-10-80 (Police)	.....	1	349 0039	
63 Thru 65 01-10-80	.....	1	349 0039	
FILLER, Domelamp Base				
60 01-10-20-80	.....	1	343 0074	
BRACKET, Domelamp Base To Windshield Header Bar				
64-65 02-05-06-08 (Police)	3.670	1	347 2294	
60 10-20-80 (Police)	.....	1	345 5678	
61 Thru 65 10-20-80 (Police)	.....	1	346 5397	
ATTACHING PARTS Domelamp Base Bracket To Windshield Header Bar				
SCREW, Tapping..... ***60 Thru 62 10-20-80 (Police)....(Replaces 346 6066)***	.....	2	400 0472	
BULB, Domelamp				
60 Thru 65 01-10-20-80	3.215	1	G455136	
60 Thru 65 01-10-20-80 (Police)	3.215	2	G455136	
3.349 LAMP ASSEMBLY, Courtesy				
61 Thru 65 01 (LHD-Note 3.349-2 Type 1): 60-61 10-20-80 (Note 3.349-1 Type 2): 61 Thru 65 10-20-80	.....	2	345 0892	
60 Thru 63 07 (Note 3.349-2 Type 2)	.....	2	346 0048	
64-65 07: 65 17-87	.....	2	350 5463	
60-61 10-20-80 (Note 3.349-1 Type 1)	.....	2	344 3823	
ATTACHING PARTS Courtesy Lamp To Instrument Panel				
SCREW, Tapping..... 61 Thru 63 01	17.666	2	G161645	

NOTE 3.349-1: Two Types of Courtesy Lamps were used on the 60-61 10-20-80 Model. They can be identified as follows:
Type 1: Lamp Socket has Connectors for Spade Terminals.
Type 2: Lamp Socket has Receptacle for Bullet Terminals.

NOTE 3.349-2: Two Types of Courtesy Lamps are used on the 61 Thru 65 07 Models. They can be identified as follows:
Type 1: Courtesy Lamp is located under Instrument Panel.
Type 2: Courtesy Lamp is located in the Rear Quarter Lower Trim Panel.

NOTE 3.349-3: Two Types of Courtesy Lamps were used on the 63 07 Model in the Rear Quarter Lower Trim Panel. They can be identified as follows:
Type 1: A Metal Socket is used.
Type 2: A Plastic Socket is used.

Copyright 1963 American Motors Corp.

GROUP NO. — DESCRIPTION — YEAR and MODEL	PRIMARY GROUP NO.	PER CAR	PART NO.	CODE
SCREW, Tapping..... 64-65 01	17.671	1	G274773	
SCREW, Tapping..... 60-61 10-20-80	17.671	2	800 0093	
SCREW, Tapping..... 62 Thru 64 10-80	17.671	4	G9514051	NA
SCREW, Tapping..... 65 10-80	17.660	2	G161901	NA
BRACKET, Courtesy Lamp To Instrument Panel				
64-65 01 (LHD)	.....	1	350 6921	
ATTACHING PARTS Bracket To Instrument Panel (Right Side)				
SCREW, Sealed..... 64-65 01 (LHD)	.....	2	400 0720	
LENS, Courtesy Lamp Assembly				
61-62 07 (Note 3.349-2 Type 2): 63 07 (Notes 3.349-2 Type 2 And 3.349-3 Type 1)	.....	2	320 2908	
63 07 (Notes 3.349-2 And 3.349-3 Type 2): 64 07	.....	1	320 4508	
HARNESS, Courtesy Lamp Assembly Switch To Domelamp Harness				
61 Thru 63 01 (LHD-Note 3.349-2 Type 1)	.....	1	346 4709	
WIRE, Courtesy Lamp Assembly (Incl. Socket)				
61-62 07 (Note 3.349-2 Type 2): 63 07 (Note 3.349-2 Type 2 And 3.349-3 Type 1)	.....	1	320 2907	
63 07 (Notes 3.349-2 Type 2 And 3.349-3 Type 2)	.....	1	320 4507	
HARNESS, Courtesy Lamp Assembly Wire				
64-65 01 (LHD)	.....	1	317 1118	
64 02-05-06-08 (RHD)	.....	1	317 1119	
64 07-09 (RHD): 65 01 (RHD)	.....	1	317 3319	
60-61 10-20-80 (Note 3.349-1 Type 1)	.....	1	343 6144	
60-61 10-20-80 (Note 3.349-1 Type 2)	.....	1	345 0893	
62 10-80	.....	1	348 6174	
63-64 10-80 ***(Replaces 349 7607)***	.....	1	317 0962	
65 10-80 (LHD)	.....	1	317 6533	
65 10 (RHD)	.....	1	317 6540	
(Left) 61 07 (Note 3.349-2 Type 2)	.....	1	346 3504	
(Left)62-63 07 (Note 3.349-2 Type 2)	.....	1	347 4673	
(Right) 61 Thru 63 07 (Note 3.349-2 Type 2)	.....	1	346 3505	
HARNESS, Courtesy Lamp Assembly To Courtesy Lamp Assembly				
61 01 (LHD-Note 3.349-2 Type 1)	.....	1	346 4711	
62-63 01 (LHD-Note 3.349-2 Type 1)	.....	1	347 4766	
HARNESS, Courtesy Lamp Assembly Switch To Connector				
60-61 10-20-80	.....	1	343 6145	
ADAPTER, Courtesy Lamp Assembly Wire				
60-61 10-20-80	6.329	1	312 3479	
BULB, Courtesy Lamp Assembly				
(GE 89) 63 01	3.215	2	G142452	
(GE 90) 61 Thru 63 01	3.215	2	G142453	
(GE 211-1) 64 01 ***(Use 320 9536)***	3.215	2	G9414045	
(GE 1004) 64-65 01: 60 Thru 65 10-80	3.215	2	G455136	
3.352 LIGHTER ASSEMBLY, Cigar (Incl. Knob And Element)				
60 01	.....	1	315 7930	

Copyright 1963 American Motors Corp.

GROUP NO. — DESCRIPTION — YEAR and MODEL	PRIMARY GROUP NO.	PER CAR	PART NO.	CODE
61 01 (Gray)	.....	1	346 0255	
61 Thru 63 01 (Black)	.....	1	315 0420	
64-65 01	.....	1	350 9448	
60 Thru 62 10-20-80	.....	1	344 0778	
63 10-80	.....	1	348 2929	
64-65 10-80	.....	1	350 9549	
LIGHTER KIT, Cigar				
61 Thru 65 01	.....	1	320 6841	
ELEMENT, Cigar Lighter Assembly				
60 Thru 63 01-10-20-80: 64-65 10-80 ***(Use 320 4304)***	.....	1	311 9884	
64-65 01 ***(Replaces 320 5329)***	.....	1	320 4304	
KNOB, Cigar Lighter Assembly				
60 01 ***(Ref. Pr. List)***	.....	1	320 1258	
61 01 (Gray) ***(Ref. Pr. List)***	.....	1	346 0254	
61 Thru 63 01 (Black)	.....	1	342 2234	
64-65 01	.....	1	320 5330	
60 Thru 62 10-20-80	.....	1	344 0594	
63 10-80	.....	1	320 4305	
64-65 10-80	.....	1	320 5481	
HOUSING, Cigar Lighter Assembly				
60 01-10-20-80 (4" Long Wire) ***(Ref. Pr. List)***	.....	1	342 8508	
60 01 (30-1/2" Long Wire) ***(Ref. Pr. List)***	.....	1	345 2893	
61 Thru 65 01: 61-62 10-20-80: 65 10 (LHD)(Except Marlin)	.....	1	345 3270	
63-64 10-80: ***65 10 (RHD)***: 65 50 (Marlin): 65 80	.....	1	348 2994	
SHELL, Cigar Lighter Assembly				
60 Thru 64 01-10-20-80 (1-3/4" Long): 65 01-10 (LHD)(Except Marlin) ***65 10 (550-RHD)***	.....	1	312 2721	
63-64 10-80 (1-9/32" Long): ***65 10 (660-RHD)(770-RHD)***	.....	1	348 2995	
65 50 (Marlin): 65 80	.....	1	351 6603	
WIRE, Cigar Lighter Assembly				
60 01: 60-61 10-80 (RHD)	.....	1	342 9672	
61 Thru 63 01: 61-62 10-20-80	.....	1	345 3281	
60 10-20-80 (LHD)	.....	1	343 6594	
WIRE, Cigar Lighter To Ignition Switch				
64-65 01 (LHD)	.....	1	317 1136	
ESCUTCHEON, Cigar Lighter Assembly				
63-64 10-80: ***65 10 (RHD)***	.....	1	348 2918	
65 50 (Marlin): 65 80 (LHD)	.....	1	351 6617	
LAMP, Cigar Lighter Assembly (Incl. Filter)				
65 50 (Marlin): 65 80 (LHD)	.....	1	351 6923	
FILTER, Cigar Lighter Lamp Assembly				
65 50 (Marlin): 65 80	3.510	1	352 0871	
BULB, Cigar Lighter Lamp Assembly				
65 80	3.215	1	320 4552	

Copyright 1963 American Motors Corp.

GROUP NO. — DESCRIPTION — YEAR and MODEL	PRIMARY GROUP NO.	PER CAR	PART NO.	CODE
BEZEL, Cigar Lighter Assembly Lamp				
65 10 (LHD)	.....	1	351 6747	
LENS, Cigar Lighter Assembly Lamp				
65 10 (LHD)	.....	1	351 6750	
3.360 CLOCK				
60 01	.....	1	342 9063	
61 Thru 63 01	.....	1	344 8416	
60 Thru 62 10-20-80	.....	1	344 0528	
63 10-80: 64 10: ***65 10 (RHD)*** ***(Replaces 348 2234)***	.....	1	350 9584	
65 10-80 (LHD)	.....	1	351 6510	
64 80	.....	1	350 9588	
ATTACHING PARTS				
Clock To Housing				
SCREW, Machine..... 61 Thru 63 01	17.614	2	G421799	NA
Clock To Instrument Panel				
CLIP..... 65 10-80	.....	1	351 6137	
SCREW, Tapping..... 60 01	17.671	2	800 0093	NA
SCREW, Tapping..... 60 Thru 62 10-20-80 ***(Replaces 343 0620)***	23.006	2	400 0055	
NUT, Hexagon..... 63 Thru 65 10-80	.....	2	400 0171	
HOUSING, Clock				
61 Thru 63 01	.....	1	344 8438	
63-64 10-80 (LHD)	.....	1	347 2709	
63-64 10-80 (RHD): 65 10 (RHD)	.....	1	347 2917	
65 10-80 (LHD)	.....	1	320 5805	
KNOB, Clock Reset				
60 01	.....	1	320 0717	
61 Thru 63 01	.....	1	320 2733	
60 Thru 62 10-20-80	.....	1	320 1699	
63-64 10-80	.....	1	320 4240	
65 10-80	.....	1	320 5803	
3.361 CLOCK KIT				
60 01 (Used On Cars Less Push Button Radio)	.....	1	320 2194	
61 01	.....	1	320 2835	
62-63 01	.....	1	320 3638	
60 Thru 62 10-20-80	.....	1	320 2195	
63 10-80	.....	1	320 4362	
64 10 (550)(660)	.....	1	320 5218	
65 10 (550)(660-Note 3.361-1): 65 80 (880-Note 3.361-1) ***(Replaces 320 5967, 320 5968)***	.....	1	320 5724	
3.369 LENS, Clock				
60 01	.....	1	320 0716	
60 Thru 62 10-20-80	.....	1	320 1700	
63 10-80	.....	1	320 4239	
64 10	.....	1	320 5415	
65 10-80	.....	1	320 5804	
64 80	.....	1	320 5416	

NOTE 3.361-1: **When ordering Clock Kit for the 65 10 (660) or 65 80 (880) Series also order Instrument Panel Overlay that is used with Clock. Refer Group 22.100.**

Copyright 1963 American Motors Corp.

GROUP NO. — DESCRIPTION — YEAR and MODEL	PRIMARY GROUP NO.	PER CAR	PART NO.	CODE
HARNESS, Clock Wiring (Incl. Socket)				
60 01	.....	1	343 6063	
62-63 01	.....	1	347 4750	
WIRE, Clock (Incl. Socket)				
61 01	.....	1	346 3510	
60 Thru 65 10-20-80	.....	1	344 5845	
WIRE, Clock Feed				
61 01	.....	1	346 3509	
ATTACHING PARTS				
Wire To Clock				
WASHER, Lock 60 10-20-80	17.820	1	G131181	NA
NUT, Hexagon 62-63 01	27.412	1	G271482	NA
NUT, Hexagon 60 10-20-80	17.412	1	G134530	NA
ADAPTER, Clock Wire Terminal				
61 Thru 63 01	3.550	1	315 9556	
BULB, Clock				
60 Thru 63 01-10-20-80: 64-65 10-80	3.215	1	G127934	
3.378 LAMP, Glove Box				
61 01 (LHD)	.....	1	346 4710	
62 01 (LHD): 63 01: 60 Thru 62 10-20-80 (LHD): 63 10-80	.....	1	344 5847	
64-65 01-10-80	.....	1	352 2321	
60 Thru 62 10-80 (RHD)	.....	1	345 1682	
BULB, Glove Box Lamp				
(GE-57) 60 Thru 65 01-10-20-80	3.215	1	G127934	
(GE-1891) 65 01-10-80	3.215	1	G456985	
3.400 BUTTON, Horn (Less Horn Ring)				
60 01	.....	1	315 7828	
62 01 (LES): 62 10-80	.....	1	316 3672	
63 01 (LES)	.....	1	316 7686	
163 01 (CAN-LES)	.....	1	317 0279	
64 01 (220-LES): 65 01 (220)	.....	1	317 0327	
63 10-80 (LES): 64 10 (LES): ***163 10-80 (CAN):*** 65 10	.....	1	316 7678	
SPRING, Horn Button Contact				
62-63 01 (LES-Flat)	.....	1	316 3663	
62-63 01 (LES-Coil): 62 10-80	.....	1	316 3665	
63 10-80: 64 10 (LES)	.....	1	316 9537	
(Upper) 64-65 01: 63 10-80: 64 10 (LES)	.....	1	316 9537	
(Lower) 64 01	.....	1	317 0332	
SEAT, Horn Button (Upper)				
62-63 01 (LES): 62 10-80	.....	1	316 3664	
RETAINER, Horn Button Seat				
60 01	.....	1	311 6011	
62-63 01 (LES)	.....	1	316 3669	
64 01 (220-LES): 65 01 (220)	3.406	1	317 0485	
62 10-80	3.406	1	315 0138	

Copyright 1963 American Motors Corp.

GROUP NO. — DESCRIPTION — YEAR and MODEL	PRIMARY GROUP NO.	PER CAR	PART NO.	CODE
PIN, Horn Blowing Contact				
64 01	3.406	1	317 0333	
RING, Horn Button Contact Lock				
62-63 01 (LES): 62 10-80	3.406	1	315 0102	
ATTACHING PARTS				
Horn Button Contact Lock Ring To Steering Wheel				
SCREW, Machine..... 62-63 01 (LES): 62 10-80	17.614	3	G111302	NA
WASHER, Lock..... 62-63 01 (LES): 62 10-80	17.820	3	G131095	NA
RING, Horn Button Contact				
62-63 01 (LES): 62 10-80	.....	1	316 3670	
ATTACHING PARTS				
Horn Button Ring To Steering Wheel				
SCREW, Tapping..... 62-63 01 (LES): 62 10-80	17.614	3	G111302	NA
PELLET, Horn Button Locating				
62-63 01 (LES): 62 10-80	.....	1	316 3661	
INSULATOR, Horn Button Spacer				
62-63 01 (LES): 62 10-80	3.406	3	315 7932	
INSULATOR, Horn Button Brush				
62-63 01 (LES): 62 10-80	3.406	1	315 3889	
INSULATOR, Horn Button Retainer				
63-64 10 (LES): 63 80	3.406	1	316 7356	
CONTACT, Horn Button (Incl. Wire)				
62 10-80 (Notes 3.321-3 Type 1 And 3.321-4 Type 1)	3.406	1	320 2981	
62 10-80 (Notes 3.321-3 Type 2 And 3.321-4 Type 2)	3.406	1	320 3294	
63 10 (LES): 63 80	3.406	1	320 4049	
CUSHION, Horn Button Upper Seat To Contact Plate				
64 01 (LES): 65 01-10-80: 63-64 10 (LES): 63 80.....***(Replaces 316 8005)***	3.406	1	316 8004	
BRUSH, Horn Button Contact				
63-64 10 (LES): 63 80	3.406	1	316 7357	
CLIP, Horn Button Insulator Retainer				
63-64 10 (LES): 63 80	3.406	1	316 9375	
PLATE, Horn Button Contact				
63-64 10 (LES): 65 10-80: 63 80	.....	1	316 8003	
(Upper) 64-65 01	.....	1	317 0341	
(Lower) 64 01	.....	1	317 0331	
PLATE, Horn Button Index				
64 01: 63-64 10 (LES): 63 80: 65 01-10-80	.....	1	316 7099	
ATTACHING PARTS				
Horn Button Index Plate To Mounting Plate				
SCREW, Tapping..... 64-65 01: 63-64 10 (LES): 65 10-80: 63 80	17.680	2	G9406672	NA

Copyright 1963 American Motors Corp.

GROUP NO. — DESCRIPTION — YEAR and MODEL	PRIMARY GROUP NO.	PER CAR	PART NO.	CODE
3.406 RING, Horn Blowing				
60 01	.....	1	315 8673	
61 01-10-20-80 (Deluxe-Painted)	.....	1	316 0196	
61 01-10-20 (Super-Chrome): 62 01-10-80 (Deluxe And Custom): 63 01: 60 10..	.....	1	315 7808	
61 01-10-20-80 (Custom-Chrome)(Also Super On 80): 62 01-10-80 (400)	.....	1	315 7620	
64 01 (LES): 65 01	.....	1	317 0326	
64 01 (WES)	.....	1	317 0490	
60 10-20-80 (Deluxe-Painted)	.....	1	315 7810	
63-64 10 (LPS-LES): ***163 10-80 (CAN):*** 65 10 ***(Replaces 316 6991)***	.....	1	320 4550	
63 10 (WES-Note 3.406-1 Type 2): 64 10 (WES)	.....	1	316 6995	
63 10 (WPS-LES-Note 3.406-1 Type 2): 64 10 (WPS-LES)	.....	1	316 6993	
65 10 (LPS)(Except Marlin)	.....	1	317 5406	
65 10 (WPS)(Except Marlin)	.....	1	317 5407	
65 50 (Marlin-LPS)	.....	1	317 7343	
65 50 (Marlin-WPS)	.....	1	317 7509	
63 80 (WPS-Note 3.406-1 Type 2): 64 80 (WPS)...(Incl. Emblem)	.....	1	316 6996	
63-64 80 (LPS) ***(Replaces 316 6994)***	.....	1	320 4551	
65 80 (LPS)	.....	1	317 5394	
65 80 (WPS)	.....	1	317 5392	
CONTACT, Horn Blowing Ring (Incl. Wire)				
60 10-20-80 (Note 3.321-1 Type 1)	.....	1	320 1942	
60 10-20-80 (Note 3.321-1 Type 2)	.....	1	320 2583	
61 10-20-80 (Note 3.321-2 Type 1): 62 10-80 (Note 3.321-3 Types 1 And 3.321-4 Type 1) ***(Replaces 320 2602)***	.....	1	320 2981	
61 10-20-80 (Note 3.321-2 Type 2): 62 10-80 (Notes3.321-3 Type 2 And 3.321-4 Type 2) ***(Replaces 320 2814)***	.....	1	320 3294	
63 10-80: 64 10-80 (LAW): ***65 10 (RHD)***	.....	1	320 4049	#
65 10-80 (LAW)	.....	1	317 5548	
SEAT, Horn Blowing Ring (Upper)				
60 Thru 63 01: 60 Thru 62 10-20-80	.....	1	313 1590	
ATTACHING PARTS				
Horn Blowing Ring Upper Seat To Ring				
SCREW, Machine ..... 60 Thru 63 01: 60 Thru 62 10-20-80	17.614	2	G174964	NA
WASHER, Lock..... 60 Thru 63 01: 60 Thru 62 10-20-80	17.820	2	G131096	NA

NOTE 3.406-1: Two Types of Horn Rings were used on the 63 10-80 Model. They can be identified as follows:
Type 1: The Horn Ring has an extension at the End. Refer Illustration.
Type 2: The Horn Ring is less an extension at the End. Refer Illustration.



TYPE 1



TYPE 2

Copyright 1963 American Motors Corp.

GROUP NO. — DESCRIPTION — YEAR and MODEL	PRIMARY GROUP NO.	PER CAR	PART NO.	CODE
SPRING, Horn Blowing Ring				
60 Thru 63 01: 60 Thru 62 10-20-80	.....	1	313 1589	
64-65 01: 63 Thru 65 10-80	.....	1	316 9434	
SPRING, Horn Blowing Ring Contact				
60-61 01 ***(Replaces 313 3542)***	3.412	1	313 3642	
62-63 01	.....	1	316 3663	
64-65 01	.....	1	317 0332	
RETAINER, Horn Blowing Ring				
60 01	.....	1	313 4891	
61 01	.....	1	316 0741	
62-63 01	3.400	1	316 3669	
64-65 01	.....	1	317 0485	
60 Thru 62 10-20-80	.....	1	315 0138	
ATTACHING PARTS Horn Blowing Ring To Steering Wheel				
SCREW, Machine 60 01	17.614	3	G173028	NA
WASHER, Lock..... 60 01	17.820	3	G131095	NA
INSULATOR, Horn Blowing Ring Retainer				
60 01	.....	2	313 4892	
61 Thru 63 01: 60 Thru 62 10-20-80	.....	1	315 3889	
INSULATOR, Horn Blowing Ring Spoke				
61 Thru 63 01: 60 Thru 62 10-20-80	.....	1	315 7619	
ATTACHING PARTS Horn Blowing Ring Spoke Insulator To Steering Wheel				
STUD, Drive..... 61 Thru 63 01: 60 Thru 62 10-20-80	17.720	1	G443094	NA
INSULATOR, Horn Blowing Ring Plate Spacer				
61 Thru 63 01 (21/32" Long): 60 Thru 62 10-20-80	.....	3	315 7932	
61 01 (1/4" Long)	.....	3	316 0740	
INSULATOR, Horn Blowing Ring Contact Plate To Cam				
61-62 10-20-80.....	.....	1	316 1370	
INSULATOR, Horn Blowing Ring Brush				
63 Thru 65 10-80	.....	1	316 7356	
PIN, Horn Blowing Contact				
64-65 01	.....	1	317 0333	
PLATE, Horn Blowing Ring Contact				
60 Thru 62 10-20-80 ***(Replaces 315 7885)***	.....	1	316 1332	
63 Thru 65 10-80	.....	1	316 8003	
(Lower) 64-65 01	.....	1	317 0331	
(Upper) 64-65 01	3.400	1	317 0341	

Copyright 1963 American Motors Corp.

GROUP NO. — DESCRIPTION — YEAR and MODEL	PRIMARY GROUP NO.	PER CAR	PART NO.	CODE
ATTACHING PARTS				
Horn Blowing Ring Contact Plate To Steering Wheel				
SCREW, Tapping..... 64-65 01	17.666	3	G161631	NA
SCREW, Machine ..... 60 Thru 62 10-20-80	17.614	3	G111302	NA
WASHER, lock ..... 60 Thru 62 10-20-80	17.820	3	G131095	NA
RING, Horn Blowing Ring Plate Lock (Notched)				
61 Thru 63 01: 60 Thru 62 10-20-80	.....	1	315 0102	
ATTACHING PARTS				
Horn Blowing Ring Plate Lock Ring To Steering Wheel				
SCREW, Machine ..... 61 Thru 63 01: 60 Thru 62 10-80	17.614	3	G111302	NA
WASHER, Lock..... 61 Thru 63 01: 60 Thru 62 10-80	17.820	3	G131095	NA
EMBLEM, Horn Blowing Ring (Shield)				
63-64 80	.....	1	316 6998	
CUSHION, Horn Blowing Ring To Contact Plate				
64-65 01: 63 Thru 65 10-80	.....	1	316 8004	
PLATE, Horn Blowing Ring Index				
64-65 01: 63 Thru 65 10-80	.....	1	316 7099	
ATTACHING PARTS				
Horn Blowing Ring Index Plate To Ring				
SCREW, Tapping..... 64-65 01: 63 Thru 65 10-80	17.660	3	320 7023	
BRUSH, Horn Blowing Ring Contact				
63 Thru 65 10-80	.....	1	316 7357	
CLIP, Horn Blowing Ring Insulator Retainer				
63 Thru 65 10-80	.....	1	316 9375	
INSERT, Horn Ring				
65 50 (Marlin-LPS)	.....	1	317 7342	
65 50 (Marlin-WPS)	.....	1	317 7504	
65 80 (LPS)	.....	1	317 5395	
65 80 (WPS)	.....	1	317 5391	
3.416 SPRING, Horn Button				
60 01	.....	1	312 8312	
RETAINER, Horn Button Spring				
60 01	.....	1	312 8744	
BUMPER, Horn Button Spring Contact				
60 01	.....	1	313 1761	
ATTACHING PARTS				
Horn Button Spring Retainer To Steering Wheel				
SCREW, Tapping 60 01	17.658	3	G178812	NA

Copyright 1963 American Motors Corp.

GROUP NO. — DESCRIPTION — YEAR and MODEL	PRIMARY GROUP NO.	PER CAR	PART NO.	CODE
3.505 HOUSING, Instrument Cluster				
60 01 (Note 3.505-1)	.....	1	320 0844	
60 01 (Note 3.505-2)	.....	1	320 2370	
61 Thru 63 01	.....	1	320 2530	
64-65 01	.....	1	320 4653	
60-61 10-20-80	.....	1	320 1694	
62 10-80	.....	1	320 3047	
63 10-80: 64 10: ***65 10 (RHD)***	.....	1	320 3956	
65 10 (Except Marlin)	.....	1	320 5686	
65 50 (Marlin): 65 80	.....	1	320 5491	
64 80	.....	1	320 5016	
GROMMET, Instrument Cluster Housing To Instrument Cluster				
62-63 01: 60 Thru 62 10-20-80	.....	2	400 0053	
63-64 10-80: ***65 10 (RHD)***	.....	1	400 0151	
PLUG, Air And Defroster Controls Opening				
64-65 01 (LAC)(Less Heater)	.....	1	350 0720	
63-64 10-80 (Less Heater & Defroster)	.....	1	349 0224	
SEAL, Air And Defroster Controls Opening Light (Polyethylene)				
64-65 01 (WAC)(With Heater)	.....	2	320 5439	
STUD, Instrument Cluster Heater And A/C Switch Hole				
64-65 01 (LAC)(Less Heater)	.....	1	400 0191	
CLIP, Instrument Cluster Wire				
62-63 01 (RHD): 60-61 10-20-80	.....	1	344 4613	
ATTACHING PARTS Instrument Cluster Housing To Instrument Panel				
SCREW, Tapping..... 61 Thru 63 01	17.660	2	G161895	NA
SCREW, Tapping..... 64-65 01	17.665	2	G168590	NA
SCREW, Tapping..... 63-64 10-80: ***65 10 (RHD)***	17.666	2	G161670	NA
SCREW, Tapping..... 65 10-80 (LHD)	17.660	2	G161860	NA
SCREW, Machine ..... 60 Thru 62 10-20-80	17.598	4	G188749	NA
WASHER, Lock..... 61 Thru 63 01	17.826	2	G178378	NA
NUT, Speed 64-65 01	.....	2	400 0895	
NUT, Spring 63 10-80	17.426	2	G187999	NA
3.510 BEZEL, Instrument Cluster				
60-61 10-20-80 (LHD)	.....	1	344 0543	
62 10-80 (LHD-With Heater)	.....	1	347 5183	
62 10-80 (RHD-With Heater)	.....	1	347 5184	
62 10-80 (LHD-Less Heater)	.....	1	347 5177	
62 10-80 (RHD-Less Heater)	.....	1	347 5178	
(T-342-Upper) 63 10-80 (LHD)...(Incl. Seal) ***(Replaces 348 2475)***	.....	1	348 8936	
(T-342-Upper) ***63 10-80 (RHD)***...(Incl. Seal) ***(Replaces 348 2481)***	.....	1	348 8937	

NOTE 3.505-1: Two Types of Instrument Clusters were used on the 60 01. They can be identified as follows:
Type 1: Gasoline and Water Temperature Gauges are attached with Screws to Housing.
Type 2: Gasoline and Water Temperature Gauges are removed by disassembling Instrument Cluster.

NOTE 3.510-1: Two Types of Instrument Cluster Upper Bezel Assemblies were used on the 63 10-80 Models. They are identified as follows:
Type 1: Has a smooth shining Finish.
Type 2: Has a dull Suede Finish.

Copyright 1963 American Motors Corp.

GROUP NO. — DESCRIPTION — YEAR and MODEL	PRIMARY GROUP NO.	PER CAR	PART NO.	CODE
(T-342-Lower) 63 10-80	.....	1	348 2491	
(T-343-Upper) 63 10-80 (LHD)...(Incl. Seal) ***(Replaces 348 2476)***	.....	1	348 8938	
(T-343-Upper) ***63 10-80 (RHD-Note 3.510-1 Type 1)***...(Incl. Seal)	.....	1	348 2482	
(T-343-Upper) ***63 10-80 (RHD-Note 3.510-1 Type 2)***...(Incl. Seal)	.....	1	348 8939	
(T-343-Lower) 63 10-80	.....	1	348 2493	
(T-344-Upper) 63 10-80 (LHD-Note 3.510-1 Type 1)...(Incl. Seal) ***(Use 348 8940)***	.....	1	348 2477	#
(T-344-Upper) 63 10-80 (LHD-Note 3.510-1 Type 2)...(Incl. Seal)	.....	1	348 8940	
(T-344-Upper) ***63 10-80 (RHD-Note 3.510-1 Type 1)*** ...(Incl. Seal)	.....	1	348 2483	
(T-344-Upper) ***63 10-80 (RHD-Note 3.510-1 Type 2)***...(Incl. Seal)	.....	1	348 8941	
(T-344-Lower) 63 10-80	.....	1	348 2493	
(T-345-Upper) 63 10-80 (LHD)...(Incl. Seal) ***(Replaces 348 2479)***	.....	1	348 8942	
(T-345-Upper) ***63 10-80 (RHD-Note 3.510-1 Type 1)***...(Incl. Seal)	.....	1	348 2485	
(T-345-Upper) ***63 10-80 (RHD-Note 3.510-1 Type 2)***...(Incl. Seal)	.....	1	348 8943	
(T-345-Lower) 63 10-80	.....	1	348 2495	
(T-346-Upper) 63 10-80 (LHD)...(Incl. Seal) ***(Replaces 348 2478)***	.....	1	348 8944	
(T-346-Upper) ***63 10-80 (RHD-Note 3.510-1 Type 1)***...(Incl. Seal)	.....	1	348 2484	
(T-346-Upper) ***63 10-80 (RHD-Note 3.510-1 Type 2)***...(Incl. Seal)	.....	1	348 8945	
(T-346-Lower) 63 10-80	.....	1	348 2494	
(T-347-Upper) 63 10-80 (LHD)...(Incl. Seal) ***(Replaces 348 2480)***	.....	1	348 8946	
(T-347-Upper) ***63 10-80 (RHD-Note 3.510-1 Type 1)***...(Incl. Seal)	.....	1	348 2486	
(T-347-Upper) ***63 10-80 (RHD-Note 3.510-1 Type 2)***...(Incl. Seal)	.....	1	348 8947	
(T-347-Lower) 63 10-80	.....	1	348 2496	
(T-351-Upper) 63 10-80 (LHD)...(Incl. Seal) ***(Replaces 348 2475)***	.....	1	348 8936	
(T-351-Upper) ***63 10-80 (RHD)***...(Incl. Seal) ***(Replaces 348 2481)***	.....	1	348 8937	
(T-351-Lower) 63 10-80	.....	1	348 2491	
(T-352-Upper) 63 10-80 (LHD)...(Incl. Seal) ***(Replaces 348 2475)***	.....	1	348 8936	
(T-352-Upper) ***63 10-80 (RHD)*** ...(Incl. Seal) ***(Replaces 348 2481)***	.....	1	348 8937	
(T-352-Lower) 63 10-80	.....	1	348 2491	
(T-353-Upper) 63 10-80 (LHD)...(Incl. Seal) ***(Replaces 348 2476)***	.....	1	348 8938	
(T-353-Upper) ***63 10-80 (RHD-Note 3.510-1 Type 1)***...(Incl. Seal)	.....	1	348 2482	
(T-353-Upper) ***63 10-80 (RHD-Note 3.510-1 Type 2)***...(Incl. Seal)	.....	1	348 8939	
(T-353-Lower) 63 10-80	.....	1	348 2492	
(T-354-Upper) 63 10-80 (LHD-Note 3.510-1 Type 1)...(Incl. Seal) ***(Use 348 8940)***	.....	1	348 2477	#
(T-354-Upper) 63 10-80 (LHD-Note 3.510-1 Type 2)...(Incl. Seal)	.....	1	348 8940	
(T-354-Upper) ***63 10-80 (RHD-Note 3.510-1 Type 1)***...(Incl. Seal)	.....	1	348 2483	
(T-354-Upper) ***63 10-80 (RHD-Note 3.510-1 Type 2)***...(Incl. Seal)	.....	1	348 8941	
(T-354-Lower) 63 10-80	.....	1	348 2493	
(T-362-Upper) 63 10 (LHD)...(Incl. Seal) ***(Replaces 348 2475)***	.....	1	348 8936	
(T-362-Upper) ***63 10 (RHD)***...(Incl. Seal) ***(Replaces 348 2481)***	.....	1	348 8937	
(T-362-Lower) 63 10	.....	1	348 2491	
(T-363-Upper) 63 10 (LHD)...(Incl. Seal) ***(Replaces 348 2476)***	.....	1	348 8938	
(T-363-Upper) ***63 10 (RHD-Note 3.510-1 Type 1)***...(Incl. Seal)	.....	1	348 2482	
(T-363-Upper) ***63 10 (RHD-Note 3.510-1 Type 2)***...(Incl. Seal)	.....	1	348 8939	
(T-363-Lower) 63 10	.....	1	348 2492	
(T-364-Upper) 63 10 (LHD-Note 3.510-1 Type 1)...(Incl. Seal) ***(Use 349 8940)***	.....	1	348 2477	#
(T-364-Upper) 63 10 (LHD-Note 3.510-1 Type 2)...(Incl. Seal)	.....	1	348 8940	
(T-364-Upper) ***63 10 (RHD-Note 3.510-1 Type 1)***...(Incl. Seal)	.....	1	348 2483	
(T-364-Upper) ***63 10 (RHD-Note 3.510-1 Type 2)***...(Incl. Seal)	.....	1	348 8941	
(T-364-Lower) 63 10	.....	1	348 2493	
(T-365-Upper) 63 10 (LHD)...(Incl. Seal) ***(Replaces 348 2479)***	.....	1	348 8942	
(T-365-Upper) ***63 10 (RHD-Note 3.510-1 Type 1)***...(Incl. Seal)	.....	1	348 2485	
(T-365-Upper) ***63 10 (RHD-Note 3.510-1 Type 2)***...(Incl. Seal)	.....	1	348 8943	
(T-365-Lower) 63 10	.....	1	348 2495	
(T-366-Upper) 63 10 (LHD)...(Incl. Seal) ***(Replaces 348 2478)***	.....	1	348 8944	
(T-366-Upper) 63 10 (***RHD-Note 3.510-1 Type 1***)...(Incl. Seal)	.....	1	348 2484	
(T-366-Upper) ***63 10 (RHD-Note 3.510-1 Type 2)***...(Incl. Seal)	.....	1	348 8945	
(T-366-Lower) 63 10	.....	1	348 2494	
(T-372-Upper) 63 10 (LHD)...(Incl. Seal) ***(Replaces 348 2475)***	.....	1	348 8936	
(T-372-Upper) ***63 10 (RHD)***...(Incl. Seal) ***(Replaces 348 2481)***	.....	1	348 8937	
(T-372-Lower) 63 10	.....	1	348 2491	
(T-373-Upper) 63 10 (LHD)...(Incl. Seal) ***(Replaces 348 2476)***	.....	1	348 8938	
(T-373-Upper) ***63 10 (RHD-Note 3.510-1 Type 1)***...(Incl. Seal)	.....	1	348 2482	
(T-373-Upper) ***63 10 (RHD-Note 3.510-1 Type 2)***...(Incl. Seal)	.....	1	348 8939	
(T-373-Lower) 63 10	.....	1	348 2492	

Copyright 1963 American Motors Corp.

GROUP NO. — DESCRIPTION — YEAR and MODEL	PRIMARY GROUP NO.	PER CAR	PART NO.	CODE
(T-374-Upper) 63 10 (LHD-Note 3.510-1 Type 1)...(Incl. Seal) ***(Use 348 8940)***	.....	1	348 2477	#
(T-374-Upper) 63 10 (LHD-Note 3.510-1 Type 2)...(Incl. Seal)	.....	1	348 8940	
(T-374-Upper) ***63 10 (RHD-Note 3.510-1 Type 1)***...(Incl. Seal)	.....	1	348 2483	
(T-374-Upper) ***63 10 (RHD-Note 3.510-1 Type 2)***...(Incl. Seal)	.....	1	348 8941	
(T-374-Lower) 63 10	.....	1	348 2493	
(T-375-Upper) 63 10 (LHD)...(Incl. Seal)...***(Replaces 348 2479)***	.....	1	348 8942	
(T-375-Upper) ***63 10 (RHD-Note 3.510-1 Type 1)***...(Incl. Seal)	.....	1	348 2485	
(T-375-Upper) ***63 10 (RHD-Note 3.510-1 Type 2)***...(Incl. Seal)	.....	1	348 8943	
(T-375-Lower) 63 10	.....	1	348 2495	
(T-376-Upper) 63 10 (LHD)...(Incl. Seal)...***(Replaces 348 2478)***	.....	1	348 8944	
(T-376-Upper) ***63 10 (RHD-Note 3.510-1 Type 1)***...(Incl. Seal)	.....	1	348 2484	
(T-376-Upper) ***63 10 (RHD-Note 3.510-1 Type 2)***...(Incl. Seal)	.....	1	348 8945	
(T-376-Lower) 63 10	.....	1	348 2494	
(T-377-Upper) 63 10 (LHD)...(Incl. Seal)...***(Replaces 348 2480)***	.....	1	348 8946	
(T-377-Upper) ***63 10 (RHD-Note 3.510-1 Type 1)***...(Incl. Seal)	.....	1	348 2486	
(T-377-Upper) ***63 10 (RHD-Note 3.510-1 Type 2)***...(Incl. Seal)	.....	1	348 8947	
(T-377-Lower) 63 10	.....	1	348 2496	
(T-382-Upper) 63 80 (LHD)...(Incl. Seal)...***(Replaces 348 2475)***	.....	1	348 8936	
(T-382-Upper) ***63 80 (RHD)***...(Incl. Seal)...***(Replaces 348 2481)***	.....	1	348 8937	
(T-382-Lower) 63 80	.....	1	348 2491	
(T-383-Upper) 63 80 (LHD)...(Incl. Seal)...***(Replaces 348 2476)***	.....	1	348 8938	
(T-383-Upper) ***63 80 (RHD-Note 3.510-1 Type 1)***...(Incl. Seal)	.....	1	348 2482	
(T-383-Upper) ***63 80 (RHD-Note 3.510-1 Type 2)***...(Incl. Seal)	.....	1	348 8939	
(T-383-Lower) 63 80	.....	1	348 2492	
(T-384-Upper) 63 80 (LHD-Note 3.510-1 Type 1)...(Incl. Seal) ***(Use 348 8940)***	.....	1	348 2477	#
(T-384-Upper) 63 80 (LHD-Note 3.510-1 Type 2)...(Incl. Seal)	.....	1	348 8940	
(T-384-Upper) ***63 80 (RHD-Note 3.510-1 Type 1)***...(Incl. Seal)	.....	1	348 2483	
(T-384-Upper) ***63 80 (RHD-Note 3.510-1 Type 2)***...(Incl. Seal)	.....	1	348 8941	
(T-384-Lower) 63 80	.....	1	348 2493	
(T-385-Upper) 63 80 (LHD)...(Incl. Seal)...***(Replaces 348 2479)***	.....	1	348 8942	
(T-385-Upper) ***63 80 (RHD-Note 3.510-1 Type 1)***...(Incl. Seal)	.....	1	348 2485	
(T-385-Upper) ***63 80 (RHD-Note 3.510-1 Type 2)***...(Incl. Seal)	.....	1	348 8943	
(T-385-Lower) 63 80	.....	1	348 2495	
(T-386-Upper) 63 80 (LHD)...(Incl. Seal)...***(Replaces 348 2478)***	.....	1	348 8944	
(T-386-Upper) ***63 80 (RHD-Note 3.510-1 Type 1)***...(Incl. Seal)	.....	1	348 2484	
(T-386-Upper) ***63 80 (RHD-Note 3.510-1 Type 2)***...(Incl. Seal)	.....	1	348 8945	
(T-386-Lower) 63 80	.....	1	348 2494	
(T-392-Upper) 63 80 (LHD)...(Incl. Seal)...***(Replaces 348 2475)***	.....	1	348 8936	
(T-392-Upper) ***63 80 (RHD)***...(Incl. Seal)...***(Replaces 348 2481)***	.....	1	348 8937	
(T-392-Lower) 63 80	.....	1	348 2491	
(T-393-Upper) 63 80 (LHD)...(Incl. Seal)...***(Replaces 348 2476)***	.....	1	348 8938	
(T-393-Upper) ***63 80 (RHD-Note 3.510-1 Type 1)***...(Incl. Seal)	.....	1	348 2482	
(T-393-Upper) ***63 80 (RHD-Note 3.510-1 Type 2)***...(Incl. Seal)	.....	1	348 8939	
(T-393-Lower) 63 80	.....	1	348 2492	
(T-394-Upper) 63 80 (LHD-Note 3.510-1 Type 1)...(Incl. Seal) ***(Use 348 8940)***	.....	1	348 2477	#
(T-394-Upper) 63 80 (LHD-Note 3.510-1 Type 2)...(Incl. Seal)	.....	1	348 8940	
(T-394-Upper) ***63 80 (RHD-Note 3.510-1 Type 1)***...(Incl. Seal)	.....	1	348 2483	
(T-394-Upper) ***63 80 (RHD-Note 3.510-1 Type 2)***...(Incl. Seal)	.....	1	348 8941	
(T-394-Lower) 63 80	.....	1	348 2493	
(T-395-Upper) 63 80 (LHD)...(Incl. Seal)...***(Replaces 348 2479)***	.....	1	348 8942	
(T-395-Upper) ***63 80 (RHD-Note 3.510-1 Type 1)***...(Incl. Seal)	.....	1	348 2485	
(T-395-Upper) ***63 80 (RHD-Note 3.510-1 Type 2)***...(Incl. Seal)	.....	1	348 8943	
(T-395-Lower) 63 80	.....	1	348 2495	
(T-396-Upper) 63 80 (LHD)...(Incl. Seal)...***(Replaces 348 2478)***	.....	1	348 8944	
(T-396-Upper) ***63 80 (RHD-Note 3.510-1 Type 1)***...(Incl. Seal)	.....	1	348 2484	
(T-396-Upper) ***63 80 (RHD-Note 3.510-1 Type 2)***...(Incl. Seal)	.....	1	348 8945	
(T-396-Lower) 63 80	.....	1	348 2494	
(T-397-Upper) 63 80 (LHD)...(Incl. Seal)...***(Replaces 348 2480)***	.....	1	348 8946	
(T-397-Upper) ***63 80 (RHD-Note 3.510-1 Type 1)***...(Incl. Seal)	.....	1	348 2486	
(T-397-Upper) ***63 80 (RHD-Note 3.510-1 Type 2)***...(Incl. Seal)	.....	1	348 8947	
(T-397-Lower) 63 80	.....	1	348 2496	
(T-452-Upper) 64 10 (LHD)...(Incl. Seal)	.....	1	348 8936	
(T-452-Upper) ***64 10 (RHD)***...(Incl. Seal)	.....	1	348 8937	
(T-452-Lower) 64 10 (LAW)	.....	1	351 2207	
(T-452-Lower) 64 10 (WAW)	.....	1	352 0982	

Copyright 1963 American Motors Corp.

GROUP NO. — DESCRIPTION — YEAR and MODEL	PRIMARY GROUP NO.	PER CAR	PART NO.	CODE
(T-453-Upper) 64 10 (LHD)...(Incl. Seal)	.....	1	351 2192	
(T-453-Upper) ***64 10 (RHD)***...(Incl. Seal)	.....	1	351 2198	
(T-453-Lower) 64 10 (LAW)	.....	1	351 2208	
(T-453-Lower) 64 10 (WAW)	.....	1	352 0983	
(T-454-Upper) 64 10 (LHD)...(Incl. Seal)	.....	1	351 2193	
(T-454-Upper) ***64 10 (RHD)***...(Incl. Seal)	.....	1	351 2199	
(T-454-Lower) 64 10 (LAW)	.....	1	351 2209	
(T-454-Lower) 64 10 (WAW)	.....	1	352 0984	
(T-462-Upper) 64 10 (LHD)...(Incl. Seal)	.....	1	348 8936	#
(T-462-Lower) 64 10 (LAW)	.....	1	351 2207	
(T-462-Lower) 64 10 (WAW)	.....	1	352 0982	
(T-463-Upper) 64 10 (LHD)...(Incl. Seal)	.....	1	351 2192	
(T-463-Upper) ***64 10 (RHD)***...(Incl. Seal)	.....	1	351 2198	
(T-463-Lower) 64 10 (LAW)	.....	1	351 2208	
(T-463-Lower) 64 10 (WAW)	.....	1	352 0983	
(T-464-Upper) 64 10 (LHD)...(Incl. Seal)	.....	1	351 2193	
(T-464-Upper) ***64 10 (RHD)***...(Incl. Seal)	.....	1	351 2199	
(T-464-Lower) 64 10 (LAW)	.....	1	351 2209	
(T-464-Lower) 64 10 (WAW)	.....	1	352 0984	
(T-465-Upper) 64 10 (LHD)...(Incl. Seal)	.....	1	351 2195	
(T-465-Upper) ***64 10 (RHD)***...(Incl. Seal)	.....	1	351 2201	
(T-465-Lower) 64 10 (LAW)	.....	1	351 2210	
(T-465-Lower) 64 10 (WAW)	.....	1	352 0985	
(T-466-Upper) 64 10 (LHD)...(Incl. Seal)	.....	1	351 2196	
(T-466-Upper) ***64 10 (RHD)***...(Incl. Seal)	.....	1	351 2202	
(T-466-Lower) 64 10 (LAW)	.....	1	351 2212	
(T-466-Lower) 64 10 (WAW)	.....	1	352 0987	
(T-468-Upper) 64 10 (LHD)...(Incl. Seal)	.....	1	351 2194	
(T-468-Upper) ***64 10 (RHD)***...(Incl. Seal)	.....	1	351 2200	
(T-468-Lower) 64 10 (LAW)	.....	1	351 2211	
(T-468-Lower) 64 10 (WAW)	.....	1	352 0986	
(T-471-Upper) 64 10 (LHD)...(Incl. Seal)...***(Replaces 348 2475)***	.....	1	348 8936	
(T-471-Upper) ***64 10 (RHD)***...(Incl. Seal)...***(Replaces 348 2481)***	.....	1	348 8937	
(T-471-Lower) 64 10 (LAW)	.....	1	351 2206	
(T-471-Lower) 64 10 (WAW)	.....	1	352 0981	
(T-472-Lower) 64 10 (LAW)	.....	1	351 2207	
(T-472-Lower) 64 10 (WAW)	.....	1	352 0982	
(T-473-Upper) 64 10 (LHD)...(Incl. Seal)	.....	1	351 2192	
(T-473-Upper) ***64 10 (RHD)***...(Incl. Seal)	.....	1	351 2198	
(T-473-Lower) 64 10 (LAW)	.....	1	351 2208	
(T-473-Lower) 64 10 (WAW)	.....	1	352 0983	
(T-474-Upper) 64 10 (LHD)...(Incl. Seal)	.....	1	351 2193	
(T-474-Upper) ***64 10 (RHD)***...(Incl. Seal)	.....	1	351 2199	
(T-474-Lower) 64 10 (LAW)	.....	1	351 2209	
(T-474-Lower) 64 10 (WAW)	.....	1	352 0984	
(T-475-Upper) 64 10 (LHD)...(Incl. Seal)	.....	1	351 2195	
(T-475-Upper) ***64 10 (RHD)***...(Incl. Seal)	.....	1	351 2201	
(T-475-Lower) 64 10 (LAW)	.....	1	351 2210	
(T-475-Lower) 64 10 (WAW)	.....	1	352 0985	
(T-476-Upper) 64 10 (LHD)...(Incl. Seal)	.....	1	351 2196	
(T-476-Upper) ***64 10 (RHD)***...(Incl. Seal)	.....	1	351 2202	
(T-476-Lower) 64 10 (LAW)	.....	1	351 2212	
(T-476-Lower) 64 10 (WAW)	.....	1	352 0987	
(T-477-Upper) 64 10 (LHD)...(Incl. Seal)	.....	1	351 2197	
(T-477-Upper) ***64 10 (RHD)***...(Incl. Seal)	.....	1	351 2203	
(T-477-Lower) 64 10 (LAW)	.....	1	351 2213	
(T-477-Lower) 64 10 (WAW)	.....	1	352 0988	
(T-478-Upper) 64 10 (LHD)...(Incl. Seal)	.....	1	351 2194	
(T-478-Upper) ***64 10 (RHD)***...(Incl. Seal)	.....	1	351 2200	
(T-478-Lower) 64 10 (LAW)	.....	1	351 2211	
(T-478-Lower) 64 10 (WAW)	.....	1	352 0986	
(T-491-Upper) 64 80 (LHD)...(Incl. Seal)...***(Replaces 348 2475)***	.....	1	348 8936	
(T-491-Upper) ***64 80 (RHD)***...(Incl. Seal)...***(Replaces 348 2481)***	.....	1	348 8937	
(T-491-Lower) 64 80 (LAW)	.....	1	351 2206	
(T-491-Lower) 64 80 (WAW)	.....	1	352 0981	

Copyright 1963 American Motors Corp.

GROUP NO. — DESCRIPTION — YEAR and MODEL	PRIMARY GROUP NO.	PER CAR	PART NO.	CODE
(T-492-Lower) 64 80 (LAW)	.....	1	351 220 7	
(T-492-Lower) 64 80 (WAW)	.....	1	352 0982	
(T-493-Upper) 64 80 (LHD)...(Incl. Seal)	.....	1	351 2192	
(T-493-Upper) ***64 80 (RHD)***...(Incl. Seal)	.....	1	351 2198	
(T-493-Lower) 64 80 (LAW)	.....	1	351 2208	
(T-493-Lower) 64 80 (WAW)	.....	1	352 0983	
(T-494-Upper) 64 80 (LHD)...(Incl. Seal)	.....	1	351 2193	
(T-494-Upper) ***64 80 (RHD)***...(Incl. Seal)	.....	1	351 2199	
(T-494-Lower) 64 80 (LAW)	.....	1	351 2209	
(T-494-Lower) 64 80 (WAW)	.....	1	352 0984	
(T-495-Upper) 64 80 (LHD)...(Incl. Seal)	.....	1	351 2195	
(T-495-Upper) ***64 80 (RHD)***...(Incl. Seal)	.....	1	351 2201	
(T-495-Lower) 64 80 (LAW)	.....	1	351 2210	
(T-495-Lower) 64 80 (WAW)	.....	1	352 0985	
(T-496-Upper) 64 80 (LHD)...(Incl. Seal)	.....	1	351 2196	
(T-496-Upper) ***64 80 (RHD)***...(Incl. Seal)	.....	1	351 2202	
(T-496-Lower) 64 80 (LAW)	.....	1	351 2212	
(T-496-Lower) 64 80 (WAW)	.....	1	352 0987	
(T-497-Upper) 64 80 (LHD)...(Incl. Seal)	.....	1	351 2197	
(T-497-Upper) ***64 80 (RHD)***...(Incl. Seal)	.....	1	351 2203	
(T-497-Lower) 64 80 (LAW)	.....	1	351 2213	
(T-497-Lower) 64 80 (WAW)	.....	1	352 0988	
(T-498-Upper) 64 80 (LHD)...(Incl. Seal)	.....	1	351 2194	
(T-498-Upper) ***64 80 (RHD)***...(Incl. Seal)	.....	1	351 2200	
(T-498-Lower) 64 80 (LAW)	.....	1	351 2211	
(T-498-Lower) 64 80 (WAW)	.....	1	352 0986	
(T-552) 65 10 (LHD-Less Crash Pad)	.....	1	351 6521	
(T-552-Upper) ***65 10 (RHD)***	.....	1	354 2570	
(T-552-Lower) ***65 10 (RHD)***	.....	1	354 2576	
(T-553) 65 10 (LHD-Less Crash Pad)	.....	1	351 6522	
(T-553-Upper) ***65 10 (RHD)***	.....	1	354 2571	
(T-553-Lower) ***65 10 (RHD)***	.....	1	354 2577	
(T-557) 65 10 (LHD-Less Crash Pad)	.....	1	351 6524	
(T-557-Upper) ***65 10 (RHD)***	.....	1	354 2573	
(T-557-Lower) ***65 10 (RHD)***	.....	1	354 2579	
(T-562) 65 10 (LHD-Less Crash Pad)	.....	1	351 6521	
(T-562-Upper) ***65 10 (RHD)***	.....	1	354 2570	
(T-562-Lower) ***65 10 (RHD)***	.....	1	354 2576	
(T-563) 65 10 (LHD-Less Crash Pad)	.....	1	351 6522	
(T-563-Upper) ***65 10 (RHD)***	.....	1	354 2571	
(T-563-Lower) ***65 10 (RHD)***	.....	1	354 2577	
(T-564) 65 10 (LHD-Less Crash Pad)	.....	1	351 6523	
(T-564-Upper) ***65 10 (RHD)***	.....	1	354 2572	
(T-564-Lower) ***65 10 (RHD)***	.....	1	354 2578	
(T-565) 65 10 (LHD-Less Crash Pad)	.....	1	351 6525	
(T-565-Upper) ***65 10 (RHD)***	.....	1	354 2574	
(T-565-Lower) ***65 10 (RHD)***	.....	1	354 2580	
(T-566) 65 10 (LHD-Less Crash Pad)	.....	1	351 6526	
(T-566-Upper) ***65 10 (RHD)***	.....	1	354 2575	
(T-566-Lower) ***65 10 (RHD)***	.....	1	354 2581	
(T-567) 65 10 (LHD-Less Crash Pad)	.....	1	351 6524	
(T-567-Upper) ***65 10 (RHD)***	.....	1	354 2573	
(T-567-Lower) ***65 10 (RHD)***	.....	1	354 2579	
(T-571) 65 10 (LHD-Less Crash Pad)	.....	1	351 6521	
(T-571-Upper) ***65 10 (RHD)***	.....	1	354 2570	
(T-571-Lower) ***65 10 (RHD)***	.....	1	354 2576	
(T-573) 65 10 (LHD-Less Crash Pad)	.....	1	351 6522	
(T-573-Upper) ***65 10 (RHD)***	.....	1	354 2571	
(T-573-Lower) ***65 10 (RHD)***	.....	1	354 2577	
(T-574) 65 10 (LHD-Less Crash Pad)	.....	1	351 6523	
(T-574-Upper) ***65 10 (RHD)***	.....	1	354 2574	
(T-574-Lower) ***65 10 (RHD)***	.....	1	354 2578	
(T-575) 65 10 (LHD-Less Crash Pad)	.....	1	351 6525	
(T-575-Upper) ***65 10 (RHD)***	.....	1	354 2574	
(T-575-Lower) ***65 10 (RHD)***	.....	1	354 2580	
(T-576) 65 10 (LHD-Less Crash Pad)	.....	1	351 6526	
(T-576-Upper) ***65 10 (RHD)***	.....	1	354 2575	
(T-576-Lower) ***65 10 (RHD)***	.....	1	354 2581	

Copyright 1963 American Motors Corp.

GROUP NO. — DESCRIPTION — YEAR and MODEL	PRIMARY GROUP NO.	PER CAR	PART NO.	CODE
(T-577) 65 10 (LHD-Less Crash Pad)	.....	1	351 6524	
(T-577-Upper) ***65 10 (RHD)***	.....	1	354 2573	
(T-577-Lower) ***65 10 (RHD)***	.....	1	354 2579	
(T-578) 65 10 (LHD-Less Crash Pad)	.....	1	351 6521	
(T-578-Upper) ***65 10 (RHD)***	.....	1	354 2570	
(T-578-Lower) ***65 10 (RHD)***	.....	1	354 2576	
(T-582) 65 80 (LHD-Less Crash Pad)	.....	1	351 6521	
(T-583) 65 80 (LHD-Less Crash Pad)	.....	1	351 6522	
(T-584) 65 80 (LHD-Less Crash Pad)	.....	1	351 6523	
(T-585) 65 80 (LHD-Less Crash Pad)	.....	1	351 6525	
(T-586) 65 80 (LHD-Less Crash Pad)	.....	1	351 6526	
(T-587) 65 80 (LHD-Less Crash Pad)	.....	1	351 6524	
ATTACHING PARTS				
Instrument Cluster Bezel To Instrument Panel				
SCREW, Machine 60-61 10-20-80	17.598	4	G188749	NA
SCREW, Machine 62 10-80	23.074	2	400 0051	
SCREW, Tapping..... 65 10-80 (LHD)	17.671	3	G9411532	NA
WASHER, Lock..... 60-61 10-20-80	17.820	4	G120380	NA
NUT, Stamped..... 65 10-80 (LHD-Less Crash Pad)	17.428	10	G9419841	NA
Instrument Cluster Upper Bezel To Instrument Panel				
CLIP..... 63-64 10-80	.....	2	348 2488	
SCREW, Tapping..... 63-64 10-80	17.660	4	G161631	NA
Instrument Cluster Upper Bezel To Lower Bezel				
SEAL..... 63-64 10-80	13.488	1	316 8866	
Instrument Cluster Lower Bezel To Instrument Panel				
SCREW, Tapping..... 63-64 10-80	17.660	4	G161872	NA
SCREW, Tapping ..... 65 10 (LHD)	17.655	4	G168590	
Instrument Cluster Lower Bezel To Upper Bezel				
SCREW, Tapping..... 63 10-80	17.648	3	G449217	NA
SCREW, Tapping..... 64 10-80	27.005	3	400 1407	
Instrument Cluster Lower Bezel To Instrument Panel Mounting Bracket				
NUT, Spinlock..... 63-64 10-80	25.052	4	439 0742	
DIAL, Instrument Control (Heater And Lights)				
63 10-80	.....	1	348 2974	
64 10: ***65 10 (RHD)***	.....	1	352 0823	
64 80 (LHD)	.....	1	352 0837	
DIAL, Instrument Control (Windshield Wiper And Ignition Switch)				
63 10-80 (LHD)	.....	1	348 2976	
63 10-80 (RHD)	.....	1	348 2977	
64 10 (LHD)	.....	1	352 0821	
64-65 10 (RHD)	.....	1	352 0822	
64 80 (LHD)	.....	1	352 0838	
FILTER, Instrument Control Dial				
65 10 (LHD)(Except Marlin)	.....	2	352 0871	
DIAL, Instrument Control (Blower, Wiper And Lights)				
65 10 (LHD)(Except Marlin)	.....	1	351 6582	
OVERLAY, Instrument Cluster Bezel Assembly				
65 10 (LHD-LAC)(Except Marlin)	.....	1	351 6576	
65 10 (LHD-WAC)(Except Marlin)	.....	1	351 6577	
65 50 (Marlin): 65 80 (LHD)	.....	1	351 6578	

Copyright 1963 American Motors Corp.

GROUP NO. — DESCRIPTION — YEAR and MODEL	PRIMARY GROUP NO.	PER CAR	PART NO.	CODE
ATTACHING PARTS				
Overlay To Instrument Panel				
SCREW, Tapping ..... 65 50 (Marlin): 65 80	17.671	2	G9411429	NA
Overlay To Bracket				
SCREW, Tapping ..... 65 50 (Marlin): 65 80	17.655	2	G168590	NA
BEZEL, Instrument Control Dial				
65 10 (LHD)(Except Marlin).....	22.100	3	351 6641	#
(Left) 63 10-80	.....	1	348 2979	
(Left) 64 10-80: ***65 10 (RHD)***	.....	1	352 8341	
(Right) 63 10-80	.....	1	348 2978	
(Right) 64 10-80: ***65 10 (RHD)***	.....	1	352 8340	
PLATE, Instrument Control Dial Backing (Heater And Lights)				
63 10-80.....	.....	1	347 2902	
64 10: ***65 10 (RHD)***.....	.....	1	352 0832	
64 80.....	.....	1	352 0834	
PLATE, Instrument Control Dial Backing (Windshield Wiper And Ignition Switch)				
63 10-80.....	.....	1	347 2903	
64 10: ***65 10 (RHD)***.....	.....	1	352 0833	
64 80.....	.....	1	352 0835	
PLATE, Instrument Control Dial Backing (Lights, Blower And Windshield Wiper)				
65 10 (LHD)(Except Marlin).....	22.100	1	351 6606	
LAMP, Instrument Control Dial (Windshield Wiper And Map Light)				
65 50 (Marlin): 65 80	3.635	1	352 0870	
BULB, Instrument Control Dial Lamp				
65 10-80.....	3.215	AR	320 4552	
FERRULE, Instrument Control Switch				
63-64 10-80 (With Heater 3 Req.)(Less Heater 2 Req.).....	3.150	AR	400 0145	
63-64 10-80 (Less Heater): ***65 10 (RHD)***	3.150	1	400 0533	#
ATTACHING PARTS				
Instrument Control Switch Ferrule To Instrument Cluster Bezel				
NUT, Spring..... 63 10-80 (With Heater 3 Req.)(Less Heater 2 Req.)..	17.421	AR	G445172	NA
Instrument Control Switch Ferrule To Instrument Cluster Backing Plate				
NUT, Spring..... 63 10-80 (With Heater 3 Req.)(Less Heater 2 Req.)..	13.017	AR	400 0130	
3.515 LENS, Instrument Cluster				
64 01	.....	1	320 4655	
65 01	.....	1	320 5681	
65 10 (Except Marlin).....	.....	1	320 5692	
65 50 (Marlin): 65 80	.....	1	320 5498	
(Outer) 60 01	.....	1	320 2089	
(Miles) 61 Thru 63 01	.....	1	320 2531	
(Miles) 60-61 10-20-80	.....	1	320 1697	
(Miles) 62 10-80.....	.....	1	320 3048	
(Miles) 63 10-80	.....	1	320 3957	
(Miles) 64 10: ***65 10 (RHD)***	.....	1	320 4901	

NOTE 3.515-1: **Two Types of Instrument Cluster Lens Masks were used on the Canadian 164 01 series. They can be identified as follows:**
Type 1: Used to Car Code No. BT-127237.
Typw 2: Used from Car Code No. BT-127238.

Copyright 1963 American Motors Corp.

GROUP NO. — DESCRIPTION — YEAR and MODEL	PRIMARY GROUP NO.	PER CAR	PART NO.	CODE
(Miles) 64 80	.....	1	320 4945	
(Kilo) 61 Thru 63 01	.....	1	320 2532	
(Kilo) 60-61 10-20-80	.....	1	320 1698	
(Kilo) 62 10-80	.....	1	320 3049	
(Kilo) 63 10-80	.....	1	320 3958	
(Kilo) 64 10: ***65 10 (RHD)***	.....	1	320 4897	
(Kilo) 64 80	.....	1	320 4946	
MASK, Instrument Cluster Lens				
63 10-80...(Incl. Red And Green Jewels)	.....	1	320 3984	
64 10: ***65 10 (RHD)***	.....	1	320 4900	
64 80	.....	1	320 4936	
(Left) 64 01: ***64 01 (Can-Note 3.515-1 Type 1)***	.....	1	320 5063	
(Left) 65 01: ***164 01 (Can-Note 3.515-1 Type 2)***	.....	1	320 5683	
(Right) 64 01: ***164 01 (Can-Note 3.515-1 Type 1)***	.....	1	320 5062	
(Right) 65 01: ***164 01 (Can-Note 3.515-1 Type 2)***	.....	1	320 5682	
(Miles) 65 10 (Except Marlin)	.....	1	320 5693	
(Miles 65 50 (Marlin)	.....	1	320 6128	
(Miles) 65 80	.....	1	320 5492	
(Kilos) 65 10 (Except Marlin)	.....	1	320 5694	#
(Kilos) 65 50 (Marlin): 65 80	.....	1	320 5493	#
ATTACHING PARTS Mask To Housing				
SCREW, Tapping..... 65 50 (Marlin): 65 80	.....	3	320 6024	
LENS, Instrument Cluster Mask (Alternator And Oil)				
65 50 (Marlin): 65 80	.....	1	320 5494	
OVERLAY, Instrument Cluster Lens				
65 50 (Marlin): 65 80	.....	1	320 5497	
OVERLAY, Instrument Cluster				
64-65 01	.....	1	320 4654	
3.520 CONDUCTOR, Instrument Cluster (Printed Circuit)				
64 01	.....	1	320 4656	
65 01	.....	1	320 5684	
63 10-80 ***(Replaces 320 3983)***	.....	1	320 5417	
64 10-80: ***65 10 (RHD)***...(Incl. Diffusers) ***(Replaces 320 4890)***	.....	1	320 5418	
65 10 (Except Marlin)	.....	1	320 5696	
65 50 (Marlin): 65 80	.....	1	320 5496	
CONNECTOR, Instrument Cluster				
64-65 01: 63-64 10-80 (Less Radio): 65 10 (Less Radio)	.....	1	348 2309	
63 10-80 (With Radio)	15.320	1	348 2433	
3.525 RETAINER, Instrument Cluster Lens				
60 01 ***(Replaces 313 2803)***	.....	1	312 8973	
3.530 BRACKET, Instrument Cluster				
60 01	.....	3	312 8972	
ATTACHING PARTS Instrument Cluster Bracket To Instrument Panel				
WASHER, Lock..... 60 01	17.820	3	G118873	NA
NUT, Hexagon..... 60 01	17.412	3	G120614	NA

Copyright 1963 American Motors Corp.

GROUP NO. — DESCRIPTION — YEAR and MODEL	PRIMARY GROUP NO.	PER CAR	PART NO.	CODE
3.550 SPEEDOMETER				
(Miles) 60 01	.....	1	320 0848	
(Miles) 61 Thru 63 01	.....	1	320 2528	
(Miles) 64 01: ***164 01 (Can-Note 3. 515-1 Type 1)***	.....	1	320 4649	
(Miles) 65 01: ***164 01 (Can-Note 3. 515-1 Type 2)***	.....	1	320 5678	
(Miles) 60-61 10-20-80	.....	1	320 1690	
(Miles) ***60 Thru 64 10-20-80 (Police)***	.....	1	315 2958	
(Miles) 62 10-80	.....	1	320 3043	
(Miles) 63 10-80	.....	1	320 3952	
(Miles) 64 10-80: ***65 10 (RHD)***	.....	1	320 5088	
(Miles) 65 10 (Except Marlin)	.....	1	320 5690	
(Miles) ***65 10-80 (Police)***	.....	1	317 2295	
(Miles) 65 50 (Marlin)	.....	1	320 6127	
(Miles) 65 80	.....	1	320 5486	
(Kilo) 60 01	.....	1	320 0850	
(Kilo) 61 Thru 63 01	.....	1	320 2529	
(Kilo) 64 01	.....	1	320 4650	
(Kilo) 65 01	.....	1	320 5685	
(Kilo) 60-61 10-20-80	.....	1	320 1691	
(Kilo) 62 10-80	.....	1	320 3044	
(Kilo) 63-64 10-80: ***65 10 (RHD)*** ***(Replaces 320 3953)***	.....	1	320 5089	
(Kilo) 65 10 (Except Marlin)	.....	1	320 5691	#
(Kilo) 65 50 (Marlin): 65 80	.....	1	320 5487	#
ATTACHING PARTS				
Speedometer To Instrument Cluster Housing				
SCREW, Tapping..... 60 Thru 64 01-10-20-80	17.616	2	G155103	NA
WASHER, Lock..... 60 Thru 64 01-10-20-80	.....	2	320 0022	
Speedometer To Bracket				
SCREW, Machine..... ***60 Thru 65 10-20-80 (Police)*** ***(Replaces 800 0081)***	17.671	2	400 1011	
GASKET, Speedometer To Instrument Cluster Housing				
65 01-10 (Except Marlin)	.....	1	320 6956	
EYELET, Speedometer To Instrument Cluster Housing				
65 01-10 (Except Marlin)...(Incl. Grommet)	.....	1	320 6955	
HOOD, Speedometer				
60 Thru 65 10-20-80 (Police)	.....	1	320 2977	
BRACKET, Speedometer				
60 Thru 62 10-20-80 (Police)	.....	1	315 9532	
60 Thru 62 10-20-80 (Heavy Duty-Note 3. 550-1)	.....	1	316 0144	
63-64 10-80 (Police)	.....	1	316 9198	
65 10-80 (Police)	.....	1	317 2412	
ATTACHING PARTS				
Speedometer Bracket To Instrument Panel				
SCREW, Machine..... ***60 Thru 62 10-20-80 (Police)***	17.608	3	G272519	NA
SCREW, Machine..... ***63-64 10-80 (Police)***	17.610	3	800 0112	NA
SCREW, Machine..... ***65 10-80 (Police)***	17.610	3	400 0971	
WASHER, Lock..... ***60 Thru 62 10-20-80 (Police)***	17.820	3	G120380	NA
WASHER, Plain..... ***60 Thru 62 10-20-80 (Police)*** ***(Replaces 800 0149)***	17.814	3	400 1089	
WASHER, Plain..... ***63 Thru 65 10-80 (Police)*** ***(Replaces 800 0153)***	17.814	3	400 1093	
NUT, Hexagon..... ***60 Thru 62 10-20-80 (Police)***	17.406	3	G120375	
NUT, Hexagon..... ***63 Thru 65 10-80 (Police)***	17.406	3	G120368	
ADAPTER, Speedometer Wire Terminal				
60 Thru 62 10-20-80 (Police)	.....	1	315 9556	

NOTE 3. 550-1: Used Special on Wisconsin State Police Cars.

Copyright 1963 American Motors Corp.

GROUP NO. — DESCRIPTION — YEAR and MODEL	PRIMARY GROUP NO.	PER CAR	PART NO.	CODE
SPACER, Speedometer Bracket				
60 Thru 62 10-20-80 (Police)	8.101	1	315 4148	
63 Thru 65 10-80 (Police)	10.455	2	314 1080	
3.555 LENS, Speedometer (Inner)				
(Miles) 60 01	.....	1	311 6302	
3.570 CABLE, Speedometer (Refer To Group 3 Charts)				
60 01 (WAT)	.....	1	315 5090	
60 01 (WST)(WOD): 60 Thru 63 02-04-05-06-08-09 (LHD-WST)(LHD-WOD): 62-63 01 (WAT): 63 07 (LHD-WOD): 61-62 10 (LHD): 61 20-80 (LHD-WAT): 62 80 (LHD) ***(Replaces 313 0638)***	.....	1	345 5673	
61 01 (WAT)	.....	1	345 9343	
61 Thru 63 07 (LHD-WST)	.....	1	316 3881	
61 Thru 63 01 (RHD)	.....	1	346 3734	
64-65 01 (LHD-WST)	.....	1	317 1710	
64-65 01 (LHD-WOD)(LHD-WAT)	.....	1	317 1709	
64-65 01 (RHD-WST): 63-64 10 (Six-LHD): 63-64 10-80 (LHD-V8-WAT): 65 10 (LHD-OHV-199)(LHD-OHV-232-WAT) ***(Replaces 316 7145)***	.....	1	316 9581	
64-65 01 (RHD-WOD)(RHD-WAT): 63 10-80 (RHD): 64 10 (RHD): 65 10 (RHD-OHV-232-WOD)(RHD-OHV-232-WAT)(RHD-V8-327-WAT)	.....	1	316 7934	
60 10 (WST-Note 3.570-2)	.....	1	343 8783	
60 10-80 (LHD): 60-61 20 (LHD-WOD): 60 20 (LHD-WAT): 61 80 (LHD-WST) (LHD-WOD) ***(Replaces 343 8743)***	.....	1	343 8745	
60 Thru 62 10 (Heavy-Duty-WST-Notes 3.570-1 And 3.570-3): 61-62 10 (Note 3.570-2): 60-61 20 (LHD-WST)	.....	1	343 8744	
60 10 (RHD-WOD)(RHD-WAT): 60 80 (RHD)	.....	1	343 8745	
60 10 (RHD-WST)	.....	1	343 8746	
61-62 10 (RHD): 61-62 80 (RHD-WAT)	.....	1	346 5420	
63-64 10-80 (LHD-V8-WST)(LHD-V8-WOD) ***(Replaces 316 7735)***	.....	1	316 9580	
64-65 10 (LHD-Six-232-WOD-Except Marlin): 65 10 (LHD-V8-287-WOD-Except Marlin)	.....	1	317 4270	
64-65 10 (LHD-OHVC-232-WST-Except Marlin): ***65 10 (Heavy Duty-LHD-WST-OHV-199)***	.....	1	317 4269	
65 10 (LHD-V8-287-WST-Except Marlin)(LHD-V8-WAT-Except Marlin)	.....	1	317 7228	
65 10 (LHD-V8-327-WST-Except Marlin)(LHD-V8-327-WOD-Except Marlin) ***165 01 (Can-OHV): 165 10 (Can-OHV-199)(Can-OHV-232-WAT): 165 80 (Can-V8-WST)***	.....	1	317 7229	#
65 10 (RHD-OHV-232-WST)	.....	1	317 7160	
65 50 (Marlin-LHD-OHV-232-WAT): 65 80 (LHD-OHV-232-WAT): ***165 01 (Can-LHE): 165 10 (Can-V8)(Can-OHV-232-WST): 165 80 (Can-Six) (Can-V8-WAT)***	.....	1	317 7232	
65 50 (Marlin-LHD-OHV-232-WOD)(Marlin-LHD-V8-287-WOD): 65 80 (LHD-OHV-232-WOD)(LHD-V8-287-WOD)	.....	1	317 7233	
65 50 (Marlin-LHD-OHV-232-WST): 65 80 (LHD-OHV-232-WST)	.....	1	317 7230	
65 50 (Marlin-LHD-V8-WAT)(Marlin-LHD-V8-287-WST): 65 80 (LHD-V8-WAT) (LHD-V8-287-WST)	.....	1	317 7231	
65 50 (Marlin-LHD-V8-327-WOD)(Marlin-LHD-V8-327-WST) 65 80 (LHD-V8-327-WOD)(LHD-V8-327-WST)	.....	1	317 7234	#
ATTACHING PARTS Speedometer Cable To Transmission				
BOLT, Hexagon ..... 60 Thru 65 01-10-20-80	17.038	1	G180016	NA

NOTE 3.570-1: 60-61 10 (WST) Cars having a Production Installed Heavy Duty Package may be identified in the following way: The Trunnion at the Transmission end of the Torque Tube is welded instead of Threaded to the Torque Tube.

NOTE 3.570-2: Used on Cars equipped with Taximeter Drive.

NOTE 3.570-3: 62-63 10 (WST) Cars having a Production Installed Heavy Duty Package may be identified in the following way: The Trunnion at the Transmission end of the Torque Tube is connected to the Transmission by 6 Bolts instead of 4.

Copyright 1963 American Motors Corp.

GROUP NO. — DESCRIPTION — YEAR and MODEL	PRIMARY GROUP NO.	PER CAR	PART NO.	CODE
RING, Speedometer Cable "O"				
64-65 01: 63 Thru 65 10-80	.....	1	316 8191	
EXTENSION, Speedometer Cable				
60 Thru 62 10-20-80 (Police)	.....	1	315 9533	
60 Thru 62 10-20-80 (Heavy Duty-Note 3.550-1): 63-64 10-80 (Police)	.....	1	316 0156	
65 10-80 (Police)	.....	1	317 2413	
CLIP, Speedometer Cable (Wrap-A-Round)				
60 01-10: ***63-64 10-80 (RHD): 65 10 (RHD)***	3.210	1	63 045	
CLIP, Speedometer Cable To Steering Column Grommet Screw				
60 01	3.192	1	47 740	
CLIP, Speedometer Cable To Front Floor Pan				
61 Thru 63 01: 61-62 20-80	3.165	1	99 477	
64-65 01	8.330	1	313 5224	
60 20 (1 Req.): 60 80 (2 Req.)	3.192	AR	47 740	
ATTACHING PARTS Speedometer Cable Clip To Front Floor Pan				
SCREW, Tapping..... 61 Thru 63 01 (1 Req.): 60 20 (1 Req.): 61-62 20-80 (1 Req.): 60 80 (2 Req.).....***(Replaces 800 0091)***	17.671	AR	400 1031	
SCREW, Tapping..... 64-65 01	17.671	1	400 1031	
CLIP, Speedometer Cable To Side Sill				
63 10-80: 64 10 (Six): 65 10-80	3.210	1	63 045	
ATTACHING PARTS Speedometer Cable Clip To Side Sill				
SCREW, Tapping..... 63 10-80.....***(Replaces 800 0091)***	17.671	1	400 1031	
SCREW, Tapping..... 64 10-80	17.671	2	400 1042	
CLIP, Speedometer Cable To Dash Panel				
63-64 10-80 (RHD): 65 10 (RHD)	4.160	1	15 708	
ATTACHING PARTS Speedometer Cable Clip To Dash Panel				
SCREW, Tapping..... ***63-64 10-80 (RHD): 65 10 (RHD)***	17.671	2	400 1042	
3.575 CORE, Speedometer Cable (Refer To Group 3 Charts)				
60 Thru 65 01: 60 10-80: 61 Thru 63 10-80 (LHD): 64-65 10-80.....***(Replaces 311 4545, 320 1639, 320 1635)***	.....	1	320 1620	
61 Thru 63 10 (RHD): 61-62 80 (RHD-WAT): 63 80 (RHD)	.....	1	320 2815	
65 10-80 (Police)	.....	1	320 6703	
EXTENSION, Speedometer Cable Core				
60 Thru 62 10-20-80 (Police)	.....	1	320 2438	
60 Thru 62 10-20-80 (Note 3.550-1): 63 10-80 (Police)	.....	1	320 2439	
3.580 GASKET, Speedometer Cable				
60 Thru 63 01 (WAT): ***60-61 10 (WST-Heavy Duty-Note 3.570-1):*** 60-61 20 (WST): 60-61 01 (WST)(WOD): 62-63 01-10: 60-61 10: 60 Thru 63 10-80 (V8): 60-61 20 (WOD)(WAT)	.....	1	312 1595	
62 10 (WST-Heavy Duty-Note 3.570-3)	.....	1	311 1263	
64 01: 65 01-10-80	3.570	1	316 8191	

Copyright 1963 American Motors Corp.

GROUP NO. — DESCRIPTION — YEAR and MODEL | PRIMARY GROUP NO. | PER CAR | PART NO. | CODE

3.590 GEAR, Speedometer Driven

GROUP 3

SPEEDOMETER DRIVEN GEARS

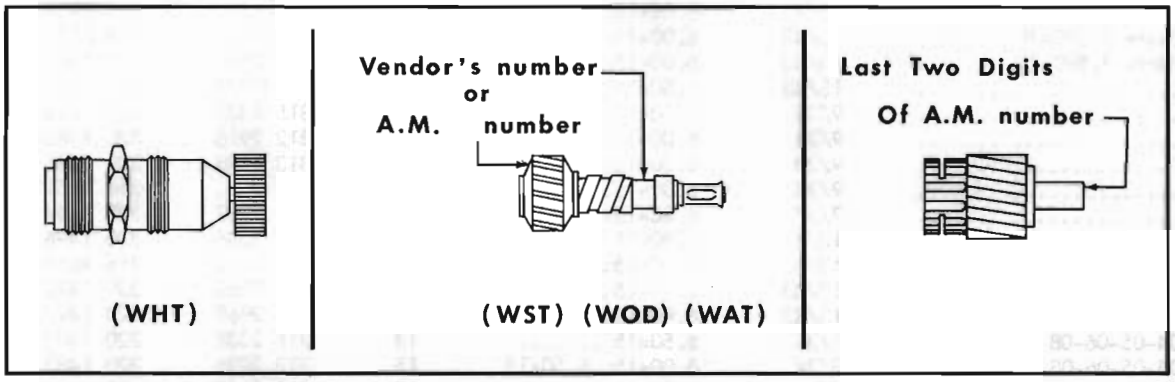

MODEL	GEAR RATIO	TIRE SIZE	TEETH	VENDOR NO.	PART NO.
60 01	9/34	5.90x15: 6.40x15	14	315 2338	320 1495
60 01	9/34	5.90x15: 6.40x15	17	313 1168	320 1486
60 01	9/37	6.40x15	15	312 2996	320 1483
60 01	9/37	5.90x15	16	312 2997	320 1484
60 01	13/43	5.90x15: 6.40x15	15	315 5346	320 1496
60 01 (WAT-Nylon)	13/43	5.90x15: 6.40x15	20	448600	315 5091
60 01 (WAT-Steel)	13/43	6.40x15	20	448725	316 0129
60 01 (WOD)	13/43	6.40x15	20	315 0562	320 1490
60 01 (Note 3.590-3)	15/43	6.40x15	17	448724	316 0128
60 01 (Note 3.590-2)	15/43	6.40x15	18		315 9891
60 01 (Note 3.590-4)	15/43	6.40x15	17		316 0548
61 01	9/34	6.50x15	14	315 2338	320 1495
61 01	9/34	6.00x15: 6.50x15	15	312 2996	320 1483
61 01	9/34	6.00x15: 6.50x15	17	313 1168	320 1486
61 01	9/37	6.00x15	16	312 2997	320 1484
61 01	13/43	6.00x15: 6.50x15	15	315 5346	320 1496
61 01 (Note 3.590-3)	13/43	6.00x15: 6.50x15	20	448725	316 0129
61 01 (Note 3.590-2)	13/43	6.00x15: 6.50x15	20	315 0562	320 1490
61 01	15/43	6.50x15	17	448724	316 0128
61 02-04-05-06-08	9/43	6.50x15	14	315 2338	320 1495
61 02-04-05-06-08	9/34	6.00x15: 6.50x15	15	312 2996	320 1483
61 02-04-05-06-08	13/43	6.00x15: 6.50x15	15	315 5346	320 1496
61 02-04-05-06-08	13/43	6.00x15: 6.50x15	20	448725	316 0129
61 02-04-05-06-08	15/43	6.50x15	17	448807	316 2943
61 02-04-05-06-08 (WST)	15/43	6.00x15	18	448808	316 2942
61 02-04-05-06-08 (WAT)	15/43	6.00x15	18	448777	316 0130

NOTE 3.590-1: Two Types of Driven Gears were used on the 60 80 (WHT) Series. They can be identified as follows:
Type 1: Used in Transmission 3156003 Model No. AS10-8.
Type 2: Used in Transmission 3160160 Model No. AS16-8.

NOTE 3.590-2: Used with Speedometer Drive Gear 3155163 (Nylon)(Blue).

NOTE 3.590-3: Used with Speedometer Drive Gear 3160127 (Nylon)(Green).

NOTE 3.590-4: Used with Speedometer Drive Gear 3160549 (Steel)(#447471).

Copyright 1963 American Motors Corp.

GROUP NO. — DESCRIPTION — YEAR and MODEL

MODEL	GEAR RATIO	TIRE SIZE	TEETH	PRIMARY GROUP NO. PER CAR VENDOR NO.	PART NO. CODE PART NO.
61 07	9/34	6.00x15: 6.50x15	17	.....	316 0955
61 07	9/37	6.50x15	15	312 2996	320 1483
61 07	9/37	6.00x15	16	312 2997	320 1484
61 07	13/43	6.00x15: 6.50x15	15	.....	316 0952
61 07 (Note 3.590-3)	13/43	6.00x15: 6.50x15	20	448725	316 0129
61 07 (Note 3.590-2)	13/43	6.00x15: 6.50x15	20	315 0562	320 1490
61 07	15/43	6.00x15	18	448777	316 0130
62 01	9/34	6.50x15	14	315 2338	320 1495
62 01	9/34	6.00x15: 6.50x15	15	312 2996	320 1483
62 01	9/34	6.50x15	17	313 1168	320 1486
62 01	9/34	6.00x15	18	.....	316 4051
62 01	9/37	6.00x15	16	312 2997	320 1484
62 01	13/43	6.50x15	15	315 5346	320 1496
62 01	13/43	6.00x15	16	.....	316 4050#
62 01	13/43	6.50x15	20	315 0562	320 1490
62 01	13/43	6.00x15	21	315 2969	320 1492
62 02-04-05-06-08	9/34	6.50x15	14	315 2338	320 1495
62 02-04-05-06-08	9/34	6.00x15: 6.50x15	15	312 2996	320 1483
62 02-04-05-06-08	9/34	6.50x15	17	313 1168	320 1486
62 02-04-05-06-08	9/34	6.00x15	18	.....	316 4051
62 02-04-05-06-08	13/43	6.50x15	15	315 5346	320 1496
62 02-04-05-06-08	13/43	6.00x15	16	.....	316 4050
62 02-04-05-06-08	13/43	6.50x15	20	315 0562	320 1490
62 02-04-05-06-08 (WAT)	13/43	6.00x15	21	315 2969	320 1492
62 02-04-05-06-08 (WOD)	13/43	6.00x15	21	.....	315 8686
62 02-04-05-06-08 (WAT)	15/43	6.50x15	17	.....	315 9980
62 02-04-05-06-08 (WST)	15/43	6.50x15	17	448807	316 2943
62 02-04-05-06-08 (WST)	15/43	6.00x15	18	448808	316 2942
62 02-04-05-06-08 (WAT)	15/43	6.00x15	18	.....	316 0160
62 07	9/34	6.50x15	17	.....	316 0955
62 07	9/34	6.00x15	18	.....	316 5572
62 07	9/34	6.50x15	20	315 2338	320 1495
62 07	9/37	6.50x15	15	312 2996	320 1483
62 07	9/37	6.00x15	16	312 2997	320 1484
62 07	13/43	6.50x15	20	315 0562	320 1490
63 01	9/34	6.50x15	14	315 2338	320 1495
63 01	9/34	6.00x15	15	312 2996	320 1483
63 01	9/34	6.50x15	17	313 1168	320 1486
63 01	9/34	6.00x15	18	.....	316 4051
63 01	9/37	6.50x15	15	312 2996	320 1483
63 01	9/37	6.00x15	16	312 2997	320 1484
63 01	13/43	6.50x14	15	315 5346	320 1496
63 01	13/43	6.00x15	16	.....	316 4050
63 01	13/43	6.50x15	20	315 0562	320 1490
63 01	13/43	6.00x15	21	315 2969	320 1492
63 02-04-05-06-08	9/34	6.50x15	14	315 2338	320 1495
63 02-04-05-06-08	9/34	6.00x15: 6.50x15	15	312 2996	320 1483
63 02-04-05-06-08	9/34	6.50x15	17	313 1168	320 1486
63 02-04-05-06-08	9/34	6.00x15	18	.....	316 4051
63 02-04-05-06-08	13/43	6.50x15	15	315 5346	320 1496
63 02-04-05-06-08	13/43	6.00x15	16	.....	316 4050
63 02-04-05-06-08	13/43	6.50x14	20	315 0562	320 1490
63 02-04-05-06-08 (WAT)	13/43	6.00x15	21	315 2969	320 1492
63 02-04-05-06-08 (WOD)	13/43	6.00x15	21	.....	315 8686
63 02-04-05-06-08 (WST)	15/43	6.50x14	17	448807	316 2943
63 02-04-05-06-08 (WAT)	15/43	6.50x14	17	.....	315 9980

Copyright 1963 American Motors Corp.

MODEL	GEAR RATIO	TIRE SIZE	TEETH	VENDOR NO.	PART NO.
63 02-04-05-06-08 (WST)	15/43	6.00x15	18	448808	316 2942
63 02-04-05-06-08 (WAT)	15/43	6.00x15	18	.....	316 0160
63 07	9/34	6.50x15	17	.....	316 0955
63 07	9/34	6.00x15	18	.....	316 5572
63 07	9/34	6.50x15	20	315 2338	320 1495
63 07	9/37	6.00x15: 6.50x15	15	312 2996	320 1483
63 07	9/37	6.00x15	16	312 2997	320 1484
63 07	13/43	6.50x15	20	315 0562	320 1490
63 07	13/43	6.50x15	21	315 2969	320 1492
63 09	9/34	6.50x15	17	313 1168	320 1486
63 09	9/34	6.00x15	18	.....	316 4051
63 09	9/34	6.50x15	20	315 2338	320 1495
63 09	9/37	6.50x15	15	312 2996	320 1483
63 09	9/37	6.00x15	16	312 2997	320 1484
63 09	13/43	6.50x15	20	315 0562	320 1490
64 01 (WST)	9/34	6.00x15	21	99	316 7399
64 01 (WOD)	9/34	6.50x14: 6.00x15	21	91	316 7391
64 01	9/34	6.00x14	22	92	316 7392
64 01	9/37	6.00x15: 6.50x14	..	.....	.....
.....	....	6.00x14	23	93	316 7393
64 01 (WST)(WAT)	13/40	6.00x14	18	96	316 7396
64 01 (WST)(WAT)	13/40	6.00x15	19	97	316 7397
64 01 (WST)(WAT)	13/40	6.50x14	20	98	316 7398
64 01 (WOD)	13/40	6.00x14: 6.50x14	20	90	316 7390
64 01 (WST)(WAT)	13/43	6.00x14: 6.50x14	19	97	316 7397
64 01 (WST)(WAT)	13/43	6.00x15	21	599	316 7399
64 01 (WOD)	13/43	6.50x14: 6.00x15	21	91	316 7391
64 01	13/43	6.00x14	22	92	316 7392
64 01	15/41	6.00x14: 6.50x14	18	96	316 7396
65 01	9/34	6.80x15: 6.95x14	21	91	316 7391
65 01	9/34	6.45x14	22	92	316 7392
65 01	9/37	6.45x14: 6.80x15: 6.95x14	23	93	316 7392
65 01	13/40	6.80x15: 6.45x14: 6.95x14	20	90	316 7390
65 01	13/43	6.45x14	22	92	316 7392
65 01	13/43	6.95x14: 6.80x15	21	91	316 7391
65 01	15/41	6.45x14: 6.95x14	18	96	316 7396
60 10 (WST)	8/35	6.40x15	16	313 5151	320 1488
60 10 (WOD)	8/35	6.40x15	16	312 2997	320 1484
60 10 ***(Heavy Duty)***	9/34	6.40x15: 6.70x15	14	.....	320 2253
60 10 (Note 3.570-2) ***(Heavy Duty)***	9/34	6.40x15: 6.70x15	14	448629	315 5863
60 10 (Notes 3.570-1 And 3.570-3)***(Heavy Duty)***	9/34	6.40x15: 6.70x15	14	.....	315 7167
60 10	9/34	6.40x15: 6.70x15	14	313 8677	320 1489
60 10	9/34	6.40x15: 6.70x15	22	315 3728	320 1494
60 10 (WOD)	9/37	6.40x15: 6.70x15	15	312 2996	320 1483

Copyright 1963 American Motors Corp.

MODEL	GEAR RATIO	TIRE SIZE	TEETH	VENDOR NO.	PART NO.
60 10 (WST)	9/37	6.40x15: 6.70x15	15	313 5150	320 1487
60 10	13/43	6.70x15	19	315 2690	320 1491
60 10	13/43	6.40x15	20	315 0562	320 1490
61 10 (WST)	8/35	6.50x15: 6.70x15	16	313 5151	320 1488
61 10 (WOD)	8/35	6.50x15: 6.70x15	16	312 2997	320 1484
61 10 ***(Heavy Duty)***	9/34	6.50x15: 6.70x15	14	.....	320 2253
61 10 (Notes 3.570-1 And 3.570-3)***(Heavy Duty)***	9/34	6.50x15: 6.70x15	14	.....	315 7167
61 10	9/34	6.50x15: 6.70x15	14	313 8677	320 1489
61 10	9/34	6.50x15: 6.70x15	22	315 3728	320 1494
60 10 (WOD)	9/37	6.50x15: 6.70x15	15	312 2996	320 1483
61 10 (WST)	9/37	6.50x15: 6.70x15	15	312 5150	320 1487
61 10	13/43	6.70x15	19	315 2690	320 1491
61 10	13/43	6.50x15	20	315 0562	320 1490
62 10	8/35	6.70x15	16	312 2997	320 1484
62 10	8/35	6.50x15	17	313 0968	320 1485
62 10 ***(Heavy Duty)***	9/34	6.50x15: 6.70x15	14	.....	320 2253
62 10 (Notes 3.570-1 And 3.570-3)	9/34	6.50x15: 6.70x15	14	.....	315 7167
62 10	9/34	6.70x15	14	313 8677	320 1489
62 10	9/34	6.50x15: 6.70x15	22	315 3728	320 1494
62 10 (WST)	9/37	6.70x15	15	313 5150	320 1487
62 10 (WOD)	9/37	6.70x15	15	312 2996	320 1483
62 10 (WST)	9/37	6.50x15: 6.70x15	16	313 5151	320 1488
62 10 (WOD)	9/37	6.70x15	16	312 2997	320 1484
62 10	13/43	6.70x15	19	315 2690	320 1491
62 10	13/43	6.50x15	20	315 0562	320 1490
63 10 (Six)	9/34	6.70x15	19	89	316 7389
63 10 (Six)	9/34	6.50x15	20	90	316 7390
63 10 (Six)	9/34	7.00x14	20	90	316 7390
63 10 (Six)	9/34	6.50x14	21	91	316 7391
63 10 (Six)	9/34	6.70x15	22	92	316 7392
63 10 (Six)	9/34	6.50x15	22	92	316 7392
63 10 (Six)	9/34	6.50x15	23	93	316 7393
63 10 (Six)	9/37	6.70x15	21	91	316 7391
63 10 (Six)	9/37	7.00x14	22	92	316 7392
63 10 (Six)	9/37	6.50x15	22	92	316 7392
63 10 (Six)	9/37	6.50x14	23	93	316 7393
63 10 (Six)	13/43	6.50x14: 6.70x15	19	89	316 7389
63 10 (Six)	13/43	7.00x14	20	90	316 7390
63 10 (Six)	13/43	6.50x15	20	90	316 7390
63 10 (Six)	13/43	6.50x14	21	91	316 7391
63 10 (V8)	10/41	6.70x15: 7.10x15	..	.....	.....
.....	.....	7.50x14	21	99	316 7399
63 10 (V8)	11/39	6.70x15: 7.10x15	18	96	316 7396
63 10 (V8)	11/39	7.50x14	19	97	316 7397
63 10 (V8)	15/43	7.50x14	17	95	316 7395
64 10 (Six-196)	9/34	6.70x15	19	89	316 7389
64 10 (Six-196)	9/34	6.50x15: 7.00x14	..	.....	.....
.....	....	6.70x15	20	90	316 7390
64 10 (Six-196)	9/34	6.50x14: 6.70x15	21	91	316 7391
64 10 (Six-196)	9/34	6.50x15: 6.70x15	22	92	316 7392

Copyright 1963 American Motors Corp.

MODEL	GEAR RATIO	TIRE SIZE	TEETH	VENDOR NO.	PART NO.
64 10 (Six-196)	9/34	6.50x15	23	93	316 7393
64 10 (Six-196)	9/37	6.50x15: 6.70x15	..	.....	.....
.....	....	7.00x14	22	92	316 7392
64 10 (Six-196)	9/37	6.50x14: 6.50x15	23	93	316 7393
64 10 (Six-196)	13/43	6.50x15: 7.00x14	20	90	316 7390
64 10 (Six-196)	13/43	6.50x14: 6.70x15	21	91	316 7391
64 10 (Six-232)	11/39	7.00x14: 6.50x15	22	92	316 7392
64 10 (Six-232)	11/39	6.50x14	23	93	316 7393
64 10 (Six-232)	13/41	6.50x15	19	97	316 7397
64 10 (Six-232)	13/41	6.50x14: 7.00x14	20	98	316 7398
64 10 (V8)	11/39	6.70x15: 7.10x15	18	96	316 7396
64 10 (V8)	11/39	7.50x14	19	97	316 7397
64 10 (V8)	13/41	7.50x14	19	97	316 7397
64 10 (V8)	15/43	6.70x15: 7.10x15	..	.....	.....
.....	.....	7.50x14	17	95	316 7395
65 10 (Six)	9/34	7.35x14: 7.35x15: 7.75x15	20	90	316 7390
65 10 (Six)	9/34	6.95x14	21	91	316 7391
65 10 (Six)	9/37	7.35x14: 7.35x15: 7.75x15	22	92	316 7392
65 10 (Six)	9/37	6.95x14	23	93	316 7393
65 10 (Six)	11/39	7.35x14: 7.35x15: 7.75x15	19	97	316 7397
65 10 (Six)	11/39	6.95x14	20	98	316 7398
65 10 (Six)	13/41	7.35x14: 7.35x15	17	95	316 7395#
65 10 (Six)	13/41	7.75x15	18	97	316 7397
65 10 (Six)	13/41	7.35x14: 7.35x15: 7.75x15	19	97	316 7397
65 10 (Six)	13/41	6.95x14	20	98	316 7398
65 10 (Six)	13/43	7.35x14: 7.35x15: 7.75x15	20	90	316 7390
65 10 (Six)	13/43	6.95x14	21	91	316 7391
65 10 (V8)	11/39	7.75x15	18	97	316 7397
65 10 (V8)	11/39	7.35x14: 7.35x15: 7.75x14: 7.75x15	19	97	316 7397
65 10 (V8)	13/41	7.75x15	18	97	316 7397
65 10 (V8)	13/41	7.35x15: 7.75x14	19	97	316 7397
65 10 (V8)	15/43	7.75x14: 7.75x15	17	95	316 7395
65 10 (V8)	15/43	7.35x15: 7.35x14	18	96	316 7396
60 20 (WOD)	9/40	6.70x15	16	312 2997	320 1484
60 20 (WST)	9/40	6.70x15	16	448016	310 5566
60 20 (WST)	9/40	7.50x14	17	315 3176	320 1439
60 20 (WOD)	9/40	7.50x14	17	448157	313 0968
60 20 (WST)	10/41	7.50x14	15	310 5565	320 1482
60 20 (WOD)	10/41	7.50x14	15	312 2996	320 1483
60 20	11/39	7.50x14	21	315 2969	320 1492
60 20	13/41	6.70x15	18	448504	315 7892
60 20 (Note 3.590-1 Type 1)	13/41	7.50x14	19	315 2690	320 1491
61 20 (WOD)	9/40	6.70x15	16	312 2997	320 1484
61 20 (WST)	9/40	6.70x15	16	448016	310 5566
61 20 (WST)	9/40	7.50x14	17	315 3176	320 1493
61 20 (WOD)	9/40	7.50x14	17	448157	313 0968
60 20 (WST)	10/41	7.50x14	15	310 5565	320 1482
61 20 (WOD)	10/41	7.50x14	15	312 2996	320 1483

Copyright 1963 American Motors Corp.

MODEL	GEAR RATIO	TIRE SIZE	TEETH	VENDOR NO.	PART NO.
61 20	11/39	7.50x14	21	315 2969	320 1492
61 20	13/41	6.70x15	18	448504	315 7892
61 20 (Note 3.590-1 Type 1)	13/41	6.70x15: 7.50x14	19	315 2690	320 1491
60 80	10/41	8.00x14	21	.....	315 8686
60 80 (Note 3.590-1 Type 1)	13/41	7.60x15	18	448504	315 7892
60 80 (Note 3.590-1 Type 2)	13/41	7.60x15	18	.....	316 0160
60 80 (Note 3.590-1 Type 1)	13/41	7.50x14	19	315 2690	320 1491
60 80 (Note 3.590-1 Type 2)	13/41	8.00x14	19	.....	315 9981
60 80 (Note 3.590-1 Type 1)	15/43	8.00x14	17	.....	315 6206
60 80 (Note 3.590-1 Type 2)	15/43	8.00x14	17	.....	315 9980
61 80	10/41	8.00x14	21	.....	315 8686
61 80 (WAT)	13/41	7.10x15: 7.60x15	18	.....	316 0160
61 80 (WST)	13/41	7.60x15	18	.....	315 8685
61 80	13/41	8.00x14	19	.....	315 9981
61 80	15/43	7.60x15	17	.....	315 9980
62 80	10/41	6.70x15: 7.50x14	..	.....	.....
.....	.....	8.00x14	21	.....	315 8686
62 80	11/39	6.70x15: 7.60x15	..	.....	.....
.....	.....	8.00x14	18	.....	315 8685
62 80	11/39	7.50x14	19	315 2690	320 1491
62 80	13/41	7.10x15: 7.60x15	18	.....	316 0160
62 80	15/43	6.70x15: 7.10x15	..	.....	.....
.....	.....	7.50x14: 7.60x15	..	.....	.....
.....	.....	8.00x14	17	.....	315 9980
63 80	10/41	6.70x15	21	99	316 7399
63 80	10/41	7.10x15	21	99	316 7399
63 80	10/41	7.50x14	21	99	316 7399
63 80	11/39	6.70x15	18	96	316 7396
63 80	11/39	7.10x15	18	96	316 7396
63 80	11/39	7.50x14	19	97	316 7397#
63 80	13/41	6.70x15	18	96	316 7396
63 80	13/41	7.10x15	18	96	316 7396
63 80	13/41	7.50x14	19	97	316 7397
63 80	15/43	6.70x15	17	95	316 7395
63 80	15/43	7.10x15	17	95	316 7395
64 80	11/39	6.70x15: 7.10x15	18	96	3167 396
64 80	11/39	7.50x14	19	97	316 7397
64 80	13/41	6.70x15: 7.10x15	18	96	316 7396
64 80	13/41	7.50x14	19	97	316 7397
64 80	15/43	6.70x15: 7.10x15	..	.....	.....
.....	.....	7.50x14	17	95	316 7395
65 80 (Six-232)	11/39	7.35x14: 7.35x15: 7.75x14: 7.75x15	19	97	316 7397
65 80 (Six-232)	13/41	7.35x14: 7.35x15	17	95	316 7395#
65 80 (Six-232)	13/41	7.75x15	18	97	316 7397
65 80 (Six-232)	13/41	7.35x14: 7.75x14: 7.75x15	19	97	316 7397
65 80 (V8)	11/39	7.75x15	18	97	316 7397
65 80 (V8)	11/39	7.35x15: 7.75x14: 7.75x15	19	97	316 7397
65 80 (V8)	13/41	7.75x15	18	97	316 7397
65 80 (V8)	13/41	7.35x15: 7.75x14	19	97	316 7397
65 80 (V8)	15/43	7.75x14: 7.75x15	17	95	316 7395
65 80 (V8)	15/43	7.35x15	18	96	316 7396

Copyright 1963 American Motors Corp.

GROUP NO. — DESCRIPTION — YEAR and MODEL		PRIMARY GROUP NO.	PER CAR	PART NO.	CODE
WIRE, Ammeter To Ignition Switch					
64-65 01 (WAE-Note 3.005-9): 63 10-80 (V8-WAE-Note 3.005-9): 64-65 10-80 (WAE-Note 3.005-9)		.....	1	316 8152	
ADAPTER, Speedometer Driven Gear Double Drive					
60 10 (WAT-Heavy Duty-Note 3.570-2)		.....	1	315 5862	
SLEEVE, Speedometer Driven Gear					
60 10 (WST-Heavy Duty-Note 3.570-2)		.....	1	315 5864	
CLAMP, Speedometer Driven Gear Sleeve					
60 10 (WST-Heavy Duty-Note 3.570-2)		.....	1	315 5865	
ATTACHING PARTS Speedometer Driven Gear Sleeve Clamp To Transmission Case					
SCREW, Machine	***60 10 (WST-Heavy Duty-Note 3.570-2)***	17.616	1	G155138	NA
RETAINER, Speedometer Driven Gear					
64-65 01: 63 Thru 65 10-80		.....	1	316 7039	
3.600 AMMETER, Alternator					
60 Thru 65 01-10-20-80 (WAE-Notes 3.005-8, 3.005-9)		.....	1	314 9228	
ATTACHING PARTS Ammeter To Instrument Panel					
SPACER	64-65 01 (WAE-Note 3.005-9)	13.113	1	316 6571	
SCREW, Machine	64 01: 63 Thru 65 10-80 (Note 3.005-9)	17.614	2	G431586	NA
SCREW, Tapping.....	62 Thru 64 01 (WAE-Notes 3.005-8, 3.005-9)	17.671	2	G274773	NA
SCREW, Tapping.....	64-65 01 (OHV-Note 3.005-9)	17.671	2	G274773	
SCREW, Tapping.....	60-61 10-20-80 (WAE-Notes 3.005-8, 3.005-9)	17.671	2	800 0093	NA
WASHER, Lock	64 01: 63 Thru 65 80 (Note 3.005-9)	17.820	2	G131096	NA
WASHER, Plain	64 01: 63 Thru 65 10-80 (Note 3.005-9)	17.814	3	G120391	NA
NUT, Hexagon.....	64 01-10-80 (Note 3.005-9): 65 10-80	17.412	2	G120614	NA
BRACKET, Alternator Ammeter Mounting					
60 Thru 65 01 (WAE-Notes 3.005-8, 3.005-9): 63 Thru 65 10-80 (Note 3.005-9)		.....	1	315 9377	
PLATE, Alternator Ammeter Mounting					
60 Thru 62 10-20-80 (WAE-Notes 3.005-8 And 3.005-9).....	***(Replaces 316 2120, 315 9417)***	.....	1	346 6249	
WIRE, Ammeter To Voltage Regulator					
60 01 (WAE-Note 3.005-9)		.....	1	315 9370	
61 10 (WAE-Note 3.005-9)		3.005	1	315 9389	
63-64 10-80 (Note 3.005-9)		.....	1	316 8151	
62 80 (WAE-Note 3.005-9)		3.005	1	316 4096	
WIRE, Ammeter To Starter Solenoid					
60 01 (WAE-Note 3.005-9): 64 01 (WAE-Note 3.005-9): 63-64 10 (WAE-Note 3.005-9)		.....	1	315 9371	
61 Thru 65 01 (WAE-Note 3.005-9): 65 10-80 (WAE-Six-Note 3.005-9)		.....	1	316 2090	#
62 10 (WAE-Note 3.005-9)		.....	1	316 4098	
63 Thru 65 10-80 (WAE-V8-Note 3.005-9)		.....	1	316 8150	
62 80 (WAE-Note 3.005-9)		.....	1	316 4103	

Copyright 1963 American Motors Corp.

GROUP NO. — DESCRIPTION — YEAR and MODEL	PRIMARY GROUP NO.	PER CAR	PART NO.	CODE	
GROMMET, Ammeter Wire (In Dash)					**3.600**
60 Thru 62 01-10-20-80 (WAE-Notes 3.005-8, 3.005-9)	13.052	1	438 6559		3.600gr
CLIP, Ammeter Wire To Chassis Harness					**3.600**
63-64 01-10-20-80 (WAE-Note 3.005-9)	3.312	AR	79 394		3.600cl
3.605 GAUGE, Oil Pressure					
60 Thru 65 01-10-20-80 ***(Replaces 320 0422)***	.....	1	314 2826		
BUSHING, Oil Pressure Gauge Reducing					**3.605**
60 Thru 65 10-20-80 (V8)	17.086	1	G119923		3.605
CLIP, Oil Pressure Wire					**3.605**
64 10 (OHVC-232)	3.056	1	317 4342		3.605
ATTACHING PARTS					**3.605**
Clip To Body					***3.605***
BOLT, Hexagon ..... 64 10 (OHVC-232): 65 10-80 (Six)	17.038	1	G180076	NA	3.605
WASHER, Lock ..... 64 10 (OHVC-232): 65 10-80 (Six)	17.820	1	G120214	NA	3.605
3.610 GAUGE, Water Temperature (In Instrument Cluster)					
60 01 (Note 3.505-1 Type 1)	.....	1	320 0846		3.610ga
60 01 (Note 3.505-1 Type 2)	.....	1	320 2372		3.610ga
61 Thru 63 01: 60-61 10-20-80 ***(Replaces 320 1693)***	.....	1	320 3215		
64 01: ***164 01 (Can-Note 3.515-1 Type 1)***	.....	1	320 4652		3.610
65 01: ***164 01 (Can-Note 3.515-1 Type 2)***	.....	1	320 5680		3.610
62 10-80	.....	1	320 3046		3.610ga
63 10-80	.....	1	320 3955		3.610ga
64 10-80: ***65 10 (RHD)***	.....	1	320 4888		
65 10 (Except Marlin)	.....	1	320 5688		3.610
65 50 (Marlin): 65 80	.....	1	320 5490		3.610
ATTACHING PARTS					**3.610**
Water Temperature Gauge To Instrument Cluster					**3.610WA**
SPACER ..... 65 10 (Except Marlin)	3.615	1	320 5689		3.610
SCREW, Tapping..... 60 01 (Note 3.505-1 Type 1)	.....	1	320 0847		3.610wa
NUT, Stamped ..... 64 01: 63 Thru 65 10-80	17.428	2	G446060	NA	3.610
WIRE, Temperature Gauge Resistor					**3.610**
64 10 (Six-232)	.....	1	317 7388		3.610wa
GAUGE, Water Temperature (Sending Unit)(In Cylinder Block)					**3.610**
60 01-10: 61 01 (LHE): 60-61 20-80	.....	1	315 4696		3.610gw
61 01 (OHV): 61 10	.....	1	316 1270		3.610gw
62 Thru 64 01-10 (Six-196): 62 Thru 65 10-80 (V8)	.....	1	316 4144		3.610
64 10 (Six-232): 65 01-10-80 (Six) ***(Replaces 317 7594, 317 3363)***	.....	1	317 9953	#	
WIRE, Water Temperature Gauge Extension (Male And Female Arkless Terminal)					**3.610**
61 10 (OHVC)	.....	1	346 6117		3.610wi
64 10 (Six-232)	.....	1	317 7367		3.610wi
WIRE, Water Temperature Gauge Extension (Bullet And Female Arkless Terminal)					**3.610**
61 01 (OHV): 61 10	.....	1	316 2385		3.610ww

Copyright 1963 American Motors Corp.

GROUP NO. — DESCRIPTION — YEAR and MODEL		PRIMARY GROUP NO.	PER CAR	PART NO.	CODE
CLIP, Water Temperature Extension Wire					
65 01-10 (OHV-199): 65 01-10-80 (OHV-232)		.....	1	400 0785	
ATTACHING PARTS					
Clip To Body					
BOLT, Hexagon	65 01-10-80 (OHV-232): 65 01-10 (OHV-199)	17.038	1	G180118	NA
WASHER, Lock	65 01-10-80 (OHV-232): 65 01-10 (OHV-199)	17.820	1	G120382	NA
WASHER, Plain	65 01-10-80 (OHV-232): 65 01-10 (OHV-199)	17.814	1	400 1102	
3.615 GAUGE, Gasoline (In Instrument Cluster)					
60 01 (Note 3.505-1 Type 1)		.....	1	320 2088	
60 01 (Note 3.505-1 Type 2)		.....	1	320 2371	
61 Thru 63 01: 60-61 10-20-80		.....	1	320 1692	
64 01: ***164 01 (Can-Note 3.515-1 Type 1)***		.....	1	320 4651	
65 01: ***164 01 (Can-Note 3.515-1 Type 2)***		.....	1	320 5679	
62 10-80		.....	1	320 3045	
63 10-80 (L3S)		.....	1	320 3954	
63 18-88 (W3S-Has Pointed Indicator)		.....	1	320 4231	
63-64 18-88 (W3S-Has Flathead Indicator): ***65 18 (RHD)***		.....	1	320 4872	
64 10-80 (L3S): ***65 10 (RHD-L3S)***		.....	1	320 4889	
65 10 (L3S)(Except Marlin)		.....	1	320 5687	
65 10 (W3S)		.....	1	320 5697	
65 50 (Marlin): 65 80 (L3S)		.....	1	320 5488	
65 80 (W3S)		.....	1	320 5489	
ATTACHING PARTS					
Gasoline Gauge To Instrument Cluster					
SPACER	65 10 (Except Marlin)	.....	1	320 5689	
SCREW, Tapping	60 01 (Note 3.505-1 Type 1)	3.610	3	320 0847	
NUT, Stamped	64 01: 63 Thru 65 10-80	17.428	2	G446060	NA
GAUGE, Gasoline (In Gasoline Tank)(Incl. Outlet Tube)					
60 01: 60 10-20-80 (L3S)		.....	1	315 7840	
61 Thru 63 01: 61-62 10-20-80 (W3S)	***(Replaces 316 1228)***	.....	1	316 3981	
64-65 01		.....	1	317 0252	
60 10-20-20-80 (W3S)		.....	1	315 7841	
61 10-20-80 (L3S)	***(Ref. Pr. List)***	.....	1	316 1229	
62 10-80 (L3S)		.....	1	316 3978	
63-64 10-80 (L3S)		.....	1	316 6820	
63 10-80 (W3S-Used With Pointed Indicator)		.....	1	316 8026	
63-64 10-80 (W3S-Used With Flathead Indicator): 65 10-80 (W3S)		.....	1	317 2387	
65 10-80 (L3S)		.....	1	317 5887	
LOCK, Gasoline Gauge					
60 Thru 65 01-10-20-80		.....	1	315 7857	
SEAL, Gasoline Gauge Lock					
60 Thru 65 01-10-20-80		.....	1	315 7863	
FILTER, Gasoline (On Tank Unit)					
61 Thru 65 01-10-20-80		4.134	1	316 3974	
WIRE, Gasoline Gauge To Body Wire Harness					
64-65 01		.....	1	317 1138	
63 10-80		.....	1	316 8845	
CLIP, Gasoline Gauge Wire (On Tank Flange)					
60 Thru 65 01-10-20-80		.....	AR	310 8634	

Copyright 1963 American Motors Corp.

GROUP NO. — DESCRIPTION — YEAR and MODEL	PRIMARY GROUP NO.	PER CAR	PART NO.	CODE
WIRE, Gasoline Gauge Extension				
65 10-80 (L3S)	.....	1	317 6538	
65 10-80 (W3S)	.....	1	317 6539	
GROMMET, Gasoline Gauge Wire (In Floor Pan)				
60 Thru 63 01: 61 18-28-88	3.163	1	436 5163	
62 01-18-88	27.038	1	400 0328	
60-61 10-20-80: 62 15-16-85-86	.....	1	400 0336	
63 10-80 ***(Replaces 316 8853)***	7.110	1	400 0649	
64-65 10-80	3.660	1	400 0688	
BUMPER, Gasoline Gauge (Rubber)(On Float)				
63 Thru 65 10-80 (W3S) ***(Replaces 317 1884)***	.....	1	316 9985	
3.622 REGULATOR, Instrument Cluster Voltage				
60 01	.....	1	320 1577	
61 Thru 63 01: 60 Thru 62 10-20-80	.....	1	320 1695	
64-65 01 (Standard): 63-64 10-80 (Standard): ***65 10 (RHD-Standard)***	.....	1	320 3982	
64-65 01 (High Tolerance): 63-64 10-80 (High Tolerance): ***65 10 (RHD-High Tolerance)***	.....	1	320 4932	
65 10 (LHD-Except Marlin)	.....	1	320 5695	
65 50 (Marlin): 65 80 (L3S)...(Incl. Gasoline Gauge)	3.615	1	320 5488	
65 80 (W3S)...(Incl. Gasoline Gauge)	3.615	1	320 5489	
ATTACHING PARTS				
Instrument Cluster Voltage Regulator To Instrument Cluster				
SCREW, Machine..... 60 Thru 62 01-10-20-80: 64-65 01	17.616	1	G155103	NA
WASHER, Lock..... 60 Thru 63 01-10-20-80: 64-65 01	.....	1	320 0022	
CLIP, Instrument Cluster Voltage Regulator				
65 50 (Marlin): 65 80	.....	1	320 6129	
CONDENSER, Radio				
62-63 01-10-80	15.320	1	346 6154	
3.635 HARNESS, Instrument Cluster (Refer To Group 3.163 For Body Wiring Harness And Group 3.165 For Chassis Wiring Harness)				
60 01	3.165	1	343 2402	
61 01 (LHE-LHD-Note 3.635-1) ***(Ref. Pr. List)***	.....	1	316 1082	
61 01 (OHV-Note 3.635-1)	3.165	1	316 1073	
62 01 (LHD-Note 3.635-1)	3.165	1	316 4377	
62 01 (RHD-Note 3.635-1)	3.165	1	316 3793	
63 01 (LHD-Note 3.635-1)	3.165	1	316 7875	
63 01 (RHD-Note 3.635-1)	3.165	1	316 7895	
60 10 (Note 3.635-1)	3.165	1	344 5968	
61 10 (Note 3.635-1)	3.165	1	316 1068	
62 10 (LHD-Note 3.635-1)	3.165	1	348 6168	
62 10 (RHD-Note 3.635-1)	3.165	1	347 6676	
60 20 (LHD-Note 3.635-1)	3.165	1	344 5969	
61 20 (LHD-Note 3.635-1)	3.165	1	316 1145	
60 80 (LHD-Note 3.635-1)	3.165	1	344 5970	
61 80 (LHD-Note 3.635-1)	13.415	1	316 1369	
62 80 (LHD-Note 3.635-1)	3.165	1	348 6169	
62 80 (RHD-Note 3.635-1)	3.165	1	347 6677	

NOTE 3.635-1: Also includes Chassis Wiring Harness.

Copyright 1963 American Motors Corp.

GROUP NO. — DESCRIPTION — YEAR and MODEL	PRIMARY GROUP NO.	PER CAR	PART NO.	CODE
WIRE, Instrument Cluster Voltage Regulator To Temperature Gauge To Gasoline Gauge				
60 01	.....	1	320 0056	
61 Thru 63 01: 60 Thru 62 10-20-80	.....	1	320 1696	
SOCKET, Instrument Cluster Voltage Regulator Wiring Harness				
64 01-10-80 (7 Req.): 65 01 (8 Req.): 65 10-80 (7 Req.)	.....	AR	350 9575	
63 10-80	.....	7	348 2255	
(1 Wire) 60 Thru 63 01: 60 Thru 62 10-20-80	.....	AR	320 0166	
(2 Wire) 60 Thru 63 01: 60 Thru 62 10-20-80	.....	AR	320 0169	
LAMP, Instrument Cluster Dial				
63 10-80	.....	2	349 0146	
64 10-80	.....	2	352 0870	
SHIELD, Instrument Cluster Light				
(Left) 63-64 10-80	.....	1	348 2939	
(Right) 63-64 10-80	.....	1	348 2938	
CONNECTOR, Instrument Cluster				
(Less Radio) 63 10-80	3.520	1	348 2309	
(With Radio) 62 10-80	15.320	1	348 2433	
BULB, Instrument Cluster Illumination				
(GE 57) 60 Thru 63 01-10-20-80	3.215	AR	G127934	
(GE 158) 64-65 01-10-80 ***(Use 320 9541)***	3.215	AR	G9415969	
(GE 1445) 63 10-80	3.215	AR	320 4552	
CLIP, Instrument Cluster Wiring Harness To Dash Panel				
60-61 01-10-20-80	3.210	1	312 3849	
ATTACHING PARTS Instrument Cluster Wiring Harness Clip To Dash Panel				
SCREW, Tapping 60-61 01-10-20-80	17.671	1	800 0093	NA

3.650 LAMP, Parking Brake Warning

61 Thru 63 01 (LHD)	15.195	1	899 0966	
64-65 01	15.195	1	899 1360	
60 Thru 62 10-80	15.195	1	899 0737	
63-64 10-80	15.195	1	899 1187	
65 10 (Except Marlin)	15.195	1	899 1593	
65 50 (Marlin): 65 80	15.195	1	899 1594	
SWITCH, Parking Brake Warning Lamp				
61 Thru 63 01 (LHD)...(Incl. Bracket)	.....	1	320 2957	
64-65 01: ***64-65 10 (RHD)***...(Incl. Bracket)	.....	1	317 2174	
60 Thru 62 10-20-80	3.018	1	315 7168	
63-64 10-80 (LHD)	.....	1	316 7359	
65 10-80 (LHD)	.....	1	317 6985	
ATTACHING PARTS Parking Brake Warning Lamp Switch To Bracket				
SCREW, Machine ..... 61 Thru 65 01 (LHD): ***63 Thru 65 10-80 (RHD)***	17.614	1	G120222	NA
SCREW, Tapping ..... 60 Thru 65 10-20-80 .....***(Replaces 800 0091)***	17.671	1	400 1031	
NUT, Square ..... 61 Thru 65 01 (LHD): ***63 Thru 65 10-80 (RHD)***	17.414	1	G120619	NA
LENS, Parking Brake Warning Lamp (Incl. Chrome Bezel)				
61 Thru 63 01 (LHD): 60 Thru 62 10-20-80: ***63 Thru 65 10-80 (RHD)***	.....	1	320 1926	
64-65 01	.....	1	320 5392	

Copyright 1963 American Motors Corp.

GROUP NO. — DESCRIPTION — YEAR and MODEL	PRIMARY GROUP NO.	PER CAR	PART NO.	CODE
SOCKET, Parking Brake Warning Lamp				
61 Thru 63 01 (LHD)...(Incl. Wire): ***63 Thru 65 10-80 (RHD)***...(Incl. Wire)	.....	1	320 2956	
64-65 01	.....	1	320 5393	
60 Thru 62 10-20-80...(Less Wire).....	.....	1	320 1470	
63-64 10-80 (LHD)...(Incl. Wire, Hood And Bulb).....	.....	1	347 2745	
65 10 (LHD)(Except Marlin)...(Incl. Wire & Bracket)	.....	1	351 6762	
65 50 (Marlin): 65 80	.....	1	320 5495	
BEZEL, Parking Brake Warning Lamp				
65 10 (LHD)(Except Marlin).....	3.352	1	351 6747	
LENS, Parking Brake Warning Lamp				
65 10 (LHD)(Except Marlin).....	.....	1	351 6751	
65 50 (Marlin): 65 80 (LHD)	.....	1	351 6579	
WIRE, Parking Brake Warning Lamp Switch To Circuit Breaker				
61 01 (LHD): 60-61 10-20-80..... ..***(Replaces 320 2955, 320 1469)***	.....	1	316 5769	
62-63 01 (LHD): 62 10-80.....	.....	1	343 9380	
WIRE, Parking Brake Warning Lamp Switch To Fuse Panel				
64-65 01	.....	1	317 1139	
WIRE, Parking Brake Warning Lamp To Switch				
60 Thru 62 10-20-80.....	.....	1	320 1468	
CLIP, Parking Brake Warning Lamp				
64-65 01	.....	1	79 394	
SPRING, Parking Brake Warning Lamp (Under Lens Bezel)				
61 Thru 65 01 (LHD): 60 Thru 62 10-20-80: ***63 10-80 (RHD)***.....	.....	1	320 1471	
ATTACHING PARTS				
Parking Brake Warning Lamp Striker To Brake Lever				
SCREW, Tapping..... 60 10-20-80 .....***(Replaces 800 0091)***	17.671	1	400 1031	
BULB, Parking Brake Warning Lamp				
(GE 256) 63 Thru 65 10-80 (LHD)	3.215	1	320 4467	
(GE 257) 61 Thru 65 01 (LHD): 60 Thru 62 10-20-80: ***63 10-80 (RHD):*** 64 80....	3.215	1	G9412348	
3.655 LAMP ASSEMBLY, "Open Door" Warning				
65 10-80 (Taxi)	.....	1	318 1007	
ADAPTER, "Open Door" Warning Lamp At Fuse Panel				
65 10-80 (Taxi)	3.550	1	315 9556	
BULB, "Open Door" Warning Lamp				
65 10-80 (Taxi)	3.215	1	320 9534	
SOCKET ASSEMBLY, "Open Door" Warning Lamp (Incl. Wire)				
65 10-80 (Taxi)	.....	1	320 7180	

Copyright 1963 American Motors Corp.

GROUP NO. — DESCRIPTION — YEAR and MODEL	PRIMARY GROUP NO.	PER CAR	PART NO.	CODE
LENS, "Open Door" Warning Lamp				
65 10-80 (Taxi)	.....	1	320 7079	#
SPRING, "Open Door" Warning Lamp Lens				
65 10-80 (Taxi)	.....	1	320 7177	#
3.660 LAMP ASSEMBLY, Trunk				
61-62 01 (LHD): 61-62 10-20-80 ..... *(Replaces 899 0890, 899 1011)*	.....	1	347 4787	
63 01-10-80	15.400	1	899 1183	
64-65 01-10-80	15.400	1	899 1362	
60 10-20-80	15.400	1	899 0735	
ATTACHING PARTS Trunk Lamp Assembly To Deck Cover				
SCREW, Tapping..... 61 01 (LHD): 60-61 10-20-80	17.669	1	800 0272	NA
SCREW, Tapping..... 62 Thru 65 01 (LHD): 62 Thru 65 10-80	17.660	1	G457002	NA
NUT, Speed..... 62 01 (LHD)	22.058	1	400 0087	
NUT, Speed..... 62 01 (LHD)	3.505	1	400 0053	
BRACKET, Trunk Lamp (Incl. Socket And Wire)				
64-65 01-10-80	.....	1	351 5479	
BULB, Trunk Lamp Assembly				
(GE 89) 63 Thru 65 01-10-80	3.215	1	G142452	
(GE 1003) 60 Thru 63 01-10-20-80 (LHD)	3.215	1	G455490	
WIRE, Trunk Lamp Assembly Extension				
63 01 (LHD)	.....	1	316 8123	
65 01-10 (RHD)	3.670	1	317 6556	
62 10-80	.....	1	320 3503	
GROMMET, Trunk Lamp Assembly				
61 Thru 63 01 (LHD): 60 Thru 62 10-20-80	3.163	1	436 5163	
64-65 01	.....	1	400 0649	
64 10-80	.....	2	400 0688	
65 15-16-17-19-85-86-87-89	3.615	2	400 0336	
TERMINAL, Trunk Lamp Assembly Wire				
60 10-20-80	3.218	1	92 788	
ADAPTER, Trunk Lamp Assembly Wire Terminal				
61 01 (LHD): 61 10-20-80	6.329	1	312 3479	
CLIP, Trunk Lamp Assembly Wire				
64 02-05-06: 65 05-06	4.141	2	316 6312	
60 10-20-80	.....	1	313 5224	
65 50 (Marlin)	3.166	1	400 0713	
ATTACHING PARTS Trunk Lamp Assembly Wire Clip To Deck Cover				
SCREW, Tapping..... 60 10-20-80	17.669	1	800 0273	NA
3.670 BASE, Cargo Area Lamp (Incl. Socket)				
60 Thru 63 04-08 (LHD): 64-65 08: 61 Thru 65 18-28-83-88	3.346	1	345 8179	
60 18-28-83-88	3.346	1	344 0850	

Copyright 1963 American Motors Corp.

GROUP NO. — DESCRIPTION — YEAR and MODEL	PRIMARY GROUP NO.	PER CAR	PART NO.	CODE
ATTACHING PARTS				
Cargo Area Lamp Base To Bracket				
SCREW, Tapping..... 61 04-08 (LHD): 60 Thru 62 18-28-83-88	3.346	2	346 6066	
SCREW, Tapping..... 62-63 04-08 (LHD).....	17.660	2	G161895	NA
SCREW, Tapping..... 63 Thru 65 10-80.....	3.346	2	400 0472	
LENS, Cargo Area Lamp				
61 Thru 63 04-08 (LHD): 64-65 08: 61-62 18-28-83-88: 63 Thru 65 18-88.....***(Replaces 345 8178)***	3.346	1	349 0039	
60 18-28-83-88.....	3.346	1	344 0851	
SWITCH, Cargo Area Lamp				
60 Thru 65 01-10-20-80.....	3.145	1	344 5741	
HARNESS, Cargo Area Lamp				
61 Thru 63 04-08 (LHD).....	.....	1	346 4721	
64 08-18-88: 65 08-18-88 (LHD).....	.....	1	317 1116	
65 01-10 (RHD).....	.....		317 6556	
60 18-28-83-88.....	.....	1	345 1312	
61-62 18-28-83-88.....	.....	1	345 7807	
63 18-88.....	.....	1	316 8843	
BRACKET, Cargo Area Lamp				
60 Thru 63 04-08 (LHD).....	.....	1	346 4602	
64-65 02-05-06-08 (Police): 64-65 08: 63 Thru 65 18-88.....	.....	1	347 2294	
61-62 18-28-83-88.....	20.425	1	345 1921	
ATTACHING PARTS				
Cargo Area Lamp Bracket To Roof Panel				
SCREW, Tapping..... 61 Thru 63 04-08 (LHD): 61 18-28-83-88	17.660	2	G161860	NA
SCREW, Tapping..... 64-65 08: 65 18-88.....	17.660	2	G161895	NA
SCREW, Tapping..... ***64-65 01 (Police):*** 62-63 18-88.....	17.660	2	G161895	NA
SCREW, Tapping..... 64 18-88	17.660	2	G161870	NA
SPACER, Cargo Area Lamp Switch				
61 Thru 63 04-08 (LHD).....	.....	1	346 4596	
ATTACHING PARTS				
Cargo Area Lamp Switch Spacer To Roof Panel				
SCREW, Tapping..... 61 Thru 64 04-08 (LHD).....	17.660	4	G161895	NA
SCREW, Tapping..... 65 08	17.660	2	G161871	NA
BULB, Cargo Area Lamp				
61 Thru 65 04-08 (LHD): 60 Thru 65 18-28-83-88	3.215	1	G455136	
3.675 BASE, Rear Quarter Lamp (Incl. Socket)				
63-64 09 (Has 52" Wire).....	.....	2	349 0037	
64 09 (Has 20" Wire).....	.....	2	352 3925	
ATTACHING PARTS				
Rear Quarter Lamp Base To Roof Extension Panel				
SCREW, Tapping..... 63-64 09 (5/8" Long).....	17.669	4	400 1267	NA
SCREW, Tapping..... 64 09 (3/4" Long).....	17.660	4	G161871	NA
NUT, Spring..... 64 09	17.422	4	G445109	NA
HOUSING, Rear Quarter Lamp				
65 50 (Marlin).....	.....	1	353 0838	
(Left) 64-65 85-88	.....	1	352 0803	
(Right) 64-65 85-88	.....	1	352 0802	

Copyright 1963 American Motors Corp.

GROUP NO. — DESCRIPTION — YEAR and MODEL	PRIMARY GROUP NO.	PER CAR	PART NO.	CODE
ATTACHING PARTS				
Housing To Roof Extension				
NUT, Speed..... 64-65 85.....	22.058	4	400 0370	
Housing To Panel				
SCREW, Tapping..... 65 50 (Marlin): 65 85.....	17.660	4	G161869	NA
NUT, Speed..... 65 50 (Marlin).....	17.426	2	400 1556	
WIRE, Rear Quarter Lamp (Incl. Wires, Terminal And Clips)				
65 09: 64-65 19-89.....	.....	2	352 8942	#
64 85-88.....	3.163	1	317 2473	
65 85-88.....	.....	1	317 6536	
CLIP, Rear Quarter Lamp				
65 09: 64-65 10-80.....	.....	2	320 6219	#
LENS, Rear Quarter Lamp				
63 Thru 65 09.....	.....	2	349 0038	
65 59 (Marlin).....	.....	1	353 0839	
(Left) 64-65 19-89 (Except Marlin).....	.....	1	352 8775	
(Left) 64-65 85-88.....	.....	1	352 0801	
(Right) 64-65 19-89 (Except Marlin).....	.....	1	352 8774	
(Right) 64-65 85-88.....	.....	1	352 0800	
RETAINER, Rear Quarter Lamp Lens				
(Left) 64 19-89.....	.....	1	352 9205	
(Right) 64 19-89.....	.....	1	352 9204	
BEZEL, Rear Quarter Lamp Lens Retainer				
(Left) 64 19-89.....	.....	1	350 9543	
(Right) 64 19-89.....	.....	1	350 9542	
BULB, Rear Quarter Lamp				
(GE 1004) 63-64 09.....	3.215	2	G455136	
(GE 211-1) 64-65 09-19-80..... ***(Use 320 9536)***	3.215	2	G9414045	
BRACKET, Rear Quarter Lamp				
65 50 (Marlin)..... ***(Discontinued)***	.....	1	353 0626	
LIGHT, Roof				
64 10 (Renault-Taxi): 65 10 (OHV-199-Renault-Taxi).....	.....	1	317 3304	
3.680 CONDUIT, Radio Cable				
64-65 02-05-06 (Police): 60 Thru 65 10-20-80 (Police).....	.....	1	345 5311	
RETAINER, Radio Cable Conduit				
60 Thru 62 10-20-80 (Police).....	3.005	2	314 9661	
ATTACHING PARTS				
Radio Cable Conduit Retainer To Wheelhouse Panel				
SCREW, Tapping..... ***60 Thru 62 10-20-80 (Police)***.....	17.671	4	G274773	NA
PLATE, Radio Cable Conduit				
64-65 02-05-06 (Police): 63 Thru 65 10-80 (Police).....	.....	5	348 8918	

Copyright 1963 American Motors Corp.

GROUP NO. — DESCRIPTION — YEAR and MODEL	PRIMARY GROUP NO.	PER CAR	PART NO.	CODE
ATTACHING PARTS Radio Cable Conduit Plate To Wheelhouse Panel				
SCREW, Tapping..... *64-65 02-05-06 (Police): 63 Thru 65 10-80 (Police)* ..	17.671	4	G274773	NA
SEAL, Radio Cable Conduit				
60 Thru 62 10-20-80 (Police).....	3.005	2	314 9662	
GASKET, Radio Cable Conduit				
64-65 02-05-06 (Police): 63 Thru 65 10-80 (Police).....	20.035	1	314 9882	
STRAP, Radio Cable Conduit				
60 Thru 62 10-20-80 (Police).....	.....	3	345 5264	
64-65 02-05-06 (Police): 63 Thru 65 10-80 (Police).....	.....	1	351 0445	
ATTACHING PARTS Radio Cable Conduit To Side Sill				
SCREW, Tapping..... *60 Thru 62 10-20-80 (Police): 64-65 10-80 (Police)*...	17.671	8	G274773	NA
3.690 FLASHER, Emergency Signal System (Simultaneous)				
61 Thru 63 01.....	.....	1	316 2774	
64-65 01 (LHE)(OHV-196).....	.....	1	317 2451	
61 Thru 65 10-80.....	.....	1	316 2110	
FLASHER, Emergency Signal System (Alternating)				
61 Thru 63 01 (Heavy Duty).....	.....	1	316 2776	
64 01 (Heavy Duty): 65 01 (LHE-Heavy Duty)(OHV-196-Heavy Duty).....	.....	1	317 2453	
61 Thru 65 10-80 (Heavy Duty).....	.....	1	316 2145	
ATTACHING PARTS Flasher To Instrument Panel				
SCREW, Machine..... *64-65 01-10-80 (Heavy Duty)*.....	17.614	2	G431586	NA
WASHER, Lock..... *64-65 01-10-80 (Heavy Duty)*.....	17.820	2	G131096	NA
NUT, Hexagon..... *64-65 01-10-80 (Heavy Duty)*.....	17.412	2	G120614	NA
CONNECTOR, Wire				
64-65 01-10-80 (Heavy Duty).....	3.341	AR	346 5210	
3.800 CONTACT ASSEMBLY, Horn				
64 10-80 (WAW).....	.....	1	320 5148	
65 10-80 (WAW).....	.....	1	320 5797	
3.802 ACTUATOR ASSEMBLY, Directional Signal Switch				
64-65 10-80 (WAW).....	.....	1	320 5156	
SPRING, Directional Signal Switch Actuator Trigger				
64-65 10-80 (WAW).....	.....	2	320 5159	
3.805 RING, Directional Signal Switch Actuator Assembly Post Retainer				
64-65 10-80 (WAW).....	.....	1	320 5157	
3.807 SPRING, Directional Signal Switch Actuator Assembly Detent				
64-65 10-80 (WAW).....	.....	1	320 5158	
3.810 CABLE ASSEMBLY, Directional Signal Switch To Housing				
64-65 10-80 (WAW).....	.....	1	320 5367	

Copyright 1963 American Motors Corp.

ELECTRICAL CHART INDEX

ALTERNATOR

AUTO-LITE NO.		PAGE NO.
ALD 5005		Ch 3 - 31
ALE 6009	Supplement	Ch 3 - 25
ALE 6303	Supplement	Ch 3 - 29
ALH 6303	Supplement	Ch 3 - 29
ALK 5101	Supplement	Ch 3 - 1
ALK 5101A	Supplement	Ch 3 - 1
ALK 5101C	Supplement	Ch 3 - 1
ALK 6302	Supplement	Ch 3 - 29
ALK 6402	Supplement	Ch 3 - 25
OE 6002	Supplement	Ch 3 - 25

DELCO-REMY NO.	PAGE NO.
1100629	Ch 3 - 35
1100647	Ch 3 - 35

LEECE-NEVILLE NO.	PAGE NO.
2036AA	Ch 3 - 29
2074AB	Ch 3 - 33

MOTOROLA NO.	PAGE NO.
A12NAM451	Ch 3 - 37
A12NAM551	Ch 3 - 39
A12NAM603	Ch 3 - 41

DISTRIBUTOR

AUTO-LITE NO.		PAGE NO.
IAT 4402-1		Ch 3 - 69
IAT 4407		Ch 3 - 73
IAT 4414	Supplement	Ch 3 - 9
IAT 4414A	Supplement	Ch 3 - 15
IAT 4415	Supplement	Ch 3 - 7
IAT 4415A	Supplement	Ch 3 - 13
IPB 4104		Ch 3 - 87
IBP 4104A		Ch 3 - 84c
IBP 4107		Ch 3 - 85
IBP 4109		Ch 3 - 89
IBP 4109A	Supplement	Ch 3 - 11
IDC 4601	Supplement	Ch 3 - 27

DELCO-REMY NO.	PAGE NO.
1110289	Ch 3 - 79
1110299	Ch 3 - 77
1110308	Ch 3 - 81
1110320	Ch 3 - 84a
1110340	Ch 3 - 80a
1111025	Ch 3 - 83
1112434	Ch 3 - 71
1112435	Ch 3 - 75

Copyright 1963 American Motors Corp.

ELECTRICAL CHART INDEX (Cont.)

GENERATOR

AUTO-LITE NO.	PAGE NO.	AUTO-LITE NO.	PAGE NO.
GGA 6001SN	Ch 3 - 5	GJP 7101	Ch 3 - 25
GJO 7101	Ch 3 - 3	GJP 7405S	Ch 3 - 27
GJO 7402S	Ch 3 - 11		

DELCO-REMY NO.	PAGE NO.	DELCO-REMY NO.	PAGE NO.
1100304	Ch 3 - 2a	1102070	Ch 3 - 21
1100313	Ch 3 - 2a	1102096	Ch 3 - 9
1100324	Ch 3 - 7	1102113	Ch 3 - 9
1100326	Ch 3 - 7	1102123	Ch 3 - 23
1100416	Ch 3 - 13	1102299	Ch 3 - 15
1102012	Ch 3 - 19	1102312	Ch 3 - 17
1102018	Ch 3 - 19	1102333	Ch 3 - 17
1102055	Ch 3 - 21		

STARTING MOTOR

AUTO-LITE NO.	PAGE NO.	AUTO-LITE NO.	PAGE NO.
MDY 6002	Ch 3 - 65	MEC 6001	Ch 3 - 61
MDY 6009	Ch 3 - 67	MEC 6003	Ch 3 - 63
MDY 6105 Supplement	Ch 3 - 5	MEC 6101 Supplement	Ch 3 - 3
MDY 6108 Supplement	Ch 3 - 17	MEC 6102 Supplement	Ch 3 - 19
MDY 6110 Supplement	Ch 3 - 21	MEC 6103 Supplement	Ch 3 - 23

DELCO-REMY NO.	PAGE NO.	DELCO-REMY NO.	PAGE NO.
1107201	Ch 3 - 47	1107347	Ch 3 - 55
1107282	Ch 3 - 51	1107348	Ch 3 - 57
1107317	Ch 3 - 49	1107349	Ch 3 - 59
1107331	Ch 3 - 53	1107731	Ch 3 - 43

Copyright 1963 American Motors Corp.

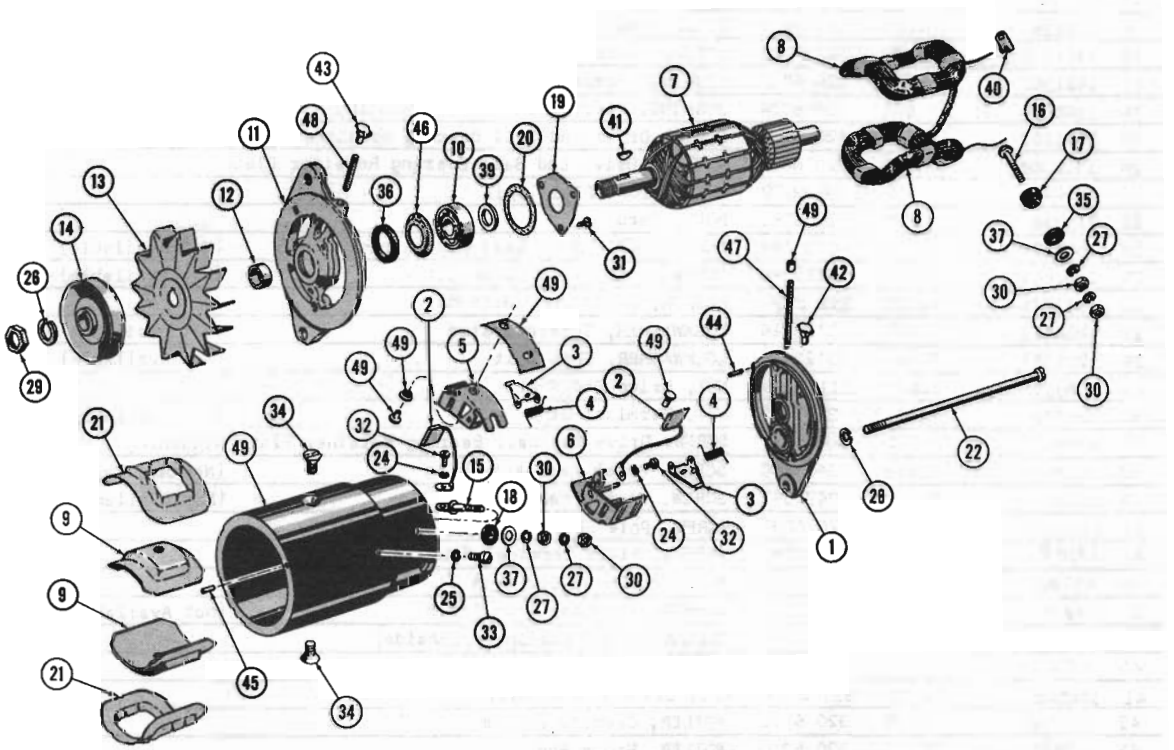

GENERATOR 60 01 (OHV): 60 10 (LAC)

A.M. NO. 320 0235 (Less Pulley) DELCO-REMY NO. 1100313
A.M. NO. 315 0323 (Incl. Pulley)(Not Serviced) DELCO-REMY NO. 1100304

KEY NO.	DELCO-REMY NUMBER	A.M. GROUP	A.M. PART NUMBER	DESCRIPTION	QUAN. REQ.
	1927598	3.005	320 0186	FRAME ASSY. (Incl. all parts listed below which are coded with a #)	1
	1927596	3.005	320 0185	FRAME ASSY. (Incl. all parts listed below which are coded with a *)	1
1				*FRAME, Commutator End	1
2	1923295			BRUSH	2
2		3.005	320 2029	BRUSH SET (Incl. 2-1923295	1
3	1878183	3.005	320 6058	ARM, Brush	2
4	1908829	3.005	311 5591	SPRING, Brush	2
5	1922288	3.005	320 6059	HOLDER, Brush (Ground)	1
6	1922289	3.005	320 6060	HOLDER, Brush (Insulated)	1
7	1928952	3.005	311 9528	ARMATURE	1
8	1927700	3.005	311 9531	COIL SET, Field (Incl. items coded with a +)	1
9	1914618	3.005	320 6065	SHOE, Pile	2
10	954378	3.005	311 3686	BEARING, Drive End Ball	1
11				#FRAME, Drive End	1
12	1858603	3.005	320 6067	COLLAR, Drive End Space (Outside)	1

KEY NO.	DELCO-REMY NUMBER	A.M. GROUP	A.M. PART NUMBER	DESCRIPTION		QUAN. REQ.
13				FAN (Part of Key No. 14)		
14	1924689	3.010	320 3410	PULLEY, (Incl. Fan)	(Replaces 311 9536)	1
15	1921369	3.005	320 6071	STUD, Armature Terminal		1
16	1921860	3.005	320 6072	+STUD, Field Terminal		1
17	1921362	3.005	320 6073	BUSHING, Armature Terminal (Insulating)		1
18	1885090	3.005	320 6074	BUSHING, Field Terminal (Insulating)		1
19	1911263	3.005	320 6075	PLATE, Drive End Ball Bearing Retainer		1
20	1912008	3.005	320 6077	GASKET, Drive End Ball Bearing Retainer Plate		1
21	1914419	3.005	320 6079	+INSULATOR, Field Coil		2
22	815018	3.005	320 6081	BOLT, Thru		2
24	1904377	17.820	G131182	LOCKWASHER, Brush Lead Attaching Screw	(Not Available)	2
25	120380	17.820	G120380	LOCKWASHER, Field Frame Screw	(Not Available)	1
26	1941978	3.010	311 2797	WASHER, Drive End Shaft Nut		1
27	1904661	17.820	G113114	LOCKWASHER, Terminal Stud	(Not Available)	2
28	120638	17.820	G120638	LOCKWASHER, Thru Bolt	(Not Available)	2
29	806915	3.010	311 2796	NUT, Drive End Shaft		1
30	121743	17.412	G121743	NUT, Terminal Stud	(Not Available)	2
31	1904370	3.005	320 6091	SCREW, Drive End Ball Bearing Retainer Plate Attaching		3
32	132688	17.678	G453460	SCREW, Brush Lead Attaching	(Not Available)	2
33	225577	17.614	G422597	SCREW, Field Frame	(Not Available)	1
34	1843646	3.005	320 6095	SCREW, Pole Shoe		2
35	1858753	3.005	320 6096	WASHER, Field Terminal Stud Insulating		1
36	809961	3.005	311 2692	*WASHER, Drive End Felt		1
37	1381409	17.814	G131015	WASHER, Terminal Stud Plain	(Not Available)	2
39	809945	3.005	320 6207	COLLAR, Drive End Space (Inside)		1
40	200382			+CLIP, Terminal		1
41	124545	3.010	311 2794	KEY, Drive End Woodruff		1
42	113702	3.005	320 6211	*OILER, Commutator End		1
43	125609	3.005	320 6210	#OILER, Drive End		1
44	809062			*PIN, Commutator End Dowel		1
45	809593	3.005	311 2693	#PIN, Drive End Dowel		1
46	819104	3.005	320 6213	*SLINGER, Drive End Bearing Grease		1
47	804080	3.005	320 6214	*WICK, Commutator End Oil		1
49				Not Serviced		

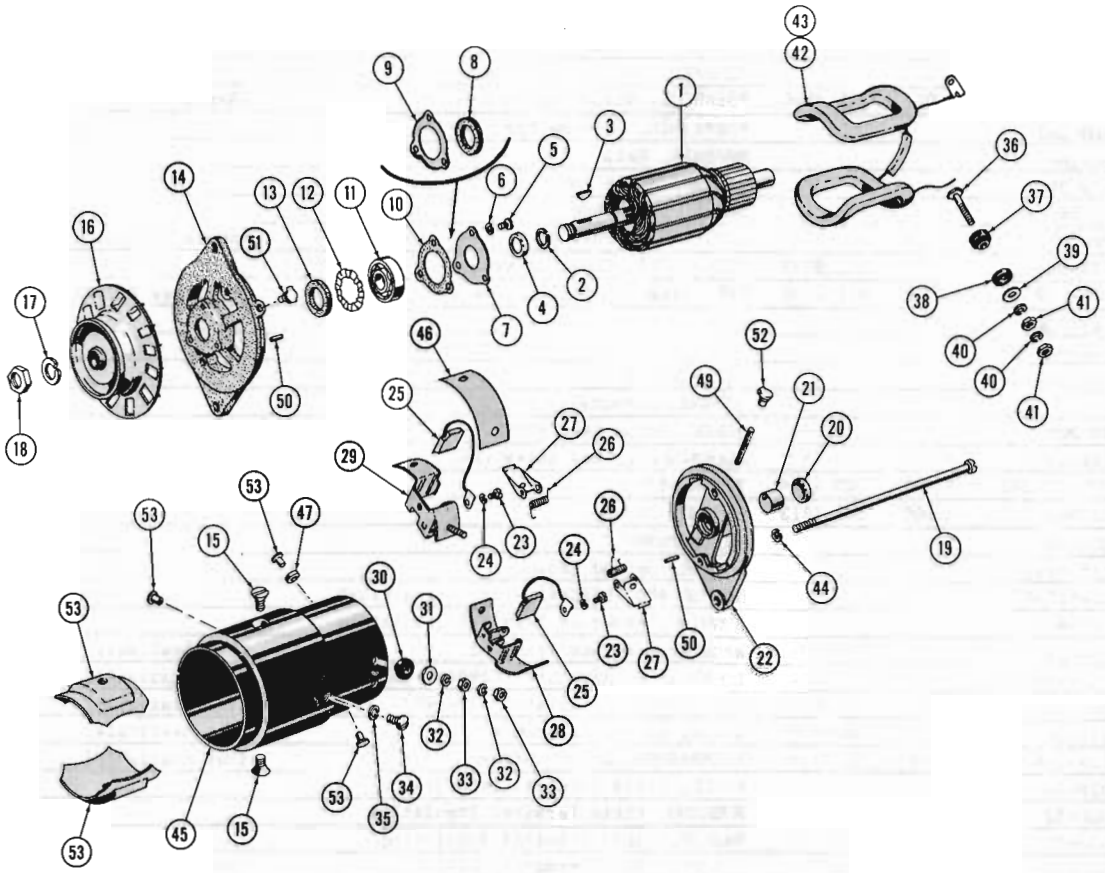

GENERATOR 60-61 01 (LHE): 60-61 20 (LAC)

A.M. NO. 320 1812 (Less Pulley) — AUTO-LITE NO. GJO-7101S
A.M. NO. 315 7206 (Incl. Pulley)(Not Serviced) — AUTO-LITE NO. GJO-7101A

KEY NO.	AUTO-LITE NUMBER	A.M. GROUP	A.M. PART NUMBER	DESCRIPTION		QUAN. REQ.
	GJP-2038	3.005	320 1816	FRAME ASSY. (Incl. all parts listed below which are coded with a +)		1
	GJO-2006	3.005	320 3572	ARMATURE (Incl. all parts listed below which are coded with a ϕ)	(Replaces 320 1818)	1
	GJO-1005A	3.005	320 1815	COIL SET, (Incl. all parts listed below which are coded with a #)		1
	GJP-1039	3.005	320 2121	FRAME ASSY. (Incl. all parts listed below which are coded with a *)		1
1				ϕARMATURE		1
2	GAR-171			ϕ RING, Snap		1
3	X-260	17.344	G103905	KEY, Woodruff		1
4	GR-32			RETAINER, Drive End		1
5	GGW-52	17.664	G169513	*SCREW, Retainer (10-32 x 12)	(Not Available)	3
6	12X-196	17.820	G122158	*LOCKWASHER, Retainer Screw (#10)	(Not Available)	3
7	GJC-27			*RETAINER, Bearing		1
8	GG-164			*WASHER, Felt		1

GROUP 3

KEY NO.	AUTO-LITE NUMBER	A.M. GROUP	A.M. PART NUMBER	DESCRIPTION		QUAN. REQ.
9	GBM-125			*Retainer (Not Used)		
10	GEE-27			*GASKET		1
11	X-295	3.005	311 3686	*BEARING, Drive End Ball	(Replaces 311 8964)	1
12	GMB-128			*RETAINER, Felt Washer		1
13	GG-164			*WASHER, Felt		1
14	GJP-39			*FRAME, Drive End		1
15	GK-38			SCREW, Pole Shoe		2
16	PU-1152	3.010	320 3589	FAN, (Incl. Pulley)	(Replaces 311 8874)	1
17	12X-864	3.010	311 8777	LOCKWASHER, Shaft Drive End		1
18	GBM-21B	3.010	311 2796	NUT, Armature Shaft Drive End	(Replaces 311 8776)	1
19	GAL-20A			BOLT, Thru		2
20	GJC-49			+COVER, Bearing Commutator End		1
21	GJC-38A			+BEARING, Bronze		1
22				+FRAME, Commutator End		1
23	8X-305	17.678	G132762	SCREW, Brush Lead (#8-32 x 1/4)	(Not Available)	2
24	12X-195	17.820	G131182	LOCKWASHER, Lead Screw (#8)	(Not Available)	2
25	GJC-2012AS	3.005	320 1814	BRUSH SET		1
26	GJC-42	3.005	320 1813	SPRING, Brush		2
27	GJC-35			ARM, Brush		2
28	GJC-1033			HOLDER, Ground Brush		1
29	GJP-1034			HOLDER AND TERMINAL, Insulating Brush		1
30	GJC-41			BUSHING, Armature Terminal Insulating		1
31	SW-634	17.814	G446179	WASHER, Armature Terminal	(Not Available)	1
32	12X-199	17.820	G113114	LOCKWASHER, Armature Terminal (1/4)	(Not Available)	2
33	8X-1063	17.410	G120613	NUT, Armature Terminal (1/4-28)	(Not Available)	2
34	8X-3381	17.614	G422597	SCREW, Ground (1/4-28 x 5/16)	(Not Available)	1
35	12X-199	17.820	G113114	LOCKWASHER, Ground Screw	(Not Available)	1
36	GJP-36			#STUD, Field Terminal (#10-32)		1
37	GGU-32			BUSHING, Field Terminal Insulating		1
38	GGU-30			WASHER, Field Terminal Insulating		1
39	GGU-31	17.814	G131015	WASHER, Field Terminal (Plain)	(Not Available)	1
40	12X-196	17.820	G122158	LOCKWASHER, Field Terminal (#10)	(Not Available)	2
41	8X-1377	17.412	G120614	NUT, Field Terminal (#10-32)	(Not Available)	2
42	GJO-1007			#COIL, Field (Right)		1
43	GJO-1008			#COIL, Field (Left)		1
44	12X-199	17.820	G113114	LOCKWASHER, Thru Bolt (1/4)	(Not Available)	2
45				HOUSING		1
46	GJC-39			INSULATION, Brush Holder		1
47				BUSHING, Brush Holder Insulation		2
48	GAR-75			RETAINER, Oil		1
49	GJC-46			+WICK, Felt		1
50	MN-21			+*PIN, Dowel		1
51	X-489			*OILER, Drive End Frame		1
52	X-3279			+OILER, Commutator End		1
53				Not Serviced		

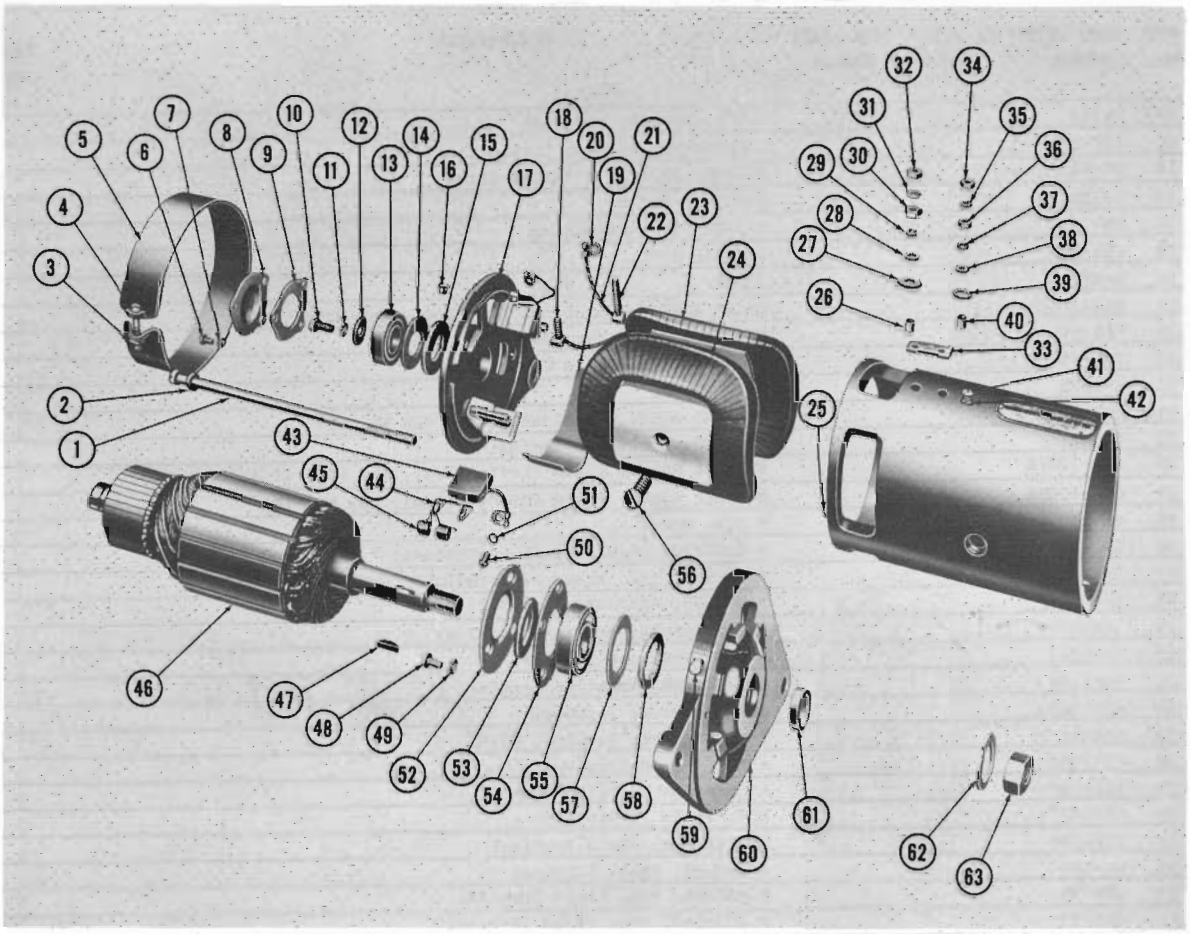

GENERATOR 60 THRU 62 01-10: 60-61 20-80
(40 AMP.)(LOW CUT IN)(REFER NOTE 3.005-4)

A.M. No. 314 9528 AUTO-LITE GGA-6001SN

KEY NO.	AUTO-LITE NUMBER *	A.M. GROUP	A.M. PART NUMBER	DESCRIPTION	PER CAR
	GGA-2033			COVER AND FIELD ASSY. (Incl. all parts listed below which are coded with a *)	1
	GGA-1005A			* COIL SET (Incl. all parts listed below which are coded with a #)	1
	GGA-1068			FRAME ASSY., Drive End (Incl. all parts listed below which are coded with a *)	1
1	GGA-20			BOLT, Thru	2
2	12X-201			LOCKWASHER, Thru Bolt	2
3	8X-794			NUT, Cover Band	1
4	8X-714			SCREW, Cover Band	1
5	GCD-24			BAND, Cover	1
6	8X-119			SCREW, Commutator End Frame	3
7	12X-196			LOCKWASHER, Commutator End Frame Screw	2
8	DD-24C			COVER, Commutator End	1
9	DD-44			GASKET, Commutator End Cover	1

GROUP 3

KEY NO.	AUTO-LITE NUMBER	A.M. GROUP	A.M. PART NUMBER	DESCRIPTION	PER CAR
10	DA-60			SCREW, Bearing Retainer	1
11	12X-199			LOCKWASHER, Bearing Retainer Screw	1
12	DA-22			WASHER, Bearing Retainer Screw	1
13	X-365			BEARING, Ball	1
14	DB-17			WASHER, Felt Retaining	1
15	GBY-28			WASHER, Felt	1
16	X-489			OILER	1
17	GGJ-2021S			FRAME ASSY., Commutator End (Incl. Key No's 44 And 45)	1
18	GEB-58			#* STUD, Field Terminal	1
19	GAU-45			* INSULATION, Field Connection	1
20	X-1425			#* TERMINAL	1
21	GCD-79			#* LEAD ASSY., Terminal (Incl. Key No. 20)	1
22	GGJ-27			#* STUD, Armature Terminal	1
23	GGA-1007A			#* COIL ASSY., Field (Left) (Incl. Key Nos. 21 And 22)	1
24	GGA-1008A			#* COIL ASSY., Field (Right) (Incl. Key No. 18)	1
25	MN-21			* PIN, Dowel	2
26	GDD-28			* BUSHING, Insul. Armature Terminal	1
27	GAA-32			* WASHER, Ins. Armature Terminal	1
28	8X-361			* WASHER, Armature Terminal	1
29	12X-199			* LOCKWASHER, Armature Terminal	1
30	8X-1063			* NUT, Armature Terminal	1
31	12X-199			LOCKWASHER, Armature Terminal	1
32	8X-1063			NUT, Armature Terminal	1
33	GGA-52			* INSULATION, Terminal Stud	1
34	8X-1377			* NUT, Field Terminal	2
35	12X-196			* LOCKWASHER, Field Terminal	1
36	8X-1377			NUT, Field Terminal	1
37	12X-196			LOCKWASHER, Field Terminal	1
38	8X-349			* WASHER, Field Terminal	1
39	GBW-34			* WASHER, Ins. Field Terminal	1
40	GDD-27			* BUSHING, Ins. Field Terminal	1
41	8X-321			SCREW, Ground	1
42	12X-196			LOCKWASHER, Ground Screw	1
43	GCD-2012S			BRUSH SET	1
44	GCE-54			ARM, Brush	2
45	GBY-25			SPRING, Brush	2
46	GFY-2101F			ARMATURE	1
47	X-263	3.010	320 3683	KEY, Woodruff	1
48	8X-311			+ SCREW, Retainer	3
49	12X-196			+ LOCKWASHER, Retainer	3
50	8X-305			SCREW, Brush Lead	2
51	12X-195			LOCKWASHER, Lead Screw	2
52	GGF-13			+ RETAINER, Bearing	1
53	GGF-9			+ WASHER, Felt	1
54	GGF-12			+ RETAINER, Felt Washer, Inner	1
55	X-298			+ BEARING, Ball	
56	GBY-38A			* SCREW, Pole Shoe	4
57	GGF-10			+ RETAINER, Felt Washer, Outer	1
58	GGF-9			+ WASHER, Felt	1
59	X-489			+ OILER	1
60	GGA-68			+ FRAME, Drive End	1
61	GGA-70			SPACER, Armature Shaft	1
62	12X-864	3.010	311 8777	LOCKWASHER, Shaft, Drive End	1
63	GMB-21B	3.010	311 2796	NUT, Shaft Drive End (Replaces 311 8776)	1

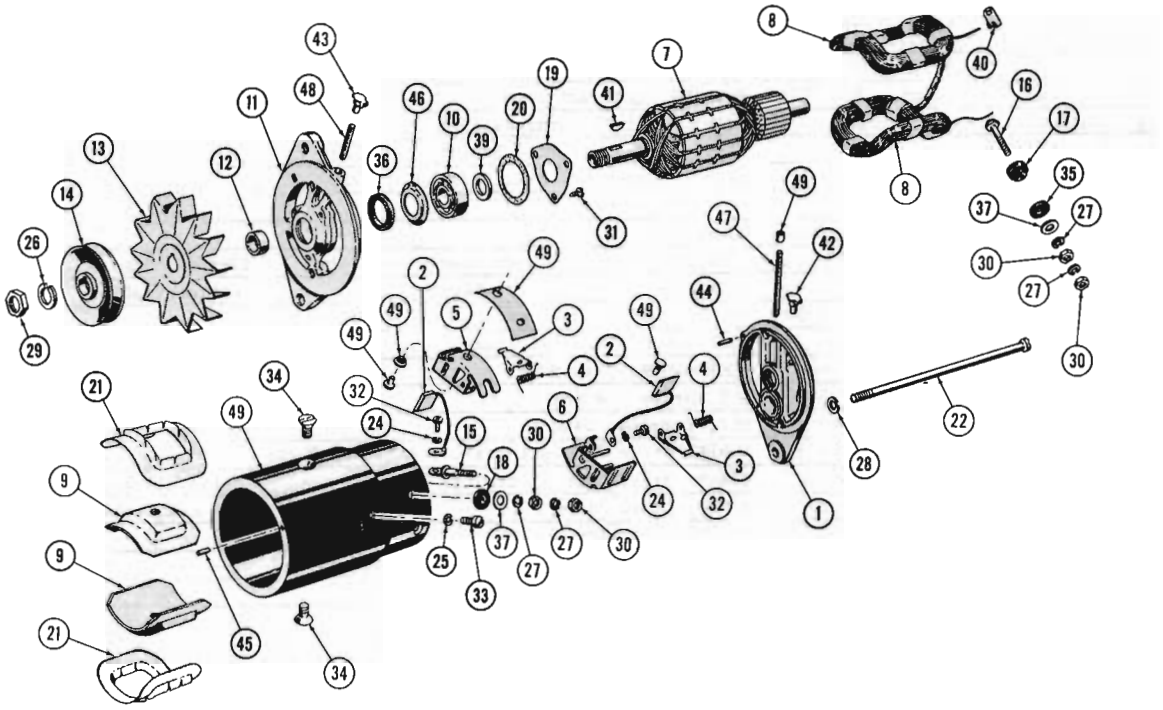

GENERATOR 61 01 (OHV-LAC): 60-61 10 (LAC)

A.M. NO. 320 2796 (Less Pulley) DELCO-REMY NO. 1100326
A.M. NO. 316 1479 (Incl. Pulley)(Not Serviced) DELCO-REMY NO. 1100324

KEY NO.	DELCO-REMY NUMBER	A.M. GROUP	A.M. PART NUMBER	DESCRIPTION	QUAN REQ.
	1910404	3.005	311 9539	FRAME ASSY. (Incl. all parts listed below which are coded with a #)	1
	1993933	3.005	320 2798	FRAME ASSY. (Incl. all parts listed below which are coded with a *)	1
1				*FRAME, Commutator End	1
2	1932506			BRUSH	2
2		3.005	320 2029	BRUSH SET (Incl. 2-1932506)	1
3	1878183	3.005	320 6058	ARM, Brush	2
4	1908829	3.005	311 5591	SPRING, Brush	2
5	1922288	3.005	320 6059	HOLDER, Brush (Ground)	1
6	1922289	3.005	320 6060	HOLDER, Brush (Insulated)	1
7	1928952	3.005	311 9528	ARMATURE	1
8	1927700	3.005	311 9531	COIL SET, Field (Incl. items coded with a +)	1
9	1914618	3.005	320 6066	SHOE, Pole	2
10	954378	3.005	311 3686	BEARING, Drive End Ball	1
11				#FRAME, Drive End	1
12	1358603	3.005	320 6067	COLLAR, Drive End Space (Outside)	1
13				FAN (Part of Key No. 14)	

GROUP 3

KEY NO.	DELCO-REMY NUMBER	A.M. GROUP	A.M. PART NUMBER	DESCRIPTION		QUAN. REQ.
14	1924689	3.010	320 3410	PULLEY, (Incl. Fan)	(Replaces 311 9536)	1
15	1921369	3.005	320 6071	STUD, Armature Terminal		1
16	1921860	3.005	320 6072	+STUD, Field Terminal		1
17	1921362	3.005	320 6073	BUSHING, Armature Terminal (Insulating)		1
18	1385090	3.005	320 6074	BUSHING, Field Terminal (Insulating)		1
19	1911263	3.005	320 6075	PLATE, Drive End Ball Bearing Retainer		1
20	1912008	3.005	320 6077	GASKET, Drive End Ball Bearing Retainer Plate		1
21	1914491	3.005	320 6078	+INSULATOR, Field Coil		2
22	815018	3.005	320 6081	BOLT, Thru		2
24	1904377	17.820	G131182	LOCKWASHER, Brush Lead Attaching Screw	(Not Available)	2
25	120380	17.820	G120380	LOCKWASHER, Field Frame Screw	(Not Available)	1
26	1941978	3.010	311 2797	WASHER, Drive End Shaft Nut		1
27	1904661	17.820	G113114	LOCKWASHER, Terminal Stud	(Not Available)	2
28	120638	17.820	G120638	LOCKWASHER, Thru Bolt	(Not Available)	2
29	806915	3.010	311 2796	NUT, Drive End Shaft		1
30	121743	17.412	G121743	NUT, Terminal Stud	(Not Available)	2
31	1904370	3.005	320 6091	SCREW, Drive End Ball Bearing Retainer Plate Attaching		3
32	132688	17.678	G453460	SCREW, Brush Lead Attaching	(Not Available)	2
33	225577	17.614	G422597	SCREW, Field Frame	(Not Available)	1
34	1843646	3.005	320 6096	SCREW, Pole Shoe		2
35	1858753	3.005	320 6097	WASHER, Field Terminal Stud Insulating		1
36	809961	3.005	311 2692	*WASHER, Drive End (Felt)		1
37	1881409	17.814	G131015	WASHER, Terminal Stud Plain	(Not Available)	2
39	809945	3.005	320 6208	COLLAR, Drive End Space (Inside)		1
40	200382			+CLIP, Terminal		1
41	124545	3.010	311 2794	KEY, Drive End Woodruff		1
42	113702	3.005	320 6211	*OILER, Commutator End		1
43	125609	3.005	320 6210	#OILER, Drive End		1
44	809062			*PIN, Commutator, End Dowel		1
45	809593	3.005	311 2693	#PIN, Drive End Dowel		1
46	819104	3.005	320 6213	*SLINGER, Drive End Bearing Grease		1
47	804080	3.005	320 6214	*WICK, Commutator End Oil		1
48	823551	3.005	320 6215	#WICK, Drive End Oil		1
49				Not Serviced		

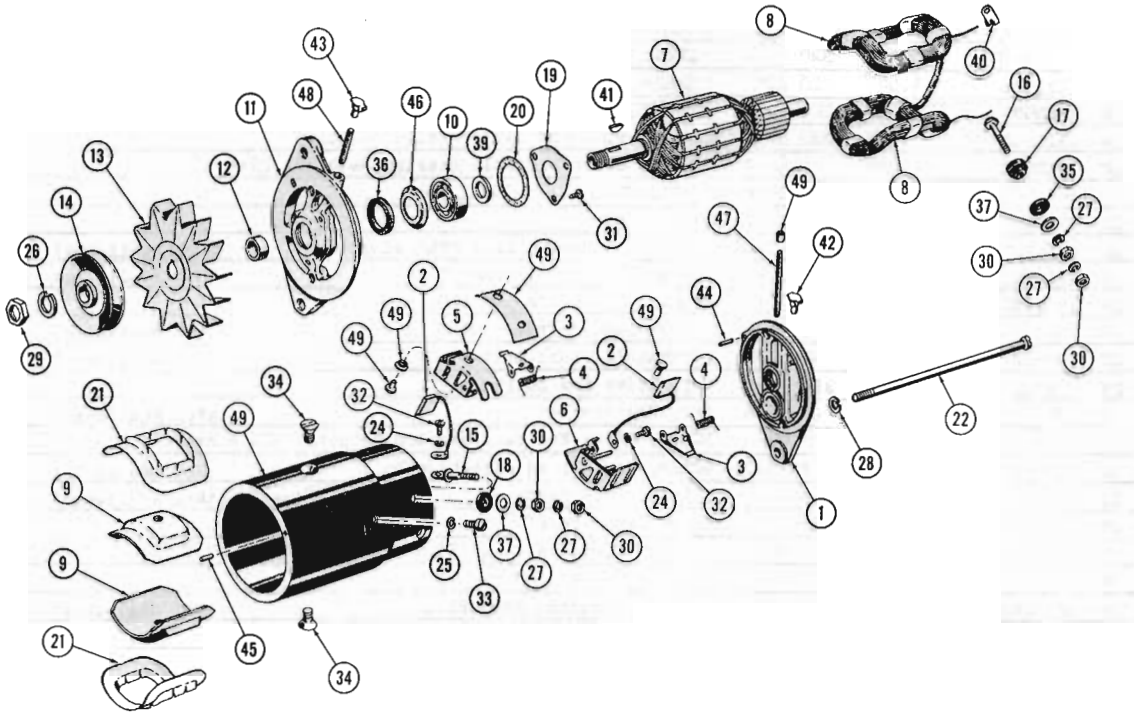

GENERATOR 61 01 (OHV-WAC): 61 10 (WAC)

A.M. NO. 320 2797 (Less Pulley) — DELCO-REMY NO. 1102096
A.M. NO. 316 1480 (Incl. Pulley)(Not Serviced) — DELCO-REMY NO. 1102113

KEY NO.	DELCO-REMY NUMBER	A.M. GROUP	A.M. PART NUMBER	DESCRIPTION	QUAN. REQ.
				FRAME ASSY. Incl. all items losted below which are coced with a *)	1
1				*FRAME, Commutator End	1
2	1932506			BRUSH	2
2		3.005	320 2029	BRUSH SET (Incl. 2-1932506)	1
3	1878183	3.005	320 6058	ARM, Brush	2
4	1908829	3.005	311 5591	SPRING, Brush	2
5	1922288	3.005	320 6059	HOLDER, Brush (Ground)	1
6	1922289	3.005	320 6060	HOLDER, Brush (Insulated)	1
7	1923535	3.005	311 9530	ARMATURE	1
8	1936388	3.005	320 0188	COIL SET, Field (Incl. all items coded with a +)	1
9	1912725	3.005	320 6066	SHOE, Pole	2
10	954378	3.005	311 3686	BEARING, Drive End Ball	1
11				*FRAME, Drive End	1
12	1858603	3.005	320 6067	COLLAR, Drive End Space (Outside)	1
13				FAN (Part of Key No. 14)	
14	1924689	3.010	311 9536	PULLEY (Incl. Fan)	1

GROUP 3

KEY NO.	DELCO-REMY NUMBER	A.M. GROUP	A.M. PART NUMBER	DESCRIPTION		QUAN. REQ.
15	1921369	3.005	320 6071	STUD, Armature Terminal		1
16	1921860	3.005	320 6072	+STUD, Field Terminal		1
17	1921362	3.005	320 6073	BUSHING, Armature Terminal (Insulating)		1
18	1885090	3.005	320 6074	BUSHING, Field Terminal (Insulating)		1
19	1911263	3.005	320 6075	PLATE, Drive End Ball Bearing Retainer		1
20	1912008	3.005	320 6077	GASKET, Drive End Ball Bearing Retainer Plate		1
21	1912073	3.005	320 6078	+INSULATOR, Field Coil		2
22	809763	3.005	320 6080	BOLT, Thru		2
24	1904377	17.820	G131182	LOCKWASHER, Brush Lead Attaching Screw	(Not Available)	2
25	120380	17.820	G120380	LOCKWASHER, Field Frame Screw	(Not Available)	1
26	1941978	3.010	311 2797	WASHER, Drive End Shaft Nut		1
27	1904661	17.820	G113114	LOCKWASHER, Terminal Stud	(Not Available)	2
28	120638	17.820	G120638	LOCKWASHER, Thru Bolt	(Not Available)	2
29	806915	3.010	311 2796	NUT, Drive End Shaft		1
30	121743	17.412	G121743	NUT, Terminal Stud	(Not Available)	2
31	1904370	3.005	320 6091	SCREW, Drive End Ball Bearing Retainer Plate Attaching		3
32	132688	17.678	G453460	SCREW, Brush Lead Attaching	(Not Available)	2
33	225577	17.614	G422597	SCREW, Field Frame	(Not Available)	1
34	1843646	3.005	320 6096	SCREW, Pole Shoe		2
35	1858753	3.005	320 6097	WASHER, Field Terminal Stud Insulating		1
36	809961	3.005	311 2692	*WASHER, Drive End (Felt)		1
37	1881409	17.814	G131015	WASHER, Terminal Stud Plain	(Not Available)	2
39	812823	3.005	320 6208	COLLAR, Drive End Space (Inside)		1
40	200382			+CLIP, Terminal		1
41	124545	3.010	311 2794	KEY, Drive End Woodruff		1
42	125609	3.005	320 6210	#OILER, Commutator End		1
43	125609	3.005	320 6210	*OILER, Drive End		1
44	809062			#PIN, Commutator End Dowel		1
45	809593	3.005	311 2693	*PIN, Drive End Dowel		1
46	81904	3.005	320 6213	*SLINGER, Drive End Bearing Grease		1
47	804080	3.005	320 6214	#WICK, Commutator End Oil		1
48	823551	3.005	320 6215	*WICK, Drive End Oil		1
49				Not Serviced		

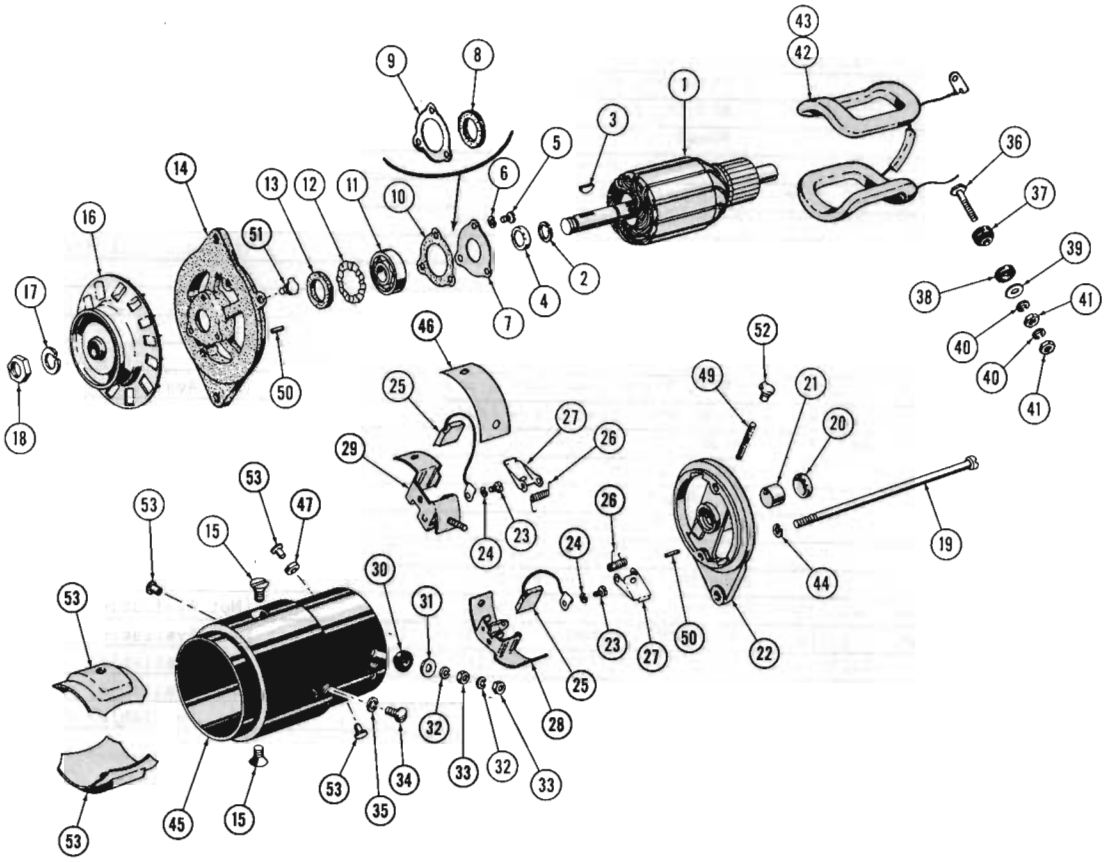

GENERATOR 62 01 (LHE)

A.M. No. 320 3587 AUTO-LITE No. GJO-7402S

KEY NO.	AUTO-LITE NUMBER	A.M. GROUP	A.M. PART NUMBER	DESCRIPTION		QUAN. REQ.
	GJO-1005B	3.005	320 4461	COIL SET (Incl. all parts listed below which are coded with a #)		1
	GJP-1039B	3.005	320 3591	FRAME ASSY. (Incl. all parts listed below which are coded with a *)		1
	GJO-2006F	3.005	320 3592	ARMATURE, (Incl. all parts listed below which are coded with a +)		1
	GJO-2047	3.005	320 3590	FRAME ASSY., (Incl. all parts listed below which are coded with a ϕ)		1
1				+ARMATURE		1
2	GAR-171			+RING, Snap		1
3	X-260	17.344	G103905	KEY, Woodruff		1
4	GR-32			RETAINER, Drive End		1
5	GGW-52	17.664	G169513	* SCREW, Retainer (10-32 x 1/2)	(Not Available)	3
6	12X-196	17.820	G122158	* LOCKWASHER, Retainer Screw (#10)	(Not Available)	3
7	GBM-127			* RETAINER, Bearing		1
8	GG-164			* WASHER, Felt		1
9	GBM-125			* RETAINER, Felt Washer (Inner)		1

GROUP 3

KEY NO.	AUTO-LITE NUMBER	A.M. GROUP	A.M. PART NUMBER	DESCRIPTION		QUAN. REQ.
10	GJK-9			* GASKET		1
11	X-295C	3.005	311 3686	*BEARING, Drive End Ball	(Replaces 320 3593)	1
12	GBM-128			* RETAINER, Felt Washer (Outer)		1
13	GG-164			* WASHER, Felt		1
14	GJP-39B			* FRAME, Drive End		1
15	GK-38			SCREW, Pole Shoe		2
16	PU-1563	3.010	320 3589	FAN (Incl. Pulley)		1
17	12X-864	3.010	311 8777	LOCKWASHER, Shaft Drive End		1
18	GBM-21B	3.010	311 2796	NUT, Armature Shaft Drive End	(Replaces 311 8776)	1
19	GAL-20A			BOLT, Thru		2
20	GJC-49			ϕCOVER, Bearing Commutator End		1
21	GJC-38A			ϕBEARING, Bronze		1
22				ϕFRAME, Commutator End		1
23	8X-305	17.678	G132762	SCREW, Brush Lead (#8-32 x 1/4)	(Not Available)	2
24	12X-195	17.820	G131182	LOCKWASHER, Lead Screw (#8)	(Not Available)	2
25	GJC-2012AS	3.005	320 1814	BRUSH SET		1
26	GJC-42	3.005	320 1813	SPRING, Brush		2
27	GJC-35			ARM, Brush		2
28	GJC-1033			HOLDER, Ground Brush		1
29	GJP-1034			HOLDER AND TERMINAL, Insulating Brush		1
30	GJC-41			BUSHING, Armature Terminal Insulating		1
31	SW-634	17.814	G446179	WASHER, Armature Terminal	(Not Available)	1
32	12X-199	17.820	G113114	LOCKWASHER, Armature Terminal (1/4)	(Not Available)	2
33	8X-1063	17.410	G120613	NUT, Armature Terminal (1/4-28)	(Not Available)	2
34	8X-3381	17.614	G422597	SCREW, Ground (1/4-28 x 5/16)	(Not Available)	1
35	12X-199	17.820	G113114	LOCKWASHER, Ground Screw	(Not Available)	1
36	GJP-36			# STUD, Field Terminal (#10-32)		1
37	GGU-32			BUSHING, Field Terminal Insulating		1
38	GGU-30			WASHER, Field Terminal Insulating		1
39	GGU-31	17.814	G131015	WASHER, Field Terminal (Plain)	(Not Available)	1
40	12X-196	17.820	G122158	LOCKWASHER, Field Terminal (#10)	(Not Available)	2
41	8X-1377	17.412	G120614	NUT, Field Terminal (#10-32)	(Not Available)	2
42	GJO-1007			# COIL, Field (Right)		1
43	GJO-1008			# COIL, Field (Left)		1
44	12X-199	17.820	G113114	LOCKWASHER, Thru Bolt (1/4)	(Not Available)	2
45				HOUSING		1
46	GJC-39			INSULATION, Brush Holder		1
47				BUSHING, Brush Holder Insulation		2
48	GAR-75			RETAINER, Oil		1
49	GJC-46			ϕWICK, Felt		1
50	MN-21			ϕ*PIN, Dowel		1
53				Not Serviced		

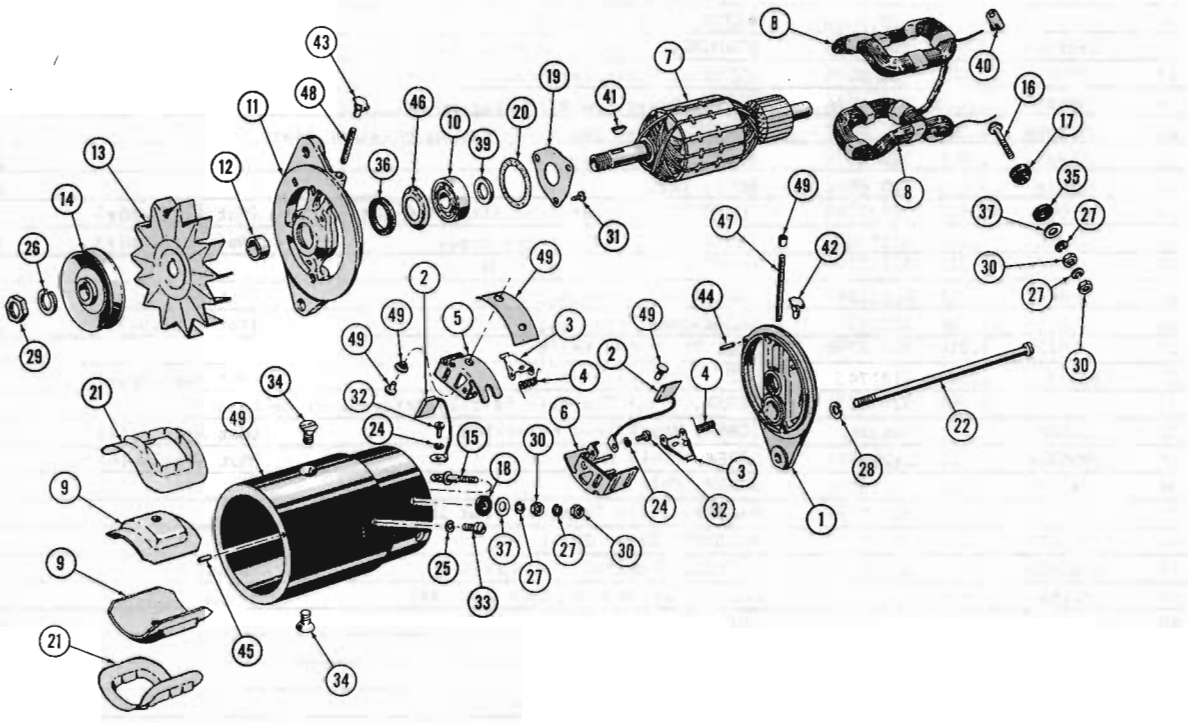

GENERATOR 62 01-10 (OHV-LAC)

A.M. No. 320 3564 DELCO-REMY No. 1100416

KEY NO.	DELCO-REMY NUMBER	A.M. GROUP	A.M. PART NUMBER	DESCRIPTION	QUAN. REQ.
	1957553	3.005	320 3409	FRAME ASSY., (Incl. all parts listed below which are coded with a #)	1
	1957555	3.005	320 3408	FRAME ASSY., (Incl. all parts listed below which are coded with a *)	1
1				*FRAME, Commutator End	1
2	1932506			BRUSH	2
2		3.005	320 2029	BRUSH SET (Incl. 2-1932506)	1
3	1878183	3.005	320 6058	ARM, Brush	2
4	1908829	3.005	311 5591	SPRING, Brush	2
5	1922288	3.005	320 6059	HOLDER, Brush (Ground)	1
6	1922289	3.005	320 6060	HOLDER, Brush (Insulated)	1
7	1928952	3.005	311 9528	ARMATURE	1
8	1927700	3.005	311 9531	COIL SET, Field (Incl. items coded with a +)	1
9	1914618	3.005	320 6065	SHOE, Pole	2
10	954378	3.005	311 3686	BEARING, Drive End Ball	1
11				#FRAME, Drive End	1
12	1955819	3.005	320 6068	COLLAR, Drive End Space (Outside)	1
13				FAN (Part of Key No. 14)	

GROUP 3

KEY NO.	DELCO-REMY NUMBER	A.M. GROUP	A.M. PART NUMBER	DESCRIPTION	QUAN. REQ.
14	1921939	3.010	320 3410	PULLEY (Incl. Fan)	1
15	1921369	3.005	320 6071	STUD, Armature Terminal	1
16	1921860	3.005	320 6072	+STUD, Field Terminal	1
17	1921362	3.005	320 6073	BUSHING, Armature Terminal (Insulating)	1
18	1885090	3.005	320 6074	BUSHING, Field Terminal (Insulating)	1
19	1955494	3.005	320 6076	PLATE, Drive End Ball Bearing Retainer	1
20	1912008	3.005	320 6077	GASKET, Drive End Ball Bearing Retainer Plate	1
21	1914491	3.005	320 6079	+INSULATOR, Field Coil	2
22	815018	3.005	320 6081	BOLT, Thru	2
24	131044	17.820	G131044	LOCKWASHER, Brush Lead Attaching Screw (Not Available)	2
25	120380	17.820	G120380	LOCKWASHER, Field Frame Screw (Not Available)	1
26	1941978	3.010	311 2797	WASHER, Drive End Shaft Nut	1
27	1904661	17.820	G113114	LOCKWASHER, Terminal Stud (Not Available)	2
28	120638	17.820	G120638	LOCKWASHER, Thru Bolt (Not Available)	2
29	806915	3.010	311 2796	NUT, Drive End Shaft	1
30	121743	17.412	G121743	NUT, Terminal Stud (Not Available)	2
31	1904370	3.005	320 6091	SCREW, Drive End Ball Bearing Retainer Plate Attaching	3
32	132688	3.005	G453460	SCREW, Brush Lead Attaching (Not Available)	2
33	1956358	17.614	G422597	SCREW, Field Frame (Not Available)	1
34	1843646	3.005	320 6095	SCREW, Pole Shoe	2
35	1858753	3.005	320 6096	WASHER, Field Terminal Stud Insulating	1
36	1957559	3.005	320 5999	#WASHER, Drive End Felt	1
37	1881409	17.814	G131015	WASHER, Terminal Stud Plain (Not Available)	2
39	1861591	3.005	320 6060	COLLAR, Drive End Space (Inside)	1
40	200382			CLIP, Terminal	1
40	200382			+CLIP, Terminal	1
41	124545	3.010	311 2794	KEY, Drive End Woodruff	1
44	809062			*PIN, Commutator End Dowel	
45	809593	3.005	311 2693	#PIN, Drive End Dowel	1
46	1947344	3.005	320 6070	*SLINGER, Drive End Bearing Grease	1
49				Not Serviced	

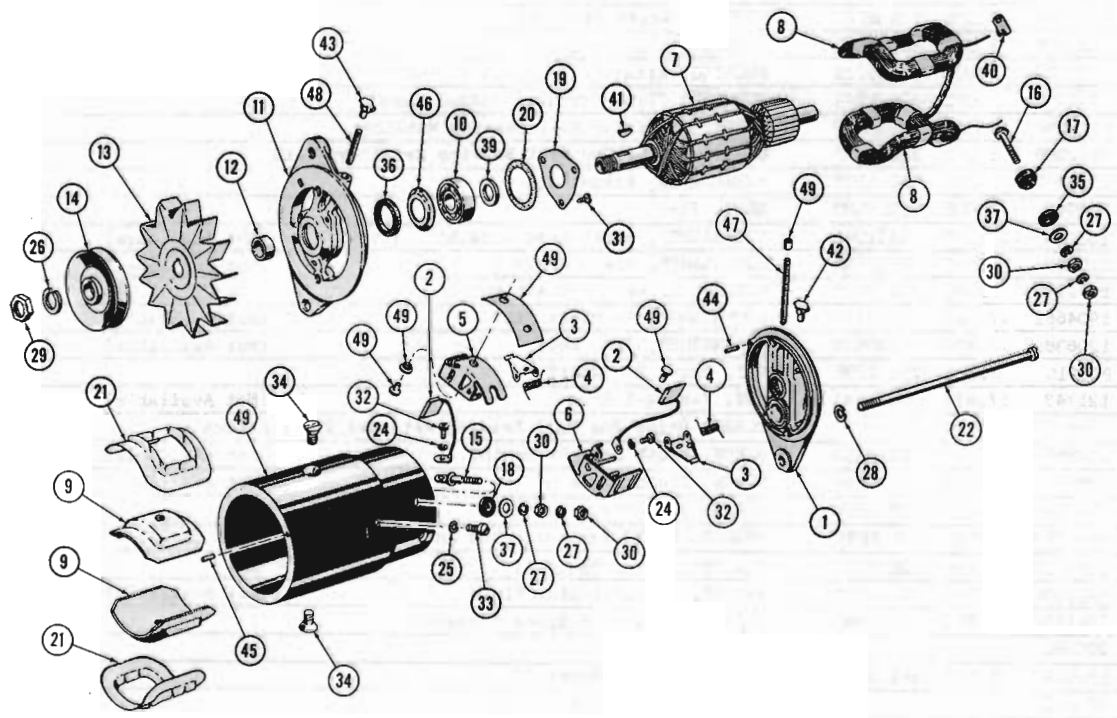

GENERATOR 62 01-10 (OHV-WAC)

A.M. No. 320 3565 DELCO-REMY No. 1102299

KEY NO.	DELCO-REMY NUMBER	A.M. GROUP	A.M. PART NUMBER	DESCRIPTION	QUAN. REQ.
	1957553	3.005	320 3409	FRAME ASSY., (Incl. all parts listed below which are coded with a #)	1
	1957555	3.005	320 3408	FRAME ASSY., (Incl. all parts listed below which are coded with a *)	1
1				*FRAME, Commutator End	1
2	1932506			BRUSH	2
2		3.005	320 2029	BRUSH SET (Incl. 2-1932506)	1
3	1878183	3.005	320 6058	ARM, Brush	2
4	1908829	3.005	311 5591	SPRING, Brush	2
5	1922288	3.005	320 6059	HOLDER, Brush (Ground)	1
6	1922289	3.005	320 6060	HOLDER, Brush (Insulated)	1
7	1923535	3.005	311 9530	ARMATURE	1
8	1936388	3.005	320 0188	COIL SET, Field (Incl. items coded with a +)	1
9	1912725	3.005	320 6066	SHOE, Pole	2
10	954378	3.005	311 3686	BEARING, Drive End Ball	1
11				#FRAME, Drive End	1
12	1947344	3.005	320 6070	COLLAR, Drive End Space (Outside)	1
13				FAN (Part of Key No. 14)	

KEY NO.	DELCO-REMY NUMBER	A.M. GROUP	A.M. PART NUMBER	DESCRIPTION		QUAN. REQ.
14	1921939	3.010	320 3410	PULLEY (Incl. Fan)		1
15	1921369	3.005	320 6071	STUD, Armature Terminal		1
16	1921860	3.005	320 6072	+STUD, Field Terminal		1
17	1921362	3.005	320 6073	BUSHING, Armature Terminal (Insulating)		1
18	1885090	3.005	320 6074	BUSHING, Field Terminal (Insulating)		1
19	1955494	3.005	320 6076	PLATE, Drive End Ball Bearing Retainer		1
20	1912008	3.005	320 6077	GASKET, Drive End Ball Bearing Retainer Plate		1
21	1912073	3.005	320 6078	+INSULATOR, Field Coil		2
22	809763	3.005	320 6080	BOLT, Thru		2
24	131044	17.820	G131044	LOCKWASHER, Brush Lead Attaching Screw	(Not Available)	2
25	120380	17.820	G120380	LOCKWASHER, Field Frame Screw	(Not Available)	1
26	1941978	3.010	311 2797	WASHER, Drive End Shaft Nut		1
27	1904661	17.820	G113114	LOCKWASHER, Terminal Stud	(Not Available)	2
28	120638	17.820	G120638	LOCKWASHER, Thru Bolt	(Not Available)	2
29	806915	3.010	311 2796	NUT, Drive End Shaft		1
30	121743	17.412	G121743	NUT, Terminal Stud	(Not Available)	2
31	1904370	3.005	320 6091	SCREW, Drive End Ball Bearing Retainer Plate Attaching		3
32	132688	17.678	G453460	SCREW, Brush Lead Attaching	(Not Available)	2
33	225577	17.614	G422597	SCREW, Field Frame	(Not Available)	1
34	1843646	3.005	320 6096	SCREW, Pole Shoe		2
35	1858753	3.005	320 6097	WASHER, Field Terminal Stud Insulating		1
36	1957559	3.005	320 5999	#WASHER, Drive End Felt		1
37	1881409	17.814	G131015	WASHER, Terminal Stud Plain	(Not Available)	2
39	1861591	3.005	320 6069	COLLAR, Drive End Space (Inside)		1
40	200382			+CLIP, Terminal		1
41	124545	3.010	311 2794	KEY, Drive End Woodruff		1
44	809062			*PIN, Commutator End Dowel		1
45	809593	3.005	311 2693	#PIN, Drive End Dowel		1
46	1947344	3.005	320 6070	*SLINGER, Drive End Bearing Grease		1
49				Not Serviced		

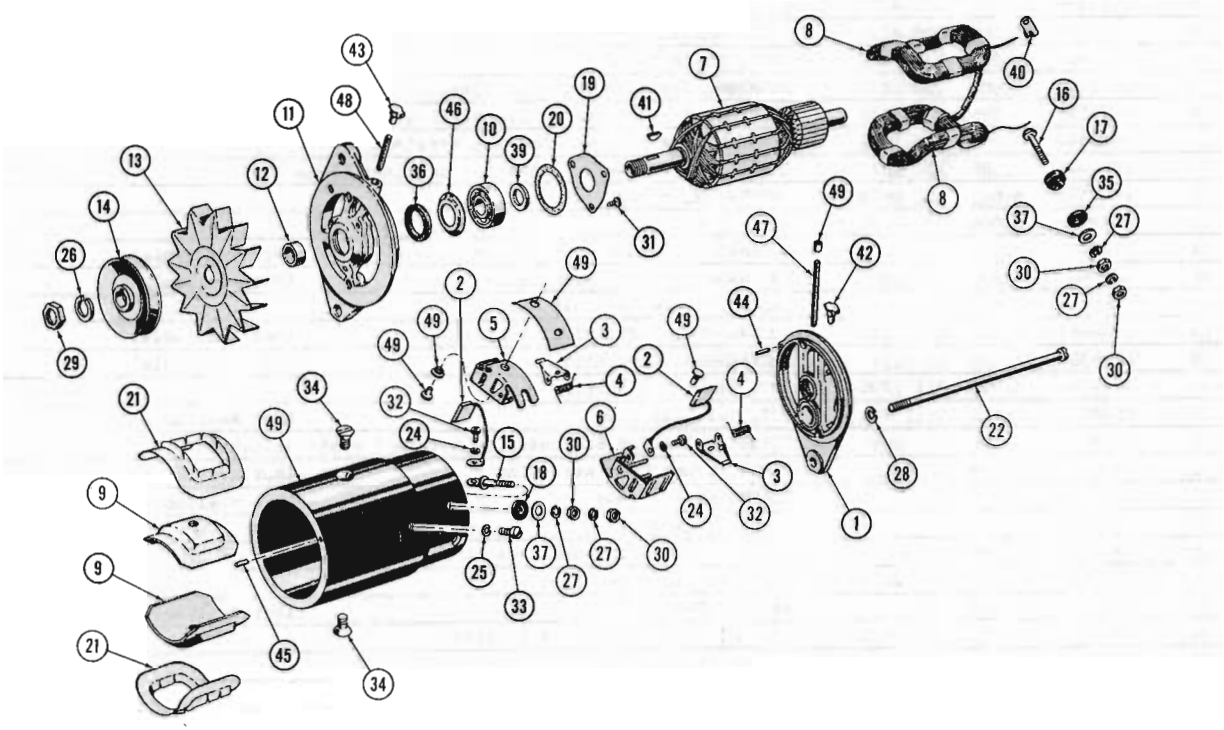

GENERATOR (Less Pulley) 63-64 01-10 (LAC)

A.M. NO. 320 3565 (Less Pulley) DELCO-REMY NO. 1102312
A.M. NO. 316 7664 (Incl. Pulley)(Not Serviced) DELCO-REMY NO. 1102333

KEY NO.	DELCO-REMY NUMBER	A.M. GROUP	A.M. PART NUMBER	DESCRIPTION	QUAN. REQ.
	1957558	3.005	320 3409	FRAME ASSY., (Incl. all items listed below which are coded with a #)	1
	1957555	3.005	320 3408	FRAME ASSY., (Incl. all items listed below which are coded with a *)	1
1				*FRAME, Commutator End	1
2	1906956			BRUSH	2
2		3.005	320 4346	BRUSH SET (Incl. 2-1906956)	1
3	1878183	3.005	320 6058	ARM, Brush	2
4	1908829	3.005	311 5591	SPRING, Brush	2
5	1922288	3.005	320 6059	HOLDER, Brush (Ground)	1
6	1922289	3.005	320 6060	HOLDER, Brush (Insulated)	1
7	1923535	3.005	311 9530	ARMATURE	1
8	1923537	3.005	311 9532	COIL SET, Field (Incl. all items coded with a †) (Replaces 320 4345)	1
9	1912725	3.005	320 6066	SHOE, Pole	2
10	954378	3.005	311 3686	BEARING, Drive End Ball	1
11				#FRAME, Drive End	1
12	1861591	3.005	320 6069	COLLAR, Drive End Space (Outside)	1

KEY NO.	DELCO-REMY NUMBER	A.M. GROUP	A.M. PART NUMBER	DESCRIPTION		QUAN. REQ.
13	1944437	3.010	320 4348	FAN		
14	1949358	3.010	320 4347	PULLEY (Incl. Fan)		1
15	1921369	3.005	320 6071	STUD, Armature Terminal		1
16	1921860	3.005	320 6072	STUD, Field Terminal		1
17	1921362	3.005	320 6073	BUSHING, Armature Terminal (Insulating)		1
18	1885090	3.005	320 6074	BUSHING, Field Terminal (Insulating)		1
19	1955494	3.005	320 6076	PLATE, Drive End Ball Bearing Retainer		1
20	1912008	3.005	320 6077	GASKET, Drive End Ball Bearing Retainer Plate		1
21	1912073	3.005	320 6078	INSULATOR, Field Coil		2
22	809763	3.005	320 6080	BOLT, Thru		2
24	131044	17.820	G131044	LOCKWASHER, Brush Lead Attaching Screw	(Not Available)	2
25	120380	17.820	G120380	LOCKWASHER, Field Frame Screw	(Not Available)	1
26	1941978	3.010	311 2797	WASHER, Drive End Shaft Nut		1
27	1904661	17.820	G113114	LOCKWASHER, Terminal Stud	(Not Available)	2
28	120638	17.820	G120634	LOCKWASHER, Thru Bolt	(Not Available)	2
29	806915	3.010	311 2796	NUT, Drive End Shaft		1
30	453460	17.412	G121743	NUT, Terminal Stud	(Not Available)	2
31	1914580	3.005	320 6091	SCREW, Drive End Ball Bearing Retainer Plate Attaching		3
32	132688	17.678	G453460	SCREW, Brush Lead Attaching	(Not Available)	2
33	225577	17.614	G422597	SCREW, Field Frame	(Not Available)	1
34	1913960	3.005	320 6096	SCREW, Pole Shoe		2
35	1858753	3.005	320 6097	WASHER, Field Terminal Stud Insulating		1
36	809961	3.005	311 2692	#WASHER, Drive End Felt		1
37	1881409	17.814	G131015	WASHER, Terminal Stud Plain	(Not Available)	2
39	1861591	3.005	320 6069	COLLAR, Drive End Space (Inside)		1
40	200382			+CLIP, Terminal		1
41	124545	3.010	311 2794	KEY, Drive End Woodruff		1
44	809062			*PIN, Commutator End Dowel		1
45	809593	3.005	311 2693	#PIN, Drive End Dowel		1
46	1947344	3.005	320 6070	#SLINGER, Drive End Bearing Grease		1
47	804076			*WICK, Commutator End Oil		1
49				Not Serviced		

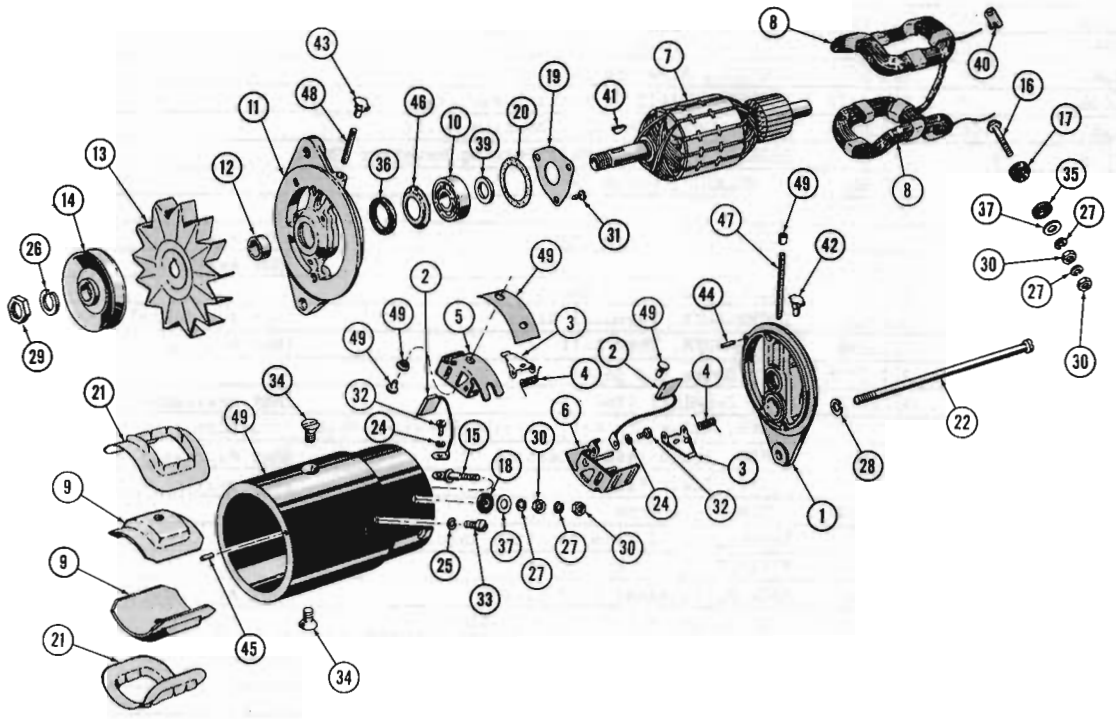

GENERATOR 60 10 (WAC)

A.M. NO. 320 0236 (Less Pulley) DELCO-REMY NO. 1102012
A.M. NO. 315 0324 (Incl. Pulley)(Not Serviced) DELCO-REMY NO. 1102018

KEY NO.	DELCO-REMY NUMBER	A.M. GROUP	A.M. PART NUMBER	DESCRIPTION	QUAN. REQ.
	1927596	3.005	320 0185	FRAME ASSY., (Incl. all items listed below which are coded with a #)	1
	1927598	3.005	320 0186	FRAME ASSY., (Incl. all items listed below which are coded with a *)	1
1				#FRAME, Commutator End	1
2	1932506			BRUSH	2
2		3.005	320 2029	BRUSH SET (Incl. 2-1932506)	1
3	1878183	3.005	320 6058	ARM, Brush	2
4	1908829	3.005	311 5591	SPRING, Brush	2
5	1922288	3.005	320 6059	HOLDER, Brush (Ground)	1
6	1922289	3.005	320 6060	HOLDER, Brush (Insulated)	1
7	1923535	3.005	311 9530	ARMATURE	1
8	1922701	3.005	311 9532	COIL SET, Field (Incl. all items coded with a +)	1
9	1912725	3.005	320 6066	SHOE, Pole	2
10	954378	3.005	311 3686	BEARING, Drive End Ball	1
11				*FRAME, Drive End	1
12	1858603	3.005	320 6067	COLLAR, Drive End Space (Outside)	1

GROUP 3

KEY NO.	DELCO-REMY NUMBER	A.M. GROUP	A.M. PART NUMBER	DESCRIPTION		QUAN. REQ.
13				FAN (Part of Key No. 14)		
14	1924689	3.010	320 3410	PULLEY (Incl. Fan)	(Replaces 311 9536)	1
15	1921369	3.005	320 6071	STUD, Armature Terminal		1
16	1921860	3.005	320 6072	+STUD, Field Terminal		1
17	1921362	3.005	320 6073	BUSHING, Armature Terminal (Insulation)		1
18	1885090	3.005	320 6074	BUSHING, Field Terminal (Insulation)		1
19	1911263	3.005	320 6075	PLATE, Drive End Ball Bearing Retainer		1
20	1912008	3.005	320 6077	GASKET, Drive End Ball Bearing Retainer Plate		1
21	1912073	3.005	320 6078	+INSULATOR, Field Coil		2
22	809763	3.005	320 6080	BOLT, Thru		2
24	1904377	17.820	G131182	LOCKWASHER, Brush Lead Attaching Screw	(Not Available)	2
25	120380	17.820	G120380	LOCKWASHER, Field Frame Screw	(Not Available)	1
26	1941978	3.010	311 2797	WASHER, Drive End Shaft Nut		1
27	1904661	17.820	G113114	LOCKWASHER, Terminal Stud	(Not Available)	2
28	120638	17.820	G120638	LOCKWASHER, Thru Bolt	(Not Available)	2
29	806915	3.010	311 2796	NUT, Drive End Shaft		1
30	121743	17.412	G121743	NUT, Terminal Stud	(Not Available)	2
31	1904370	3.005	320 6091	SCREW, Drive End Ball Bearing Retainer Plate Attaching		3
32	132688	17.678	G453460	SCREW, Brush Lead Attaching	(Not Available)	2
33	225577	17.614	G422597	SCREW, Field Frame	(Not Available)	1
34	1843646	3.005	320 6096	SCREW, Pole Shoe		2
35	1858753	3.005	320 6097	WASHER, Field Terminal Stud Insulating		1
36	809961	3.005	311 2692	*WASHER, Drive End (Felt)		1
37	1881409	17.814	G131015	WASHER, Terminal Stud Plain	(Not Available)	2
39	809945	3.005	320 6207	COLLAR, Drive End Space (Inside)		1
40	200382			+CLIP, Terminal		1
41	124545	3.010	311 2794	KEY, Drive End Woodruff		1
42	113702	3.005	320 6211	#Oiler, Commutator End		1
43	125609	3.005	320 6210	*OILER, Drive End		1
44	809062			#PIN, Commutator End Dowel		1
45	809593	3.005	311 2693	*PIN, Drive End Dowel		1
46	819104	3.005	320 6213	*SLINGER, Drive End Bearing Grease		1
47	804080	3.005	320 6214	#WICK, Commutator End Oil		1
48	823551	3.005	320 6215	*WICK, Drive End Oil		1
49				Not Serviced		

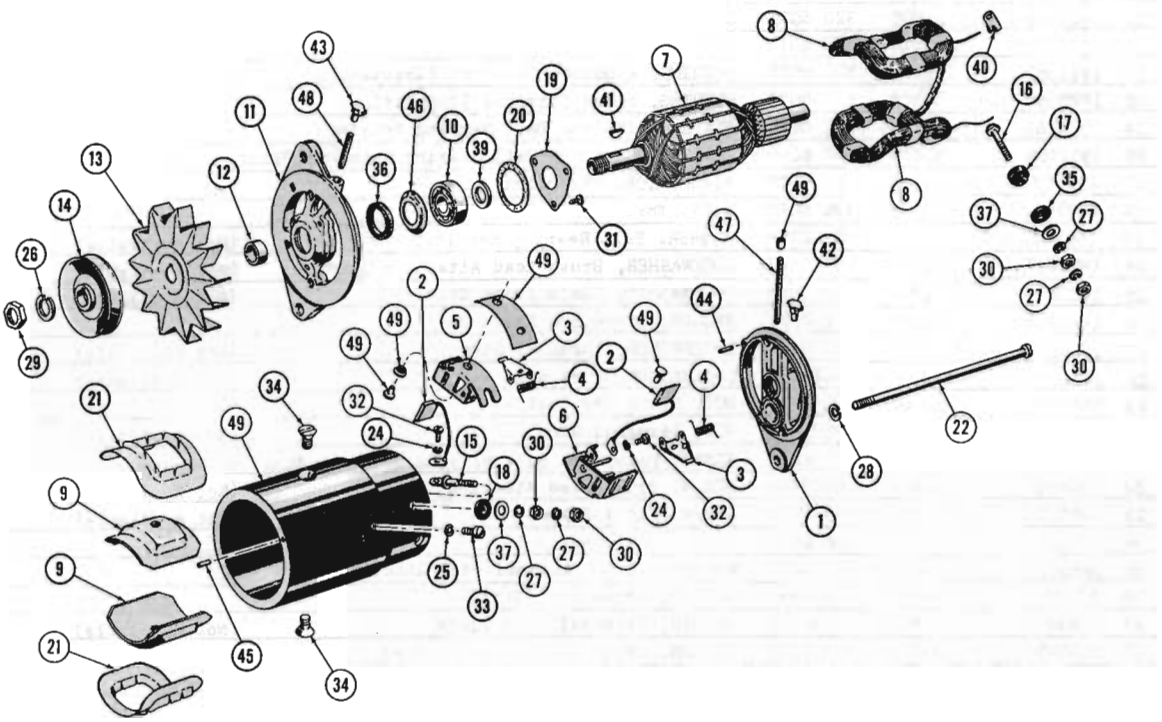

GENERATOR 60 10-20 (HEAVY DUTY-NOTE 3.005-3)

A.M. NO. 320 0237 (Less Pulley) DELCO-REMY NO. 1102055
A.M. NO. 315 0325 (Incl. Pulley)(Not Serviced) DELCO-REMY NO. 1102070

KEY NO.	DELCO-REMY NUMBER	A.M. GROUP	A.M. PART NUMBER	DESCRIPTION	QUAN. REQ.
	1934298	3.005	320 0187	FRAME ASSY. (Incl. all parts listed below which are coded with a #)	1
	1934300	3.005	320 0190	FRAME ASSY. (Incl. all parts listed below which are coded with a *)	1
1				#FRAME, Commutator End	1
2	1923295			BRUSH	2
2		3.005	320 2029	BRUSH SET (Incl. 2-1932506)	1
3	1878183	3.005	320 6058	ARM, Brush	2
4	1908829	3.005	311 5591	SPRING, Brush	2
5	1922288	3.005	320 6059	HOLDER, Brush (Ground)	1
6	1922289	3.005	320 6060	HOLDER, Brush (Insulated)	1
7	1932900	3.005	320 0187	ARMATURE	1
8	1936388	3.005	320 0188	COIL SET, Field (Incl. all parts coded with a +)	1
9	1912725	3.005	320 6066	SHOE, Pole	2
10	954378	3.005	311 3686	BEARING, Drive End Ball	1
11				*FRAME, Drive End	1
12	1858603	3.005	320 6067	COLLAR, Drive End Space (Outside)	1
13				FAN (Part of Key No. 14)	

GROUP 3

KEY NO.	DELCO-REMY NUMBER	A.M. GROUP	A.M. PART NUMBER	DESCRIPTION		QUAN. REQ.
14	1925586	3.010	320 0242	PULLEY (Incl. Fan)		1
15	1921369	3.005	320 6071	STUD, Armature Terminal		1
16	1921860	3.005	320 6072	+STUD, Field Terminal		1
17	1921362	3.005	320 6073	BUSHING, Armature Terminal (Insulating)		1
18	1885090	3.005	320 6074	BUSHING, Field Terminal (Insulating)		1
19	1911263	3.005	320 6075	PLATE, Drive End Ball Bearing Retainer		1
20	1912008	3.005	320 6077	GASKET, Drive End Ball Bearing Retainer Plate		1
21	1912073	3.005	320 6078	+INSULATOR, Field Coil		2
22	809763	3.005	320 6080	BOLT, Thru		2
23	1880781	17.820	G122158	WASHER, Ball Bearing Retainer Plate Lock	(Not Available)	3
24	1904377	17.820	G131182	LOCKWASHER, Brush Lead Attaching Screw	(Not Available)	2
25	120380	17.820	G120380	LOCKWASHER, Field Frame Screw	(Not Available)	1
26	1941978	3.010	311 2797	WASHER, Drive End Shaft Nut		1
27	1904661	17.820	G113114	LOCKWASHER, Terminal Stud	(Not Available)	2
28	120638	17.820	G120638	LOCKWASHER, Thru Bolt	(Not Available)	2
29	806915	3.010	311 2796	NUT, Drive End Shaft		1
30	121743	17.412	G121743	NUT, Terminal Stud	(Not Available)	2
31	1904370	3.005	320 6091	SCREW, Drive End Ball Bearing Retainer Plate Attaching		1
32	132688	17.678	G453460	SCREW, Brush Lead Ataching	(Not Available)	2
33	225577	17.614	G422597	SCREW, Field Frame	(Not Available)	1
34	1843646	3.005	320 6096	SCREW, Pole Shoe		2
35	1858753	3.005	320 6097	WASHER, Field Terminal Stud Insulating		1
36	809961	3.005	311 2692	WASHER, Drive End (Felt)		1
37	1881409	17.814	G131015	WASHER, Terminal Stud Plain	(Not Available)	2
39	809945	3.005	320 6207	COLLAR, Drive End Space (Inside)		1
40	300382		"	+CLIP, Terminal		1
41	124545	3.010	311 2794	KEY, Drive End Woodruff		1
42	125609	3.005	320 6210	#OILER, Commutator End		1
43	125609	3.005	320 6210	*OILER, Drive End		1
44	809062			#PIN, Commutator End Dowel		1
45	809593	3.005	311 2693	*PIN, Drive End Dowel		1
46	819104	3.005	320 6213	*SLINGER, Drive End Bearing Grease		1
47	804080	3.005	320 6214	#WICK, Commutator End Oil Wick		1
48	823551	3.005	320 6215	*WICK, Drive End		1
49				Not Serviced		

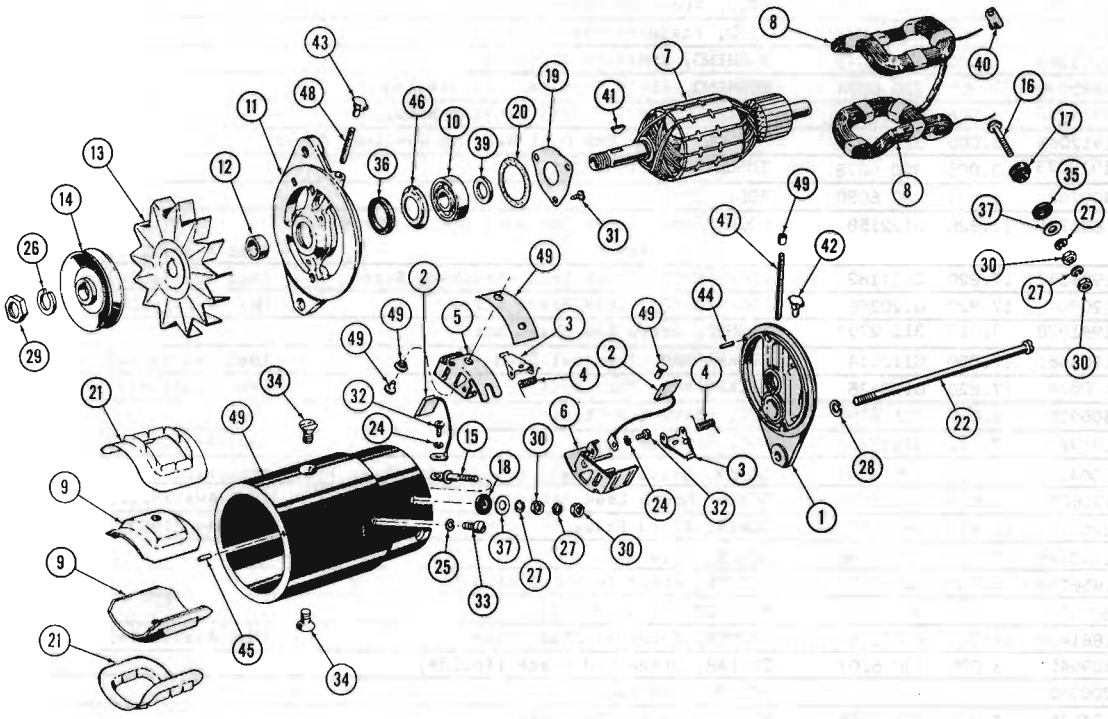

GENERATOR 60 THRU 62 10-20-80 (HEAVY DUTY)
(45 AMP.)(NOT LOW CUT-IN)(REFER NOTE 3.005-1)

A.M. No. 315 5796 DELCO-REMY No. 1102123

KEY NO.	DELCO-REMY Number	A.M. Group	A.M. PART Number	DESCRIPTION	QUAN. REQ.
	1939984	3.005	320 6059	FRAME ASSY., (Incl. all parts listed below which are coded with a #)	1
	1934300	3.005	320 0190	FRAME ASSY., (Incl. all parts listed below which are coded with a *)	1
1				#FRAME, Commutator End	1
2	1932506			BRUSH	2
2		3.005	320 2029	BRUSH SET (Incl. 2-1932506)	1
3	1878183	3.005	320 6058	ARM, Brush	2
4	1908829	3.005	311 5591	SPRING, Brush	2
5	1922288	3.005	320 6059	HOLDER, Brush (Ground) (Package)	1
6	1922289	3.005	320 6060	HOLDER, Brush (Insulated)(Package)	1
7	1939837	3.005	320 6061	ARMATURE	1
8	1935779	3.005	320 6063	COIL, Field (Incl. parts coded with a +)	1
9	1911961	3.005	320 6066	SHOE, Pole	2
10	954378	3.005	311 3686	BEARING, Drive End Ball	1
11				*FRAME, Drive End	1
12	1858603	3.005	320 6067	COLLAR, Drive End Space (Outside)	1
13	1940994	3.010	315 5797	FAN (Less Pulley)	1

KEY NO.	DELCO-REMY NUMBER	A.M. GROUP	A.M. PART NUMBER	DESCRIPTION		QUAN. REQ.
14	1939990	3.010	315 5798	PULLEY (Less Fan)		1
15	1921369	3.005	320 6071	STUD, Armature Terminal		1
16	1921860	3.005	320 6072	STUD, Field Terminal (To Brush)		1
17	1921362	3.005	320 6073	BUSHING, Armature Terminal (Insulating)		1
18	1885090	3.005	320 6074	BUSHING, Field Terminal (Insulating)		1
19	1911263	3.005	320 6075	PLATE, Drive End Ball Bearing Retainer		1
20	1912008	3.005	320 6077	GASKET, Drive End Ball Bearing Retainer Plate		1
21	1912073	3.005	320 6078	INSULATOR, Field Coil		2
22	809763	3.005	320 6080	BOLT, Thru		2
23	1880781	17.820	G122158	LOCKWASHER, Drive End Ball Bearing Retainer Plate Screw	(Not Available)	3
24	1904377	17.820	G131182	LOCKWASHER, Brush Lead Attaching Screw	(Not Available)	2
25	120380	17.820	G120380	LOCKWASHER, Field Frame Screw	(Not Available)	1
26	1941978	3.010	311 2797	WASHER, Drive End Shaft Nut		1
27	1904661	17.820	G113114	LOCKWASHER, Terminal Stud	(Not Available)	2
28	120638	17.820	G120638	LOCKWASHER, Thru Bolt	(Not Available)	2
29	806915	3.010	311 2796	NUT, Drive End Shaft		1
30	121743	17.412	G121743	NUT, Terminal Stud	(Not Available)	2
31	1904370	3.005	320 6091	SCREW, Drive End Ball Bearing Retainer Plate Attaching		3
32	132688	17.678	G453460	SCREW, Brush Lead Attaching	(Not Available)	2
33	225577	17.614	G422597	SCREW, Field Frame	(Not Available)	1
34	1843646	3.005	320 6096	SCREW, Pole Shoe		2
35	1858753	3.005	320 6097	WASHER, Field Terminal Stud Insulating		1
36	809961	3.005	311 2692	*WASHER, Drive End Felt		1
37	1881409	17.814	G131015	WASHER, Terminal Stud Plain	(Not Available)	2
39	809945	3.005	320 6207	COLLAR, Drive End Space (Inside)		1
40	200382			+CLIP, Terminal		1
41	124545	3.010	311 2794	KEY, Drive End Woodruff		1
42	125609	3.005	320 6210	#OILER, Commutator End		1
43	125609	3.005	320 6210	*OILER, Drive End		1
44	809062			#PIN, Commutator End Dowel		1
45	809593	3.005	311 2693	*PIN, Drive End Dowel		1
46	819104	3.005	320 6213	*PLATE, Drive End Felt Retainer		1
49				Not Serviced		

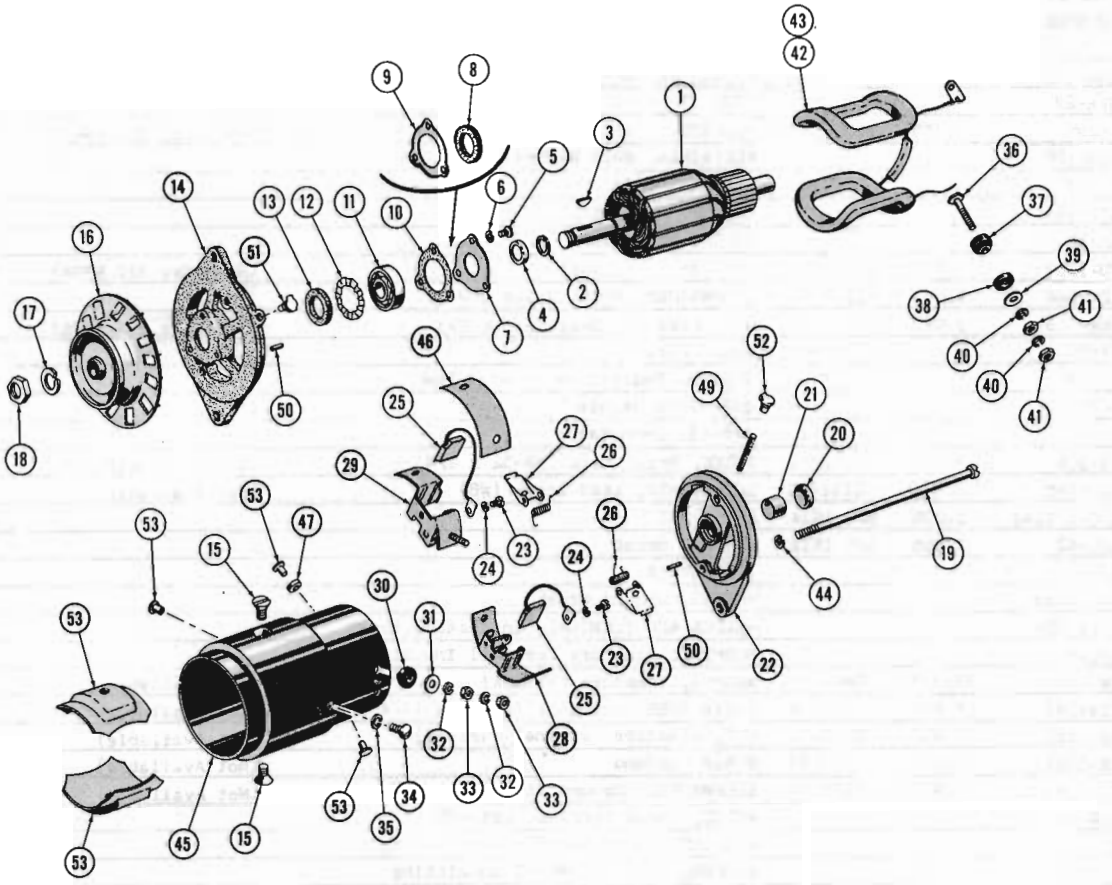

GENERATOR 60-61 20 (WAC): 60-61 80: 60-61 10-20 (HEAVY DUTY-REFER NOTE 3.005-2)

A.M. NO. 320 1811 (Less Pulley) AUTO-LITE NO. GJP-7101S
A.M. NO. 315 7211 (Incl. Pulley)(Not Serviced) AUTO-LITE NO. GJP-7101A

KEY NO.	AUTO-LITE NUMBER	A.M. GROUP	A.M. PART NUMBER	DESCRIPTION		QUAN. REQ.
	GJP-1005B	3.005	320 1825	COIL SET (Incl. all parts listed below which are coded with a #)		1
	GJP-1039	3.005	320 2121	FRAME ASSY. (Incl. all parts listed below which are coded with a *)		1
	GJP-2038	3.005	320 1816	FRAME ASSY. (Incl. all parts listed below which are coded with a ϕ)		1
1	GJP-2030	3.005	320 1817	ARMATURE (Incl. all parts coded with a +)		1
2	GAR-171A			+RING, Snap		1
3	X-260	17.344	G103905	KEY, Armature Shaft Drive End Woodruff		1
4	GR-32	3.005	320 5984	RETAINER, Drive End		1
5	GGW-52	17.664	G169513	*SCREW, Retainer (#10-32 x 1/2)	(Not Available)	3
6	12X-196	17.820	G122158	*LOCKWASHER, Retainer Screw (#10)	(Not Available)	3
7	GJC-27			*RETAINER, Bearing		1
8	GG-164			*WASHER, Felt		1

GROUP 3

KEY NO.	AUTO-LITE NUMBER	A.M. GROUP	A.M. PART NUMBER	DESCRIPTION		QUAN. REQ.
9	GBM-125			*RETAINER (Not Used)		
10	GEE-27			*GASKET		1
11	X-295	3.005	311 3686	*BEARING, Drive End Ball	(Replaces 311 8964)	1
12	GBM-128			*RETAINER, Felt Washer		1
13	GG-164			*WASHER, Felt		1
14	GJP-39			*FRAME, Drive End		1
15	GK-38			SCREW, Pole Shoe		2
16	PU-1152	3.010	320 3589	FAN (Incl. Pulley)	(Replaces 311 8874)	1
17	12X-864	3.010	311 8777	LOCKWASHER, Shaft Drive End		1
18	GBM-21B	3.010	311 2796	NUT, Armature Shaft Drive End	(Replaces 311 8776)	1
19	GY-20			BOLT, Thru		2
20	GJC-49			ϕCOVER, Bearing Commutator End		1
21	GJC-38A			ϕBEARING, Bronze		1
22				ϕFRAME, Commutator End		1
23	8X-305	17.678	G132762	SCREW, Brush Lead (#8-32 x 1/4)	(Not Available)	2
24	12X-195	17.820	G131182	LOCKWASHER, Lead Screw (#8)	(Not Available)	2
25	GJC-2012AS	3.005	320 1814	BRUSH SET		1
26	GJC-42	3.005	320 1813	SPRING, Brush		2
27	GJC-35			ARM, Brush		2
28	GJC-1033			HOLDER, Ground Brush		1
29	GJP-1034			HOLDER AND TERMINAL, Insulating Brush		1
30	GJC-41			BUSHING, Armature Terminal Insulating		1
31	SW-634	17.814	G446179	WASHER, Armature Terminal	(Not Available)	1
32	12X-199	17.820	G113114	LOCKWASHER, Armature Terminal (1/4")	(Not Available)	2
33	8X-1063	17.410	G120613	NUT, Armature Terminal (1/4-28)	(Not Available)	2
34	8X-3381	17.614	G422597	SCREW, Ground	(Not Available)	1
35	12X-199	17.820	G113114	LOCKWASHER, Ground Screw	(Not Available)	1
36	GJP-36			#STUD, Field Terminal (#10-32)		1
37	GGU-32			BUSHING, Field Terminal Insulating		1
38	GGU-30			WASHER, Field Terminal Insulating		1
39	GGU-31	17.814	G131015	WASHER, Field Terminal (Plain)	(Not Available)	1
40	12X-196	17.820	G122158	LOCKWASHER, Field Terminal (#10)	(Not Available)	2
41	8X-1377	17.412	G120614	NUT, Field Terminal (#10-32)	(Not Available)	2
42	GJP-1007			#COIL, Field (Right)		1
43	GJP-1008			#COIL, Field (Left)		1
44	12X-199	17.820	G113114	LOCKWASHER, Thru Bolt	(Not Available)	2
45				HOUSING (Not Serviced)		1
46	GJC-39			INSULATION, Brush Holder		1
47	MDF-25			BUSHING, Brush Holder Insulation		
48	GAR-75			RETAINER, Oil		
49	GJC-46			ϕWICK, Felt		
50	MN-21			*PIN, Drive End Dowel		1
51	X-489	3.005	320 6011	*OILER, Drive End Frame		
52	MN-21			ϕPIN, Commutator End Dowel		1
53				Not Serviced		
54	X-3279			ϕOILER, Commutator End Frame		1

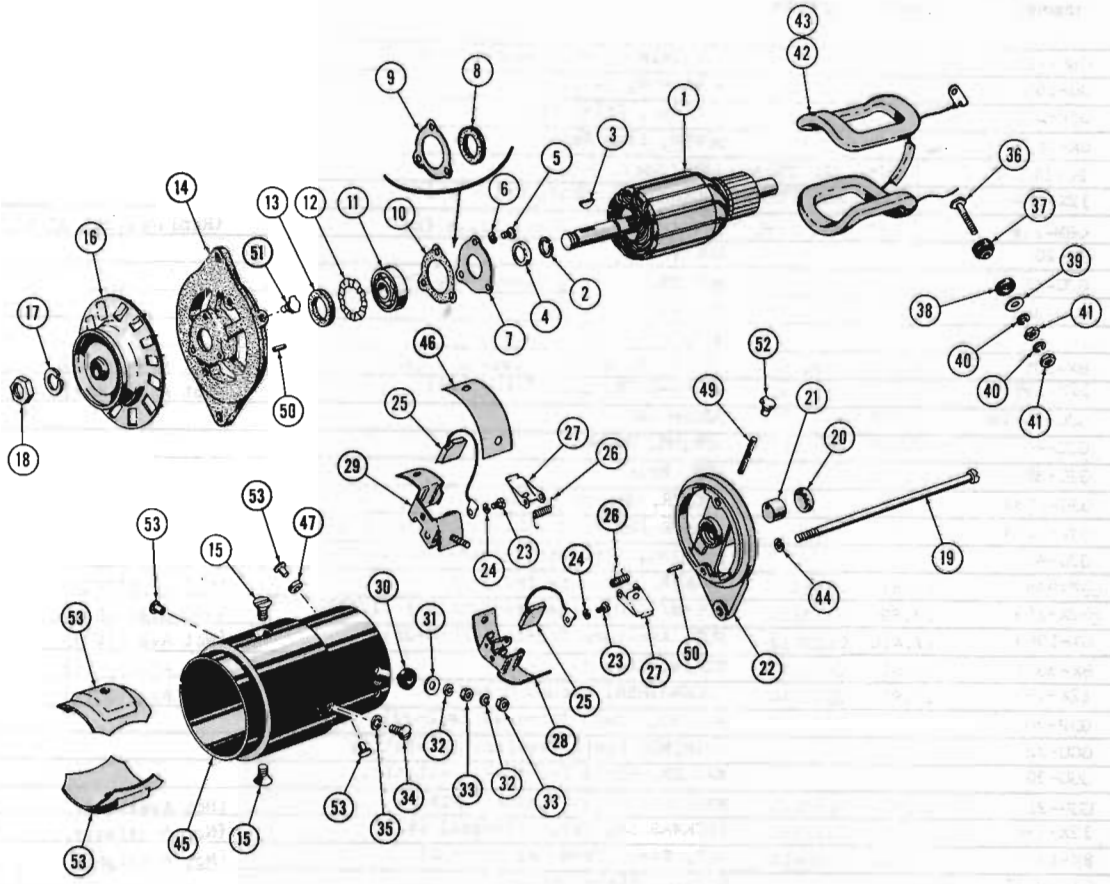

GENERATOR 62 80: 62 10 (Heavy Duty)(Refer Note 3.005-3)

A.M. No. 320 3588 AUTO-LITE No. GJP-7405S

KEY NO.	AUTO-LITE NUMBER	A.M. GROUP	A.M. PART NUMBER	DESCRIPTION		QUAN. REQ.
	GJP-1005B	3.005	320 1825	COIL SET (Incl. all parts listed below which are coded with a #)		1
	GJP-1039B	3.005	320 3591	FRAME ASSY. (Incl. all parts listed below which are coded with a *)		1
	GJO-2047	3.005	320 3590	FRAME ASSY., (Incl. all parts listed below which are coded with a ϕ)		1
1	GJC-2030F	3.005	320 1817	ARMATURE (Incl. parts coded with a +)	(Replaces 311 9596)	1
2	GAR-171			+RING, Snap		1
3	X-260	17.344	G103905	KEY, Armature Shaft Drive End Woodruff		1
4	GR-32			RETAINER, Drive End		1
5	GGW-52	17.664	G169513	* SCREW, Retainer (#10-32 x 1/2)	(Not Available)	3
6	L2X-196	17.820	G122158	* LOCKWASHER, Retainer Screw (#10)	(Not Available)	3
7	GBM-127			* RETAINER, Bearing		1
8	GG-164			* WASHER, Felt		1
9	GBM-125			* RETAINER, Felt Washer (Inner)		1
10	GJK-9	3.005	320 6021	* GASKET		1
11	X-295C	3.005	320 3593	* BEARING, Drive End Ball		1

GROUP 3

KEY NO.	AUTO-LITE NUMBER	A.M. GROUP	A.M. PART NUMBER	DESCRIPTION		QUAN. REQ.
12	GBM-128			* RETAINER, Felt Washer (Outer)		1
13	GG-164			* WASHER, Felt		1
14	GJP-39B			* FRAME, Drive End		1
15	GK-38			SCREW, Pole Shoe		2
16	PU-1563	3.010	320 3589	FAN (Incl. Pulley)		1
17	12X-864	3.010	311 8777	LOCKWASHER, Shaft Drive End		1
18	GBM-21B	3.010	311 2796	NUT, Armature Shaft Drive End	(Replaces 311 8776)	1
19	GY-20			BOLT, Thru		2
20	GJC-49			ϕCOVER, Bearing Commutator End		1
21	GJC-38A			ϕBEARING, Bronze		1
22				ϕFRAME, Commutator End		1
23	8X-305	17.678	G132762	SCREW, Brush Lead (#8-32 x 1/4)	(Not Available)	2
24	12X-195	17.820	G131182	LOCKWASHER, Lead Screw (#8)	(Not Available)	2
25	GJC-2012AS	3.005	320 1814	BRUSH SET		1
26	GJC-42	3.005	320 1813	SPRING, Brush		2
27	GJC-35			ARM, Brush		2
28	GJC-1033			HOLDER, Ground Brush		1
29	GJP-1034			HOLDER AND TERMINAL, Insulating Brush		1
30	GJC-41			BUSHING, Armature Terminal Insulating		1
31	SW-634	17.814	G446179	WASHER, Armature Terminal	(Not Available)	1
32	12X-199	17.820	G113114	LOCKWASHER, Armature Terminal (1/4")	(Not Available)	2
33	8X-1063	17.410	G120613	NUT, Armature Terminal (1/4-28)	(Not Available)	2
34	8X-3381	17.614	G422597	SCREW, Ground	(Not Available)	1
35	12X-199	17.820	G113114	LOCKWASHER, Ground Screw	(Not Available)	1
36	GJP-36			# STUD, Field Terminal (#10-32)		1
37	GGU-32			BUSHING, Field Terminal Insulating		1
38	GGU-30			WASHER, Field Terminal Insulating		1
39	GGU-31	17.814	G131015	WASHER, Field Terminal (Plain)	(Not Available)	1
40	12X-196	17.820	G122158	LOCKWASHER, Field Terminal (#10)	(Not Available)	2
41	8X-1377	17.412	G120614	NUT, Field Terminal (#10-32)	(Not Available)	2
42	GJP-1007			# COIL, Field (Right)		1
43	GJP-1008			# COIL, Field (Left)		1
44	12X-199	17.820	G113114	LOCKWASHER, Thru Bolt	(Not Available)	2
45				HOUSING		1
46				INSULATION, Brush Holder		1
47				BUSHING, Brush Holder Insulation		1
48				RETAINER, Oil		1
49				WICK, Felt		1
50				*PIN, Drive End Dowel		1
51				ϕPIN, Commutator End Dowel		1
53				Not Serviced		

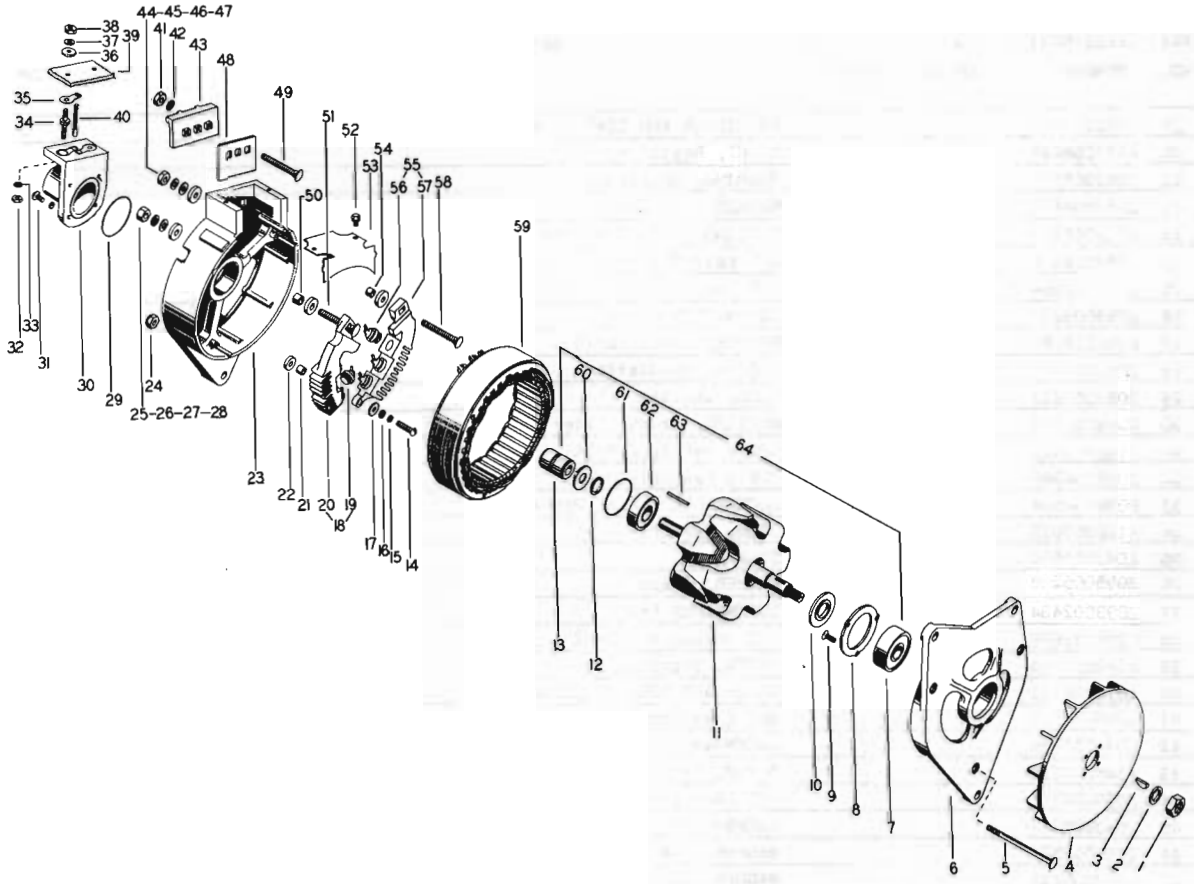

ALTERNATOR (60 AMP.) 60-61 01-10-20-80

A.M. NO. 315 9384 LEECE-NEVILLE NO. A0012036AA

KEY NO.	LEECE-NEVILLE NUMBER	A.M. GROUP	A.M. PART NUMBER	DESCRIPTION	PER CAR
1	Z098028464	3.010	320 3623	NUT, (Hexagon)(1/2-20)	1
2	Z093001613	3.010	320 3642	LOCKWASHER (1/2)	1
3	Z087002763	3.010	320 3643	KEY, Woodruff (#6)	1
4	A041054222	3.010	315 2718	FAN ASSEMBLY (Replaces 314 1346)	1
5	A116058439			SCREW (Special)	3
6	A015058248			HOUSING, Drive End	1
7	A079057166			BEARING	1
8	A059057898			RETAINER, Bearing	1
9	Z152056418			SCREW (10-32 x 1/2)	3
10	A032057895			SPACER	1
11	A020057897			ROTOR AND COIL ASSEMBLY	1
12	Z088057470			RING, Snap	1
13	A062057462			RING ASSEMBLY, Slip	1
14	Z106004491			SCREW (10-32)	2
15	Z093002434			LOCKWASHER (#10)	2
16	Z095005413			WASHER, Guard (#10)	2
17	Z082007983			WASHER, Insulation	2
18	A051058428			RECTIFIER	1

GROUP 3

KEY NO.	LEECE-NEVILLE NUMBER	A.M. GROUP	A.M. PART NUMBER	DESCRIPTION	PER CAR
19	A051058587			RECTIFIER AND LEAD ASSEMBLY	3
20	A777058436			MOUNT, Rectifier	1
21	Z082005706			BUSHING, Insulation	2
22	Z082004471			WASHER, Insulation	1
23	A012058433			HOUSING, Slip Ring End	1
24	Z037026175			NUT (#10-32)	3
25	Z098002364			NUT (Hexagon)(5/16-18)	2
26	Z093003231			LOCKWASHER (5/16)	2
27	Z095013789			WASHER, Guard (5/16)	1
28	Z082004470			WASHER, Insulation	2
29	Z053057611			RING, Sealing	1
30	A009058777			HOUSING, Brush Holder	1
31	Z106013622			SCREW (#8-32 x 7/16)	4
32	Z098004340			NUT (Hexagon)(10-24)	2
33	F094004534			LOCKWASHER (Shake Proof)(#10)	2
34	A116057613			STUD, Terminal	2
35	A047057594			JUMPER	2
36	Z095005293			WASHER, Guard	2
37	Z093002434			LOCKWASHER (#10)	2
38	F098032629			NUT (Hexagon)(10-32)	2
39	A148057615			COVER, Terminal	1
40	A010028711			BRUSH AND SPRING ASSEMBLY	2
41	Z098002711			NUT (Hexagon)(1/4-20)	3
42	Z094035869			LOCKWASHER (1/4)	3
43	A146057715			BLOCK, Terminal	1
44	Z098002771			NUT (Hexagon)(1/4-20)	4
45	Z09302523			LOCKWASHER (1/4)	1
46	Z095002524			WASHER, Guard (1/4)	1
47	Z082008214			WASHER, Insulation	2
48	A148057721			INSULATOR (Inner)	1
49	A115057218			SCREW, Terminal	3
50	Z082004472			BUSHING, Insulation	3
51	A115058431			SCREW, Terminal	1
52	Z164056405			SCREW (Hexagon)(10-32)	2
53	A038057919			COVER	1
54	Z082004488			BUSHING, Insulation	3
55	A051058429			RECTIFIER ASSEMBLY (Negative)	1
56	A051058586			RECTIFIER AND LEAD ASSEMBLY	3
57	A777058437			MOUNT, Rectifier	1
58	A115058432			SCREW, Terminal	1
59	A022057887			STATOR AND TERMINAL ASSEMBLY	1
60	Z082057626			WASHER, Insulation	1
61	Z053057597			"O" RING	1
62	M079026853			BEARING	1
63	Z063030468			WEDGE, Slot	1
64	A020057896			ROTOR ASSEMBLY	1
	Z093057246			JUMPER, Grounding (Not Shown)	1
	Z080057351			TERMINAL, Stator Lead (Not Shown)	3
	39382	3.010	314 6065	PULLEY (Less Fan)(Not Shown)	1
	K172057966	3.010	315 3771	HUB, Pulley (Not Shown)	1

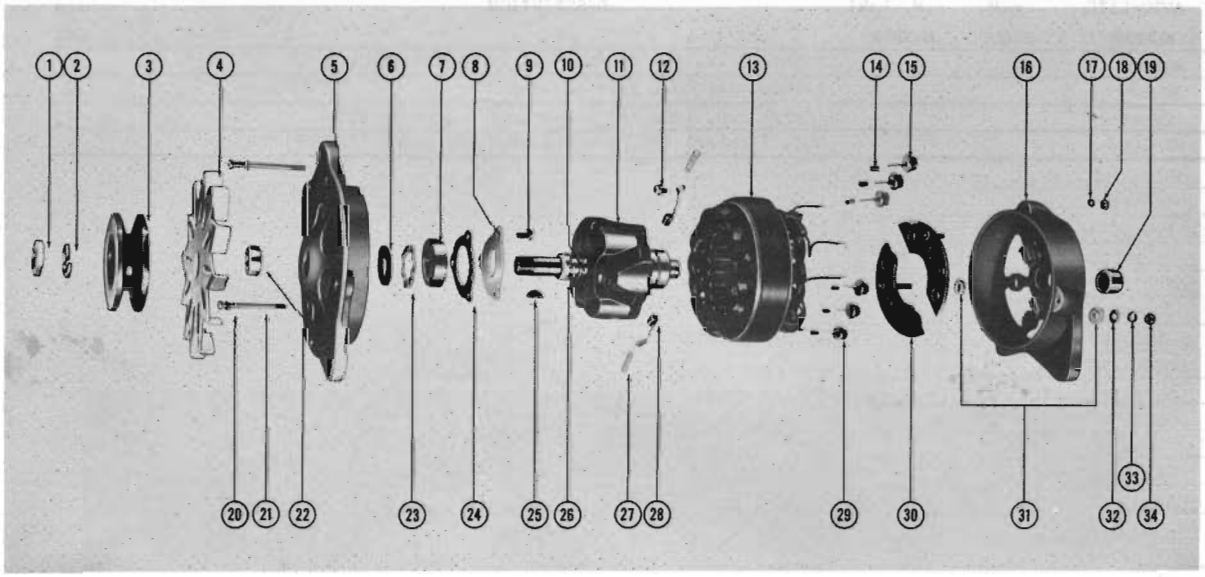

ALTERNATOR (40 AMP.) 62 01-10-80

A.M. NO. 316 3761 AUTO-LITE NO. ALD-5005

KEY NO.	AUTO-LITE NUMBER	A.M. GROUP	A.M. PART NUMBER	DESCRIPTION	PER CAR
1	GBM-21B	3.010	311 8776	NUT, Rotor Shaft Drive End (Replaces 311 8776)	1
2	12X-864	3.010	311 8777	LOCKWASHER, Rotor Shaft Drive End Nut	1
3	PU-611	3.010	320 3645	PULLEY, Drive	1
4	PU-602	3.010	320 3644	FAN, Ventilating (Less Pulley)	1
5	ALA-1003			HEAD, Drive End	1
6	GG-164			WASHER, Felt	1
7	X-3416			BEARING, Ball	1
8	ALA-36			RETAINER, Bearing	1
9	8X-3427			SCREW, Bearing Retainer (#10-32 x 1/2)	3
10	GAR-171			RING, Snap	1
11	ALA-2006			ROTOR ASSEMBLY	1
12	X-3418A			SCREW, Ground Brush	1
13	ALD-2008			STATOR ASSEMBLY	1
14	XA-932			CLAMP, Stator Lead To Rectifier Wire	6
15	XA-944			RECTIFIER, Negative	3
16	ALD-2302S			HEAD ASSEMBLY, Commutator End	1
17	12X-196			LOCKWASHER, Mounting Stud Nut (#10)	2
18	8X-173			NUT, Mounting Stud (Hexagon) (#10-32)	2
19	X-3417			BEARING, Roller	1
20	12X-196			LOCKWASHER, Thru Bolt	4
21	ALA-20			BOLT, Thru	4
22	ALC-21			SPACER, Rotor Shaft	1
23	GBM-128			RETAINER, Felt Washer	1
24	ALA-35			GASKET	1
25	X-261	3.010	320 3643	KEY, Woodruff (#6)	1
26	GR-32			RETAINER, Drive End	1
27	ALA-19			SPRING, Brush	2
28	ALA-1012S			BRUSH SET	1
29	XA-943			RECTIFIER, Positive	3
30	ALA-4			PLATE, Rectifier Mounting	2

KEY NO.	AUTO-LITE NUMBER	A.M. GROUP	A.M. PART NUMBER	DESCRIPTION	PER CAR
31	ALA-33			BUSHING, Insulating Terminal And Mounting Stud	4
32	SW-634			WASHER, Terminal Stud (Plain)	2
33	12X-199			LOCKWASHER, Terminal And Mounting Stud (1/4")	3
34	8X-1063			NUT, Terminal And Mounting Stud (Hexagon) (1/4-28)	3

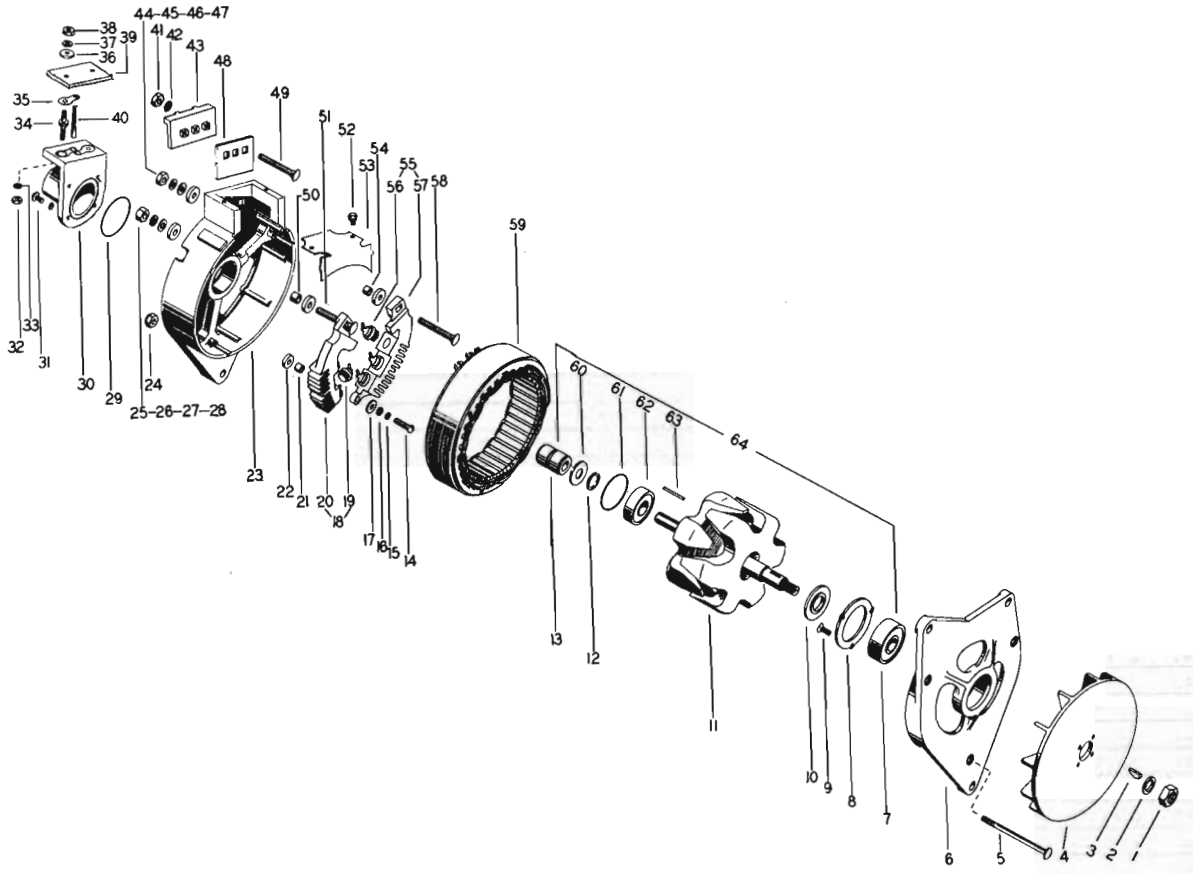

ALTERNATOR (60 AMP.) 62 Thru 65 01-10-80

A.M. NO. 316 3773 (Less Pulley & Belt) LEECE-NEVILLE NO. 2074AB (Type A001)

KEY NO.	LEECE-NEVILLE NUMBER	A.M. GROUP	A.M. PART NUMBER	DESCRIPTION	PER CAR
1	Z098028464	3.010	320 3623	NUT, (Hexagon)(1/2-20)	1
2	Z093001613	3.010	320 3642	LOCKWASHER (1/2)	1
3	Z087002763	3.010	320 3643	KEY, Woodruff (#6)	1
4	A041054222	3.010	315 2718	FAN ASSEMBLY (Replaces 314 1346)	1
5	A116058439			SCREW (Special)	3
6	A015058248			HOUSING, Drive End	1
7	A079057166			BEARING	1
8	A059057898			RETAINER, Bearing	1
9	Z152056418			SCREW (10-32 x 1/2)	3
10	A032057895			SPACER	1
11	A020057897			ROTOR AND COIL ASSEMBLY	1
12	Z088057470			RING, Snap	1
13	A062057462			RING ASSEMBLY, Slip	1
14	Z106004491			SCREW (10-32)	2
15	Z093002434			LOCKWASHER (#10)	2
16	Z095005413			WASHER, Guard (#10)	2
17	Z082007983			WASHER, Insulation	2
18	A051058428			RECTIFIER	1
19	A051058587			RECTIFIER AND LEAD ASSEMBLY	3

GROUP 3

KEY NO.	LEECE-NEVILLE NUMBER	A.M. GROUP	A.M. PART NUMBER	DESCRIPTION	PER CAR
20	A777058436			MOUNT, Rectifier	1
21	Z082005706			BUSHING, Insulation	2
22	Z082004471			WASHER, Insulation	1
23	A012058433			HOUSING, Slip Ring End	1
24	Z037026175			NUT (#10-32)	3
25	Z098002364			NUT (Hexagon)(5/16-18)	2
26	Z093003231			LOCKWASHER (5/16)	2
27	Z095013789			WASHER, Guard (5/16)	1
28	Z082004470			WASHER, Insulation	2
29	Z053057611			RING, Sealing	1
30	A009058777			HOUSING, Brush Holder	1
31	Z106013622			SCREW (#8-32 x 7/16)	4
32	Z098004340			NUT (Hexagon)(10-24)	2
33	F094004534			LOCKWASHER (Shake Proof)(#10)	2
34	A116057613			STUD, Terminal	2
35	A047057594			JUMPER	2
36	Z095005293			WASHER, Guard	2
37	Z093002434			LOCKWASHER (#10)	2
38	F098032629			NUT (Hexagon)(10-32)	2
39	A148057615			COVER, Terminal	1
40	A010028711			BRUSH AND SPRING ASSEMBLY	2
41	Z098002771			NUT (Hexagon)(1/4-20)	3
42	Z094035869			LOCKWASHER (1/4)	3
43	A146057715			BLOCK, Terminal	1
44	Z098002771			NUT (Hexagon)(1/4-20)	4
45	Z09302523			LOCKWASHER (1/4)	1
46	Z095002524			WASHER, Guard (1/4)	1
47	Z082008214			WASHER, Insulation	2
48	A148057721			INSULATOR (Inner)	1
49	A115057218			SCREW, Terminal	3
50	Z082004472			BUSHING, Insulation	3
51	A115058431			SCREW, Terminal	1
52	Z164056405			SCREW (Hexagon)(10-32)	2
53	A038057919			COVER	1
54	Z082004488			BUSHING, Insulation	3
55	A051058429			RECTIFIER ASSEMBLY (Negative)	1
56	A051058586			RECTIFIER AND LEAD ASSEMBLY	3
57	A777058437			MOUNT, Rectifier	1
58	A115058432			SCREW, Terminal	1
59	A022057887			STATOR AND TERMINAL ASSEMBLY	1
60	Z082057626			WASHER, Insulation	1
61	Z053057597			"O" RING	1
62	M079026853			BEARING	1
63	Z063030468			WEDGE, Slot	1
64	A020057896			ROTOR ASSEMBLY	1
	Z093057246			JUMPER, Grounding (Not Shown)	1
	Z080057351			TERMINAL, Stator Lead (Not Shown)	3
	39382	3.010	314 6065	PULLEY (Less Fan) (Not Shown)	1
	K172057966	3.010	316 3771	HUB, Pulley (Not Shown)	1

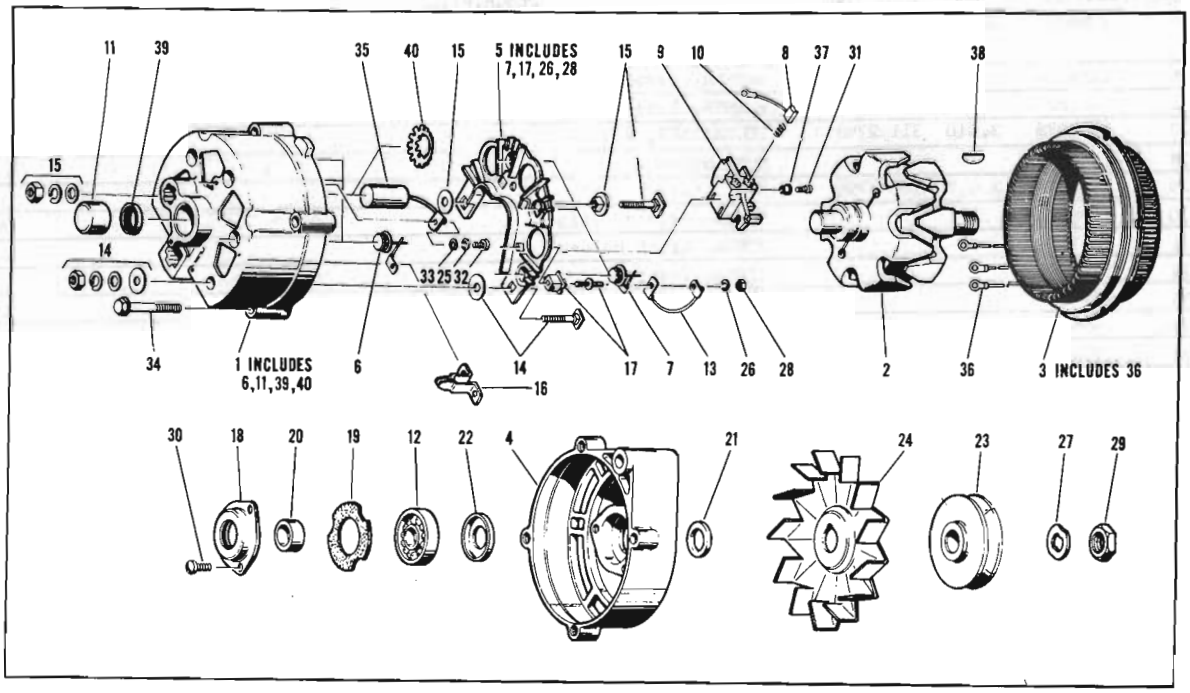

ALTERNATOR (Less Pulley) (42 AMP.) 63 01-10-80

A.M. NO. 320 4215 (Less Pulley) — DELCO-REMY NO. 1100629
A.M. NO. 316 7668 (Incl. Pulley)(Not Serviced) — DELCO-REMY NO. 1100647

KEY	DELCO-REMY NUMBER	A.M. GROUP	A.M. PART NUMBER	DESCRIPTION	QUAN. REQ.
1	1959827			FRAME	1
2	1956963			ROTOR	1
3	1959381			STATOR	1
4	1959917			FRAME, Drive End	1
5	1959828			HEAT SINK ASSEMBLY	1
6	1959830			DIODE (Negative)	3
7	1959829			DIODE (Positive)	3
8	1958197			BRUSH PACKAGE	1
9	1959978			HOLDER, Brush	1
10	1955519			SPRING, Brush	2
11	9418076			BEARING	1
12	954378			BEARING, Drive End	1
13	1959969			LEAD, Light Indicator	1
14	1959832			TERMINAL, Battery	1
15	1959833			TERMINAL, Ground	1
16	1956982			TERMINAL, Field	1
17	1959834			TERMINAL, Diode	1
18	1955494			BEARING, Retainer	1
19	1912008			GASKET	1
20	1843015			COLLAR, Inside	1
21	1959991			COLLAR, Outside	1
22	1947344			SLINGER, Grease	1
23	1947620	3.010	320 4230	PULLEY	1
24	1940994	3.010	315 5797	FAN	1

GROUP 3

KEY	DELCO-REMY NUMBER	A.M. GROUP	A.M. PART NUMBER	DESCRIPTION	QUAN. REQ.
25	1914304			WASHER, Capacitor Terminal	1
26	131182			WASHER, Diode Terminal	1
27	1941978	3.010	311 2797	LOCKWASHER, Pulley	1
28	120622			NUT, Diode	1
29	1911324	3.010	311 2796	NUT, Shaft	1
30	1956984			SCREW, Ball Bearing	3
31	1957501			SCREW, Brush Holder	2
32	132768			SCREW, Terminal	1
33	807716			WASHER, Plain	1
34	1956975			BOLT, Thru	4
35	1959455			CAPACITOR	1
36	1959532			CLIP, Terminal	3
37	1957562			INSULATOR, Holder Screw	2
38	124545	3.010	311 2794	KEY, Woodruff	1
39	1959790			RETAINER	1
40	1959390			SPRING, Capacitor	1

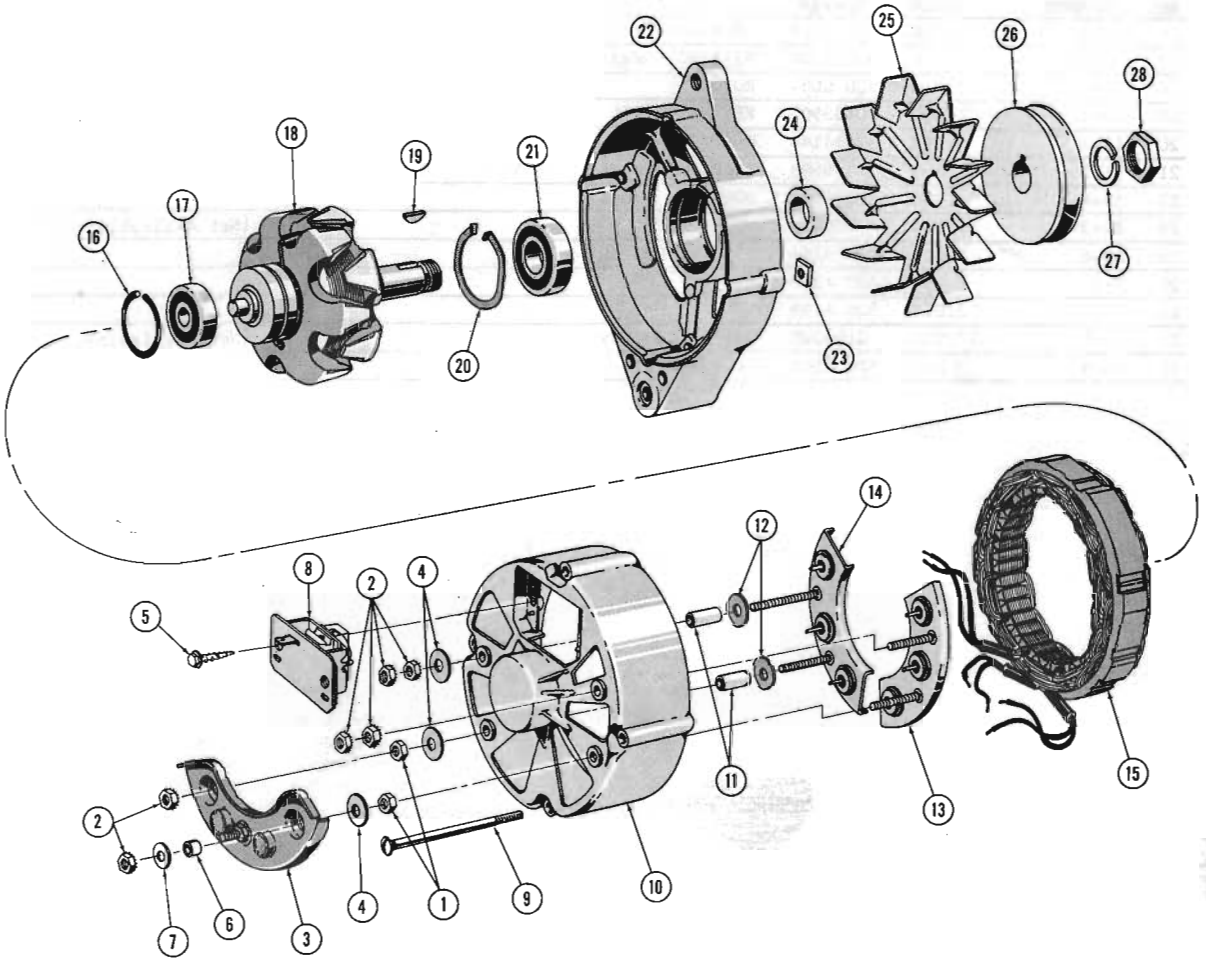

ALTERNATOR (Less Pulley and Belt)(40 AMP.) 64-65 01-10-80

A.M. NO. 320 5050 (Less Pulley & Belt) MOTOROLA NO. Al2NAM551-S
A.M. NO. 317 2525 (Incl. Pulley)(Not Serviced) MOTOROLA NO. Al2NAM551

KEY NO.	MOTOROLA NUMBER	A.M. GROUP	A.M. PART NUMBER	DESCRIPTION		QUAN. REQ.
1	20-34	17.412	G120361	NUT, Diode Stud	(Not Available)	2
2	20-33	17.412	G271166	NUT, Diode Stud	(Not Available)	6
3	1-13	3.016	320 5024	DIODE (Isolation)		1
4	15-3	3.016	320 4158	WASHER, Insulator (Fiber)		3
5	20-32	17.671	G456794	SCREW, Brushes	(Not Available)	2
6	15-2	3.016	320 6842	INSULATOR, Sleeve		1
7	15-3	3.016	320 4158	WASHER, Insulator		1
8	3-1	3.016	320 4152	BRUSHES (Incl. Holder and Cover)		1
9	20-2	3.016	320 5053	BOLT		4
10	14-2	3.016	320 4151	HOUSING, Rear		1
11	15-1	3.016	320 4157	INSULATOR, Sleeve		2
12	15-3	3.016	320 4158	WASHER, Insulator (Fiber)		2
13	1-1	3.016	320 5506	DIODE (Positive)		1
14	1-2	3.016	320 5507	DIODE (Negative)		1
15	13-2	3.016	320 5114	STATOR		1

GROUP 3

KEY NO.	MOTOROLA NUMBER	A.M. GROUP	A.M. PART NUMBER	DESCRIPTION		QUAN. REQ.
16	11-4	3.016	320 4150	RETAINER, Rear Bearing		1
17	11-2	3.016	320 4146	BEARING, Rear		1
18	12-2	3.016	320 5054	ROTOR		1
19	20-7	17.344	G103905	KEY, Woodruff		1
20	11-3	3.016	320 4144	WASHER, Spring		1
21	11-1	3.016	313 9988	BEARING, Front		1
22	14-4	3.016	320 4142	HOUSING, Front		1
23	20-3	17.414	G120611	NUT	(Not Available)	4
24	20-6	3.017	320 4141	SPACER, Pulley		1
25	7-8	3.017	320 4140	FAN		1
26	7-5	3.017	320 4139	PULLEY		1
27	20-5	17.820	G103325	WASHER, Pulley Lock	(Not Available)	1
28	20-4	3.017	320 4160	NUT, Pulley		1

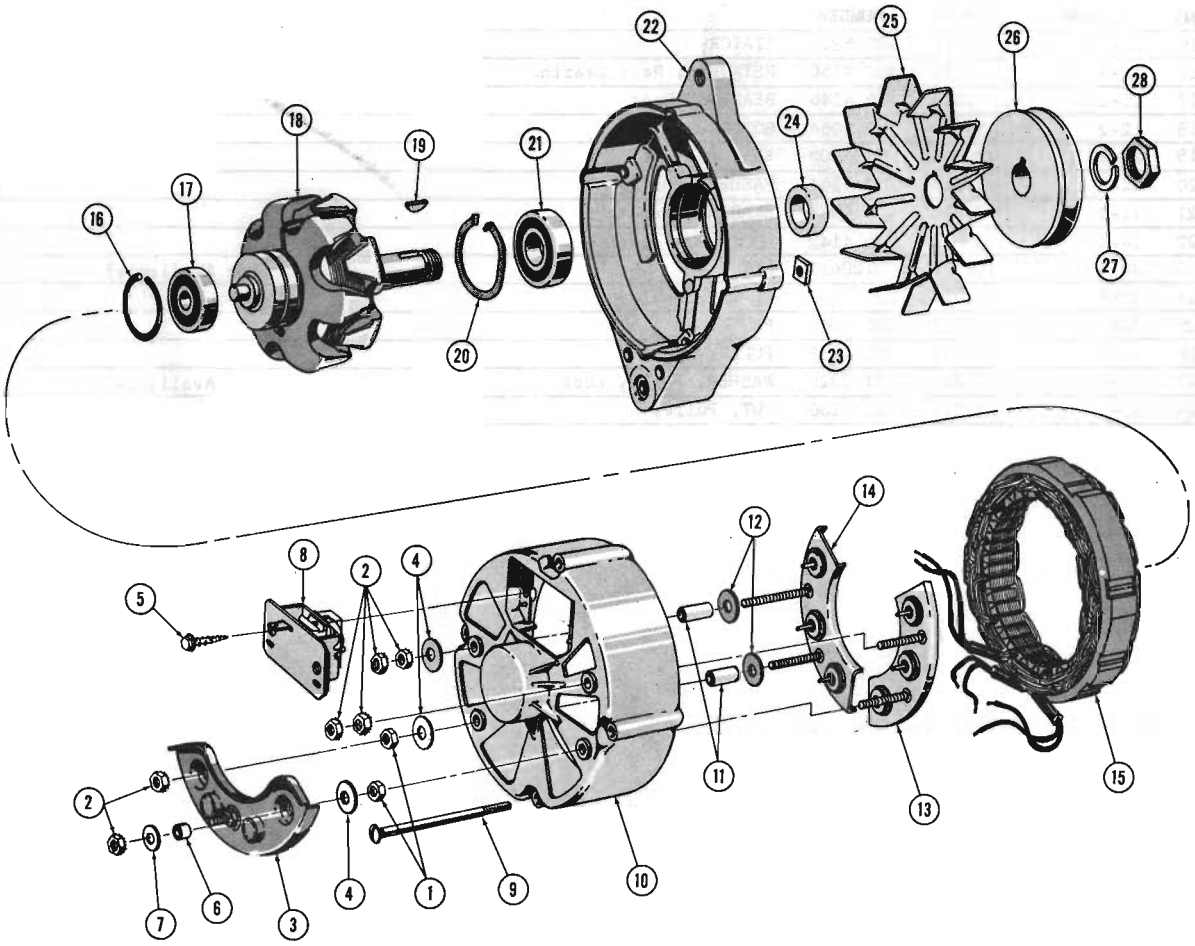

ALTERNATOR (Less Pulley and Belt)(55 AMP.) 64-65 01-10-80

A.M. NO. 320 5226 (Less Pulley & Belt) MOTOROLA NO. A12NAM603-S
A.M. NO. 317 4731 (Incl. Pulley)(Not Serviced) MOTOROLA NO. A12NAM603

KEY NO.	MOTOROLA NUMBER	A.M. GROUP	A.M. PART NUMBER	DESCRIPTION		QUAN. REQ.
1	20-34	17.412	G120361	NUT, Diode Stud	(Not Available)	2
2	20-33	17.412	G271166	NUT, Diode Stud	(Not Available)	6
3	1-13	3.016	320 5024	DIODE (Isolation)		1
4	15-3	3.016	320 4158	WASHER, Insulator (Fiber)		3
5	20-32	17.671	G456794	SCREW, Brushes	(Not Available)	2
6	15-2	3.016	320 6842	INSULATOR, Sleeve		1
7	15-3	3.016	320 4158	WASHER, Insulator		1
8	3-1	3.016	320 4152	BRUSHES (Incl. Holer and Cover)		1
9	20-2	3.016	320 5053	BOLT		4
10	14-2	3.016	320 4151	HOUSING, Rear		1
11	15-1	3.016	320 4157	INSULATOR, Sleeve		2
12	15-3	3.016	320 4158	WASHER, Insulator (Fiber)		2
13	1-1	3.016	~~320 5506~~ 320 7850	DIODE (Positive)		1
14	1-2	3.016	~~320 5507~~ 320 7851	DIODE (Negative)		1

GROUP 3

KEY NO.	MOTOROLA NUMBER	A.M. GROUP	A.M. PART NUMBER	DESCRIPTION		QUAN. REQ.
15	13-3	3.016	320 5227	STATOR		1
16	11-4	3.016	320 4150	RETAINER, Rear Bearing		1
17	11-2	3.016	320 4146	BEARING, Rear		1
18	12-2	3.016	320 5054	ROTOR		1
19	20-7	17.344	G103905	KEY, Woodruff		1
20	11-3	3.016	320 4144	WASHER, Spring		1
21	11-1	3.016	313 9988	BEARING, Front		1
22	14-4	3.016	320 4142	HOUSING, Front		1
23	20-3	17.414	G120611	NUT	(Not Available)	4
24	20-6	3.017	320 4141	SPACER, Pulley		1
25	7-8	3.017	320 4140	FAN		1
26	7-5	3.017	320 4139	PULLEY		1
27	20-5	17.820	G103325	WASHER, Pulley Lock	(Not Available)	1
28	20-4	3.017	320 4160	NUT, Pulley		1

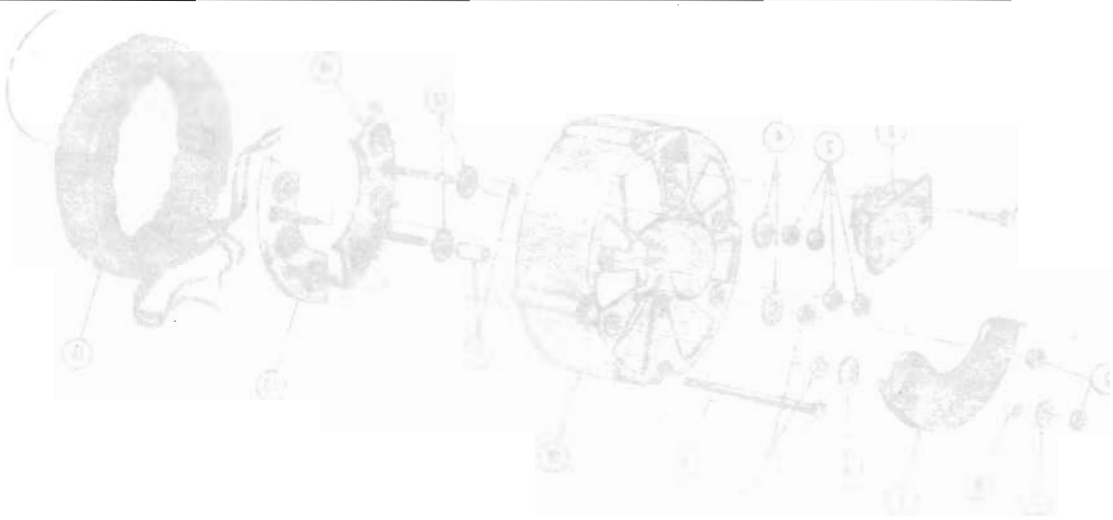

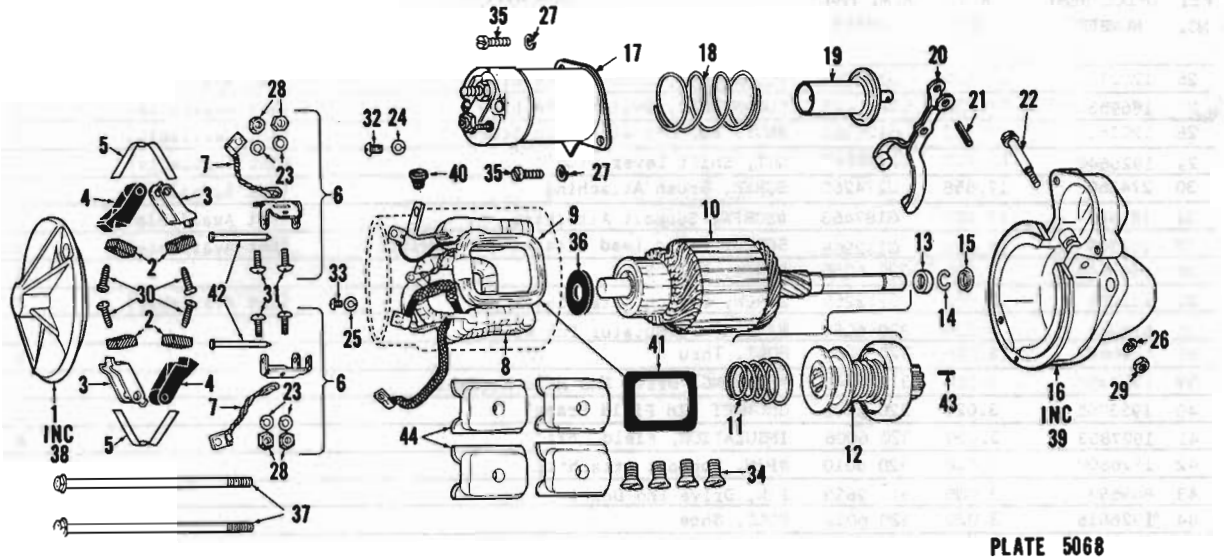

PLATE 5068

STARTING MOTOR 60-61 01-10 (OHV)

A.M. NO. 315 6116 DELCO-REMY NO. 1107731

KEY NO.	DELCO-REMY NUMBER	A.M. GROUP	A.M. PART NUMBER	DESCRIPTION		QUAN. REQ.
1	1928966	3.020	311 9543	END, Commutator		1
2	1906945			BRUSH		4
2		3.020	320 2006	BRUSH SET (Incl. 4 Brushes)		1
3	1926617	3.020	320 6082	HOLDER, Brush (Ground)		2
4	1926618	3.020	320 6083	HOLDER, Brush (Insulated)		2
5	1926622	3.020	311 9545	SPRING, Brush		2
6	1928015	3.020	320 6084	SUPPORT, Brush Holder (Package)(Incl. all parts listed below which are coded with a #)		2
7	1926605	3.020	320 6085	#LEAD, Brush Ground		2
8	1933761	3.020	320 0936	COIL, Field (Incl. 4 Coils)		1
9				COIL, Shunt (Part of Key No. 8)		
10	1935851	3.020	320 0935	ARMATURE		1
11	1932209	3.020	320 6086	SPRING, Shift Lever Assist		1
12	1935853	3.020	320 0938	DRIVE ASSEMBLY		1
13	1927849	3.020	320 6087	COLLAR, Drive End Pinion Stop		1
14	1927848	3.020	320 6088	RING, Drive End Pinion Stop Retainer		1
15	1927850	3.020	320 6092	COLLAR, Drive End Thrust		1
16	1945013	3.020	320 1283	HEAD, Drive End (Drive Housing)(Incl. all parts coded with a *)		1
17	1119919	3.020	320 0939	SWITCH, Solenoid		1
18	1932208	3.020	320 6285	SPRING, Plunger Return	(Replaces 320 6093)	1
19	1932200	3.020	320 4021	PLUNGER		1
20	1932205	3.020	320 6094	LEVER, Shift		1
21	455106	17.472	G455106	PIN, Plunger Attaching To Shift Lever	(Not Available)	1
22	1932197	3.020	320 6098	STUD, Shift Lever		1
23	120217	17.820	G120217	#LOCKWASHER, Support Attaching Screw	(Not Available)	4
24	274545	17.820	G274545	LOCKWASHER, Field Lead Attaching Screw To Switch	(Not Available)	1

GROUP 3

KEY NO.	DELCO-REMY NUMBER	A.M. GROUP	A.M. PART NUMBER	DESCRIPTION		QUAN. REQ.
26	120214	17.820	G120214	LOCKWASHER, Shift Lever Stud	(Not Available)	1
27	1869533	17.820	G9421423	LOCKWASHER, Switch Attaching	(Not Available)	2
28	120361	17.412	G120361	#NUT, Support Attaching Screw	(Not Available)	4
29	1926640	17.412	G1926640	NUT, Shift Lever Stud	(Not Available)	1
30	274260	17.658	G274260	SCREW, Brush Attaching	(Not Available)	4
31	187463	17.608	G187463	#SCREW, Support Attaching	(Not Available)	4
32	132908	17.614	G132908	SCREW, Field Lead Attaching To Switch	(Not Available)	1
34	1843646	3.005	320 6096	SCREW, Pole Shoe		4
35	132255	17.602	G132255	SCREW, Switch Attaching	(Not Available)	2
36	818265	3.020	320 6099	WASHER, Commutator End Brake		1
37	1926625	3.020	320 6286	BOLT, Thru		2
39	1923907	3.020	311 9548	*BUSHING, Drive End Head Assembly		1
40	1933765	3.020	320 6005	GROMMET (In Field Frame)		1
41	1927853	3.020	320 6006	INSULATION, Field Coil		4
42	1926600	3.020	320 6010	#PIN, Support Attaching		2
43	809593	3.005	311 2693	PIN, Drive End Dowel		1
44	1926616	3.020	320 6012	POLE, Shoe		4

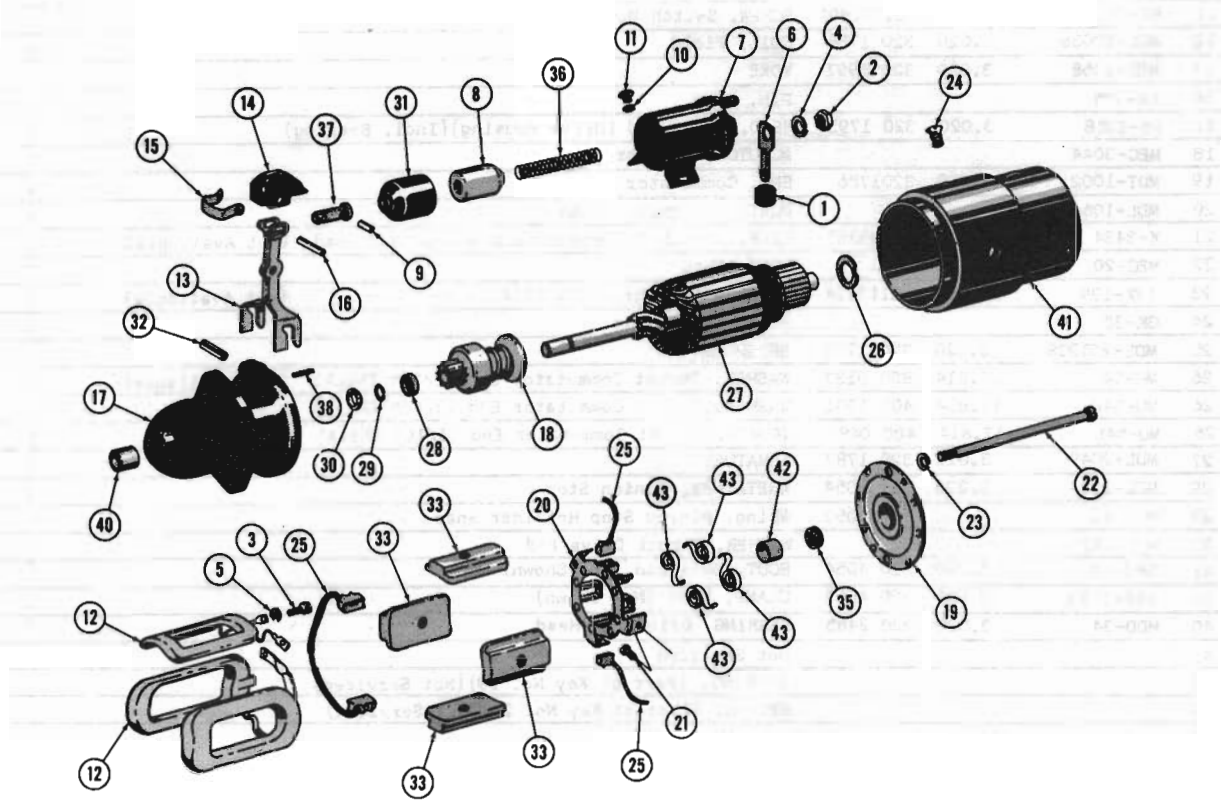

STARTING MOTOR 60 THRU 62 01 (LHE)

A.M. No. 315 7208 AUTO-LITE No. MEC-6002

KEY NO.	AUTO-LITE NUMBER	A.M. GROUP	A.M. PART NUMBER	DESCRIPTION		QUAN. REQ.
		3.020	320 1790	CLUTCH, Starter (Includes all parts listed below which are coded with a #)		1
1	MEC-27			GROMMET, Connector		1
2	8X-165	17.406	G219432	NUT, Terminal Stud (3/8-16)	(Not Available)	1
3	8X-304	17.593	G156750	SCREW, Switch Connecting (8-32 x 5/16)	(Not Available)	1
4	12X-201	17.820	G120382	LOCKWASHER, Terminal Stud (3/8)	(Not Available)	1
5	12X-195	17.820	G131182	LOCKWASHER, Switch Connecting And Ground Lead And Brush Plate Mounting Screw (#8)	(Not Available)	5
6	MEC-26			CONNECTOR, Switch		1
7	SAJ-4003	3.020	320 2429	SWITCH, Starting Motor Solenoid (Less Plunger)		1
8	SAJ-1021D	3.020	320 4020	PLUNGER, Starting Motor Solenoid		1
9	XA-904			PIN, Link		1
10	12X-199	17.820	G113114	LOCKWASHER, Switch Mounting Screw (1/4)	(Not Available)	2

GROUP 3

KEY NO.	AUTO-LITE NUMBER	A.M. GROUP	A.M. PART NUMBER	DESCRIPTION		QUAN. REQ.
11	8X-467	17.038	G179789	SCREW, Switch Mounting (1/4-20 x 3/8)	(Not Available)	2
12	MEC-1005S	3.020	320 1784	COIL, Field		1
13	MEC-1058	3.020	320 5997	YOKE		1
16	XA-905			PIN, Yoke		1
17	PS-1358	3.020	320 1793	HEAD, Drive End (Drive Housing)(Incl. Bearing)		1
18	MEC-3044			#CLUTCH, Starter		1
19	MDT-1002	3.020	3201786	END, Commutator		1
20	MDL-1064			PLATE ASSEMBLY, Brush		1
21	X-3434	17.572	G193305	RIVET, Brush Plate Mounting And Ground Lead	(Not Available)	3
22	MEC-20			BOLT, Thru		2
23	12X-199	17.820	G113114	LOCKWASHER, Thru Bolt (1/4)	(Not Available)	2
24	GK-38			SCREW, Pole Shoe		4
25	MDL-2012CS	3.020	320 1791	BRUSH SET		1
26	MU-54	17.814	800 0137	WASHER, Thrust Commutator End (1/32" Thick)	(Not Available)	AR
26	MU-54B	17.814	400 1091	WASHER, Thrust Commutator End (3/64" Thick)		AR
26	MU-54L	17.814	400 0480	WASHER, Thrust Commutator End (1/16" Thick)		1
27	MDL-2049	3.020	320 1787	ARMATURE		1
28	MCL-129	3.020	311 9054	#RETAINER, Pinion Stop		1
29	MCL-127	3.020	311 9053	#Ring, Pinion Stop Retainer Snap		1
30	MCL-132			WASHER, Thrust Drive End		1
31	SAJ-33	3.020	320 4054	BOOT, Solenoid (Not Shown)		1
32	SSX-1023	3.020	320 4053	CLAMP, Boot (Not Shown)		1
40	MDD-34	3.020	320 2485	BEARING, Drive End Head		1
41				Not Serviced		
42				BEARING, (Part of Key No. 19)(Not Serviced)		
43				SPRING, (Part of Key No. 20)(Not Serviced)		

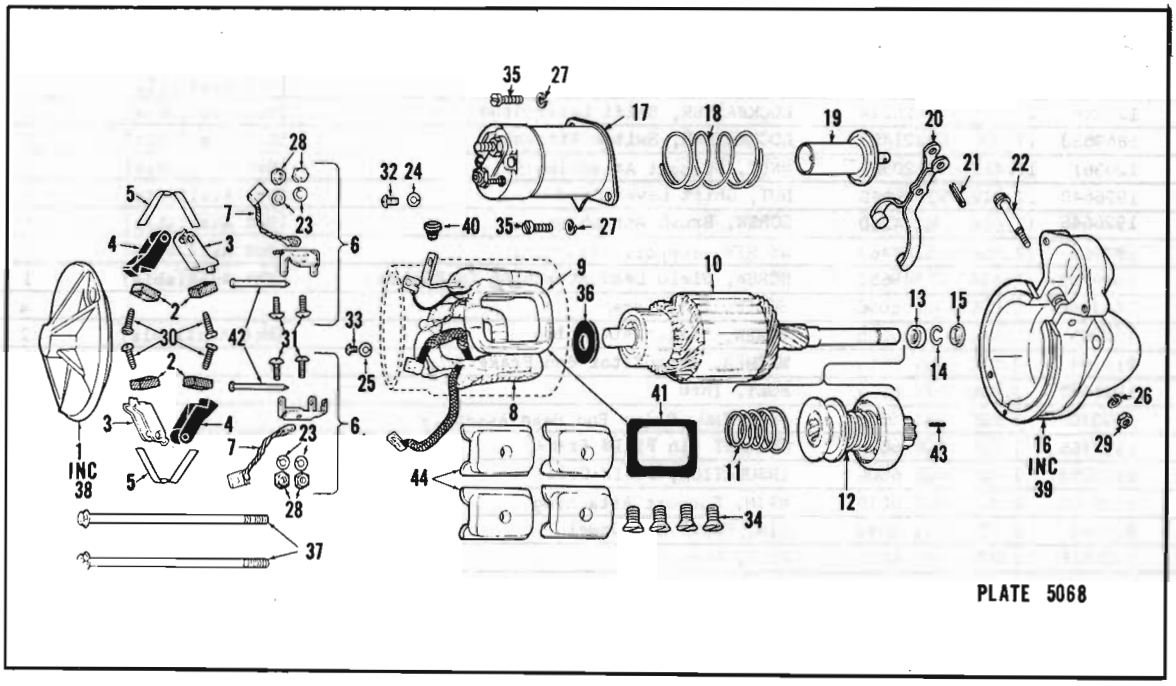

STARTING MOTOR 61-62 01-10 (OHV): 63 01-10

A.M. No. 316 1142 DELCO-REMY No. 1107201

KEY NO.	DELCO-REMY NUMBER	A.M. GROUP	A.M. PART NUMBER	DESCRIPTION	QUAN. REQ.
1	1928966	3.020	311 9543	END, Commutator	1
2	1906945			BRUSH	4
2		3.020	320 2006	BRUSH SET (Incl. 4 Brushes)	1
3	1926617	3.020	320 6082	HOLDER, Brush (Ground)	2
4	1926618	3.020	320 6083	HOLDER, Brush (Insulated)	2
5	1926622	3.020	311 9545	SPRING, Brush	2
6	1928015	3.020	320 6084	SUPPORT, Brush Holder (Package)(Incl. all parts listed below which are coded with a #)	2
7	1926605	3.020	320 6085	#LEAD, Brush Ground	2
8	1933761	3.020	320 0936	COIL, Field (Incl. 4 Coils)	1
9				COIL, Shunt (Part of Key No. 8)	
10	1935851	3.020	320 0935	ARMATURE	1
11	1932209	3.020	320 6086	SPRING, Shift Lever Assist	1
12	1935853	3.020	320 0938	DRIVE ASSEMBLY	1
13	1927849	3.020	320 6087	COLLAR, Drive End Pinion Stop	1
14	1927848	3.020	320 6088	RING, Drive End Pinion Stop Retainer	1
15	1927850	3.020	320 6092	COLLAR, Drive End Thrust	1
16	1945013	3.020	320 1283	HEAD, Drive End (Drive Housing)(Incl. all parts coded with a *)	1
17	1119798	3.020	320 2630	SWITCH, Solenoid (use 320 5022)	1
18	1932208	3.020	320 6285	SPRING, Plunger Return (Replaces 320 6093)	1
19	1932200	3.020	320 4021	PLUNGER	1
20	1932205	3.020	320 6094	LEVER, Shift	1
21	455106	17.472	G455106	PIN, Plunger Attaching To Shift Lever (Not Available)	1
22	1932197	3.020	320 6098	STUD, Shift Lever	1
23	120217	17.820	G120217	#LOCKEASHER, Support Attaching Screw (Not Available)	4

KEY NO.	DELCO-REMY NUMBER	A.M. GROUP	A.M. PART NUMBER	DESCRIPTION		QUAN. REQ.
24	274545	17.820	G274545	LOCKWASHER, Field Lead Attaching Screw To Switch	(Not Available)	1
26	120214	17.820	G120214	LOCKWASHER, Shift Lever Stud	(Not Available)	1
27	1869533	17.820	G9421423	LOCKWASHER, Switch Attaching	(Not Available)	2
28	120361	17.412	G120361	#NUT, Support Attaching Screw	(Not Available)	4
29	1926640	17.412	G1926640	NUT, Shift Lever Stud	(Not Available)	1
30	1926648	17.658	G274260	SCREW, Brush Attaching	(Not Available)	4
31	187463	17.608	G187463	#SCREW, Support Attaching	(Not Available)	4
32	1949653	17.614	G1949653	SCREW, Field Lead Attaching To Switch	(Not Available)	1
34	1843646	3.005	320 6096	SCREW, Pole Shoe		4
35	132255	17.602	G132255	SCREW, Switch Attaching	(Not Available)	2
36	818265	3.020	320 6099	WASHER, Commutator End Brake		1
37	1926625	3.020	320 6212	BOLT, Thru		2
39	1923907	3.020	311 9548	*BUSHING, Drive End Head Assembly		1
40	1933765	3.020	320 6005	GROMMET (In Field Frame)		1
41	1927853	3.020	320 6006	INSULATION, Field Coil		4
42	1926600	3.020	320 6010	#PIN, Support Attaching		2
43	809593	3.005	311 2693	PIN, Drive End Dowel		1
44	1926616	3.020	320 6012	POLE, Shoe		4

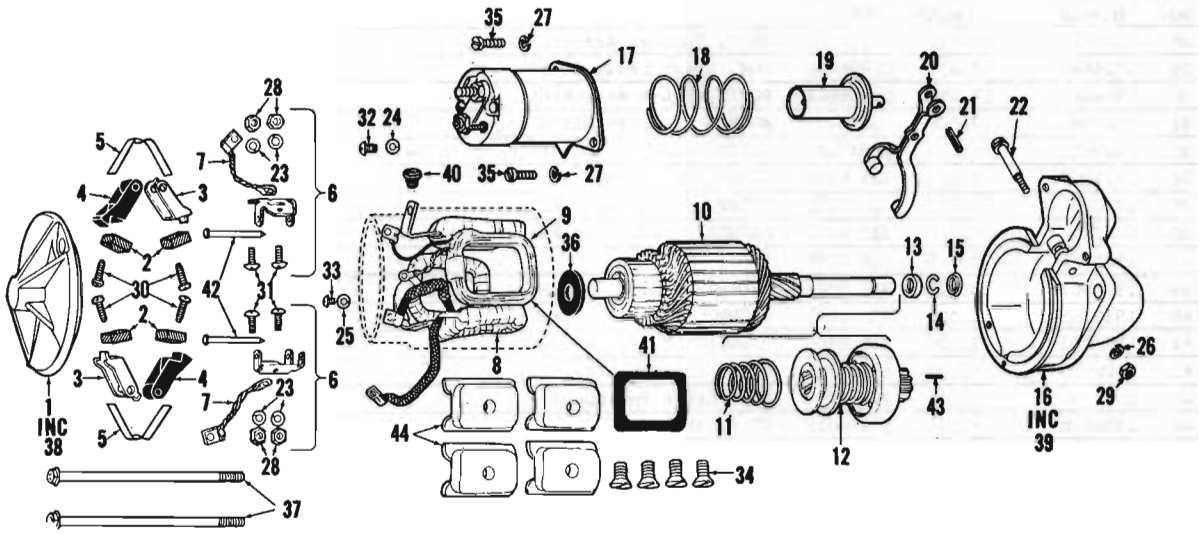

PLATE 5068

STARTING MOTOR 64 01-10 (SIX-196): 65 01 (LHE)(OHV-196)

A.M. NO. 317 3151 DELCO-REMY NO. 1107317

KEY NO.	DELCO-REMY NUMBER	A.M. GROUP	A.M. PART NUMBER	DESCRIPTION	QUAN. REQ.
1	1928966	3.020	311 9543	END, Commutator	1
2	1906945			BRUSH	4
2		3.020	320 2006	BRUSH SET (Incl. 4 Brushes)	1
3	1926617	3.020	320 6082	HOLDER, Brush (Ground)	2
4	1926618	3.020	320 6083	HOLDER, Brush (Insulator)	2
5	1926622	3.020	311 9545	SPRING, Brush	2
6	1928015	3.020	320 6084	SUPPORT, Brush (Package) Holder	2
7	1926605	3.020	320 6085	#LEAD, Brush Cround	2
8	1933761	3.020	320 0936	COIL, Field (Incl. 4 Coils)	1
9				COIL, Shunt (Part of Key No. 8)	
10	1955937	3.020	320 5019	ARMATURE	1
11				SPRING, Shift Lower Assist (Not Used)	1
12	1954842	3.020	320 5021	DRIVE ASSEMBLY	1
13	1927849	3.020	320 6087	COLLAR, Drive End Pinion Stop	1
14	1927848	3.020	320 6088	RING, Drive End Pinion Stop Retainer	1
15	1927850	3.020	320 6092	COLLAR, Drive End Thrust	1
16	1955193	3.020	320 5020	HEAD, Drive End (Drive Housing)(Incl. all parts coded with a *)	1
17	1114356	3.020	320 5022	SWITCH, Solenoid (Service Replacement For Delco-Remy #1114334)	1
18	1951792	3.020	320 6284	SPRING, Plunger Return (Use 320 6285)	1
19	1953041	3.020	320 4021	PLUNGER	1
20	1932205	3.020	320 6094	LEVER, Shift	1
21	455106	17.472	G455106	PIN, Plunger Attaching To Shift Lever (Not Available)	1
22	1932197	3.020	320 6098	STUD, Shift Lever	1
23	453296	17.820	G453296	#LOCKWASHER, Support Attaching Screw (Not Available)	4
24	274545	17.820	G274545	LOCKWASHER, Field Load Attaching Screw To Switch) (Not Available)	1
26	120214	17.820	G120214	LOCKWASHER, Shift Level Stud (Not Available)	1
27	1869533	17.820	G9421423	LOCKWASHER, Switch Attaching (Not Available)	2

GROUP 3

KEY NO.	DELCO-REMY NUMBER	A.M. GROUP	A.M. PART NUMBER	DESCRIPTION		QUAN. REQ.
28	120361	17.412	G120361	#NUT, Support Attaching Screw	(Not Available)	4
29	1926640	17.412	G1926640	NUT, Shift Lever Stud	(Not Available)	1
30	1926648	17.658	G1926648	SCREW, Brush Attaching	(Not Available)	4
31	274738	17.608	G274738	#SCREW, Support Attaching	(Not Available)	4
32	1949653	17.614	G194964	SCREW, Field Lead Attaching To Switch	(Not Available)	1
34	1913960	3.005	320 6096	SCREW, Pole Shoe		4
35	132255	17.602	G132255	SCREW, Switch Attaching	(Not Available)	2
36	818265	3.020	320 6099	WASHER, Cummutator End Brace		1
37	1926625	3.020	320 6286	BOLT, Thru		2
39	1923907	3.020	311 9548	*BUSHING, Drive End Head Assembly		1
40	1933765	3.020	320 6005	GROMMET (In Field Frame)		1
41	1927853	3.020	320 6006	INSULATION, Field Coil		4
42	1926600	3.020	320 6010	#PIN, Support Attaching		2
43	809593	3.005	311 2693	PIN, Drive End Dowel		1
44	1926616	3.020	320 6012	POLE, Shoe		4

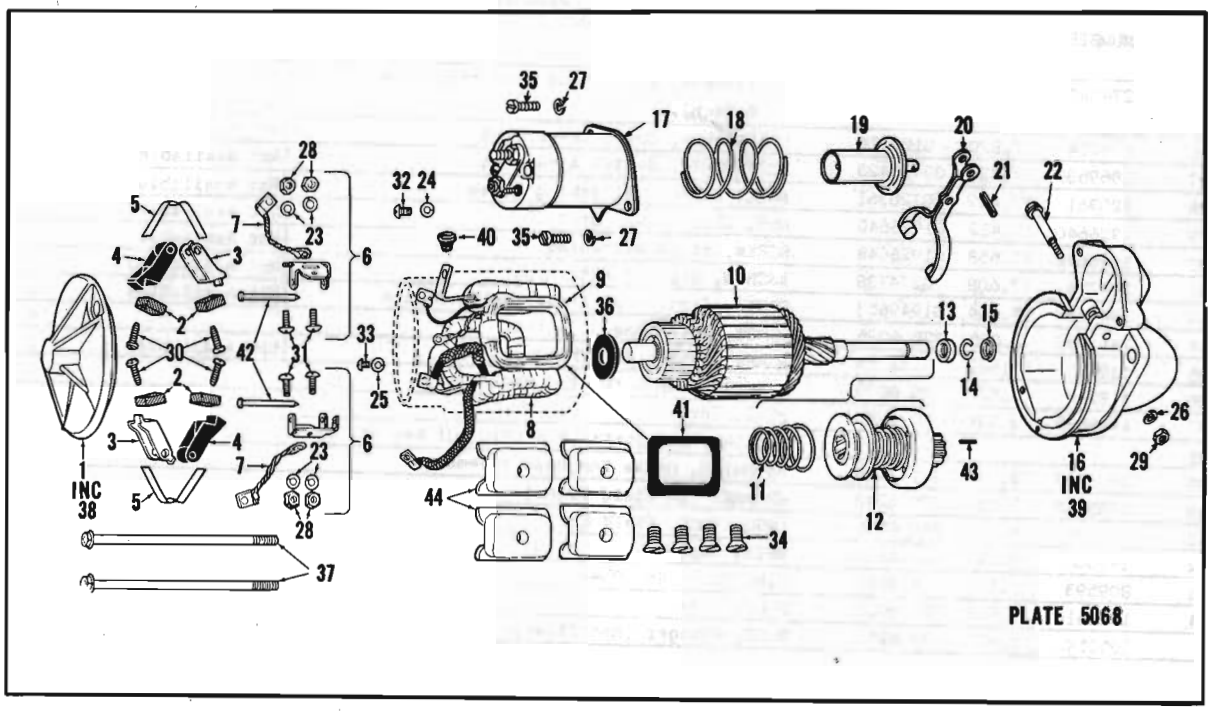

STARTING MOTOR 63 Thru 65 10-80 (V8)

A.M. NO. 316 8961 DELCO-REMY NO. 1107282

KEY NO.	DELCO-REMY NUMBER	A.M. GROUP	A.M. PART NUMBER	DESCRIPTION	QUAN. REQ.
1	1928966	3.020	311 9543	END, Commutator	1
2	1906945			BRUSH	4
		3.020	320 2006	BRUSH SET (Incl. 4 Brushes)	1
3	1926617	3.020	320 6082	HOLDER, Brush (Ground)	2
4	1926618	3.020	320 6083	HOLDER, Brush (Insulated)	2
5	1926622	3.020	311 9545	SPRING, Brush	2
6	1928015	3.020	320 6084	SUPPORT, Brush Holder (Package)(Incl. all parts listed below which are coded with a #)	2
7	1926605	3.020	320 6085	#LEAD, Brush Ground	2
8	1935128	3.020	320 1072	COIL, Field (Incl. 3 Coils)	1
9	1935131			COIL, Shunt	
10	1935851	3.020	320 0935	ARMATURE	1
11				SPRING, Shift Lever Assist (Not Used)	1
12	1935853	3.020	320 0938	DRIVE ASSEMBLY	1
13	1927849	3.020	320 6087	COLLAR, Drive End Pinion Stop	1
14	1927848	3.020	320 6088	RING, Drive End Pinion Stop Retainer	1
15	1927850	3.020	320 6092	COLLAR, Drive End Thrust	1
16	1961943	3.020	320 4343	HEAD, Drive End (Drive Housing)(Incl. all parts coded with a *)	1
17	1114262	3.020	320 4349	SWITCH, Solenoid	1
18	1932208	3.020	320 6285	SPRING, Plunger Return (Replaces 320 6093)	1
19	1932200	3.020	320 4021	PLUNGER	1
20	1951567	3.020	320 6281	LEVER, Shift	1
21	455106	17.412	G455106	PIN, Plunger Attaching To Shift Lever (Not Available)	1
22	1932197	3.020	320 6098	STUD, Shift Lever	1
23	120217	17.820	G120217	#LOCKWASHER, Support Attaching Screw (Not Available)	4

GROUP 3

KEY NO.	DELCO-REMY NUMBER	A.M. GROUP	A.M. PART NUMBER	DESCRIPTION		QUAN. REQ.
24	274545	17.820	G274545	LOCKWASHER, Field Lead Attaching Screw To Switch)	(Not Available)	1
26	120214	17.820	G120214	LOCKWASHER, Shift Lever Stud	(Not Available)	1
27	1869533	17.820	G9421423	LOCKWASHER, Switch Attaching	(Not Available)	2
28	120361	17.412	G120361	#NUT, Support Attaching Screw	(Not Available)	4
29	1926640	17.412	G1926640	NUT, Shift Lever Stud	(Not Available)	1
30	1926648	17.658	G1926648	SCREW, Brush Attaching	(Not Available)	4
31	274738	17.608	G274738	#SCREW, Support Attaching	(Not Available)	4
32	1949653	17.614	G1949653	SCREW, Field Lead Attaching To Switch	(Not Available)	1
34	1913960	3.005	320 6096	SCREW, Pole Shoe		4
35	132255	17.602	G132255	SCREW, Switch Attaching	(Not Available)	2
36	818265	3.020	320 6099	WASHER, Commutator End Brake		1
37	1926625	3.030	320 6286	BOLT, Thru		2
38				BUSHING, Commutator End (Part Of Key No. 1)		1
39	1923907	3.020	311 9548	*BUSHING, Drive End Head Assembly		1
40	1935168	3.020	320 6282	GROMMET (In Field Frame)		1
41	1927853	3.020	320 6006	INSULATION, Field Coil		4
42	192660	3.020	320 6010	#PIN, Support Attaching		2
43	809593	3.005	311 2693	PIN, Drive End Dowel		1
44	1926616	3.005	320 6012	POLE, Shoe		4
	1951546	3.020	320 6283	BOOT, Plunger (Not Shown)		1

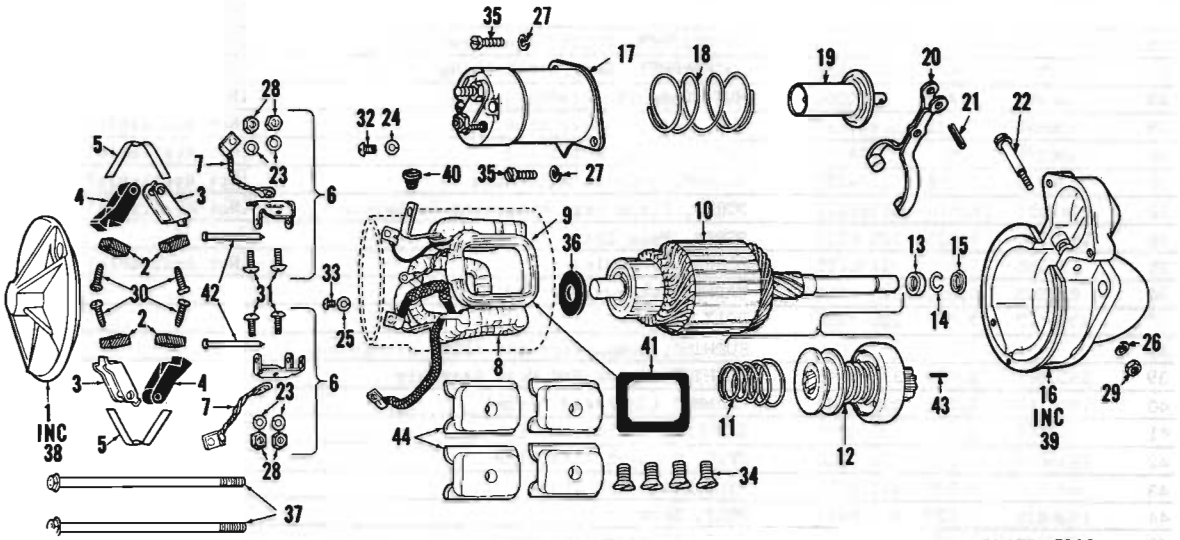

STARTING MOTOR 64 10 (OHV-232)

A.M. NO. 317 3236 DELCO-REMY NO. 1107331

KEY	DELCO-REMY NUMBER	A.M. GROUP	A.M. PART NUMBER	DESCRIPTION	QUAN. REQ.
1	1928966	3.020	311 9543	END, Commutator	1
2	1906945			BRUSH	4
		3.020	320 2006	BRUSH SET (Incl. 4 Brushes)	1
3	1926617	3.020	320 6082	HOLDER, Brush (Ground)	2
4	1926618	3.020	320 6083	HOLDER, Brush (Insulated)	2
5	1926622	3.020	311 9545	SPRING, Brush	2
6	1928015	3.020	320 6084	SUPPORT, Brush Holder (Package)(Incl. all parts listed below which are coded with a #)	2
7	1926605	3.020	320 6085	#LEAD, Brush Ground	2
8	1935128	3.020	320 1072	COIL, Field (Incl. 4 Coils)	1
9	1935131			COIL, Shunt (Part of Key No. 8)	
10	1955937	3.020	320 5019	ARMATURE (Replaces 320 5388)	1
11				SPRING, Shift Lever Assist (Not Used)	1
12	1954842	3.020	320 5021	DRIVE ASSEMBLY (Replaces 320 5389)	1
13	1927849	3.020	320 6087	COLLAR, Drive End Pinion Stop	1
14	1927848	3.020	320 6088	RING, Drive End Pinion Stop Retainer	1
15	1927850	3.020	320 6092	COLLAR, Drive End Thrust	1
16	1963937	3.020	320 5390	HEAD, Drive End (Drive Housing)(Incl. all parts coded with a *)	1
17	1114356	3.020	320 5022	SWITCH, Solenoid (Replaces 320 5391)	1
18	1958679	3.020	320 6285	SPRING, Plunger Return	1
19	1953041	3.020	320 4021	PLUNGER	1
20	1932205	3.020	320 6094	LEVER, Shift	1
21	455106	17.472	G455106	PIN, Plunger Attaching To Shift Lever (Not Available)	1
22	1932197	3.020	320 6098	STUD, Shift Lever	1
23	453296	17.820	G453296	#LOCKWASHER, Support Attaching Screw (Not Available)	4

24	274545	17.820	G274545	LOCKWASHER, Field Lead Attaching Screw to Switch	(Not Available)	1
26	120214	17.820	G120214	LOCKWASHER, Shift Lever Stud	(Not Available)	1
27	1869533	17.820	G9421423	LOCKWASHER, Switch Attaching	(Not Available)	2
28	120361	17.412	G120361	NUT, Support Attaching Screw	(Not Available)	4
29	1926640	17.412	G1926640	NUT, Switch Lever Stud	(Not Available)	1
30	1926648	17.658	G274260	SCREW, Brush Attaching	(Not Available)	4
31	274738	17.608	G274738	#SCREW, Support Attaching	(Not Available)	4
32	1949653	17.614	G1949653	SCREW, Field Lead Attaching To Switch	(Not Available)	1
34	1913960	3.005	320 6096	SCREW, Pole Shoe		4
35	132255	17.602	G132255	SCREW, Attaching	(Not Available)	2
36	818265	3.020	320 6099	WASHER, Commutator End Brake		1
37	1926625	3.020	320 6286	BOLT, Thru		2
38				BUSHING, Commutator End (Part of Key No. 1)		1
39	1923907	3.020	311 9548	BUSHING, Drive End Head Assembly		1
40	1935168	3.020	320 6282	GROMMET (In Field Frame)		1
41	1927853	3.020	320 6006	INSULATOR, Field Coil		4
42	1926600	3.020	320 6010	#PIN, Support Attaching		2
43	809593	3.005	311 2693	PIN, Drive End Dowel		1
44	1926616	3.020	320 6012	POLE, Shoe		4
45	1951546	3.020	320 6283	BOOT, Plunger (Not Shown)		1

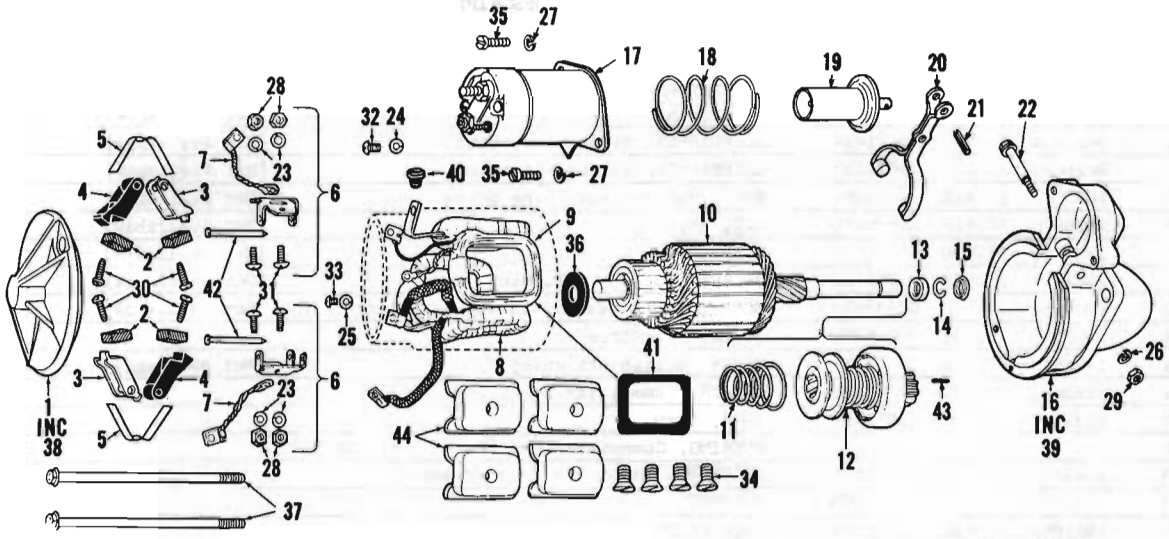

PLATE 5068

STARTING MOTOR 64 10 (OHV-232): 65 10-80 (OHV-232)

A.M. NO. 317 8305 DELCO-REMY NO. 1107347

KEY NO.	DELCO-REMY NUMBER	A.M. GROUP	A.M. PART NUMBER	DESCRIPTION	QUAN. REQ.
1	1928966	3.020	311 9543	END, Commutator	1
2	1906945			BRUSH	4
		3.020	320 2006	BRUSH SET (Incl. 4 Brushes)	1
3	1926617	3.020	320 6082	HOLDER, Brush (Ground)	2
4	1926618	3.020	320 6083	HOLDER, Brush (Insulated)	2
5	1926622	3.020	311 9545	SPRING, Brush	2
6	1928015	3.020	320 6084	SUPPORT, Brush Holder (Package)(Incl. all parts listed below which are coded with a #)	2
7	1926605	3.020	320 6085	#LEAD, Brush Ground	2
8	1964718	3.020	320 5881	COIL, Field (Incl. 4 Coils)	1
9				COIL, Shunt (Part Of Key No. 8)	
10	1955937	3.020	320 5019	ARMATURE (Replaces 320 5388)	1
11				SPRING, Shift Lever Assist (Not Used)	
12	1954842	3.020	320 5021	DRIVE ASSEMBLY (Replaces 320 5389)	1
13	1927849	3.020	320 6087	COLLAR, Drive End Pinion Stop	1
14	1927848	3.020	320 6088	RING, Drive End Pinion Stop	1
15	1927850	3.020	320 6092	COLLAR, Drive End Thrust	1
16	1963937	3.020	320 5390	HEAD, Drive End (Drive Housing)(Incl. all parts coded with a *)	1
17	1114356	3.020	320 5022	SWITCH, Solenoid (Replaces 320 5391)	1
18	1958679	3.020	320 6285	SPRING, Plunger Return	1
19	1953041	3.020	320 4027	PLUNGER	1
20	1932205	3.020	320 6094	LEVER, Shift	1
21	455106	17.412	G455106	PIN, Plunger Attaching To Shift Lever (Not Available)	1
22	1932197	3.020	320 6098	STUD, Shift Lever	1
23	453296	17.820	G453296	#LOCKWASHER, Support Attaching Screw (Not Available)	4

KEY NO.	DELCO-REMY NUMBER	A.M. GROUP	A.M. PART NUMBER	DESCRIPTION		QUAN. REQ.
24	274545	17.820	G274545	LOCKWASHER, Field Lead Attaching Screw To Switch	(Not Available)	1
26	9421424	17.820	G9421424	LOCKWASHER, Shift Lever Stud	(Not Available)	1
27	9421423	17.820	G9421423	LOCKWASHER, Switch Attaching	(Not Available)	2
28	120361	17.412	G120361	#NUT, Support Attaching Screw	(Not Available)	2
29	1926640	17.412	G1926640	NUT, Shift Lever Stud	(Not Available)	1
30	1926648	17.658	G1926648	SCREW, Brush Attaching	(Not Available)	4
31	27438	17.608	G274738	#SCREW, Support Attaching	(Not Available)	4
32	1949653	17.614	G1949653	SCREW, Field Lead Attaching To Switch	(Not Available)	1
34	1913100	3.020	320 6288	SCREW, Pole Shoe		4
35	132255	17.602	G132255	SCREW, Switch Attaching	(Not Available)	2
36	818265	3.020	320 6099	WASHER, Commutator End Brake		1
37	1939970	3.020	320 6286	BOLT, Thru		2
38				BUSHING, Commutator End (Part Of Key No. 1)		1
39	1923907	3.020	311 9548	*BUSHING, Drive End Head Assembly		1
40	1932198	3.005	320 6005	GROMMET (In Field Coil		1
41	1927853	3.020	320 6006	INSULATION, Field Coil		4
42	1926600	3.020	320 6010	#PIN, Support Attaching		2
43	809593	3.005	311 2693	PIN, Drive End Dowel		1
44	1926616	3.020	320 6012	POLE, Shoe		4
45	1951546	3.020	320 6283	BOOT, Plunger (Not Shown)		1

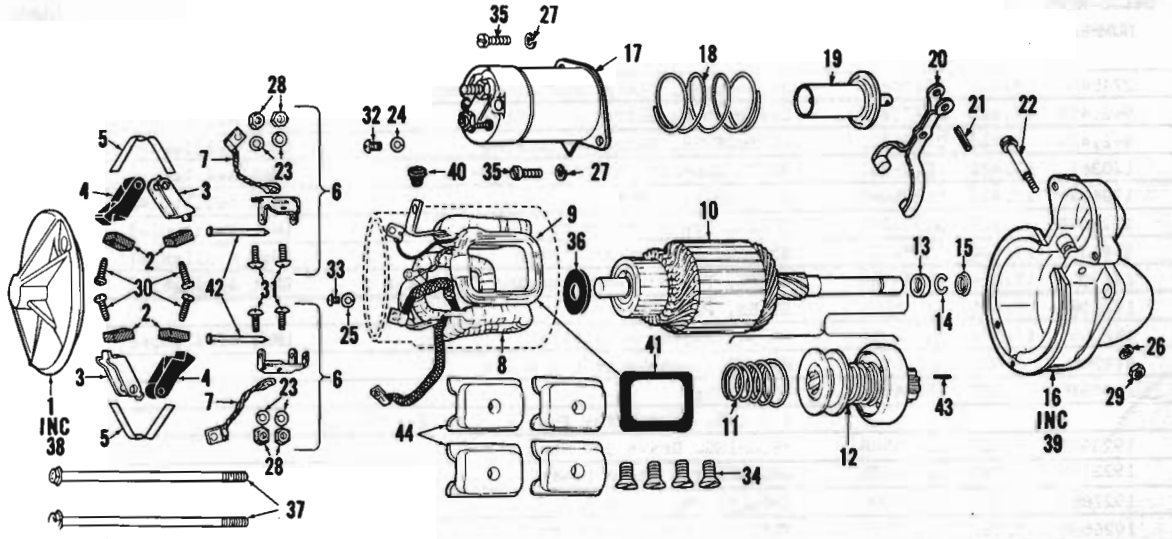

STARTING MOTOR 64-65 10-80 (V8)

A.M. NO. 317 7770 DELCO-REMY NO. 1107348

KEY NO.	DELCO-REMY NUMBER	A.M. GROUP	A.M. PART NUMBER	DESCRIPTION	QUAN. REQ.
1	1928966	3.020	311 9543	END, Commutator	1
2	1906945			BRUSH	4
		3.020	320 2006	BRUSH SET (Incl. 4 Brushes)	1
3	1926617	3.020	320 6082	HOLDER, Brush (Ground)	2
4	1926618	3.020	320 6083	HOLDER, Brush (Insulated)	2
5	1926622	3.020	311 9545	SPRING, Brush	2
6	1928015	3.020	320 6084	SUPPORT, Brush Holder (Package)(Incl. all parts listed below which are coded with a #)	2
7	1926605	3.020	320 6085	#LEAD, Brush Ground	2
8	1964718	3.020	320 5881	COIL, Field (Incl. 4 Coils)	1
9				COIL, Shunt (Part Of Key No. 8)	1
10	1935851	3.020	320 0935	ARMATURE	1
11				SPRING, Shift Lever Assist (Not Used)	1
12	1935853	3.020	320 0938	DRIVE ASSEMBLY	1
13	1927849	3.020	320 6087	COLLAR, Drive End Pionion Stop	1
14	1927848	3.020	320 6088	RING, Drive End Pinion Stop Retainer	1
15	1927850	3.020	320 6092	COLLAR, Drive End Thrust	1
16	1961943	3.020	320 4343	HEAD, Drive End (Drive Housing)(Incl. all parts coded with a *)	1
17	1114356	3.020	320 5022	SWITCH, Solenoid (Replaces 320 5391)	1
18	1958679	3.020	320 6285	SPRING, Plunger Return	1
19	1953041	3.020	320 4021	PLUNGER	1
20	1951567	3.020	320 6281	LEVER, Shift	1
21	455106	17.412	G455106	PIN, Plunger Attaching To Shift Lever (Not Available)	1
22	1932197	3.020	320 6098	STUD, Shift Lever	1
23	453296	17.820	G453296	#LOCKWASHER, Support Attaching Screw (Not Available)	4

GROUP 3

KEY NO.	DELCO-REMY NUMBER	A.M. GROUP	A.M. PART NUMBER	DESCRIPTION	QUAN. REQ.
24	274545	17.820	G274545	Lockwasher, Field Lead Attaching Screw Switch (Not Available)	1
26	9421424	17.820	G9421424	Lockwasher, Shift Lever Stud (Not Available)	1
27	9421423	17.820	G942143	LOCKWASHER, Switch Attaching (Not Available)	2
28	120361	17.412	G12-361	#NUT, Support Attaching Screw (Not Available)	4
29	1926640	17.412	G1926640	NUT, Shift Lever Stud (Not Available)	1
30	1926648	17.658	G1926648	SCREW, Brush Attaching (Not Available)	4
31	274738	17.608	G274738	#SCREW, Support Attaching (Not Available)	4
32	1949653	17.614	G1949653	SCREW, Field Lead Attaching To Switch (Not Available)	1
34	1913960	3.005	320 6096	SCREW, Pole Shoe	4
35	132255	17.602	G132255	SCREW, Switch Attaching (Not Available)	2
36	818265	3.020	320 6099	WASHER, Commutator End Brake	1
37	1939970	3.020	320 6286	BOLT, Thru	2
38				BUSHING, Commutator End (Part Of Key No. 1)	1
39	1923907	3.020	311 9548	*BUSHING, Drive End Head Assembly	1
40	1932198	3.020	320 6005	GROMMET (In Field Frame)	1
41	1927853	3.020	320 6006	INSULATION, Field Coil	4
42	1926600	3.020	320 6010	#PIN, Support Attaching	2
43	809593	3.005	311 2693	PIN, Drive End Dowel	1
44	1926616	3.020	320 6012	POLE, Shoe	4
	1951546	3.020	320 6283	BOOT, Plunger	

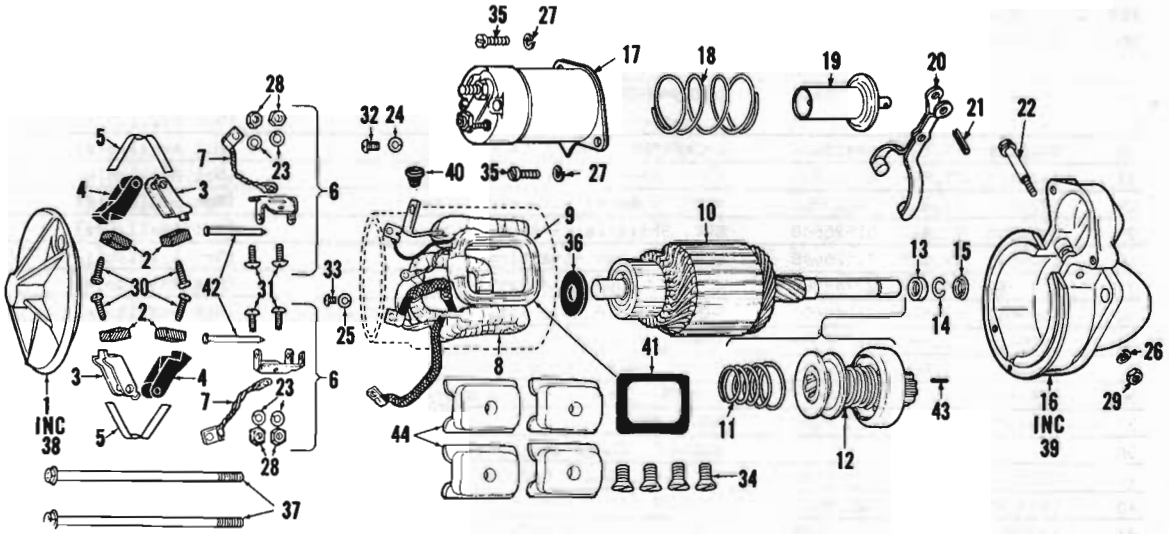

PLATE 5068

STARTING MOTOR 65 10 (OHV-199)

A.M. NO. 317 4483 DELCO-REMY NO. 1107349

KEY NO.	DELCO-REMY NUMBER	A.M. GROUP	A.M. PART NUMBER	DESCRIPTION	QUAN REQ.
1	1928966	3.020	311 9543	END, Commutator	1
2	1906945			BRUSH	4
		3.020	320 2006	BRUSH SET (Incl. 4 Brushes)	1
3	1926617	3.020	320 6082	HOLDER, Brush (Ground)	2
4	1926618	3.020	320 6083	HOLDER, Brush (Insulated)	2
5	1926622	3.020	311 9545	SPRING, Brush	2
6	1928015	3.020	320 6084	SUPPORT, Brush Holder (Package)(Incl. all parts listed below which are coded with a #)	2
7	1926605	3.020	320 6085	#LEAD, Brush Ground	2
8	1933761	3.020	320 0936	COIL, Field (Incl. 4 Coils)	1
9				COIL, Shunt (Part Of Key No. 8)	
10	1955937	3.020	320 5388	ARMATURE	1
11				SPRING, Shift Lever Assist (Not Used)	1
12	1954842	3.020	320 5389	DRIVE ASSEMBLY	1
13	1927849	3.020	320 6087	COLLAR, Drive End Pinion Stop	1
14	1927848	3.020	320 6088	RING, Drive End Pinion Stop Retainer	1
15	1927850	3.020	320 6092	COLLAR, Drive End Thrust	1
16	1963937	3.020	320 5390	HEAD, Drive End (Drive Housing)	1
17	1114356	3.020	320 5391	SWITCH, Solenoid	1
18	1958679	3.020	320 6285	SPRING, Plunger Return	1
19	1953041	3.020	320 4021	PLUNGER	1
20	1932205	3.020	320 6094	LEVER, Shift	1
21	445106	17.412	G455106	PIN, Plunger Attaching To Shift Lever (Not Available)	1
22	1932197	3.020	320 6098	STUD, Shift Lever	1
23	453296	17.820	G453296	#LOCKWASHER, Support Attaching Screw (Not Available)	4

GROUP 3

KEY NO.	DELCO-REMY NUMBER	A.M. GROUP	A.M. PART NUMBER	DESCRIPTION		QUAN. REQ.
24	274545	17.820	G274545	LOCKWASHER, Field Lead Attaching Screw To Switch	(Not Available)	1
26	9421424	17.820	G9421424	LOCKWASHER, Shift Lever Stud	(Not Available)	1
27	9421423	17.820	G9421423	LOCKWASHER, Switch Attaching	(Not Available)	2
28	120361	17.412	G120361	#NUT, Support Attaching Screw	(Not Available)	4
29	1926640	17.412	G1926640	NUT, Shift Lever Stud	(Not Available)	1
30	1926648	17.658	G1926648	SCREW, Brush Attaching	(Not Available)	4
31	274738	17.608	G274738	#SCREW, Support Attaching	(Not Available)	4
32	1949653	17.614	G1949653	SCREW, Field Lead Attaching To Switch	(Not Available)	1
34	1926616	3.020	320 6012	SCREW, Pole Shoe		4
35	132255	17.602	G132255	SCREW, Switch Attaching	(Not Available)	2
36	818265	3.020	320 6099	WASHER, Commutator End Brake		1
37	1939970	3.020	320 6286	BOLT, Thru		2
38				BUSHING, Commutator End (Part Of Key No. 1)		1
39	192307	3.020	311 9548	*BUSHING, Drive End Head Assembly		1
40	1933765	3.020	320 6005	GROMMET (In Field Frame)		1
41	1927853	3.020	320 6006	INSULATION, Field Coil		4
42	1926600	3.020	320 6010	#PIN, Support Attaching		2
43	809593	3.005	311 2693	PIN, Drive End Dowel		1
44	1926616	3.020	320 6012	POLE, Shoe		4
45	1951546	3.020	320 6283	BOOT, Plunger (Not Shown)		1

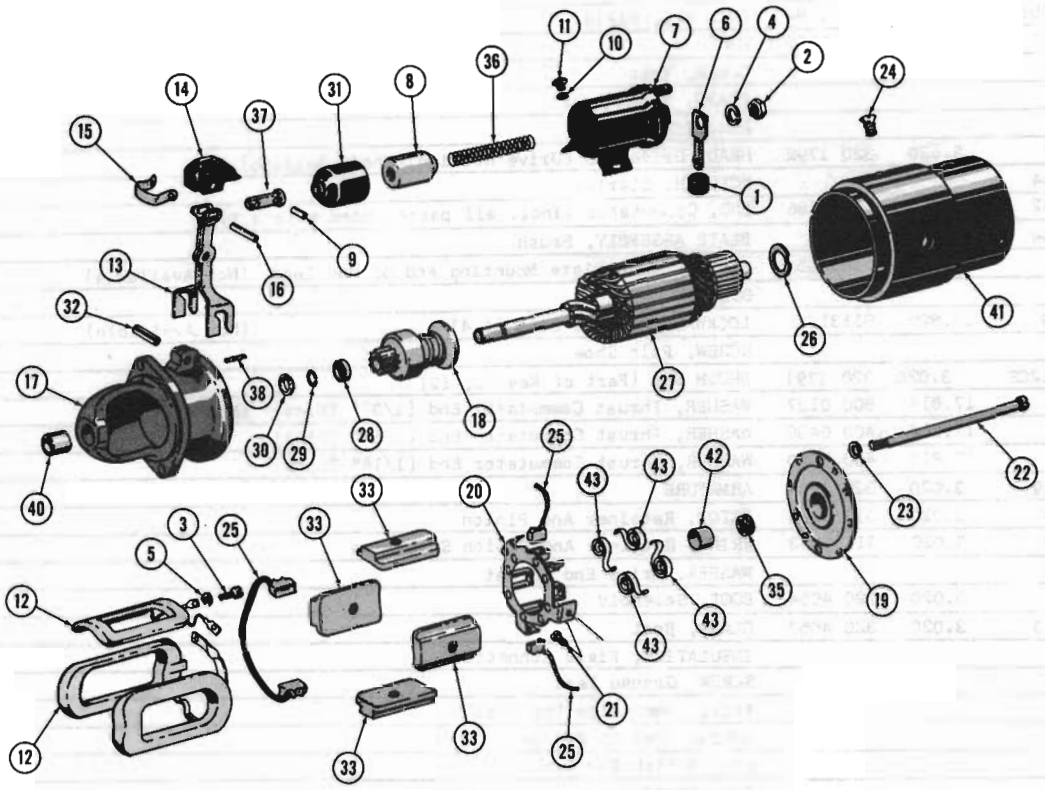

STARTING MOTOR 60-61 20

A.M. NO. 315 7217 AUTO-LITE NO. MEC-6001

KEY NO.	AUTO-LITE NUMBER	A.M. GROUP	A.M. PART NUMBER	DESCRIPTION		QUAN. REQ.
		3.020	320 1790	CLUTCH, Starter (Includes all parts listed below which are coded with a #)		1
1	MEC-27	3.020	320 5985	GROMMET, Connector		1
2	8X-165	17.406	G219432	NUT, Terminal Stud	(Not Available)	1
3	8X-304	17.592	G156750	SCREW, Switch Connector Lead (8-32 X 5/16)	(Not Available)	1
4	12X-201	17.820	G120382	LOCKWASHER, Terminal Stud (3/8)	(Not Available)	1
5	12X-195	17.820	G131182	LOCKWASHER, Switch Connector Lead Screw (#8)	(Not Available)	1
6	MEC-26			CONNECTOR, Switch		1
7	SAJ-4001	3.020	320 2429	SWITCH, Starting Motor Solenoid (Less Plunger)	(Replaces 320 1788)	1
8	SAJ-1021D	3.020	320 4020	PLUNGER, Starting Motor Solenoid		1
9	XA-904			PIN, Link		1
10	12X-199	17.820	G113114	LOCKWASHER, Switch Mounting Screw (1/4)	(Not Available)	2
11	8X-467	17.038	G179789	SCREW, Switch Mounting (1/4-20 x 3/8)	(Not Available)	2

GROUP 3

KEY NO.	AUTO-LITE NUMBER	A.M. GROUP	A.M. PART NUMBER	DESCRIPTION	QUAN. REQ.
12	MEC-1005S	3.020	320 1784	COIL SET, Field	1
13	MEC-1058	3.020	320 5997	YOKE	1
14	MEC-59			COVER, Yoke	1
15	MEC-60			CLAMP, Yoke Cover	1
16	XA-905			PIN, Yoke	1
17	PS-1357	3.020	320 1792	HEAD, Drive End (Drive Housing)(Incl. Bearing)	1
18	MEC-3044			#CLUTCH, Starter	1
19	MDT-1002	3.020	320 1786	END, Commutator (Incl. all parts coded with a *)	1
20	MDL-1064			PLATE ASSEMBLY, Brush	1
21	X-3434	17.572	G193305	RIVET, Brush Plate Mounting And Ground Lead (Not Available)	3
22	MEC-20			BOLT, Thru	2
23	12X-199	17.820	G113114	LOCKWASHER, Thru Bolt (1/4) (Not Available)	2
24	GK-38			SCREW, Pole Shoe	4
25	MDL-2012CS	3.020	320 1791	BRUSH SET (Part of Key No, 12)	1
26	MJ-54	17.814	800 0137	WASHER, Thrust Commutator End (1/32" Thick) (Not Available)	AR
26	MJ-54B	17.814	400 0480	WASHER, Thrust Commutator End (3/64" Thick)	AR
26	MJ-54L	17.814	400 0480	WASHER, Thrust Commutator End (1/16" Thick)	1
27	MDL-2049	3.020	320 1787	ARMATURE	1
28	MCL-129	3.020	311 9054	#STOP, Retainer And Pinion	1
29	MCL-127	3.020	311 9053	#RING, Retainer And Pinion Stop Snap	1
30	MCL-132			WASHER, Drive End Thrust	1
31	SAJ-33	3.020	320 4054	BOOT, Solenoid	1
32	SSX-1023	3.020	320 4053	CLAMP, Boot	1
33	MDL-66			INSULATION, Field Connection	1
34	8X-3342			SCREW, Ground Lead	1
35	MAD-10			FELT, Commutator End Head	1
36	SAJ-27			SPRING, Switch Plunger	1
37	XA-907			PIN, Switch Plunger	1
38	MN-21			PIN, Dowel	1
39	8X-3390			SCREW, Bearing Plate Mounting	1
40	MDD-34	3.020	320 2485	BEARING, Drive End Head	1
41				Not Serviced	
42				BEARING, (Part of Key No. 19)(Not Serviced)	
43				SPRING, (Part of Key No. 20)(Not Serviced)	

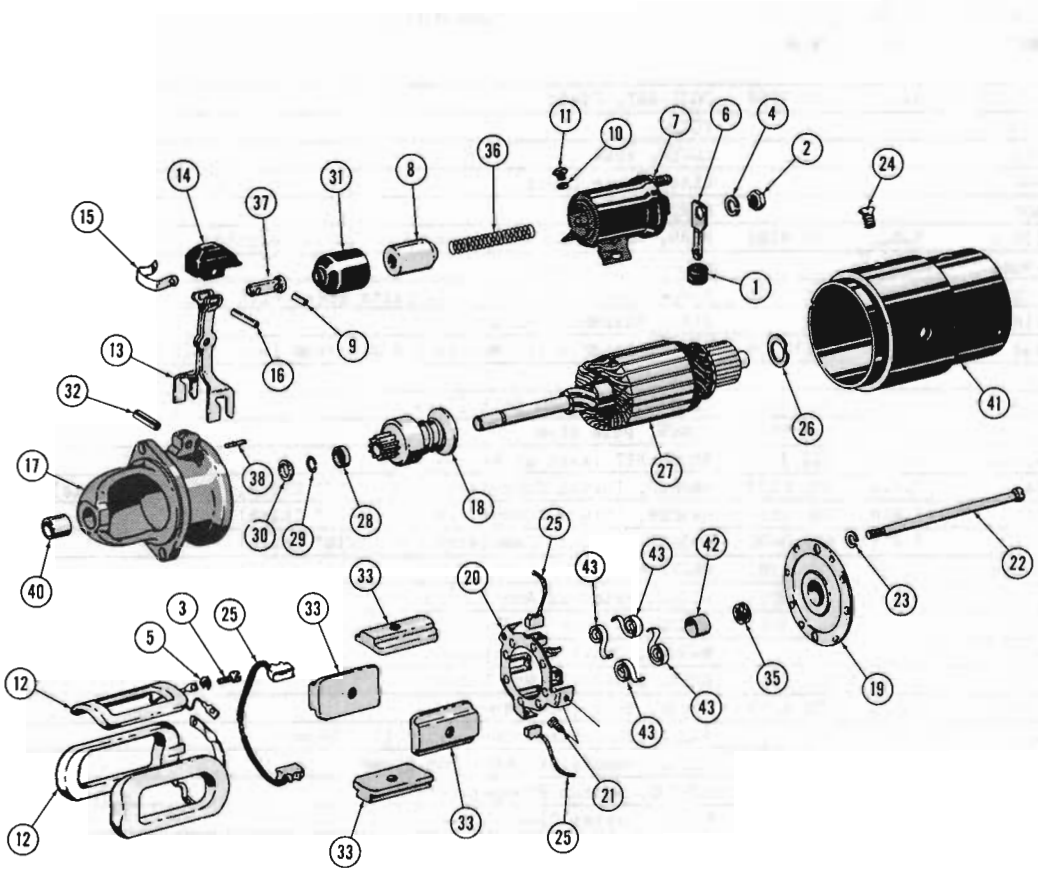

STARTING MOTOR 61 20

A.M. NO. 316 2210 AUTO-LITE NO. MEC-6003

KEY NO.	AUTO-LITE NUMBER	A.M. GROUP	A.M. PART NUMBER	DESCRIPTION		QUAN. REQ.
		3.020	320 1790	CLUTCH, Starter (Includes all parts listed below which are coded with a #)		1
1	MEC-27			GROMMET, Connector		1
2	8X-165	17.406	G219432	NUT, Terminal Stud	(Not Available)	1
3	8X-304	17.592	G156750	SCREW, Switch Connector Lead (8-32 x 5/16)	(Not Available)	1
4	12X-201	17.820	G120382	LOCKWASHER, Terminal Stud (3/8)	(Not Available)	1
5	12X-195	17.820	G131182	LOCKWASHER, Switch Connector Lead Screw (#8)	(Not Available)	1
6	MEC-82			CONNECTOR, Switch		1
7	SAJ-4004	3.020	320 2863	SWITCH, Starting Motor Solenoid (Less Plunger)		1
8	SAJ-1021D	3.020	320 4020	PLUNGER, Starting Motor Solenoid		1
9	XA-904			PIN, Link		1
10	12X-199	17.820	G113114	LOCKWASHER, Switch Mounting Screw (1/4)	(Not Available)	2
11	8X-467	17.038	G179789	SCREW, Switch Mounting (1/4-20 x 3/8)	(Not Available)	2

GROUP 3

KEY NO.	AUTO-LITE NUMBER	A.M. GROUP	A.M. PART NUMBER	DESCRIPTION	QUAN. REQ.
12	MEC-1005S	3.020	320 1784	COIL SET, Field	1
13	MEC-1058			YOKE	1
14	MEC-59			COVER, Yoke	1
15	MEC-60			CLAMP, Yoke Cover	1
16	XA-905			PIN, Yoke	1
17	PS-1357A	3.020	320 4108	HEAD, Drive End (Drive Housing)(Incl. Bearing)	1
18	MEC-3044			#CLUTCH, Starter	1
19	MDT-1002	3.020	320 1786	END, Commutator (Incl. all parts coded with a *)	1
20	MDL-1064			PLATE ASSEMBLY, Brush	1
21	X-3434	17.572	G193305	RIVET, Brush Plate Mounting And Ground Lead (Not Available)	3
22	MEC-20			BOLT, Thru	2
23	12X-199	17.820	G113114	LOCKWASHER, Thru Bolt (1/4) (Not Available)	2
24	GK-38	3.005	320 5992	SCREW, Pole Shoe	4
25	MDL-2012CS	3.020	320 1791	BRUSH SET (Part of Key No. 12)	1
26	MU-54	17.814	800 0137	WASHER, Thrust Commutator End (1/32" Thick) (Not Available)	AR
26	MU-54B	17.814	400 1091	WASHER, Thrust Commutator End (3/64" Thick)	AR
26	MU-54L	17.814	400 0480	WASHER, Thrust Commutator End (1/16" Thick)	1
27	MDL-2049	3.020	320 1781	ARMATURE	1
28	MCL-129	3.020	311 9054	#STOP, Retainer And Pinion	1
29	MCL-127	3.020	311 9053	#RING, Retainer And Pinion Stop Snap	1
30	MCL-132			WASHER, Drive End Thrust	1
31	SAJ-33	3.020	320 4054	BOOT, Solenoid (Not Shown)	1
32	SSX-1023	3.020	320 4053	CLAMP, Boot (Not Shown)	1
33	MDL-66			INSULATION, Field Connection (Not Shown)	1
35	MAD-10			FELT, Commutator Head (Not Shown)	1
36	SAJ-27			SPRING, Switch Plunger (Not Shown)	1
38	MN-21			*PIN, Starter Clutch Dowel (Not Shown)	1
40	MDD-34	3.020	320 2485	BEARING, Drive End Head	1
41				Not Serviced	
42				BEARING, (Part of Key No. 19)(Not Serviced)	
43				SPRING, (Part of Key No. 20)(Not Serviced)	

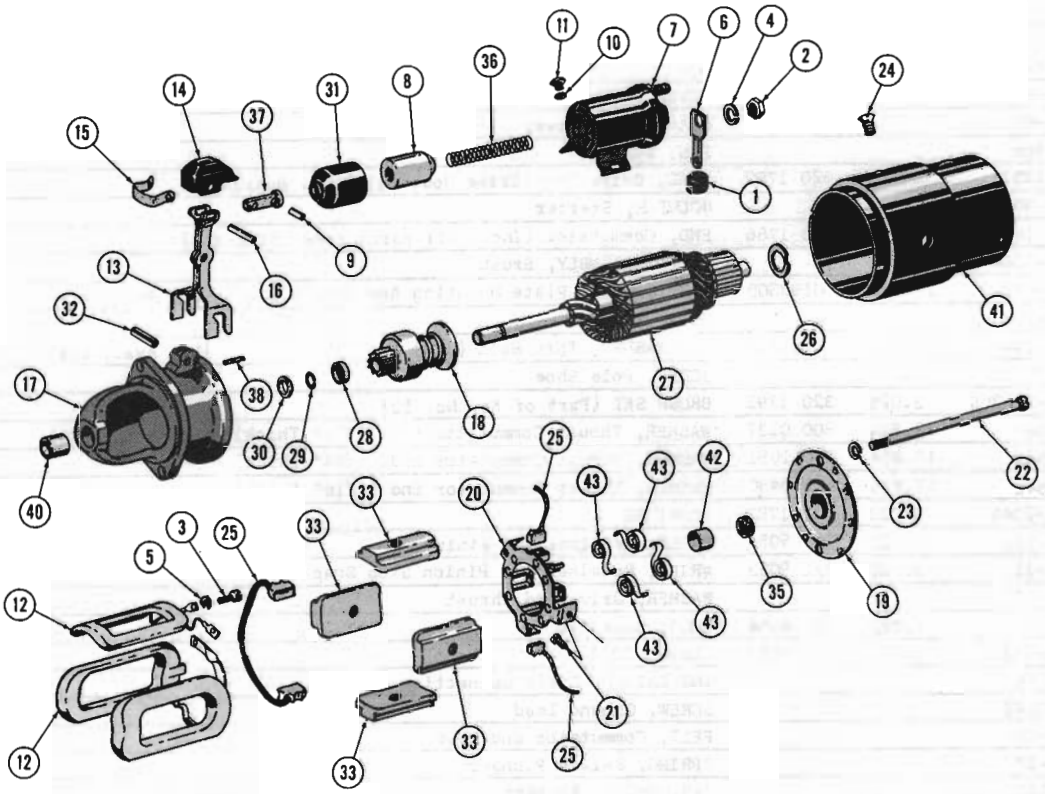

STARTING MOTOR 60-61 80

A.M. NO. 315 7222 AUTO-LITE NO. MDY-6002

KEY NO.	AUTO-LITE NUMBER	A.M. GROUP	A.M. PART NUMBER	DESCRIPTION		QUAN. REQ.
		3.020	320 1790	CLUTCH, Starter (Includes all parts listed below which are coded with a #)		1
1	MEC-27			GROMMET, Connector		1
2	8X-165	17.406	G219432	NUT, Terminal Stud	(Not Available)	1
3	8X-304	17.592	G156750	SCREW, Switch Connector Lead (8-32 x 5/16)	(Not Available)	1
4	12X-201	17.820	G120382	LOCKWASHER, Terminal Stud (3/8)	(Not Available)	1
5	12X-195	17.820	G131182	LOCKWASHER, Switch Connector Lead Screw (#8)	(Not Available)	1
6	MEC-26			CONNECTOR, Switch		1
7	SAJ-4001	3.020	320 2429	SWITCH, Starting Motor Solenoid (Less Plunger)	(Replaces 320 1788)	1
8	SAJ-1021D	3.020	320 4020	PLUNGER, Starting Motor Solenoid		1
9	XA-904			PIN, Link		1
10	12X-199	17.820	G113114	LOCKWASHER, Switch Mounting Screw (1/4)	(Not Available)	2
11	8X-467	17.038	G179789	SCREW, Switch Mounting (1/4-20 x 3/8)	(Not Available)	2

GROUP 3

KEY NO.	AUTO-LITE NUMBER	A.M. GROUP	A.M. PART NUMBER	DESCRIPTION	QUAN. REQ.
12	MDY-1005AS	3.020	320 1785	COIL SET, Field	1
13	MEC-1058	3.020	320 5997	YOKE	1
14	MEC-59			COVER, Yoke	1
15	MEC-60			CLAMP, Yoke Cover	1
16	XA-905			PIN, Yoke	1
17	PS-1357	3.020	320 1792	HEAD, Drive End (Drive Housing)(Incl. Bearing)	1
18	MEC-3044			#CLUTCH, Starter	1
19	MDT-1002	3.020	320 1786	END, Commutator (Incl. all parts coded with a *)	1
20	MDL-1064			PLATE ASSEMBLY, Brush	1
21	P90-242	17.572	G193305	RIVET, Brush Plate Mounting And Ground Lead (Not Available)	3
22	MEC-20			BOLT, Thru	2
23	12X-199	17.820	G113114	LOCKWASHER, Thru Bolt (1/4) (Not Available)	2
24	GK-38			SCREW, Pole Shoe	4
25	MDL-2012CS	3.020	320 1791	BRUSH SET (Part of Key No. 12)	1
26	MJ-54	17.814	800 0137	WASHER, Thrust Commutator End (1/32" Thick) (Not Available)	AR
26	MJ-54B	17.814	400 1091	WASHER, Thrust Commutator End (3/64" Thick)	AR
26	MJ-54L	17.814	400 0480	WASHER, Thrust Commutator End (1/16" Thick)	AR
27	MDL-2049	3.020	320 1787	ARMATURE	1
28	MCL-129	3.020	311 9054	#STOP, Retainer And Pinion	1
29	MCL-127	3.020	311 9053	#RING, Retainer And Pinion Stop Snap	1
30	MCL-132			WASHER, Drive End Thrust	1
31	SAJ-33	3.020	320 4054	BOOT, Solenoid	1
32	SSX-1023	3.020	320 4053	CLAMP, Boot	1
33	MDL-66			INSULATION, Field Connection	1
34	8X-3342			SCREW, Ground Lead	1
35	MAD-10			FELT, Commutator End Head	1
36	SAJ-27			SPRING, Switch Plunger	1
37	XA-907			PIN, Switch Plunger	1
38	MN-21			*PIN, Dowel	1
39	8X-3390			SCREW, Bearing Plate Mounting	1
40	MDD-34	3.020	320 2485	BEARING, Drive End Head	1
41				Not Serviced	
42				BEARING, (Part of Key No. 19)(Not Serviced)	
43				SPRING, (Part of Key No. 20)(Not Serviced)	

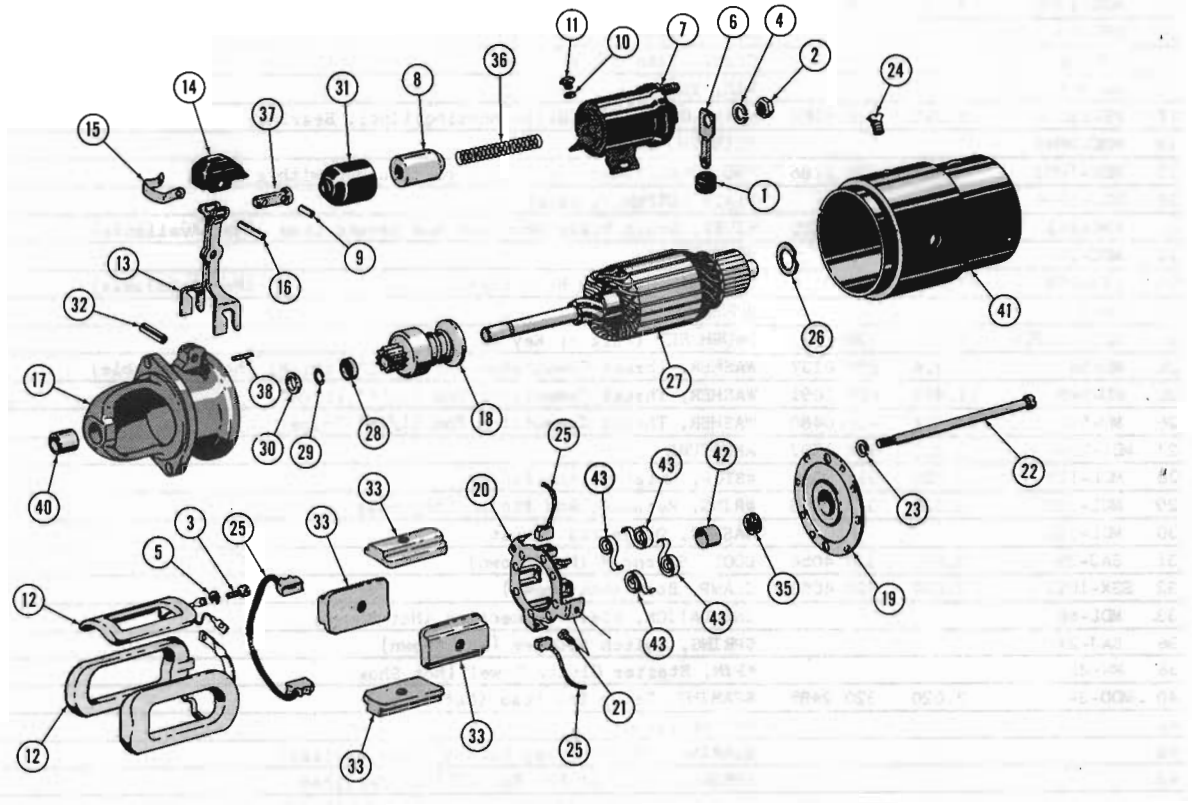

STARTING MOTOR 61-62 80

A.M. No. 316 2209 AUTO-LITE No. MDY-6009

KEY NO.	AUTO-LITE NUMBER	A.M. GROUP	A.M. PART NUMBER	DESCRIPTION		QUAN. REQ.
		3.020	320 1790	CLUTCH, Starter (Includes all parts listed below which are coded with a #)		1
1	MEC-27			GROMMET, Connector		1
2	8X-165	17.406	G219432	NUT, Terminal Stud	(Not Available)	1
3	8X-304	17.592	G156750	SCREW, Switch Connector Lead (8-32 x 5/16)	(Not Available)	1
4	12X-201	17.820	G120380	LOCKWASHER, Terminal Stud (3/8)	(Not Available)	1
5	12X-195	17.820	G131182	LOCKWASHER, Switch Connector Lead Screw (#8)	(Not Available)	1
6	MEC-82			CONNECTOR, Switch		1
7	SAJ-4004	3.020	320 2863	SWITCH, Starting Motor Solenoid (Less Plunger)		1
8	SAJ-1021D	3.020	320 4020	PLUNGER, Starting Motor Solenoid		1
9	XA-904			PIN, Link		1
10	12X-199	17.820	G113114	LOCKWASHER, Switch Mounting Screw (1/4)	(Not Available)	2
11	8X-467	17.038	G179789	SCREW, Switch Mounting (1/4-20 x 3/8)	(Not Available)	2

GROUP 3

KEY NO.	AUTO-LITE NUMBER	A.M. GROUP	A.M. Part NUMBER	DESCRIPTION	QUAN. REQ.
12	MDY-1005AS	3.020	320 1785	COIL, Field	1
13	MEC-1058	3.020	320 5997	YOKE	1
14	MEC-59			COVER, Yoke	1
15	MEC-60			CLAMP, Yoke Cover	1
16	XA-905			PIN, Yoke	1
17	PS-1357A	3.020	320 4108	HEAD, Drive End (Drive Housing)(Incl. Bearing)	1
18	MEC-3044			#CLUTCH, Starter	1
19	MDT-1002	3.020	320 1786	END, Commutator (Incl. all parts coded with a *)	1
20	MDL-1064			PLATE ASSEMBLY, Brush	1
21	P90-242	17.572	G193305	RIVET, Brush Plate Mounting And Ground Lead (Not Available)	3
22	MEC-20			BOLT, Thru	2
23	12X-199	17.820	G113114	LOCKWASHER, Thru Bolt (1/4) (Not Available)	2
24	GK-38			SCREW, Pole Shoe	4
25	MDL-2012CS	3.020	320 1791	BRUSH SET (Part of Key No. 12)	1
26	MU-54	17.814	800 0137	WASHER, Thrust Commutator End (1/32'' Thick) (Not Available)	AR
26	MU-54B	17.814	400 1091	WASHER, Thrust Commutator End (3/64" Thick)	AR
26	MU-54L	17.814	400 0480	WASHER, Thrust Commutator End (1/16" Thick)	1
27	MDL-2049	3.020	320 1787	ARMATURE	1
28	MCL-129	3.020	311 9054	#STOP, Retainer And Pinion	1
29	MCL-127	3.020	311 9053	#RING, Retainer And Pinion Stop Snap	1
30	MCL-132			WASHER, Drive End Thrust	1
31	SAJ-33	3.020	320 4054	BOOT, Solenoid (Not Shown)	1
32	SSX-1023	3.020	320 4053	CLAMP, Boot (Not Shown)	1
33	MDL-66			INSULATION, Field Connection (Not Shown)	1
36	SAJ-27			SPRING, Switch Plunger (Not Shown)	1
38	MN-21			*PIN, Starter Clutch Dowel (Not Shown)	1
40	MDD-34	3.020	320 2485	BEARING, Drive End Head (Not Shown)	1
41				Not Serviced	
42				BEARING, (Part of Key No. 19)(Not Serviced)	
43				SPRING, (Part of Key No. 20)(Not Serviced	

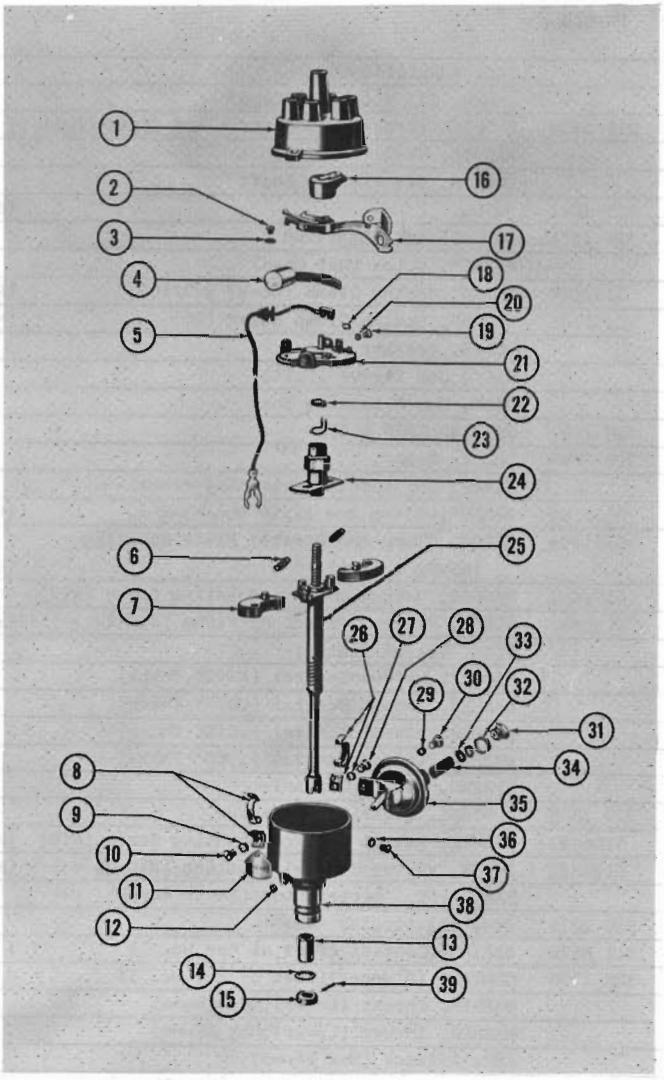

DISTRIBUTOR 60-61 01 (LHE)

A.M. NO. 315 7209

AUTO-LITE NO. IAT-4402-1

KEY NO.	AUTO-LITE NUMBER	A.M. GROUP	A.M. PART NUMBER	DESCRIPTION		QUAN. REQ.
1	IAT-1033C	3.020	320 3937	CAP ASSY., Distributor (Incl. Key No. 40 & 41)	(Replaces 320 1797)	1
2	8X-884	17.602	G131958	SCREW, Breaker Contact Lock (#8-32 x 3/16)	(Not Available)	1
3	SSB-38	17.820	G131182	WASHER, Breaker Contact Lock Screw (#8)	(Not Available)	1
4	IBB-2042SS-1	3.030	320 4585	CONDENSER	(Replaces 320 1800)	1
5	IAT-81C	3.030	320 2010	LEAD, Primary (Low Tension Wire)		1
6	IGB-308DS	3.030	320 1809	SPRING SET, Governor Weight		1
7	IGC-2168L			WEIGHT, Governor		2
8	IGB-1007			CLAMP, Cap (Incl. Spring And Hinge)		1
9	X-1275			WASHER, Clamp And Plate Mounting (Not Used)		1
10	8X-304	17.602	G131958	SCREW, Clamp And Breaker Plate Mounting (#8-32 x 5/16)	(Not Available)	1

GROUP 3

KEY NO.	AUTO-LITE NUMBER	A.M. GROUP	A.M. PART NUMBER	DESCRIPTION		QUAN. REQ.
11	IBT-49			TAG, Identification		1
12	GAR-98A			COVER, Oil Wick (Not Used)		1
13	IG-579A	3.030	311 1952	BUSHING (Bronze)(On Distributor Shaft)(Part of Key No. 38)		2
14	IG-313			WASHER, Thrust (Lower)		1
15	IGB-199			COLLAR, Distributor Shaft		1
16	IAU-1016A	3.035	320 3871	ROTOR	(Replaces 311 9571)	1
17	IBP-2040L	3.031	320 1801	CONTACT SET, Ignition		1
18	IGS-226			WASHER, Nylon (Not Used)		1
19	IGC-175A	17.614	G132184	SCREW, Spring Clamp (#6-32 x 3/16)	(Not Available)	1
20	IGE-15	17.820	G131181	WASHER, Spring Clamp Screw (#6)	(Not Available)	1
21	IAT-2072LS			PLATE, Breaker		1
22	IGH-28			WICK, Cam Sleeve (Felt)		1
23	IGS-17			RING, Cam Retaining Snap		1
24	IAT-1100LB	3.030	320 1807	CAM AND STOP PLATE		1
25	IAT-1054LB	3.030	320 2008	SHAFT, Main		1
26	IGB-1007			CLAMP, Cap (Incl. Spring And Hinge)		1
27	X-1275	17.820	G131182	WASHER, Clamp And Plate Mounting	(Not Available)	1
28	8X-304	17.602	G131958	SCREW, Clamp And Breaker Plate Mounting (#8-32 x 5/16)	(Not Available)	1
29	X-1270	17.820	G106497	WASHER, Vacuum Control Mounting Screw (#10)	(Not Available)	1
30	8X-872	17.614	G132892	SCREW, Vacuum Control Mounting (#10-32 x 1/4)	(Not Available)	1
31	IAT-29			PLUG, Vacuum Control		1
32	IAT-30			GASKET, Vacuum Control (1/32" Thick)		1
33	VC-46			WASHER, Vacuum Control (.032" Thick)		AR
33	VC-46A			WASHER, Vacuum Control (.010" Thick)		AR
33	VC-46B			WASHER, Vacuum Control (.065" Thick)		AR
34	VC-167			SPRING, Vacuum Control		1
35	IAT-2023LL	3.046	320 1808	CONTROL, Distributor Vacuum		1
36	X-1270	17.820	G106497	WASHER, Vacuum Control Mounting Screw (#10)	(Not Available)	1
37	8X-872	17.614	G132892	SCREW, Vacuum Control Mounting (#10-32 x 1/4)	(Not Available)	1
38	IAT-1038A			BASE ASSY., Distributor (Incl. Key No. 13)		1
39	XA-839	3.042	320 2016	PIN, Distributor Gear		1
40	IAO-20	3.032	311 8872	SPRING, Contact (Part of Key No. 1)		1
41	IAT-87	3.032	320 1798	CONTACT (Plunger)(Part of Key No. 1)		1
	IAO-10			WASHER, Thrust (Inner)(Not Shown)		1
	IAO-11			WASHER, Thrust (Lower)(Not Shown)		1
	IAT-1092			ARM, Advance (Not Shown)		1
	8X-1546			SCREW, Condenser Mounting (Not Shown)		1
	12X-195	17.820	G131182	WASHER, Breaker Plate (Not Shown)	(Not Available)	1

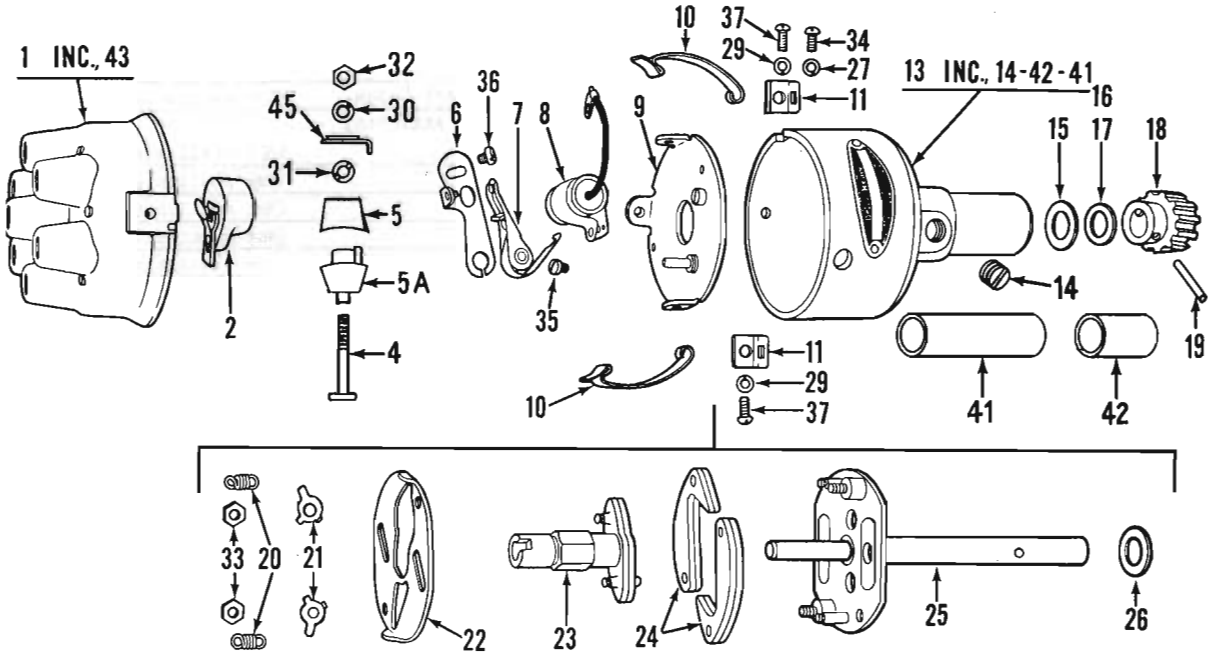

DISTRIBUTOR 60-61 01-10 (OHV)

A.M. NO. 315 7914 DELCO-REMY NO. 1112434

KEY NO.	DELCO-REMY NUMBER	A.M. GROUP	A.M. PART NUMBER	DESCRIPTION	QUAN. REQ.
	1924571	3.031	311 8584	CONTACT SET (Incl. Key No's. 6 and 7)	1
	1944375	3.031	320 2807	CONTACT SET (Pre-Assembled)(Incl. Key No's. 6 and 7)	1
1	1931512	3.032	314 1430	CAP (Incl. Key No. 43)	1
2	1924245	3.035	311 8583	ROTOR	1
4	1924371	3.030	320 6634	STUD, Terminal	1
5	1924370	3.030	320 6635	BUSHING, Terminal Stud Insulating (Outside)	1
5A	1924369	3.030	320 6636	BUSHING, Terminal Stud Insulating (Inside)	1
6	1848038			CONTACT POINT (Incl. Support)	1
7	1917254			BREAKER LEVER, Contact	1
8	1928111	3.033	320 4584	CONDENSER (Incl. Bracket) (Replaces 311 8585)	1
9	1948546	3.030	320 6647	PLATE, Breaker	1
10	1871838	3.030	320 6638	SPRING, Cap	2
11	1847289			SUPPORT, Cap Spring	2
13	1948547	3.030	320 1920	HOUSING (Incl. Key No's. 14, 41, 42)	1
14	125947	3.030	320 6640	PIPE PLUG	1
15	811912	3.030	320 6659	WASHER, Space (Under Weight Plate)	1
16	810074	3.030	320 6642	WASHER, Shim (.005 Thick)	AR
17	810078	3.030	320 6643	WASHER, Shim (.010 Thick)	AR
18	1948549	3.042	320 1924	GEAR	1
19	1857502	3.042	311 8591	PIN, Gear Attaching	1
20	1900232	3.030	320 1923	SPRING, Weight	2
21	1885558	3.030	311 2732	PLATE, Weight Hold Down Plate Attaching Nut Lock	2
22	1885557	3.030	311 2731	PLATE, Weight Hold Down	1
23	1948544	3.030	320 1922	CAM, Advance And Breaker	1
24	1881371	3.030	320 6644	WEIGHT	2

KEY NO.	DELCO-REMY NUMBER	A.M. GROUP	A.M. PART NUMBER	DESCRIPTION		QUAN. REQ.
25	1948542	3.030	320 1921	SHAFT, Main (Incl. Weight Plate)		1
26	811912	3.030	320 6659	WASHER, Space (Under Coupling)		1
27	121841	17.820	G121841	LOCKWASHER, Breaker Plate Support Screw	(Not Available)	1
29	121841	17.820	G121841	LOCKWASHER, Cap Spring Support Attaching Screw	(Not Available)	2
30	1904376	17.820	G1904376	LOCKWASHER, Terminal Stud	(Not Available)	1
31	1924372	17.408	G1924372	NUT, Terminal Stud (Slotted)	(Not Available)	1
32	120622	17.412	G120622	NUT, Terminal Stud (Hexagon)	(Not Available)	1
33	1923540	17.412	G1923540	NUT, Weight Hold Down Plate Attaching	(Not Available)	2
34	121749	17.614	G121749	SCREW, Breaker Plate Support	(Not Available)	1
35	131949	17.614	G131949	SCREW, Condenser Attaching	(Not Available)	1
36	816784	3.030	320 6645	SCREW, Contact Adjusting		1
37	121832	17.614	G121832	SCREW, Cap Spring Support Attaching	(Not Available)	2
41	1957530	3.030	311 4705	BUSHING, Housing (Upper)		1
42	1957529	3.030	311 2716	BUSHING, Housing (Lower)		1
43	1938193			BUTTON, Cap (Carbon)(Part of Key No. 1)		1
45	1914144	3.030	320 6646	CLIP, Terminal Stud Lock		1

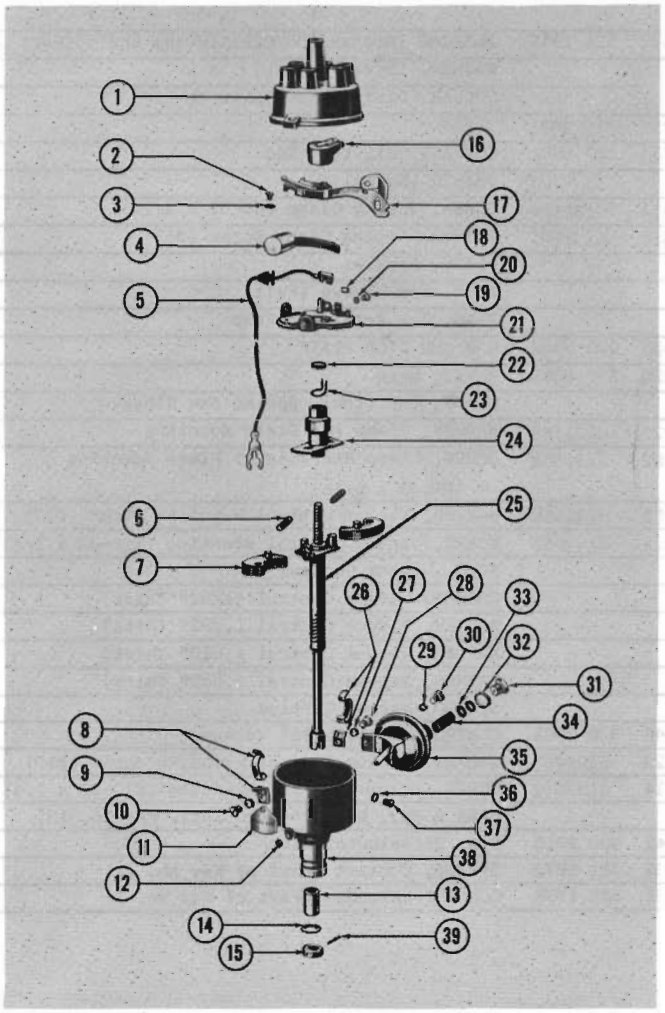

DISTRIBUTOR 62 01 (LHE)

A.M. No. 316 4149 AUTO-LITE No. IAT-4407

KEY NO.	AUTO-LITE NUMBER	A.M. GROUP	A.M. PART NUMBER	DESCRIPTION		QUAN. REQ.
1	IAT-1033C	3.032	320 3937	CAP ASSY., Distributor (Incl. Key # 40 & 41)	(Replaces 320 1797)	1
2	8X-884	17.602	G131958	SCREW, Breaker Contact Lock (#8-32 x 3/16)	(Not Available)	1
3	SSB-38	17.602	G131958	WASHER, Breaker Contact Lock Screw (#8)	(Not Available)	1
4	IBB-2042SS-1	3.033	320 4585	CONDENSER	(Replaces 320 1800)	1
5	IAT-81C	3.030	320 2010	LEAD, Primary (Low Tension Wire)		1
6	IGB-308DS	3.030	320 1809	SPRING SET, Governor Weight		1
7	IGC-2168L			WEIGHT, Governor		2
8	IGB-1007			CLAMP, Cap (Incl. Spring And Hinge)		1
9	X-1275	17.820	G131182	WASHER, Clamp And Plate Mounting	(Not Available)	1
10	8X-304	17.602	G131958	SCREW, Clamp And Breaker Plate Mounting (#8-32 x 5/16)	(Not Available)	1
11	IBT-49			TAG, Identification		1
12	GAR-98A			COVER, Oil Wick		1

GROUP 3

KEY NO.	AUTO-LITE NUMBER	A.M. GROUP	A.M. PART NUMBER	DESCRIPTION		QUAN. REQ.
13	IG-579A	3.030	311 1952	BUSHING (Bronze)(On Distributor Shaft)(Part of Key No. 38)		2
14	IG-313			WASHER, Thrust (Lower)		1
15	IGB-199			COLLAR, Distributor Shaft		1
16	IAU-1016A	3.035	320 3871	ROTOR	(Replaces 311 9571)	1
17	IBP-2040L	3.031	320 1801	CONTACT SET, Ignition		1
18	IGS-226			WASHER (Nylon)		1
19	IGC-175A	17.614	G132684	SCREW, Spring Clamp (#6-32 x 3/16)	(Not Available)	1
20	IGE-15	17.820	G131181	WASHER, Spring Clamp Screw (#6)	(Not Available)	1
21	IAT-2072LS			PLATE, Breaker		1
22	IGH-28			WICK, Cam Sleeve (Felt)		1
23	IG-680			RING, Cam Retaining Snap		1
24	IGS-1100LAN	3.030	320 3532	CAM AND STOP PLATE		1
25	IAT-1054LB	3.030	320 2008	SHAFT, Main		1
26	IGB-1007			CLAMP, Cap (Incl. Spring And Hinge)		1
27	X-1275	17.820	G131182	WASHER, Clamp And Plate Mounting	(Not Available)	1
28	8X-304	17.602	G131958	SCREW, Clamp And Breaker Plate Mounting (#8-32 x 5/16)	(Not Available)	1
29	X-1270	17.602	G131958	WASHER, Vacuum Control Mounting Screw (#10)	(Not Available)	1
30	8X-872	17.614	G132892	SCREW, Vacuum Control Mounting (#10-32 x 1/4)	(Not Available)	1
31	IAT-29			PLUG, Vacuum Control		1
32	IAT-30			GASKET, Vacuum Control (1/32" Thick)		1
33	VC-46			WASHER, Vacuum Control (.032" Thick)		AR
33	VC-46A			WASHER, Vacuum Control (.010" Thick)		AR
33	VC-46B			WASHER, Vacuum Control (.065" Thick)		AR
34	VC-167			SPRING, Vacuum Control		1
35	IAT-2023LL	3.046	320 1808	CONTROL, Distributor Vacuum		1
36	X-1270	17.820	G106497	WASHER, Vacuum Control Mounting Screw (#10)	(Not Available)	1
37	8X-872	17.614	G132892	SCREW, Vacuum Control Mounting (#10-32 x 1/4)	(Not Available)	1
38	IAT-1038A			BASE ASSY., Distributor (Incl. Key No. 13)		1
39	XA-889	3.042	320 2016	PIN, Distributor Gear		1
40	IAO-20	3.032	311 8872	SPRING, Contact (Part of Key No. 1)		1
41	IAT-87	3.032	320 1798	CONTACT (Plunger)(Part of Key No. 1)		1

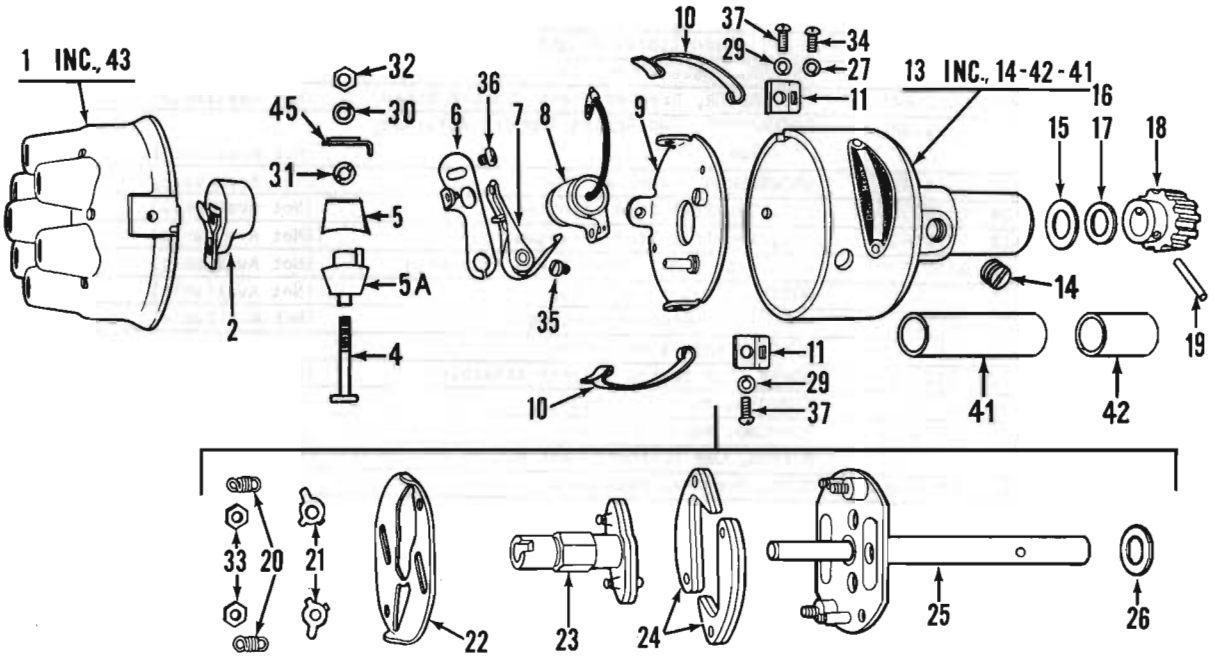

DISTRIBUTOR 62 01-10 (OHV)

A.M. No. 316 4204 DELCO-REMY No. 1112435

KEY No.	DELCO-REMY Number	A.M. Group	A.M. PART Number	DESCRIPTION	QUAN. REQ.
	1924571	3.031	311 8584	CONTACT SET (Incl. Key No's. 6 and 7)	1
	1944375	3.031	320 2807	CONTACT SET (Pre-Assembled)(Incl. Key No's. 6 and 7)	1
1	1931512	3.032	314 1430	CAP (Incl. Key No. 43)	1
2	1924245	3.035	311 8583	ROTOR	1
4	1924371	3.030	320 6634	STUD, Terminal	1
5	1924370	3.030	320 6635	BUSHING, Terminal Stud Insulating (Outside)	1
5A	1924369	3.030	320 6636	BUSHING, Terminal Stud Insulating (Inside)	1
6	1848038			CONTACT POINT (Incl. Support)	1
7	1917254			BREAKER LEVER, Contact	1
8	1928111	3.033	320 4584	CONDENSER (Incl. Bracket) (Replaces 311 8585)	1
9	1957532	3.030	320 6647	PLATE, Breaker	1
10	1871838	3.030	320 6638	SPRING, Cap	2
11	1847289			SUPPORT, Cap Spring	2
13	1957527	3.030	320 3411	HOUSING (Incl. Key No's. 14, 41, 42)	1
14	125947	3.030	320 6640	PIPE PLUG	1
15	811912	3.030	320 6641	WASHER, Space (Under Weight Plate)	1
16	810074	3.030	320 6642	WASHER, Shim (.005 Thick)	AR
17	810078	3.030	320 6643	WASHER, Shim (.010 Thick)	AR
18	1957536	3.042	320 3415	GEAR	1
19	1952265	3.042	320 3414	PIN, Gear Attaching	1
20	1957483	3.030	320 6648	SPRING, Weight (Use 320 4210)	2
21	1885558	3.030	311 2732	PLATE, Weight Hold Down Plate Attaching Nut Lock	2
22	1885557	3.030	311 2731	PLATE, Weight Hold Down	1
23	1948544	3.030	320 1922	CAM, Advance And Breaker	1
24	1881371	3.030	320 6644	WEIGHT	2

KEY NO.	DELCO-REMY NUMBER	A.M. GROUP	A.M. PART NUMBER	DESCRIPTION		QUAN. REQ.
25	1957534	3.030	320 3412	SHAFT, Main (Incl. Weight Plate)		1
26	811912	3.030	320 6659	WASHER, Space (Under Coupling)		1
27	121841	17.820	G121841	LOCKWASHER, Breaker Plate Support Screw	(Not Available)	1
29	121841	17.820	G121841	LOCKWASHER, Cap Spring Support Attaching Screw	(Not Available)	1
30	1904376	17.820	G1904376	LOCKWASHER, Terminal Stud	(Not Available)	1
31	1924372	17.408	G1924372	NUT, Terminal Stud (Slotted)	(Not Available)	1
32	120622	17.412	G120622	NUT, Terminal Stud (Hexagon)	(Not Available)	1
33	1923540	17.412	G1923540	NUT, Weight Hold Down Plate Attaching	(Not Available)	2
34	121749	17.614	G121749	SCREW, Breaker Plate Support	(Not Available)	1
35	131949	17.614	G131949	SCREW, Condenser Attaching	(Not Available)	1
36	816784	3.030	320 6645	SCREW, Contact Adjusting		1
37	121832	17.614	G121832	SCREW, Cap Spring Support Attaching	(Not Available)	2
41	1957530	3.030	320 3411	BUSHING, Housing (Upper)	(Replaces 320 3523)	1
42	1957529	3.030	320 3411	BUSHING, Housing (Lower)	(Replaces 320 3524)	1
43	1938193			BUTTON, Cap (Carbon)(Part of Key No. 1)		1
45	1914144	3.030	320 6646	CLIP, Terminal Stud Lock		1

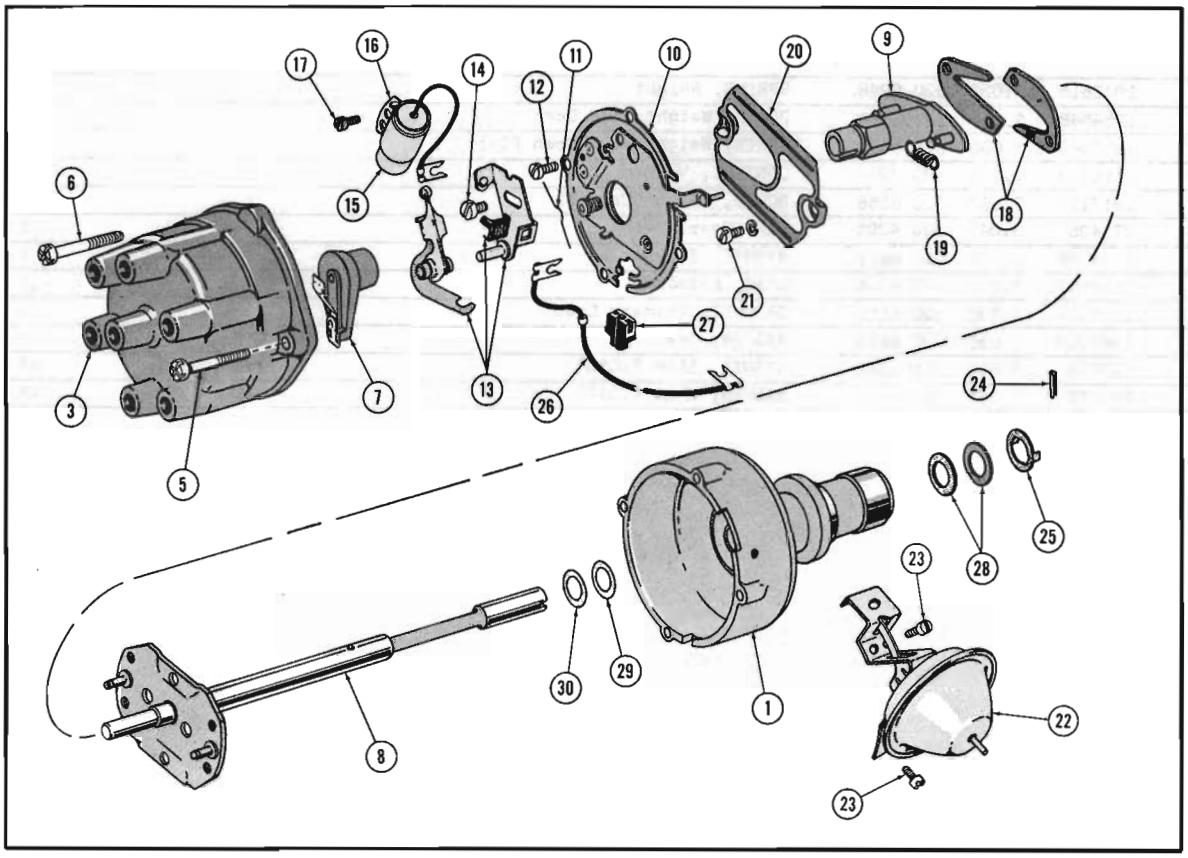

DISTRIBUTOR 63 Thru 65 01 (LHE)

A.M. NO. 316 7665 DELCO-REMY NO. 1110299

KEY NO.	DELCO-REMY NUMBER	A.M. GROUP	A.M. PART NUMBER	DESCRIPTION		QUAN. REQ.
1	1961361	3.030	320 6649	HOUSING		1
2	1957763	3.030	320 6650	SEAL, Lubrication (Not Shown)		1
3	1954569	3.032	320 4197	CAP, Distributor		1
4	1938193			CARBON BUTTON, Cap (Part Of Cap)		1
5	1954571	17.592	G187871	SCREW, Cap Attaching (#8-32)(Part Of Cap)	(Not Available)	1
6	1957573	17.592	G157070	SCREW, Cap Attaching (#10-32)(Part Of Cap)	(Not Available)	1
7	1954566	3.035	320 4198	ROTOR		1
8	1961364	3.030	320 4199	SHAFT, Distributor Main		1
9	1961365	3.030	320 4200	CAM, Advance And Breaker		1
10	1958481	3.030	320 4201	PLATE, Breaker		1
11	1956213	3.030	320 6651	SPRING, Breaker Plate Retaining (Part Of Plate)	(Use 320 5360)	1
12	453461	17.596	G453461	SCREW, Breaker Plate Support	(Not Available)	2
13	1954557	3.031	320 4202	CONTACT SET		1
14	1914916	17.596	G1914916	SCREW, Contact Adjusting	(Not Available)	1
15	1956007	3.033	320 4584	CONDENSER (Incl. Bracket)		1
16	1944118	3.030	320 6652	BRACKET, Condenser		1
17	454458	17.596	G454458	SCREW, Condenser	(Not Available)	1
18	1924737	3.030	320 6653	WEIGHT		2

GROUP 3

KEY NO.	DELCO-REMY NUMBER	A.M. GROUP	A.M. PART NUMBER	DESCRIPTION	QUAN. REQ.
19	1942615	3.030	320 0948	SPRING, Weight	2
20	1954548	3.030	320 6654	PLATE, Weight Hold Down	1
21	1954549	3.030	320 6655	SCREW, Weight Hold Down Plate	2
22	1116213	3.046	320 4204	CONTROL, Vacuum	1
23	1917123	3.030	320 6656	SCREW, Vacuum Control	2
24	273436	3.042	320 4205	PIN, Gear	1
25	1946238	3.030	320 6657	WASHER (Thrust)	1
26	1954563	3.030	320 4206	LEAD, Primary	1
27	1954564	3.030	320 6658	GROMMET, Primary Lead	1
28	1960920	3.030	320 6659	WASHER, Space	2
29	810074	3.030	320 6642	WASHER, Shim (.050)	AR
30	810078	3.030	320 6643	WASHER, Shim (.010)	AR

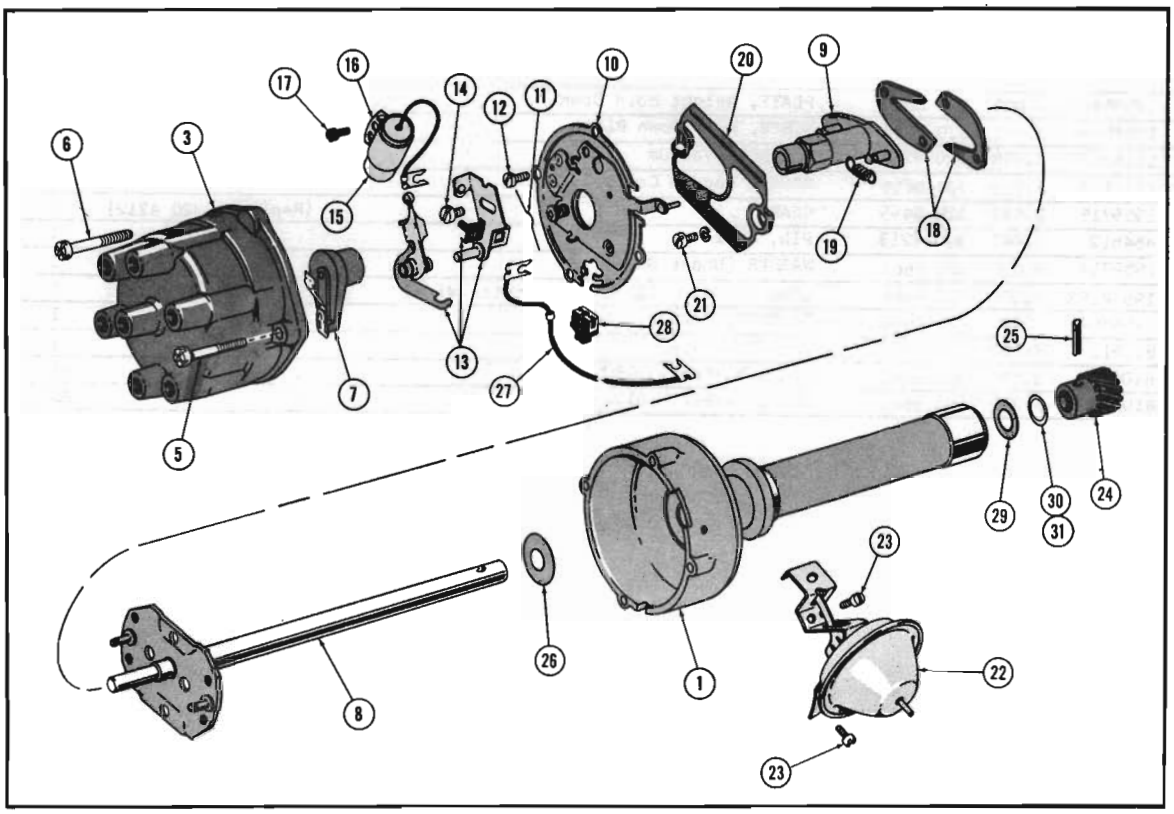

DISTRIBUTOR 63-64 01-10 (OHV-196): 65 01 (OHV-196)

A.M. NO. 316 7666 DELCO-REMY NO. 1110289

KEY NO.	DELCO-REMY NUMBER	A.M. GROUP	A.M. PART NUMBER	DESCRIPTION		QUAN. REQ.
1	1959711	3.030	320 6660	HOUSING		1
2	1957763	3.030	320 6650	SEAL, Lubrication (Not Shown)		1
3	1954569	3.032	320 4197	CAP, Distributor		1
4	1938193			CARBON BUTTON (Part Of Distributor Cap)		1
5	1954571	17.592	G187871	SCREW, Cap Attaching (#8-32)(Part Of Distributor Cap)	Not Available)	1
6	1957573	17.592	G157070	SCREW, Cap Attaching (#10-32)(Part Of Distributor Cap)	(Not Available)	1
7	1954566	3.035	320 4198	ROTOR		1
8	1959718	3.030	320 4208	SHAFT, Distributor Main		1
9	1959717	3.030	320 4209	CAM, Advance And Breaker		1
10	1961428	3.030	320 4201	PLATE, Breaker		1
11	1956213	3.030	320 6651	SPRING (Part Of Breaker Plate)	(Use 320 5360)	1
12	453461	17.596	G453461	SCREW, Breaker Plate	(Not Available)	1
13	1954557	3.031	320 4202	CONTACT SET		1
14	1914916	17.596	G1914916	SCREW, Contact Adjusting	(Not Available)	1
15	1956007	3.033	320 4584	CONDENSER (Incl. Bracket)		1
16	1944118	3.030	320 6652	BRACKET, Condenser		1
17	454458	17.596	G454458	SCREW, Condenser Attaching	(Not Available)	1
18	1881371	3.030	320 6644	WEIGHT		2
19	1957483	3.030	320 4210	SPRING, Weight		2

GROUP 3

KEY NO.	DELCO-REMY NUMBER	A.M. GROUP	A.M. PART NUMBER	DESCRIPTION	QUAN. REQ.
20	1954548	3.030	320 6654	PLATE, Weight Hold Down	1
21	1954549	3.030	320 6655	SCREW, Hold Down Plate	2
22	1116207	3.046	320 4211	CONTROL, Vacuum	1
23	1917123	3.030	320 6656	SCREW, Vacuum Control	2
24	1959715	3.042	320 4499	GEAR (Replaces 320 4212)	1
25	454512	3.042	320 4213	PIN, Gear	1
26	1959714	3.030	320 6661	WASHER (Under Shaft)	1
27	195 4563	3.030	320 4206	LEAD, Primary (Also Low Tension Wire)	1
28	1954564	3.030	320 6658	GROMMET, Primary Lead	1
29	811912	3.030	320 6659	WASHER, Space	1
30	810074	3.030	320 6642	SHIM, Washer (.005)	AR
31	810078	3.030	320 6643	SHIM, Washer (.010)	AR

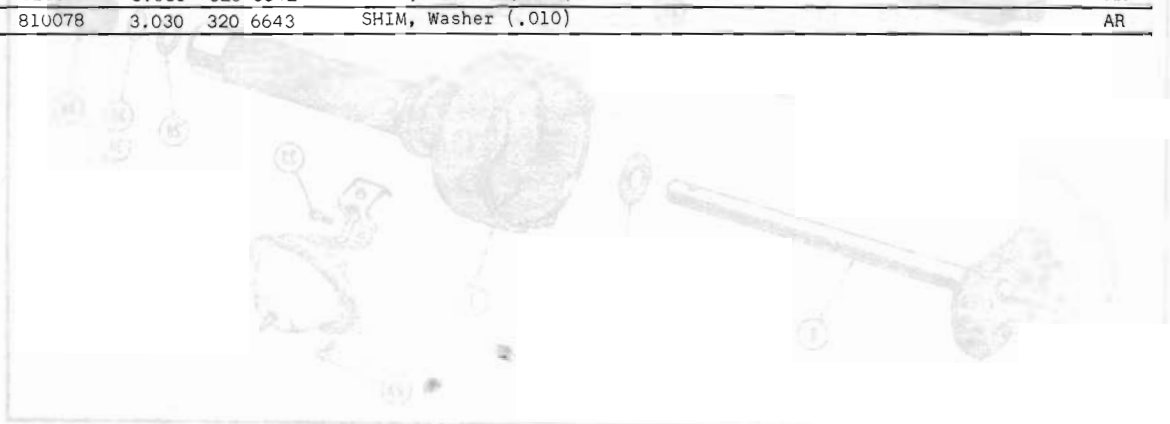

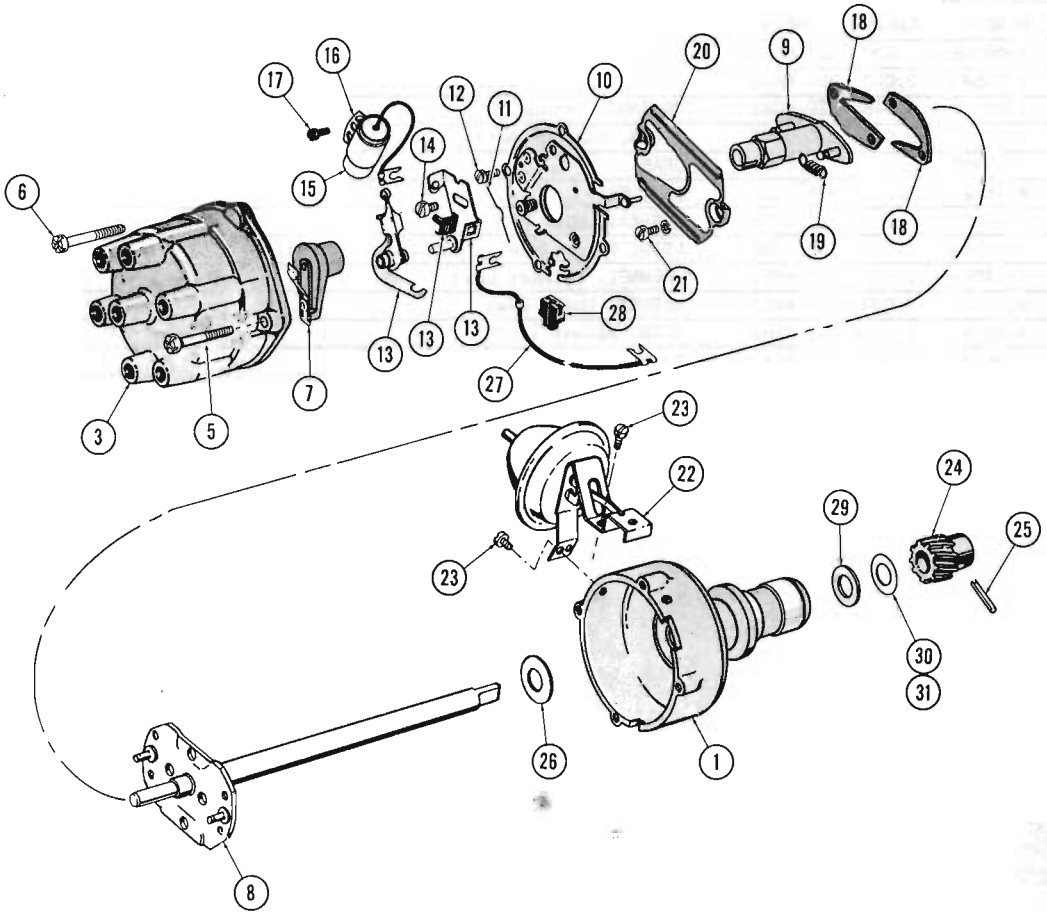

DISTRIBUTOR 65 01-10-80 (OHV-199) (OHV-232)

A.M. NO. 318 0070 DELCO-REMY NO. 1110340

KEY NO.	DELCO-REMY NUMBER	A.M. GROUP	A.M. PART NUMBER	DESCRIPTION		QUAN. REQ.
1	1963904			HOUSING		1
2	1950569	3.030	320 6678	SEAL, In Housing (Not Shown)		1
3	1954569	3.032	320 4197	CAP (Contains all parts listed below shown with a #)		1
4	1938193	3.030	320 6670	# CARBON BUTTON		1
5	1954571	17.592	G187871	#SCREW, Cap Attaching (#8-32)	(Not Available)	1
6	1957573	17.592	G157070	#SCREW, Cap Attaching (#10-32)	(Not Available)	1
7	1954566	3.035	320 4198	ROTOR		1
8	1965888	3.030	320 6948	SHAFT, Main (Incl. Weight Plate)		1
9	1965889	3.030	320 6949	CAM, Advance And Breaker		1
10	1961428	3.030	320 4201	PLATE, Breaker (Incl. Key No. 11)		1
11	1956213	3.030	320 6651	SPRING (Part of Key No. 10)		1
12	453461	17.596	G453461	SCREW	(Not Available)	2
13	1954557	3.031	320 4202	CONTACT SET		1
14	1914916	17.596	G1914916	SCREW, Contact Adjusting	(Not Available)	1
15	1928111	3.033	320 4584	CONDENSER		1
16	1944118	3.030	320 6642	BRACKET, Condenser		1
17	454458	17.596	G454458	SCREW, Condenser Adjusting	(Not Available)	1
18	1881371	3.030	320 6644	WEIGHT		2
19	1887743	3.030	320 6950	SPRING, Weight		2

GROUP 3

KEY NO.	DELCO-REMY NUMBER	A.M. GROUP	A.M. PART NUMBER	DESCRIPTION	QUAN. REQ.
20	1954548	3.030	320 6654	PLATE, Weight Hold Down	1
21	1954549	3.030	320 6655	SCREW, Weight Hold Down (Incl. Washer)	2
22	1116207	3.046	320 4211	CONTROL, Vacuum	1
23	1917123	3.030	320 6656	SCREW, Vacuum Control	2
24	1963905	3.042	320 5387	GEAR	1
25	454512	3.042	320 4213	PIN, Gear	1
26	1838568	3.030	311 2708	WASHER, Under Shaft	1
27	1954563	3.030	320 4206	LEAD, Primary (Also Low Tension Wire)	1
28	1954564	3.030	320 6658	GROMMET, Primary Lead	1
29	811912	3.030	320 6659	WASHER, Under Gear	1
30	810074	3.030	320 6642	SHIM, Washer (.005)	AR
31	810078	3.030	320 6643	SHIM, Washer (.010)	AR



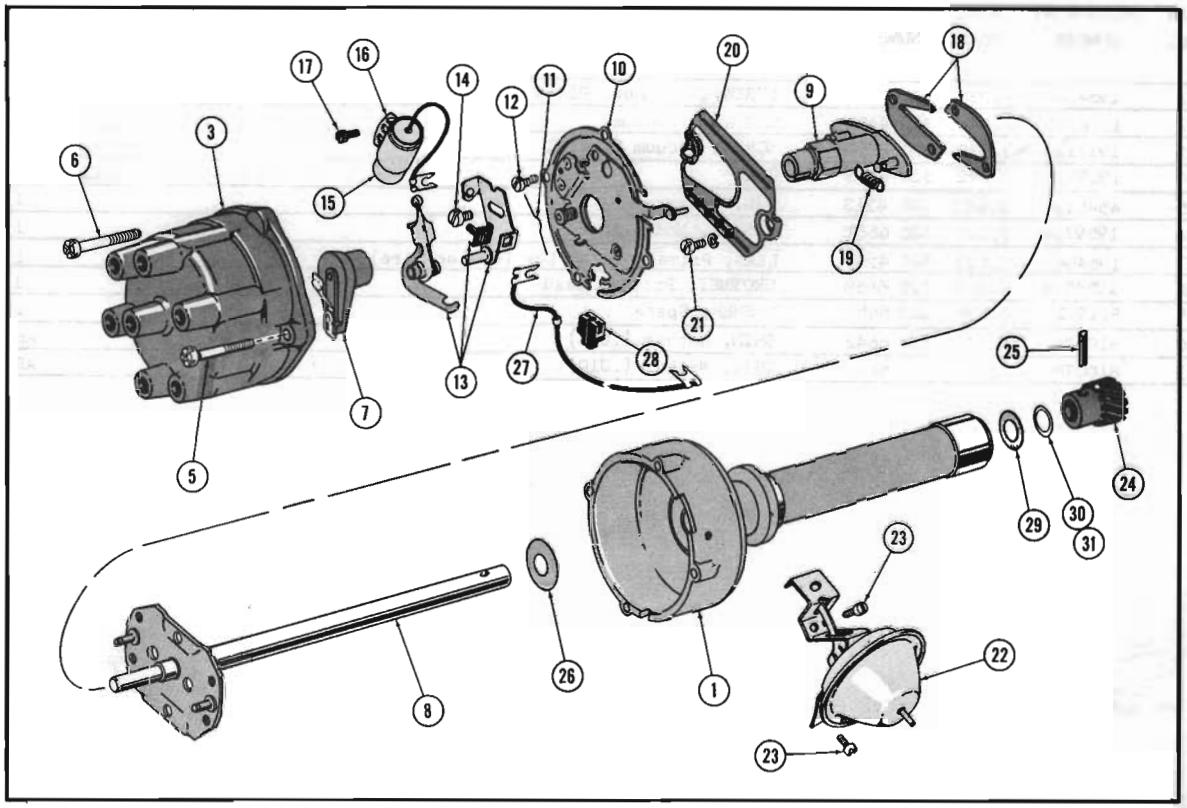

DISTRIBUTOR 63 10

A.M. NO. 317 0250 DELCO-REMY NO. 1110308

KEY NO.	DELCO-REMY NUMBER	A.M. GROUP	A.M. PART NUMBER	DESCRIPTION	QUAN. REQ
1	1959711	3.030	320 6660	HOUSING	1
2	1957763	3.030	320 6650	SEAL, Lubrication (Not Shown)	1
3	1954569	3.032	320 4197	CAP, Distributor	1
4	1938193			CARBON BUTTON (Part Of Distributor Cap)	1
5	1954571	17.592	G187871	SCREW, Cap Attaching (#8-32)(Part Of Distributor Cap) (Not Available)	1
6	1957573	17.592	G157070	SCREW, Cap Attaching (#10-32)(Part Of Distributor Cap) (Not Available)	1
7	1954566	3.035	320 4198	ROTOR	1
8	1959718	3.030	320 4208	SHAFT, Distributor Main	1
9	1959717	3.030	320 4209	CAM, Advance And Breaker	1
10	1958481	3.030	320 4201	PLATE, Breaker	1
11	1956213	3.030	320 6651	SPRING (Part Of Breaker Plate) (Use 320 5360)	1
12	453461	17.596	G453461	SCREW, Breaker Plate (Not Available)	1
13	1954557	3.031	320 4202	CONTACT SET	1
14	1914916	17.596	G1914916	SCREW, Contact Adjusting (Not Available)	1
15	1956007	3.033	320 4584	CONDENSER (Incl. Bracket)	1
16	1944118	3.030	320 6652	BRACKET, Condenser	1
17	454458	17.596	G454458	SCREW, Condenser Attaching (Not Available)	1
18	1881371	3.030	320 6644	WEIGHT	2
19	1957483	3.030	320 4210	SPRING, Weight	2
20	1954548	3.030	320 6654	PLATE, Weight Hold Down	1

GROUP 3

KEY NO.	DELCO-REMY NUMBER	A.M. GROUP	A.M. PART NUMBER	DESCRIPTION	QUAN. REQ.
21	1954549	3.030	320 6655	SCREW, Hold Down Plate	2
22	1116225	3.046	320 4488	CONTROL, Vacuum	1
23	1917123	3.030	320 6656	SCREW, Vacuum Control	2
24	1959715	3.042	320 4499	GEAR (Replaces 320 4212)	1
25	454512	3.042	320 4213	PIN, Gear	1
26	1959714	3.020	320 6661	WASHER, Under Shaft	1
27	1954563	3.030	320 4206	LEAD, Primary (Also Low Tension Wire)	1
28	1954564	3.030	320 6658	GROMMET, Primary Lead	1
29	811912	3.030	320 6659	WASHER, Space	1
30	810074	3.030	320 6642	SHIM, Washer (.005)	AR
31	810078	3.030	320 6643	SHIM, Washer (.010)	AR

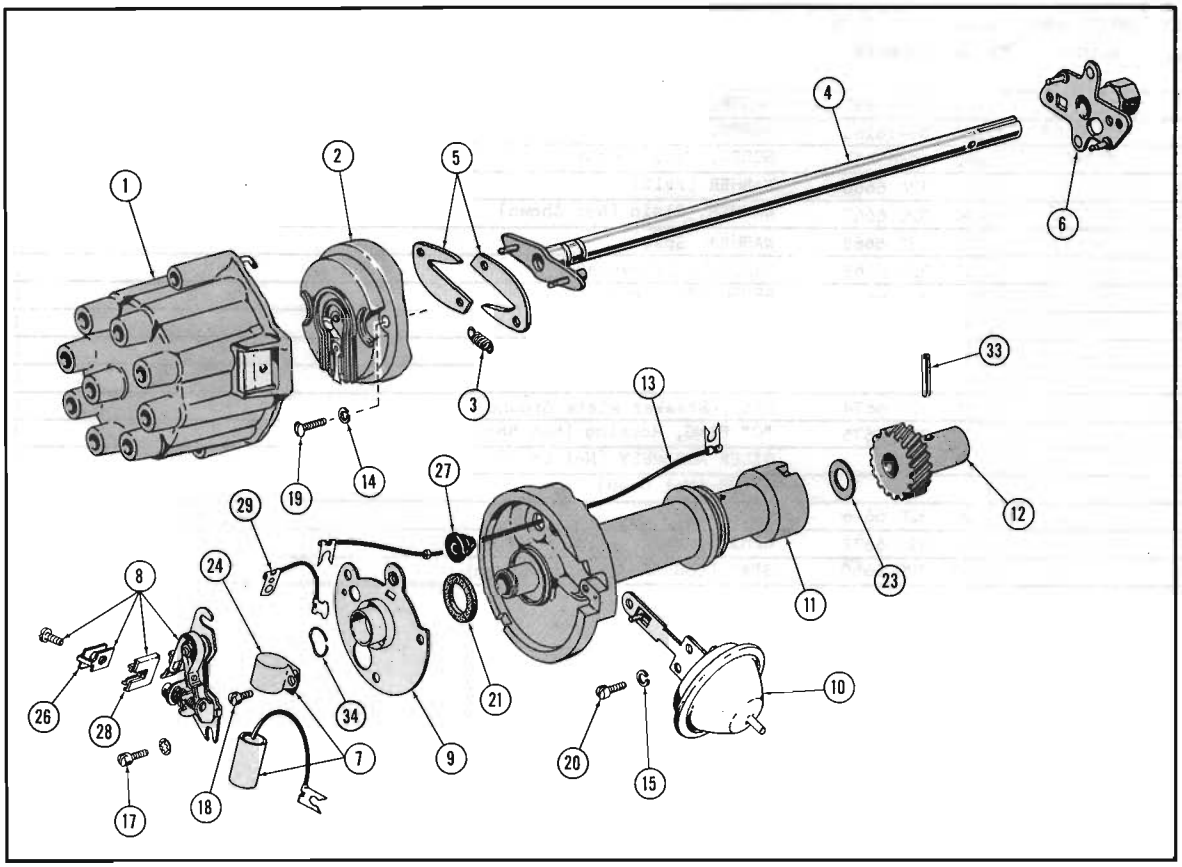

DISTRIBUTOR 63 Thru 65 10-80 (V8)

A.M. NO. 316 7667 DELCO-REMY NO. 1111025

KEY NO.	DELCO-REMY NUMBER	A.M. GROUP	A.M. PART NUMBER	DESCRIPTION		QUAN. REQ.
1	1932018	3.032	320 0192	CAP		1
2	1932015	3.035	320 4216	ROTOR		1
3	1911855	3.030	320 4217	SPRING, Weight		2
4	1961764	3.030	320 4219	SHAFT (Incl. Cam)		1
5	1881371	3.030	320 6644	WEIGHT		2
6	1937838	3.030	320 0201	CAM		1
7	1932004	3.033	320 4585	CONDENSER	(Replaces 320 0198)	1
8	1931988	3.031	320 0197	CONTACT SET		1
9	1935622	3.030	320 6663	PLATE, Breaker		1
10	1116212	3.046	320 4221	CONTROL, Vacuum		1
11	1961358	3.030	320 6664	HOUSING		1
12	1961360	3.042	320 4222	GEAR, Shaft		1
13	1932616	3.030	320 4220	LEAD, Primary		1
14	106497	17.820	G106497	WASHER, Rotor	(Not Available)	2
15	121841	17.820	G121841	WASHER, Vacuum Control	(Not Available)	2
16	9417096	17.596	G9417096	SCREW, Breaker Spring (Not Shown)	(Not Available)	1
17	1949847	3.030	320 6665	SCREW, Contact		2

GROUP 3

KEY NO.	DELCO-REMY NUMBER	A.M. GROUP	A.M. PART NUMBER	DESCRIPTION		QUAN. REQ.
18	1949837	17.596	G1949837	SCREW, Condenser Clamp	(Not Available)	1
19	9416183	17.608	G9416183	SCREW, Rotor	(Not Available)	2
20	453461	17.602	G453461	SCREW, Vacuum Control	(Not Available)	2
21	1951099	3.030	320 6666	WASHER (Felt)		1
22	807295	3.030	320 6667	WASHER, Plain (Not Shown)		2
23	1945776	3.030	320 6668	WASHER, Space		1
24	1869573	3.030	320 6669	BRACKET, Condenser		1
25	1938193	3.030	320 6670	BRUSH (In Cap)		1
26	1931998	3.030	320 6671	CLIP, Breaker Lever Spring		1
27	1932023	3.030	320 6672	GROMMET, Lead		1
28	1931997	3.030	320 6673	INSULATOR		1
29	1932002	3.030	320 6674	LEAD, Breaker Plate Ground		1
30	1927131	3.030	320 6675	"O" RING, Housing (Not Shown)		1
31				OILER ASSEMBLY (Not Used)		1
32				OILER (Not Used)		1
33	456652	3.030	320 6676	PIN, Gear	(Use 320 4233)	1
34	1932024	3.030	320 6677	SPRING, Breaker Plate Retaining		1
35	[illegible]569	3.030	320 6650	SEAL LUBRICATION (Not Shown)		1

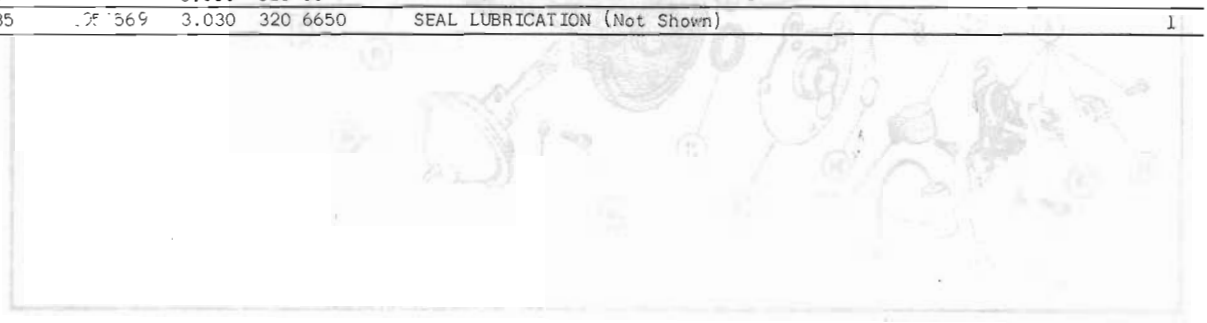

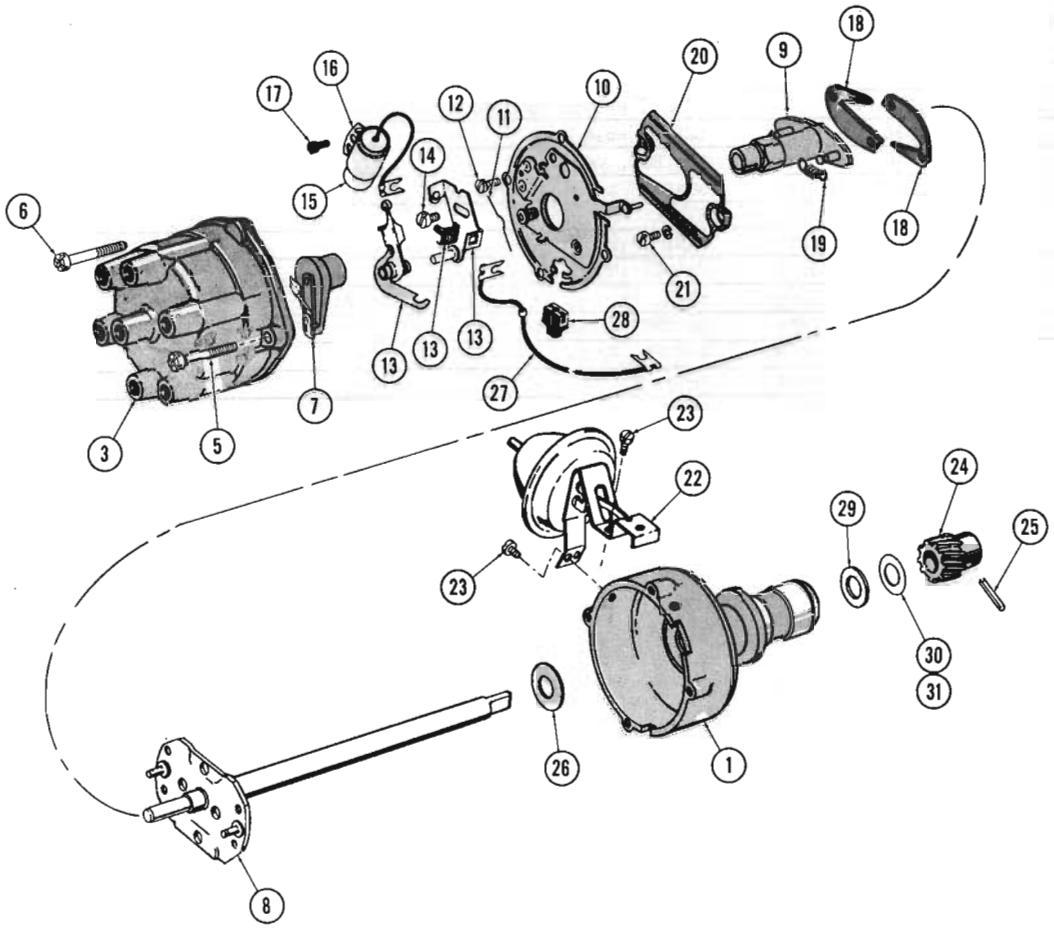

DISTRIBUTOR 64 10 (OHV-232): 65 10-80 (SIX)

A.M. NO. 317 3220

DELCO-REMY NO.1110320

KEY	DELCO-REMY NUMBER	A.M. GROUP	A.M. PART NUMBER	DESCRIPTION		QUAN. REQ.
1	1963904			HOUSING		1
2	1957763	3.030	320 6650	SEAL (Not Shown)		1
3	1954569	3.032	320 4197	CAP, Distributer		1
4	1938193			CARBON BUTTON (Part of Distributor Cap)		1
5	1954571	17.592	G187871	SCREW, Cap Attaching (#8-32)(Part of Distributor Cap)	(Not Available)	1
6	1957573	17.592	G157070	SCREW, Cap Attaching (#10-32)(Part of Distributor)	(Not Available)	1
7	1954566	3.035	320 4198	ROTOR		1
8	1963926	3.030	320 5384	SHAFT, Distributor Main		1
9	195 8596	3.030	320 5385	CAM, Advance and Breaker		1
10	1961428	3.030	320 4201	PLATE, Breaker		1
11	1956213	3.030	320 6651	SPRING (Part of Breaker Plate)	(Use 320 5360)	1
12	453461	17.596	G453461	SCREW, Breaker Plate	(Not Available)	2
13	1954557	3.031	320 4202	CONTACT SET		1
14	1914916	17.596	G1914916	SCREW, Contact Adjusting	(Not Available)	1
15	1928111	3.033	320 4584	CONDENSER		1
16	1944118	3.030	320 6652	BRACKET, Condenser		1
17	454458	17.596	G454458	SCREW, Condenser Attaching	(Not Available)	1
18	1881371	3.030	320 6644	WEIGHT		2
19	1942510	3.030	320 5386	SPRING, Weight		2

20	1954548	3.030	320 6654	PLATE, Weight Hold Down		1
21	1954549	3.030	320 6655	SCREW, Hold Down		2
22	1116207	3.046	320 4211	CONTROL, Vacuum		1
23	453461	17.596	G453461	SCREW, Vacuum Control	(Not Available)	2
24	1963905	3.042	320 5387	GEAR		1
25	454512	3.042	320 4213	PIN, Gear		1
26	1902600	3.030	320 6662	WASHER (Under Shaft)	(Discontinued)	1
27	1954563	3.030	320 4206	LEAD, Primary (Also Low Tension Wire)		1
28	1954564	3.030	320 6658	GROMMET, Primmary Lead		1
29	811912	3.030	320 6659	WASHER, Space		1
30	810074	3.030	320 6642	SHIM, Washer (.005)		AR
31	810078	3.030	320 6643	SHIM, Washer (.010)		AR

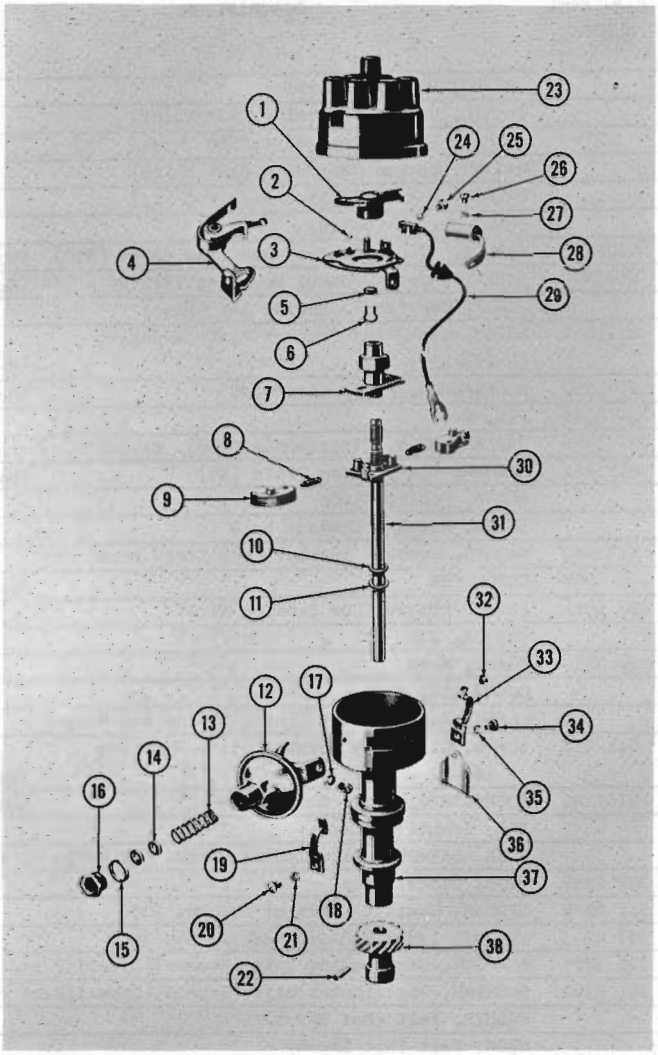

DISTRIBUTOR 60 20

A.M. NO. 315 7218

AUTO-LITE IBP-4104A

KEY NO.	AUTO-LITE NUMBER	A.M. GROUP	A.M. PART NUMBER	DESCRIPTION	QUAN. REQ.
1	IBK-1016	3.035	320 1799	ROTOR	1
2	IGS-226			WASHER (Nylon) (Not Used)	1
3	IBP-2041AS			PLATE, Breaker	1
4	IBP-2040L	3.031	320 1801	CONTACT SET, Ignition	1
5	IGH-28			WICK, Cam Sleeve (Felt)	1
6	IG-680			RING, Cam Snap	1
7	IBP-2209LH	3.030	320 1802	CAM AND STOP PLATE	1
8	IGB-401AS	3.030	320 2810	SPRING SET, Governor Weight	1
9	IGC-2168L			WEIGHT, Governor	2
10	IAO-10			WASHER, Drive Shaft Thrust (Inner-Upper)	1
11	IAO-11			WASHER, Drive Shaft Thrust (Outer-Upper)	1
12	IBP-2023LC	3.046	320 1803	CONTROL, Distributor Vacuum	1

KEY NO.	AUTO-LITE NUMBER	A.M. GROUP	A.M. PART NUMBER	DESCRIPTION	QUAN. REQ.
13	VC-45			SPRING, Vacuum Control	1
14	VC-46			WASHER, Vacuum Control (.032" Thick)	AR
14	VC-46B			WASHER, Vacuum Control (.065" Thick)	AR
14	VC-46A			WASHER, Vacuum Control (.010" Thick)	AR
15	IAT-30			GASKET, Vacuum Control (1/32" Thick)	1
16	IAT-29			PLUG, Vacuum Control	1
17	X-1270	17.820	G106497	WASHER, Vacuum Control Mounting Screw (#10) (Not Available)	2
18	8X-872	17.614	G132892	SCREW, Vacuum Control Mounting (#10-32 x 1/4)(Not Available)	2
19	IAZ-1015			CLAMP, Cap (Incl. Spring And Hinge)	1
20	8X-55	17.614	G121832	SCREW, Clamp And Breaker Plate Mounting	1
				(#8-32 x 3/8) (Not Available)	1
21	12X-195	17.820	G131182	LOCKWASHER, Plate Screw (#8) (Not Available)	1
22	XA-839	3.042	320 2016	PIN, Gear	1
23	IBK-1003A	3.032	320 1796	CAP ASSEMBLY, Distributor (Incl. Key No's. 39 And 40)	1
24	IGE-15	17.820	G131181	WASHER, Clamp Screw Plain (#6) (Not Available)	1
25	IGC-175A			SCREW, Spring Clamp	1
26	8X-884			SCREW, Breaker Contact Lock	1
27	SSB-38	17.820	G131182	WASHER, Breaker Contact Lock Screw Plain (#8)	1
28	IBB-2042SS-1	3.030	320 4585	CONDENSER (Replaces 320 1800)	1
29	IAT-81RA	3.030	320 2011	LEAD, Primary (Low Tension Wire)	1
30	IGS-99			SPACER, Cam	1
31	IAZ-1045L	3.030	320 2009	SHAFT, Main	1
32	GAR-98A			COVER, Oil Wick	1
33	IAZ-1014			CLAMP, Cap Locating (Incl. Spring And Hinge)	1
34	8X-55	17.614	G121832	SCREW, Clamp And Breaker Plate Mounting	1
				(#8-32 x 3/8) (Not Available)	1
35	12X-195	17.820	G131182	LOCKWASHER, Plate Screw Lock (Not Available)	1
36	IBT-49			TAG, Identification	1
37	IBP-1020			BASE ASSEMBLY, Distributor (Incl. Key No's. 41 And 42)	1
38	GE-108	3.042	320 2015	GEAR, Distributor	1
39	IAO-20	3.032	311 8872	SPRING, Contact (Part of Key No. 23)	1
40	IAO-7A	3.032	311 8871	CONTACT (Plunger)(Part of Key No. 23)	1
41	IAZ-30	3.030	320 2809	BUSHING, Distributor Base (Bronze)(Lower)(Part of Key No. 37)	1
42	IG-579A	3.030	311 1952	BUSHING, Distributor Base (Bronze)(Upper)(Part of Key No. 37)	1
	IAZ-17			WASHER, Felt (Not Shown)	1
	IGT-117			WICK, Felt (Not Shown)	1
	X-1590			OILER (Not Shown)	1
	8X-1546			SCREW, Condenser Mounting (Not Shown)	1
	IG-313			WASHER, Thrust (Lower)(Not Shown)	1
	IGS-17			RING, Lock (Not Shown)	1
	XA-899			SEAL, Shaft ("O" Ring)	1
	8X-189B			WASHER, Vacuum Arm Pin (Not Shown)	1

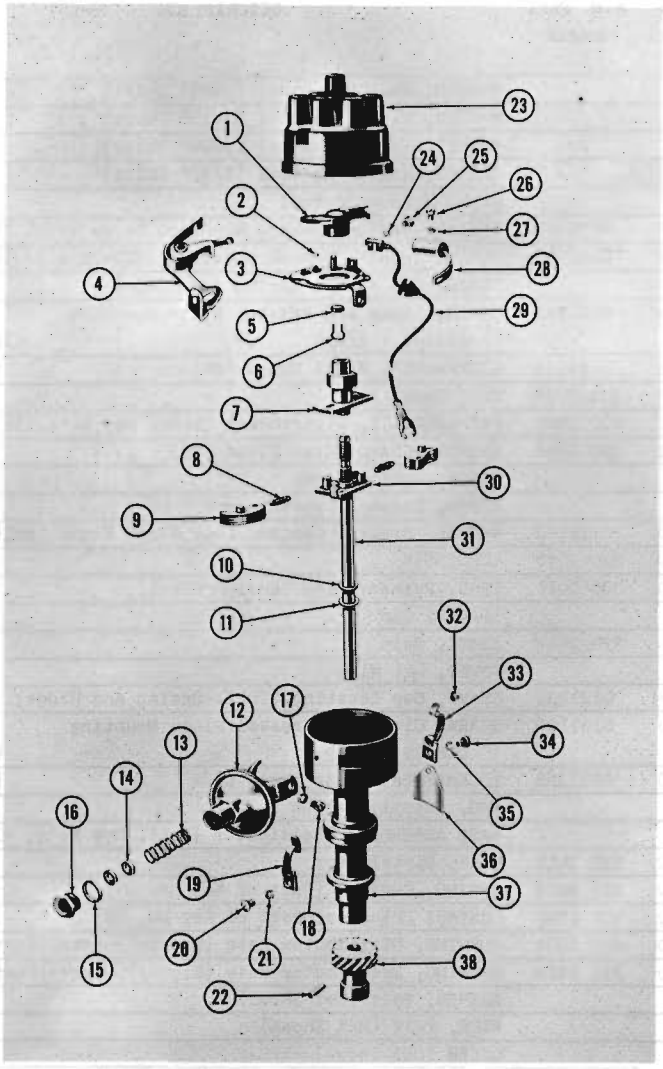

DISTRIBUTOR 61 20-80

A.M. NO. 316 2037 AUTO-LITE IBP-4107

KEY NO.	AUTO-LITE NUMBER	A.M. GROUP	A.M. PART NUMBER	DESCRIPTION	QUAN. REQ.
1	IBK-1016	3.035	320 1799	ROTOR	1
2	IGS-226			WASHER (Nylon)	1
3	IBP-2041AS			PLATE, Breaker	1
4	IBP-2040L	3.031	320 1801	CONTACT SET, Ignition	1
5	IGH-28			WICK, Cam Sleeve (Felt)	1
6	IG-680			RING, Cam Snap	1
7	IBP-2209LH	3.030	320 1802	CAM AND STOP PLATE	1
8	IGB-401AS	3.030	320 2810	SPRING SET, Governor Weight	1
9	IGC-2168L			WEIGHT, Governor	2
10	IAO-10			WASHER, Drive Shaft Thrust (Inner-Upper)	1
11	IAO-11			WASHER, Drive Shaft Thrust (Outer-Upper)	1
12	IBP-2023LC	3.046	320 1803	CONTROL, Distributor Vacuum	1
13	VC-45			SPRING, Vacuum Control	1

KEY NO.	AUTO-LITE NUMBER	A.M. GROUP	A.M. PART NUMBER	DESCRIPTION	QUAN. REQ.
14	VC-46			WASHER, Vacuum Control (.032" Thick)	AR
14	VC-46A			WASHER, Vacuum Control (.010" Thick)	AR
14	VC-46B			WASHER, Vacuum Control (.065" Thick)	AR
15	IAT-30			GASKET, Vacuum Control (1/32" Thick)	1
16	IAT-29			PLUG, Vacuum Control	1
17	X-1270	17.820	G106497	WASHER, Vacuum Control Mounting Screw (#10) (Not Available)	2
18	8X-872	17.614	G132892	SCREW, Vacuum Control Mounting (#10-32 x 1/4)(Not Available)	2
19	IAZ-1015			CLAMP, Cap (Incl. Spring And Hinge)	1
20	8X-55	17.614	G121832	SCREW, Clamp And Breaker Plate Mounting	1
				(#8-32 x 3/8) (Not Available)	1
21	12X-195	17.820	G131182	LOCKWASHER, Plate Screw (#8) (Not Available)	1
22	XA-910	3.042	320 3204	PIN, Gear	1
23	IBK-1003C	3.032	320 2808	CAP ASSEMBLY, Distributor (Incl. Key No's. 39 And 40)	1
24	IGE-15	3.042	320 3204	WASHER, Clamp Screw Plain (#6)	1
25	IGC-175A			SCREW, Spring Clamp	1
26	8X-884			SCREW, Breaker Contact Lock	1
27	SSB-38	17.820	G131182	WASHER, Breaker Contact Lock Screw Plain (#8)(Not Available)	1
27	IBB-2042SS-1	3.033	320 4585	CONDENSER (Replaces 320 1800)	1
29	IAT-81RA	3.030	320 2011	LEAD, Primary (Low Tension Wire)	1
30	IGS-99			SPACER, Cam	1
31	IAZ-1045L	3.030	320 2009	SHAFT, Main	1
32	GAR-98A			COVER, Oil Wick	1
33	IAZ-1014	17.614	G121832	CLAMP, Cap Locating (Incl. Spring And Hinge) (Not Available)	1
34	8X-55	17.820	G131182	SCREW, Clamp And Breaker Plate Mounting	1
				(#8-32 x 3/8) (Not Available)	1
35	12X-195	17.820	G131182	LOCKWASHER, Plate Screw Lock (Not Available)	1
36	IBT-49			TAG, Identification	1
37	IBP-2020			BASE ASSEMBLY, Distributor (Incl. Key No's. 41 And 42)	1
38	GE-108	3.042	320 2015	GEAR, Distributor	1
39	IAO-20	3.032	311 8872	SPRING, Contact (Part of Key No. 23)	1
40	IAT-87	3.032	320 1798	CONTACT (Plunger)(Part of Key No. 23)	1
41	IAZ-30	3.030	320 2809	BUSHING, Distributor Base (Bronze)(Lower)(Part of Key No. 37)	1
42	IG-579A	3.030	311 1952	BUSHING, Distributor Base (Bronze)(Upper)(Part of Key No. 37)	1
	IAZ-17			WASHER, Felt (Not Shown)	1
	IGT-17			WICK, Felt (Not Shown)	1
	X-1590			OILER (Not Shown)	1
	8X-1546			SCREW, Condenser Mounting (Not Shown)	1
	IG-313			WASHER, Thrust (Lower)(Not Shown)	1

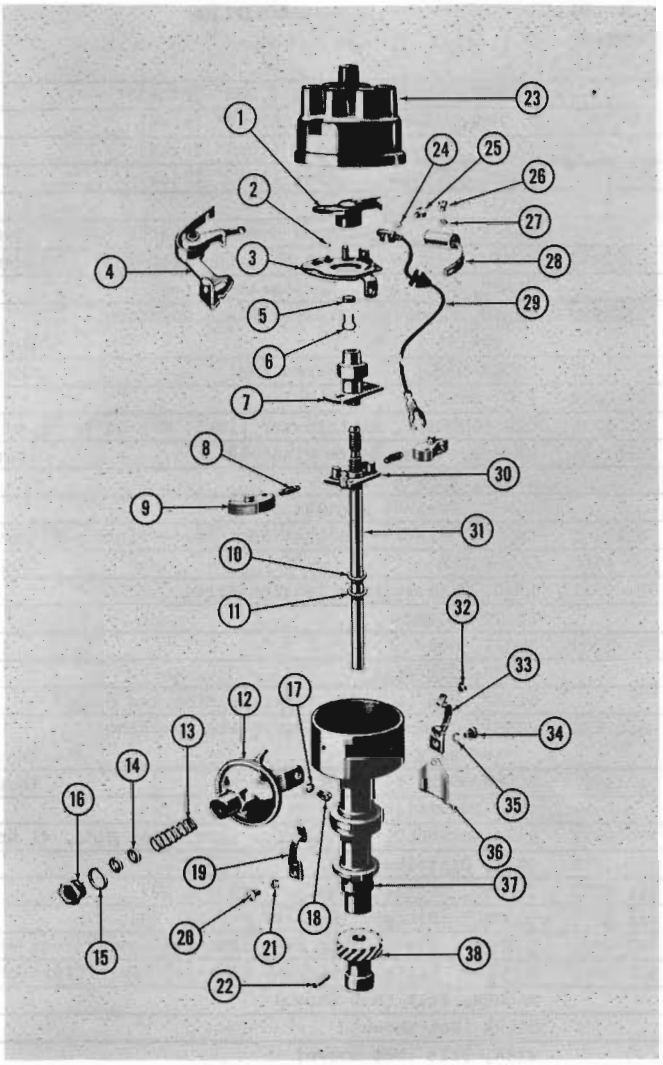

DISTRIBUTOR 60 80

A.M. NO. 315 7223 AUTO-LITE IBP-4104

KEY NO.	AUTO-LITE NUMBER	A.M. GROUP	A.M. PART NUMBER	DESCRIPTION	QUAN. REQ.
1	IBK-1016	3.035	320 1799	ROTOR	1
2	IGS-226			WASHER (Nylon)	1
3	IBP-2041AS			PLATE, Breaker	1
4	IBP-2040L	3.031	320 1801	CONTACT SET, Ignition	1
5	IGH-28			WICK, Cam Sleeve (Felt)	1
6	IG-680			RING, Cam Snap	1
7	IBP-2209LH	3.030	320 1802	CAM AND STOP PLATE	L
8	IGB-401AS	3.030	320 2810	SPRING SET, Governor Weight	1
9	IGC-2168L			WEIGHT, Governor	2
10	IAO-10			WASHER, Drive Shaft Thrust (Inner-Upper)	1
11	IAO-11			WASHER, Drive Shaft Thrust (Outer-Upper)	1
12	IBP-2023LC	3.046	320 1803	CONTROL, Distributor Vacuum	1
13	VC-45			SPRING, Vacuum Control	1

GROUP 3

KEY NO.	AUTO-LITE NUMBER	A.M. GROUP	A.M. PART NUMBER	DESCRIPTION	QUAN. REQ.
14	VC-46			WASHER, Vacuum Control (.032" Thick)	AR
14	VC-46A			WASHER, Vacuum Control (.010" Thick)	AR
14	VC-46B			WASHER, Vacuum Control (.065" Thick)	AR
15	IAT-30			GASKET, Vacuum Control (1/32" Thick)	1
16	IAT-29			PLUG, Vacuum Control	1
17	X-1270	17.820	G106497	WASHER, Vacuum Control Mounting Screw (#10) (Not Available)	2
18	8X-872	17.614	G132892	SCREW, Vacuum Control Mounting (#10-32 x 1/4)(Not Available)	2
19	IAZ-1015			CLAMP, Cap (Incl. Spring And Hinge)	1
20	8X-55	17.614	G121832	SCREW, Clamp And Breaker Plate Mounting (#8-32 x 3/8) (Not Available)	1
21	12X-195	17.820	G131182	LOCKWASHER, Plate Screw (#8) (Not Available)	1
22	XA-910	3.042	320 3204	PIN, Gear	1
23	IBK-1003A	3.032	320 1796	CAP ASSEMBLY, Distributor (Incl. Key No's. 39 And 40)	1
24	IGE-15	17.820	G131181	WASHER, Clamp Screw Plain (#6) (Not Available)	1
25	IGC-175A			SCREW, Spring Clamp	1
26	8X-884			SCREW, Breaker Contact Lock	1
27	SSB-38	17.820	G131182	WASHER, Breaker Contact Lock Screw Plain (#8)(Not Available)	1
28	IBB-2042SS-1	3.033	320 4585	CONDENSER (Replaces 320 1800)	1
29	IAT-81RA	3.030	320 2011	LEAD, Primary (Low Tension Wire)	1
30	IGS-99			SPACER, Cam	1
31	IAZ-1045L	3.030	320 2009	SHAFT, Main	1
32	GAR-98A			COVER, Oil Wick	1
33	IAZ-1014			CLAMP, Cap Locating (Incl. Spring And Hinge)	1
34	8X-55	17.614	G121832	SCREW, Clamp And Breaker Plate Mounting (#8-32 x 3/8) (Not Available)	1 1
35	12X-195	17.820	G131182	LOCKWASHER, Plate Screw Lock (Not Available)	1
36	IBT-49			TAG, Identification	1
37	IBP-1020	3.030	320 6627	BASE ASSEMBLY, Distributor (Incl. Key No's. 41 And 42)	1
38	GE-108	3.042	320 2015	GEAR, Distributor	1
39	IAO-20	3.032	311 8872	SPRING, Contact (Part of Key No. 23)	1
40	IAO-7A	3.032	311 8871	CONTACT (Plunger)(Part of Key No. 23)	1
41	IAZ-30	3.030	320 2809	BUSHING, Distributor Base (Bronze)(Lower)(Part of Key No. 37)	1
42	IG-579A	3.030	311 1952	BUSHING, Distributor Base (Bronze)(Upper)(Part of Key No. 37)	1
	IAZ-17			WASHER, Felt (Not Shown)	1
	X-1590			OILER (Not Shown)	1
	IGT-117			WICK, Felt (Not Shown)	1
	8X-1546			SCREW, Condenser Mounting (Not Shown)	1
	IG-313			WASHER, Thrust (Lower)	1

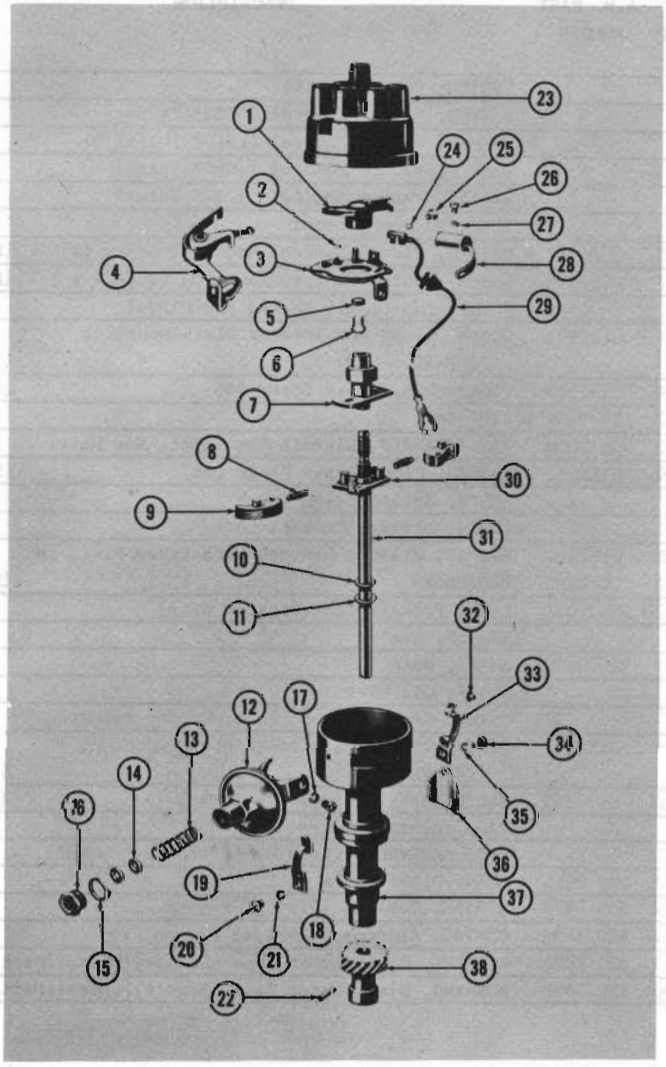

DISTRIBUTOR 62 80

A.M. No. 316 4150 AUTO-LITE IBP-4109

KEY NO.	AUTO-LITE NUMBER	A.M. GROUP	A.M. PART NUMBER	DESCRIPTION	QUAN. REQ.
1	IBK-1016	3.035	3201799	ROTOR	1
2	IGS-226			WASHER, (Nylon)	1
3	IBP-2041AS			PLATE, Breaker	1
4	IBP-2040L	3.031	320 1801	CONTACT SET, Ignition	1
5	IGH-28			WICK, Cam Sleeve (Felt)	1
6	IG-680			RING, Cam Snap	1
7	IBP-2209LH	3.030	320 1802	CAM AND STOP PLATE	1
8	IGB-401AS	3.030	320 2810	SPRING SET, Governor Weight	1
9	IGC-2168L			WEIGHT, Governor	2
10	IAO-10			WASHER, Drive Shaft Thrust (Inner-Upper)	1
11	IAO-11			WASHER, Drive Shaft Thrust (Outer-Upper)	1
12	IBP-2023LC	3.046	320 1803	CONTROL, Distributor Vacuum	1

GROUP 3

KEY NO.	AUTO-LITE NUMBER	A.M. GROUP	A.M. PART NUMBER	DESCRIPTION	QUAN. REQ.
13	VC-45			SPRING, Vacuum Control	1
14	VC-46			WASHER, Vacuum Control (.032" Thick)	AR
14	VC-46A			WASHER, Vacuum Control (.010" Thick)	AR
14	VC-46B			WASHER, Vacuum Control (.065" Thick)	AR
15	IAT-30			GASKET, Vacuum Control (1/32" Thick)	1
16	IAT-29			PLUG, Vacuum Control	1
17	X-1270	17.820	G106497	WASHER, Vacuum Control Mounting Screw (#10) (Not Available)	2
18	8X-872	17.614	G132892	SCREW, Vacuum Control Mounting (#10-32 x 1/4) (Not Available)	2
19	IAZ-1015			CLAMP, Cap (Incl. Spring And Hinge)	1
20	8X-55	17.614	G121832	SCREW, Clamp And Breaker Plate Mounting (#8-32 x 3/8) (Not Available)	1
21	12X-195	17.820	G131182	LOCKWASHER, Plate Screw (#8) (Not Available)	1
22	XA-910	3.042	320 3204	PIN, Gear	1
23	IKB-1003C	3.032	320 2808	CAP ASSEMBLY, Distributor (Incl. Key No's. 39 And 40)	1
24	IGE-15	17.820	G131181	WASHER, Clamp Screw Plain (#6) (Not Available)	1
25	IGC-175A			SCREW, Spring Clamp	1
26	8X-884			SCREW, Breaker Contact Lock	1
27	SSB-38	17.820	G131182	WASHER, Breaker Contact Lock Screw Plain (#8)	1
28	IBB-2042SS-1	3.033	320 4585	CONDENSER (Replaces 320 1800)	1
29	IAT-81RA	3.030	320 2011	LEAD, Primary (Low Tension Wire)	1
30	IGS-99			SPACER, Cam	1
31	IAZ-1045L	3.030	320 2009	SHAFT, Main	1
32	GAR-98A			COVER, Oil Wick	1
33	IAZ-1014			CLAMP, Cap Locating (Incl. Spring And Hinge)	1
34	8X-55	17.614	G121832	SCREW, Clamp And Breaker Plate Mounting (#8-32 x 3/8) (Not Available)	1
35	12X-195	17.820	G131182	LOCKWASHER, Plate Screw Lock (Not Available)	1
36	IBT-49			TAG, Identification	1
37	IBP-1020			BASE ASSEMBLY, Distributor (Incl. Key No's. 41 And 42)	1
38	GE-108	3.042	320 2015	GEAR, Distributor	1
39	IAO-20	3.032	311 8872	SPRING, Contact (Part of Key No. 23)	1
40	IAT-87	3.032	320 1798	CONTACT (Plunger)(Part of Key no. 23)	1
41	IAZ-30	3.030	320 2809	BUSHING, Distributor Base (Bronze)(Lower)(Part of Key No. 37)	1
42	IG-579A	3.030	311 1952	BUSHING, Distributor Base (Bronze)(Upper)(Part of Key No. 37)	1

SPEEDOMETER CABLES

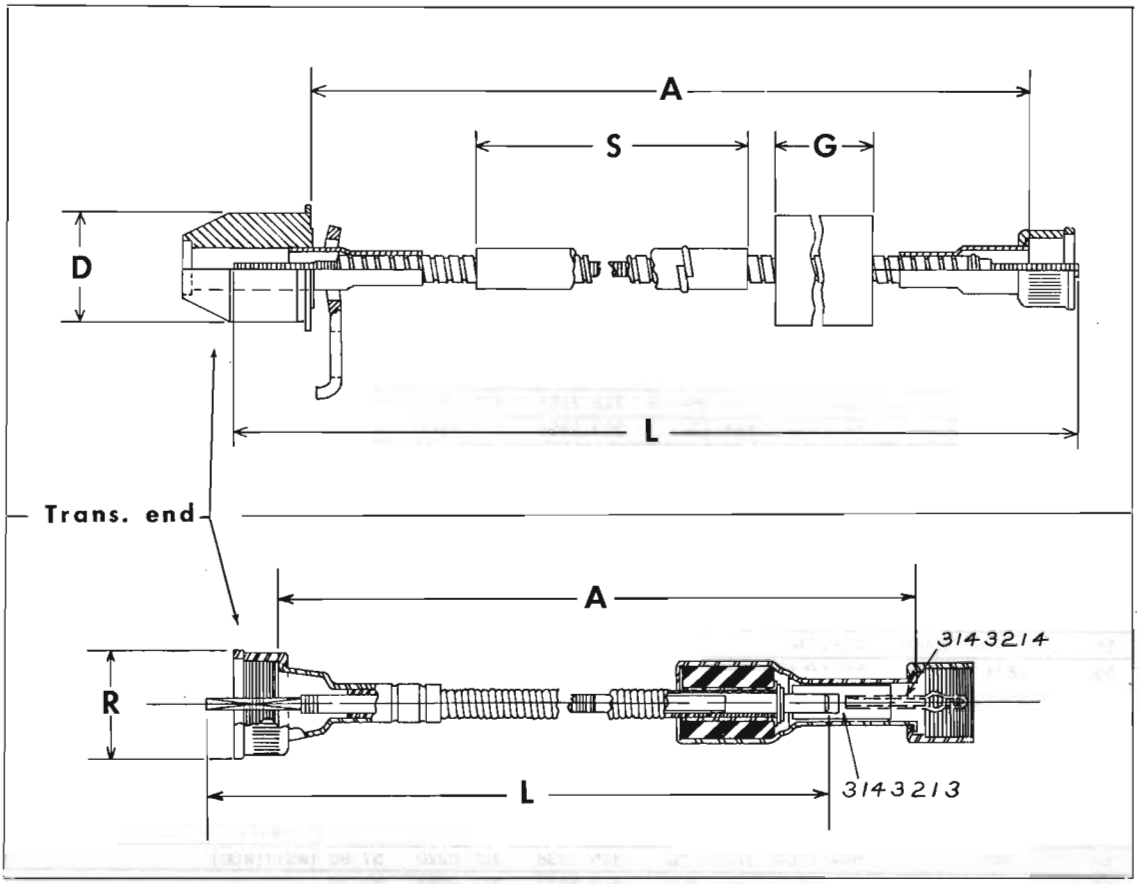

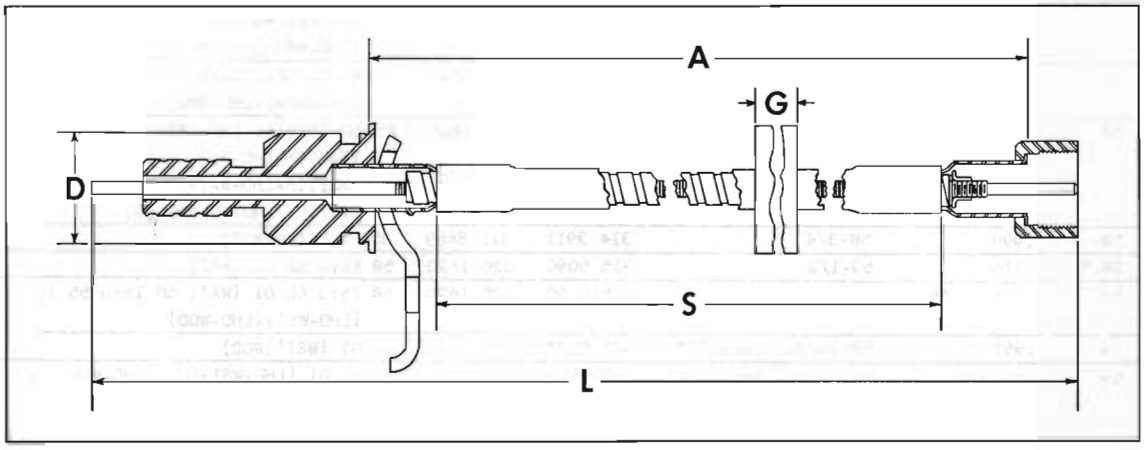

A	D	R	L	MISC.	CABLE NO.	CORE NO.	MODEL APPLICATION
48	.874		50-11/16		317 1710	320 1620	64-65 01 (LHD-WST)
50.5	.997		51-9/16		313 1695	311 4659	51 Thru 55 10 (RHD-WST)

GROUP 3

A	D	R	L	MISC.	CABLE NO.	CORE NO.	MODEL APPLICATION
51	.999		51-13/16	"S" 10	316 3881	320 1620	61 Thru 63 07 (LHD-WST): 63 09 (LHD-WST)
51		.750	52-5/32		313 4237	311 5948	52 Thru 54 40 (WHT): 53 10 (WHT): 52-53 60 (WHT)
52	.872		52-7/8		312 7152	311 3246	49 40 (RHD-WST)
52	.872		53-1/16			320 1620	52 Thru 54 40 (WST)
52	.997		51-3/4		314 3130	320 1620	55-56 40 (WST)(WOD)
52	.997		53-1/16		313 4240	320 1620	52 Thru 54 40 (WOD)
53		1.000	52-3/4		314 3132	311 8858	55-56 40 (WHT): 57 80 (WAT)
53		1.000	53-7/16		314 3019	320 1620	55-56 80
55	.872		54-3/4		314 3133	320 1620	55 60 (WST): 56 50 (WST)
55	.872		55-13/16		95 705	320 1620	38 Thru 40 (WST)
55	.872		55-7/8	No "S"	310 7900	310 8487	46 40: 47-48 40 (LOD): 46 Thru 48 60 (RHD-LOD)
55	.872		55-7/8	"S" 26-1/8	312 7158	310 8487	49 60 (RHD-WST)
55	.872		56-1/16	"S" 12	313 1556	311 4660	51 40-60 (LHD-WST)
55	.872		56-1/16	"S" 49-3/4	313 4241	311 5864	52 Thru 54 60 (WST)
55	.997		54-3/4		315 1738	320 1620	56 Thru 58 10 (RHD-WST): 55-56 60 (WOD)
55	.997		55-7/8	Incl. "G"	343 8746	320 1620	59-60 10 (RHD-WST)
55	.997		56-1/16		313 4240	311 5864	52 Thru 54 60 (WOD)
55	.999		55-7/8		314 3981	320 1620	355 40 (LHD-WST)(LHD-WOD)
55 1/2			57-1/4		811 0707	811 1740	540
56		1.000	57-5/32		314 3883	311 8684	355 40 (WHT)
56	.874		59-7/64	Incl. "G"	317 7230	320 1620	65 50 (Marlin-LHD-WST-OHV-232): 65 80 (LHD-WST-OHV-232)
56 1/4	.874		57-1/4	Incl. "G"	345 9343	320 1620	61 01 (WAT)
57		.750	58-5/32		313 8735	311 6742	53-54 60 (WHT)
57		1.000	58-5/8		314 3886	320 1620	355 80
57		1.000	57		314 3926	320 1620	56 50 (WHT): 55-56 60 (WHT): 57 80 (WAT)
57	.997		56-11/64	Incl. "G"	315 1738	320 0220	57 80 (WST)(WOD)
57	.997		57-7/8	Less "G"	312 8532	311 4023	50 10
58	.437		60-11/16	Incl. "G"	317 4269	320 1620	64-65 10 (OHV-232-LHD-WST) (Except Marlin):65 10 (LHD-WST-OHV-199-Heavy Duty)
58	.874		58-3/4		302 288	320 1620	1948-49, 501-502-503-504 (LHD-WOD)(LHD-SMD)
58	.874		61-7/64		317 7231	320 1620	65 50 (Marlin-LHD-WAT-V8) (Marlin-LHD-WST-V8-287) (Marlin-LHD-WAT-V8) (Marlin-LHD-WST-V8-287)
58	.999		58-3/4		314 3911	311 8689	355 60 (LHD-WOD)
58.5	.874		59-1/2		315 5090	320 1620	58 Thru 60 01 (WAT)
59	.874	60			315 5090	320 1620	58 Thru 60 01 (WAT) 50 Thru 55 10 (LHD-WST)(LHD-WOD)
59	.997		58-23/32	Less "G"	345 5673	320 1620	58 01 (WST)(WOD)
59	.997		60	Incl. "G"	345 5673	320 1620	61-62 01 (LHD-WST-LCV)(LHD-WOD) 62 01 (WAT): 63 02-04-05-06-08 (LHD-WST)(LHD-WOD): 63 07-09 (LHD-WOD): 63 01 (WAT): 61-62 10 (LHD): 61 20-80 (LHD-WAT) 62 80 (LHD-WAT)(LHD-WOD)
59	.997		60-1/16	Incl. "G"	345 5673	320 1620	58 Thru 60 01 (WST)(WOD)
60		7.50	61-5/32		313 1558	320 1634	51 40-60 (RHD-WHT)
60		1.000	61-5/32		314 3926	320 1634	355 60 (WHT)

A	D	R	L	MISC.	CABLE NO.	CORE NO.	MODEL APPLICATION
60	.750		61-1/4		811 2400	811 2470	560
60	.872		61-1/16		313 2444	311 4661	51 60 (LHD-WST)
60	.874		62-11/16		317 1709	320 1620	64-65 01 (LHD-WAT)(LHD-WOD)
60	.874		63-7/64		317 7228	320 1620	65 10 (LHD-WST-V8-287)(LHD-WAT-V8-287) (LHD-WAT-V8-327)(Except Marlin)
60	.874		63-7/64		317 7232	320 1620	165 01 (LHE-Can): 165 10 (V8-Can) (OHV-232-WST-Can): 65 50 (Marlin-LHD-WAT-OHV-232): 65 80 (LHD-WAT-OHV-232): 165 80 (Six-Can) (V8-WAT-Can)
60	.875		61-1/4		811 2400	811 2035	540-560
60	.997		61-1/16		313 1557	311 4661	51 40-60 (LHD-WOD)
61		1.000	61-1/2		314 7273	311 9682	356 80
61	.872		61-13/16		95 706	96 806	38 Thru 40 (WOD)
61.5	.997		61-1/4		314 7271	320 1620	356 40 (WST)(WOD): 56 50 (WOD)
62		1.000	62		315 1754	320 1620	357 80 (WAT)
62	.872		62-7/8	No "S"	310 7901	310 8488	46 Thru 48 60 (LHD-LOD): 46 60 (RHD-WOD)
62	.872		62-7/8	"S" 26-1/8	312 6246	310 8488	49 40-60 (LHD-WST)
62	.872		62-3/4	"S" 53-3/16	314 3912	320 1620	355 60 (LHD-WST)
62	.874	65-7/64		Incl. "G"	317 7233	320 1620	65 50 (Marlin-LHD-WOD-OHV-232) (Marlin-LHD-V8-287-WOD): 6580 (LHD-WOD-OHV-232)(LHD-V8-287-WOD)
62	.875		64-5/8	Incl. "G"	316 9581	320 1620	64-65 01 (RHD-WST): 63-64 10 (Six-LHD): 63-64 10-80 (V8-LHD-WAT): 65 10 (LHD-OHV-199) (LHD-WAT-OHV-232)
62	.997		62-7/8		312 6245	310 8488	49 40-60 (LHD-WOD)
62	.997		62-7/8	Incl. "G"	343 8743	320 1620	59-60 10-80 (LHD): 61 80 (LHD-WST) (LHD-WOD): 59 Thru 61 20 (LHD-WOD)
62	.997		63-1/16		312 1586	311 4665	47 40 (WOD): 49 40 (LHD-WOD): 46 Thru 48 60 (LHD-WOD): 51 Thru 55 10 (RHD-WOD)
63	.874		63-3/4	No "G"	304 707	320 1620	4A-4B-5B-4C-5C (LHD-WOD)(LHD-WHT) (LHD-SMD)
63	.874		63-3/4	Incl. "G"	303 122	320 1620	500,50A (LHD-WOD)(LHD-SMD)
63	.874		63-3/4	"S" 4	304 708	320 1620	5A-6A-7A-8A-7B-8B-7C (LHD-WOD) (LHD-WHT)(LHD-SMD)
63	.999		63-3/4		311 139	320 1620	6D-7D (WAT)
64		1.000	64		343 8783	320 1620	356 40-50-60 (WHT)
64	.437		66-11/16	Incl. "G"	317 4270	320 1620	64-65 10 (OHV-232-LHD-WOD)(Except Marlin) 65 10 (V8-287-LHD-WOD)(Except Marlin)
64	.872		63-3/4		315 2562	320 1620	57-58 20 (LHD-WST): 57 30 (LHD-WST)
64	.872		64-7/8	Incl. "G"	343 8744	320 1620	59 Thru 62 10 (WST-Heavy Duty-Note 3.570-1): 61-62 10 (Heavy Duty-Note 3.570-2): 59 Thru 61 20 (LHD-WST): 62 80 (LHD-WST)
64	.874		64-3/4		302 289	320 1620	1948-49, 501-502-503-504 (LHD-WOD) (LHD-SMD)
64	.874		67-7/64	Incl. "G"	317 7234	320 1620	65 50 (Marlin-LHD-WOD-V8-327) (Marlin-LHD-WST-V8-327): 65 80 (LHD-WOD-V8-327)(LHD-WST-V8-327)
64	.997		63-3/4		343 8745	320 1620	57-58 10 (LHD-WST)(RHD-WOD)
65	.997		65-7/8	No "S"	312 1587	320 1620	48 40 (RHD-WOD): 46 Thru 48 60 (RHD-WOD)

GROUP 3

A	D	R	L	MISC.	CABLE NO.	CORE NO.	MODEL APPLICATION
65	.997		65-7/8	"S" 26-1/8	313 1821	320 1620	49 40 (RHD-WOD)
65	.997		66-1/16		313 1821	311 4663	51 60 (LHD-WOD)
66	.872		65-3/4		314 7268	311 9683	57 20 (LHD-WST): 356 50-60 (WST)
66	.874		66-3/4		310 590	320 1620	4D-5D-6D-7D (LHD-WOD)(LHD-WHT) (LHD-WAT)
65		7.50	66-5/32		313 8355	320 1620	63 Thru 55 10 (WHT)
65		1.000	66		163 767	320 1620	1946-47 (LHD-LOD)(With Taximeter)
65	.872		65-7/8		310 7278	320 1620	46 60 (LHD-WOD)
65	.874		65-3/4		162 002	320 1620	1946-47 (LHD-WOD)(Less Taximeter)
66	.874		69-7/64	Incl. "G"	317 7229	320 1620	165 01 (OHV-Can): 65 10 (LHD-V8-327-WST) (LHD-V8-287-WOD)(Except Marlin): 165 10 (OHV-199-Can)(OHV-232-WAT-Can): 165 80 (V8-WST-Can)
66	.875		68-5/8		316 9580	320 1620	63-64 10-80 (V8-LHD-WST)(V8-LHD-WOD)
66	.997		65-3/4		314 7269	311 9683	356 50-60 (WOD): 357 80 (WST)(WOD)
67	.872		68-1/16		313 2438	311 3792	51 40 (RHD-WST)
67	.999		67-3/4		308 738	320 1620	1C-2C-1D-2D-3D (LHD-WOD)(LHD-WHT): 4D-5D (WAT)
68	.872		68-7/8		310 7902	320 1620	42 80 (LHD-WOD): 41 80
68	.997		68-7/8	Incl. "G"	343 8745	320 1620	59-60 10 (RHD-WOD)(RHD-WAT): 59-60 80 (RHD)
68	.997		67-3/4		343 8745	320 1620	56 10 (LHD-WOD): 57 10-20-30 (LHD-WOD): 57 10 (WAT): 58 10 (LHD-WOD)(WAT): 58 20 (LHD-WOD)(LHD-WAT): 58 80
68		1.000	67-7/8		343 8783	320 1620	56 10 (WHT): 57 10 (LHD-WHT): 57 20-30 (WHT)
68		1.000	69-3/16	Incl. "G"	343 8783	320 1620	59-60 10 (WST)(Note 3.570-2)
70	.872		71-1/16		313 2441	320 1620	51 60 (RHD-WST)
71	.874		71-3/4		162 004	320 1620	1946-47 (LHD-WOD)(Less Taximeter)
71	.874		71-3/4		302 290	320 1620	500,50A (LHD-WOD)(LHD-SMD): 1948-49, 501-502-503-504 (RHD-LOD)
71		1.000	72		304 651	320 1620	1951-52, 7C (WHT)
73	.874		76-7/64		317 7160	320 1620	65 10 (RHD-WST-OHV-232)
73	.997		73-7/8		312 7151	320 1620	49 60 (RHD-WOD)
73	.997		73-15/16	"S" 10	346 5420	320 2815	61 10 (RHD): 61 80 (RHD-WAT)
73	.999		73-3/4	No "S"	308 740	320 1620	1C-2C-1D-2D-3D (LHD-WOD)
73	.999		73-3/4	No "S"	306 440	320 1620	4B-5B-4C-5C (LHD-WOD) "W"
73	.999		73-3/4	"S" 4	306 442	320 1620	6B-7B-8B-7C (LHD-WOD) "W"
73		1.000	74		308 902	320 1620	1C-2C-1D-2D-3D (WHT)
74		1.000	75		310 600	320 1620	4D-5D-6D-7D (WHT)
74	.997		75-1/16		312 9065	320 1620	50 40-60 (LHD-WOD)
74	.872		75-1/16		312 9066	320 1620	50 40-60 (LHD-WST)
74		.750	76-21/32		312 8891	320 1620	50 40-60 (LHD-WHT)
75	.872		75-3/4		314 5134	320 1620	355 60 (RHD-WST)
75	.999		75-3/4		314 5135	320 1620	355 40 (RHD-WST)(RHD-WOD): 355 60
79	.875		81-1/2	Incl. "G"	316 7934	320 1620	64-65 01 (RHD-WOD)(RHD-WAT): 63 10-80 (RHD): 64 10 (RHD): 65 10 (RHD-WOD-OHV-232)(RHD-WAT-OHV-232) (RHD-WAT-V8-327)
80	.997		81-1/16		313 2439	320 1620	50-51 40 (RHD-WOD)
85	.997		85-7/8	"S" 40	346 3734	320 1620	61-62 01 (RHD)
88	.997		89-1/16	Less "G"	312 9264	320 2815	50-51 60 (RHD-WOD)
88	.997		89-1/16	Incl. "G"	313 2442	320 2815	51 60 (RHD-WOD)(RHD-WOD)

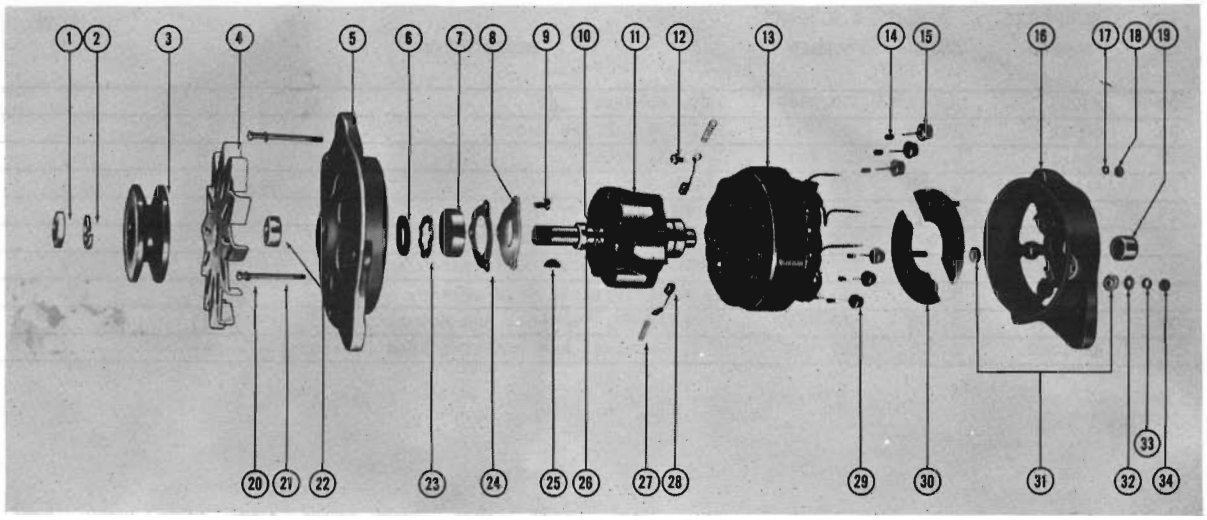

ALTERNATOR

A.M. NO. 316 9168 (34 Amp.) 163-164 01-10-80 AUTO-LITE NO. ALK-5101
A.M. NO. 317 9286 (34 Amp.) 165 01 (LHE)(OHV-196): 165 10-80 (V8) AUTO-LITE NO. ALK-5001C
A.M. NO. 316 9474 (40 Amp.) 163-164 01-10-80: 165 01 (LHE)(OHV-196): 165 10-80 (V8) AUTO-LITE NO. ALE-5101A

KEY NO.	AUTO-LITE NUMBER	A.M. GROUP	A.M. PART NUMBER	DESCRIPTION	QUAN. REQ.
1	GBM-21B	3.010	311 2796	NUT, Rotor Shaft Drive End (Replaces 311 8776)	1
2	12X-864	3.010	311 8777	LOCKWASHER, Rotor Shaft Drive End Nut	1
3	PU-585	3.010	320 9013	PULLEY, Drive	1
4	PU-625	3.010	320 9014	FAN, Ventilating (Less Pulley)(34 Amp.)	1
4	PU-1605	3.017	320 9041	FAN, Ventilating (Less Pulley)(40 Amp.)	1
5	ALE-1003G	3.005	320 9015	HEAD, Drive End (34 Amp.)	1
5	ALE-1003	3.005	320 9052	HEAD, Drive End (40 Amp.)	1
7	X-3416	3.005	320 9016	BEARING, Ball	1
8	GJC 27C	3.005	320 9017	RETAINER, Bearing	1
9	8X-3427	3.005	320 9018	SCREW, Bearing Retainer (#10-32 x 1/2)	3
10	GAR-171	3.005	320 9019	RING, Snap	1
11	ALE-2006C	3.005	320 9020	ROTOR ASSEMBLY (34 Amp.)	1
11	ALE-2006	3.005	320 9043	ROTOR ASSEMBLY (40 Amp.)	1
12	X-3470	3.005	320 9021	SCREW, Ground Brush	1
13	ALE-2008D	3.005	320 9022	STATOR ASSEMBLY (34 Amp.)	1
13	ALE-2008	3.005	320 9044	STATOR ASSEMBLY (40 Amp.)	1
14	X-3554	3.005	320 9023	CLAMP, Stator Lead To Rectifier Wire	3
15	XA-944C	3.005	320 9024	DIODE, Negative	3
16	ALE-1002FS	3.005	320 9025	HEAD ASSEMBLY, Commutator End (34 Amp.)	1
16	ALE-1002AS	3.005	320 9045	HEAD ASSEMBLY, Commutator (40 Amp.)	1
17	12X-196	3.005	311 3686	LOCKWASHER, Mounting Stud Nut (#19) (Replaces 311 8964)	2
18	8X-173	3.005	320 9027	NUT, Mounting Stud (Hexagon)(#10-32)	2
19	X-3417	3.005	320 9028	BEARING, Roller	1
20	12X-196	3.005	311 3686	LOCKWASHER, Thr Bolt (Replaces 311 8964)	4
21	ALA-20C	3.005	320 9030	BOLT, Thru	4
22	ALC-21D	3.005	320 9031	SPACER, Rotor Shaft (34 Amp.)	1
22	ALD-21	3.005	320 9046	SPACER, Rotor Shaft (40 Amp.)	1

KEY NO.	AUTO-LITE NUMBER	A.M. GROUP	A.M. PART NUMBER	DESCRIPTION	QUAN. REQ.
25	X-261	3.010	320 3643	KEY, Woodruff (#6)	1
26	GR-32	3.005	320 9032	RETAINER, Drive End	1
27	ALA-19	3.005	320 9033	SPRING, Brush	2
28	ALE-1012CS	3.005	320 9034	BRUSH SET	1
29	A-943C	3.005	320 9035	DIODE, Positive	3
30	ALE-4	3.005	320 9036	PLATE, Rectifier Mounting	2
31	ALA-33	3.005	320 9037	BUSHING, Insulating Terminal And Mounting Stud	4
32	SW-634	3.005	320 9038	WASHER, Terminal Stud (Plain)	2
33	12X-199	3.005	320 9039	LOCKWASHER, Terminal And Mounting Stud (1/4 in.)	2
34	8X-1063	3.005	320 9040	NUT, Terminal And Mounting Stud (Hexagon)(1/4-28)	3

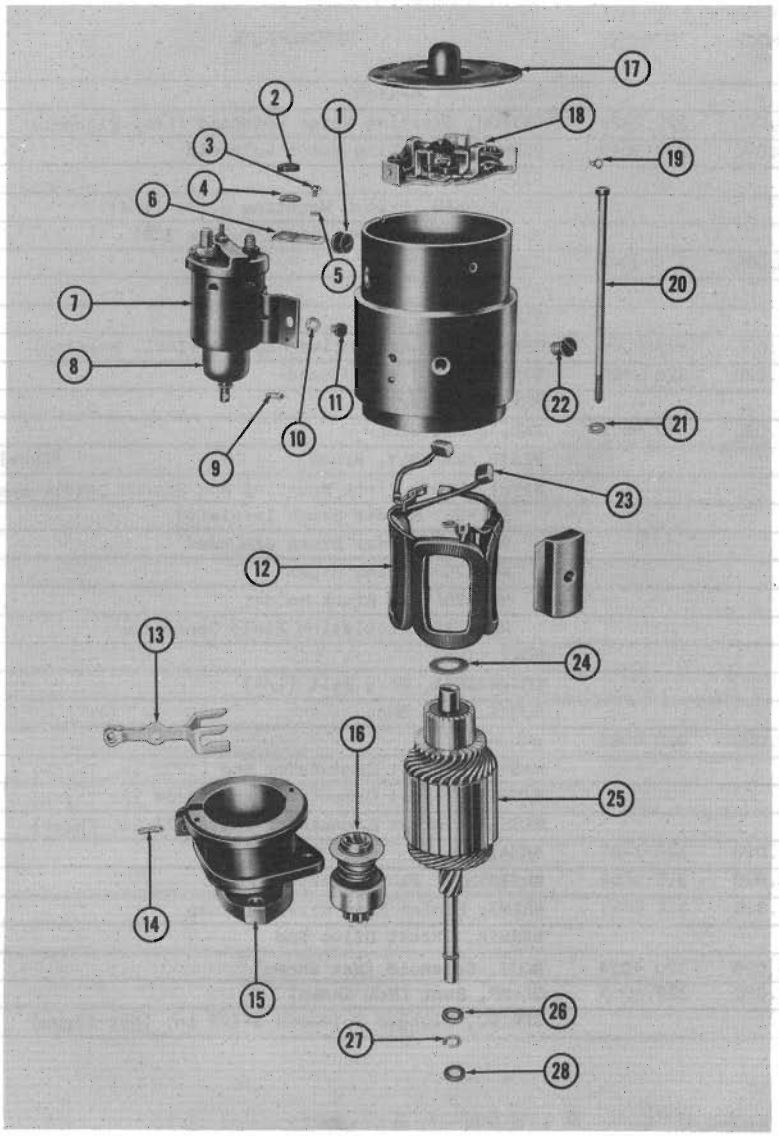

STARTING MOTOR 162-163 01-10

A.M. NO. 320 9078 AUTO-LITE NO. MEC-6101

KEY NO.	AUTO-LITE NUMBER	A.M. GROUP	A.M. PART NUMBER	DESCRIPTION	QUAN. REQ.
		3.020	320 9087	CLUTCH, Starter (Incl. all parts listed below which are coded with a #)	1
	MEC-2083CAN			FRAME, FIELD COIL, AND BRUSH ASSEMBLY	1
1	MEC-84			GROMMET, Connector	1
2	8X-165			NUT, Terminal Stud (3/8-16)	1
3	8X-304			SCREW, Switch Connecting (8-32 x 5/16)	1
4	12X-201			LOCKWASHER, Terminal Stud (3/8)	1
5	12X-195			LOCKWASHER, Switch Connecting And Ground Lead And Brush Plate Mounting Screw (#8)	5

KEY NO.	AUTO-LITE NUMBER	A.M. GROUP	A.M. PART NUMBER	DESCRIPTION	QUAN. REQ.
6	MEC-26			CONNECTOR, Switch	1
7	SAJ-4003	3.020	320 2429	SWITCH, Starting Motor Solenoid (Less Plunger)	1
8	SAJ-1021	3.020	320 9049	PLUNGER, Starting Motor Solenoid	1
9	XA-904			PIN, Link	1
10	12X-199			LOCKWASHER, Switch Mounting Screw (1/4)	2
11	8X-467			SCREW, Switch Mounting (1/4-20 x 3/8)	2
12	MEC-1005AS	3.020	320 9064	COIL, Field	1
13	MEC-1058			YOKE	1
14	XA-905			PIN, Yoke	1
15	PS-1411	3.020	320 9065	HEAD, Drive End (Drive Housing)(Incl. Bearing)	1
	MDD-34	3.020	320 2485	BEARING, Drive End Head	1
16				#CLUTCH, Starter	1
17	MDL-1002	3.020	320 9052	END, Commutator	1
18				PLATE ASSEMBLY, Brush)Serviced as following	
19				RIVET, Brush Plate Mounting And Ground Lead)components:	
				MDL-23 Holder Brush Insulated	
				MDL-24 Holder Brush Grounded	
				MDL-25 Spring Brush	
				MDL-26 Pin Brush Holder	
				MDL-314A Insulation Field Connector	
20	MEC-20			BOLT, Thru	2
21	12X-199			LOCKWASHER, Thru Bolt (1/4)	2
22	GK-38			SCREW, Pole Shoe	4
23	13-900	3.020	320 9063	BRUSH SET	1
24	MU-54			WASHER, Thrust Commutator End (1/32 in. Thick)	AR
24	MU-54B			WASHER, Thrust Commutator End (3/64 in. Thick)	AR
24	MU-54L			WASHER, Thrust Commutator End (1/16 in. Thick)	1
25	MDL-2049	3.020	320 1787	ARMATURE	1
26	MCL-129	3.020	311 9054	#RETAINER, Pinion Stop	1
27	MCL-127	3.020	311 9053	#RING, Pinion Stop Retainer Snap	1
28	MCL-132			WASHER, Thrust Drive End	1
	SAJ-33	3.020	320 4054	BOOT, Solenoid (Not Shown)	1
	SSX-1023	3.020	320 4053	CLAMP, Boot (Not Shown)	1
	SAJ-27			SPRING, Plunger Solenoid 3-1/2 in. (Not Shown)	1

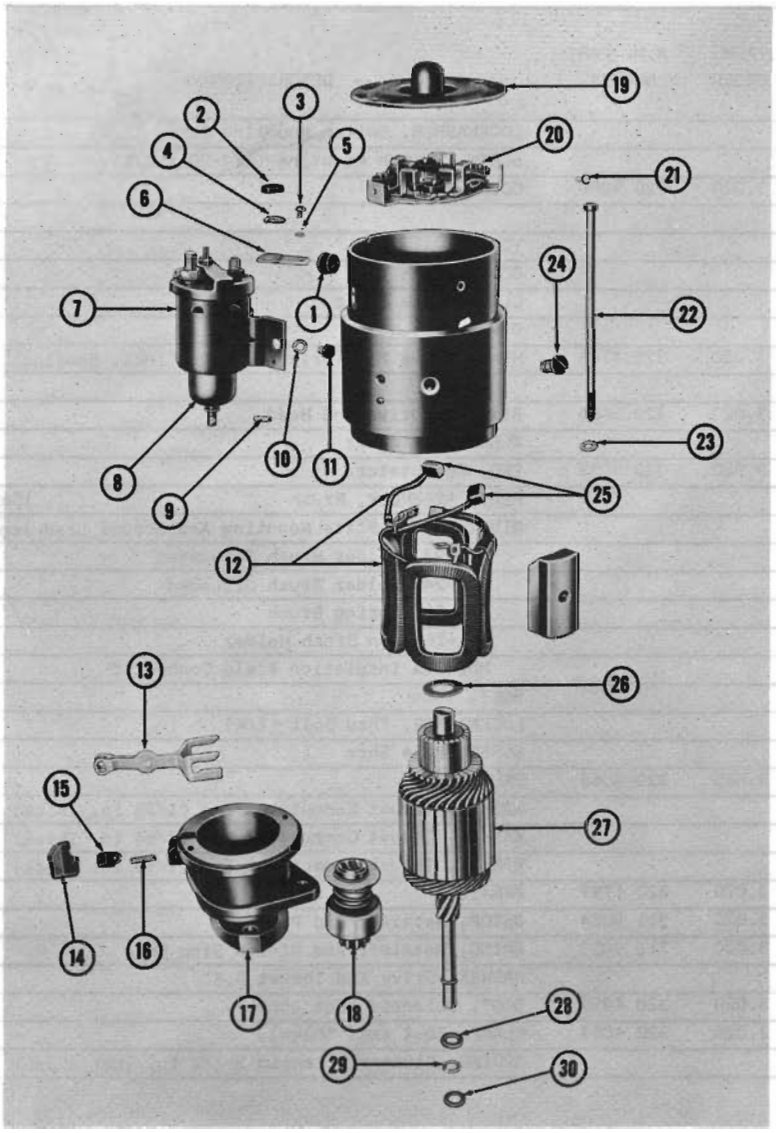

STARTING MOTOR 163 80

A.M. NO. 316 9673 AUTO-LITE NO. MDY-6105

KEY NO.	AUTO-LITE NUMBER	A.M. GROUP	A.M. PART NUMBER	DESCRIPTION	QUAN. REQ.
		3.020	320 9087	CLUTCH, Starter (Incl. all parts listed below which are coded with a #)	1
	MDY-2079-CAN			FRAME, FIELD COIL, AND BRUSH ASSEMBLY	1
1	MEC-84			GROMMET, Connector	1
2	8X-165			NUT, Terminal Stud	1
3	8X-304			SCREW, Switch Connector Lead (8-32 x 5/16)	1
4	12X-201			LOCKWASHER, Terminal Stud (3/8)	1
5	12X-195			LOCKWASHER, Switch Connector Lead Screw (#8)	1
6	MEC-82			CONNECTOR, Switch	1
7	SAJ-4006	3.022	320 9066	SWITCH, Starting Motor Solenoid (Less Plunger)	1
8	SAJ-1021	3.020	320 9049	PLUNGER, Starting Motor Solenoid	1
9	XA-904			PIN, Link	1

CANADIAN PECULIAR

KEY NO.	AUTO-LITE NUMBER	A.M. GROUP	A.M. PART NUMBER	DESCRIPTION	QUAN. REQ.
10	12X-199			LOCKWASHER, Switch Mounting Screw (1/4)	2
11	8X-467			SCREW, Switch Mounting (1/4-20 x 3/8)	2
12	MDY-1005A-	3.020	320 9050	COIL, Field	
	CAN				1
13	MEC-1058			YOKE	1
14	MEC-59			COVER, Yoke	1
15	MEC-60			CLAMP, Yoke Cover	1
16	XA-905			PIN, Yoke	1
17	PS-1357A-	3.020	320 4108	HEAD, Drive End (Drive Housing)(Incl. Bearing)	
	CAN				1
	MDD-34	3.020	320 2485	BEARING, Drive End Head	1
18				#CLUTCH, Starter	1
19	MDL-1002	3.020	320 9052	END, Commutator	1
20				PLATE ASSEMBLY, Brush)Serviced as following	
21				RIVET, Brush Plate Mounting And Ground Lead)components:	
				MDL-23 Holder Brush Insulated	
				MDL-24 Holder Brush Grounded	
				MDL-25 Spring Brush	
				MDL-26 Pin Brush Holder	
				MDL-31A Insulation Field Connector	
22	MEC-20			BOLT, Thru	2
23	12X-199			LOCKWASHER, Thru Bolt (1/4)	2
24	GK-38			SCREW, Pole Shoe	4
25	13-900	3.020	320 9063	BRUSH SET	1
26	MU-54			WASHER, Thrust Commutator End (1/32 in. Thick)	AR
26	MU-54B			WASHER, Thrust Commutator End (3/64 in. Thick)	AR
26	MU-54L			WASHER, Thrust Commutator End (1/16 in. Thick)	1
27	MDL-2049	3.020	320 1787	ARMATURE	1
28	MCL-129	3.020	311 9054	#STOP, Retainer And Pinion	1
29	MCL-127	3.020	311 9053	#RING, Retainer And Pinion Stop Snap	1
30	MCL-132			WASHER, Drive End Thrust D.E.	1
	SAJ-33	3.020	320 4054	BOOT, Solenoid (Not Shown)	1
	SSX-1023	3.020	320 4053	CLAMP, Boot (Not Shown)	1
	SAJ-27			SPRING, Plunger Solenoid 3-1/2 in. (Not Shown)	1

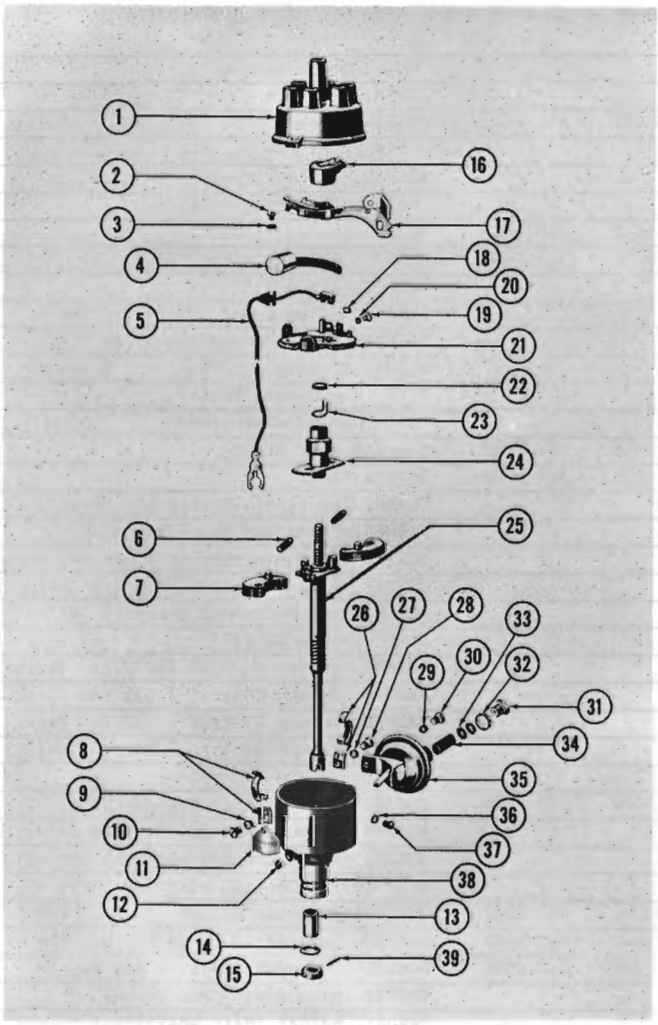

DISTRIBUTOR 163 01 (LHE)

A.M. NO. 316 9406 AUTO-LITE NO. IAT-4415

KEY NO.	AUTO-LITE NUMBER	A.M. GROUP	A.M. PART NUMBER	DESCRIPTION	QUAN. REQ.
1	IBR-1003B	3.032	320 9053	CAP ASSY., Distributor (Incl. Key No's. 40 And 41)	1
2	8X-884			SCREW, Breaker Contact Lock (#8-32 x 3/16)	1
3	SSB-38			WASHER, Breaker Contact Lock Screw (#8)	1
4	IBB-204SS-1	3.033	320 4585	CONDENSER (Replaces 320 1800)	1
5	IAT-81C	3.030	320 2010	LEAD, Primary (Low Tension Wire)	1
6	IGB-308DS	3.030	320 1809	SPRING SET, Governor Weight	1
7	IGC-2168L			WEIGHT, Governor	2
8	IBT-1007			CLAMP, Cap (Incl. Spring And Hinge)	1
9	12X-1275			WASHER, Clamp And Plate Mounting	1
10	8X-304			SCREW, Clamp And Breaker Plate Mounting (#8-32 x 5/16)	1

KEY NO.	AUTO-LITE NUMBER	A.M. GROUP	A.M. PART NUMBER	DESCRIPTION	QUAN. REQ.
11	IBT-49			TAG, Identification	1
12	IAT-100			COVER, Oil Wick	1
13	IG-579A	3.030	311 1952	BUSHING (Bronze)(On Distributor Shaft)	
				(Part of Key No. 38)	2
14	IG-313			WASHER, Thrust (Lower)	1
15	IGB-199B			COLLAR, Distributor Shaft	1
16	IBR-1016	3.035	320 9056	ROTOR	1
17	IBP-2040L	3.031	320 1801	CONTACT SET, Ignition	1
18	IGS-226			WASHER, (Nylon)	1
19	IGC-175A			SCREW, Spring Clamp (#6-32 x 3/16)	1
20	IGE-15			WASHER, Spring Clamp Screw (#6)	1
21	IAT-2072LB			PLATE, Breaker	1
22	IGH-28			WICK, Cam Sleeve (Felt)	1
23	IG-680			RING, Cam Retaining Snap	1
24	IGS-1100LAR	3.030	320 9057	CAM AND STOP PLATE	1
25	IAT-1054LB	3.030	320 2008	SHAFT, Main	1
26	IBT-1007			CLAMP, Cap (Incl. Spring And Hinge)	1
27	12X-1275			WASHER, Clamp And Plate Mounting	1
28	8X-304			SCREW, Clamp And Breaker Plate Mounting (#8-32 x 5/16)	1
29	X-1270			WASHER, Vacuum Control Mounting Screw (#10)	1
30	8X-872			SCREW, Vacuum Control Mounting (#10-32 x 1/4)	1
31	IAT-29			PLUG, Vacuum Control	1
32	IAT-30			GASKET, Vacuum Control (1/32 in. Thick)	1
33	VC-46			WASHER, Vacuum Control (.032 in. Thick)	AR
33	VC-46A			WASHER, Vacuum Control (.010 in. Thick)	AR
33	VC-46B			WASHER, Vacuum Control (.065 in. Thick)	AR
34	VC-167			SPRING, Vacuum Control	1
35	IAT-2023LL	3.046	320 1808	CONTROL, Distributor Vacuum	1
36	X-1270			WASHER, Vacuum Control Mounting Screw (#10)	1
37	8X-872			SCREW, Vacuum Control Mounting (#10-32 x 1/4)	1
38	IAT-1107			BASE ASSY., Distributor (Incl. Key No. 13)	1
39	XA-889	3.042	320 2016	PIN, Distributor Collar	1
40	IAO-20	3.032	311 8872	SPRING, Contact (Part of Key No. 1)	1
41	IAT-87	3.032	320 1798	CONTACT (Plunger)(Part of Key No. 1)	1
	IAO-10			WASHER (Main Shaft)(Not Shown)	1
	IAO-11			THRUST, Washer (Main Shaft)(Not Shown)	1

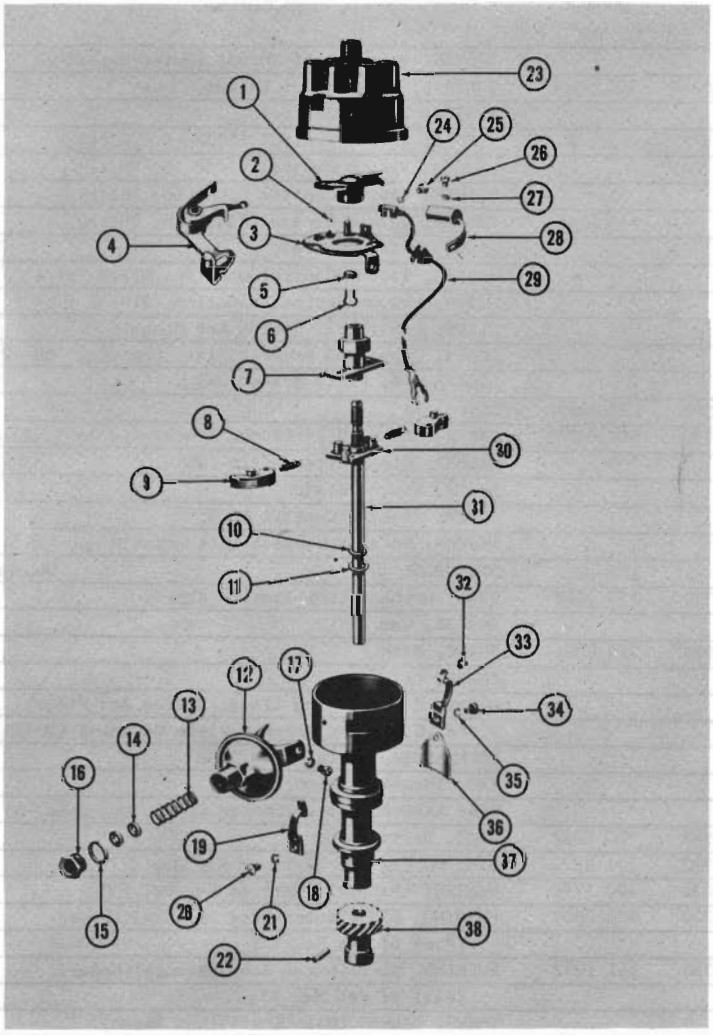

DISTRIBUTOR i63 10

A.M. NO. 316 9407 AUTO-LITE NO. IAT-4414

KEY NO.	AUTO-LITE NUMBER	A.M. GROUP	A.M. PART NUMBER	DESCRIPTION	QUAN. REQ.
1	IBR-1016	3.035	320 9056	ROTOR	1
2	IGS-226			WASHER (Nylon)	1
3	IAT-2072IA			PLATE, Breaker	1
4	IBP-2040L	3.031	320 1801	CONTACT SET, Ignition	1
5	IGH-28			WICK, Cam Sleeve (Felt)	1
6	IG-680			RING, Cam Snap	1
7	IGS-1100LAU	3.030	320 9058	CAM AND STOP PLATE	1
8	IGE-2935	3.030	320 9055	SPRING SET, Governor Weight	1
9	IGC-2168L			WEIGHT, Governor	2
10	IAO-10			WASHER, Drive Shaft Thrust (Inner-Upper)	1

CANADIAN PECULIAR

KEY NO.	AUTO-LITE NUMBER	A.M. GROUP	A.M. PART NUMBER	DESCRIPTION	QUAN. REQ.
11	IAO-11			WASHER, Drive Shaft Thrust (Outer-Upper)	1
12	IAT-2023LT	3.0346	320 9061	CONTROL, Distributor Vacuum	1
13	VC-49			SPRING, Vacuum Control	1
14	VC-46			WASHER, Vacuum Control (.032 in. Thick)	AR
14	VC-46A			WASHER, Vacuum Control (.010 in. Thick)	AR
14	VC-46B			WASHER, Vacuum Control (.065 in. Thick)	AR
15	IAT-30			GASKET, Vacuum Control (1/32 in. Thick)	1
16	IAT-29			PLUG, Vacuum Control	1
17	X-1270			WASHER, Vacuum Control Mounting Screw (#10)	2
18	8X-872			SCREW, Vacuum Control Mounting (#10-32 x 1/4)	2
19	IBT-1007			CLAMP, Cap (Incl. Spring And Hinge)	1
20	8X-304			SCREW, Clamp And Breaker Plate Mounting (#8-32 x 3/8)	1
21	12X-175			LOCKWASHER, Plate Screw (#8)	1
22	XA-889	3.042	320 9183	PIN, Gear	1
23	IBR-1003B	3.032	320 9053	CAP ASSEMBLY, Distributor (Incl. Key No's. 39 And 40)	1
24	IGE-15			WASHER, Clamp Screw Plain (#6)	1
25	IGC-175A			SCREW, Spring Clamp	1
26	8X-884			SCREW, Breaker Contact Lock	1
27	SSB-38			WASHER, Breaker Contact Lock Screw Plain (#8)	1
28	IBB-2042SS-1	3.033	320 4585	CONDENSER (Replaces 320 1800)	1
29	IAT-81B	3.030	320 9054	LEAD, Primary (Low Tension Wire)	1
30	IGS-99			SPACER, Cam	1
31	IAT-2086LA	3.030	320 9060	SHAFT, Main	1
32	IAT-100			COVER, Oil Wick	1
33	IBP-1007			CLAMP, Cap Locating (Incl. Spring And Hinge)	1
34	8X-304			SCREW, Clamp And Breaker Plate Mounting (#8-32 x 3/8)	1
35	12X-195			LOCKWASHER, Plate Screw Lock	1
36	IBT-49			TAG, Identification	1
37	IAT-1088B			BASE ASSEMBLY, Distributor (Incl. Key No's. 41 And 42)	1
38	GE-107	3.042	320 9062	GEAR, Distributor	1
39	IAO-20	3.032	311 8872	SPRING, Contact (Part of Key No. 23)	1
40	IAT-87	3.032	320 1798	CONTACT (Plunger)(Part of Key No. 23)	1
41	IAZ-30	3.030	320 2809	BUSHING, Distributor Base (Bronze)(Lower) (Part of Key No. 37)	1
42	IG-579A	3.030	311 1952	BUSHING, Distributor Base (Bronze)(Upper) (Part of Key No. 37)	1
	IG-90B			THRUST WASHER (Main Shaft)(Not Shown)	2

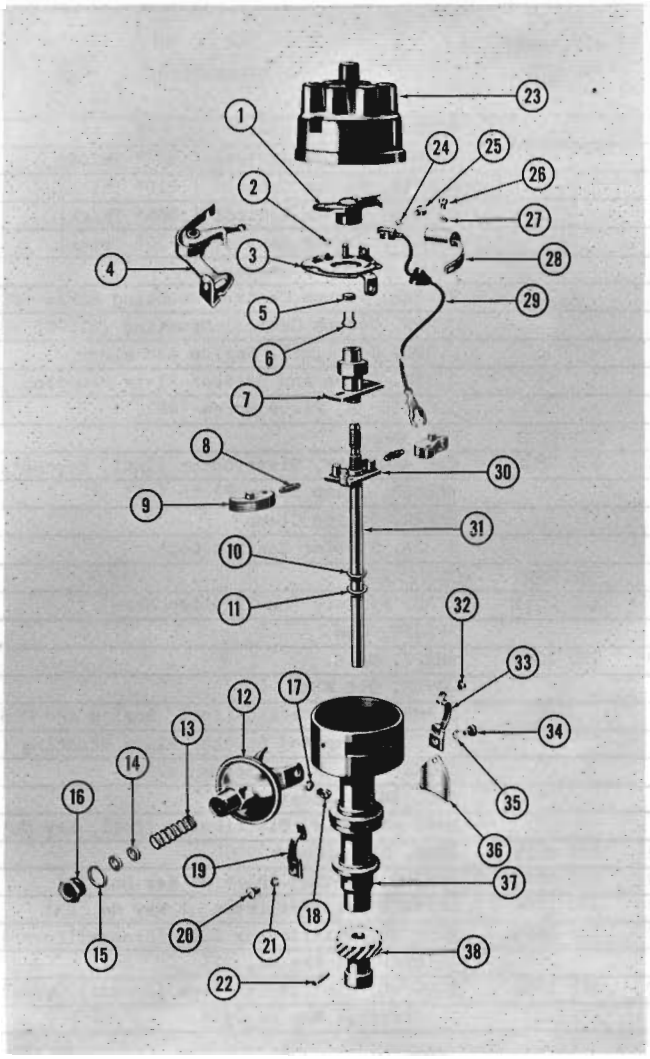

DISTRIBUTOR 164-165 10-80 (V8)

A.M. NO. 317 3163

AUTO-LITE NO. IBP-4109A

KEY NO.	AUTO-LITE NUMBER	A.M. GROUP	A.M. PART NUMBER	DESCRIPTION	QUAN. REQ.
1	IBK-1016	3.035	320 1799	ROTOR	1
2	IGS-226			WASHER, (Nylon)	1
3	IBP-2041AS			PLATE, Breaker	1
4	IBP-2040L	3.031	320 1801	CONTACT SET, Ignition	1
5	IGH-28			WICK, Cam Sleeve (Felt)	1
6	IG-680			RING, Cam Snap	1
7	IBP-2209LH	3.030	320 1802	CAM AND STOP PLATE	1
8	IGB-401AS	3.030	320 2810	SPRING SET, Weight	1
9	IGC-2168L			WEIGHT, Governor	2
10	IAO-10			WASHER, Drive Shaft Thrust (Inner-Upper)	1
11	IAO-11			WASHER, Drive Shaft Thrust (Outer-Upper)	1
12	IBP-2023LC	3.046	320 1803	CONTROL, Distributor Vacuum	1

KEY NO.	AUTO-LITE NUMBER	A.M. GROUP	A.M. PART NUMBER	DESCRIPTION	QUAN. REQ.
13	VC-45			SPRING, Vacuum Control	1
14	VC-46			WASHER, Vacuum Control (.032" Thick)	AR
14	VC-46A			WASHER, Vacuum Control (.010" Thick)	AR
14	VC-46B			WASHER, Vacuum Control (.065" Thick)	AR
15	IAT-30			GASKET, Vacuum Control (1/32" Thick)	1
16	IAZ-33			PLUG, Vacuum Control	1
17	X-1270			WASHER, Vacuum Control Mounting Screw (#10)	2
18	8X-872			SCREW, Vacuum Control Mounting (#10-32 x 1/4)	2
19	IAZ-1015			CLAMP, Cap (Incl. Spring And Hinge)	1
20	8X-55			SCREW, Clamp And Breaker Plate Mounting (#8-32 x 3/8)	1
21	12X-195			LOCKWASHER, Plate Screw (#8)	1
22	XA-960	3.042	320 9203	PIN, Gear	1
23	IKB-1003C	3.032	320 2808	CAP ASSEMBLY, Distributor (Incl. Key No's. 39 And 40)	1
24	IGE-15			WASHER, Clamp Screw Plain (#6)	1
25	IGC-175A			SCREW, Spring Clamp	1
26	8X-884			SCREW, Breaker Contact Lock	1
28	IAT-3076DS	3.033	320 9088	CONDENSER	1
29	IAT-81RA	3.030	320 2011	LEAD, Primary (Low Tension Wire)	1
30	IGS-99			SPACER, Cam	1
31	IAZ-1045L	3.030	320 2009	SHAFT, Main	1
32	IAT-100			COVER, Oil Wick	1
33	IAZ-1014			CLAMP, Cap Locating (Incl. Spring And Hinge)	1
34	8X-55			SCREW, Clamp And Breaker Plate Mounting (#8-32 x 3/8)	1
35	12X-195			LOCKWASHER, Plate Screw Lock	1
36	IBT-49			TAG, Identification	1
37	IBP-1020			BASE ASSEMBLY, Distributor (Incl. Key No's. 41 And 42)	1
38	GE-108S	3.042	320 2015	GEAR, Distributor	1
39	IAO-20	3.032	311 8872	SPRING, Contact (Part of Key No. 23)	1
40	IAT-87	3.032	320 1798	CONTACT (Plunger)(Part of Key No. 23)	1
41	IAZ-30	3.030	320 2809	BUSHING, Distributor Base (Bronze)(Lower) (Part of Key No. 37)	1
42	IG-579A	3.030	311 1952	BUSHING, Distributor Base (Bronze)(Upper) (Part of Key No. 37)	1

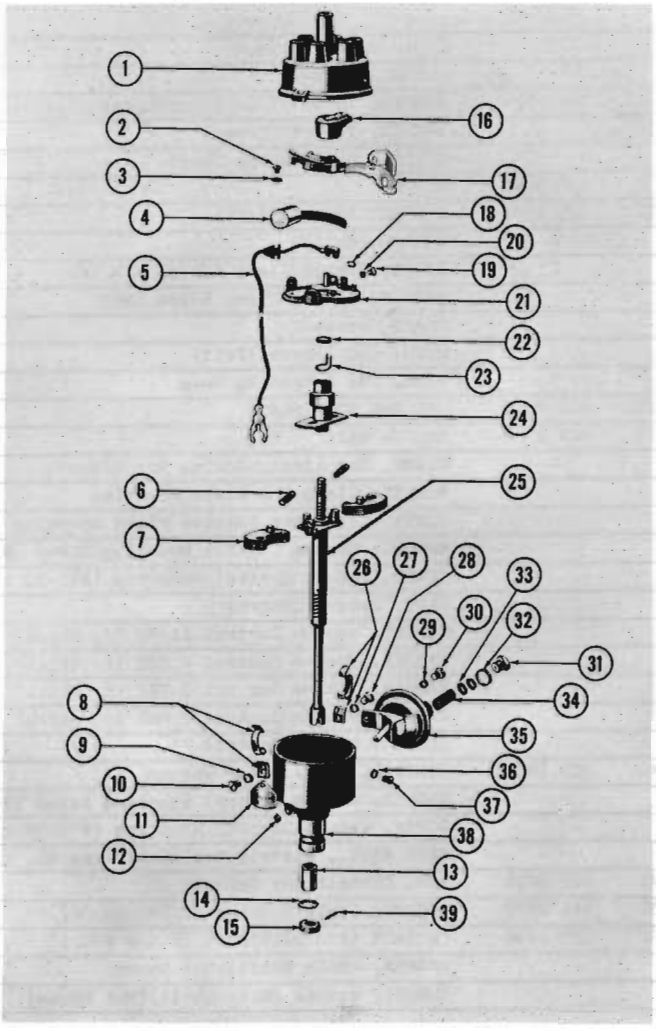

DISTRIBUTOR 164-165 01 (LHE)

A.M. NO. 317 3161

AUTO-LITE NO. IAT-4415A

KEY NO.	AUTO-LITE NUMBER	A.M. GROUP	A.M. PART NUMBER	DESCRIPTION	QUAN. REQ.
1	IBR-1003B	3.032	320 9053	CAP ASSY., Distributor (Incl. Key No's. 40 And 41)	1
2	8X-884			SCREW, Breaker Contact Lock (#8-32 x 3/16)	1
4	IAT-3076DS	3.033	320 9088	CONDENSER	1
5	IAT-81C	3.030	320 2010	LEAD, Primary (Low Tension Wire)	1
6	IGB-308DS	3.030	320 1809	SPRING SET, Governor Weight	1
7	IGC-2168L			WEIGHT, Governor	2
8	IBT-1007			CLAMP, Cap (Incl. Spring And Hinge)	1
9	12X-1275			WASHER, Clamp And Plate Mounting	1
10	8X-304			SCREW, Clamp And Breaker Plate Mounting (#8-32 x 5/16)	1

CANADIAN PECULIAR

KEY NO.	AUTO-LITE NUMBER	A.M. GROUP	A.M. PART NUMBER	DESCRIPTION	QUAN. REQ.
11	IBT-49			TAG, Identification	1
12	IAT-100			COVER, Oil Wick	1
13	IG-579A	3.030	311 1952	BUSHING (Bronze)(On Distributor Shaft)(Part of Key NO. 38)	2
14	IG-313			WASHER, Thrust (Lower)	1
15	IGB-199			COLLAR, Distributor Shaft	1
15	IBR-1016	3.035	320 9056	ROTOR	1
17	IBP-2040L	3.031	320 1801	CONTACT SET, Ignition	1
18	IGS-226			WASHER (Nylon)	1
19	IGC-175A			SCREW, Spring Clamp (#6-32 x 3/16)	1
20	IGE-15			WASHER, Spring Clamp Screw (#6)	1
21	IAT-2072LB			PLATE, Breaker	1
22	IGH-28			WICK, Cam Sleeve (Felt)	1
23	IG-680			RING, Cam Retaining Snap	1
24	IGS-1100LAR	3.030	320 9057	CAM AND STOP PLATE	1
25	IAT-1054LB	3.030	320 2008	SHAFT, Main	1
26	IBT-1007			CLAMP, Cap (Incl. Spring And Hinge)	1
27	12X-1275			WASHER, Clamp And Plate Mounting	1
28	8X-304			SCREW, Clamp And Breaker Plate Mounting (#8-32 x 5/16)	1
29	X-1270			WASHER, Vacuum Control Mounting Screw (#10)	1
30	8X-872			SCREW, Vacuum Control Mounting (#10-32 x 1/4)	1
31	IAZ-33			PLUG, Vacuum Control	1
32	IAT-30			GASKET, Vacuum Control (1/32 in. Thick)	1
33	VC-46			WASHER, Vacuum Control (.032 in. Thick)	AR
33	VC-46A			WASHER, Vacuum Control (.010 in. Thick)	AR
33	VC-46B			WASHER, Vacuum Control (.065 in. Thick)	AR
34	VC-167			SPRING, Vacuum Control	1
35	IAT-2023LL	3.046	320 1808	CONTROL, Distributor Vacuum	1
36	X-1270			WASHER, Vacuum Control Mounting Screw (#10)	1
37	8X-872			SCREW, Vacuum Control Mounting (#10-32 x 1/4)	1
38	IAT-1107			BASE ASSY., Distributor (Incl. Key No. 13)	1
39	XA-889	3.042	320 2016	PIN, Distributor Collar	1
40	IAO-20	3.032	311 8872	SPRING, Contact (Part of Key No. 1)	1
41	IAT-87	3.032	320 1798	CONTACT (Plunger)(Part of Key No. 1)	1
	IAO-10			WASHER, (Main Shaft)(Not Shown)	1
	IAO-11			THRUST, Washer (Main Shaft)(Not Shown)	1

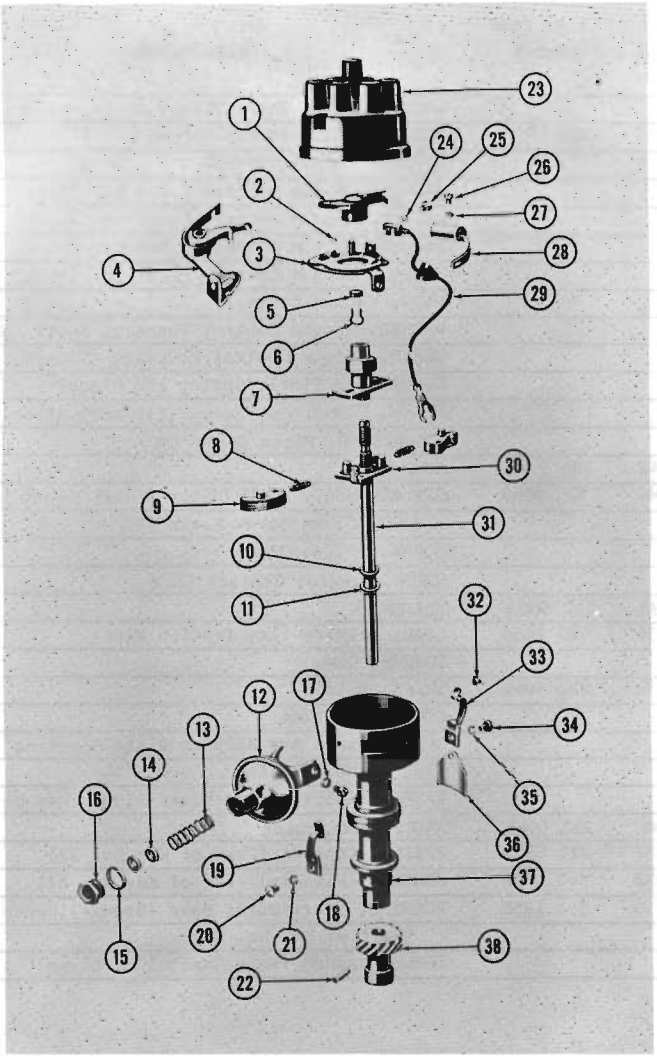

DISTRIBUTOR 164-165 01 (OHV-196): 164 10 (SIX)

A.M. NO. 317 3162 AUTO-LITE NO. IAT-4414A

KEY NO.	AUTO-LITE NUMBER	A.M. GROUP	A.M. PART NUMBER	DESCRIPTION	QUAN. REQ.
1	IBR-1016	3.035	320 9056	ROTOR	1
2	IGS-226			WASHER (Nylon)	1
3	IAT-2072LS			PLATE, Breaker	1
4	IBP-2040L	3.031	320 1801	CONTACT SET, Ignition	1
5	IGH-28			WICK, Cam Sleeve (Felt)	1
6	IG-680			RING, Cam Snap	1
7	IGS-1100LAU	3.030	320 9058	CAM AND STOP PLATE	1
8	IGE-29BS	3.030	320 9055	SPRING SET, Governor Weight	1
9	IGC-2168L			WEIGHT, Governor	2
10	IAO-10			WASHER, Drive Shaft Thrust (Inner-Upper)	1

CANADIAN PECULIAR

KEY NO.	AUTO-LITE NUMBER	A.M. GROUP	A.M. PART NUMBER	DESCRIPTION	QUAN. REQ.
11	IAO-11			WASHER, Drive Shaft Thrust (Outer-Upper)	1
12	IAT-2023LT	3.046	320 9061	CONTROL, Distributor Vacuum	1
13	VC-49			SPRING, Vacuum Control	1
14	VC-46			WASHER, Vacuum Control (.032 in. Thick)	AR
14	VC-46A			WASHER, Vacuum Control (.010 in. Thick)	AR
14	VC-46B			WASHER, Vacuum Control (.065 in. Thick)	AR
15	IAT-30			GASKET, Vacuum Control (1/32 in. Thick)	1
16	IAZ-33			PLUG, Vacuum Control	1
17	X-1270			WASHER, Vacuum Control Mounting Screw (#10)	2
18	8X-872			SCREW, Vacuum Control Mounting (#10-32 x 1/4)	2
19	IBT-1007			CLAMP, Cap (Incl. Spring And Hinge)	1
20	8X-304			SCREW, Clamp And Breaker Plate Mounting (#8-32 x 3/8)	1
21	12X-1275			LOCKWASHER, Plate Screw (#8)	1
22	XA-949	3.042	320 9183	PIN, Gear	1
23	IBR-1003B	3.042	320 9053	CAP ASSEMBLY, Distributor (Incl. Key No'S. 39 And 40)	1
24	IGE-15			WASHER, Clamp Screw Plain (#6)	1
25	IGC-175A			SCREW, Spring Clamp	1
26	8X-3504			SCREW, Breaker Contact Lock	1
28	IAT-3076DS	3.033	320 9088	CONDENSER	1
29	IAT-81B	3.030	320 9054	LEAD, Primary (Low Tension Wire)	1
30	IGS-99			SPACER, Cam	1
31	IAT-2086LA	3.030	320 9060	SHAFT, Main	1
32	IAT-100			COVER, Oil Wick	1
34	8X-304			SCREW, Clamp And Breaker Plate Mounting (#8-32 x 3/8)	1
36	IBT-49			TAG, Identification	1
37	IAT-1088B			BASE ASSEMBLY, Distributor (Incl. Key No's. 41 And 42)	1
38	GE-107S	3.042	320 9062	GEAR, Distributor	1
39	IAO-20	3.032	311 8872	SPRING, Contact (Part of Key No. 23)	1
40	IAT-87	3.032	320 1798	CONTACT (Plunger)(Part of Key No. 23)	1
42	IG-579A	3.030	311 1952	BUSHING, Distributor Base (Bronze)(Upper) (Part of Key No. 37)	1
	IG-90B			THRUST WASHER (Main Shaft)(Not Shown)	2

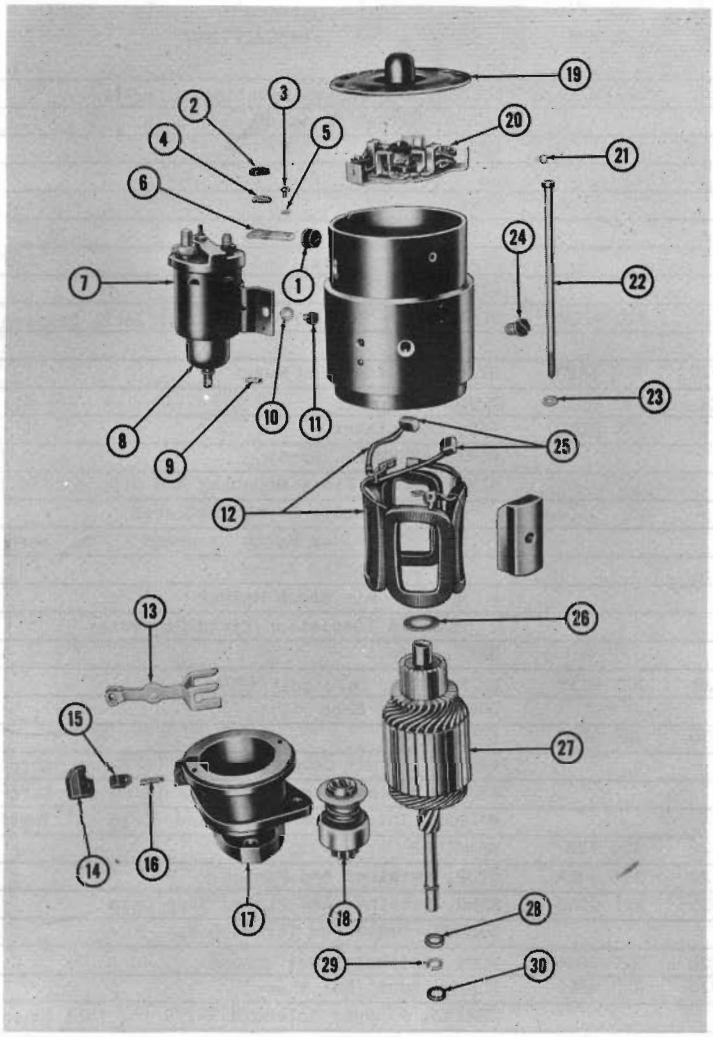

STARTING MOTOR 164-165 10-80 (V8)

A.M. NO. 317 4521

AUTO-LITE NO. MDY-6108

KEY NO.	AUTO-LITE NUMBER	A.M. GROUP	A.M. PART NUMBER	DESCRIPTION	QUAN. REQ.
	MDY-2079-CAN			FRAME, FIELD COIL, AND BRUSH ASSEMBLY	1
1	MEC-84			GROMMET, Connector	1
2	8X-165			NUT, Terminal Stud	1
3	8X-304			SCREW, Switch Connector Lead (8-32 x 5/16)	1
4	12X-201			LOCKWASHER, Terminal Stud (3/8)	1
5	12X-195			LOCKWASHER, Switch Connector Lead Screw (#8)	1
6	MEC-82			CONNECTOR, Switch	1
7	SAJ-4006	3.020	320 9066	SWITCH, Starting Motor Solenoid (Less Plunger)	1
8	SAJ-1021	3.020	320 9049	PLUNGER, Starting Motor Solenoid	1
9	XA-904			PIN, Link	1

CANADIAN PECULIAR

KEY NO.	AUTO-LITE NUMBER	A.M. GROUP	A.M. PART NUMBER	DESCRIPTION	QUAN. REQ.
10	12X-199	3.020	320 9039	LOCKWASHER, Switch Mounting Screw (1/4)	2
11	8X-467			SCREW, Switch Mounting (1/4-20 x 3/8)	2
12	MDY-1005A-	3.020	320 9050	COIL, Field	
	CAN				1
13	MEC-1058			YOKE	1
14	MEC-59			COVER, Yoke	1
15	MEC-60			CLAMP, Yoke Cover	1
16	XA-905			PIN, Yoke	1
17	PS-1422A	3.020	320 4108	HEAD, Drive End (Drive Housing)(Incl. Bearing)	
	CAN				1
	MOD-34	3.020	320 2485	BEARING, Drive End Head	1
18	18-11	3.020	320 9087	CLUTCH, Starter	1
19	MDL-1002	3.020	320 9052	END, Commutator	1
20				PLATE ASSEMBLY, Brush)Serviced as following	
21				RIVET, Brush Plate Mounting And Ground Lead)components:	
				MDL-23 Holder Brush Insulated	
				MDL-24 Holder Brush Grounded	
				MDL-25 Spring Brush	
				MDL-26 Pin Brush Holder	
				MDL-31A Insulation Field Connector	
22	MEC-20			BOLT, Thru	2
23	12X-199	3.020	320 9039	LOCKWASHER, Thru Bolt (1/4)	2
24	GK-38			SCREW, Pole Shoe	4
25	13-900	3.020	320 9063	BRUSH SET	1
26	MU-54			WASHER, Thrust Commutator End (1/32 in. Thick)	AR
26	MU-54B			WASHER, Thrust Commutator End (3/64 in. Thick)	AR
26	MU-54L			WASHER, Thrust Commutator End (1/16 in. Thick)	1
27	MDL-2049	3.020	320 1787	ARMATURE	1
28	MCL-129	3.020	311 9054	STOP, Retainer And Pinion	1
29	MCL-127	3.020	311 9053	RING, Retainer And Pinion Stop Snap	1
30	MCL-132			WASHER, Drive End Thrust D.E.	1
	SAJ-49	3.020	320 9086	BOOT, Solenoid (Not Shown)	1
	SSX-1023	3.020	320 4053	CLAMP, Boot (Not Shown)	1
	SAJ-27			SPRING, Plunger Solenoid 3-1/2 in. (Not Shown)	1
	MDY-65L	3.020	320 9083	COVER, Left	1
	MDY-65R	3.020	320 9082	COVER, Right	1

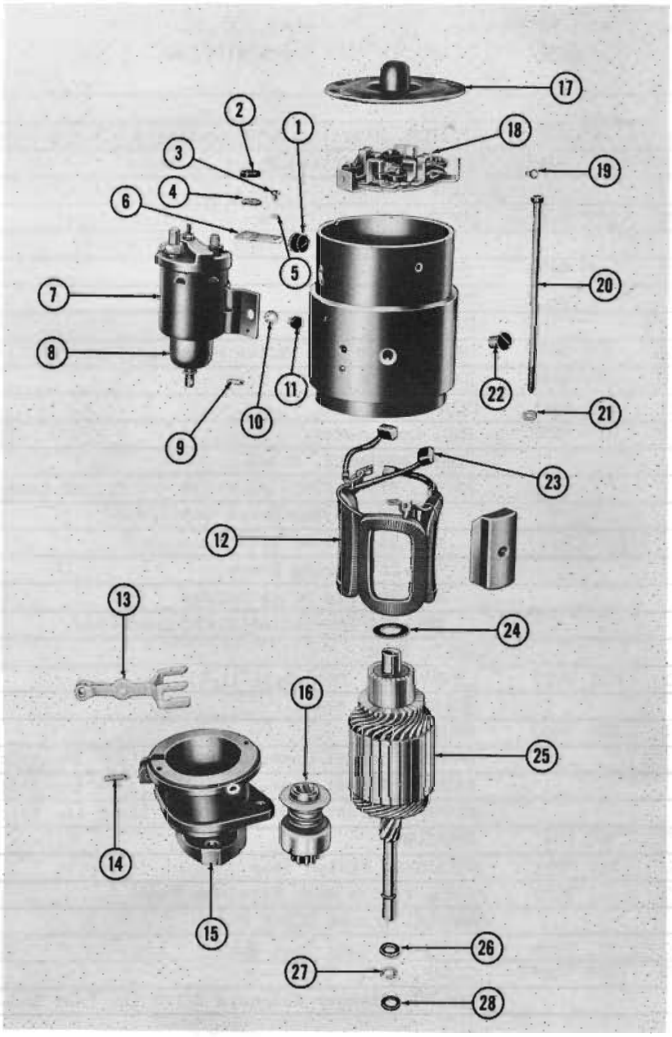

STARTING MOTOR 164-165 01 (LHE) (OHV-196): 164 10 (SIX)

A.M. NO. 317 4522 AUTO-LITE NO. MEC-6102

KEY NO.	AUTO-LITE NUMBER	A.M. GROUP	A.M. PART NUMBER	DESCRIPTION	QUAN. REQ.
	MEC-2083CAN			FRAME, FIELD COIL, AND BRUSH ASSEMBLY	1
1	MEC-84			GROMMET, Connector	1
2	8X-165			NUT, Terminal Stud (3/8-16)	1
3	8X-304			SCREW, Switch Connecting (8-32 x 5/16)	1
4	12X-201			LOCKWASHER, Terminal Stud (3/8)	1
5	12X-195			LOCKWASHER, Switch Connecting And Ground Lead And Brush Plate Mounting Screw (#8)	5

KEY NO.	AUTO-LITE NUMBER	A.M. GROUP	A.M. PART NUMBER	DESCRIPTION	QUAN. REQ.
6	MEC-26			CONNECTOR, Switch	1
7	SAJ-4008	3.020	320 9081	SWITCH, Starting Motor Solenoid (Less Plunger)	1
8	SAJ-1021	3.020	320 9049	PLUNGER, Starting Motor Solenoid	1
9	XA-904			PIN, Link	1
10	12X-199	3.020	320 9039	LOCKWASHER, Switch Mounting Screw (1/4)	2
11	8X-467			SCREW, Switch Mounting (1/4-20 x 3/8)	2
12	MEC-1005AS	3.020	320 9064	COIL, Field	1
13	MEC-1058			YOKE	1
14	XA-905			PIN, Yoke	1
15	PS-1411A	3.020	320 9079	HEAD, Drive End (Drive Housing)(Incl. Bearing)	1
	MDD-34	3.020	320 2485	BEARING, Drive End Head	1
16	18-11	3.020	320 9087	CLUTCH, Starter	1
17	MDL-1002	3.020	320 9052	END, Commutator	1
18				PLATE ASSEMBLY, Brush)Serviced as following	
19				RIVET, Brush Plate Mounting And Ground Lead)components:	
				MDL-23 Holder Brush Insulated	
				MDL-24 Holder Brush Grounded	
				MDL-25 Spring Brush	
				MDL-26 Pin Brush Holder	
				MDL-31A Insulation Field Connector	
20	MEC-20			BOLT, Thru	2
21	12X-199	3.020	320 9039	LOCKWASHER, Thru Bolt (1/4)	2
22	GK-38			SCREW, Pole Shoe	4
23	13-900	3.020	320 9063	BRUSH SET	1
24	MU-54			WASHER, Thrust Commutator End (1/32 in. Thick)	AR
24	MU-54B			WASHER, Thrust Commutator End (3/64 in. Thick)	AR
24	MU-54L			WASHER, Thrust Commutator End (1/16 in. Thick)	1
25	MDL-2049	3.020	320 1787	ARMATURE	1
26	MCL-129	3.020	311 9054	RETAINER, Pinion Stop	1
27	MCL-127	3.020	311 9053	RING, Pinion Stop Retainer Snap	1
28	MCL-132			WASHER, Thrust Drive End	1
	MDT-41	3.020	320 9085	BOOT, Solenoid (Not Shown)	1
	MEC-60	3.020	320 9084	CLAMP, Boot	1
	SAJ-27			SPRING, Plunger Solenoid 3-1/2 in. (Not Shown)	1

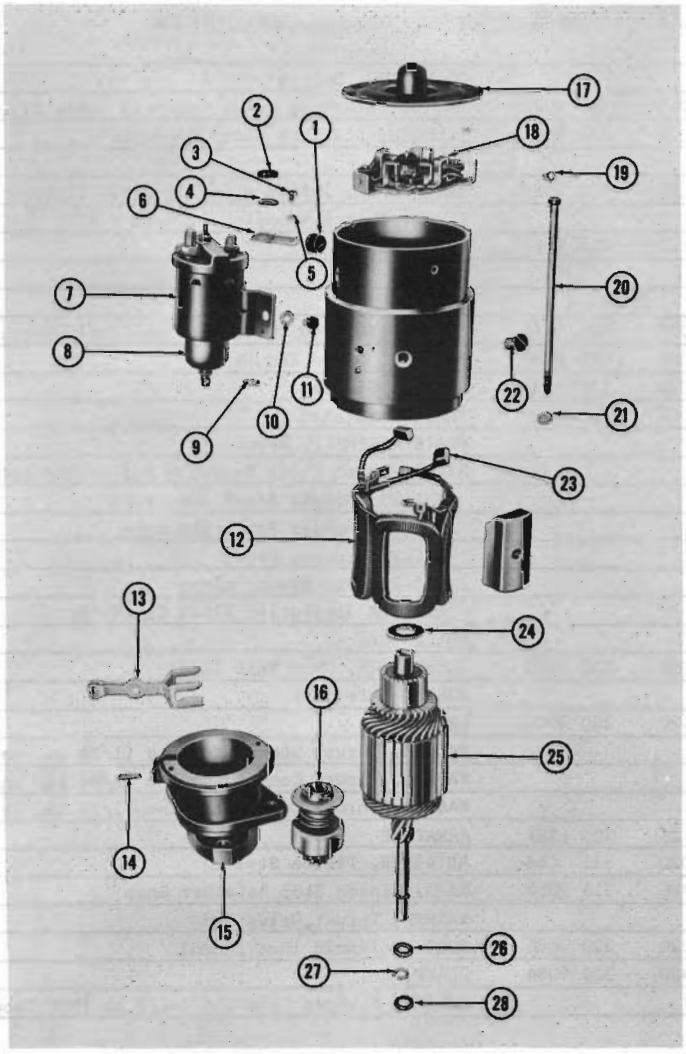

STARTING MOTOR 165 01-10-80 (OHV-232)

A.M. NO. 317 9095

AUTO-LITE NO. MDY-6110

KEY NO.	AUTO-LITE NUMBER	A.M. GROUP	A.M. PART NUMBER	DESCRIPTION	QUAN. REQ.
	MEC-2083CAN			FRAME, FIELD COIL, AND BRUSH ASSEMBLY	1
1	MEC-84			GROMMET, Connector	1
2	8X-165			NUT, Terminal Stud (3/8-16)	1
3	8X-304			SCREW, Switch Connecting (8-32 x 5/16)	1
4	12X-201			LOCKWASHER, Terminal Stud (3/8)	1
5	12X-195			LOCKWASHER, Switch Connecting And Ground Lead And Brush Plate Mounting Screw (#8)	5

KEY NO.	AUTO-LITE NUMBER	A.M. GROUP	A.M. PART NUMBER	DESCRIPTION	QUAN. REQ.
6	MEC-26			CONNECTOR, Switch	1
7	SAJ-4008	3.020	320 9081	SWITCH, Starting Motor Solenoid (Less Plunger)	1
8	SAJ-1021	3.020	320 9049	PLUNGER, Starting Motor Solenoid	1
9	XA-904			PIN, Link	1
10	12X-199	3.020	320 9039	LOCKWASHER, Switch Mounting Screw (1/4)	2
11	8X-467			SCREW, Switch Mounting (1/4-20 x 3/8)	2
12	OE-1740	3.020	320 9163	COIL, Field	1
13	MEC-1058			YOKE	1
14	XA-905			PIN, Yoke	1
15	PS-1411A	3.020	320 9079	HEAD, Drive End (Dive Housing)(Incl. Bearing)	1
	MDD-34	3.020	320 2485	BEARING, Drive End Head	1
16	18-11	3.020	320 9087	CLUTCH, Starter	1
17	MDL-1002	3.020	320 9052	END, Commutator	1
18				PLATE ASSEMBLY, Brush)Serviced as following	
19				RIVET, Brush Plate Mounting And Ground Lead)components:	
				MDL-23 Holder Brush Insulated	
				MDL-24 Holder Brush Grounded	
				MDL-25 Spring Brush	
				MDL-26 Pin Brush Holder	
				MDL-31A Insulation Field Connector	
20	MEC-20			BOLT, Thru	2
21	12X-199	3.020	320 9039	LOCKWASHER, Thru Bolt (1/4)	2
22	GK-38			SCREW, Pole Shoe	4
23	13-900	3.020	320 9063	BRUSH SET	1
24	MU-54			WASHER, Thrust Commutator End (1/32 in. Thick)	AR
24	MU-54B			WASHER, Thrust Commutator End (3/64 in. Thick)	AR
24	MU-54L			WASHER, Thrust Commutator End (1/16 in. Thick)	1
25	MDL-2049	3.020	320 1787	ARMATURE	1
26	MCL-129	3.020	311 9054	RETAINER, Pinion Stop	1
27	MCL-127	3.020	311 9053	RING, Pinion Stop Retainer Snap	1
28	MCL-132			WASHER, Thrust Drive End	1
	MDT-41	3.020	320 9085	BOOT, Solenoid (Not Shown)	1
	MEC-60	3.020	320 9084	CLAMP, Boot	1
	SAJ-27			SPRING, Plunger Solenoid 3-1/2 in.(Not Shown)	1

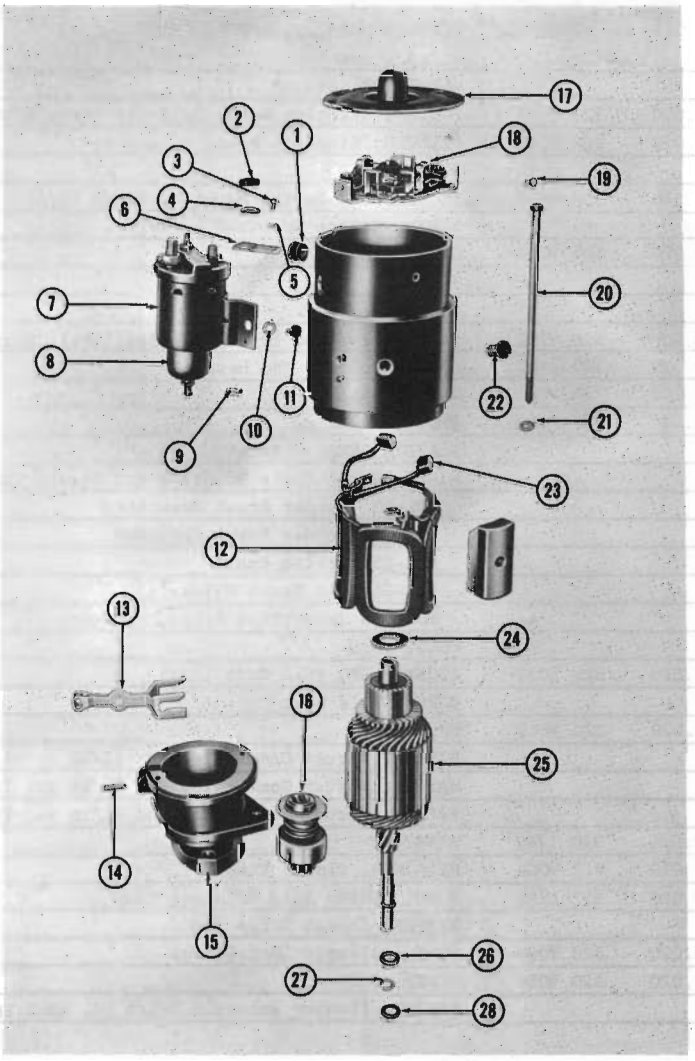

STARTING MOTOR 165 01-10 (OHV-199)

A.M. NO. 317 8993 AUTO-LITE NO. MEC-6103

KEY NO.	AUTO-LITE NUMBER	A.M. GROUP	A.M. PART NUMBER	DESCRIPTION	QUAN. REQ.
	MEC-2083CAN			FRAME, FIELD COIL, AND BRUSH ASSEMBLY	1
1	MEC-84			GROMMET, Connector	1
2	8X-165			NUT, Terminal Stud (3/8-16)	1
3	8X-304			SCREW, Switch Connecting (8-32 x 5/16)	1
4	12X-201			LOCKWASHER, Terminal Stud (3/8)	1
5	12X-195			LOCKWASHER, Switch Connecting And Ground Lead And Brush Plate Mounting Screw (#8)	5

CANADIAN PECULIAR

KEY NO.	AUTO-LITE NUMBER	A.M. GROUP	A.M. PART NUMBER	DESCRIPTION	QUAN. REQ.
6	MEC-26			CONNECTOR, Switch	1
7	SAJ-4008	3.020	320 9081	SWITCH, Starting Motor Solenoid (Less Plunger)	1
8	SAJ-1021	3.020	320 9049	PLUNGER, Starting Motor Solenoid	1
9	XA-904			PIN, Link	1
10	12X-199	3.020	320 9039	LOCKWASHER, Switch Mounting Screw (1/4)	2
11	8X-467			SCREW, Switch Mounting (1/4-20 x 3/8)	2
12	MEC-1005AS	3.020	320 9064	COIL, Field	1
13	MEC-1058			YOKE	1
14	XA-905			PIN, Yoke	1
15	OE-1739	3.020	320 9162	HEAD, Drive End (Drive Housing)(Incl. Bearing)	1
	MDD-34	3.020	320 2485	BEARING, Drive End Head	1
16	18-11	3.020	320 9087	CLUTCH, Starter	1
17	MDL-1002	3.020	320 9052	END, Commutator	1
18				PLATE ASSEMBLY, Brush)Serviced as following	
19				RIVET, Brush Plate Mounting And Ground Lead)components:	
				MDL-23 Holder Brush Insulated	
				MDL-24 Holder Brush Grounded	
				MDL-25 Spring Brush	
				MDL-26 Pin Brush Holder	
				MDL-31A Insulation Field Connector	
20	MEC-20			BOLT, Thru	2
21	12X-199	3.020	320 9039	LOCKWASHER, Thru Bolt (1/4)	2
22	GK-38			SCREW, Pole Shoe	4
23	13-900	3.020	320 9063	BRUSH SET	1
24	MU-54			WASHER, Thrust Commutator End (1/32 in. Thick)	AR
24	MU-54B			WASHER, Thrust Commutator End (3/64 in. Thick)	AR
24	MU-54L			WASHER, Thrust Commutator End (1/16 in. Thick)	1
25	MDL-2049	3.020	320 1787	ARMATURE	1
26	MCL-129	3.020	311 9054	RETAINER, Pinion Stop	1
27	MCL-127	3.020	311 9053	RING, Pinion Stop Retainer Snap	1
28	MCL-132			WASHER, Thrust Drive End	1
	MDT-41	3.020	320 9085	BOOT, Solenoid (Not Shown)	1
	MEC-60	3.020	320 9084	CLAMP, Boot	1
	SAJ-27			SPRING, Plunger Solenoid 3-1/2 in. (Not Shown)	1

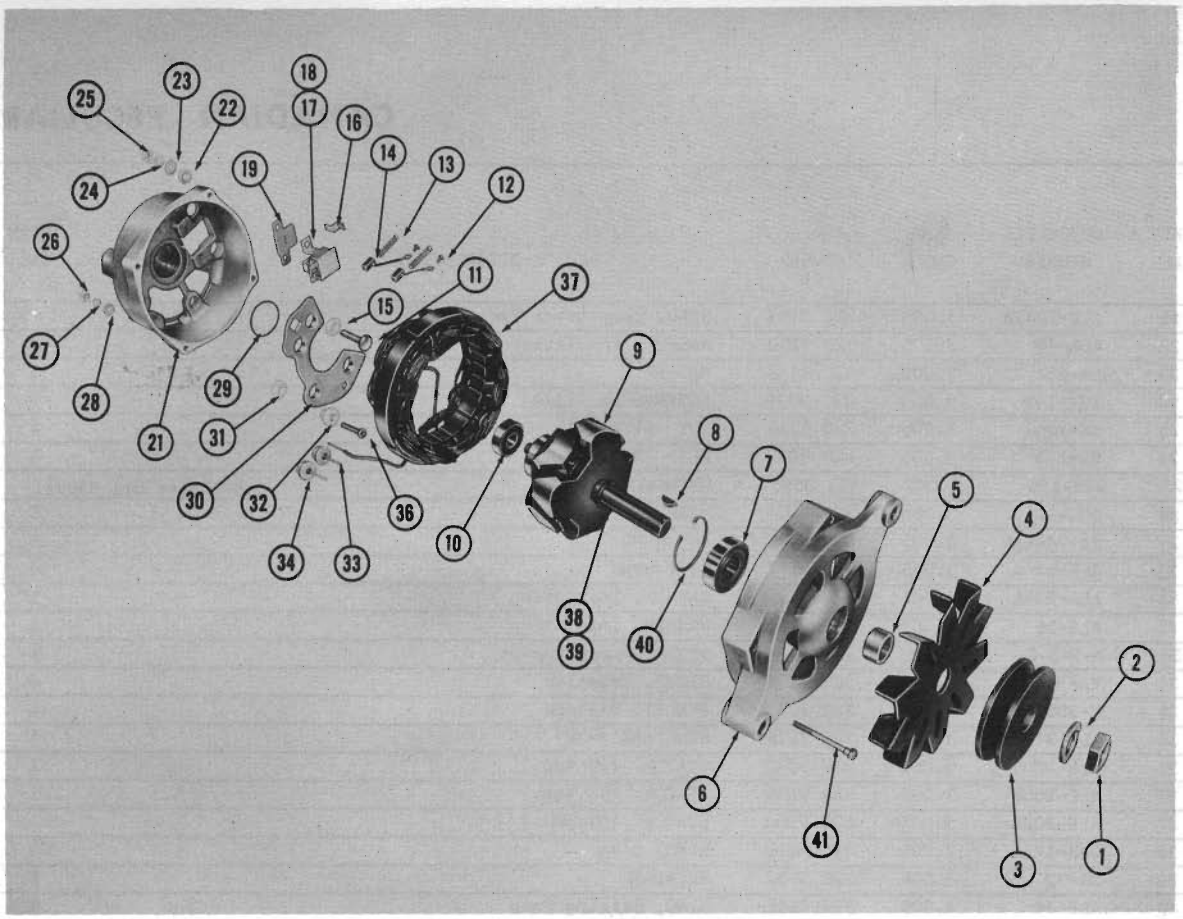

ALTERNATOR 165 01-10 (OHV-199): 165 01-10-80 (OHV-232)

A.M. NO. 317 8915 (34 Amp.) — AUTO-LITE NO. ALK-6402
A.M. NO. 318 0083 (40 Amp.) — AUTO-LITE NO. ALE-6009
A.M. NO. 318 0074 (55 Amp.) — AUTO-LITE NO. OE-6002

KEY NO.	AUTO-LITE NUMBER	A.M. GROUP	A.M. PART NUMBER	DESCRIPTION	QUAN. REQ.
1	GBM-21B	3.010	311 2796	NUT, Rotor Shaft Drive End (Replaces 311 8776)	1
2	12X-864	3.010	311 8777	LOCKWASHER, Rotor Shaft Drive End Nut	1
3	PU-585	3.010	320 9013	PULLEY, Drive	1
4	PU-625	3.010	320 9014	FAN, Ventilating (34 Amp.)	1
4	PU-1664	3.010	320 9174	FAN, Ventilating (40 Amp.)(55 Amp.)	1
5	ALC-21-D	3.005	320 9031	SPACER, Rotor Shaft	1
6	ALK-25	3.005	320 9140	HEAD, Drive End	1
7	X-3416	3.005	320 9016	BEARING, Ball	1
8	X-261	3.010	320 3643	KEY, Woodruff (#6)	1
9	ALK-2024	3.005	320 9146	ROTOR ASSEMBLY (34 Amp.)	1
9	ALE-2046	3.005	320 9175	ROTOR ASSEMBLY (40 Amp.)	1
9	ALH-2046	3.005	320 9176	ROTOR ASSEMBLY (55 Amp.)	1
10	X-3433	3.005	320 9148	BEARING, Ball	1
11	8X-3550	3.005	320 9152	TERMINAL STUD	1
12	8X-3611	3.005	320 9145	SCREW, Brush Holder (#4-40)	2
13	ALA-19	3.005	320 9033	SPRING, Brush	2
14	ALE-1012-KS	3.005	320 9161	BRUSH SET	1
15	ALA-33	3.005	320 9037	WASHER, Insulation	1
16	ALE-48	3.005	320 9144	TERMINAL SPADE	1
17	ALE-45	3.005	320 9142	BRACKET, Brush	1
18	ALE-41	3.005	320 9143	HOLDER, Brush	1
19	ALE-55			INSULATION	1
20	X-3470	3.005	320 9021	SCREW (#10-24)	2

CANADIAN PECULIAR

KEY NO.	AUTO-LITE NUMBER	A.M. GROUP	A.M. PART NUMBER	DESCRIPTION	QUAN. REQ.
21	ALE-1042A	3.005	320 9157	HEAD, Commutator End	1
22	ALE-49	3.005	320 9150	WASHER, Insulation	1
23	SW-634	3.005	320 9038	WASHER	1
24	12X-199	3.005	320 9039	LOCKWASHER (1/4)	2
25	8X-1063	3.005	320 9040	NUT (1/4-20)	2
26	8X-173	3.005	320 9027	NUT (#10-32)	1
27	12X-196	3.005	311 3686	LOCKWASHER (#10) (Replaces 311 8964)	7
28	GGU-31	3.005	320 9154	WASHER (#10)	1
29	XA-744-AN	3.005	320 9155	"O" RING	1
30	ALE-54-A	3.005	320 9177	HEAT SINK	1
31	ALA-33-A	3.005	320 9037	WASHER, Insulation	1
32	ALE-56	3.005	320 9156	WASHER, Insulation	1
33	X-943-C	3.005	320 9035	DIODE, Postitive	3
34	XA-944-C	3.005	320 9024	DIODE, Negative	3
35	X-3554	3.005	320 9023	EYELET, Stator	6
36	ALB-37	3.005	320 9178	STUD (#10-32)	1
37	ALE-2008-D	3.005	320 9022	STATOR (34 Amp.)	1
37	ALE-2008	3.005	320 9179	STATOR (40 Amp.)	1
37	ALE-2008-C	3.005	320 9180	STATOR (55 Amp.)	1
38	GAR-171	3.005	320 9019	RING, Snap	1
39	GR-32	3.005	320 9032	RETAINER	1
40	ALE-44	3.005	320 9141	RING, Bearing Snap	1
41	ALA-20-B	3.005	320 9158	SCREW, Frame (#10-24)(34 Amp.)	4
41	ALA-20-A	3.005	320 9181	SCREW, Frame (#10-24)(40 Amp.)	4
41	ALA-20	3.005	320 9182	SCREW, Frame (#10-24)(55 Amp.)	4

CANADIAN PECULIAR

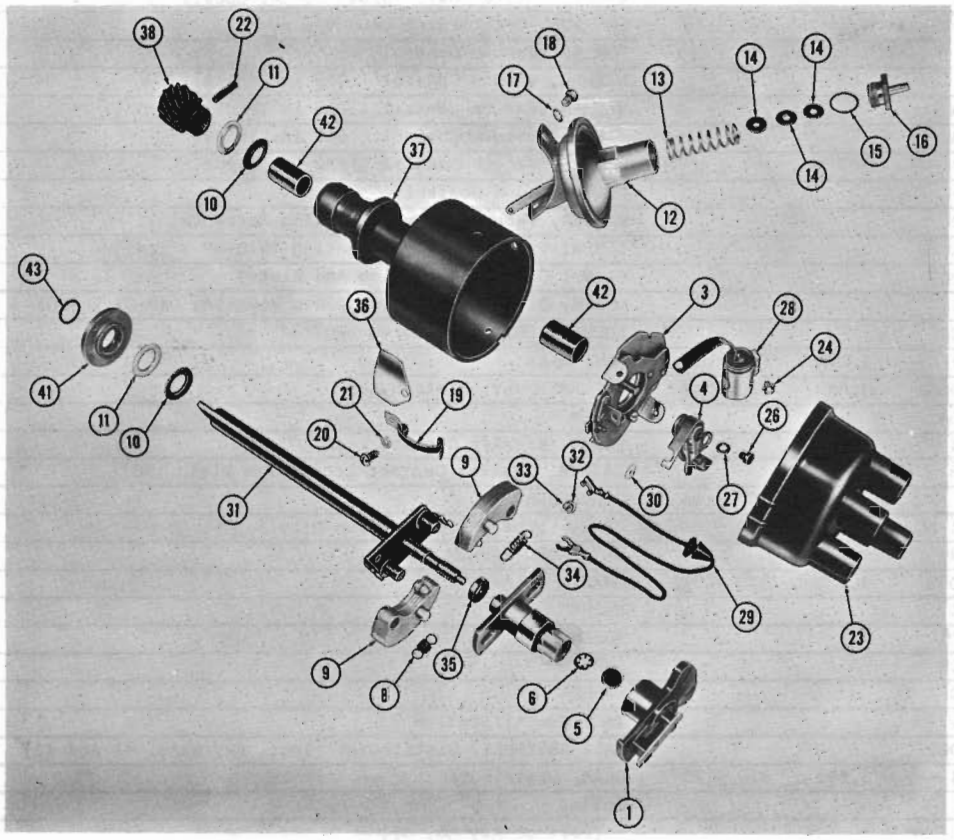

DISTRIBUTOR 165 01-10 (OHV-199): 165 01-10-80 (OHV-232)

A.M. NO. 317 9094 AUTO-LITE NO. IDC-4601

KEY NO.	AUTO-LITE NUMBER	A.M. GROUP	A.M. PART NUMBER	DESCRIPTION	QUAN REQ.
1	IBR-1016	3.035	320 9056	ROTOR	1
3	IDC-2004	3.031	320 9173	PLATE, Breaker	1
4	IGS-2224-RB	3.031	320 9165	CONTACT SET, Ignition	1
5	IGH-28			WICK, Cam Sleeve (Felt)	1
6	X-3505			RING, Cam Snap	1
7	IGS-1100-RBD	3.030	320 9167	CAM AND STOP PLATE	1
8	IGC-219-AS	3.030	320 9172	SPRING SET, Governor Weight	1
9	IGC-2168-R			WEIGHT, Governor	2
10	IAO-10			WASHER, Drive Shaft Thrust (Inner-Upper)	1

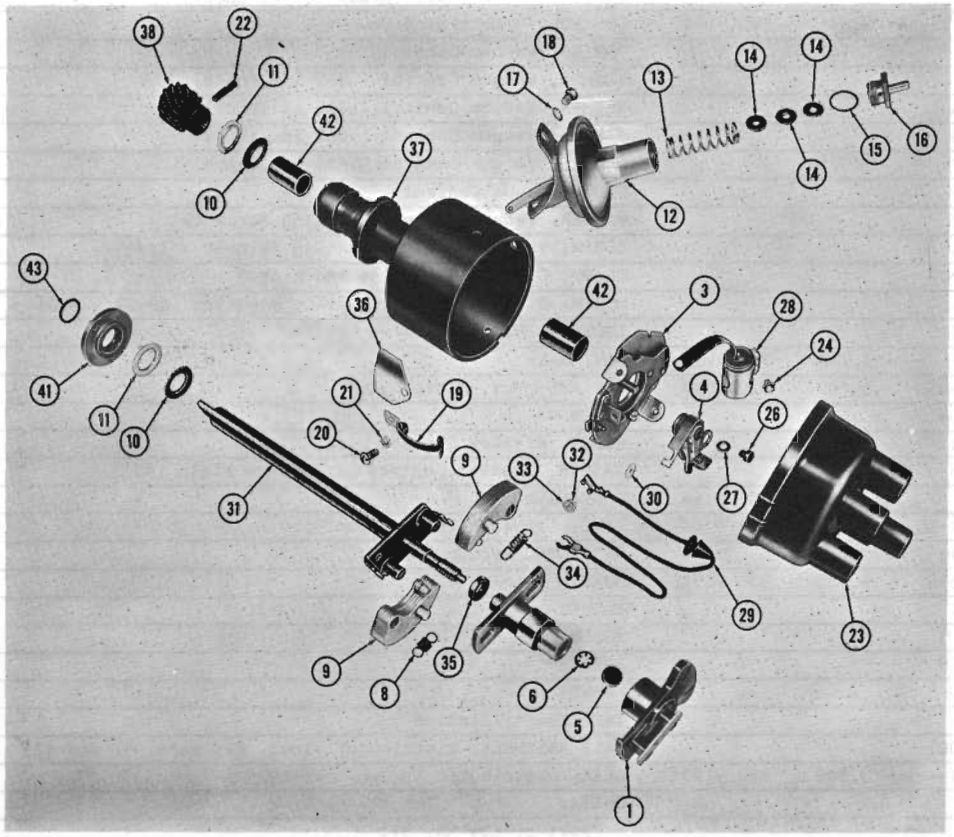

DISTRIBUTOR 165 01-10 (OHV-199): 165 01-10-80 (OHV-232)

A.M. NO. 317 9094 AUTO-LITE NO. IDC-4601

KEY NO.	AUTO-LITE NUMBER	A.M. GROUP	A.M. PART NUMBER	DESCRIPTION	QUAN REQ.
1	IBR-1016	3.035	320 9056	ROTOR	1
3	IDC-2004	3.031	320 9173	PLATE, Breaker	1
4	IGS-2224-RB	3.031	320 9165	CONTACT SET, Ignition	1
5	IGH-28			WICK, Cam Sleeve (Felt)	1
6	X-3505			RING, Cam Snap	1
7	IGS-1100-RBD	3.030	320 9167	CAM AND STOP PLATE	1
8	IGC-219-AS	3.030	320 9172	SPRING SET, Governor Weight	1
9	IGC-2168-R			WEIGHT, Governor	2
10	IAO-10			WASHER, Drive Shaft Thrust (Inner-Upper)	1

CANADIAN PECULIAR

KEY NO.	AUTO-LITE NUMBER	A.M. GROUP	A.M. PART NUMBER	DESCRIPTION	QUAN REQ.
11	IAO-11			WASHER, Drive Shaft Thrust (Outer-Upper)	1
12	IAT-2023-RR	3.046	320 9168	CONTROL, Distributor Vacuum	1
13	VC-49			SPRING, Vacuum Control	1
14	VC-46			WASHER, Vacuum Control (.032 in. Thick)	AR
14	VC-46A			WASHER, Vacuum Control (.010 in Thick)	AR
14	VC-46B			WASHER, Vacuum Control (.065 in. Thick)	AR
15	IAT-30			GASKET, Vacuum Control (1/32 in. Thick)	1
16	IAZ-33			PLUG, Vacuum Control	1
17	X-1270			WASHER, Vacuum Control Mounting Screw (#10)	2
18	8X-872			SCREW, Vacuum Control Mounting (#10-32 x 1/4)	2
19	IBT-1007			CLAMP, Cap (Incl. Spring And Hinge)	2
20	8X-304			SCREW, Clamp And Breaker Plate Mounting (#8-32 x 3/8)	2
21	12X-1275			LOCKWASHER, Plate Screw (#8)	2
22	XA-949	3.042	320 9183	PIN, Gear	1
23	IBR-1003B	3.042	320 9053	CAP ASSEMBLY, Distributor	1
24	8X-3504			SCREW	1
26	8X-884			SCREW, Breaker Contact Lock	1
27	SSB-38			WASHER, Breaker Contact Lock Screw Plain (#8)	1
28	2-32	3.033	320 9166	CONDENSER	1
29	IAT-81-RD	3.030	320 9164	LEAD, Primary (Low Tension Wire)	1
30	IGS-226			RETAINER, Vacuum Arm	1
31	IDC-1002	3.030	320 9171	SHAFT, Main	1
32	IGE-15			WASHER	1
33	IGC-175			SCREW	1
34	IGC-219			SPRING	1
35	IGS-99			WASHER	
36	IBT-49			TAG, Identification	1
37	IDC-2001			BASE ASSEMBLY, Distributor (Incl. Key No's. 41 And 42)	1
38	GE-128	3.042	320 9170	GEAR, Distributor	1
41	IDC-3			Collar	1
				(Part of Key No. 37)	1
42	IG-579A	3.030	311 1952	BUSHING, Distributor Base (Bronze)(Upper)	
				(Part of Key No. 37)	2
43	XA-899	3.030	320 9169	"O" RING	1

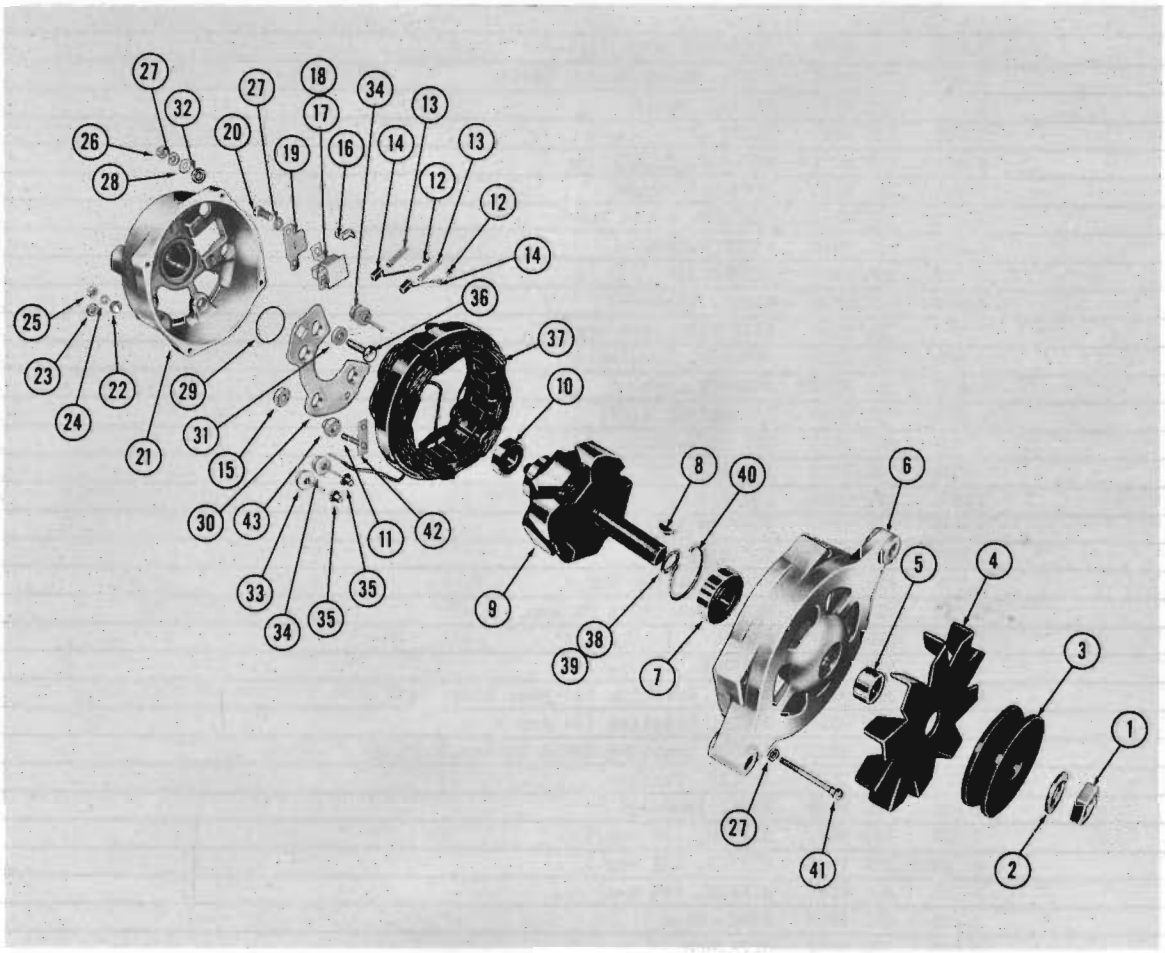

ALTERNATOR

A.M. No. 317 6579 (34 Amp.) 165 01-10-80 — Prestolite No. ALK-6302
A.M. No. 318 0110 (40 Amp.) 165 01-10-80 — Prestolite No. ALE-6303
A.M. No. 318 0081 (55 Amp.) 165 01-10-80 — Prestolite No. ALH-6303

KEY NO.	PRESTOLITE NUMBER	A. M. GROUP	A. M. PART NO.	DESCRIPTION	QUAN. REQ.
		3.005	320 9202	PARTS PACKAGE (Incl. all parts listed below which are coded with a #)	1
1		3.010	311 8776	NUT, Rotor Shaft Drive End	1
2		3.010	311 8777	LOCKWASHER, Rotor Shaft Drive End Nut	1
3		3.010	320 9013	PULLEY, Drive	1
4		3.010	320 9014	FAN, 34 Amp.	1
4		3.015	320 9174	FAN, 40 & 55 Amp.	1
5		3.005	320 9031	SPACER, Rotor Shaft	1
6		3.005	320 9140	HEAD, Drive End	1
7		3.005	320 9016	BEARING, Ball	1
8		3.017	320 3643	KEY, Woodruff (#6)	1
9		3.005	320 9146	ROTOR ASSY. (34 Amp.)	1
9		3.005	320 9175	ROTOR ASSY. (40 Amp)	1
9		3.005	320 9176	ROTOR ASSY. (55 Amp.)	1
10		3.005	320 9148	BEARING, Ball	1

11	3.005	320 9193	#TERMINAL STUD (1/4-20)	1
12	3.005	320 9145	SCREW, Brush Holder (#4-40)	2
13	3.005	320 9033	SPRING, Brush	2
14	3.005	320 9161	BRUSH SET	1
15	3.005	320 9037	#WASHER, Insulation	1
16	3.005	320 9144	TERMINAL, Spade	1
17	3.005	320 9142	BRACKET, Brush Holder	1
18	3.005	320 9143	BRUSH HOLDER	1
19	3.005	320 9159	INSULATION	1
20	3.005	320 9021	SCREW, (#10-24)	2
21	3.005	320 9194	SLIP RING, End Head	1
22	3.005	320 9150	#WASHER, Insulation	1
23	3.005	320 9038	#WASHER	1
24	3.005	320 9039	LOCKWASHER (1/4)	2
25	3.005	320 9040	NUT (1/4-20)	2
26	3.005	320 9027	NUT (#10-32)	2
27	3.005	311 8964	LOCKWASHER (#10)	8
28	3.005	320 9154	#WASHER (#10)	1
29	3.005	320 9155	"O" RING	1
30	3.005	320 9195	HEAT Sink (34 Amp.)	1
30	3.005	320 9196	HEAT Sink (40 & 55 Amp.)	1
31	3.005	320 9037	#WASHER, Insulation	1
32	3.005	320 9197	#WASHER, Insulation	1
33	3.005	320 9035	DIODE, Positive (In Heat Sink, Red)	3
34	3.005	320 9024	DIODE, Negative (34 Amp.)	4
34	3.005	320 9024	DIODE, Negative (40 & 55 Amp.)	5
35	3.005	320 9023	EYELET, Stator	3
36	3.005	320 9198	#BOLT (#10-32)	1
37	3.005	320 9022	STATOR, (34 Amp.)	1
37	3.005	320 9179	STATOR, (40 Amp.)	1
37	3.005	320 9180	STATOR, (55 Amp)	1
38	3.005	320 9019	RING, Snap	1
39	3.005	320 9032	RETAINER	1
40	3.005	320 9141	SNAP Ring Bearing	1
41	3.005	320 9158	FRAME, Screw (#10-24)(34 Amp.)	4
41	3.005	320 9181	FRAME Screw (#10-24)(40 Amp.)	4
41	3.005	320 9182	FRAME Screw (#10-24)(55 Amp.)	4
42	3.005	320 9199	CONNECTOR (34 Amp.)	1
42	3.005	320 9199	CONNECTOR (40 &55 Amp.)	2
43	3.005	320 9200	#WASHER, Insulation	1

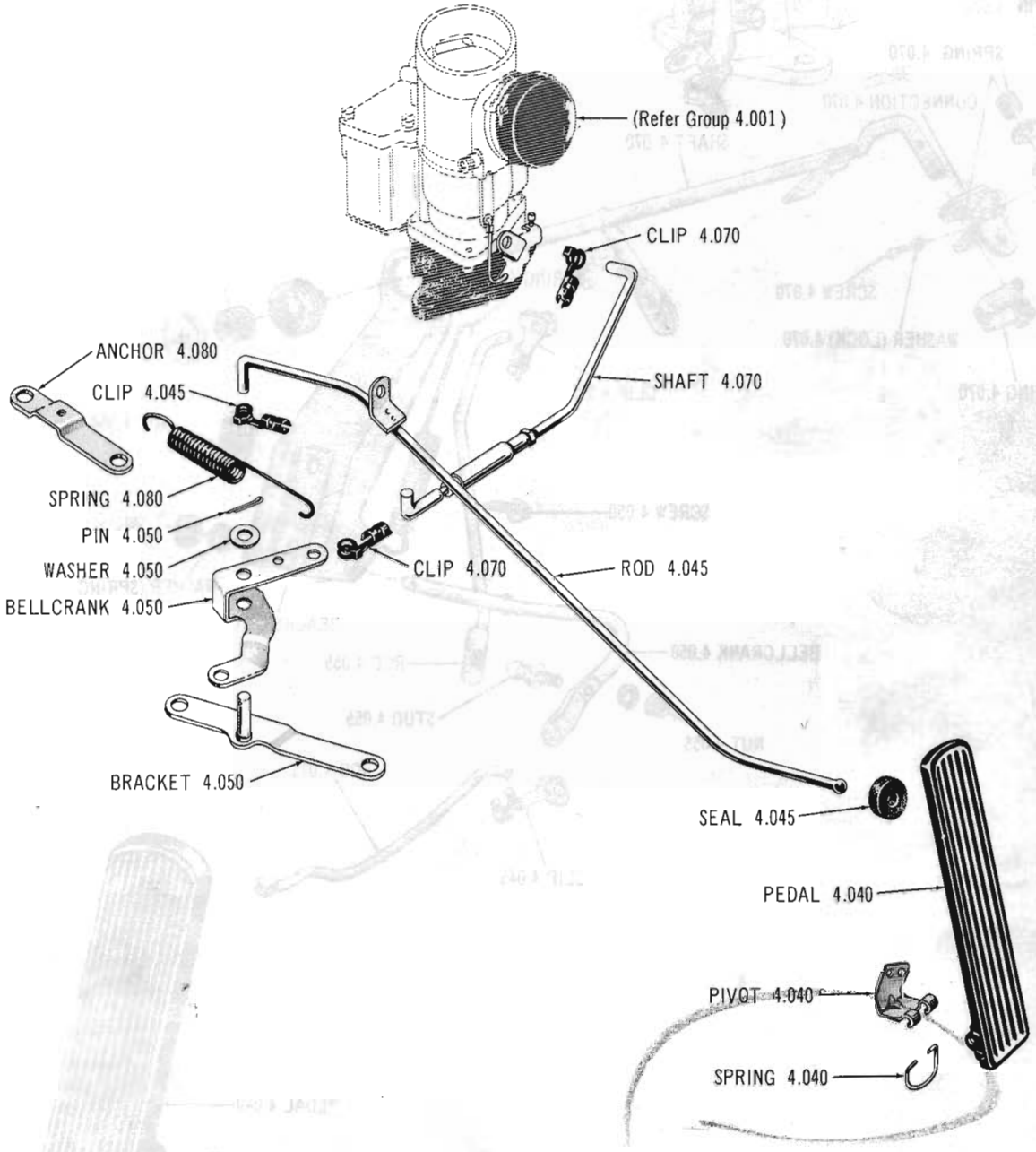

ACCELERATOR LINKAGE 60 thru 63 01 (LHD-LHE)

Copyright 1963 American Motors Corp.

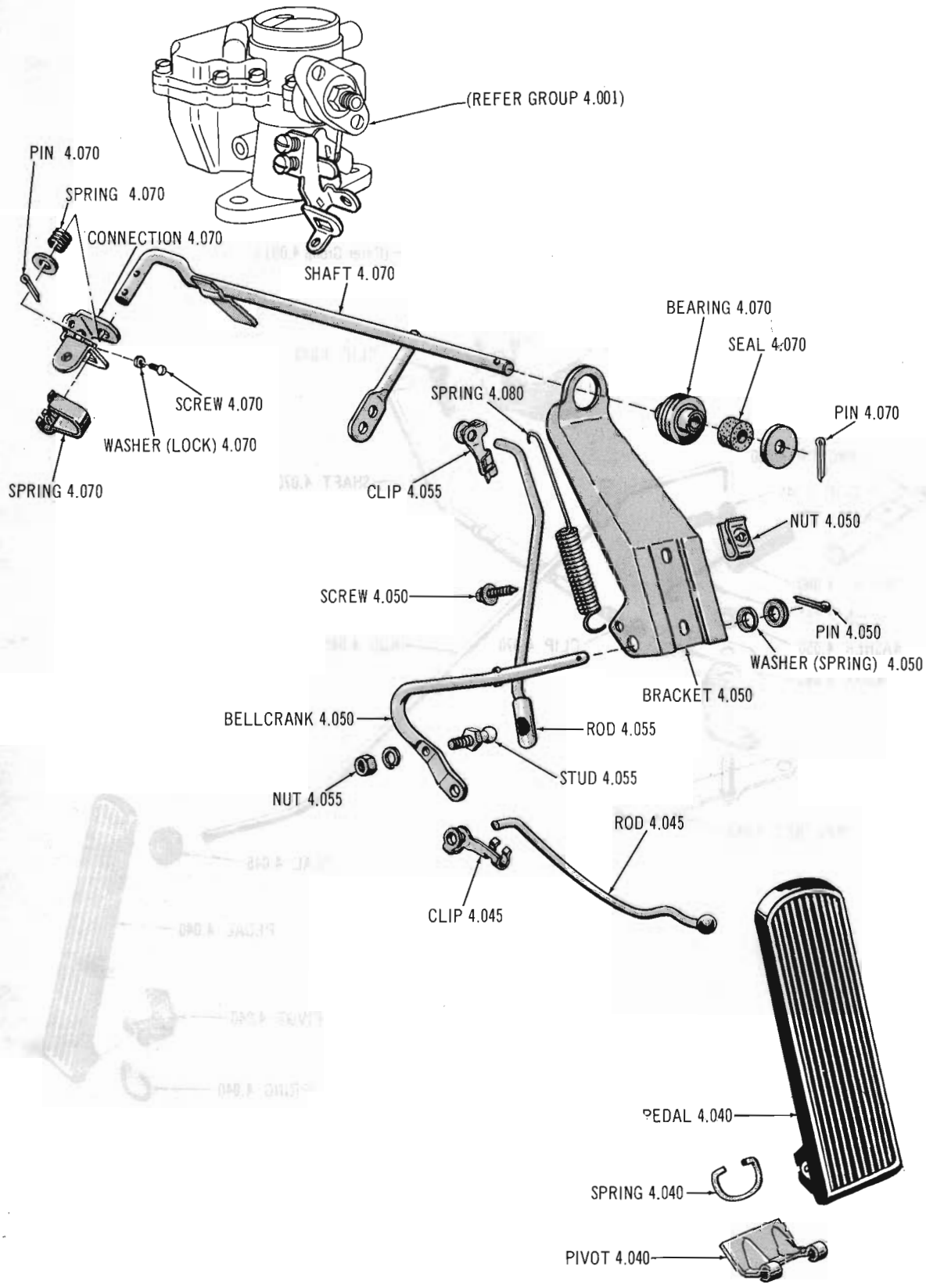

ACCELERATOR LINKAGE 63 01 (OHV-WST-LDT)

Copyright 1963 American Motors Corp.

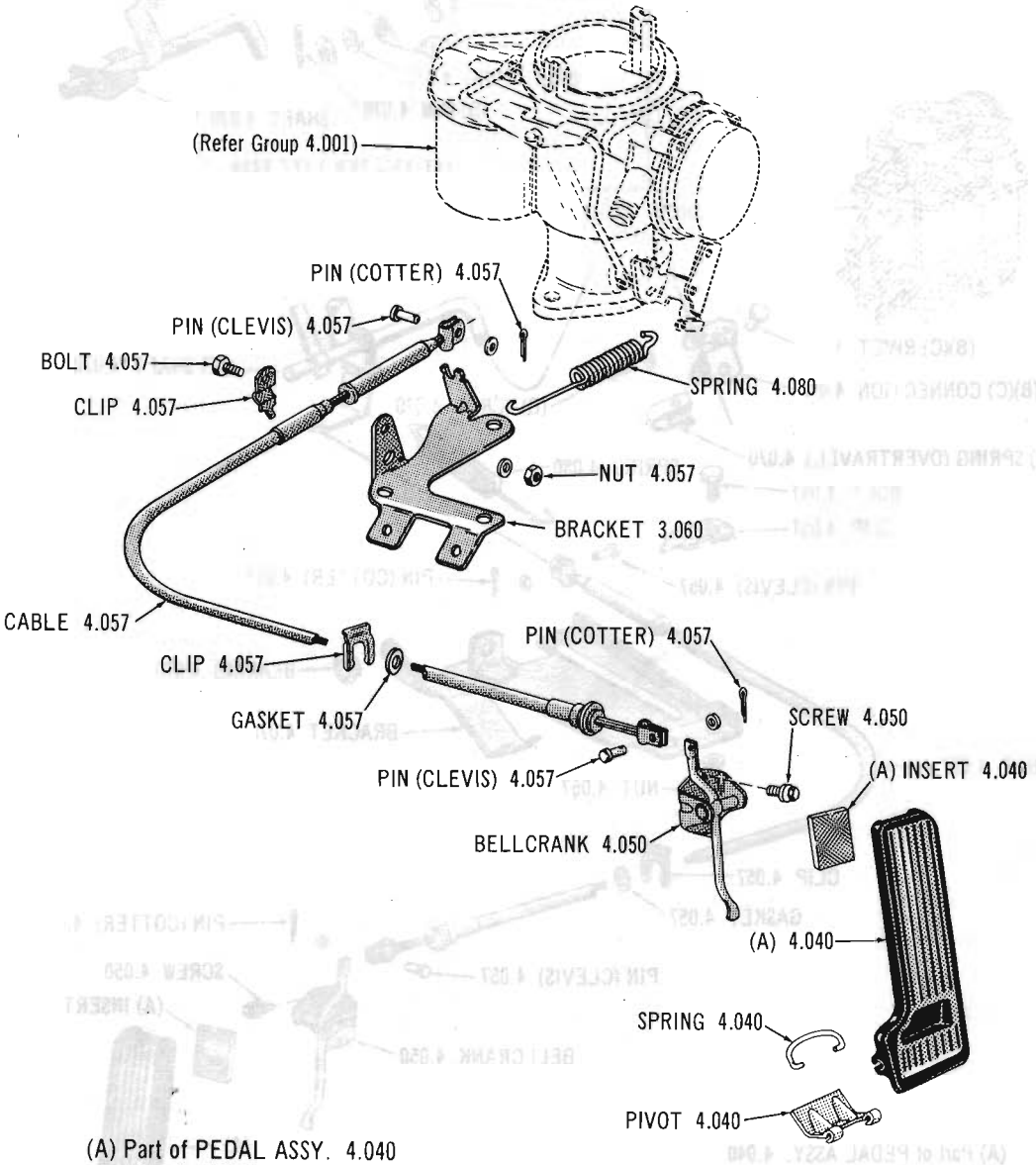

(A) Part of PEDAL ASSY. 4.040

ACCELERATOR LINKAGE 64-65 01 (LHE)

Copyright 1963 American Motors Corp.

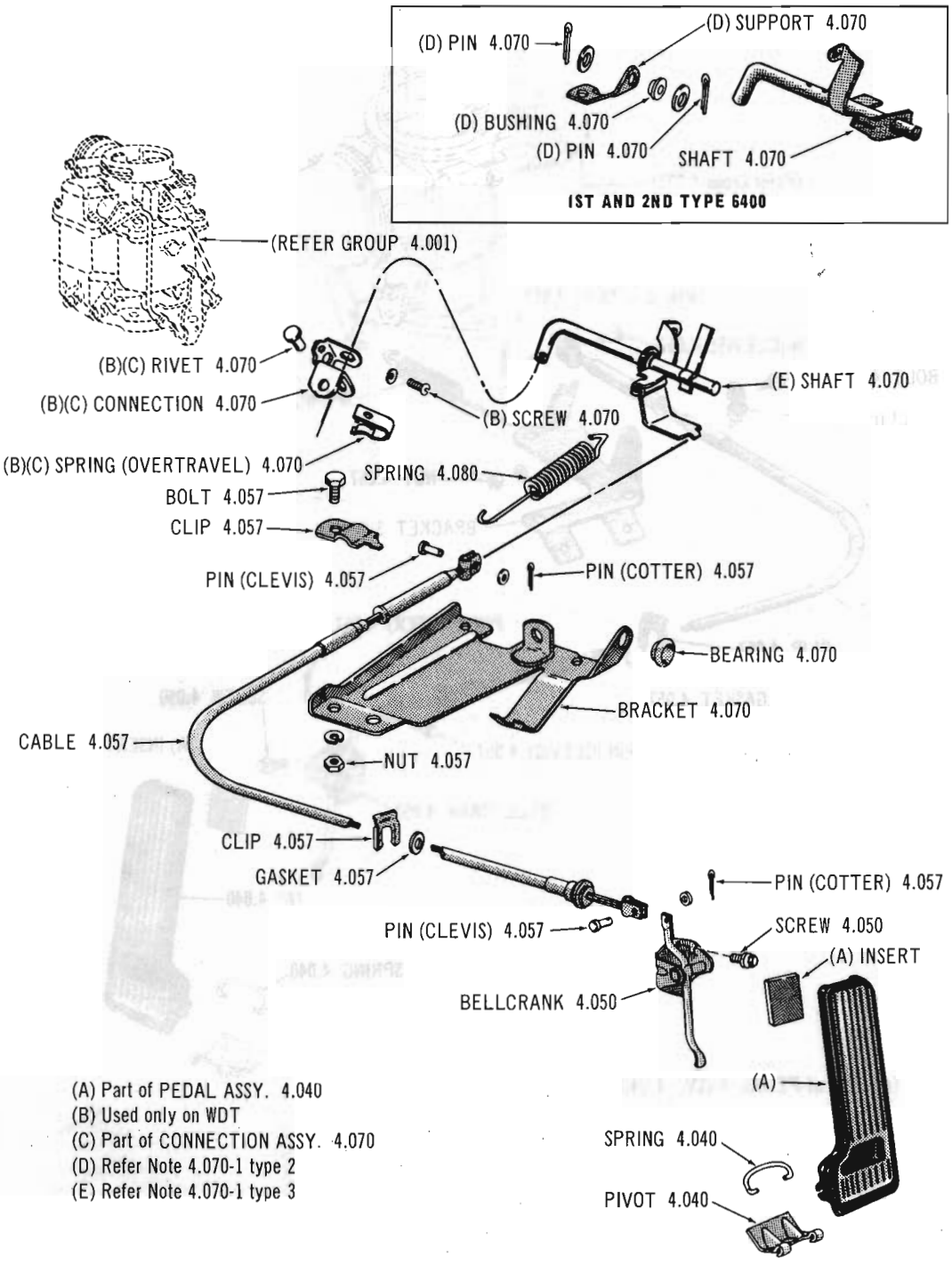

(A) Part of PEDAL ASSY. 4.040
(B) Used only on WDT
(C) Part of CONNECTION ASSY. 4.070
(D) Refer Note 4.070-1 type 2
(E) Refer Note 4.070-1 type 3

ACCELERATOR LINKAGE 64-65 01 (LHD-OHV-196)

Copyright 1963 American Motors Corp.

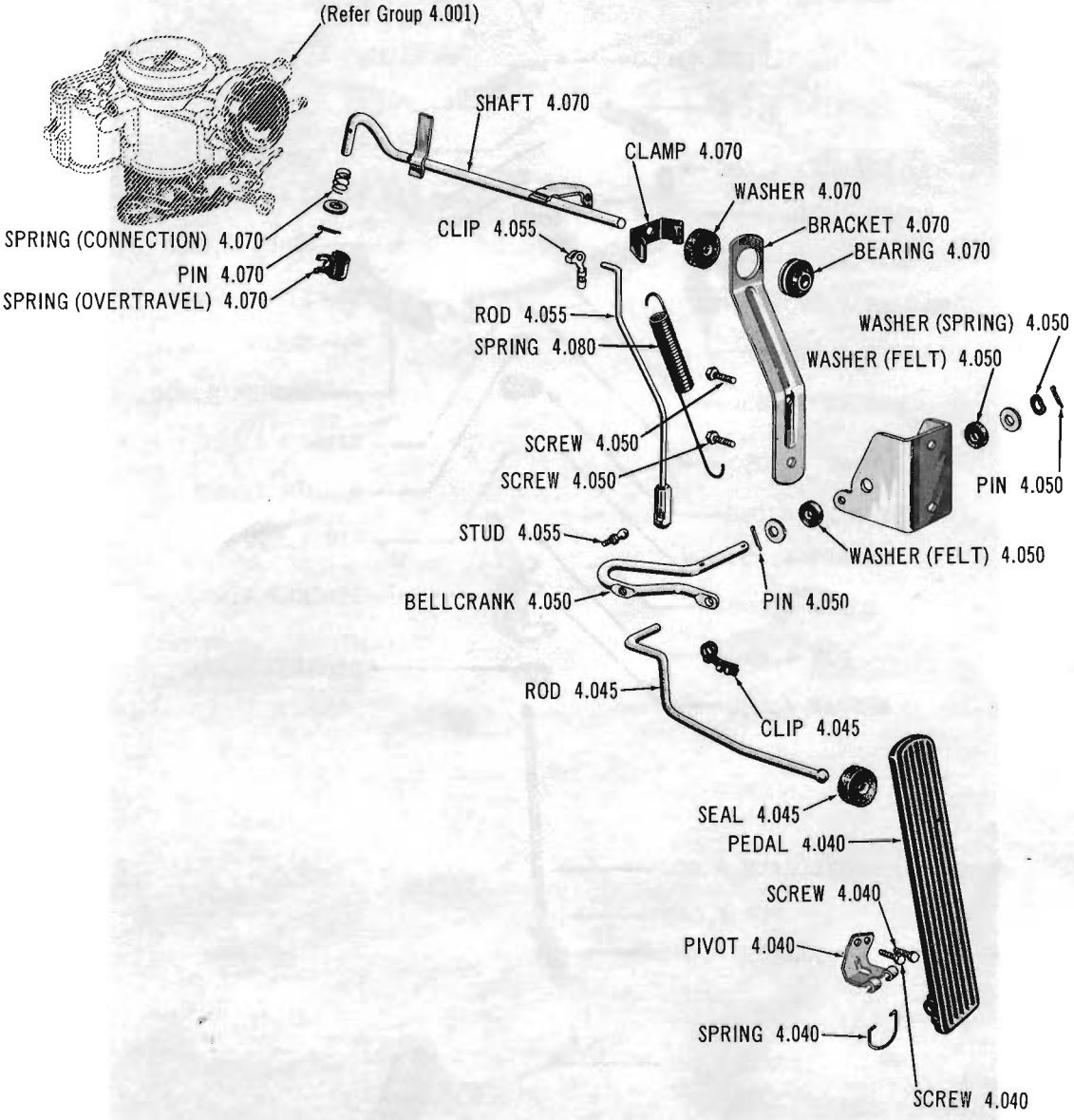

ACCELERATOR LINKAGE 60-61 01-10 (LHD-OHV)

Copyright 1963 American Motors Corp.

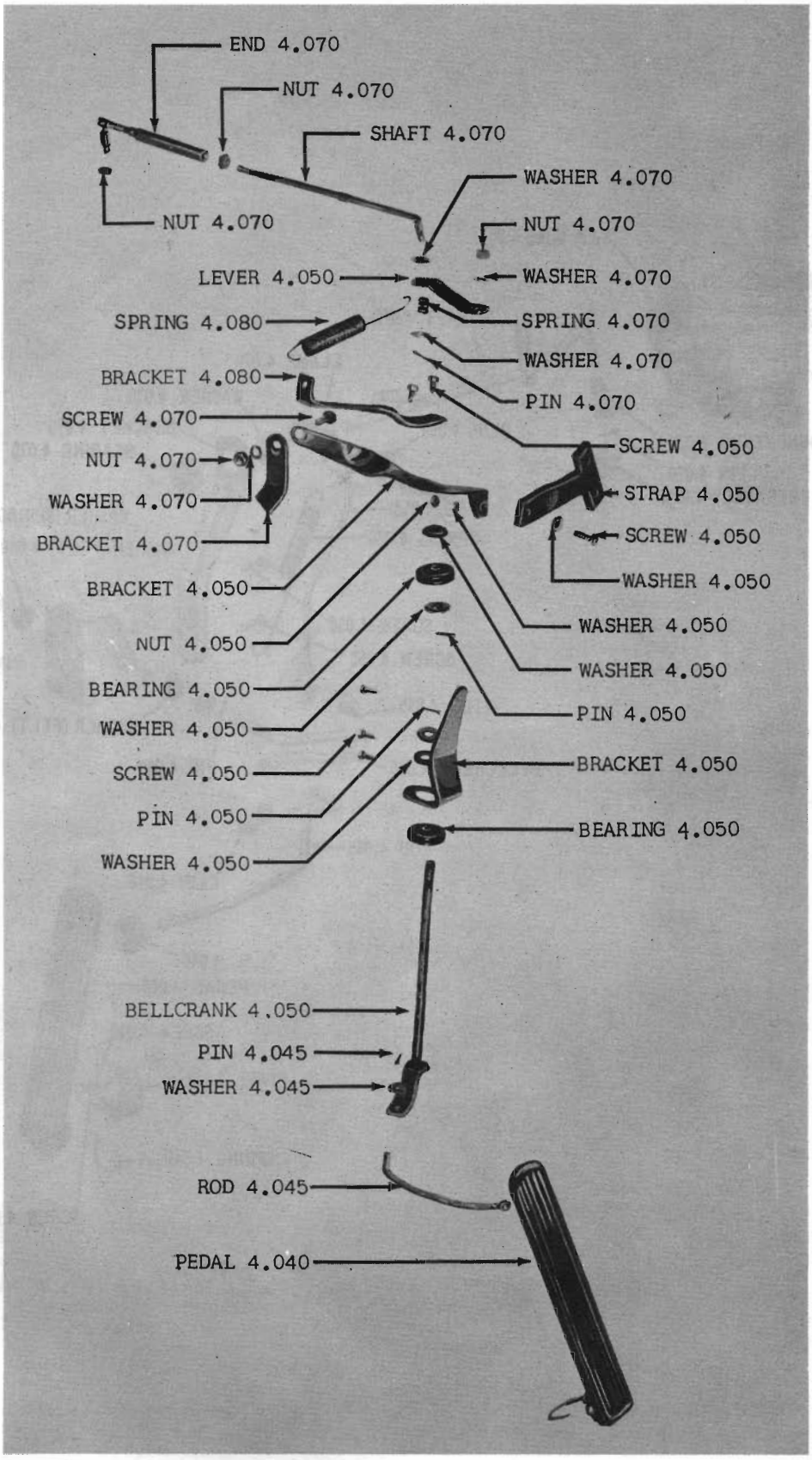

ACCELERATOR LINKAGE 60-61 20-80 (LHD)

Copyright 1963 American Motors Corp.

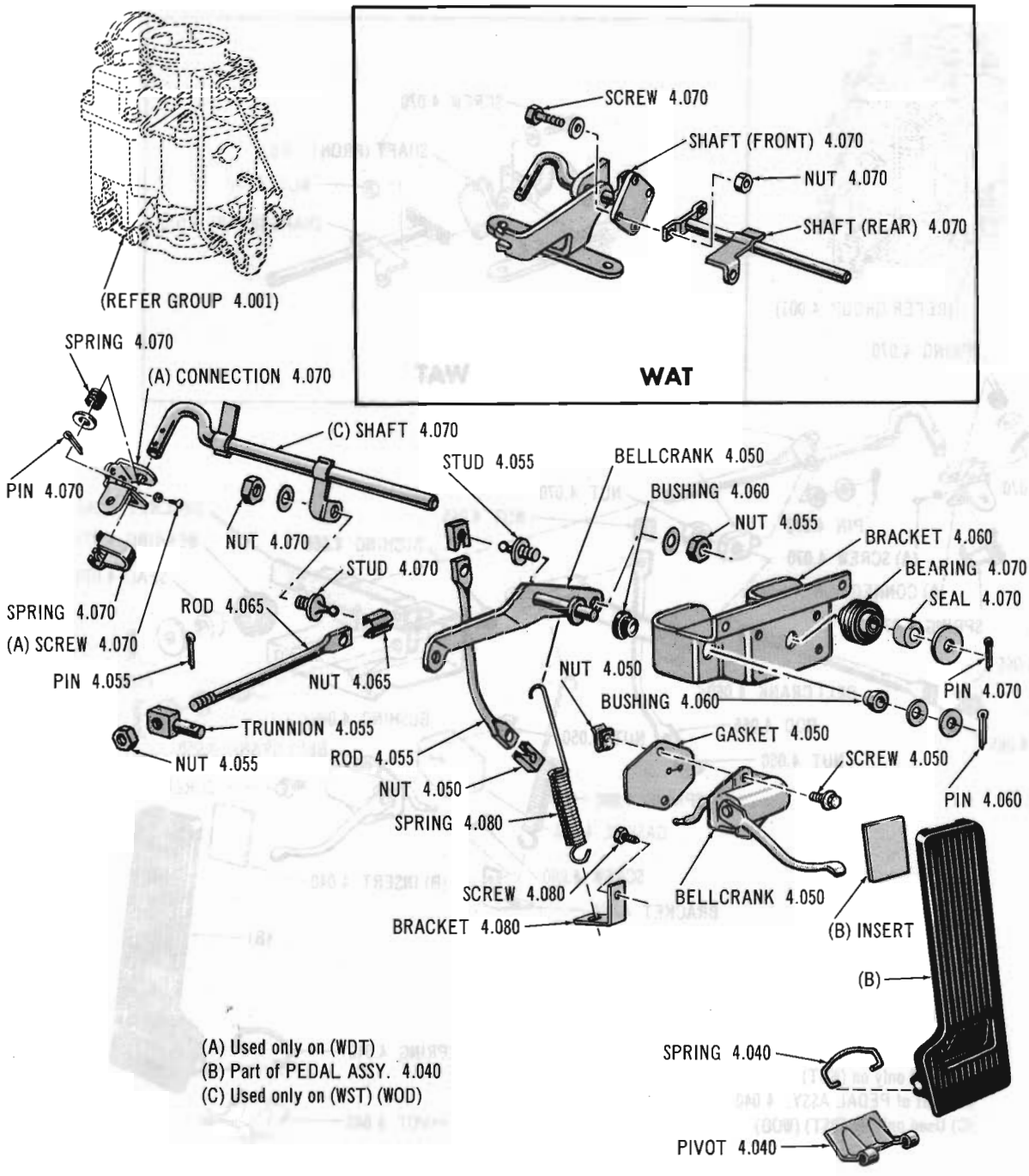

ACCELERATOR LINKAGE 63 10 (1st type - LHD-OHV)

Copyright 1963 American Motors Corp.

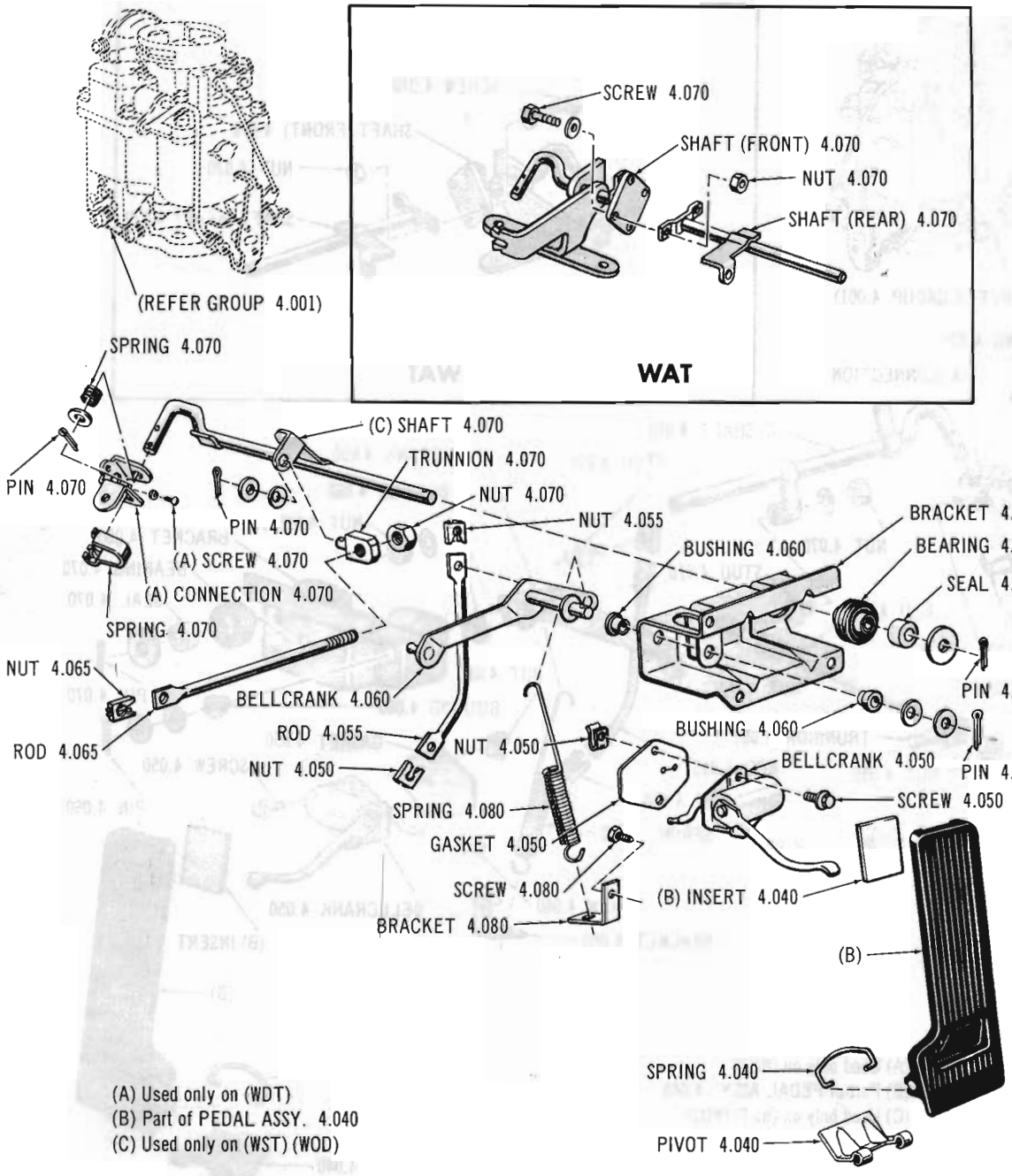

(A) Used only on (WDT)
(B) Part of PEDAL ASSY. 4.040
(C) Used only on (WST) (WOD)

ACCELERATOR LINKAGE 63 10 (2nd type-LHD-OHV-196): 64 10 (LHD-OHV-196)

Copyright 1963 American Motors Corp.

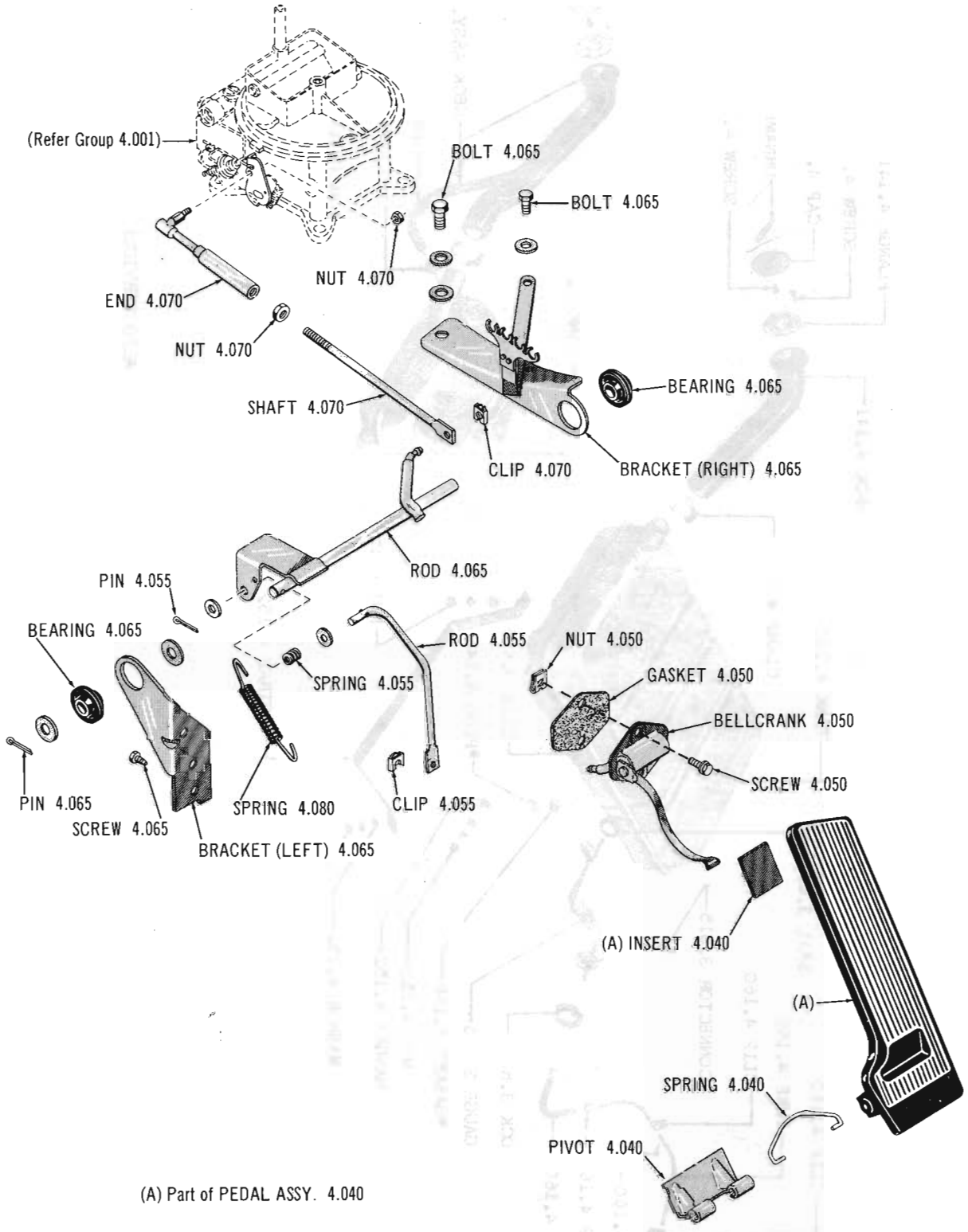

(A) Part of PEDAL ASSY. 4.040

ACCELERATOR LINKAGE 63-64 10-80 (V8)

Copyright 1963 American Motors Corp.

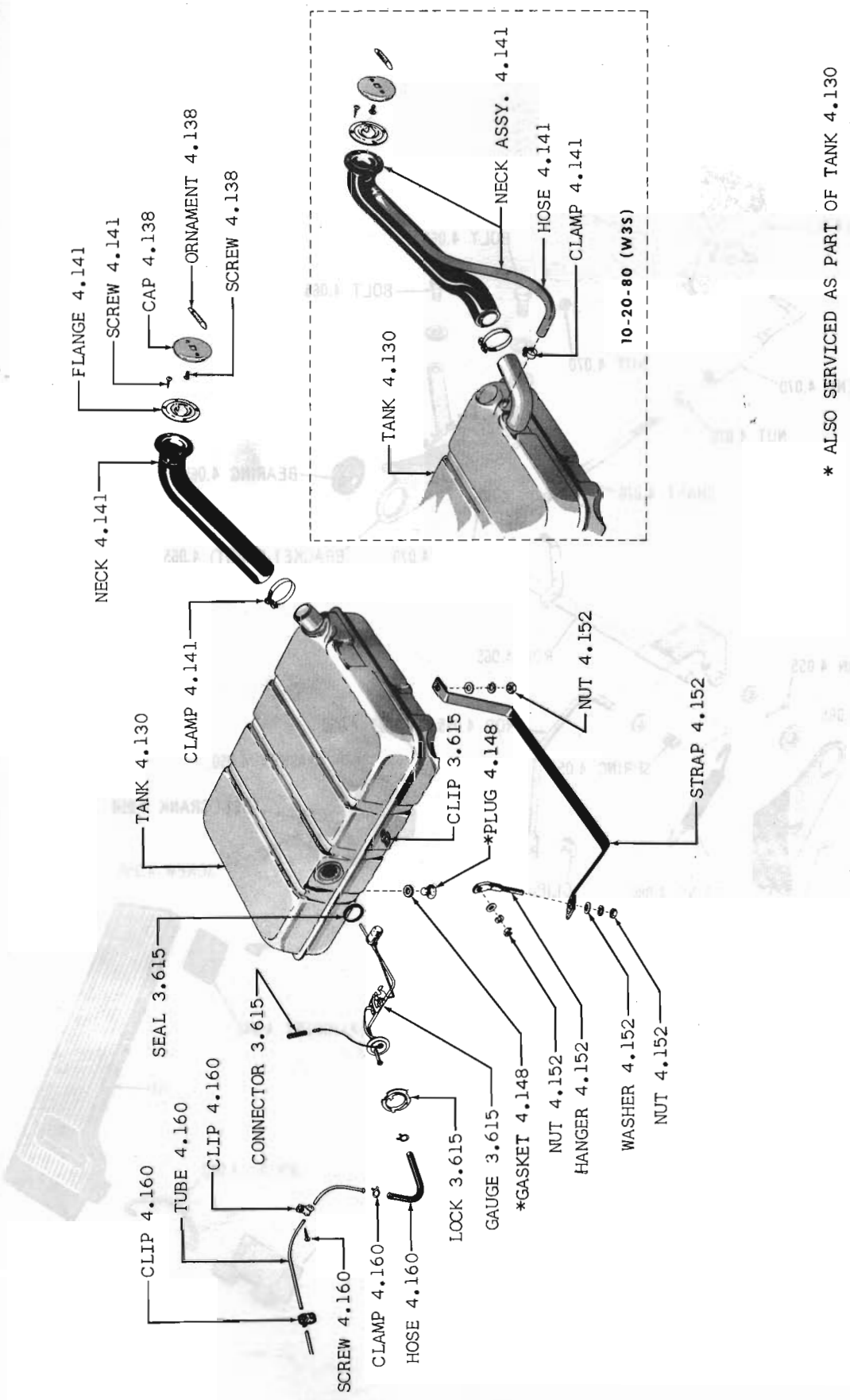

GASOLINE TANK AND LINES 60-61 ALL MODELS

Copyright 1963 American Motors Corp.

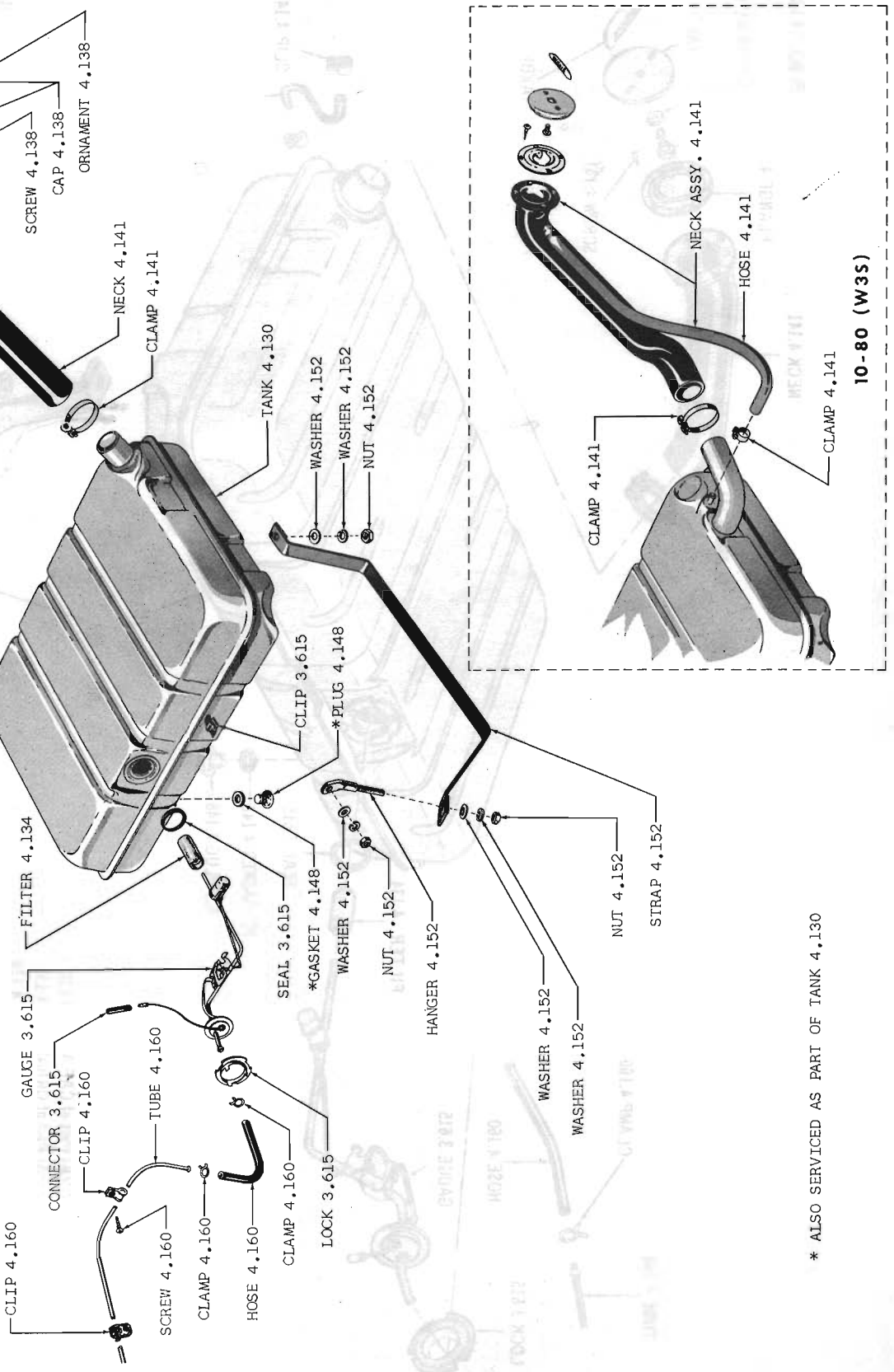

* ALSO SERVICED AS PART OF TANK 4.130

GASOLINE TANK AND LINES 62 ALL MODELS

Copyright 1963 American Motors Corp.

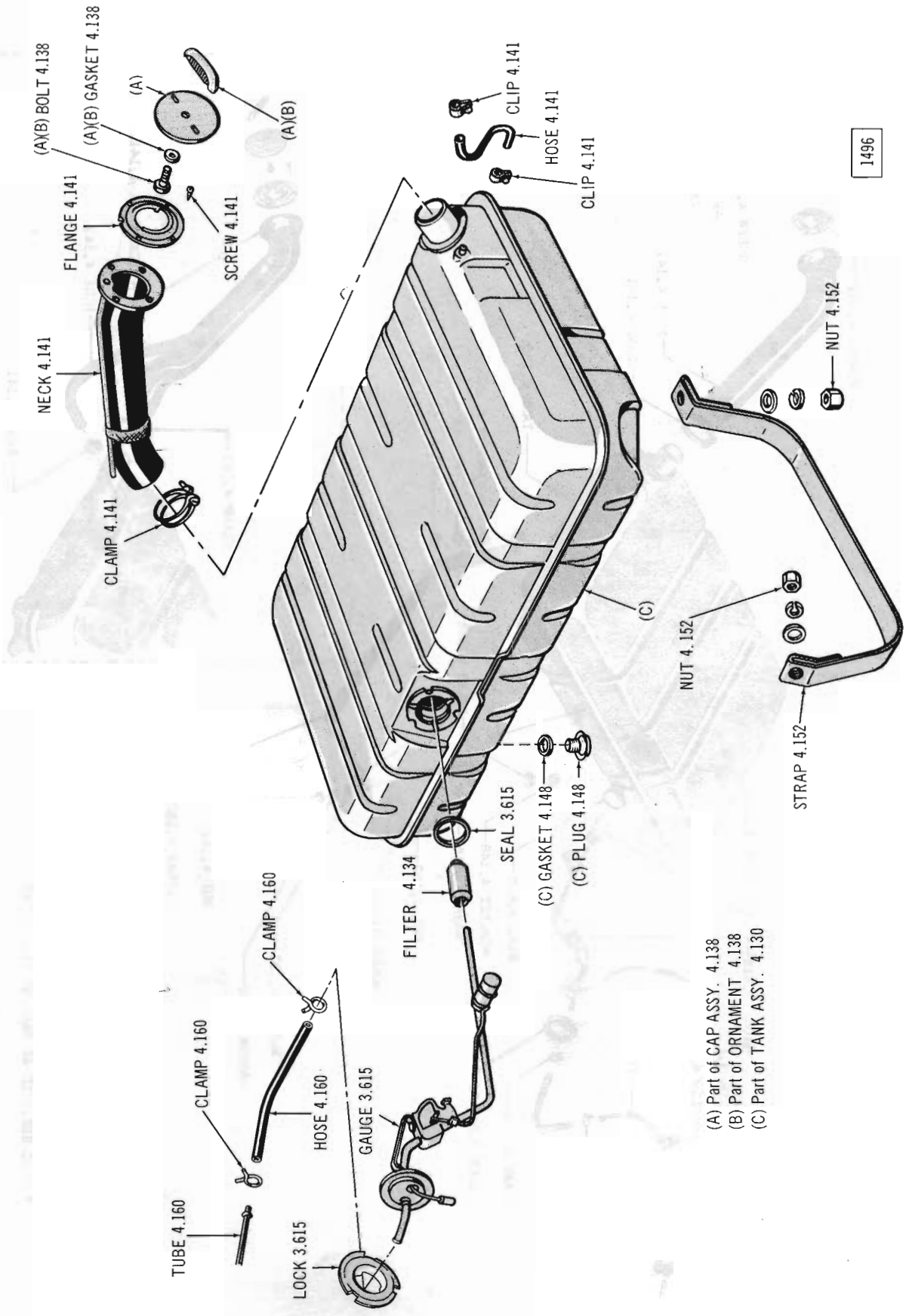

GASOLINE TANK AND LINES 63 01

Copyright 1963 American Motors Corp.

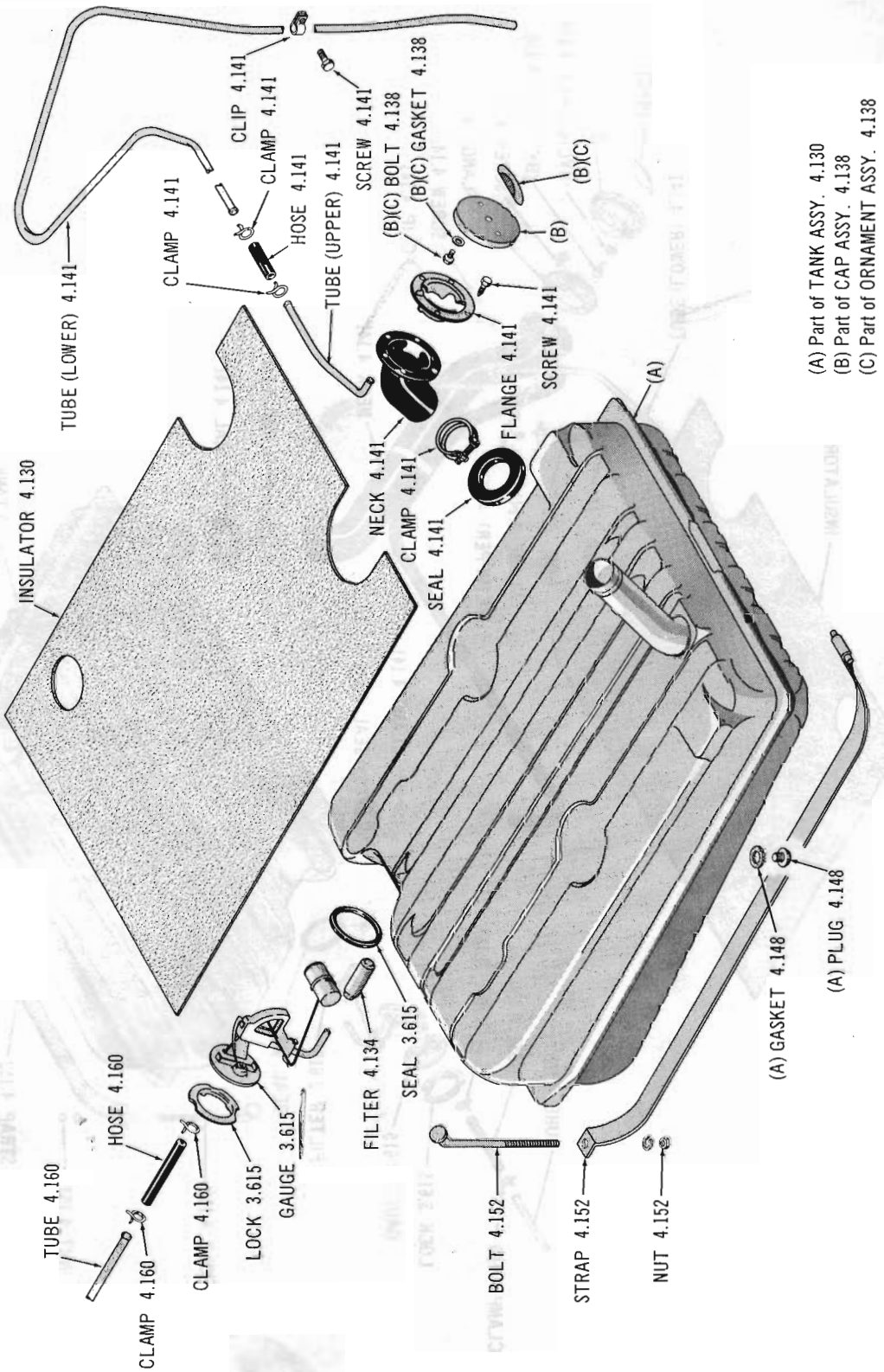

GASOLINE TANK AND LINES 64-65 05-06-07-09

Copyright 1963 American Motors Corp.

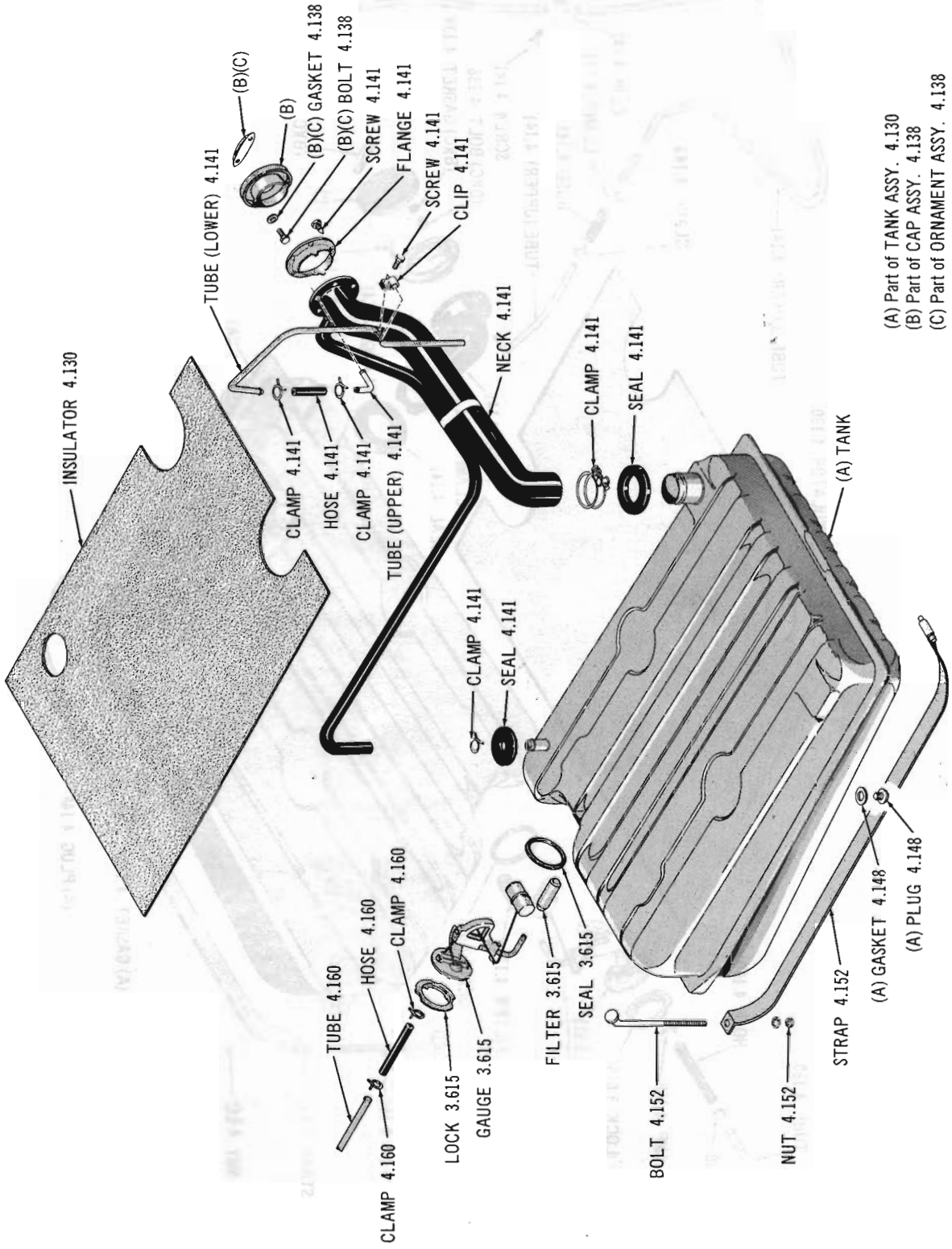

GASOLINE TANK AND LINES 64-65 08

Copyright 1963 American Motors Corp.

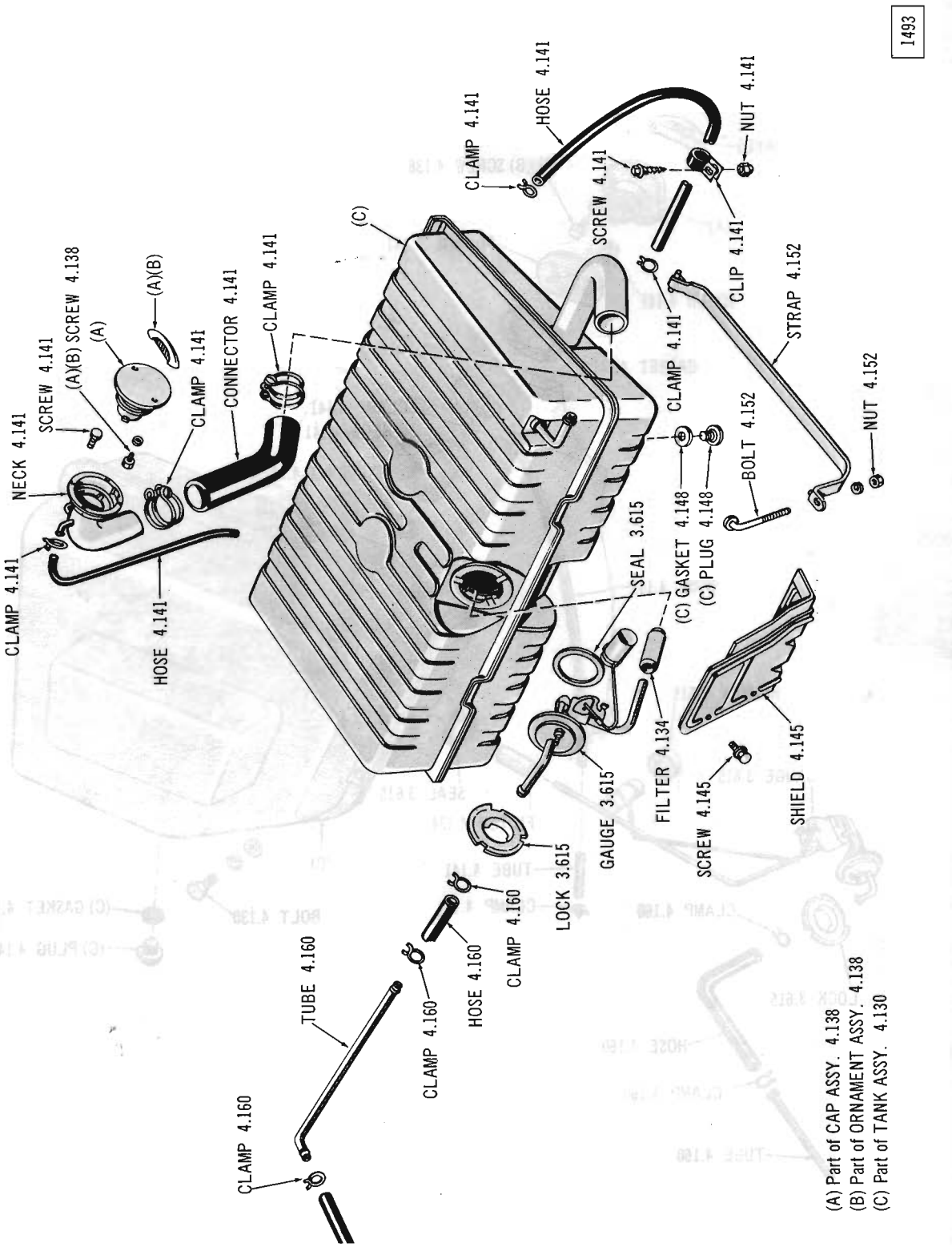

GASOLINE TANK AND LINES 63-64 10-80 (L3S)

Copyright 1963 American Motors Corp.

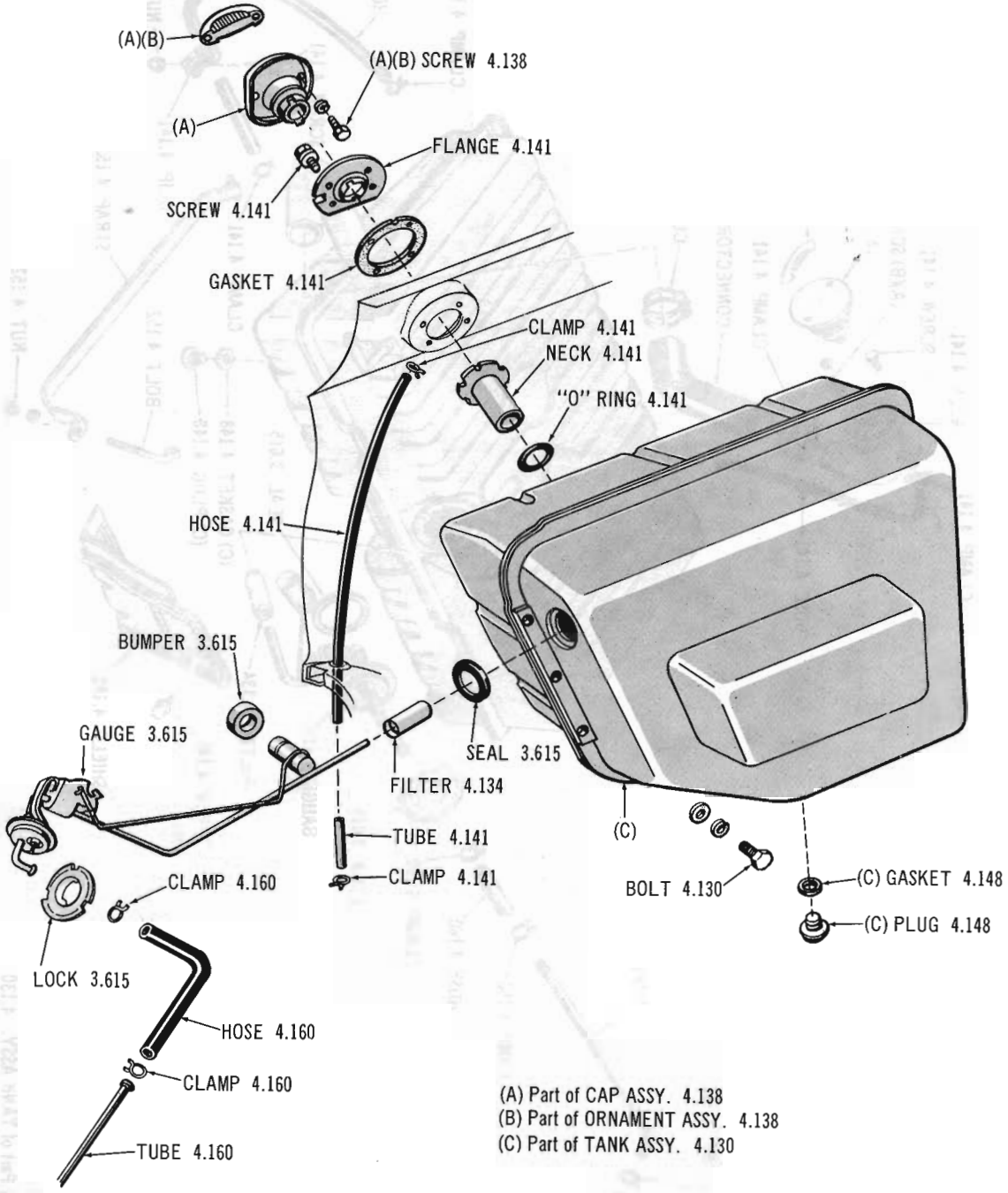

(A) Part of CAP ASSY. 4.138
(B) Part of ORNAMENT ASSY. 4.138
(C) Part of TANK ASSY. 4.130

GASOLINE TANK AND LINES 63 thru Current 18-88 (W3S)

Copyright 1963 American Motors Corp.

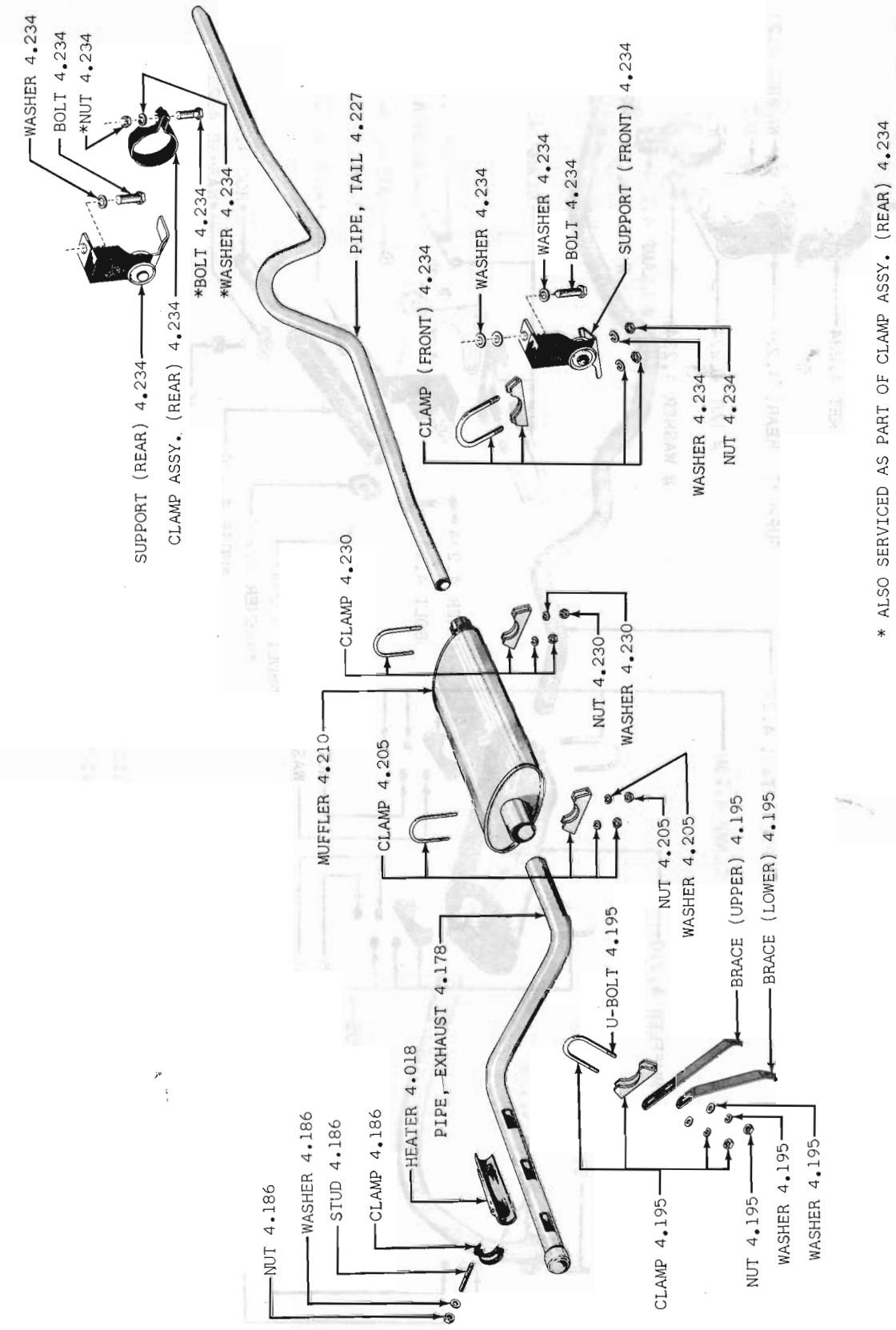

* ALSO SERVICED AS PART OF CLAMP ASSY. (REAR) 4.234

EXHAUST SYSTEM 60 01 (LHE)

Copyright 1963 American Motors Corp.

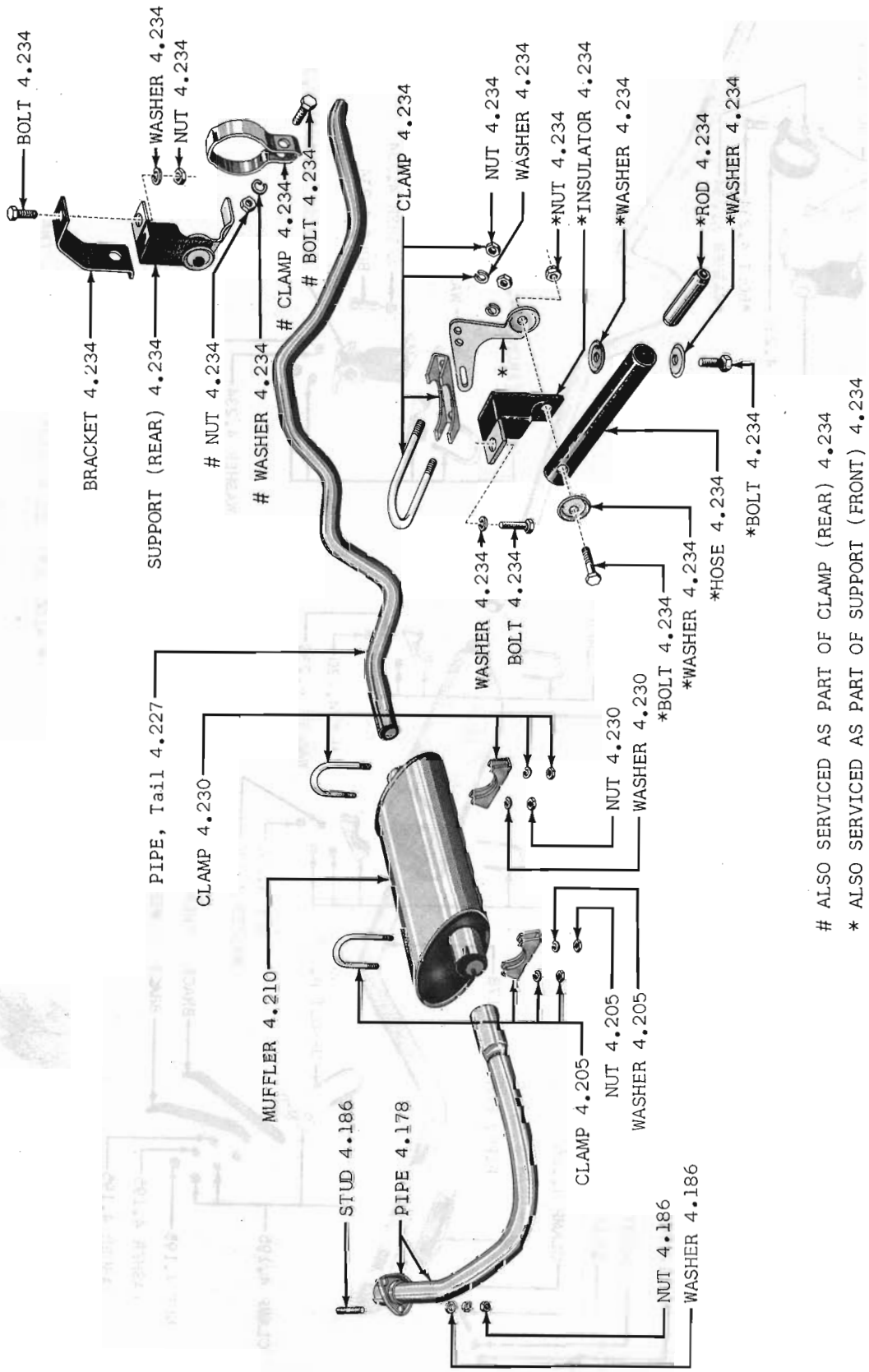

ALSO SERVICED AS PART OF CLAMP (REAR) 4.234

* ALSO SERVICED AS PART OF SUPPORT (FRONT) 4.234

EXHAUST SYSTEM 60 10

Copyright 1963 American Motors Corp.

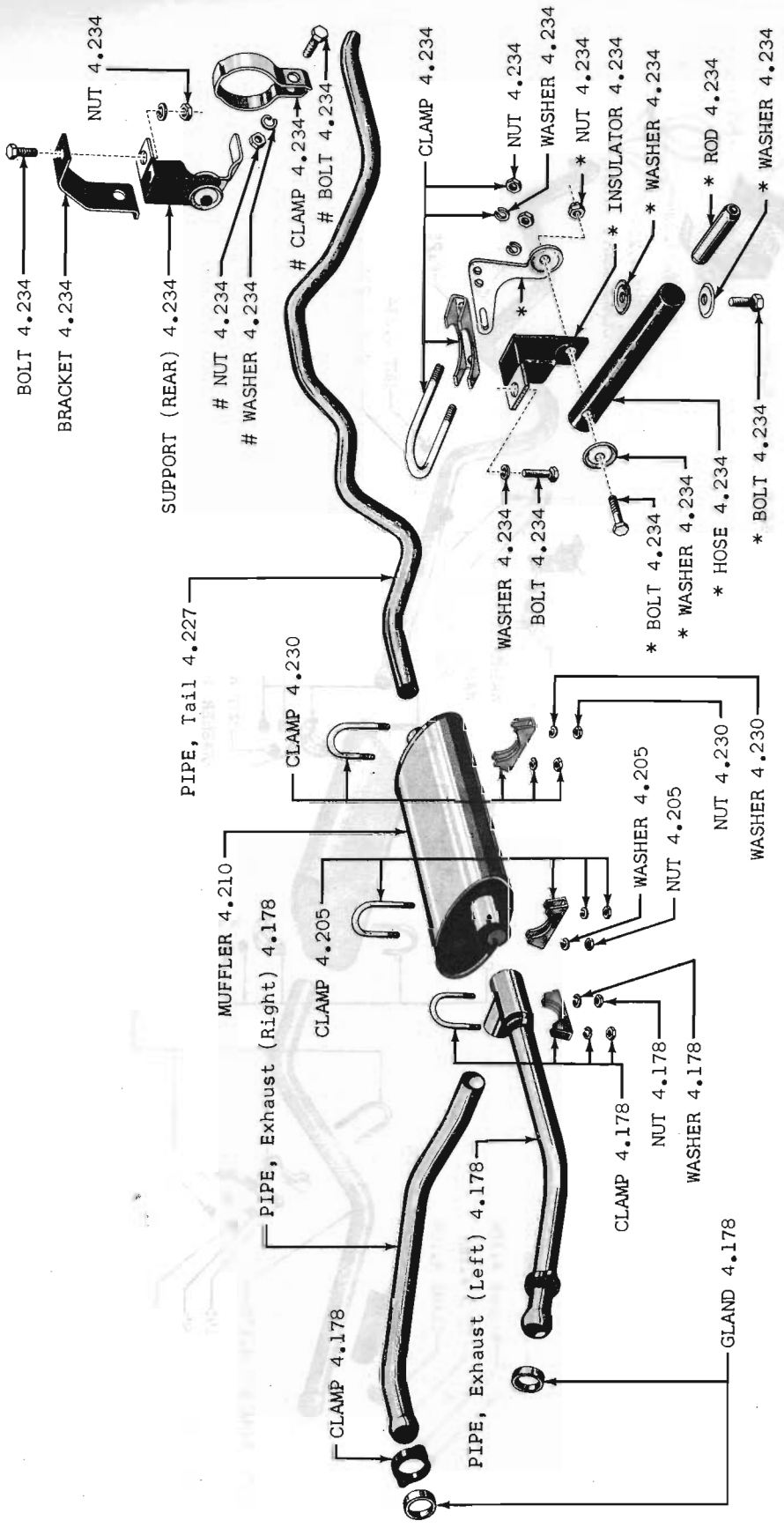

ALSO SERVICED AS PART OF CLAMP (REAR) 4.234

* ALSO SERVICED AS PART OF SUPPORT (FRONT) 4.234

EXHAUST SYSTEM 60 20-80 (LDE)

Copyright 1963 American Motors Corp.

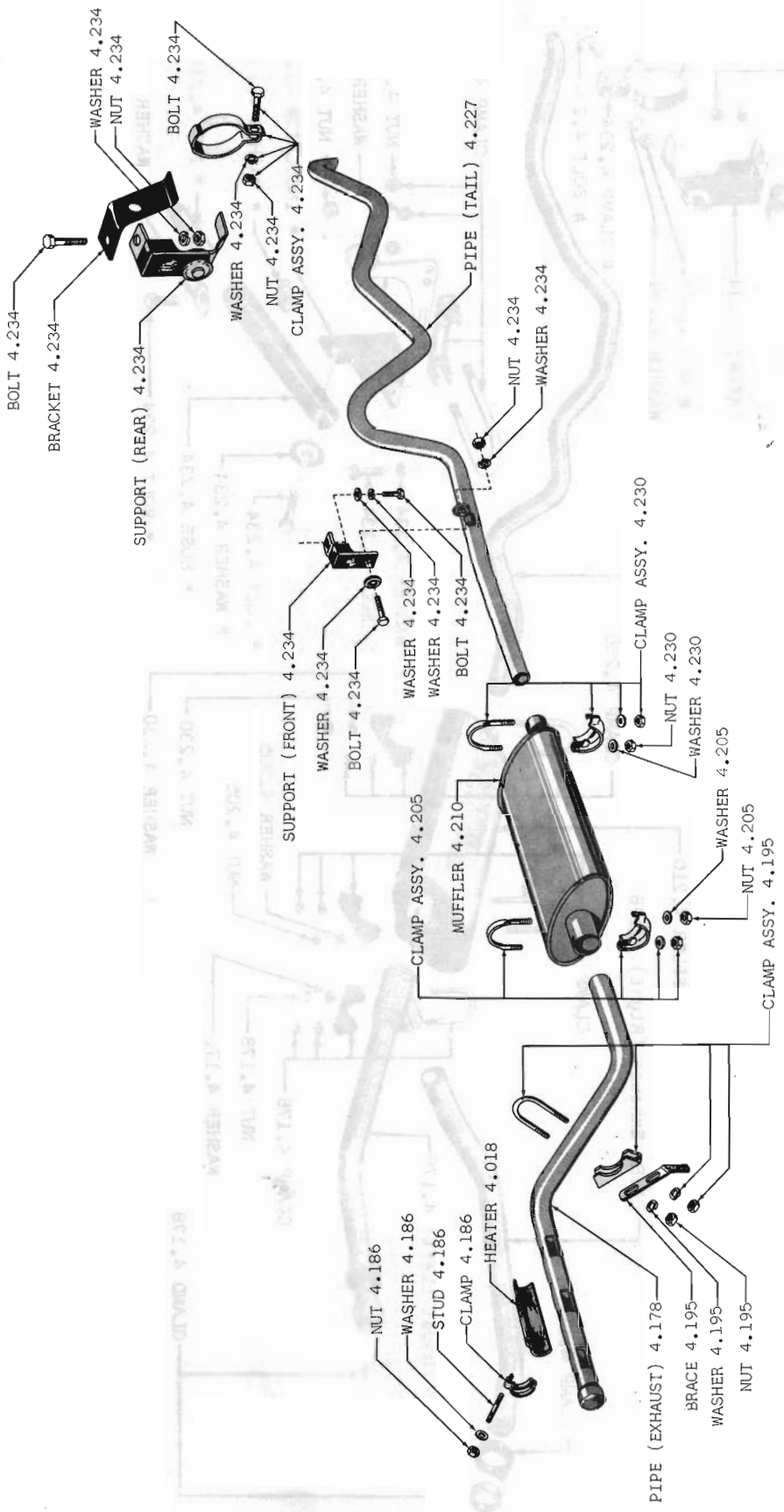

EXHAUST SYSTEM 62 01 (LHE)

Copyright 1963 American Motors Corp.

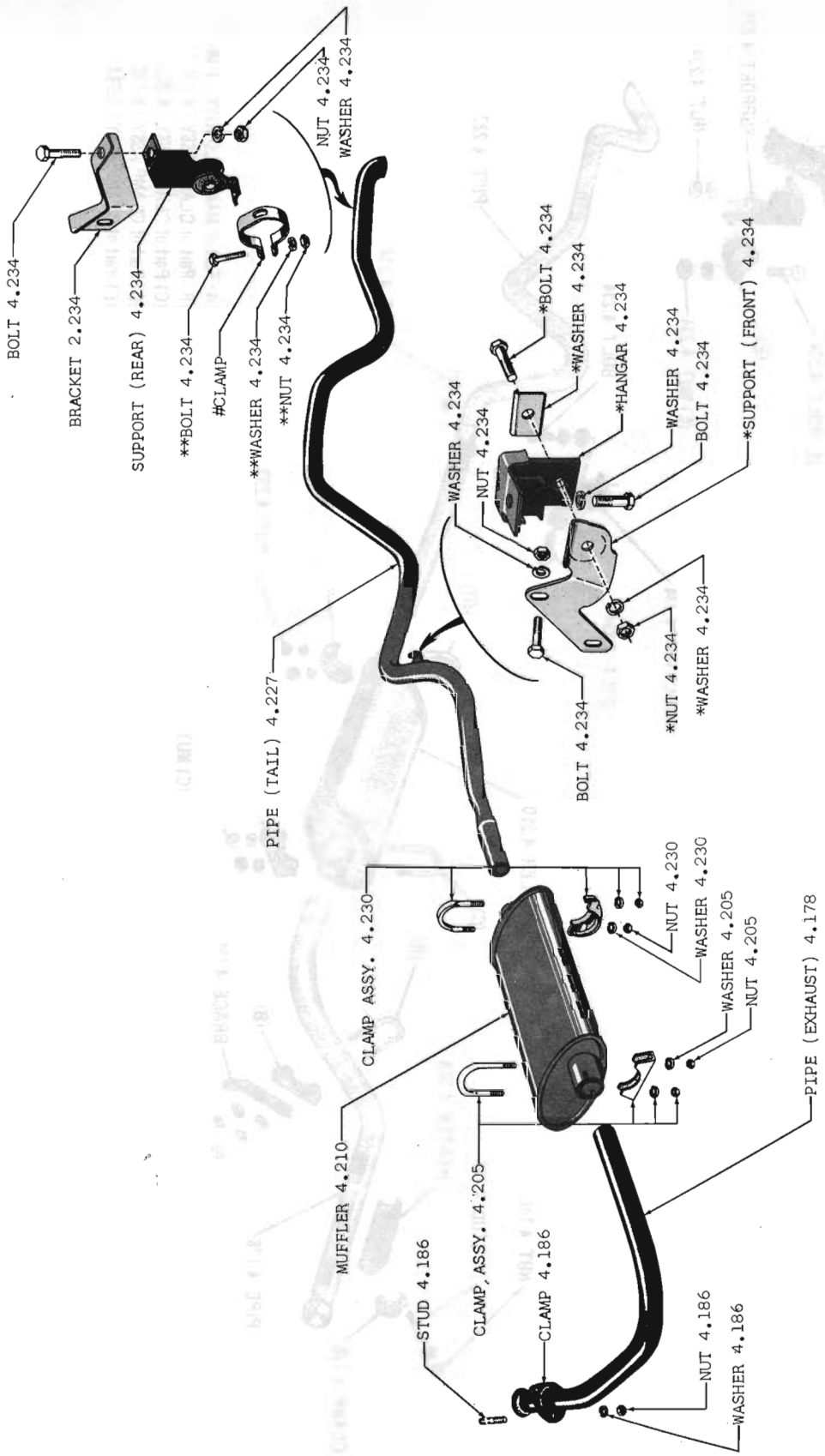

* ALSO SERVICED AS PART OF SUPPORT ASSY. 4.234

\# SERVICED ONLY AS PART OF CLAMP ASSY. 4.234

** ALSO SERVICED AS PART OF CLAMP ASSY. 4.234

EXHAUST SYSTEM 62 01-10 (OHV)

Copyright 1963 American Motors Corp.

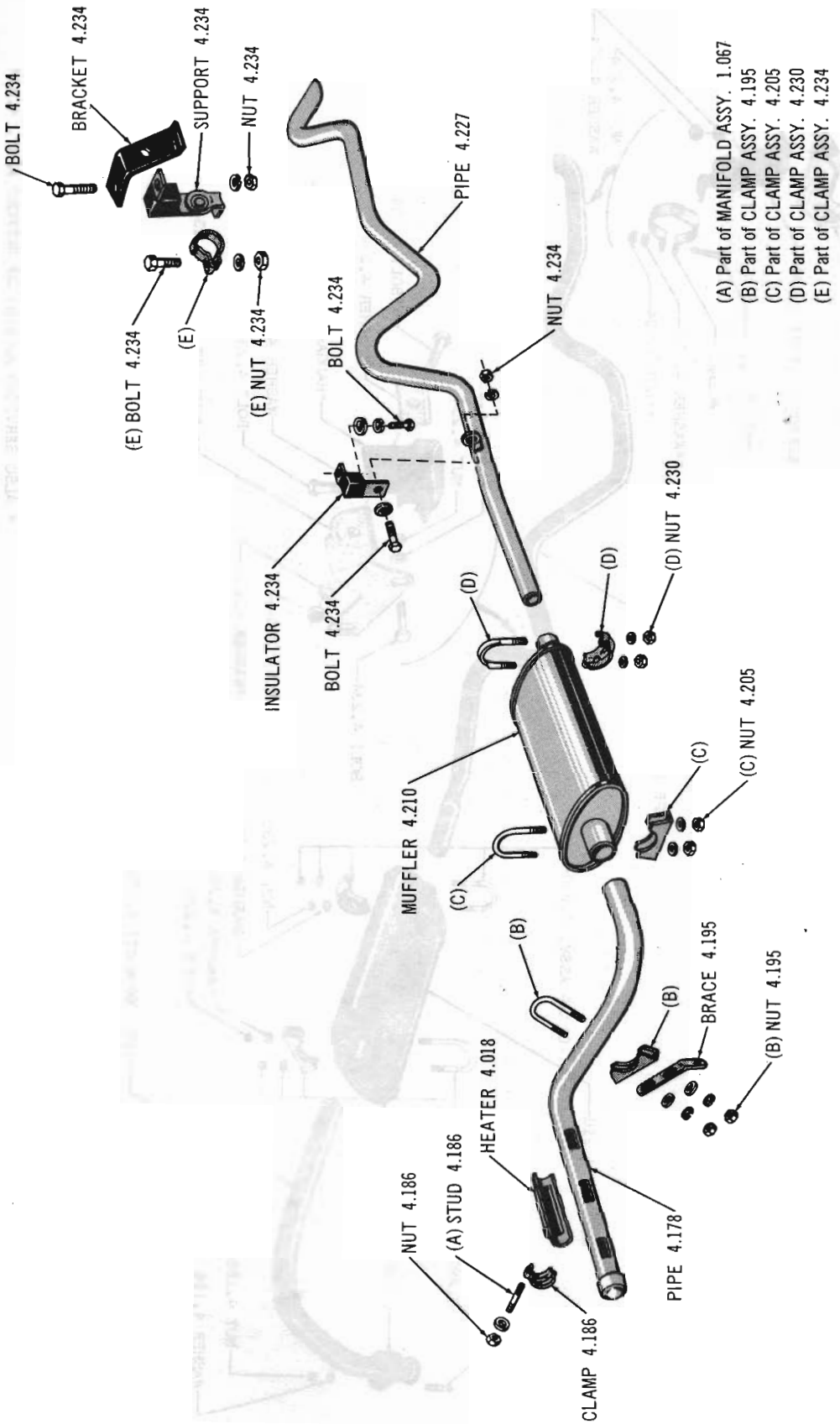

EXHAUST SYSTEM 63 01 (LHD-LHE)

Copyright 1963 American Motors Corp.

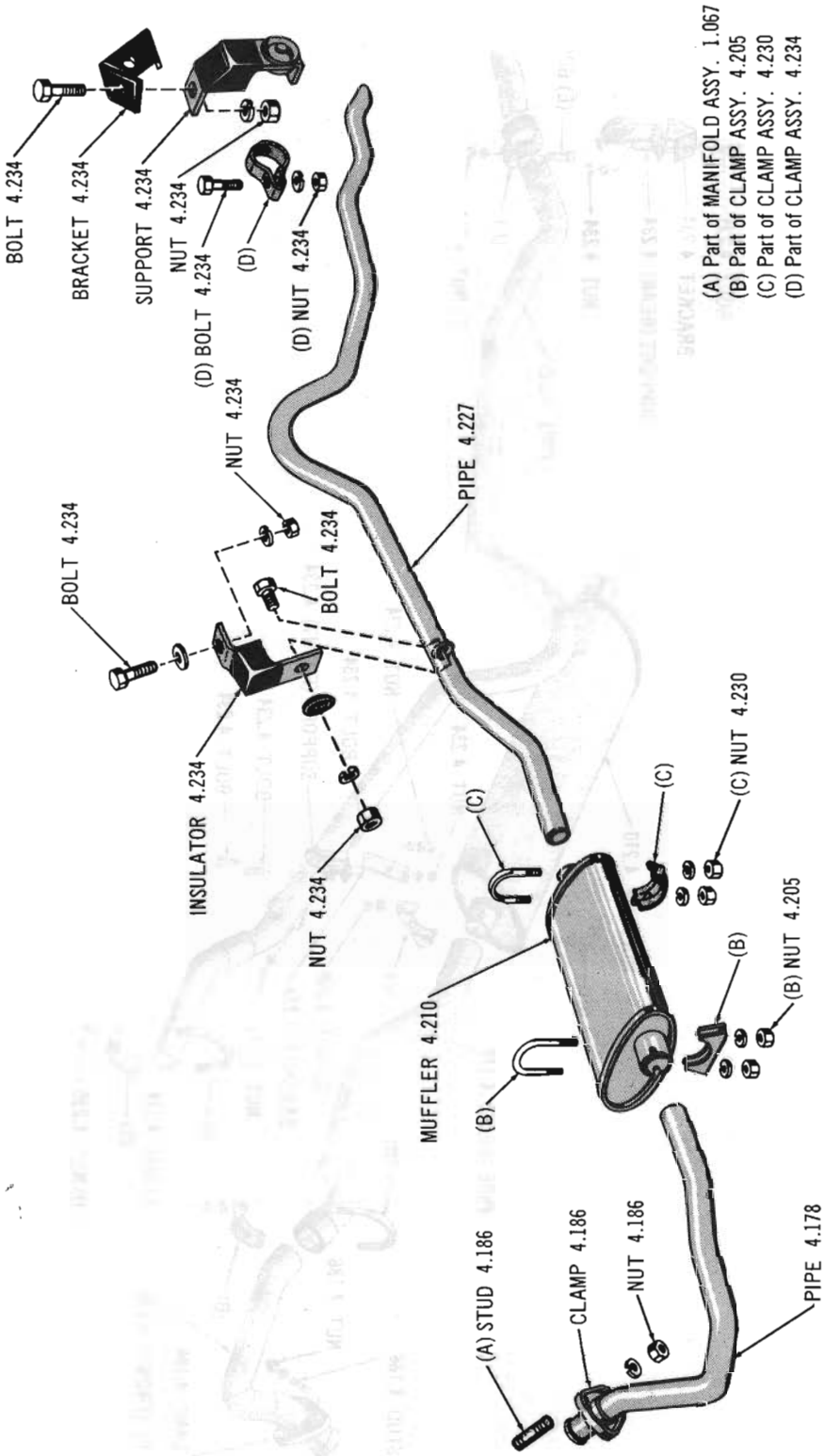

EXHAUST SYSTEM 63 02-04-05-06-08 (OHV)

Copyright 1963 American Motors Corp.

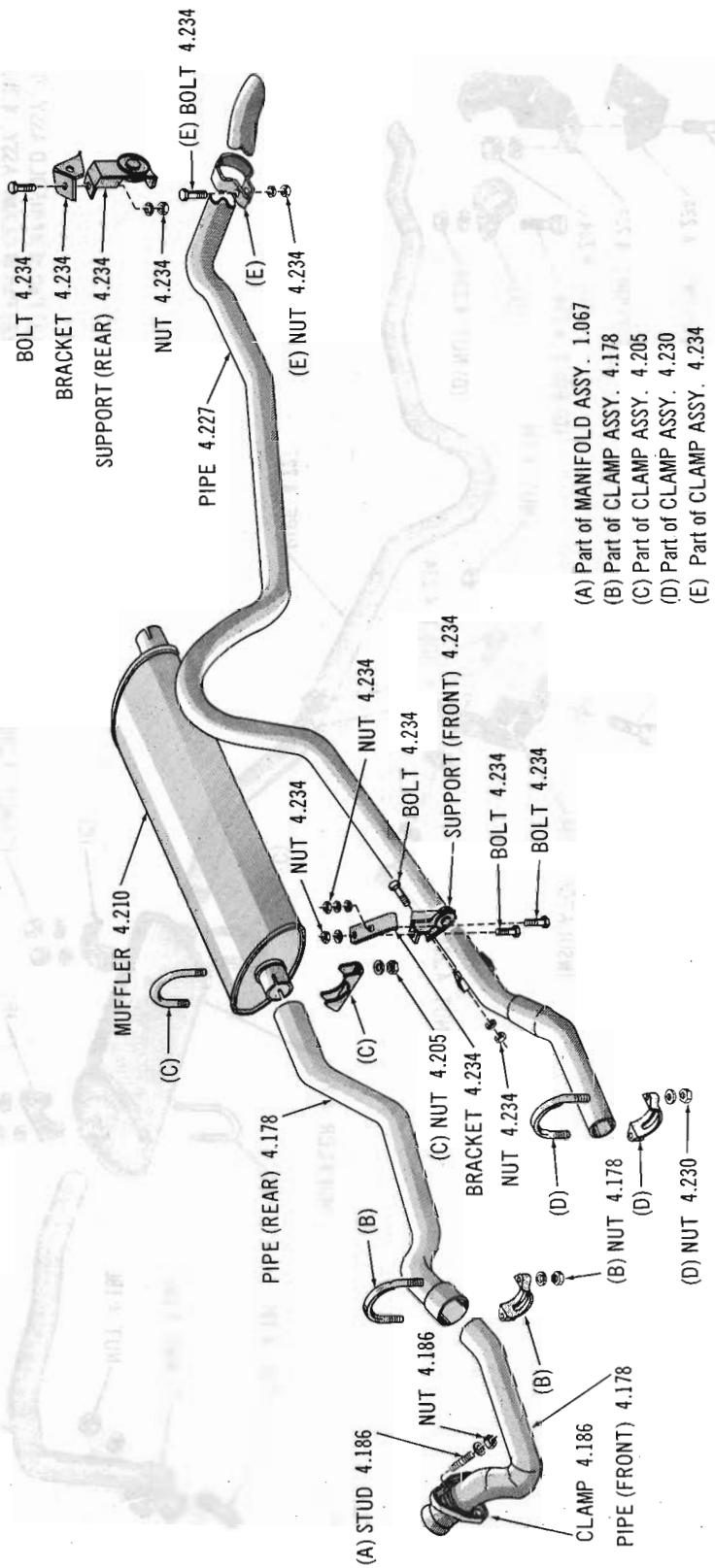

EXHAUST SYSTEM 61 thru 63 07 (OHV)

Copyright 1963 American Motors Corp.

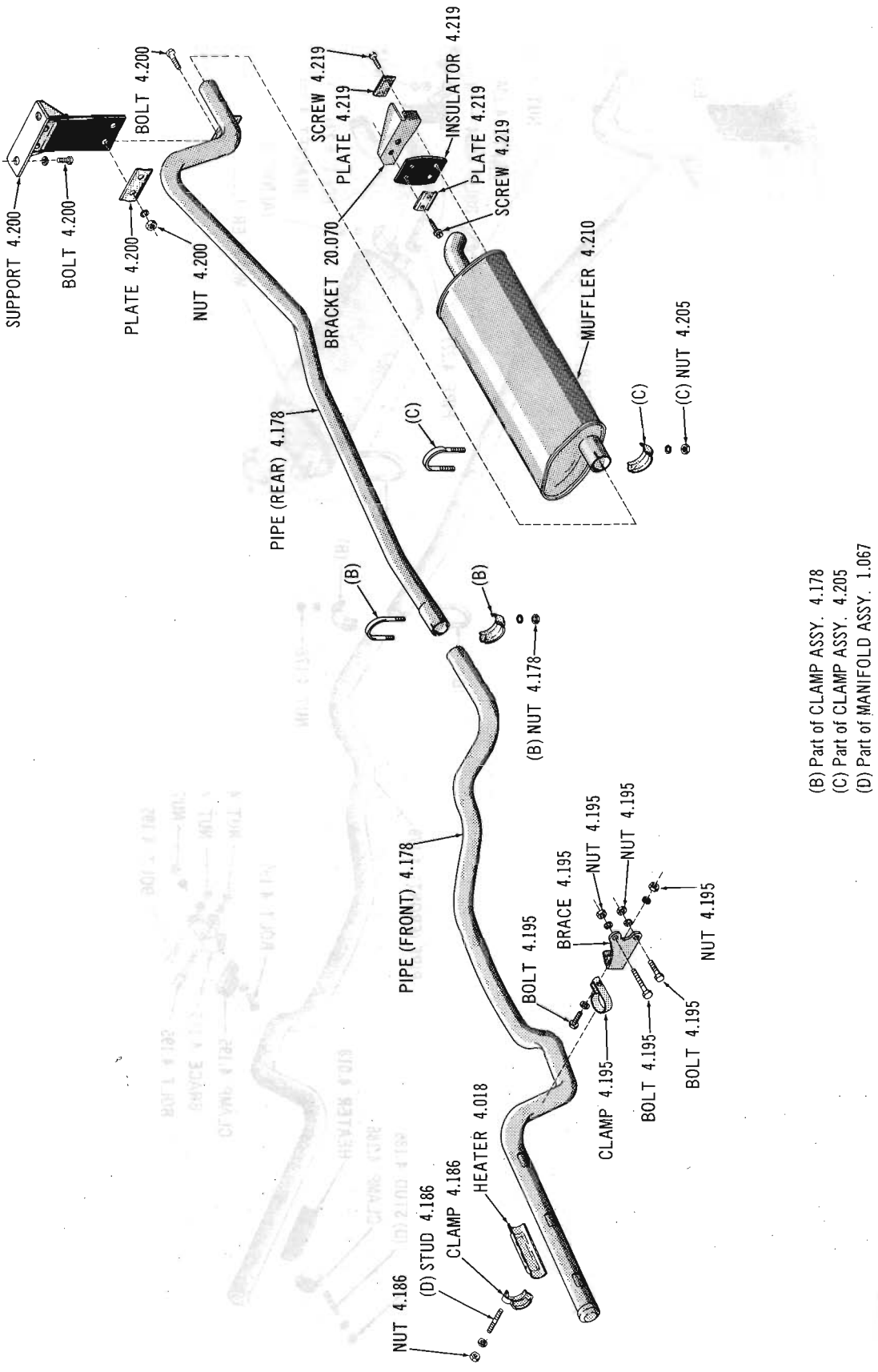

(B) Part of CLAMP ASSY. 4.178
(C) Part of CLAMP ASSY. 4.205
(D) Part of MANIFOLD ASSY. 1.067

EXHAUST SYSTEM 64-65 02-05-06-09 (LHE)

Copyright 1963 American Motors Corp.

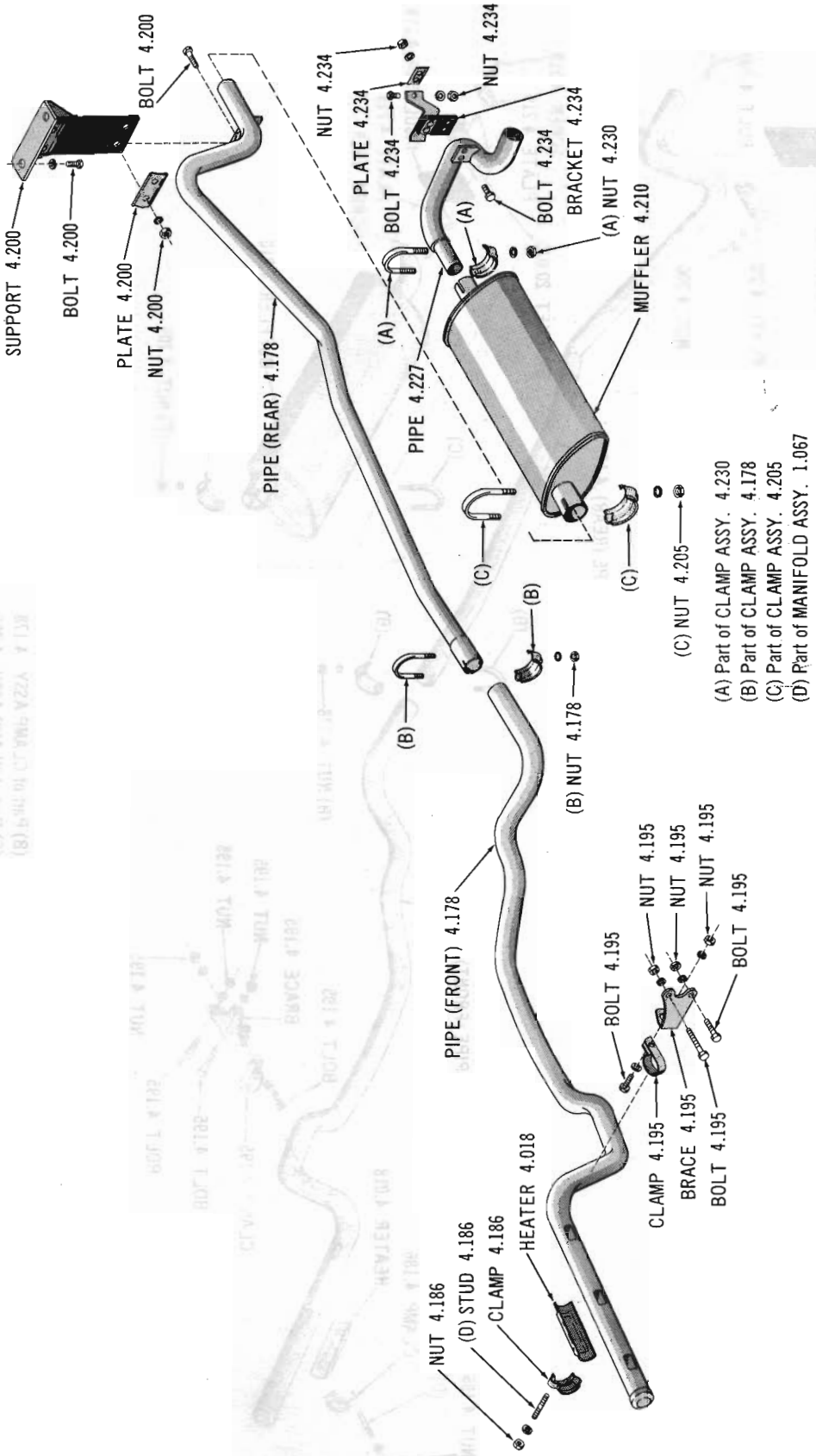

EXHAUST SYSTEM 64-65 08 (LHE)

Copyright 1963 American Motors Corp.

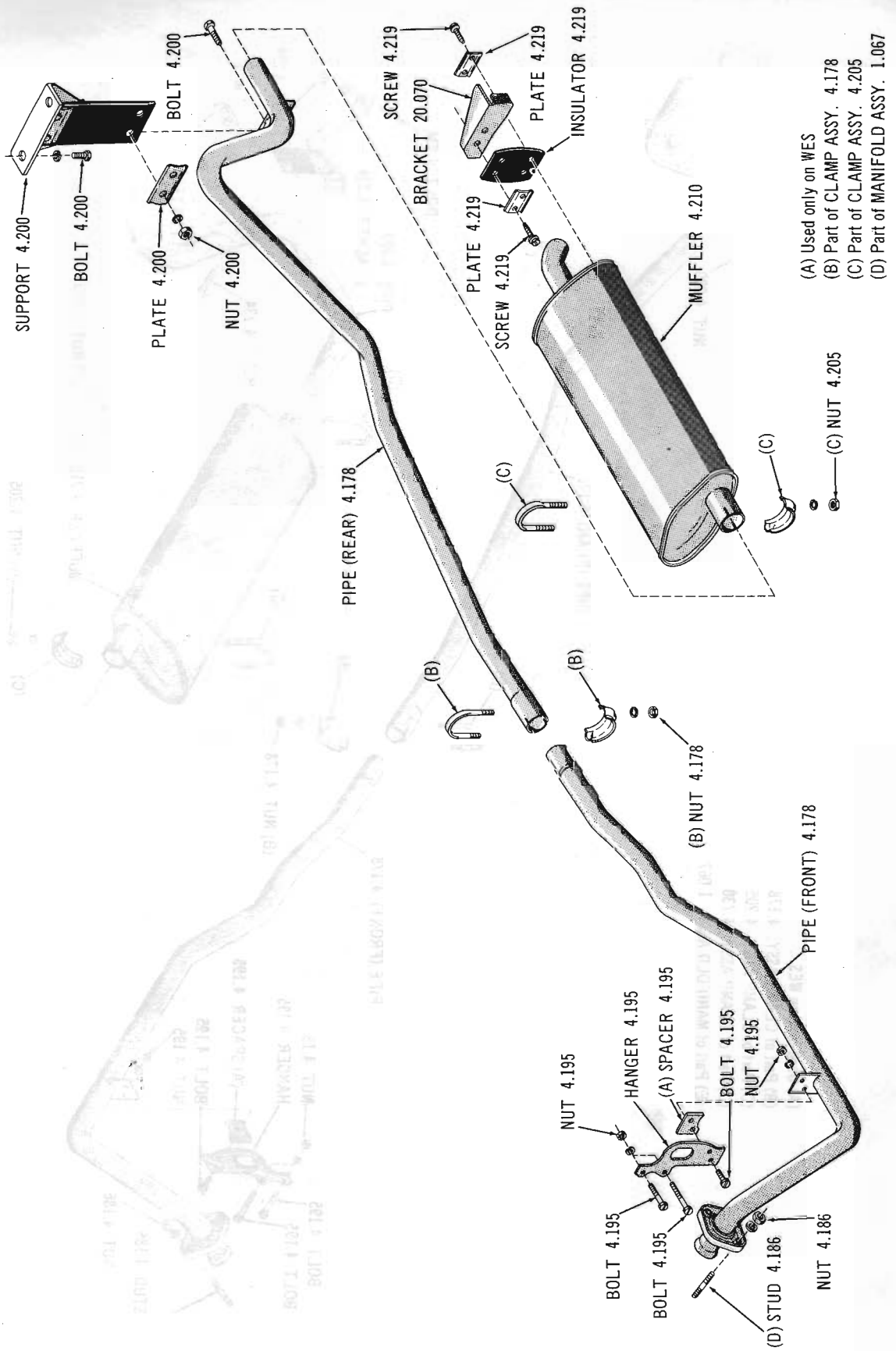

EXHAUST SYSTEM 64 02-05-06-09 (OHV)

Copyright 1963 American Motors Corp.

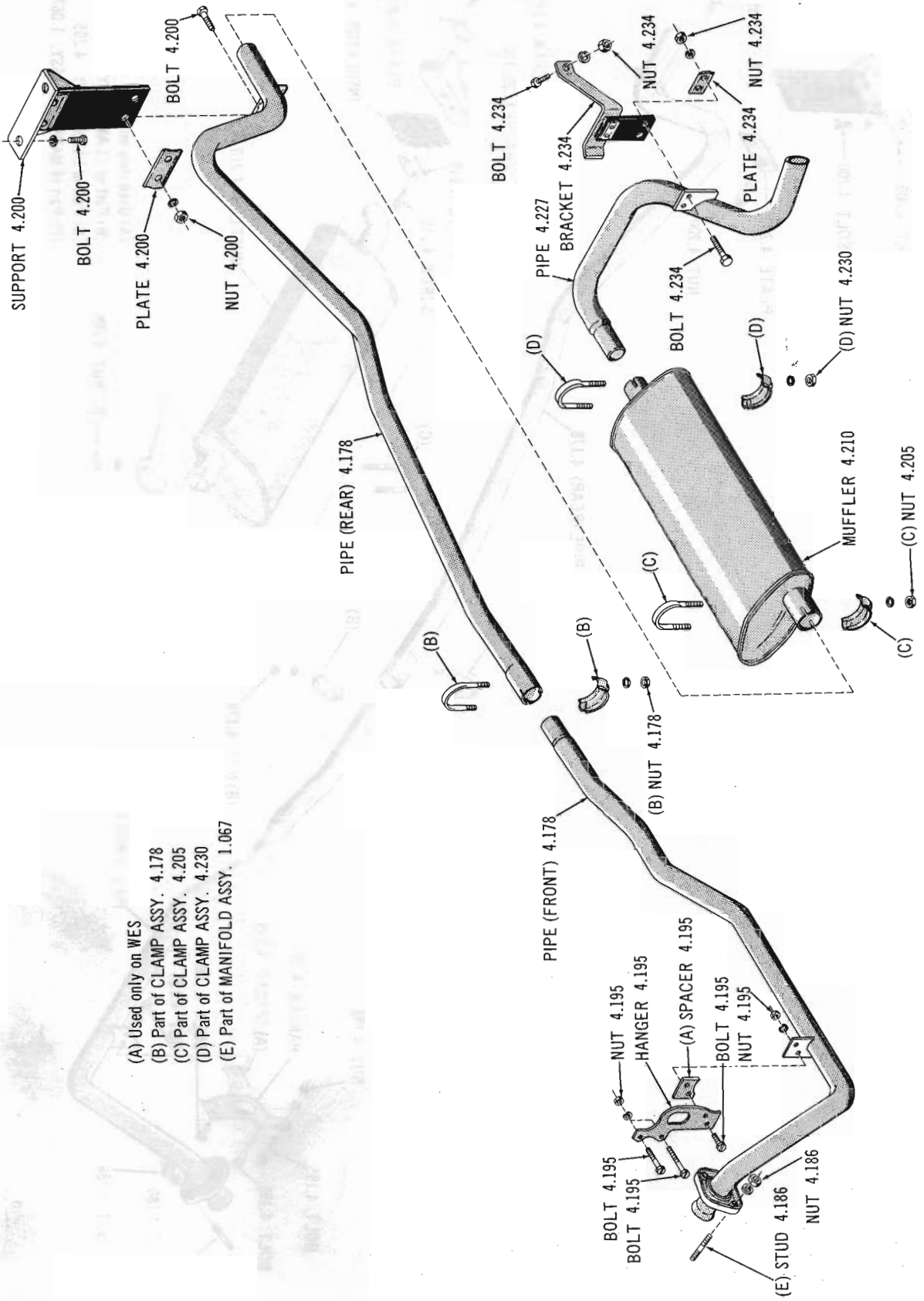

EXHAUST SYSTEM 64 07-08 (OHV)

Copyright 1963 American Motors Corp.

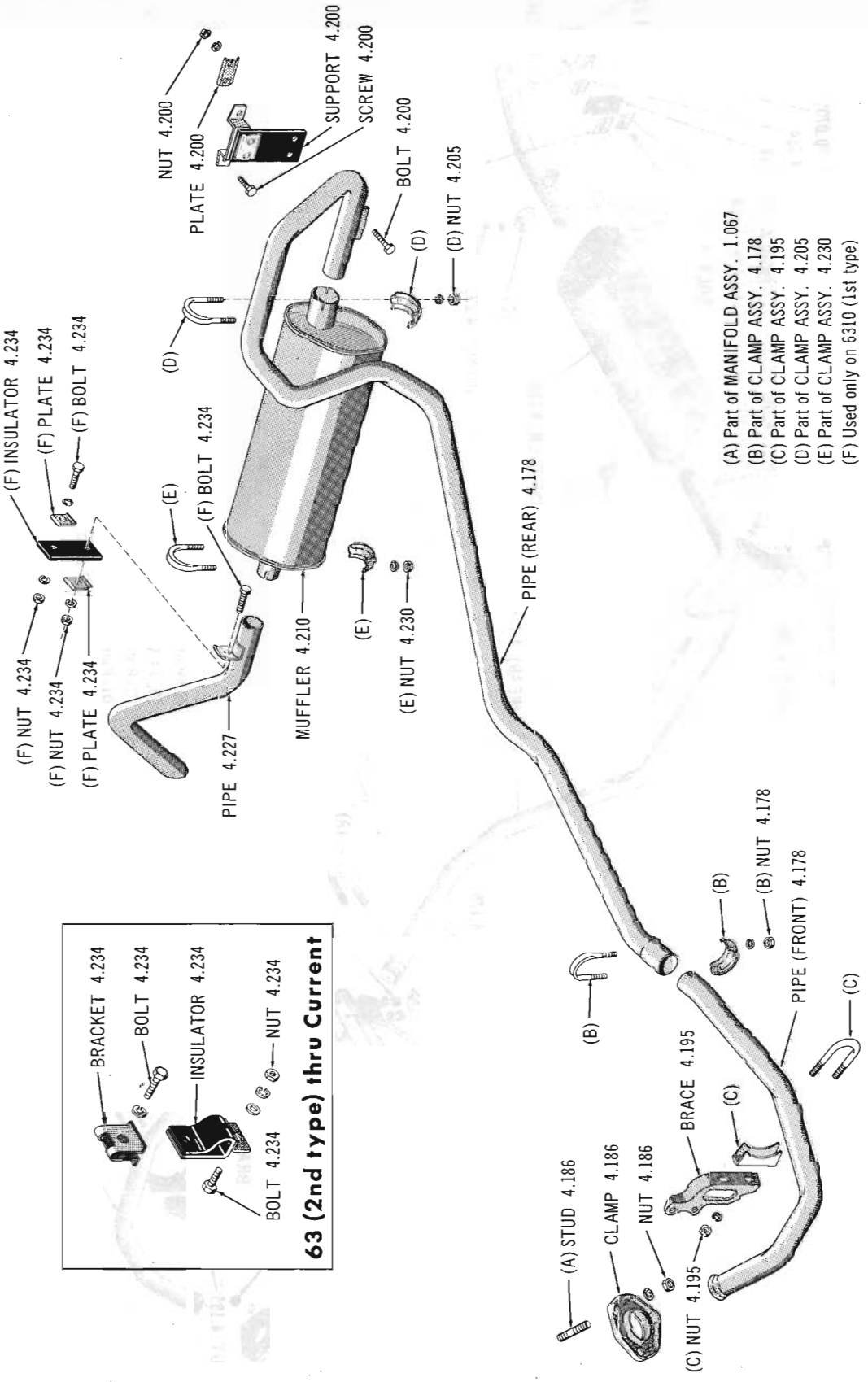

EXHAUST SYSTEM 63-64 10 (OHV-196-L3S)

Copyright 1963 American Motors Corp.

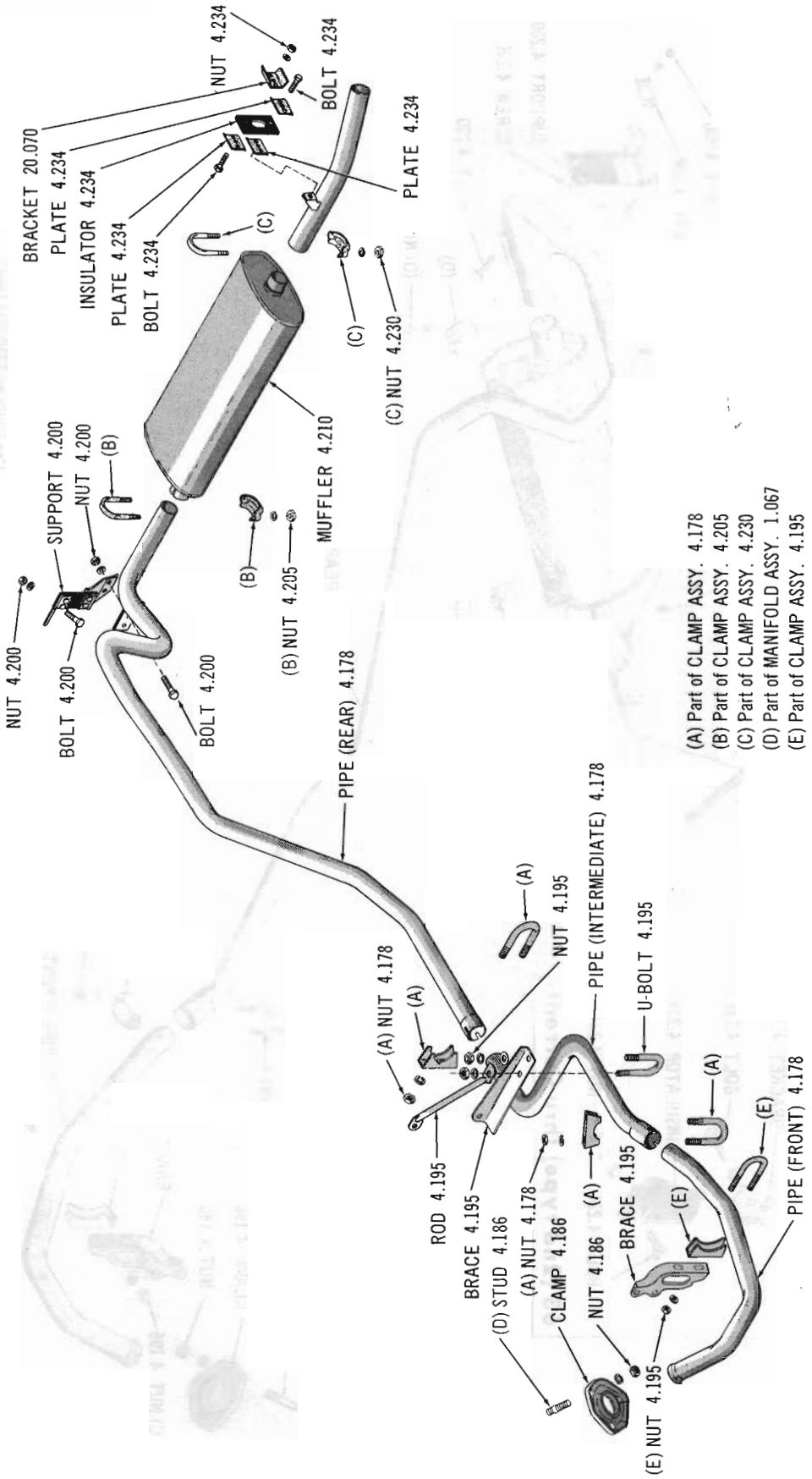

EXHAUST SYSTEM 63 18 (1st type - OHV-196-W3S)

Copyright 1963 American Motors Corp.

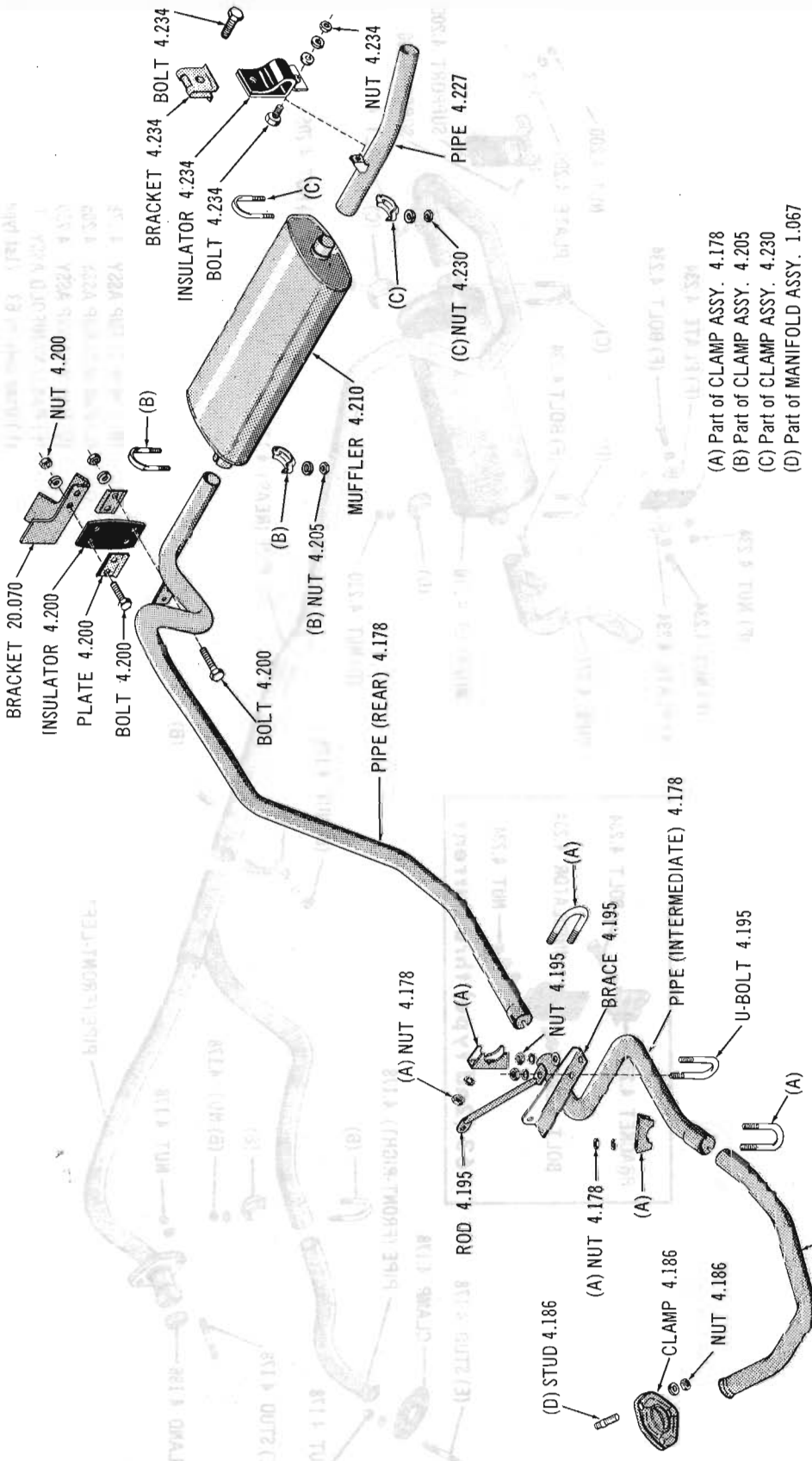

EXHAUST SYSTEM 63 18 (2nd type-OHV-196-W3S): 64 18 (OHV-196-W3S)

Copyright 1963 American Motors Corp.

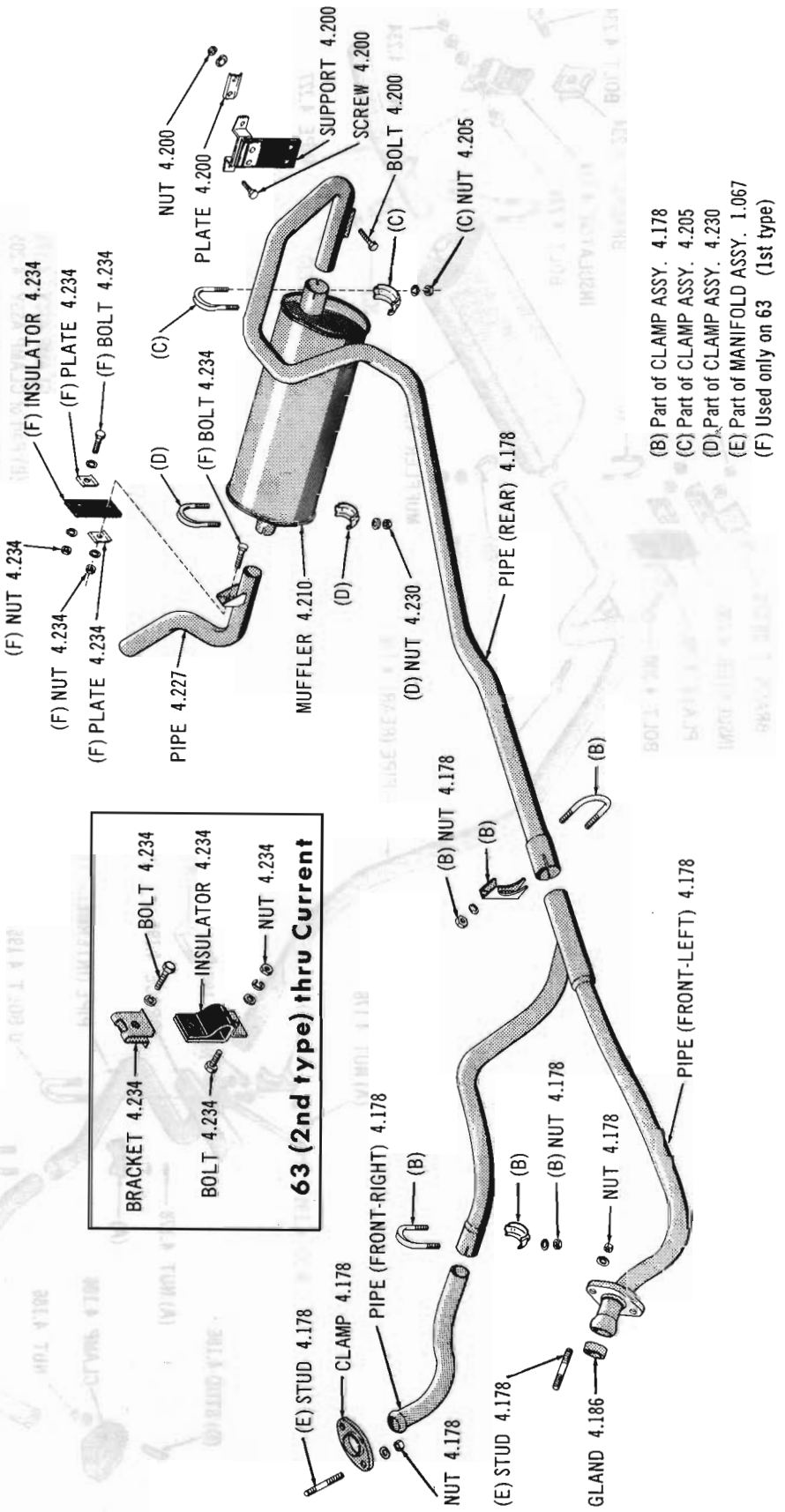

EXHAUST SYSTEM 63-64 10-80 (V8-L3S)

Copyright 1963 American Motors Corp.

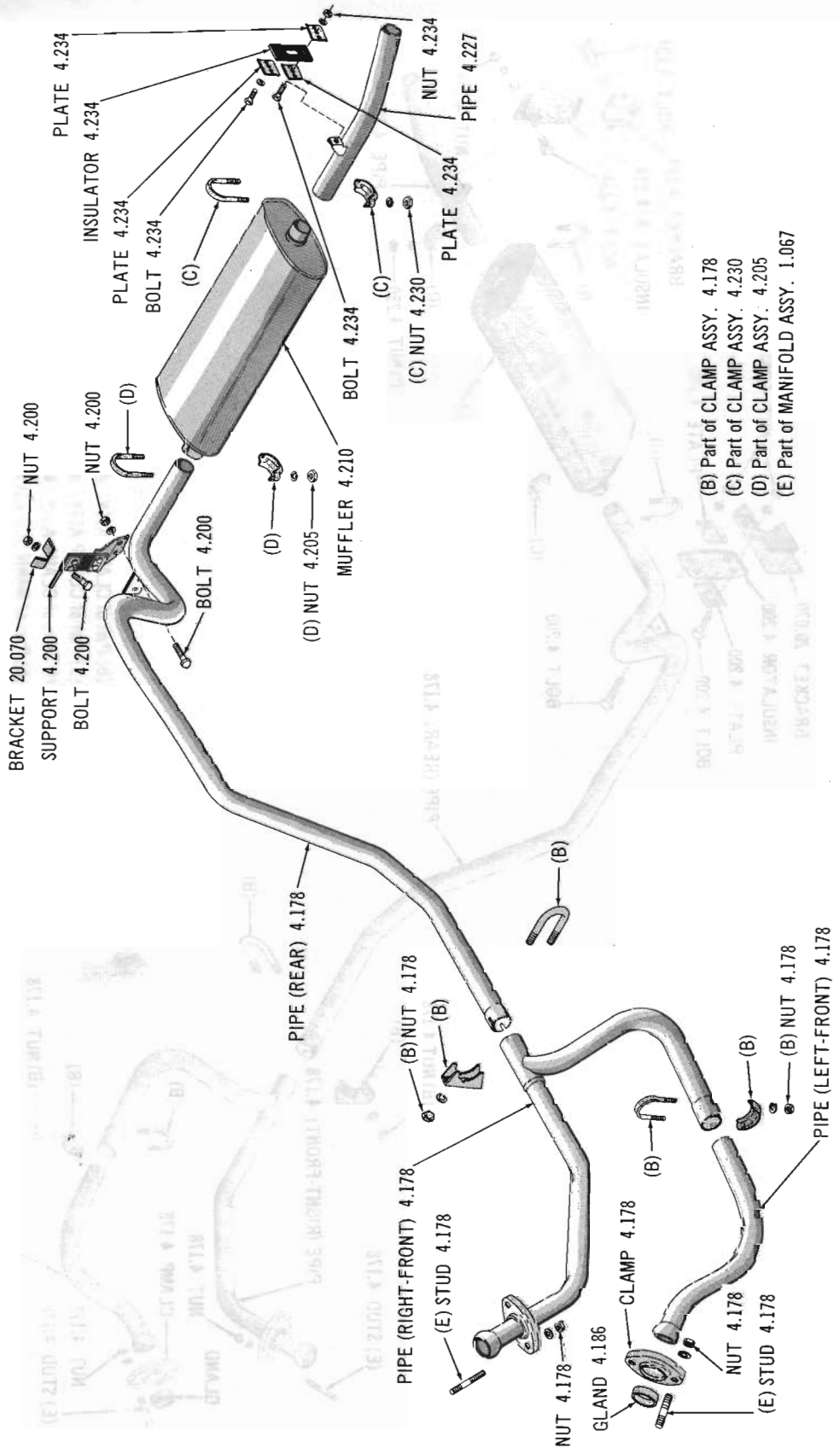

EXHAUST SYSTEM 63 18-88 (1st type - V8 - W3S)

Copyright 1963 American Motors Corp.

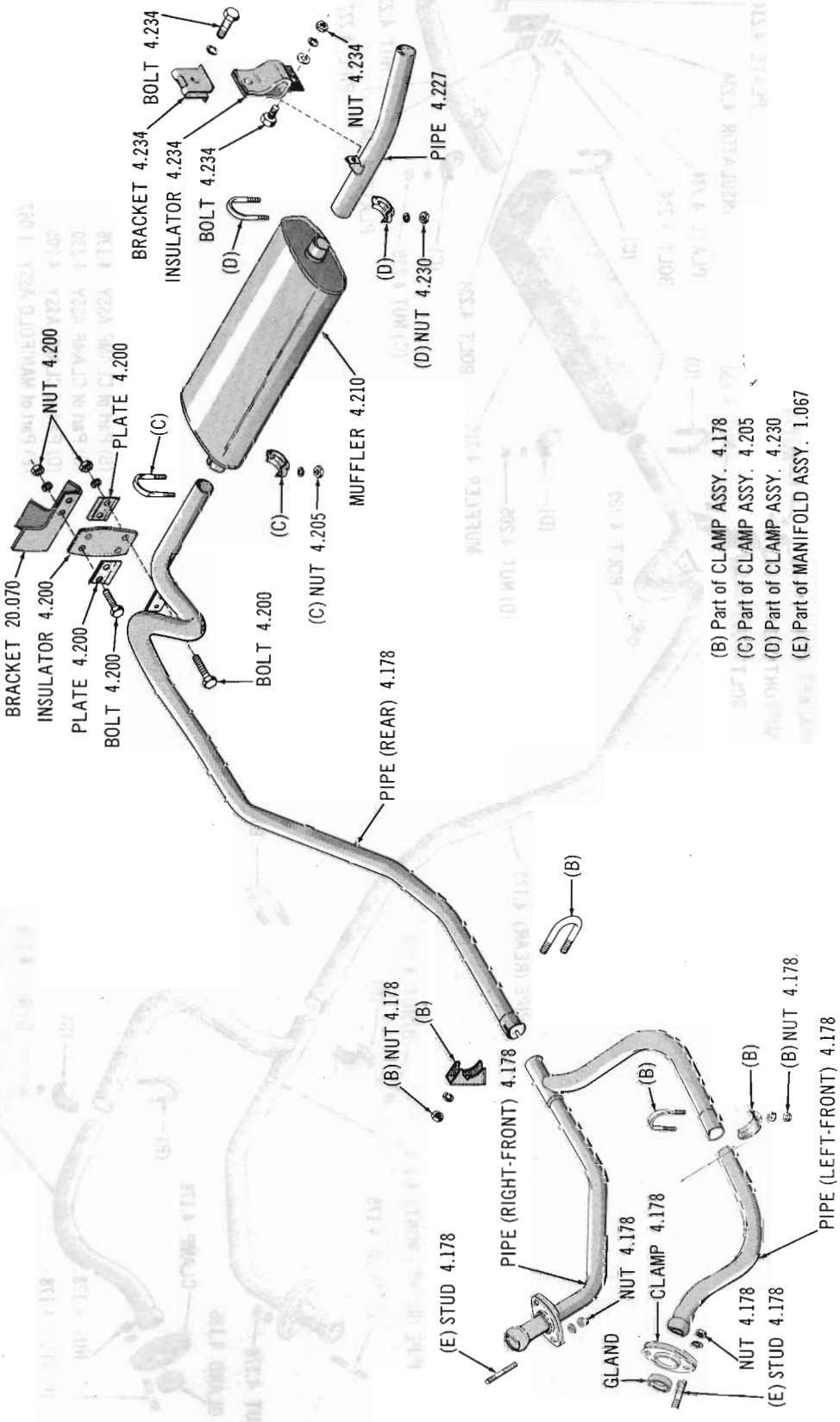

EXHAUST SYSTEM 63 18 (2nd type-V8-W3S): 64 18-88 (V8-W3S)

Copyright 1963 American Motors Corp.

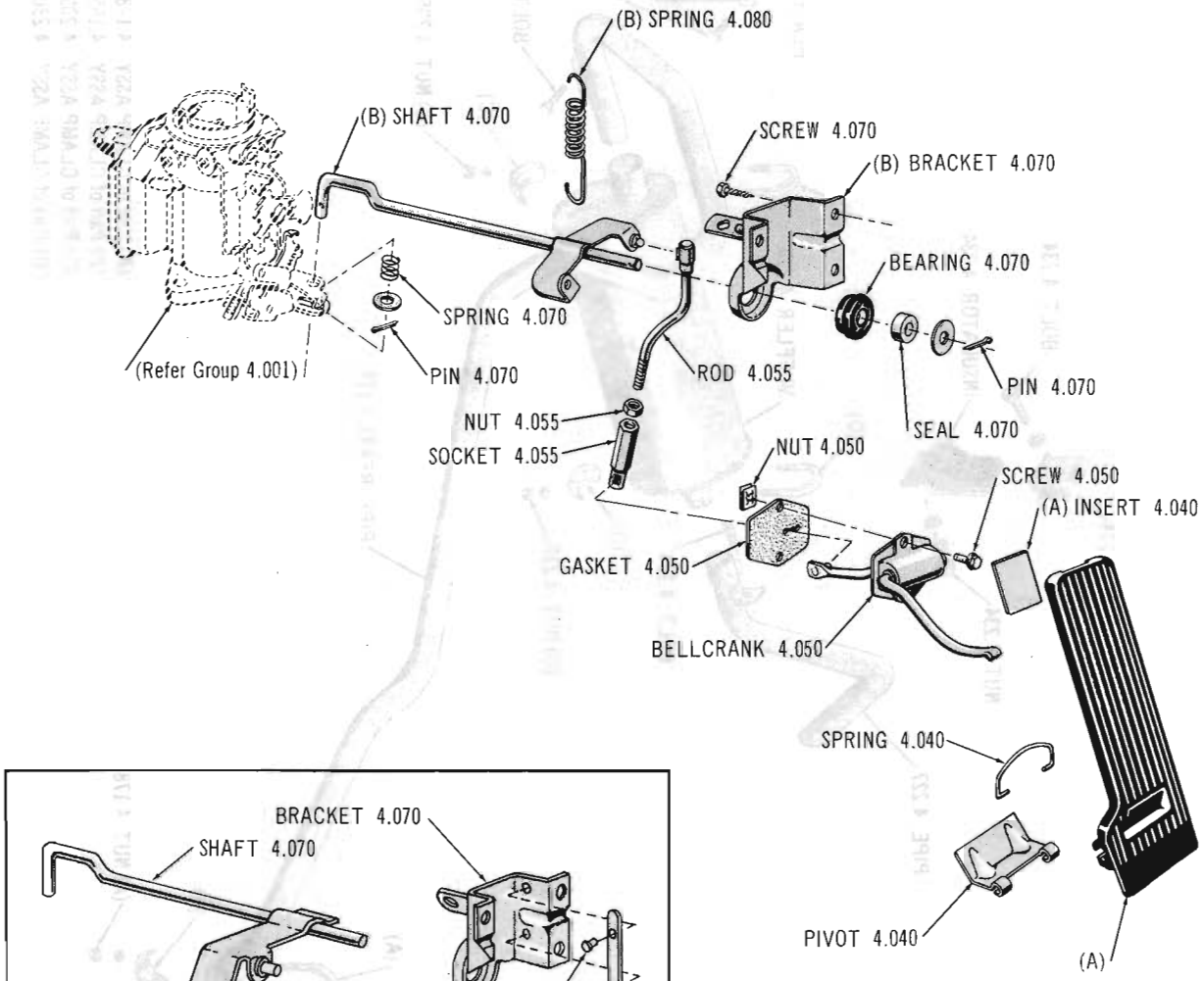

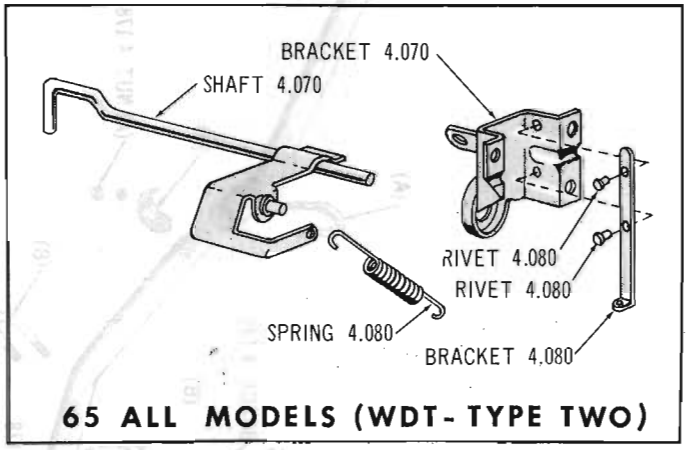

65 ALL MODELS (WDT- TYPE TWO)

(A) Part of PEDAL ASSY. 4.040
(B) 6500 ALL MODELS (WDT-TYPE ONE)

ACCELERATOR LINKAGE 64-65 ALL MODELS (LHD-OHV-199)(LHD-OHV-232)

Copyright 1963 American Motors Corp.

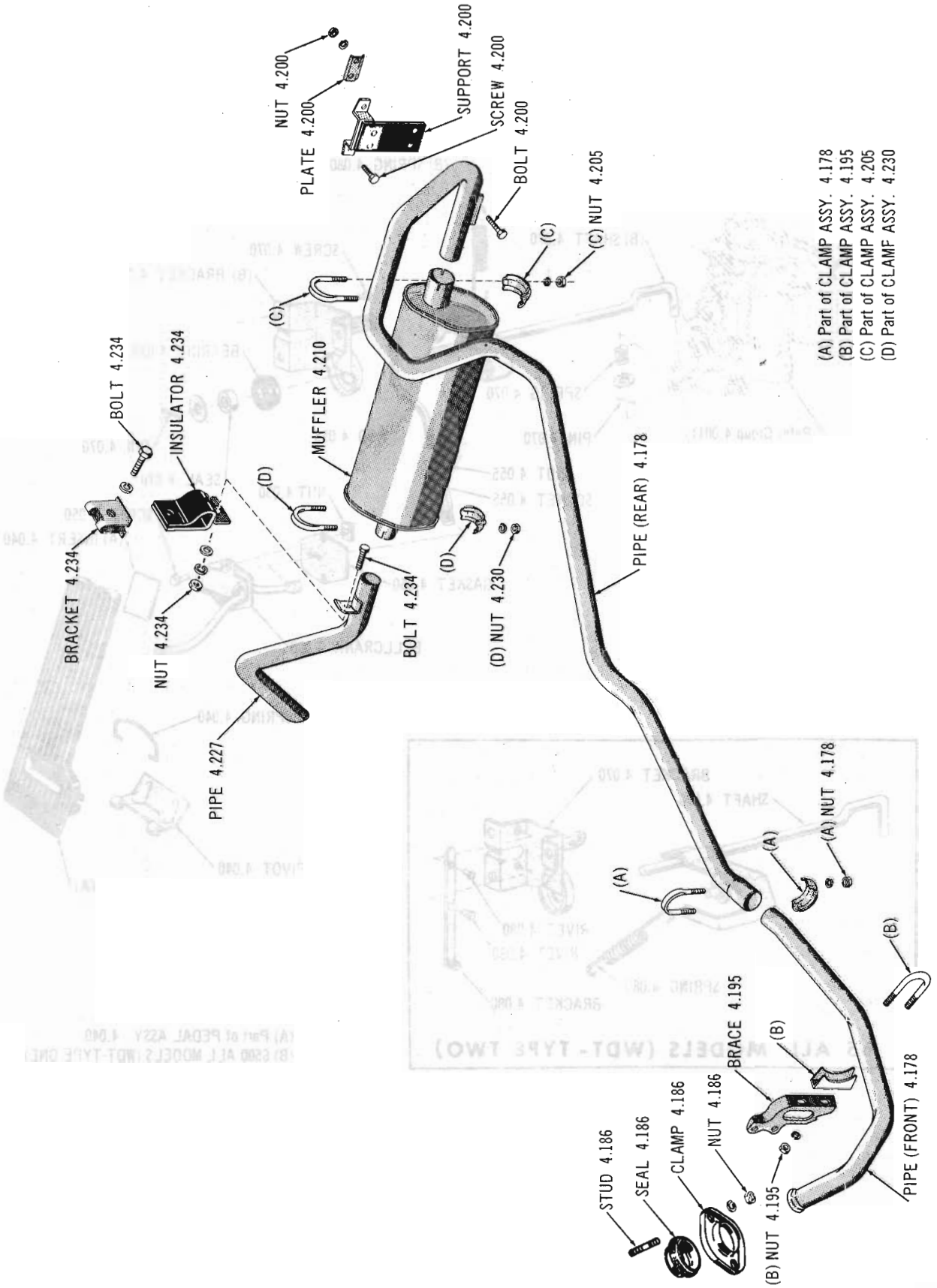

EXHAUST SYSTEM 64 10 (OHV-232-L3S)

Copyright 1963 American Motors Corp.

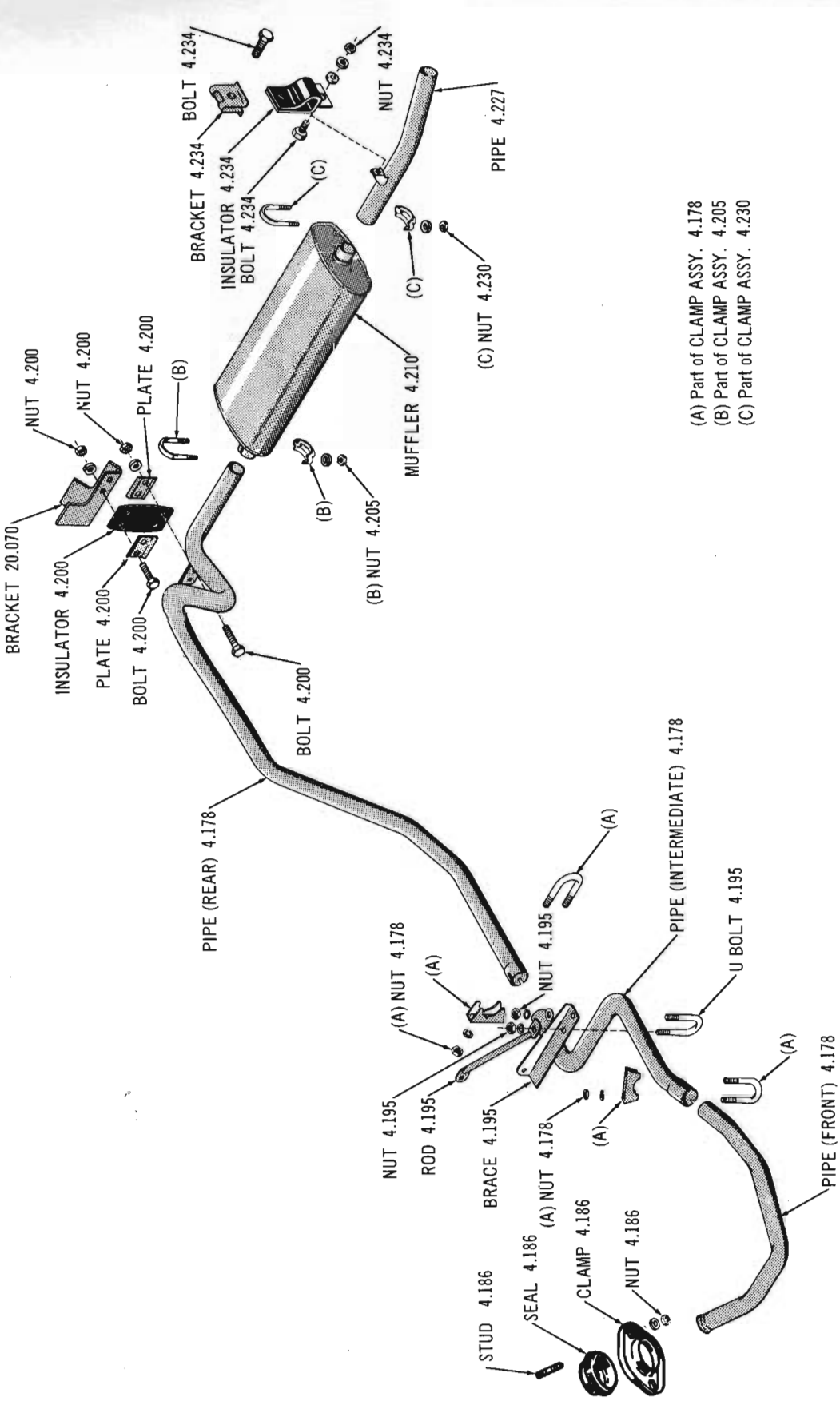

EXHAUST SYSTEM 64 18 (OHV-232-W3S): 65 18-88 (SIX-W3S)

Copyright 1963 American Motors Corp.

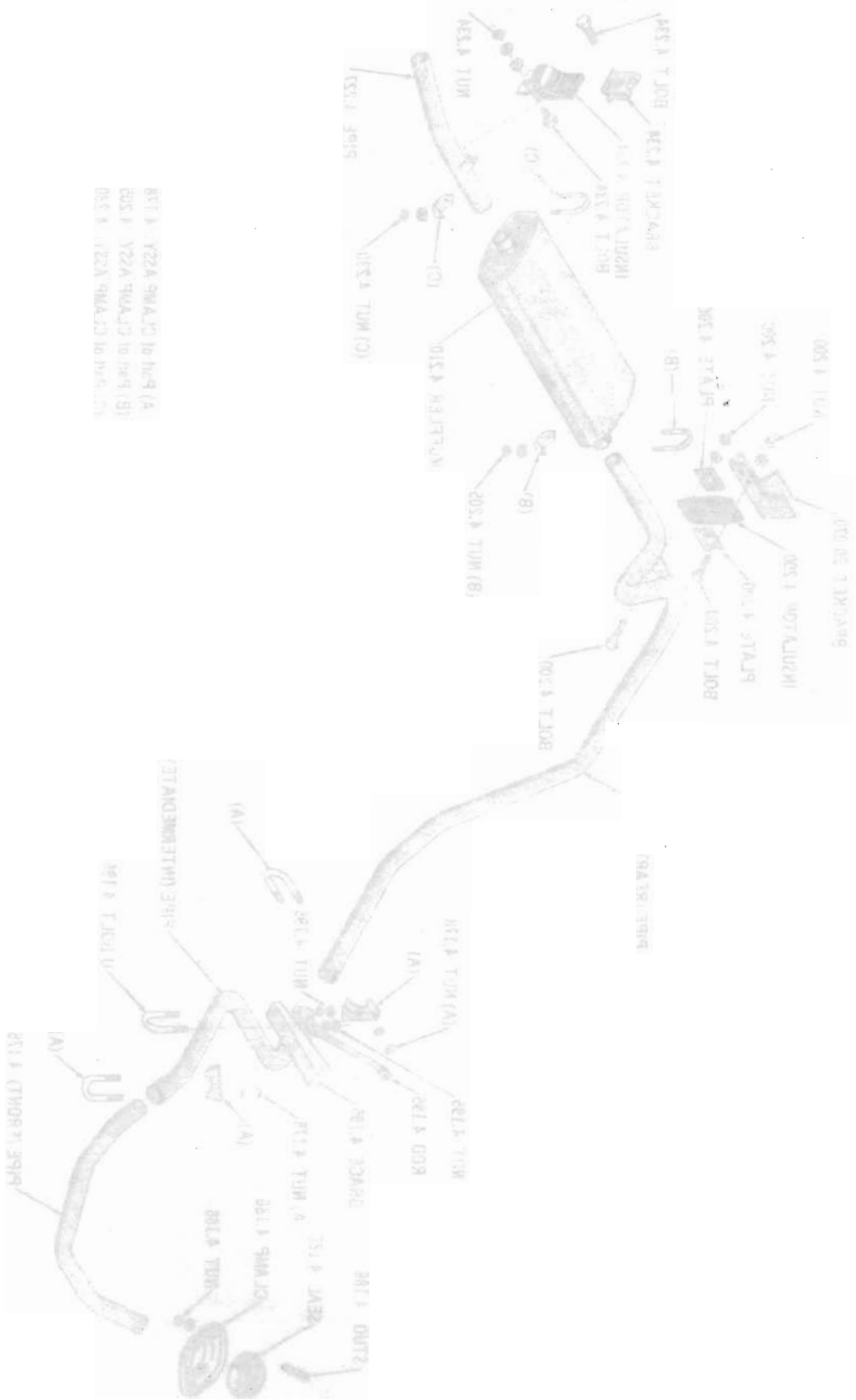

Copyright 1963 American Motors Corp.

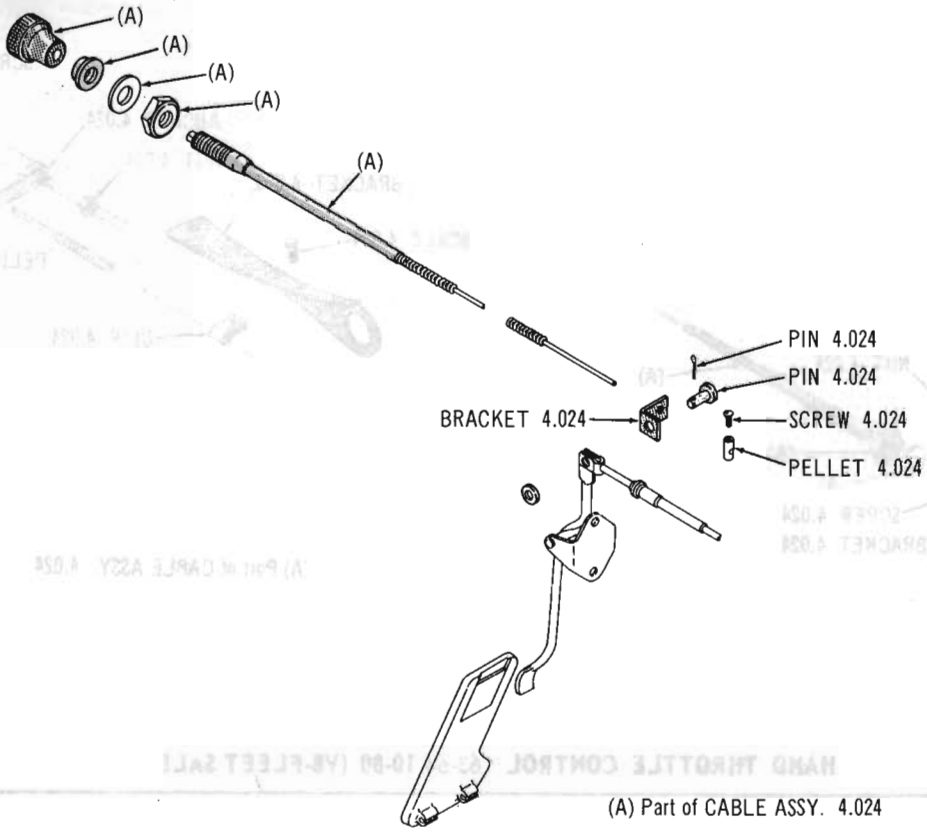

(A) Part of CABLE ASSY. 4.024

HAND THROTTLE CONTROL 64-65 01 (FLEET SALES)

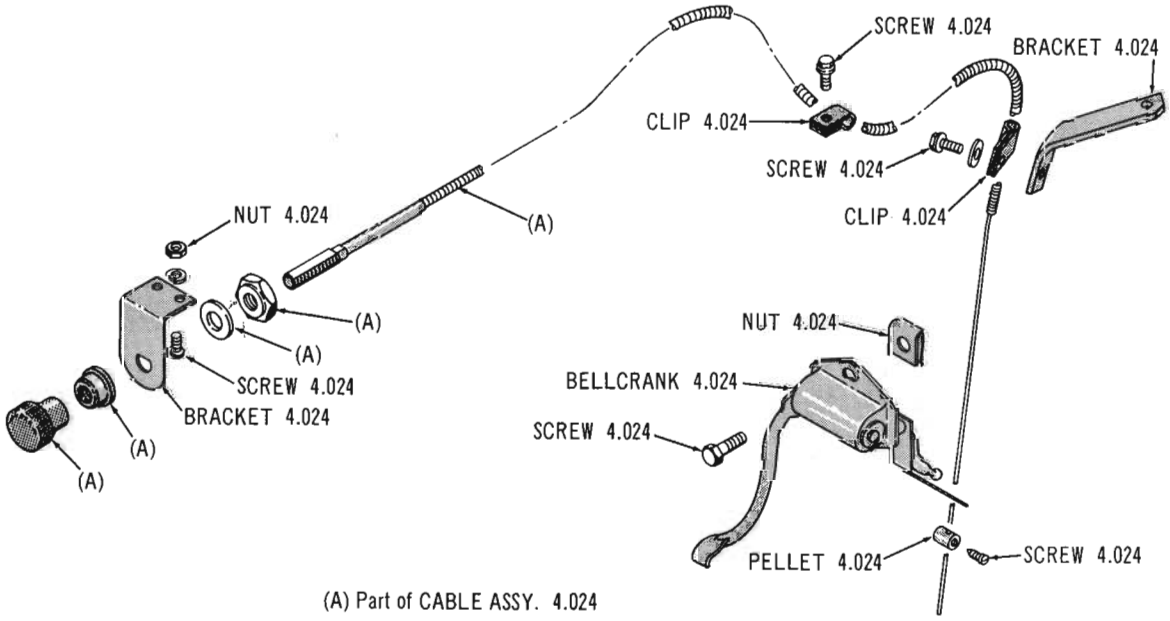

(A) Part of CABLE ASSY. 4.024

HAND THROTTLE CONTROL 63-64 10 (SIX-FLEET SALES)

Copyright 1963 American Motors Corp.

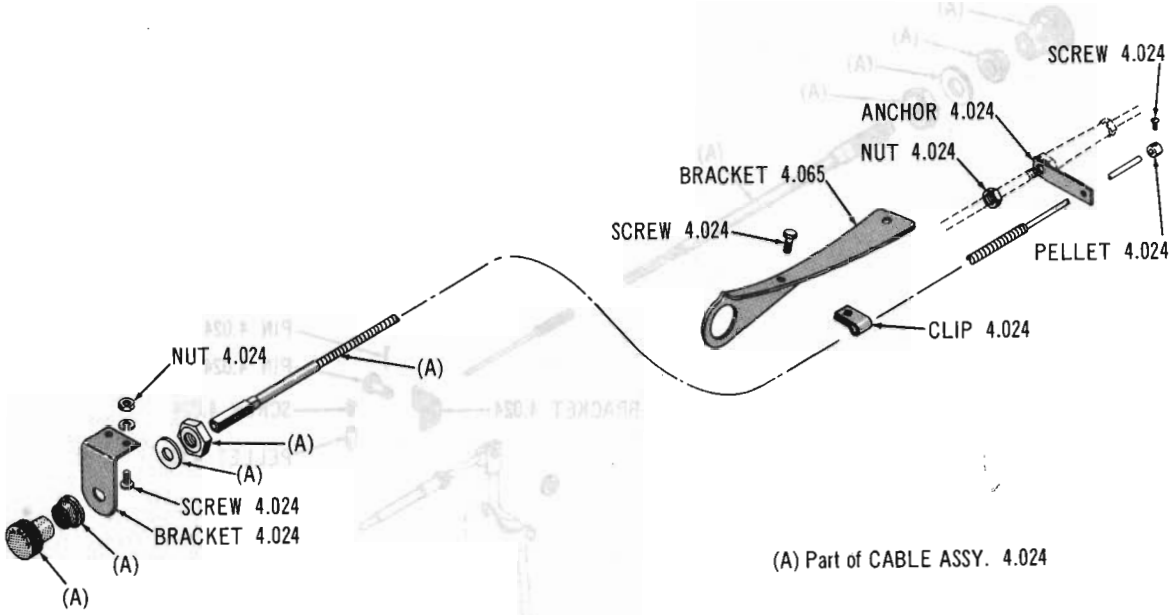

(A) Part of CABLE ASSY. 4.024

HAND THROTTLE CONTROL 63-64 10-80 (V8-FLEET SALES)

Copyright 1963 American Motors Corp.

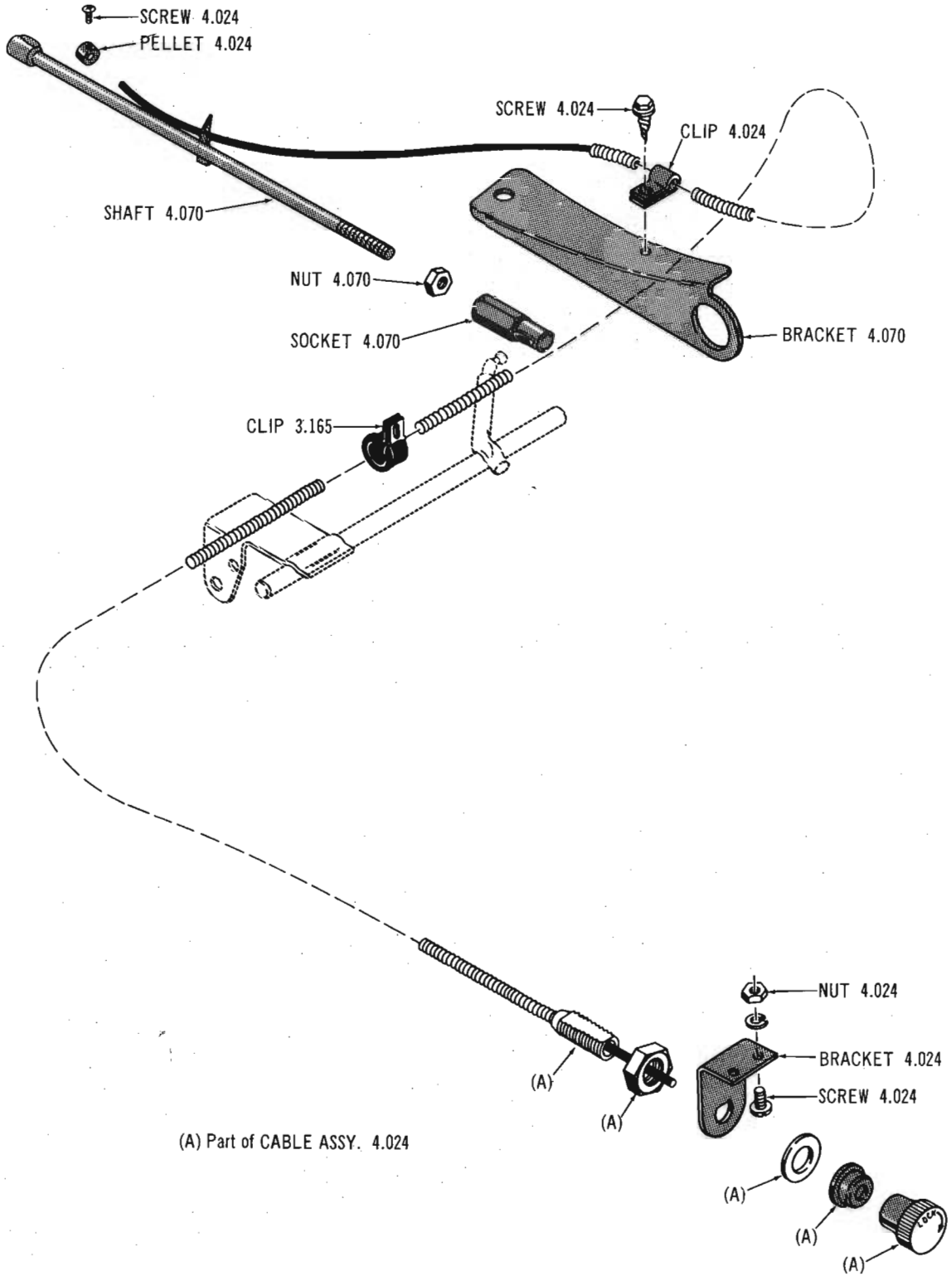

(A) Part of CABLE ASSY. 4.024

HAND THROTTLE CONTROL 65 10-80 (V8-FLEET SALES)

Copyright 1963 American Motors Corp.

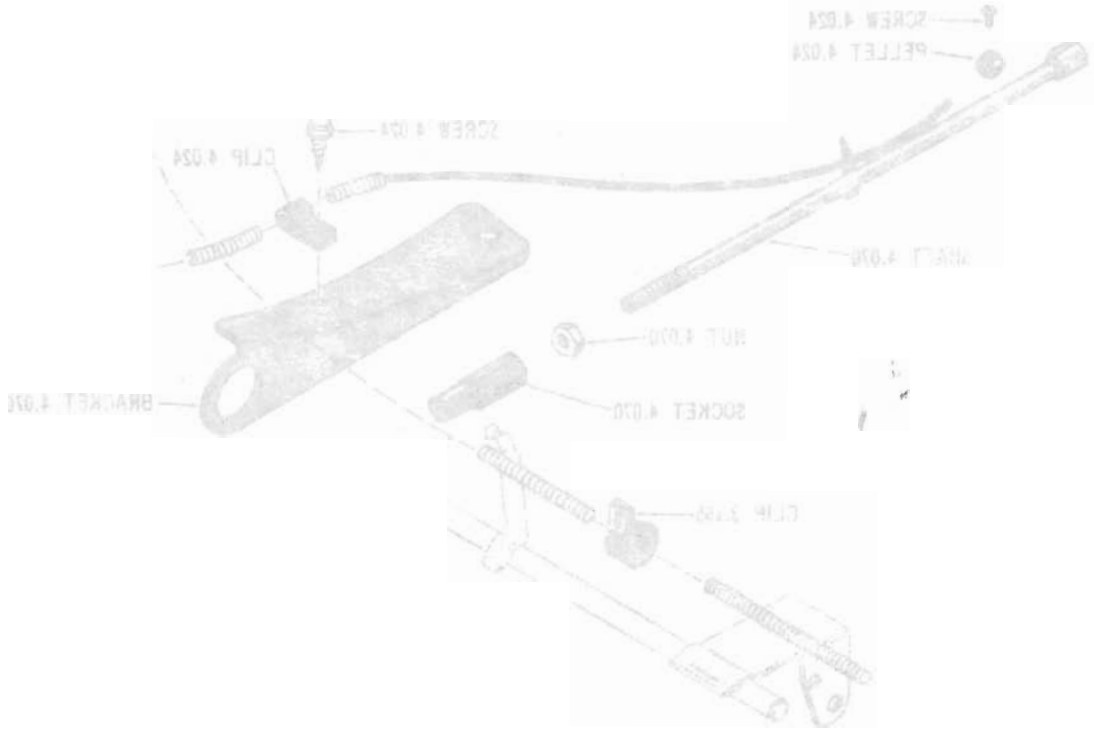

Copyright 1963 American Motors Corp.

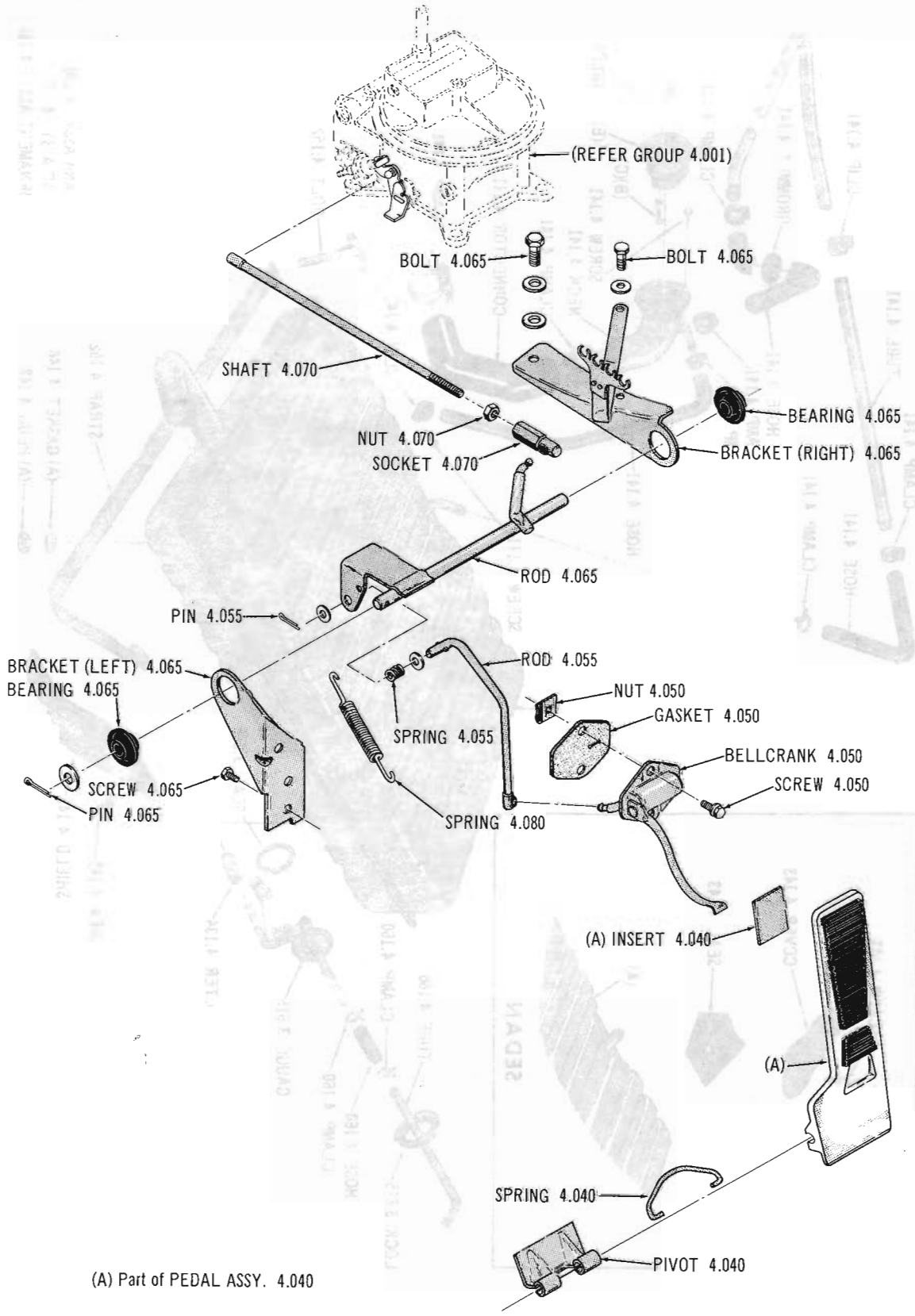

(A) Part of PEDAL ASSY. 4.040

ACCELERATOR LINKAGE 65 10-80 (LHD-V8)

Copyright 1963 American Motors Corp.

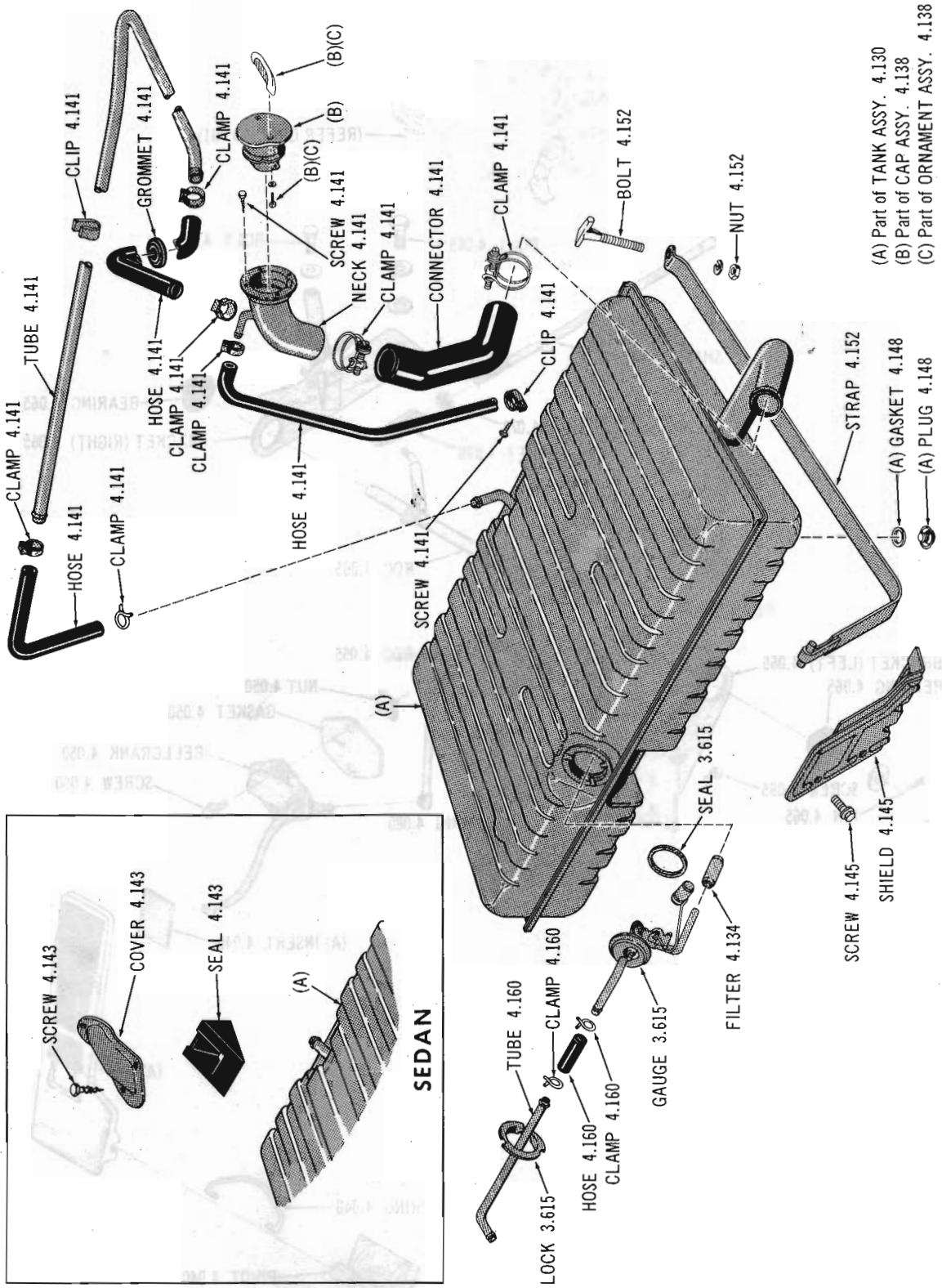

GASOLINE TANK AND LINES 65 10-80 (L3S)

Copyright 1963 American Motors Corp.

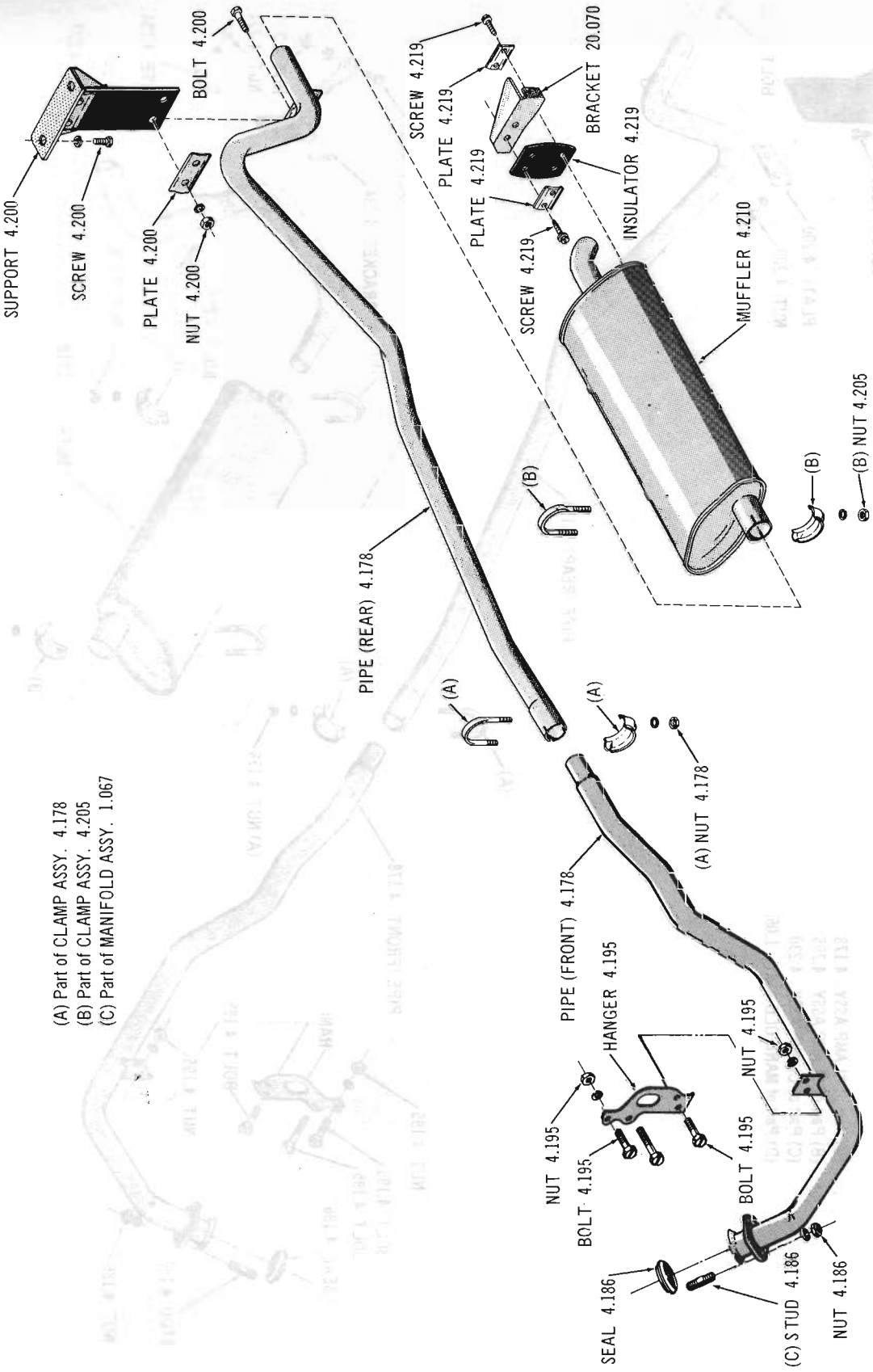

EXHAUST SYSTEM 65 05-06-09 (OHV)

Copyright 1963 American Motors Corp.

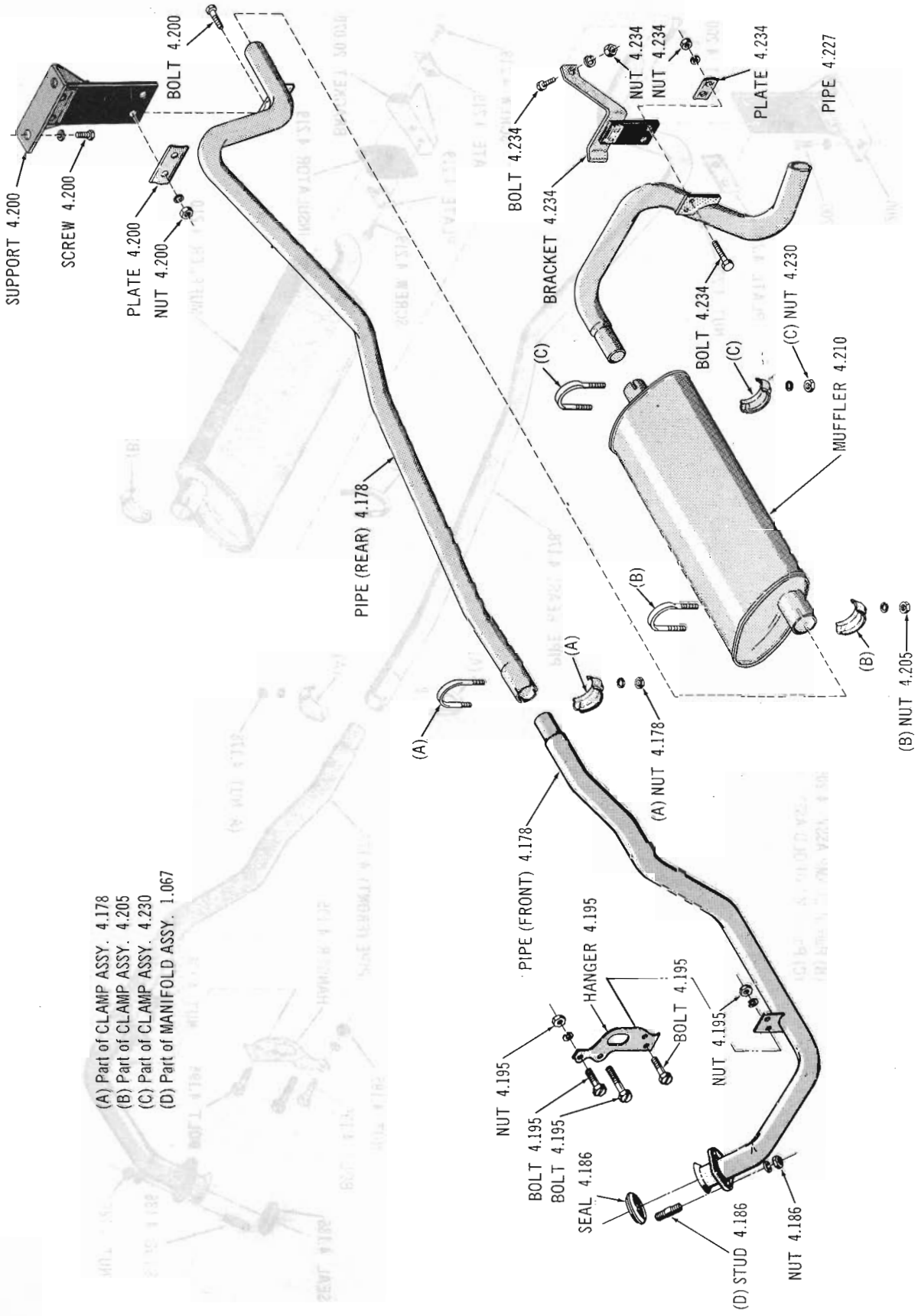

EXHAUST SYSTEM 65 07-08 (OHV)

Copyright 1963 American Motors Corp.

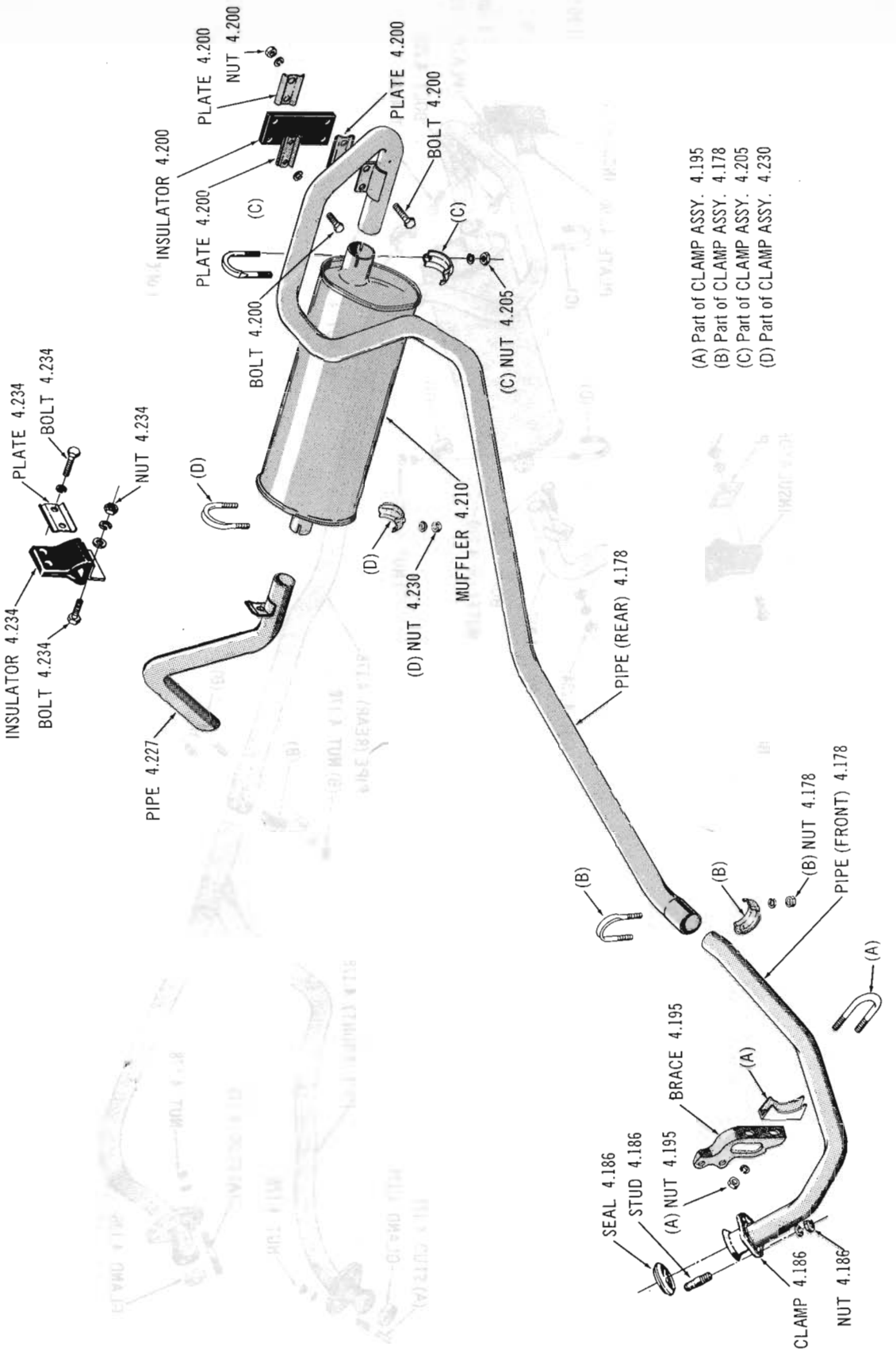

EXHAUST SYSTEM 65 10-80 (SIX-L3S)

Copyright 1963 American Motors Corp.

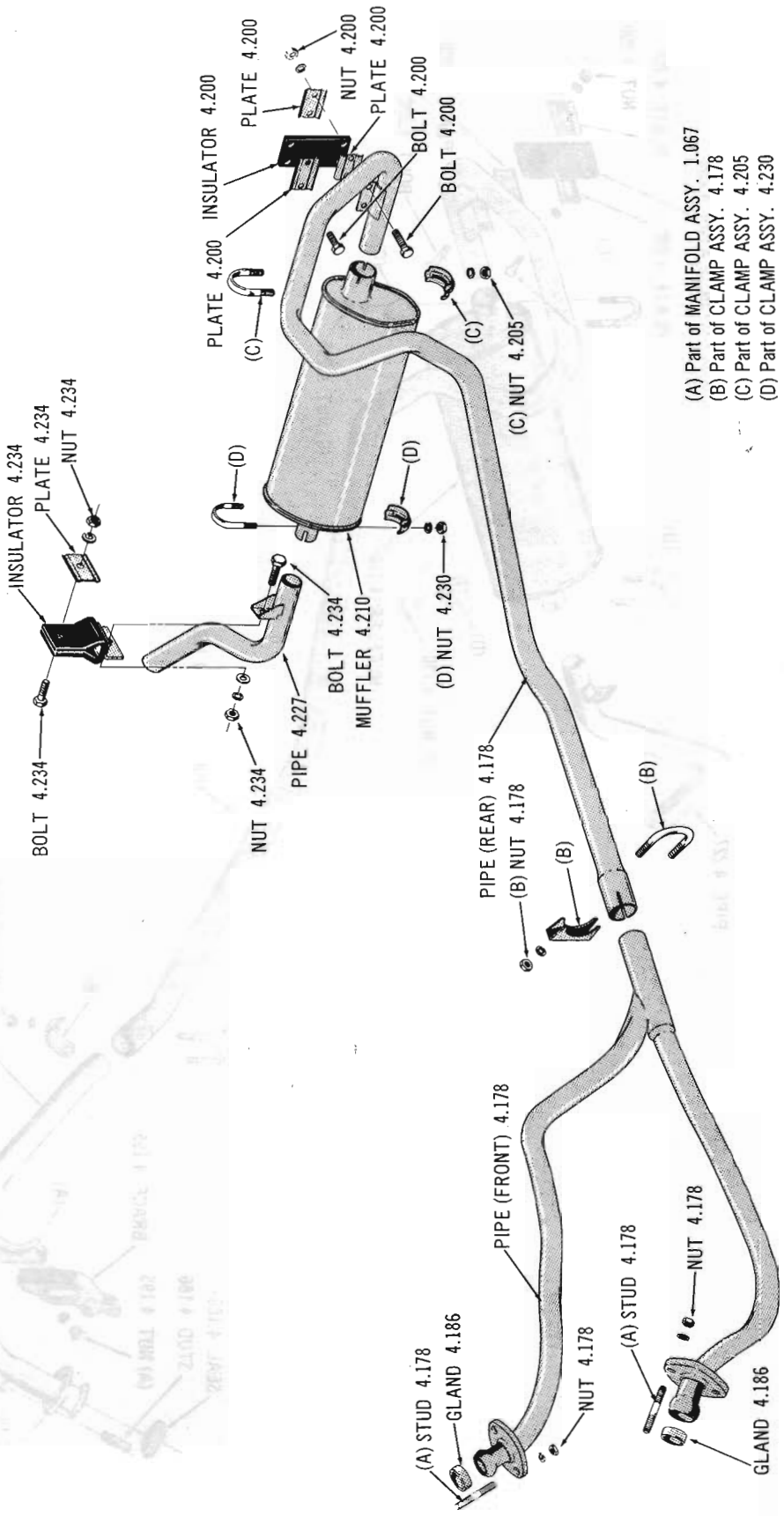

EXHAUST SYSTEM 65 10-80 (V8-L3S)

Copyright 1963 American Motors Corp.

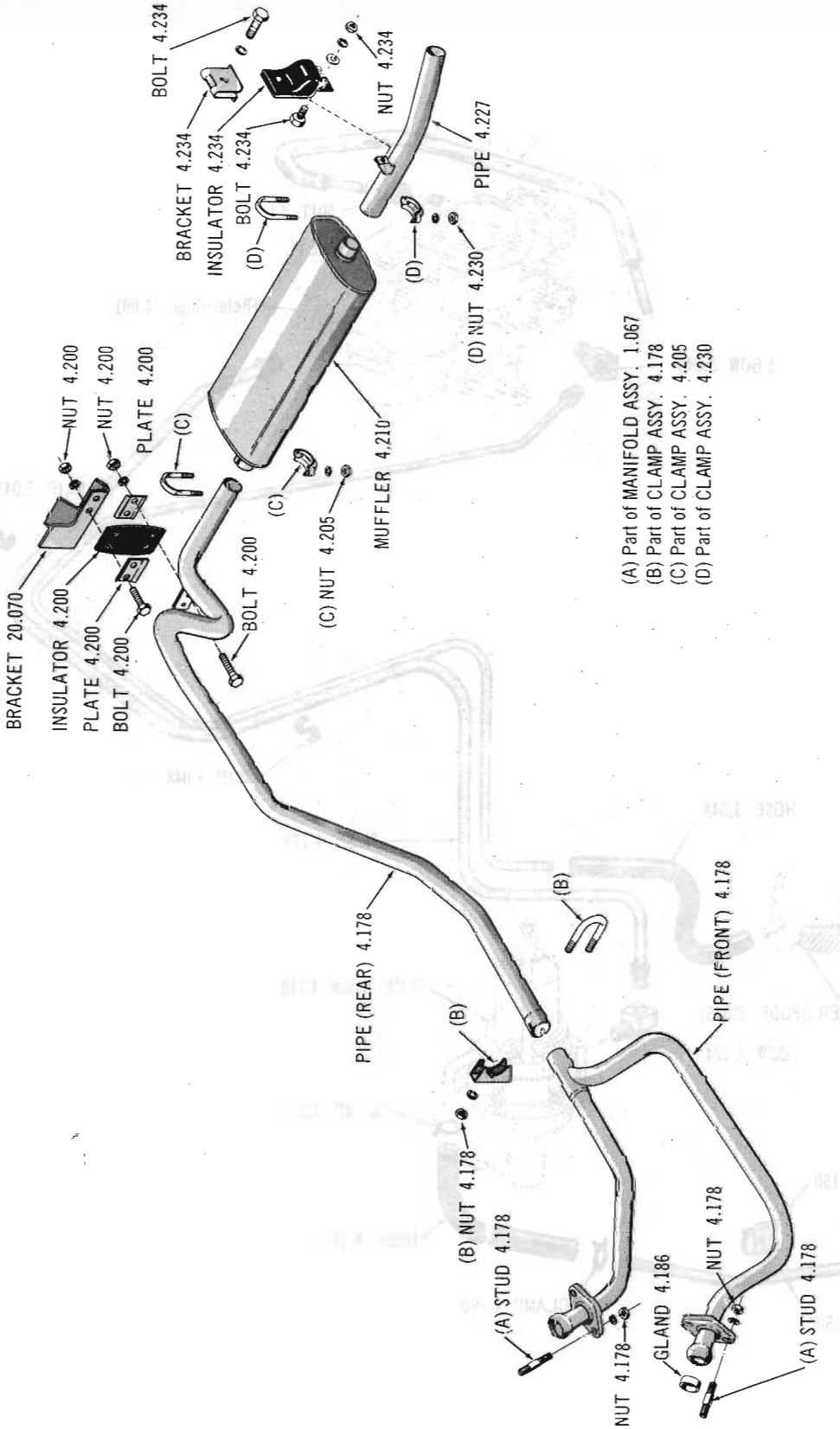

EXHAUST SYSTEM 65 10-80 (V8-W3S)

Copyright 1963 American Motors Corp.

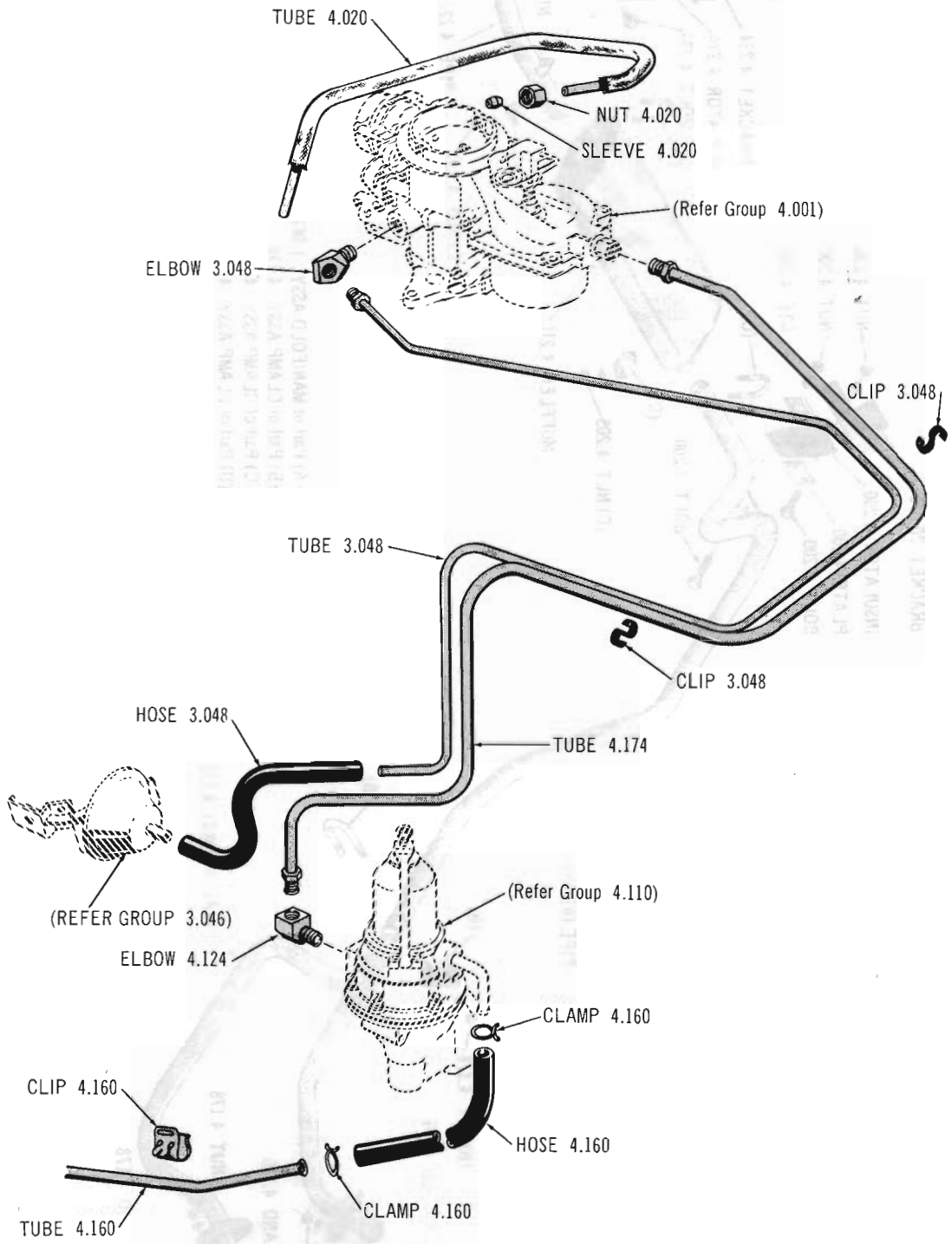

CARBURETOR FUEL AND VACUUM LINES 65 01-10 (OHV-199)(WEW)

Copyright 1963 American Motors Corp.

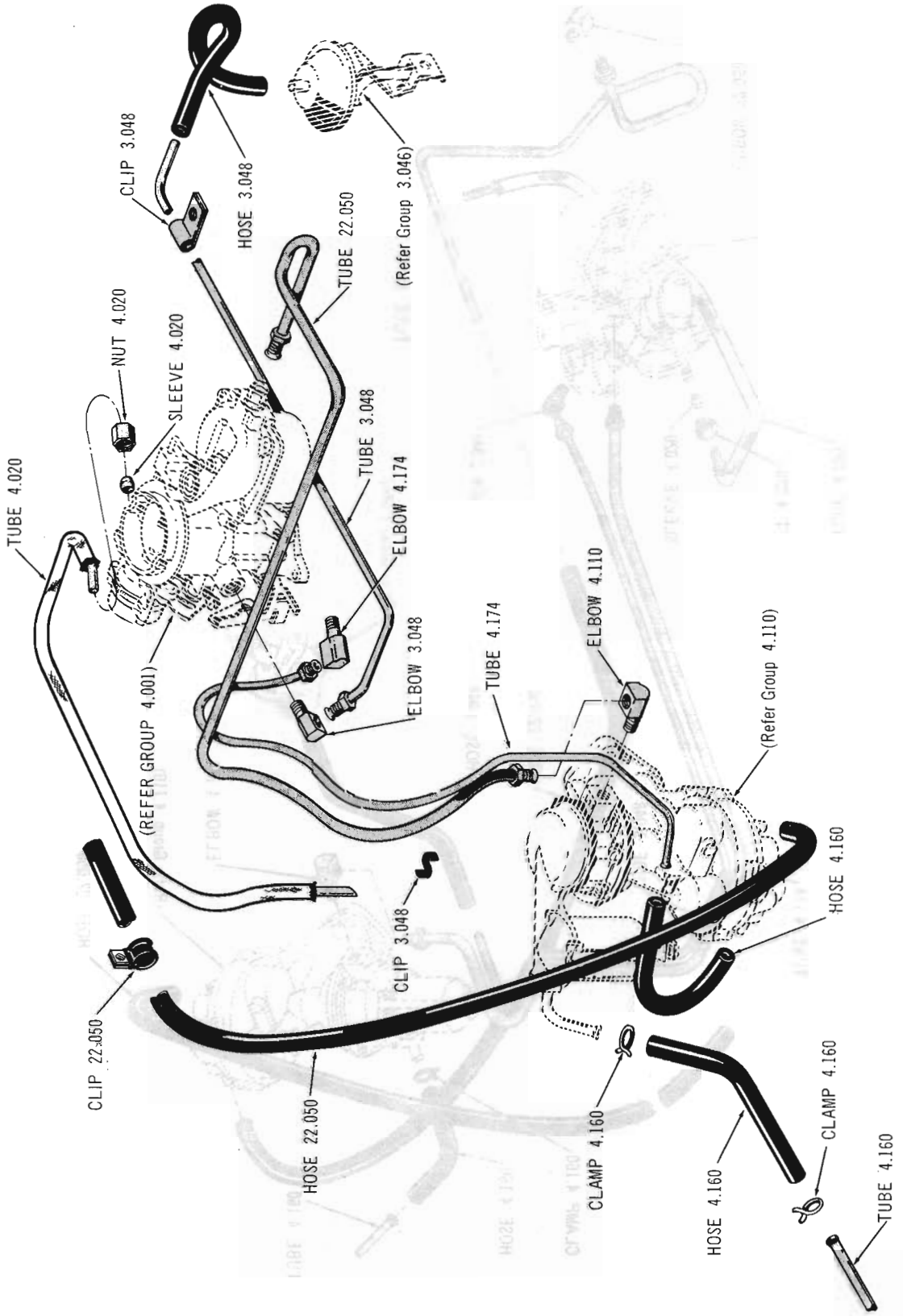

CARBURETOR FUEL AND VACUUM LINES 64-65 01 (LHE)

Copyright 1963 American Motors Corp.

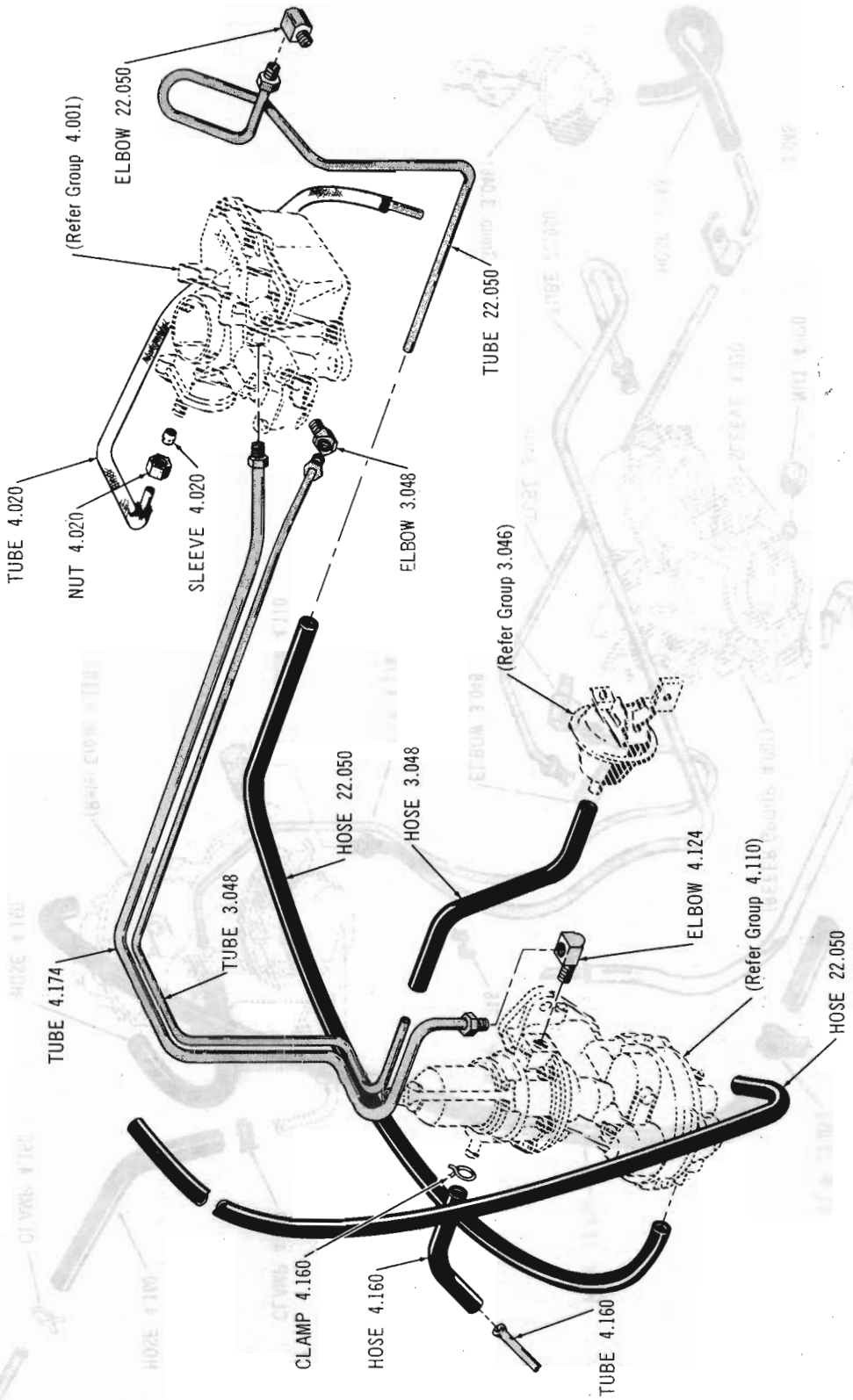

CARBURETOR FUEL AND VACUUM LINES 65 01-10 (196-LDT)

Copyright 1963 American Motors Corp.

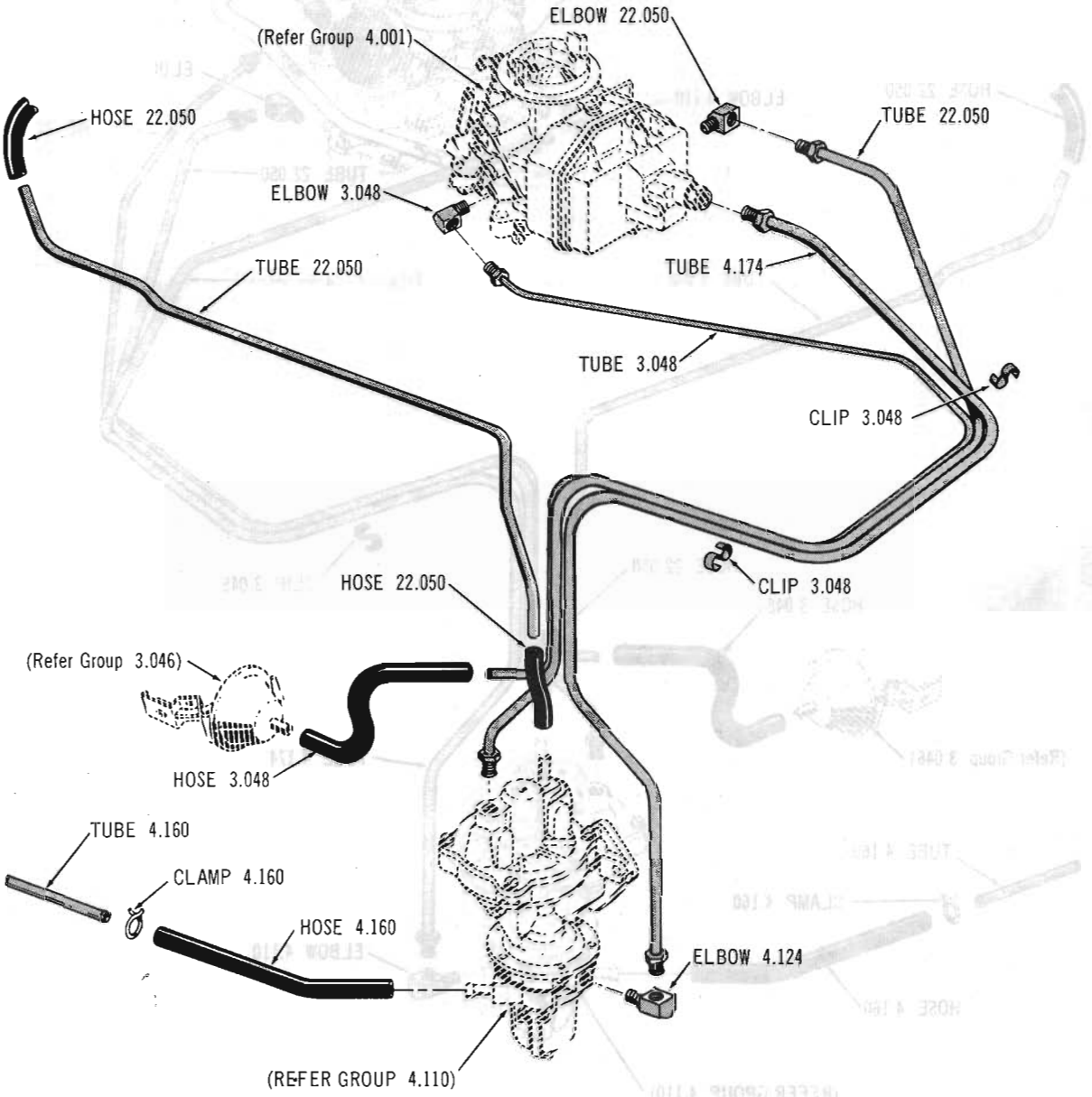

CARBURETOR FUEL AND VACUUM LINES 65 10 (232-LDT)

Copyright 1963 American Motors Corp.

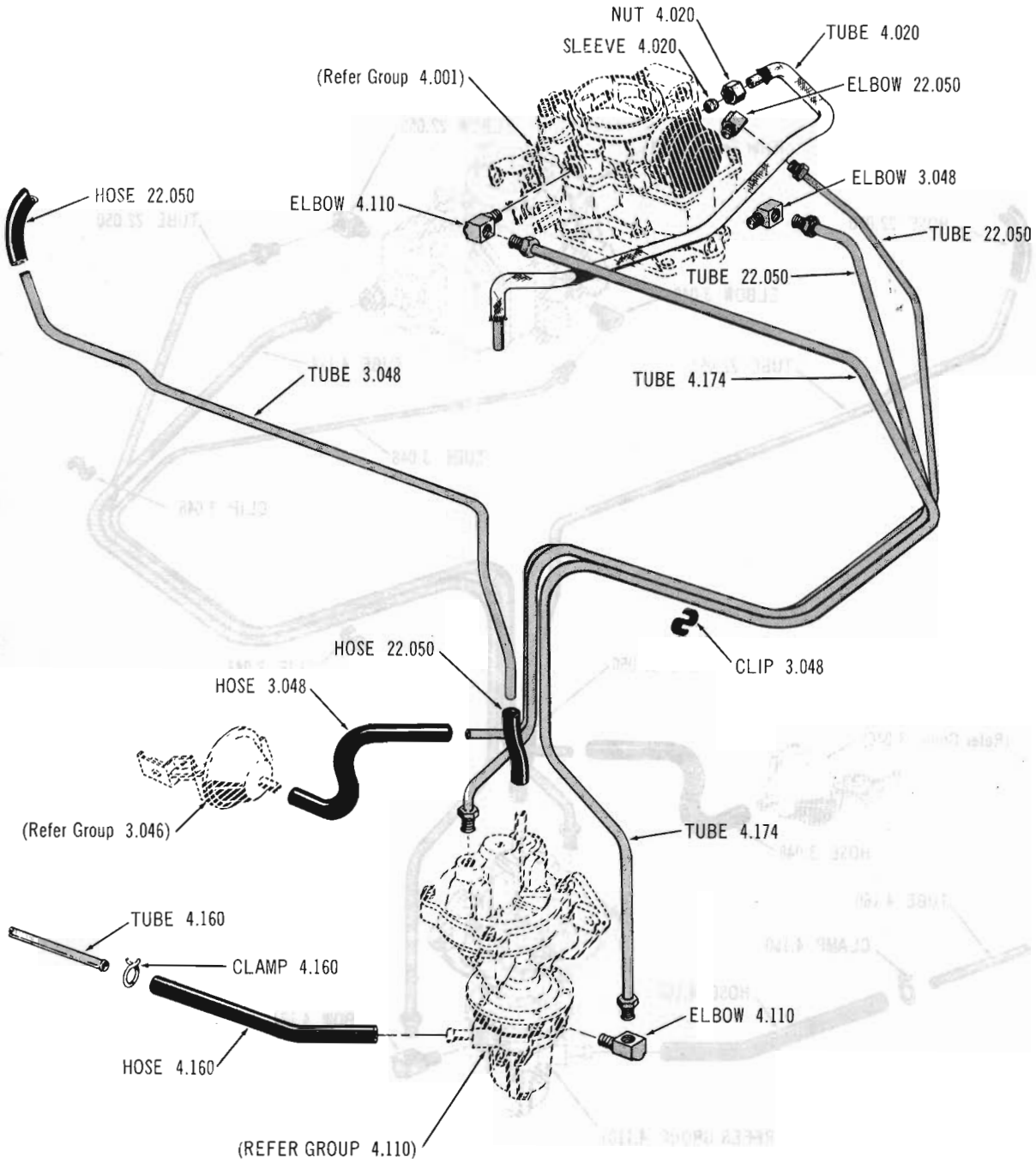

CARBURETOR FUEL AND VACUUM LINES 65 10 (232-WDT)

Copyright 1963 American Motors Corp.

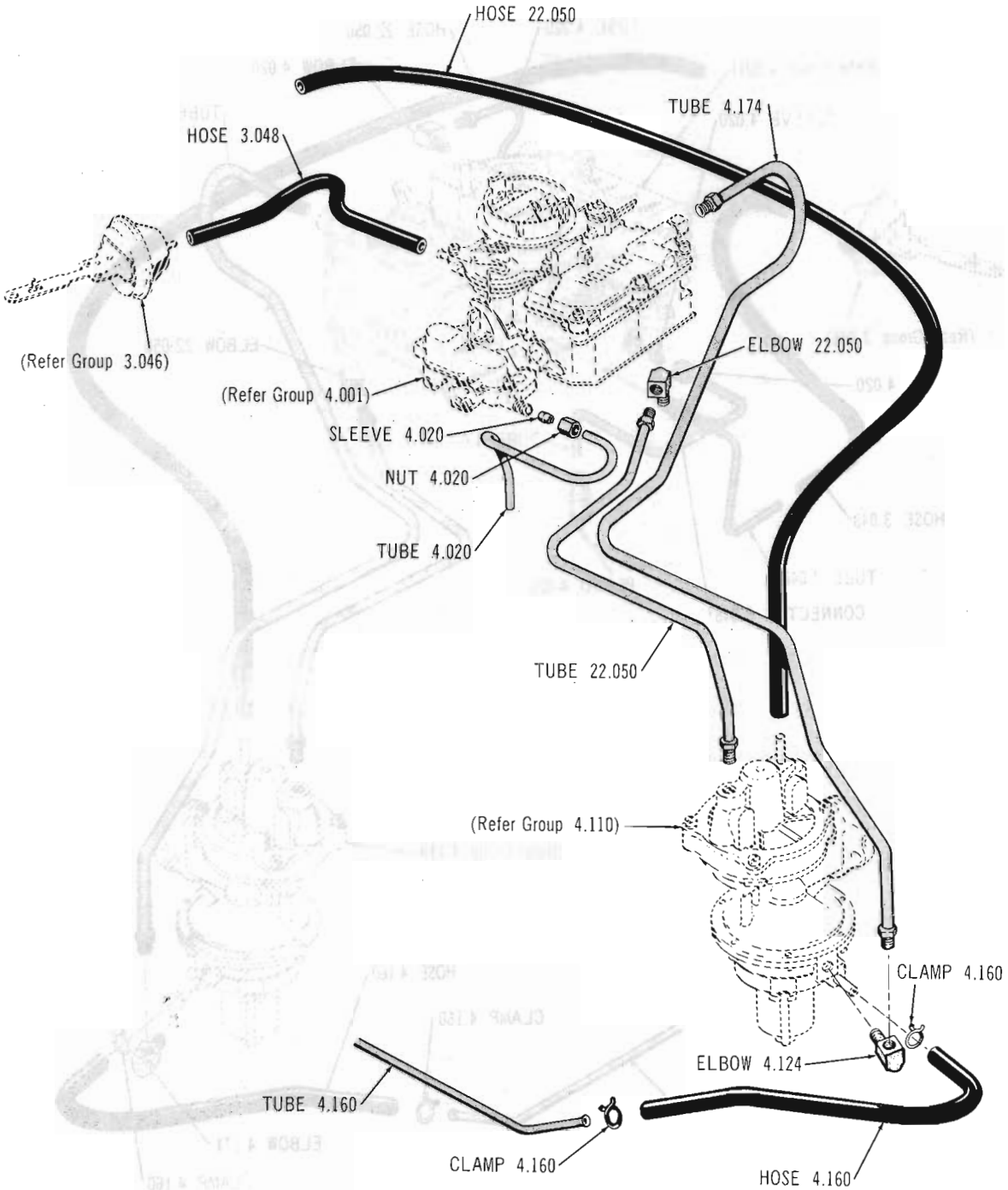

CARBURETOR FUEL AND VACUUM LINES 65 10-80 (287-V8)

Copyright 1963 American Motors Corp.

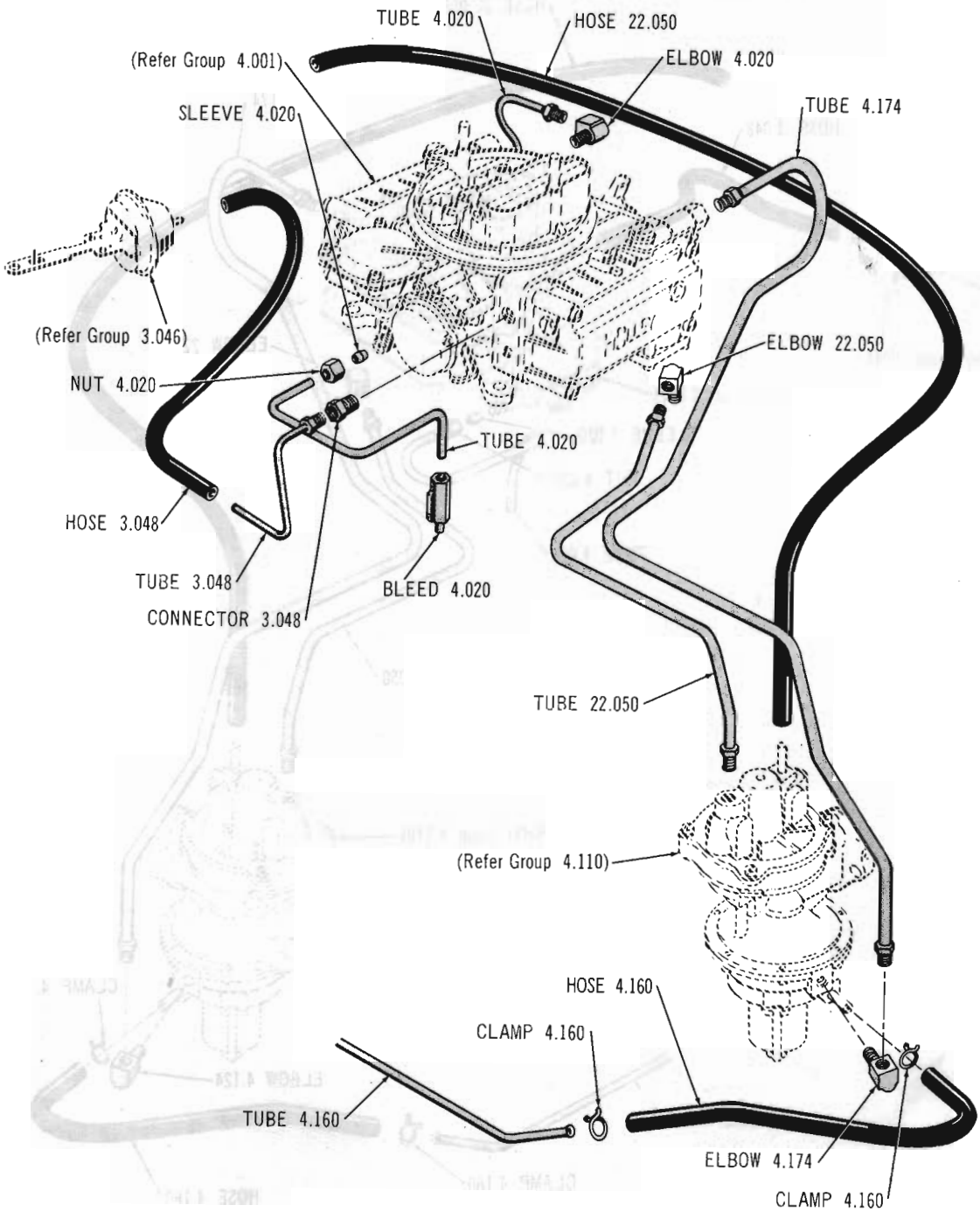

CARBURETOR FUEL AND VACUUM LINES 65 10-80 (327-V8)

Copyright 1963 American Motors Corp.

GROUP NO. — DESCRIPTION — YEAR and MODEL	PRIMARY GROUP NO.	PER CAR	PART NO.	CODE
4.001 CARBURETOR				
(Carter YF-3380) (Use For Carter Z-2757 And Carter YF-2014) 60 Thru 62 01 (LHE-WST-LES)(LHE-WOD-LES) (LHE-WAT) ***(Replaces 320 2176)***	.....	1	320 3849	
(Carter YF-3331S) 62 01 (LHE-WST-WES)(LHE-WOD-WES)	.....	1	316 3653	
(Carter RBS-3487S) 63 01 (LHE): ***163 01 (CAN)***	.....	1	316 6874	
(Carter 3708S) 64-65 01 (LHE)	.....	1	317 2239	
(Holley R-2381-1) (Use For Holley R-2168-2, Holley R-2166, Holley R-2269 And Holley R-2381) 60-61 01 (OHV): 62 01 (OHV-WST-LES) (OHV-WOD-LES): 62 01 (OHV-WAT) ***(Replaces 315 9884, 316 0027, 316 1238, 316 2948)***	.....	1	316 2968	
(Holley R-2446) 62 01 (OHV-WST-WES)(OHV-WOD-WES)	.....	1	316 3654	
(Holley 2555) 63-64 01 (OHV-LDT)	.....	1	316 6872	
(Carter WCD-3535S) 63 01-10 (OHV-WDT-196)	.....	1	316 7873	
(Holley 2387) 63 01 (OHV-LDT-LES): 63 10 (OHV-196-WST-LDT) (OHV-196-WOD-LDT)	.....	1	316 6873	
(Holley 2555-3) 64-65 01 (OHV-196-LDT)	.....	1	317 5913	
(Carter 3706S) 64-65 01 (OHV-196-WDT): 64 10 (OHV-WDT-196)	.....	1	317 2231	
(Carter WCD-2887S, 2586S & 2586SA) 60 10 (WDT)	.....	1	315 1207	
(Carter AS-3206) (Use For Carter AS-3169) 61-62 10 (WAT-LDT): ***162 10 (CAN-LDT)*** ***(Replaces 315 9992)***	.....	1	316 2214	
(Carter WCD-3170S) 61 10 (WDT)	.....	1	316 0099	
(Carter WCD-3322S) 61-62 10 (WDT)	.....	1	316 3916	
(Holley R-2138-1) (Use For HolleyR-1598-1, Holley R-1598-2 And Holley R-2138) 60 10 (LDT): 61-62 10 (WST-LDT) (WOD-LDT) ***(Replaces 315 7563, 315 8763, 315 8344)***	.....	1	316 2770	
(Carter 3536S) 63 10 (OHV-196-WAT-LDT): ***163 10 (CAN-LDT)***	.....	1	316 7872	
(Carter 3488) 64 10 (OHV-196-WAT-LDT) ***(Replaces 317 1291)***	.....	1	320 5426	
(Carter 3727S) 64 10 (OHV-196-WST-LDT)(OHV-196-WOD-LDT): ***164-165 01 (OHV-Can-196)*** **(Replaces 317 3149)**	.....	1	320 5425	
(Holley R-2697AZ) 64-65 10 (OHV-232-WST-LDT)(OHV-232-WOD-LDT)	.....	1	317 3318	
(Holley R-3200) 65 10 (OHV-232-WST-LDT) (OHV-232-WOD-LDT) ***(Use 317 3318)***	.....	1	318 0305	
(Holley R-2880A) 64-65 10 (OHV-232-WAT-LDT)	.....	1	317 4497	
(Holley R-3199) 65 10 (OHV-232-WAT-LDT) ***(Use 317 4497)***	.....	1	318 0304	
(Carter 3888) 65 01-10-80 (OHV-232-WDT) ***(Use 320 7016)***	.....	1	317 5904	
(Carter 3766) 65 01-10 (OHV-199-LDT)	.....	1	317 5853	
(Holley R-2463)(Use For Holley R-2228, Holley R-2040 A, Holley R-2442A): 60 Thru 65 10-80 (V8-WDT)...(Incl. Dashpot)***(Replaces 315 8255, 316 0570)***	.....	1	316 4329	
(Holley 2699)(Use For Holley R-2698A) 65 10-80 (LHD-V8-WDT)	.....	1	317 5902	
(Holley R-3218A)(Use For Holley R-3217A) 65 10-80 (LHD-V8-WDT)	.....	1	318 0263	
(Holley R-3168) ***65 10 (RHD-V8-287-WAT)***	.....	1	317 6593	
(Holley R-3219A) ***65 10 (RHD-V8-287-WAT)***	.....	1	318 0308	
(Holley R-1312-3) (Use For Holley R-1748-1, Holley R-1748-2, Holley R-1958-1, Holley R-1312-2, Holley R-1957-1 And Holley R-2464) 60 Thru 65 10-20-80 (V8-W4B) ***(Replaces 315 5606, 320 2368, 320 2369, 315 3434)(Use 320 5642)***	.....	1	320 3567	#
(Holley R-1312-4)(Use For Holley 3044A And R-3045A) 65 10-80 (V8-W4B)	.....	1	320 5642	
(Holley R-3203A)(Use For Holley R-3201 & Holley R-3202) 65 10-80 (V8-W4B)	.....	1	320 6237	
(Carter RBS-3765S) ***165 10-80 (Can-OHV-232-LDT)***	.....	1	317 8916	
ELBOW, Carburetor To Fuel Pump Gasoline Tube				
60 Thru 65 01 (LHE): 63 Thru 65 01 (OHV-196-WDT): 60 Thru 64 10 (OHV-196-WDT)	17.218	1	G137422	
CONNECTOR, Carburetor To Fuel Pump Gasoline Tube				
60 01 (OHV): 60 10 (LDT)	17.160	1	G137406	

Copyright 1963 American Motors Corp.

GROUP NO. — DESCRIPTION — YEAR and MODEL	PRIMARY GROUP NO.	PER CAR	PART NO.	CODE
4.004 GASKET, Carburetor				
60-61 01: 62 Thru 65 01 (LHE)	.....	2	315 3999	
62 01 (OHV): 63 Thru 65 01 (OHV-196-LDT): 62 Thru 64 10 (OHV-196-LDT)	.....	1	315 3999	
63-64 01 (OHV-196-WDT): 61 Thru 64 10 (OHV-WDT-196)	.....	1	316 0094	
60 10 (WDT)	.....	1	315 0679	
60 Thru 65 10-20-80 (V8-WDT)	.....	2	315 8245	
60 Thru 65 10-20-80 (V8-W4B)	.....	2	315 3819	
64-65 10 (OHV-232-LDT)	.....	2	317 3228	
65 01-10 (OHV-199-LDT)	.....	2	317 5948	
65 01 (OHV-196-WDT-1 Req.): 65 01-10-80 (OHV-232-WDT-2 Req.)	.....	AR	317 5993	
165 10-80 (Can-OHV-232)	.....	2	317 6474	
INSULATOR, Carburetor				
64-65 10 (OHV-232-LDT)	.....	1	317 3289	
65 01-10 (OHV-199)	.....	1	317 5933	
65 01-10-80 (OHV-232-WDT)	.....	1	317 5992	
60 Thru 62 20-80 (WDT-LPV)	.....	1	315 8246	
60 Thru 62 20-80 (W4B-LPV)	.....	1	315 3820	
61-62 20-80 (WDT-WPV)	.....	1	315 9914	
61-62 20-80 (W4B-WPV)	.....	1	315 9916	
63 Thru 65 10-80 (V8-WDT)	.....	1	316 7482	
63 Thru 65 10-80 (V8-W4B)	.....	1	316 8111	
165 10-80 (Can-OHV-232)	.....	1	317 6473	
4.007 SPACER, Carburetor To Cylinder Head				
60 Thru 65 01 (LHE)	.....	1	312 1704	
4.010 ATTACHING PARTS, Carburetor				
Carburetor To Cylinder Head				
STUD — 60 Thru 65 01 (LHE)	4.190	2	313 5884	
WASHER, Lock — 60 Thru 63 01 (LHE)	17.822	2	G114606	NA
NUT, Jam — 60 Thru 65 01 (LHE)	17.410	2	G114494	NA
Carburetor To Manifold Cover				
STUD — 60 Thru 62 01 (OHV): 63 Thru 65 01 (OHV-196-LDT): 60 Thru 64 10 (OHV-LDT-196)	.....	2	314 4808	
STUD — 63 Thru 65 01 (OHV-196-WDT-1-7/8" Long): 60 Thru 64 10 (OHV-196-WDT-1-7/8" Long)	.....	2	315 0840	
STUD — 63 Thru 65 01 (OHV-196-WDT-2-1/8" Long): 60 Thru 64 10 (OHV-196-WDT-2-1/8" Long)	.....	1	315 0831	
STUD — 63 Thru 65 01 (OHV-196-WDT-2-3/8" Long): 60 Thru 64 10 (OHV-196-WDT-2-3/8" Long) ***(Replaces 315 0832)***	1.112	1	314 5158	
STUD — 64-65 10 (OHV-232-LDT): 65 01-10 (OHV-199)	17.718	2	G191992	
NUT, Jam — 60 Thru 62 01 (OHV): 63 Thru 65 01 (OHV-196-LDT): 65 01 (OHV-199): 60 Thru 65 10 (LDT-Six)	17.410	2	G114494	NA
NUT, Hexagon — 65 01 (OHV-196-WDT)	17.406	4	G120368	
Carburetor To Manifold				
STUD — 60 Thru 65 10-20-80 (V8): 65 01-10-80 (OHV-232-WDT)	17.718	4	G148090	
NUT, Hexagon — 60 Thru 65 10-20-80 (V8): 65 01-10-80 (OHV-232-WDT)	17.406	4	G120368	
4.015 HOUSING, Carburetor Choke Thermostat				
64-65 10 (OHV-232-WST-LDT)(OHV-232-WOD-LDT)	.....	1	317 5659	
64-65 10 (OHV-232-LDT-WAT)	.....	1	317 3229	
ATTACHING PARTS				
Housing To Carburator				
CLIP — 64-65 10 (OHV-232-LDT)	.....	1	317 5666	

Copyright 1963 American Motors Corp.

GROUP NO. — DESCRIPTION — YEAR and MODEL	PRIMARY GROUP NO.	PER CAR	PART NO.	CODE
Housing To Exhaust Manifold				
STUD..... 64-65 10 (OHV-232-LDT).....	17.718	2	G144532	
WASHER, Lock..... 64-65 10 (OHV-232-LDT).....	17.820	2	G120380	NA
NUT, Hexagon..... 64-65 10 (OHV-232-LDT).....	17.406	2	G120367	
SHIELD, Carburetor Choke Thermostat Housing				
64-65 10 (OHV-232-LDT).....	.....	1	317 7017	
4.018 HEATER, Carburetor Choke				
60 Thru 65 01 (LHE).....	.....	1	312 1786	
4.020 TUBE, Carburetor Choke Heater				
60 Thru 62 01 (LHE).....	.....	1	313 7497	
63 01 (LHE).....	.....	1	316 7721	
64-65 01 (LHE).....	.....	1	317 2995	
60 Thru 62 01 (OHV): 60 10 (LDT): 61-62 10 (WST-LDT)(WOD-LDT).....	.....	1	315 8092	
63 Thru 65 01 (OHV-196-LDT): 63 10 (OHV-WST-LDT-196) (OHV-WOD-LDT-196).....	.....	1	316 7884	
63-64 01 (OHV-196-WDT): 60 Thru 64 10 (OHV-196-WDT) ***(Replaces 314 5538)***.....	.....	1	317 0716	
65 01 (OHV-196-WDT).....	.....	1	317 8723	
65 01-10 (OHV-199): ***165 10-80 (Can-OHV-232)***.....	.....	1	317 7010	
65 01-10-80 (OHV-232-WDT).....	.....	1	317 7026	
61 Thru 63 10 (OHV-196-WAT-LDT): ***162 10 (CAN-LHD-LDT): 163 10 (CAN-OHV)*** .....***(Replaces 316 1048)***	.....	1	317 0715	
64 10 (OHV-LDT-196): **165 01 (Can-OHV-196)**.....	.....	1	317 2845	
(Left) 60 Thru 64 10-20-80 (V8-WDT): 65 10-80 (LHD-V8-WDT)(Use With Holley Carb. No. R-2463 And R-2442).....	.....	1	315 8402	
(Left) 65 10-80 (V8-WDT)(Use With Holley Carb. Nos R-3217A, R-3218A And R-3219A).....	.....	1	318 0146	
(Left) 60 Thru 65 10-20-80 (V8-W4B).....	.....	1	315 3817	
(Right) 60-61 20-80 (WDT).....	.....	1	315 8401	
(Right) 60 Thru 63 10-20-80 (V8-W4B) .....***(Ref. Pr. List)***	.....	1	315 3818	
(Right) 62 Thru 64 10-80 (V8-WDT): 65 10-80 (LHD-V8-WDT)(Use With Holley Carb. Nos. R-2463 And R-2442).....	.....	1	316 3885	
(Right) 64-65 10-80 (V8-W4B).....	.....	1	317 0836	
(Right) 65 10-80 (V8-WDT)(Use With Holley Carb. Nos. R-2699, R-2968 And R-3168).....	.....	1	317 7035	
(Right) 65 10-80 (V8-WDT)(Use With Holley Carb Nos. R-3217A, R-3218A And R-3219A).....	.....	1	318 0145	
(In Manifold) 61 Thru 65 01 (OHV-196): 60 Thru 64 10 (OHV-196).....	.....	1	314 4673	
(In Manifold) 65 01-10 (OHV-199): 65 01-10-80 (OHV-232-WDT)..... ***(Use 320 7101)***	.....	1	317 5718	#
(In Manifold) 60 Thru 65 10-20-80 (V8).....	.....	1	315 5604	
HOSE, Carburetor Choke Heater Tube (Bulk - Order Per Foot)				
65 10-80 (V8-WDT).....	4.141	AR	320 3865	
BLEED, Carburetor Choke Heater Tube Air				
62 Thru 64 10-80 (V8-WDT): 65 10-80 (LHD-V8-287-WDT)(Use With Holley Carb. Nos. R-2463 And R-2442).....	.....	1	316 3779	
64-65 10-80 (V8-WAT-W4B).....	.....	1	317 0773	
64-65 10-80 (V8-WST-W4B)(V8-WOD-W4B).....	.....	1	317 1020	
SLEEVE, Carburetor Choke Heater Tube				
60 Thru 64 01-10 (1 Req.-OHV-196): 65 01 (LHE-1 Req.): 65 01 (1 Req.-OHV-196): 60 Thru 64 10-20-80 (W4B-V8-1 Req.)(V8-WDT-2 Req.): 65 10-80 (V8-1 Req.).....	17.030	AR	G114628	
SEAL, Carburetor Choke Heater Tube				
65 10-80 (V8-287-WDT).....	.....	4	318 0243	

Copyright 1963 American Motors Corp.

GROUP NO. — DESCRIPTION — YEAR and MODEL	PRIMARY GROUP NO.	PER CAR	PART NO.	CODE
NUT, Carburetor Choke Heater Tube				
60 Thru 64 01-10 (1 Req. -OHV-196): 65 01 (LHE-1 Req.): 65 01 (1 Req. -OHV-196): 60 Thru 64 10 -20-80 (W4B-V8-1 Req.): 60 Thru 64 10-20-80 (V8-WDT-2 Req.): 65 10-80 (V8-1 Req.)	17.448	AR	G114627	
ELBOW, Carburetor Choke Heater Tube				
60 Thru 65 10-20-80 (W4B-V8)	.....	1	315 3879	
PLUG, Carburetor Choke Heater Hole (In Manifold)				
60 Thru 65 10-20-80 (V8-373" O.D.)	.....	1	315 0265	
60 Thru 65 10-20-80 (V8-365" O.D.)	.....	1	315 0266	
4.024 CABLE, Throttle Control (Incl. Knob)				
64-65 01 (LHE-Heavy Duty): 64-65 01 (OHV-196-Heavy Duty)	.....	1	317 3640	
65 01 (OHV-199-Heavy Duty)(OHV-232-Heavy Duty)	.....	1	316 2119	
60 10 (Heavy Duty-Note 4.024-1)	.....	1	315 5552	
60 10 (Heavy Duty-note 4.024-2): 61-62 10-20 (Heavy Duty): 61 Thru 64 10-80 (Heavy Duty-V8): 65 10-80 (Heavy Duty)...(Replaces 316 0031)	.....	1	316 2119	
63-64 10 (Six-Heavy Duty)	.....	1	316 9923	
60 20-80 (Heavy Duty-Note 4.024-1)	.....	1	315 5553	
60 20-80 (Heavy Duty-Note 4.024-2)	.....	1	316 0030	
ATTACHING PARTS				
Cable To Dash Panel				
CLIP, Closed ..... ***63-64 10-80 (Heavy Duty): 65 10-80 (Six-Heavy Duty).***	17.134	1	G120520	
SCREW, Tapping..... ***63-64 10-80 (Heavy Duty)***	17.671	1	G274773	NA
SCREW, Tapping..... ***65 10-80 (Six-Heavy Duty)***	17.670	1	G189119	NA
Cable To Pellet				
SCREW, Tapping..... ***60 Thru 65 10-20-80 (Heavy Duty): 64-65 01 (Heavy Duty)***	12.061	1	310 8350	
Cable To Bracket				
CLIP, Closed ..... ***65 01 (OHV-199-Heavy Duty)(OHV-232-Heavy Duty): 65 10-80 (V8-Heavy Duty)***	17.134	1	G120520	
SCREW, Tapping..... ***65 01 (OHV-199-Heavy Duty)(OHV-232-Heavy Duty)***	17.670	1	G189119	NA
SCREW, Tapping..... ***65 10-80 (V8-Heavy Duty)***	17.671	1	G274773	NA
WASHER, Plain..... ***65 01 (OHV-199-Heavy Duty)(OHV-232-Heavy Duty)***	17.814	1	G120391	NA
BRACKET, Throttle Control Cable (On Instrument Panel)				
60 10-20-80 (Heavy Duty-Note 4.024-2): 61 Thru 65 10-20-80 (Heavy Duty)	.....	1	316 0015	
ATTACHING PARTS				
Bracket To Instrument Panel				
SCREW, Machine..... ***60 Thru 65 10-20-80 (Heavy Duty)***	17.614	2	G431586	NA
WASHER, Plain..... ***60 Thru 62 10-20-80 (Heavy Duty)***	17.814	2	G120391	NA
WASHER, Lock ..... ***60 Thru 65 10-20-80 (Heavy Duty)***	17.820	2	G131096	NA
NUT, Hexagon..... ***60 Thru 65 10-20-80 (Heavy Duty)***	17.412	2	G120614	NA
BRACKET, Throttle Control Cable (On Manifold)				
61-62 10-20-80 (Heavy Duty)	.....	1	316 2121	
63-64 10 (OHV-Six-Heavy Duty)	.....	1	316 9921	

NOTE 4.024-1: Used on Cars with Non Locking Type Cable.
NOTE 4.024-2: Used on Cars with Locking Type Cable.

Copyright 1963 American Motors Corp.

GROUP NO. — DESCRIPTION — YEAR and MODEL	PRIMARY GROUP NO.	PER CAR	PART NO.	CODE
ATTACHING PARTS				
Bracket To Manifold				
CLIP ..... *61 10 (Heavy Duty-2 Req.): 61 20-80 (Heavy Duty-1 Req.)*	3.165	AR	15 898	
CLIP, Closed ..... *62 Thru 64 10-80 (Heavy Duty)*	17.134	1	G120520	
SCREW, Tapping..... *61 Thru 64 10-80 (Heavy Duty)*	17.671	1	G274773	NA
BELLCRANK, Throttle Control Accelerator Pedal				
63-64 10 (Six-Heavy Duty)	4.050	1	316 9922	
ATTACHING PARTS				
Bellcrank To Dash				
SCREW, Tapping..... *63-64 10 (Six-Heavy Duty)*	17.671	2	G443794	NA
NUT, Speed ..... *63-64 10 (Six-Heavy Duty)*	4.050	2	316 3893	
ANCHOR, Throttle Control Cable				
64-65 01 (LHE-Heavy Duty): 64-65 01 (OHV-196-Heavy Duty)	.....	1	317 3616	
60 Thru 62 10 (Heavy Duty)	.....	1	316 4029	
60 Thru 64 10-20-80 (Heavy Duty-V8): 65 10-80 (Six-Heavy Duty): 65 01 (OHV-199-Heavy Duty)(OHV-232-Heavy Duty)	.....	1	315 5555	#
ATTACHING PARTS				
Anchor To Shaft				
NUT, Hexagon..... *60 Thru 64 10-20-80 (Heavy Duty-V8)*	17.410	2	G120613	NA
Anchor To Pedal Bellcrank				
PIN, Clevis ..... *64-65 01 (LHE-Heavy Duty): 64-65 01 (OHV-196-Heavy Duty)*	16.300	1	316 4193	
WASHER, Plain..... *64 01 (Heavy Duty)*	17.814	1	G446152	NA
WASHER, Plain..... *65 01 (LHE-Heavy Duty): 65 01 (OHV-196-Heavy Duty)*	17.814	1	400 1078	NA
PIN, Cotter ..... *64-65 01 (LHE-Heavy Duty): 64-65 01 (OHV-196-Heavy Duty)*	17.460	1	G137127	NA
PELLET, Throttle Control Cable				
60 Thru 65 10-20-80 (Heavy Duty): 64-65 01 (Heavy Duty)	6.367	1	312 5873	
4.040 PEDAL, Accelerator				
60 01 (Note 4.040-1): 60 10-20-80 (LHD-Note 4.040-3)	.....	1	315 4567	
60 01 (Note 4.040-2): 60 10-20-80 (LHD-Note 4.040-4): 61 Thru 63 01 (LHD): 61-62 10-20-80 (LHD)	.....	1	315 8712	
61 Thru 63 01 (RHD): 60 Thru 62 10-80 (RHD)	.....	1	312 3410	
64-65 01: 63-64 10-80...(Incl. Insert)	.....	1	316 7539	
65 10 (Except Marlin)...(Incl. Insert): 65 80 (880)...(Incl. Insert)	.....	1	317 6665	
65 80 (990)(990H): 65 59 (Marlin)...(Incl. Insert)	.....	1	317 6321	
ATTACHING PARTS				
Pedal To Hinge				
PIN, Clevis ..... *61 Thru 63 01 (RHD): 60 Thru 62 10-80 (RHD) .....(Replaces 800 0221)*	17.474	1	400 1202	
PIN, Cotter ..... *61 Thru 63 01 (RHD): 60 Thru 62 10-80 (RHD)*.....	17.460	1	G103362	NA
INSERT, Accelerator Pedal				
64-65 01: 63 Thru 65 10-80	.....	1	316 7518	

NOTE 4.040-1: Used prior to Car Code No. 11215.
NOTE 4.040-2: Used beginning with Car Code No. 11215.
NOTE 4.040-3: Used prior to Car Code No. 11213.
NOTE 4.040-4: Used beginning with car Code No. 11213.

Copyright 1963 American Motors Corp.

GROUP NO. — DESCRIPTION — YEAR and MODEL	PRIMARY GROUP NO.	PER CAR	PART NO.	CODE
PIVOT, Accelerator Pedal				
60-61 01 (LHD): 62 01: 60 Thru 62 10-20-80 (LHD)	.....	1	344 4537	
63 01: 63 10-80: 64-65 10-80 (LHD)	.....	1	349 2478	
64-65 01 (LHD): ***64-65 10 (RHD)***	.....	1	350 5771	
64-65 01 (RHD)...(Incl. Support)	.....	1	350 5783	
HINGE, Accelerator Pedal				
61 Thru 63 01 (RHD): 60 Thru 62 10-80 (RHD)	.....	1	95 095	
ATTACHING PARTS				
Hinge To Toeboard				
SCREW, Tapping..... ***61 Thru 63 01 (RHD): 60 Thru 62 10-80 (RHD)***	17.670	2	G445656	NA
EXTENSION, Accelerator Pedal				
61 Thru 63 01 (RHD): 60 Thru 62 10-80 (RHD)	.....	1	313 1671	
ATTACHING PARTS				
Extension To Pedal				
SCREW, Machine..... ***61 Thru 63 01 (RHD): 60 Thru 62 10-80 (RHD)***	17.584	2	G189618	NA
WASHER, Lock..... ***61 Thru 63 01 (RHD): 60 Thru 62 10-80 (RHD)***	17.820	2	G131096	NA
NUT, Hexagon..... ***61 Thru 63 01 (RHD): 60 Thru 62 10-80 (RHD)***	17.412	2	G120614	NA
SPRING, Accelerator Pedal				
61 Thru 63 01 (RHD): 60 Thru 62 10-80 (RHD)	.....	1	313 1861	
SPRING, Accelerator Pedal Hinge Safety				
60 Thru 62 01-10-20-80 (LHD): 63 01 (LHD)	.....	1	316 0283	
64-65 01: 63 Thru 65 10-80	.....	1	316 7605	
4.045 ROD, Accelerator Pedal				
60 01 (LHE-WST)	.....	1	315 4372	
60 01 (LHE-WOD)(LHE-WAT)	.....	1	315 4373	
61 01 (LHD-LHE-WST)	.....	1	315 9308	
61 01 (LHD-LHE-WOD)(LHD-LHE-WAT): 62-63 01 (LHD-LHE-WOD) ***(Replaces 315 9309)***	.....	1	316 4923	
61 Thru 63 01 (RHD)	.....	1	316 1096	
62-63 01 (LHD-LHE-WST)(LHD-LHE-WAT)	.....	1	316 4922	
60-61 01 (OHV): 62-63 01 (LHD-OHV)..... ***(Replaces 315 9851, 316 1235)***	.....	1	316 3818	
60-61 10 (LHD)	.....	1	315 6121	
60 10-80 (RHD)	.....	1	315 3757	
61 10-80 (RHD)	.....	1	316 1067	
62 10 (LHD-LDT)	.....	1	316 3457	
62 10 (LHD-WDT)	.....	1	316 3300	
62 10-80 (RHD)	.....	1	316 3207	
60-61 20-80 (LHD)	.....	1	315 6210	
62 80 (LHD)..... ***(Replaces 316 3274)***	.....	1	316 5938	
ATTACHING PARTS				
Rod To Pedal				
WASHER, Plain ..... ***61 Thru 63 01 (RHD)***	17.814	1	G120392	NA
WASHER, Plain..... ***60 Thru 62 10-80 (RHD) .....(Replaces 800 0145)***	17.814	1	400 1085	
WASHER, Spring..... ***61 Thru 63 01 (RHD): 60 Thru 62 10-80 (RHD)***	4.044	1	313 4115	
PIN, Cotter ..... ***61 Thru 63 01 (RHD): 60 Thru 62 10-80 (RHD)***	17.460	1	G103361	NA
Rod To Bellcrank				
CLIP..... 60-61 01-10-20-80 (LHD): 62-63 01 (LHD-LHE)....	.....	1	315 8183	
CLIP..... 62-63 01 (OHV): 62 10 (LHD).....	.....	1	314 0386	
CLIP..... ***62 10-80 (RHD)***	.....	1	316 3209	
STUD..... ***62 10-80 (RHD)***	.....	1	316 3208	
WASHER, Plain..... ***61 Thru 63 01 (RHD):*** 62 80 (LHD).....	17.814	1	G120392	NA

Copyright 1963 American Motors Corp.

GROUP NO. — DESCRIPTION — YEAR and MODEL	PRIMARY GROUP NO.	PER CAR	PART NO.	CODE
WASHER, Plain..... ***60-61 10-80 (RHD).....(Replaces 800 0145)***	17.814	1	400 1085	
WASHER, Spring..... ***61 Thru 63 01 (RHD): 60 10-80 (RHD)***	4.044	1	313 4115	
WASHER, Spring..... 62 80 (LHD)	4.266	1	312 8655	
WASHER, Lock..... ***62 10-80 (RHD)***	17.824	1	G120423	NA
PIN, Cotter ..... ***61 Thru 63 01 (RHD): 60-61 10-80 (RHD):*** 62 80 (LHD)	17.460	1	G103361	NA
SEAL, Accelerator Pedal Rod Opening				
60 Thru 62 01 (LHD): 63 01: 60 Thru 62 10-20-80 (LHD).....	4.040	1	313 4126	
4.050 BELLCRANK, Accelerator Pedal Rod				
60 01 (LHE).....	.....	1	313 6716	
60 01 (OHV).....	.....	1	315 9852	
61 01 (LHD-LHE): 62-63 01 (LHD-LHE-WST)(LHD-LHE-WOD).....	.....	1	315 9305	
61 01 (LHD-OHV).....	.....	1	316 0366	
61 Thru 63 01 (RHD).....	.....	1	316 1094	
62 01 (LHE-WAT): 63 01 (LHE-WAT-Note 4.050-2).....	.....	1	316 3599	
63 01 (LHE-WAT-Note 4.050-3) .....***(Replaces 317 0342)***	.....	1	317 0325	
62 01 (OHV)...(Incl. Bracket).....	.....	1	316 3821	
63 01 (OHV).....	.....	1	316 3816	
64 01 (LHD): 65 01 (LHD-LHE)(LHD-OHV-196)...(Incl. Bracket)	.....	1	317 0346	
65 01 (LHD-OHV-199)(LHD-OHV-232-Note 4.050-7).....	.....	1	317 6966	
65 01 (LHD-OHV-232-Note 4.050-8)	.....	1	317 9993	
64-65 01 (RHD)...(Incl. Bracket)	.....	1	317 1745	
60-61 10 (LHD) .....***(Replaces 315 6122)***	.....	1	316 1275	
60 10-80 (RHD)	.....	1	315 3763	
61 10 (RHD-WDT): 61 80 (RHD)	.....	1	316 2320	
62 10 (LHD-LDT-Note 4.050-5 Type 1)...(Incl. Bracket).....	.....	1	316 3479	
62 10 (LHD-LDT-Note 4.050-5 Type 2)...(Incl. Bracket).....	.....	1	316 6243	
62 10 (LHD-WDT-Note 4.050-5 Type 1)...(Incl. Bracket).....	.....	1	316 3481	
62 10 (LHD-WDT-Note 4.050-5 Type 2)...(Incl. Bracket).....	.....	1	316 6300	
62 10-80 (RHD)	.....	1	316 3198	
63 10-80 (LHD): 64 10 (OHV-196-LHD): 64 80 (LHD): 65 10-80 (LHD-V8)...(Incl. Bracket) .....***(Replaces 316 6689)***	.....	1	316 9481	
64 10 (OHV-232).....	.....	1	317 5371	
63 10 (RHD-OHV-196): 63 10-80 (RHD-V8-Note 4.050-4 Type 1)	.....	1	316 9004	
64 10 (RHD-OHV-196): 65 10 (RHD-OHV-232)(RHD-OHV-287).....	.....	1	317 2375	
65 10-80 (LHD-Six-Note 4.050-9).....	.....	1	317 8360	
65 10-80 (LHD-Six-Note 4.050-10).....	.....	1	318 0078	
60 20-80 (LHD).....	.....	1	315 6211	
61 20-80 (LHD).....	.....	1	316 0448	
62 80 (LHD).....	.....	1	316 3273	
63 10-80 (RHD-V8-Note 4.050-4 Type 2): 64 10 (RHD-V8).....	.....	1	316 9638	

NOTE 4.050-1: Two Types of Accelerator Linkage were used on the 63 10-80 (LHD) Models. They can be identified as follows:
Type 1: The Upper Bellcrank Bracket Mounting Holes are 1-7/8" Apart.
Type 2: The Upper Bellcrank Bracket Mounting Holes are 4-1/4" Apart at the top and 3-3/8" Apart at the bottom.

NOTE 4.050-2: Used on Cars having the Transmission Control Cable Pin Threaded into the Bellcrank.

NOTE 4.050-3: Used on Cars having the Transmission Control Cable Pin Retained in the Bellcrank with a Retaining Ring.

NOTE 4.050-4: Two Types of Accelerator Linkage were used on the 63 80 (RHD) Model. They can be identified as follows:
Type 1: Rods are used as Linkage.
Type 2: A Cable is used as Linkage.

NOTE 4.050-5: Two Types of Linkage were used on the 62 10 (LHD) Model. They can be identified as follows:
Type 1: The Bellcrank Bracket on the Dash has 3 Mounting Holes.
Type 2: The Bellcrank Bracket on the Dash has 4 Mounting Holes.

NOTE 4.050-7: Used prior to Car Sequence No. E-069113 on Domestic Cars and WT-500540 on Canadian built Cars.

NOTE 4.050-8: Used beginning with Car Sequence No. E-069113 on Domestic Cars and WT-500540 on Canadian built Cars.

NOTE 4.050-9: Carburetor Control Shaft Bracket has no attached Bracket for Pull Back Spring and used prior to Car Sequence No. E-136082 and W-130869.

NOTE 4.050-10: Carburetor Control Shaft Bracket has an attached Bracket for Pull Back Spring and used beginning with Car Sequence No. E-136082 and W-130869.

Copyright 1963 American Motors Corp.

GROUP NO. — DESCRIPTION — YEAR and MODEL		PRIMARY GROUP NO.	PER CAR	PART NO.	CODE
ATTACHING PARTS					
Bellcrank To Bracket					
WASHER, Plain	60-61 01 (OHV-7/8" O. D.): ***61 Thru 63 01 (RHD-7/8" O. D.):*** 60-61 10-20-80 (LHD-7/8" O. D.) ..... ***(Replaces 800 0153)***	17.814	1	400 1093	
WASHER, Plain	60-61 01 (OHV-11/16" O. D.): ***61 Thru 63 01 (RHD-11/16" O. D.):*** 60-61 10-20 (LHD-11/16" O. D.): 62 10: 60 80 (11/16" O. D.)	17.814	2	G120393	NA
WASHER, Plain.....	61 01 (LHD-LHE): 62-63 01 (LHD-LHE-WST) (LHD-LHE-WOD): 63 01 (OHV)	17.814	1	G120393	NA
WASHER, Plain.....	62-63 01 (LHE-WAT-1 Req.): ***60 10-80 (RHD-2 Req.)*** ..... ***(Replaces 800 0151)***	17.814	AR	400 1091	
WASHER, Plain.....	62 80 (LHD) ..... ***(Replaces 800 0157)***	17.814	1	400 0480	
WASHER, Lock	***63 01 (RHD)***	17.820	1	G120380	NA
WASHER, Spring	60-61 01 (OHV): ***61 Thru 63 01 (RHD):*** 60 Thru 62 10 (LHD): 63 01 (OHV) ..... ***(Replaces 316 7598)***	.....	1	314 7171	
WASHER, Felt.....	60-61 01 (LHE): ***61 Thru 63 01 (RHD):*** 60-61 10-20-80 (LHD).....	4.049	2	313 4122	
PIN, Cotter	60-61 01 (OHV): 60 10: 61 10 (LHD): 60-61 20-80 ..	17.460	2	G103361	NA
PIN, Cotter	61 Thru 63 01 (LHD-LHE): 62 80 (LHD)	17.460	1	G103361	NA
PIN, Cotter	***61 Thru 63 01 (RHD)***.....	17.460	1	G103362	NA
PIN, Cotter	63 01 (OHV)	17.460	1	G103373	NA
PIN, Cotter	62 10 (LHD)	17.460	1	G103372	NA
NUT, Hexagon.....	***63 01 (RHD)***	17.406	1	G120375	
LEVER, Accelerator Pedal Rod					
1 Thru 63 01 (RHD).....		.....	1	316 1095	
Upper) 60 Thru 62 20-80 (LHD).....		.....	1	315 3811	
Front) ***60 10-80 (RHD)***.....		.....	1	315 3751	
Front) ***62 10-80 (RHD)***		.....	1	316 3197	
ATTACHING PARTS					
Lever To Bellcrank					
WASHER, Lock	***61 Thru 63 01 (RHD): 60 Thru 62 10 (RHD):*** 60 Thru 62 20-80.....	17.820	1	G120380	NA
NUT, Hexagon.....	***61 Thru 63 01 (RHD): 60 Thru 62 10 (RHD):*** 60 Thru 62 20-80.....	17.406	1	G120375	
BRACKET, Accelerator Pedal Rod Bellcrank Mounting					
60-61 01 (OHV): 60-61 10 (LHD).....		.....	1	315 0199	
61 01 (LHD-LHE): 62-63 01 (LHD-LHE-WST)(LHD-LHE-WOD).....		.....	1	313 6718	
1 Thru 63 01 (RHD).....		.....	1	316 1093	
62-63 01 (LHE-WAT)		.....	1	316 3598	
63 01 (OHV)		.....	1	316 6878	
Rear) ***60 10-80 (RHD)***		.....	1	315 3764	
Rear) ***61-62 10-80 (RHD)***.....		.....	1	316 2317	
Front) ***60 10-80 (RHD)***.....		.....	1	315 3755	
Front) ***61-62 10-80 (RHD)***		.....	1	316 2277	
Lower) 60-61 20-80 (LHD).....		.....	1	315 0439	
Lower) 62 80 (LHD).....		.....	1	316 3276	
Upper) 60-61 20		.....	1	315 2745	
Upper) 60-61 80 (LHD).....		.....	1	315 3034	
Upper) 62 80 (LHD).....		.....	1	316 3277	
ATTACHING PARTS					
Bracket To Dash					
SCREW, Tapping.....	60-61 01 (OHV): 60-61 10 (LHD): 61-62 20-80 (LHD)	17.670	2	G451808	NA
SCREW, Tapping.....	***61 Thru 63 01 (RHD)***.....	17.670	2	G445656	NA

Copyright 1963 American Motors Corp.

GROUP NO. — DESCRIPTION — YEAR and MODEL	PRIMARY GROUP NO.	PER CAR	PART NO.	CODE
SCREW, Tapping..... 62 01 (OHV)	17.670	2	G455451	NA
SCREW, Tapping..... 62-63 01 (OHV): 63-64 10: 63-64 80 (LHD): ***63 10 (RHD-V8-Note 4.050-4 Type 1)***	17.671	2	G443794	NA
SCREW, Tapping..... 65 01 (OHV-199)(OHV-232): 65 10-80 (LHD)	17.670	2	G445656	NA
SCREW, Tapping..... ***60 10-80 (RHD)***	17.671	3	800 0093	NA
SCREW, Tapping..... 62 10 (LHD-Note 4.050-5 Type 1): ***65 10 (RHD)***	17.670	3	G189119	NA
SCREW, Tapping..... 64-65 01 (LHD-LHE)(OHV-196): 62 10 (LHD-Note 4.050-5 Type 2): ***63 10 (RHD-V8-Note 4.050-4 Type 2): 64 10-80 (RHD-V8)***	17.670	4	G189119	NA
SCREW, Tapping..... ***61-62 10-80 (RHD)***	17.670	2	G145415	NA
SCREW, Tapping..... ***61-62 10-80 (RHD)***	17.671	2	G274773	NA
SCREW, Tapping..... 60 20-80 ***(Replaces 800 0105)***	17.671	3	400 1042	
WASHER, Plain..... 62 01 (OHV)	17.814	2	G120391	NA
NUT, Speed..... 62-63 01 (OHV): 65 01 (OHV-199)(LHD-OHV-232): 63 10: 64 10 (LHD-OHV-Six): ***63 10-80 (RHD-V8-Note 4.050-4 Type 1):*** 63 Thru 65 10-80 (LHD)	.....	2	316 3893	
Bracket To Shaft				
BUSHING..... ***63 10-80 (RHD-V8-Note 4.050-4 Type 2): 64 10 (RHD-V8)***	.....	2	316 7590	
WASHER, Plain..... ***63 10-80 (RHD-V8-Note 4.050-4 Type 2): 64 10 (RHD-V8)***	17.814	2	G120393	NA
WASHER, Spring..... ***63 10-80 (RHD-V8-Note 4.050-4 Type 2): 64 10 (RHD-V8) (Replaces 316 7598)***	.....	1	314 7171	
PIN, Cotter..... ***63 10-80 (RHD-V8-Note 4.050-4 Type 2): 64 10 (RHD-V8)***	17.460	2	G103373	NA
Upper Bracket To Support				
BOLT, Hexagon..... 60-61 20-80 (LHD)	17.038	1	G180018	NA
WASHER, Lock..... 60-61 20-80 (LHD)	17.820	1	G120380	NA
NUT, Hexagon..... 60-61 20-80 (LHD)	17.406	1	G120375	
PIN, Clevis..... 62 80 (LHD)	.....	1	316 5588	
PIN, Cotter..... 62 80 (LHD)	17.460	1	G103361	NA
WASHER, Spring..... 62 80 (LHD)	4.266	1	312 8655	
WASHER, Plain..... 62 80 (LHD)	17.814	1	G120392	NA
SUPPORT, Accelerator Pedal Rod Bellcrank (To Manifold)				
60 01 (LHE)	.....	1	313 6718	
60 Thru 62 20-80 (LHD)	4.070	1	315 0434	
GASKET, Accelerator Pedal Rod Bellcrank Mounting Bracket				
65 01 (LHD-OHV-232): 63 10-80: 64-65 10-80 (LHD)	.....	1	316 6679	
BUSHING, Accelerator Shaft				
60 10-20-80: 61-62 20-80 (LHD) ***(Replaces 316 3822)***	.....	2	317 2126	#
61-62 10-80 (RHD)	.....	2	316 2318	
SEAL, Accelerator Pedal Rod Bellcrank Mounting Bracket				
61 10-80 (RHD)	.....	1	316 2314	
PLATE, Accelerator Shaft Bushing Retainer				
60 10-80 (RHD)	23.012	4	341 6915	
ATTACHING PARTS				
Plate To Bracket				
SCREW, Machine..... ***60 10-80 (RHD)***	17.626	2	G431942	NA
WASHER, Lock..... ***60 10-80 (RHD)***	17.820	2	G131096	NA
NUT, Hexagon..... ***60 10-80 (RHD)***	17.412	2	G120614	NA

Copyright 1963 American Motors Corp.

GROUP NO. — DESCRIPTION — YEAR and MODEL	PRIMARY GROUP NO.	PER CAR	PART NO.	CODE
STRAP, Accelerator Pedal Rod Bracket				
60 20-80 (LHD)	.....	1	315 3632	
61 20-80 (LHD)	.....	1	316 0450	
62 80 (LHD)	.....	1	316 3199	
ATTACHING PARTS				
Strap To Bracket				
SCREW, Machine..... 60 Thru 62 20-80 (LHD)	17.626	1	G442279	NA
WASHER, Plain..... 60 Thru 62 20-80 (LHD)	17.814	1	G120391	NA
WASHER, Lock..... 60 Thru 62 20-80 (LHD)	17.820	1	G131096	NA
NUT, Hexagon..... 60 Thru 62 20-80 (LHD)	17.412	1	G120614	NA
Strap To Toeboard				
SCREW, Tapping..... 60 Thru 62 20-80 (LHD).....*(Replaces 800 0105)*	17.671	2	400 1042	
4.055 ROD, Accelerator Control				
60 01 (OHV)	.....	1	315 9854	
61 01 (OHV)	.....	1	316 0369	
61 Thru 63 01 (RHD)	.....	1	316 1092	
62 01 (OHV)	.....	1	316 3825	
63 01 (OHV-LDT)	.....	1	316 6889	
63 01 (OHV-WDT)	.....	1	316 7712	
60 10 (LHD-LDT)	.....	1	315 6269	
60 10 (LHD-WDT)	.....	1	314 9851	
61 10 (LHD-LDT)	.....	1	316 0735	
61 10 (LHD-WDT)	.....	1	316 0869	
62 10 (LHD-LDT)	.....	1	316 3213	
62 10 (LHD-WDT).....*(Replaces 316 3214)*	.....	1	316 6249	
63 10 (LHD-OHV-196-Note 4.050-1 Type 1)	.....	1	316 7753	
63 10 (LHD-OHV-196-Note 4.050-1 Type 2): 64 10 (LHD-OHV-196-Note 4.065-1 Type 1)	.....	1	316 9456	
63 10-80 (LHD-V8-Note 4.050-1 Type 1)	.....	1	316 6687	
63 10 (RHD-OHV-196)	.....	1	316 8148	
63 10-80 (LHD-V8-Note 4.050-1 Type 2): 64 10-80 (LHD-V8-Note 4.065-1 Type 1)	.....	1	317 0834	
64 10-80 (V8-LHD-Note 4.065-1 Type 2): 65 10-80 (LHD-V8)	.....	1	317 2204	
64 10 (LHD-196-Note 4.065-1 Type 2)	.....	1	317 2206	
65 01 (OHV-199): 64 10 (OHV-232): 65 10 (LHD-OHV-199-LDT) (LHD-OHV-232-LDT)	.....	1	317 5573	
65 01 (LHD-OHV-232-WDT-Note 4.050-7): 65 10-80 (LHD-OHV-232-WDT-Note 4.050-9)	.....	1	317 5770	#
65 10-80 (LHD-OHV-232-WDT-Note 4.050-10)	.....	1	318 0020	#
65 01 (LHD-OHV-232-WDT-Note 4.050-8)	.....	1	317 9978	
(Right) ***63 10-80 (RHD-V8-Note 4.050-4 Type 1)***	.....	1	316 8138	
(Left) ***63 10-80 (RHD-V8-Note 4.050-4 Type 1)***	.....	1	316 8139	
(Crossover) ***61 10 (RHD-LDT)***	.....	1	316 2307	
(Crossover) ***61 10 (RHD-WDT)***	.....	1	316 2308	
(Crossover) ***62 10 (RHD-LDT)***	.....	1	316 3219	
(Crossover) ***62 10 (RHD-WDT)***	.....	1	316 3220	
(Crossover) ***63 10 (RHD-OHV-196-LDT)***	.....	1	316 8130	
(Crossover) ***63 10 (RHD-OHV-196-WDT)***	.....	1	316 8131	
(Crossover) ***62 80 (RHD)***	.....	1	316 3206	
(Crossover) ***63 10-80 (RHD-V8-Note 4.050-4 Type 1)***	.....	1	316 8133	
ATTACHING PARTS				
Rod To Bellcrank				
CLIP..... ***60 10 (RHD)***	4.045	1	314 0386	
CLIP..... ***60 80 (RHD-2 Req.): 61 80 (RHD-1 Req.)***	4.045	AR	315 8183	
WASHER, Plain..... ***61 Thru 63 01 (RHD)***	17.814	1	G120392	NA
WASHER, Spring..... ***61 Thru 63 01 (RHD)***	4.044	1	313 4115	
PIN, Cotter..... ***61 Thru 63 01 (RHD)***	17.460	1	G103361	NA

Copyright 1963 American Motors Corp.

GROUP NO. — DESCRIPTION — YEAR and MODEL		PRIMARY GROUP NO.	PER CAR	PART NO.	CODE
	Rod To Control Shaft				
CLIP	60 Thru 63 01 (OHV): 60-61 10 (LHD-LDT)	.....	1	313 1562	
CLIP	60-61 10 (LHD-WDT)	4.256	1	313 1561	
CLIP	***60 Thru 62 10 (RHD-LDT):*** 62 10 (LHD-LDT)	4.045	1	314 0386	
CLIP	***60 Thru 62 10 (RHD-WDT):*** 62 10 (LHD-WDT)	4.045	1	315 8183	
	Rod To Shaft Ball Stud				
WASHER, Lock	60 Thru 63 01 (OHV): 60-61 10 (LHD)	17.820	1	G131096	NA
NUT, Hexagon	60 Thru 63 01 (OHV): 60-61 10 (LHD)	17.412	1	G120614	NA
	Rod To Trunnion				
SPRING	***61 Thru 63 01 (RHD)***	.....	1	99 705	
WASHER, Plain	***61 Thru 63 01 (RHD)***	17.814	2	G120392	NA
NUT, Jam	***61 Thru 63 01 (RHD)***	17.410	4	G120613	NA
	Rod To Shaft Bracket				
WASHER, Plain	63 10-80 (LHD-V8-Note 4.050-1 Type 2): 64-65 10-80 (LHD-V8)	17.814	2	G120392	NA
PIN, Cotter	63 10-80 (LHD-V8-Note 4.050-1 Type 2): 64-65 10-80 (LHD-V8)	17.460	1	G103361	NA
SPRING	63 10-80 (LHD-V8-Note 4.050-1 Type 2): 64-65 10-80 (LHD-V8)	4.068	1	314 3326	
	Rod To Lower Bellcrank				
CLIP	63-64 10: 63-64 80 (LHD-Note 4.065-1 Type 1): ***63 10-80 (RHD-V8-Note 4.050-4 Type 1)***	4.045	1	316 3209	
	Rod To Upper Bellcrank				
CLIP	***63 10 (RHD-OHV-196): 61-62 80 (RHD): 63 10-80 (RHD-V8-4.050-4 Type 1)***	4.045	1	314 0386	
CLIP	63-64 10-80 (LHD)	4.045	1	316 3209	
	Rod To Lever				
CLIP	62 10 (LHD-LDT)	4.045	1	315 8183	
CLIP	62 10 (LHD-WDT): ***63 10 (RHD-OHV-196)***	4.045	1	314 0386	
	Rods To Lever And Upper Rod				
CLIP	***63 10-80 (RHD-V8-Note 4.050-4 Type 1)***	4.045	3	314 0386	
	BRACKET, Accelerator Control Rod				
(Left)	***63 10-80 (RHD-V8-Note 4.050-4 Type 1)***	.....	1	316 8136	
(Right)	***63 10-80 (RHD-V8-Note 4.050-4 Type 1)***	.....	1	316 8137	
	ATTACHING PARTS				
	Left Bracket To Dash				
SCREW, Tapping	***63 10-80 (RHD-V8-Note 4.050-4 Type 1)***	17.670	2	G189119	NA
	Right Bracket To Dash				
SCREW, Tapping	***63 10-80 (RHD-V8-Note 4.050-4 Type 1)***	17.671	2	G443794	NA
NUT, Speed	***63 10-80 (RHD-V8-Note 4.050-4 Type 1)***	4.050	2	316 3893	
	LEVER, Kickdown Switch				
61 01 (RHD): 62-63 01 (RHD-WOD)		.....	1	316 1097	
	ATTACHING PARTS				
	Lever Adjusting				
NUT, Jam	***61 01 (RHD): 62-63 01 (RHD-WOD)***	17.410	1	G120613	NA

Copyright 1963 American Motors Corp.

GROUP NO. — DESCRIPTION — YEAR and MODEL	PRIMARY GROUP NO.	PER CAR	PART NO.	CODE
STUD, Accelerator Control Rod Ball				
60 Thru 63 01 (OHV): 60-61 10 (LHD)	4.044	1	313 8271	
63 10 (LHD-OHV-196-Note 4.050-1 Type 1)	4.045	1	316 3208	
ATTACHING PARTS				
Stud To Bellcrank				
WASHER, Lock — 63 10 (LHD-OHV-196-Note 4.050-1 Type 1)	17.824	1	G120423	NA
NUT, Jam — 63 10 (LHD-OHV-196-Note 4.050-1 Type 1)	17.410	1	G120613	NA
TRUNNION, Accelerator Control Rod				
61 Thru 63 01 (RHD)	.....	1	313 6060	
63 10 (LHD-OHV-196-Note 4.050-1 Type 1): 64 10 (LHD-OHV-196)	4.060	1	316 8847	
ATTACHING PARTS				
Trunnion To Bellcrank				
WASHER, Plain — ***61 Thru 63 01 (RHD)***	17.814	1	G120392	NA
WASHER, Spring — ***61 Thru 63 01 (RHD):*** 63 10 (LHD-OHV-196-Note 4.050-1 Type 1): 64 10 (LHD-OHV-196)	4.044	1	313 4115	
WASHER, Plain — 63 10 (LHD-OHV-196-Note 4.050-1 Type 1): 64 10 (LHD-OHV-196)	17.460	1	G137159	NA
PIN, Cotter — ***61 Thru 63 01 (RHD)***	17.460	1	G103361	NA
PIN, Cotter — 63 10 (LHD-OHV-196-Note 4.050-1 Type 1): 64 10 (LHD-OHV-196) ***(Replaces 800 0145)***	17.814	1	400 1085	
SOCKET, Accelerator Control Rod				
65 01 (OHV-199)(LHD-OHV-232): 64 10 (OHV-232): 65 10-80 (LHD-Six)	.....	1	317 5202	#
NUT, Accelerator Control Rod Socket Adjusting				
65 01 (OHV-199)(LHD-OHV-232): 64 10 (OHV-232): 65 10-80 (LHD-Six)	17.406	1	G120367	#
TURNBUCKLE, Accelerator Control Rod				
60 10 (RHD)	.....	1	315 8654	
ATTACHING PARTS				
Turnbuckle To Rod				
NUT, Lock — ***60 10 (RHD)***	17.416	1	G442823	NA
SEAL, Accelerator Control Rod				
61 01 (RHD)	4.040	1	313 4126	
CLEVIS, Accelerator Control Rod				
61 Thru 63 10 (RHD-OHV-196) (Replaces 316 9390)	.....	1	313 4588	
ATTACHING PARTS				
Clevis To Rod				
NUT, Hexagon — ***61 Thru 63 10 (RHD-OHV-196)***	17.406	1	G120368	
Clevis To Lever				
WASHER, Spring — ***61 Thru 63 10 (RHD-OHV-196)***	4.044	2	313 4115	
PIN, Cotter — ***61 Thru 63 10 (RHD-OHV-196)***	17.460	1	G103361	NA
PIN, Clevis — ***61 Thru 63 10 (RHD-OHV-196) (Replaces 800 0229)***	17.474	1	400 1210	

Copyright 1963 American Motors Corp.

GROUP NO. — DESCRIPTION — YEAR and MODEL		PRIMARY GROUP NO.	PER CAR	PART NO.	CODE
BEARING, Accelerator Control Shaft					
63 10-80 (RHD-V8-Note 4.050-4 Type 1)	***(Use 317 2126)***	4.050	2	316 3822	
ATTACHING PARTS					
Bearing To Bracket					
WASHER, Plain	***63 10-80 (RHD-V8-Note 4.050-4 Type 1)*** ***(Replaces 800 0157)***	17.814	2	400 0480	
PIN, Cotter	***63 10-80 (RHD-V8-Note 4.050-4 Type 1)***	17.460	2	G103373	NA
4.057 CABLE, Accelerator					
64 01 (LHD-LHE)	***(Use 317 7272)***	.....	1	317 3024	
65 01 (LHD-LHE)		.....	1	317 7272	
64 01 (LHD-OHV): 65 01 (LHD-OHV-196-LDT)	***(Replaces 317 3025)***	.....	1	317 7271	#
65 01 (LHD-OHV-196-WDT)		.....	1	318 0026	
63 10-80 (RHD-V8-Note 4.050-2 Type 2)		.....	1	316 9610	
64 01-10 (RHD-OHV-196): 65 01 (RHD)		.....	1	317 3026	
64 10 (RHD-V8)		.....	1	317 2176	
65 01 (RHD-OHV-199): 65 10 (RHD-OHV-232)		.....	1	317 6070	#
65 10 (RHD-OHV-287)		.....	1	317 3027	
ATTACHING PARTS					
Cable To Dash					
CLIP	64-65 01 (LHE)(OHV-196): ***64 10 (RHD-OHV-196): 65 10 (RHD-OHV-232)(RHD-OHV-287)***	8.192	1	312 8734	
CLIP	***63 10-80 (RHD-V8-Note 4.050-4 Type 2): 64 10 (RHD-V8)***	.....	1	317 0388	
WASHER, Plain	***63 10-80 (RHD-V8-Note 4.050-4 Type 2): 64 10 (RHD-V8)***	17.814	1	G120394	NA
Cable To Valve Cover					
CLIP	***63 10-80 (RHD-V8-Note 4.050-4 Type 2): 64 10 (RHD-V8): 65 10 (RHD-OHV-287-WAT)***	3.022	1	313 0379	
Cable To Control Shaft Lever					
PIN, Clevis	64-65 01: ***64 10 (RHD-OHV-196): 65 10 (RHD)***	16.300	1	316 4193	
PIN, Cotter	64-65 01: ***64 10 (RHD-OHV-196): 65 10 (RHD)***	17.460	1	G137127	NA
PIN, Locking	65 01 (LHD-OHV-196-WDT)	.....	1	400 0793	
WASHER, Plain	64-65 01: ***64 10 (RHD-OHV-196): 65 10 (RHD)***	17.814	1	G446152	NA
Cable To Carburetor Pin					
WASHER, Plain	***63 10-80 (RHD-V8-Note 4.050-4 Type 2): 64 10 (RHD-V8): 65 10 (RHD-OHV-287-WAT)***	17.814	1	G446152	NA
PIN, Cotter	***63 10-80 (RHD-V8-Note 4.050-4 Type 2): 64 10 (RHD-V8)***	17.460	1	G103361	NA
PIN, Cotter	***65 10 (RHD-OHV-287-WAT)***	17.460	1	G137127	NA
NUT, Hexagon	***63 10-80 (RHD-V8-Note 4.050-4 Type 2): 64 10 (RHD-V8)***	17.412	1	G120614	NA
Cable To Control Shaft Bracket					
BOLT, Hexagon	64-65 01 (LHE)(OHV-196): ***64 10 (RHD-OHV-196): 65 10 (RHD)***	17.038	1	G180018	NA
WASHER, Lock	64-65 01 (LHE)(OHV-196): ***64 10 (RHD-OHV-196): 65 10 (RHD)***	17.820	1	G120380	NA
NUT, Hexagon	64-65 01 (LHE)(OHV-196): ***64 10 (RHD-OHV-196): 65 10 (RHD)***	17.406	1	G120375	
CLIP	64 01: ***64 10 (RHD-OHV-196)*** ***(Use 317 3016)***	.....	1	316 9596	
CLIP	65 01 (LHE)(OHV-196): ***65 01 (RHD-OHV-199): 65 10 (RHD-OHV-232)(RHD-OHV-287)***	.....	1	317 3016	#
Cable To Bellcrank					
PIN, Clevis	64-65 01 (LHE)(OHV-196): ***64 10 (RHD-OHV-196)***	16.300	1	316 4193	
WASHER, Plain	64-65 01 (LHE)(OHV-196): ***64 10 (RHD-OHV-196)***	17.814	1	G446152	NA
PIN, Cotter	64-65 01 (LHE)(OHV-196): ***64 10 (RHD-OHV-196)***	17.460	1	G137127	NA

Copyright 1963 American Motors Corp.

GROUP NO. — DESCRIPTION — YEAR and MODEL	PRIMARY GROUP NO.	PER CAR	PART NO.	CODE
GASKET, Accelerator Cable (To Dash)				
63 10-80 (RHD-V8-Note 4.050-4 Type 2): 64 10 (RHD-V8)	4.148	1	316 0632	
64-65 01 (LHE)(OHV-196): *65 01 (RHD-OHV-199): 64 10 (RHD-OHV-196): 65 10 (RHD-OHV-232)(RHD-OHV-287)*	.....	1	317 0389	#
TRUNNION, Accelerator Cable To Lever				
63 10-80 (RHD-V8-Note 4.050-4 Type 2): 64 10 (RHD-V8)	.....	1	316 9600	
ATTACHING PARTS Trunnion To Lever				
WASHER, Plain ..... *63 10-80 (RHD-V8-Note 4.050-4 Type 2): 64 10 (RHD-V8)*	17.814	1	400 1085	
WASHER, Spring ..... *63 10-80 (RHD-V8-Note 4.050-4 Type 2): 64 10 (RHD-V8)*	4.044	1	313 4115	
PIN, Cotter ..... *63 10-80 (RHD-V8-Note 4.050-4 Type 2): 64 10 (RHD-V8)*	17.160	1	G137159	NA
RING, Accelerator Cable To Trunnion Retaining				
63 10-80 (RHD-V8-Note 4.050-4 Type 2): 64 10 (RHD-V8)	.....	1	316 9622	
SPRING, Accelerator Cable Overtravel				
63 10-80 (RHD-V8-Note 4.050-4 Type 2): 64 10 (RHD-V8)	4.055	1	99 705	
ATTACHING PARTS Spring To Cable				
WASHER, Plain ..... *63 10-80 (RHD-V8-Note 4.050-4 Type 2): 64 10-80 (RHD-V8)*	17.814	1	G120392	NA
PIN, Cotter ..... *63 10-80 (RHD-V8-Note 4.050-4 Type 2): 64 10-80 (RHD-V8)*	17.460	1	G103362	NA
PIN, Accelerator Cable To Carburetor				
63 10-80 (RHD-V8-Note 4.050-4 Type 2): 64-65 10 (RHD-V8)	.....	1	316 9587	
BRACKET, Accelerator Cable Bracket To Cylinder Head				
63 10-80 (RHD-Note 4.050-4 Type 2): 64 10 (RHD-V8)	.....	1	316 9585	
65 10 (RHD-OHV-287)	.....	1	317 6744	
ATTACHING PARTS Bracket To Cylinder Head				
CLIP ..... *63 10-80 (RHD-V8-Note 4.050-4 Type 2): 64 10 (RHD-V8)*	.....	1	316 9596	
BOLT, Hexagon ..... *63 10-80 (RHD-V8-Note 4.050-4 Type 2): 64-65 10 (RHD-V8)*	17.038	1	G180018	NA
BOLT, Hexagon ..... *65 10 (RHD-V8)*	17.038	1	G179814	NA
WASHER, Lock ..... *63 10-80 (RHD-V8-Note 4.050-4 Type 2): 64 10 (RHD-V8)*	17.460	1	G103319	NA
WASHER, Copper ..... *65 10 (RHD-V8)*	8.116	1	310 7540	
WASHER, Plain ..... *65 10 (RHD-V8)*	17.814	2	G120394	NA
NUT, Hexagon ..... *63 10-80 (RHD-V8-Note 4.050-4 Type 2): 64 10 (RHD-V8)*	17.406	1	G120375	
4.060 BELLCRANK, Carburetor Control Shaft				
61 Thru 63 01 (RHD)	.....	1	316 1089	
63 10 (LHD-OHV-196-LDT-Note 4.050-1 Type 1)	.....	1	316 7672	
63 10 (LHD-OHV-196-LDT-Note 4.050-1 Type 2): 64 10 (LHD-OHV-LDT-196)	.....	1	316 9478	
63 10 (LHD-OHV-196-WDT-Note 4.050-1 Type 1)	.....	1	316 7681	
63 10 (LHD-OHV-196-WDT-Note 4.050-1 Type 2): 64 10 (LHD-OHV-WDT-196)	.....	1	316 9464	

Copyright 1963 American Motors Corp.

GROUP NO. — DESCRIPTION — YEAR and MODEL		PRIMARY GROUP NO.	PER CAR	PART NO.	CODE
63 10 (RHD-OHV-196-LDT)		.....	1	316 8162	
63 10 (RHD-OHV-196-WDT)		.....	1	316 8166	
60-61 80 (RHD)		.....	1	315 3759	
62 80 (RHD)		.....	1	316 3202	
ATTACHING PARTS					
	Bellcrank To Bracket				
WASHER, Plain	***61 Thru 63 01 (RHD):*** 63 10 (LHD-OHV-196-Note 4.050-1 Type 1)	17.814	1	G120393	NA
WASHER, Plain	63 10 (LHD-OHV-196-Note 4.050-1 Type 2): 64 10 (LHD-OHV-LDT-196)	17.814	2	G120393	NA
WASHER, Spring	63-64 10 (LHD-OHV-196) ***(Replaces 316 7598)***	4.050	1	314 7171	
PIN, Cotter	***61 Thru 63 01 (RHD)***	17.460	1	G103361	NA
PIN, Cotter	63-64 10 (LHD-OHV-196)	17.460	1	G103373	NA
BUSHING	63-64 10 (LHD-OHV-196)	.....	1	316 7590	
	Bellcrank To Upper Bracket				
WASHER, Plain	***60-61 80 (RHD)***	17.814	1	G120393	NA
WASHER, Plain	***62 80 (RHD)*** ***(Replaces 800 0157)***	17.814	1	400 0480	
WASHER, Felt	***60-61 80 (RHD)***	4.049	1	313 4122	
PIN, Cotter	***60 Thru 62 80 (RHD)***	17.460	1	G103361	NA
	Bellcrank To Lower Bracket				
WASHER, Plain	***60-61 80 (RHD)*** ***(Replaces 800 0153)***	17.814	2	400 1093	
WASHER, Plain	***62 80 (RHD)*** ***(Replaces 800 0151)***	17.814	1	400 1091	
WASHER, Felt	***60 Thru 62 80 (RHD)***	4.049	1	313 4122	
PIN, Cotter	***60-61 80 (RHD)***	17.460	1	G103361	NA
LEVER, Carburetor Control Shaft Bellcrank					
60-61 80 (RHD)		4.050	1	315 3811	
62 80 (RHD)		4.050	1	316 3197	
ATTACHING PARTS					
	Lever To Bellcrank				
WASHER, Lock	***60 Thru 62 80 (RHD)***	17.820	1	G120380	NA
NUT, Hexagon	***60 Thru 62 80 (RHD)***	17.406	1	G120375	
BRACKET, Carburetor Control Shaft Bellcrank Mounting					
61 Thru 63 01 (RHD)		.....	1	316 1242	
63 10 (LHD-OHV-196-Note 4.050-1 Type 1)		.....	1	316 8282	
63 10 (LHD-OHV-196-Note 4.050-1 Type 2): 64 10 (LHD-OHV-196)		.....	1	316 7986	
(Lower) ***60-61 80 (RHD)***		.....	1	315 0439	
(Lower) ***62 80 (RHD)***		.....	1	316 2277	
(Upper) ***60-61 80 (RHD)***		4.050	1	315 3034	
(Upper) ***62 80 (RHD)***		.....	1	316 3205	
(On Cowl) ***62 80 (RHD)***		.....	1	346 9227	
ATTACHING PARTS					
	Lower Bracket To Toeboard				
SCREW, Tapping	***60-61 80 (RHD)***	17.670	3	G145415	NA
SCREW, Tapping	***62 80 (RHD)***	17.670	2	G451808	NA
	Bracket To Dash				
SCREW, Tapping	63-64 10 (OHV-196)	17.670	4	G189119	NA

Copyright 1963 American Motors Corp.

GROUP NO. — DESCRIPTION — YEAR and MODEL	PRIMARY GROUP NO.	PER CAR	PART NO.	CODE
Upper Bracket To Support				
BOLT, Hexagon ..... ***60-61 80 (RHD)***	17.038	1	G180018	NA
PIN, Clevis ..... ***62 80 (RHD)***	4.050	1	316 5588	
PIN, Cotter ..... ***62 80 (RHD)***	17.460	1	G103361	NA
WASHER, Lock ..... ***60-61 80 (RHD)***	17.820	1	G103319	NA
WASHER, Plain..... ***62 80 (RHD)***	17.814	1	G120392	NA
NUT, Hexagon..... ***60-61 80 (RHD)***	17.406	1	G120375	
WASHER, Spring ..... ***62 80 (RHD)***	4.266	1	312 8655	
SUPPORT, Carburetor Control Shaft				
60 Thru 62 80 (RHD)	4.070	1	315 0434	
BEARING, Carburetor Control Shaft Bellcrank Bracket				
60 Thru 62 80 (RHD): 63-64 10 (LHD-OHV-196)..... ***(Replaces 316 3822)***	4.050	1	317 2126	#
STRAP, Carburetor Control Shaft Bellcrank Bracket				
60 80 (RHD)	4.050	1	315 3632	
61 80 (RHD)	4.050	1	316 0450	
62 80 (RHD)	4.050	1	316 3199	
ATTACHING PARTS				
Strap To Toeboard				
SCREW, Tapping..... ***60 80 (RHD)*** ..... ***(Replaces 800 0105)***	17.671	2	400 1042	
SCREW, Tapping..... ***62 80 (RHD)***	17.670	2	G451808	NA
WASHER, Plain..... ***62 80 (RHD)***	17.814	2	G120391	NA
Strap To Bracket				
SCREW, Machine..... ***60 Thru 62 80 (RHD)***	17.626	1	G442279	NA
WASHER, Plain..... ***60 Thru 62 80 (RHD)***	17.814	1	G120391	NA
WASHER, Lock ..... ***60 Thru 62 80 (RHD)***	17.820	1	G131096	NA
NUT, Hexagon..... ***60 Thru 62 80 (RHD)***	17.412	1	G120614	NA
4.065 ROD, Carburetor Control Shaft				
63 10 (LHD-OHV-196-LDT-Note 4.050-1 Type 1).....	.....	1	316 6684	
63 10 (LHD-OHV-196-WDT-Note 4.050-1 Type 1).....	.....	1	316 6683	
63 10 (LHD-OHV-196-Note 4.050-1 Type 2): 64 10 (LHD-OHV-196-Note 4.065-1 Type 1) ..... ***(Use 317 2205)***	.....	1	316 9455	#
64 10 (LHD-OHV-196-Note 4.065-1 Type 2).....	.....	1	317 2205	
63 10-80 (LHD-V8-Note 4.050-1 Type 1)	.....	1	316 6674	
63 10-80 (LHD-V8-Note 4.050-1 Type 2): 64-65 10-80 (LHD-V8).....	.....	1	317 0835	
63 10-80 (RHD-V8-Note 4.050-4 Type 1)	.....	1	316 8135	
ATTACHING PARTS				
Rod To Shaft				
CLIP 63-64 10 (LHD-OHV-196)	4.045	1	316 3209	
NUT, Hexagon..... 63-64 10 (LHD-OHV-196)	17.406	1	G120367	
Rod To Bracket				
WASHER, Plain..... 63 Thru 65 10-80 (LHD-V8): ***63 10-80 (RHD-V8-Note 4.050-4 Type 1)***.....	17.814	2	400 0480	
PIN, Cotter ..... 63 Thru 65 10-80 (LHD-V8): ***63 10-80 (RHD-Note 4.050-4 Type 1)***.....	17.460	1	G103373	NA

NOTE 4.065-1: Two Types of Rods were used on the 64 10-80 (LHD) Series. They can be identified as follows:
Type 1: Rod has no Built-In Stud Clip.
Type 2: Rod has a Built-In Stud Clip.

Copyright 1963 American Motors Corp.

GROUP NO. — DESCRIPTION — YEAR and MODEL		PRIMARY GROUP NO.	PER CAR	PART NO.	CODE
BRACKET, Carburetor Control Shaft Rod (Left)					
63 Thru 65 10-80 (LHD-V8): ***63 10-80 (RHD-V8-Note 4.050-4 Type 1)***		.....	1	316 7871	
ATTACHING PARTS					
Bracket To Dash					
SCREW, Tapping.....	63-64 10-80 (LHD-V8): ***63 10-80 (RHD-V8-Note 4.050-4 Type 1)***	17.670	3	G189119	NA
SCREW, Tapping.....	65 10-80 (LHD-V8)	17.671	3	400 1042	
WASHER, Plain.....	65 10-80 (LHD-V8)	17.814	1	400 1100	
BRACKET, Carburetor Pull-Back Spring And Ignition Wire Separator (Right)					
63 10-80 (LHD-V8)***(RHD-V8-Note 4.050-4 Type 1):*** 64-65 10-80 (LHD-V8)		.....	1	316 8872	
ATTACHING PARTS					
Bracket To Cover					
BOLT, Hexagon	63-64 10-80 (LHD-V8-3/8" Dia.): ***63 10-80 (RHD-V8-3/8" Dia.-Note 4.050-4 Type 1)***	17.038	1	G180116	NA
BOLT, Hexagon	63 Thru 65 10-80 (LHD-V8-5/16" Dia.): ***63 10-80 (RHD-5/16" Dia.-Note 4.050-4 Type 1)***	17.038	1	G179812	NA
BOLT, Hexagon	65 10-80 (LHD-V8-5/16" Dia.)	17.038	1	G179814	NA
BOLT, Hexagon	65 10-80 (LHD-V8-3/8" Dia.)	17.038	1	G180118	NA
WASHER, Plain.....	63 Thru 65 10-80 (LHD-V8-13/32" I.D.): ***63 10-80 (RHD-V8-13/32" I.D.-Note 4.050-4 Type 1)***	17.814	1	G120394	NA
WASHER, Plain.....	63 Thru 65 10-80 (LHD-V8-11/32" I.D.): 63 10-80 ***(RHD-V8-11/32" I.D.-Note 4.050-4 Type 1)***	17.814	1	G120393	NA
WASHER, Copper	63 Thru 65 10-80 (LHD-V8): ***63 10-80 (RHD-V8-Note 4.050-4 Type 1)***	8.116	1	310 7540	
BEARING, Carburetor Control Shaft Rod					
63 10-80 (LHD-V8): ***63 10-80 (RHD-V8-Note 4.050-4 Type 1):*** 64-65 10-80 (LHD-V8).....	***(Replaces 316 3822)***	4.050	2	317 2126	
4.070 SHAFT, Carburetor Control					
60 01 (LHD)		4.055	1	313 9804	
60 01 (OHV-WST)		.....	1	316 0028	
60 01 (OHV-WOD)(OHV-WAT)		.....	1	316 0026	
61 01 (LHD-LHE): 62 01 (LHD-LHE-WST)(LHD-LHE-WOD)		.....	1	315 9310	
61 01 (OHV)		.....	1	316 0370	
61-62 01 (RHD)		.....	1	316 1091	
62 01 (LHE-WAT)		.....	1	316 3601	
62 01 (OHV-WST)(OHV-WOD)		.....	1	316 3833	
63 01 (LHD-LHE-WST)(LHD-LHE-WOD)		.....	1	316 6861	
63 01 (LHE-WAT)		.....	1	316 6862	
63 01 (OHV-WST-LDT)(OHV-WOD-LDT)		.....	1	316 6867	
63 01 (OHV-WST-WDT)(OHV-WOD-WDT)		.....	1	316 7694	
63 01 (RHD)		.....	1	316 7952	

NOTE 4.070-1: Three Types of Carburetor Control Shafts were used on 64 01 (LHD-OHV). They can be identified as follows:
Type 1: Shaft is not mounted to a Support with Washers and Cotter Pin.
Type 2: Shaft is mounted to a Support with Washers and Cotter Pin.
Type 3: Shaft is staked to the Support.

NOTE 4.070-2: Two Types of Carburetor Control Shafts were used on 65 10-80 (LHD-V8-WAT-W4B). They can be identified as follows:
Type 1: Shaft is 7-1/2" long and used prior to Car Sequence No.
Type 2: Shaft is 10-1/2" long and used beginning with Car Sequence No.

NOTE 4.070-3: Two Types of Carburetor Control Shafts were used on 65 10-80 (LHD-V8-WAT-WDT). They can be identified as follows:
Type 1: Shaft is 6-5/8" long and used prior to Car Sequence No.
Type 2: Shaft is 9-3/8" long and used beginning with Car Sequence No.

Copyright 1963 American Motors Corp.

GROUP NO. — DESCRIPTION — YEAR and MODEL	PRIMARY GROUP NO.	PER CAR	PART NO.	CODE
64 01 (OHV-LDT-WST-Note 4.070-1 Type 2)(OHV-LDT-WOD-Note 4.070-1 Type 2)	.....	1	317 2904	
64 01 (LHD-OHV-WST-LDT-Note 4.070-1 Type 3)(LHD-OHV-WOD-LDT-Note 4.070-1 Type 3): 65 01 (LHD-OHV-196-WST-LDT) (LHD-OHV-196-WOD-LDT)	.....	1	317 5637	
64 01 (OHV-LDT-WAT-Note 4.070-1 Type 2) ***(Use 317 5469)***	.....	1	317 2905	#
64 01 (LHD-OHV-WAT-LDT-Note 4.070-1 Type 3): 65 01 (LHD-OHV-196-WAT-LDT)	.....	1	317 5638	
64 01 (LHD-OHV-WDT-Notes 4.070-1 Type 2) ***(Replaces 317 3348, 317 4476, 317 3349, 317 0957, 317 0958)***	.....	1	317 5467	
64 01 (LHD-OHV-WDT-Note 4.070-1 Type 3): 65 01 (LHD-OHV-196-WDT) ***(Replaces 317 5467, 317 5661)***	.....	1	317 9204	#
65 01 (LHD-OHV-232-WDT-Note 4.050-7): 65 10-80 (LHD-OHV-232-WDT-Note 4.050-9)	.....	1	317 5774	
65 10-80 (LHD-OHV-232-WDT-Note 4.050-10)	.....	1	318 0022	
65 01 (LHD-OHV-232-WDT-Note 4.050-8)	.....	1	317 9981	
60 10 (LHD-WST-LDT)	.....	1	315 6270	
60 10 (LHD-WOD-LDT)(LHD-WAT-LDT)	.....	1	315 6271	
60-61 10 (LHD-WDT) ***(Replaces 315 1462)***	.....	1	315 1463	
60 10 (RHD-LDT)	.....	1	315 6290	
60 10 (RHD-WDT)	.....	1	315 3809	
61 10 (LHD-LDT) ***(Replaces 316 0804)***	.....	1	316 0805	
61 10 (RHD-LDT)	.....	1	316 2315	
61 10 (RHD-WDT)	.....	1	316 2309	
62 10 (LHD-WST-LDT-Note 4.050-5 Type 1)(LHD-WOD-LDT-Note 4.050-5 Type 1)	.....	1	316 3234	
62 10 (LHD-WST-LDT-Note 4.050-5 Type 2)(LHD-WOD-LDT-Note 4.050-5 Type 2)	.....	1	316 6303	
63 10 (LHD-OHV-196-WST-WDT-Note 4.050-1 Type 1) (LHD-OHV-196-WOD-WDT-Note 4.050-1 Type 1)	.....	1	316 3237	
62 10 (LHD-WST-WDT-Note 4.050-5 Type 2)(LHD-WOD-WDT-Note 4.050-5 Type 2)	.....	1	316 6304	
63-64 10 (LHD-OHV-196-WST-LDT)(LHD-OHV-196-WOD-LDT) ***(Replaces 316 8810)***	.....	1	316 9463	
63 10 (LHD-OHV-196-WST-WDT-Note 4.050-1 Type 1) (LHD-OHV-196-WOD-WDT-Note 4.050-1 Type 1)	.....	1	316 8809	
63 10 (LHD-OHV-196-WST-WDT-Note 4.050-1 Type 2) (LHD-OHV-196-WOD-WDT-Note 4.050-1 Type 2): 64 10 (LHD-OHV-WST-WDT-196)(LHD-OHV-WOD-WDT-196)	.....	1	316 9459	
64 10 (OHV-232)	.....	1	317 5377	
63-64 10-80 (LHD-V8-WDT)***(RHD-V8-WDT-Note 4.050-4 Type 1):*** 65 10-80 (LHD-V8-WDT-WAT-Note 4.070-3 Type 1) ***(Replaces 316 6686)***	.....	1	317 1055	
64 10-80 (LHD-V8-W4B): 65 10-80 (LHD-V8-W4B-WAT-Note 4.070-2 Type 1)	.....	1	317 1054	
65 01 (OHV-199-LDT): 65 10 (LHD-Six-LDT)	.....	1	317 6592	
65 10-80 (LHD-V8-W4B-Note 4.070-2 Type 2)	.....	1	317 5890	
65 10-80 (V8-WDT-Note 4.070-3 Type 2)	.....	1	317 5892	
65 10-80 (V8-WDT-Heavy Duty)	.....	1	317 7109	
65 10-80 (V8-W4B-Heavy Duty)	.....	1	317 7111	
64-65 01-10 (RHD-OHV-196-WST-WDT)(RHD-OHV-196-WOD-WDT)	.....	1	317 2436	
64 01-10 (RHD-OHV-196-WST-LDT)(RHD-OHV-196-WOD-LDT): 65 01 (RHD-OHV-WST-LDT)(RHD-OHV-WOD-LDT)	.....	1	317 2439	
63 10 (RHD-OHV-196-WST-LDT)(RHD-OHV-196-WOD-LDT)	.....	1	316 8093	
63 10 (RHD-OHV-196-WST-WDT)(RHD-OHV-196-WOD-WDT)	.....	1	316 8105	
65 01 (RHD-OHV-199): 65 10 (RHD-OHV-232)	.....	1	317 6059	
60-61 20 (WDT)	.....	1	315 8340	
60-61 80 (W4B)	.....	1	315 3033	

Copyright 1963 American Motors Corp.

GROUP NO. — DESCRIPTION — YEAR and MODEL	PRIMARY GROUP NO.	PER CAR	PART NO.	CODE
62 80 (LHD-WDT)	.....	1	316 3271	
62 80 (LHD-W4B)	.....	1	316 3270	
62 80 (RHD-WDT)	.....	1	316 3204	
62 80 (RHD-W4B)	.....	1	316 3203	
(Rear Half) 62 01 (OHV-WAT)	.....	1	316 4248	
(Rear Half) 63 01 (OHV-WAT-LDT)	.....	1	316 6869	
(Rear Half) 63 01 (OHV-WAT-WDT)	.....	1	316 7714	
(Rear Half) ***64 01-10 (RHD-OHV-196-WAT-LDT): 65 01 (RHD-OHV-WAT-LDT)***	.....	1	317 2440	
(Rear Half) ***64 01-10 (RHD-OHV-196-WAT-WDT): 65 01 (RHD-WAT-WDT)***	.....	1	317 2434	
(Rear Half) 62 10 (LHD-WAT-LDT-Note 4.050-5 Type 1)	.....	1	316 4195	
(Rear Half) 62 10 (LHD-WAT-LDT-Note 4.050-5 Type 2)	.....	1	316 6305	
(Rear Half) 62 10 (LHD-WAT-WDT-Note 4.050-5 Type 1)	.....	1	316 4232	
(Rear Half) 62 10 (LHD-WAT-WDT-Note 4.050-5 Type 2)	.....	1	316 6306	
(Rear Half) ***62 10 (RHD-WAT-LDT)***	.....	1	316 4751	
(Rear Half) ***62 10 (RHD-WAT-WDT)***	.....	1	316 4753	
(Rear Half) 63 10 (LHD-OHV-196-WAT-LDT-Note 4.050-1 Type 1)	.....	1	316 6663	
(Rear Half) 63 10 (LHD-OHV-196-WAT-LDT-Note 4.050-1 Type 2): 64 10 (LHD-OHV-196-WAT-LDT)	.....	1	316 9462	
(Rear Half) 63 10 (LHD-OHV-196-WAT-WDT-Note 4.050-1 Type 1)	.....	1	316 6658	
(Rear Half) 63 10 (LHD-OHV-196-WAT-WDT-Note 4.050-1 Type 2): 64 10 (LHD-OHV-WAT-WDT-196)	.....	1	316 9460	
(Rear Half) ***63 10 (RHD-OHV-196-WAT-LDT)***	.....	1	316 8167	
(Rear Half) ***63 10 (RHD-OHV-196-WAT-WDT)***	.....	1	316 8168	
(Front Half) 62 01 (OHV-WAT)	.....	1	316 4249	
(Front Half) 63 01 (OHV-WAT-LDT): 62-63 10 (OHV-196-WAT-LDT)	.....	1	316 4198	
(Front Half) 63 01 (OHV-WAT-WDT): 62-63 10 (OHV-196-WAT-WDT)	.....	1	316 4233	
(Front Half) ***64-65 01 (RHD-LDT-WAT):*** 64 10 (OHV-196-LDT-WAT)	.....	1	317 1742	
(Front Half) 64 10 (OHV-WAT-WDT-196): ***64-65 01 (RHD-WDT-WAT)***	.....	1	317 1743	

ATTACHING PARTS

Shaft To Connection

CLIP	60 Thru 63 01 (LHD-LHE)	4.256	1	313 1561	
CLIP	***61 Thru 63 01 (RHD)***	4.055	1	313 1562	
SPRING	60 Thru 63 01-10 (OHV-196): 65 01 (OHV): 64-65 10 (Six): ***64-65 01 (RHD-OHV-196-LDT):*** 65 80 (OHV-232)	1.074	1	72 447	
SCREW, Machine	60 10 (WDT)	17.614	2	G145530	NA
WASHER, Plain	60 Thru 64 01-10 (OHV-Six): 65 01 (OHV): 65 10-80 (Six): ***65 01 (RHD-OHV-196-LDT)*** ***(Replaces 800 0151)***	17.814	1	400 1091	
WASHER, Lock	60 10 (WDT)	17.820	2	G131095	NA
PIN, Cotter	60 Thru 64 01-10 (OHV-Six): 65 01 (OHV): 65 10-80 (Six)	17.460	1	G103373	NA
PIN, Cotter	***65 01 (RHD-OHV-196)***	17.460	1	G103362	NA

Shaft To Bellcrank Lever

CLIP	60-61 10 (LHD-LHE): 62 01 (LHD-LHE-WST) (LHD-LHE-WOD)	4.045	1	314 0386	
CLIP	***61 Thru 63 01 (RHD)***	4.256	1	313 1561	
CLIP	62 01 (LHE-WAT): 63 01 (LHD-LHE)	4.045	1	315 8183	
SPRING	60 Thru 62 20-80	4.068	1	314 3326	
WASHER, Plain	60-61 20-80 (2 Req.): 62 80 (Lower-1 Req.)	17.814	AR	G120392	NA
WASHER, Plain	62 80 (Upper) ***(Replaces 800 0143)***	17.814	1	400 1083	
PIN, Cotter	60 Thru 62 20-80	17.460	1	G103361	NA

Shaft To Rod

CLIP	60 01 (OHV): 60 10 (LHD-LDT)	4.055	1	313 1562	
CLIP	60 10 (LHD-WDT)	4.256	1	313 1561	

Shaft To Bracket

WASHER, Plain	60 Thru 63 01-10 (OHV-196): 65 01 (LHD-OHV-199) (LHD-OHV-232): 64 10 (LHD-OHV-Six): 65 10-80 (LHD-Six) ***(Replaces 800 0159)***	17.814	1	400 1098	
PIN, Cotter	60 Thru 63 01-10 (OHV-196): 65 01 (LHD-OHV-199) (LHD-OHV-232): 64 10 (LHD-OHV-Six): 65 10-80 (LHD-Six)	17.460	1	G103373	NA

Copyright 1963 American Motors Corp.

GROUP NO. — DESCRIPTION — YEAR and MODEL	PRIMARY GROUP NO.	PER CAR	PART NO.	CODE
Rear Shaft To Front Shaft				
SCREW, Machine..... 62-63 01 (OHV-WAT): 64 10 (LHD-OHV-WAT-196): ***65 01 (RHD-OHV-196)***.....	17.626	2	G187838	NA
WASHER, Plain..... 62-63 01 (OHV-WAT): 64 10 (LHD-OHV-WAT-196): ***65 01 (RHD-OHV-196)***.....	17.814	2	G446152	NA
NUT, Hexagon..... 62-63 01 (OHV-WAT): 64 10 (LHD-OHV-WAT-196): ***65 01 (RHD-OHV-196)***.....	4.070	2	400 0710	
Shaft To Cross Rod				
CLIP..... 63 10-80.....	4.045	1	316 3209	
REPAIR KIT, Carburetor Front Control Shaft (Incl. Disc, Rivets And Washers)				
62 Thru 64 01-10 (WAT).....	.....	1	320 7255	#
SOCKET, Carburetor Control Shaft				
65 10-80 (LHD-V8-Note 4.070-2 Type 2 And 4.070-3 Type 2).....	.....	1	317 5202	
NUT, Carburetor Control Shaft Socket Adjusting				
65 10-80 (LHD-V8-Note 4.070-2 Type 2 And 4.070-3 Type 2).....	17.406	1	G120367	
SPRING, Accelerator Overtravel				
60 Thru 62 01 (OHV): 60 10 (LHD-LDT): 61 10 (WST-LDT)(WOD-LDT): 62 10 (LHD-WST-LDT)(LHD-WOD-LDT)***(RHD-LDT):*** 65 01 (OHV-196-WDT).....	4.080	1	315 6377	
64-65 01 (OHV-196-LDT).....	.....	1	317 5910	
60 10 (LHD-WDT)***(RHD):*** 61-62 10 (WDT): 61 10 (WAT-LDT): 62 10 (LHD-WAT-LDT): 63 10 (LHD-OHV-196): 64 10 (OHV-196).....	.....	1	314 0310	
ATTACHING PARTS				
Spring To Carburetor				
RIVET, Tubular..... 64-65 01 (OHV-196-LDT).....	.....	1	400 0756	
CONNECTION, Carburetor Control Shaft To Carburetor				
63 01 (OHV-WDT): 60 Thru 63 10 (OHV-196-WDT).....	.....	1	313 8268	
64 01 (OHV-196-WDT)...(Incl. Overtravel Spring).....	.....	1	317 5912	
64 10 (OHV-196-WDT): 65 01 (OHV-196-WDT).....	.....	1	317 5911	
ATTACHING PARTS				
Connection To Carburetor				
SCREW, Machine..... 63 Thru 65 01 (OHV-196-WDT): 60 Thru 63 10 (OHV-196-WDT): 64 10 (LHD-OHV-196-WDT)...	17.614	2	G145530	NA
WASHER, Lock..... 63 Thru 65 01 (OHV-196-WDT): 60 Thru 63 10 (OHV-196-WDT): 64 10 (LHD-OHV-196-WDT)...	17.820	2	G131095	NA
Connection To Spring				
RIVET, Tibular..... 64 01 (OHV-196-WDT).....	.....	1	400 0756	
LEVER, Carburetor Control Shaft				
64 01-10 (RHD-OHV-196-LDT): 65 01 (RHD-OHV-196-LDT).....	.....	1	317 2518	
64 01-10 (RHD-OHV-196-WDT): 65 01 (RHD-OHV-196-WDT).....	.....	1	317 2519	
65 01 (RHD-OHV-199): 65 10 (RHD-OHV-232).....	.....	1	317 6054	
ATTACHING PARTS				
Lever To Shaft				
WASHER, Lock..... ***64 01-10 (RHD-OHV-196): 65 01 (RHD): 65 10 (RHD-OHV-232)***.....	17.820	1	G120380	NA
NUT, Hexagon..... ***64 01-10 (RHD-OHV-196): 65 01 (RHD): 65 10 (RHD-OHV-232)***.....	17.406	1	G120375	
END, Carburetor Control Shaft				
60 Thru 62 20-80: 63-64 10-80 (LHD-V8): ***63 10-80 (RHD-V8-Note 4.050-4 Type 1):*** 65 10-80 (LHD-V8-Note 4.070-2 Type 1 And 4.070-3 Type 1).....	.....	1	648 0849	

Copyright 1963 American Motors Corp.

GROUP NO. — DESCRIPTION — YEAR and MODEL		PRIMARY GROUP NO.	PER CAR	PART NO.	CODE
ATTACHING PARTS					
End To Carburetor					
NUT, Hexagon.....	60 Thru 62 20-80: 63 10-80 (LHD-V8)***(RHD-V8-Note 4.050-4 Type 1)***.....	17.412	1	G271169	
NUT, Hexagon.....	64 10-80 (LHD-V8): 65 10-80 (V8-LHD-Note 4.070-2 Type 1 And 4.070-3 Type 1).....	.....	1	400 0710	
STUD, Carburetor Control Shaft					
63 10 (LHD-OHV-Six-Note 4.050-1 Type 1).....		.....	1	316 3208	
ATTACHING PARTS					
Stud To Shaft					
WASHER, Lock.....	63 10 (LHD-OHV-Six-Note 4.050-1 Type 1).....	17.824	1	G120423	NA
NUT, Jam.....	63 10 (LHD-OHV-Six-Note 4.050-1 Type 1).....	17.410	1	G120613	NA
NUT, Carburetor Control Shaft End Adjusting					
60 Thru 62 20-80: 63-64 10-80 (LHD-V8): ***63 10-80 (RHD-V8-Note 4.050-4 Type 1):*** 65 10-80 (V8-LHD-Note 4.070-2 Type 1) And 4.070-3 Type 1)		17.421	1	G120613	NA
TRUNNION, Carburetor Control Shaft					
63 10 (LHD-OHV-Six-Note 4.050-1 Type 2).....		.....	1	316 8847	
ATTACHING PARTS					
Trunnion To Shaft					
WASHER, Plain.....	63 10 (LHD-OHV-Six-Note 4.050-1 Type 2).....***(Replaces 800 0145)***	17.814	1	400 1085	
WASHER, Spring.....	63 10 (LHD-OHV-Six-Note 4.050-1 Type 2).....	4.044	1	313 4115	
PIN, Cotter.....	63 10 (LHD-OHV-Six-Note 4.050-1 Type 2).....	17.460	1	G137159	NA
BEARING, Carburetor Control Shaft					
60 Thru 63 01 (OHV): 65 01 (OHV-232): 60 Thru 62 10: 63-64 10 (OHV-Six): 65 10-80 (LHD-Six) .....***(Replaces 316 3822)***		4.050	1	317 2126	#
64-65 01 (OHV-196): ***65 01 (RHD-OHV-199): 64 10 (RHD-OHV-196): 65 10 (RHD-OHV-232)***.....		.....	1	317 0829	
WASHER, Carburetor Control Shaft Bearing Felt					
60-61 01 (OHV-1 Req.): 60 10 (1 Req.): 61 10 (2 Req.)		.....	AR	312 8941	
CLAMP, Carburetor Control Shaft Bearing Washer					
60-61 01 (OHV-1 Req.): 60 10 (1 Req.): 61 10 (2 Req.)		.....	AR	312 8942	
SEAL, Carburetor Control Shaft					
62-63 01-10 (OHV-Six): 65 01 (LHD-OHV-199)(LHD-OHV-232): 64 10 (LHD-OHV-Six): 65 10-80 (LHD-Six).....		5.160	1	313 0998	
BRACKET, Carburetor Control Shaft					
60-61 01 (OHV).....		.....	1	315 9855	
64-65 01 (LHD-OHV-196-WST-LDT)(LHD-OHV-196-WAT-LDT) (LHD-OHV-196-WOD-WFGS-LDT)		.....	1	317 3582	#
64-65 01 (LHD-OHV-196-WOD-WCGS-LDT) ....***(Replaces 317 0956, 317 5684)***		.....	1	320 6218	#
64-65 01 (LHD-OHV-196-WDT) .....***(Replaces 317 0960, 317 4492, 317 5685)***		.....	1	320 6217	#
64 01-10 (RHD-OHV-196): 65 01 (RHD).....		.....	1	317 2559	
65 01 (LHD-OHV-199)(LHD-OHV-232-WDT).....		.....	1	318 0032	
60 10 (LHD).....		.....	1	315 6272	
60 10 (RHD-LDT).....		.....	1	315 6289	
60 10 (RHD-WDT).....		.....	1	315 0674	
61 10.....		.....	1	316 0524	

Copyright 1963 American Motors Corp.

GROUP NO. — DESCRIPTION — YEAR and MODEL	PRIMARY GROUP NO.	PER CAR	PART NO.	CODE
62 10 (RHD)	.....	1	316 4750	
63 10 (RHD-OHV-Six)	.....	1	316 8080	
64 10 (OHV-232): 65 10 (LHD-Six-LDT)	.....	1	317 5758	
65 10-80 (LHD-OHV-232-WDT-Note 4.050-9) ...(Incl. Bearing)	.....	1	317 5775	
65 10-80 (LHD-OHV-232-WDT-Note 4.050-10)	.....	1	318 0033	
65 01 (RHD-OHV-199): 65 10 (RHD-OHV-232)	.....	1	317 7578	
ATTACHING PARTS				
Bracket To Dash				
SCREW, Tapping..... ***60 10 (RHD-3 Req.): 61 10 (RHD-2 Req.): 62 10 (RHD)***	17.671	2	G274773	NA
SCREW, Tapping..... 65 01 (OHV-199)(LHD-OHV-232): ***63 10 (RHD-OHV-Six):*** 64 10 (OHV-232): 65 10-80 (LHD-Six)	17.670	3	G189119	NA
Bracket To Cylinder Head				
BOLT, Hexagon ..... ***64 01-10 (RHD-196): 65 01 (RHD-OHV-196)***	1.063	1	315 1412	
WASHER, Lock ..... ***64 01-10 (RHD-196): 65 01 (RHD-OHV-196)***	17.820	1	G131100	NA
WASHER, Plain..... ***64 01-10 (RHD-196): 65 01 (RHD-OHV-196)***	1.034	1	24 545	
NUT, Hexagon..... ***64 01-10 (RHD-196): 65 01 (RHD-OHV-196)***	17.406	1	G120370	
Bracket To Manifold Cover				
BOLT ..... ***64 01-10 (RHD-196): 65 01 (RHD-OHV-196)***	17.038	1	G180022	NA
SCREW, Machine..... ***65 01 (RHD-OHV-199): 65 10 (RHD-OHV-232)***	17.626	2	400 0987	
WASHER, Plain..... ***64 01-10 (RHD-196): 65 01 (RHD-OHV-196)***	17.814	1	G446188	NA
WASHER, Lock ..... ***65 01 (RHD-OHV-199): 65 10 (RHD-OHV-232)***	17.186	2	G120214	NA
SUPPORT, Carburetor Control Shaft				
64 01 (LHD-OHV-WDT-Note 4.070-1 Type 2)	.....	1	317 3345	
64 01 (LHD-OHV-LDT-Note 4.070-1 Type 2)	.....	1	317 2912	
ATTACHING PARTS				
Shaft To Support				
BUSHING ..... 64 01 (Note 4.070-1 Type 2): 65 01 (LHD-OHV-196)	4.050	1	316 7590	
WASHER, Plain..... 64 01 (Note 4.070-1 Type 2)	17.814	2	400 1091	
PIN, Cotter ..... 64 01 (Note 4.070-1 Type 2)	17.460	1	G103373	NA
LEVER, Carburetor Control Shaft To Kickdown Switch				
60 20-80 (WOD-WDT)(WAT-WDT)	.....	1	315 8419	
60 20-80 (WOD-W4B)(WAT-W4B): 61-62 20-80 (WOD)(WAT)	.....	1	315 4268	
NUT, Carburetor Control Shaft To Kickdown Switch Lever				
60 Thru 62 20-80 (WOD)(WAT)	17.410	1	G120613	NA

4.080 SPRING, Carburetor Pull Back

60 01-20-80: 60 10 (LHD): 61 10 (LDT): 62 01 (LHD-LHE-WST-5" Long) (LHD-LHE-WAT-5" Long): 62 01 (LHD-WOD): 62 10-80: 63 01 (LHD-LHE-WOD)(OHV): 63 10 (OHV-Six): 63 80 (LHD-5" Long)***(RHD-5" Long-Note 4.050-4 Type 1):*** 64 10 (LHD-OHV-196) ***(Replaces 316 0520, 316 2201)***	.....	1	313 9296	
60 10 (RHD): 61 10 (RHD-WDT)	.....	1	314 3516	
61 01 (RHD)	5.092	1	312 5077	
61 01 (LHD-LHE)(OHV): 61 10 (LHD-WDT): 61 20-80	10.470	1	315 5195	
62 01 (LHD-LHE-WST-4-1/4" Long)(LHD-LHE-WAT-4-1/4" Long): 63 01 (LHD-LHE-WST)(LHD-LHE-WAT): 63 10-80 (4-1/4" Long-V8): 64-65 10-80 (LHD-V8): ***64 01-10 (RHD-OHV-196-LDT): 65 01 (RHD-OHV-196-LDT)***	.....	1	316 4949	

NOTE 4.080-1: Two Types of Springs were used on the 62 01 (LHD-LHE-WST)(LHD-LHE-WAT) Models. They can be identified as follows:
Type 1: The overall length of the Spring is either 5" or 5-1/2" long.
Type 2: The Overall length of the Spring is 4-1/4".

Copyright 1963 American Motors Corp.

GROUP NO. — DESCRIPTION — YEAR and MODEL	PRIMARY GROUP NO.	PER CAR	PART NO.	CODE
62-63 01 (RHD)	.....	1	316 2352	
64-65 01 (LHD-OHV-196-LDT): 65 10-80 (LHD-OHV-232-WDT-4-1/2" Long-Note 4.050-9)	.....	1	317 1863	
64-65 01 (LHE): ***64 01-10 (RHD-OHV-196-WDT): 65 01 (RHD-OHV-196-WDT): 65 10 (RHD-OHV-232)*** .....***(Replaces 317 2247)***	.....	1	317 4523	
64-65 01 (LHD-OHV-196-WDT): 65 01 (LHD-OHV-232-WDT-Note 4.050-8): 65 10-80 (LHD-OHV-232-WDT-4" Long-Note 4.050-10)	.....	1	317 4455	
65 01 (LHD-OHV-232-WDT-Note 4.050-7)	.....	1	317 9190	
63 10-80 (RHD-Note 4.050-2 Type 2): 64 10 (RHD-V8)..... (Use 317 9190)	.....	1	316 9666	
65 10 (RHD-OHV-287-WAT)	.....	1	317 8621	
64 10 (OHV-232-3-11/16" Long)	.....	1	317 5971	
65 01-10 (LHD-OHV-199-LDT)	.....	1	317 8976	
64 10 (OHV-232-10-3/8" Long): 65 10 (LHD-OHV-232-LDT) .....***(Replaces 317 8686)***	.....	1	317 8975	

BRACKET, Carburetor Pull Back Spring Anchor

60-61 01 (LHD-LHE): 62-63 01 (LHD-LHE-WOD): 62 01 (LHD-LHE-WST-Note 4.080-1 Type 1)(LHD-LHE-WAT-Note 4.080-1 Type 2)	4.062	1	313 6722	
60 01 (OHV): 65 01 (LHD-OHV-199): 60-61 10 (LHD-LDT): 64 10 (LHD-OHV-196)	13.450	1	315 3673	
61 Thru 63 01 (RHD)	4.062	1	312 1808	
62 01 (LHD-LHE-WST-Note 4.080-1 Type 2)(LHD-LHE-WAT-Note 4.080-1 Type 2): 63 01 (LHD-LHE-WST)(LHD-LHE-WAT)	5.190	1	314 5919	
65 01 (LHD-OHV-232-WDT)	.....	1	317 9982	
62 10 (LHD-LDT)	13.440	1	315 8227	
60-61 20-80	.....	1	315 2746	
63 10-80 (RHD-V8-Note 4.050-4 Type 2): 64 10 (RHD-V8)... (At Cylinder Head)	.....	1	316 9586	
63 10-80 (RHD-V8-Note 4.050-4 Type 2): 64 10 (RHD-V8)... (At Carburetor)	.....	1	316 9667	
65 10 (RHD-OHV-287-WAT)	.....	1	317 6596	
65 10-80 (LHD-OHV-232-WDT-Note 4.050-10)	.....	1	318 0019	

ATTACHING PARTS

Bracket To Head

SCREW, Tapping.....	60-61 10 (LHD-LDT)	17.670	1	G179370	NA
SCREW, Tapping.....	60-61 20-80 .....***(Replaces 800 0091)***	17.671	1	400 1031	
SCREW, Tapping.....	***62 01 (RHD)***	17.660	1	G161798	NA
SCREW, Tapping.....	65 01 (LHD-OHV-199): 63-64 10 (LHD-OHV-Six)	17.670	1	G189119	NA
BOLT, Hexagon	62 10 (LHD-LDT)	17.038	1	G179819	NA
BOLT, Hexagon	***65 10 (RHD-OHV-287-WAT)***	17.038	1	G180120	NA
WASHER, Plain	62 10 (LHD-LDT)	17.814	1	G120393	NA
WASHER, Plain.....	***65 10 (RHD-OHV-287-WAT)***	17.814	1	G120394	NA
WASHER, Lock	62-63 01 (LHD-LHE-WST)(LHD-LHE-WAT)	17.822	1	G114607	NA
WASHER, Lock.....	62 10 (LHD-LDT)	17.820	1	G120214	NA
WASHER, Lock.....	***65 10 (RHD-OHV-287-WAT)***	17.820	1	G120382	NA

Bracket To Control Shaft Bracket

SCREW, Tapping.....	65 01-10-80 (LHD-OHV-232-WDT)	17.670	2	G189119	NA#

4.088 CLEANER, Carburetor Air

(Dry) 60 Thru 62 01 (LHE) .....***(Replaces 315 4526)***	.....	1	316 2915	
(Dry) 62 01 (OHV-LPB): 62 10 (LDT) .....***(Replaces 320 3788)***	.....	1	316 2917	
(Dry) 62 01 (OHV-WPB)	.....	1	316 5067	

NOTE 4.088-1: Used prior to Car Sequence No. E-40006.

NOTE 4.088-2: Used beginning with Car Sequence No. E-40006.

NOTE 4.088-3: Two Types of Air Cleaners were used on 65 10-80 (V8-WDT-LSFC). They can be identified as follows:

Type 1: Carburetor Opening Flange has I. D. of 5-1/8" and used prior to Car Sequence No.

Type 2: Carburetor Opening Flange has I. D. of 2-5/8" and used beginning with Car Sequence No.

NOTE 4.088-4: Two Types of Air Cleaners were used on 65 10-80 (V8-WDT-WSFC): They can be identified as follows:

Type 1: Carburetor Opening Flange has I. D. of 5-5/64 and used prior to Car Sequence No.

Type 2: Carburetor Opening Flange has I. D. of 2-5/8" and used beginning with Car Sequence No.

Copyright 1963 American Motors Corp.

GROUP NO. — DESCRIPTION — YEAR and MODEL	PRIMARY GROUP NO.	PER CAR	PART NO.	CODE
(Dry) 63 Thru 65 01 (LHE)	.....	1	316 8008	
(Dry) 63 01 (OHV-LDT-LPB-Note 4.088-2)	.....	1	316 9353	
(Dry) 63 01 (OHV-LDT-WPB-Note 4.088-1)	.....	1	316 8009	
(Dry) 63 01 (OHV-LDT-LPB-Note 4.088-1): 63 10 (WST-LDT)(WOD-LDT)	.....	1	316 7041	
(Dry) 63 01 (OHV-LDT-WPB-Note 4.088-2)	.....	1	316 9354	
(Dry) 63 01 (OHV-WDT-LPB): 61-62 10 (WDT): 63 10 (OHV-196-WDT) ***(Replaces 316 0668)***	.....	1	316 7035	
(Dry) 63 01 (OHV-WDT-WPB)	.....	1	316 7676	
(Dry) 64-65 01 (OHV-196-LDT)	.....	1	317 1970	
(Dry) 64 01-10 (OHV-WDT-196)	.....	1	317 2625	
(Dry) 65 01 (OHV-196-WDT)	.....	1	317 2233	
(Dry) ***164-165 01 (LHE-Can-Heavy Duty): 164-165 01 (OHV-196-Can-LDT) (Can-OHV-199-LDT): 164 10 (OHV-196-Can-LDT): 165 10 (Can-Six-LDT)***	.....	1	317 2899	
(Dry) **165 01 (Can-OHV-196-WDT): 165 01-10-80 (Can-OHV-232-WDT)**	.....	1	317 6755	
(Dry) 60-61 10 (LDT): 63 10 (OHV-196-WAT-LDT) ***(Replaces 315 6316)***	.....	1	316 7037	
(Dry) ***163 10 (CAN-2-3/4" High)***	.....	1	317 1912	
(Dry) ***163 10 (CAN-LDT-4-3/16" High)***	.....	1	316 9195	
(Dry) 64 10 (OHV-196-LDT)(United) ***(Replaces 317 2854)***	.....	1	320 5834	
(Dry) 64 10 (OHV-196-LDT)(Fram) ***(Ref. Pr. List)***	.....	1	317 3125	
(Dry) 64 10 (OHV-232-LFFC)	.....	1	317 3651	
(Dry) 64 10 (OHV-232-WFFC)	.....	1	317 3450	
(Dry) ***164 01-10 (OHV-196-CAN-WDT)***	.....	1	317 4417	
(Dry) 65 01 (OHV-199)	.....	1	317 3654	#
(Dry) 65 10 (LDT-WFFC)	.....	1	317 3652	#
(Dry) 65 10 (OHV-232-LDT-LFFC): 65 10 (OHV-199-LDT-LFFC) ***(Replaces 317 6037)***	.....	1	317 8904	#
(Dry) 64 10-80 (V8-LSFC)	.....	1	317 2637	
(Dry) 64 10-80 (V8-WSFC): 65 10-80 (V8-WSFC-W4B): 65 10-80 (V8-287-WSFC-Note 4.088-4 Type 1)	.....	1	317 1942	
(Dry) 65 10-80 (V8-W4B-LSFC): 65 10-80 (OHV-287-LSFC-Note 4.088-3 Type 1)	.....	1	317 3659	
(Dry) 60 Thru 63 10-20-80 (V8) ***(Replaces 315 3946)***	.....	1	316 2899	
(Dry) 65 01-10-80 (OHV-232-WDT-LFFC) ***(Use 317 8906)***	.....	1	317 6120	#
(Dry) 65 01-10-80 (OHV-232-WDT-WFFC)	.....	1	317 6758	
(Dry) 65 10-80 (V8-WDT-LSFC-Note 4.088-3 Type 2)	.....	1	317 6668	
(Dry) 65 10-80 (V8-WDT-WSFC-Note 4.088-4 Type 2) ***(Replaces 317 6762)***	.....	1	317 7178	#
(Dry) ***164-165 80 (CAN-WDT)***	.....	1	317 4452	
(Dry) ***165 10-80 (Can-V8-287)***	.....	1	317 9307	#
(Wet) 60 Thru 62 01 (LHE)	.....	1	315 4525	
(Wet) 60-61 01 (OHV): 62 01 (OHV-LPB): 60-61 10 (LDT)	.....	1	315 3947	
(Wet) 63 Thru 65 01 (LHE)	.....	1	316 7234	
(Wet) 60 10 (WDT)	.....	1	315 1308	

ATTACHING PARTS

Cleaner To Carburetor

STUD	63 Thru 65 01 (LHE-With Dry Cleaner)	.....	1	316 7104	
STUD	63 Thru 65 01 (LHE-With Wet Cleaner)	.....	1	316 7744	
STUD	64-65 01 (OHV-196-LDT)	.....	1	317 1971	
STUD	64 10 (OHV-196-LDT): ***164 10 (Can-OHV-196):*** 64 10 (OHV-232): 65 10 (Six-LDT): 65 01 (OHV-199-LDT): ***164-165 01 (Can): 165 10 (Can-Six-LDT)*** ***(Replaces 317 2868)***	.....	1	317 3279	
STUD	63 01 (OHV-LDT-LPB): 63 10 (WST-LDT) (WOD-LDT)	.....	1	316 7043	
STUD	64 01-10 (OHV-WDT-196): 65 01 (OHV-WDT): 65 10-80 (OHV-232-WDT)	.....	1	317 2175	
STUD	63 01 (OHV-LDT-WPB)	.....	1	316 7105	
STUD	65 10-80 (V8-WDT)	.....	1	317 6783	
STUD	62 Thru 64 10-80 (V8): 65 10-80 (V8-W4B) ***(Replaces 316 2993)***	.....	1	317 4234	
STUD	60-61 20-80	.....	1	315 3873	
STUD	***164-165 10-80 (V8-CAN)***	.....	1	317 4504	
BOLT, Hexagon	60-61 01: 62 01 (OHV-LPB)(LHE)	.....	1	320 1621	
NUT, Wing	60 Thru 62 01 (1/4-20 Dia.): 63 Thru 65 01 (LHE-1/4-20 Dia.): 60 Thru 62 10	17.432	1	G148312	
NUT, Wing	60 Thru 62 01 (LHE-10-32 Dia.)	17.432	1	G148310	
NUT, Wing	63 Thru 65 01-10: 60 Thru 65 20-80	.....	1	315 1735	

Copyright 1963 American Motors Corp.

GROUP NO. — DESCRIPTION — YEAR and MODEL	PRIMARY GROUP NO.	PER CAR	PART NO.	CODE
INSULATOR, Carburetor Air Cleaner				
61 10 (WDT): 62 10 (OHVA-WDT)	13.113	1	345 7685	
ELEMENT, Carburetor Dry Air Cleaner				
60-61 01 (LHE): 60-61 10 (LDT)	15.135	1	899 0575	
62-63 01 (LDT): 62-63 10 (OHV-196-LDT): 64-65 01 (LHE)	15.135	1	899 1012	
63 01 (WDT): 61 Thru 63 10 (OHV-196-WDT)	15.135	1	899 0838	
(8" I. D. -Less Lip) 64-65 01-10-80 (OHV-Six)	.....	1	899 1386	
(7-1/4" I. D. -With Lip) 64-65 01-10-80 (OHV-Six)	.....	1	899 1677	
(9" Dia.) 60 Thru 65 10-20-80 (V8)	15.135	1	899 1013	
(10" Dia.) 64-65 10-80 (V8)	15.135	1	899 1451	
CAP, Carburetor Air Cleaner Top				
60-61 01 (LHE): 62 01: 60 Thru 62 10 (LDT) ***(Replaces 320 2417)***	.....	1	320 3031	
63 Thru 65 01 (LHE)	.....	1	320 4174	
63 01 (OHV-LDT): 63 10 (OHV-196-LDT)	.....	1	320 4175	
63 01 (OHV-WDT): 62-63 10 (WDT): 60 Thru 64 20-80: 64 10 (V8)(Use With United Cleaner)	.....	1	320 2643	
64-65 10-80 (V8)(Use With Fram Air Cleaner)	.....	1	320 5413	
163 10 (CAN-Use With 4-3/16" High Cleaner)	.....	1	320 9095	
163 10 (Can-Use With 2-3/4" High Cleaner): 164-165 01-10-80 (Can-Six)	.....	1	320 9098	
164 80 (Can): 165 80 (Can-V8-W4B)	.....	1	320 9099	
SLEEVE, Carburetor Air Cleaner (Incl. Clamp)				
62 01 (OHV-LPB): 62 10 (LDT): 63 10 (OHV-196-WAT-LDT)	.....	1	316 2916	
62 01 (OHV-WPB)	.....	1	316 5068	
63 01 (OHV-WDT-LPB): 61 Thru 63 10 (OHV-196-WDT): ***163 10 (CAN-WDT-1-5/16" Stud)***	.....	1	316 0950	
163 10 (CAN-WDT-1-1/2" Stud)	.....	1	317 1914	
163 10 (CAN-LDT-2-3/8" Stud)	.....	1	316 3001	
163 10 (CAN-LDT-1-1/2" Stud)	.....	1	317 1913	
63 01 (OHV-WDT-WPB)	.....	1	316 7675	
60-61 10 (LDT)	.....	1	315 8464	
GASKET, Carburetor Air Cleaner Strip				
64-65 01-10 (OHV-196)	.....	1	320 5383	
GASKET, Carburetor Air Cleaner To Carburetor				
60 Thru 62 01 (OHV): 60 Thru 62 10 (LDT): 63 10 (OHV-196-WAT-LDT)	.....	1	314 6126	
63 Thru 65 01 (LHE): 65 01 (OHV-199-LDT): 64-65 10 (Six-LDT): ***164 01 (OHV-Can-196): 165 80 (OHV-Can-232)***	.....	1	316 7056	
63 Thru 65 01 (OHV-196-LDT): 63 10 (OHV-196-WST-LDT) (OHV-196-WOD-LDT)	.....	1	316 7055	
64 01-10 (OHV-WDT-196): 65 01 (OHV-196-WDT): 65 01-10-80 (OHV-232-WDT): 65 10-80 (V8-WDT)	.....	1	317 2428	
62 Thru 64 10-80 (V8): 65 10-80 (V8-W4B)	.....	1	316 2918	
SEAL, Carburetor Air Cleaner To Carburetor				
60-61 20-80	.....	1	320 1248	

Copyright 1963 American Motors Corp.

GROUP NO. — DESCRIPTION — YEAR and MODEL	PRIMARY GROUP NO.	PER CAR	PART NO.	CODE
4.110 PUMP, Fuel				
(AC-5621658) 60 01	.....	1	315 5483	
(Carter MDOF-3184S) 61 01 (LHD) ***(Use 316 3647)***	.....	1	316 1249	#
(Carter M-774-SA) ***61 Thru 63 01 (RHD)***	.....	1	313 0091	
(Carter MDOF-3344S) (Use For Carter MDOF-3184SA) 62 01 (LHD) ***(Replaces 316 4647)***	.....	1	316 3647	
(Carter MPOF-3730S) 63 Thru 65 01 (LHD-LHE-WVW)	.....	1	316 7610	
(Carter MOF-3723S) 64-65 01 (LHE-WEW)	.....	1	317 2795	
(Carter MPF-3531) 63 Thru 65 01 (OHV-196-WVW): 63-64 10 (LHD-OHV-196-WVW)(OHVC-196-WES-WEW)	.....	1	316 7730	
(Carter MPF-3011S) 60 10	.....	1	315 8342	
(Carter MPF-3025SA)(Use For Carter MPF-3025S) 60-61 10: 62 10 (LHD) ***(Replaces 315 8546)***	.....	1	316 4578	
(Carter MPF-3346) ***62 Thru 64 10 (RHD-OHV-196-WVW)***	.....	1	316 3880	
(Carter MF-3598S) 64 01 (OHV-WEW-LES): 63-64 10 (LES-WEW-OHV-196): 65 01 (OHV-196-WEW)	.....	1	317 0521	
(Carter M-3763) 64 10 (OHV-232-WVW)(OHV-232-WES): 65 10 (OHV-232-WVW-LDT-Note 4.110-1)	.....	1	317 3221	
(Carter M-3805) 65 01 (OHV-199-WEW)(OHV-232-WEW): ***65 01 (RHD-OHV-199):*** 64 10 (OHV-232-WEW): 65 10-80 (Six-WEW)	.....	1	317 3674	
(Carter MPF-2988S) 60 20-80	.....	1	315 7894	
(Carter MPF-3158) 61 Thru 65 10-20-80 (V8-WVW)	.....	1	316 0756	
(Carter MF-3599S) 63 Thru 65 10-80 (V8-WEW)	.....	1	317 0522	
(Carter MPOF-3943) 65 01 (OHV-232-WVW)(OHV-199-WVW): 65 10-80 (Six-WVW-Note 4.110-2) ***(Replaces 317 7277)***	.....	1	320 6148	
ATTACHING PARTS				
Pump To Block				
BOLT, Hexagon ..... 60 01-10 (OHV): 61-62 01: 61-62 10 (OHVC)	.....	2	313 0125	
BOLT, Hexagon ..... 60 01 (LHE)	17.038	2	G179822	NA
BOLT, Hexagon ..... 63-64 01: 61-62 10 (OHVA): 63-64 10 (OHV-196)	.....	2	316 0300	
BOLT, Hexagon ..... 64 10 (OHV-232): 65 01-10 (Six)	17.038	2	G180081	
WASHER, Lock ..... 60 Thru 65 01-10 (Six)	17.820	2	G103320	NA
Pump To Front Cover				
BOLT, Hexagon ..... 60 Thru 65 10-20-80 (V8)	17.038	2	G180126	NA
WASHER, Lock ..... 60 Thru 65 10-20-80 (V8)	17.820	2	G120382	NA
BOWL, Fuel Pump Filter				
60 10-20-80	.....	1	320 2350	
63 Thru 65 01 (LHD-LHE)	4.002	1	311 7225	#
63 Thru 65 01 (OHV): 63 Thru 65 10-80	.....	1	320 4193	
GASKET, Fuel Pump Filter Bowl				
63 Thru 65 01-10-80	4.002	1	311 7226	#
SPRING, Fuel Pump Filter Bowl				
63 Thru 65 01 (LHD-LHE)	.....	1	311 7228	
63 Thru 65 01 (OHV): 60 10-20-80: 63 Thru 65 10-80	.....	1	320 2351	
ELEMENT, Fuel Pump				
61 01-10	15.190	1	899 0952	
62 Thru 64 01-10: 61 Thru 64 20-80 (Use With Glass Bowl)	15.190	1	899 0953	
63 Thru 65 01-10-80 (Use With Metal Bowl)	15.190	1	899 1450	

NOTE 4.110-1: On 65 10 (OHV-232-LDT-WVW) used prior to Engine Code No. 608L04.
NOTE 4.110-2: On 65 10 (OHV-232-LDT-WVW) used beginning with Engine Code No. 608L04.

Copyright 1963 American Motors Corp.

GROUP NO. — DESCRIPTION — YEAR and MODEL	PRIMARY GROUP NO.	PER CAR	PART NO.	CODE
REPAIR KIT, Fuel Pump				
61-62 01 (LHD)...(Incl. 1-Cam Lever Shaft Seal Plug, 1-Breather Vent Filter, 1-Welsh Plug, 1-Flange Gasket, 1-Cam Lever Pin Retainer, 1-Vacuum Oil Seal, 1-Outlet Airdome Diaphragm, 1-Fuel Diaphragm Assembly and 1-Vacuum Diaphragm Assembly.)	.....	1	320 3289	
63 Thru 65 01 (LHD-LHE)...(Incl. 1-Rivet Plug, 1-Cam Lever Shaft Seal Plug, 1-Flange Gasket, 3-Vacuum Valve Housing Gaskets, 1-Piston Ring, 1-Outlet Airdome Diaphragm and 1-Fuel Diaphragm Assembly.)	.....	1	320 3718	
63 Thru 65 01 (OHV-196-WVW): 60 10 (Use On MPF-3025S Pump): 61 Thru 64 10 (OHV-196-WVW): 63-64 10 (OHV-196-WES-WEW)...(Incl. 1-Rivet Plug, 1-Cam Lever Shaft Seal Plug, 1-Flange Gasket, 3-Vacuum Valve Housing Gaskets, 1-Piston Ring, 1-Outlet Airdome Diaphragm And 1-Fuel Diaphragm Assembly)	.....	1	320 3288	
60 10 (Use on MPF-3011S Pump)...(Incl. 1-Rivet Plug, 1-Cam Lever Shaft Seal Plug, 1-Flange Gasket, 3-Vacuum Valve Housing Gaskets, 1-Piston Ring, 1-Outlet Airdome Diaphragm and 1-Fuel Diaphragm Assembly.)	.....	1	320 3287	
64-65 01 (OHV-196-WEW-LES): 63-64 10 (OHV-196-LES-WEW)...(Incl. 1-Rivet Plug, 1-Filter Element, 1-Filter Element Gasket, 1-Flange Gasket, 1-Outlet Airdome Diaphragm and 1-Fuel Diaphragm Assembly.)	.....	1	320 4553	
60 Thru 65 10-20-80 (V8-WVW)...(Incl. 1-Rivet Plug, 1-Cam Lever Shaft Seal Plug, 1-Flange Gasket, 3-Vacuum Valve Housing Gasket, 1-Piston Ring, 1-Outlet Airdome Diaphragm and 1-Fuel Diaphragm Assembly.)	.....	1	320 3286	
63 Thru 65 10-80 (V8-WEW)...(Incl. 1-Rivet Plug, 1-Filter Element, 1-Filter Element Gasket, 1-Flange Gasket, 1-Outlet Airdome Diaphragm And 1-Fuel Diaphragm Assembly.)	.....	1	320 4554	
65 10-80 (Six-WVW)...(Incl. 1-Rivet Plug, 1-Cam Lever Shaft Seal Plug, 1-Flange Gasket, 3-Vacuum Valve Housing Gasket, 1-Piston Ring, 1-Outlet Airdome Diaphragm And 1-Fuel Diaphragm Assembly)	.....	1	320 5746	
4.116 GASKET, Fuel Pump				
60 Thru 63 01-10-20-80: 64-65 01 (OHV-196): 64-65 01 (LHE): 64 10 (OHV-196): 64-65 10-80 (V8)	.....	1	315 8396	
65 01 (OHV-199)(OHV-232): 64 10 (OHV-232): 65 10-80 (Six)	.....	1	317 4685	#
4.118 ECCENTRIC, Fuel Pump Camshaft				
60 Thru 65 10-20-80 (V8)	.....	1	314 4449	
ATTACHING PARTS Eccentric To Camshaft				
BOLT, Hexagon ..... 60 Thru 65 10-20-80 (V8)	.....	1	314 4704	
WASHER, Retaining .... 60 Thru 65 10-20-80 (V8)	.....	1	314 4702	
WASHER, Lock ..... 60 Thru 65 10-20-80 (V8)	17.820	1	G120382	NA
4.124 ELBOW, Fuel Pump To Gas Line				
60-61 01 (2 Req.): 62 Thru 65 01 (1 Req.): 60 Thru 62 10 (2 Req.): 63 Thru 65 10 (OHV-1 Req.-Six): 60 Thru 65 10-20-80 (V8-1 Req.)	17.218	AR	G137422	
ELBOW, Fuel Pump To Vacuum Line				
60 Thru 62 01 (OHV): 60 20-80	17.218	1	G137422	
62 01 (LHE-2 Req.-Note 4.124-1 Type 2)(OHV-1 Req.-Note 4.124-1 Type 2)..	17.218	1	G137421	
60 Thru 62 10 (RHD)	17.216	1	G116341	

NOTE 4.124-1: **Two Types of Fuel Pumps and Attaching Parts were used on the 62 01 (LHD) Model. They can be identified as follows:**
Type 1: Used with Fuel Pump MDOF-3184SA.
Type 2: Used with Fuel Pump MDOF-3344S.

Copyright 1963 American Motors Corp.

GROUP NO. — DESCRIPTION — YEAR and MODEL	PRIMARY GROUP NO.	PER CAR	PART NO.	CODE
CONNECTOR, Fuel Pump To Vacuum Line				
60-61 01 (LHE-1 Req.): 62 01 (LHE-2 Req. -Note 4.124-1 Type 2): 62 01 (OHV-1 Req. -Note 4.124-1 Type 2)	17.160	AR	G137405	
63 01 (OHV): 60 Thru 62 10 (LHD): 63 10: 60 Thru 63 20-80: 64 10 (OHV-232)	17.160	1	G137406	
TEE, Fuel Pump To Vacuum Line				
60 01 (WAT)	17.754	1	G143482	
CLIP, Fuel Pump To Carburetor And Wiper Tubes				
60 20-80	3.312	2	79 394	
4.130 TANK ASSEMBLY, Gasoline (Less Gauge)				
60 Thru 63 01: 60 Thru 62 10-20-80 (L3S) ***(Replaces 320 1644)***	.....	1	320 2493	
64-65 02-05-06-07-09	.....	1	320 4714	
64-65 08	.....	1	320 4713	
60 Thru 62 10-20-80 (W3S) ***(Replaces 320 1645)***	.....	1	320 2494	
63-64 10-80 (L3S)	.....	1	320 3973	
65 15-16-17-19-85-86-87-89	.....	1	320 5568	
65 18-88 (L3S)	.....	1	320 5569	
63 Thru 65 10-80 (W3S)	.....	1	320 3974	
ATTACHING PARTS Tank To Body				
BOLT, Hexagon ..... 63 Thru 65 18-88 (W3S)	17.038	6	G181593	NA
WASHER, Plain..... 63 Thru 65 18-88 (W3S)	17.814	6	G120393	NA
WASHER, Lock..... 63 Thru 65 18-88 (W3S)	17.820	6	G120214	NA
INSULATOR..... 64-65 01	.....	1	317 2893	
4.134 FILTER, Gasoline Tank				
61 Thru 65 01-10-20-80	.....	1	316 3974	
4.138 CAP, Gasoline Tank Filler (Incl. Ornament)				
60 01 ***(Replaces 315 4523)***	.....	1	315 4524	
61 01 ***(Replaces 315 3626, 315 3628)***	.....	1	315 3877	#
62 01-10-80 (Note 4.138-1 Type 1) ***(Use 320 4103)***	.....	1	316 5750	
62 01-10-80 (Note 4.138-1 Type 2) ***(Use 320 3933)***	.....	1	316 6311	
63 01	.....	1	320 3933	
64 01 (Note 4.138-2)	.....	1	320 4692	
64 01 (Note 4.138-3)	.....	1	320 5444	
65 01	.....	1	317 6695	
60-61 10-20-80 ***(Replaces 315 7611)***	.....	1	315 7612	
63 10-80 (L3S)(Vented)	.....	1	320 3922	
63 10-80 (L3S)(Non Vented): 64-65 10-80 (L3S)	.....	1	320 4953	
63-64 18-88 (W3S)	.....	1	320 3925	
65 18-88 (W3S)	.....	1	320 5474	

NOTE 4.138-1: Two Types of Gasoline Tank Filler Caps were used on the 62 01-10-80 Series. They can be identified as follows:
Type 1: Cap Screw has a Vent Hole and there is a Gasket under the Ornament.
Type 2: Cap Screw does not have a Vent Hole and there is not a Gasket under the Ornament.

NOTE 4.138-2: Used prior to Car Sequence No. E-133000.

NOTE 4.138-3: Used beginning with Car Sequence No. E-133000.

Copyright 1963 American Motors Corp.

GROUP NO. — DESCRIPTION — YEAR and MODEL		PRIMARY GROUP NO.	PER CAR	PART NO.	CODE
ORNAMENT, Gasoline Tank Filler Cap					
60-61 01-10-20-80		.....	1	315 3627	
62 01-10-80: 63 01: 64 01 (Note 4.138-2)...(Incl. Gasket And Bolt)		.....	1	320 4387	
	(Replaces 316 5749)				
63-64 10-80: 64 01 (Note 4.138-3)...(Incl. Screws): 65 01: 65 10-80 (L3S)...(Incl. Screws)		.....	1	320 4386	
65 18-88 (W3S)...(Incl. Screws)		.....	1	320 5477	
ATTACHING PARTS					
Ornament To Cap					
SCREW, Machine.....	60-61 01	17.598	1	800 0045	NA
SCREW, Machine.....	60-61 10-20-80	17.598	1	G456845	NA
SCREW, Machine.....	63-64 10-80: 64 01 (Note 4.138-3): 65 10-80 (W3S)	17.598	2	G159582	NA
SCREW, Machine.....	65 01: 65 10-80 (L3S)	17.598	2	G159577	
BOLT, Hexagon.....	62 01-10-80 (Note 4.138-1 Type 1)	.....	1	316 5710	
BOLT, Hexagon	62 01-10-80 (Note 4.138-1 Type 2): 63 01: 64 01 (Note 4.138-2)	17.038	1	G180016	
WASHER, Lock	63-64 10-80: 64 01 (Note 4.138-3): 65 01-10-80	17.822	2	G121752	NA
GASKET, Gasoline Tank Filler Cap					
62 01-10-80 (Under Bolt): 63 01: 64 01 (Note 4.138-2)		.....	1	316 5711	
62 01-10-80 (Under Ornament-Note 4.138-1 Type 1)		.....	1	316 5978	
SEAL, Gasoline Tank Filler Cap					
62 01-10-80		.....	1	313 2516	
4.141 NECK, Gasoline Tank Filler					
60 01		.....	1	315 8249	
61 01: 62 01 (Note 4.141-1)	***(Ref. Pr. List)***	.....	1	315 8392	
62 01 (Note 4.141-2): 63 01...(Incl. Vent)		.....	1	316 6316	
64-65 02-05-06-07-09 (4 Screw Mounting)		.....	1	317 0229	
65 05-06-07-09 (6 Screw Mounting)		.....	1	317 9079	
64-65 08 (4 Screw Mounting)		.....	1	317 1871	
65 08 (6 Screw Mounting)		.....	1	317 9313	
60-61 10-20-80 (L3S)		.....	1	315 7879	
60-61 10-20-80 (W3S)...(Incl. Vent)		.....	1	315 7903	
62 10-80 (L3S-Note 4.141-1)	***(Ref. Pr. List)***	.....	1	316 2919	
62 10-80 (L3S-Note 4.141-2)...(Incl. Vent)		.....	1	316 6317	
62 10-80 (W3S-Note 4.141-1)...(Incl. Vent)	***(Ref. Pr. List)***	.....	1	316 2922	
62 10-80 (W3S-Note 4.141-2)...(Incl. Vent)		.....	1	316 6318	
63 10-80 (L3S-Note 4.141-3 Type 1)...(Incl. Vent)		.....	1	316 7613	
64 10-80 (L3S): 63 10-80 (L3S-Note 4.141-3 Type 2)		.....	1	317 3186	
65 10-80 (L3S)		.....	1	317 5940	
63-64 10-80 (W3S)		.....	1	316 7132	
65 18-88 (W3S)		.....	1	317 5227	
ATTACHING PARTS					
Neck To Body					
SCREW, Tapping.....	60-61 01-10-20-80	17.671	4	800 0093	NA
SCREW, Tapping.....	62 Thru 65 10-80: 62-63 01	17.671	4	G274773	NA
SCREW, Tapping.....	64-65 01	17.671	AR	400 0478	
Neck To Tank					
CLAMP	63 Thru 65 01	17.108	1	320 3079	

NOTE 4.141-1: On 62 01-10-80 used prior to Car Sequence Nos. E-97297 and W-98946.
NOTE 4.141-2: On 62 01-10-80 used beginning with Car Sequence Nos. E-97297 and W-98946.
NOTE 4.141-3: Two Types of Gasoline Tank Filler Necks were used on the 63 10-80 (L3S) Models. They can be identified as follows:
Type 1: Filler Neck has one Venting Nipple.
Type 2: Filler Neck has two Venting Nipple

Copyright 1963 American Motors Corp.

GROUP NO. — DESCRIPTION — YEAR and MODEL	PRIMARY GROUP NO.	PER CAR	PART NO.	CODE
VENTING KIT, Gasoline Tank				
63-64 15-16-19-85-86-89	.....	1	320 9525	
63-64 18-88 (L3S)	.....	1	320 9526	
FLANGE, Gasoline Tank Filler Neck				
60-61 01-10-20-80	.....	1	315 3374	
62-63 01: 62 10-80	.....	1	316 5776	
64-65 01 (4 Screw Mounting)	.....	1	317 0256	
65 01 (6 Screw Mounting)	.....	1	317 9078	
63 Thru 65 10-88 (W3S)	.....	1	316 7334	
ATTACHING PARTS Flange To Body				
SCREW, Tapping..... 64-65 01	17.671	AR	400 0478	NA#
CONNECTOR, Gasoline Tank Filler Neck To Tank				
63-64 10-80 (L3S)	.....	1	316 7579	
65 10-80 (L3S)	.....	1	317 5941	
CLAMP, Gasoline Tank Filler Neck To Connector				
63 Thru 65 10-80 (L3S)	17.108	2	320 3079	
GASKET, Gasoline Tank Filler Neck Flange				
63 Thru 65 18-88 (W3S)	.....	1	316 8802	
SEAL, Gasoline Tank Filler Tube ("O" Ring)				
64-65 01 (Lower-At Tank)	.....	1	317 0228	
63 Thru 65 18-88 (W3S)	.....	1	316 7133	
HOSE, Gasoline Tank Filler Tube Vent (Bulk-Order Per Foot)				
65 01	.....	AR	320 6752	#
62 01-10-80 (Note 4.141-2): 63-64 01: 63-64 10-80 (L3S-7/32" I.D.) ***(Use 320 6752)***	.....	AR	320 3865	#
65 10-80 (1/2" I.D.) ***(Use 320 6694)***	.....	AR	320 5635	#
ATTACHING PARTS Hose To Shield Bracket				
CLIP, Closed 64-65 10-80 (L3S)	17.134	1	G105251	
SCREW, Tapping..... 64-65 10-80 (L3S)	17.671	1	400 1042	
CLIP, Gasoline Tank Filler Tube Vent Hose To Tank				
62-63 01: 62 10-80 (L3S-Note 4.141-2)	.....	2	316 6312	
62 10-80 (W3S-Note 4.141-2)	.....	1	313 5224	
63-64 18-88 (L3S)	.....	3	G105245	
CLAMP, Gasoline Tank Filler Tube Vent Hose To Tank				
64-65 08	17.108	1	320 3076	
SCREW, Gasoline Tank Filler Tube Vent Hose Clip				
62 10-80 (W3S-Note 4.141-2) ***(Replaces 800 0091)***	17.671	1	400 1031	
HOSE, Gasoline Tank Filler Tube Vent				
60 Thru 62 10-20-80 (W3S)	.....	1	315 7901	
63 10-80 (L3S)	.....	1	316 7588	
64 10-80 (L3S)	.....	1	317 3398	

Copyright 1963 American Motors Corp.

GROUP NO. — DESCRIPTION — YEAR and MODEL	PRIMARY GROUP NO.	PER CAR	PART NO.	CODE
TEE, Gasoline Tank Air Vent Hose				
63-64 10-80 (L3S)	.....	1	320 5260	
CLAMP, Gasoline Tank Filler Tube Vent Hose				
64 01	.....	2	317 1891	#
65 01	.....	2	318 0753	#
60 Thru 62 01-10-20-80	17.108	1	320 3079	
60 Thru 62 10-80 (W3S-1 Req.): 63-64 10-80 (L3S-2 Req.)	17.108	AR	320 3076	#
163 01 (CAN): 63-64 10-80 (L3S)	17.108	1	G272842	
65 10-80 (L3S)	.....	4	318 0752	#
HOSE, Gasoline Tank Drain				
63 Thru 65 18-88 (W3S)	.....	1	349 2666	
CLAMP, Gasoline Tank Drain Hose				
63 Thru 65 18-88 (W3S)	4.160	1	315 5854	
SEAL, Gasoline Tank Air Vent Nipple				
64-65 08	.....	1	317 1873	
TUBE, Gasoline Tank Filler Tube Air Vent				
(Upper) 64-65 08	.....	1	317 1866	
(Upper) 64-65 02-05-06-07-09	.....	1	317 1867	
(Upper) 63-64 18-88 (L3S)	.....	1	320 5273	
(Lower) 64-65 08	.....	1	317 1868	
(Lower) 64-65 02-05-06-07-09	.....	1	317 1865	
(Lower) 63-64 18-88 (L3S)	.....	1	320 5269	
63-64 15-16-19-85-86-89 (Filler Neck Hose To Auxiliary Vent Hose)	.....	1	320 5268	
63-64 10-80 (L3S-Filler Neck Tee Hose To Tank)	.....	1	320 5277	
65 18-88 (L3S-Neck To Tank-Except Marlin)	.....	1	317 6981	
65 15-16-17-19-85-86-87-89 (Neck To Tank-Except Marlin)	.....	1	317 6086	
65 59 (Marlin-Neck To Tank)	.....	1	317 8753	
ATTACHING PARTS Tube To Body				
Clip, Closed 64-65 01	17.134	1	G105245	
CLIP, Closed 65 18-88 (L3S)	.....	1	317 6983	#
CLIP, Closed ..... 65 59 (Marlin)	.....	3	400 0786	
SCREW, Tapping..... 64-65 01	17.671	1	400 1040	
SCREW, Tapping..... 65 59 (Marlin)	17.671	3	400 1037	
TUBE, Gasoline Tank Drain Hose (Lower)				
63 Thru 65 18-88 (W3S)	.....	1	348 8240	
ATTACHING PARTS Tube To Hose				
CLAMP ..... 63 Thru 65 18-88 (W3S)	17.108	1	G272841	
GROMMET, Gasoline Tank Vent Tube Hose				
65 10-80 (L3S)	.....	1	317 7194	
COVER, Gasoline Tank Auxilliary Air Vent Cap And Tube				
63-64 10-80 (L3S)	.....	1	320 5261	
ATTACHING PARTS Cover To Rear Floor Pan				
SCREW, Tapping..... 63-64 10-80 (L3S)	17.671	3	400 1042	

Copyright 1963 American Motors Corp.

GROUP NO. — DESCRIPTION — YEAR and MODEL	PRIMARY GROUP NO.	PER CAR	PART NO.	CODE
SEAL, Gasoline Tank Auxilliary Air Vent Tube				
63-64 10-80 (L3S)	.....	1	320 5279	
TUBE AND CAP ASSEMBLY, Gasoline Tank Auxilliary Vent				
63-64 10-80 (L3S)	.....	1	320 5270	
4.143 COVER, Gasoline Tank Vent Tube Protective				
65 10-80 (L3S-Except Marlin)	.....	1	317 6004	
65 59 (Marlin)	.....	1	317 8684	
ATTACHINGS PARTS Cover To Floor Pan				
SCREW, Tapping 65 10-80 (L3S)	17.671	3	400 1031	
SEAL, Gasoline Tank Vent Tube				
65 10-80 (L3S)	.....	1	317 5986	
4.145 SHIELD, Gasoline Tank Filler Tube (Incl. Seal)				
63-64 10-80 (L3S)	.....	1	349 2547	
65 10-80 (L3S)	.....	1	354 7739	
ATTACHING PARTS Shield To Wheelhouse Panel				
BOLT, Hexagon 63 10-80 (L3S)	17.038	2	G180018	NA
SCREW, Machine 64-65 10-80 (L3S)	22.056	2	400 0058	
WASHER, Lock 63 10-80 (L3S)	17.820	2	G120380	NA
4.148 PLUG, Gasoline Tank Drain				
61 Thru 65 01-10-20-80	.....	1	316 0725	
GASKET, Gasoline Tank Drain Plug				
61 Thru 65 01-10-20-80	.....	1	316 0632	
4.152 STRAP, Gasoline Tank Mounting				
60 01	.....	1	315 7887	
61 Thru 63 02-05-06-09	.....	1	316 0630	
61 Thru 63 04-07-08	.....	1	315 9826	
64-65 01 ...(Incl. Pin)	.....	1	317 0235	
60 10-20-80 (L3S-Note 4.152-1)	.....	1	315 7859	
60 10-20-80 (L3S-Note 4.152-2): 61-62 10-20-80 (L3S)	.....	1	315 9520	
60 10-20-80 (W3S)	.....	1	315 7860	
61-62 10-20-80 (W3S)	.....	1	316 1285	
63-64 10-80 (L3S) ...(Incl. Pin)	.....	2	316 6811	
65 10-80 (L3S)...(Incl. Pin)	.....	2	317 5428	#
ATTACHING PARTS Strap To Stud				
WASHER, Plain ..... 60 Thru 62 01-10-20-80: 63 01 ***(Replaces 800 0179)***	17.814	2	400 1116	
WASHER, Lock ..... 60 Thru 62 01-10-20-80: 63 01	17.820	2	G131100	NA
NUT, Hexagon ..... 60 Thru 62 01-10-20-80: 63 01	17.406	2	G120370	NA

NOTE 4.152-1: Used prior to Car Code No. 11027.
NOTE 4.152-2: Used beginning with Car Code No. 11027.

Copyright 1963 American Motors Corp.

GROUP NO. — DESCRIPTION — YEAR and MODEL	PRIMARY GROUP NO.	PER CAR	PART NO.	CODE
Strap To Rear Floor Pan Support				
BOLT 64-65 01	.....	1	317 0233	
BOLT ..... 63-64 10-80 (L3S).....	.....	2	316 6804	
BOLT ..... 65 10-80 (L3S).....	.....	2	317 5859	
WASHER, Plain..... 65 10-80 (L3S).....	17.814	2	G120393	NA
WASHER, Lock 64-65 01	17.820	1	G120382	NA
WASHER, Lock ..... 63 Thru 65 10-80 (L3S)	17.820	2	G120214	
NUT, Hexagon..... 64-65 01	17.406	1	G120369	NA
NUT, Hexagon..... 63 Thru 65 10-80 (L3S)	17.406	2	G120368	
HANGER, Gasoline Tank Mounting Strap				
60 Thru 62 10-20-80 (W3S)	.....	1	315 7858	
ATTACHING PARTS				
Hanger To Stud				
WASHER, Plain..... 60 Thru 62 10-20-80 (W3S) .... ***(Replaces 800 0179)***	17.814	1	400 1116	
WASHER, Lock ..... 60 Thru 62 10-20-80 (W3S).....	17.820	1	G131100	NA
NUT, Hexagon..... 60 Thru 62 10-20-80 (W3S)	17.406	1	G120370	NA
4.160 TUBE, Gasoline Tank To Fuel Pump				
(75-1/2" Long) 60 Thru 63 01 (LHD-LCV)	.....	1	315 9505	
(92-1/4" Long) 60 01.....***(Ref. Pr. List)***	.....	1	315 8544	
(16-1/2" Long) 60 01.....	.....	1	315 9504	
(1-3/4" Long) 60 01: 61 01 (LHE): ***62-63 01 (RHD):*** 62 10: ***63 10 (RHD)***	.....	1	315 5856	
(25-1/4" Long) 61 Thru 63 01 (LCV)	.....	1	315 9983	
(99" Long) 61 Thru 63 07	.....	1	316 1461	
(81-1/2" Long) ***61 Thru 63 01 (RHD)***	.....	1	316 2213	
(2-9/32" Long) 62 01 (OHV).....	22.050	1	316 5612	
(95-3/4" Long) 64-65 05-06-08-09.....	.....	1	317 1887	
(33-1/4" Long-Front) 64-65 07 (LHD-OHV-196)	.....	1	317 2173	
(62-1/2" Long-Rear) 64-65 07.....	.....	1	317 2171	
(17" Long) 65 05-06-08-09 (OHV-199-WVW)(OHV-232-WVW)	.....	1	317 7538	
(24-1/2" Long) 65 05-06-08-09 (LHD-OHV-199-WEW)(LHD-OHV-232-WEW) ...	.....	1	317 8704	
(26" Long) ***65 01 (RHD-OHV-199)***	.....	1	318 0154	
(51-3/16" Long) 65 07 (OHV-199-WVW)(OHV-232-WVW)	.....	1	317 8961	
(58-5/8" Long) 65 07 (OHV-199-WEW)(OHV-232-WEW)	.....	1	317 8960	
(102" Long) 60-61 10.....	.....	1	315 8500	
(105-3/8" Long) 62 15-16 (LHD).....	.....	1	316 3352	
(34-3/8" Long) 62 18 (LHD): ***62 10 (RHD):*** 62 80	.....	1	316 4058	
(69-1/2" Long) 62 18 (LHD): ***62 10 (RHD):*** 62 80	.....	1	316 4094	
(102-1/2" Long) 63 10-80 (Note 4.160-1)	.....	1	316 7734	
(101-7/8" Long) 63 10-80 (Note 4.160-2): 64 10 (196): 64 10-80 (V8-Note 4.160-3)	.....	1	316 9849	
(15-7/8" Long) 63-64 10-80 (L3S).....	.....	1	316 7935	
(23-1/2" Long) 63-64 10-80 (V8-Note 4.160-3)..... ***(Use 317 4232)***	.....	1	316 7767	#
(106-1/2" Long) 60-61 20-80.....	.....	1	315 8501	
(23-1/4" Long) 60-61 20.....	.....	1	315 5858	
(23-3/4" Long) 60-61 80	.....	1	315 7939	
(29-1/2" Long) ***62 80 (RHD)***.....	.....	1	316 4633	
(26-5/8" Long) 62 80 (LHD).....	.....	1	316 3303	
(123-5/16" Long) 64 10-80 (V8-Note 4.160-4): 64 10 (OHV-232): 65 10-80 (V8): 65 10-80 (Six-WEW): 65 10 (OHV-232-LDT-WVW-Note 4.160-5).	.....	1	317 4232	
(10-7/8" Long) 65 10-80 (L3S)	.....	1	317 6611	
(113-3/4" Long) 65 10-80 (Six-WVW-Note 4.160-6)	.....	1	317 7241	

NOTE 4.160-1: Used prior to Car Sequence No. E-50273 and W-42040.
NOTE 4.160-2: Used beginning with Car Sequence No. E-50273 and W-42040.
NOTE 4.160-3: Used prior to Car Sequence No. W-16338.
NOTE 4.160-4: Used beginning with Car Sequence No. W-16338.
NOTE 4.160-5: On 65 10 (OHV-232-LDT-WVW) used prior to Engine Code No. 608L04.
NOTE 4.160-6: On 65 10 (OHV-232-LDT-WVW) used beginning with Engine Code No. 608L04.

Copyright 1963 American Motors Corp.

GROUP NO. — DESCRIPTION — YEAR and MODEL	PRIMARY GROUP NO.	PER CAR	PART NO.	CODE
ATTACHING PARTS				
Tube To Rear Floor Pan				
CLIP ..... 60 Thru 65 01 (1 Req.): 60 Thru 62 10-20-80 (2 Req.): 63 10-80 (6 Req.): 64-65 10-80 (5 Req.) .	.....	AR	15 708	
CLIP ..... 61 Thru 63 07	17.134	1	G120520	
CLIP ..... 61 Thru 63 07 (Also Holds Brake Tube)	6.631	1	314 9613	
CLIP ..... ***63 01 (RHD)***	4.152	2	47 272	
SCREW, Tapping ..... 61 Thru 63 07 (5/8" Long) ..... ***(Replaces 800 0103)***	17.671	1	G9411563	
SCREW, Tapping ..... 61 Thru 63 07 (1/2" Long)	17.671	1	G274773	NA
SCREW, Tapping ..... 60 01: 60 Thru 62 10-20-80 ..... ***(Replaces 800 0091)***	17.671	1	400 1031	
SCREW, Tapping ..... 63 10-80 (Note 4.160-1) ..... ***(Replaces 800 0091)***	17.671	2	400 1031	
SCREW, Tapping ..... 63 10-80 (Note 4.160-2) ..... ***(Replaces 800 0091)***	17.671	5	400 1031	
SCREW, Tapping ..... 64 01 (1 Req.): 64-65 10-80 (5 Req.): 65 01 (3 Req.) ..... ***(Replaces 800 0105)***	17.671	1	400 1042	
WASHER, Lock ..... 60 Thru 63 01: 60 Thru 62 10: 63 10-80 (Note 4.160-2): 60 Thru 62 80	17.820	1	G120380	NA
WASHER, Lock ..... 63 10-80 (Note 4.160-1)	17.820	2	G120380	NA
NUT, Hexagon ..... 60 Thru 63 01: 60 Thru 62 10: 63 10-80 (Note 4.160-2): 60 Thru 62 80	17.406	1	G120375	
NUT, Hexagon ..... 63 10-80 (Note 4.160-1)	17.406	2	G120375	
Tube To Rear Seat Kickup				
CLIP 64-65 01	.....	1	15 708	
SCREW, Tapping ..... 64-65 01 ..... ***(Replaces 800 0105)***	17.671	1	400 1042	
Tube To Front Seat Reinforcement				
CLIP 64-65 01	.....	1	15 708	
SCREW, Tapping ..... 64-65 01 ..... ***(Replaces 800 0105)***	17.671	1	400 1042	
Tube To Side Sill				
CLIP ..... 60 01 (4 Req.): 61 Thru 63 01 (LHD-LHE-6 Req.): 61 Thru 63 01 (OHV-LCV-2 Req.): ***62 01 (RHD-1 Req.):*** 62 10-80 (1 Req.): 63 10-80 (2 Req.): ***62 80 (RHD-1 Req.):*** 64-65 10-80 (3 Req.)	4.152	AR	47 272	
CLIP ..... 61 Thru 63 01 (OHV-LCV-4 Req.): 62-63 01 (LHD-LHE-3 Req.): 61 07 (3 Req.): 60-61 10-20-80 (3 Req.): 62 15-16 (LHD-4 Req.): 62 18 (LHD-3 Req.): ***62 10 (RHD-3 Req.):*** 62 80 (3 Req.)	8.101	AR	312 6110	
CLIP ..... ***62-63 01 (RHD):*** 60-61 10-20-80	.....	1	15 708	
SCREW, Tapping ..... ***62-63 01 (RHD)*** ..... ***(Replaces 800 0105)***	17.671	1	400 1042	
SCREW, Tapping ..... 60-61 10-20-80 ..... ***(Replaces 800 0091)***	17.671	1	400 1031	
Gasoline And Vacuum Tube				
CLIP 60 10	3.048	1	313 7319	
Extension Tube				
CLIP ..... 60 20 (2 Req.): 60 80 (1 Req.)	.....	AR	15 708	
SCREW, Tapping 60 20	17.671	2	800 0093	NA
BOLT, Hexagon 60 80	17.038	1	G180020	NA
WASHER, Plain 60 80	17.814	1	G120392	NA
WASHER, Lock 60 80	17.820	1	G120380	NA
NUT, Hexagon 60 80	17.406	1	G120375	
Tube To Front Crossmember				
CLIP 61 20	.....	1	15 708	
SCREW 61 20	17.671	1	800 0093	NA
Tube To Rear Crossmember				
CLIP ..... 65 01 (LCV)	.....	1	47 272	
Tube To Gas Tank Support				
CLIP ..... 65 01 (LCV)	.....	1	47 272	

Copyright 1963 American Motors Corp.

GROUP NO. — DESCRIPTION — YEAR and MODEL	PRIMARY GROUP NO.	PER CAR	PART NO.	CODE
Tube To Front Suspension Bracket				
CLIP 61 80	.....	1	15 708	
BOLT, Hexagon 61 80	17.038	1	G180020	NA
WASHER, Lock 61 80	17.820	1	G120380	NA
NUT, Hexagon 61 80	17.406	1	G120375	
Sending Unit And Outlet Tube				
CLIP ..... 63 Thru 65 10-80 (L3S)	4.152	1	47 272	
Tube To Wheelhouse				
CLIP 62-63 80	4.152	2	47 272	
Tube To Rear Sill				
CLIP ..... 63 Thru 65 10-80 (LHD-L3S)	.....	1	310 7665	
Tube To Front Support Bracket				
CLIP ..... 65 10 (Six-WVW-1 Req.): 65 10 (V8-2 Req.): 65 80 (V8-1 Req.): 65 10 (Six-WEW-2 Req.): 65 80 (OHV-232-WEW-1 Req.)	.....	AR	47 272	
HOSE, Gasoline (Bulk-Order Per Foot)				
60 Thru 65 01-10-20-80	.....	AR	320 2187	
ATTACHING PARTS				
Hose To Floor Pan				
CLIP 62 10-80 (W3S)	3.210	1	312 3849	
SCREW, Tapping ..... 62 10-80 (W3S) ..... ***(Replaces 800 0091)***	17.671	1	400 1031	
UNION, Extension Tube				
60-61 20-80	17.796	1	G137414	
CLAMP, Gasoline Hose				
60 Thru 65 01-10-20-80	.....	AR	315 5854	
4.174 TUBE, Fuel Pump To Carburetor				
60 Thru 62 01 (LHD-LHE)	.....	1	315 5519	
61-62 01 (RHD) ..... ***(Use 316 5980)***	2.062	1	316 1497	#
60 Thru 62 01 (OHV): ***60 10 (RHD-LDT):*** 61-62 10 (LHD-LDT-WST) (LHD-LDT-WOD) ..... ***(Replaces 315 9859, 316 1045)***	.....	1	316 2963	
63 01 (LHD-LHE)	.....	1	316 7740	
63 01 (OHV-WDT): ***60 10 (RHD-WDT):*** 61 Thru 63 10 (OHV-WDT-Six) ..... ***(Replaces 316 1046)***	.....	1	316 2967	
63 01 (OHV-LDT): 63 10 (OHV-WST-LDT-196)(OHV-WOD-LDT-196)	.....	1	316 7499	
63 01 (RHD)	.....	1	316 7958	
64-65 01 (LHD-LHE)	.....	1	317 1859	
64 01 (OHV-LDT)	.....	1	317 3496	
65 01 (OHV-196-LDT)	.....	1	317 5825	
64-65 01 (OHV-196-WDT): 64 10 (OHV-196-WDT) ..... ***(Replaces 317 3464)***	.....	1	317 5828	
60 10 (LHD-LDT-Note 4.174-1)	.....	1	315 8423	
60 10 (LHD-LDT-Note 4.174-2)	.....	1	315 8698	
60 10 (LHD-WDT-Note 4.174-1)	.....	1	315 8424	
60 10 (LHD-WDT-Note 4.174-2)	.....	1	315 8699	
60 10 (RHD-LDT) ..... ***(Discontinued)***	.....	1	315 9438	#
60 10 (RHD-WDT)	.....	1	315 9521	
61 10 (LDT-WAT)	.....	1	316 1044	
61-62 10 (RHD-LDT-WST)(RHD-LDT-WOD)	.....	1	316 2288	
62-63 10 (LDT-WAT): ***162 10 (CAN-LHD-LDT): 163 10 (CAN)***	.....	1	316 2965	

NOTE 4.174-1: Used with Fuel Pump 315 8342 (Carter MPF-2988S).
NOTE 4.174-2: Used with Fuel Pump 315 8546 (Carter MPF-3025S).
NOTE 4.174-3: Used prior to Engine Code No. 608L04.
NOTE 4.174-4: Used beginning with Engine Code No. 608L04.

Copyright 1963 American Motors Corp.

GROUP NO. — DESCRIPTION — YEAR and MODEL	PRIMARY GROUP NO.	PER CAR	PART NO.	CODE
65 01 (OHV-199-WEW): ***65 01 (RHD-OHV-199):*** 64 10 (OHV-232): 65 10 (Six-WEW-LDT): 65 10 (OHV-232-LDT-WVW-Note 4.174-3)	.....	1	317 4330	
64 10 (OHV-LDT-196): ***165 01 (Can-OHV-196)*** ***(Replaces 317 2842)***	.....	1	317 5824	
65 01-10-80 (OHV-232-WVW-WDT)	.....	1	317 6995	
65 01-10 (OHV-199-LDT-WVW): 65 10 (OHV-232-LDT-WVW-Note 4.174-4): ***165 80 (Can-Six)***	.....	1	317 7170	
65 01-10-80 (OHV-232-WEW-WDT)	.....	1	317 8759	
60 Thru 62 20-80	.....	1	315 7938	
63 Thru 65 10-80 (V8)	.....	1	316 7962	
TUBE, Manifold To Fuel Pump (Vacuum)				
60 20-80	22.050	1	315 8204	
CLIP, Fuel Pump To Carburetor Tube				
61 Thru 64 01 (OHV-2 Req.): 61 Thru 64 10 (OHV-196-2 Req.): 64 10 (OHV-232-3 Req.)	3.048	AR	313 7319	
61 Thru 63 10-20-80 (V8)	3.312	1	79 394	
4.178 PIPE, Exhaust				
60 01 (LHE)	.....	1	315 4575	
60 01 (OHV)	.....	1	315 9861	
61 01 (LHD-LHE-Note 4.178-1 Type 1)	.....	1	316 1303	
61 01 (LHD-LHE-Note 4.178-1 Type 2): 62-63 01 (LHD-LHE)	.....	1	316 3291	
61 01 (OHV-LCV-Note 4.178-1 Type 1)	.....	1	316 1304	
61 01 (OHV-LCV-Note 4.178-1 Type 2): 62-63 01 (OHV-LCV)	.....	1	316 3502	
61 01 (RHD-LHE)	.....	1	316 1307	
62-63 01 (RHD)	.....	1	316 3992	
60-61 10...(Incl. Clamp) ***(Replaces 315 6250)***	.....	1	316 1308	
62 10	.....	1	316 3112	
(Left) 60-61 20 (LDE)...(Incl. Clamp) ***(Replaces 315 6275)***	.....	1	316 1309	
(Left) 60-61 20 (WDE)...(Incl. Clamp) ***(Replaces 315 6106)***	.....	1	316 1312	
(Left) 60-61 80 (LDE)...(Incl. Clamp) ***(Replaces 315 6255)***	.....	1	316 1310	
(Left) 60-61 80 (LHD-WDE)...(Incl. Clamp) ***(Replaces 315 6108)***	.....	1	316 1314	
(Left) ***60-61 80 (RHD-WDE)***...(Incl. Clamp) ***(Replaces 315 6649)***	.....	1	316 1316	
(Left) 62 80 (LDE)...(Incl. Clamp)	.....	1	316 3113	
(Left) 62 80 (WDE)	.....	1	316 3047	
(Left-Front) 63-64 10-80 (V8-L3S): 65 10-80 (V8-L3S-Note 4.178-4)...(Incl. Clamp)	.....	1	316 6784	
(Left-Front) 63-64 18-88 (V8-W3S)	.....	1	316 6942	
(Right-Front) 63-64 10-80 (V8-L3S): 65 10-80 (V8-L3S-Note 4.178-4)...(Incl. Clamp)	.....	1	316 6785	
(Right-Front) 63-64 18-88 (V8-W3S)...(Incl. Clamp)	.....	1	316 6941	

NOTE 4.178-1: Two Types of Exhaust System were used on the 61 01 (LHD-LHE), 61 01 (OHV-LCV) and 61 07. They can be identified as follows:
Type 1: Overall length of Muffler on 61 01 (LHD-LHE) is 34-1/4". On 61 01 (OHV) is 28-3/4".
Type 2: Overall length of Muffler on 61 01 (LHD-LHE) is 32-1/4". On 61 01 (OHV-LCV) is 26-3/4". On 61 07 is 27-1/2".

NOTE 4.178-2: Two Types of Exhaust Pipes (Rear) were used on the 64 01 Series. They can be identified as follows:
Type 1: Bracket is welded to left side of Pipe.
Type 2: Bracket is welded to right side of Pipe.

NOTE 4.178-3: Two Types of Exhaust Systems were used on the 64 10-80 Series. They can be identified as follows:
Type 1: Exhaust Pipes and Tailpipes are attached to the Muffler by Clamp Assemblies with a 5/16-18 Thread.
Type 2: Exhaust Pipes and Tailpipes are attached to the Muffler by Clamp Assemblies with a 3/8-16 Thread.

NOTE 4.178-4: Used prior to Car Sequence No. W004649 and used beginning with Car Sequence No. W105818.

NOTE 4.178-5: Used beginning with Car Sequence No. W004649 and used prior to Car Sequence No. W105818.

Copyright 1963 American Motors Corp.

GROUP NO. — DESCRIPTION — YEAR and MODEL	PRIMARY GROUP NO.	PER CAR	PART NO.	CODE
(Right) 60-61 20-80 (LDE)	.....	1	315 6256	
(Right) 60-61 20 (WDE)...(Incl. Clamp).....*(Replaces 315 6107)*	.....	1	316 1313	
(Right) ***60-61 80 (RHD-WDE)*** .....***(Replaces 316 1317)***	.....	1	315 6650	
(Right) 60-61 80 (LHD-WDE)...(Incl. Clamp).....***(Replaces 315 6109)***	.....	1	316 1315	
(Right) 62 80 (LHD-WDE)...(Incl. Clamp)	.....	1	316 3048	
(Right) ***62 80 (RHD-WDE)***...(Incl. Clamp)	.....	1	316 3579	
(Right) 62 80 (LHD-LDE)	.....	1	316 3114	
(Right) ***62 80 (RHD-LDE)***	.....	1	316 3578	
(Front) 61 Thru 63 07	.....	1	316 0674	
(Front) 64-65 01 (LHE)	.....	1	317 1400	
(Front) 64 01 (OHV)...(Incl. Bracket)	.....	1	317 0378	
(Front) 65 01 (OHV-196)	.....	1	317 5868	
(Front) 65 01 (OHV-199)	.....	1	317 7390	
(Front) 65 01 (OHV-232)	.....	1	317 6931	
(Front) 64 10 (OHV-232): 65 10-80 (Six)	.....	1	317 5840	
(Front) 63-64 10 (OHV-L3S-196)	.....	1	316 6786	
(Front) 63-64 18 (W3S-OHV-196)	.....	1	316 8096	
(Front) 65 10-80 (V8-L3S-Note 4.178-5)	.....	1	317 5754	
(Front) 65 10-80 (V8-W3S)	.....	1	317 5982	
(Rear) 61 07 (Note 4.178-1 Type 1)	.....	1	316 1305	
(Rear) 61 07 (Note 4.178-1 Type 2): 62-63 07	.....	1	316 3576	
(Rear) 64 01 (Note 4.178-2 Type 1)...(Incl. Bracket)	.....	1	317 0447	
(Rear) 64 01 (Note 4.178-2 Type 2)...(Incl. Bracket).....***(Use 317 3185)***	.....	1	317 2209	#
(Rear) 65 01 (LHE)(OHV-196)(OHV-199)	.....	1	317 5665	
(Rear) 65 01 (OHV-232)	.....	1	317 6976	
(Rear) 63-64 10 (OHV-196-L3S-Note 4.178-3 Type 1) .....***(Use 317 3173)***	.....	1	316 7013	
(Rear) 64 10 (OHV-196-L3S-Note 4.178-3 Type 2)	.....	1	317 3173	
(Rear) 64 10 (OHV-232-L3S)	.....	1	317 3453	
(Rear) 63-64 18 (OHV-196-W3S).....***(Replaces 316 7432, 317 1065)***	.....	1	317 3174	
(Rear) 64 18 (OHV-232-W3S)	.....	1	317 3692	
(Rear) 63-64 10-80 (V8-L3S)...(Incl. Bracket)	.....	1	316 7014	
(Rear) 64-65 18-88 (V8-W3S)	.....	1	317 1066	
(Rear) 63 88 (W3S)...(Incl. Bracket)	.....	1	316 7158	
(Rear) 65 10-80 (Six-L3S)	.....	1	317 5860	4486008 19/10
(Rear) 65 10-80 (Six-W3S)	.....	1	317 6765	
(Rear) 65 10-80 (V8-L3S)	.....	1	317 5601	
(Intermediate) 63-64 18 (W3S-OHV-196)	.....	1	316 8095	
(Intermediate) 64 18 (OHV-232-W3S): 65 18-88 (Six-W3S)	.....	1	317 4201	
ATTACHING PARTS				
Left Pipe To Manifold				
STUD..... 60 Thru 64 10-20-80 (V8)	.....	2	315 7615	
WASHER, Lock..... 60 Thru 64 10-20-80 (V8)	17.820	2	G103328	NA
NUT, Hexagon..... 60 Thru 64 10-20-80 (V8)	.....	2	314 9891	
Right Pipe To Manifold				
STUD..... 60-61 20-80 (WDE)	.....	2	315 7616	
WASHER, Lock..... 60-61 20-80 (WDE)	17.820	2	G103328	NA
NUT, Hexagon..... 60-61 20-80 (WDE)	.....	2	314 9891	
Front Pipe To Manifold				
STUD (Left Side)..... 65 10-80 (V8)	.....	2	315 7615	
STUD (Right Side)..... 65 10-80 (V8)	.....	2	315 7616	
WASHER, Lock..... 65 10-80 (V8)	17.820	4	G103328	NA
NUT, Hexagon..... 65 10-80 (V8)	.....	4	314 9891	
CLAMP, Right Exhaust Pipe To Manifold				
60 Thru 62 20-80 (LDE-1 Req.): 62 80 (WDE-2 Req.): 63-64 10-80 (V8-1 Req.)	.....	AR	315 7613	

Copyright 1963 American Motors Corp.

GROUP NO. — DESCRIPTION — YEAR and MODEL	PRIMARY GROUP NO.	PER CAR	PART NO.	CODE
ATTACHING PARTS				
Clamp To Manifold				
STUD ..... 60 Thru 62 20-80 (LDE-2 Req.): 62 80 (WDE-4 Req.): 63-64 10-80 (V8-2 Req.)	.....	AR	315 7616	
WASHER, Lock ..... 60 Thru 62 20-80 (LDE-2 Req.): 62 80 (WDE-4				
NUT, Hexagon ..... 60 Thru 62 20-80 (LDE-2 Req.): 62 80 (WDE-4 Req.): 63-64 10-80 (V8-2 Req.)	.....	AR	314 9891	
CLAMP ASSEMBLY, Right Exhaust Pipe To Left Exhaust Pipe				
60 Thru 62 20-80 (LDE)	4.230	1	313 1516	
63-64 10-80 (V8): 64 10 (OHV-W3S-196): 65 10-80 (V8-Note 4. 178-4)	.....	1	317 0598	
ATTACHING PARTS				
Clamp To Pipe				
WASHER, Plain ..... 63-64 10-80 (V8): 64 10 (OHV-W3S-196)	17.814	2	G120393	NA
WASHER, Lock ..... 60 Thru 62 20-80 (LDE): 63-64 10-80 (V8): 64 10 (OHV-W3S-196): 65 10-80 (V8-L3S-Note 4. 178-4)	17.820	2	G120214	NA
NUT, Hexagon ..... 60 Thru 62 20-80 (LDE): 63-64 10-80 (V8): 64 10 (OHV-W3S-196): 65 10-80 (V8-L3S-Note 4. 178-4)	17.406	2	G120376	NA
CLAMP ASSEMBLY, Front Exhaust Pipe To Rear Exhaust Pipe				
61 Thru 63 07: 63 10 (L3S-OHV-Six) ..... ***(Use 316 9263)(Replaces 102211)***	4.230	1	316 3984	
64 01	.....	1	316 3983	
65 01 (LHE)(OHV-196)(OHV-199)	.....	1	317 7362	
65 01 (OHV-232): 64 10 (OHV-Six): 65 10-80 (Six)	.....	1	313 1516	
63 Thru 65 10-80 (V8) ..... ***(Replaces 316 6895, 316 9262)***	.....	1	314 3124	#
ATTACHING PARTS				
Clamp To Pipe				
WASHER, Plain 63 07-80: 63 10 (OHV-Six-L3S)	17.814	2	G120393	NA
WASHER, Lock 61-62 07: 64-65 01-10-80	17.820	2	G120214	NA
NUT, Hexagon ..... 61 Thru 63 07: 63 10 (L3S-OHV-Six): 64 01-10 (OHV-Six-5/16-18): 64-65 10-80 (V8): 65 01	17.406	2	G120376	NA
NUT, Hexagon ..... 63 10-80 (V8): 64 01 (3/8-16)	17.406	2	G120377	NA
CLAMP ASSEMBLY, Front Exhaust Pipe To Intermediate Exhaust Pipe				
63 18 (OHV-Six-W3S) ..... ***(Use 316 9263)***	4.230	1	316 3984	
64 18 (OHV-Six-W3S): 65 10-80 (Six-W3S)	.....	1	317 0598	
ATTACHING PARTS				
Clamp To Pipe				
WASHER, Plain 63 18 (OHV-Six-W3S)	17.814	2	G120393	NA
WASHER, Lock ..... 64 18 (OHV-Six-W3S): 65 10-80 (Six-W3S)	17.820	2	G120214	NA
NUT, Hexagon ..... 63-64 18 (OHV-Six-W3S): 65 10-80 (Six-W3S)	17.406	2	G120376	NA
CLAMP ASSEMBLY, Intermediate Exhaust Pipe To Rear Exhaust Pipes				
63 18 (OHV-Six-W3S) ..... ***(Use 316 9263)***	4.230	1	316 3984	
64 18 (OHV-Six-W3S): 65 10-80 (Six-W3S)	4.230	1	313 1516	
ATTACHING PARTS				
Clamp To Pipe				
WASHER, Plain 63 18 (OHV-Six-W3S)	17.814	2	G120393	NA
WASHER, Lock ..... 64 18 (OHV-Six-W3S): 65 10-80 (Six-W3S)	17.820	2	G120214	NA
NUT, Hexagon ..... 63-64 18 (OHV-Six-W3S): 65 10-80 (Six-W3S)	17.406	2	G120376	NA
INSERT, Exhaust Pipe				
63-64 01-10 (OHV)	.....	1	320 5629	

Copyright 1963 American Motors Corp.

GROUP NO. — DESCRIPTION — YEAR and MODEL		PRIMARY GROUP NO.	PER CAR	PART NO.	CODE
4.186	**CLAMP, Exhaust Pipe To Manifold**				
60 Thru 65 01 (LHE)		.....	3	313 8796	
61 Thru 64 01 (OHV): 61 Thru 64 10 (OHV-196)		.....	1	314 5127	
64 10 (OHV-232): 65 10-80 (Six)		.....	1	317 5841	
	ATTACHING PARTS Clamp To Manifold				
GLAND	61 Thru 65 10-20-80 (V8)	4.178	2	315 5098	
STUD	60 Thru 64 01 (LHE-6 Req.): 65 01 (LHE-2-3/16" Long-2 Req.)	4.190	AR	313 5885	
STUD	65 01 (LHE-1-31/32" Long)	.....	4	317 9159	
STUD	60 Thru 64 01 (OHV-3 Req.): 60 Thru 64 10 (OHV-196-3 Req.): 64 10 (OHV-232-2 Req.): 65 01 (OHV-2 Req.): 65 10-80 (Six-2 Req.)	.....	AR	315 6257	
WASHER, Plain	60 Thru 65 01 (LHE) ***(Replaces 800 0162)***	17.814	6	400 1101	
WASHER, Plain	60 01-10 (OHV) ***(Replaces 800 0446)***	17.814	2	400 1166	
WASHER, Lock	60 Thru 64 01 (OHV-3 Req.): 60 Thru 64 10 (OHV-196-3 Req.): 64 10 (OHV-232-2 Req.): 65 01 (OHV-2 Req.): 65 10-80 (Six-2 Req.)	17.820	AR	G103321	NA
NUT, Hexagon	60 Thru 65 01 (LHE)	17.406	6	G103026	NA
NUT, Hexagon	60 Thru 64 01 (OHV-3 Req.): 60 Thru 64 10 (OHV-196-3 Req.): 64 10 (OHV-232-2 Req.): 65 01 (OHV-2 Req.): 65 10-80 (Six-2 Req.)	1.067	AR	314 9892	
	SEAL, Exhaust Pipe To Manifold				
64 10 (OHV-232): 65 01 (OHV): 65 10-80 (Six)		.....	1	317 5842	
4.195	**BRACE, Exhaust Pipe**				
60 01 (OHV)		.....	1	315 9870	
60 Thru 63 01 (LHE-WAT): 62-63 01 (LHE-WST-WES)(LHE-WOD-WES)		.....	1	315 4557	
61 Thru 63 01 (LHD-LHE-LES-WST-5-3/8" Long) (LHD-LHE-LES-WOD-5-3/8" Long)		.....	1	316 2938	
64-65 01 (LHE)		.....	1	317 0837	
62-63 01 (RHD)		.....	1	316 4456	
63 10 (OHV-196-W3S-Note 4.195-1 Type 2): 64 10 (Six-W3S): 65 18-88 (Six-W3S)		.....	1	317 2826	
63 10 (OHV-196-Note 4.195-1 Type 1): 64-65 10-80 (Six-L3S)	***(Replaces 316 6896)***	.....	1	317 3482	#
(Lower) 60-61 01 (LHE-WST-8-5/8" Long)(LHE-WOD-8-5/8" Long)		.....	1	315 4637	
(Upper) 60-61 01 (LHE-WST-10-1/4" Long)(LHE-WOD-10-1/4" Long)		.....	1	315 4636	
	CLAMP ASSEMBLY, Exhaust Pipe To Brace				
60 01: 61 Thru 63 01 (LHE): ***62-63 01 (RHD):*** 64 10 (OHV-Six-L3S): 65 10-80 (Six-L3S)		4.205	1	313 0326	
64-65 01 (LHE)		.....	1	317 0838	
63 10 (OHV-196-Note 4.195-1 Type 1)		4.230	1	313 0310	
	ATTACHING PARTS Clamp To Brace				
BOLT, Hexagon	64-65 01 (LHE)	17.038	1	G181614	NA
WASHER, Plain	60 01: 61 Thru 63 01 (LHE): ***62-63 01 (RHD)***	17.814	2	G120393	NA

NOTE 4.195-1: **Two Types of Exhaust Pipe Braces were used on the 63 10 (W3S) series. They can be identified as follows:**
Type 1: Brace is not Mounted to Torque Tube Trunnion.
Type 2: Brace is Mounted to Torque Tube Trunnion.

Copyright 1963 American Motors Corp.

GROUP NO. — DESCRIPTION — YEAR and MODEL	PRIMARY GROUP NO.	PER CAR	PART NO.	CODE	
WASHER, Plain..... 64-65 01 (LHE): 64 18 (OHV-196-W3S) .....*(Replaces 800 0155)*	17.814	2	400 1095		4.195cb 4.195cb
WASHER, Lock..... 60 01: 61 Thru 65 01 (LHE): ***62-63 01 (RHD):***					***4.195***
63-64 10 (OHV-Six-L3S): 65 10-80 (Six-L3S)....	17.820	2	G120214	NA	4.195
NUT, Hexagon..... 60 01: 61 Thru 63 01 (LHE): ***62-63 01 (RHD):***					***4.195cb***
63-64 10 (OHV-Six-L3S): 65 10-80 (Six-L3S)....	17.406	2	G120376	NA	4.195cb
NUT, Hexagon..... 64-65 01 (LHE)	17.406	1	G120368		4.195cb
U-BOLT, Exhaust Pipe To Brace					**4.195**
63 10 (OHV-196-W3S-Note 4.195-1 Type 2): 64 18 (OHV-Six-W3S): 65 10-80 (Six-W3S)	.....	1	318 2127		4.195
ATTACHING PARTS					**4.195**
U-Bolt To Brace					**4.195**
WASHER, Plain..... 64 10 (OHV-Six-W3S): 65 10-80 (Six-W3S).....	17.814	1	400 1095		4.195
WASHER, Lock..... 64 10 (OHV-Six-W3S): 65 10-80 (Six-W3S).....	17.820	2	G120214	NA	4.195ub
NUT, Hexagon..... 64 10 (OHV-Six-W3S): 65 10-80 (Six-W3S).....	17.406	2	G120376	NA	4.195ub
ROD, Exhaust Pipe Support (To Trunnion)					**4.195**
63 10 (OHV-196-W3S-Note 4.195-1 Type 2): 64 18 (Six-W3S): 65 18-88 (Six-W3S)	.....	1	317 2827		4.195rs 4.195rs
STRAP KIT, Exhaust Pipe					**4.195**
60 Thru 62 20-80 (LDE-WAT)	.....	1	320 2080		4.195sk
ATTACHING PARTS					**4.195**
Strap To Pipe					**4.195SP**
BOLT, Hexagon ..... 60 Thru 62 20-80.....	17.038	1	G181610	NA	4.195sp
WASHER, Plain..... 60 Thru 62 20-80.....*(Replaces 800 0153)*	17.814	1	400 1093		4.195sp
WASHER, Lock..... 60 Thru 62 20-80.....	17.820	1	G120214	NA	4.195sp
NUT, Hexagon..... 60 Thru 62 20-80.....	17.406	1	G120368		4.195sp
HANGER, Exhaust Pipe Support					**4.195**
64-65 01 (OHV)	.....	1	317 1429		4.195
ATTACHING PARTS					**4.195**
Hanger To Pipe Bracket					**4.195**
SPACER ..... 64 01 (OHV-WES)	.....	1	317 1428		4.195hp
BOLT, Hexagon ..... 64-65 01 (OHV)	17.038	2	G181596	NA	
WASHER, Lock..... 64-65 01 (OHV)	17.820	2	G120214	NA	
WASHER, Plain..... 65 01 (OHV)	17.814	2	G120393	NA	4.195
NUT, Hexagon..... 64-65 01 (OHV)	17.406	2	G120368		
4.200 SUPPORT, Exhaust Pipe Rear					
64-65 01...(Incl. Insulator).....*(Replaces 317 2212)*	.....	1	317 4573		
63 10-80 (L3S)..... *(Use 317 0892)*	.....	1	316 8891	#	
63 10-80 (W3S-Note 4.200-1 Type 1) .....*(Replaces 316 9134)*	.....	1	317 0891		4.200su
64 10-80 (L3S).....	.....	1	317 0892		4.200su
ATTACHING PARTS					**4.200**
Support Insulator To Pipe					**4.195**
PLATE 64-65 01	.....	1	317 0879		4.200sp
BOLT, Hexagon 64-65 01	17.038	2	G181608	NA	4.200
WASHER, Lock..... 64-65 01	17.820	2	G120214	NA	4.200sp
NUT, Hexagon..... 64-65 01	17.406	2	G120368		4.200sp

NOTE 4.200-1: Two Types of Exhaust Pipes Support (Rear) were used on the 63 10-80 (W3S) series. They can be identified as follows:
Type 1: Insulator is riveted to Body Bracket.
Type 2: Insulator is bolted to Body Bracket.

4.200-1
4.200-1
4.200-1
4.200-1

Copyright 1963 American Motors Corp.

GROUP NO. — DESCRIPTION — YEAR and MODEL	PRIMARY GROUP NO.	PER CAR	PART NO.	CODE
Support To Body Bracket				
SCREW, Tapping..... 63 10-80 (L3S).....	17.670	1	G172468	NA
SCREW, Tapping..... 65 01	17.670	2	G172470	NA
BOLT, Hexagon ..... 63 18-88 (W3S-1 Req.): 64 01 (2 Req.)	17.038	AR	G181595	NA
BOLT, Hexagon..... 63-64 10-80 (L3S-5/16" Dia.).....	17.038	2	G181593	NA
BOLT, Hexagon ..... 63 10-80 (L3S-1/4" Dia.)	17.038	2	G180018	NA
WASHER, Lock ..... 63 18-88 (W3S).....	17.820	1	G120214	NA
WASHER, Lock ..... 63-64 10-80 (L3S-5/16" I.D.): 64-65 01	17.820	2	G120214	NA
WASHER, Lock ..... 63 10-80 (L3S-1/4" I.D.).....	17.820	2	G120380	NA
NUT, Hexagon..... 63 18-88 (W3S)	17.406	1	G120368	
NUT, Hexagon..... 63 10-80 (L3S)	17.406	2	G120375	
Exhaust Pipe Bracket To Support				
WASHER, Hexagon ..... 63 10-80: 64 10-80 (L3S).....	17.406	2	G120368	
WASHER, Lock ..... 63 18-88 (W3S): 64 10-80 (L3S)	17.820	2	G120214	NA
WASHER, Lock ..... 63 10-80 (L3S).....	17.820	2	G103320	NA
BOLT, Hexagon ..... 63 18-88 (W3S).....	17.038	2	G181595	NA
BOLT, Hexagon..... 63-64 10-80 (L3S).....	17.038	2	G181608	NA
PLATE ..... 63 10 (OHV-196).....	.....	1	316 7892	
INSULATOR, Exhaust Pipe Support				
63 10-80 (W3S-Note 4.200-1 Type 2): 64 10-80 (W3S): 65 10-80	.....	1	317 0877	
ATTACHING PARTS				
Insulator To Pipe And Body Sill				
PLATE ..... 63 10-80 (W3S-Note 4.200-1 Type 2-2 Req.): 64 10-80 (W3S-2 Req.): 65 10-80 (L3S-3 Req.): 65 10-80 (W3S-2 Req.)	.....	AR	317 0879	
BOLT, Hexagon ..... 63 10-80 (W3S-Note 4.200-1 Type 2): 64-65 10-80 (W3S)	17.038	4	G181608	NA
BOLT, Hexagon ..... 65 10-80 (L3S)(To Pipe)	17.038	2	G181610	NA
SCREW, Tapping..... 65 10-80 (L3S)(To Reinforcement).....	17.670	2	G172470	NA
WASHER, Lock ..... 63 10-80 (W3S-Note 4.200-1 Type 2): 64 10-80 (W3S): 65 10-80.....	17.820	4	G120214	NA
NUT, Hexagon..... 63 10-80 (W3S-Note 4.200-1 Type 2): 64 10-80 (W3S): 65 10-80 (L3S-2 Req.): 65 10-80 (W3S-4 Req.).....	17.406	4	G120368	NA
4.205 CLAMP ASSEMBLY, Exhaust Pipe To Muffler				
60 Thru 64 01-10-20-80 (Special 1-7/8" Thru 2").....	4.230	1	320 3616	
60 Thru 64 01-10-20-80 (Special 2-1/8" Thru 2-1/4").....	4.230	1	320 3617	
60 Thru 63 01 (LHD-LHE).....	.....	1	313 0326	
60 01 (OHV-1 Req.): 60-61 10 (1 Req.): 60-61 20-80 (WDE-2 Req.) ..... ***(Use 316 9263)(Replaces 102211)***	.....	AR	316 3984	
61 Thru 63 01 (OHV-1 Req.) ***(RHD-1 Req.):*** 62 10 (1 Req.): 62 80 (WDE-2 Req.)	4.230	1	313 1516	
64 01	.....	1	316 3983	
65 01 (LHE)(OHV-196)(OHV-199)	.....	1	317 7362	
63-64 10 (OHV-Six) ..... ***(Replaces 317 3217)(Use 317 7363)***	.....	1	316 6897	
65 01 (OHV-232): 65 10-80 (Six)	.....	1	317 7363	
63-64 10-80 (V8).....	.....	1	317 4432	
65 10-80 (V8).....	.....	1	317 7364	
60 Thru 62 80 (LDE).....	.....	1	314 3124	
ATTACHING PARTS				
Clamp To Pipe				
WASHER, Plain 64 01: 63-64 10-80 (V8)	17.814	2	G120393	NA
WASHER, Lock ..... 64 10 (OHV-196-Note 4.178-3 Type 1).....	17.829	2	G120214	NA

Copyright 1963 American Motors Corp.

GROUP NO. — DESCRIPTION — YEAR and MODEL	PRIMARY GROUP NO.	PER CAR	PART NO.	CODE
WASHER, Lock ..... 64 10 (OHV-196-Note 4.178-3 Type 2): 64 10-80 (V8): 64 10 (OHV-232): 65 01-10-80	17.820	2	G120382	
WASHER, Lock ..... 60 Thru 63 01-10 (2 Req. -OHV-196): 60 Thru 62 20-80 (LDE-2 Req.): 60 Thru 62 20-80 (WDE-4 Req.)	17.820	AR	G120214	NA
NUT, Hexagon ..... 60 Thru 65 01-10 (2 Req. 5/16-18): 60 Thru 63 20-80 (LDE-2 Req.): 60 Thru 63 20-80 (WDE-4 Req.): 65 80	17.406	AR	G120376	NA
NUT, Hexagon ..... 64 10 (OHV-196-Note 4.178-3 Type 1)	17.406	2	G120376	NA
NUT, Hexagon ..... 64 10 (OHV-196-Note 4.178-3 Type 2): 64 10-80 (V8): 64 01 (3/8-16): 64 10 (OHV-232)	17.406	2	G120377	NA

4.210 MUFFLER, Ceramic Coated

60 01 (LHE): 61 01 (LHD-LHE-Note 4.178-1 Type 1)	.....	1	316 1291	
60 01 (OHV): 60 10	.....	1	316 0167	
61 01 (LHD-LHE-Note 4.178-1 Type 2): 62-63 01 (LHD-LHE) ..... ***(Replaces 316 3298)***	.....	1	316 7140	
61 01 (OHV-Note 4.178-1 Type 1) ***(RHD)*** ..... ***(Replaces 320 2799)***	.....	1	316 1292	
61 07 (Note 4.178-1 Type 2): 62-63 07 ..... ***(Replaces 316 3567)***	.....	1	316 7141	
61 01 (OHV-LCV-Note 4.178-1 Type 2): 62-63 01 (OHV-LCV) ***(RHD)***: 62 10 ..... ***(Replaces 316 3070)***	.....	1	316 7143	
64-65 05-06-09 (LHE): 64-65 05-06-09 (OHV-196)(OHV-199)	.....	1	317 3182	
65 05-06-09 (OHV-232) ..... ***(Replaces 317 8348)***	.....	1	317 8587	
64-65 08 (LHE): 64-65 07-08 (OHV-196)(OHV-199) ..... ***(Use 317 1698)***	.....	1	317 3183	
65 07-08 (OHV-232) ..... ***(Replaces 317 8349)***	.....	1	317 8586	
61 10	.....	1	316 0167	
63 10 (OHV-196): 64 10 (196-Note 4.178-3 Type 1) ..... ***(Use 317 8619)***	.....	1	316 7012	#
64 10 (196-Note 4.178-3 Type 2): 64 10 (OHV-232)	.....	1	317 3180	
63-64 10-80 (V8-Note 4.178-3 Type 1)	.....	1	316 7011	
64 10-80 (V8-Note 4.178-3 Type 2)	.....	1	317 3181	
65 10-80 (Six)	.....	1	317 8619	
65 10-80 (V8)	.....	1	317 8620	
60-61 20-80 (LDE)	.....	1	316 1293	
60-61 20-80 (WDE)	.....	2	316 1294	
62 80 (LDE) ..... ***(Replaces 316 3071)***	.....	1	316 7142	
62 80 (WDE) ..... ***(Replaces 316 3070)***	.....	2	316 7143	

MUFFLER, Not Ceramic Coated

60 01 (LHE): 61 01 (LHD-LHE-Note 4.178-1 Type 1) ..... ***(Replaces 315 6526)***	.....	1	315 6527	
60 01 (OHV): 60-61 10	.....	1	315 6251	
60-61 20-80 (LDE) ..... ***(Replaces 315 6219)***	.....	1	315 8504	
60-61 20-80 (WDE) ..... ***(Replaces 315 6528)***	.....	2	315 8650	

COVER KIT, Muffler Protective

61-62 01 (LHE): 61 10	.....	1	320 3736	
61 01 (OHV): 61-62 07: 61 20-80 (WDE) (7-3/4" Width)	.....	AR	320 3737	
60-61 20-80 (LDE)	.....	1	320 3738	
61-62 01 (OHV): 62 10: 62 80 (WDE) (9-3/4" Width)	.....	1	320 3769	

4.219 INSULATOR, Muffler Support

64-65 01	.....	1	317 2214	

ATTACHING PARTS
Insulator To Muffler And Body Bracket

PLATE	64-65 01	.....	2	317 2213	
SCREW, Tapping	64-65 01	17.671	4	G442751	NA

Copyright 1963 American Motors Corp.

GROUP NO. — DESCRIPTION — YEAR and MODEL	PRIMARY GROUP NO.	PER CAR	PART NO.	CODE
4.227 PIPE, Ceramic Coated Tail				
60 04 (LHE)	.....	1	320 2717	
60 04 (OHV)	.....	1	320 2719	
60 02-05-06 (LHE)	.....	1	320 2718	
60 02-05-06 (OHV)	.....	1	320 2720	
61 01 (LHD-LHE-Note 4.178-1 Type 1)	.....	1	316 1295	
61 01 (LHD-LHE-Note 4.178-1 Type 2): 62-63 01 (LHD-LHE)	.....	1	316 3307	
61 01 (OHV-LCV-Note 4.178-1 Type 1)	.....	1	316 1429	
61 01 (OHV-LCV-Note 4.178-1 Type 2): 62-63 01 (OHV-LCV): **62-63 01 (RHD)**	.....	1	316 3521	
61 07 (Note 4.178-1 Type 1)	.....	1	316 1297	
61 07 (Note 4.178-1 Type 2): 62-63 07	.....	1	316 3577	
64-65 08 (LHE): 64-65 07-08 (OHV-196)(OHV-199) ***(Replaces 317 3184)***	.....	1	317 2225	#
65 07-08 (OHV-232) ***(Replaces 317 8435)***	.....	1	317 7012	
62 01 (RHD)	.....	1	316 1296	
60 10: 61 15	.....	1	316 1248	
61 18	.....	1	316 2165	
62 15-16	.....	1	316 3106	
62 18	.....	1	316 3107	
63 15-16 (Six): 64 15-16-19 (OHV-196-Note 4.178-3 Type 1) ***(Replaces 317 1672)***	.....	1	316 7046	
63 18 (L3S-OHV-196) ***(Replaces 316 7443)***	.....	1	317 1674	#
63 18 (W3S-OHV-196): 64 18 (W3S-OHV-196-Note 4.178-3 Type 1) ***(Use 317 3171)(Replaces 317 1676)***	.....	1	316 7414	
64 15-16-19 (OHV-196-Note 4.178-3 Type 2): 64 15-16-19 (OHV-232)	.....	1	317 3169	
65 15-16-17-19-85-86-87-89 (Six)	.....	1	317 5907	
64 15-16-19-85-89 (V8) ***(Replaces 317 1673)***	.....	1	317 3170	
65 15-16-17-19-85-86-87-89 (V8)	.....	1	317 5453	
64 18 (L3S-Six) ***(Replaces 317 3488)***	.....	1	317 2416	
64 18 (OHV-196-W3S-Note 4.178-3 Type 2): 64 18 (OHV-232)	.....	1	317 3171	
65 18-88 (Six-L3S)	.....	1	317 5964	
65 18-88 (V8-L3S)	.....	1	317 5963	
65 18-88 (Six-W3S)	.....	1	317 5984	
65 18-88 (V8-W3S)	.....	1	317 5983	
64 18-88 (V8-L3S) ***(Replaces 317 3489)***	.....	1	317 2417	
63-64 18-88 (V8-W3S) ***(Replaces 316 7415, 317 1677)***	.....	1	317 3172	
60-61 25-85 (LDE)	.....	1	316 1299	
61 28-88 (LDE)	.....	1	316 2166	
62 85 (LDE)	.....	1	316 3108	
62 88 (LDE)	.....	1	316 3109	
63 15-16-85-86 (V8)	.....	1	316 7118	
63 18-88 (V8-L3S) ***(Use 317 1675)***	.....	1	316 7444	
(Left) 60-61 25-85 (WDE)	.....	1	316 1248	
(Left) 61 28-88 (WDE)	.....	1	316 2165	
(Left) 62 85 (WDE)	.....	1	316 3106	
(Left) 62 88 (WDE)	.....	1	316 3107	
(Right) 60-61 25-85 (LHD-WDE)	.....	1	316 1300	
(Right) 61 28-88 (LHD-WDE)	.....	1	316 2167	
(Right) 62 85 (WDE)	.....	1	316 3110	
(Right) 62 88 (WDE)	.....	1	316 3111	
PIPE, Not Ceramic Coated Tail				
60 04 (LHE)	.....	1	315 8200	
60 04 (OHV)	.....	1	315 9849	
60 02-05-06 (LHE)	.....	1	315 8201	
60 02-05-06 (OHV)	.....	1	315 9847	
61 01 (LHD-LHE-Note 4.178-1 Type 1)	.....	1	320 2721	
61 01 (OHV-LCV-Note 4.178-1 Type 1)	.....	1	320 2723	
61 07 (Note 4.178-1 Type 1)	.....	1	320 2722	

Copyright 1963 American Motors Corp.

GROUP NO. — DESCRIPTION — YEAR and MODEL	PRIMARY GROUP NO.	PER CAR	PART NO.	CODE
60 10: 61 15	.....	1	315 8218	
61 18	.....	1	320 2811	
60 20-80 (LDE): 61 25-85 (LDE)	.....	1	315 8219	
61 28-88 (LDE)	.....	1	320 2812	
(Left) 60 20-80 (WDE): 61 25-85 (WDE)	.....	1	315 8218	
(Left) 61 28-88 (WDE)	.....	1	320 2811	
(Right) 60 20-80 (WDE): 61 25-85 (LHD-WDE) ***(Replaces 315 8646)***	.....	1	315 8257	
(Right) 61 28-88 (LHD-WDE)	.....	1	320 2813	

4.230 CLAMP ASSEMBLY, Muffler To Tail Pipe

60 Thru 65 01-10-20-80 (Special 1-7/8" Thru 2")	.....	1	320 3616	
60 Thru 65 01-10-20-80 (Special 2-1/8" Thru 2-1/4")	.....	1	320 3617	
60 01 (OHV): 61 01 (OHV-Note 4.178-1) ***(RHD-LHE):*** 60-61 10	.....	1	313 0326	
60 Thru 63 01 (LHD-LHE): 64 07-08 (5/16-18) ***(Replaces 313 0327)***	.....	1	316 3982	
64 07-08 (3/18-16)	.....	1	317 3278	
65 07-08 (LHE)(OHV-196)(OHV-199)	.....	1	317 7361	
61 01 (OHV-Note 4.178-1 Type 2): 62-63 01 (OHV) ***(RHD):*** 62 Thru 64 10 (OHV-196) ***(Replaces 317 3216)***	.....	1	316 3983	
60-61 20-80 (WDE)	.....	2	313 0326	
60 Thru 62 20-80 (LDE): 62-63 10-80 (V8) ***(Use 316 9263)(Replaces 102211)***	.....	1	316 3984	
62 80 (WDE)	.....	2	316 3983	
64 10-80 (V8)	.....	1	317 4432	
65 07-08 (OHV-232): 65 10-80 (Six)	.....	1	317 7362	
65 10-80 (V8)	.....	1	317 7364	

ATTACHING PARTS
Clamp To Pipe

WASHER, Plain	62-63 01-10: 62 80 (LDE): 63 80: 64 07-08: 64 10 (OHV-196-Note 4.178-3 Type 1)	17.814	2	G120393	NA
WASHER, Lock	60-61 01-10: 60-61 20-80 (LDE)	17.820	2	G120214	NA
WASHER, Lock	64 10 (OHV-196-Note 4.178-3 Type 2): 64 10-80 (V8): 64 10 (OHV-232): 65 01-10-80	17.820	2	G120382	NA
NUT, Hexagon	60-61 01-10: 60-61 20-80 (LDE)	17.406	2	G120368	
NUT, Hexagon	62-63 01-10 (2 Req.): 62-63 80 (LDE-2 Req.): 62-63 80 (WDE-4 Req.): 64 07-08 (5/15-18): 64 10 (OHV-2 Req.-196-Note 4.178-3 Type 1): 65 01-10-80	17.406	AR	G120376	NA
NUT, Hexagon	64 10 (OHV-196-Note 4.178-3 Type 2): 64 10-80 (V8): 64 07-08 (3/8-16): 64 10 (OHV-232)	17.406	2	G120377	NA

4.234 SUPPORT, Tail Pipe

(Front) 61 Thru 63 07...(Incl. Insulator)	.....	1	316 0673	#
(Front) 60 01	.....	1	315 4535	
(Front-Left) 60 10-20-80...(Incl. Vibration Damper)	.....	1	315 6675	
(Front-Left) 61 10: 61 20-80 (LDE)	.....	1	315 6565	
(Front-Left) 62 10-80	.....	1	316 4792	
(Front-Left) 62 10-80...(Incl. Support, Hanger And Insulator)	.....	1	316 4928	
(Front-Right) 60 20-80 (WDE)	.....	1	315 6676	
(Front-Right) 61 20-80 (WDE)	.....	1	315 6566	
(Front-Right) 62 10-80 (WDE)	.....	1	316 4793	
(Front-Right) 62 10-80 (WDE)...(Incl. Support, Hanger And Insulator)	.....	1	316 4929	
(Rear) 60 Thru 63 01	.....	1	315 6588	
(Rear) 60 Thru 62 10 (1 Req.): 60 Thru 62 20-80 (LDE-1 Req.): 60 Thru 62 20-80 (WDE-2 Req.)	.....	AR	315 8440	

Copyright 1963 American Motors Corp.

GROUP NO. — DESCRIPTION — YEAR and MODEL		PRIMARY GROUP NO.	PER CAR	PART NO.	CODE
ATTACHING PARTS					
Support To Floor Pan					
BOLT, Hexagon	60 01	17.038	1	G181596	NA
BOLT, Hexagon	60 10 (1 Req.): 60 20-80 (LDE-1 Req.)(WDE-2 Req.)	17.038	AR	G181595	NA
WASHER, Plain	60 01 ***(Replaces 800 0155)***	17.814	2	400 1095	
WASHER, Lock	60 01-10 (1 Req.): 60 20-80 (LDE-1 Req.): 60 20-80 (WDE-2 Req.)	17.820	AR	G120214	NA
Front Support To Pipe (For Ceramic Coated Pipes)					
BOLT, Square	61 07	17.044	1	G149535	NA
BOLT, Hexagon	61 Thru 63 01 (LCV)	17.038	1	G181596	NA
BOLT, Hexagon	62-63 07	17.038	1	G181595	NA
BOLT, Hexagon	61-62 10 (2 Req.): 61-62 20-80 (LDE-2 Req.): 61-62 20-80 (WDE-4 Req.)	17.038	AR	G181595	NA
WASHER, Plain	61 Thru 63 01 (LCV)	.....	1	314 2090	
WASHER, Lock	61 Thru 63 01 (1 Req.): 61-62 10 (2 Req.): 61-62 20-80 (LDE-2 Req.): 61-62 20-80 (WDE-4 Req.)	17.820	AR	G120214	NA
NUT, Hexagon	61 Thru 63 01 (1 Req.): 61-62 10 (2 Req.): 61-62 20-80 (LDE-2 Req.): 61-62 20-80 (WDE-4 Req.)	17.406	AR	G120368	
Front Support To Pipe (For Non Ceramic Coated Pipes)					
BOLT, Square	61 07	17.044	1	G149535	NA
WASHER, Lock	61 07	17.820	1	G120214	NA
NUT, Hexagon	61 07	17.406	1	G120368	
CLAMP ASSEMBLY, Front Support To Tail Pipe					
60 01 (LHE)		4.230	1	313 0327	
60 01 (OHV-1 Req.): 60 10 (1 Req.): 60 20-80 (WDE-2 Req.)		4.205	AR	313 0326	
60 20-80 (LDE)	***(Replaces 102211)***	4.230	1	316 3984	
ATTACHING PARTS					
Clamp To Pipe					
WASHER, Lock	60 01-10 (2 Req.): 60 20-80 (LDE-2 Req.): 60 20-80 (WDE-4 Req.)	17.820	AR	G120214	NA
NUT, Hexagon	60 01-10 (2 Req.): 60 20-80 (LDE-2 Req.): 60 20-80 (WDE-4 Req.)	17.406	AR	G120368	
CLAMP ASSEMBLY, Front Support To Tail Pipe (For Non Ceramic Coated Pipes)					
61 10 (1 Req.): 61 20-80 (WDE-2 Req.)		4.205	AR	313 0326	
61 20-80 (LDE)		4.230	1	316 3984	
ATTACHING PARTS					
Clamp To Pipe					
WASHER, Lock	61 10 (2 Req.): 61 20-80 (LDE-2 Req.): 61 20-80 (WDE-4 Req.)	17.820	AR	G120214	NA
NUT, Hexagon	61 10 (2 Req.): 61 20-80 (LDE-2 Req.): 61 20-80 (WDE-4 Req.)	17.406	AR	G120368	
CLAMP ASSEMBLY, Rear Support To Pipe					
60 Thru 63 01 (LHE)		4.328	1	312 3193	
60 Thru 63 01 (OHV-1 Req.): 60 Thru 62 10 (1 Req.): 60 Thru 62 20-80 (WDE-2 Req.)		.....	1	315 8447	
60 Thru 62 20-80 (LDE)		.....	1	315 8445	
ATTACHING PARTS					
Clamp To Pipe					
BOLT, Hexagon	60 Thru 63 01 (1 Req.): 60 Thru 62 10 (1 Req.): 60 Thru 62 20-80 (LDE-1 Req.): 60 Thru 62 20-80 (WDE-2 Req.)	17.038	AR	G181614	NA

Copyright 1963 American Motors Corp.

GROUP NO. — DESCRIPTION — YEAR and MODEL	PRIMARY GROUP NO.	PER CAR	PART NO.	CODE
WASHER, Lock ..... 60 Thru 63 01 (1 Req.): 60 Thru 62 10 (1 Req.): 60 Thru 62 20-80 (LDE-1 Req.): 60 Thru 62 20-80 (WDE-2 Req.)	17.820	AR	G120214	NA
NUT, Hexagon ..... 60 Thru 63 01 (1 Req.): 60 Thru 62 10 (1 Req.): 60 Thru 62 20-80 (LDE-1 Req.): 60 Thru 62 20-80 (WDE-2 Req.)	17.406	AR	G120368	
INSULATOR, Tail Pipe Front Support				
61 Thru 63 01 (LCV): 60 10: 60 20-80 (LDE)	.....	1	315 1408	
60 20-80 (WDE)	.....	2	315 1408	
61 10: 61 20-80 (LDE)	.....	1	316 1323	
61 20-80 (WDE)	.....	2	316 1323	
63 10-80 (4-1/16" Long) ***(Replaces 316 9037)***	.....	1	317 0430	
63-64 10-80 (7-5/8" Long): 65 10-80 (W3S)...(Incl. Bracket)	.....	1	317 1182	
65 10-80 (L3S)	.....	1	317 5604	
ATTACHING PARTS				
Insulator To Support				
BOLT, Hexagon ..... 60 10 (1 Req.): 60 20-80 (LDE-1 Req.): 60 20-80 (WDE-2 Req.)	17.038	AR	G181610	NA
BOLT, Hexagon ..... 61 10 (1 Req.): 60 20-80 (LDE-1 Req.): 60 20-80 (WDE-2 Req.)	17.038	AR	G181004	NA
WASHER, Plain ..... 60 10 (1 Req.): 60 20-80 (LDE-1 Req.): 60 20-80 (WDE-2 Req.)	.....	AR	314 2090	
WASHER, Plain ..... 61 10 (1 Req.): 61 20-80 (LDE-1 Req.): 61 20-80 (WDE-2 Req.)	.....	AR	316 2005	
WASHER, Lock ..... 61 10 (1 Req.): 61 20-80 (LDE-1 Req.): 61 20-80 (WDE-2 Req.)	17.820	AR	G120214	NA
NUT, Hexagon ..... 60-61 10 (1 Req.): 60-61 20-80 (LDE-1 Req.): 60-61 20-80 (WDE-2 Req.)	17.416	AR	G442826	NA
Insulator To Sill				
BOLT, Hexagon ..... 63 10-80 (1" Long)	17.038	1	G181608	NA
BOLT, Hexagon ..... 63-64 10-80 (1-1/2" Long): 65 10-80 (W3S)	17.038	1	G181614	NA
WASHER, Lock 63-64 10-80: 65 10-80 (W3S)	17.820	1	G120214	NA
NUT, Hexagon 63-64 10-80	17.406	1	G120368	
Insulator To Bracket				
PLATE 65 10-80 (L3S)	.....	1	317 0879	
BOLT, Hexagon 65 10-80 (L3S)	17.038	2	G181610	NA
WASHER, Lock 65 10-80 (L3S)	17.820	2	G120214	NA
NUT, Hexagon 65 10-80 (L3S)	17.406	2	G120368	
NUT, Push 65 10-80 (L3S)	.....	2	400 1702	#
Insulator To Body				
BOLT, Hexagon ..... 63 01 (LHE-1 Req.): 61 10 (1 Req.): 61 20-80 (LDE-1 Req.): 61 20-80 (WDE-2 Req.)	17.038	AR	G181608	NA
BOLT, Hexagon ..... 61 01 (LCV): 63 01 (OHV-LCV)	17.038	1	G181596	NA
WASHER, Plain ..... 61 01 (LCV): 63 01 (OHV-LCV). ***(Replaces 800 0155)***	17.814	1	400 1095	
WASHER, Lock ..... 61 01 (LCV-1 Req.): 63 01 (LCV-1 Req.): 61 10 (1 Req.): 61 20-80 (LDE-1 Req.): 61 20-80 (WDE-2 Req.)	17.820	AR	G120214	NA
NUT, Hexagon ..... 61 01 (LCV-1 Req.): 63 01 (LCV-1 Req.): 61 10 (1 Req.): 61 20-80 (LDE-1 Req.): 61 20-80 (WDE-2 Req.)	17.406	AR	G120368	

Copyright 1963 American Motors Corp.

GROUP NO. — DESCRIPTION — YEAR and MODEL	PRIMARY GROUP NO.	PER CAR	PART NO.	CODE
Insulator To Pipe				
BOLT, Hexagon ..... 63 10-80 (1" Long): 65 10-80	17.038	1	G181608	NA
BOLT, Hexagon..... 63-64 10-80 (3/4" Long).....	17.038	1	G181595	NA
WASHER, Plain..... 63 Thru 65 10-80.....	17.814	1	G120393	NA
WASHER, Lock ..... 63 Thru 65 10-80.....	17.820	1	G120214	NA
NUT, Hexagon..... 63 Thru 65 10-80.....	17.406	1	G120368	
PLATE, Tail Pipe Front Support Insulator				
63 10-80 (L3S-2 Req.): 63 18-88 (W3S-3 Req.).....	.....	AR	316 6894	
BRACKET, Tail Pipe Front Support Insulator				
63-64 10-80: 65 10-80 (W3S)	.....	1	317 1180	#
BRACKET, Tail Pipe Front Support				
61 Thru 63 07.....	.....	1	316 2860	
ATTACHING PARTS				
Bracket To Support				
BOLT, Hexagon..... 61 Thru 63 07.....	17.038	1	G181596	NA
WASHER, Lock ..... 61 Thru 63 07.....	17.820	1	G120214	NA
NUT, Hexagon..... 61 Thru 63 07.....	17.406	1	G120368	
Bracket To Body				
BOLT, Hexagon..... 61 Thru 63 07.....	17.038	1	G181596	NA
WASHER, Lock ..... 61 Thru 63 07.....	17.820	1	G120214	NA
NUT, Hexagon..... 61 Thru 63 07.....	17.406	1	G120368	
BRACKET, Tail Pipe Rear Support				
60 04	.....	1	315 8689	
61 Thru 63 01 (LHE).....	.....	1	316 0898	
61 Thru 63 01 (OHV).....	.....	1	316 0672	
64-65 07-08.....	.....	1	317 2223	#
61-62 18-28-88	.....	2	346 5921	
(Left) 60 10-20-80: 61-62 15-25-85.....	.....	1	315 8441	
(Right) 60 20-80 (WDE): 61-62 25-85 (WDE)	.....	1	315 8442	
ATTACHING PARTS				
Bracket To Support				
BOLT, Hexagon..... 60 Thru 63 01 (1 Req.): 60 Thru 62 10 (1 Req.): 60 Thru 62 20-80 (LDE-1 Req.): 60 Thru 62 20-80 (WDE-2 Req.).....	17.038	AR	G181595	NA
WASHER, Lock ..... 60 Thru 63 01 (1 Req.): 60 Thru 62 10 (1 Req.): 60 Thru 62 20-80 (LDE-1 Req.): 60 Thru 62 20-80 (WDE-2 Req.).....	17.820	AR	G120214	NA
NUT, Hexagon..... 60 Thru 63 01 (1 Req.): 60 Thru 62 10 (1 Req.): 60 Thru 62 20-80 (LDE-1 Req.): 60 Thru 62 20-80 (WDE-2 Req.).....	17.406	AR	G120368	
Bracket To Reinforcememt Bracket				
BOLT, Hexagon ..... 64-65 07-08.....	17.038	1	G181595	NA#
WASHER, Lock ..... 64-65 07-08.....	17.820	1	G120214	NA#
NUT, Hexagon..... 64-65 07-08.....	17.406	1	G120368	#
Bracket Insulator To Pipe				
PLATE..... 64-65 07-08.....	4.219	1	317 2213	#
BOLT, Hexagon ..... 64-65 07-08.....	17.038	2	G181608	NA#
WASHER, Lock..... 64-65 07-08.....	17.820	2	G120214	NA#
NUT, Hexagon..... 64-65 07-08.....	17.406	2	G120368	#

Copyright 1963 American Motors Corp.

GROUP NO. — DESCRIPTION — YEAR and MODEL	PRIMARY GROUP NO.	PER CAR	PART NO.	CODE
HANGER, Tail Pipe Front Support (Incl. Insulator)				
62 10 (1 Req.): 62 80 (LDE-1 Req.): 62 80 (WDE-2 Req.)	.....	AR	316 1323	
ATTACHING PARTS				
Hanger To Support				
BOLT, Hexagon..... 62 10 (1 Req.): 62 80 (LDE-1 Req.): 62 80 (WDE-2 Req.)	17.038	AR	G181596	NA
WASHER, Plain..... 62 10 (1 Req.): 62 80 (LDE-1 Req.): 62 80 (WDE-2 Req.)	.....	AR	316 2005	
WASHER, Lock..... 62 10 (1 Req.): 62 80 (LDE-1 Req.): 62 80 (WDE-2 Req.)	17.820	AR	G120214	NA
NUT, Hexagon..... 62 10 (1 Req.): 62 80 (LDE-1 Req.): 62 80 (WDE-2 Req.)	17.406	AR	G120368	
Hanger To Body				
BOLT, Hexagon..... 62 01 (OHV-LCV)	17.038	1	G181596	NA
BOLT, Hexagon..... 62 01 (LHE-1 Req.): 62 10 (1 Req.): 62 80 (LDE-1 Req.): 62 80 (WDE-2 Req.)	17.038	AR	G181608	NA
WASHER, Plain..... 62 01 (LHE) ***(Replaces 800 0155)***	17.814	2	400 1095	
WASHER, Plain..... 62 01 (OHV-LCV)	17.814	1	G120393	NA
WASHER, Lock..... 62 01 (LCV-1 Req.): 62 10 (1 Req.): 62 80 (LDE-1 Req.): 62 80 (WDE-2 Req.)	17.820	AR	G120214	NA
NUT, Hexagon..... 62 01 (LCV-1 Req.): 62 10 (1 Req.): 62 80 (LDE-1 Req.): 62 80 (WDE-2 Req.)	17.406	AR	G120368	
HOSE, Vibration Damper				
60 10: 60 20-80 (LDE)	.....	1	315 6674	
ATTACHING PARTS				
Hose To Floor Pan				
BOLT, Hexagon..... 60 10: 60 20-80 (LDE)	17.038	1	G181614	NA
WASHER, Plain..... 60 10: 60 20-80 (LDE)	.....	1	314 2090	
ROD, Vibration Damper Hose				
60 10: 60 20-80 (LDE)	.....	1	315 6673	
4.248 SHIELD, Rear Wheel Opening Tail Pipe				
(Left) 60 10-20-80: 61 15-25-85	.....	1	344 3649	
(Right) 60-61 10: 60 20-80: 61 25-85	.....	1	344 3648	
ATTACHING PARTS				
Shield To Fender				
SCREW, Tapping..... 60 10-20-80 (10 Req.): 61 15-25-85 (10 Req.): 61 18 (5 Req.): 61 25-85 (LDE-5 Req.)	17.671	AR	800 0093	NA

Copyright 1963 American Motors Corp.

CARBURETOR CHART INDEX

CARTER NO.			PAGE NO.
AS	3169		Ch 4 - 56
AS	3206		Ch 4 - 54
AS	3536		Ch 4 - 63
RBS	3487		Ch 4 - 7
RBS	3488		Ch 4 - 65
RBS	3498		Ch 4 - 7
RBS	3708		Ch 4 - 9
RBS	3709		Ch 4 - 9
RBS	3727		Ch 4 - 67
RBS	3728		Ch 4 - 67
RBS	3765	Supplement	Ch 4 - 1
RBS	3766		Ch 4 - 39
WCD	2586		Ch 4 - 47
WCD	2586SA		Ch 4 - 47
WCD	2887		Ch 4 - 47
WCD	3170		Ch 4 - 58
WCD	3322		Ch 4 - 60
WCD	3434		Ch 4 - 32
WCD	3535		Ch 4 - 28
WCD	3706		Ch 4 - 34
WCD	3707		Ch 4 - 34
WCD	3888		Ch 4 - 41
YF	2014		Ch 4 - 2a
YF	3331		Ch 4 - 5
Z	2757		Ch 4 - 3

HOLLEY NO.		PAGE NO.
R	1598-1	Ch 4 - 43
R	1598-2	Ch 4 - 45
R	1748	Ch 4 - 97
R	1748-1	Ch 4 - 97
R	1748-2	Ch 4 -101
R	1957-1	Ch 4 -101
R	1958-1	Ch 4 -101
R	2040	Ch 4 - 85
R	2040-1	Ch 4 - 85
R	2138	Ch 4 - 51
R	2138-1	Ch 4 - 49
R	2166	Ch 4 - 13
R	2168-2	Ch 4 - 11
R	2228	Ch 4 - 88
R	2269	Ch 4 - 15
R	2381	Ch 4 - 17
R	2381-1	Ch 4 - 19
R	2387	Ch 4 - 26
R	2387-1	Ch 4 - 26
R	2387-1*	Ch 4 - 26
R	2442	Ch 4 - 91
R	2442-1	Ch 4 - 73
R	2442-2	Ch 4 - 73
R	2446	Ch 4 - 22
R	2463	Ch 4 - 94
R	2463-1	Ch 4 - 73
R	2463-2	Ch 4 - 73
R	2464	Ch 4 -101
R	2555	Ch 4 - 24
R	2555-1	Ch 4 - 24
R	2555-2	Ch 4 - 24
R	2555-3	Ch 4 - 37
R	2556	Ch 4 - 24
R	2556-1	Ch 4 - 24
R	2556-2	Ch 4 - 24
R	2557	Ch 4 - 26
R	2557-1	Ch 4 - 26
R	2557-1*	Ch 4 - 26
R	2697	Ch 4 - 71
R	2699	Ch 4 - 76
R	2880	Ch 4 - 69
R	2968	Ch 4 - 76
R	3044	Ch 4 - 79
R	3045	Ch 4 - 79
R	3199	Ch 4 - 69
R	3200	Ch 4 - 71
R	3201	Ch 4 - 82
R	3202	Ch 4 - 82
R	3217	Ch 4 - 76
R	3218	Ch 4 - 76

Copyright 1963 American Motors Corp.

CARBURETOR CHART INDEX (Cont.)

Copyright 1963 American Motors Corp.

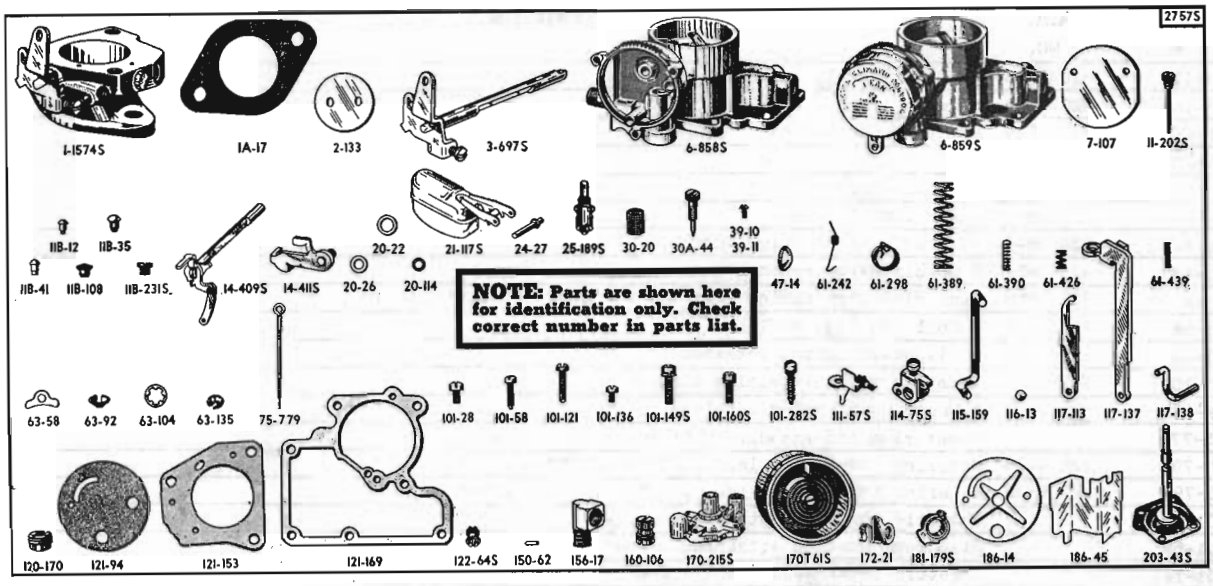

CARBURETOR 60 THRU 63 01 (LHE-LES)

A.M.C. No. 315 4345 CARTER NO. YF-2014S

CARTER NO.	A.M. NO.	DESCRIPTION	PER CAR
AM-1	320 3800	Assortment Kit (Includes all parts listed below which are coded with a ϕ)	
900-38	320 3150	Zip Kit (Includes 109-332 Float Gauge and all parts listed below which are coded with a #) (Replaces 320 2174)	1
1590N	320 3155	Repair Kit (Re-Carb) (Includes all parts listed below which are coded with a *) (Replaces 320 2239)	1
216	320 2255	# Gasket Set (Includes all parts listed below which are coded with a +)	1
1-1574S		Body flange assembly (2757S)	1
1-847S		Body flange assembly (2014S)	1
1A-17	315 3999	** Flange gasket	2
2-133		Throttle valve (Use 2-248)	1
2-248	320 3868	Throttle valve	1
3-697S		Throttle shaft and lever assembly	1
6-858S		Air horn and climatic control assembly	1
6-859S		Air horn assembly	1
7-107	320 6425	Choke valve	1
11-202S	320 3834	Low speed jet assembly (.028")	1
11B-12	320 3801	ϕ Flange passage plug	1
11B-35	320 3802	ϕ Nozzle passage rivet plug	1
11B-41	320 3803	ϕ Rivet plug	1
11B-108	320 3806	ϕ Idle port rivet plug	1
11B-231S	320 3810	ϕ Ball retainer screw plug assembly	1
14-409S	320 6426	Choke piston lever and shaft assembly	1
14-411S	320 3836	Choke trip lever and pin assembly	1
20-22		+ Needle seat gasket	1
20-26		+ Ball retainer screw plug gasket	1
20-114	320 6427	Diaphragm housing attaching screw gasket	1
21-117S	320 2231	Float and lever assembly	1
24-27	320 6428	Float lever pin	1
25-189S	320 3146	#* Needle and seat assembly (.076'') (Replaces 320 2233)	1
30-20	320 3838	Pump intake strainer	1
30A-44	320 2229	Idle adjustment screw	1
39-10	320 3812	ϕ Choke valve attaching screw	2

CARTER NO.	A.M. NO.	DESCRIPTION	PER CAR
39-11	320 3813	ϕ Throttle valve attaching screw	2
47-14	320 3814	ϕ Welsh plug	1
61-242	320 3839	Metering rod spring	1
61-298	320 3840	Fast idle cam spring	1
61-389	320 3842	Pump diaphragm spring	1
61-390	320 3843	Upper pump spring	1
61-426	320 3844	Idle adjustment screw spring	1
61-439	320 3852	Pump discharge spring	1
61-451	320 3853	Pump diaphragm spring (For use at 5,000 ft. altitude)	1
63-58	320 3818	ϕ Coil housing retainer	3
63-92	320 3819	ϕ Diaphragm spring retainer	1
63-104	320 3858	Throttle shaft retaining ring	1
63-135	320 3820	ϕ Upper pump spring retainer	1
75-779		* Metering rod-standard .078 x .07325" x .047"	1
75-793	320 6429	Metering rod-1 size lean .078" x .0745" x .050"	1
75-794	320 6430	Metering rod-2 sizes lean .080" x .076" x .053"	1
101-28		Throttle shaft arm attaching screw	1
101-58		Diaphragm housing attaching screw	1
101-121		Throttle lever adjustment screw	1
101-136	320 6431	Coil housing attaching screw	3
101-149S		Body flange attaching screw and washer assembly	3
101-160S	320 6432	Air horn attaching screw and washer assembly	7
101-282S	320 6433	Diaphragm housing attaching screw and washer assembly	3
111-57S	320 6434	Metering rod arm assembly	1
114-75S	320 6435	Throttle shaft arm assembly	1
115-159	320 6436	Choke connector rod	1
116-13	320 3825	ϕ Pump check ball	1
117-113	320 3861	Fast idle link	1
117-137	320 6437	Pump lifter link	1
117-138	320 3862	Pump connector link	1
120-170		* Metering rod jet (.102")	1
121-94		*+ Thermostatic coil housing gasket	1
121-153		*+ Body flange gasket	1
121-169		*+ Bowl cover and air horn gasket	1
122-64S	320 6438	Intake ball check assembly	1
150-62	320 3829	ϕ Choke piston pin	1
156-17	320 6439	Fuel line elbow	1
160-106	320 6440	Choke piston	1
170-215S	320 6441	Pump diaphragm housing assembly	1
170T-61S	320 3867	Thermostatic coil and housing assembly	1
172-21	320 3831	ϕ Throttle connector rod retainer	1
181-179S		Fast idle cam assembly	1
186-14	320 6442	Coil housing baffle plate	1
186-45	320 6443	Fuel bowl baffle plate	1
203-43S	320 2236	#* Pump diaphragm assembly	1

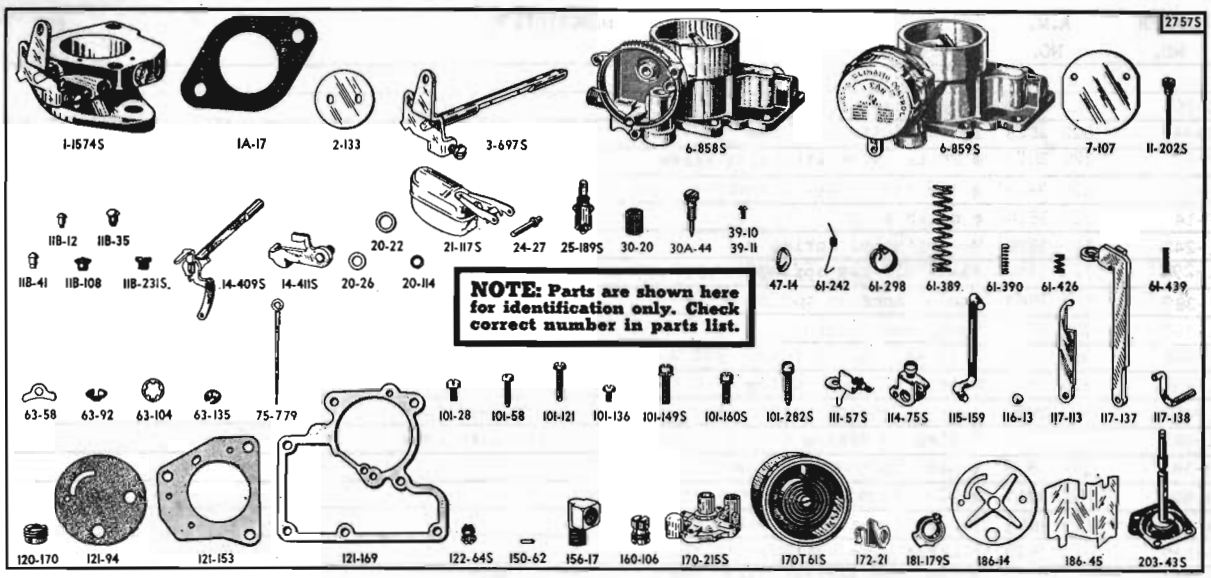

CARBURETOR (ZIP FIT) 60 THRU 63 01 (LHE-LES)

A.M. No. 320 2176 CARTER No. Z-2757S

CARTER NO.	A.M. NO.	DESCRIPTION	PER CAR
AM-1	320 3800	Assortment Kit (Includes all parts listed below which are coded with a ϕ)	
902-38	320 3150	Zip Kit (Includes 109-332 Float Gauge and all parts listed below which are coded with a #)	1
1590X	320 3155	Repair Kit (Re-Carb) (Includes all parts listed below which are coded with a *)	1
216	320 2255	# Gasket Set (Includes all parts listed below which are coded with a +)	1
75-802U	313 2962	Metering Rod Kit (Incl. 1 Carter 75-793 Metering Rod 5% lean & 1 Carter 75-794 Metering Rod 10% lean) (Export Special Equip.)	1
75-1588U	320 3415	Modification Kit (For Positive Ventilation Cars Only - Incl. all parts listed below which are coded with a °)	1
1-1574S		Body flange assembly (2757S)	1
1-847S		Body flange assembly (2014S)	1
1A-17	315 3999	** Flange gasket	2
2-248	320 3868	Throttle valve	1
3-697S		Throttle shaft and lever assembly	1
6-858S		Air horn and climatic control assembly	1
6-859S		Air horn assembly	1
7-107	320 6425	Choke valve	1
11-202S	320 3834	Low speed jet assembly (.028")	1
11B-12	320 3801	ϕ Flange passage plug	1
11B-35	320 3802	ϕ Nozzle passage rivet plug	1
11B-41	320 3803	ϕ Rivet plug	1
11B-231S	320 3810	ϕ Ball retainer screw plug assembly	1
11B-389	320 3870	ϕ Idle port rivet plug	1
14-409S	320 6426	Choke piston lever and shaft assembly	1
14-411S	320 3836	Choke trip Lever and pin assembly	1
20-22		+ Needle seat gasket	1
20-26		+ Ball retainer screw plug gasket	
20-114	320 6427	Diaphragm housing attaching screw gasket	1
21-117S	320 2231	Float and lever assembly	1
24-27	320 6428	Float lever pin	1
25-189S		Neelde and seat assembly (.076")(Use 25-510S)	
25-510S	320 3146	#* Needle and seat assembly (.076")	1

CARTER NO.	A.M. NO.	DESCRIPTION	PER CAR
30-20	320 3838	Pump intake strainer	1
30A-44	320 2229	Idle adjustment screw	1
39-10	320 3812	ϕ Choke valve attaching screw	2
39-11	320 3813	ϕ Throttle valve attaching screw	2
47-14	320 3814	ϕ Welsh plug	1
61-242	320 3839	Metering rod spring	1
61-298	320 3840	Fast idle cam spring	1
61-389	320 3842	Pump diaphragm spring	1
61-390	320 3843	Upper pump spring	1
61-426	320 3844	Idle adjustment screw spring	1
61-439	320 3852	Pump discharge spring	1
61-451	320 3853	Pump diaphragm spring (For use at 5,000 ft. Altitude)	1
61-463		° Step Up Spring (For Positive Ventilation Cars Only)	1
63-58	320 3818	ϕ Coil housing retainer	3
63-92	320 3819	ϕ Diaphragm spring retainer	1
63-104	320 3858	Throttle shaft retaining ring	1
63-135	320 3820	ϕ Upper pump spring retainer	1
75-779		* Metering rod-standard .078 x .07325" x .047"	1
75-793	320 6429	Metering rod 1-size lean .078" x .0745" x .050"	1
75-794	320 6430	Metering rod-2 sizes lean .080" x .076" x .053"	1
75-1474	315 7891	Metering rod-1 size lean for 5,000 ft. and over .080" x .076" x .059" (Special equipment)	1
75-1598		° Metering Rod (For Positive Ventilation Cars Only)	1
101-28		Throttle shaft arm attaching screw	1
101-58		Diaphragm housing attaching screw	1
101-121		Throttle lever adjustment screw	1
101-136	320 6431	Coil housing attaching screw	3
101-149S		Body flange attaching screw and washer assembly	3
101-160S	320 6432	Air horn attaching screw and washer assembly	7
101-282S	320 6433	Diaphragm housing attaching screw and washer assembly	3
111-57S	320 6434	Metering rod arm assembly	1
114-75S	320 6435	Throttle shaft arm assembly	1
115-159	320 6436	Choke connector rod	1
116-13	320 3825	ϕ Pump check ball	1
117-113	320 3861	Fast idle link	1
117-137	320 6437	Pump lifter link	1
117-138	320 3862	Pump connector link	1
120-170		* Metering rod jet (.102)	1
121-94		*+ Thermostatic coil housing gasket	1
121-153		*+ Body flange gasket	1
121-169		*+ Bowl cover and air horn gasket	1
122-64S	320 6438	Intake ball check assembly	1
150-62	320 3829	ϕ Choke piston pin	1
156-17	320 6439	Fuel line elbow	1
160-106	320 6440	Choke piston	1
170-215S	320 6441	Pump diaphragm housing assembly	1
170T-61S	320 3867	Thermostatic coil and housing assembly	1
172-21	320 3831	ϕ Throttle connector rod retainer	1
181-179S		Fast idle cam assembly	1
186-14	320 6442	Coil housing baffle plate	1
186-45	320 6443	Fuel bowl baffle plate	1
203-43S	320 2236	#* Pump diaphragm assembly	1

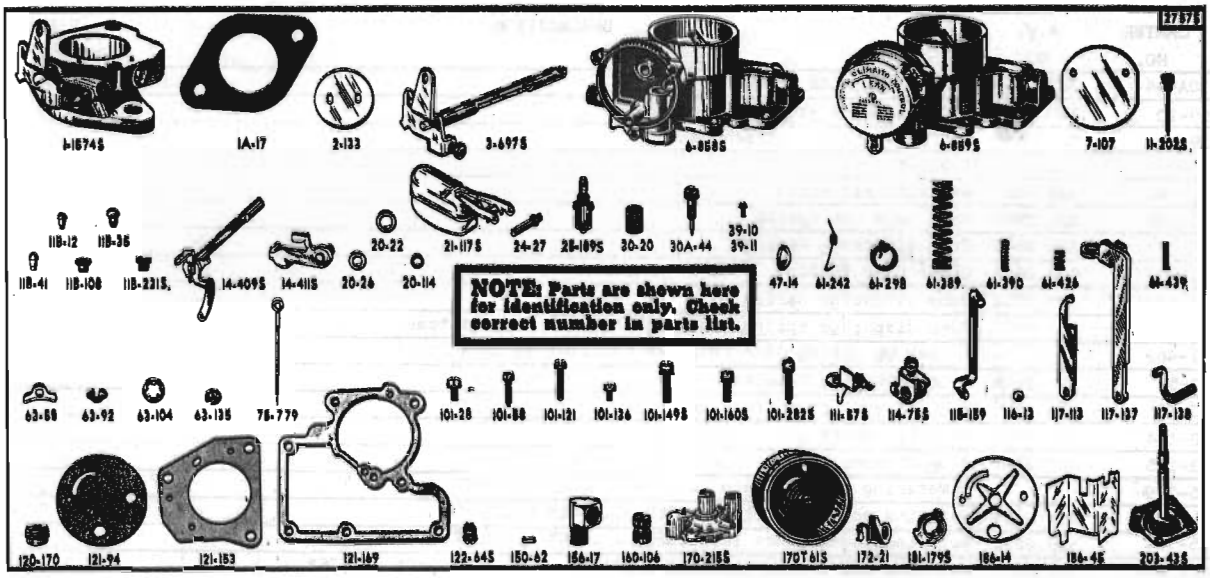

CARBURETOR 62 01 (LHE-WST-WES)(LHE-WOD-WES)

A.M. No. 316 3653 — CARTER No. YF-3331S

CARTER NO.	A.M. NO.	DESCRIPTION	PER CAR
AM-1	320 3800	Assortment Kit (Includes all parts listed below which are coded with a ϕ)	
902-38	320 3150	Zip Kit (Includes 109-332 Float Gauge and all parts listed below which are coded with a #)	1
1590X	320 3155	Repair Kit (Re-Carb) (Includes all parts listed below which are coded with a *)	1
216	320 2255	# Gasket Set (Includes all parts listed below which are coded with a +)	1
75-802U	313 2962	Metering Rod Kit (Incl. 1 Carter 75-793 Metering Rod 5% lean & 1 Carter 75-794 Metering Rod 10% lean) (Export Special Equip.)	1
75-1588U	320 3415	Modification Kit (For Positive Ventilation Cars Only - Incl. all parts listed below which are coded with a ◊)	1
1-1574S		Body flange assembly (Use 1-1795S)	
1-1795S		Body flange assembly	1
1A-17	315 3999	** Flange gasket	2
2-248	320 3868	Throttle valve	1
3-697S		Throttle shaft and lever assembly (Use 3-1369S)	
3-1369S		Throttle shaft and lever assembly	1
6-858S		Air horn and climatic control assembly	1
6-859S		Air horn assembly	1
7-107	320 6425	Choke Valve	1
11-202S	320 3834	Low speed jet assembly (.028")	1
11B-12	320 3801	ϕ Flange passage plug	1
11B-36	320 3802	ϕ Nozzle passage rivet plug	1
11B-41	320 3803	ϕ Rivet plug	1
11B-231S	320 3810	ϕ Ball retainer screw plug assembly	1
11B-389	320 3870	ϕ Idle port rivet plug	1
14-409S	320 6426	Choke piston lever and shaft assembly	1
14-411S	320 3836	Choke trip lever and pin assembly	1
20-22		Needle seat gasket (Use 20-126)	
20-126		+ Needle seat gasket	1
20-26		+ Ball retainer screw plug gasket	1
20-114	320 6427	Diaphragm housing attaching screw gasket (Not used)	
21-117S	320 2231	Float and lever assembly	1
24-27	320 6428	Float lever pin	1
25-189S		Needle and seat assembly (.076") (Use 25-510S)	
25-510S	320 3146	#* Needle and seat assembly (.076")	1
30-20	320 3838	Pump intake strainer	1

GROUP 4

CARTER NO.	A.M. NO.	DESCRIPTION	PER CAR
30A-44	320 2229	Idle adjustment screw	1
39-10	320 3812	ϕ Choke valve attaching screw	2
39-11	320 3813	ϕ Throttle valve attaching screw	2
47-14	320 3814	ϕ Welsh plug	1
61-242	320 3839	Metering rod spring	1
61-298	320 3840	Fast idle cam spring	1
61-389	320 3842	Pump diaphragm spring	1
61-390	320 3843	Upper pump spring	1
61-439	320 3852	Pump discharge spring	1
61-451	320 3853	Pump diaphragm spring (For use at 5,000 ft. altitude)	1
61-463		° Step Up Spring (For Positive Ventilation Cars Only)	1
63-58	320 3818	ϕ Coil housing retainer	3
63-92	320 3819	ϕ Diaphragm spring retainer	1
63-104	320 3858	Throttle shaft retaining ring	1
63-135	320 3820	ϕ Upper pump spring retainer	1
75-779		* Metering rod-standard .078" x .07325" x .047"	1
75-793	320 6429	Metering rod-1 size lean .078" x .0745" x .050"	1
75-794	320 6430	Metering rod-2 sizes lean .080" x .076" x .053"	1
75-1474	315 7891	Metering rod-1 size lean for 5,000 Ft. and over .080" x .076" x .059" (Special equipment)	1
75-1598		° Metering Rod (For Positive Ventilation Cars Only)	1
101-28		Throttle shaft arm attaching screw	1
101-58		Diaphragm housing attaching screw	1
101-121		Throttle lever adjustment screw	1
101-136	320 6431	Coil housing attaching screw	3
101-149S		Body flange attaching screw and washer assembly	3
101-160S	320 6432	Air horn attaching screw and washer assembly	5
101-216S	320 6487	Dashpot bracket attaching screw and washer assembly (Not shown)	2
101-282S	320 6433	Diaphragm housing attaching screw and washer assembly	3
105A-52		Dashpot lock nut (Not shown)	1
111-57S	320 6434	Metering rod arm assembly	1
114-75S	320 6435	Throttle shaft arm assembly	1
115-159	320 6436	Choke connector rod	1
116-13	320 3825	ϕ Pump check ball	1
117-113	320 3861	Fast idle link	1
117-137	320 6437	Pump lifter link	1
117-138	320 3862	Pump connector link	1
120-170		* Metering rod jet (.102)	1
121-94		*+ Thermostatic coil housing gasket	1
121-153		*+ Body flange gasket	1
121-169		*+ Bowl cover and air horn gasket	1
122-64S	320 6438	Intake ball check assembly	1
150-62	320 3829	ϕ Choke piston pin	1
156-17	320 6439	Fuel line elbow	1
160-106	320 6440	Choke piston	1
170-215S	320 6441	Pump diaphragm housing assembly	1
170T-61S	320 3867	Thermostatic coil and housing assembly	1
172-21	320 3831	ϕ Throttle connector rod retainer	1
180-114		Dashpot bracket (Not shown)	1
181-179S		Fast idle cam assembly	1
186-14	320 6442	Coil housing baffle plate	1
186-45	320 6443	Fuel bowl baffle plate	1
202-69S	320 4334	Dashpot assembly (Not shown)	1
203-43S	320 2236	#* Pump diaphragm assembly	1

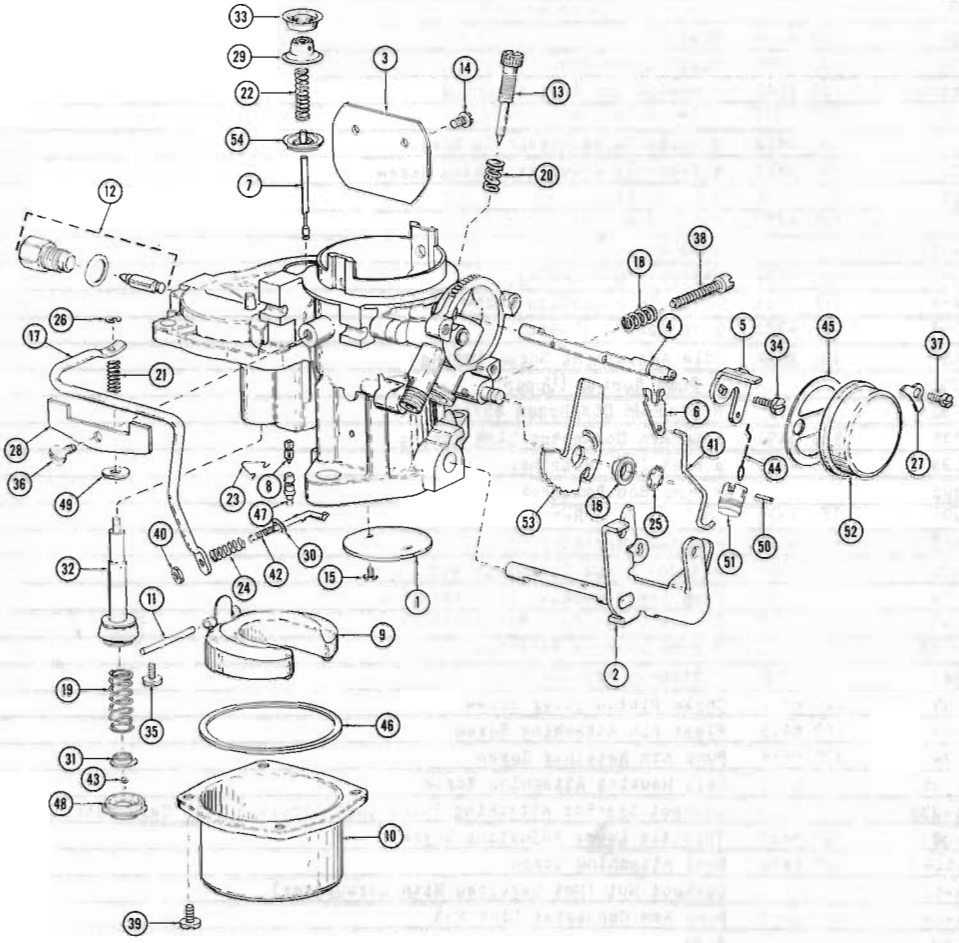

CARBURETOR 63 01 (LHE)

A.M. NO. 316 6874 (Less Dashpot) CARTER NO. RBS-3487S
A.M. NO. 316 6877 (With Dashpot)(Not Serviced) Order 316 6874 And 320 4334 CARTER NO. RBS-3498S

KEY NO.	CARTER NO.	A.M. NO.	DESCRIPTION	PER CAR
	AM-2	320 3800	Assortment Kit (Includes all parts listed below which are coded with a ϕ)	
	902-183	320 4290	Overhaul Kit (Includes all parts listed below which are coded with a *)	1
	1A-131	315 3999	* Flange Gasket	1
1	2-101	320 4318	Throttle Valve	1
2	3-1405S	320 6488	Throttle Shaft and Lever Assembly	1
3	7-270	320 6489	Choke Valve	1
	11B-69	320 3804	ϕ Spark Port Rivet Plug	1
	11B-389	320 3870	ϕ Idle Port Rivet Plug	1
	11B-392		Rivet Plug	2
4	13-222	320 6490	Choke Shaft	1
5	14-737	320 6491	Choke Piston Lever	1
6	14-738	320 4319	Choke Lever	1
7	16-215		* Step Up Rod (.074" x .062")	1
	16-229	320 5582	Step-up Rod - 1 Size Lean For 5,000 Ft. (Replaces 316 9633)	1

GROUP 4

KEY NO.	CARTER NO.	A.M. NO.	DESCRIPTION	PER CAR
8	17-78	320 6492	Pump Discharge Check Needle	1
	20-31	320 6493	Needle Seat Gasket	1
9	21-217S	320 4320	Float and Lever Assembly	1
10	23-84	320 6494	Bowl	1
11	24-32	320 6495	Float Lever Pin	1
12	25-530S	320 3148	* Needle and Seat Assembly	1
13	30A-81	320 4321	Idle Adjustment Screw	1
14	39-10	320 3812	ϕ Choke Valve Attaching Screw	2
15	39-11	320 3813	ϕ Throttle Valve Attaching Screw	2
	47-14	320 3814	ϕ Welsh Plug	1
16	51-70	320 4322	Fast Idle Cam Collar	1
17	53A-456		Pump Arm	1
	61-242	320 3839	Metering Rod Spring	1
18	61-242	320 3839	Throttle Adjusting Screw Spring	1
19	61-398	320 4323	Pump Spring (Lower)	1
20	61-467	320 3844	Idle Adjustment Screw Spring	1
21	61-731		* Pump Spring (Upper)	1
22	61-731		* Step Up Diaphragm Spring	1
24	61-738	320 6497	Pump Arm Connector Link Spring	1
25	63-123	320 4325	ϕ Fast Idle Retainer	1
26	63-282		* Pump Rod Retainer	1
27	63-298	320 4326	Coil Housing Retainer	3
28	63-302	320 6498	Pump Arm Retainer	1
29	63-306	320 4327	* Step-up Rod Diaphragm Retainer	1
30	63-309	320 6499	Pump Arm Connector Link Retainer	1
31	63-310	320 4328	Intake Check Ball Retainer	1
32	64-306S	320 4329	* Pump Plunger Assembly	1
33	65-54	320 4330	* Step-up Rod Diaphragm Cover	1
34	101-65	320 6412	Choke Piston Lever Screw	1
35	101-67	320 6413	Float Pin Attaching Screw	2
36	101-74	320 6414	Pump Arm Retainer Screw	1
37	101-136	320 6431	Coil Housing Attaching Screw	3
	F101-238		Dashpot Bracket Attaching Screw (Not Serviced With Carburetor)	1
38	101-387	320 6415	Throttle Lever Adjusting Screw	1
39	101-514	320 6416	Bowl Attaching Screw	4
	105A-52		Dashpot Nut (Not Serviced With Carburetor)	1
40	105A-69	320 6417	Pump Arm Connector Link Nut	1
	108-83		* Ring	1
41	115-365	320 6418	Fast Idle Connector Rod	1
42	115-366	320 6419	Pump Arm Connector Link	1
43	116-31	320 4331	ϕ* Intake Check Ball	1
44	117-200	320 4337	Choke Piston Link	1
45	121-491		* Coil Housing Gasket	1
46	121-492		* Bowl Ring Gasket	1
47	122-126	320 4336	Pump Discharge Needle Seat	1
58	122-127	320 4332	* Intake Ball Check Seat	1
49	136-257	320 6420	Pump Washer	1
	136-267		* Conical Washer	1
50	150-170	320 6421	Choke Piston Pin	1
51	160-279	320 6422	Choke Piston	1
	180-120	320 6423	Dashpot Bracket (Not Serviced With Carburetor)	1
52	170FA-771S	320 4333	Thermostatic Coil and Housing Assembly	1
53	181-303	320 6424	Fast Idle Cam	1
	202-69S	320 4334	Dashpot Assembly (Not Serviced With Carburetor)	1
54	203-172S	320 4335	* Step-up Rod Diaphragm Assembly	1

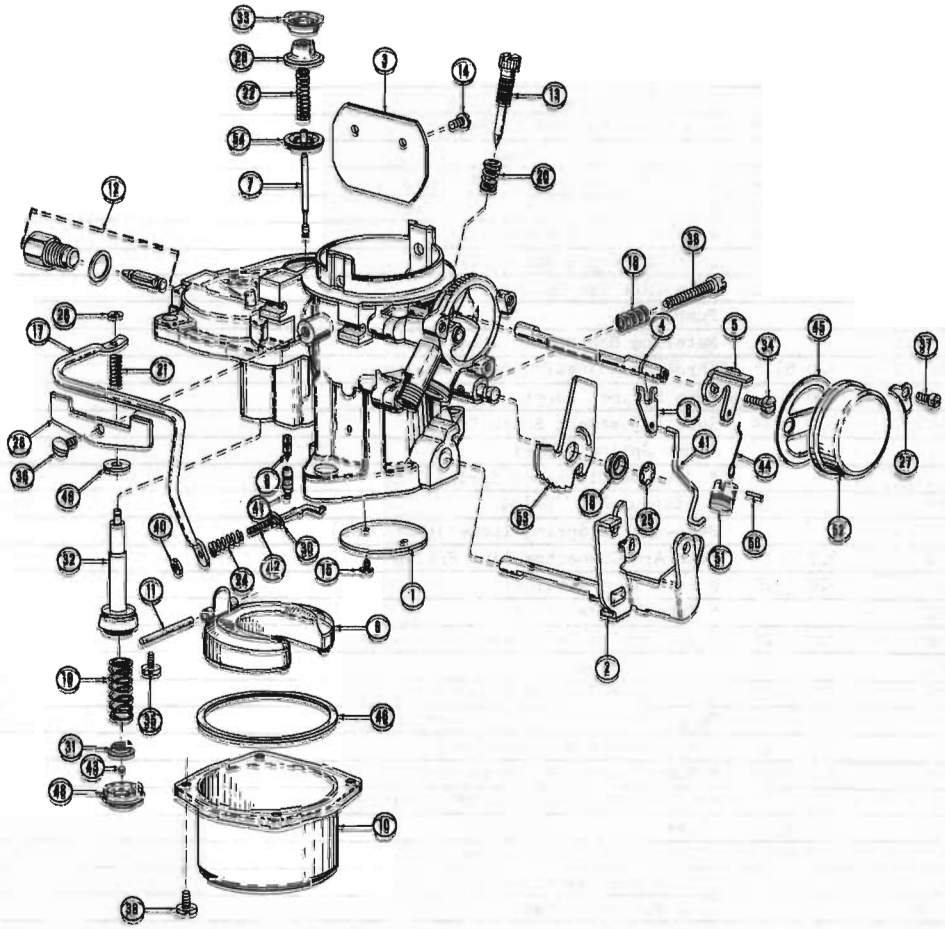

CARBURETOR 64-65 01 (LHE)

A.M. NO. 317 2239 (Less Dashpot) CARTER NO. RBS-3708S
A.M. NO. 317 2240 (With Dashpot)(Not Serviced)
Order 317 2239 And 320 4334 CARTER NO. RBS-3709S

KEY NO.	CARTER NO.	A.M. NO.	DESCRIPTION	PER CAR
	AM-3	320 3800	Assortment Kit (Includes all parts listed below which are coded with a ¢)	
	902-183	320 4290	Overhaul Kit (Includes all parts listed below which are coded with a *)	1
	16-317U	320 5582	Metering Jet Package (Includes All Parts Listed Below Which are Coded With A #)(Use For 5,000 Ft. Altitude)	1
	1A-131	315 3999	* Flange Gasket	1
1	2-101	320 4318	Throttle Valve	1
2	3-1469S	320 6801	Throttle Shaft and Lever Assembly	1
3	7-270	320 6489	Choke Valve	1
	11B-69	320 3804	¢ Spark Port Rivet Plug (Not Shown)	1
	11B-389	320 3870	¢ Idle Port Rivet Plug (Not Shown)	1
4	13-222	320 6490	Choke Shaft	1
5	14-737	320 6491	Choke Piston Lever	1
6	14-738	320 4319	Choke Lever	1
7	16-272S		* Step Up Rod (.7250" x .062")	1
	16-279S		# Step-up Rod - 1 Size Lean For 5,000 Ft.	1
8	17-78	320 6492	Pump Discharge Check Needle	1
	20-203		Needle Seat Gasket	1
9	21-217S	320 4320	Float and Lever Assembly	1

KEY NO.	CARTER NO.	A.M. NO.	DESCRIPTION	PER CAR
10	23-84	320 6494	Bowl	1
11	24-32	320 6495	Float Lever Pin	1
12	25-726S	320 5124	* Needle and Seat Assembly	1
13	30A-81	320 4321	Idle Adjustment Screw	1
14	39-10	320 3812	ϕ Choke Valve Attaching Screw	2
15	39-11	320 3813	ϕ Throttle Valve Attaching Screw	2
	47-14	320 3814	ϕ Welsh Plug (Choke Piston)	1
	47-31	320 4949	ϕ Welsh Plug (Fuel Well)	1
16	51-71	320 4322	Fast Idle Cam Collar	1
17	53A-456		Pump Arm	1
			Metering Rod Spring (Not Shown)	1
18	61-291	320 5125	Throttle Adjusting Screw Spring	1
19	61-398	320 4323	Pump Spring (Lower)	1
20	61-467	320 3844	Idle Adjustment Screw Spring	1
21	61-731		*Pump Spring (Upper)	1
22	61-731		* Step Up Diaphragm Spring	1
22	61-764		# Step-up Rod Spring	1
23			Step-up Rod Spring (Lower)(Not Used)	
24	61-738	320 6497	Pump Arm Connector Link Spring	1
25	63-123	320 4325	ϕ Fast Idle Retainer	1
26	63-282		* Pump Rod Retainer	1
27	63-298	320 4326	Coil Housing Retainer	3
28	63-302	320 6498	Pump Arm Retainer	1
29	63-306	320 4327	#* Step-up Rod Diaphragm Retainer	1
30	63-309	320 6499	Pump Arm Connector Link Retainer	1
31	63-310	320 4328	Intake Check Ball Retainer	1
32	64-306S	320 4329	* Pump Plunger Assembly	1
33	65-54	320 4330	#* Step-up Rod Diaphragm Cover	1
34	101-65	320 6412	Choke Piston Lever Screw	1
35	101-67	320 6413	Float Pin Attaching Screw	2
36	101-74	320 6414	Pump Arm Retainer Screw	1
37	101-136	320 6431	Coil Housing Attaching Screw	3
	P101-238		Dashpot Bracket Attaching Screw (Not Serviced With Carburetor)	1
38	101-387	320 6415	Throttle Lever Adjusting Screw	1
39	101-514	320 6416	Bowl Attaching Screw	4
	105A-60	320 6802	Dashpot Nut (Not Serviced With Carburetor)	1
40	105A-69	320 6417	Pump Arm Connector Link Nut	1
	108-83		#* Ring	1
	108-87		Pump Plunger Shaft Bushing	1
41	115-391	320 6803	Fast Idle Connector Rod	1
42	115-366	320 6419	Pump Arm Connector Link	1
43	116-31	320 4331	ϕ Intake Check Ball	1
44	117-200	320 4337	Choke Piston Link	1
45	121-491		* Coil Housing Gasket	1
46	121-492		* Bowl Ring Gasket	1
47	122-126	320 4336	Pump Discharge Needle Seat	1
48	122-127	320 4332	* Intake Ball Check Seat	1
49	136-257	320 6420	Pump Washer	1
	136-267		#* Conical Washer	1
50	150-170	320 6421	Choke Piston Pin	1
51	160-279	320 6422	Choke Piston	1
52	170FA-771S	320 4333	Thermostatic Coil and Housing Assembly	1
	180-120	320 6423	Dashpot Bracket (Not Serviced With Carburetor)	1
53	181-329	320 6804	Fast Idle Cam	1
	202-69S	320 4334	Dashpot Assembly (Not Serviced With Carburetor)	1
54			Step-up Rod Diaphragm Assembly (Not Used)	

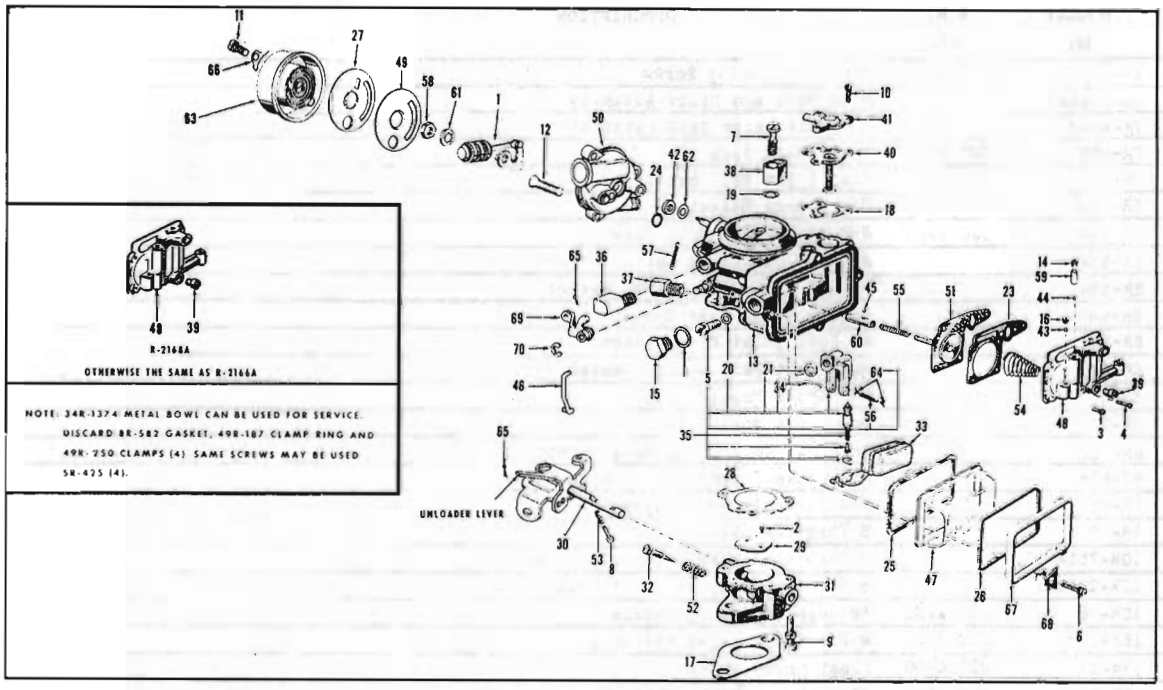

CARBURETOR 60-61 01 (OHV-WST)(OHV-WOD)

AMERICAN MOTORS No. 315 9884 HOLLEY No. R-2168-2

KEY NO.	HOLLEY NO.	A.M. NO.	DESCRIPTION	PER CAR
	85A-1111	320 3586	Assortment Kit (Includes all parts listed below which are coded with a ϕ)	
	85R-709	320 2225	Pep Kit (Includes all parts listed below which are coded with a #)	
	85R-981	320 2442	Repair Kit (Includes all parts listed below which are coded with a *)	
	85G-641	320 2221	* Gasket Set (Includes all parts listed below which are coded with a +)	
	85B-1398	320 6300	Bowl Kit (Includes all parts listed below which are coded with a ◎)	1
	85C-1176	320 6306	Choke Kit (Includes all parts listed below which are coded with a °)	1
	85D-1174	320 6303	Pump Diaphragm Kit (Includes all parts listed below which are coded with a Ж)	1
	85E-1170	320 6305	Economizer Kit (Includes all parts listed below which are coded with a ⊞)	1
	85T-1161	320 6309	Throttle Body And Shaft Assy. Kit (Includes all parts listed below which are coded with a ⊘)	1
1	4R-648A		o Link And Piston Assembly Choke Thermostat Lever	1
2	5R-4	320 3101	ϕ*⊘ Throttle Plate Screw and Lock Washer	2
3	5R-420	320 3106	ϕ Main Well and Economizer Body Screw and LW (Short)	3
4	5R-421	320 3107	ϕ Main Well and Economizer Body Screw and LW (Long)	2
5	5R-423	320 6406	Fuel Inlet Seat Screw	1
6	5R-425	320 3108	ϕ◎ Float Bowl Clamp Screw and Lock Washer	4
7	5R-492	320 6311	Pump Discharge Nozzle Screw	1
8	5R-534	320 3110	ϕ⊘ Throttle Stop Screw	1
9	5R-571	320 3115	ϕo Throttle Body Screw and Lock Washer	2
10	5R-641	320 3120	ϕ⊞ Economizer Body Screw and Lock Washer	3
11	5R-731	320 6312	o Thermostat Housing Screw	3

GROUP 4

KEY NO.	HOLLEY NO.	A.M. NO.	DESCRIPTION	PER CAR
12	5R-775	320 6398	° Choke Housing Screw	2
13	6R-2066A		Main Body and Plugs Assembly	1
14	7R-48-3	320 6313	Pump Discharge Ball Retainer	1
15	7R-255	320 6399	Fuel Inlet Plug	1
16	7R-274	320 6314	Pump Inlet Ball Retainer	1
17	8R-453	315 3999	#+∀ Flange Gasket	1
18	8R-534	320 2203	#+Ħ Economizer Body Gasket	1
19	8R-538		#+ Pump Discharge Nozzle Gasket	1
20	8R-539		+ Fuel Inlet Seat Screw Gasket	1
21	8R-540		+ Fuel Inlet Seat Gasket	1
22	8R-541		#+ Fuel Inlet Plug Gasket	1
23	8R-545		Main Well Body Spacer Gasket	1
24	8R-568		#+° Choke Housing Gasket	1
25	8R-579		#+@ Float Bowl Gasket	1
26	8R-582		#+ Float Bowl Clamp Ring Gasket	1
27	8R-644		#+° Choke Thermostat Housing Gasket	1
28	8R-864		#+∀ Throttle Body Gasket	1
29	9R-70		∀ Throttle Plate	1
30	10R-755A		∀ Throttle Lever and Shaft Assembly	1
31	12R-2198A		∀ Throttle Body and Shaft Assembly	1
32	15R-36	320 2205	*∀ Idle Adjusting Needle	1
33	16R-178A	320 2207	@ Float and Lever Assembly	1
34	17R-31	320 6400	Float Lever Shaft	1
35	18R-53AS	320 2211	#* Fuel Inlet Valve and Seat Assembly	1
36	19R-219	320 6401	Spark Fitting	1
37	19R-223	320 6362	Fuel Inlet Fitting	1
38	21R-355-28	320 6315	Pump Discharge Nozzle	1
39	22R-40-56	320 3250	Main Jet	1
40	25R-166A	320 2213	#*Ħ Economizer Stem Assembly	1
41	25R-167A	320 6407	Ħ Economizer Body Cover Assembly	1
42	27R-204	320 6316	#+° Choke Shaft Seal	1
43	28R-6	320 6318	* Pump Inlet Ball	1
44	28R-94	320 3181	ϕ*Ж Pump Discharge Ball	1
45	28R-94	320 3181	ϕ*Ж Pump Push Rod Sleeve Ball	1
46	33R-344	320 6319	*∀ Pump Operating Link	1
47	34R-1374	320 3707	@ Float Bowl	1
48	34R-2379A	320 6321	Main Well and Economizer Body and Plugs Assembly	1
49	34R-2757		° Choke Housing Plate	1
50	34R-2740AS		° Choke Housing and Plugs Assembly	1
51	36R-334A	320 2219	#+Ж Pump Diaphragm and Rod Assembly	1
52	38R-108	320 3191	ϕ∀ Idle Adjusting Needle Spring	1
53	38R-110	320 3192	ϕ∀ Throttle Stop Screw Spring	1
54	38R-395	320 3193	ϕЖ Pump Return Spring	1
55	38R-452	320 3194	ϕЖ Pump Operating Spring	1
56	38R-566	320 6402	Float Bumper Spring	1
57	38R-759	320 3201	ϕ° Choke Lever Spring	1
58	39R-11	320 4409	° Choke Shaft Nut	1
59	40R-283	320 6323	Pump Discharge Valve Weight	1
60	42R-112		Ж Pump Push Rod Sleeve	1
61	46R-252	320 6326	° Choke Shaft Nut Lock Washer (Shakeproof)	1
62	46R-529	320 6327	° Choke Shaft Seal Washer	1
63	47R-144A	320 3225	° Choke Thermostat Housing Assembly (Complete) (Identified by "El" on Cover)	1
64	48R-5	320 6403	Float Bumper Spring Retainer	2
65	48R-183	320 3228	ϕ*∀ Pump Operating Link Cotter Pin	2
66	49R-128	320 3219	ϕ° Choke Thermostat Housing Clamp	3
67	49R-187	320 6404	Float Bowl Clamp Ring	1
68	49R-250	320 6405	Float Bowl Clamp	4
69	63R-213A	320 6328	∀ Pump Operating Lever Assembly	1
70	75R-37	320 3240	ϕ∀ Pump Operating Lever Retainer	1

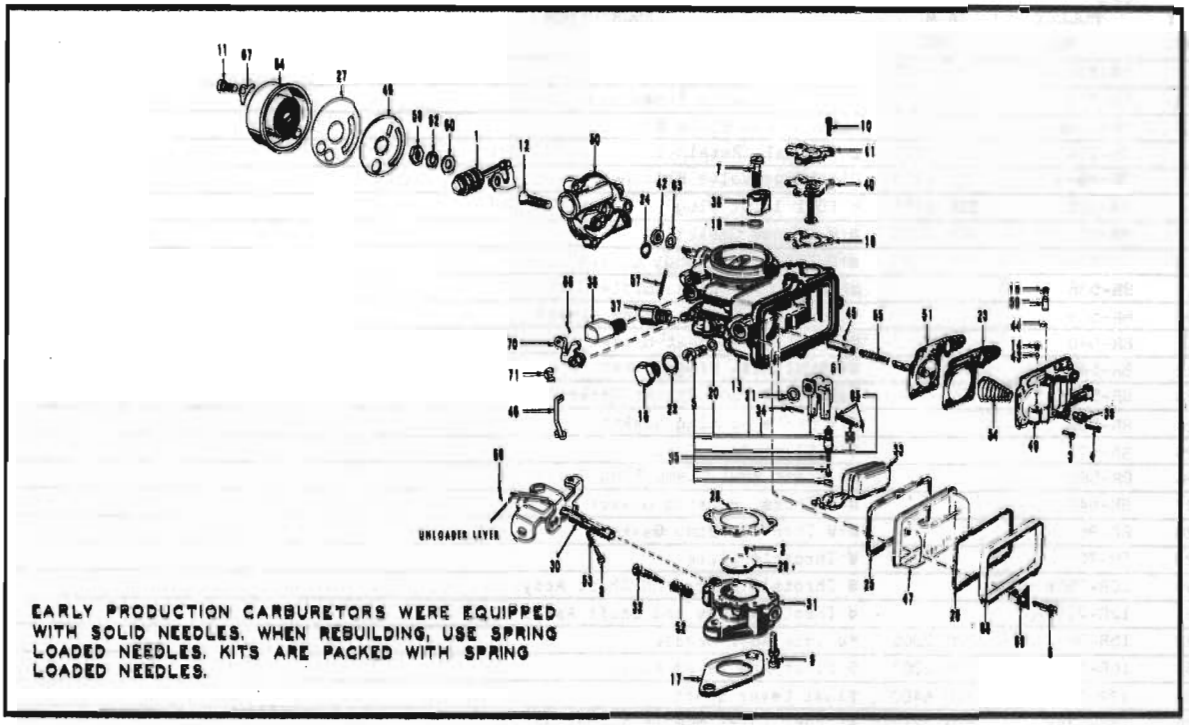

EARLY PRODUCTION CARBURETORS WERE EQUIPPED WITH SOLID NEEDLES. WHEN REBUILDING, USE SPRING LOADED NEEDLES. KITS ARE PACKED WITH SPRING LOADED NEEDLES.

CARBURETOR 60-61 01 (OHV-WAT)

AMERICAN MOTORS No. 316 0027 HOLLEY No. R-2166

KEY NO.	HOLLEY NO.	A.M. NO.	DESCRIPTION	PER CAR
	85A-1111	320 3586	Assortment Kit (Includes all parts listed below which are coded with a ϕ)	
	85R-709	320 2225	Rep Kit (Includes all parts listed below which are coded with a #)	1
	85R-981	320 2442	Repair Kit (Includes all parts listed below which are coded with a *)	1
	85G-641	320 2221	* Gasket Set (Includes all parts listed below which are coded with a +)	1
	85B-1398	320 6300	Bowl Kit (Includes all parts listed below which are coded with a @)	1
	85C-1176	320 6306	Choke Kit (Includes all parts listed below which are coded with a °)	1
	85D-1174	320 6303	Pump Diaphragm Kit (Includes all parts listed below which are coded with a ¥)	1
	85E-1170	320 6305	Economizer Kit (Includes all parts listed below which are coded with a ¤)	1
	85T-1161	320 6309	Throttle Body and Shaft Assy. Kit (Includes all parts listed below which are coded with a ¥)	1
1	4R-648A		° Choke Therm. Lever Link and Piston	1
2	5R-4	320 3101	ϕ*¥ Throttle Plate Screw	2
3	5R-420	320 3106	ϕ Main Well & Econ. Body Screw & L.W. (Short)	3
4	5R-421	320 3107	ϕ Main Well & Econ. Body Screw & L.W. (Long)	2
5	5R-423	320 6406	Fuel Inlet Seat Screw	1
6	5R-425	320 3108	ϕ@ Float Bowl Clamp Screw and Lock Washer	4
7	5R-492	320 6311	Pump Discharge Nozzle Screw	1
8	5R-534	320 3110	ϕ¥ Throttle Stop Screw	1
9	5R-571	320 3115	ϕ Throttle Body Screw and Lock Washer	2
10	5R-641	320 3120	ϕ¤ Economizer Body Screw and Lock Washer	2

KEY NO.	HOLLEY NO.	A.M. NO.	DESCRIPTION	PER CAR
11	5R-731	320 6312	° Therm. Housing Screw	3
12	5R-775	320 6398	° Choke Housing Screw and L.W.	2
13	6R-2066A		Main Body & Plugs Assy.	1
14	7R-274	320 6314	Inlet Ball Retainer	1
15	7R-48-3	320 6313	Discharge Valve Retainer	1
16	7R-255	320 6399	☿ Fuel Inlet Plug	1
17	8R-453	315 3999	#+☿ Flange Gasket	1
18	8R-534	320 2203	#+⊞ Economizer Body Gasket	1
19	8R-538		#+ Pump Discharge Nozzle Gasket	1
20	8R-539		+ Fuel Inlet Seat Screw Gasket	1
21	8R-540		#+ Fuel Inlet Seat Gasket	1
22	8R-541		#+ Fuel Boss Plug Gasket	1
23	8R-545		Main Well Body Spacer Gasket	1
24	8R-568		#+° Choke Housing Gasket	1
25	8R-579		#+@ Float Bowl Gasket	1
26	8R-582		#+ Float Bowl Clamp Ring Gasket	1
27	8R-644		#+° Therm. Housing Gasket	1
28	8R-864		#+☿ Throttle Body Gasket	1
29	9R-70		☿ Throttle Plate	1
30	10R-755A		☿ Throttle Lever and Shaft Assy.	1
31	12R-2198A		☿ Throttle Body and Shaft Assy.	1
32	15R-36	320 2205	*☿ Idle Adj. Needle	1
33	16R-178A	320 2207	@ Float And Lever Assy.	1
34	17R-31	320 6400	Float Lever Shaft	1
35	18R-53AS	320 2211	#+ Fuel Inlet Needle & Seat Assy.	1
36	19R-219	320 6401	Spark Fitting	1
37	19R-223	320 6362	Fuel Inlet Fitting	1
38	21R-355-28	320 6315	Pump Discharge Nozzle	1
39	22R-40-55	320 3166	Main Jet	1
40	25R-166A	320 2213	#+⊞ Economizer Stem Assy.	1
41	25R-167A	320 6407	⊞ Economizer Body Cover Assy.	1
42	27R-204	320 6316	#+° Choke Shaft Seal	1
43	28R-6	320 6318	* Pump Inlet Ball	1
44	28R-94	320 3181	ϕ*Ж Pump Discharge Ball	1
45	28R-94	320 3181	ϕ*Ж Pump Push Rod Ball	1
46	33R-344	320 6319	*☿ Pump Oper. Link	1
47	34R-1374	320 3707	@ Float Bowl	1
48	34R-2757		° Choke Housing Plate	1
49	34R-2379A	320 6321	Main Well & Econ. Body & Plugs Assy.	1
50	34R-2740A		° Choke Housing and Plugs Assy.	1
51	35R-344A	320 2887	#*Ж Pump Diaphragm and Rod Assy.	1
52	38R-108	320 3191	ϕ☿ Idle Adjusting Needle Spring	1
53	38R-110	320 3192	ϕ☿ Throttle Stop Screw Spring	1
54	38R-395	320 3193	ϕЖ Pump Return Spring	1
55	38R-452	320 3194	ϕЖ Pump Oper. Spring	1
56	38R-566	320 6402	Float Bumper Spring	1
57	38R-759	320 3201	ϕ Choke Lever Spring	1
58	39R-11	320 4409	° Choke Shaft Nut	1
59	40R-283	320 6323	Pump Discharge Valve Weight	1
61	42R-112		Ж Pump Push Rod Sleeve	1
62	46R-252	320 6326	° Choke Shaft Nut L.W.	1
63	46R-529	320 6327	° Choke Shaft Seal Washer	1
64	47R-144A	320 3225	° Therm. Housing Assy. Complete	1
65	48R-5	320 6403	Float Bumper Spring Retainer	2
66	48R-183	320 3228	ϕ*☿ Pump Oper. Link Retainer	2
67	49R-128	320 3229	ϕ° Therm. Housing Clamp	3
68	49R-187	320 6404	Float Bowl Clamp Ring	1
69	49R-250	320 6405	Float Bowl Clamp	4
70	63R-233A	320 6328	☿ Pump Oper. Lever Assy.	1
71	75R-37	320 3240	ϕ☿ Pump Oper. Lever Retainer	1

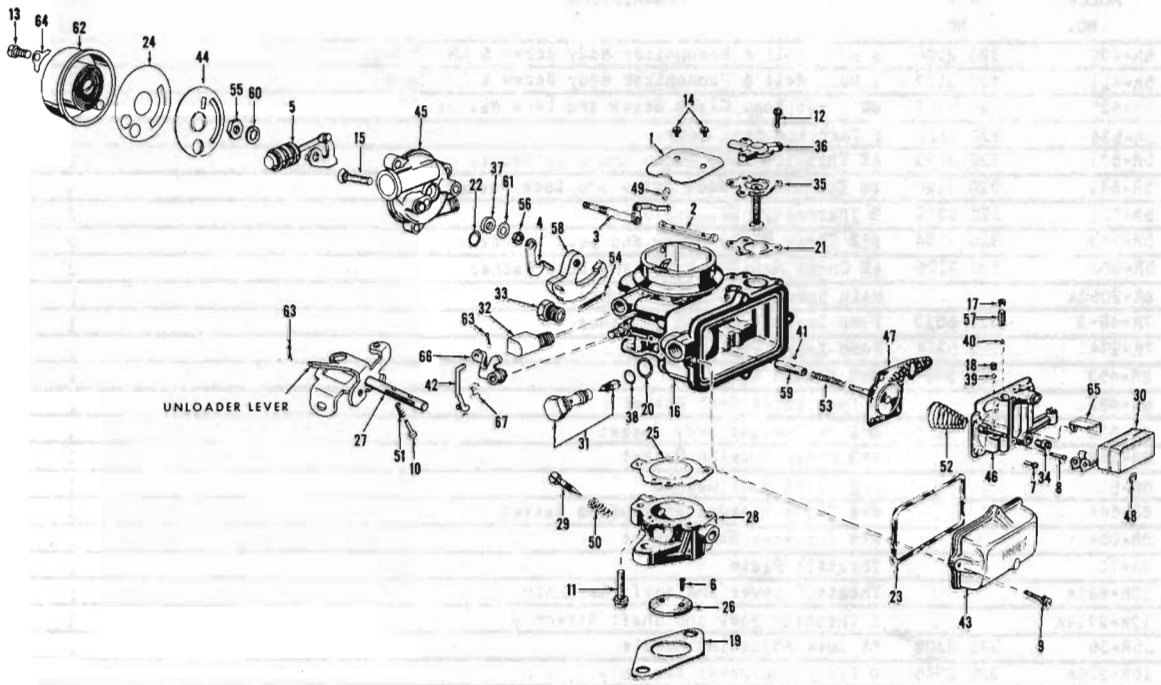

CARBURETOR 61 01 (OHV)

AMERICAN MOTORS No. 316 1238 HOLLEY No. R-2269

KEY NO.	HOLLEY NO.	A.M. NO.	DESCRIPTION	PER CAR
	85A-1111	320 3586	Assortment Kit (Includes all parts listed below which are coded with a ϕ)	
	85R-743	320 3605	Pep Kit (Includes all parts listed below which are coded with a # (Replaces 320 2788)	1
	85R-1005	320 2789	Repair Kit (Includes all parts listed below which are coded with a *)	1
	85G-1006	320 2787	* Gasket Kit (Includes all parts listed below which are coded with a +)	1
	85M-1089	320 3418	Modification Kit (For Positive Ventilation Cars Only; incl. all parts listed below which are coded with a °)	1
		316 2749	Metering Jet Package (Includes 1-Holley 22R-40-49 Metering Jet, 2 sizes lean for altitudes 2,000 to 5,000 feet, and 1-Holley 22R-40-47 Metering Jet, 4 sizes lean for altitudes 5,000 to 10,000 ft.)(Export Special Equipment)	1
	85B-1173	320 6301	Bowl Kit (Includes all parts listed below which are coded with a @)	1
	85C-1177	320 6307	Choke Kit (Includes all parts listed below which are coded with a ⊞)	1
	85D-1175	320 6304	Pump Diaphragm Kit (Includes all parts listed below which are coded with a ⊠)	1
	85E-1170	320 6305	Economizer Kit (Includes all parts listed below which are coded with a ⊻)	1
	85C-1162	320 6302	Choke Shaft Kit (Includes all parts listed below which are coded with a ⊼)	1
	85I-1160	320 6308	Throttle Body and Shaft Kit (Includes all parts listed below which are coded with a ⊻)	1
1	2R-324A		⊼ Choke Plate and Bracket Assembly	1
2	3R-353		⊼ Choke Shaft	1
3	3R-391A		⊼ Choke Link and Lever Assembly	1
4	4R-582		⊞ Choke Pick-Up Lever	1
5	4R-681A		⊞ Choke Thermostat Lever, Link and Piston	1
6	5R-4	320 3101	ϕ* Throttle Plate Screw	2

KEY NO.	HOLLEY NO.	A.M. NO.	DESCRIPTION	PER CAR
7	5R-420	320 3106	ϕ Main Well & Economizer Body Screw & LW (Short)	2
8	5R-421	320 3107	ϕ Main Well & Economizer Body Screw & LW (Long)	3
9	5R-425	320 3108	ϕ@ Float Bowl Clamp Screw and Lock Washer	4
10	5R-534	320 3110	ϕ Throttle Stop Screw	1
11	5R-571	320 3115	ϕ‡ Throttle Body Screw and Lock Washer	2
12	5R-641	320 3120	ϕ∀ Economizer Body Screw and Lock Washer	3
13	5R-731	320 6312	⊞ Thermostat Housing Screw	3
14	5R-773	320 3124	ϕ*Ⅹ Choke Plate Screw and Lock Washer	2
15	5R-806	320 3126	ϕ⊞ Choke Housing Screw and Lock Washer	2
16	6R-2050A		Main Body and Plugs Assembly	1
17	7R-48-3	320 6313	Pump Discharge Ball Retainer	1
18	7R-274	320 6314	Pump Inlet Ball Retainer	1
19	8R-453	315 3999	#+‡ Flange Gasket	1
20	8R-482		+ Fuel Inlet Seat Gasket	1
21	8R-534	320 2203	#+∀ Economizer Body Gasket	1
22	8R-568		#+⊞ Choke Housing Gasket	1
23	8R-579		#+@ Float Bowl Gasket	1
24	8R-644		#+⊞ Choke Thermostat Housing Gasket	1
25	8R-864		#+‡ Throttle Body Gasket	1
26	9R-70		Throttle Plate	1
27	10R-885A		Throttle Lever and Shaft Assembly	1
28	12R-2719A		‡ Throttle Body and Shaft Assembly	1
29	15R-36	320 2205	*‡ Idle Adjusting Needle	1
30	16R-316A	320 2946	@ Float and Lever Assembly	1
31	18R-62AS	320 3495	#* Fuel Inlet Valve and Seat Assembly (Replaces 320 2902)	1
32	19R-219	320 6401	Spark Fitting	1
33	19R-223	320 6362	Fuel Inlet Fitting	1
34	22R-40-51	320 3165	Main Jet	1
34	22R-40-52		° Main Jet (For Positive Ventilation Cars Only)	1
35	25R-166A	320 2213	#*∀ Economizer Stem Assembly	1
36	25R-167A	320 6407	∀ Economizer Body Cover Assembly	1
37	27R-204	320 6316	#*⊞ Choke Shaft Seal	1
38	27R-229	320 6317	+ Fuel Inlet Seat Seal	1
39	28R-6	320 6318	* Pump Inlet Ball	1
40	28R-94	320 3181	ϕ*Ⅹ Pump Discharge Ball	1
41	28R-94	320 3181	ϕ*Ⅹ Pump Push Rod Sleeve Ball	1
42	33R-368	320 6320	*‡ Pump Operating Link	1
43	34R-1374	320 3707	@ Float Bowl	1
44	34R-2757		⊞ Choke Housing Plate	1
45	34R-3014A		⊞ Choke Housing and Plugs Assembly	1
46	34R-3151A	320 3711	Main Well and Economizer Body and Plugs Assembly	1
47	35R-347A	320 2887	#*Ⅹ Pump Diaphragm and Rod Assembly	1
48	36R-169	320 3189	ϕ*@ Float Retainer	1
49	36R-225	320 3190	ϕ*Ⅹ Choke Plate Link Retainer	1
50	38R-108	320 3191	ϕ‡ Idle Adjusting Needle Spring	1
51	38R-110	320 3192	ϕ Throttle Stop Screw Spring	1
52	38R-396	320 3193	ϕⅩ Pump Return Spring	1
53	38R-452	320 3194	ϕⅩ Pump Operating Spring	1
54	38R-759	320 3201	ϕⅩ Choke Lever Spring	1
55	39R-11	320 4409	⊞ Choke Shaft Nut	1
56	39R-166	320 6322	⊞ Choke Pick-Up Lever Nut	1
57	40R-283	320 6323	Pump Discharge Valve Weight	1
58	41R-338A	320 6324	Ⅹ Fast Idle Cam Assembly	1
59	42R-200		Ⅹ Pump Push Rod Sleeve	1
60	46R-252	320 6326	⊞ Choke Shaft Nut Lock Washer (Shakeproof)	1
	46R-347		° Economizer Shim (For Positive Ventilation Cars Only)	2
61	46R-529	320 6327	⊞ Choke Shaft Seal Washer	1
62	47R-160A	320 3224	⊞ Choke Therm. Hsg. Assy. (Cp)(Ident. by "R" on Cover)	1
63	48R-183	320 3228	ϕ*‡ Pump Operating Link Cotter Pin	2
64	49R-128	320 3229	ϕ⊞ Choke Thermostat Housing Clamp	3
65	59R-46		@ Fuel Inlet Baffle	1
66	63R-233A	320 6328	‡ Pump Operating Lever Assembly	1
67	75R-37	320 3240	ϕ‡ Pump Operating Lever Retainer	1

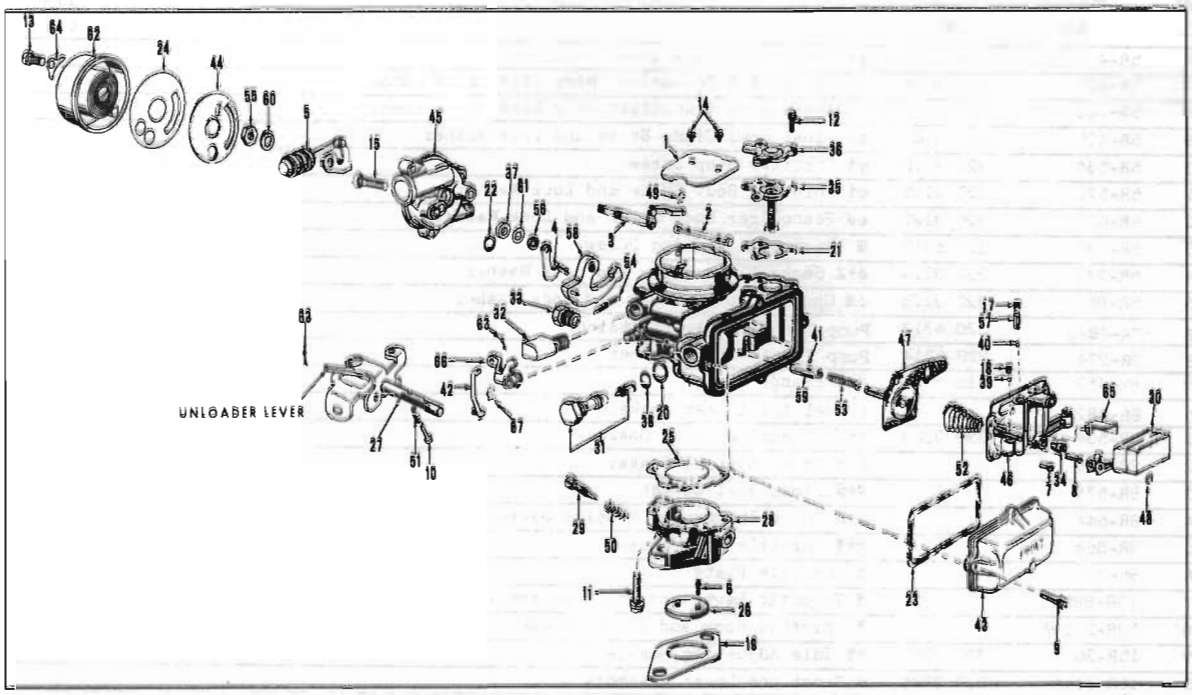

CARBURETOR 61 01 (OHV)

AMERICAN MOTORS No. 316 2948 HOLLEY No. R-2381

KEY NO.	HOLLEY NO.	A.M. NO.	DESCRIPTION	PER CAR
	86A-1111	320 3586	Assortment Kit (Includes all parts listed below which are coded with a ϕ)	
	85R-743	320 3605	Rep Kit (Includes all parts listed below which are coded with a #) (Replaces 320 2788)	1
	85R-1005	320 2789	Repair Kit (Includes all parts listed below which are coded with a *)	1
	85G-1006	320 2787	* Gasket Kit (Includes all parts listed below which are coded with a *)	1
	85M-1089	320 3418	Modification Kit (For Positive Ventilation Cars Only; incl. all parts listed below which are coded with a ◊)	1
		316 2750	Metering Jet Package (Includes 1-Holley 22R-40-53 Metering Jet, 2 sizes lean for altitudes 2,000 to 5,000 feet, and 1-Holley 22R-40-51 Metering Jet, 4 sizes lean for altitudes 5,000 to 10,000 feet)	1
	85B-1173	320 6301	Bowl Kit (Includes all parts listed below which are coded with a @)	1
	85C-1177	320 6307	Choke Kit (Includes all parts listed below which are coded with a ⊞)	1
	85D-1175	320 6304	Pump Diaphragm Kit (Includes all parts listed below which are coded with a ⊠)	1
	85E-1170	320 6305	Economizer Kit (Includes all parts listed below which are coded with a ⊻)	1
	85C-1162	320 6302	Choke Shaft Kit (Includes all parts listed below which are coded with a ⊼)	1
	85T-1160	320 6308	Throttle Body and Shaft Kit (Includes all parts listed below which are coded with a ⊛)	1
1	2R-324A		⊼ Choke Plate and Bracket Assembly	1
2	3R-353		⊼ Choke Shaft	1
3	3R-391A		⊼ Choke Link and Lever Assembly	1
4	4R-582		⊞ Choke Pick-Up Lever	1
5	4R-581A		⊞ Choke Thermostat Lever, Link and Piston Assembly	1

GROUP 4

KEY NO.	HOLLEY NO.	A.M. NO.	DESCRIPTION	PER CAR
6	5R-4	320 3101	ϕ*⧗ Throttle Plate Screw	2
7	5R-420	320 3106	ϕ Main Well & Economizer Body Screw & LW (Short)	2
8	5R-421	320 3107	ϕ Main Well & Economizer Body Screw & LW (Long)	3
9	5R-425	320 3108	ϕ@ Float Bowl Clamp Screw and Lock Washer	4
10	5R-534	320 3110	ϕ⧗ Throttle Stop Screw	1
11	5R-571	320 3115	ϕ⧗ Throttle Body Screw and Lock Washer	2
12	5R-641	320 3120	ϕ⧬ Economizer Body Screw and Lock Washer	3
13	5R-731	320 6312	⧈ Thermostat Housing Screw	3
14	5R-773	320 3124	ϕ*⧖ Choke Plate Screw and Lock Washer	2
15	5R-806	320 3126	ϕ⧈ Choke Housing Screw and Lock Washer	2
17	7R-48-3	320 6313	Pump Discharge Ball Retainer	1
18	7R-274	320 6314	Pump Inlet Ball Retainer	1
19	8R-453	315 3999	#+⧗ Flange Gasket	1
20	8R-482		+ Fuel Inlet Seat Gasket	1
21	8R-534	320 2203	#+⧬ Economizer Body Gasket	1
22	8R-568		#+⧈ Choke Housing Gasket	1
23	8R-579		#+@ Float Bowl Gasket	1
24	8R-644		#+⧈ Choke Thermostat Housing Gasket	1
25	8R-864		#+⧗ Throttle Body Gasket	1
26	9R-70		⧗ Throttle Plate	1
27	10R-885A		⧗ Throttle Lever and Shaft Assembly	1
28	12R-2719A		⧗ Throttle Body and Shaft Assembly	1
29	15R-36	320 2205	*⧗ Idle Adjusting Needle	1
30	16R-316A	320 2946	@ Float and Lever Assembly	1
31	18R-62AS	320 3495	#* Fuel Inlet Valve and Seat Assembly (Replaces 320 2902)	1
32	19R-219	320 6401	Spark Fitting	1
33	19R-223	320 6362	Fuel Inlet Fitting	1
34	22R-40-51	320 3165	Main Jet	1
34	22R-40-52		° Main Jet (For Positive Ventilation Cars Only)	1
35	25R-166A	320 2213	#*⧬ Economizer Stem Assembly	1
36	25R-167A	320 6407	⧬ Economizer Body Cover Assembly	1
37	27R-204	320 6316	#+⧈ Choke Shaft Seal	1
38	27R-229	320 6317	+ Fuel Inlet Seat Seal	1
39	28R-6	320 6318	* Pump Inlet Ball	1
40	28R-94	320 3181	ϕ*⧓ Pump Discharge Ball	1
41	28R-94	320 3181	ϕ*⧓ Pump Push Rod Sleeve Ball	1
42	33R-368	320 6320	*⧗ Pump Operating Link	1
43	34R-1374	320 3707	@ Float Bowl	1
44	34R-2757		⧈ Choke Housing Plate	1
45	34R-3014A		⧈ Choke Housing and Plugs Assembly	1
46	34R-3386A	320 3713	Main Well and Economizer Body and Plugs Assembly	1
47	35R-347A	320 2887	#*⧓ Pump Diaphragm and Rod Assembly	1
48	36R-169	320 3189	ϕ*@ Float Retainer	1
49	36R-225	320 3190	ϕ*⧖ Choke Plate Link Retainer	1
50	38R-108	320 3191	ϕ⧗ Idle Adjusting Needle Spring	1
51	38R-110	320 3192	ϕ Throttle Stop Screw Spring	1
52	38R-395	320 3193	ϕ⧓ Pump Return Spring	1
53	38R-452	320 3194	ϕ⧓ Pump Operating Spring	1
54	38R-759	320 3201	ϕ⧖ Choke Lever Spring	1
55	39R-11	320 4409	⧈ Choke Shaft Nut	1
56	39R-166	320 6322	⧈ Choke Pick-Up Lever Nut	1
57	40R-283	320 6323	Pump Discharge Valve Weight	1
58	41R-338A	320 6324	⧖ Fast Idle Cam Assembly	1
59	42R-200		⧓ Pump Push Rod Sleeve	1
60	46R-252	320 6326	⧈ Choke Shaft Nut Lock Washer (Shakeproof)	1
61	46R-529	320 6327	⧈ Choke Shaft Seal Washer	1
62	47R-160A	320 3224	⧈ Choke Therm. Hsg. Assy. (Cp)(Ident. by "R" on Cover)	1
63	48R-183	320 3228	ϕ*⧗ Pump Operating Link Cotter Pin	2
64	49R-128	320 3229	ϕ⧈ Choke Thermostat Housing Clamp	3
65	59R-46		@ Fuel Inlet Baffle	1
66	63R-570	320 6329	⧗ Pump Operating Lever Assembly	1
67	75R-37	320 3240	ϕ⧗ Pump Operating Lever Retainer	1

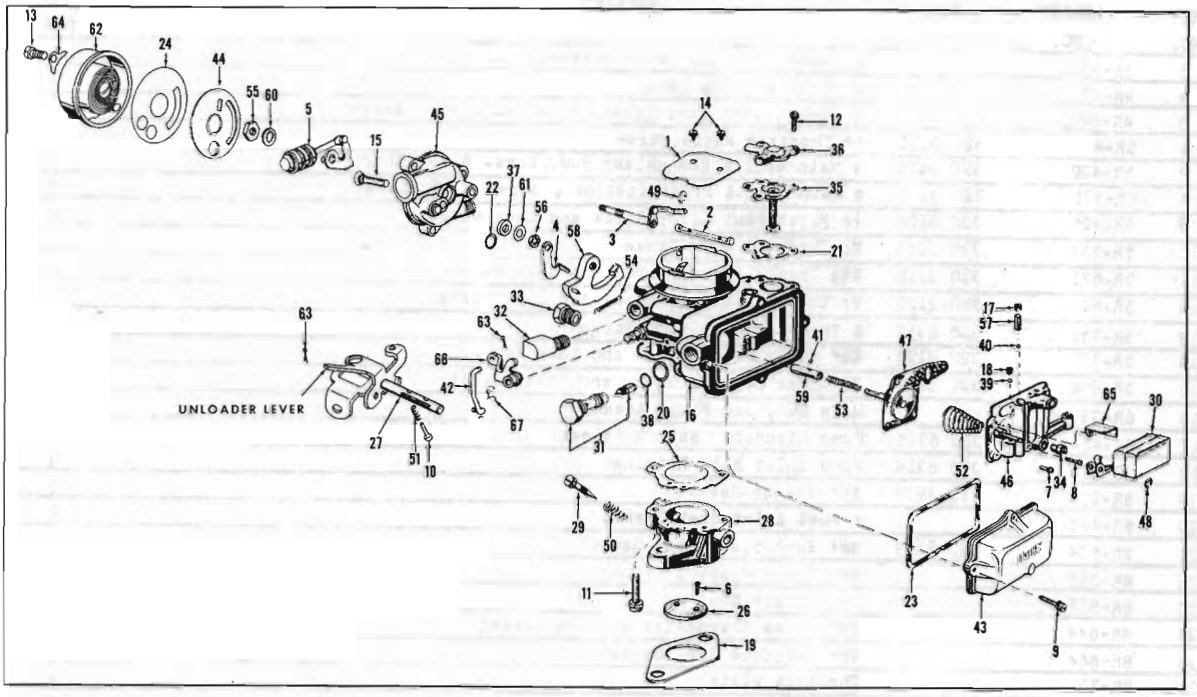

CARBURETOR 61-62 01 (OHV-LES)

A.M. No. 316 2968 HOLLEY No. R-2381-1

KEY NO.	HOLLEY NO.	A.M. NO.	DESCRIPTION	PER CAR
	85A-1111	320 3586	Assortment Kit (Includes all parts listed below which are coded with a ϕ)	
	85R-766	320 3605	Pep Kit (Includes all parts listed below which are coded with a #)	1
	85R-1127	320 3604	Repair Kit (Inlcudes all parts listed below which are coded with a *)	1
	85G-1006	320 2787	* Gasket Kit (Includes all parts listed below which are coded with a +)	1
	85M-1089	320 3418	Modification Kit (For Positive Ventilation Cars Only; includes all parts listed below which are coded with a °)	1
	85M-1204	320 3872	Modification kit (For Lean Acceleration: Includes all parts listed below which are coded with a @)	1
		316 2749	Metering Jet Pkg. (Incl. 1-Holley 22R-40-49 Metering Jet, 2 sizes lean for alt. 2,000 to 5,000 ft., & 1-Holley 22R-40-47 Metering Jet, 4 sizes lean for alt. 5,000 to 10,000 ft.) (Export Special Equipment)	1
	85B-1173	320 6301	Bowl Kit (Includes all parts listed below which are coded with a ‡)	1
	85C-1177	320 6307	Choke Kit (Includes all parts listed below which are coded with a ⊞)	1
	85D-1175	320 6304	Pump Diaphragm Kit (Includes all parts listed below which are coded with a Ж)	1
	85E-1170	320 6305	Economizer Kit (Includes all parts listed below which are coded with a Ю)	1
	85C-1162	320 6302	Choke Shaft Kit (Includes all parts listed below which are coded with a Ƶ)	1
	85T-1160	320 6308	Throttle Body and Shaft Kit (Includes all parts listed below which are coded with a ‡)	1
1	2R-324A		Ƶ Choke Plate and Bracket Assembly	1
2	3R-353		Ƶ Choke Shaft	1

KEY NO.	HOLLEY NO.	A.M. NO.	DESCRIPTION	PER CAR
3	3R-391A		Choke Link and Lever Assembly	1
4	4R-582		Choke Pick-Up Lever	1
5	4R-681A		Choke Thermostat Lever, Link and Piston Assembly	1
6	5R-4	320 3101	* Throttle Plate Screw	2
7	5R-420	320 3106	Main Well & Economizer Body Screw & LW (Short)	2
8	5R-421	320 3107	Main Well & Economizer Body Screw & LW (Long)	3
9	5R-425	320 3108	Float Bowl Clamp Screw and Lock Washer	4
10	5R-534	320 3110	Throttle Stop Screw	1
11	5R-571	320 3115	Throttle Body Screw and Lock Washer	2
12	5R-641	320 3120	Economizer Body Screw and Lock Washer	3
13	5R-731	320 6312	Thermostat Housing Screw	3
14	5R-773	320 3124	* Choke Plate Screw and Lock Washer	2
15	5R-806	320 3126	Choke Housing Screw and Lock Washer	2
16	6R-2309A		Main Body and Plugs Assembly	1
17	7R-48-3	320 6313	Pump Discharge Ball Retainer	1
18	7R-274	320 6314	Pump Inlet Ball Retainer	1
19	8R-253	315 3999	Flange Gasket	1
20	8R-482		+ Fuel Inlet Seat Gasket	1
21	8R-534	320 2203	Economizer Body Gasket	1
22	8R-568		Choke Housing Gasket	1
23	8R-579		Float Bowl Gasket	1
24	8R-644		Choke Thermostat Housing Gasket	1
25	8R-864		Throttle Body Gasket	1
26	9R-70		Throttle Plate	1
27	10R-885A		Throttle Lever and Shaft Assembly	1
28	12R-2719A		Throttle Body and Shaft Assembly	1
29	15R-36	320 2205	* Idle Adjusting Needle	1
30	16R-316A	320 2946	Float and Lever Assembly	1
31	18R-81AS	320 3495	* Fuel Inlet Valve and Seat Assembly	1
32	19R-219	320 6401	Spark Fitting	1
33	19R-223	320 6362	Fuel Inlet Fitting	1
34	22R-40-51	320 3165	Main Jet	1
34	22R-40-52		° Main Jet (For Positive Ventilation Cars Only)	1
	22R-40-54		@ Main Jet	1
35	25R-166A	320 2213	Economizer Stem Assembly	1
36	25R-167A	320 6407	Economizer Body Cover Assembly	1
37	27R-204	320 6316	Choke Shaft Seal	1
38	27R-229	320 6317	+ Fuel Inlet Seat Seal	1
39	28R-6	320 6318	Pump Inlet Ball	1
40	28R-94	320 3181	Pump Discharge Ball	1
41	28R-94	320 3181	* Pump Push Rod Sleeve Ball	1
42	33R-368	320 3207	Pump Operating Link	1
43	34R-1374	320 3707	Float Bowl	1
44	34R-2757		Choke Housing Plate	1
45	34R-3014A		Choke Housing and Plugs Assembly	1
46	34R-3386A	320 3713	Main Well and Economizer Body and Plugs Assembly	1
	34R-3617A		@ Main Well and Economizer Body and Plug Assembly	1
47	35R-347A	320 2887	* Pump Diaphragm and Rod Assembly	1
48	36R-169	320 3189	* Float Retainer	1
49	36R-225	320 3190	* Choke Plate Link Retainer	1
50	38R-108	320 3191	Idle Adjusting Needle Spring	1
51	39R-110	320 3192	Throttle Stop Screw Spring	1
52	38R-395	320 3193	Pump Return Spring	1
53	38R-452	320 3194	Pump Operating Spring	1
54	38R-759	320 3201	Choke Lever Spring	1
55	39R-11	320 4409	Choke Shaft Nut	1
56	39R-166	320 6322	Choke Pick Up Lever Nut	1
57	40R-383	320 6323	Pump Discharge Valve Weight	1
58	41R-338A	320 6324	Fast Idle Cam Assembly	1
59	42R-200		Pump Push Rod Sleeve	1
60	46R-252	320 6326	Choke Shaft Nut Lock Washer (Shakeproof)	1

KEY NO.	HOLLEY NO.	A.M. NO.	DESCRIPTION	PER CAR
	46R-347		° Economizer Shim (For Positive Ventilation Cars Only)	2
61	46R-529	320 6327	⊞ Choke Shaft Seal Washer	1
62	47R-160	320 3224	⊞ Choke Thermostat Housing Assembly (Complete) (Identified by "R" on Cover)	1
63	48R-183	320 3228	‡¢* Pump Operating Link Cotter Pin	1
64	49R-238	320 3229	⊞¢ Choke Thermostat Housing Clamp	3
65	59R-46		¦ Fuel Inlet Baffle	1
66	63R-570	320 6329	‡ Pump Operating Lever Assembly	1
67	75R-37	320 3240	‡¢ Pump Operating Lever Retainer	1

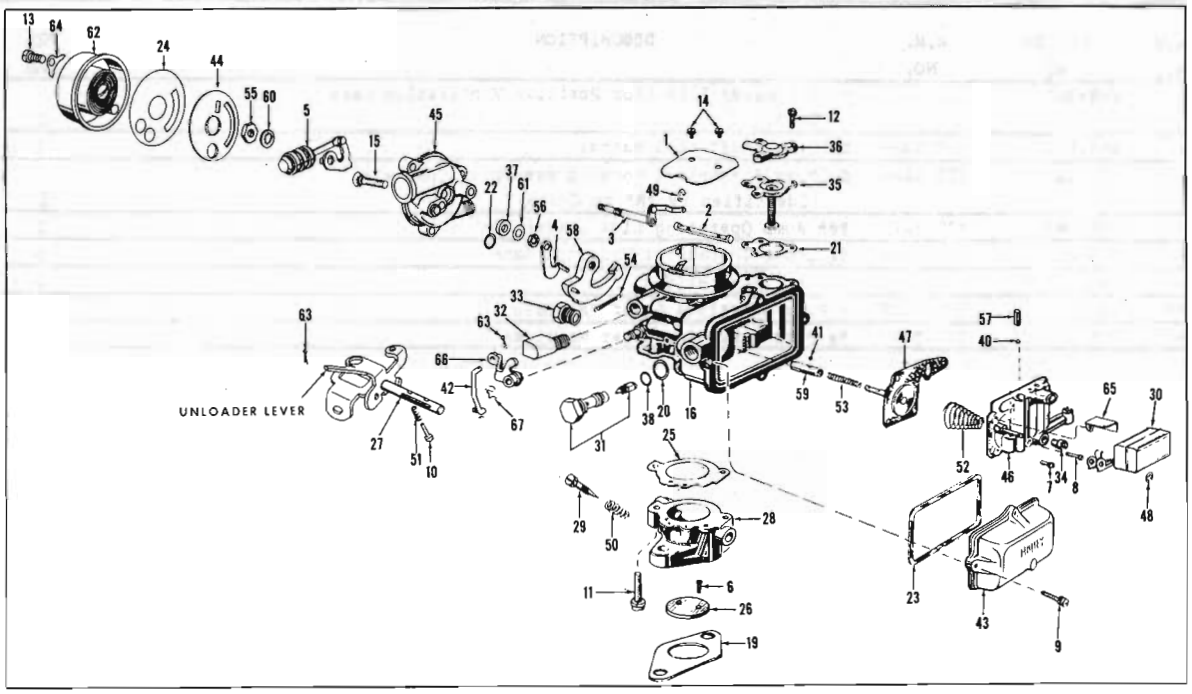

CARBURETOR 62 01 (OHV-WST-WES)(OHV-WOD-WES)

A.M. No. 316 3654 HOLLEY No. R-2446

KEY NO.	HOLLEY NO.	A.M. NO.	DESCRIPTION	PER CAR
	85A-1111	320 3586	Assortment Kit (Includes all parts listed below which are coded with a ϕ)	
	85R-766	320 3605	Pep Kit (Includes all parts listed below which are coded with a #)	1
	85R-1127	320 3604	Repair Kit (Includes all parts listed below wich are coded with a *)	1
	85G-1006	320 2787	* Gasket Kit (Includes all parts listed below which are coded with a +)	1
	85M-1089	320 3418	Modification Kit (For Positive Ventilation Cars Only; incl. all parts listed below which are coded with a °)	1
		316 2749	Metering Jet Pkg. (Incl. 1-Holley 22R-40-49 Metering Jet, 2 sizes lean for alt. 2,000 to 5,000 ft., & 1-Holley 22R-40-47 Metering Jet, 4 sizes lean for alt. 5,000 to 10,000 ft.) (Export Special Equipment)	1
	85B-1173	320 6301	Bowl Kit (Includes all parts listed below which are coded with a @)	1
	85C-1177	320 6307	Choke Kit (Includes all parts listed below which are coded with a ⊞)	1
	85D-1175	320 6304	Pump Diaphragm Kit (Includes all parts listed below which are coded with a Ж)	1
	85E-1170	320 6305	Economizer Kit (Includes all parts listed below which are coded with a ☿)	1
	85C-1162	320 6302	Choke Shaft Kit (Includes all parts listed below which are coded with a ⊼)	1
	85T-1178	320 6310	Throttle Body And Shaft Kit (Includes all parts listed below which are coded with a Ⅹ)	1
1	2R-324A		⊼ Choke Plate and Bracket Assembly	1
2	3R-353		⊼ Choke Shaft	1
3	3R-391A		⊼ Choke Link and Lever Assembly	1
4	4R-582		⊞ Choke Pick-Up Lever	1
5	4R-681A		⊞ Choke Thermostat Lever, Link and Piston Assembly	1
6	5R-4	320 3101	ϕ* Throttle Plate Screw	2
7	5R-420	320 3106	ϕ Main Well and Economizer Body Screw and Lock Washer (Short)	2
8	5R-421	320 3107	ϕ Main Well and Economizer Body Screw and Lock Washer (Long)	3

KEY NO.	HOLLEY NO.	A.M. NO.	DESCRIPTION	PER CAR
9	5R-425	320 3108	@ϕ Float Bowl Clamp Screw and Lock Washer	4
	5R-441	320 3177	ϕ Dashpot Lever Screw (Not shown)	1
	5R-447	320 3178	ϕ Dashpot Lever Adjusting Screw (Not shown)	1
10	5R-534	320 3110	ϕ Throttle Stop Screw	1
11	5R-571	320 3115	ϕZ Throttle Body Screw and Lock Washer	2
12	5R-641	320 3120	ϕ Economizer Body Screw and Lock Washer	3
13	5R-731	320 6312	Thermostat Housing Screw	3
14	5R-773	320 3124	ϕ* Choke Plate Screw and Lock Washer	2
15	5R-806	320 3126	ϕ Choke Housing Screw and Lock Washer	2
16	6R-2323A		Main Body and Plugs Assembly	1
19	8R-453	315 3999	#+ Flange Gasket	1
20	8R-482		+ Fuel Inlet Seat Gasket	1
21	8R-534	320 2203	#+ Economizer Body Gasket	1
22	8R-568		#+ Choke Housing Gasket	1
23	8R-579		@#+ Float Bowl Gasket	1
24	8R-644		#+ Choke Thermostat Housing Gasket	1
25	8R-864		#+ Throttle Body Gasket	1
26	9R-70		Throttle Plate	1
27	10R-885A		Throttle Lever and Shaft Assembly	1
	11R-612A		Dashpot Lever Assembly (Not shown)	1
28	12R-2694A		Throttle Body and Shaft Assembly	1
29	15R-36	320 2205	* Idle Adjusting Needle	1
30	16R-316A	320 2946	@ Float and Lever Assembly	1
31	18R-81AS	320 3495	#* Fuel Inlet Valve and Seat Assembly	1
32	19R-219	320 6401	Spark Fitting	1
33	19R-223	320 6362	Fuel Inlet Fitting	1
34	22R-40-51	320 3165	Main Jet	1
34	22R-40-52		° Main Jet (For Positive Ventilation Cars Only)	1
35	25R-166A	320 2213	#* Economizer Stem Assembly	1
36	25R-167A	320 6407	Economizer Body Cover Assembly	1
37	27R-204	320 6316	#+ Choke Shaft Seal	1
38	27R-229	320 6317	+ Fuel Inlet Seat Seal	1
40	28R-94	320 3181	ϕ* Pump Discharge Ball	1
41	28R-94	320 3181	ϕ* Pump Push Rod Sleeve Ball	1
42	33R-368	320 3207	Pump Operating Link	1
43	34R-1374	320 3707	@ Float Bowl	1
44	34R-2757		Choke Housing Plate	1
45	34R-3014A		Choke Housing and Plugs Assembly	1
46	34R-3386A	320 3713	Main Well and Economizer Body and Plugs Assembly	1
47	35R-347A	320 2887	#* Pump Diaphragm and Rod Assembly	1
48	36R-169	320 3189	@ϕ* Float Retainer	1
49	36R-225	320 3190	ϕ* Choke Plate Link Retainer	1
50	38R-108	320 3191	ϕ Idle Adjusting Needle Spring	1
51	38R-110	320 3192	ϕ Throttle Stop Screw Spring	1
52	38R-395	320 3193	ϕ Pump Return Spring	1
53	38R-452	320 3194	ϕ Pump Operating Spring	1
54	38R-759	320 3201	ϕ Choke Lever Spring	1
55	39R-11	320 4409	Choke Shaft Nut	1
56	39R-166	320 6322	Choke Pick Up Lever Nut	1
57	40R-283	320 6323	Pump Discharge Valve Weight	1
58	41R-338A	320 6324	Fast Idle Cam Assembly	1
59	42R-200		Pump Push Rod Sleeve	1
	46R-10	320 6325	Dashpot Lock Washer (Not shown)	1
60	46R-252	320 6326	Choke Shaft Nut Lock Washer (Shakeproof)	1
	46R-347		° Economizer Shim (For Positive Ventilation Cars Only)	2
61	46R-529	320 6327	Choke Shaft Seal Washer	1
62	47R-160A	320 3224	Choke Therm. Hsg. Assy. (Cp) (Ident. by "R" on Cover)	1
63	48R-183	320 3228	ϕ* Pump Operating Link Cotter Pin	1
64	49R-128	320 3229	ϕ Choke Thermostat Housing Clamp	3
	58R-49A	320 3209	Dashpot Assembly (Not shown)	1
65	59R-46		@ Fuel Inlet Baffle	1
66	63R-233A	320 6328	Pump Operating Lever Assembly	1
67	75R-37	320 3240	ϕ Pump Operating Lever Retainer	1

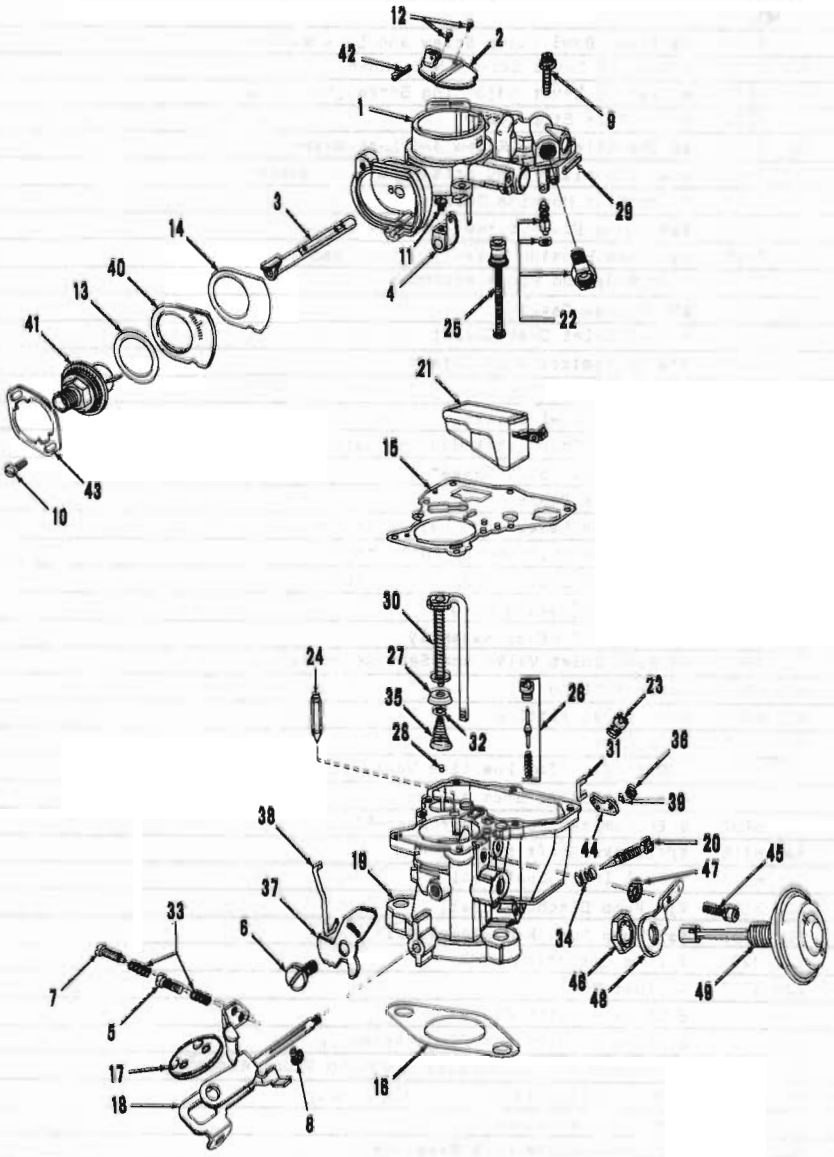

CARBURETOR 63-64 01 (OHV-LDT)

A.M. NO. 316 6872 (Less Dashpot) HOLLEY NO. R-2555, R-2555-1 And R-2555-2
A.M. NO. 316 6875 (With Dashpot)(Not Serviced) HOLLEY NO. R-2556, R-2556-1 And R-2556-2
Order 316 6872 And 320 4367

KEY NO.	HOLLEY NO.	A.M. NO.	DESCRIPTION	PER CAR
	85A-1111	320 3586	Assortment Kit (Includes all parts listed below which are coded with a ϕ)	
	85A-1265	320 4399	Assortment Kit (Includes all parts listed below which are coded with a °)	
	85R-770	320 4369	Pep Kit (Includes all parts listed below which are coded with a #)	1
	85R-1260	320 4370	Repair Kit (Includes all parts listed below which are coded with a *)	1
	85G-1261	320 4368	* Gasket Set (Includes all parts listed below which are coded with a +)	1
	85R-1314	320 6352	Choke Kit (For 2555, 2556)(Includes all parts listed below which are coded with a ※)	1

KEY NO	HOLLEY NO.	A.M. NO.	DESCRIPTION	PER CAR
	85R-1304	320 6354	Choke Kit (For 2555-1, 2555-2, 2556-1, and 2556-2) (Includes all parts listed below which are coded with a ▦)	1
	85C-1301	320 6351	Choke Shaft Kit (Includes all parts listed below which are coded with a ☤)	1
	85T-1303	320 6356	Throttle Shaft Kit (Includes all parts listed below which are coded with a ⧗)	1
	85R-1263	320 4367	Dashpot Kit (Includes all parts listed below which are coded with a @)	1
1	1R-836A	320 6357	Air Horn and Tube Assembly	1
2	2R-352A		☤ Choke Plate Assembly	1
3	3R-457A		☤ Choke Shaft and Lever Assembly	1
4	4R-745B		☤ Choke Lever	1
5	5R-357	320 4400	° Throttle Stop Screw	1
6	5R-816	320 4401	° ☤ Fast Idle Cam Retainer	1
7	5R-928	320 4412	° Fast Idle Screw (Phillip Head)	1
8	5R-837	320 4402	⧗ * ° Throttle Plate Screw	2
9	5R-847	320 6358	Carb. Body Screw and Lockwasher	8
10	5R-848	320 4403	Ж ▦ ° Thermostat Cap Clamp Screw	2
11	5R-849	320 4404	☤ ° Choke Lever Screw	1
12	5R-906	320 4406	☤ * ° Choke Plate Screw	2
13	8R-941		Ж ▦ + # Thermostat Cap Gasket	1
14	8R-942		Ж ▦ + # Choke Housing Gasket	1
15	8R-982		+# Carb. Body Gasket	1
16	8R-955	315 3999	# + Flange Gasket	1
17	9R-164		⧗ Throttle Plate	1
18	10R-1090A	320 6359	⧗ Throttle Shaft and Lever Assembly	1
19	12R-2878A		Carb. Body and Shaft Assembly	1
	13R-860		Bearing Throttle Shaft (Not Shown)	1
20	15R-61	320 6361	* Idle Needle	1
21	16R-346A-3	320 4844	Float Assembly	1
22	18R-104-AS	320 5127	#* Fuel Inlet Needle and Retainer Assembly	1
22	19R-223	320 6362	Fuel Inlet Fitting	1
23	22R-40-58	320 3251	Main Jet	1
24	23R-321	320 6364	* Pump Discharge Valve	1
25	25R-322A	320 4424	Power Valve Piston Assembly	1
26	25R-336-AS	320 6365	#* Power Valve Assembly	1
27	27R-250	320 6366	#* Pump Piston Cup	1
28	28R-94	320 3181	* Pump Inlet Ball	1
29	29R-726	320 6367	* Float Hinge Pin	1
30	31R-211A	320 4845	Pump Rod and Stem Assembly	1
31	33R-403	320 6368	⧗ * Pump Link	1
32	36R-340	320 4407	#*° Pump Piston Cup Retainer	1
33	38R-108	320 3191	ϕ Throttle Stop Screw Spring	2
34	38R-108	320 3191	ϕ Idle Needle Spring	1
35	38R-975	320 4408	° Pump Return Spring	1
36	39R-11	320 4409	⧗ ° Pump Lever Nut	1
37	41R-428	320 6369	☤ Fast Idle Cam	1
38	43R-301	320 6370	☤ Fast Idle Link	1
39	46R-636	320 6371	⧗ Pump Lever Nut Lock Washer	1
40	47R-176		▦ Ж Choke Housing Plate	1
41	47R-188	320 4455	Ж Thermostat Cap Assembly (Use on Carburetor 2555 and 2556)	1
41	47R-190A	320 4425	▦ Thermostat Cap Assembly (Use on Carburetor 2555-1 and 2556-1)	1
42	48R-183-3	320 3228	☤ * Choke Piston Link Pin	1
43	49R-562		Ж ▦ Thermostat Cap Clamp	1
44	63R-566	320 6373	⧗ Pump Lever	1
45	5R-893	320 4405	°@ Dashpot Bracket Screw	1
46	39R-193	320 4410	°@ Dashpot Nut	1
47	46R-2	320 4411	°@ Dashpot Bracket Screw Lock Washer	1
48	49R-600		@ Dashpot Bracket	1
49	58R-51A	320 6372	@ Dashpot Assembly	1

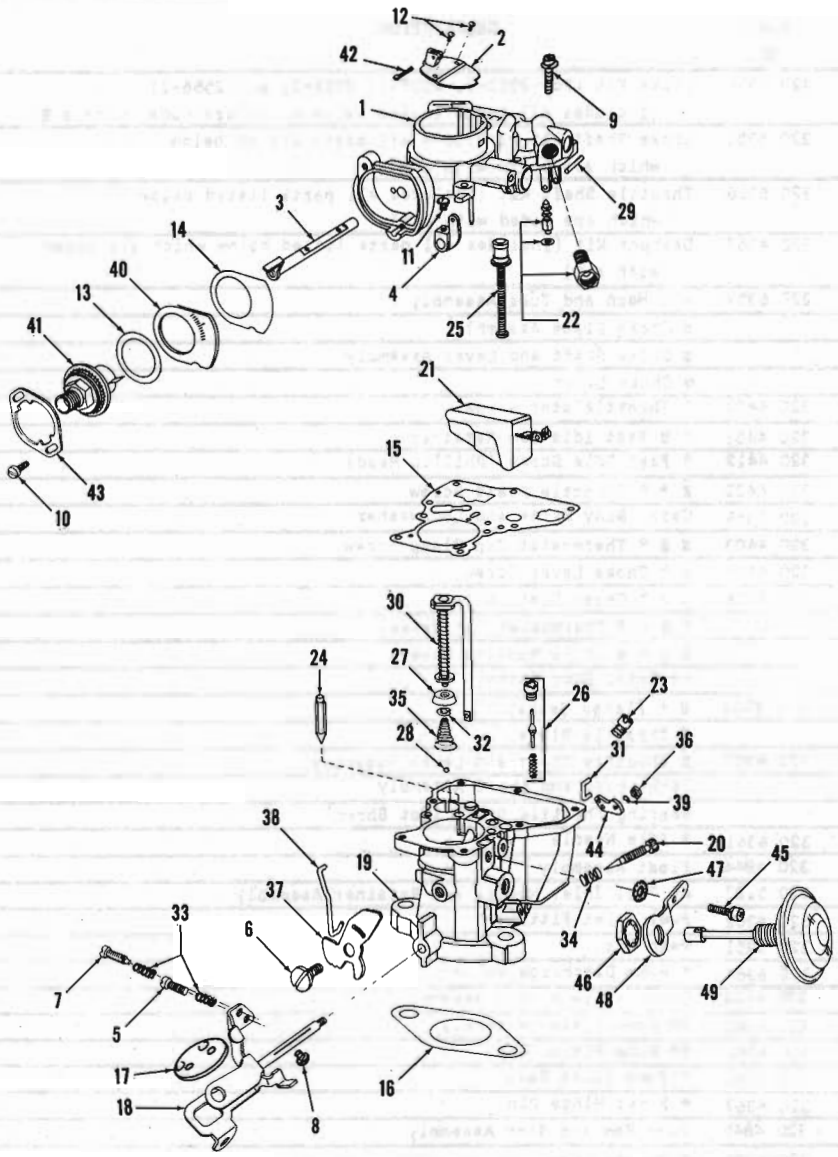

CARBURETOR 63 01 (OHV-LDT-LES): 63 10 (WST-LDT)(WOD-LDT)

A.M. NO. 316 6873 (Less Dashpot) HOLLEY NO. R-2387, R-2387-1* & R-2387-1
A.M. NO. 316 6876 (With Dashpot)(Not Serviced)
Order 316 6873 & 320 4367 HOLLEY NO. R-2557, R-2557-1* & R-2557-1

KEY NO.	HOLLEY NO.	A.M. NO.	DESCRIPTION	PER CAR
	85A-1111	320 3586	Assortment Kit (Includes all parts listed below which are coded with a ϕ)	
	85A-1265	320 4399	Assortment Kit (Includes all parts listed below which are coded with a °)	
	85R-770	320 4369	Pep Kit (Includes all parts listed below which are coded with a #)	1
	85R-1260	320 4370	Repair Kit (Includes all parts listed below which are coded with a *)	1
	85G-1261	320 4368	* Gasket Set (Includes all parts listed below which are coded with a +)	1

KEY NO.	HOLLEY NO.	A.M. NO.	DESCRIPTION	PER CAR
	85R-1314	320 6352	Choke Kit (For R-2387 and R-2557)(Includes all parts listed below which are coded with a ⊞)	1
	85R-1313	320 6353	Choke Kit (For R-2387-1 and R-2557-1)(Includes all parts listed below which are coded with a Ж)	1
	85R-1302	320 6355	Choke Kit (For *R-2387-1 and *R-2557-1)(Includes all parts listed below which are coded with a ☿)	1
	85C-1301	320 6351	Choke Shaft Kit (Includes all parts listed below which are coded with a ⧗)	1
	85T-1303	320 6356	Throttle Shaft Kit (Includes all parts listed below which are coded with a ⧫)	1
	85R-1263	320 4367	Dashpot Kit (Includes all parts listed below which are coded with a @)	1
		316 9636	Metering Jet Pkg. (Incl. 1-Holley 22R-40-61 Metering Jet, 2 sizes lean for alt. 2,000 to 5,000 ft., & 1-Holley 22R-40-59 Metering Jet, 4 sizes lean for alt. 5,000 to 10,000 ft.)	1
1	1R-841A	320 4846	Air Horn and Tube Assembly	1
2	2R-387A		⧗ Choke Plate Assembly	1
3	3R-457A		⧗ Choke Shaft and Lever Assembly	1
4	4R-745B		⧗ Choke Lever	1
5	5R-357	320 4400	° Throttle Stop Screw	1
6	5R-816	320 4401	° ⧗ Fast Idle Cam Retainer	1
7	5R-928	320 4412	° Fast Idle Screw (Phillip Head)	1
8	5R-837	320 4402	⧫ ° * Throttle Plate Screw	2
9	5R-847	320 6358	Carb Body Screw and Lockwasher	8
10	5R-848	320 4403	⊞ Ж ☿ ° Thermostat Cap Clamp Screw	2
11	5R-849	320 4404	⧗ ° Choke Lever Screw	1
11	5R-849	320 4404	° Choke Lever Screw	1
12	5R-906	320 4406	⧗ ° * Choke Plate Screw	2
13	8R-941		⊞ Ж ☿ # + Thermostat Cap Gasket	1
14	8R-942		⊞ Ж ☿ # + Choke Housing Gasket	1
15	8R-982		#+ Carb. Body Gasket	1
16	8R-955	315 3999	# + Flange Gasket	1
17	9R-164		⧫ Throttle Plate	1
18	10R-1090	320 6359	⧫ Throttle Shaft and Lever Assembly	1
19	12R-2674A		Carb. Body and Shaft Assembly	1
20	15R-59	320 6360	* Idle Needle	1
21	16R-346A-3	320 4844	Float Assembly	1
22	18R-104-AS	320 5127	*# Fuel Inlet Needle and Retainer Assembly	1
22	19R-223	320 6362	Fuel Inlet Fitting	1
23	22R-40-63	320 6363	Main Jet	1
24	23R-321	320 6364	* Pump Discharge Valve	1
25	25R-322A	320 4424	Power Valve Piston Assembly	1
26	25R-336-AS	320 6365	*# Power Valve Assembly	1
27	27R-250	320 6366	*# Pump Piston Cup	1
28	28R-94	320 3181	* Pump Inlet Ball	1
29	29R-726	320 6367	* Float Hinge Pin	1
30	31R-211A	320 4845	Pump Rod and Stem Assembly	1
31	33R-403	320 6368	⧫ * Pump Link	1
32	36R-340	320 4407	°*# Pump Piston Cup Retainer	1
33	38R-108	320 3191	ϕ Throttle Stop Screw Spring	2
34	38R-108	320 3191	ϕ Idle Needle Spring	1
35	38R-975	320 4408	° Pump Return Spring	1
36	39R-11	320 4409	° ⧫ Pump Lever Nut	1
37	41R-428	320 6369	⧗ Fast Idle Cam	1
38	43R-301	320 6370	⧗ Fast Idle Link	1
39	46R-636	320 6371	⧫ Pump Lever Nut Lock Washer	1
40	47R-176		⊞ Ж ☿ Choke Housing Plate	1
41	47R-188A	320 4455	⊞ Thermostat Cap Assembly (Use on Carburetor 2387 and 2557)	1
41	47R-192	320 4456	☿ Thermostat Cap Assembly (Use on Carburetor 2387-1 *and 2557-1*)	1
41	47R-193	320 4457	Ж Thermostat Cap Assembly (Use on Carbruetor 2387-1 and 2557-1)	1

GROUP 4

KEY NO.	HOLLEY NO.	A.M. NO.	DESCRIPTION	PER CAR
42	48R-183-3	320 3228	Ⱬ * Choke Piston Link Pin	1
43	49R-562		Ⱳ Ⱳ ⱴ Thermostat Cap Clamp	1
44	63R-566	320 6373	Ⱡ Pump Lever	1
45	5R-893	320 4405	°@ Dashpot Bracket Screw	1
46	39R-193	320 4410	°@ Dashpot Nut	1
47	46R-2	320 4411	°@ Dashpot Bracket Screw Lockwasher	1
48	49R-600		@ Dashpot Bracket	1
49	58R-51A	320 6372	@ Dashpot Assembly	1

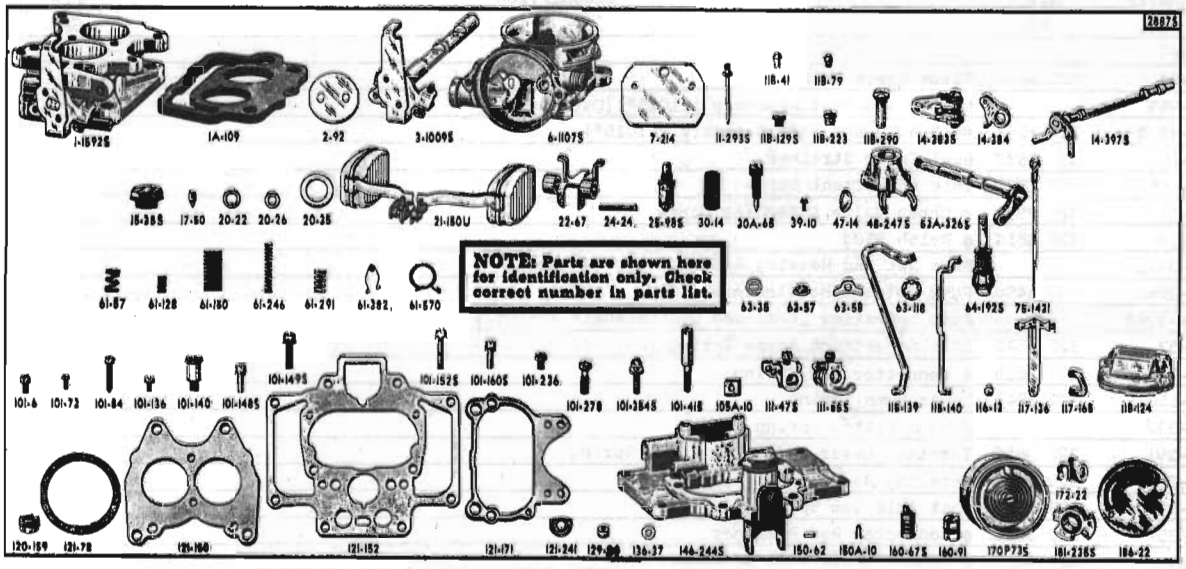

CARBURETOR 63 01 (OHV-WDT-LES): 63 10 (WDT-LES)

A.M. NO. 316 7873 (LESS DASHPOT) CARTER NO. WCD-3535S

CARTER NO.	A.M. NO.	DESCRIPTION	PER CAR
AM-1	320 3800	Assortment Kit (Includes all parts listed below which are coded with a ϕ)	
902-165	320 3773	Zip Kit (Includes 109-316 Float Gauge and all parts listed below which are coded with a #)	1
5075X	320 4291	Repair Kit (Re-Carb)(Includes all parts listed below which are coded with a *)	1
360	320 2945	# Gasket Set (Includes all parts listed below which are coded with a +)	1
1A-109		# Flange Gasket (Use 1A-155)	
1A-155	316 0094	#** Flange Gasket	1
1-1592S		Body Flange Assembly (use 1-1740S)(Not Available)	
1-1740S		Body Flange Assembly (Not Available)	1
2-92	320 6444	Throttle Valve	2
3-1412S	320 6800	Throttle Shaft and Lever Assembly	1
6-1107S		Air Horn and Plug Assembly (Use 6-1577S) (Not Available)	
6-1577S		Air Horn and Plug Assembly (Not Available)	1
7-214		Choke Valve (Use 7-265)	
7-265	320 6485	Choke Valve	1
11-293S		Low Speed Jet Assembly (.026")(Use 11-181S)	
11-181S	320 3835	Low Speed Jet Assembly (.026")	2
11B-41	320 3803	ϕ Rivet Plug	2
11B-79	320 3805	ϕ Rivet Plug	7
11B-129S	320 3807	ϕ Pump Discharge Passage Plug Assembly	1
11B-223	320 3809	ϕ Nozzle Passage Rivet Plug	2
11B-290	320 3811	ϕ Idle Port Rivet Plug	2
14-383S	320 6446	Choke Lever and Screw Assembly	1
14-384	320 6447	Cam Trip Lever	1
14-397S		Choke Piston Lever, Link and Shaft Assembly	1
15-35S	320 6448	Strainer Nut Assembly	1
17-50	320 6449	Pump Check Needle	1
20-126		+ Needle Seat Gasket	1
20-26		#+ Gasket	1
20-35		#** Bowl Strainer Gasket	1
21-150U	320 2232	Unitized Package (Float Assy.)	1

CARTER NO.	A.M. NO.	DESCRIPTION	PER CAR
22-67		Auxiliary Float Lever	1
24-24	320 6451	Float Lever Pin	1
25-98S		Needle and Seat Assembly (.1015")(Use 25-483S)	
25-483S	320 3147	#* Needle and Seat Assembly (.1015")	1
30-14	320 3837	Bowl Cover Strainer	1
30A-65	320 2230	Idle Adjustment Screw	2
39-10	320 3812	ϕ Choke Valve Attaching Screw	2
47-14	320 3814	ϕ Welsh Plug	1
48-247S		Pump Jet and Housing Assembly (Use 48-236S)	
48-286S	320 6486	Pump Jet and Housing Assembly	1
53A-326S		Pump Operating Lever and Countershaft Assembly	1
61-57	320 3845	Idle Adjustment Screw Spring	2
61-128	320 3815	ϕ Connector Rod Spring	1
61-150	320 3847	Lower Pump Spring	1
61-332		Vacuum Piston Spring	
61-291	320 3850	Throttle Lever Adjusting Screw Spring	1
61-382	320 3841	Metering Rod Spring	1
61-570	320 3854	Fast Idle Cam Spring	1
63-35	320 3816	ϕ Connector Rod Retainer	1
63-57	320 3817	ϕ Intake Check Ball Retainer	1
63-58	320 3818	ϕ Coil Housing Retainer	2
63-118	320 3859	Throttle Shaft Retaining Ring (Not Used)	
64-192S	320 2237	#* Pump Plunger, Rod, Spring and Retainer Assembly	1
75-1619		* Metering Rod-standard .073" x .067" x .061"	2
75-1621	316 9634	Metering Rod - 1 Size Lean For 5,000 Ft. Altitude	1
101-6	320 6452	Pump Arm Clamp Screw	1
101-73	320 6453	Throttle Valve Attaching Screw	4
101-84		Fast Idle Adjustment Screw	1
101-136	320 6431	Coil Housing Attaching Screw	2
101-140	320 6454	Fast Idle Cam Attaching Screw	1
101-148S	320 6455	Dust Cover Attaching Screw and Washer Assembly	2
101-149S		Body Flange Attaching Screw and Washer Assembly	4
101-152S	320 6456	Air Horn Attaching Screw and Washer Assembly	4
101-160S	320 6432	Bowl Cover Attaching Screw and Washer Assembly	6
101-236		Metering Rod Arm Clamp Screw	1
101-278	320 6457	Pump Jet Housing Attaching Screw	1
101-354S	320 6458	Choke Lever Clamp Screw and Washer Assembly	1
101-415		Throttle Lever Adjusting Screw	1
105A-10	320 6459	Choke Lever Clamp Screw Nut	1
111-47S	320 6460	Pump Arm and Screw Assembly	1
111-55S		Metering Rod Arm and Screw Assembly	1
115-139	320 6461	Throttle Connector Rod	1
115-140	320 3860	Choke Connector Rod	1
116-13	320 3825	ϕ Ball	1
117-136	320 6462	Vacumeter Piston Link	1
117-165	320 6463	Pump Connector Link	1
118-124		Dust Cover	1
120-159		* Metering Rod Jet (.089")	2
121-78		#*† Coil Housing Gasket	1
121-150		#*† Body Flange Gasket	1
121-152		#*† Bowl Cover Gasket	1
121-171		#*† Air Horn Gasket	1
121-241		#*† Pump Jet Housing Gasket	1
129-22	320 6464	Metering Rod Disk	2
136-37	320 3827	ϕ Connector Rod Washer	1
146-244S		Bowl Cover and Strainer Assembly (Not Available)	1
150-62	320 3829	ϕ Piston Pin	1
150A-10	320 3830	ϕ Pin Spring	2
160-67S	320 3864	Vacuum Piston and Pin Assembly	1

CARTER NO.	A.M. NO.	DESCRIPTION	PER CAR
160-91	320 3865	Choke Piston (Use 160-138)	
160-138	320 3866	Choke Piston	1
170P-73S		Thermostatic Coil and Housing Assembly (Use 170U-73SU)	1
170U-73SU	320 6796	Thermostatic Coil and Housing Assembly	1
172-22	320 3822	ϕ Throttle Connector Rod Retainer	1
181-235S	320 6465	Fast Idle Cam Assembly	1
186-22	320 6466	Baffle Plate	1

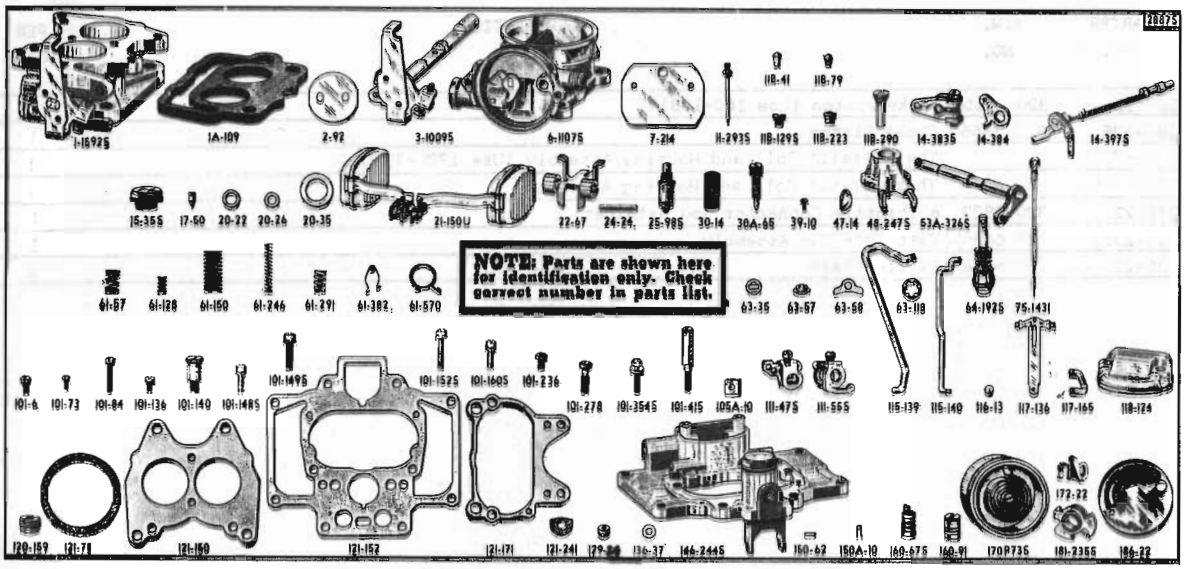

CARBURETOR 63 01 (OHV-WDT-WES); 63 10 (WDT-WES)

A.M. NO. 316 6944 (With Dashpot)(Not Serviced) Order 316 7873 And 320 5126 CARTER NO. WCD 3434S

CARTER NO.	A.M. NO.	DESCRIPTION	PER CAR
AM-1	320 3800	Assortment Kit (Includes all parts listed below which are coded with a ϕ)	
902-165	320 3773	Zip Kit (Includes 109-316 Float Gauge and all parts listed below which are coded with a #)	1
5075X	320 4291	Repair Kit (Re-Carb)(Includes all parts listed below which are coded with a *)	1
360	320 2945	# Gasket Set (Includes all parts listed below which are coded with a †)	1
1A-109		Flange Gasket (Use 1A-155)	
1A-155	316 0094	#*† Flange Gasket	1
1-1740S		Body Flange Assembly (Not Available)	1
2-92	320 6444	Throttle Valve	2
3-1412S	320 6800	Throttle Shaft and Lever Assembly	1
6-1577S		Air Horn and Plug Assembly (Not Available)	1
7-214		Choke Valve (Use 7-265	
7-265	320 6485	Choke Valve	1
11-293S		Low Speed Jet Assembly (.026")(Use 11-181S)	
11-181S	320 3836	Low Speed Jet Assembly (.026")	2
11B-41	320 3803	ϕ Rivet Plug	2
11B-79	320 3805	ϕ Rivet Plug	7
11B-129S	320 3807	ϕ Pump Discharge Passage Plug Assembly	1
11B-223	320 3809	ϕ Nozzle Passage Rivet Plug	2
11B-290	320 3811	ϕ Idle Port Rivet Plug	2
14-383S	320 6446	Choke Lever and Screw Assembly	1
14-384	320 6447	Cam Trip Lever	1
14-397S		Choke Piston Lever, Link and Shaft Assembly	1
15-35S	320 6448	Strainer Nut Assembly	1
17-50	320 6449	Pump Check Needle	1
20-26		#† Gasket	1
20-126		† Needle Seat Gasket	1
20-35		#*† Bowl Strainer Gasket	1
21-150U	320 2232	Unitized Package (Float Assy.)	1
22-67		Auxiliary Float Lever	1
24-24	320 6451	Float Lever Pin	1
25-98S		Needle and Seat Assembly (.1015)(Use 25-483S)	

CARTER NO.	A.M. NO.	DESCRIPTION	PER CAR
25-483S	320 3147	#* Needle and Seat Assembly (.1015")	1
30-14	320 3837	Bowl Cover Strainer	1
30A-65	320 2230	Idle Adjustment Screw	2
39-10	320 3812	ϕ Choke Valve Attaching Screw	2
47-14	320 3814	ϕ Welsh Plug	1
47-14		Welsh Plug	1
48-247S		Pump Jet and Housing Assembly (Use 48-236S)	
48-286S	320 6486	Pump Jet and Housing Assembly	1
53A-326S		Pump Operating Lever and Countershaft Assembly	1
61-57	320 3845	Idle Adjustment Screw Spring	2
61-128	320 3815	ϕ Connector Rod Spring	1
61-150	320 3847	Lower Pump Spring	1
61-332		Vacuum Piston Spring	
61-291	320 3850	Throttle Lever Adjusting Screw Spring	1
61-382	320 3841	Metering Rod Spring	1
61-570	320 3854	Fast Idle Cam Spring	1
63-35	320 3816	ϕ Connector Rod Retainer	1
63-57	320 3817	ϕ Intake Check Ball Retainer	1
63-58	320 3818	ϕ Coil Housing Retainer	2
63-118	320 3859	Throttle Shaft Retaining Ring (Not Used)	
64-192S	320 2237	#* Pump Plunger, Rod, Spring and Retainer Assembly	1
75-1619		* Metering Rod-Standard .073" x .067" x .061"	2
75-1621	316 9634	Metering Rod = 1 Size Lean For 5,000 Ft. Altitude	1
101-6	320 6452	Pump Arm Clamp Screw	1
101-73	320 6453	Throttle Valve Attaching Screw	4
101-84		Fast Idle Adjustment Screw	1
101-136	320 6431	Coil Housing Attaching Screw	2
101-140	320 6454	Fast Idle Cam Attaching Screw	1
101-148S	320 6455	Dust Cover Attaching Screw and Washer Assembly	2
101-149S		Body Flange Attaching Screw and Washer Assembly	4
101-152S	320 6456	Air Horn Attaching Screw and Washer Assembly	4
101-160S	320 6432	Bowl Cover Attaching Screw and Washer Assembly	4
101-216S	320 6487	Bowl Cover Attaching Screw and Washer Assembly	2
101-236		Metering Rod Arm Clamp Screw	1
101-278	320 6457	Pump Jet Housing Attaching Screw	1
101-354S	320 6458	Choke Lever Clamp Screw and Washer Assembly	1
101-415		Throttle Lever Adjusting Screw	1
105A-10	320 6459	Choke Lever Clamp Screw Nut	1
111-47S	320 6460	Pump Arm and Screw Assembly	1
111-55S		Metering Rod Arm and Screw Assembly	1
115-139	320 6461	Throttle Connector Rod	1
115-140	320 3860	Choke Connector Rod	1
116-13	320 3825	ϕ Ball	1
117-136	320 6462	Vacumeter Piston Link	1
117-165	320 6463	Pump Connector Link	1
118-124		Dust Cover	1
121-150		#*† Body Flange Gasket	1
121-152		#*† Bowl Cover Gasket	1
121-171		#*† Air Horn Gasket	1
121-241		#*† Pump Jet Housing Gasket	1
129-22	320 6464	Metering Rod Disk	2
136-37	320 3827	ϕ Connector Rod Washer	1
146-244S		Bowl Cover and Strainer Assembly (Not Available)	1
150-62	320 3829	ϕ Piston Pin	1
150A-10	320 3830	ϕ Pin Spring	2
160-67S	320 3864	Vacuum Piston and Pin Assembly	1
160-138	320 3866	Choke Piston	1
170P-73S		Thermostatic Coil and Housing Assembly (Use 170U-73SU)	1
170U-73SU	320 6796	Thermostatic Coil and Housing Assembly	1
172-22	320 3822	ϕ Throttle Connector Rod Retainer	1
181-235S	320 6465	Fast Idle Cam Assembly	1
186-22	320 6466	Baffle Plate	1
202-187S	320 5126	Dashpot and Bracket Assembly (Not Shown)	1

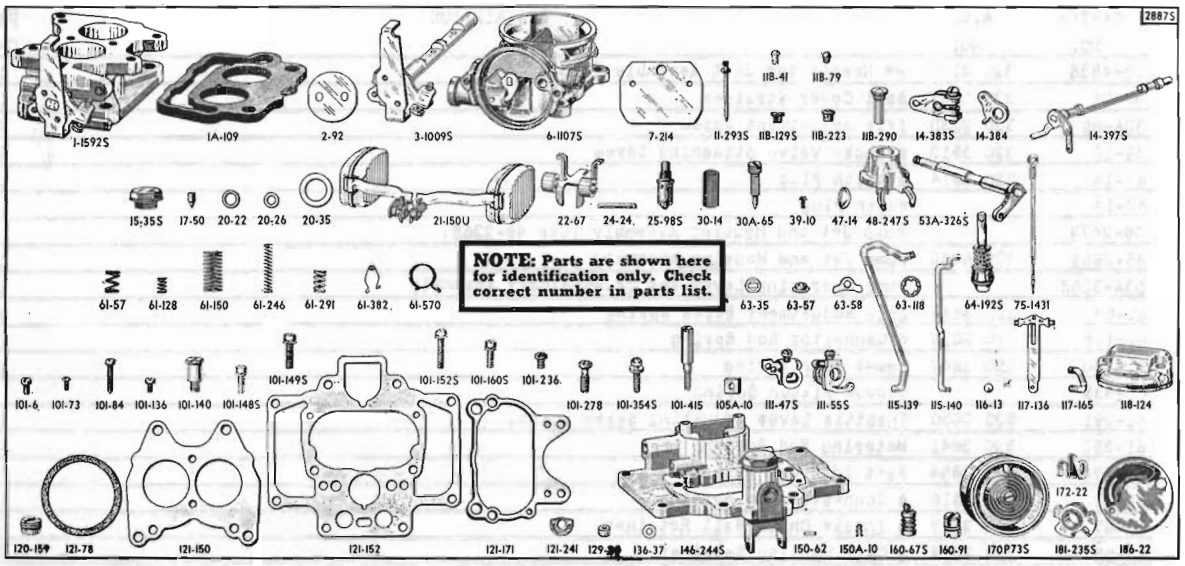

CARBURETOR 64 01-10 (OHV-196-WDT): 65 01 (OHV-196-WDT)

A.M. NO. 317 2231 (Less Dashpot) CARTER NO. WCD-3706S

A.M. NO. 317 2232 (With Dashpot)(Not Serviced)
Order 317 2231 And 320 5126 CARTER NO. WCD-3707S

CARTER NO.	A.M. NO.	DESCRIPTION	PER CAR
AM-3	320 3800	Assortment Kit (Includes all parts listed below which are coded with a ϕ)	
902-165	320 3773	Zip Kit (Includes 109-316 Float Gauge and all parts listed below which are coded with a #)	1
5075X	320 4291	Repair Kit (Re-carb)(Includes all parts listed below which are coded with a *)	1
360	320 2945	# Gasket Set (Includes all parts listed below which are coded with a +)	1
1A-109		# Flange Gasket (Use 1A-155)	
1A-155	316 0094	#*+ Flange Gasket	1
1-1592S		Body Flange Assembly (Use 1-1740S)(Not Available)	
1-1740S		Body Flange Assembly (Not Available)	1
2-204	320 6805	Throttle Valve	2
3-1412S	320 6800	Throttle Shaft and Lever Assembly	1
6-11-7S		Air Horn and Plug Assembly (Use 6-1712S)(Not Available)	
6-1712S		Air Horn and Plug Assembly (Not Available)	1
7-214		Choke Valve (Use 7-265)	
7-265	320 6485	Choke Valve	1
11-293S		Low Speed Jet Assembly (.026")(Use 11-183S)	
11-183S	320 5485	Low Speed Jet Assembly (.031")(Pkg. Of 2)	1
11B-41		Rivet Plug (Not Used)	2
11B-79	320 3805	ϕ Rivet Plug	7
11B-129S		Pump Discharge Passage Plug Assembly (Not Used)	1
11B-223	320 3809	ϕ Nozzle Passage Rivet Plug	2
11B-290	320 3811	ϕ Idle Port Rivet Plug	2
14-383S	320 6446	Choke Lever and Screw Assembly	1
14-384	320 6447	Cam Trip Lever	1
14-397S		Choke Piston Lever, Link and Shaft Assembly	1
15-35S	320 6448	Strainer Nut Assembly	1
17-50	320 6449	Pump Check Needle	1
20-204		+ Needle Seat Gasket	1
20-26		Gasket (Not Used)	1
20-35		#*+ Bowl Strainer Gasket	1
21-150U	320 2232	Unitized Package (Float Assy.)	1

CARTER NO.	A.M. NO.	DESCRIPTION	PER CAR
22-67		Auxiliary Float Lever	1
24-24	320 6451	Float Lever Pin	1
25-98S		Needle and Seat Assembly (.1015")(Use 25-736S)	
25-736S	320 3147	#* Needle and Seat Assembly (.1015")	1
30-14	320 3837	Bowl Cover Strainer	1
30A-65	320 2230	Idle Adjustment Screw	2
39-10	320 3812	ϕ Choke Valve Attaching Screw	2
47-14	320 3814	ϕ Welsh Plug	1
48-247S		Pump Jet and Housing Assembly (Use 48-286S)	
48-286S	320 6486	Pump Jet and Housing Assembly	1
53A-326S		Pump Operating Lever and Countershaft Assembly	1
61-57	320 3845	Idle Adjustment Screw Spring	2
61-128	320 3815	ϕ Connector Rod Spring	1
61-150	320 3847	Lower Pump Spring	1
61-332		Vacuum Piston Spring	
61-291	320 3850	Throttle Lever Adjusting Screw Spring	1
61-382	320 3841	Metering Rod Spring	1
61-570	320 3854	Fast Idle Cam Spring	1
63-35	320 3816	ϕ Connector Rod Retainer	1
63-57	320 3817	ϕ Intake Check Ball Retainer	1
63-58	320 3818	ϕ Coil Housing Retainer	2
63-118		Throttle Shaft Retaining Ring (Not Used)	
64-192S	320 2237	#* Pump Plunger, Rod, Spring and Retainer Assembly	1
75-1619		* Metering Rod-Standard .073" x .061"	2
75-1621	316 9634	Metering Rod - 1 Size Lean For 5,000 Ft. Altitude (Package Of 2)	1
101-6	320 6452	Pump Arm Clamp Screw	1
101-73	320 6453	Throttle Valve Attaching Screw	4
101-472	320 6806	Fast Idle Adjustment Screw	1
101-136	320 6431	Coil Housing Attaching Screw	2
101-140	320 6454	Fast Idle Cam Attaching Screw	1
101-148S	320 6455	Dust Cover Attaching Screw and Washer Assembly	2
101-149S		Body Flange Attaching Screw and Washer Assembly	4
101-152S	320 6456	Air Horn Attaching Screw and Washer Assembly	4
101-160S	320 6432	Bowl Cover Attaching Screw and Washer Assembly (3706S-6 Req.)(3707S-4 Req.)	AR
101-236		Metering Rod Arm Clamp Screw	1
101-278	320 6457	Pump Jet Housing Attaching Screw	1
101-307S	320 6807	Bowl Cover Attaching Screw and Washer Assembly (3707S)	2
101-354S	320 6458	Choke Lever Clamp Screw and Washer Assembly	1
101-415		Throttle Lever Adjusting Screw	1
103-14	320 4948	ϕ Plug	
103-16	320 4947	ϕ Plug	
105A-10	320 6459	Choke Lever Clamp Screw Nut	1
111-47S	320 6460	Pump Arm and Screw Assembly	1
111-54		Metering Rod Arm and Screw Assembly	1
115-139	320 6461	Throttle Connector Rod	1
115-140	320 3860	Choke Rod	1
116-13	320 3825	ϕ Ball	1
117-136	320 6462	Vacuum Piston Link	1
117-165	320 6463	Pump Connector Link	1
118-124		Dust Cover	1
120-159		* Metering Rod Jet (.089")	2
121-78		#*+ Coil Housing Gasket	1
121-150		#*+ Body Flange Gasket	1
121-152		#*+ Bowl Cover Gasket	1
121-171		#*+ Air Horn Gasket	1
121-241		#*+ Pump Jet Housing Gasket	1
129-22	320 6464	Metering Rod Disk	2
136-37		ϕ Connector Rod Washer	1
146-244S		Bowl Cover and Strainer Assembly (Not Available)	1
150-62	320 3829	ϕ Piston Pin	1
150A-10	320 3830	ϕ Pin Spring	2

GROUP 4

CARTER NO.	A.M. NO.	DESCRIPTION	PER CAR
160-67S	320 3864	Vacuum Piston and Pin Assembly	1
160-91	320 3865	Choke Piston (Use 160-138)	
160-138	320 3866	Choke Piston	1
170P-73S		Thermostatic Coil and Housing Assembly (Use 170U-73SU)	1
170U-73SU	320 6796	Thermostatic Coil and Housing Assembly	1
172-22	320 3822	ϕ Throttle Connector Rod Retainer	1
181-235S	320 6465	Fast Idle Cam Assembly	1
186-22	320 6466	Baffle Plate	1
202-187S	320 5126	Dashpot and Bracket Assembly (Not Serviced with Carburetor)	1

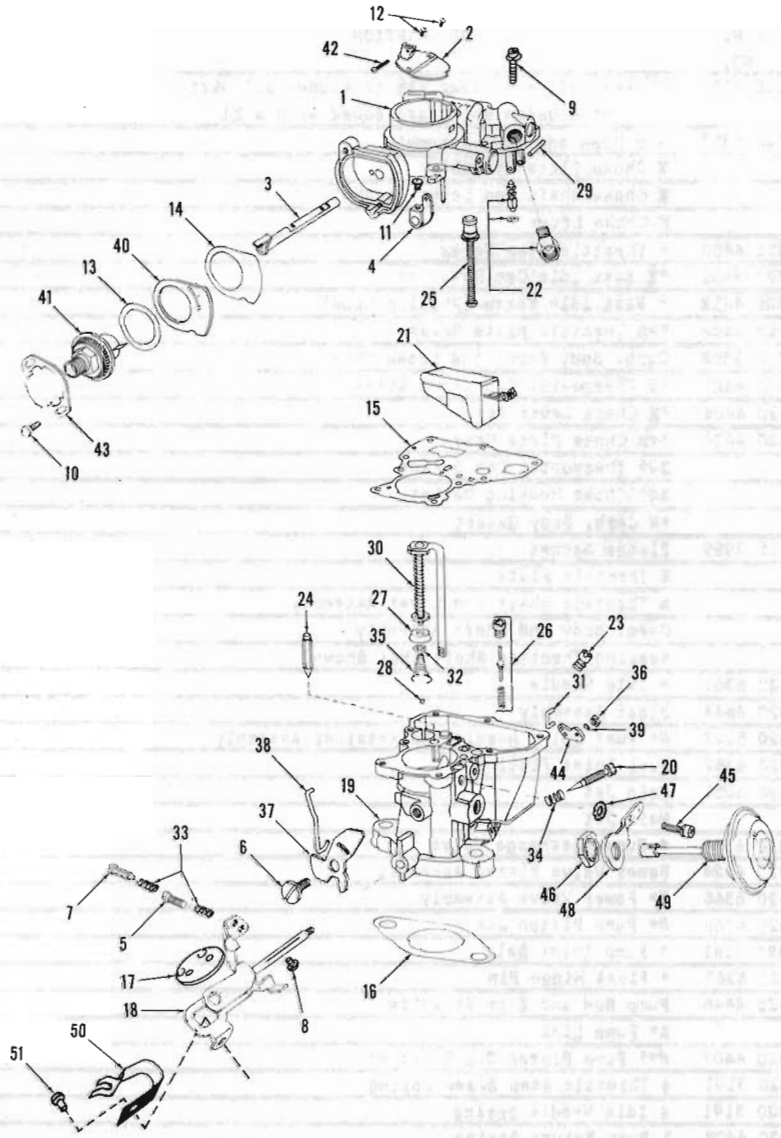

CARBURETOR 64-65 01 (OHV-196-LDT)

A.M. NO. 317 5913 HOLLEY NO. 2555-3

KEY NO.	HOLLEY NO.	A.M. NO.	DESCRIPTION	PER CAR
	85A-1111	320 3586	Assortment Kit (Includes all parts listed below which are coded with a ϕ)	
	85A-1265	320 4399	Assortment Kit (Includes all parts listed below which are coded with a °)	
	85R-770	320 4369	Pep Kit (Includes all parts listed below which are coded with a #)	1
	85R-1260	320 4370	Repair Kit (Includes all parts listed below which are coded with a *)	1
	85G-1261	320 4368	* Gasket Set (Includes all parts listed below which are coded with a +)	1
	85R-1263	320 4367	Dashpot Kit (Includes all parts listed below which are coded with a @)	1
	85R-1304	320 6354	Choke Kit (Includes all parts listed below which are coded with a ⊞)	1
	85T-1303	320 6356	Throttle Shaft Kit (Includes all parts listed below which are coded with a Ж)	1

GROUP 4

KEY NO.	HOLLEY NO.	A.M. NO.	DESCRIPTION	PER CAR
	85C-1301	320 6351	Choke Shaft and Lever Kit (Includes all parts listed below which are coded with a ⧗)	1
1	1R-836A	320 6357	Air Horn and Tube Assembly	1
2	2R-352A		⧗ Choke Plate Assembly	1
3	3R-457A		⧗ Choke Shaft and Lever Assembly	1
4	4R-745B		⧗ Choke Lever	1
5	5R-357	320 4400	° Throttle Stop Screw	1
6	5R-816	320 4401	°⧗ Fast Idle Cam Retainer	1
7	5R-928	320 4412	° Fast Idle Screw (Phillip Head)	1
8	5R-837	320 4402	°*Ж Throttle Plate Screw	2
9	5R-847	320 6358	Carb. Body Screw and Lockwasher	8
10	5R-848	320 4403	°Ш Thermostat Cap Clamp Screw	2
11	5R-849	320 4404	°⧗ Choke Lever Screw	1
12	5R-906	320 4406	°*⧗ Choke Plate Screw	2
13	8R-941		Ш#+ Thermostat Cap Gasket	1
14	8R-942		Ш#+ Choke Housing Gasket	1
15	8R-982		+# Carb. Body Gasket	1
16	8R-955	315 3999	Flange Gasket	1
17	9R-164		Ж Throttle Plate	1
18	10R-1090A		Ж Throttle Shaft and Lever Assembly	1
19	12R-2878A		Carb. Body and Shaft Assembly	1
	13R-860		Bearing Throttle Shaft (Not Shown)	1
20	15R-61	320 6361	* Idle Needle	1
21	16R-346A-3	320 4844	Float Assembly	1
22	18R-104-AS	320 5127	#* Fuel Inlet Needle and Retainer Assembly	1
22	19R-223	320 6362	Fuel Inlet Fitting	1
23	22R-40-58	320 3251	Main Jet	1
23	22R-40-60		Main Jet	1
24	23R-321	320 6364	* Pump Discharge Valve	1
25	25R-322A	320 4424	Power Valve Piston Assembly	1
26	25R-336-AS	320 6365	#* Power Valve Assembly	1
27	27R-250	320 6366	#* Pump Piston Cup	1
28	28R-94	320 3181	* Pump Inlet Ball	1
29	29R-726	320 6367	* Float Hinge Pin	1
30	31R-211A	320 4845	Pump Rod and Stem Assembly	1
31	33R-403		Ж* Pump Link	1
32	36R-340	320 4407	#*° Pump Piston Cup Retainer	1
33	38R-108	320 3191	ϕ Throttle Stop Screw Spring	2
34	38R-108	320 3191	ϕ Idle Needle Spring	1
35	38R-975	320 4408	° Pump Return Spring	1
36	39R-11	320 4409	°Ж Pump Lever Nut	1
37	41R-428	320 6369	⧗ Fast Idle Cam	1
38	43R-301	320 6370	⧗ Fast Idle Link	1
39	46R-636	320 6371	Ж Pump Lever Nut Lock Washer	1
40	47R-189		Ш Choke Housing Plate	1
41	47R-190A	320 4425	Ш Thermostat Cap Assembly	1
42	48R-183-3	320 3228	* Choke Piston Link Pin	1
43	49R-562		Thermostat Cap Clamp	1
44	63R-566	320 6373	Ж Pump Lever	1
45	5R-893	320 4405	°@ Dashpot Bracket Screw	1
46	39R-193	320 4410	°@ Dashpot Nut	1
47	46R-2	320 4411	°@ Dashpot Bracket Screw Lock Washer	1
48	49R-600		@ Dashpot Bracket	1
49	58R-51A	320 6372	@ Dashpot Assembly	1
50		317 5910	Accelerator Overtravel Spring	1
51		400 0756	Accelerator Overtravel Spring Rivet	1

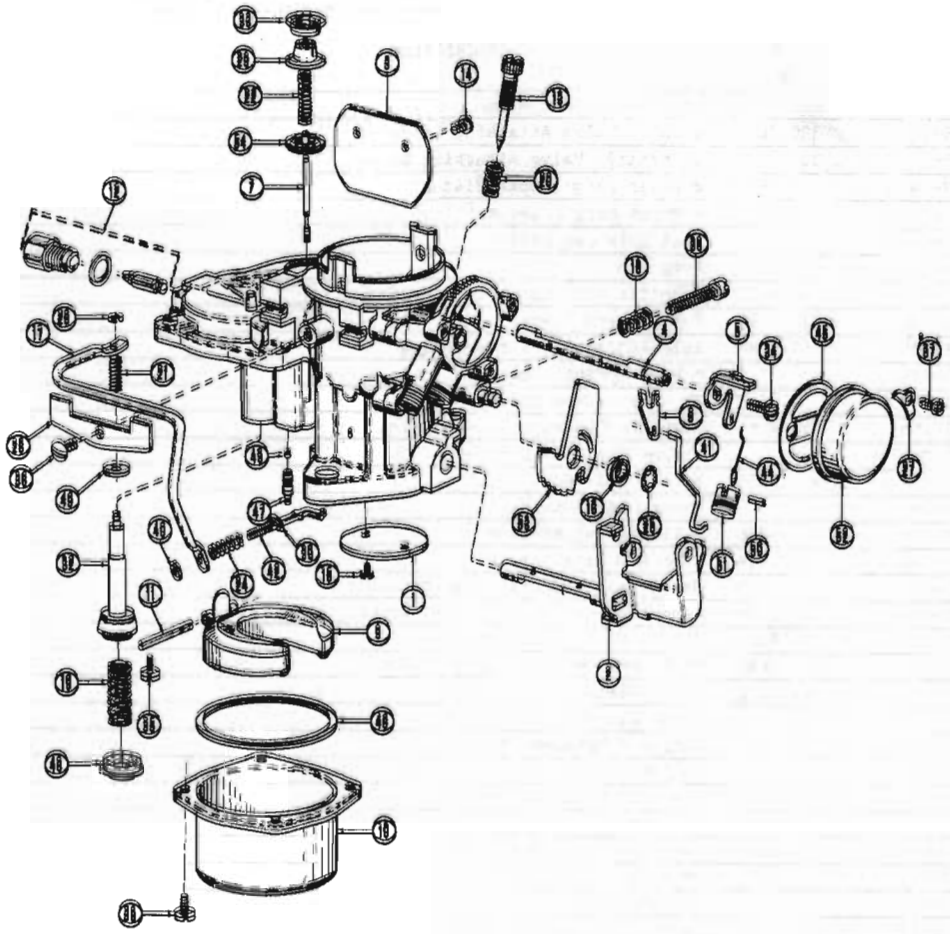

CARBURETOR 65 01-10 (OHV-199-LDT)

A.M. NO. 317 5853 CARTER NO. RBS 3766

KEY NO.	CARTER NO.	A.M. NO.	DESCRIPTION	PER CAR
	AM-3	320 3800	Assortment Kit (includes all parts listed below which are coded with a $)	
	902-208	320 5745	Zip Kit (includes all parts listed below which are coded with a *)	1
	16-343U	320 5747	Metering Jet Package (Includes All Parts Listed Below Which Are coded with a #)(Use for 5,000 Ft. altitude)	1
	LA-234	317 5948	* Flange Gasket	2
1	2-101	320 4318	Throttle Valve	1
2	3-14958		Throttle Shaft and Lever Assembly	1
3	7-270	320 6489	Choke Valve	1
	118-389	320 3870	$ Idle Port Rivet Plug	1
4	13-222	320 6490	Choke Shaft	1
5	14-797	320 6809	Choke Piston Lever	1
6	14-738	320 4314	Choke Lever	1
7	16-343S		#* Step Up Rod (.071" x .063")	1
8	17-78	320 6492	Pump Discharge Check Needle	1
	30-303		Needle Seat Gasket	1
9	21-2175	320 4320	Float and Lever Assembly	1
10	23-84	320 6494	Bowl	1
11	24-31	320 6495	Float Lever Pin	1
12	29-7575	320 6710	* Needle and Seat Assembly	1

KEY NO.	CARTER NO.	A.M. NO.	DESCRIPTION	PER CAR
13	30A-81	320 4321	Idle Adjustment Screw	1
14	39-10	320 3812	ϕ Choke Valve Attaching Screw	2
15	39-11	320 3813	ϕ Throttle Valve Attaching Screw	2
	47-14	320 3814	ϕ Welsh Plug (Choke Piston)	1
	47-31	320 4949	ϕ Welsh Plug (Fuel Well)	1
16	51-71	320 4322	Fast Idle Cam Collar	1
17	53A-466	320 6810	Pump Arm	1
18	61-291	320 5125	Throttle Adjusting Screw Spring	1
19	61-398	320 4323	Pump Spring (Lower)	1
20	61-467	320 3844	Idle Adjustment Screw Spring	1
21	61-731		* Pump Spring (Upper)	1
22	61-773		#* Step-up Rod Spring	1
24	61-758	320 6811	Pump Arm Connector Link Spring	1
	63-321		* Pump Cylinder Retainer	1
25	63-327	320 4325	ϕ Fast Idle Retainer	1
26	63-282		* Pump Rod Retainer	1
27	63-298	320 4326	Coil Housing Retainer	3
28	63-302	320 6498	Pump Arm Retainer	1
29	63-306	320 4327	#* Step-up Rod Diaphragm Retainer	1
30	63-309	320 6499	Pump Arm Connector Link Retainer	1
32	64-306S	320 4329	* Pump Plunger Assembly	1
33	65-54	320 4330	#* Step-up Rod Diaphragm Cover	1
34	101-65	320 6412	Choke Piston Lever Screw	1
35	101-67	320 6413	Float Pin Attaching Screw	2
36	101-74	320 6414	Pump Arm Retainer Screw	1
37	101-136	320 6431	Coil Housing Attaching Screw	3
38	101-387	320 6415	Throttle Lever Adjusting Screw	1
39	101-514	320 6416	Bowl Attaching Screw	4
40	105A-69	320 6417	Pump Arm Connector Link Nut	1
	108-83		#* Ring	1
	108-93		Bushing Pump Plunger Shaft	1
41	115-391	320 6803	Fast Idle Connector Rod	1
42	115-385	320 6812	Pump Arm Connector Link	1
43	116-13	320 3825	ϕ* Intake Check Ball	1
44	117-200	320 4337	Choke Piston Link	1
45	121-527		* Coil Housing Gasket	1
46	121-492		* Bowl Ring Gasket	1
47	122-126	320 4336	Pump Discharge Needle Seat	1
48	122-132	320 5855	* Intake Ball Check Seat	1
49	136-257	320 6420	Pump Washer	1
	136-267		#* Conical Washer	1
50	150-170	320 6421	Choke Piston Pin	1
51	160-279	320 6422	Choke Piston	1
52	170FF-771S	320 6728	Thermostatic Coil and Housing Assembly	1
53	181-328	320 6814	Fast Idle Cam (Inner)	1
	181-329	320 6804	Fast Idle Cam (Outer)	1
54	203-172S		Step-up Rod Diaphragm Assembly (Not Used)	1

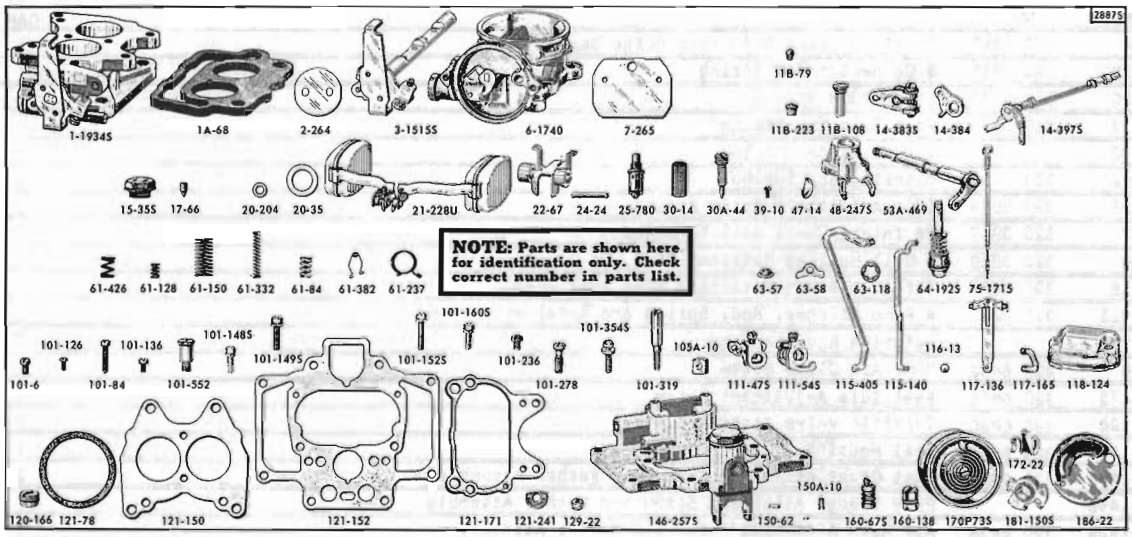

CARBURETOR 65 01-10-80 (OHV-232-WDT)

A.M. NO. 317 5904 CARTER NO. WCD 3888

CARTER NO.	A.M. NO.	DESCRIPTION	PER CAR
AM-3	320 3800	Assortment Kit (Includes all parts listed below which are coded with a ϕ)	
902-210	320 5882	Zip Kit (Includes 109-316 Float Gauge and all parts listed below which are coded with a #)	1
509	320 5883	# Gasket Set (Includes all parts listed below which are coded with a +)	1
1A-68	317 5993	#+ Flange Gasket	1
1-1934S	320 6797	Body Flange Assembly	1
2-264		Throttle Valve	2
3-1515S	320 6816	Throttle Shaft and Lever Assembly	1
6-1740		Air Horn and Plug Assembly (Not Available)	1
7-265	320 6485	Choke Valve	1
11B-79	320 3805	ϕ Rivet Plug	7
11B-223	320 3809	ϕ Nozzle Passage Rivet Plug	2
11B-108	320 3806	ϕ Idle Port Rivet Plug	2
14-383S	320 6446	Choke Lever and Screw Assembly	1
14-384	320 6447	Cam Trip Lever	1
14-397S		Choke Piston Lever, Link and Shaft Assembly	1
15-35S	320 6448	Strainer Nut Assembly	1
17-66	320 6817	Pump Check Needle	1
20-204		+ Needle Seat Gasket	1
20-35		#+ Bowl Strainer Gasket	1
21-228U	320 6136	Unitized Package (Float Assy.)	1
22-67		Auxiliary Float Lever	1
24-24	320 6451	Float Lever Pin	1
25-780S	320 5884	# Needle and Seat Assembly	1
25-1658U	317 8668	Metering Rod (1 Size Lean For 5,000 Ft. Altitude)(Pkg. of Two)	1
30-14	320 3837	Bowl Cover Strainer	1
30A-44	320 2229	Idle Adjustment Screw	2
39-10	320 3812	ϕ Choke Valve Attaching Screw	2
47-14	320 3814	ϕ Welsh Plug	1
48-247S		Pump Jet and Housing Assembly (Use 48-171S)	
48-171S	320 6818	Pump Jet and Housing Assembly	1
53A-469S	320 6819	Pump Operating Lever and Countershaft Assembly	1

GROUP 4

CARTER NO.	A.M. NO.	DESCRIPTION	PER CAR
61=84	320 5885	Throttle Lever Adjusting Screw Spring	1
61=128	320 3815	ϕ Connector Rod Spring	1
61=150	320 3847	Lower Pump Spring	1
61=237	320 5886	Fast Idle Cam Spring	1
61=332		Vacuum Piston Spring	
61=382	320 3841	Metering Rod Spring	1
61=426	320 3844	Idle Adjustment Screw Spring	2
63=57	320 3817	#ϕ Intake Check Ball Retainer	1
63=58	320 3818	ϕ Coil Housing Retainer	2
63=118	320 3859	Throttle Shaft Retaining Ring (Not Used)	
64=1928	320 2237	# Pump Plunger, Rod, Spring and Retainer Assembly	1
75=1715		Metering Rod-Standard	2
101=6	320 6452	Pump Arm Clamp Screw	1
101=472	320 6806	Fast Idle Adjustment Screw	1
101=126	320 6820	Throttle Valve Attaching Screw	4
101=136	320 6431	Coil Housing Attaching Screw	2
101=1488	320 6455	Dust Cover Attaching Screw and Washer Assembly	2
101=1498		Body Flange Attaching Screw and Washer Assembly	4
101=1528	320 6456	Air Horn Attaching Screw and Washer Assembly	4
101=1608	320 6432	Bowl Cover Attaching Screw and Washer Assembly	4
101=236		Metering Rod Arm Clamp Screw	1
101=278	320 6457	Pump Jet Housing Attaching Screw	1
101=319	320 6821	Throttle Lever Adjusting Screw	1
101=3548	320 6458	Choke Lever Clamp Screw and Washer Assembly	1
101=552	320 6822	Fast Idle Cam Attaching Screw	1
105A=10	320 6459	Choke Lever Clamp Screw Nut	1
111=478	320 6460	Pump Arm and Screw Assembly	1
111=54		Metering Rod Arm and Screw Assembly	1
115=140	320 3860	Choke Conneetor Rod	1
115=405		Throttle Connector Rod	1
116=13	320 3825	#ϕ Intake Check Ball	1
117=136	320 6462	Vacumeter Piston Link	1
117=165	320 6463	Pump Connector Link	1
118=124		Dust Cover	1
120=166	320 6823	Metering Rod Jet (.0935)	2
121=78		+# Coil Housing Gasket	1
121=150		#+ Body Flange Gasket	1
121=152		#+ Bowl Cover Gasket	1
121=171		#+ Air Horn Gasket	1
121=241		#+ Pump Jet Housing Gasket	1
129=22	320 6464	Metering Rod Disk	2
146=2578		Bowl Cover and Strainer Assembly (Not Available)	1
150=62	320 3829	ϕ Piston Pin	1
150A=10	320 3830	#ϕ Pin Spring	2
160=138	320 3866	Choke Piston	1
160=678	320 3864	Vacuum Piston and Pin Assembly	1
170P=738		Thermostatic Coil and Housing Assembly (Use 170U=738U)	1
170U=738U	320 6796	Thermostatic Coil and Housing Assembly	1
172=22	320 3822	#ϕ Throttle Connecter Rod Retainer	1
181=1508	320 6824	Fast Idle Cam Assembly	1
186=22	320 6466	Baffle Plate	1

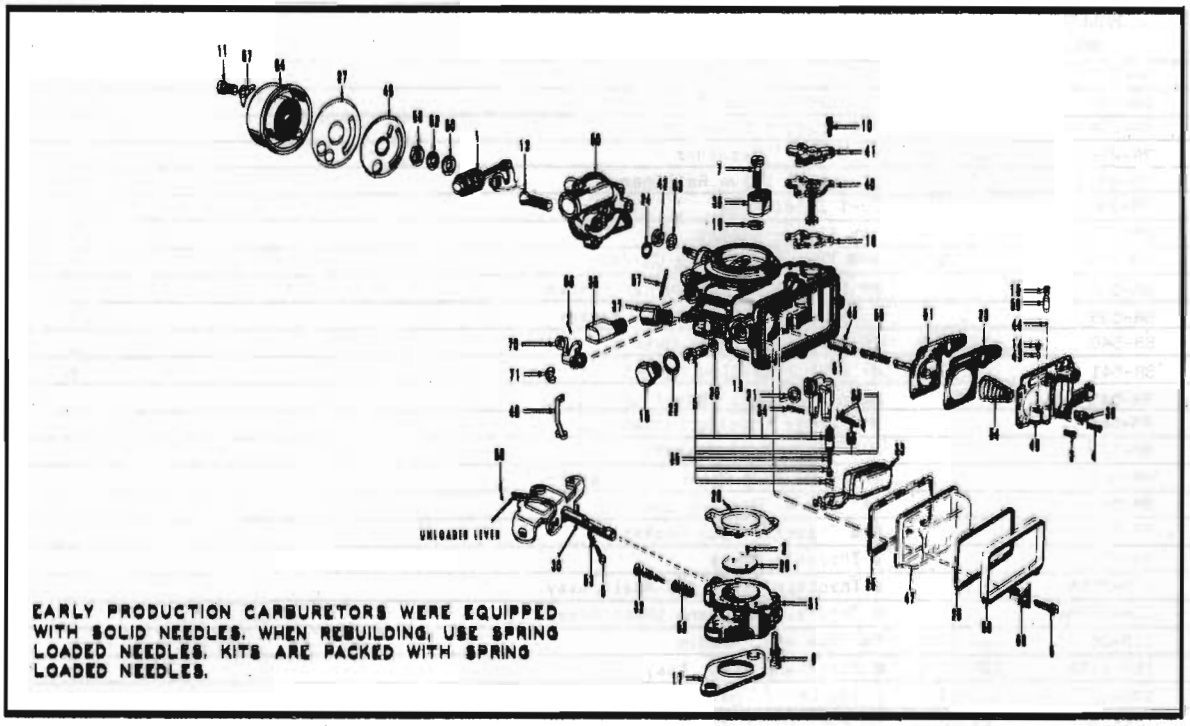

EARLY PRODUCTION CARBURETORS WERE EQUIPPED WITH SOLID NEEDLES. WHEN REBUILDING, USE SPRING LOADED NEEDLES. KITS ARE PACKED WITH SPRING LOADED NEEDLES.

CARBURETOR 60 10 (LDT)

A.M. NO. 315 7563 HOLLEY NO. R-1598-1

KEY NO.	HOLLEY NO.	A.M. NO.	DESCRIPTION	PER CAR
	85A-1111	320 3586	Assortment Kit (Includes all parts listed below which are coded with a ϕ)	1
	85R-709	320 2225	Pep Kit (Includes all parts listed below which are coded with a #)	1
	85R-642	320 2442	Repair Kit (Includes all parts listed below which are coded with a *) (Replaces 320 2224)	1
	85G-641	320 2221	* Gasket Set (Includes all parts listed below which are coded with a +)	1
	85B-1398	320 6300	Bowl Kit (Includes all parts listed below which are coded with a @)	1
	85C-1176	320 6306	Choke Kit (Includes all parts listed below which are coded with a °)	1
	85D-1174	320 6303	Pump Diaphragm Kit (Includes all parts listed below which are coded with a ¥)	1
	85E-1170	320 6305	Economizer Kit (Includes all parts listed below which are coded with a ¤)	1
	85T-1161	320 6309	Throttle Body and Shaft Assy. Kit (Includes all parts which are coded with a ¥)	1
1	4R-648A		° Choke Therm. Lever Link and Piston	1
2	5R-4	320 3101	ϕ*¥ Throttle Plate Screw	2
3	5R-420	320 3106	ϕ Main Well & Econ. Body Screw & L.W. (Short)	3
4	5R-421	320 3107	ϕ Main Well & Econ. Body Screw & L.W. (Long)	2
5	5R-423	320 6406	Fuel Inlet Seat Screw	1
6	5R-425	320 3108	ϕ@ Float Bowl Clamp Screw and L.W.	4
7	5R-492	320 6311	Pump Discharge Nozzle Screw	1
8	5R-534	320 3110	ϕ¥ Throttle Stop Screw	1
9	5R-571	320 3115	ϕ¥ Throttle Body Screw And L.W.	2
10	5R-641	320 3120	ϕ¤ Economizer Body Screw and L.W.	3

KEY NO.	HOLLEY NO.	A.M. NO.	DESCRIPTION	PER CAR
11	5R-731	320 6312	° Therm. Housing Screw	3
12	5R-757	320 6409	° Choke Housing Screw and L.W.	2
13	6R-1947A		Main Body & Plugs Assy.	1
14	7R-48-3	320 6313	Inlet Ball Retainer	1
15	7R-48-3	320 6313	Discharge Valve Retainer	1
16	7R-255	320 6399	Fuel Inlet Plug	1
17	8R-453	315 3999	#+Ø Flange Gasket	1
18	8R-534	320 2203	#+⊞ Economizer Body Gasket	1
19	8R-538		#+ Pump Discharge Nozzle Gasket	1
20	8R-539		+ Fuel Inlet Seat Screw Gasket	1
21	8R-540		#+ Fuel Inlet Seat Gasket	1
22	8R-541		#+ Fuel Boss Plug Gasket	1
23	8R-545		Main Well Body Spacer Gasket	1
24	8R-568		#+° Choke Housing Gasket	1
25	8R-579		#+@ Float Bowl Gasket	1
26	8R-582		#+ Float Bowl Clamp Ring Gasket	1
27	8R-644		#+° Therm. Housing Gasket	1
28	8R-800		#+Ø Throttle Body Gasket	1
29	9R-70		Ø Throttle Plate	1
30	10R-755A		Ø Throttle Lever and Shaft Assy.	1
31	12R-2198A		Ø Throttle Body and Shaft Assy.	1
32	15R-36	320 2205	*Ø Idle Adj. Needle	1
33	16R-178A	320 2207	@ Float and Lever Assy.	1
34	17R-31	320 6400	Float Lever Shaft	1
35	18R-53AS	320 2211	#* Fuel Inlet Needle & Seat Assy.	1
36	19R-219	320 6401	Spark Fitting	1
37	19R-223	320 6362	Fuel Inlet Fitting	1
38	21R-355-28	320 6315	Pump Discharge Nozzle	1
39	22R-40-59	320 3167	* Main Jet	1
40	25R-166A	320 2213	#*⊞ Economizer Stem Assembly	1
41	25R-167A	320 6407	⊞ Economizer Body Cover Assy.	1
42	27R-204	320 6316	#+° Choke Shaft Seal	1
43	28R-6	320 6318	* Pump Inlet Ball	1
44	28R-94	320 3181	ϕ*Ж Pump Discharge Ball	1
45	28R-94	320 3181	ϕ*Ж Pump Push Rod Ball	1
46	33R-344	320 6319	*Ø Pump Oper. Link	1
47	34R-1374	320 3707	@ Float Bowl	1
48	34R-2757		° Choke Housing Plate	1
49	34R-2379A	320 6321	Main Well & Econ. Body & Plugs Assy.	1
50	34R-2810A		° Choke Housing and Plugs Assy.	1
51	35R-347A	320 2887	#*Ж Pump Diaphragm and Rod Assy.	1
52	38R-108	320 3191	ϕØ Idle Adj. Needle Spring	1
53	38R-110	320 3192	ϕØ Throttle Stop Screw Spring	1
54	38R-395	320 3193	ϕЖ Pump Return Spring	1
55	38R-452	320 3194	ϕЖ Pump Oper. Spring	1
56	38R-566	320 6402	Float Bumper Spring	1
57	38R-759	320 3201	ϕ Choke Lever Spring	1
58	39R-11	320 4409	Choke Shaft Nut	1
59	40R-283	320 6323	Pump Discharge Valve Weight	1
61	42R-112		Ж Pump Push Rod Sleeve	1
62	46R-252	320 6326	° Choke Shaft Nut L.W.	1
63	46R-529	320 6327	° Choke Shaft Seal Washer	1
64	47R-144A	320 3225	° Therm. Housing Assy. (Complete)	1
65	48R-5	320 6403	Float Bumper Spring Retainer	2
66	48R-183	320 3228	ϕ*Ø Pump Oper. Link Retainer	2
67	49R-128	320 3229	ϕ° Therm. Housing Clamp	3
68	49R-187	320 6404	Float Bowl Clamp Ring	1
69	49R-250	320 6405	Float Bowl Clamp	4
70	63R-233A	320 6328	Ø Pump Oper. Lever Assy.	1
71	75R-37	320 3240	ϕØ Pump Oper. Lever Retainer	1

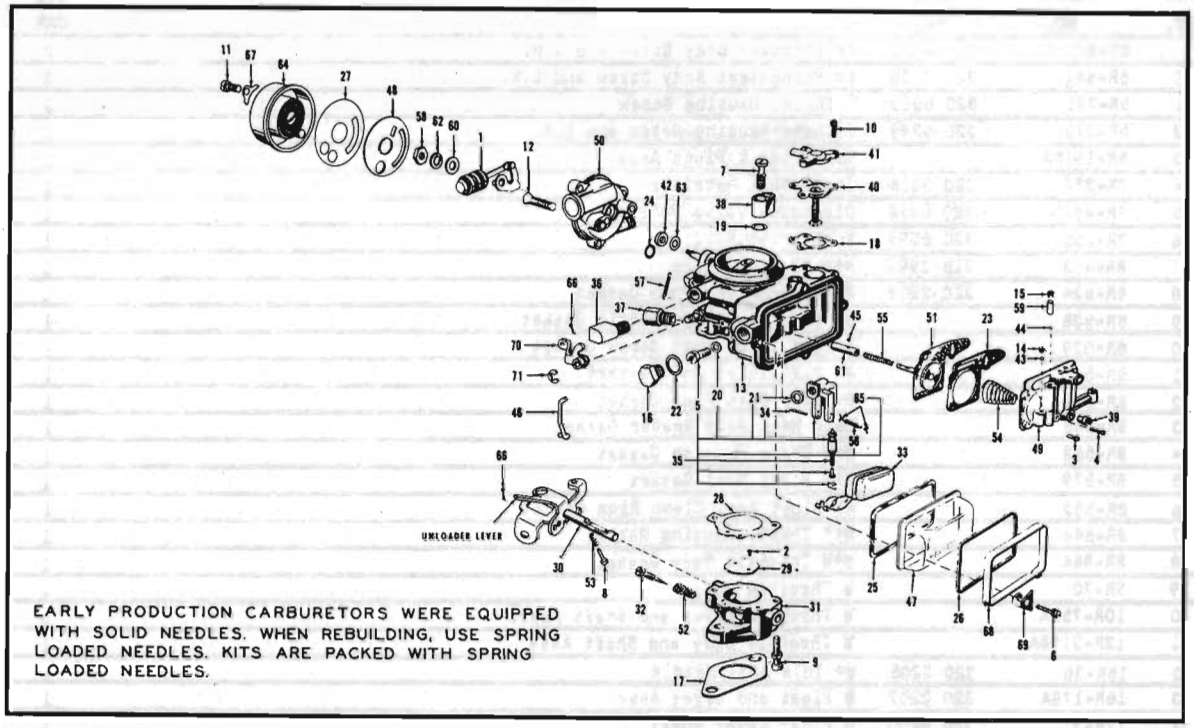

CARBURETOR 60 10 (LDT)

A.M. NO. 315 8763 HOLLEY NO. R-1598-2

KEY NO.	HOLLEY NO.	A.M. NO.	DESCRIPTION	PER CAR
	85A-1111	320 3586	Assortment Kit (Includes all parts listed below which are coded with a ϕ)	
	85R-709	320 2225	Pep Kit (Includes all parts listed below which are coded with a #)	1
	85R-964	320 2442	Repair Kit (Includes all parts listed below which are coded with a *) (Replaces 320 2367)	1
	85G-641	320 2221	* Gasket Set (Includes all parts listed below which are coded with a +)	1
	85B-1398	320 6300	Bowl Kit (Includes all parts listed below which are coded with a @)	1
	85C-1176	320 6306	Choke Kit (Includes all parts listed below which are coded with a °)	1
	85D-1174	320 6303	Pump Diaphragm Kit (Includes all parts listed below which are coded with a Ж)	1
	85E-1170	320 6305	Economizer Kit (Includes all parts listed below which are coded with a Ш)	1
	85T-1161	320 6309	Throttle Body and Shaft Assy. Kit (Includes all parts listed below which are coded with a Ѯ)	1
1	4R-648A		° Choke Therm. Lever Link and Piston	1
2	5R-4	320 3101	ϕ*Ѯ Throttle Plate Screw	2
3	5R-420	320 3106	ϕ Main Well & Econ. Body Screw & L.W. Short	3
4	5R-421	320 3107	ϕ Main Well & Econ. Body Screw & L.W. (Long)	2
5	5R-423	320 6406	Fuel Inlet Seat Screw	1
6	5R-425	320 3108	ϕ@ Float Bowl Clamp Screw and L.W.	4
7	5R-492	320 6311	Pump Discharge Nozzle Screw	1
8	5R-534	320 3110	ϕѮ Throttle Stop Screw	1

GROUP 4

KEY NO.	HOLLEY NO.	A.M. NO.	DESCRIPTION	PER CAR
9	5R-571	320 3115	ϕ¥ Throttle Body Screw and L.W.	2
10	5R-641	320 3120	ϕ# Economizer Body Screw and L.W.	3
11	5R-731	320 6312	⁶ Therm. Housing Screw	3
12	5R-775	320 6398	⁵ Choke Housing Screw and L.W.	2
13	6R-1915A		Main Body & Plugs Assy.	1
14	7R-274	320 6314	Inlet Ball Retainer	1
15	7R-48-3	320 6313	Discharge Valve Retainer	1
16	7R-255	320 6399	Fuel Inlet Plug	1
17	8R-453	315 3999	#+¥ Flange Gasket	1
18	8R-534	320 2203	#+# Economizer Body Gasket	1
19	8R-538		#+ Pump Discharge Nozzle Gasket	1
20	8R-539		+ Fuel Inlet Seat Screw Gasket	1
21	8R-540		#+ Fuel Inlet Seat Gasket	1
22	8R-541		#+ Fuel Boss Plug Gasket	1
23	8R-545		Main Well Body Spacer Gasket	1
24	8R-568		#+⁵ Choke Housing Gasket	1
25	8R-579		#+@ Float Bowl Gasket	1
26	8R-582		#+ Float Bowl Clamp Ring Gasket	1
27	8R-644		#+⁶ Therm. Housing Gasket	1
28	8R-864		#+¥ Throttle Body Gasket	1
29	9R-70		¥ Throttle Plate	1
30	10R-755A		¥ Throttle Lever and Shaft Assy.	1
31	12R-2198A		¥ Throttle Body and Shaft Assy.	1
32	15R-36	320 2205	¥* Idle Adj. Needle	1
33	16R-178A	320 2207	@ Float and Lever Assy.	1
34	17R-31	320 6400	@ Float Lever Shaft	1
35	18R-53A8	320 2211	#* Fuel Inlet Needle & Seat Assy.	1
36	19R-219	320 6401	Spark Fitting	1
37	19R-223	320 6362	Fuel Inlet Fitting	1
38	21R-355-28	320 6315	Pump Discharge Nozzle	1
39	22R-40-58	320 3251	* Main Jet	1
40	25R-166A	320 2213	#*# Economizer Stem Assy.	1
41	25R-167A	320 6407	# Economizer Body Cover Assy.	1
42	27R-204	320 6316	#*⁵ Choke Shaft Seal	1
43	28R-6	320 6318	* Pump Inlet Ball	1
44	28R-94	320 3181	ϕ*¥ Pump Discharge Ball	1
45	28R-94	320 3181	ϕ*¥ Pump Push Rod Ball	1
46	33R-344	320 6319	*¥ Pump Oper. Link	1
47	34R-1374	320 3707	@ Float Bowl	1
48	34R-2757		⁵ Choke Housing Plate	1
49	34R-2379A	320 6321	Main Well & Econ. Body & Plugs Assy.	1
50	34R-2740A		⁵ Choke Housing and Plugs Assy.	1
51	35R-347A	320 2887	#*¥ Pump Diaphragm and Rod Assy.	1
52	38R-108	320 3191	ϕ¥ Idle Adj. Needle Spring	1
53	38R-110	320 3192	ϕ¥ Throttle Stop Screw Spring	1
54	38R-395	320 3193	ϕ¥ Pump Return Spring	1
55	38R-452	320 3194	ϕ¥ Pump Oper. Spring	1
56	38R-566	320 6402	Float Bumper Spring	1
57	38R-759	320 3201	ϕ Choke Lever Spring	1
58	39R-11	320 4409	⁵ Choke Shaft Nut	1
59	40R-283	320 6323	Pump Discharge Valve Weight	1
61	42R-112		¥ Pump Push Rod Sleeve	1
62	46R-252	320 6326	⁵ Choke Shaft Nut L.W.	1
63	46R-529	320 6327	⁵ Choke Shaft Seal Washer	1
64	47R-144A	320 3225	⁶ Therm. Housing Assy. (Complete)	1
65	48R-5	320 6403	Float Bumper Spring Retainer	2
66	48R-183	320 3228	ϕ*¥ Pump Oper. Link Retainer	2
67	49R-128	320 3229	ϕ⁶ Therm. Housing Clamp	3
68	49R-187	320 6404	Float Bowl Clamp Ring	1
69	49R-250	320 6405	Float Bowl Clamp	4
70	63R-233A	320 6328	¥ Pump Oper. Lever Assy.	1
71	75R-37	320 3240	ϕ¥ Pump Oper. Lever Retainer	1

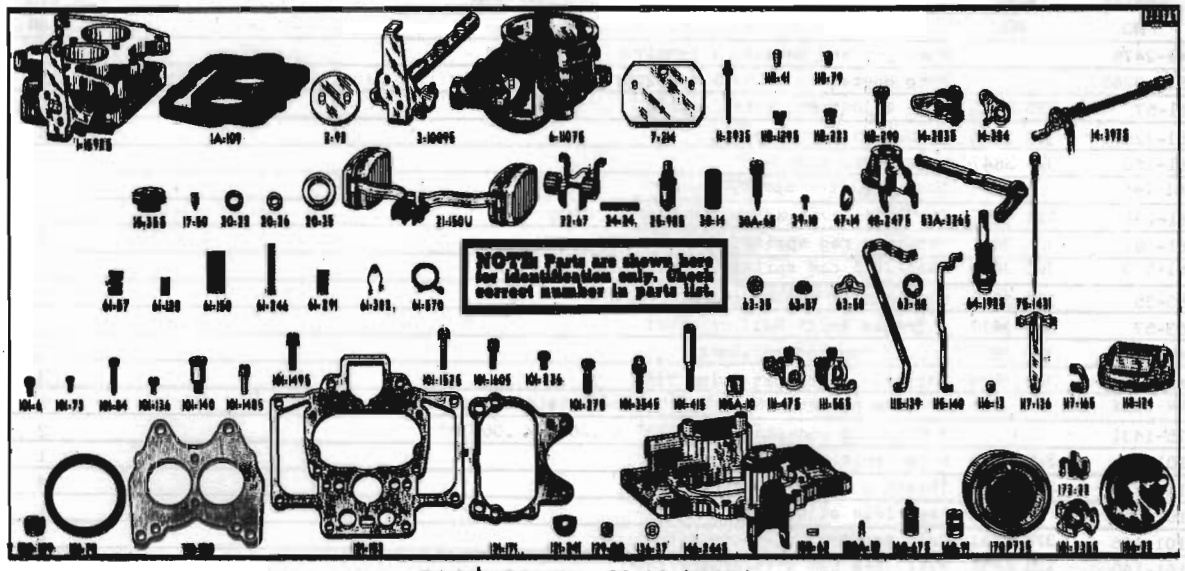

CARBURETOR 60 10 (WDT)

A.M.C. No. 315 1207 CARTER NO. WCD-28878, WCD-28868 AND WCD-28868A

CARTER NO.	A.M. NO.	DESCRIPTION	PER CAR
AM-1	320 3800	Assortment Kit (Includes all parts listed below which are coded with a ϕ)	
900-73	320 3773	Zip Kit (Includes 109-316 Float Gauge and all parts listed below which are coded with a #) (Replaces 320 2175)	1
1836	320 3156	Repair Kit (Re-Carb) (Includes all parts listed below which are coded with a *) (Replaces 320 2240)	1
285	320 2238	# Gasket Set (Includes all parts listed below which are coded with a +)	1
1A-109	315 0679	** Flange gasket	1
1-14958		Body flange assembly	1
1-15928		Body flange assembly (Use 1-14958)	1
2-92	320 6444	Throttle valve	2
3-10098		Throttle shaft and lever assembly	1
6-11078		Air horn and plug assembly	1
7-214		Choke valve	1
11-2938		Low speed jet assembly (.026")	2
11B-41	320 3803	ϕ Rivet plug	2
11B-79	320 3805	ϕ Rivet plug	7
11B-1298	320 3807	ϕ Pump discharge passage plug assembly	1
11B-223	320 3809	ϕ Nozzle passage rivet plug	2
11B-290	320 3811	ϕ Idle port rivet plug	2
11B-290	320 3811	Idle port rivet plug	2
14-3838	320 6446	Choke lever and screw assembly	1
14-384	320 6447	Cam trip lever	1
14-3978		Choke piston lever, link and shaft assembly	1
15-358	320 6448	Strainer nut assembly	1
17-50	320 6449	Pump check needle	1
20-22		+ Needle seat gasket	1
20-26		+ Gasket	1
20-35		+ Bowl strainer gasket.	1
21-150U	320 2232	Unitized package (Float Assy.)	1
22-67		Auxiliary float lever	1
24-24	320 6451	Float lever pin	1
25-988	320 3147	#* Needle and seat assembly (.1015") (Replaces 320 2235)	1
30-14	320 3837	Bowl cover strainer	1
30A-65	320 2230	Idle adjustment screw	2
39-10	320 3812	ϕ Choke valve attaching screw	2
47-14	320 3814	ϕ Welsh plug	1

CARTER NO.	A.M. NO.	DESCRIPTION	PER CAR
48-247S		Pump jet and housing assembly	1
53A-326S		Pump operating lever and countershaft assembly	1
61-57	320 3845	Idle adjustment screw spring	2
61-128	320 3815	ϕ Connector rod spring	1
61-150	320 3847	Lower pump spring	1
61-246		Vacuum piston spring	1
61-291	320 3850	Throttle lever adjusting screw spring	1
61-382	320 3841	Metering rod spring	1
61-570	320 3854	Fast idle cam spring	1
63-35	320 3816	ϕ Connector rod retainer	1
63-57	320 3817	ϕ Intake check ball retainer	1
62-58	320 3818	ϕ Coil housing retainer	2
63-118	320 3859	Throttle shaft retaining ring	1
64-192S	320 2237	#* Pump plunger, Rod, Spring and Retainer assembly	1
75-1431		* Metering rod-standard .073" x .068" x .06175"	2
101-6	320 6452	Pump arm clamp screw	1
101-73	320 6453	Throttle valve attaching screw	4
101-84		Fast idle adjustment screw	1
101-136	320 6431	Coil housing attaching screw	2
101-140	320 6454	Fast idle cam attaching screw	1
101-148S	320 6455	Dust cover attaching screw and washer assembly	2
101-149S		Body flange attaching screw and washer assembly	4
101-152S	320 6456	Air horn attaching screw and washer assembly	4
101-160S	320 6432	Bowl cover attaching screw and washer assembly	6
101-236		Metering rod arm clamp screw	1
101-278	320 6457	Pump jet housing attaching screw	1
101-354S	320 6458	Choke lever clamp screw and washer assembly	1
101-415		Throttle lever adjusting screw	1
105A-10	320 6459	Choke lever clamp screw nut	1
111-47S	320 6460	Pump arm and screw assembly	1
111-55S		Metering rod arm and screw assembly	1
115-139	320 6461	Throttle connector rod	1
115-140	320 3860	Choke connector rod	1
116-13	320 3825	ϕ Ball	1
117-136	320 6462	Vacumeter piston link	1
117-165	320 6463	Pump connector link	1
118-124		Dust cover	1
120-159		* Metering rod jet (.089")	2
121-78		*+ Coil housing gasket	1
121-150		*+ Body flange gasket	1
121-152		*+ Bowl cover gasket	1
121-171		*+ Air horn gasket	1
121-241		*+ Pump jet housing gasket	1
129-22	320 6464	Metering rod disk	2
136-37	320 3827	ϕ Connector rod washer	1
146-244S		Bowl cover and strainer assembly	1
150-62	320 3829	ϕ Piston pin	1
150A-10	320 3830	ϕ Pin spring	2
160-67S	320 3864	Vacuum piston and pin assembly	1
160-91	320 3865	Choke piston	1
170P-73S		Thermostatic coil and housing assembly (Use 170U-73SU)	1
170U-73SU	320 6796	Thermostatic coil and housing assembly	1
172-22	320 3832	ϕ Throttle connector rod retainer	1
181-235S	320 6465	Fast idle cam assembly	1
186-22	320 6466	Baffle plate	1

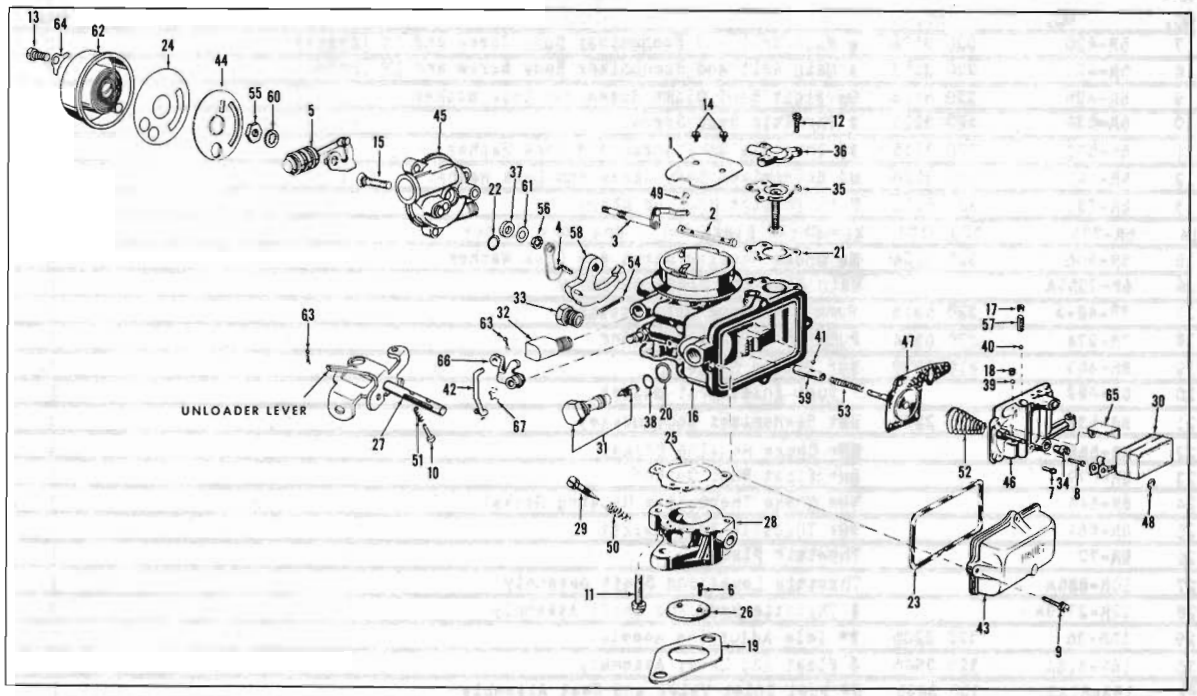

CARBURETOR 61-62 10 (WST-LDT)(WOD-LDT)

A.M. No. 316 2770 HOLLEY No. R-2138-1

KEY NO.	HOLLEY NO.	A.M. NO.	DESCRIPTION	PER CAR
	85A-1111	320 3586	Assortment Kit (Includes all parts listed below which are coded with a ϕ)	
	85A-766	320 3605	Pep Kit (Includes all parts listed below which are coded with a #)	1
	85R-1127	320 3604	Repair Kit (Includes all parts listed below which are coded with a *)	1
	85G-1006	320 2787	* Gasket Kit (Includes all parts listed below which are coded with a +)	1
	85M-1090	320 3419	Modification Kit (For Positive Ventilation Cars Only; includes all parts listed below which are coded with a °)	1
		316 2750	Metering Jet Pkg. (Incl. 1-Holley 22R-40-53 Metering Jet, 2 sizes lean for alt. 2,000 to 5,000 ft., & 1-Holley 22R-40-51 Metering Jet, 4 sizes lean for alt. 5,000 to 10,000 ft.) (Export Special Equipment)	1
	85B-1173	320 6301	Bowl Kit (Includes all parts listed below which are coded with a @)	1
	85C-1177	320 6307	Choke Kit (Includes all parts listed below which are coded with a ⊞)	1
	85D-1175	320 6304	Pump Diaphragm Kit (Includes all parts listed below which are coded with a ⊠)	1
	85E-1170	320 6305	Economizer Kit (Includes all parts listed below which are coded with a ⊻)	1
	85C-1162	320 6302	Choke Shaft Kit (Includes all parts listed below which are coded with a ⧖)	1
	85T-1160	320 6308	Throttle Body And Shaft Kit (Includes all parts listed below which are coded with a ⧳)	1
1	2R-324A		⧖ Choke Plate and Bracket Assembly	1
2	3R-353		⧖ Choke Shaft	1
3	3R-391A		⧖ Choke Link and Lever Assembly	1
4	4R-582		⊞ Choke Pick-Up Lever	1
5	4R-681A		⊞ Choke Thermostat Lever, Link and Piston Assembly	1
6	5R-4	320 3101	ϕ* Throttle Plate Screw	2

KEY NO.	HOLLEY NO.	A.M. NO.	DESCRIPTION	PER CAR
7	5R-420	320 3106	¢ Main Well and Economizer Body Screw and LW (Short)	2
8	5R-421	320 3107	¢ Main Well and Economizer Body Screw and LW (Long)	3
9	5R-425	320 3108	@¢ Float Bowl Clamp Screw and Lock Washer	4
10	5R-534	320 3110	¢ Throttle Stop Screw	1
11	5R-571	320 3115	‡¢ Throttle Body Screw and Lock Washer	2
12	5R-641	320 3120	¥¢ Economizer Body Screw and Lock Washer	3
13	5R-731	320 6312	▥ Thermostat Housing Screw	3
14	5R-773	320 3124	Z¢* Choke Plate Screw and Lock Washer	2
15	5R-806	320 3126	▥¢ Choke Housing Screw and Lock Washer	2
16	6R-2359A		Main Body and Plugs Assembly	1
17	7R-48-3	320 6313	Pump Discharge Ball Retainer	1
18	7R-274	320 6314	Pump Inlet Ball Retainer	1
19	8R-453	315 3999	‡#+ Flange Gasket	1
20	8R-482		+ Fuel Inlet Seat Gasket	1
21	8R-534	320 2203	¥#+ Economizer Body Gasket	1
22	8R-568		▥#+ Choke Housing Gasket	1
23	8R-579		@#+ Float Bowl Gasket	1
24	8R-644		▥#+ Choke Thermostat Housing Gasket	1
25	8R-864		‡#+ Throttle Body Gasket	1
26	9R-70		Throttle Plate	1
27	10R-885A		Throttle Lever and Shaft Assembly	1
28	12R-2719A		‡ Throttle Body and Shaft Assembly	1
29	15R-36	320 2205	‡* Idle Adjusting Needle	1
30	16R-316A	320 2946	@ Float and Lever Assembly	1
31	18R-81AS	320 3495	#* Fuel Inlet Valve and Seat Assembly	1
32	19R-219	320 6401	Spark Fitting	1
33	19R-223	320 6362	Fuel Inlet Fitting	1
34	22R-40-55	320 3166	Main Jet	1
34	22R-40-56	320 3250	° Main Jet (For Positive Ventilation Cars Only)	1
35	25R-166A	320 2213	¥#* Economizer Stem Assembly	1
36	25R-167A	320 6407	¥ Economizer Body Cover Assembly	1
37	27R-204	320 6316	▥#+ Choke Shaft Seal	1
38	27R-229	320 6317	+ Fuel Inlet Seat Seal	1
39	28R-6	320 6318	Pump Inlet Ball	1
40	28R-94	320 3181	¥¢* Pump Discharge Ball	1
41	28R-94	320 3181	¥¢* Pump Push Rod Sleeve Ball	1
42	33R-368	320 3207	‡ Pump Operating Link	1
43	34R-1374	320 3707	@ Float Bowl	1
44	34R-2757		▥ Choke Housing Plate	1
45	34R-3014A		▥ Choke Housing and Plugs Assembly	1
46	34R-3453A	320 3714	Main Well and Economizer Body and Plugs Assembly	1
47	35R-347A	320 2887	¥#* Pump Diaphragm and Rod Assembly	1
48	36R-169	320 3189	@¢* Float Retainer	1
49	36R-225	320 3190	Z¢* Choke Plate Link Retainer	1
50	38R-108	320 3191	‡¢ Idle Adjusting Needle Spring	1
51	38R-110	320 3192	¢ Throttle Stop Screw Spring	1
52	38R-395	320 3193	¥¢ Pump Return Spring	1
53	38R-452	320 3194	¥¢ Pump Operating Spring	1
54	38R-759	320 3201	Z¢ Choke Lever Spring	1
55	39R-11	320 4409	▥ Choke Shaft Nut	1
56	39R-166	320 6322	▥ Choke Pick Up Lever Nut	1
57	40R-283	320 6323	Pump Discharge Valve Weight	1
58	41R-338A	320 6324	Z Fast Idle Cam Assembly	1
59	42R-200		¥ Pump Push Rod Sleeve	1
60	46R-252	320 6326	▥ Choke Shaft Nut Lock Washer (Shakeproof)	1
	46R-347		° Economizer Shim (For Pos. Ventilation Cars Only)	2
61	46R-529	320 6327	▥ Choke Shaft Seal Washer	1
62	47R-160A	320 3224	▥ Choke Therm. Hsg. Assy. (CP)(Ident. by "R" on Cover)	1
63	48R-183	320 3228	‡¢* Pump Operating Link Cotter Pin	2
64	49R-128	320 3229	▥¢ Choke Thermostat Housing Clamp	3
65	59R-46		@ Fuel Inlet Baffle	1
66	63R-570	320 6329	‡ Pump Operating Lever Assembly	1
67	75R-37	320 3240	‡¢ Pump Operating Lever Retainer	1

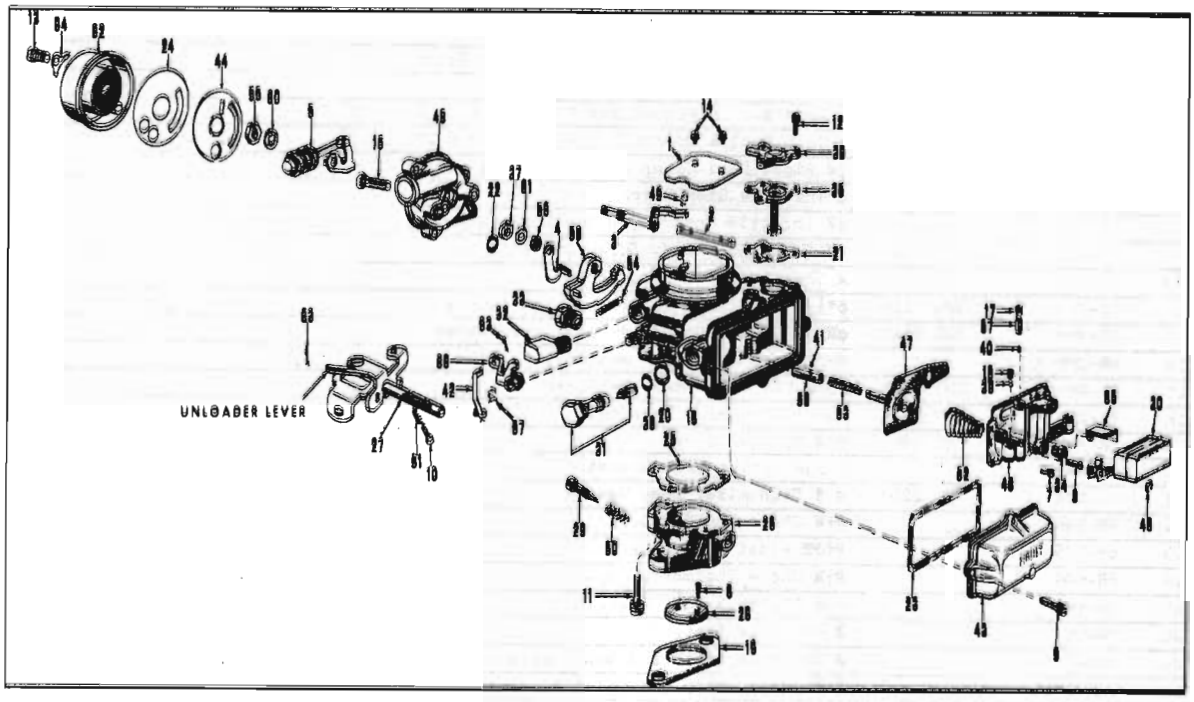

CARBURETOR 81 10 (WBT-LDT)(WOD-LDT)

A.M. No. 315 8344 HOLLEY No. R-2138

KEY NO.	HOLLEY NO.	A.M. NO.	DESCRIPTION	PER CAR
	85A-1111	320 3586	Assortment Kit (Includes all parts listed below which are coded with a ϕ)	
	85R-743	320 3605	Rep Kit (Includes all parts listed below which are coded with a #) (Replaces 320 2788)	1
	85R-1006	320 2789	Repair Kit (Includes all parts listed below which are coded with a *)	1
	85G-1006	320 2787	* Gasket Kit (Includes all parts listed below which are coded with a +)	1
	85M-1090	320 3419	Modification Kit (For Positive Ventilation Cars Only; incl. all parts listed below which are coded with a ⁸)	1
	85M-1115	320 3171	Altitude Kit (Includes all parts listed below which are coded with a @)	1
		316 2750	Metering Jet Package (Includes 1-Holley 22R-40-53 Metering Jet, 2 sizes lean for altitudes 2,000 to 5,000 feet, and 1-Holley 22R-40-51 Metering Jet, 4 sizes lean for altitudes 5,000 to 10,000 feet)	1
	85B-1173	320 6301	Bowl Kit (Includes all parts listed below which are coded with a ₩)	1
	85C-1177	320 6307	Choke Kit (Includes all parts listed below which are coded with a ₩)	1
	85D-1175	320 6304	Pump Diaphragm Kit (Includes all parts listed below which are coded with a ₩)	1
	85E-1170	320 6303	Economizer Kit (Includes all parts listed below which are coded with a ₹)	1
	85C-1162	320 6302	Choke Shaft Kit (Includes all parts listed below, which are coded with a [)	1
	85T-1160	320 6308	Throttle Body and Shaft Kit (Includes all parts listed below which are coded with a ₩)	1
1	2R-324A		Choke Plate and Bracket Assembly	1
2	3R-353		Choke Shaft	1
3	3R-391A		Choke Link and Lever Assembly	1

KEY NO.	HOLLEY NO.	A.M. NO.	DESCRIPTION	PER CAR
4	4R-582		Choke Pick-Up Lever	1
5	4R-681A		Choke Thermostat Lever, Link and Piston Assembly	1
6	5R-4	320 3101	Throttle Plate Screw	2
7	5R-420	320 3106	Main Well & Economizer Body Screw & LW (Short)	2
8	5R-421	320 3107	Main Well & Economizer Body Screw & LW (Long)	3
9	5R-425	320 3108	Float Bowl Clamp Screw and Lock Washer	4
10	5R-534	320 3110	Throttle Stop Screw	1
11	5R-571	320 3115	Throttle Body Screw and Lock Washer	2
12	5R-641	320 3120	Economizer Body Screw and Lock Washer	3
13	5R-731	320 6312	Thermostat Housing Screw	3
14	5R-773	320 3124	Choke Plate Screw and Lock Washer	2
15	5R-806	320 3126	Choke Housing Screw and Lock Washer	2
16	6R-2050A		Main Body and Plugs Assembly	1
17	7R-48-3	320 6313	Pump Discharge Ball Retainer	1
18	7R-274	320 6314	Pump Inlet Ball Retainer	1
19	8R-453	315 3999	Flange Gasket	1
20	8R-482		Fuel Inlet Seat Gasket	1
21	8R-534	320 2203	Economizer Body Gasket	1
22	8R-568		Choke Housing Gasket	1
23	8R-579		Float Bowl Gasket	1
24	8R-644		Choke Thermostat Housing Gasket	1
25	8R-864		Throttle Body Gasket	1
26	9R-70		Throttle Plate	1
27	10R-885A		Throttle Lever and Shaft Assembly	1
28	12R-2719A		Throttle Body and Shaft Assembly	1
29	15R-36	320 2205	Idle Adjusting Needle	1
30	16R-316A	320 2946	Float and Lever Assembly	1
31	18R-62AS	320 2902	Fuel Inlet Valve and Seat Assembly	1
32	19R-219	320 6401	Spark Fitting	1
33	19R-223	320 6362	Fuel Inlet Fitting	1
34	22R-40-55	320 3166	Main Jet	1
34	22R-40-56	320 3250	Main Jet (For Positive Ventilation Cars Only)	1
35	25R-166A	320 2213	Economizer Stem Assembly	1
36	25R-167A	320 6407	Economizer Body Cover Assembly	1
37	27R-204	320 6316	Choke Shaft Seal	1
38	27R-229	320 6317	Fuel Inlet Seat Seal	1
39	28R-6	320 6318	Pump Inlet Ball	1
40	28R-94	320 3181	Pump Discharge Ball	1
41	28R-94	320 3181	Pump Push Rod Sleeve Ball	1
42	33R-344	320 6319	Pump Operating Link	1
42	33R-368	320 6320	Pump Operating Link	1
43	34R-1374	320 3707	Float Bowl	1
44	34R-2757		Choke Housing Plate	1
45	34R-3014A		Choke Housing and Plugs Assembly	1
46	34R-3016A	320 3710	Main Well and Economizer Body and Plugs Assembly	1
47	35R-347A	320 2887	Pump Diaphragm and Rod Assembly	1
48	36R-169	320 3189	Float Retainer	1
49	36R-225	320 3190	Choke Plate Link Retainer	1
	37R-135		Pump Pivot Stud	1
50	38R-108	320 3191	Idle Adjusting Needle Spring	1
51	38R-110	320 3192	Throttle Stop Screw Spring	1
52	38R-395	320 3193	Pump Return Spring	1
53	38R-452	320 3194	Pump Operating Spring	1
54	38R-759	320 3201	Choke Lever Spring	1
55	39R-11	320 4409	Choke Shaft Nut	1
56	39R-166	320 6322	Choke Pick-Up Lever Nut	1
57	40R-283	320 6323	Pump Discharge Valve Weight	1
58	41R-338A	320 6324	Fast Idle Cam Assembly	1
59	42R-200		Pump Push Rod Sleeve	1
60	46R-252	320 6326	Choke Shaft Nut Lock Washer (ShakeProof)	1

KEY NO.	HOLLEY NO.	A.M. NO.	DESCRIPTION	PER CAR
	46R-347		° Economizer Shim (For Positive Ventilation Cars Only)	2
61	46R-529	320 6327	Ж Choke Shaft Seal Washer	1
62	47R-160A	320 3224	Ж Choke Therm. Hsg. Assy. (Cp.)(Ident. by "R" on Cover)	1
63	48R-183	320 3228	ϕ*@Ж Pump Operating Link Cotter Pin	2
64	49R-128	320 3229	ϕЖ Choke Thermostat Housing Clamp	3
65	59R-46		Ш Fuel Inlet Baffle	1
66	63R-233A	320 6328	Ж Pump Operating Lever Assembly	1
66	63R-570	320 6329	@ Pump Operating Lever Assembly	1
67	75R-37	320 3240	Ж Pump Operating Lever Retainer	1



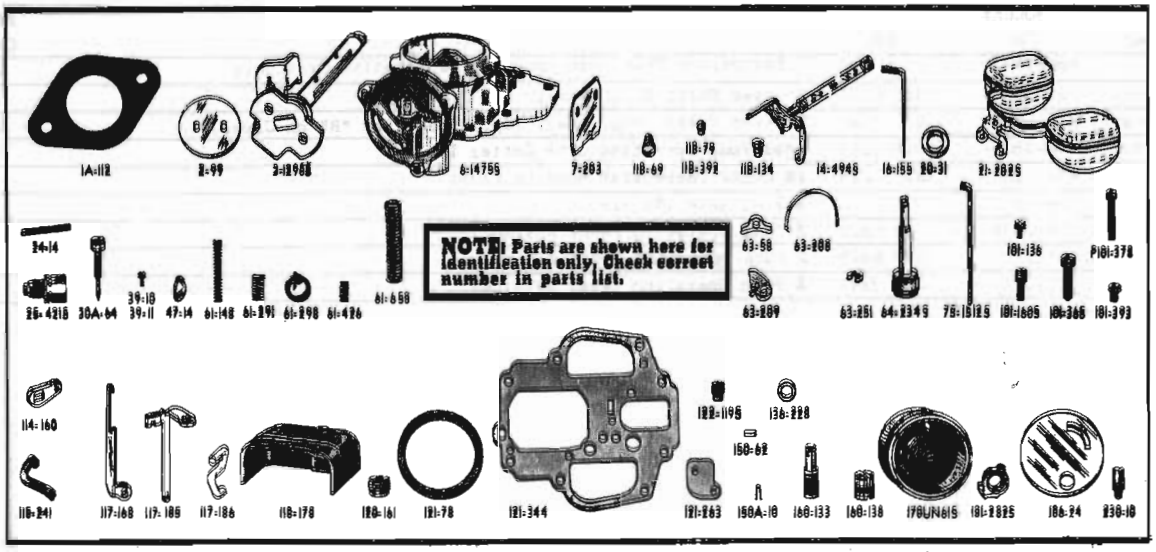

CARBURETOR 61-62 10 (WAT-1DT)

A.M. No. 316 2214 CARTER No. AS-3206S

CARTER NO.	A.M. NO.	DESCRIPTION	PER CAR
AM-1	320 3800	Assortment Kit (Includes all parts listed below which are coded with a ϕ)	
902-129	320 3774	Zip Kit (Includes T109-333 Float Gauge and all parts listed below which are coded with a #) (Replaces 320 3154)	1
5047X	320 3170	Repair Kit (Re-Carb) (Includes all parts listed below which are coded with a *)	1
367	320 2953	# Gasket Set (Includes all parts listed below which are coded with a +)	1
75-1589S	320 3416	Modification Kit (For Positive Ventilation Cars Only - Incl. all parts listed below which are coded with a ϕ)	1
	316 2139	Metering Jet Pkg. (Incl. 1-Carter 75-1564-S Metering Jet, 1 size lean for alt. 2,000 to 5,000 ft., & 1-Carter 75-1565-S Metering Jet 2 sizes lean for alt. 5,000 to 10,000 ft.) (Expert Special Equipment)	1
1A-112		Flange gasket (Use 1A-131)	
1A-131	315 3999	** Flange gasket	1
2-99		Throttle valve (Use 2-251	
2-251	320 3869	Throttle valve	1
3-12988		Throttle shaft and lever assembly (Use 3-12508)	
3-12508	320 6467	Throttle shaft and lever assembly	1
6-14758		Air horn assembly (Use 6-15278)	
6-15278		Air horn assembly	1
7-203		Choke valve (Use 7-253)	
7-253	320 6488	Choke valve	1
11B-69	320 3804	ϕ Spark port rivet plug	1
11B-79	320 3805	ϕ Rivet plug	2
11B-134	320 3808	ϕ Rivet plug	1
11B-392	320 3833	Rivet plug	1
14-4948	320 6469	Choke piston lever, link and shaft assembly	1
16-155		Power jet rod (Use 16-142)	
16-142		* Power jet rod .074" x .056"	1
20-31		+ Needle seat gasket	1
21-2028		Float and lever assembly (Use 21-2108)	
21-2108	320 2954	Float and lever assembly	1
24-14	320 6470	Float lever pin	1
25-4218		Needle and seat assembly (Use 25-5308)	
25-5308	320 3148	#* Needle and seat assembly	1

CARTER NO.	A.M. NO.	DESCRIPTION	PER CAR
30A=64	320 2792	Idle adjustment screw	1
39=10	320 3812	ϕ Choke valve attaching screw	2
47=14	320 3814	Welsh plug	1
61=148		Step-up piston spring (Use 61=604)	
61=604	320 3857	* Step-up piston spring	1
61=291	320 3850	Throttle lever adjusting screw spring	1
61=298	320 3840	Fast idle cam spring	1
61=426	320 3844	Idle adjustment screw spring	1
61=657	320 3855	Pump spring (upper) (Not shown)	1
61=658	320 3856	Pump spring (lower)	1
63=58	320 3818	ϕ Coil housing retainer	3
63=208	320 3821	ϕ Float lever pin retainer	1
63=209	320 3822	ϕ Metering rod retainer	1
63=213	320 3823	ϕ Discharge ball retainer (Not shown)	1
63=251	320 3824	ϕ Pump spring retainer	1
64=234S		Pump plunger and rod assembly (Use 64=233S)	
64=233S	320 2941	#* Pump plunger and rod assembly	1
75=1512S		Metering rod assembly (Use 75=1561S)	
75=1561S		* Metering rod assembly - standard .075" x .071" x .060"	1
75=1589		ϑ Metering rod (For Positive Ventilation Cars Only)	1
101=136	320 6431	Coil housing attaching screw	3
101=160S	320 6432	Air horn attaching screw and washer assembly	9
101=365		Throttle lever adjusting screw	1
P101=378	320 6471	Dust cover screw	2
101=393	320 6472	Throttle shaft screw	1
101=419	320 6473	Throttle valve attaching screw (Not shown)	2
114=161S	320 6474	Throttle shaft arm and link assembly (Contains 1 of 114=160 and 1 of 117=186 assembled)	1
115=241		Connector rod (Use 115=332)	
115=332	320 6475	Connector rod	1
116=25	320 3826	ϕ Discharge check ball (Not shown)	1
117=168		Fast idle link (Use 117=183)	
117=183	320 6476	Fast idle link	1
117=185	320 6477	Pump lifter link	1
118=178		Dust cover	1
120=161		Metering rod jet (Use 120=171)	
120=171		* Metering rod jet (.1065)	1
121=78		** Coil housing gasket	1
121=263		** Dust cover gasket	1
121=344		Body gasket (Use 121=352)	
121=352		** Body gasket	1
122=108S	320 3863	Pump intake check assembly	1
122=119S		Pump intake check assembly (Use 122=108S)	
136=228	320 3828	ϕ Pump shaft washer	1
150=62	320 3829	ϕ Choke piston pin	1
150A=10	320 3830	Pin spring	1
160=133	320 6479	Step-up piston	1
160=138	320 3866	Choke piston	1
170UN=61S		Thermostatic coil and housing assembly (Use 170AE=61S)	
170AE=61S	320 6268	Thermostatic coil and housing assembly	1
181=202S		Fast idle cam assembly (Use 181=234S)	
181=234S	320 6480	Fast idle cam assembly	1
186=24	320 6481	Choke baffle plate	1
230=10		* Power jet (.076")	1

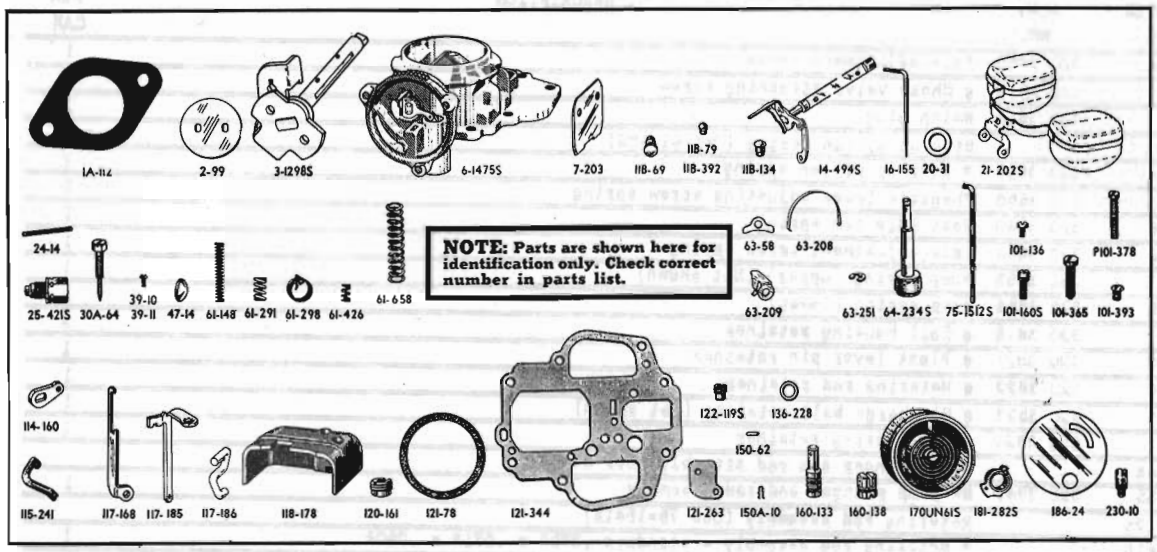

CARBURETOR 61 10 (WAT-LDT)

A.M.C. No. 315 9992 CARTER No. AS-3169-S

CARTER NO.	A.M. NO.	DESCRIPTION	PER CAR
AM-1	320 3800	Assortment Kit (Includes all parts listed below which are coded with a ϕ)	
900-127	320 3774	Zip Kit (Includes 109-325 Float Gauge and all parts listed below which are coded with a #) (Replaces 320 2939)	1
5046N	320 3161	Repair Kit (Re-Carb) (Includes all parts listed below which are coded with a *) (Replaces 320 2942)	1
361	320 2943	# Gasket Set (Includes all parts listed below which are coded with a +)	1
	316 2139	Metering Jet Package (Incl. 1 Carter 75-1554-S Metering Jet 1 size lean for alt. 2,000 to 5,000 ft., and 1 Carter 75-1555-S Metering Jet 2 sizes lean for alt. 5,000 to 10,000 ft.)	1
1A-112		Flange gasket (Use 1A-131)	
1A-131	315 3999	*+ Flange gasket	1
2-99		Throttle valve (Use 2-251)	
2-251	320 3869	Throttle valve	1
3-1298S		Throttle shaft and lever assembly (Use 3-1250S)	
3-1250S	320 6467	Throttle shaft and lever assembly	1
6-1475S		Air horn assembly (Use 6-1520S)	
6-1520S		Air horn assembly	1
7-203		Choke valve (Use 7-253)	
7-253	320 6468	Choke valve	1
11B-69	320 3804	ϕ Spark port rivet plug	1
11B-79	320 3805	ϕ Rivet plug	2
11B-134	320 3808	ϕ Rivet plug	1
11B-392	320 3833	Rivet plug	1
14-494S	320 6469	Choke piston lever, link and shaft assembly	1
16-155		Power jet rod (Use 16-142)	
16-142		* Power jet rod (.074" x .056")	1
20-31		+ Needle seat gasket	1
21-202S	320 2790	Float and lever assembly	1
24-14	320 6470	Float lever pin	1
25-421S		Needle and seat assembly (Use 25-449S)	
25-449S	320 2791	#* Needle and seat assembly (.0935")	1
30A-64	320 2792	Idle adjustment screw	1
39-10	320 3812	ϕ Choke valve attaching screw	2
47-14	320 3814	ϕ Welsh plug	1

CARTER NO.	A.M. NO.	DESCRIPTION	PER CAR
61-148		Step-up piston spring (Use 61-226)	
61-226	320 3848	* Step-up piston spring	1
61-291	320 3850	Throttle lever adjusting screw spring	1
61-298	320 3840	Fast idle cam spring	1
61-426	320 3844	Idle adjustment screw spring	1
61-657	320 3855	Pump spring (upper) (not shown)	1
61-658	320 3856	Pump spring (lower)	1
63-58	320 3818	ϕ Coil housing retainer	3
63-208	320 3821	ϕ Float lever pin retainer	1
63-209	320 3822	ϕ Metering rod retainer	1
63-213	320 3823	ϕ Discharge ball check retainer (not shown)	1
63-251	320 3824	ϕ Pump spring retainer	1
64-234S		Pump plunger and rod assembly (Use 64-233S)	
64-233S	320 2941	#* Pump plunger and rod assembly	1
75-1512S		Metering rod assembly (Use 75-1552S)	
75-1552S		* Metering rod assembly .076" x .072" x .052" Standard	1
101-136	320 6431	Coil housing attaching screw	3
101-160S	320 6432	Air horn attaching screw and washer assembly	9
101-365		Throttle lever adjusting screw	1
P101-378	320 6471	Dust cover screw	2
101-393	320 6472	Throttle shaft screw	1
101-419	320 6473	Throttle valve attaching screw (not shown)	2
114-161S	320 6474	Throttle shaft arm and link assembly (contains 1 of 114-160 and 1 of 117-186 assembled)	1
115-241		Connector rod (Use 115-332)	
115-332	320 6475	Connector rod	1
116-25	320 3825	ϕ Pump discharge check ball (not shown)	1
117-168		Fast idle link (Use 117-183)	
117-183	320 6476	Fast idle link	1
117-185	320 6477	Pump lifter link	1
118-178		Dust cover	1
120-161		Metering rod jet (Use 120-171)	
120-171		* Metering rod jet (.1065")	1
121-78		*+ Coil housing gasket	1
121-263		*+ Dust cover gasket	1
121-344		Body gasket (Use 121-339)	
121-339		*+ Body gasket	1
122-119S		Pump intake check assembly (Use 122-108S)	
122-108S	320 3863	Pump intake check assembly	1
136-228	320 3828	ϕ Pump shaft washer	1
150-62	320 3829	ϕ Choke piston pin	1
150A-10	320 3830	ϕ Pin spring	1
160-133	320 6479	Step-up Piston	1
160-138	320 3866	Choke piston	1
170UN-61S		Thermostatic coil and housing assembly (Use 170AF-61S)	
170AF-61S	320 6268	Thermostatic coil and housing assembly	1
181-282S		Fast idle cam assembly (Use 181-234S)	
181-234S	320 6480	Fast idle cam assembly	1
186-24	320 6481	Choke baffle plate	1
230-10		* Power jet (.076)	1

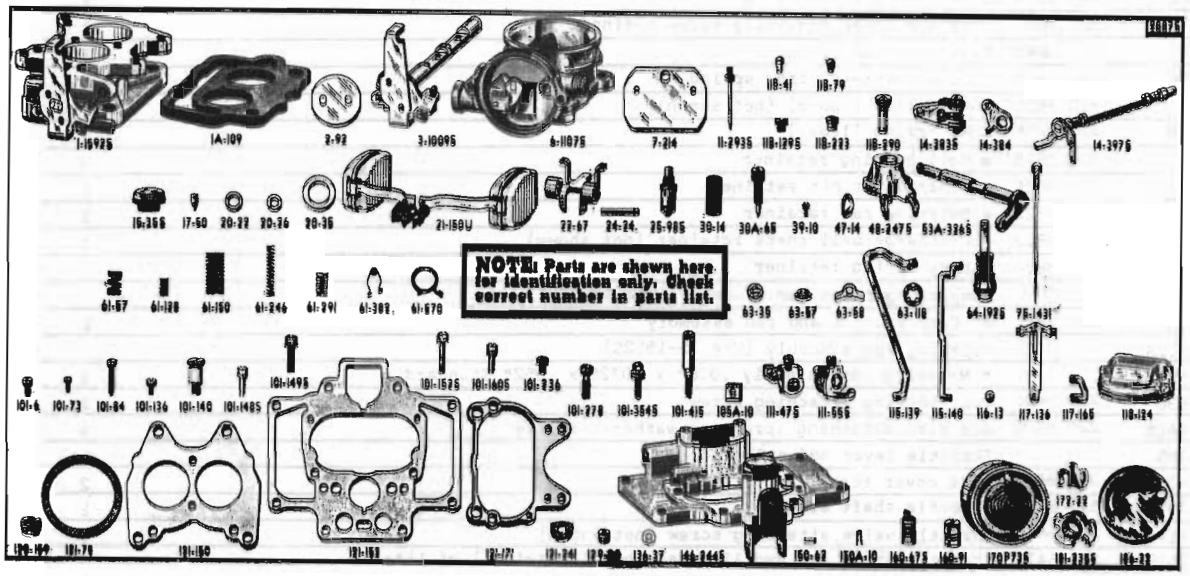

CARBURETOR 61 10 (WDT)

AMERICAN MOTORS No. 316 0099 — CARTER No. WCD-3170S

CARTER NO.	A.M. NO.	DESCRIPTION	PER CAR
AM-1	320 3800	Assortment Kit (Includes all parts listed below which are coded with a ϕ)	
900-126	320 3773	Zip Kit (Includes 109-316 Float Gauge and all parts listed below which are coded with a #) (Replaces 320 2938)	1
5043N	320 3157	Repair Kit (Re-Carb) (Includes all parts listed below which are coded with a *) (Replaces 320 2944)	1
360	320 2945	# Gasket Set (Includes all parts listed below which are coded with a +)	1
11-325U	320 3417	Modification Kit (For Positive Ventilation Cars Only - Incl. all parts listed below which are coded with a °)	1
75-1321U	314 9884	Metering Rod Kit (Incl. 2 Carter 75-1290 Metering Rods 3% lean and 2 Carter 75-1291 Metering Rods 6% lean and 2 Carter 75-1292 Metering Rods 9% lean) (for use at 5,000 ft. alt.)	1
1A-109		Flange gasket (Use 1A-155)	
1A-155	316 0094	** Flange gasket	1
1-1592S		Body flange assembly (Use 1-1740S)	
1-1740S		Body flange assembly	1
2-92	320 6444	Throttle valve	2
3-1009S		Throttle shaft and lever assembly	1
6-1107S		Air horn and plug assembly	1
7-214		Choke valve	1
11-245		° Low Speed Jet (For Positive Ventilation Cars Only)	2
11-293S		Low speed jet assembly (.026")	2
11B-41	320 3803	ϕ Rivet plug	2
11B-79	320 3805	ϕ Rivet plug	7
11B-129S	320 3807	ϕ Pump discharge passage plug assembly	1
11B-223	320 3809	ϕ Nozzle passage rivet plug	2

CARTER NO.	A.M. NO.	DESCRIPTION	PER CAR
11B-290	320 3811	ϕ Idle port rivet plug	2
14-3838	320 6446	Choke lever and screw assembly	1
14-384	320 6447	Cam trip lever	1
14-3978		Choke piston lever, link and shaft assembly	1
15-358	320 6448	Strainer nut assembly	1
17-50	320 6449	Pump check needle	1
20-22		+ Needle seat gasket	1
20-26		+ Gasket	1
20-35		+ Bowl strainer gasket	1
21-1BQV	320 2232	Unitized package (Float Assy.)	1
22-67		Auxiliary float lever	1
24-24	320 6451	Float lever pin	1
25-98S	320 3147	#* Needle and seat assembly (.1015") (Replaces 320 2235)	1
30-14	320 3837	Bowl cover strainer	1
30A-65	320 2230	Idle adjustment screw	2
39-10	320 3812	ϕ Choke valve attaching screw	2
47-14	320 3814	ϕ Welsh plug	1
48-247S		Pump jet and housing assembly (Use 48-282S)	
48-282S	320 6482	Pump jet and housing assembly	1
53A-326S		Pump operating lever and countershaft assembly	1
61-57	320 3845	Idle adjustment screw spring	2
61-128	320 3815	ϕ Connector rod spring	1
61-150	320 3847	Lower pump spring	1
61-226	320 3848	Vacuum pistonspring	1
61-246	320 3849	Vacuum piston spring (Use 61-226)	
61-291	320 3850	Throttle lever adjusting screw spring	1
61-382	320 3841	Metering rod spring	1
61-570	320 3854	Fast idle cam spring	1
61-604	320 3857	ᵕ Step Up Spring (For Positive Ventilation Cars Only)	1
63-35	320 3816	ϕ Connector rod retainer	1
63-57	320 3817	ϕ Intake check ball retainer	1
63-58	320 3818	ϕ Coil housing retainer	2
63-118	320 3859	Throttle shaft retaining ring	1
64-192S	320 2237	#* Pump plunger, Rod, Spring and Retainer assembly	1
75-1431		* Metering rod-standard .073" x .068" x .06175"	2
75-1464	320 6483	Metering rod - 1 size lean .0735" x .069" x .0635"	2
75-1465	320 6484	Metering rod - 2sizes lean .075" x .070" x .065"	2
101-6	320 6452	Pump arm clamp screw	1
101-73	320 6453	Throttle valve attaching screw	4
101-84		Fast idle adjustment screw	1
101-136	320 6431	Coil housing attaching screw	2
101-140	320 6454	Fast idle cam attaching screw	1
101-148S	320 6455	Dust cover attaching screw and washer assembly	2
101-149S		Body flange attaching screw and washer assembly	4
101-152S	320 6456	Air horn attaching screw and washer assembly	4
101-160S	320 6432	Bowl cover attaching screw and washer assembly	6
101-236		Metering rod arm clamp screw	1
101-278	320 6457	Pump jet housing attaching screw	1
101-354S	320 6458	Choke lever clamp screw and washer assembly	1
101-415		Throttle lever adjusting screw	1
105A-10	320 6459	Choke lever clamp screw nut	1
111-47S	320 6460	Pump arm and screw assembly	1
111-55S		Metering rod arm and screw assembly	1
115-139	320 6461	Throttle connector rod	1
115-140	320 3860	Choke connector rod	1
116-13	320 3825	ϕ Ball	1
117-136	320 6462	Vacumeter piston link	1
117-165	320 6463	Pump connector link	1
118-124		Dust cover	1
120-159		* Metering rod jet (.089")	2
121-78		** Coil housing gasket	1

CARTER NO.	A.M. NO.	DESCRIPTION	PER CAR
121-150		** Body flange gasket	1
121-152		** Bowl cover gasket	1
121-171		** Air horn gasket	1
121-241		** Pump jet housing gasket	1
129-22	320 6464	Metering rod disk (Use 170U-73SU)	2
136-37	320 3827	Connector rod washer	1
146-244S		Bowl cover and strainer assembly	1
150-62	320 3829	ϕ Piston pin	1
150A-10	320 3830	ϕ Pin spring	2
160-67S	320 3864	Vacuum piston and pin assembly	1
160-91	320 3865	Choke piston	1
170P-73S		Thermostatic coil and housing assembly (Use 170U-73SU)	1
170U-73SU	320 6796	Thermostatic coil and housing assembly	
172-22	320 3832	ϕ Throttle connector rod retainer	1
181-235S	320 6465	Fast idle cam assembly	1
186-22	320 6466	Baffle plate	1

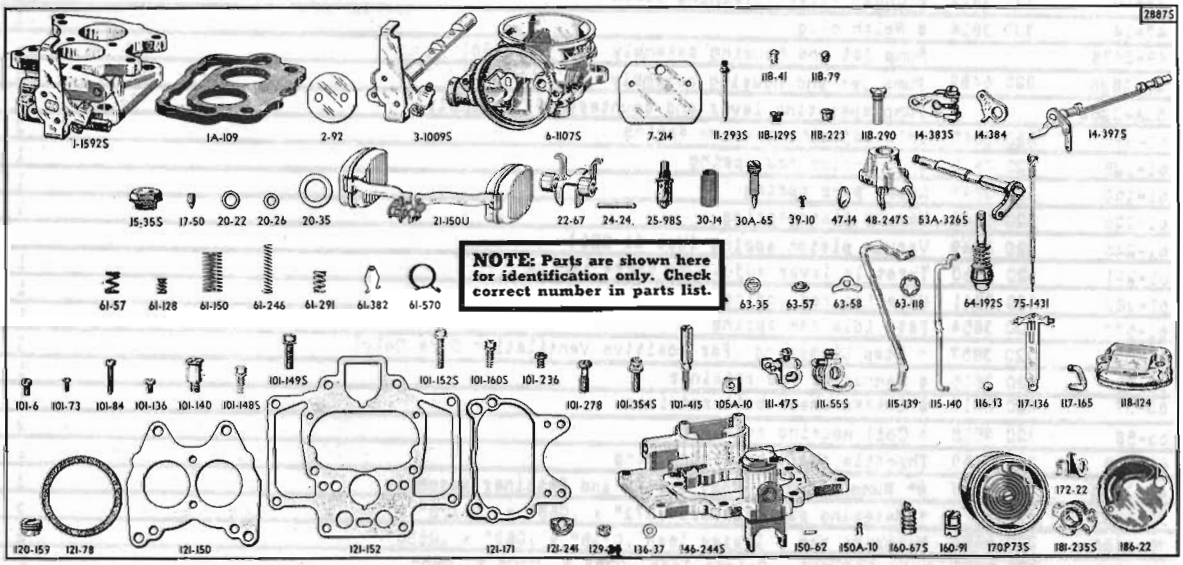

CARBURETOR 61-62 10 (WDT)

AMERICAN MOTORS No. 316 3916 CARTER No. WCD-3322S

CARTER NO.	A.M. NO.	DESCRIPTION	PER CAR
AM-1	320 3800	Assortment Kit (Includes all parts listed below which are coded with a ϕ)	
900-126	320 2938	Zip Kit (Includes 109-316 Float Gauge and all parts listed below which are coded with a #)	1
5043N	320 2944	Repair Kit (Re-Carb) (Includes all parts listed below which are coded with a *)	1
360	320 2945	# Gasket Set (Includes all parts listed below which are coded with a +)	1
75-1321U	314 9884	Metering Rod Kit (Incl. 2 Carter 75-1290 Metering Rods 3% lean and 2 Carter 75-1291 Metering Rods 6% lean and 2 Carter 75-1292 Metering Rods 9% lean) (for use at 5,000 ft. alt.)	
1A-109		Flange gasket (Use 1A-155)	
1A-155	316 0094	** Flange gasket	1
1-1592S		Body flange assembly (Use 1-1740S)	
1-1740S		Body flange assembly	1
2-92	320 6444	Throttle valve	2
3-1009S		Throttle shaft and lever assembly	1
6-1107S		Air horn and plug assembly (Use 6-1577S)	
6-1577S		Air horn and plug assembly	1

CARTER NO.	A.M. NO.	DESCRIPTION	PER CAR
7-214		Choke valve (Use 7-265)	
7-265	320 6485	Choke valve	1
11-181S	320 3835	Low speed jet assembly (.026")	2
11-293S		Low speed jet assembly (.026")(Use 11-181S)	
11B-41	320 3803	ϕ Rivet plug	2
11B-79	320 3805	ϕ Rivet plug	7
11B-129S	320 3807	ϕ Pump discharge passage plug assembly	1
11B-223	320 3809	ϕ Nozzle passage rivet plug	2
11B-290	320 3811	ϕ Idle port rivet plug	2
14-383S	320 6446	Choke lever and screw assembly	1
14-384	320 6447	Cam trip lever	1
14-397S		Choke piston lever, link and shaft assembly	1
15-35S	320 6448	Strainer nut assembly	1
17-50	320 6449	Pump check needle	1
20-22		+ Needle seat gasket	1
20-26		+ Gasket	1
20-35		+ Bowl strainer gasket	1
21-150U	320 2232	Unitized package (Float Assy.)	1
22-67		Auxiliary float lever	1
24-24	320 6451	Float lever pin	1
25-98S	320 3147	#* Needle and seat assembly (.1015") (Replaces 320 2235)	1
30-14	320 3837	Bowl cover strainer	1
30A-65	320 2230	Idle adjustment screw	2
39-10	320 3812	ϕ Choke valve attaching screw	2
47-14	320 3814	ϕ Welsh plug	1
48-247S		Pump jet and housing assembly (Use 48-286S)	
48-286S	320 6486	Pump jet and housing assembly	1
53A-326S		Pump operating lever and countershaft assembly	1
61-57	320 3845	Idle adjustment screw spring	2
61-128	320 3815	ϕ Connector rod spring	1
61-150	320 3847	Lower pump spring	1
61-246		Vacuum piston spring (Use 61-604)	
61-604	320 3857	Vacuum piston spring	1
61-291	320 3850	Throttle lever adjusting screw spring	1
61-382	320 3841	Metering rod spring	1
61-570	320 3854	Fast idle cam spring	1
63-35	320 3816	ϕ Connector rod retainer	1
63-57	320 3817	Intake check ball retainer	1
63-58	320 3818	Coil housing retainer	2
63-118	320 3859	Throttle shaft retaining ring (Not Used)	
64-192S	320 2237	#* Pump plunger, rod, spring and retainer assembly	1
75-1431		* Metering rod-standard .073" x .068" x .06175"	2
75-1464	320 6483	Metering rod - 1 size lean .0735" x .069" x .0635"	2
75-1465	320 6484	Metering rod - 2 sizes lean .075" x .070" x .065"	2
101-6	320 6452	Pump arm clamp screw	1
101-73	320 6453	Throttle valve attaching screw	4
101-84		Fast idle adjustment screw	1
101-136	320 6431	Coil housing attaching screw	2
101-140	320 6454	Fast idle cam attaching screw	1
101-148S	320 6455	Dust cover attaching screw and washer assembly	2
101-149S		Body flange attaching screw and washer assembly	4
101-152S	320 6456	Air horn attaching screw and washer assembly	4
101-160S	320 6432	Bowl cover attaching screw and washer assembly	6
101-236		Metering rod arm clamp screw	1
101-278	320 6457	Pump jet housing attaching screw	1
101-354S	320 6458	Choke lever clamp screw and washer assembly	1
101-415		Throttle lever adjusting screw	1
105A-10	320 6459	Choke lever clamp screw nut	1
111-47S	320 6460	Pump arm and screw assembly	1
111-55S		Metering rod arm and screw assembly	1
115-139	320 6461	Throttle connector rod	1

GROUP 4

CARTER NO.	A.M. NO.	DESCRIPTION	PER CAR
115-140	320 3860	Choke connector rod	1
116-13	320 3825	ϕ Ball	1
117-136	320 6462	Vacumeter Piston Link	1
117-165	320 6463	Pump connector link	1
118-124		Dust cover	1
120-159		* Metering rod jet (.089")	2
121-78		** Coil housing gasket	1
121-150		** Body flange gasket	1
121-152		** Bowl cover gasket	1
121-171		** Air horn gasket	1
121-241		** Pump jet housing gasket	1
129-22	320 6464	Metering rod disk	2
129-24		Metering rod disk	2
136-37	320 3827	ϕ Connector rod washer	1
146-244S		Bowl cover and strainer assembly	1
150-62	320 3829	ϕ Piston pin	1
150A-10	320 3830	ϕ Pin spring	2
160-67S	320 3864	Vacuum piston and pin assembly	1
160-91	320 3865	Choke piston (Use 160-138)	
160-138	320 3866	Choke piston	1
170P-73S		Thermostatic coil and housing assembly (Use 170U-73SU)	1
170U-73SU	320 6796	Thermostatic coil and housing assembly	1
172-22	320 3832	ϕ Throttle connector rod retainer	1
181-235S	320 6465	Fast idle cam assembly	1
186-22	320 6466	Baffle plate	1

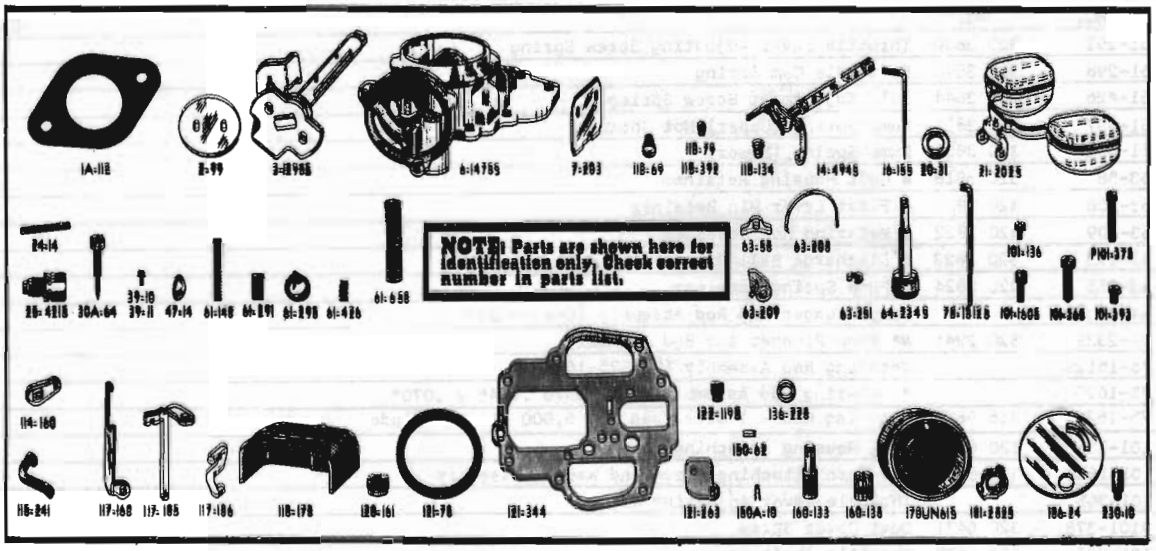

CARBURETOR 63 10 (WAT-LDT)

A.M. NO. 316 7872 CARTER NO. AS-3536S

CARTER NO.	A.M. NO.	DESCRIPTION	PER CAR
AM=2	320 3800	Assortment Kit (Includes all parts listed below which are coded with a @)	
902=172	320 3774	Zip Kit (Includes T109=333 Float Gauge and all parts listed below which are coded with a #)	1
5074X	320 4288	Repair Kit (Re-Carb)(Includes all parts listed below which are coded with a *)	1
367	320 2953	# Gasket Set (Includes all parts listed below which are coded with a +)	1
1A=112		Flange Gasket (Use 1A=131)	
1A=131	315 3999	#*+ Flange Gasket	1
2=99		Throttle Valve (Use 2=251)	
2=251	320 3869	Throttle Valve	1
3=12988		Throttle Shaft and Lever Assembly (Use 3=12505)	
3=12505	320 6467	Throttle Shaft and Lever Assembly	1
6=14758		Air Horn Assembly (Use 6=15275)(Not Available)	
6=15275		Air Horn Assembly (Not Available)	1
7=203		Choke Valve (Use 7=253)	
7=253	320 6468	Choke Valve	1
11B=69	320 3804	@ Spark Port Rivet Plug	1
11B=79	320 3805	@ Rivet Plug	2
11B=134	320 3808	@ Rivet Plug	1
11B=392	320 3833	Rivet Plug	1
14=4945	320 6469	Choke Piston Lever, Link and Shaft Assembly	1
16=155		Power Jet Rod (Use 16=223)	
16=223		* Power Jet Rod .074" x .043"	1
20=31	320 6493	+ Needle Seat Gasket	1
21=2025		Float and Lever Assembly (Use 21=2105)	
21=2105	320 2954	Float and Lever Assembly	1
24=14	320 6470	Float Lever Pin	1
25=4215		Needle and Seat Assembly (Use 25=5305)	
25=5305	320 3148	#* Needle and Seat Assembly	1
30A=64	320 2792	Idle Adjustment Screw	1
39=10	320 3812	@ Choke Valve Attaching Screw	2
47=14	320 3814	Welsh Plug	1
61=332	320 4289	* Step-up Piston Spring	1

CARTER NO.	A.M. NO.	DESCRIPTION	PER CAR
61-291	320 3850	Throttle Lever Adjusting Screw Spring	1
61-298	320 3840	Fast Idle Cam Spring	1
61-426	320 3844	Idle Adjustment Screw Spring	1
61-657	320 3855	Pump Spring (Upper)(Not Shown)	1
61-658	320 3856	Pump Spring (Lower)	1
63-58	320 3818	ϕ Coil Housing Retainer	3
63-208	320 3821	ϕ Float Lever Pin Retainer	1
63-209	320 3822	ϕ Metering Rod Retainer	1
63-213	320 3823	ϕ Discharge Ball Retainer (Not Shown)	1
63-251	320 3824	ϕ Pump Spring Retainer	1
64-234S		Pump Plunger and Rod Assembly (Use 64-233S)	
64-233S	320 2941	#* Pump Plunger and Rod Assembly	1
75-1512S		Metering Rod Assembly (Use 75-1620)	
75-1620		* Metering Rod Assembly - Standard .074" x .070"	1
75-1622	316 9635	Metering Rod - 1 Size Lean For 5,000 Ft. Altitiude	1
101-136	320 6431	Coil Housing Attaching Screw	3
101-160S	320 6432	Air Horn Attaching Screw and Washer Assembly	9
101-365		Throttle Lever Adjusting Screw	1
P101-378	320 6471	Dust Cover Screw	2
101-393	320 6472	Throttle Shaft Screw	1
101-419	320 6473	Throttle Valve Attaching Screw (Not Shown)	2
114-161S	320 6474	Throttle Shaft Arm and Link Assembly (Contains 1 of 114-160 and 1 or 117-186 assembled)	1
115-241		Connector Rod (Use 115-332)	
115-332	320 6475	Connector Rod	1
116-25	320 3826	ϕ Discharge Check Ball (Not Shown)	1
117-168		Fast Idle Link (Use 117-183)	
117-183	320 6476	Fast Idle Link	1
117-185	320 6477	Pump Lifter Link	1
118-178		Dust Cover	1
120-161		Metering Rod Jet (Use 120-171)	
120-171		* Metering Rod Jet (.1065)	1
121-78		#*+ Coil Housing Gasket	1
121-263		#*+ Dust Cover Gasket	1
121-344		Body Gasket (Use 121-352)	
121-352		#*+ Body Gasket	1
122-108S	320 3863	Pump Intake Check Assembly	1
122-119S		Pump Intake Check Assembly (Use 122-108S)	
136-228	320 3828	ϕ Pump Shaft Washer	1
150-62	320 3829	ϕ Choke Piston Pin	1
150A-10	320 3830	Pin Spring	1
160-133	320 6479	Step-up Piston	1
160-138	320 3866	Choke Piston	1
170UN-61S		Thermostatic Coil and Housing Assembly (Use 170AE-61S)	
170AE-61S	320 6268	Thermostatic Coil and Housing Assembly	1
181-282S		Fast Idle Cam Assembly (Use 181-234S)	
181-234S	320 6480	Fast Idle Cam Assembly	1
186-24	320 6481	Choke Baffle Plate	1
230-10		* Power Jet (.076")	1

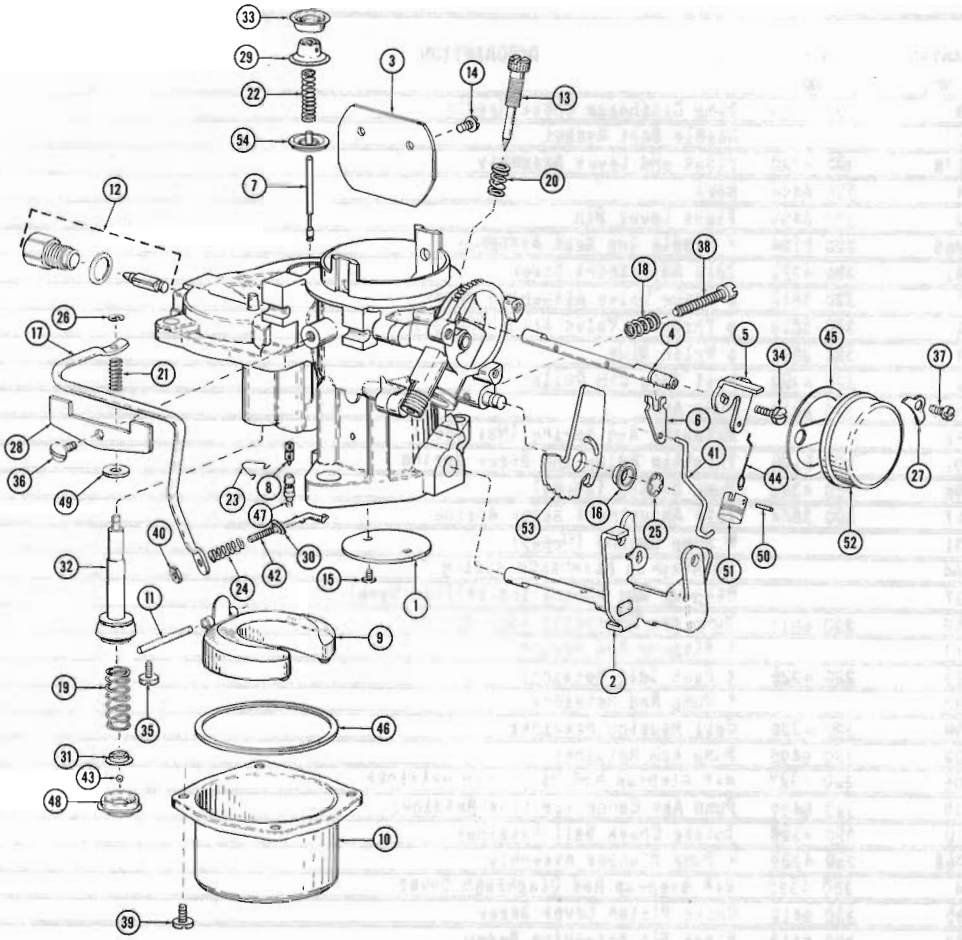

CARBURETOR 64 10 (OHV-196-WAT-LDT)

A.M. NO. 317 1291 CARTER NO. RBS-3488S

KEY NO.	CARTER NO.	A.M. NO.	DESCRIPTION	PER CAR
	AM-3	320 3800	Assortment Kit (Includes all parts listed below which are coded with a ϕ)	
	902-200	320 5427	Zip Kit (Includes all parts listed below which are coded with a *) (Replaces 320 5324)	1
	61-774U	320 5412	Carburetor Kit, used on Carburetors Prior to Revision "E" Stamped On Carburetor Flange (Includes All Parts Listed Below Which Are Coded With A +)	1
	16-320U	320 5581	Metering Jet Package (Includes All Parts Listed Below Which Are Coded With A #)(Use For 5,000 Ft. Altitude)	1
	1A-131	315 3999	* Flange Gasket	1
1	2-101	320 4318	Throttle Valve	1
2	3-1455S	320 6808	Throttle Shaft and Lever Assembly	1
3	7-270	320 6489	Choke Valve	1
	11B-69		Spark Port Rivet Plug	1
	11B-389	320 3870	ϕ Idle Port Rivet Plug	1
	11B-392		Rivet Plug (Not Used)	
4	13-222	320 6490	Choke Shaft	1
5	14-757	320 6809	Choke Piston Lever	1
6	14-738	320 4319	Choke Lever	1
7	16-273S		* Step Up Rod (.074" x .062")	1
	16-315S		#Step-up Rod - 1 Size Lean For 5,000 Ft.	1

GROUP 4

KEY NO.	CARTER NO.	A.M. NO.	DESCRIPTION	PER CAR
8	17=78	320 6402	Pump Discharge Check Needle	1
	20=203		Needle Seat Gasket	1
9	21=2178	320 4320	Float and Lever Assembly	1
10	23=84	320 6404	Bowl	1
11	24=32	320 6405	Float Lever Pin	1
12	25=7268	320 6124	* Needle and Seat Assembly	1
13	30A=81	320 4321	Idle Adjustment Screw	1
14	39=10	320 3812	ϕ Choke Valve Attaching Screw	2
15	39=11	320 3813	ϕ Throttle Valve Attaching Screw	2
	47=14	320 3814	ϕ Welsh Plug	1
16	51=71	320 4322	Fast Idle Cam Collar	1
17	53A=466	320 6810	Pump Arm	1
	61=242		Metering Rod Spring (Not Used)	
18	61=291	320 5125	Throttle Adjusting Screw Spring	1
19	61=398	320 4323	Pump Spring (Lower)	1
20	61=467	320 3844	Idle Adjustment Screw Spring	1
21	61=731		* Pump Spring (Upper)	1
22	61=764		#* Step-up Diaphragm Spring	1
23	61=737		Step-up Rod Spring (Lever)(Not Used)	
24	61=758	320 6811	Pump Arm Connector Link Spring	1
	61=773		+ Step-up Rod Spring	1
25	63=123	320 4325	ϕ Fast Idle Retainer	1
26	63=282		* Pump Rod Retainer	1
27	63=298	320 4326	Coil Housing Retainer	3
28	63=302	320 6406	Pump Arm Retainer	1
29	63=306	320 4327	#+* Step-up Rod Diaphragm Retainer	1
30	63=309	320 6409	Pump Arm Connector Link Retainer	1
31	63=310	320 4328	Intake Check Ball Retainer	1
32	64=3068	320 4329	* Pump Plunger Assembly	1
33	65=94	320 4330	#+* Step-up Rod Diaphragm Cover	1
34	101=65	320 6412	Choke Piston Lever Screw	1
35	101=67	320 6413	Float Pin Attaching Screw	2
36	101=74	320 6414	Pump Arm Retainer Screw	1
37	101=136	320 6431	Coil Housing Attaching Screw	3
38	101=387	320 6415	Throttle Lever Adjusting Screw	1
39	101=914	320 6416	Bowl Attaching Screw	4
40	105A=69	320 6417	Pump Arm Connector Link Nut	1
	108=83		#+* Ring	1
	108=84		Bushing Pump Plunger Shaft	1
	109=393		+ No. 62 (.038") Drill	1
41	115=391	320 6803	Fast Idle Connector Rod	1
42	115=385	320 6812	Pump Arm Connector Link	1
43	116=31	320 4331	ϕ* Intake Check Ball	1
44	117=200	320 4337	Choke Piston Link	1
45	121=527		* Coil Housing Gasket	1
46	121=492		* Bowl Ring Gasket	1
47	122=126	320 4336	Pump Discharge Needle Seat	1
48	122=127	320 4332	* Intake Ball Check Seat	1
49	130=257	320 6420	Pump Washer	1
	130=267		#+* Conical Washer	1
50	150=170	320 6421	Choke Piston Pin	1
51	160=279	320 6422	Choke Piston	1
52	170A=7715	320 4333	Thermostatic Coil and Housing Assembly	1
53	181=303	320 6424	Fast Idle Cam	1
54	203=1728		Step-up Rod Diaphragm Assembly (Not Used)	1

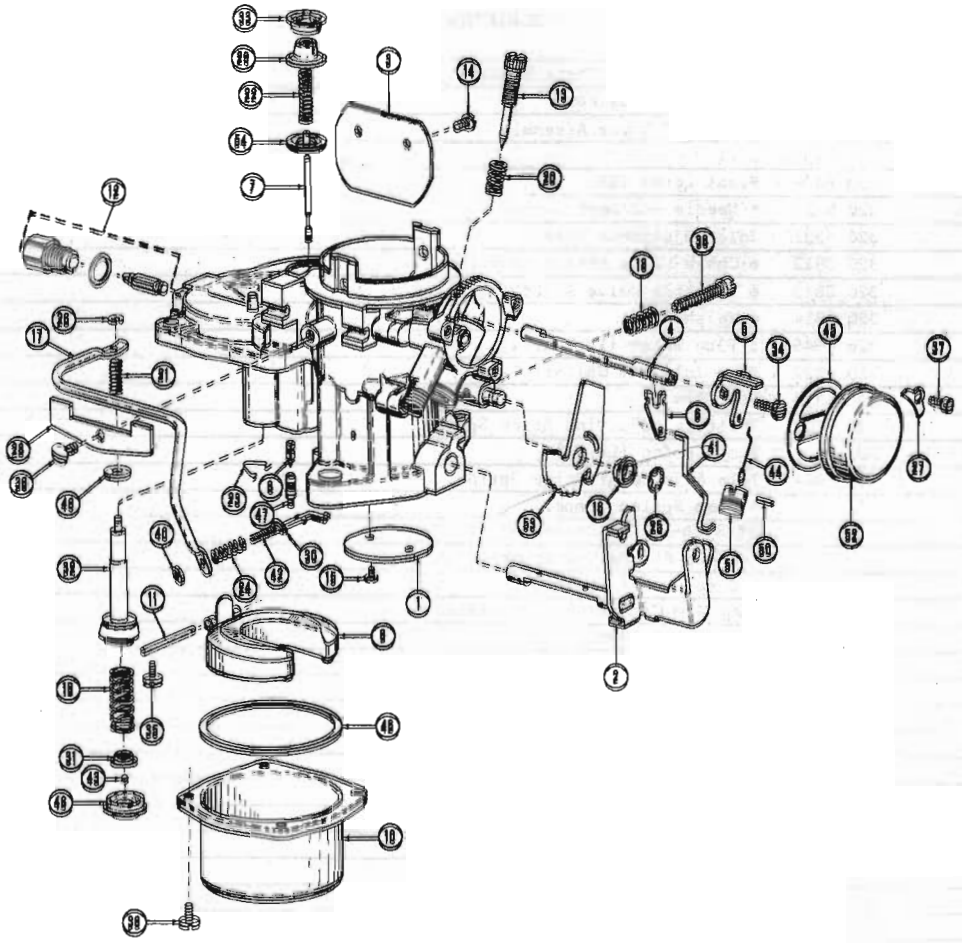

CARBURETOR 64 10 (OHV-196-W8T-LDT)(OHV-196-WOD-LDT)

A.M. NO. 317 3149 (Less Dashpot) CARTER NO. RBS-3727S
A.M. NO. 317 3150 (With Dashpot)(Not Serviced)
Order 317 3149 And 320 4334 CARTER NO. RBS-3728S

KEY NO.	CARTER NO.	A.M. NO.	DESCRIPTION	PER CAR
	AM-3	320 3800	Assortment Kit (Includes all parts listed below which are coded with a ϕ)	
	902-201	320 5428	Zip Kit (Includes all parts listed below which are coded with a *) (Replaces 320 5325)	1
	61-774U	320 5412	Carburetor Kit (Used On Carburetors Prior To Revision "E") Stamped On Carburetor Flange (Includes All Parts Listed Below Which Are Coded With A +)	1
	16-321U	320 5580	Metering Jet Package (Includes All Parts Listed Below Which are Coded With A #)(Use For 5,000 Ft. Altitude)	1
	1A-131	315 3999	* Flange Gasket	1
1	2-101	320 4318	Throttle Valve	1
2	3-1455S	320 6808	Throttle Shaft and Lever Assembly	1
3	7-270	320 6489	Choke Valve	1
	11B-69		Spark Port Rivet Plug	1
	11B-389	320 3870	ϕ Idle Port Rivet Plug	1
	11B-392		Rivet Plug (Not Used)	
4	13-222	320 6490	Choke Shaft	1
5	14-757	320 6809	Choke Piston Lever	1
6	14-738	320 4319	Choke Lever	1
7	16-285S		* Step Up Rod (.066" x .0525)	1
	16-314S		#Step-up Rod - 1 Size Lean For 5,000 Ft.	1

GROUP 4

KEY NO.	CARTER NO.	A.M. NO.	DESCRIPTION	PER CAR
8	17-78	320 6492	Pump Discharge Check Needle	1
	20-203		Needle Seat Gasket	1
9	21-217S	320 4320	Float and Lever Assembly	1
10	23-84	320 6494	Bowl	1
11	24-32	320 6495	Float Lever Pin	1
12	25-726S	320 5124	* Needle and Seat Assembly	1
13	30A-81	320 4321	Idle Adjustment Screw	1
14	39-10	320 3812	ϕ Choke Valve Attaching Screw	2
15	39-11	320 3813	ϕ Throttle Valve Attaching Screw	2
	47-14	320 3814	ϕ Welsh Plug	1
	47-31	320 4949	ϕ Plug Welsh (Fuel Well)	1
16	51-71	320 4322	Fast Idle Cam Collar	1
17	53A466	320 6810	Pump Arm	1
18	61-291	320 5125	Throttle Adjusting Screw Spring	1
19	61-398	320 4323	Pump Spring (Lower)	1
20	61-467	320 3844	Idle Adjustment Screw Spring	1
21	61-731		* Pump Spring (Upper)	1
22	61-764		#* Step-up Diaphragm Spring	1
23	61-737		Step-up Rod Spring (Lower)(Not Used)	
	61-773		+ Step-up Rod Spring	1
24	61-758	320 6811	Pump Arm Connector Link Spring	1
25	63-123	320 4325	ϕ Fast Idle Retainer	1
26	63-282		* Pump Rod Retainer	1
27	63-298	320 4326	Coil Housing Retainer	3
28	63-302	320 6498	Pump Arm Retainer	1
29	63-306	320 4327	#+* Step-up Rod Diaphragm Retainer	1
30	63-309	320 6499	Pump Arm Connector Link Retainer	1
31	63-310	320 4328	Intake Check Ball Retainer	1
32	64-306S	320 4329	* Pump Plunger Assembly	1
33	65-54	320 4330	#+* Step-up Rod Diaphragm Cover	1
34	101-65	320 6412	Choke Piston Lever Screw	1
35	101-67	320 6413	Float Pin Attaching Screw	2
36	101-74	320 6414	Pump Arm Retainer Screw	1
37	101-136	320 6431	Coil Housing Attaching Screw	3
	P101-238		Dashpot Bracket Screw (Not Serviced With Carburetor)	1
38	101-387	320 6415	Throttle Lever Adjusting Screw	1
39	101-514	320 6416	Bowl Attaching Screw	4
	105A-60	320 6802	Dashpot Nut (Not Serviced With Carburetor)	1
40	105A-69	320 6417	Pump Arm Connector Link Nut	1
	108-83		#+* Ring	1
	108-84		Bushing Pump Plunger Shaft	1
	109-393		+ No. 62 (.038") Drill	1
41	115-391	320 6803	Fast Idle Connector Rod	1
42	115-385	320 6812	Pump Arm Connector Link	1
43	116-31	320 4331	ϕ* Intake Check Ball	1
44	117-200	320 4337	Choke Piston Link	1
45	121-527		* Coil Housing Gasket	1
46	121-492		* Bowl Ring Gasket	1
47	122-126	320 4336	Pump Discharge Needle Seat	1
48	122-127	320 4332	* Intake Ball Check Seat	1
49	136-257	320 6420	Pump Washer	1
	136-267		#+* Conical Washer	1
50	150-170	320 6421	Choke Piston Pin	1
51	160-279	320 6422	Choke Piston	1
	180-131	320 6813	Dashpot Bracket (Not Serviced With Carburetor)	1
52	170FA-771S	320 4333	Thermostatic Coil and Housing Assembly	1
53	181-329	320 6804	Fast Idle Cam (Outer)	1
	181-328	320 6814	Fast Idle Cam (Inner)	1
	202-69S	320 4334	Dashpot Assembly (Not Serviced With Carburetor)	1
54	203-172S		Step-up Rod Diaphragm Assembly (Not Used)	

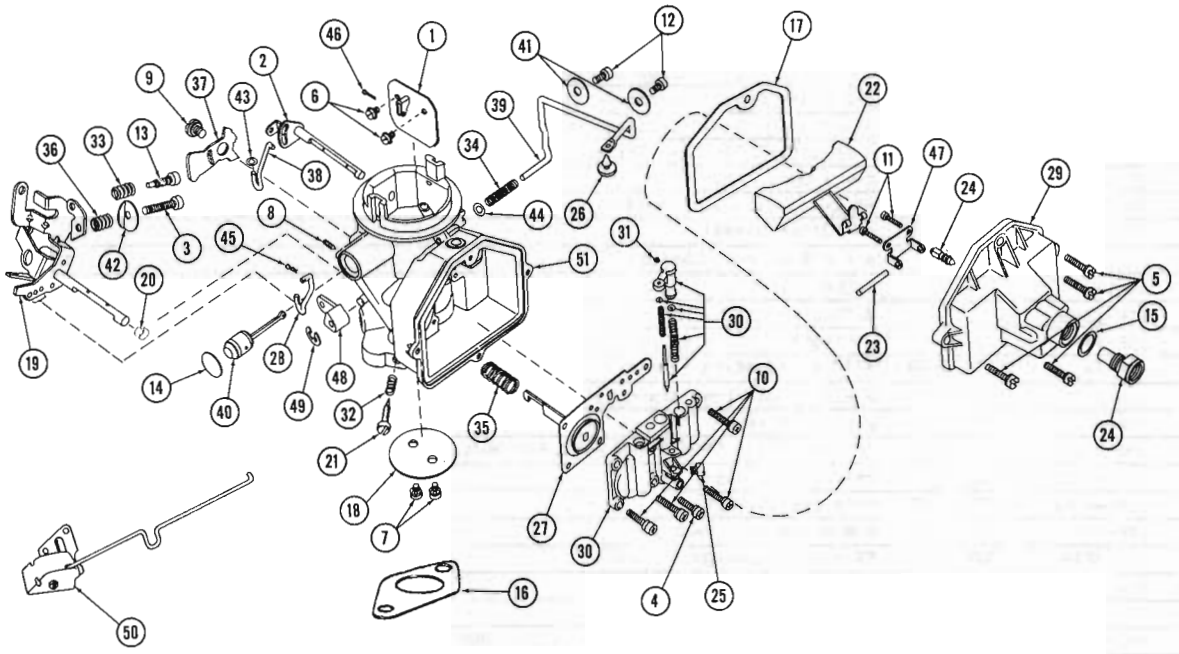

CARBURETOR 64-65 10 (OHV-232-WAT-LDT)

A.M. No. 317 4497 — HOLLEY NO. R-2880
A.M. No. 318 0304 — HOLLEY NO. R-3199A

KEY NO.	HOLLEY NO.	A.M. NO.	DESCRIPTION	PER CAR
	85A-1111	320 3586	Assortment Kit (Includes all parts listed below which are coded with a ϕ)	
	85A-1592	320 5904	Assortment Kit (Includes all parts listed below which are coded with a @)	
	85R-788	320 5571	Pep Kit (Includes all parts listed below which are coded with a #)	1
	85R-1537	320 5573	Repair Kit (Includes all parts listed below which are coded with a *)	1
	85G-1538	320 5574	*Gasket Set (Includes all parts listed below which are coded with a +)	1
	85R-1512	317 4508	Metering Jet Pkg. (Incl. 1-Holley 22R-40-57 Metering Jet, 4 sizes lean for alt. 2,000 to 5,000 ft. & 1-Holley 22R-40-59 Metering Jet, 2 sizes lean for alt. 5,000 to 10,000 ft.	1
	85C-1566	320 6825	Choke Shaft Kit (Includes all parts listed below which are coded with a ⊞)	1
	85T-1564	320 6826	Throttle Shaft Kit (Includes all parts listed below which are coded with a ⊠)	1
	85B-1567	320 6827	Bowl Kit (Includes all parts listed below which are coded with a ⊎)	1
	85R-1568	320 6830	Choke Kit (Includes all parts listed below which are coded with a ⊠)	1
1	2R-332		⊞ Choke Plate Assembly	1
2	3R-496		⊞ Choke Shaft Assembly	1
3	5R-1036	320 6715	Throttle Stop Screw	1
4	5R-421	320 3107	ϕ Metering Block Screw And Lockwasher	1
5	5R-425	320 3108	⊎ ϕ Float Bowl Screw And Lockwasher	4
6	5R-476	320 5907	⊞ @ * Choke Plate Screw and Lockwasher	2
7	5R-476	320 5907	⊠ @ * Throttle Plate Screw And Lockwasher	2
8	5R-779	320 5908	@ Choke Piston Adjusting Screw	1
9	5R-797	320 5909	⊞ @ Fast Idle Cam Screw	1

GROUP 4

KEY NO.	HOLLEY NO.	A.M. NO.	DESCRIPTION	PER CAR
10	5R-1004	320 5914	@ Metering Block Screw And Lockwasher	1
11	5R-1016	320 5915	☿ @ Float Shaft Bracket Screw And Lockwasher	2
12	5R-1035	320 5917	@ Vent Rod Retainer Screw	2
13	5R-1043	320 5918	@ Throttle Adjusting Screw	1
14	7R-218	320 5920	⧖ @ * Choke Piston Plug	1
15	8R-541		+# Fuel Inlet Seat Gasket	1
16	8R-1168	317 3228	+# Flange Gasket	1
17	8R-1125		☿ + # Fuel Bowl Gasket	1
18	9R-145		⧓ Throttle Plate	1
19	10R-1195A		⧓ Throttle Lever And Shaft Assembly	1
20	13R-885	320 5922	@ Throttle Shaft Bearing	1
21	15R-72	320 5649	* Idle Adjusting Needle	1
22	16R-393A	320 5650	☿ Float And Hinge Assembly	1
23	17R-41		☿ Float Shaft	1
24	18R-116A	320 5651	*# Fuel Inlet Needle And Seat Assembly	1
25	22R-40-60	320 6757	Main Jet (R-3199)	1
25	22R-40-61	320 5647	Main Jet (R-2880)	1
26	23R-453	320 5925	@+# Mechanical Vent Valve	1
27	30R-381A	320 5652	*# Pump Diaphragm Assembly	1
28	33R-443	320 6828	Pump Operating Link	1
29	34R-4115	320 5653	Float Bowl	1
30	34R-4154A	320 5654	Metering Block & Plug Assembly (R-2880)	1
30	34R-4530A	320 6714	Metering Block & Plug Assembly (R-3199)	1
31	36R-225	320 3190	Power Valve Retainer	1
32	38R-108	320 3191	ϕ Idle Adjusting Needle Spring	1
33	38R-110	320 3192	ϕ Fast Idle Screw Spring	1
34	38R-1037	320 5929	@ Mechanical Vent Spring	1
35	38R-1112	320 5930	@ Pump Drive Spring	1
36	38R-1161	320 5932	@ Throttle Stop Screw Spring	1
37	41R-493	320 6829	⧆ Fast Idle Cam	1
38	43R-296		⧆ * Fast Idle Rod	1
39	43R-352		⧓ Mechanical Vent Rod	1
40	44R-129A		⧗ Choke Piston And Link Assembly	1
41	46R-692	320 5935	@ Mechanical Vent Rod Retainer Washer	2
42	46R-753	320 5936	@ Vent Rod Operating Washer	1
43	46R-763	320 5937	⧆ @ Fast Idle Rod Washer	1
44	46R-763	320 5937	⧓ @ Mechanical Vent Spring Washer	1
45	48R-31	320 3227	⧓ ϕ * Pump Link Retainer	1
46	48R-183	320 3228	⧗ ϕ * Choke Piston Link Cotter Pin	1
47	59R-70		☿ Float Shaft Retaining Bracket	1
48	63R-650		⧓ Pump Operating Lever	1
49	75R-37	320 3240	ϕ Pump Operating Lever Retainer	1
50	R-2722-1A	317 3229	⧗ Choke Thermostat Housing Assembly (Not Serviced With Carburetor)	1
51			(Not Available)	1

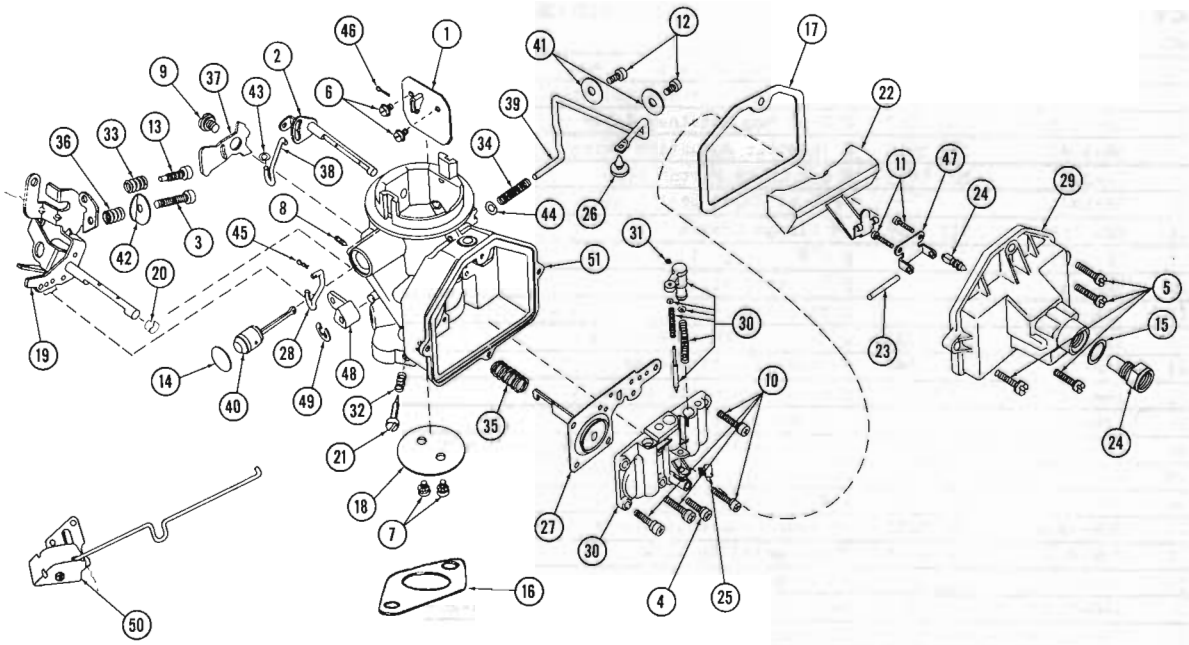

CARBURETOR 64-65 10 (OHV-232-WST-LDT)(OHV-232-WOD-LDT)

A.M. No. 317 3318 — HOLLEY No. R-2697
A.M. NO. 318 0305 — HOLLEY NO. R-3200A

KEY NO.	HOLLEY NO.	A.M. NO.	DESCRIPTION	PER CAR
	85A-1111	320 3586	Assortment Kit (Includes all parts listed below which are coded with a ϕ)	
	85A-1592	320 5904	Assortment Kit (Includes all parts listed below which are coded with a @)	
	85R-787	320 5570	Pep Kit (Includes all parts listed below which are coded with a #)	1
	85R-1536	320 5572	Repair Kit (Includes all parts listed below which are coded with a *)	1
	85G-1538	320 5574	* Gasket Set (Includes all parts listed below which are coded with a +)	1
	85R-1512	317 4508	Metering Jet Pkg. (Incl. 1-Holley 22R-40-57 Metering Jet, 4 sizes lean for alt. 2,000 to 5,000 ft. & 1-Holley 22R-40-59 Metering Jet, 2 sizes lean for alt. 5,000 to 10,000 ft.	1
	85B-1567	320 6827	Bowl Kit (Includes all parts listed below which are coded with a ⊞)	1
	85R-1572	320 6831	Choke Kit (Includes all parts listed below which are are coded with a ⊻)	1
	85C-1565	320 6832	Choke Shaft Kit (Includes all parts listed below which are coded with a ⊎)	1
	85T-1563	320 6833	Throttle Shaft Kit (Includes all parts listed below which are coded with a ⧗)	1
1	2R-332		⊎ Choke Plate Assembly	1
2	3R-496		⊎ Choke Shaft Assembly	1
3	5R-1036	320 6715	Throttle Stop Screw	1
4	5R-421	320 3107	ϕ Metering Block Screw And Lockwasher	1
5	5R-425	320 3108	⊞ ϕ Float Bowl Screw And Lockwasher	4
6	5R-476	320 5907	⊎ @ * Choke Plate Screw And Lockwasher	2
7	5R-476	320 5907	⧗ @ * Throttle Plate Screw And Lockwasher	2
8	5R-779	320 5908	@ Choke Piston Adjusting Screw	1
9	5R-797	320 5909	⊎ @ Fast Idle Cam Screw	1

GROUP 4

KEY NO.	HOLLEY NO.	A.M. NO.	DESCRIPTION	PER CAR
10	5R-1004	320 5914	@ Metering Block Screw And Lockwasher	4
11	5R-1016	320 5915	⊞ @ Float Shaft Bracket Screw And Lockwasher	2
12	5R-1035	320 5917	@ Vent Rod Retainer Screw	2
13	5R-1043	320 5918	@ Throttle Adjusting Screw	1
14	7R-218	320 5920	Ж @ * Choke Piston Plug	1
15	8R-541		+# Fuel Inlet Seat Gasket	1
16	8R-1168	317 3228	+# Flange Gasket	1
17	8R-1125		⊞ + # Fuel Bowl Gasket	1
18	9R-145		⧗ Throttle Plate	1
19	10R-1193A		⧗ Throttle Lever And Shaft Assembly	1
20	13R-885	320 5922	@ Throttle Shaft Bearing	1
21	15R-72	320 5649	* Idle Adjusting Needle	1
22	16R-393A	320 5650	⊟ Float And Hinge Assembly	1
23	17R-41		⊞ Float Shaft	1
24	18R-116A	320 5651	*# Fuel Inlet Needle And Seat Assembly	1
25	22R-40-61	320 5647	Main Jet	1
26	23R-453	320 5925	@+# Mechanical Vent Valve	1
27	30R-380A	320 5655	#* Pump Diaphragm Assembly	1
28	33R-443	320 6828	Pump Operating Link	1
29	34R-4115	320 5653	Float Bowl	1
30	34R-4130A	320 5656	Metering Block And Plug Assembly (R-2697)	1
30	34R-4530A	320 6714	Metering Block and Plug Assembly (R-3200)	1
31	36R-225	320 3190	Power Valve Retainer	1
32	38R-108	320 3191	ϕ Idle Adjusting Needle Spring	1
33	38R-110	320 3192	ϕ Fast Idle Screw Spring	1
34	38R-1037	320 5929	@ Mechanical Vent Spring	1
35	38R-1112	320 5930	@ Pump Drive Spring	1
36	38R-1161	320 5932	@ Throttle Stop Screw Spring	1
37	41R-493	320 6829	⊎ Fast Idle Cam	1
38	43R-296		⊎ * Fast Idle Rod	1
39	43R-352		⧗ Mechanical Vent Rod	1
40	44R-129A		Ж Choke Piston And Link Assembly	1
41	46R-692	320 5935	@ Mechanical Vent Rod Retainer Washer	2
42	46R-753	320 5936	@ Vent Rod Operating Washer	1
43	46R-763	320 5937	⊎ @ Fast Idle Rod Washer	1
44	46R-763	320 5937	⧗ @ Mechanical Vent Spring Washer	1
45	48R-31	320 3227	⧗ ϕ * Pump Link Retainer	1
46	48R-183	320 3228	Ж ϕ * Choke Piston Link Cotter Pin	1
47	59R-70		⊞ Float Shaft Retaining Bracket	1
48	63R-650		⧗ Pump Operating Lever	1
49	75R-37	320 3240	ϕ Pump Operating Lever Retainer	1
50	R-2763A	317 5659	Ж Choke Thermostat Housing Assembly (Not Serviced With Carburetor)	1
51			(Not Available)	1

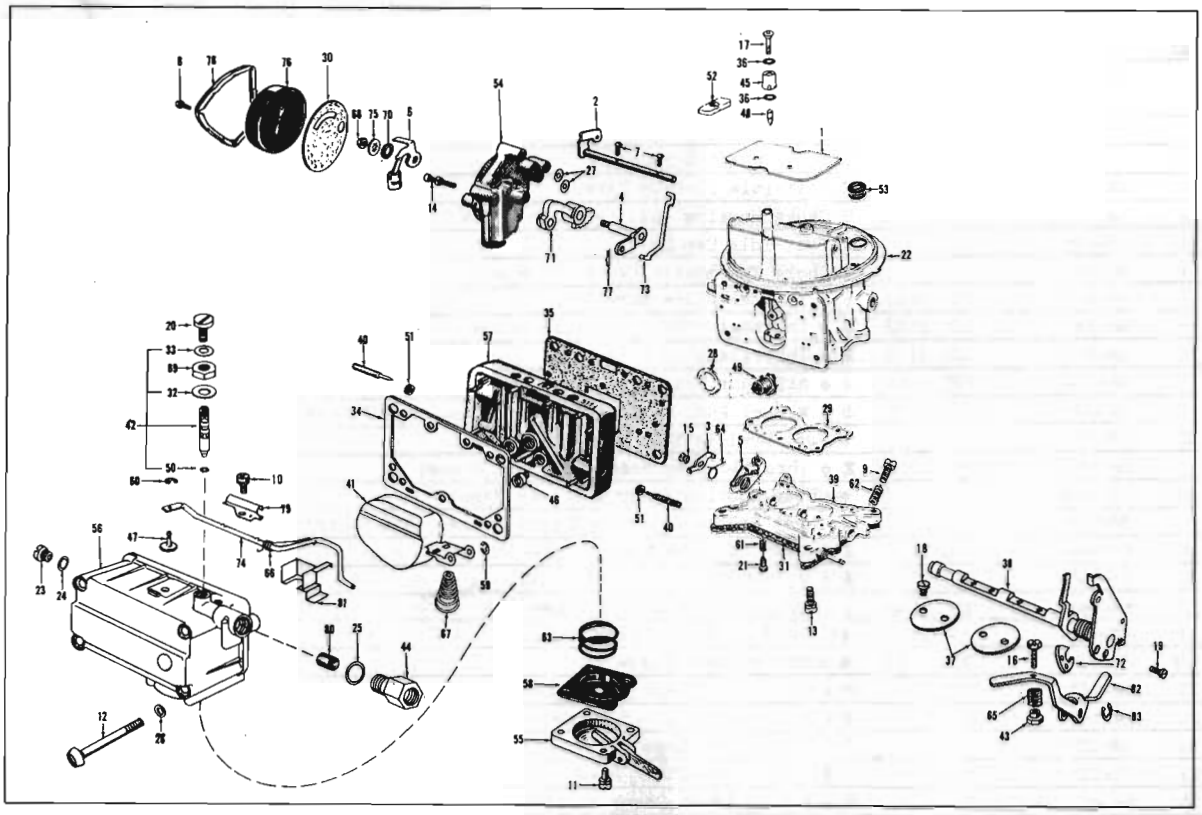

CARBURETOR 63 THRU 65 10-80 (V8-WDT)

A.M. NO. 316 4329 (With Dashpot) HOLLEY NO. R-2463-1 And R-2463-2
A.M. NO. 316 3778 (Less Dashpot)(Not Serviced)
Order 316 4329 And 320 3188 HOLLEY NO. R-2442-1 And R-2442-2

KEY NO.	HOLLEY NO.	A.M. NO.	DESCRIPTION	PER CAR
	85A-1111	320 3586	Assortment Kit (Includes all parts listed below which are coded with a ϕ)	
	85R-781	320 4995	Pep Kit (Includes all parts listed below which are coded with a #)	1
	85R-1499	320 4996	Repair Kit (Includes all parts listed below which are coded with a *)	1
	85G-1500	320 4997	*Gasket Set (Includes all parts listed below which are coded with a +)	1
	85M-1091	320 3420	Modification Kit (For Positive Ventilation Cars Only, Includes all parts listed below which are coded with a °)	1
	85R-1402	317 0980	Metering Jet Pkg. (Includes 2 Holley 22R-40-48 Metering Jets For 5,000 Ft. Alt. and 2 Holley 22R-40-46 Metering Jets for 10,000 Ft. Alt.)	1
	85B-1194	320 6330	Bowl Kit (Includes all parts listed below which are coded with a @)	1
	85C-1446	320 6332	Choke Kit (Includes all parts listed below which are coded with ⊞)	1
	85D-1192	320 6333	Pump Diaphragm Kit (Includes all parts listed below which are coded with a ⊠)	1
	85R-1190	320 6334	Choke Shaft And Lever Assy. Kit (Includes all parts listed below which are coded with a ⊻)	1

KEY NO.	HOLLEY NO.	A.M. NO.	DESCRIPTION	PER CAR
	85T-1570	320 6834	Throttle Shaft Kit (Includes all parts listed below which are coded with a Ⓩ)	1
1	2R-388	320 4454	Ⓨ Choke Plate	1
2	3R-278A	320 3286	Ⓨ Choke Shaft Assy.	1
3	4R-485		Ⓩ Fast Idle Pick-Up Lever	1
4	4R-486A		Ⓗ Choke Housing Shaft and Lever Assy.	1
5	4R-505		Ⓩ Fast Idle Cam Lever	1
6	4R-466A		Ⓗ Choke Thermostat Lever, Link and Piston Assy.	1
7	5R-4	320 3101	Ⓨ ϕ * Choke Plate Screw	2
8	5R-16	320 3102	Ⓗ ϕ Thermostat Housing Clamp Screw	3
9	5R-155	320 3103	Ⓩ ϕ Throttle Stop Screw	1
10	5R-294	320 3104	@ ϕ Air Vent Rod Clamp Screw and Lock Washer	1
11	5R-370	320 3105	@ ϕ Ⓦ Fuel Pump Cover Assy. Screw and Lock Washer	4
12	5R-552	320 3111	ϕ Fuel Bowl To Main Body Screw	4
13	5R-567	320 3112	Ⓩ ϕ Throttle Body Screw and Lock Washer	5
14	5R-569	320 3114	ϕ Choke Housing Screw and Lock Washer	3
	5R-579	320 3180	Dashpot Bracket Screw and Lock Washer (Not shown)	
15	5R-584	320 3116	Ⓩ ϕ Fast Idle Cam Lever Screw and Lock Washer	1
16	5R-595	320 3117	Ⓩ ϕ Pump Lever Adjusting Screw	1
17	5R-584	320 3182	ϕ Pump Discharge Nozzle Screw	1
18	5R-635	320 3119	ϕ+ Throttle Plate Screw	4
19	5R-682	320 3121	ϕ Pump Cam Lock Screw	1
20	5R-765	320 3123	@ ϕ Fuel Valve Seat Lock Screw	1
21	5R-507	320 3127	ϕ Fast Idle Cam Lever Screw	1
22	6R-2224A		Main Body and Plugs Assy.	1
23	7R-225	320 3128	@ ϕ Fuel Level Check Plug	1
24	8R-49		@ # + Fuel Level Check Plug Gasket	1
25	8R-482		@ # + Fuel Inlet Fitting Gasket	1
26	8R-657		#+ Fuel Bowl Screw Gasket	4
27	8R-659		Ⓗ # + Choke Housing Gasket	2
28	8R-669	320 2204	#+ Power Valve Body Gasket	1
29	8R-1051		Ⓧ # + Throttle Body Gasket	1
30	8R-686		Ⓣ # + Choke Thermostat Housing Gasket	1
31	8R-926	315 8245	Ⓩ # + Flange Gasket	2
32	8R-776		© + Fuel Valve Seat Adjusting Nut Gasket	1
33	8R-777		© + Fuel Valve Seat Lock Screw Gasket	1
34	8R-963		@ # + Fuel Bowl Gasket	1
35	8R-962		@ # + Metering Body Gasket	1
36	8R-844		#+ Pump Discharge Nozzle Gasket	2
37	9R-122		Throttle Plate	2
38	10R-847A		Throttle Lever and Shaft Assy.	1
39	12R-3042		Ⓩ Throttle Body and Shaft Assy.	1
40	15R-40	320 2206	* Idle Adjusting Needle	2
41	16R-260A-4	320 2209	@ Float and Hinge Assy. (Black)	1
42	18R-86AS	320 3038	@ # * Fuel Inlet Valve and Seat Assy.	1
43	19R-189	320 3160	Ⓩ ϕ Pump Lever Adjusting Nut Fitting	1
44	19R-221	320 6338	@ Fuel Inlet Fitting	1
45	21R-572-28	320 3214	Pump Discharge Nozzle	1
46	22R-40-50	320 3164	Main Jet	2
46	22R-40-51	320 3165	° Main Jet (For Positive Ventilation Cars Only)	2
47	23R-211	320 3169	@ ϕ Air Vent Valve	1
48	23R-258	320 6340	Pump Discharge Needle Valve	1
49	25R-237A-85	320 2215	#+ Power Valve Assy.	1
50	27R-148		@ + Fuel Valve Seat ""O"" Ring Seal	1
51	27R-152		#+ Idle Needle Seal	2
52	27R-238	320 6341	Ⓨ Choke Rod Seal	1
53	27R-223	320 6342	Choke Cold Air Tube Grommet	1
54	34R-2876A		Ⓗ Choke Housing and Plugs Assy.	1
55	34R-2183A		Ⓦ @ Fuel Pump Cover Assy.	1
56	34R-2818A	320 6269	@ Fuel Bowl and Plugs Assy.	1
57	34R-3175A	320 3712	Main Metering Body and Plugs Assy.	1
58	35R-342A	320 2218	Ⓦ @ # * Diaphragm Assy.	1

KEY NO.	HOLLEY NO.	A.M. NO.	DESCRIPTION	PER CAR
59	36R-169	320 3189	@ ϕ * Float Retainer	1
60	36R-225	320 3190	@ ϕ * Air Vent Valve Retainer	1
61	38R-108	320 3191	⧗ ϕ Fast Idle Cam Lever Screw Spring	1
62	38R-569	320 3196	@ ⧖ ϕ Diaphragm Return Spring	1
63	38R-610	320 3192	⧗ ϕ Throttle Stop Screw Spring	1
64	38R-583	320 3197	⧗ ϕ Fast Idle Cam Lever Spring	1
65	38R-931	320 3184	⧗ ϕ Pump Lever Adjusting Spring	1
66	38R-760	320 3202	@ ϕ Air Vent Rod Spring	1
67	38R-803	320 3203	@ ϕ Float Spring (Blue)	1
68	39R-5	320 6344	⊞ Choke Thermostat Shaft Hexagon Nut	1
69	39R-160	320 3206	@ ϕ Fuel Valve Seat Adjusting Nut	1
70	40R-108	320 3208	⊞ ϕ Choke Thermostat Lever Spacer	1
71	41R-229A	320 6346	⊞ Fast Idle Cam Assy.	1
72	41R-218	320 6348	Pump Cam	1
73	43R-203		⧖ Choke Rod	1
74	43R-276		@ Air Vent Rod	1
75	46R-248	320 6349	⊞ Choke Shaft Nut Shakeproof Lock Washer	1
76	47R-114A	320 3213	⊞ Thermostat Housing Assy. (Cp.)	1
77	48R-31	320 3227	⧖ ϕ * Choke Rod Retainer	2
78	49R-328		⊞ Thermostat Housing Clamp	1
	49R-366		Dashpot Bracket (Not shown)	1
79	79R-425		@ Air Vent Rod Clamp	1
80	57R-35	320 6350	@ Filter Screen	1
	58R-50A	320 3188	Dashpot and Bracket Assembly (Not shown)	1
81	59R-34		@ Baffle Plate	1
82	63R-595		⧗ Pump Operating Lever	1
83	75R-37	320 3240	⧗ ϕ Pump Operating Lever Retainer	1



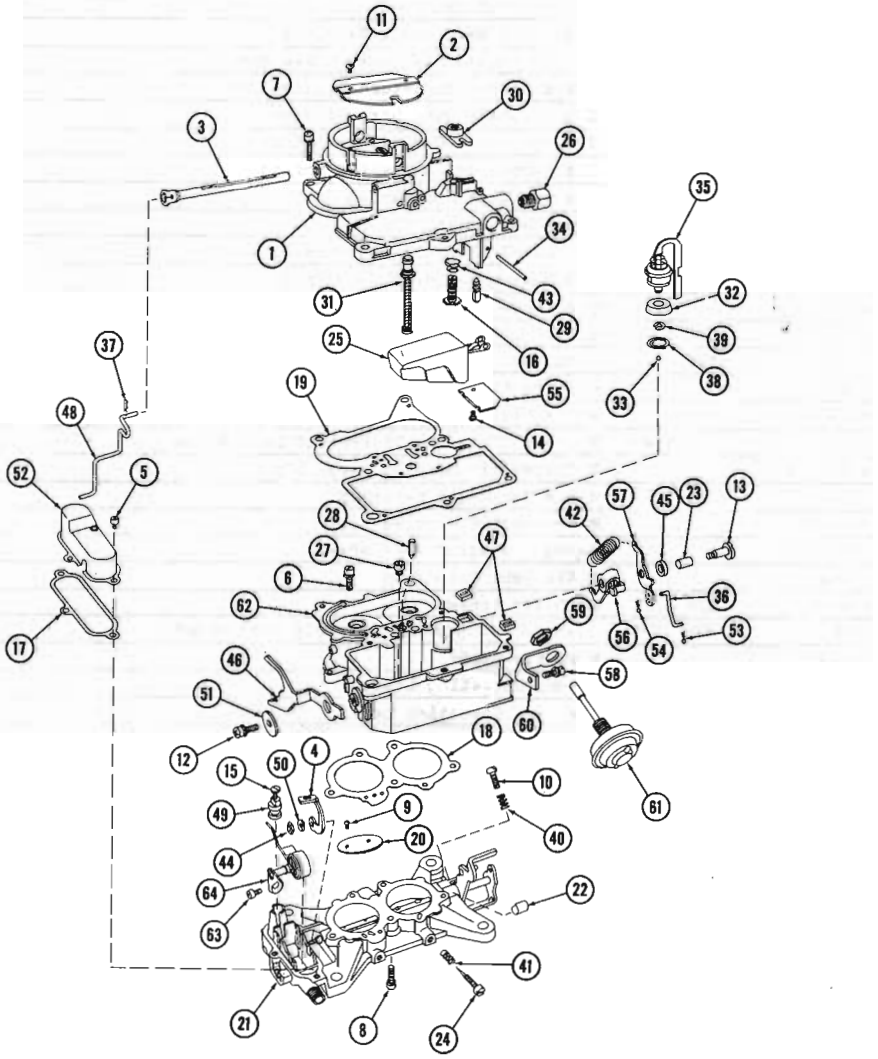

CARBURETOR 65 10-80 (V8-WDT)

LHD...A.M. NO. 317 5902...(Less Dashpot)	HOLLEY NO. R-2699
LHD...A.M. NO. 317 5903...(Incl. Dashpot)(Not Serviced Order 317 5902 And 320 5951	HOLLEY NO. R-2968
LHD...A.M. NO. 318 0263...(Less Dashpot)	HOLLEY NO. R-3218
LHD...A.M. NO. 318 0264...(Incl. Dashpot)(Not Serviced Order 318 0263 And 320 5951)	HOLLEY NO. R-3217
RHD...A.M. NO. 317 6593...(Incl. Dashpot)	HOLLEY NO. R-3168
RHD...A.M. NO. 318 0308...(Incl. Dashpot)	HOLLEY NO. R-3219

KEY NO.	HOLLEY NO.	A.M. NO.	DESCRIPTION	PER CAR
	85A-1592	320 5904	Assortment Kit (Includes all parts listed below which are coded with a ϕ)	1
	85A-1265	320 4399	Assortment Kit (Includes all parts listed below which are coded with a @)	1
	85A-1111	320 3586	Assortment Kit (Includes all parts listed below which are coded with a x)	1

KEY NO.	HOLLEY NO.	A.M. NO.	DESCRIPTION	PER CAR
	85R-790	320 5706	Pep Kit (Includes all parts listed below which are coded with a #)	1
	85R-1577	320 5707	Repair Kit (Includes all parts listed below which are coded with a *)	1
	85G-1578	320 5708	#* Gasket Set (Includes all parts listed below which are coded with a +)	1
	85R-1588	317 8666	Metering Jet Pkg. (Includes 2-Holley 22R-40-55 for altitude to 5,000 Ft. and 2-Holley 22R-40-53 for altitude to 10,000 Ft.)	1
	85R-1595	320 5951	Dashpot Kit (Includes all parts listed below which are coded with a °)	1
	85R-1688	320 6917	Choke Kit (Includes all parts listed below which are coded with a ⊞)	1
	85C-1685	320 6905	Choke Shaft Kit (Includes all parts listed below which are coded coded with a ☿)	1
	85T-1684	320 6904	Throttle Body and Shaft Kit (Includes all parts listed below which are coded with a ⧓)	1
1	1R-847A		Air Horn and Plugs Assy. (R-2699, R-2968 And R-3168)	1
1	1R-880A		Air Horn And Plugs Assy. (R-3217, R-3218 And R-3219)	1
2	2R-399		☿ Choke Plate	1
3	3R-504A		☿ Choke Shaft and Lever Assy.	1
4	4R-832		Choke Unload Lever	1
5	5R-375	320 5906	ϕ⊞ Thermostat Housing Cover Screw	3
6	5R-425	320 3108	x⧓ Throttle Body To Main Body Screw and L.W.	2
7	5R-425	320 3108	x Air Horn To Main Body Screw	7
8	5R-520	320 5923	ϕ⧓ Throttle Body To Main Body Screw and L.W.	3
9	5R-808	320 5910	*ϕ Throttle Plate Screw	4
10	5R-835	320 5911	ϕ Throttle Stop Screw	1
11	5R-837	320 4402	*@☿ Choke Plate Screw	2
12	5R-872	320 5913	ϕ Fast Idle Cam Screw	1
13	5R-1024	320 5916	ϕ Pump Lever Screw	1
14	5R-1067	320 5919	ϕ Fuel Bowl Baffle Screw	1
15	5R-1083	320 5924	ϕ Choke Piston Screw	1
16	5R-1086	320 5933	ϕ Vent Valve Screw	1
17	8R-1040		+⊞ Thermostat Housing Cover Gasket	1
18	8R-1041		+⧓ Throttle Body Gasket	1
19	8R-1042		+ Main Body Gasket	1
20	9R-70		Throttle Plate	2
21	12R-2937A		⧓ Throttle Body and Shaft Assy. (LHD)	1
21	12R-3262A		Throttle Body and Shaft Assy. (RHD)	1
22	13R-617	320 5921	ϕ Throttle Shaft Bearing	1
23	13R-892	320 6882	Pump Drive Lever Bushing	1
24	15R-59	320 6360	* Idle Adjustment Needle	2
25	16R-346A-4	320 6835	Float Assembly	1
26	19R-295A	320 5950	Fuel Inlet Fitting Assy.	1
27	22R-40-57	320 6836	Main Jet	2
28	23R-406	320 6837	* Pump Discharge Valve	1
29	23R-455A	320 5947	#* Fuel Inlet Needle Assy.	1
30	23R-470	320 5934	ϕ Vent Valve	1
31	25R-374A	320 5948	Power Valve Piston Assy.	1
32	27R-366	320 5949	#* Pump Cup	1
33	28R-94	320 3181	*x Pump Inlet Valve	1
34	29R-814	320 6838	* Float Hinge Pin	1
35	31R-232A	320 6839	Accelerating Pump Assy.	1
36	33R-471	320 6840	* Pump Operating Link	1
37	48R-31	320 3227	☿ Choke Rod Retainer	1
38	36R-466	320 5927	ϕ Inlet Valve Retainer	1
39	36R-477	320 5928	ϕ Pump Cup Retainer	1
40	38R-108	320 3191	x Throttle Stop Screw Spring	1
41	38R-108	320 3191	x Idle Adjusting Needle Spring	2
42	38R-1151	320 5931	ϕ Pump Operating Spring	1
43	38R-1199	320 5946	ϕ Vent Valve Spring	1
44	39R-11	320 4409	Choke Unload Lever Nut	1

GROUP 4

KEY NO.	HOLLEY NO.	A.M. NO.	DESCRIPTION	PER CAR
45	40R-450	320 6881	Pump Lever Spacer	1
46	41R-449	320 6883	Fast Idle Cam	1
47	42R-351	320 6884	Pump Rod Guide	2
48	43R-365	320 6885	☿ Choke Rod	1
49	44R-123	320 6886	Choke Piston	1
50	46R-636	320 6371	Choke Unload Lever Lockwasher	1
51	46R-692		Washer	1
52	47R-223A	320 6887	Thermostat Cover And Guide Assy.	1
53	48R-31	320 3227	*x Pump Operating Link Retainer	1
54	48R-31	320 3227	*x Pump Operating Link Retainer	1
55	59R-75	320 6888	Fuel Bowl Baffle	1
56	63R-694	320 6889	Pump Operating Lever	1
57	63R-695	320 6890	Pump Drive Lever	1
58	5R-367	320 5905	ϕ° Dashpot Screw & Lockwasher	1
59	39R-193		° Dashpot Nut	1
60	49R-716	320 6891	° Dashpot Bracket	1
61	58R-51A	320 6372	° Dashpot Assembly	1
62	6R-2492A		Main Body	1
63	5R-1035	320 6892	⊞ Thermostat and Piston Link Assy. Screw	1
64	47R-230AS	320 6893	⊞ Thermostat and Piston Link Assy.	1

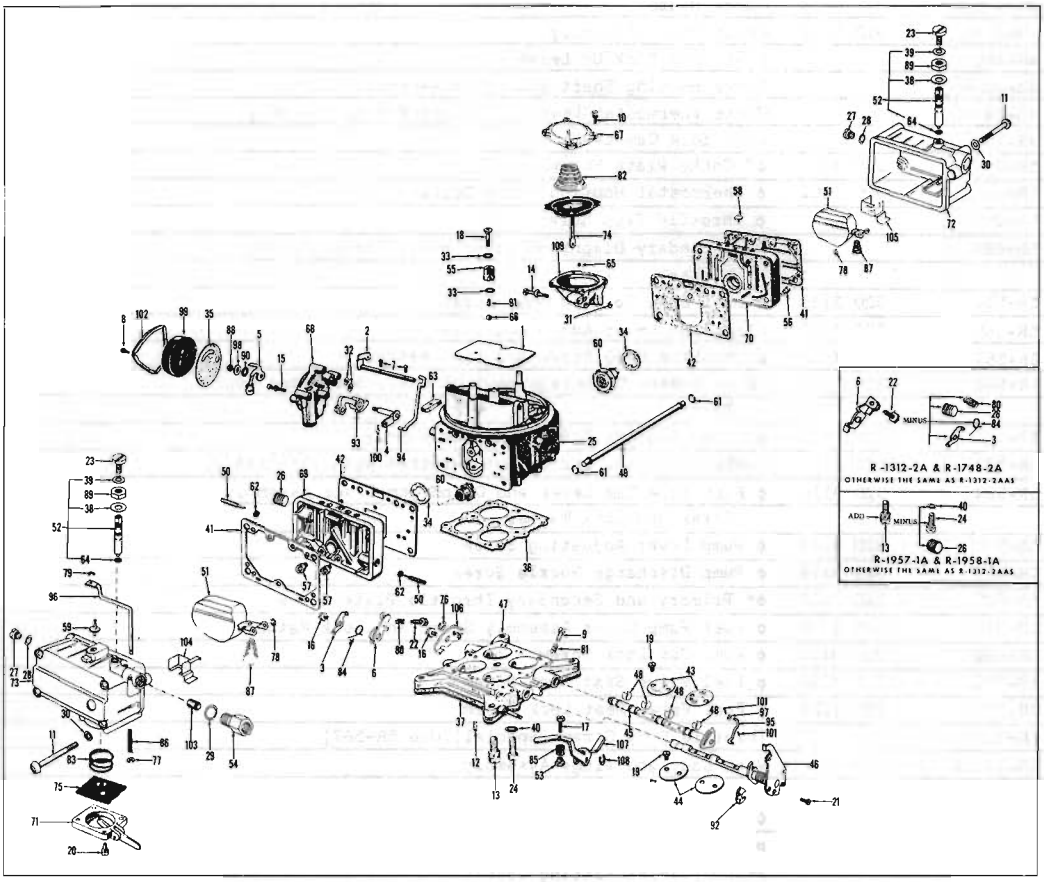

CARBURETOR 65 10-80 (V8-W4B)

A.M. NO. 320 5642 (Use For R-3044 and R-3045)(Less Dashpot) HOLLEY NO. R-1312-4

KEY NO.	HOLLEY NO.	A.M. NO.	DESCRIPTION	PER CAR
	85A-1111	320 3586	Assortment Kit (Includes all parts listed below which are coded with a ϕ)	
	85R-759*	320 3039	Pep Kit (Includes all parts listed below which are coded with a #)	1
	85R-1078	320 3041	Repair Kit (Includes all parts listed below which are coded with a *)	1
	85G-963	320 2364	* Gasket Set (Includes all parts listed below which are coded with a +)	1
		317 0979	Metering Jet Pkg. (Includes 2 Holley 22R-40-47 Metering Jets for 5,000 ft. Alt. and 10,000 Ft. Alt.)	1
	85D-1192	320 6333	Pump Diaphragm Kit (Includes all parts listed below which are coded with a ⊞)	1
	85S-1208	320 6376	Secondary Diaphragm Housing Assembly Kit (Includes all parts listed below which are coded with a ⊠)	1
	85B-1210	320 6378	Bowl Kit (Secondary) (Includes all parts listed below which are coded with a ⊻)	1
	85B-1211	320 6374	Bowl Kit (Primary) (Includeds all parts listed below which are coded with a ⊼)	1

GROUP 4

KEY NO.	HOLLEY NO.	A.M. NO.	DESCRIPTION	PER CAR
1	2R-388	320 4454	Choke Plate	1
2	3R-278A	320 3168	Choke Shaft Assembly	1
3	4R-485		Fast Idle Pick Up Lever	1
4	4R-486A		Choke Housing Shaft and Lever Assembly	1
5	4R-547A		Choke Thermostat Lever, Link and Piston Assembly	1
6	4R-505		Fast Idle Cam Lever	1
7	5R-4	320 3101	ϕ* Choke Plate Screw	2
8	5R-16	320 3102	ϕ Thermostat Housing Clamp Screw	3
9	5R-26		ϕ Throttle Stop Screw	1
10	5R-688		⊞Ж Secondary Diaphragm Cover Assy. Screw and Lock Washer	4
11	5R-552	320 3111	ϕ Fuel Bowl To Main Body Screw	8
12	5R-565	320 6379	Diaphragm Lever Adjusting Screw	1
13	5R-567	320 3112	ϕ Throttle Body Screw and Lock Washer	8
14	5R-568	320 3113	ЖϕSecondary Diaphragm Housing Assy. Screw and Lock Washer	3
15	5R-569	320 3114	ϕ Choke Housing Screw and Lock Washer	3
	5R-579	320 3180	Dashpot Bracket Screw (Not Serviced With Carburetor)	1
16	5R-584	320 3116	ϕ Fast Idle Cam Lever and Diaphragm Lever Assembly Screw and Lock Washer	2
17	5R-595	320 3117	ϕ Pump Lever Adjusting Screw	1
18	5R-614	320 3118	ϕ Pump Discharge Nozzle Screw	1
19	5R-635	320 3119	ϕ* Primary and Secondary Throttle Plate Screw	8
20	5R-370	320 3105	ϕ Fuel Pump Cover Assembly Screw and Lock Washer	4
21	5R-682	320 3121	ϕ Pump Cam Lock Screw	1
22	5R-765	320 3123	ϕ Fuel Valve Seat Lock Screw	2
23	5R-765	320 3123	ϕ Fuel Valve Seat Lock Screw	2
24	5R-716		Throttle Body Screw (Special)(Use 5R-567)	
25	6R-1835A		Main Body and Plugs Assembly	1
26			Spark Hole Plug (Not Used)	1
27	7R-225	320 3128	ϕ Fuel Level Check Plug	2
28	8R-49		#+ Fuel Level Check Plug Gasket	2
29	8R-482		#+ Fuel Inlet Fitting Gasket	2
	8R-539		+ Gasket	2
30	8R-657		#+ Fuel Bowl Screw Gasket	8
31	8R-658		Ж#+ Secondary Diaphragm Housing Gasket	1
32	8R-659		#+ Choke Housing Gasket	2
33	8R-844		#+ Pump Discharge Nozzle Gasket	2
34	8R-669	320 2204	#+ Power Valve Body Gasket	2
35	8R-686		#+ Choke Thermostat Housing Gasket	1
36	8R-687		#+ Throttle Body Gasket	1
37	8R-763	315 3819	#+ Flange Gasket	2
38	8R-776		#+ Fuel Valve Seat Adjusting Nut Gasket	2
39	8R-777		#+ Fuel Valve Seat Lock Screw Gasket	2
40	8R-779		Throttle Body Screw Gasket	
41	8R-963		ØZ#+ Fuel Bowl Gasket	2
42	8R-962		ØZ#+ Metering Body Gasket	2
43	9R-96		Throttle Plate (Secondary)	2
44	9R-103		Throttle Plate (Primary)	2
45	10R-736A		Throttle Shaft Assembly (Secondary)	1
46	10R-724A		Throttle Lever and Shaft Assy.	1
47	12R-3211A		Throttle Body and Shaft Assy.	1
48	13R-490		Secondary Throttle Shaft Bushing	4
49	14R-320	320 6382	Fuel Line Tube	1
50	15R-40	320 2206	* Idle Adjusting Needle	2
51	16R-260A-4	320 2209	Float and Hinge Assembly	2
52	18R-76AS	320 2914	#* Fuel Inlet Valve and Seat Assembly	2
53	19R-189	320 3160	ϕ Pump Lever Adjusting Fitting	1
54	19R-221	320 6338	Fuel Inlet Fitting	1
55	21R-572-21	320 3187	Pump Discharge Nozzle	1
56	22R-40-35	320 3162	Main Jet (Secondary)	2
57	22R-40-49	320 3163	Main Jet (Primary)	2

KEY NO.	HOLLEY NO.	A.M. NO.	DESCRIPTION	PER CAR
57	22R-40-50	320 3164	° Main Jet (Primary)(For Positive Ventilation Cars Only)	2
58	23R-196	320 3168	ϕ Bowl Vent Valve	1
59	23R-280	320 3185	ϕ Air Vent Valve	1
60	25R-237A-85	320 2215	#* Primary and Secondary Power Valve Assembly	2
61	27R-109	320 2216	Ж#+ Fuel Line Tube "O" Ring Seal	2
62	27R-152		#+ Idle Needle Seal	2
63	27R-238	320 6341	Choke Rod Seal	1
64	27R-148		+ Fuel Valve Seat "O" Ring Seal	1
65	28R-1	320 3179	Жϕ Diaphragm Housing Check Ball	1
66	28R-94	320 3181	ϕ* Discharge Pump Check Ball	1
67	34R-1334		Ж Secondary Diaphragm Housing Cover	1
68	34R-1529A		Choke Housing and Plugs Assembly	1
69	34R-1940A	320 3708	Main Metering Body and Plugs Assembly (Primary)	1
70	34R-1942A	320 3709	Main Metering Body and Plugs Assembly (Secondary)	1
71	34R-2183A		Ш Fuel Pump Cover Assembly	1
72	34R-3038A		Ø Fuel Bowl and Plugs Assembly (Secondary)	1
73	34R-2968A		Ø Fuel Bowl and Plugs Assembly (Primary)	1
74	35R-199A	320 2217	Ж* Secondary Diaphragm and Rod Assembly	1
75	35R-342A	320 2218	Ш#* Diaphragm Assembly	1
76	36R-164	320 3183	Жϕ Secondary Diaphragm Link Retainer	1
77	36R-169	320 3189	ϕ* Air Vent Rod Spring Retainer	1
78	36R-169	320 3189	ϕ* Float Retainer	2
79	36R-225	320 3190	ϕ* Air Vent Valve Retainer	1
80	38R-108	320 3191	ϕ Fast Idle Cam Lever Screw Spring	1
81	38R-110	320 3192	ϕ Throttle Stop Screw Spring	1
82	38R-464	320 3195	Жϕ Secondary Diaphragm Spring	1
83	38R-569	320 3196	Шϕ Diaphragm Return Spring	1
84	38R-583	320 3197	ϕ Fast Idle Cam Lever Spring	1
85	38R-587	320 3198	ϕ Pump Lever Adjusting Spring	1
86	38R-615	320 3199	ϕ Air Vent Rod Spring	1
87	38R-757	320 3200	ϕ Float Spring	2
88	39R-5	320 6344	Choke Thermostat Shaft Nut	1
89	39R-160	320 3206	ϕ Fuel Valve Seat Adjusting Nut	2
90	40R-108	320 3208	ϕ Choke Thermostat Lever Spacer	1
91	40R-336	320 6391	Pump Check Ball Weight	1
92	41R-234	320 6393	Pump Cam	1
93	41R-244A	320 6392	Fast Idle Cam Assembly	1
94	43R-203		Choke Rod	1
95	43R-205		Throttle Connecting Rod	1
96	43R-281	320 6395	Air Vent Push Rod	1
97	46R-25	320 6396	Throttle Connecting Rod Washer	1
98	46R-248	320 6349	Choke Shaft Nut Lock Washer (Shakeproff)	1
99	47R-116A	320 3222	Thermostat Housing Assembly (Complete)(Identified by 57-MI)	1
100	48R-31	320 3227	ϕ* Choke Rod Retainer	1
101	48R-183	320 3228	ϕ* Throttle Connecting Rod Cotter Pin	2
102	49R-328		Thermostat Housing Clamp	1
103	57R-35	320 6350	Filter Screen	1
	58R-55A	320 6700	Dashpot and Bracket Assy. (Not Shown)	1
104	59R-34		Baffle Plate (Primary)	1
105	59R-35		Baffle Plate (Secondary)	1
106	63R-301A		Diaphragm Lever Assembly	1
107	63R-382		Pump Operating Lever	1
108	75R-37	320 3240	ϕ Pump Operating Lever Retainer	1
109	79R-389		Ж Secondary Diaphragm Housing	1

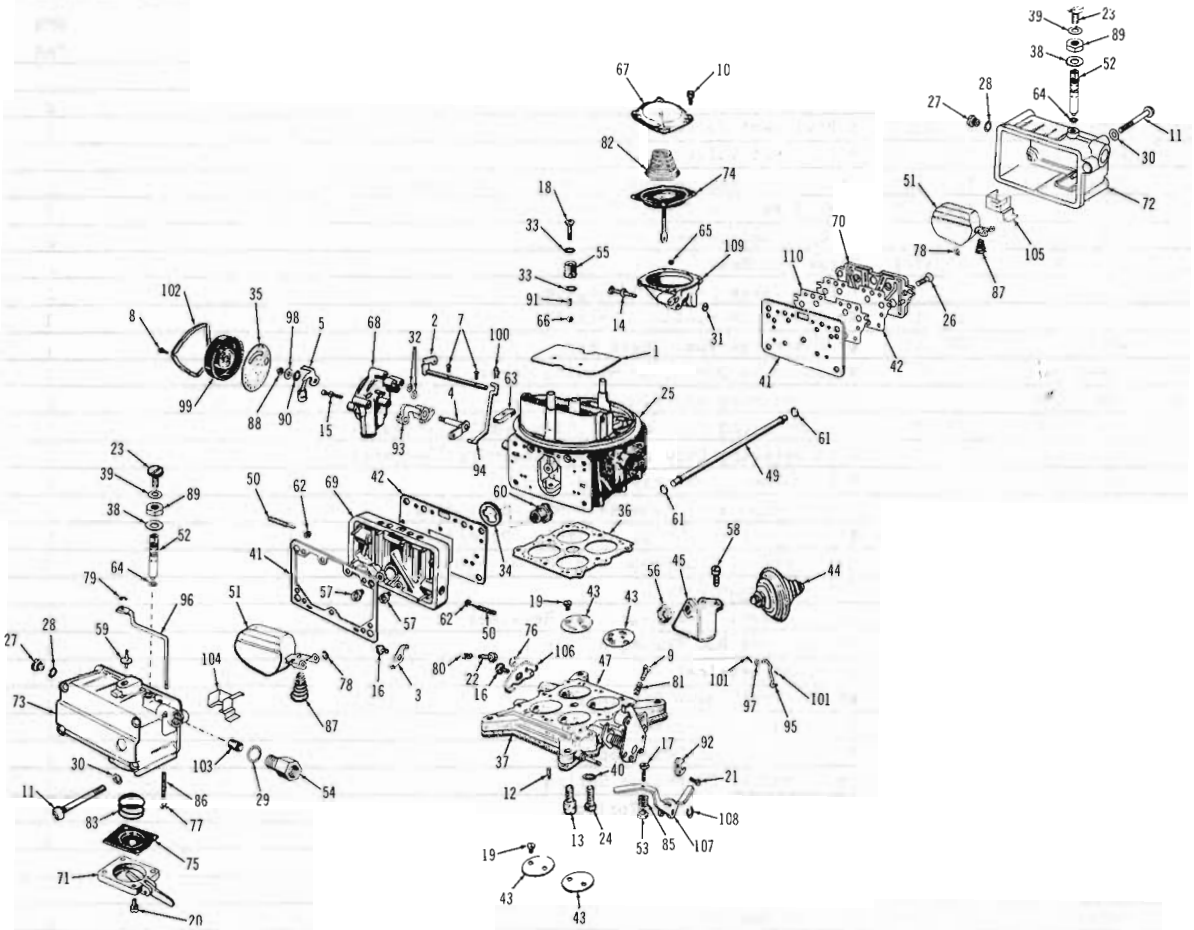

CARBURETOR 65 10-80 (V8-W4B)

A.M. NO. 320 6237 (Use For R-3201 and R-3202) HOLLEY NO. R-3203A

KEY NO.	HOLLEY NO.	A.M. NO.	DESCRIPTION	PER CAR
	85A-1111	320 3586	Assortment Kit (Includes all parts listed below which are coded with a ϕ)	
	85R-792	320 6538	Pep Kit (Includes all parts listed below which are coded with a #)	1
	85R-1676	320 6537	Repair Kit (Includes all parts listed below which are coded with a *)	1
	85G-1675	320 6539	*Gasket Set (Includes all parts listed below which are coded with a +)	1
	85R-1686	320 6700	Dashpot and Bracket Assy. (Includes all parts listed below which are coded with a @	1
		317 0979	Metering Jet Pkg. (Includes 2 Holley 22R-40-47 Metering Jets for 5,000 ft. Alt. and 10,000 Ft. Alt.)	1
	85D-1192	320 6333	Pump Diaphragm Kit (Includes all parts listed below which are coded with a ⊞)	1
	85S-1208	320 6376	Secondary Diaphragm Housing Assembly Kit (Includes all parts listed below which are coded with a ⊠)	1
	85B-1210	320 6378	Bowl Kit (Secondary) (Includes all parts listed below which are coded with a ⊎)	1
	85B-1211	320 6374	Bowl Kit (Primary) (Includes all parts listed below which are coded with a ⊻)	1

KEY NO.	HOLLEY NO.	A.M. NO.	DESCRIPTION	PER CAR
1	2R-388	320 4454	Choke Plate	1
2	3R-278A	320 3168	Choke Shaft Assembly	1
3	4R-485		Fast Idle Pick Up Lever	1
4	4R-486A		Choke Housing Shaft and Lever Assembly	1
5	4R-547A		Choke Thermostat Lever, Link and Piston Assembly	1
7	5R-4	320 3101	ϕ* Choke Plate Screw	2
8	5R-16	320 3102	ϕ Thermostat Housing Clamp Screw	3
9	5R-26		ϕ Throttle Stop Screw	1
10	5R-688		⊞Ж ϕ Secondary Diaphragm Cover Assy. Screw and Lock Washer	4
11	5R-552	320 3111	ϕ Fuel Bowl to Main Body Screw (Primary)	4
11	5R-645		Fuel Bowl to Main Body (Secondary)	4
12	5R-565	320 6379	Diaphragm Lever Adjusting Screw	1
13	5R-567	320 3112	ϕ Throttle Body Screw and Lock Washer	7
14	5R-568	320 3113	Ж ϕ Secondary Diaphragm Housing Assy. Screw and Lock Washer	3
15	5R-569	320 3114	ϕ Choke Housing Screw and Lock Washer	3
16	5R-584	320 3116	ϕ Fast Idle Cam Lever and Diaphragm Lever Assembly Screw and Lock Washer	2
17	5R-595	320 3117	ϕ Pump Lever Adjusting Screw	1
18	5R-614	320 3118	ϕ Pump Discharge Nozzle Screw	1
19	5R-635	320 3119	ϕ* Primary and Secondary Throttle Plate Screw	8
20	5R-370	320 3105	ϕ Fuel Pump Cover Assembly Screw and Lock Washer	4
21	5R-682	320 3121	ϕ Pump Cam Lock Screw	1
22	5R-807	320 6411	Fast Idle Cam Lever Screw	1
23	5R-765	320 3123	ϕ Fuel Valve Seat Lock Screw	2
24	5R-716		Throttle Body Screw (Special)(Use 5R-567)	
25			Main Body and Plugs Assembly	1
26	5R-691		Metering Block Screw (Secondary)	6
27	7R-225	320 3128	ϕ Fuel Level Check Plug	2
28	8R-49		#+ Fuel Level Check Plug Gasket	2
29	8R-482		#+ Fuel Inlet Fitting Gasket	1
30	8R-657		#+ Fuel Bowl Screw Gasket	8
31	8R-659		Ж#+ Secondary Diaphragm Housing Gasket	1
32	8R-659		#+ Choke Housing Gasket	2
33	8R-844		#+ Pump Discharge Nozzle Gasket	2
34	8R-669	320 2204	#+ Power Valve Body Gasket	1
35	8R-686		#+ Choke Thermostat Housing Gasket	1
36	8R-687		#+ Throttle Body Gasket	1
37	8R-763	315 3819	#+ Flange Gasket	2
38	8R-776		#+ Fuel Valve Seat Adjusting Nut Gasket	2
39	8R-777		#+ Fuel Valve Seat Lock Screw Gasket	2
40	8R-779		Throttle Body Screw Gasket	1
41	8R-963		Ж#+ Fuel Bowl Gasket (Primary)	1
41	8R-726		+# Metering Body Plate Gasket (Secondary)	1
42	8R-962		Ж#+ Metering Body Gasket (Primary)	1
42	8R-964		Ж+# Metering Body Gasket (Secondary)	1
43	9R-96		Throttle Plate (Secondary)	2
43	9R-103		Throttle Plate (Primary)	2
44	58R-49A	320 3209	@ Dashpot (Less Bracket)	1
45	49R-714		@ Dashpot Bracket	1
47	12R-3211A		Throttle Body and Shaft Assy.	1
49	14R-370		Fuel Line Tube	1
50	15R-40	320 2206	* Idle Adjusting Needle	2
51	16R-260A-4	320 2209	Float and Hinge Assembly	2
52	18R-76AS	320 2914	#* Fuel Inlet Valve and Seat Assembly	2
53	19R-189	320 3160	ϕ Pump Lever Adjusting Fitting	1
54	19R-221	320 6338	Fuel Inlet Fitting	1
55	21R-572-21	320 3187	Pump Discharge Nozzle	1
56	39R-143	320 6345	@ Dashpot Nut	1
57	22R-40-49	320 3163	Main Jet (Primary)	2
58	5R-579	320 3180	@ Dashpot Bracket Screw and Lockwasher	1

KEY NO.	HOLLEY NO.	A.M. NO.	DESCRIPTION	PER CAR
59	23R-280	320 3185	ϕ Air Vent Valve	1
60	25R-237A-85	320 2215	#* Primary Power Valve Assembly	1
61	27R-109	320 2216	¥Σ#+ Fuel Line Tube "O" Ring Seal	2
62	27R-152		#+ Idle Needle Seal	2
63	27R-238	320 6341	Choke Rod Seal	1
64	27R-148		+ Fuel Valve Seat "O" Ring Seal	2
65	28R-1	320 3179	¥ϕ* Diaphragm Housing Check Ball	1
66	28R-94	320 3181	ϕ* Discharge Pump Check Ball	1
67	34R-1334		¥ Secondary Diaphragm Housing Cover	1
68	34R-1529A		Choke Housing and Plugs Assembly	1
69	34R-1940A	320 3708	Main Metering Body and Plugs Assembly (Primary)	1
70	34R-2007-8	320 6701	Main Metering Body (Secondary)	1
71	34R-2183A		⊞ Fuel Pump Cover Assembly	1
72	34R-3038A		¥ Fuel Bowl and Plugs Assembly (Secondary)(Complete)	1
73	34R-2968A		Σ Fuel Bowl and Plugs Assembly (Primary)(Complete)	1
74	35R-199A	320 2217	¥* Secondary Diaphragm and Rod Assembly	1
75	35R-342A	320 2218	⊞#* Diaphragm Assembly	1
76	36R-164	320 3183	¥ϕ* Secondary Diaphragm Link Retainer	1
77	36R-169	320 3189	ϕ* Air Vent Rod Spring Retainer	1
78	36R-169	320 3189	ϕ* Float Retainer	2
79	36R-225	320 3190	ϕ* Air Vent Valve Retainer	1
80	38R-108	320 3191	ϕ Fast Idle Cam Lever Screw Spring	1
81	38R-110	320 3192	ϕ Throttle Stop Screw Spring	1
82	38R-464	320 3195	¥ϕ Secondary Diaphragm Spring	1
83	38R-569	320 3196	⊞ϕ Diaphragm Return Spring	1
85	39R-587	320 3198	ϕ Pump Lever Adjusting Spring	1
86	38R-615	320 3199	ϕ Air Vent Rod Spring	1
87	38R-757	320 3200	ϕ Float Spring	2
88	39R-5	320 6344	Choke Thermostat Shaft Nut	1
89	39R-160	320 3206	ϕ Fuel Valve Seat Adjusting Nut	2
90	40R-108	320 3208	ϕ Choke Thermostat Lever Spacer	1
91	40R-336	320 6391	Pump Check Ball Weight	1
92	41R-234	320 6393	Pump Cam	1
93	41R-502A		Fast Idle Cam Assembly	1
94	43R-203		Choke Rod	1
95	43R-205		Throttle Connecting Rod	1
96	43R-281	320 6395	Air Vent Push Rod	1
97	46R-25	320 6396	Throttle Connecting Rod Washer	1
98	46R-248	320 6349	Choke Shaft Nut Lock Washer (Shakeproff)	1
99	47R-116A	320 3222	Thermostat Housing Assembly (Complete)(Identified by 57-MI)	1
100	48R-31	320 3227	ϕ* Choke Rod Retainer	1
101	48R-183	320 3228	ϕ* Throttle Connecting Rod Cotter Pin	2
102	49R-328		Thermostat Housing Clamp	1
103	57R-35	320 6350	Filter Screen	1
104	59R-34		Baffle Plate (Primary)	1
105	59R-35		Baffle Plate (Secondary)	1
106	63R-301A		Diaphragm Lever Assembly	1
107	63R-387A		Pump Operating Lever	1
108	75R-37	320 3240	ϕ Pump Operating Lever Retainer	1
109	79R-389		¥ Secondary Diaphragm Housing	1
110	34R-1993		Metering Body Plate (Secondary)	1

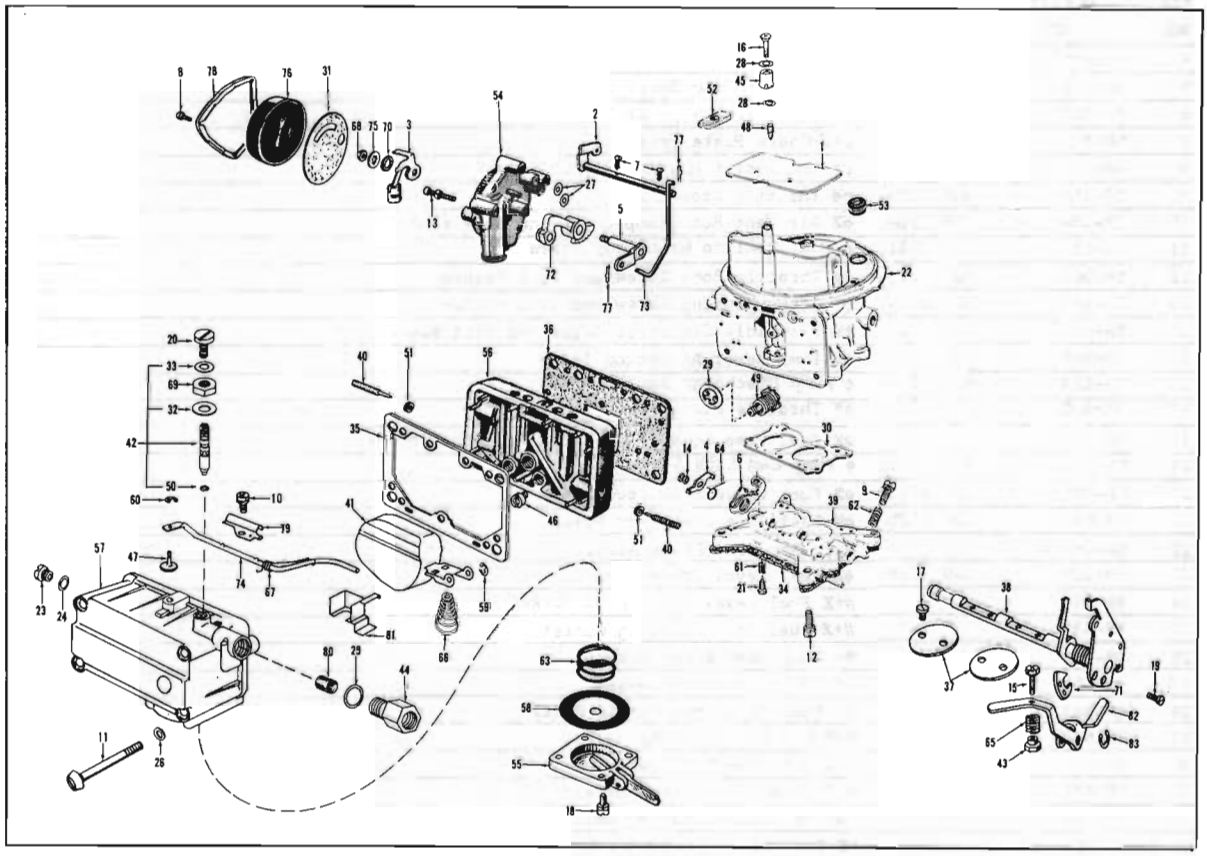

CARBURETOR 60 20-80 (Dual Throat)

AMERICAN MOTORS NO. 315 8255 HOLLEY NO. R-2040, R-2040-1

KEY NO.	HOLLEY NO.	A.M. NO.	DESCRIPTION	PER CAR
	85A-1111	320 3586	Assortment Kit (Includes all parts listed below which are coded with a ϕ)	
	85R-733	320 4995	Pep Kit (Includes all parts listed below which are coded with a #) (Replaces 320 2227)	1
	85R-931	320 3052	Repair Kit (Includes all parts listed below which are coded with a *) (Replaces 320 2228)	1
	85G-930	320 2222	* Gasket Set (Includes all parts listed below which are coded with a +)	1
	85R-971	320 2390	Power Valve Kit (Includes all parts listed below which are coded with a @)	1
	85R-1194	320 6330	Bowl Kit (Includes all parts listed below which are coded with a ⧖)	1
	85C-1195	320 6331	Choke Kit (Includes all parts listed below which are coded with a °)	1
	85D-1192	320 6333	Pump Diaphragm Kit (Includes all parts listed below which are coded with a ⧗)	1
	85C-1190	320 6334	Choke Shaft Kit (Includes all parts listed below which are coded with a ⊞)	1
	85T-1187	320 6335	Throttle Shaft Kit (Includes all parts listed below which are coded with a ⊻)	1
1	2R-388	320 4454	°⊞ Choke Plate	1
2	3R-278A	320 3186	°⊞ Choke Shaft Assy.	1
3	4R-674A		° Choke Thermostat Lever, Link and Piston Assy.	1

GROUP 4

KEY NO.	HOLLEY NO.	A.M. NO.	DESCRIPTION	PER CAR
4	4R-485		☿ Fast Idle Pick-Up Lever	1
5	4R-486A		° Choke Housing Shaft and Lever Assy.	1
6	4R-505		☿ Fast Idle Cam Lever	1
7	5R-4	320 3101	ϕ*⊞ Choke Plate Screw	2
8	5R-16	320 3102	ϕ° Thermostat Housing Clamp Screw	3
9	5R-155	320 3103	ϕ☿ Throttle Stop Screw	1
10	5R-294	320 3104	ϕ⧗ Air Vent Rod Clamp Screw and Lock Washer	1
11	5R-552	320 3111	ϕ Fuel Bowl to Main Body Screw	4
12	5R-567	320 3112	ϕ☿ Throttle Body Screw and Lock Washer	5
13	5R-569	320 3114	ϕ° Choke Housing Screw and Lock Washer	3
14	5R-584	320 3116	ϕ☿ Fast Idle Cam Lever Screw and Lock Washer	1
15	5R-595	320 3117	ϕ☿ Pump Lever Adjusting Screw	1
16	5R-614	320 3118	ϕ Pump Discharge Nozzle Screw	1
17	5R-635	320 3119	ϕ* Throttle Plate Screw	4
18	5R-370	320 3105	⧗⧗ Fuel Pump Cover Assy. Screw and Lock Washer	4
19	5R-682	320 3121	ϕ Pump Cam Lock Screw	1
20	5R-765	320 3123	ϕ⧗ Fuel Valve Seat Lock Screw	1
21	5R-582	320 3125	ϕ☿ Fast Idle Cam Lever Screw	1
22	6R-1848A		Main Body and Plugs Assy.	1
23	7R-225	320 3128	ϕ⧗ Fuel Level Check Plug	1
24	8R-49		#+⧗ Fuel Level Check Plug Gasket	1
25	8R-482		#+⧗ Fuel Inlet Fitting Gasket	1
26	8R-657		#+ Fuel Bowl Screw Gasket	4
27	8R-659		#+° Choke Housing Gasket	2
28	8R-844		#+ Pump Discharge Nozzle Gasket	2
29	8R-669	320 2204	#+@ Power Valve Body Gasket	1
30	8R-1051		#+☿ Throttle Body Gasket	1
31	8R-686		#+° Choke Thermostat Housing Gasket	1
32	8R-776		+⧗ Fuel Valve Seat Adjusting Nut Gasket	1
33	8R-777		+⧗ Fuel Valve Seat Lock Screw Gasket	1
34	8R-926	315 8245	#+☿ Flange Gasket	2
35	8R-799		#+@⧗ Fuel Bowl Gasket	1
36	8R-814		#+@⧗ Metering Body Gasket	1
37	9R-122		☿ Throttle Plate	2
38	10R-847A		☿ Throttle Lever and Shaft Assy.	1
39	12R-2306A		☿ Throttle Body and Shaft Assy.	1
40	15R-40	320 2206	* Idle Adjusting Needle	2
41	16R-260A-4	320 2209	⧗ Float and Hinge Assy. (Black)	1
42	18R-73A	320 2212	#*⧗ Fuel Inlet Valve and Seat Assy.	1
43	19R-189	320 3160	ϕ☿ Pump Lever Adjusting Nut Fitting	1
44	19R-221	320 6338	⧗ Fuel Inlet Fitting	1
45	21R-572-21	320 3187	Pump Discharge Nozzle	1
46	22R-40-50	320 3164	@ Main Jet	2
47	23R-211	320 3169	ϕ⧗ Air Vent Valve	1
48	23R-258	320 6340	Pump Discharge Needle Valve	1
49	25R-237A-85	320 2215	#*@ Power Valve Assy.	1
50	27R-148		+⧗ Fuel Valve Seat "O" Ring Seal	1
51	27R-152		#+ Idle Needle Seal	2
52	27R-238	320 6341	Choke Rod Seal	1
53	27R-223	320 6342	⊞ Choke Cold Air Tube Grommet	1
54	34R-1529A		° Choke Housing and Plugs Assy.	1
55	34R-2183A		⧗⧗ Fuel Pump Cover Assy.	1
56	34R-2813A	320 6343	Main Metering Body and Plugs Assy.	1
57	34R-2818A		⧗ Fuel Bowl and Plugs Assy.	1
58	35R-342A	320 2218	#*⧗⧗ Diaphragm Assy.	1
59	36R-169	320 3189	ϕ*⧗ Float Retainer	1
60	36R-225	320 3190	ϕ*⧗ Air Vent Valve Retainer	1
61	38R-108	320 3191	ϕ☿ Fast Idle Cam Lever Screw Spring	1

KEY NO.	HOLLEY NO.	A.M. NO.	DESCRIPTION	PER CAR
62	38R-110	320 3192	ϕ Throttle Stop Screw Spring	1
63	38R-569	320 3196	ϕ Diaphragm Return Spring	1
64	38R-583	320 3197	ϕ Fast Idle Cam Lever Spring	1
65	38R-587	320 3198	ϕ Pump Lever Adjusting Spring	1
66	38R-803	320 3203	ϕ Float Spring (Blue)	1
67	38R-760	320 3202	ϕ Air Vent Rod Spring	1
68	39R-5	320 6344	° Choke Thermostat Shaft Hexagon Nut	1
69	39R-160	320 3206	ϕ Fuel Valve Seat Adjusting Nut	1
70	40R-108	320 3208	ϕ° Choke Thermostat Lever Spacer	1
71	41R-240	320 6347	Pump Cam (Red)	1
72	41R-229A	320 6346	° Fast Idle Cam Assy.	1
73	43R-203		Choke Rod	1
74	43R-276		Air Vent Rod	1
75	46R-248	320 6349	° Choke Shaft Nut Shakeproof Lock Washer	1
76	47R-116A	320 3222	° Thermostat Housing Assy. (Cp.)(Identified by 57-M1 on Cover)	1
77	48R-31	320 3227	ϕ* Choke Rod Retainer	2
78	49R-328		° Thermostat Housing Clamp	1
79	49R-425		Air Vent Rod Clamp	1
80	57R-35	320 6350	Filter Screen	1
81	59R-34		Baffle Plate	1
82	63R-382		Pump Operating Lever	1
83	75R-37	320 3240	ϕ Pump Operating Lever Retainer	1

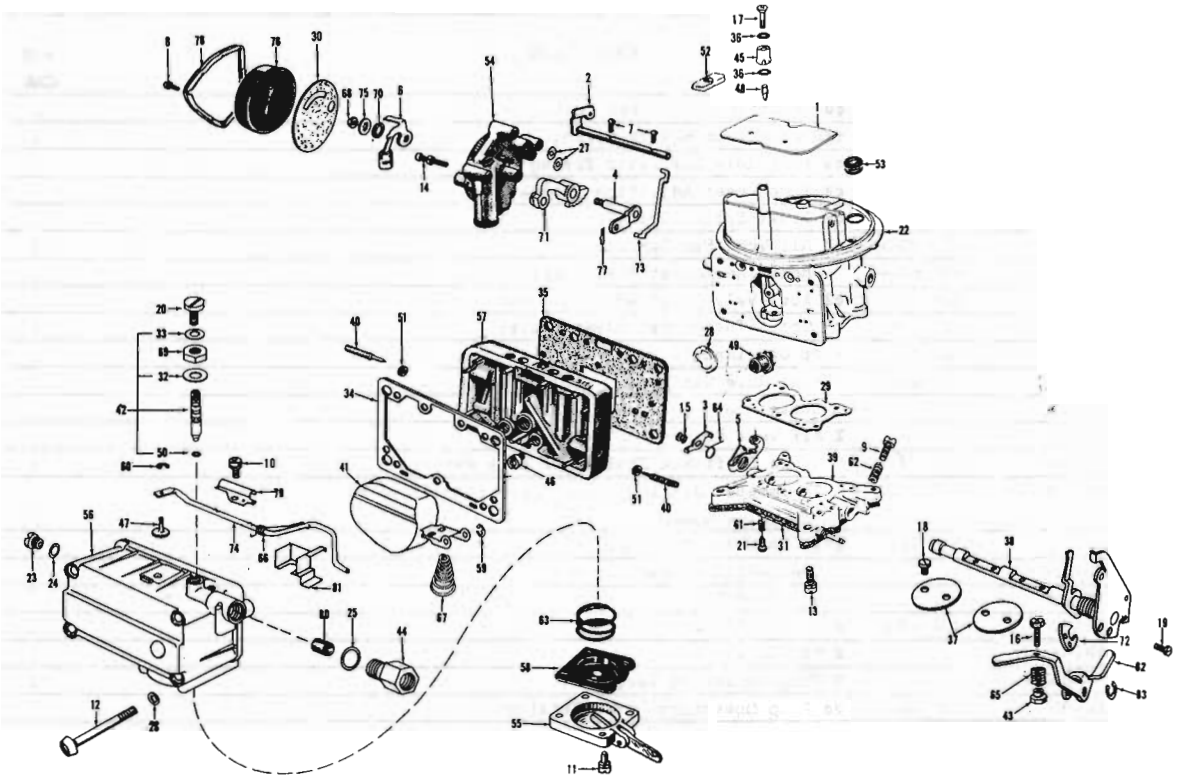

CARBURETOR 61 20-80 (DUAL THROAT)

AMERICAN MOTORS No. 316 0570 HOLLEY No. R-2228

KEY NO.	HOLLEY NO.	A.M. NO.	DESCRIPTION	PER CAR
	85A-1111	320 3586	Assortment Kit (Includes all parts listed below which are coded with a ϕ)	
	85R-733	320 4995	Pep Kit (Includes all parts listed below which are coded with a #) (Replaces 320 2227)	1
	85R-931	320 3052	Repair Kit (Includes all parts listed below which are coded with a *) (Replaces 320 2228)	1
	85G-930	320 2222	* Gasket Set (Includes all parts listed below which are coded with a +)	1
	85M-1091	320 3420	Modification Kit (For Positive Ventilation Cars Only; incl. all parts listed below which are coded with a °)	1
	85R-1194	320 6330	Bowl Kit (Includes all parts listed below which are coded with a @)	1
	85C-1195	320 6331	Choke Kit (Includes all parts listed below which are coded with a ⊞)	1
	85D-1192	320 6333	Pump Diaphragm Kit (Includes all parts listed below which are coded with a ⊠)	1
	85C-1190	320 6334	Choke Shaft Kit (Includes all parts listed below which are coded with a ⊎)	1
	85T-1189	320 6337	Throttle Shaft Kit (Includes all parts listed below which are coded with a ⊠)	1
1	2R-372	320 3211	⊎ Choke Plate	1
2	3R-278A	320 3186	⊎ Choke Shaft Assy.	1
3	4R-485		⊠ Fast Idle Pick-Up Lever	1
4	4R-486A		⊞ Choke Housing Shaft and Lever Assy.	1
5	4R-505		⊠ Fast Idle Cam Lever	1
6	4R-674A		⊞ Choke Thermostat Lever, Link and Piston Assy.	1
7	5R-4	320 3101	ϕ*⊎ Choke Plate Screw	2

KEY NO.	HOLLEY NO.	A.M. NO.	DESCRIPTION	PER CAR
8	5R-16	320 3102	ϕ⊞ Thermostat Housing Clamp Screw	3
9	5R-155	320 3103	ϕ⧗ Throttle Stop Screw	1
10	5R-294	320 3104	ϕ@ Air Vent Rod Clamp Screw and Lock Washer	1
11	5R-370	320 3105	ϕ@⊠ Fuel Pump Cover Assy. Screw and Lock Washer	4
12	5R-552	320 3111	ϕ Fuel Bowl to Main Body Screw	4
13	5R-567	320 3112	ϕ⧗ Throttle Body Screw and Lock Washer	5
14	5R-569	320 3114	ϕ⊞ Choke Housing Screw and Lock Washer	3
15	5R-584	320 3116	ϕ⧗ Fast Idle Cam Lever Screw and Lock Washer	1
16	5R-595	320 3117	ϕ⧗ Pump Lever Adjusting Screw	1
17	5R-614	320 3118	ϕ Pump Discharge Nozzle Screw	1
18	5R-635	320 3119	ϕ*⧗ Throttle Plate Screw	4
19	5R-682	320 3121	ϕ Pump Cam Lock Screw	1
20	5R-765	320 3123	ϕ@ Fuel Valve Seat Lock Screw	1
21	5R-807	320 3127	ϕ Fast Idle Cam Lever Screw	1
22	6R-2224A		Main Body and Plugs Assy.	1
23	7R-225	320 3128	ϕ@ Fuel Level Check Plug	1
24	8R-49		#+@ Fuel Level Check Plug Gasket	1
25	8R-482		#+@ Fuel Inlet Fitting Gasket	1
26	8R-657		#+ Fuel Bowl Screw Gasket	4
27	8R-659		#+⊞ Choke Housing Gasket	2
28	8R-669	320 2204	#+ Power Valve Body Gasket	1
29	8R-1051		#+⧗ Throttle Body Gasket	1
30	8R-686		#+⊞ Choke Thermostat Housing Gasket	1
31	8R-926	315 8245	#+⧗ Flange Gasket	2
32	8R-776		+@ Fuel Valve Seat Adjusting Nut Gasket	1
33	8R-777		+@ Fuel Valve Seat Lock Screw Gasket	1
34	8R-963		#+@ Fuel Bowl Gasket	1
35	8R-962		#+@ Metering Body Gasket	1
36	8R-844		#+ Pump Discharge Nozzle Gasket	2
37	9R-122		⧗ Throttle Plate	2
38	10R-847A		⧗ Throttle Lever and Shaft Assy.	1
39	12R-2578A		⧗ Throttle Body and Shaft Assy.	1
40	15R-40	320 2206	* Idle Adjusting Needle	2
41	16R-260A-4	320 2209	@ Float and Hinge Assy. (Black)	1
42	18R-86A	320 2212	#+@ Fuel Inlet Valve and Seat Assembly	1
43	19R-189	320 3160	ϕ⧗ Pump Lever Adjusting Nut Fitting	1
44	19R-221	320 6338	@ Fuel Inlet Fitting	1
45	21R-572-21	320 3187	Pump Discharge Nozzle	1
46	22R-40-50	320 3164	Main Jet	2
47	23R-211	320 3169	ϕ@ Air Vent Valve	1
48	23R-258	320 6340	Pump Discharge Needle Valve	1
49	25R-237A-85	320 2215	#* Power Valve Assy.	1
50	27R-148		+@ Fuel Valve Seat "O" Ring Seal	1
51	27R-152		#+ Idle Needle Seal	2
52	27R-238	320 6341	⊎ Choke Rod Seal	1
53	27R-223	320 6342	Choke Cold Air Tube Grommet	1
54	34R-1529A		⊞ Choke Housing and Plugs Assy.	1
55	34R-2183A		@⊠ Fuel Pump Cover Assy.	1
56	34R-2818A		@ Fuel Bowl and Plugs Assy.	1
57	34R-3174A	320 3712	Main Metering Body and Plugs Assy.	1
58	35R-342A	320 2218	#*@⊠ Diaphragm Assy.	1
59	36R-169	320 3189	ϕ*@ Float Retainer	1
60	36R-225	320 3190	ϕ*@ Air Vent Valve Retainer	1
61	38R-108	320 3191	ϕ⧗ Fast Idle Cam Lever Screw Spring	1
62	38R-110	320 3192	ϕ⧗ Throttle Stop Screw Spring	1
63	38R-569	320 3196	ϕ@⊠ Diaphragm Return Spring	1
64	38R-583	320 3197	ϕ⧗ Fast Idle Cam Lever Spring	1
65	38R-587	320 3198	ϕ⧗ Pump Lever Adjusting Spring	1
66	38R-760	320 3202	ϕ@ Air Vent Rod Spring	1
67	38R-803	320 3203	ϕ@ Float Spring (Blue)	1
68	39R-5	320 6344	⊞ Choke Thermostat Shaft Hexagon Nut	1

GROUP 4

KEY NO.	HOLLEY NO.	A.M. NO.	DESCRIPTION	PER CAR
69	39R-160	320 3206	ϕ@ Fuel Valve Seat Adjusting Nut	1
70	40R-108	320 3208	ϕ⊞ Choke Thermostat Lever Spacer	1
71	41R-229A	320 6346	⊞ Fast Idle Cam Assy.	1
72	41R-240	320 6347	Pump Cam (Red)	1
73	43R-203		☿ Choke Rod	1
74	43R-276		@ Air Vent Rod	1
75	46R-248	320 6349	⊞ Choke Shaft Nut Shakeproof Lock Washer	1
76	47R-116A	320 3222	⊞ Thermostat Housing Assy. (Cp)(Ident. by 57-M1 on Cover)	1
77	48R-31	320 3227	ϕ*☿ Choke Rod Retainer	2
78	49R-328		⊞ Thermostat Housing Clamp	1
79	49R-425		@ Air Vent Rod Clamp	1
80	57R-35	320 6350	@ Filter Screen	1
81	59R-34		@ Baffle Plate	1
82	63R-382		⧗ Pump Operating Lever	1
83	75R-37	320 3240	ϕ⧗ Pump Operating Lever Retainer	1

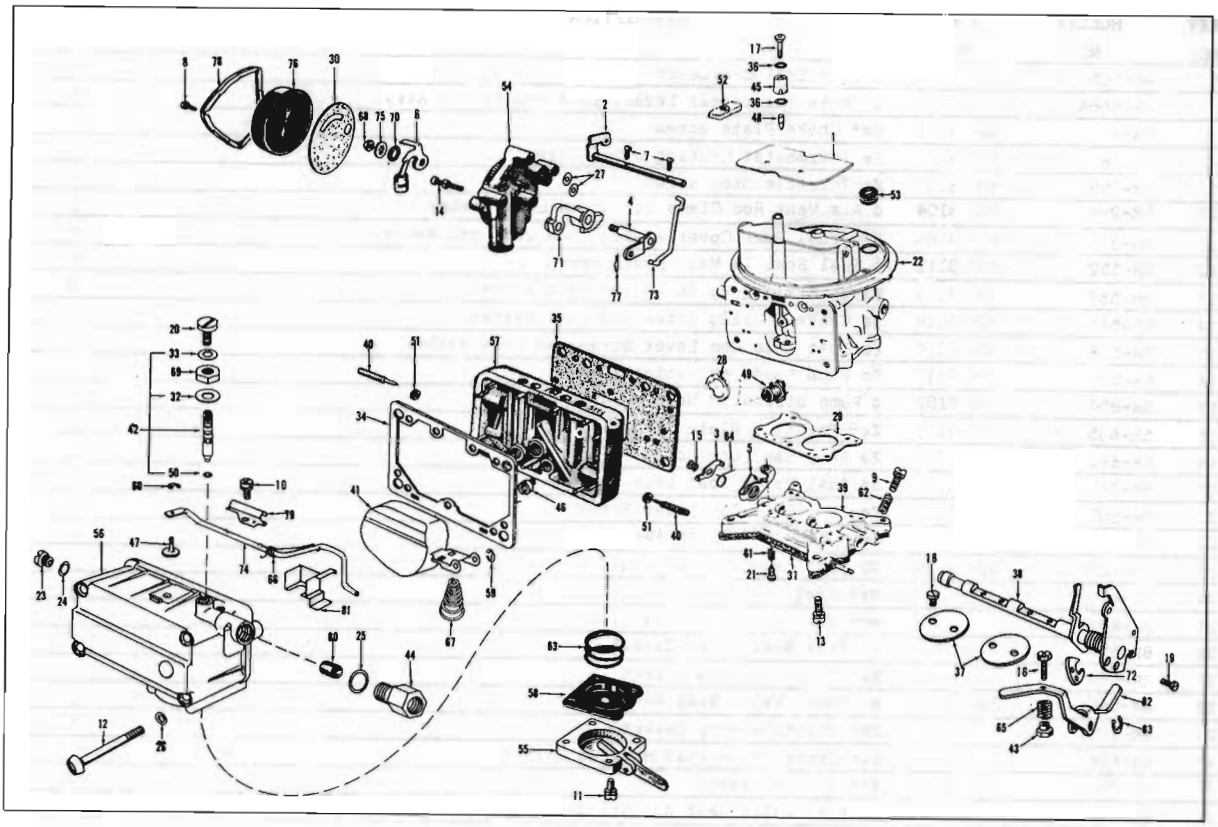

CARBURETOR 62 80 (WST-WDT)(WOD-WDT)

A.M. No. 316 3778 HOLLEY No. R-2442

KEY NO.	HOLLEY NO.	A.M. NO.	DESCRIPTION	PER CAR
	85A-1111	320 3586	Assortment Kit (Includes all parts listed below which are coded with a ϕ)	
	85R-760	320 4995	Pep Kit (Includes all parts listed below which are coded with a #) (Replaces 320 3040)	1
	85R-1077	320 3052	Repair Kit (Includes all parts listed below which are coded with a *)	1
	85G-930	320 2222	* Gasket Set (Includes all parts listed below which are coded with a +)	1
	85M-1091	320 3420	Modification Kit (For Positive Ventilation Cars Only; includes all parts listed below which are coded with a °)	1
	85B-1194	320 6330	Bowl Kit (Includes all parts listed below which are coded with a @)	1
	85C-1107	320 6332	Choke Kit (Includes all parts listed below which are coded with a ⊞)	1
	85D-1192	320 6333	Pump Diaphragm Kit (Includes all parts listed below which are coded with a ⊠)	1
	85C-1190	320 6334	Choke Shaft Kit (Includes all parts listed below which are coded with a ⊎)	1
	85T-1570	320 6834	Throttle Shaft Kit (Includes all parts listed below which are coded with a ⧗)	1
1	2R-372	320 3211	⊎ Choke Plate	1
2	3R-278A	320 3186	⊎ Choke Shaft Assy.	1
3	4R-485		⧗ Fast Idle Pick-Up Lever	1
4	4R-486		⊞ Choke Housing Shaft and Lever Assy.	1

GROUP 4

KEY NO.	HOLLEY NO.	A.M. NO.	DESCRIPTION	PER CAR
5	4R-505		Ⅹ Fast Idle Cam Lever	1
6	4R-466A		Ⅲ Choke Thermostat Lever, Link and Piston Assy.	1
7	5R-4	320 3101	ⅴϕ* Choke Plate Screw	2
8	5R-16	320 3102	Ⅲϕ Thermostat Housing Clamp Screw	3
9	5R-155	320 3103	Ⅹϕ Throttle Stop Screw	1
10	5R-294	320 3104	ϕ Air Vent Rod Clamp Screw and Lock Washer	1
11	5R-370	320 3105	Ⅺ@ϕ Fuel Pump Cover Assy. Screw and Lock Washer	4
12	5R-552	320 3111	ϕ Fuel Bowl To Main Body Screw	4
13	5R-567	320 3112	Ⅹϕ Throttle Body Screw and Lock Washer	5
14	5R-569	320 3114	Ⅲϕ Choke Housing Screw and Lock Washer	3
15	5R-584	320 3116	Ⅹϕ Fast Idle Cam Lever Screw and Lock Washer	1
16	5R-595	320 3117	Ⅹϕ Pump Lever Adjusting Screw	1
17	5R-854	320 3182	ϕ Pump Discharge Nozzle Screw	1
18	5R-635	320 3119	Ⅹϕ* Throttle Plate Screw	4
19	5R-682	320 3121	Ⅹϕ Pump Cam Lock Screw	1
20	5R-765	320 3123	@ϕ Fuel Valve Seat Lock Screw	1
21	5R-807	320 3127	Ⅹϕ Fast Idle Cam Lever Screw	1
22	6R-2224A		Main Body and Plugs Assy.	1
23	7R-225	320 3128	@ϕ Fuel Level Check Plug	1
24	8R-49		@#+ Fuel Level Check Plug Gasket	1
25	8R-482		@#+ Fuel Inlet Fitting Gasket	1
26	8R-657		#+ Fuel Bowl Screw Gasket	4
27	8R-659		Ⅲ#+ Choke Housing Gasket	2
28	8R-669	320 2204	#+ Power Valve Body Gasket	1
29	8R-1051		Ⅹ#+ Throttle Body Gasket	1
30	8R-686		Ⅲ#+ Choke Thermostat Housing Gasket	1
31	8R-926	315 8245	Ⅹ#+ Flange Gasket	2
32	8R-776		@+ Fuel Valve Seat Adjusting Nut Gasket	1
33	8R-777		@+ Fuel Valve Seat Lock Screw Gasket	1
34	8R-799		@#+ Fuel Bowl Gasket	1
35	8R-814		@#+ Metering Body Gasket	1
36	8R-844		#+ Pump Discharge Nozzle Gasket	2
37	9R-122		Ⅹ Throttle Plate	2
38	10R-847A		Ⅹ Throttle Lever and Shaft Assy.	1
39	12R-3042A		Ⅹ Throttle Body and Shaft Assy.	1
40	15R-40	320 2206	* Idle Adjusting Needle	2
41	16R-260A-4	320 2209	@ Float and Hinge Assy. (Black)	1
42	18R-86AS	320 3038	@#* Fuel Inlet Valve and Seat Assembly	1
43	19R-189	320 3160	Ⅹϕ Pump Lever Adjusting Nut Fitting	1
44	19R-221	320 6338	@ Fuel Inlet Fitting	1
45	21R-572-24	320 3212	Pump Discharge Nozzle	1
46	22R-40-50	320 3164	Main Jet	2
46	22R-40-51	320 3165	° Main Jet (For Positive Ventilation Cars Only)	2
47	23R-211	320 3169	@ϕ Air Vent Valve	1
48	23R-258	320 6340	Pump Discharge Needle Valve	1
49	25R-237A-85	320 2215	#* Power Valve Assy.	1
50	27R-148		@+ Fuel Valve Seat "O" Ring Seal	1
51	27R-152		#+ Idle Needle Seal	2
52	27R-238	320 6341	ⅴ Choke Rod Seal	1
53	27R-223	320 6342	Choke Cold Air Tube Grommet	1
54	34R-2876A		Ⅲ Choke Housing and Plugs Assy.	1
55	34R-2183A		Ⅺ@ Fuel Pump Cover Assy.	1
56	34R-3296A		@ Fuel Bowl and Plugs Assy. (Complete)	1
57	34R-3174A	320 3712	Main Metering Body and Plugs Assy.	1
58	35R-342A	320 2218	Ⅺ@#* Diaphragm Assy.	1
59	36R-169	320 3189	@ϕ* Float Retainer	1
60	36R-225	320 3190	@ϕ* Air Vent Valve Retainer	1
61	38R-108	320 3191	Ⅹϕ Fast Idle Cam Lever Screw Spring	1
62	38R-110	320 3192	Ⅹϕ Throttle Stop Screw Spring	1
63	38R-569	320 3196	@Ⅺϕ Diaphragm Return Spring	1

KEY NO.	HOLLEY NO.	A.M. NO.	DESCRIPTION	PER CAR
64	38R-583	320 3197	Ƶ◊ Fast Idle Cam Lever Spring	1
65	38R-931	320 3184	Ƶ◊ Pump Lever Adjusting Spring	1
66	38R-760	320 3202	◎◊ Air Vent Rod Spring	1
67	38R-803	320 3203	◎◊ Float Spring (Blue)	1
68	39R-5	320 6344	⊟ Choke Thermostat Shaft Hexagon Nut	1
69	39R-160	320 3206	◎◊ Fuel Valve Seat Adjusting Nut	1
70	40R-108	320 3208	⊞◊ Choke Thermostat Lever Spacer	1
71	41R-229A	320 6346	⊞ Fast Idle Cam Assy.	1
72	41R-218A	320 6348	Ƶ Pump Cam (Red)	1
73	43R-203		☿ Choke Rod	1
74	43R-276		◎ Air Vent Rod	1
75	46R-248	320 6349	⊞ Choke Shaft Nut Shakeproof Lock Washer	1
76	47R-114A	320 3213	⊟ Thermostat Housing Assy. (Cp.)	1
77	48R-31	320 3227	☿◊* Choke Rod Retainer	2
78	49R-328		⊞ Thermostat Housing Clamp	1
79	49R-425		◎ Air Vent Rod Clamp	1
80	57R-35	320 6350	◎ Filter Screen	1
81	59R-34		◎ Baffle Plate	1
82	63R-382		Ƶ Pump Operating Lever	1
83	75R-37	320 3240	Ƶ◊ Pump Operating Lever Retainer	1

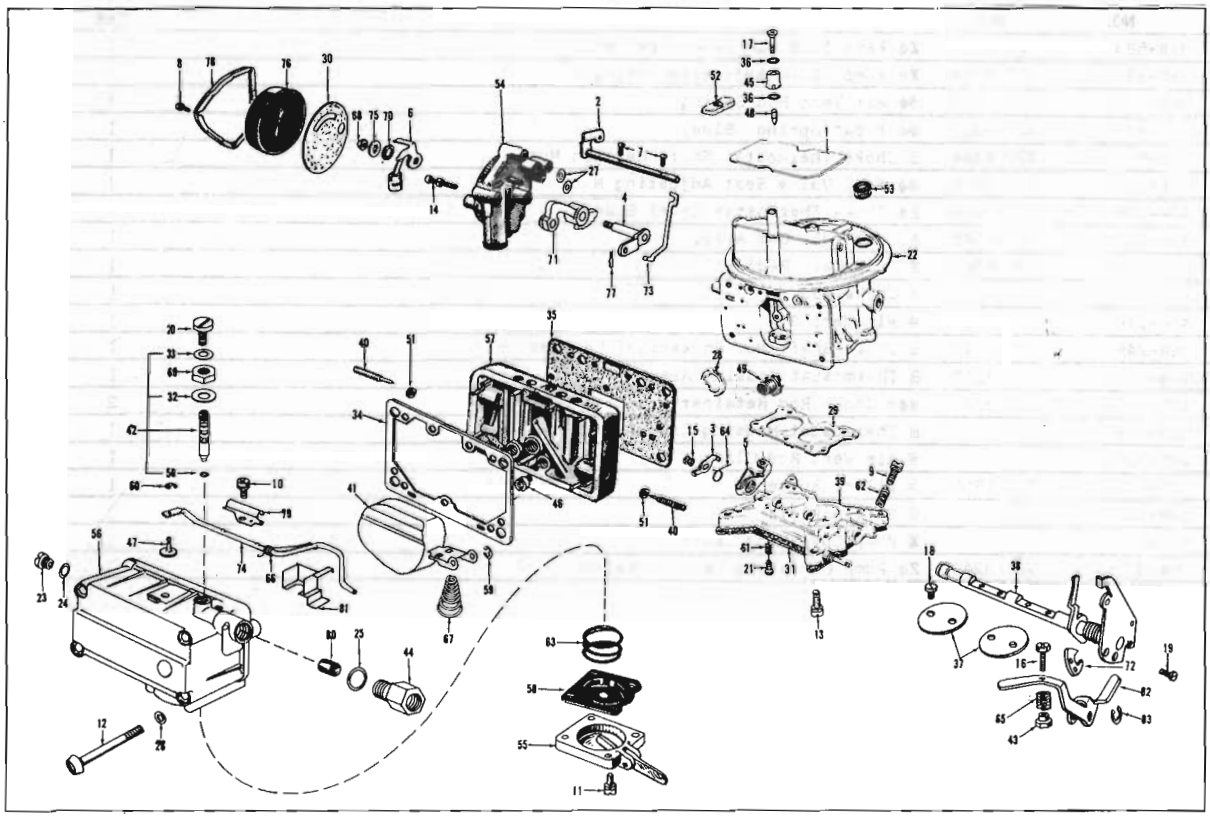

CARBURETOR 62-63 80 (WAT-WDT)

A.M. No. 316 4329 HOLLEY No. R-2463

KEY NO.	HOLLEY NO.	A.M. NO.	DESCRIPTION	PER CAR
	85A-1111	320 3586	Assortment Kit (Includes all parts listed below which are coded with a ϕ)	
	85R-760	320 4995	Pep Kit (Includes all parts listed below which are coded with a #) (Replaces 320 3040)	1
	85R-1077	320 3052	Repair Kit (Includes all parts listed below which are coded with a *)	1
	85G-930	320 2222	* Gasket Set (Includes all parts listed below which are coded with a +)	1
	85M-1091	320 3420	Modification Kit (For Positive Ventilation Cars Only; includes all parts listed below which are coded with a °)	1
	85B-1194	320 6330	Bowl Kit (Includes all parts listed below which are coded with a @)	1
	85C-1446	320 6332	Choke Kit (Includes all parts listed below which are coded with a ⊞)	1
	85D-1192	320 6333	Pump Diaphragm Kit (Includes all parts listed below which are coded with a ⊠)	1
	85C-1190	320 6334	Choke Shaft Kit (Includes all parts listed below which are coded with a ⊻)	1
	85T-1570	320 6834	Throttle Shaft Kit (Includes all parts listed below which are coded with a Z)	1
1	2R-372	320 3211	⊻ Choke Plate	1
2	3R-278A	320 3186	⊻ Choke Shaft Assy.	1
3	4R-485		Z Fast Idle Pick-Up Lever	1
4	4R-486A		⊞ Choke Housing and Lever Assy.	1

KEY NO.	HOLLEY NO.	A M. NO.	DESCRIPTION	PER CAR
5	4R-505		Ⓧ Fast Idle Cam Lever	1
6	4R-674A		⊞ Choke Thermostat Lever, Link and Piston Assy.	1
7	5R-4	320 3101	⊍ ϕ * Choke Plate Screw	2
8	5R-16	320 3102	⊞ ϕ Thermostat Housing Clamp Screw	3
9	5R-155	320 3103	Ⓧ ϕ Throttle Stop Screw	1
10	5R-294	320 3104	@ ϕ Air Vent Rod Clamp Screw and Lock Washer	1
11	5R-370	320 3105	@ ϕ Ⓜ Fuel Pump Cover Assy. Screw and Lock Washer	4
12	5R-552	320 3111	ϕ Fuel Bowl To Main Body Screw	4
13	5R-567	320 3112	Ⓧ ϕ Throttle Body Screw and Lock Washer	5
14	5R-569	320 3114	ϕ Choke Housing Screw and Lock Washer	3
	5R-579	320 3180	Dashpot Bracket Screw and Lockwasher (Not shown)	
15	5R-584	320 3116	Ⓧ ϕ Fast Idle Cam Lever Screw and Lock Washer	1
16	5R-595	320 3117	Ⓧ ϕ Pump Lever Adjusting Screw	1
17	5R-854	320 3182	ϕ Pump Discharge Nozzle Screw	1
18	5R-635	320 3119	Ⓧ ϕ * Throttle Plate Screw	4
19	5R-682	320 3121	Ⓧ ϕ Pump Cam Lock Screw	1
20	5R-765	320 3123	@ ϕ Fuel Valve Seat Lock Screw	1
21	5R-807	320 3127	ϕ Fast Idle Cam Lever Screw	1
22	6R-2224A		Main Body and Plugs Assy.	1
23	7R-225	320 3128	@ ϕ Fuel Lever Check Plug	1
24	8R-49		@ # + Fuel Lever Check Plug Gasket	1
25	8R-482		@ # + Fuel Inlet Fitting Gasket	1
26	8R-657		#+ Fuel Bowl Screw Gasket	4
27	8R-659		⊞ # + Choke Housing Gasket	2
28	8R-669	320 2204	#+ Power Valve Body Gasket	1
29	8R-1051		Ⓧ # + Throttle Body Gasket	1
30	8R-686		⊞ # + Choke Thermostat Housing Gasket	1
31	8R-926	315 8245	Ⓧ # + Flange Gasket	2
32	8R-776		@ + Fuel Valve Seat Adjusting Nut Gasket	1
33	8R-777		@ + Fuel Valve Seat Lock Screw Gasket	1
34	8R-799		@ # + Fuel Bowl Gasket	1
35	8R-814		@ # + Metering Body Gasket	1
36	8R-844		#+ Pump Discharge Nozzle Gasket	2
37	9R-122		Ⓧ Throttle Plate	2
38	10R-847A		Ⓧ Throttle Lever and Shaft Assy.	1
39	12R-3042A		Ⓧ Throttle Body and Shaft Assy.	1
40	15R-40	320 2206	* Idle Adjusting Needle	2
41	16R-260A-4	320 2209	@ Float and Hinge Assy. (Black)	1
42	18R-86AS	320 3038	@ # * Fuel Inlet Valve and Seat Assembly	1
43	19R-189	320 3160	Ⓧ ϕ Pump Lever Adjusting Nut Fitting	1
44	19R-221	320 6338	@ Fuel Inlet Fitting	1
45	21R-572-28	320 3214	Pump Discharge Nozzle	1
46	22R-40-50	320 3164	Main Jet	2
46	22R-40-51	320 3165	° Main Jet (For Positive Ventilation Cars Only)	2
47	23R-211	320 3169	@ ϕ Air Vent Valve	1
48	23R-258	320 6340	Pump Discharge Needle Valve	1
49	25R-237A-85	320 2215	#* Power Valve Assy.	1
50	27R-148		@ + Fuel Valve Seat "O" Ring Seal	1
51	27R-152		#+ Idle Needle Seal	2
52	27R-238	320 6341	⊍ Choke Rod Seal	1
53	27R-223	320 6342	Choke Cold Air Tube Grommet	1
54	34R-2876A		⊞ Choke Housing and Plugs Assy.	1
55	34R-2183A		@ Ⓜ Fuel Pump Cover Assy.	1
56	34R-3296A		@ Fuel Bowl and Plugs Assy. (Complete)	1
57	34R-3174A	320 3712	Main Metering Body and Plugs Assy.	1
58	35R-342A	320 2218	@ Ⓜ # * Diaphragm Assy.	1
59	36R-169	320 3189	@ ϕ * Float Retainer	1
60	36R-225	320 3190	@ ϕ * Air Vent Valve Retainer	1
61	38R-108	320 3191	Ⓧ ϕ Fast Idle Cam Lever Screw Spring	1
62	38R-108	320 3192	Ⓧ ϕ Throttle Stop Screw Spring	1
63	38R-569	320 3196	@ Ⓜ ϕ Diaphragm Return Spring	1

GROUP 4

KEY NO.	HOLLEY NO.	A.M. NO.	DESCRIPTION	PER CAR
64	38R-583	320 3197	Ⓧ ϕ Fast Idle Cam Lever Spring	1
65	38R-931	320 3184	Ⓧ ϕ Pump Lever Adjusting Spring	1
66	38R-760	320 3202	@ ϕ Air Vent Rod Spring	1
67	38R-803	320 3203	@ ϕ Float Spring (Blue)	1
68	39R-5	320 6344	Ⓗ Choke Thermostat Shaft Hexagon Nut	1
69	39R-160	320 3206	@ ϕ Fuel Valve Seat Adjusting Nut	1
70	40R-108	320 3208	Ⓗ ϕ Choke Thermostat Lever Spacer	1
71	41R-229A	320 6346	Ⓗ Fast Idle Cam Assy.	1
72	41R-218	320 6348	Pump Cam	1
73	43R-203		☿ Choke Rod	1
74	43R-276		@ Air Vent Rod	1
75	46R-248	320 6349	Ⓗ Choke Shaft Nut Shakeproof Lock Washer	1
76	47R-114A	320 3213	Ⓗ Thermostat Housing Assy. (Cp.)	1
77	48R-31	320 3227	☿ ϕ * Choke Rod Retainer	2
78	49R-328		Ⓗ Thermostat Housing Clamp	1
	49R-366		Dashpot Bracket (Not shown)	1
79	79R-425		@ Air Vent Rod Clamp	1
80	57R-35	320 6350	@ Filter Screen	1
	58R-50A	320 3188	Dashpot and Bracket Assembly (Not shown)	1
81	59R-34		@ Baffle Plate	1
82	63R-595		Ⓧ Pump Operating Lever	1
83	75R-37	320 3240	Ⓧ ϕ Pump Operating Lever Retainer	1

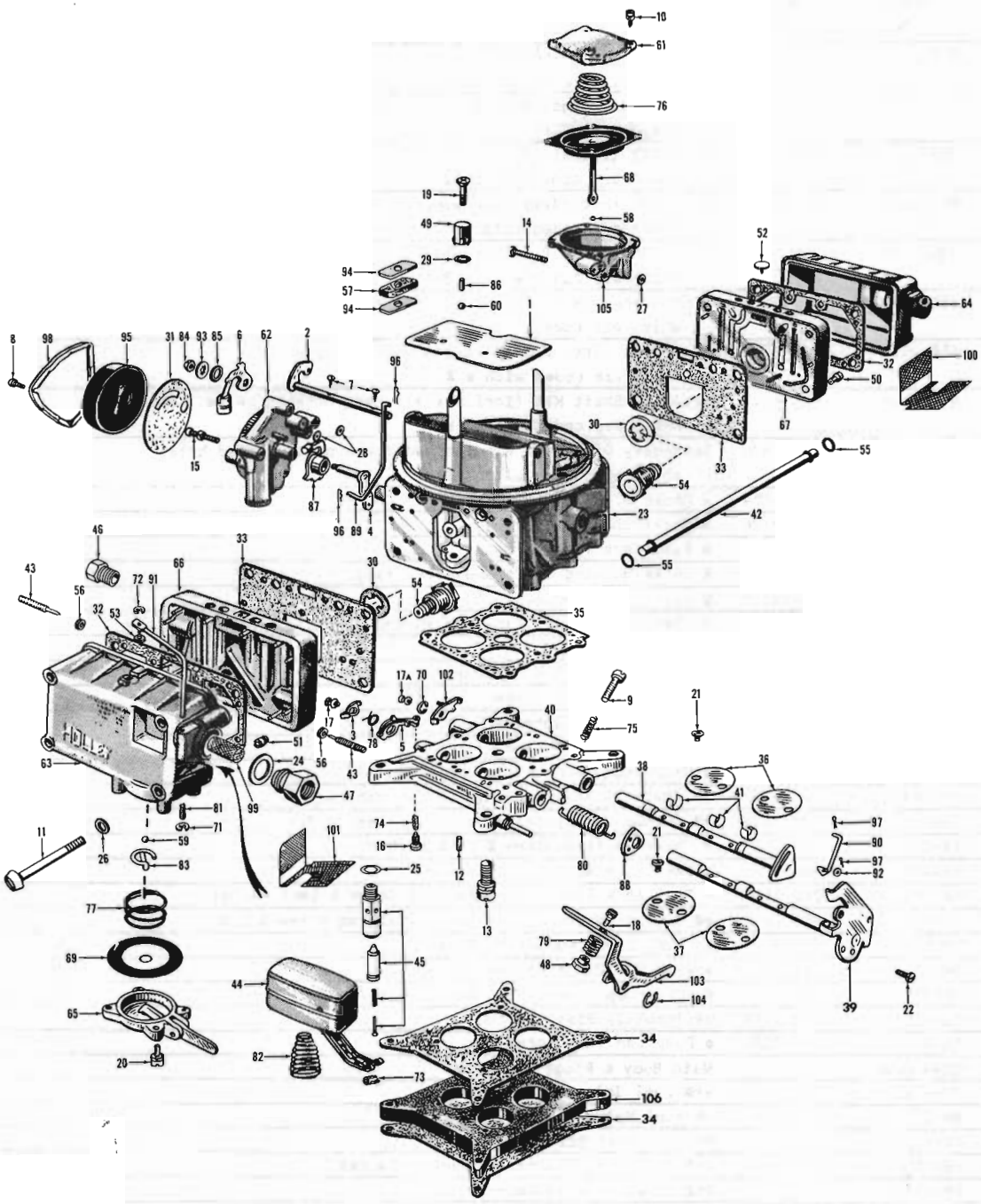

CARBURETOR 60 20-80 (4 BARREL)

A.M. NO. 315 5606	60 20	HOLLEY NO. R-1748 And R-1748-1
A.M. NO. 315 3434	60 80	HOLLEY NO. R-1312 And R-1312-1
A.M. NO. 320 2368	60 80	HOLLEY NO. R-1312-2 And R-1957-1

KEY NO.	HOLLEY NO.	A.M. NO.	DESCRIPTION	PER CAR
	85A-1111	320 3586	Assortment Kit (Includes all parts listed below which are coded with a ϕ)	
	85R-716	320 2226	Pep Kit (Includes all parts listed below which are coded with a #)	1

KEY NO.	HOLLEY NO.	A.M. NO.	DESCRIPTION	PER CAR
41	13R-490		Secondary Throttle Shaft Bushing	3
42	14R-320	320 6382	Fuel Line Tubing	1
43	15R-40	320 2206	* Idle Adjusting Needle	2
44	16R-258A	320 2208	@ Float and Hinge Assembly	2
45	18R-50A	320 2210	#*@ Fuel Valve and Seat Assembly	2
46	19R-74		Spark Fitting	1
47	19R-92	320 6385	@ Fuel Inlet Fitting	1
48	19R-189	320 3160	ϕ¥ Pump Lever Adjusting Screw Fitting	1
49	21R-572-21	320 3187	* Pump Discharge Nozzle	1
50	22R-40-35	320 3162	* Main Jet (Secondary)	2
51	22R-40-49	320 3163	* Main Jet (Primary)	2
52	23R-196	320 3168	ϕ Bowl Vent Valve	1
53	23R-211	320 3169	ϕ@ Air Vent Valve	1
54	25R-237A-85	320 2215	#* Power Valve Assembly	2
55	27R-109	320 2216	#+@° Fuel-Line Tube "O" Ring	2
56	27R-152		#+ Idle Needle Seal	2
57	27R-238		#+⊞ Choke Rod Seal	1
58	28R-1	320 3179	ϕ*Ⅱ Check Ball	1
59	28R-35	320 6367	* Pump Check Ball	1
60	28R-94	320 3181	ϕ* Pump Check Ball	1
61	34R-1334		Ⅱ Diaphragm Cover	1
62	34R-1529A		Ⅹ Choke Housing and Plugs Assembly	1
63	34R-2968A		@ Fuel Bowl and Plugs Assembly (Complete)(Primary)	1
64	34R-3038A		° Fuel Bowl and Plugs Assy. (Complete)(Secondary)	1
65	34R-2183A		@Ⅹ Fuel Pump Cover Assembly	1
66	34R-1940A	320 3708	Main Metering Body & Plugs Assembly (Primary)	1
67	34R-1942A	320 3709	Main Metering Body & Plugs Assembly (Secondary)	1
68	35R-199A	320 2217	*Ⅱ Secondary Diaphragm Assembly	1
69	35R-342A	320 2218	#*@Ⅹ Diaphragm Assembly	1
70	36R-164	320 3183	ϕ*Ⅱ¥ Secondary Diaphragm Link Retainer	1
71	36R-169	320 3189	ϕ*@ Air Vent Rod Spring Retainer	1
72	36R-225	320 3190	ϕ*@ Air Vent Valve Retainer	1
73	36R-236	320 6388	*@ Float Retainer	2
74	38R-108	320 3191	ϕ Fast Idle Adjusting Screw Spring	1
75	38R-110	320 3192	ϕ¥ Throttle Stop Screw Spring	1
76	38R-464	320 3195	ϕⅡ Secondary Diaphragm Spring	1
77	38R-569	320 3196	ϕ@Ⅹ Diaphragm Return Spring	1
78	38R-583	320 3197	ϕ¥ Fast Idle Cam Lever Spring	1
79	38R-587	320 3198	ϕ¥ Pump Lever Adjusting Screw Spring	1
80	38R-607		Throttle Return Spring	1
81	38R-615	320 3199	ϕ@ Air Vent Rod Spring	1
82	38R-616	320 6389	@ Float Spring	2
83	38R-635	320 6390	* Pump Check Ball Retainer	1
84	39R-5	320 6344	Ⅹ Choke Shaft Nut	1
85	40R-108	320 3208	ϕⅩ Choke Thermostat Lever Spacer	1
86	40R-336	320 6391	Pump Check Ball Weight	1
87	41R-244A	320 6392	Ⅹ Fast Idle Cam Assembly	1
88	41R-234	320 6393	Pump Cam (Black)(Used on 60 80, Except Carb. 320 2368, R-1312-2 And R-1957-1)	1
88	41R-240	320 6347	Pump Cam (Red)(Used on 60 20)(Also Used on 60 80 With Carb. 320 2368, R-1313-2 And R-1957-1)	1
89	43R-203		⊞ Choke Rod	1
90	43R-205		¥ Throttle Connecting Rod	1
91	43R-219	320 6394	@ Air Vent Push Rod	1
92	46R-25	320 6396	¥ Throttle Connecting Rod Washer	1
93	46R-248	320 6349	Ⅹ Choke Shaft Nut L.W.	1
94	46R-463		Choke Rod Seal Washer	2
95	47R-16A	320 3222	Ⅹ Thermostat Housing Assembly	1
96	48R-31	320 3227	ϕ*⊞ Choke Rod Retainer	2
97	48R-183	320 3228	ϕ*¥ Throttle Connecting Rod Retainer	2

KEY NO.	HOLLEY NO.	A.M. NO.	DESCRIPTION	PER CAR
98	49R-328		Ⱬ Thermostat Housing Clamp	1
99	57R-28A	320 6397	*@ Filter Screen Assembly	1
100	59R-29		@ Baffle Plate (Secondary)	1
101	59R-30		@ Baffle Plate (Primary)	1
102	63R-301A		☿ Diaphragm Lever Assembly	1
103	63R-382		☿ Pump Operating Lever	1
104	75R-37	320 3240	ϕ*☿ Pump Operating Lever Retainer	1
105	79R-389		ⱡ Diaphragm Housing (Machine)	1
106		315 3820	Carburetor to Manifold Insulator	1

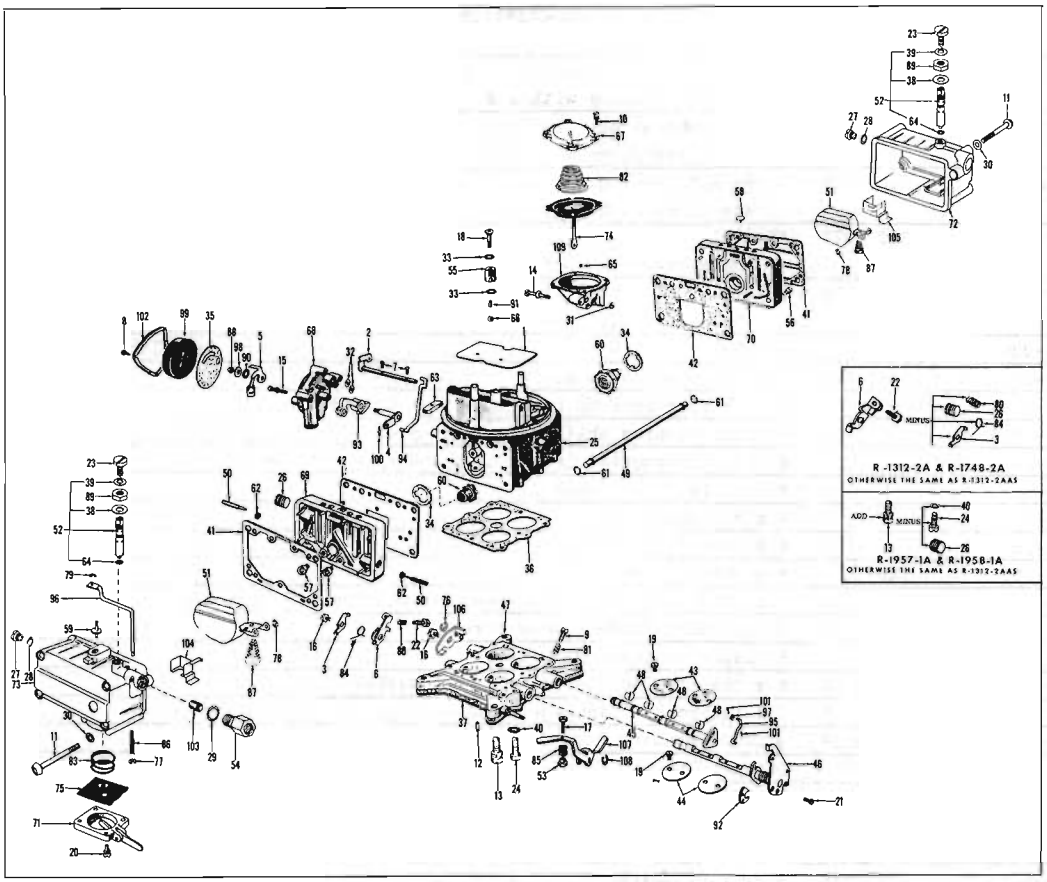

CARBURETOR 60 THRU 65 10-20-80 (V8-W4B)

A.M. NO. 320 2368 — HOLLEY NO. R-1312-2 And R-1957-1
A.M. NO. 320 2369 — HOLLEY NO. R-1748-2 And R-1958-1
A.M. NO. 320 3567 — HOLLEY NO. R-1312-3 And R-2464

KEY NO.	HOLLEY NO.	A.M. NO.	DESCRIPTION	PER CAR
	85R-1111	320 3586	Assortment Kit (Includes all parts listed below which are coded with a ϕ)	
	85R-759	320 3039	Pep Kit (Includes all parts listed below which are coded with a #)	1
	85R-1078	320 3041	Repair Kit (Includes all parts listed below which are coded with a *)	1
	85G-963	320 2364	* Gasket Set (Includes all parts listed below which are coded with a +)	1
	85M-1092	320 3421	Modification Kit (For Positive Ventilation Cars Only; includes all parts listed below which are coded with a °)	1
		317 0979	Metering Jet Pkg. (Includes 2 Holley 22R-40-47 Metering Jets for 5,000 Ft. Alt. and 2 Holley 22R-40-45 Metering Jets for 10,000 Ft. Alt.)	
	85B-1211	320 6374	Bowl Kit (Primary)(Includes all parts listed below which are coded with a @)	1
	85B-1210	320 6378	Bowl Kit (Secondary)(Includes all parts listed below which are coded with a ⊞)	1

KEY NO.	HOLLEY NO.	A.M. NO.	DESCRIPTION	PER CAR
	85C-1190	320 6334	Choke Shaft Kit (Includes all parts listed below which are coded with a ⊠)	1
	85D-1192	320 6333	Pump Diaphragm Kit (Includes all parts listed below which are coded with a ⊎)	1
	85R-1106	320 6375	Choke Kit (Includes all parts listed below which are coded with a ⧗)	1
	85T-1589	320 6377	Throttle Shaft Kit (Includes all parts listed below which are coded with ⧯)	1
	85R-1208	320 6376	Secondary Diaphragm Kit (Includes all parts listed below which are coded with a ⧙)	1
1	2R-388	320 4454	⊠ Choke Plate (Replaces 320 3259)	1
2	3R-278A	320 3186	⊠ Choke Shaft Assembly	1
3	4R-485		⧯ Fast Idle Pick Up Lever (Part of 48-568)	1
4	4R-486A		⧗ Choke Housing Shaft and Lever Assembly	1
5	4R-547A		⧗ Choke Thermostat Lever, Link and Piston Assembly	1
6	4R-568		⧯ Fast Idle Cam Lever	1
7	5R-4	320 3101	⊠ ϕ * Choke Plate Screw	2
8	5R-16	320 3102	⧗ ϕ Thermostat Housing Clamp Screw	3
9	5R-155	320 3103	⧯ ϕ Throttle Stop Screw	1
10	5R-370	320 3105	⧙ ϕ Secondary Diaphragm Cover Assy. Screw and Lock Washer	4
11	5R-552	320 3111	ϕ Fuel Bowl to Main Body Screw	8
12	5R-555	320 6379	⧯ Diaphragm Lever Adjusting Screw	1
13	5R-567	320 3112	⧯ ϕ Throttle Body Screw and Lock Washer	8
14	5R-568	320 3113	⧙ ϕ Secondary Diaphragm Housing Assy. Screw and Lock Washer	3
15	5R-569	320 3114	ϕ Choke Housing Screw and Lock Washer	3
	5R-579	320 3180	Dashpot Bracket Screw (Not Shown)	1
16	5R-584	320 3116	⧯ ϕ Fast Idle Cam Lever and Diaphragm Lever Assembly Screw and Lock Washer	2
17	5R-595	320 3117	⧯ ϕ Pump Lever Adjusting Screw	1
18	5R-614	320 3118	ϕ Pump Discharge Nozzle Screw	1
19	5R-635	320 3119	ϕ* Primary and Secondary Throttle Plate Screw	8
20	5R-370	320 3105	@ ⊎ ϕ Fuel Pump Cover Assembly Screw and Lock Washer	4
21	5R-682	320 3121	ϕ Pump Cam Lock Screw	1
22	5R-582	320 3125	⧯ ϕ Fast Idle Cam Lever Adjusting Screw	1
23	5R-765	320 3123	@ ⊞ ϕ Fuel Valve Seat Lock Screw	2
24			Throttle Body Screw (Special)(Use 5R-567)	
25	6R-1835A		Main Body and Plugs Assembly	1
26	7R-5	320 6381	Spark Hole Plug	1
27	7R-225	320 3128	@ ⊟ ϕ Fuel Level Check Plug	2
28	8R-49		@ ⊟ # + Fuel Level Check Plug Gasket	2
29	8R-482		@ # + Fuel Inlet Fitting Gasket	1
	8R-539		+ Gasket	2
30	8R-657		#+ Fuel Bowl Screw Gasket	8
31	8R-659		⧙ # + Secondary Diaphragm Housing Gasket	1
32	8R-659		⧗ # + Choke Housing Gasket	2
33	8R-844		#+ Pump Discharge Nozzle Gasket	2
34	8R-669	320 2204	#+ Power Valve Body Gasket	2
35	8R-686		⧗ # + Choke Thermostat Housing Gasket	1
36	8R-687		⧯ # + Throttle Body Gasket	1
37	8R-763	315 3819	#+ Flange Gasket	2
38	8R-776		@ ⊞ # + Fuel Valve Seat Adjusting Nut Gasket	2
39	8R-777		@ ⊞ # + Fuel Valve Seat Lock Screw Gasket	2
40	8R-779		⧯ Throttle Body Screw Gasket	1
41	8R-963		@ ⊟ # + Fuel Bowl Gasket	2
42	8R-962		@ ⊟ # + Metering Body Gasket	2
43	9R-96		⧯ Throttle Plate (Secondary)	2
44	9R-103		⧯ Throttle Plate (Primary)	2
45	10R-736A		⧯ Throttle Shaft Assembly (Secondary)	1
46	10R-724A		⧯ Throttle Lever and Shaft Assy.	1
47	12R-1901A		⧯ Throttle Body and Shaft Assy.	1
48	13R-490		⧯ Secondary Throttle Shaft Bushing	4
49	14R-320	320 6382	Fuel Line Tube	1

KEY NO.	HOLLEY NO.	A.M. NO.	DESCRIPTION	PER CAR
50	15R-40	320 2206	* Idle Adjusting Needle	2
51	16R-260A-4	320 2209	@ ⊞ Float and Hinge Assembly	2
52	18R-76AS	320 2914	@ ⊞ # * Fuel Inlet Valve and Seat Assembly	2
53	19R-189	320 3160	⧓ ϕ Pump Lever Adjusting Fitting	1
54	19R-221	320 6338	@ Fuel Inlet Fitting	1
55	21R-572-21	320 3187	* Pump Discharge Nozzle	1
56	22R-40-45	320 3162	Main Jet (Secondary)	2
57	22R-40-49	320 3163	Main Jet (Primary)	2
57	22R-40-50	320 3164	° Main Jet (Primary)(For Positive Ventilation Cars only)	2
58	23R-196	320 3168	ϕ Bowl Vent Valve	1
59	23R-280	320 3185	@ ϕ Air Vent Valve	1
60	25R-237A-85	320 2215	#* Primary and Secondary Power Valve Assembly	2
61	27R-109	320 2216	@ ⊞ # + Fuel Line Tube "O" Ring Seal	2
62	27R-152		#+ Idle Needle Seal	2
63	27R-238	320 6341	⧔ Choke Rod Seal	1
64	27R-148		@ ⊞ + Fuel Valve Seat "O" Ring Seal	2
65	28R-1	320 3179	⧗ ϕ * Diaphragm Housing Check Rail	1
66	28R-94	320 3181	ϕ Discharge Pump Check Ball	1
67	34R-1334		⧗ Secondary Diaphragm Housing Cover	1
68	23R-1529A		⧖ Choke Housing and Plugs Assembly	1
69	34R-1940A	320 3708	Main Metering Body and Plugs Assembly (Primary)	1
70	34R-1942A	320 3709	Main Metering Body and Plugs Assembly (Secondary)	1
71	34R-2183A		@ ⧕ Fuel Pump Cover Assembly	1
72	34R-2541A		⊞ Fuel Bowl and Plugs Assembly (Secondary)	1
73	34R-2969A		@ Fuel Bowl and Plugs Assembly (Primary)	1
74	35R-199A	320 2217	⧗ * Secondary Diaphragm and Rod Assembly	1
75	35R-342A	320 2218	@ ⧕ # * Diaphragm Assembly	1
76	36R-164	320 3183	⧗ ⧓ ϕ Secondary Diaphragm Link Retainer	1
77	36R-169	320 3189	@ ϕ Air Vent Rod Spring Retainer	1
78	36R-169	320 3189	@ ⊞ ϕ * Float Retainer	2
79	36R-225	320 3190	@ ϕ * Air Vent Valve Retainer	1
80	38R-108	320 3191	ϕ Fast Idle Cam Lever Screw Spring	1
81	38R-110	320 3192	⧓ ϕ Throttle Stop Screw Spring	1
82	38R-464	320 3195	⧗ ϕ Secondary Diaphragm Spring	1
83	38R-569	320 3196	@ ⧕ ϕ Diaphragm Return Spring	1
84	38R-583		⧓ Fast Idle Cam Lever Spring	
85	38R-587	320 3198	⧓ ϕ Pump Lever Adjusting Spring	1
86	38R-615	320 3199	@ ϕ Air Vent Rod Spring	1
87	38R-757	320 3200	@ ⊞ ϕ Float Spring	1
88	39R-5	320 6344	⧖ Choke Thermostat Shaft Nut	1
	39R-143	320 6345	Dashpot Nut (Not Shown)	1
89	39R-160	320 3206	@ ⊞ ϕ Fuel Valve Seat Adjusting Nut	2
90	40R-108	320 3208	⧖ ϕ Choke Thermostat Lever Spacer	1
91	40R-336	320 6391	Pump Check Ball Weight	1
92	41R-234	320 6393	Pump Cam	1
93	41R-244A	320 6392	⧖ Fast Idle Cam Assembly	1
94	43R-203		⧔ Choke Rod	1
95	43R-205		⧓ Throttle Connecting Rod	1
96	43R-281	320 6395	@ Air Vent Push Rod	1
97	46R-25	320 6396	⧓ Throttle Connecting Rod Washer	1
98	46R-248	320 6349	⧖ Choke Shaft Nut Lock Washer (Shakeproof)	1
99	47R-116A	320 3222	⧖ Thermostat Housing Assembly (Complete)(Identified by 57-M1)	1
100	48R-31	320 3227	⧔ ϕ Choke Rod Retainer	1
101	48R-183	320 3228	⧓ ϕ * Throttle Connecting Rod Cotter Pin	2
102	49R-328		⧖ Thermostat Housing Clamp	1
	59R-366		Dashpot Bracket (Not Shown)	1
103	57R-35	320 6350	@ Filter Screen	1

GROUP 4

KEY NO.	HOLLEY NO.	A.M. NO.	DESCRIPTION	PER CAR
	58R-50A	320 3188	Dashpot and Bracket Assembly (Not Shown)	1
104	59R-34		@ Baffle Plate (Primary)	1
105	59R-35		⊞ Baffle Plate (Secondary)	1
106	63R-301A		⊼ Diaphragm Lever Assembly	1
107	63R-382		⊼ Pump Operating Lever	1
108	75R-37	320 3240	⊼ ϕ Pump Operating Lever Retainer	1
109	79R-389		⊻ Secondary Diaphragm Housing	1

CANADIAN PECULIAR

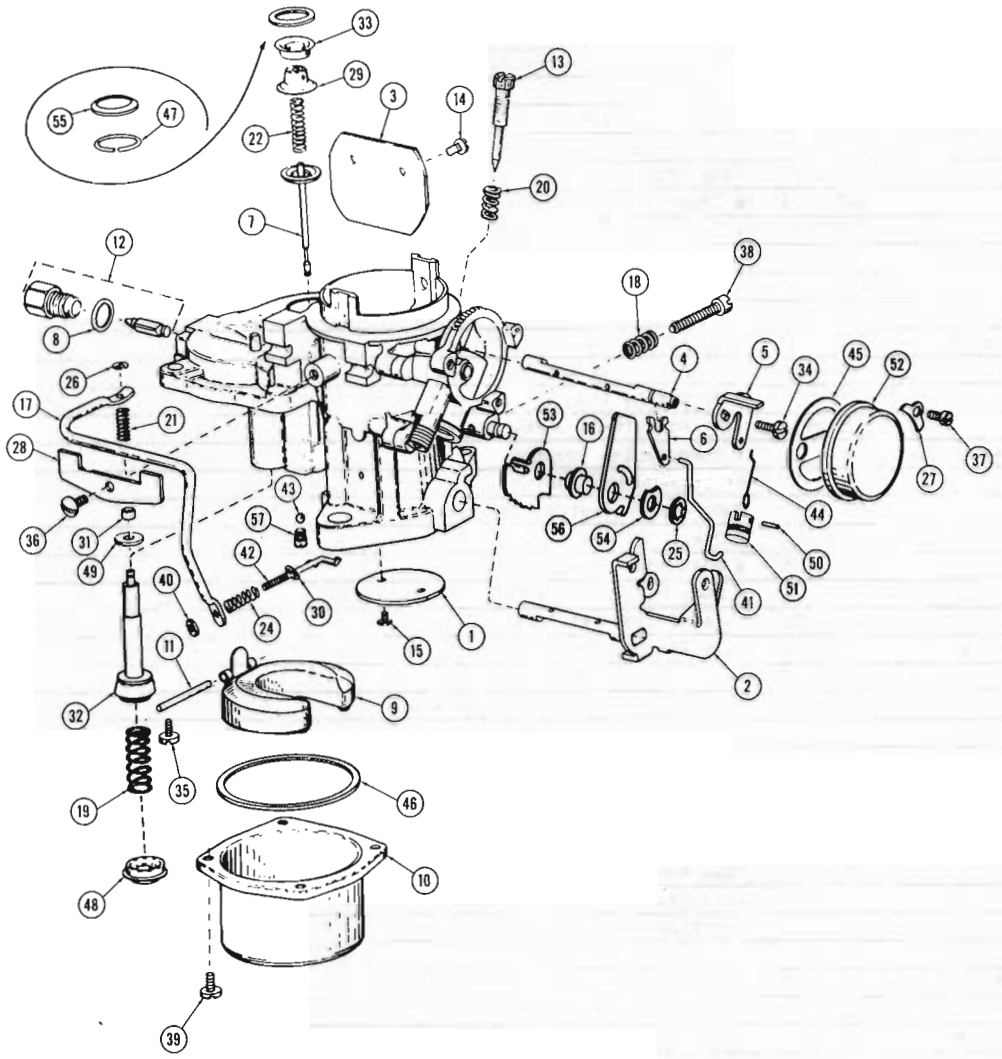

CARBURETOR 165 10-80 (CAN-OHV-232-LDT)

A.M. NO. 317 8916 CARTER NO. RBS 3765S

KEY NO.	CARTER NO.	A.M. NO.	DESCRIPTION	PER CAR
		320 3800	Assortment Kit (Includes all parts listed below which are coded with a ϕ)	
		320 9186	Metering Jet Package (Includes all parts listed below which are coded with a #)(Use for 5,000 Ft. Altitude)	1
		320 9184	Zip Kit (Includes all parts listed below which are coded with a *)	1
		317 6474	* Flange Gasket	2
1	2-99		Throttle Valve	1
2	3-1545S		Throttle Shaft and Lever Assembly	1
3	7-270	320 6486	Choke Valve	1
		320 3870	ϕ Idle Port Rivet Plug	2
4	13-222	320 6490	Choke Shaft	1
5	14-757	320 6809	Choke Piston Lever	1
6		320 4319	Choke Lever	1
7	16-272S		#* Step Up Rod and Diaphragm Assembly (.725" x .062") Std.	1
8	20-203		Needle Seat Gasket	1

CANADIAN PECULIAR

KEY NO.	CARTER NO.	A.M. NO.	DESCRIPTION	PER CAR
9		320 4320	Float and Lever Assembly	1
10	23-84	320 6494	Bowl	1
11	24-32	320 6495	Float Lever Pin	1
12		320 6710	* Needle and Seat Assembly	1
13		320 4321	Idle Adjustment Screw	1
14		320 3812	ϕ Choke Valve Attaching Screw	2
15		320 3813	ϕ Throttle Valve Attaching Screw	2
		320 3814	ϕ Welsh Plug (Choke Piston)	1
		320 4949	ϕ Welsh Plug (Fuel Well)	1
16		320 4322	Fast Idle Cam Collar	1
17	53A-466	320 6810	Pump Arm	1
18		320 5125	Throttle Adjusting Screw Spring	1
19		320 9191	Pump Spring (Lower)	1
20		320 3844	Idle Adjustment Screw Spring	1
21	61-721		* Pump Spring (Upper)	1
22	61-773		#* Step-Up Rod Spring	1
24	61-758	320 6811	Pump Arm Connector Link Spring	1
	63-321		* Pump Cylinder Retainer	1
25		320 4325	ϕ Fast Idle Retainer	1
26	63-282		* Pump Rod Retainer	1
27		320 4326	Coil Housing Retainer	3
28	63-302	320 6498	Pump Arm Retainer	1
29		320 4327	#* Step-Up Rod Diaphragm Retainer	1
30	63-309	320 6499	Pump Arm Connector Link Retainer	1
31	108-84		Bushing Pump Plunger Shaft	1
32		320 4329	* Pump Plunger Assembly	1
33		320 4330	#* Step-Up Rod Diaphragm Cover	1
34	101-65	320 6412	Choke Piston Lever Screw	1
35	101-67	320 6413	Float Pin Attaching Screw	2
36	101-74	320 6414	Pump Arm Retainer Screw	1
37	101-136	320 6431	Coil Housing Attaching Screw	3
38	101-387	320 6415	Throttle Lever Adjusting Screw	1
39	101-514	320 6416	Bowl Attaching Screw	4
40	105A-69	320 6417	Pump Arm Connector Link Nut	1
41	115-391	320 6803	Fast Idle Connector Rod	1
42	115-385	320 6812	Pump Arm Connector Link	1
43		320 3825	*ϕ Pump Inlet Check Ball	1
44		320 4337	Choke Piston Link	1
45		320 9190	* Coil Housing Gasket	1
46	121-492		* Bowl Ring Gasket	1
47		320 4528	#* Ring. Diaphragm Cover Slit	1
48		320 5855	* Pump Cover	1
49	136-257	320 6420	Pump Washer	1
50	150-170	320 6421	Choke Piston Pin	1
51		320 9188	Choke Piston	1
52		320 6728	Thermostatic Coil and Housing Assembly	1
53	181-328	320 6814	Fast Idle Cam (Inner)	1
54	136-95		Washer, Fast Idle Retainer	1
55		320 4529	*# Conical Washer	1
56	181-329	320 6804	Fast Idle Cam (Outer)	1
57			Pump Inlet Check Ball Seat	1

CLUTCH COVER AND HOUSING 60 thru Current ALL MODELS (LES-WST)(LES-WOD)

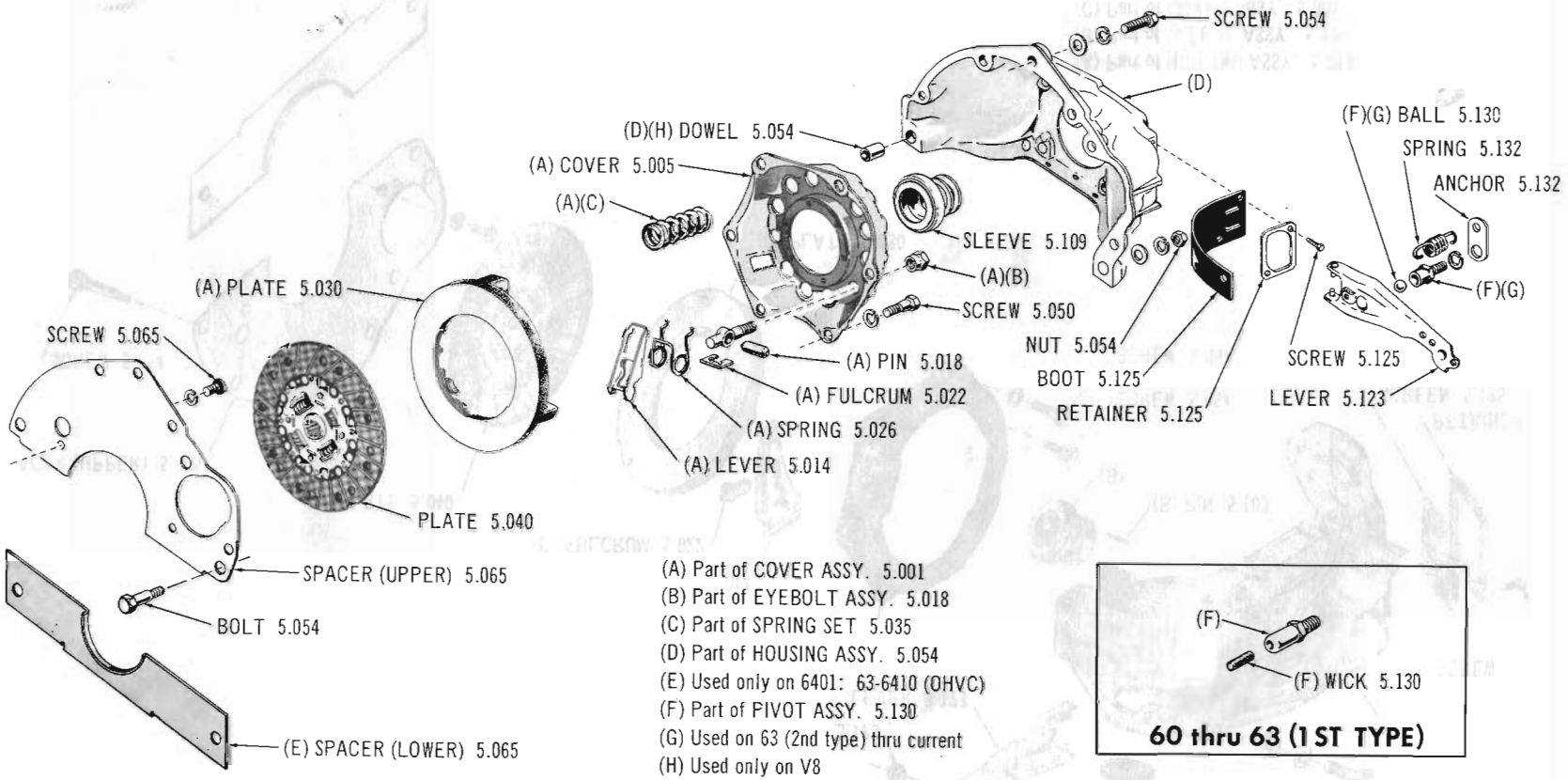

(A) Part of COVER ASSY. 5.001
(B) Part of EYEBOLT ASSY. 5.018
(C) Part of SPRING SET 5.035
(D) Part of HOUSING ASSY. 5.054
(E) Used only on 6401: 63-6410 (OHVC)
(F) Part of PIVOT ASSY. 5.130
(G) Used on 63 (2nd type) thru current
(H) Used only on V8

60 thru 63 (1 ST TYPE)

Copyright 1963 American Motors Corp.

Printed in U.S.A.

CLUTCH COVER AND HOUSING 62 thru 64 01-10 (WES-WST)(WES-WOD)

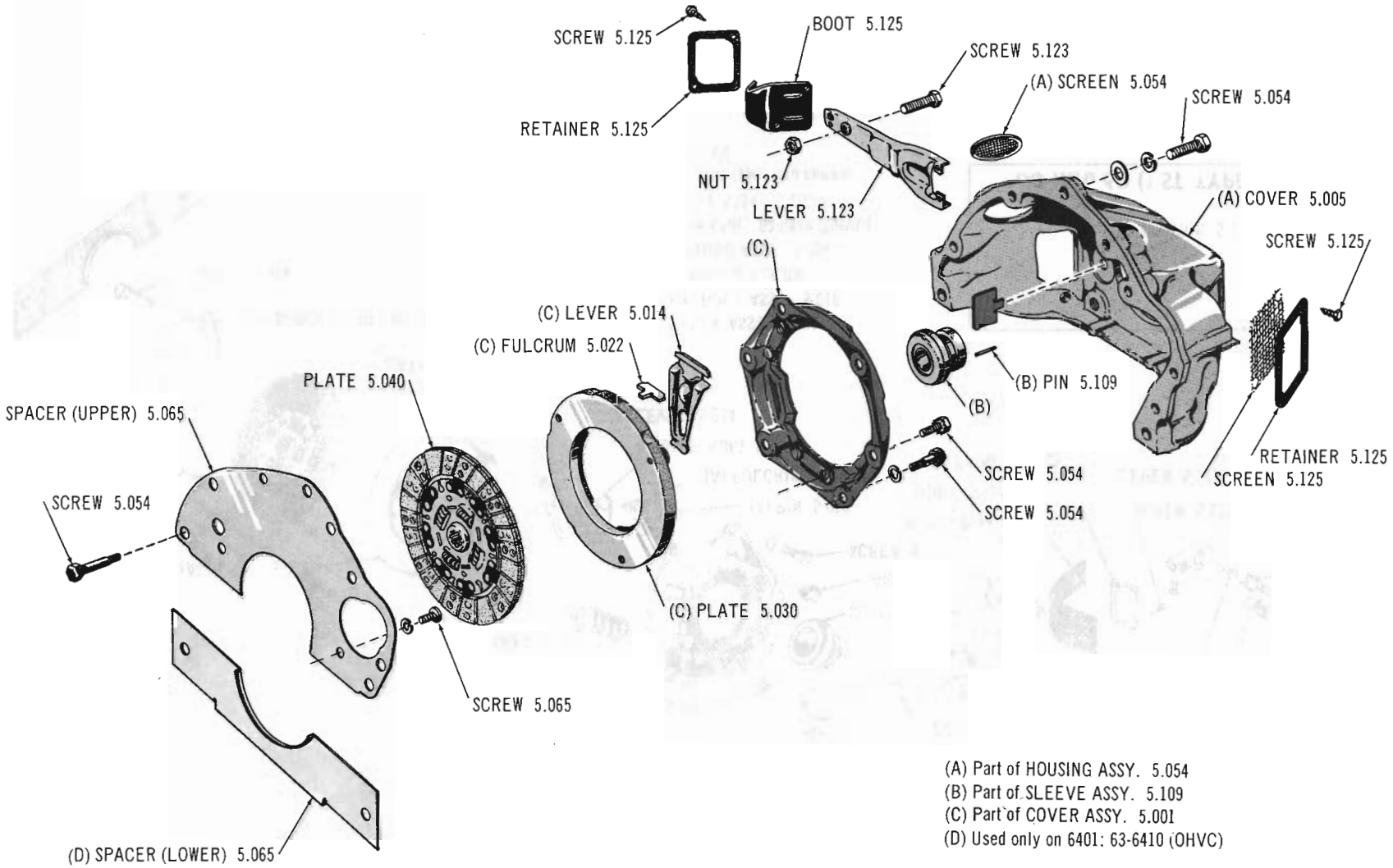

(A) Part of HOUSING ASSY. 5.054
(B) Part of SLEEVE ASSY. 5.109
(C) Part of COVER ASSY. 5.001
(D) Used only on 6401: 63-6410 (OHVC)

1889

Copyright 1963 American Motors Corp.

Printed in U.S.A.

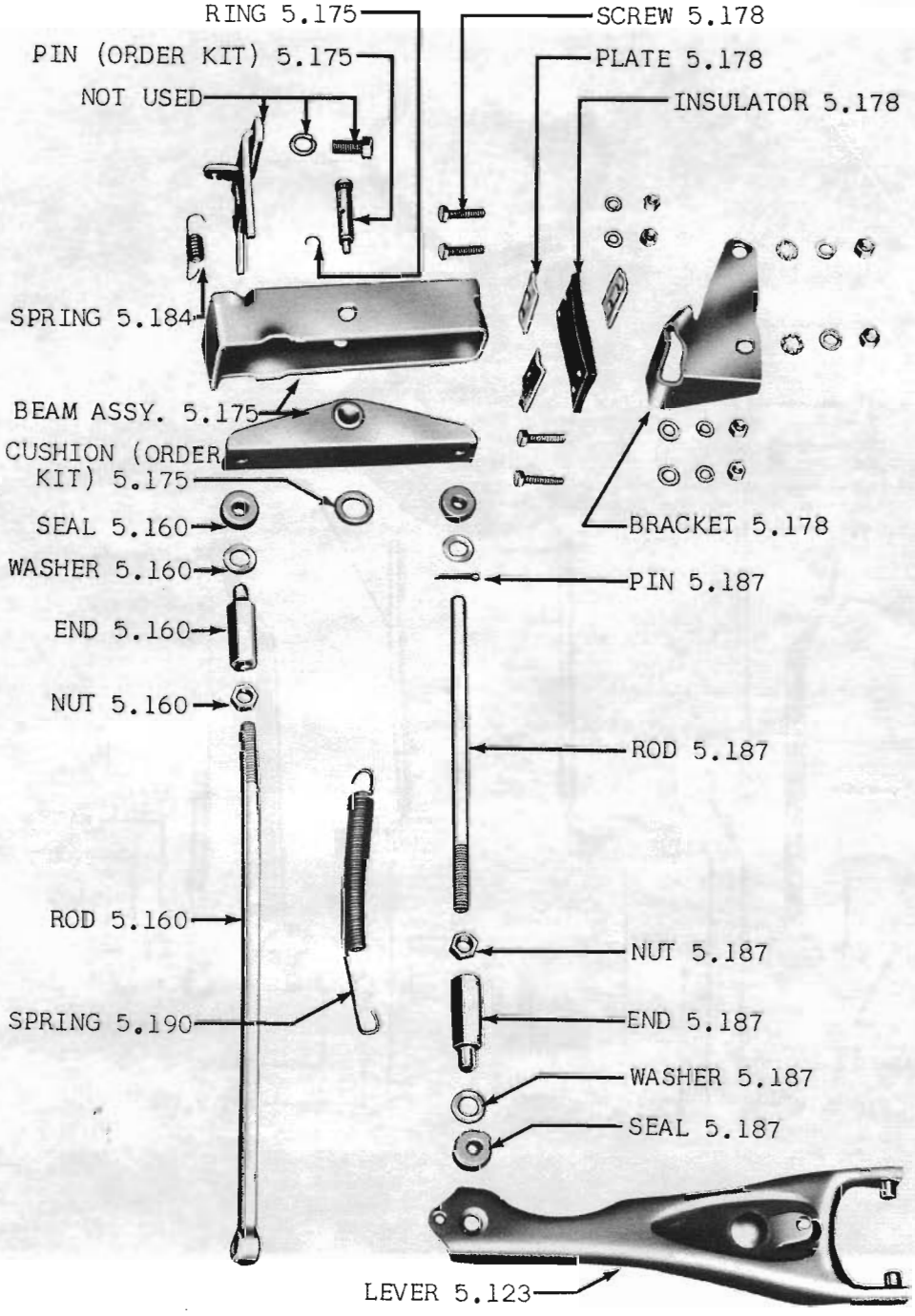

CLUTCH LINKAGE 60 01 (WST)(WOD)

Copyright 1963 American Motors Corp.

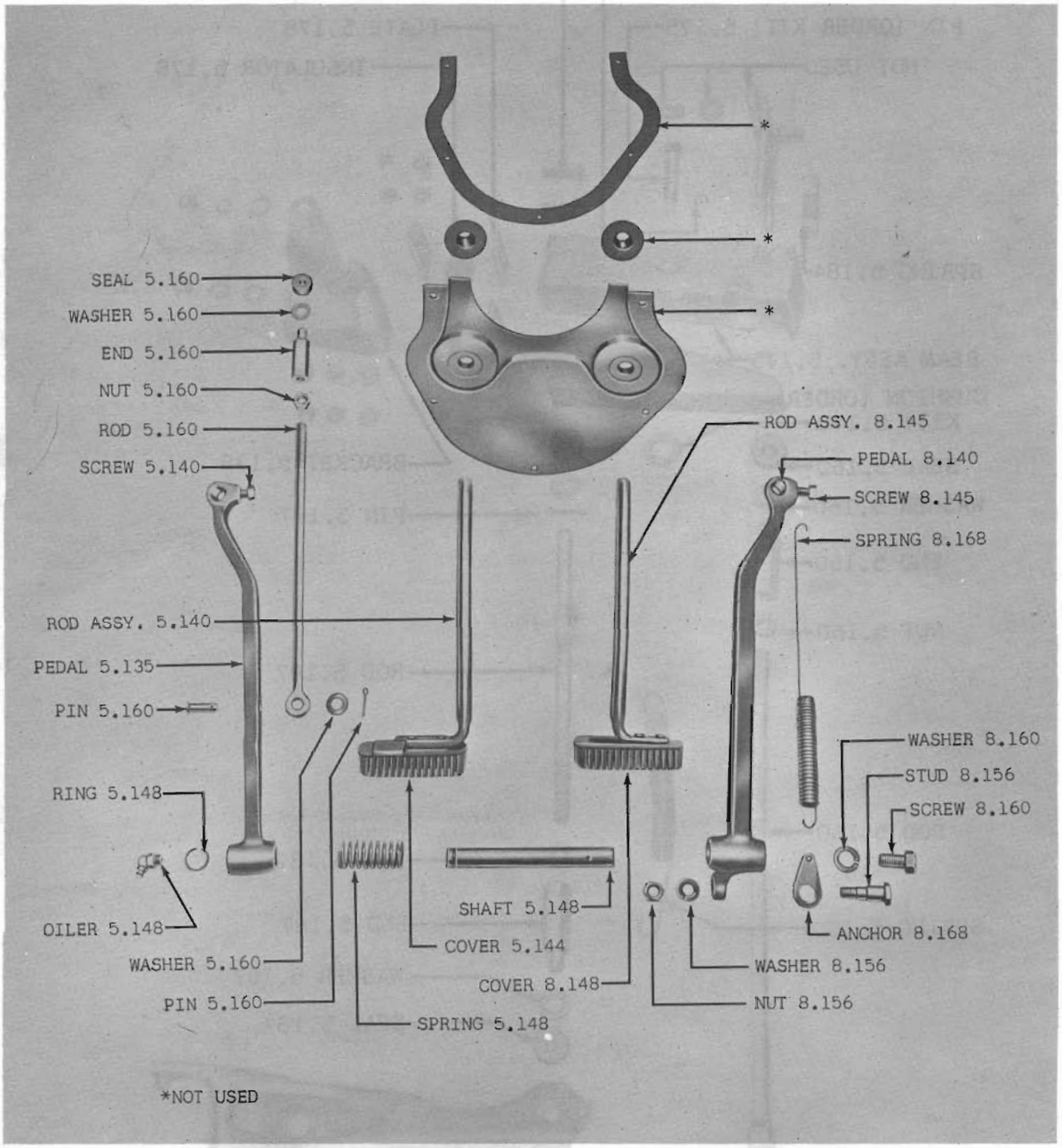

CLUTCH AND BRAKE PEDAL LINKAGE 60 01 (WST)(WOD)

Copyright 1963 American Motors Corp.

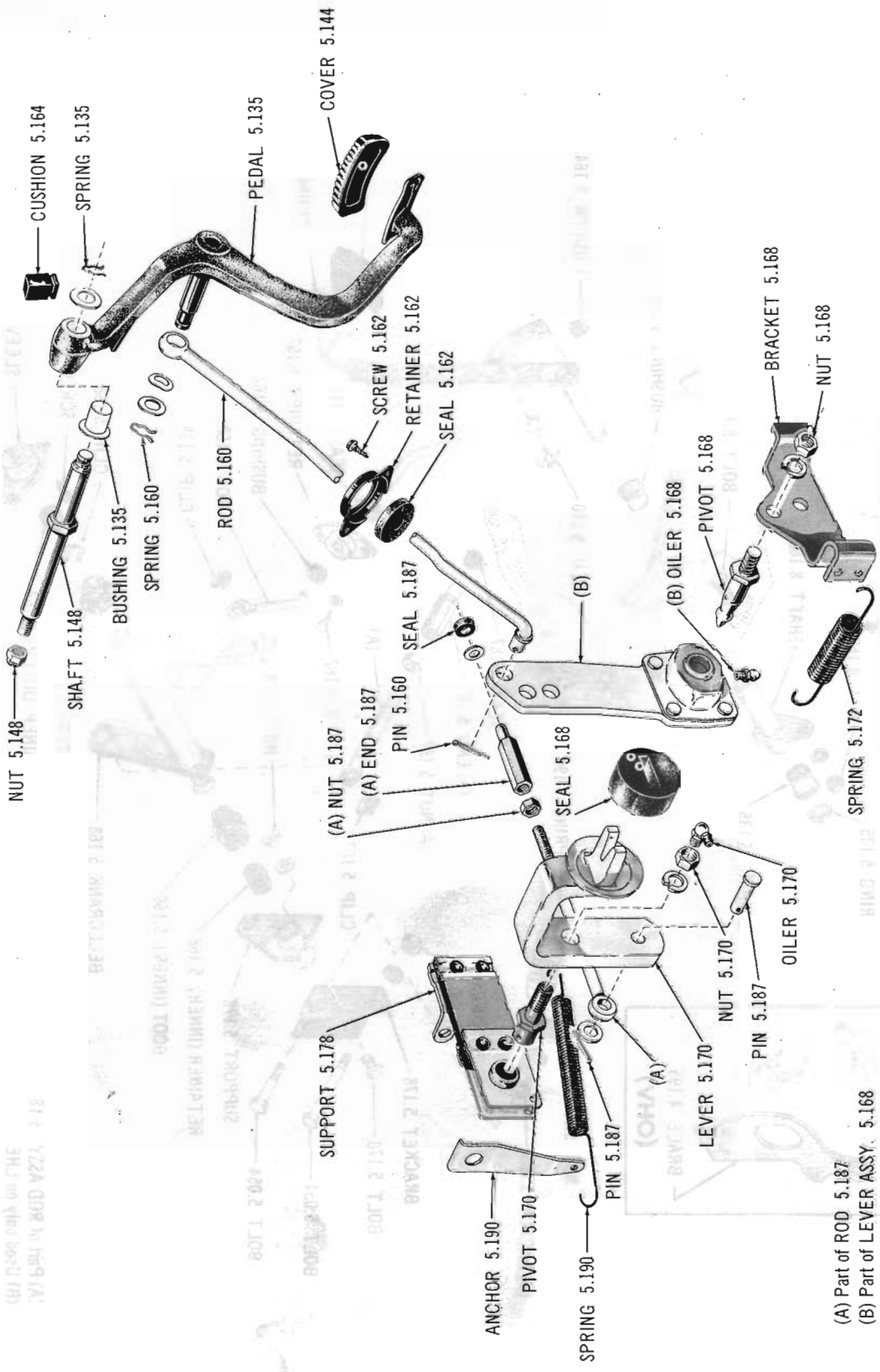

CLUTCH LINKAGE 61 thru 63 ALL MODELS (LHD-LES-WST)(LHD-LES-WOD)

Copyright 1963 American Motors Corp.

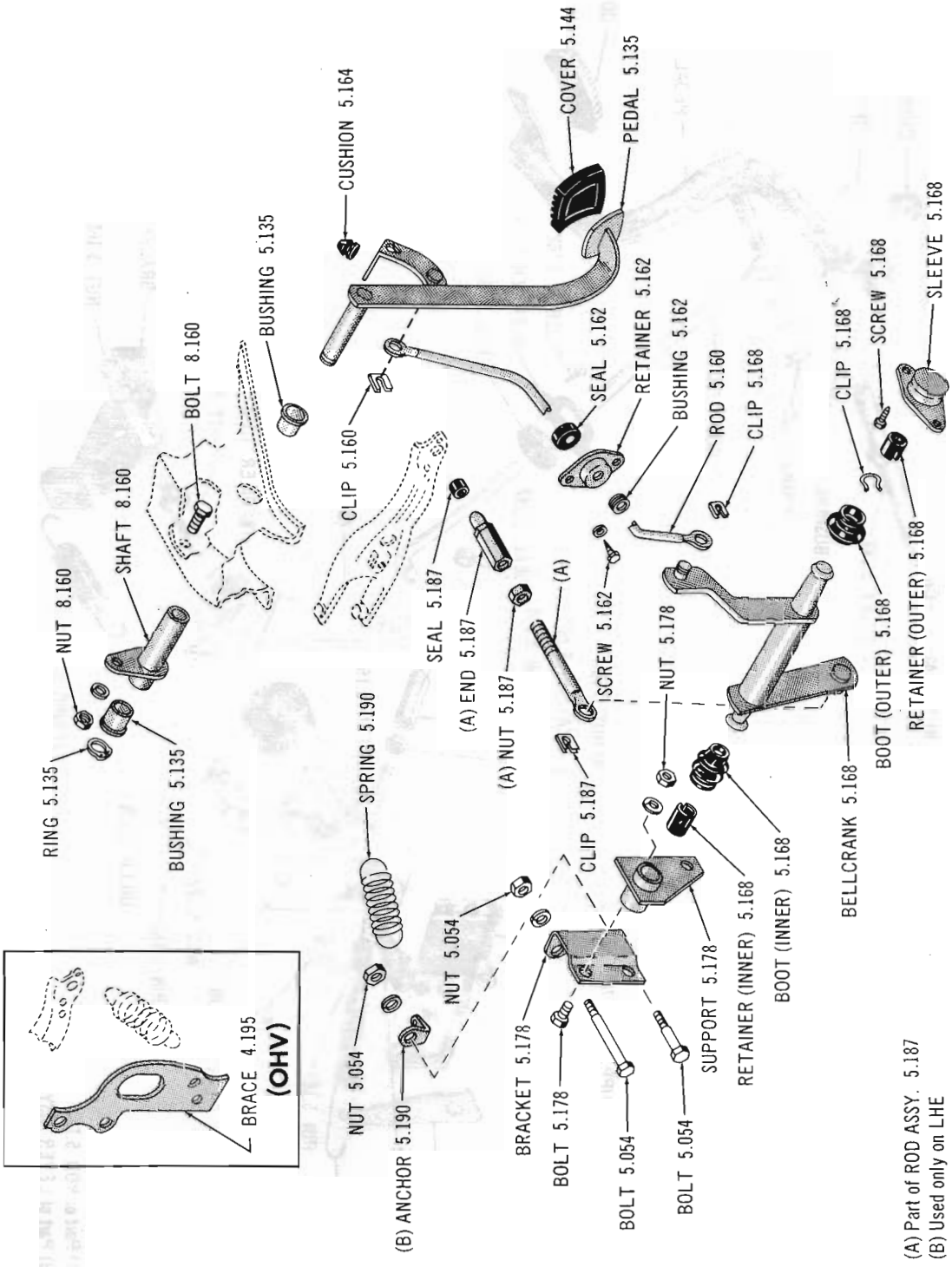

(A) Part of ROD ASSY. 5.187
(B) Used only on LHE

CLUTCH PEDAL AND LINKAGE 64-65 01 (LHD-WST)(LHD-WOD)

Copyright 1963 American Motors Corp.

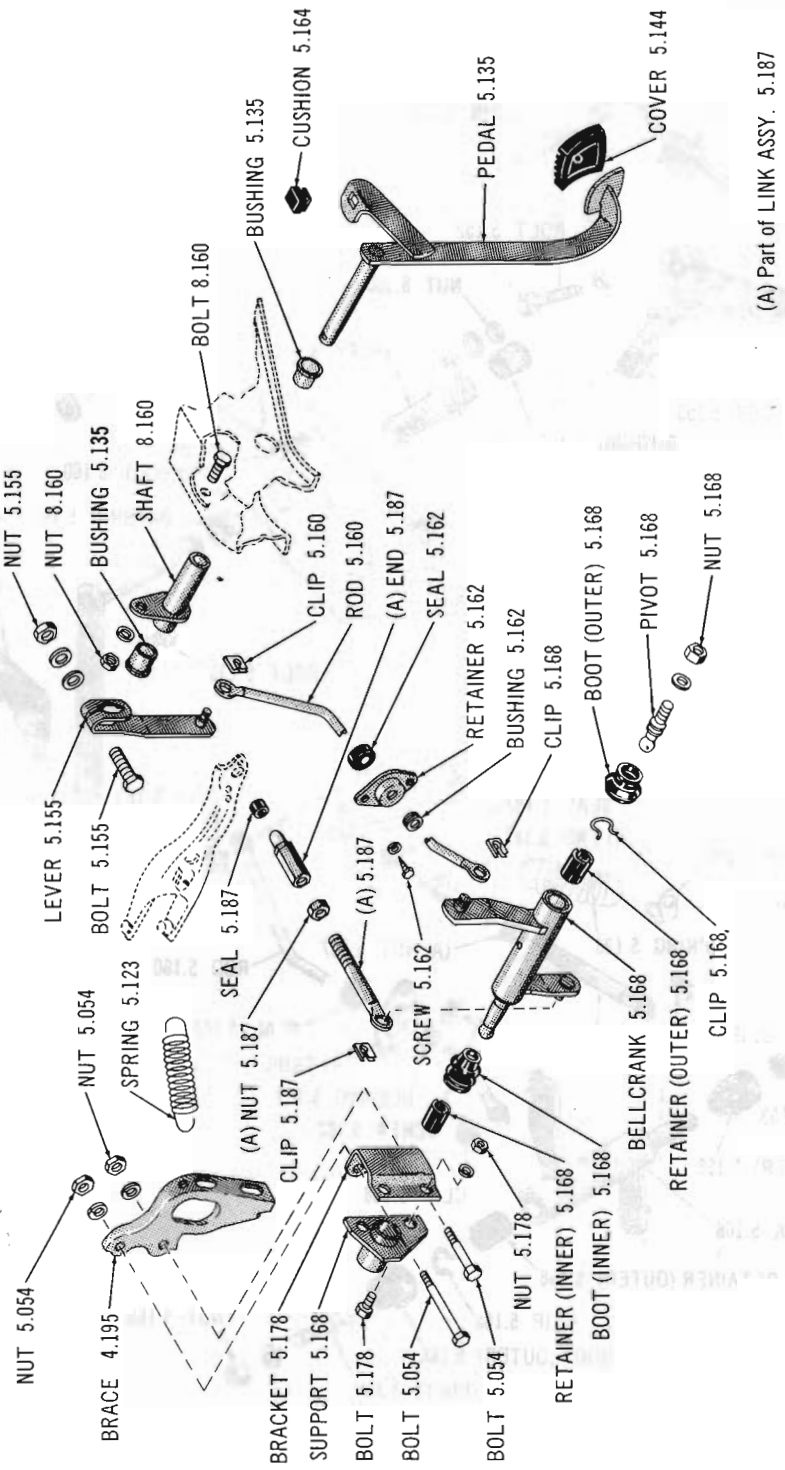

CLUTCH PEDAL AND LINKAGE 64-65 10 (LHD-196)

Copyright 1963 American Motors Corp.

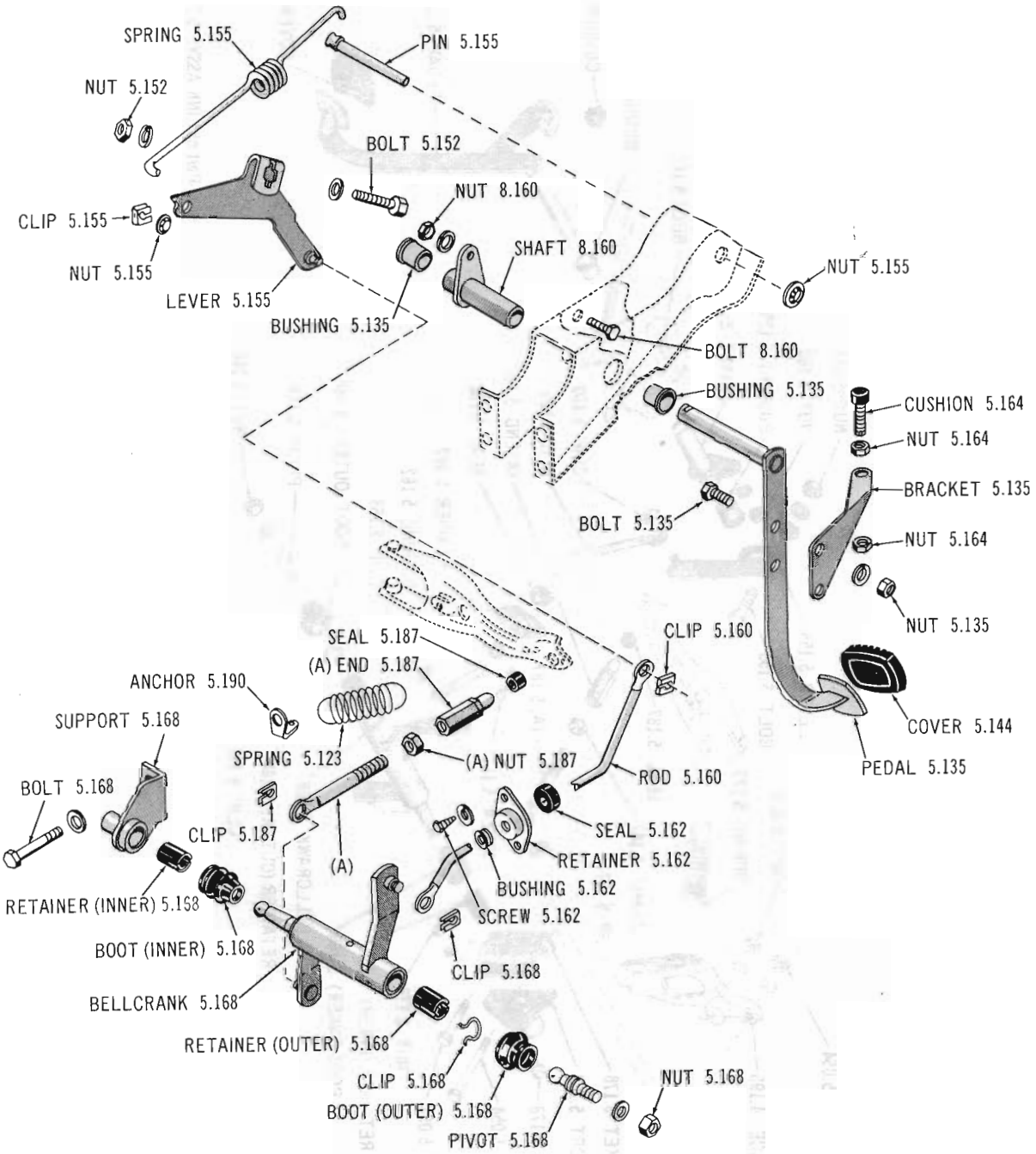

(A) Part of LINK ASSY. 5.187

CLUTCH PEDAL AND LINKAGE 64-65 10 (OHV-232-WST)(OHV-232-WOD): 64-65 10-80 (V8-WST)(V8-WOD)

Copyright 1963 American Motors Corp.

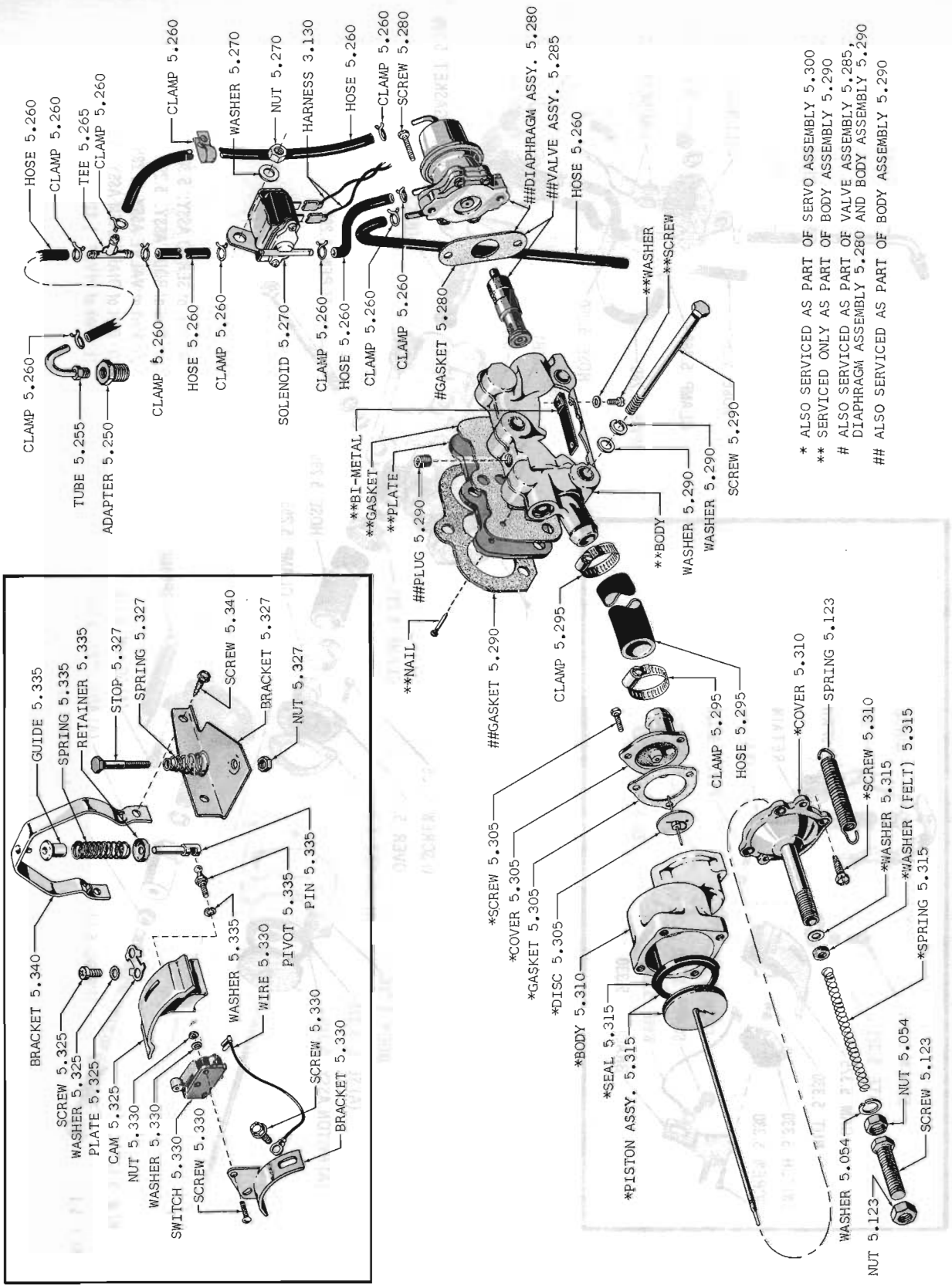

E-STICK VALVE, SERVO AND SWITCH 62 01 (WST)(WOD)

Copyright 1963 American Motors Corp.

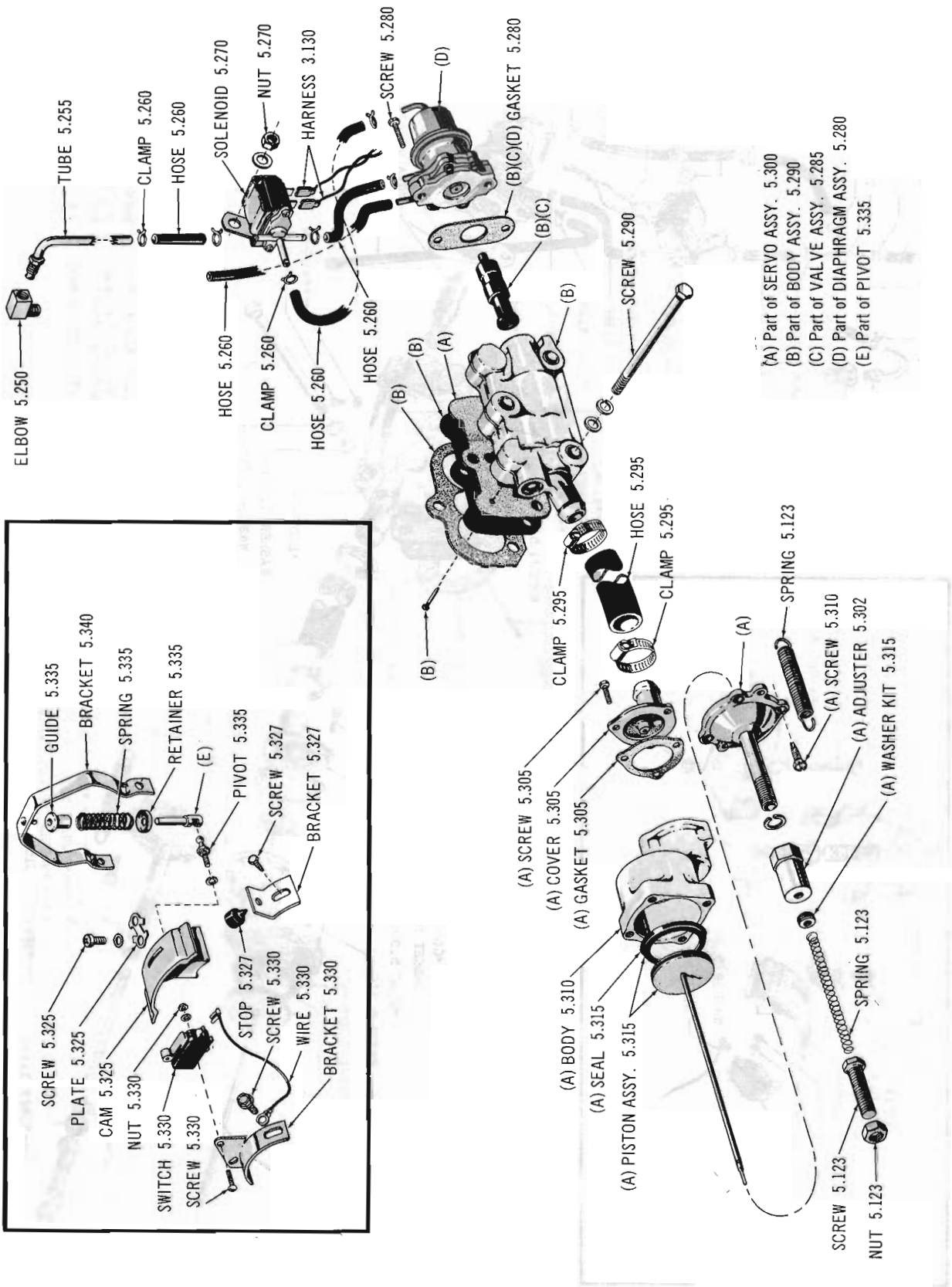

E-STICK VALVE, SERVO AND SWITCH 63 01-10 (1st type)(WST)(WOD)

Copyright 1963 American Motors Corp.

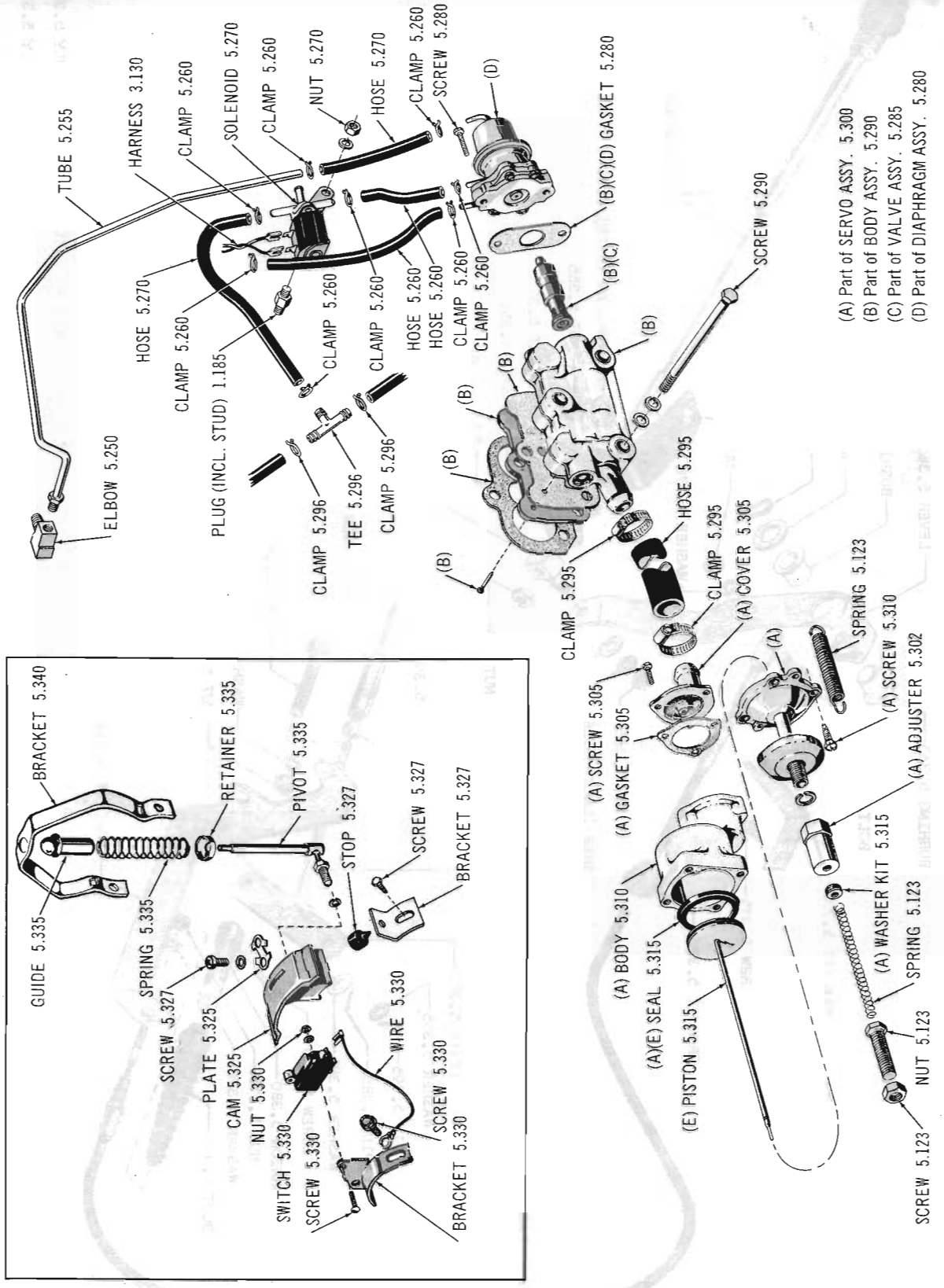

E-STICK VALVE, SERVO AND SWITCH 63 01-10 (2nd Type)(WST)(WOD): 64 01-10 (WST)(WOD)

Copyright 1963 American Motors Corp.

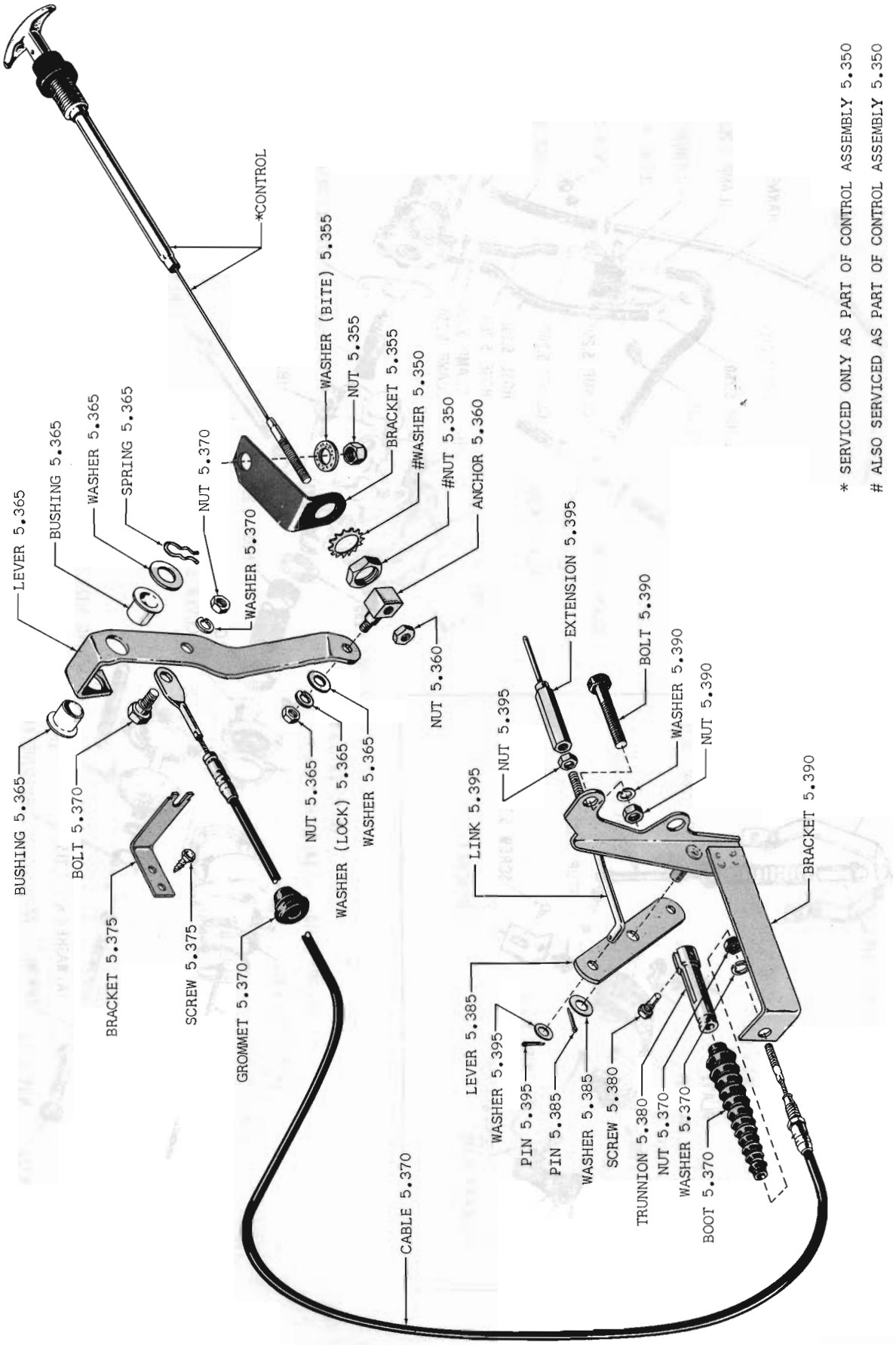

* SERVICED ONLY AS PART OF CONTROL ASSEMBLY 5.350

\# ALSO SERVICED AS PART OF CONTROL ASSEMBLY 5.350

E-STICK TOW START 62 01 (WST)(WOD)

Copyright 1963 American Motors Corp.

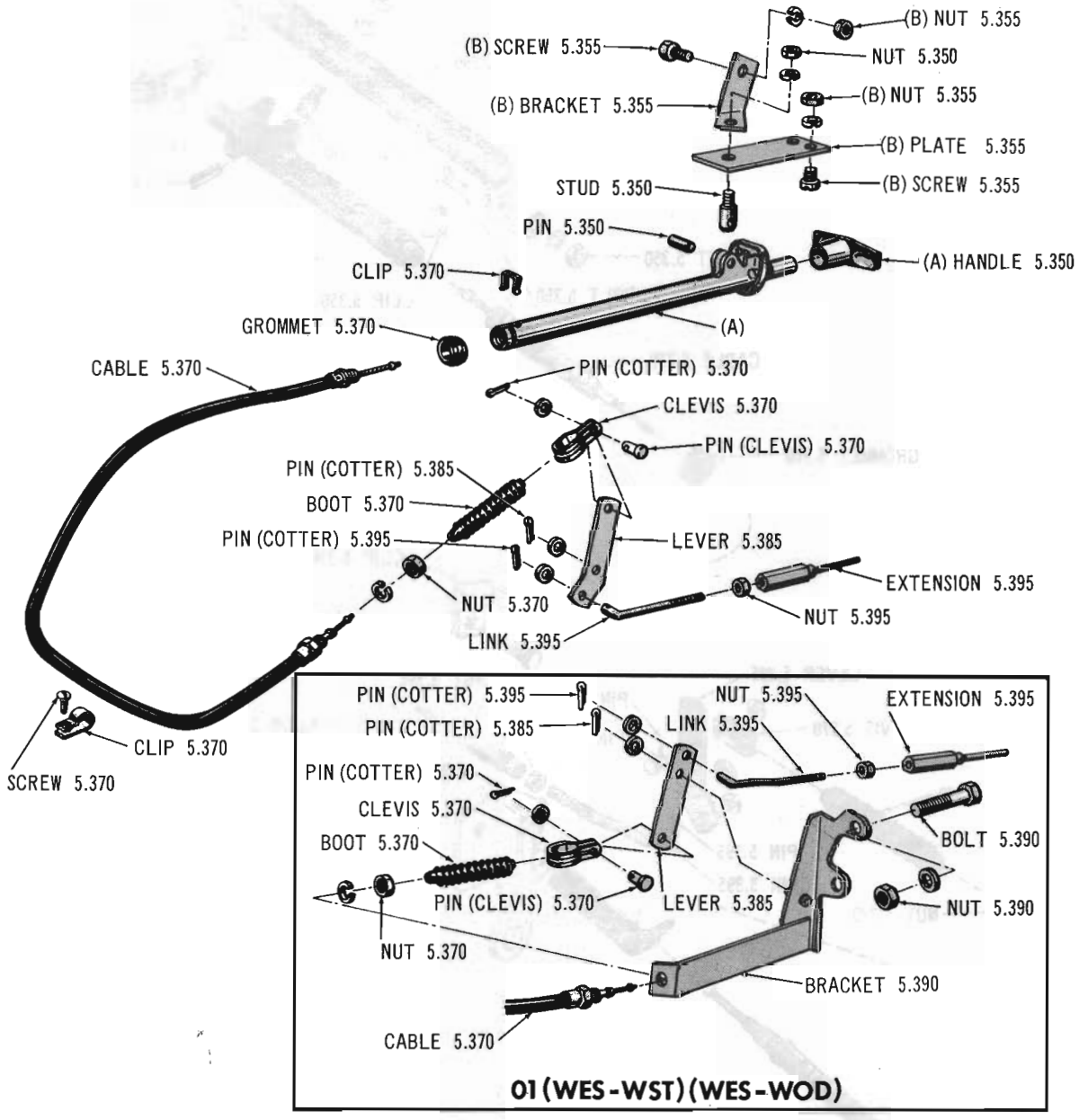

(A) Part of HANDLE ASSY. 5.350
(B) Used only on 10 (WES-WST)(WES-WOD)

E-STICK TOW START 63 01 (WST)(WOD): 63-64 10 (WST)(WOD)

Copyright 1963 American Motors Corp.

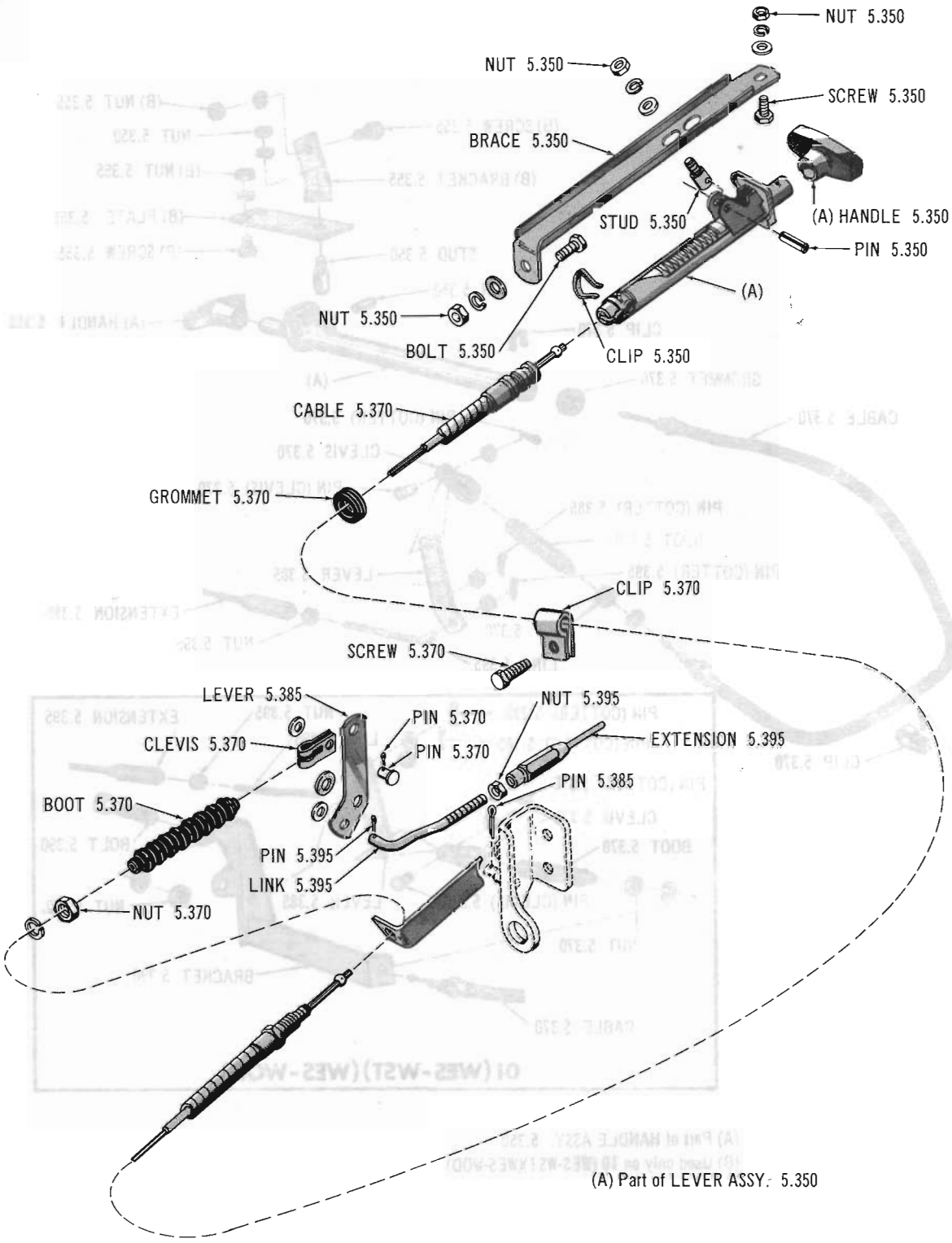

(A) Part of LEVER ASSY. 5.350

E-STICK TOW START 64 01 (WST)(WOD)

Copyright 1963 American Motors Corp.

GROUP NO. — DESCRIPTION — YEAR and MODEL	PRIMARY GROUP NO.	PER CAR	PART NO.	CODE
5.001 COVER ASSEMBLY, Clutch				
60-61 20 (Except Heavy Duty)(Vender #1436)	.....	1	314 9824	
60 Thru 62 01 (Except Heavy Duty-LHE-LES)(Vendor #1627 & 1531)	.....	1	315 8448	
63 01 (LHE-LES)(Vendor #1578)	.....	1	316 9258	
64-65 01 (Except Heavy Duty-LHE-LES)(Vendor #1650)	.....	1	317 1776	
60 Thru 62 01-10 (Except Heavy Duty-OHV-LES)(Vendor #1530 & 1626)	.....	1	315 8338	
63 01-10 (Except Heavy Duty-OHV-LES)(Vendor #1619)	.....	1	316 9257	
63 Thru 65 10 (V8-287-WST)(V8-287-WOD): 65 80 (V8-287-WST)(V8-287-WOD) (Vendor #1638)	.....	1	317 0724	
65 10-80 (V8-287-W4ST)(Vendor #1725)	.....	1	318 2657	
62 Thru 64 01-10 (WES)(Vendor #1600)	.....	1	316 3652	
64-65 01 (OHV-LES): 64 10 (Except Heavy Duty-Six-LES): 65 10 (Except Heavy Duty-Six-199)(Vendor #1651)	.....	1	317 1967	
60 Thru 63 80 (Except Heavy Duty)(Vendor #1442 & 1623)	.....	1	315 0450	
64-65 10-80 (V8-327-WST)(V8-327-WOD)(Vendor #1664)	.....	1	317 3175	
65 10-80 (V8-327-W4ST)(Vendor #1726)	.....	1	318 2658	
64-65 10 (Except Heavy Duty-Six-232): 65 80 (Except Heavy Duty-Six-232) (Vendor #1671)	.....	1	317 3322	
60 Thru 62 01-10 (Heavy Duty-OHV): 60-61 01 (Heavy Duty-LHE) (Vendor #1416 & 1622) ***(Replaces 313 9078)***	.....	1	314 9162	
63 01-10 (Heavy Duty-OHV)(Vendor #1621)	.....	1	316 9259	
64-65 01 (Heavy Duty-LHE)(Vendor #1651)	.....	1	317 1967	
64-65 01-10 (Heavy Duty-OHV)(Vendor #1654)	.....	1	317 1968	
60 Thru 64 10 (Heavy Duty-WST-Note 5.001-1)(Vendor #1494 & 1625)	.....	1	315 5760	
64-65 10-80 (Heavy Duty-Six-232)(Vendor #1676)	.....	1	317 6685	
65 10 (Heavy Duty-Six-199-Note 5.001-1)(Vendor #1671)	.....	1	317 3322	
64 10 (Heavy Duty-V8)(Vendor #1442 & 1623)	.....	1	315 0450	
65 10 (Heavy Duty-V8)(Vendor #1664)	.....	1	317 3175	
60-61 20 (Heavy Duty)(Vendor #1407)	.....	1	314 7551	
60 Thru 63 80 (Heavy Duty)(Vendor #1449 & 1624)	.....	1	315 1514	
64-65 80 (Heavy Duty)(Vendor #1666)	.....	1	317 3189	
65 10 (Renault-Six-199)(Vendor #1436)	.....	1	314 9824	

CLUTCH SPRING COLOR CODE

27 897 PINK	311 8826 BLACK	311 9905 WHITE	320 4990 YELLOW
310 4343 LIGHT BLUE	311 8827 DARK BLUE	320 0029 NONE	320 7053 LAVENDER
311 8825 RED OR NONE	311 9644 LIGHT GREEN		

CLUTCH COVER ASSEMBLY COMPONENTS

COVER ASSEMBLY *VENDOR NUMBER*		313 9078 *1360*	314 7551 *1407*	314 9162 *1416 or 1622*	314 9824 *1436*	315 0450 *1442 or 1623*
COVER (Only)	5.005	(1) 311 6885	(1) 93 488	(1) 320 2081	(1) 320 0025	(1) 311 8782
LEVER	5.014	(3) 311 6888	(3) 93 489	(3) 320 2082	(3) 93 489	(3) 93 489
EYEBOLT and NUT	5.018	(3) 311 6887	(3) 26 810	(3) 310 7686	(3) 26 810	(3) 311 8939
PIN	5.018	(3) 45 473	(3) 45 473	(3) 310 7731	(3) 45 473	(3) 45 473
PAD, Grease	5.018	.....	.....	(3) 320 4419	.....	(3) 320 4419
FULCRUM	5.022	(3) 46 024	(3) 46 024	(3) 310 7732	(3) 46 024	(3) 46 024
SPRING, Anti-Rattle	5.026	(3) 311 6886	(3) 46 242	(3) 310 7734	(3) 46 242	(3) 46 242
PLATE, Pressure	5.030	(1) 311 6889	(1) 93 491	(1) 320 2083	(1) 93 491	(1) 311 9156
SPRING	5.035	.....	(3) 311 9644	.....	(3) 311 9644	(6) 320 0029
SPRING	5.035	(9) 320 7053	(6) 311 8827	(6) 311 9905	(6) 310 4343	(6) 311 9644
PLATE, Driven	5.040	(1) 314 5221	(1) 314 7552	(1) 314 7133	(1) 312 5822	(1) 315 7988
PLATE, Driven	.....	.....	.....	.....	***(1) 317 3128 Renault***	.....

NOTE 5.001-1: **60 Thru 65 10 (WST) Cars having a production installed Heavy Duty Package may be identified by the following:**
The Transmission Case Cover is mounted to the Transmission with six (6) bolts instead of four (4).

Copyright 1963 American Motors Corp.

CLUTCH COVER ASSEMBLY COMPONENTS (Cont.)

COVER ASSEMBLY *VENDOR NUMBER*		315 1514 *1449 or 1624*	315 5760 *1494 or 1625*	315 8338 *1530 or 1626*	315 8448 *1531 or 1627*	316 3652 *1600*
COVER (Only)	5.005	(1) 311 8782	(1) 307 810	(1) 320 2081	(1) 320 2081	(1) 320 3441
LEVER	5.014	(3) 93 489	(3) 27 989	(3) 320 2082	(3) 320 2082	(3) 320 3442
EYEBOLT and NUT	5.018	(3) 311 8939	(3) 310 7686	(3) 310 7686	(3) 310 7686	.....
PIN	5.018	(3) 45 473	(3) 45 473	(3) 310 7731	(3) 310 7731	.....
PAD, Grease	5.018	(3) 320 4419	(3) 320 4419	(3) 320 4419	(3) 320 4419	.....
FULCRUM	5.022	(3) 46 024	(3) 46 024	(3) 310 7732	(3) 310 7732	(3) 320 3447
SPRING, Anti-Rattle	5.026	(3) 46 242	(3) 46 242	(3) 310 7734	(3) 310 7734	.....
PLATE, Pressure	5.030	(1) 311 9156	(1) 310 4831	(1) 320 2083	(1) 310 7728	(1) 320 3443
SPRING	5.035	(9) 311 9644	(6) 311 9905	(6) 311 8826	(6) 311 8825	.....
SPRING	5.035	(3) 311 8827	.....	.....	.....	.....
PLATE, Driven	5.040	(1) 315 7988	(1) 315 5695	(1) 314 7133	(1) 314 2241	(1) 317 2869

COVER ASSEMBLY *VENDOR NUMBER*		316 9257 *1619*	316 9258 *1578*	316 9259 *1621*	317 0724 *1638*	317 1776 *1650*
COVER (Only)	5.005	(1) 320 2081	(1) 320 2081	(1) 320 2081	(1) 320 0025	(1) 307 810
LEVER	5.014	(3) 320 2082	(3) 320 2082	(3) 320 2082	(3) 93 489	(3) 27 989
EYEBOLT and NUT	5.018	(3) 310 7686	(3) 310 7686	(3) 310 7686	(3) 311 8939	(3) 320 4989
PIN	5.018	(3) 310 7731	(3) 310 7731	(3) 310 7731	(3) 45 473	(3) 45 473
PAD, Grease	5.018	(3) 320 4419	(3) 320 4419	(3) 320 4419	(3) 320 4419	(3) 320 4419
FULCRUM	5.022	(3) 310 7732	(3) 310 7732	(3) 310 7732	(3) 46 024	(3) 46 024
SPRING, Anti-Rattle	5.026	(3) 310 7734	(3) 310 7734	(3) 310 7734	(3) 46 242	(3) 46 242
PLATE, Pressure	5.030	(1) 320 2083	(1) 320 2083	(1) 320 2083	(1) 93 491	(1) 320 4991
SPRING	5.035	(6) 311 8826	(4) 311 8825	(6) 311 9905	(9) 27 897	(6) 311 8825
SPRING	5.035	.....	(2) 311 8826	.....	.....	.....
PLATE, Driven	5.040	(1) 316 9254	(1) 316 9256	(1) 316 9254	(1) 317 0723	(1) 317 7211

COVER ASSEMBLY *VENDOR NUMBER*		317 1967 *1651*	317 1968 *1654*	317 3175 *1664*	317 3189 *1666*	317 3322 *1671*
COVER (Only)	5.005	(1) 307 810	(1) 307 810	(1) 311 8782	(1) 311 8782	(1) 307 810
LEVER	5.014	(3) 27 989	(3) 27 989	(3) 320 5478	(3) 320 5478	(3) 27 989
EYEBOLT and NUT	5.018	(3) 320 4989	(3) 320 4989	(3) 311 8939	(3) 311 8939	(3) 310 7686
PIN	5.018	(3) 45 473	(3) 45 473	(3) 45 473	(3) 45 473	(3) 45 473
PAD, Grease	5.018	(3) 320 4419	(3) 320 4419	(3) 320 4419	(3) 320 4419	(3) 320 4419
FULCRUM	5.022	(3) 46 024	(3) 46 024	(3) 46 024	(3) 46 024	(3) 46 024
SPRING, Anti-Rattle	5.026	(3) 46 242	(3) 46 242	(3) 46 242	(3) 46 242	(3) 46 242
PLATE, Pressure	5.030	(1) 320 4991	(1) 320 4991	(1) 311 9156	(1) 311 9156	(1) 320 4991
SPRING	5.035	(6) 320 4990	(6) 320 4990	(6) 310 4343	(9) 311 8827	(6) 311 8825
SPRING	5.035	(3) 320 7053	(3) 311 8825	(6) 311 9644	(3) 320 0029	(3) 320 7053 #
PLATE, Driven	5.040	(1) 317 7211	(1) 317 7211	(1) 317 3218	(1) 317 3218	(1) 317 6717

COVER ASSEMBLY *VENDOR NUMBER*		317 6685 *1676*	318 2657 *1725*	318 2658 *1726*
COVER (Only)	5.005	(1) 307 810	(1) 320 7080	(1) 320 7085
LEVER	5.014	(3) 27 989	(3) 320 7082	(3) 320 5478
EYEBOLT and NUT	5.018	(3) 310 7686	.....	.....
PIN	5.018	(3) 45 473	(3) 45 473	(3) 45 473
PAD, Grease	5.018	(3) 320 4419	(3) 320 4419	(3) 320 4419
FULCRUM	5.022	(3) 46 024	(3) 320 7083	(3) 320 7083
SPRING, Anti-Rattle	5.026	(3) 46 242	(3) 46 242	(3) 46 242
PLATE, Pressure	5.030	(1) 320 4991	(1) 320 7081	(1) 320 7086
ROLLER ASSEMBLY	5.030	.....	(3) 320 7084	(3) 320 7084
SPRING	5.035	(6) 320 4990	(6) 311 8826	(6) 311 8825
SPRING	5.035	(3) 311 8825	(3) 320 4990	(3) 311 8826
PLATE, Driven	5.040	(1) 317 6717	(1) 318 2528	(1) 318 1548

Copyright 1963 American Motors Corp.

GROUP NO. — DESCRIPTION — YEAR and MODEL	PRIMARY GROUP NO.	PER CAR	PART NO.	CODE
5.050 SCREW, Clutch Cover To Flywheel				
60 Thru 64 01-10: 65 01: 65 10-80 (Six)	.....	6	311 0965	
60 Thru 64 20-80: 65 10-80 (V8)	.....	6	40 574	
WASHER, Clutch Cover To Flywheel Screw				
60 Thru 64 01-10: 65 01: 65 10-80 (Six)	17.820	6	G103320	NA
60 Thru 64 20-80: 65 10-80 (V8)	17.820	6	G103321	NA
5.054 HOUSING				
60 Thru 63 01 (LHD-Six-LES): 60 Thru 62 10 (LHD-LES)	.....	1	320 5827	#
63 10 (LHD-SIX-LES)	.....	1	316 6501	
60 Thru 62 10 (WST-Heavy Duty-Note 5.001-1)	.....	1	315 5822	
63 10 (WST-Heavy Duty-Note 5.001)	.....	1	316 7435	
64 10 (Six-Heavy Duty) ***(Use 320 5828)***	.....	1	317 1782	
61-62 01 (RHD): 63 01 (RHD)	.....	1	314 5410	
64 01-10 (LHD-LES): 65 01 (LHE): 65 01 (OHV-196-LHD)	.....	1	317 1965	#
65 01 (RHD-OHV-199)	.....	1	317 4415	#
65 10 (OHV-199-Heavy Duty-Note 5.001-1): 64 10 (232): 65 10 (LHD-OHV-232): 65 80 (OHV-232)	.....	1	317 2743	
65 01 (OHV-199): 65 10 (OHV-199)	.....	1	317 3495	#
65 10 (RHD-OHV-232)	.....	1	317 4414	
HOUSING ASSEMBLY (Incl. Outlet Screen)				
62-63 01 (WES)	.....	1	316 3997	
63 10 (WES): ***63 10 (RHD)***	.....	1	316 6914	
64 01-10 (WES): ***64 01-10 (RHD): 65 01 (RHD-OHV)***	.....	1	317 2067	
HOUSING ASSEMBLY (Incl. 2 Dowels)				
63 10 (V8-WCGS): 64 10 (V8): 65 10-80 (V8-287)	.....	1	317 0988	
60-61 20	.....	1	315 7917	
60 Thru 62 80 ***(Use 320 6126)***	.....	1	315 7918	
64-65 10 (V8-Heavy Duty): 63 Thru 65 80 (OHV-327)	.....	1	316 6482	

Copyright 1963 American Motors Corp.

GROUP NO. — DESCRIPTION — YEAR and MODEL	PRIMARY GROUP NO.	PER CAR	PART NO.	CODE
ATTACHING PARTS				
Housing To Engine				
BOLT, Dowel ..... 60 01 (LHD-OHV): 61 01: 62-63 01 (OHV): 63 01 (LHD-WES): 60-61 10 (LHD-OHV): 62 10 (LHD-OHVC)	.....	1	316 7417	
BOLT, Dowel ..... 62-63 01 (LHD-LES-LHE): 64-65 01	.....	2	316 7417	
BOLT, Dowel ..... 60 01-10 (LHD-OHV): 61 01-10(LHD): 62-63 01 (OHV)(WES-LHE): 62 10 (LHD)	.....	1	316 7417	
BOLT, Dowel ..... 60 01 (LHE): ***60 Thru 63 01 (RHD): 60 Thru 62 10 (RHD)***	.....	2	316 7417	
BOLT, Dowel ..... 61 10 (LHD-OHVA): 62 10 (OHVA).....	.....	1	316 0307	
BOLT, Dowel ..... 63-64 10 (OHVA)(LHD): ***64 01 (RHD): 65 01 (RHD-OHV)***	.....	2	316 7418	
BOLT, Dowel ..... 63-64 10 (OHVC)(LES)(WES).....	.....	2	316 7417	
BOLT, Hexagon ..... 60 Thru 63 01: 60 Thru 64 10 (OHVC): 65 01-10-80 (Six).....	17.038	3	G179841	NA
BOLT, Hexagon ..... 61 Thru 64 10 (OHVA)	17.038	3	G180125	NA
BOLT, Hexagon ..... 64 01 (WES): 63-64 10 (WES): 63 10 (OHVC).....	17.038	2	G181377	NA
BOLT, Hexagon ..... ***63-64 10 (RHD)***	17.038	2	G180380	NA
BOLT, Hexagon (Left).. 63 10 (LHD).....	17.038	1	G181380	NA
BOLT, Hexagon (Left).. 63 10 (LHD-OHVA).....	17.038	1	G181380	NA
BOLT, Hexagon (Right). 64-65 01 (LES): 63-64 10	17.038	1	G181377	NA
BOLT, Hexagon (Right). 64 01 (LES): 65 01: 63-64 10 (OHVC-LES).....	17.038	1	G181370	NA
BOLT, Hexagon (Right). 60-61 20: ***65 10 (RHD-OHV-232):*** 60 Thru 65 10-80 (V8)	17.038	6	G179868	NA
BOLT, Hexagon (Left).. 65 10 (Six)	17.038	1	G179868	NA
BOLT, Hexagon (Right). 60-61 20: 60 Thru 64 10-80 (V8).....	17.038	6	G179868	NA
BOLT, Hexagon (Right). 65 10 (Six)	17.038	1	G179866	NA
WASHER, Plain..... ***62 10 (RHD):*** 63 01 (WES) .....***(Replaces 800 0190)***	17.814	1	400 1129	
WASHER, Plain..... 60 Thru 64 01-10.....***(Replaces 800 0299)***	17.814	6	400 1116	
WASHER, Plain..... 60 Thru 64 01: 60-61 10: 62 Thru 64 10 (LHD)(LES) ....***(Replaces 800 0190)***	17.814	2	400 1129	

Copyright 1963 American Motors Corp.

GROUP NO. — DESCRIPTION — YEAR and MODEL		PRIMARY GROUP NO.	PER CAR	PART NO.	CODE
WASHER, Plain	60-61 20-80 ***(Replaces 800 0299)***	17.814	6	400 1116	
WASHER, Plain	***62 10 (RHD)*** ***(Replaces 800 0181)***	17.814	1	400 1118	
WASHER, Plain	64-65 01: 63-64 10 ***(Replaces 800 0177)***	17.814	1	400 0482	
WASHER, Plain	65 01-10-80 (Six)	17.814	3	400 1101	
WASHER, Plain	65 10-80 (V8)	17.814	6	400 1156	
WASHER, Plain	62 Thru 64 10-80 (V8)	17.814	6	800 0298	NA
WASHER, Lock	60 Thru 65 01-10 (LES-Six): 65 80 (Six)	17.820	2	G103328	NA
WASHER, Lock	60 01-10: 62 Thru 65 01-10: 65 80 (Six)	17.820	3	G103321	NA
WASHER, Lock	63 01 (WES)	17.820	1	G103328	NA
WASHER, Lock	60 20-80: 62 Thru 65 10-20-80 (V8)	17.820	6	G103328	NA
NUT, Hexagon	63 01 (WES)	17.406	1	G103027	NA
NUT, Hexagon	60 Thru 65 01: 60 Thru 64 10	17.406	2	G103027	NA
	Housing To Transmission				
BOLT, Hexagon	60 Thru 65 01: 60 Thru 64 10: 65 10 (V8-287): 60 Thru 65 80 (V8-327)	17.038	4	G179861	NA
BOLT, Hexagon	65 10-80 (Six)	17.038	4	G179860	NA
WASHER, Plain	60-61 01-10-20-80 ***(Replaces 800 0299)***	17.814	1	400 1116	NA
WASHER, Plain	62-63 01-10-80	17.814	1	800 0298	NA
WASHER, Lock	60 01-10-20-80: 62 Thru 65 01-10-80	17.822	4	G114607	NA
SCREEN, Outlet					
62-63 01 (WES)		.....	1	316 3995	
COVER, Clutch Housing					
64 10 (232): 65 01 (OHV-199): 65 10-80 (Six)		.....	1	317 3494	
ATTACHING PARTS					
Cover To Housing					
SCREW, Tapping	64 10 (232): 65 10-80 (Six)	17.670	4	G448423	NA
DOWEL					
60 Thru 65 10-20-80 (V8)		.....	2	314 5091	
5.065 SPACER, Clutch Housing To Engine					
60 Thru 62 01-10 (Six)		.....	1	314 5412	#
60-61 20: 60 Thru 65 10-80 (V8)		.....	1	314 5085	
63-64 10 (OHVA-Six)		.....	1	316 6584	#
65 01 (OHV): 64-65 10 (OHV-232): 65 80 (OHV-232)		.....	1	317 2627	
(Upper) 63-64 01: 63-64 10 (OHVC): 65 01		.....	1	316 9388	
(Lower) 64 01: 63-64 10 (OHVC): 65 01 (OHV-196)(LHE)		.....	1	316 9389	
ATTACHING PARTS					
Spacer To Engine					
SCREW	60 01-10	6.521	2	313 0284	
SCREW	61 Thru 65 01-10 (Six): 65 80 (OHV-232)	.....	2	316 0330	
SCREW	60 Thru 65 10-20-80 (V8)	17.626	2	400 0987	
WASHER	60 Thru 65 01-10: 65 80 (OHV-232)	17.824	2	G138538	NA
5.109 SLEEVE, Clutch Throwout Lever					
60 Thru 63 01-10 (LES): 64 01-10 (LES-Six-Note 5.123-1 Type 1)...(Incl. Bearing)		.....	1	313 0008	#
64 01-10 (SIX-LES-Note 5.123-1 Type 2)...(Incl. Bearing)		.....	1	317 1444	
60 Thru 62 10 (Heavy Duty-Note 5.001-1): 60-61 01: 60 Thru 65 10-20-80 (V8)...(Incl. Bearing)		.....	1	314 0867	#
62-63 01: 63 10 (WES)...(Incl. Bearing And 2 Pins)		.....	1	316 3830	#
64 01-10 (WES)...(Incl. Bearing And 2 Pins)		.....	1	317 2298	

Copyright 1963 American Motors Corp.

GROUP NO. — DESCRIPTION — YEAR and MODEL	PRIMARY GROUP NO.	PER CAR	PART NO.	CODE
65 01: 65 10 (OHV-199)...(Incl. Bearing)	.....	1	317 4641	
64-65 10 (OHV-232): 65 80 (OHV-232): ***65 10 (OHV-199-LHD-Heavy Duty-Note 5. 001-1)***...(Incl. Bearing)	.....	1	317 3462	#
63 10 (WST-Heavy Duty-Note 5. 001-1)...(Incl. Bearing)	.....	1	316 7874	
64 10 (WST-Heavy Duty-Note 5. 001-1)	.....	1	317 2395	
PIN, Clutch Throwout Lever Sleeve				
62 Thru 64 01-10 (WES)	.....	2	316 3735	

5. 123 LEVER, Clutch Throwout

60 01-10: 61 01 (LHD): 61 10: ***62 10 (RHD)***	.....	1	314 4091	
62 01-10 (LHD-LES): 63 01 (LHD-LES): 63 10 (LES): ***61 01 (Heavy Duty-Use only with Cover Assy. 314 9162):*** 64 01-10 (LHD-Six-LES-Note 5. 123-1 Type 1)	.....	1	316 3006	
61 Thru 63 01 (RHD)	.....	1	313 1733	
60 01 (Heavy Duty)	.....	1	314 5331	
60-61 10 (WST-Heavy Duty-Note 5. 001-1): 61 20-80	.....	1	312 5599	
62-63 01 (WES)	.....	1	316 3727	
64 01 (RHD): 62 10 (WST-Heavy Duty-Note 5. 001-1): 64 10 (SIX-Heavy Duty): 64 10 (V8-Note 5. 160-3 Type 1): 62-63 80	.....	1	316 3007	
63 10 (Heavy Duty-Note 5. 001-1): 64 10 (SIX-Heavy Duty-Note 5. 001-1)	.....	1	316 9398	
64 01 (WES): 63-64 10 (WES)	.....	1	316 7194	
64 01-10 (Six-LHD-LES-Note 5. 123-1 Type 2): 64 10 (V8-Note 5. 160-3 Type 2): 65 01: 65 10 (OHV-199): 65 10 (V8-287): 64-65 80 (V8-327)	.....	1	316 9944	
64-65 10 (OHV-232): 65 80 (OHV-232): ***64 10 (OHV-196-Heavy Duty-Note 5. 001-1): 65 10 (OHV-199-Heavy Duty-Note 5. 001-1)***	.....	1	317 3524	
ATTACHING PARTS				
Clutch Throwout Lever Adjusting				
PIN, Cotter ..... ***61 Thru 63 01 (RHD)***	17. 460	1	G108630	NA
SCREW ..... 62 Thru 64 01-10 (WES)	.....	1	316 3730	
NUT, Hexagon..... 62 Thru 64 01-10 (WES)	17. 406	1	G120371	NA
Anti - Rattle				
WASHER, Spring 64-65 01-10-80	.....	1	317 8359	
SPRING, Clutch Throwout Lever Return				
62 Thru 64 01-10 (WES)	.....	1	316 5060	

5. 125 BOOT, Clutch Throwout Lever

60 01: 60-61 10 (LHD): 61 01 (LHD)	.....	1	313 0098	
62-63 01 (LHD-LES): 62 10 (LHD-LES)	.....	1	316 3150	
62-63 01 (WES)	.....	1	316 3732	
64 01-10 (LES): 65 01	.....	1	317 2081	
64 01-10 (WES)	.....	1	317 2793	
61 Thru 63 01 (RHD): 60 Thru 62 10 (RHD)	.....	1	313 5492	
60-61 10 (WST-Heavy Duty-Note 5. 001-1): 60-61 20-80	.....	1	314 5646	
63 10 (LHD-LES): ***64 10 (OHV-196-Heavy Duty-Note 5. 001-1)... (Use 316 9946)***	.....	1	316 6939	#
63 10 (LHD-WES)	.....	1	316 6940	
62 10 (WST-Heavy Duty-Note 5. 001-1): 62 80	.....	1	316 3149	
64 10 (V8-Note 5. 160-3 Type 1): 63 80	.....	1	316 9945	
64 10 (V8-Note 5. 160-3 Type 2): 64-65 10-80 (V8)	.....	1	317 3451	

NOTE-5. 123-1: Two types of Clutch Throwout Levers, pivots and sleeves were used in 64 01-10 Six-LES) cars. They can be identified as follows:
Type 1: The Flywheel Ring Gear is 7/16" wide.
Type 2: The Flywheel Ring Gear is 3/8" wide.

Copyright 1963 American Motors Corp.

GROUP NO. — DESCRIPTION — YEAR and MODEL	PRIMARY GROUP NO.	PER CAR	PART NO.	CODE
64 01-10 (RHD): 65 01 (OHV-196-RHD)	.....	1	317 2648	
65 01 (OHV-199): 65 10 (OHV-199): 64-65 10 (OHV-232): 65 80 (OHV-232)	.....	1	317 3646	
RETAINER, Clutch Throwout Lever Boot				
60 01: 61 Thru 63 01 (LHD-LES): 60 Thru 62 10 (LHD)	.....	1	312 9614	
62-63 01 (WES)	.....	2	316 3733	
64-65 01: 64 10 (Six)	.....	1	317 2080	
63 10: ***64 10 (196-Heavy Duty-Note 5.001-1)***	.....	1	316 7827	
60 Thru 62 10 (RHD): 61 Thru 63 01 (RHD)	.....	1	313 2530	
60 Thru 62 10 (WST-Heavy Duty-Note 5.001-1): 60 Thru 62 20-80	.....	1	314 5647	
63 Thru 65 10-80 (V8)	.....	1	316 7433	
ATTACHING PARTS Clutch Throwout Lever Boot And Retainer To Clutch Housing				
SCREW, Tapping..... 60 Thru 65 01-10-20-80 (LES)	17.670	2	G448423	NA
SCREW, Tapping..... 62-63 01 (WES)	17.670	4	G448423	NA
SCREEN, Clutch Throwout Lever Retainer Inlet				
62-63 01 (WES)	.....	1	316 3996	
5.130 PIVOT ASSEMBLY, Clutch Throwout Lever				
60 Thru 62 01-10 (LES): 63 01-10-80 (LES-Note 5.123-1 Type 1)...(Incl. Ball)	.....	1	320 4950	
63 01-10-80 ...(Incl. Wick)	.....	1	320 4842	
63 01-10-80 (Note 5.123-1 Type 2)..... ***(Use 320 5362)***	.....	1	320 4843	
60 Thru 62 10 (WST-Heavy Duty-Note 5.001-1): 60 Thru 62 20-80	.....	1	311 5761	
64-65 01: 64 10: ***65 10 (OHV-199-Heavy Duty-Note 5.001-1):*** 65 10 (OHV-232): 65 10 (V8-287): 64-65 80	.....	1	320 5362	
65 01-10 (OHV-199)	.....	1	320 5648	
65 01 (RHD-OHV-199)	.....	1	320 6273	
BALL, Throwout Lever Pivot				
64-65 01-10-80	17.018	1	G169162	
PIVOT, Clutch Throwout Lever				
62 Thru 64 01 (WES): 63-64 10 (WES)	.....	1	316 3731	
ATTACHING PARTS Pivot To Housing Bolt				
WASHER, Lock..... 60 Thru 63 01-10-20-80	17.820	1	G120382	NA
WASHER, Lock..... 64-65 01-10-80	17.820	1	G103328	NA
WICK, Clutch Throwout Lever Pivot Assembly				
60 Thru 65 10-20-80	.....	1	313 2682	
5.132 SPRING, Clutch Throwout Lever (In Clutch)				
60 Thru 64 01-10 (LES): 65 01-10: 63 Thru 65 80	.....	1	310 6505	
60 Thru 63 10 (WST-Heavy Duty-Note 5.001-1): 60 Thru 62 20-80	.....	1	312 7032	
ANCHOR, Clutch Throwout Lever Spring				
60 Thru 63 01-10-20-80	.....	1	310 5508	
64 01-10-80 (LES): 65 01-10-80	.....	1	317 2037	

Copyright 1963 American Motors Corp.

GROUP NO. — DESCRIPTION — YEAR and MODEL	PRIMARY GROUP NO.	PER CAR	PART NO.	CODE
5.135 PEDAL, Clutch				
60 01	.....	1	314 0843	
60 Thru 62 10-20-80	.....	1	315 7646	
61 01 (LHD-Note 5.135-1)	.....	1	315 8798	
61 01 (LHD-Note 5.135-2): 62-63 01 (LHD-LES)	.....	1	316 2173	
64-65 01 (LHD-LES)	.....	1	317 2021	
61 Thru 63 01 (RHD)	.....	1	313 3026	
64 01 (RHD): 65 01 (RHD-OHV-196)	.....	1	317 2531	
63 10 (LHD-LES): 63 80	.....	1	316 7151	
64 10 (LHD-Six-196)	.....	1	317 2506	#
65 10 (LHD-OHV-199)	.....	1	317 6327	
64 10 (V8-Note 5.160-3 Type 1)	.....	1	317 2632	
64 10 (V8-Note 5.160-3 Type 2): 64 10 (232): ***65 10 (OHV-199-Heavy Duty-Note 5.001-1): 64 80***	.....	1	317 3471	
65 10 (LHD-OHV-232-Note 5.135-3)(LHD-V8-287-Note 5.135-3): 65 80 (LHD-Note 5.135-3)	.....	1	317 6312	
65 10 (LHD-OHV-232-Note 5.135-4)(LHD-V8-287-Note 5.135-4): 65 80 (LHD-Note 5.135-4)	.....	1	317 8631	
60 Thru 62 10 (RHD)	.....	1	314 6529	
63 10 (RHD)	.....	1	316 9006	
64 10 (RHD-SIX)	.....	1	317 2589	
65 10 (RHD-OHV-232)	.....	1	317 4790	
ATTACHING PARTS Clutch Pedal To Pedal Shaft				
WASHER, Plain ..... 61 Thru 63 01 (LHD-LES): 60-61 10 (LHD): 60-61 20-80: 62 10-80 (LHD)	17.814	1	400 1163	
SPRING, Retaining ..... 61 01 (LHD: 60-61 10 (LHD): 60-61 20-80	17.710	1	G455563	
SPRING, Retaining ..... 62-63 01 (LHD-LES): 62 10-80 (LHD)	17.710	1	G148149	
BUSHING, Clutch Pedal				
61 Thru 64 01 (LHD-LES): 60-61 10 (LHD): 60-61 20-80: 62 Thru 64 10-80 (LHD): 65 01-10-80	.....	2	314 5488	
RING, Clutch Pedal Shaft Retaining				
64-65 01 (LHD-LES): ***64 10 (RHD)***	.....	1	317 2124	
OILER, Clutch Pedal				
60 Thru 62 10 (RHD): 61 Thru 63 01 (RHD)	5.175	1	313 0018	
5.140 ROD, Clutch Pedal				
60 01	.....	1	315 7584	
61 Thru 63 01 (RHD)	.....	1	313 6654	
60 Thru 62 10 (RHD)	.....	1	313 4838	
PIN, Rod To Pedal				
64-65 01 (RHD)	.....	1	317 2526	
ATTACHING PARTS Rod To Pedal				
SCREW, Hexagon ..... ***60 Thru 63 01 (RHD): 60 Thru 62 10 (RHD)***	.....	1	313 3781	
NUT, Hexagon ..... ***64-65 01 (RHD)***	17.406	1	G120369	
WASHER, Lock ..... ***64-65 01 (RHD)***	17.820	1	G120382	

NOTE 5.135-1: Distance of 6" from Pedal Mounting Hole to Pedal Pin. Used prior to Body Nos. 11953 & R954.

NOTE 5.135-2: Distance of 5-1/4" from Pedal Mounting Hole to Pedal Pin. Used beginning with Body Nos. 11953 & R954.

NOTE 5.135-3: Used prior to Car Sequence No.

NOTE 5.135-4: Used beginning with Car Sequence No.

Copyright 1963 American Motors Corp.

GROUP NO. — DESCRIPTION — YEAR and MODEL	PRIMARY GROUP NO.	PER CAR	PART NO.	CODE
5.144 COVER, Clutch Pedal Pad				
61 Thru 63 01 (LHD-LES): ***164 01 (CAN):*** 60 Thru 64 10 (LHD-SIX): 60 20-80: 61 Thru 64 10-20-80 (LHD-V8)	8.148	1	314 8572	
60 01: ***61 Thru 63 01 (RHD): 60 Thru 63 10 (RHD)***	.....	1	310 6732	
64 01 (LES): 65 01	8.148	1	317 1670	
65 10-80	8.148	1	317 5994	
OVERLAY, Clutch Pedal Pad Cover				
65 50: 65 80 (990)	8.148	1	317 6315	
5.148 SHAFT, Clutch Pedal				
60 01	.....	1	312 9550	
61 Thru 63 01 (LHD-LES): 60 Thru 62 10 (LHD): 60-61 20-80: 62 80 (LHD)	8.160	1	314 9728	
61 Thru 63 01 (RHD)	.....	1	314 0269	
65 01	8.160	1	317 2018	
60-61 10 (RHD)	8.036	1	341 0274	
63-64 10 (Six): 64 10 (V8-Note 5.160-3 Type 1): 63 80: 65 10 (OHV-199)	8.160	1	316 7023	
64 10 (V8-Note 5.160-3 Type 2): ***65 10 (OHV-199-Heavy Duty-Note 5.001-1):*** 65 10 (OHV-232)(V8): 64-65 80	8.160	1	317 3432	
ATTACHING PARTS — Shaft To Clutch Pedal				
BOLT, Hexagon 60 01	17.038	1	G181659	NA
BOLT, Hexagon 63 10-80: 64-65 01-10-80	17.038	1	G181593	NA
WASHER, Plain ..... ***64 01 (RHD)***	17.814	1	400 1145	
WASHER, Plain 63 10-80: 64-65 01-10-80	17.820	1	G120214	NA
WASHER, Lock 60 01	17.820	1	G131100	NA
NUT, Hexagon 63 10-80: 64-65 01-10-80	17.406	1	G120368	NA
NUT, Hexagon ..... 61 Thru 63 01 (LHD-LES): 60 Thru 62 10 (LHD): 60-61 20-80: 62 80 (LHD)	17.416	1	G442828	NA
PIN, Cotter ..... ***64 01 (RHD)***	17.460	1	G103374	NA
SPACER, Clutch Pedal Shaft				
61 Thru 63 01 (RHD)	8.160	2	313 4023	
RING, To Support Lock				
61 Thru 63 01 (RHD)	.....	2	314 0270	
60 01	.....	1	310 6815	
SPRING, Clutch Pedal Shaft				
60 Thru 62 10 (RHD)	8.160	1	314 1453	
60 01	8.160	1	312 9696	
OILER, Clutch Pedal Shaft				
60 01	17.290	1	G273323	
5.152 SUPPORT, Clutch Pedal				
60 Thru 62 10 (LHD): 60-61 20-80: 62 80 (LHD)	8.164	1	315 7651	
61 01 (LHD-Note 5.152-1)	8.164	1	345 8053	
61 01 (LHD-Note 5.152-2): 62 01 (LHD-LES)	8.164	1	346 4765	
63 01 (LHD-LES)	8.164	1	350 5101	
64 01 (LHD-LPB): 64 01 (WPB-LHD-Note 5.152-3 Type 1): 65 01 (LHD-LPB)	8.164	1	316 9776	
64 01 (LHD-WPB-Note 5.152-3 Type 2): 65 01 (WPB-LHD)	8.164	1	317 3418	

NOTE 5.152-1: Used prior to Body Nos. 55954 & A13928.
NOTE 5.152-2: Used beg. with Body Nos. 55954 & A13928.
NOTE 5.152-3: Two Types of Supports were used on 64 01 (LHD-WPB) cars. They can be identified as follows:
Type 1: Has 4 weld nuts on front of Support.
Type 2: Has 2 weld nuts on front of Support.

Copyright 1963 American Motors Corp.

GROUP NO. — DESCRIPTION — YEAR and MODEL		PRIMARY GROUP NO.	PER CAR	PART NO.	CODE
63 10-80	***(Replaces 316 7573)***	8.164	1	317 1561	
61 01 (RHD)		8.164	1	316 1233	
62-63 01 (RHD)		8.164	1	316 2835	
64-65 01 (RHD)		8.164	1	317 1197	
65 10 (RHD-WPB)		8.164	1	317 6875	
64 10-80 (LHD)		8.164	1	317 2629	
65 10-80 (LHD): ***64 10 (RHD-LPB)***		8.164	1	317 6876	
ATTACHING PARTS					
Support To Dash Panel					
BOLT, Hexagon	***62-63 01 (RHD)***	17.038	4	G181596	NA
BOLT, Hexagon	63 10	17.038	3	G181635	NA
STUD	61-62 01 (LHD)	8.035	2	315 7870	
STUD	64-65 01: 61 Thru 65 10-20-80 (LHD)	8.035	4	315 7870	
SCREW	61 Thru 63 01 (LHD)	8.035	4	316 2760	
SCREW	60-61 10 (LHD): 60 20-80: 61 20-80 (LHD): 62 10-80 ***(Replaces 344 4626)***	22.056	4	400 0032	
NUT, Hexagon	***62-63 01 (RHD)***	17.406	4	G120368	NA
NUT, Hexagon	61 10-20-80: 62-63 01-10-80 (LHD)	17.406	4	G120369	NA
NUT, Hexagon	61 01	17.416	2	G442828	
WASHER, Lock	***62-63 01 (RHD)***	17.820	4	G120214	NA
WASHER, Lock	62-63 01-10-80 (LHD)	17.820	4	G120382	NA
WASHER, Lock	61 01 (LHD)	17.822	2	G114606	NA
WASHER, Plain	***62-63 01 (RHD)*** ***(Replaces 800 0157)***	17.814	2	400 0480	
WASHER, Plain	***62-63 01 (RHD)*** ***(Replaces 800 0153)***	17.814	2	400 1093	
WASHER, Plain	62 10-80 (LHD) ***(Replaces 800 0165)***	17.814	2	400 1104	
WASHER, Plain	62 10 (LHD) ***(Replaces 800 0105)***	17.671	2	400 1042	
Support To Instrument Panel					
BOLT, Hexagon	60-61 80	17.038	1	G180120	NA
WASHER, Lock	60-61 80	17.820	1	G120382	NA
WASHER, Plain	64 80	17.814	1	400 1104	
Support To Brace					
BOLT, Hexagon	60 Thru 63 01 (LHD)	17.038	1	G189329	NA
SCREW	60-61 10 (LHD): 60-61 20-80: 62 10-80 (LHD) ***(Replaces 344 4626)***	22.056	2	400 0032	
WASHER, Plain	61 Thru 65 01 (LHD)	17.814	1	G120394	NA
WASHER, Lock	61 Thru 65 01 (LHD)	17.820	1	G120382	NA
NUT, Hexagon	61 Thru 65 01 (LHD)	17.406	1	G120369	NA
Support To Brace (At Instrument Panel)					
BOLT, Hexagon	65 01	17.038	2	G181637	NA
BOLT, Hexagon	60-62 10 (LHD): 60-61 20-80: 62 80 (LHD)	17.038	2	G181641	NA
BOLT, Hexagon	63-64 10-80 (V8)(LHD)	17.038	2	G181645	NA
WASHER, Plain	65 01: 60 Thru 64 10 (LHD): 60-61 20-80: 62-63 80 (LHD)	17.814	2	G120394	NA
NUT, Speed	60-61 10 (LHD): 60-61 20-80	8.164	2	345 0012	
NUT, Stamped	65 01: 62 10-80 (LHD)	17.428	2	G454385	NA
NUT, Stamped	63-64 10-80 (V8)(LHD)	17.406	2	G120369	NA
BRACE, Clutch Pedal Support					
(Left) 61 Thru 63 01 (LHD)		8.164	1	316 0464	
(Left) 60 Thru 62 10 (LHD): 60-61 20-80: 62 80 (LHD)		8.164	1	344 5961	
(Right) 61 Thru 63 01 (LHD)		8.164	1	316 0465	
(Right) 60 10 (LHD): 60 20-80		8.164	1	344 5960	
(Right) 61-62 10 (LHD): 61 20-80: 62 80 (LHD)		8.164	1	344 7766	

5. 155 LEVER, Clutch Pedal To Rod

63 10 (LES): 63 10-80 (V8): 64 10 (V8-Note 5. 160-3 Type 1)	.....	1	316 8903	
(196-Heavy Duty-Note 5. 001-1): 65 10 (OHV-232-LHD-WST) (OHV-232-WOD-LHD-WFGS-LAW): 65 10 (V8-LHD-WST) (V8-LHD-WOD-WFGS-LAW): 65 80 (LHD-WST)(LHD-WOD-WFGS-LAW): ***65 10 (OHV-199-Heavy Duty-Note 5. 001-1)***	.....	1	317 3460	

Copyright 1963 American Motors Corp.

GROUP NO. — DESCRIPTION — YEAR and MODEL	PRIMARY GROUP NO.	PER CAR	PART NO.	CODE
64 10 (V8-WFGS-WAW-Note 5.160-3 Type 2): 64 80 (WFGS-WAW): 65 10 (OHV-232-LHD-WOD-WFGS-WAW): 65 10 (V8-LHD-WOD-WFGS-WAW): 65 80 (LHD-WOD-WFGS-WAW)	.....	1	317 5383	
64 10 (LHD-Six): 65 10 (OHV-199)	.....	1	317 2533	
63-64 10 (RHD-SIX)	.....	1	316 7745	
65 10 (RHD-OHV-232)	.....	1	317 5121	
ATTACHING PARTS				
Lever To Shaft				
BOLT, Hexagon 64 10-80	17.038	1	G181648	NA
BOLT, Hexagon 65 10 (OHV-199)	17.038	1	G181645	NA
BOLT, Hexagon ..... 65 10 (OHV-232)(V8): 65 80	17.038	1	G181647	NA
NUT, Stamped ..... 64 10: 65 10 (OHV-232)(V8): 64-65 80	17.406	1	317 5205	
WASHER, Lock 64 10-80	17.820	1	G120382	NA
WASHER, Plain ..... 64 10: 65 10 (OHV-232)(V8): 64-65 80	17.814	2	G120394	NA
Lever To Rod				
CLIP 64 10-80	5.160	1	316 7609	
SPRING, Clutch Pedal To Rod				
63-64 10 (SIX)	.....	1	316 7246	
63 10-80 (V8)	.....	1	316 8870	
64 10-80 (V8): ***64 10 (Six-Heavy Duty): 65 10 (OHV-199-Heavy Duty-Note 5.001-1):*** 65 10-80 (OHV-232)(V8)	.....	1	317 3463	
PAD, Clutch Pedal Overcenter Spring Lubricating				
63 10 (Six): 64 10 (Six-232): 63-64 80: ***65 10 (OHV-199-Heavy Duty-Note 5.001-1)***	.....	1	316 9182	
ATTACHING PARTS				
Bracket To Spring				
PIN, Retaining ..... ***65 10 (OHV-199-Heavy Duty-Note 5.001-1):*** 65 10 (OHV-232): 64-65 10 (V8): 64-65 80	.....	1	317 3472	
NUT, Speed ..... ***65 10 (OHV-199-Heavy Duty-Note 5.001-1):*** 65 10 (OHV-232): 64-65 10 (V8): 64-65 80	8.590	1	400 0235	
NUT, Speed ..... ***65 10 (OHV-199-Heavy Duty-Note 5.001-1):*** 64 10 (V8): 64 80	13.012	1	400 0268	
SPRING, Clutch Pedal Return				
64 10 (OHV-196-Heavy Duty-Note 5.001-1)	5.190	1	312 3558	#
BRACKET, Clutch Pedal Return Spring				
64 10 (OHV-196-Heavy Duty-Note 5.001-1)	13.450	1	315 3673	#
5.160 ROD, Clutch Pedal To Outer Lever Or Beam				
60 01	.....	1	314 0748	
61 01 (LHD-Note 5.135-1)	.....	1	315 8799	
61 01 (LHD-Note 5.135-2): 62-63 01 (LHD)	.....	1	316 2177	
64 01 (LHD-Note 5.168-4 Type 1): ***64 01 (RHD)***	.....	1	317 2010	
64 01 (Note 5.168-4 Type 2): 65 01	.....	1	317 4648	
61 Thru 63 01 (RHD)	.....	1	316 2221	
60 10 (LHD)	.....	1	315 7649	
61 10 (LHD) ***(Replaces 316 1472)***	.....	1	316 2885	
62 10 (LHD)	.....	1	316 3455	
63 10 (LHD-LES-Note 5.168-5): 64 10 (V8-Note 5.160-3 Type 1, Note 5.168-5): 63 80 (Note 5.168-5)	.....	1	316 6929	#
60 20: 61 20 (Note 5.160-1)	.....	1	315 7650	

NOTE 5.160-1: Pedal to Lever Rod is 15-11/32" long. Used prior to car sequence No. W86382.
NOTE 5.160-2: Pedal to Lever Rod is 15-5/8" long. Used beginning with car sequence No. W86382.
NOTE 5.160-3: Two Types of Clutch Linkages were used on 64 10 (V8) cars. They can be identified as follows:
Type 1: The Clutch Pedal Rod is 13-11/32" long.
Type 2: The Clutch Pedal Rod is 15-23/32" Long.

Copyright 1963 American Motors Corp.

GROUP NO. — DESCRIPTION — YEAR and MODEL	PRIMARY GROUP NO.	PER CAR	PART NO.	CODE
61 20 (Note 5.160-2)	.....	1	316 2381	
60-61 80	.....	1	315 7648	
64 10 (V8-Note 5.160-3 Type 2, Note 5.168-5): 65 10 (OHV-232)(V8-Note 5.168-5): 64-65 80 (Note 5.168-5)	.....	1	317 3455	#
63 10 (RHD)	.....	1	316 7615	
64 10 (LHD-Six): 65 10 (OHV-199-LHD)	.....	1	317 2549	
64 10 (RHD-SIX)	.....	1	317 2570	
65 10 (RHD-OHV-232)	.....	1	317 4788	
63 Thru 65 10-80 (V8-WCGS-Note 5.168-6)	.....	1	318 1763	#
ATTACHING PARTS				
Rod To End				
NUT, Hexagon ..... 60 01: ***60 Thru 62 10 (RHD)***	17.406	1	G120369	NA
Pedal And Lever To Rod				
PIN, Clevis ..... ***61 Thru 63 01 (RHD)*** ***(Replaces 800 0225)***	17.474	1	400 1206	
PIN, Clevis ..... 60 01: ***60 Thru 62 10 (RHD)*** ***(Replaces 800 0228)***	17.474	1	400 1209	
PIN, Cotter ..... 60 10 (LHD): 60 20-80: ***61 01 (RHD):*** 61 Thru 63 01 (LES): 61-62 10-20-80 (LHD)	17.460	1	G103362	NA
PIN, Cotter ..... 60 01: ***60 Thru 62 10 (RHD)***	17.460	1	G103373	NA
WASHER, Plain ..... 61 Thru 63 01 (LHD-LES): 60 Thru 62 10 (LHD): 60 20-80: 61-62 20-80 (LHD)	17.814	1	G120394	NA
WASHER, Plain ..... ***61 Thru 63 01 (RHD)***	17.814	1	G120393	NA
WASHER, Seal ..... 60 01: ***60 Thru 62 10 (RHD)*** ***(Replaces 800 0163)***	17.814	1	400 1102	
WASHER, Wave ..... 60 10 (LHD): 60 20-80: 61-62 01-10-20-80 (LHD)	7.088	1	312 1635	
WASHER, Wave ..... 63 01 (LHD-LES)	7.088	1	316 7670	
CLIP, Retaining 64-65 01-10: 65 80	.....	2	316 7609	
END, Clutch Pedal Rod				
60 01	5.187	1	312 2695	
60 Thru 62 10 (RHD)	5.187	1	314 5456	
SEAL, Lever To Rod				
60 01: ***60 Thru 62 10 (RHD)***	.....	1	313 0998	
60-61 10 (WST-Heavy Duty-Note 5.001-1)	.....	1	315 8566	
62 10 (WST-Heavy Duty-Note 5.001-1)	.....	1	316 4200	
60-61 10 (RHD)	.....	1	314 8942	
62 10 (RHD)	.....	1	316 3680	
60 20: 61 20 (Note 5.160-1)	.....	1	315 7650	
60-61 80	.....	1	315 7648	
62 80	.....	1	316 3459	
SPRING, Clutch Rod To Pedal Retaining				
60 10 (LHD): 60 20-80	17.710	1	G455563	
61 Thru 63 01 (LHD-LES): 61-62 10-20-80 (LHD)	17.710	1	G148149	
5.162 SEAL, Clutch Pedal To Rod				
60 01: ***60 10 (RHD)***	8.172	1	312 8937	
60 10 (LHD): 60 20-80: 61 Thru 63 01 (LHD): 61-62 10-20-80 (LHD)	.....	1	314 6336	
64 01 (LES): 65 01: 63 01: 64 10 (Six): 64 10 (V8-Note 5.160-3 Type 1): 65 10 (OHV-199): 63 80	.....	1	316 7464	
64 10 (V8-Note 5.160-3 Type 2): 65 10 (OHV-232)(V8): 64-65 80	.....	1	317 3449	
RETAINER, Clutch Pedal To Rod Seal				
60 Thru 62 10-20-80	.....	1	314 6337	
64-65 01 (LES): 63 10: 64 10 (Six): 65 10 (OHV-199): 64 10 (V8-Note 5.160-3 Type 1): 63 80 ***(Replaces 317 7184)***	.....	1	316 7445	
64 10 (OHV-196-Heavy Duty-Note 5.001-1): 64 10 (V8-Note 5.160-3 Type 2): 64 80: 65 10 (OHV-232)(V8): 65 80 ***(Replaces 317 7183)***	.....	1	317 3456	#

Copyright 1963 American Motors Corp.

GROUP NO. — DESCRIPTION — YEAR and MODEL	PRIMARY GROUP NO.	PER CAR	PART NO.	CODE
ATTACHING PARTS Retainer To Dash Panel				
SCREW, Tapping..... 60 10 (LHD): 60-61 10: 60 Thru 62 20-80.....***(Replaces 800 0105)***	17.671	2	400 1042	
SCREW, Tapping..... 64-65 01: 65 10-80.....	17.670	2	G189119	NA
SCREW, Tapping..... 63-64 10-80.....***(Replaces 800 0122)***	17.670	2	400 1054	
WASHER, Plain..... 64-65 01: 63-64 10 (LES): 65 10: 63 Thru 65 80....	17.814	2	G446188	NA
BUSHING, Clutch Pedal To Rod Seal				
64 01 (LES): 65 01: 63 10: 64 10 (Six): 64 10 (V8-Note 5.160-3 Type 1): 65 10 (OHV-199): 63 80.....	.....	1	316 7487	
64 10 (V8-Note 5.160-3 Type 2): 65 10 (OHV-232)(V8): 64-65 80.....	.....	1	317 3461	
5. 164 CUSHION, Clutch Pedal Stop				
62 Thru 63 01 (LHD): 60 Thru 62 10 (LHD): 60 20-80: 61-62 20-80 (LHD).....	8.172	1	315 8398	
61 Thru 63 01 (RHD): 61-62 10 (RHD).....	8.172	1	312 8937	
63 10 (LES-Note 5.164-1 Type 1): 63 80 (LES-Note 5.164-1 Type 1).....	5.168	1	316 7906	
64 01 (LHD-WST-LES)(LHD-WOD-LES): 64 10 (196-WST-LES)(196-WOD-LES).	8.172	1	316 5745	
65 01: 65 10 (OHV-199).....	.....	1	317 7189	
63 10-80 (LHD-WST-Note 5.164-1 Type 3)(LHD-WOD-Note 5.164-1 Type 3)...	12.001	1	343 0618	
65 10 (OHV-199-Heavy Duty-Note 5.001-1): 64-65 10 (OHV-232): 64-65 10 (V8-287): 64-65 80: ***64 10 (Six-Heavy Duty-Note 5.001-1)***.....	.....	1	317 3448	
ATTACHING PARTS Cushion To Bracket				
NUT, Hexagon..... ***65 10 (OHV-199-Heavy Duty-Note 5.001-1):*** 64-65 10 (V8-232): 65 10 (V8): 64-65 80.....	17.406	2	G120369	
WASHER, Lock..... 63 10-80 (WST-LHD-Note 5.164-1 Type 3) (LHD-WOD-Note 5.164-1 Type 3).....	17.820	1	G120380	NA
BRACKET, Clutch Pedal Stop Cushion				
63 10 (WST): 63 80 (WST).....***(Replaces 316 7905)***	.....	1	316 9442	
64 10 (V8-Note 5.160-3 Type 1).....	.....	1	317 2715	
64 10 (V8-Note 5.160-3 Type 2): ***65 10 (OHV-199-Heavy Duty-Note 5.001-1):*** 64-65 10 (OHV-232): 65 10 (V8): 64-65 80.....	.....	1	317 3428	
63 10-80 (LHD-WST-Note 5.164-1 Type 3) (LHD-WOD-Note 5.164-1 Type 3)...	.....	1	317 2386	
ATTACHING PARTS Bracket To Pedal				
BOLT, Hexagon ..... 64-65 10-80.....	17.038	2	G181637	NA
NUT, Hexagon..... 64-65 10-80.....	17.406	2	G120369	NA
WASHER, Lock ..... 64-65 10-80.....	17.820	2	G120382	NA
STOP KIT, Clutch Pedal				
63 10-80 (LHD-WST)(LHD-WOD).....	.....	1	320 4792	
WASHER, Clutch Pedal Stop Cushion Bite				
63 10 (WST-LES-Note 5.164-1 Type 2): 63 80 (WST-Note 5.164-1 Type 2): 64 10 (LES): 64 80.....	.....	1	94 524	
63 10-80 (LHD-WST-Note 5.164-1 Type 3)(LHD-WOD-Note 5.164-1 Type 3)...	10.003	2	310 8995	

NOTE 5.164-1: **Three Types of Clutch Pedal Stop Brackets were used in 63 10-80 Cars.**
Type 1: Has a round opening to receive the Pedal Stop Bracket Bolt.
Type 2: Has an elliptical opening to receive the Pedal Stop Bracket Bolt.
Type 3: Has a threaded cushion instead of a snap-in cushion.

Copyright 1963 American Motors Corp.

GROUP NO. — DESCRIPTION — YEAR and MODEL	PRIMARY GROUP NO.	PER CAR	PART NO.	CODE
5. 165 PAN, Clutch Pedal Splash				
60 01 (LHE)	8. 175	1	313 0971	
60 01 (OHV)	8. 175	1	315 9996	
ATTACHING PARTS				
Pan To Rear Crossmember And Front Sill				
SCREW, Hexagon 60 01	17. 671	3	G187303	NA
5. 168 BELLCRANK, Clutch Release Idler Outer				
64 01 (LHD-Note 5. 168-4 Type 1)	.....	1	317 2031	
64 01 (Note 5. 168-4 Type 2): 65 01 (LHD)	.....	1	317 4647	
64 01 (RHD): 65 01 (RHD-OHV-196)	.....	1	317 2547	
63 10 (Note 5. 187-1 Type 1)	.....	1	316 7103	
63 10 (Note 5. 187-1 Type 2)(Note 5. 168-3 Type 1)	.....	1	317 0532	
63 10 (LHD-LES-Note 5. 168-3 Type 2)	.....	1	317 0934	
64 10 (Six-LHD): 65 10 (OHV-199-LHD)	.....	1	317 2553	
63 10 (Heavy Duty-Note 5. 168-3 Type 1)	.....	1	316 7673	
63 10 (LHD-Heavy Duty-Note 5. 168-3 Type 2)	.....	1	316 9847	
63 10 (RHD-Note 5. 187-1 Type 1)	.....	1	316 7604	
63 10 (RHD-Note 5. 187-1 Type 2)	.....	1	317 0533	
64 10 (RHD-SIX)	.....	1	317 2651	
65 10 (RHD-OHV-232)	.....	1	317 5551	
64 10 (OHV-196-Heavy Duty-Note 5. 001-1): 65 10 (OHV-199-Heavy Duty-Note 5. 001-1): 64-65 10 (OHV-232-LHD): 65 80 (OHV-232-LHD)	.....	1	317 5435	#
63 80 (Note 5. 187-1 Type 1, Note 5. 168-5)	.....	1	316 7529	#
63 80 (Note 5. 187-1 Type 2, Note 5. 168-3 Type 1, Note 5. 168-5)	.....	1	317 0534	#
63 80 (Note 5. 168-3 Type 2, Note 5. 168-5): 64 10 (V8-Note 5. 160-3 Type 1, Note 5. 168-5)	.....	1	316 9446	#
64 10 (V8-Note 5. 160-3 Type 2, Note 5. 168-5): 65 10-80 (OHV-287-Note 5. 168-5)	.....	1	317 3539	#
64-65 80 (OHV-327-Note 5. 168-5)	.....	1	317 3459	#
63 Thru 65 10-80 (V8-287-WCGS-Note 5. 168-6)	.....	1	317 9715	#
63 Thru 65 10-80 (V8-327-WCGS-Note 5. 168-6)	.....	1	318 0772	#
LEVER, Clutch Release Idler Outer				
61 07 (Note 5. 168-2): 62-63 01 (LHD-LES)	.....	1	316 3526	
61 01 (LHD-Note 5. 135-2): 61 07 (Note 5. 168-1)	.....	1	316 2175	
60 10 (LHD): 60 20-80: 61 01 (LHD-Note 5. 135-1): 61-62 10-80 (LHD): 61 20	.....	1	316 3528	
ATTACHING PARTS				
Bellcrank Or Lever To Shaft				
NUT, Hexagon ..... 62 Thru 64 01-10-80 (LHD): 65 10-80	17. 410	1	G272123	NA
WASHER, Lock ..... 62 Thru 64 01-10-80 (LHD): 65 10-80	17. 822	1	G114607	NA
Bellcrank To Rod				
CLIP 64 01-10	5. 160	1	316 7609	
SEAL, Clutch Release Idler Outer Lever Oil (Rubber)				
61 Thru 63 01 (LHD): 60 Thru 62 10 (LHD): 60 20-80: 61-62 20-80 (LHD)	.....	1	315 0475	

NOTE 5. 168-1: Lever has Oiler.
NOTE 5. 168-2: Lever does not have Oiler.
NOTE 5. 168-3: Two Types of Clutch Release Idlers were used on 63 10-80 Cars. They can be identified as follows:
Type 1: The Clutch Release Idler has a Fabricka mounted assembly.
Type 2: The Clutch Release Idler has a two Ball mounted assembly.
NOTE 5. 168-4: Two Types of Bellcranks and Rods were used on the 64 01 (WST-LES)(WOD-LES) Cars. They can be identified as follows:
Type 1: The Bellcrank Shaft is 1/4" shorter from the end of the shaft inboard to the shoulder, (on the outer lever side), than it is on the inner lever side.
Type 2: Both ends of Bellcrank shaft are identical.
NOTE 5. 168-5: The Bellcrank uses two levers for Bellcranking action.
NOTE 5. 168-6: The Bellcrank uses four levers for Bellcranking action.

Copyright 1963 American Motors Corp.

GROUP NO. — DESCRIPTION — YEAR and MODEL	PRIMARY GROUP NO.	PER CAR	PART NO.	CODE
PLUG, Clutch Release Idler Outer Oiler Hole				
61 07 (LHD): 62-63 01-10-80 (LHD): 64-65 10-80	5.170	1	316 4636	
PIVOT, Clutch Release Idler Outer Lever				
61 Thru 63 01 (LHD): 60 Thru 62 10 (LHD): 60 20-80: 61-62 20-80 (LHD)	5.178	1	315 0477	
63 Thru 65 10-80 ***(Replaces 317 3485)***	.....	1	316 7038	
OILER, Clutch Release Idler Outer Lever				
60 10 (LHD): 60 20-80	17.290	1	G125696	
61 01-10-20-80 (LHD)	17.290	1	G271287	
BOOT, Clutch Pivot To Lever				
(Outer) 64 01 (LES): 62 Thru 64 10-80 (LES): 65 10-80	.....	1	316 7049	
(Outer) 65 01	.....	1	317 0937	
(Inner) 65 01: 63 10-80 (WST-LES-Note 5.168-3 Type 2)(WOD-LES-Note 5. 168-3 Type 2): 64 01-10-80 (LES): 65 10-80	.....	1	317 0937	
RETAINER, Clutch Pivot To Lever Boot				
64-65 01: 62 Thru 65 10-80	.....	2	316 7067	
CLIP, Retainer To Pivot Retaining				
63 10-80 (WST-LES-Note 5.168-3 Type 2)(WOD-LES-Note 5.168-3 Type 2): 64 01-10-80 (LES): 65 01-10-80	.....	1	316 9769	
SLEEVE, Clutch Release Idler Outer Pivot				
64-65 01 (LHD)	.....	1	317 2035	
ATTACHING PARTS				
Sleeve To Sill				
SCREW, Tapping 64-65 01	17.671	2	400 1037	
BRACKET, Clutch Release Idler Outer Lever				
61-62 01	.....	1	343 6443	
60 10 (LHD): 60 20: 61 10-20 (LHD)	.....	1	341 7155	
62 10 (LHD)	.....	1	316 3454	
62 80 (LHD)	.....	1	316 3458	
BOLT, Hexagon ..... 62 10-80 (LHD)	17.038	2	G181636	NA
SPACER ..... 62 10 (LHD) ***(Replaces 800 0441)***	17.814	1	400 1163	
ATTACHING PARTS				
Bracket To Frame And Clutch Release Idler Outer Lever				
WASHER, Lock ..... 60 10 (LHD): 60 20-80: 61 01-10-20-80 (LHD)	17.820	1	G131100	NA
WASHER, Lock ..... 62 10-80 (LHD)	17.820	2	G120382	NA
NUT, Hexagon ..... 60 10 (LHD): 60 20-80: 61 01-10-20-80 (LHD)	17.406	1	G120370	NA
NUT, Hexagon ..... 62 10-80 (LHD)	17.406	2	G120369	NA
SUPPORT, Clutch Release Idler Bracket				
63 10 (LHD-WST-LES-Note 5.168-3 Type 2)(LHD-WOD-LES-Note 5.168-3 Type 2): 64-65 10 (LHD-Six): 65 80 (LHD-Six) ***(Replaces 317 0933)***	.....	1	317 2501	#
64 10 (RHD-Six): 65 10 (RHD-OHV-232)	.....	1	317 2448	
63 80 (WST-Note 5.168-3 Type 2)(WOD-Note 5.168-3 Type 2): 64-65 10-80 (V8)	.....	1	317 0940	

Copyright 1963 American Motors Corp.

GROUP NO. — DESCRIPTION — YEAR and MODEL	PRIMARY GROUP NO.	PER CAR	PART NO.	CODE
OILER, Clutch Beam				
60 01: ***61-62 01 (RHD): 60 Thru 62 10 (RHD)***	.....	1	313 0018	
5. 178 SUPPORT, Clutch Idler Inner Lever Or Beam Pivot				
62 10-80 (LHD-Heavy Duty)	.....	1	320 4482	
63 10 (LHD-Note 5. 168-3 Type 1)	.....	1	316 7607	
63 80 (WST-Note 5. 168-3 Type 1)(WOD-Note 5. 168-3 Type 1, Note 5. 168-5)	.....	1	316 7614	#
61 20: 61-62 80 ***(Replaces 315 2240)***	.....	1	316 3803	
63 10 (RHD)	.....	1	316 7622	
62 10 (RHD)	.....	1	316 3400	
61 10 (WST-Heavy Duty-Note 5. 001-1)	.....	1	316 2796	
61 Thru 63 01 (LHD): 60 Thru 62 10 (LHD): 60 20-80 ***(Replaces 316 3757, 315 2239, 315 1675)***	.....	1	316 4328	
61 Thru 63 01 (RHD)	.....	1	316 1266	
64 01 (LHD-LES): 65 01 (LHD)	.....	1	317 2028	
64 01 (RHD): 65 01 (RHD-OHV-196)	.....	1	317 2959	
63 Thru 65 10-80 (V8-WCGS-Note 5. 168-6)	.....	1	318 1772	#
SEAT, Clutch Idler Lever Spring				
60 Thru 62 20-80	.....	1	315 3024	
PLATE, Insulator				
60 01-10-20-80: ***61 Thru 63 01 (RHD): 61-62 10 (RHD)***	.....	4	312 5651	
BAR, Clutch Beam Support				
61 Thru 63 01 (RHD)	.....	1	316 2834	
ATTACHING PARTS				
Bar To Pivot Stud				
WASHER, Lock ..... ***61 Thru 63 01 (RHD)***	17. 820	1	G131100	NA
NUT, Hexagon ..... ***61 Thru 63 01 (RHD)***	17. 406	1	G120370	NA
SPRING, Clutch Beam Support Bar				
61 Thru 63 01 (RHD): 63 10 (LHD)	5. 190	1	314 5435	
STUD, Clutch Beam Pivot				
61 Thru 63 01 (RHD)	.....	1	315 4750	
BRACKET, Clutch Beam Support Or Beam				
60 01	.....	1	315 4092	
60 10 (LHD) ***(Replaces 315 0481)***	.....	1	316 3757	
60 10 (RHD)	.....	1	314 6543	
61 10 (RHD)	.....	1	316 1363	
64 01 (RHD): 64 10 (Six-RHD): 65 01 (RHD-OHV-196): 65 10 (RHD-OHV-232)	.....	1	317 2446	
60 20-80 ***(Replaces 315 0478)***	.....	1	316 3803	
62 10 (LHD-Heavy Duty)	.....	1	320 4483	
62 80 (LHD-Heavy Duty)	.....	1	320 4479	
63 Thru 65 01 (LHD): 63 Thru 65 10 (LHD-Six): 65 80 (OHV-232) ***(Replaces 316 9802)***	.....	1	317 2445	#

Copyright 1963 American Motors Corp.

GROUP NO. — DESCRIPTION — YEAR and MODEL	PRIMARY GROUP NO.	PER CAR	PART NO.	CODE
ATTACHING PARTS				
Bracket To Support				
BOLT, Hexagon ..... 60 10 (LHD): 60 20-80	17.038	2	G180022	NA
BOLT, Hexagon ..... ***62 10-80 (LHD-Heavy Duty):*** 64 01 (LHD)	17.038	2	G181595	NA
BOLT, Hexagon ..... 64-65 01: 64 10: 65 10-80 (Six)	17.038	2	G181596	NA
WASHER, Plain..... 60 10 (LHD): 60 20-80	17.814	2	G120392	NA
WASHER, Lock..... 60 10 (LHD): 60 20-80	17.820	2	G120380	NA
WASHER, Lock ..... ***62 10-80 (LHD-Heavy Duty):*** 64-65 01: 64 10: 65 10-80 (Six)	17.820	2	G120214	NA
NUT, Hexagon..... 60 10 (LHD): 60 20-80	17.406	2	G120375	
NUT, Hexagon..... ***62 10-80 (LHD-Heavy Duty):*** 64-65 01: 64 10: 64 10-80 (Six)	17.406	2	G120368	
Bracket To Clutch Housing				
BOLT, Hexagon ..... 60 Thru 65 10-20-80 (V8)	17.820	2	G180077	NA
WASHER, Lock ..... 60 Thru 65 10-20-80 (V8)	17.820	2	G120214	NA
Bracket To Pedal Bracket				
BOLT, Hexagon ..... ***61 Thru 63 01 (RHD)***	17.038	2	G180077	NA
WASHER, Lock..... ***61 Thru 63 01 (RHD)***	17.814	2	G120214	NA
Bracket To Engine				
BOLT, Hexagon ..... ***62 10 (RHD)***	17.038	1	G181369	NA
WASHER, Plain..... ***62 10 (RHD)***	17.814	1	G120394	NA
WASHER, Lock..... ***62 10 (RHD)***	17.820	1	G120382	NA
NUT, Hexagon..... ***62 10 (RHD)***	17.406	1	G103026	NA
INSULATOR, Clutch Beam To Engine Bracket				
60 01	.....	1	315 4093	
61 Thru 63 01 (RHD)	.....	1	312 5650	
60 Thru 62 10 (RHD)	.....	1	314 3230	
ATTACHING PARTS				
Insulator To Support Bar				
BOLT, Hexagon ..... ***61 Thru 63 01 (RHD)***	17.038	2	G180034	NA
BOLT, Hexagon ..... ***61 Thru 63 01 (RHD)***	17.038	2	G180023	NA
WASHER, Plain..... ***61 Thru 63 01 (RHD)***	17.814	4	G120392	NA
WASHER, Lock..... ***61 Thru 63 01 (RHD)***	17.820	4	G120380	NA
NUT, Hexagon..... ***61 Thru 63 01 (RHD)***	17.406	4	G120375	
Insulator To Beam				
BOLT, Hexagon ..... 60-61 01: ***60 10 (RHD)***	17.038	4	G180021	NA
BOLT, Hexagon ..... 60 01: ***62 10 (RHD)***	17.038	4	G180022	NA
WASHER, Plain..... ***60 10 (RHD)***	17.814	2	G120392	NA
WASHER, Lock..... 60 01: ***60 10 (RHD): 62 10 (RHD)***	17.820	4	G120380	NA
NUT, Hexagon..... 60 01: ***60 10 (RHD): 62 10 (RHD)***	17.406	4	G120375	
SPACER, Bracket				
61 10 (RHD)	3.309	1	315 6252	
64 01-10 (RHD): 65 01 (RHD-OHV-196)	.....	1	317 2568	
65 10 (RHD-OHV-232)	.....	2	400 1289	
ANCHOR, Clutch Throwout Lever Spring				
61 Thru 63 01 (LHD): 60 Thru 62 10 (LHD) ***(Replaces 315 0476)***	5.190	1	315 9821	
60 Thru 62 10 (WST-Heavy Duty-Note 5.001-1): 60-61 20-80: ***64 10 (RHD)***	5.190	1	314 5919	
62 10-80 (LHD-Heavy Duty)	5.190	1	320 4486	

Copyright 1963 American Motors Corp.

GROUP NO. — DESCRIPTION — YEAR and MODEL	PRIMARY GROUP NO.	PER CAR	PART NO.	CODE
BRACKET, Anchor Spring				
61 Thru 63 01 (RHD)	.....	1	316 2837	
BRACKET, Bar (Bolted To Pedal Bracket)				
61 Thru 63 01 (RHD)	.....	1	316 2836	
5. 180 LINKAGE KIT, Clutch Release Idler Inner				
62 10 (LHD-Heavy Duty)	.....	1	320 4573	
62 80 (LHD-Heavy Duty)	.....	1	320 4574	
5. 181 PLATE, Clutch Beam Fulcrum				
60-61 10 (RHD): 61 80 (RHD)	.....	1	341 0276	
62 10 (RHD)	.....	1	347 0038	
5. 184 SPRING, Clutch Beam Pull Back				
60 01: *60-61 10 (RHD)*	.....	2	313 3787	
61 Thru 63 01 (RHD)	5. 150	1	312 8205	
62 10 (RHD)	.....	2	314 5444	
ANCHOR, Clutch Beam Pull Back Spring				
60 Thru 63 01 (RHD)	8. 192	1	313 5352	
ATTACHING PARTS Anchor To Bracket				
BOLT, Hexagon ..... *61 Thru 63 01 (RHD)*	17. 038	1	G180020	NA
WASHER, Lock ..... *61 Thru 63 01 (RHD)*	17. 820	1	G120380	NA
NUT, Hexagon ..... *61 Thru 63 01 (RHD)*	17. 406	1	G120375	
5. 187 ROD ASSEMBLY, Clutch Inner Lever Or Beam To Throwout Lever (Incl. End & Nut)				
60 01	.....	1	315 4090	
61 01 (LHD-Note 5. 135-2): 62-63 01 (LHD): 61-62 10 (LHD)(4-1/8" Long)	.....	1	316 2180	#
61 01 (LHD-Note 5. 135-1): 60-61 10 (LHD)(4-3/4" Long)	.....	1	315 0489	#
64 01 (LHD): 65 01	.....	1	317 1061	
60-61 10 (RHD)	.....	1	314 6634	
60-61 10 (WST-Heavy Duty-Note 5. 001-1)	.....	1	315 5779	
61 10 (LHD)(4-3/8" Long) *(Replaces 316 2335)*	.....	1	316 2883	#
60-61 20-80: 62 80 *(Replaces 315 0487)*	.....	1	316 2884	
62 10 (WST-Heavy Duty-Note 5. 001-1)	.....	1	316 4324	
62 10 (RHD)	.....	1	316 3699	
64 10 (Six-LES): 65 10 (OHV-199)	.....	1	317 2699	
64 10 (196-Heavy Duty-Note 5. 001-1): 65 10 (OHV-199-Heavy Duty-Note 5. 001-1): 64-65 10 (OHV-232): 65 80 (OHV-232)	.....	1	317 3609	
ATTACHING PARTS Rod Assembly To Inner Lever				
PIN, Clevis ..... 61 01 (LHD): 60-61 10 (LHD): 60-61 20-80 *(Replaces 800 0337)*	17. 474	1	400 1221	
PIN, Cotter ..... 60 01: 61 01 (LHD-Note 5. 135-1): 60-61 10-20-80: 62 01-10-80 (LHD)	17. 460	1	G103373	NA
PIN, Cotter ..... 61 01 (LHD-Note 5. 135-2): 63 01-10-80 (LHD)	17. 460	1	G103362	NA
WASHER, Plain ..... 61 01 (LHD): 60-61 10 (LHD): 60-61 20-80	17. 814	1	G103341	NA
WASHER, Plain ..... 62 Thru 64 01-10-80 (LHD) *(Replaces 800 0163)*	17. 814	1	400 1102	

NOTE 5. 187-1: Two Types of Bellcrank and Link Assemblies were used on 63 10-80 Series Cars. They can be identified as follows:

Type 1: The length of the Link on the 63 10 is 5-1/2". The length of the Link on the 63 80 is 5-3/4".

Type 2: The length of the Link on the 63 10 is 7-7/8". The length of the Link on the 63 80 is 6-15/16".

Copyright 1963 American Motors Corp.

GROUP NO. — DESCRIPTION — YEAR and MODEL	PRIMARY GROUP NO.	PER CAR	PART NO.	CODE
ROD, Clutch Inner Lever Or Beam To Throwout Lever				
61 Thru 63 01 (RHD)	.....	1	316 2222	
63 10 (LES–Note 5.187–1 Type 1)	.....	1	316 7591	
63 10 (LES–Note 5.187–1 Type 2)	.....	1	317 0538	
63 80 (Note 5.187–1 Type 1)	.....	1	316 7633	
63 80 (Note 5.187–1 Type 2): 64–65 10–80 (V8)	.....	1	317 0880	
ATTACHING PARTS				
Rod To Throwout Lever				
NUT ***61 Thru 63 01 (RHD)***	.....	1	312 9671	
NUT, Hexagon ***61 Thru 63 01 (RHD)***	17.406	1	G120368	
Rod To End				
NUT, Hexagon 60 01–10: 61 Thru 64 01 (LHD): 61 10 (LHD): 63–64 10 (LHD): 62 10: 60–61 20: 60 Thru 64 80	17.406	1	G120369	NA
END, Clutch Inner Lever Rod				
60 01	.....	1	312 2695	
61 Thru 63 01 (LHD): 63 10 (LHD): 65 10 (Six): 60 Thru 62 10–20: 60 Thru 65				
61 Thru 63 01 (LHD): 65 01: 63 10 (LHD): 65 10 (Six): 60 Thru 62 10–20: 60 Thru 65 10 (V8): 60 Thru 64 80 (V8): 65 80	.....	1	314 5456	
SEAL, Clutch Inner Lever Rod End				
60 01: 61 Thru 64 01 (LHD): 65 01: 60 Thru 64 10 (LHD): 60–61 20–80: 62–63 80 (LHD): 65 10: 64–65 80: ***60 Thru 62 10 (RHD): 63 01 (RHD)***	5.160	2	313 0998	
ATTACHING PARTS				
Seal To End				
WASHER, Plain 60 01: 61 Thru 63 01 (LHD): 60 Thru 63 10 (LHD): 60–61 20–80: 62 Thru 64 80 (LHD): ***60 Thru 62 10 (RHD): 63 01 (RHD):*** 65 10–80 ***(Replaces 800 0163)***	17.814	2	400 1102	
PIN, Cotter ***62-63 10 (RHD)***	17.460	1	G103373	NA
CLIP, Seal End				
64 01 (LES): 63–64 10–80: 65 01: 65 10 (Six)	5.160	3	316 7609	
5.190 SPRING, Clutch Throwout Lever				
60 01: ***61 01 (RHD): 63 01 (RHD)***	5.150	2	312 8205	
60–61 10 (LHD): 61 Thru 63 01 (LHD): 62 10: 63 80 (LHD–Note 5.187–1 Type 1): ***63 10 (RHD)***	5.150	1	314 6472	
60-61 10 (RHD)	.....	1	312 3558	
60 Thru 62 10 (WST-Heavy Duty-Note 5.001-1): 60–61 20: 60 Thru 62 80: 63 10 (Note 5.187–1 Type 2): 64 01–10 (LES): 65 01–10: 64–65 80	.....	1	314 5435	
ANCHOR, Clutch Throwout Lever Spring				
62–63 01 (LES): 60 Thru 62 10 (LHD–LES) ***(Replaces 315 0476)***	.....	1	315 9821	
64–65 01 (LHE): ***60 Thru 62 10 (WST-Heavy Duty-Note 5.001-1):*** 60–61 20–80: 63–64 10–80 (WST)(WOD): 65 10–80 (V8): 65 18–88 (W3S)	.....	1	314 5919	
5.250 NIPPLE, E-Stick Intake Manifold				
62 01 (WES–OHV–Note 5.270–1 Type 1)	.....	1	316 3718	

Copyright 1963 American Motors Corp.

GROUP NO. — DESCRIPTION — YEAR and MODEL	PRIMARY GROUP NO.	PER CAR	PART NO.	CODE
ADAPTER, E-Stick Intake Manifold				
62 01 (WES-LHE-Note 5.270-1 Type 1)	.....	1	316 3716	
BUSHING, E-Stick Intake Manifold				
63 01 (WES-LHE) ***(Replaces G119922)***	17.086	1	G141539	
62 01 (WES-Note 5.270-1 Type 2): 63 01-10 (WES-OHV)	17.086	1	G119923	
ELBOW, E-Stick Intake Manifold				
62 01 (WES-Note 5.270-1 Type 2): 63 01-10 (WES-Note 5.270-2 Type 1)	17.218	1	G137421	
TEE, E-Stick Intake Manifold Adapter				
63 01-10 (WES-Note 5.270-2 Type 2): 64 01-10 (WES)	.....	1	316 9443	
5.255 TUBE, E-Stick Vacuum Hose				
62 01 (LHE-WES-Note 5.270-1 Type 1) ***(Replaces 316 3717)***	.....	1	316 5969	
62 01 (LHE-WES-Note 5.270-1 Type 2)	.....	1	316 5728	
63 01 (LHE-WES-Note 5.270-2 Type 1)	.....	1	316 7520	
63 01 (LHE-WES-Note 5.270-2 Type 2): 64 01 (LHE)	.....	1	316 9424	
62 01 (OHV-WES-Note 5.270-1 Type 2): 63 01-10 (OHV-WES-Note 5.270-2 Type 1)	.....	1	316 5771	
63 01-10 (OHVC-WES-Note 5.270-2 Type 2): 64 01-10 (OHV)	.....	1	316 9427	
CLIP, E-Stick Vacuum Hose				
63-64 01-10 (WES)	.....	2	316 9437	
5.260 HOSE, Vacuum				
62 01 (WES-Note 5.270-2 Type 1): 63 01-10 (WES): 64 01-10 (WES)	.....	AR	320 3440	
62 01 (WES-Note 5.270-1 Type 2)	.....	1	316 5712	
CLAMP, E-Stick Vacuum Hose				
62-63 01 (WES): 63 10 (WES)	17.108	AR	G272841	
64 01-10 (WES)	.....	4	317 3299	
62 01 (WES-Note 5.270-1 Type 2) (2 Req.): 63 01-10 (WES)	17.108	4	320 3076	
62 01 (WES-OHV-Note 5.270-1 Type 1)	.....	1	316 4057	
62 01 (WES-OHV-Note 5.270-1 Type 2): 63 01-10 (WES-OHV-Note 5.270-2 Type 1)	3.022	1	313 0379	
ATTACHING PARTS				
Clamp To Hose				
BOLT, Hexagon ..... 62-63 01 (WES-LAC): 63 10 (WES-LAC)	17.038	1	G179835	NA
WASHER, Lock ..... 62-63 01 (WES-LAC): 63 10 (WES-LAC)	17.820	1	G120382	NA
5.265 TEE, E-Stick Vacuum Hose				
62 01 (WES-Note 5.270-1 Type 1)	.....	1	316 3719	
5.270 SOLENOID, E-Stick Air Valve				
62 01 (WES): 63 01-10 (WES-Note 5.270-2 Type 1) ***(Replaces 316 3650)***	.....	1	316 5714	
63 01-10 (WES-Note 5.270-2 Type 2): 64 01-10	.....	1	316 9433	

NOTE 5.270-2: Two types of Hose routings were used on 63 01-10 (WES).
Type 1: The Vacuum side of the Solenoid is routed directly to the Cylinder Head.
Type 2: The Vacuum side of the Solenoid is routed to the Fuel Pump.

Copyright 1963 American Motors Corp.

GROUP NO. — DESCRIPTION — YEAR and MODEL	PRIMARY GROUP NO.	PER CAR	PART NO.	CODE
ATTACHING PARTS				
Solenoid To Engine				
WASHER, Plain..... 62 01 (WES) .....*(Replaces 800 0153)*	17.814	1	400 1093	
WASHER, Plain..... 63-64 01-10 (WES)	17.814	1	G120214	NA
NUT, Hexagon..... 62 Thru 64 01 (WES): 63-64 10 (WES)	17.406	1	G120368	
HOSE, Air Valve Solenoid (Bulk)				
63 01-10 (WES-Note 5.270-2 Type 1): 64 01-10 (SIX).....	4.141	AR	320 3865	
63-64 01-10 (WES-Note 5.270-2 Type 2).....	22.050	AR	320 2249	
5.280 DIAPHRAGM ASSEMBLY, E-Stick				
62 01 (WES): 63 01-10 (WES-Note 5.270-2 Type 1).....	.....	1	320 3398	
63-64 01-10 (WES-Note 5.270-2 Type 2).....	.....	1	320 4397	
ATTACHING PARTS				
Diaphragm To Valve Body				
SCREW ..... 62 Thru 64 01: (WES): 63-64 10 (WES).....	.....	2	320 3399	
GASKET ..... 62 Thru 64 01: (WES): 63-64 10 (WES).....	.....	1	320 3422	
TUBE, Diaphragm Assembly (Incl. Nut)				
62 01 (WES): 63 01-10 (WES-Note 5.270-2 Type 1).....	.....	1	320 3771	
63-64 01-10 (WES-Note 5.270-2 Type 2).....	.....	1	320 4398	
5.285 VALVE ASSEMBLY, E-Stick Pressure Regulator (Incl. Gasket)				
62 01 (WES): 63 01-10 (WES-Note 5.270-2 Type 1).....	.....	1	320 3423	
63 01-10 (WES-Note 5.270-2 Type 2): 64 01-10.....	.....	1	320 4396	
5.290 BODY ASSEMBLY, E-Stick Valve (Incl. Gasket, Pipe, Plug And Valve)				
62 01: 63 01-10 (WES-OHVC-Note 5.270-2 Type 1): 64 01-10.....*(Replaces 320 3424)*	.....	1	320 3702	
63 01-10 (WES-Note 5.270-2 Type 2).....	.....	1	320 4395	
ATTACHING PARTS				
Valve Body To Oil Pump				
SCREW ..... 62 Thru 64 01 (WES): 63 10 (WES).....	1.155	3	316 3714	
WASHER, Lock..... 62 Thru 64 01 (WES): 63 10 (WES).....	17.820	3	G103320	NA
WASHER, Plain..... 62 Thru 64 01 (WES): 63 10 (WES).....	1.155	3	316 5761	
GASKET, E-Stick Valve Body Assembly (To Oil Pump)				
62 Thru 64 01 (WES): 63-64 10 (WES-OHVC).....	.....	1	316 3713	
PLUG, E-Stick Valve Body Assembly Pipe				
62 01 (WES)	.....	1	320 3142	
5.295 HOSE, E-Stick Valve Body To Check Valve				
62 01 (WES)	.....	1	316 3685	
63-64 01-10 (WES)	.....	1	316 8141	
CLAMP, E-Stick Valve Body To Check Valve Hose				
62 Thru 64 01 (WES): 63-64 10 (WES).....	.....	2	320 3076	
5.296 TEE, E-Stick Solenoid To Vacuum Hose				
63-64 01: 63 10: 64 10 (WVW)	.....	1	316 9426	

Copyright 1963 American Motors Corp.

GROUP NO. — DESCRIPTION — YEAR and MODEL	PRIMARY GROUP NO.	PER CAR	PART NO.	CODE
HOSE, Solenoid To Vacuum				
63-64 01-10 (WES)	22.050	AR	320 2250	
CLAMP, Solenoid To Vacuum Hose				
63-64 01-10 (WES)	17.108	2	G272844	
5.300 SERVO ASSEMBLY, E-Stick (Incl. Check Valve)				
62 01 (WES)		1	316 3649	
63 01 (WES)		1	316 7214	
64 01 (WES...Incl. Self Adjuster): 63-64 10 (WES...Incl. Self Adjuster)		1	316 7191	
ATTACHING PARTS Servo To Block				
WASHER, Lock ..... 62 Thru 64 01 (WES): 63-64 10 (WES)	17.820	1	G120384	NA
NUT, Hexagon ..... 62 Thru 64 01 (WES): 63-64 10 (WES)	17.406	1	G120371	NA
5.302 ADJUSTER, E-Stick Servo Self				
63-64 01-10 (WES)		1	316 7824	
5.305 Cover, E-Stick Check Valve				
62 Thru 64 01 (WES): 63-64 10 (WES)		1	320 3428	
ATTACHING PARTS Cover To Body				
SCREW ..... 62 Thru 64 01 (WES): 63-64 10 (WES)		3	320 3430	
DISC, E-Stick Check Valve				
62 01 (WES)		1	320 3431	
GASKET, E-Stick Check Valve Cover				
62 Thru 64 01 (WES): 63-64 10 (WES)		1	320 3429	
5.310 BODY, E-Stick Servo				
62 01 (WES)		1	320 3432	
63-64 01-10 (WES)		1	320 4055	
COVER, E-Stick Servo Body				
62 Thru 64 01 (WES): 63-64 10 (WES)		1	320 3433	
ATTACHING PARTS Cover To Body				
SCREW ..... 62 Thru 64 01 (WES): 63-64 10 (WES)		4	320 3434	
5.315 PISTON ASSEMBLY, E-Stick Servo (Incl. Seal)				
62 01 (WES)		1	320 3435	
63-64 01 (WES)		1	320 4056	
63-64 10 (WES)		1	320 4057	
SEAL, E-Stick Servo Piston Assembly				
62 Thru 64 01 (WES): 63-64 10 (WES)		1	320 3436	
SPRING, E-Stick Servo Piston Assembly				
62 01 (WES)		1	320 3437	
63-64 01-10 (WES)		1	316 7846	

Copyright 1963 American Motors Corp.

GROUP NO. — DESCRIPTION — YEAR and MODEL		PRIMARY GROUP NO.	PER CAR	PART NO.	CODE
5.335 PIVOT, E-Stick Actuator Cam					
62 Thru 64 01 (WES): 63-64 10 (WES)		.....	1	320 4664	
SPRING, E-Stick Actuator Cam Pivot Compression					
62 Thru 64 01 (WES): 63-64 10 (WES)		.....	1	320 3454	
GUIDE, E-Stick Actuator Cam Pivot Spring					
62 Thru 64 01 (WES): 63-64 10 (WES)		.....	1	320 4665	
RETAINER, E-Stick Actuator Cam Pivot Spring					
62 Thru 64 01 (WES): 63-64 10 (WES)		.....	1	320 3452	
ATTACHING PARTS Retainer To Pivot					
WASHER, Lock	62 Thru 64 01 (WES): 63-64 10 (WES)	17.820	1	G118873	NA
5.340 BRACKET, E-Stick Spring Hold Down					
62 Thru 64 01 (WES): 63-64 10 (WES)		.....	1	320 4663	
ATTACHING PARTS Spring Hold Down Bracket To Cam Stop Bracket					
SCREW, Tapping.....	62 Thru 64 01 (WES): 63-64 10 (WES)	17.671	2	G274105	NA
5.350 LEVER ASSEMBLY, Tow Start (Incl. Handle)					
62 01 (WES-Note 5.350-1 Type 2): 63 01 (WES): 63-64 10 (WES)		.....	1	316 6375	
64 01 (WES)		.....	1	317 1798	
ATTACHING PARTS Lever To Dash Brace					
STUD.....	62 01 (WES-Note 5.350-1 Type 2): 63-64 01-10 (WES)	.....	1	316 6380	
PIN, To Stud	62 01 (WES-Note 5.350-1 Type 2): 63-64 01-10 (WES)	8.180	1	313 4717	
WASHER, Plain.....	62 01 (WES-Note 5.350-1 Type 2): 63-64 01 (WES)	17.814	1	G120394	NA
WASHER, Plain.....	63-64 10 (WES)	17.826	1	G178532	NA
WASHER, Lock	62 01 (WES-Note 5.350-1 Type 2): 63-64 01-10 (WES)	17.822	1	G120382	NA
NUT, Hexagon.....	62 01 (WES-Note 5.350-1 Type 2): 63-64 01-10 (WES)	17.406	1	G120369	NA
CLIP	62 01 (WES-Note 5.350-1 Type 2): 63-64 01-10 (WES)	8.192	1	313 0165	
BRACE, Tow Start Mounting					
64 01 (WES)		.....	1	317 2099	
ATTACHING PARTS Brace To Dash					
BOLT, Hexagon	64 01 (WES)	17.038	1	G181003	NA
NUT, Hexagon.....	64 01 (WES)	17.406	1	G120367	
WASHER, Lock	64 01 (WES)	17.820	1	G120380	NA
WASHER, Plain.....	64 01 (WES)	17.814	1	G446188	NA

NOTE 5.350-1: Two types of Tow Start Linkage were used on the 62 01 (WES) Series. They can be identified by the printing on the Handle as follows:
Type 1: Shift in Gear, Pull and Rotate to Park.
Type 2: Shift in Gear, Pull to Park.

Copyright 1963 American Motors Corp.

GROUP NO. — DESCRIPTION — YEAR and MODEL	PRIMARY GROUP NO.	PER CAR	PART NO.	CODE
HOSE, Solenoid To Vacuum				
63-64 01-10 (WES)	22.050	AR	320 2250	
CLAMP, Solenoid To Vacuum Hose				
63-64 01-10 (WES)	17.108	2	G272844	
5.300 SERVO ASSEMBLY, E-Stick (Incl. Check Valve)				
62 01 (WES)	.....	1	316 3649	
63 01 (WES)	.....	1	316 7214	
64 01 (WES...Incl. Self Adjuster): 63-64 10 (WES...Incl. Self Adjuster)	.....	1	316 7191	
ATTACHING PARTS Servo To Block				
WASHER, Lock ..... 62 Thru 64 01 (WES): 63-64 10 (WES)	17.820	1	G120384	NA
NUT, Hexagon ..... 62 Thru 64 01 (WES): 63-64 10 (WES)	17.406	1	G120371	NA
5.302 ADJUSTER, E-Stick Servo Self				
63-64 01-10 (WES)	.....	1	316 7824	
5.305 Cover, E-Stick Check Valve				
62 Thru 64 01 (WES): 63-64 10 (WES)	.....	1	320 3428	
ATTACHING PARTS Cover To Body				
SCREW ..... 62 Thru 64 01 (WES): 63-64 10 (WES)	.....	3	320 3430	
DISC, E-Stick Check Valve				
62 01 (WES)	.....	1	320 3431	
GASKET, E-Stick Check Valve Cover				
62 Thru 64 01 (WES): 63-64 10 (WES)	.....	1	320 3429	
5.310 BODY, E-Stick Servo				
62 01 (WES)	.....	1	320 3432	
63-64 01-10 (WES)	.....	1	320 4055	
COVER, E-Stick Servo Body				
62 Thru 64 01 (WES): 63-64 10 (WES)	.....	1	320 3433	
ATTACHING PARTS Cover To Body				
SCREW ..... 62 Thru 64 01 (WES): 63-64 10 (WES)	.....	4	320 3434	
5.315 PISTON ASSEMBLY, E-Stick Servo (Incl. Seal)				
62 01 (WES)	.....	1	320 3435	
63-64 01 (WES)	.....	1	320 4056	
63-64 10 (WES)	.....	1	320 4057	
SEAL, E-Stick Servo Piston Assembly				
62 Thru 64 01 (WES): 63-64 10 (WES)	.....	1	320 3436	
SPRING, E-Stick Servo Piston Assembly				
62 01 (WES)	.....	1	320 3437	
63-64 01-10 (WES)	.....	1	316 7846	

Copyright 1963 American Motors Corp.

GROUP NO. — DESCRIPTION — YEAR and MODEL	PRIMARY GROUP NO.	PER CAR	PART NO.	CODE
WASHER KIT (Incl. 3 Washers)				
63-64 01-10 (WES)	.....	1	316 7845	
ATTACHING PARTS				
To Piston Assembly				
WASHER ..... 62 01 (WES)	.....	1	320 3438	
WASHER, Felt ..... 62 01 (WES)	.....	1	320 3439	
5.325 CAM, E-Stick Actuator				
62 Thru 64 01 (WES): 63-64 10 (WES)	.....	1	320 3449	
PLATE, E-Stick Actuator Cam Locking				
62 Thru 64 01 (WES): 63-64 10 (WES)	.....	1	320 3572	
ATTACHING PARTS				
Plate To Cam				
SCREW ..... 62 Thru 64 01 (WES): 63-64 10 (WES)	.....	2	320 3450	
5.327 STOP, E-Stick Actuator Cam				
62 01 (WES)	.....	1	320 3618	
63-64 01-10 (WES)	.....	1	320 4371	
BRACKET, E-Stick Actuator Cam Stop				
62 01 (WES)	.....	1	320 3619	
63-64 01-10 (WES)	.....	1	320 4372	
ATTACHING PARTS				
Bracket To Steering Column				
SCREW, Tapping ..... 63-64 01-10 (WES)	17.671	1	G274105	NA
Bracket To Cam Stop				
NUT ..... 62 01 (WES)	.....	1	320 3621	
SPRING, E-Stick Actuator Cam Stop				
62 01 (WES)	.....	1	320 3620	
5.330 SWITCH, E-Stick Actuator Cam				
62 Thru 64 01 (WES): 63-64 10 (WES)	.....	1	320 3448	
BRACKET, E-Stick Actuator Cam				
62 Thru 64 01 (WES): 63-64 10 (WES)	.....	1	320 3221	
ATTACHING PARTS				
Bracket To Tube				
SCREW ..... 62 Thru 64 01 (WES): 63-64 10 (WES)	.....	2	320 3522	
Bracket To Switch				
SCREW ..... 62 Thru 64 01 (WES): 63-64 10 (WES)	.....	2	320 3406	
NUT, Speed ..... 62 Thru 64 01 (WES): 63-64 10 (WES)	.....	1	320 3508	
WIRE, E-Stick Actuator Cam Switch Ground				
62 Thru 64 01 (WES): 63-64 10 (WES)	.....	1	320 3456	
5.333 GUIDE KIT, E-Stick Actuator Cam				
63-64 01-10 (WES)	.....	1	320 4661	

Copyright 1963 American Motors Corp.

GROUP NO. — DESCRIPTION — YEAR and MODEL		PRIMARY GROUP NO.	PER CAR	PART NO.	CODE
5.335 PIVOT, E-Stick Actuator Cam					
62 Thru 64 01 (WES): 63-64 10 (WES)		.....	1	320 4664	
SPRING, E-Stick Actuator Cam Pivot Compression					
62 Thru 64 01 (WES): 63-64 10 (WES)		.....	1	320 3454	
GUIDE, E-Stick Actuator Cam Pivot Spring					
62 Thru 64 01 (WES): 63-64 10 (WES)		.....	1	320 4665	
RETAINER, E-Stick Actuator Cam Pivot Spring					
62 Thru 64 01 (WES): 63-64 10 (WES)		.....	1	320 3452	
ATTACHING PARTS Retainer To Pivot					
WASHER, Lock	62 Thru 64 01 (WES): 63-64 10 (WES)	17.820	1	G118873	NA
5.340 BRACKET, E-Stick Spring Hold Down					
62 Thru 64 01 (WES): 63-64 10 (WES)		.....	1	320 4663	
ATTACHING PARTS Spring Hold Down Bracket To Cam Stop Bracket					
SCREW, Tapping.....	62 Thru 64 01 (WES): 63-64 10 (WES)	17.671	2	G274105	NA
5.350 LEVER ASSEMBLY, Tow Start (Incl. Handle)					
62 01 (WES-Note 5.350-1 Type 2): 63 01 (WES): 63-64 10 (WES)		.....	1	316 6375	
64 01 (WES)		.....	1	317 1798	
ATTACHING PARTS Lever To Dash Brace					
STUD.....	62 01 (WES-Note 5.350-1 Type 2): 63-64 01-10 (WES)	.....	1	316 6380	
PIN, To Stud	62 01 (WES-Note 5.350-1 Type 2): 63-64 01-10 (WES)	8.180	1	313 4717	
WASHER, Plain.....	62 01 (WES-Note 5.350-1 Type 2): 63-64 01 (WES)	17.814	1	G120394	NA
WASHER, Plain.....	63-64 10 (WES)	17.826	1	G178532	NA
WASHER, Lock	62 01 (WES-Note 5.350-1 Type 2): 63-64 01-10 (WES)	17.822	1	G120382	NA
NUT, Hexagon.....	62 01 (WES-Note 5.350-1 Type 2): 63-64 01-10 (WES)	17.406	1	G120369	NA
CLIP	62 01 (WES-Note 5.350-1 Type 2): 63-64 01-10 (WES)	8.192	1	313 0165	
BRACE, Tow Start Mounting					
64 01 (WES)		.....	1	317 2099	
ATTACHING PARTS Brace To Dash					
BOLT, Hexagon	64 01 (WES)	17.038	1	G181003	NA
NUT, Hexagon.....	64 01 (WES)	17.406	1	G120367	
WASHER, Lock	64 01 (WES)	17.820	1	G120380	NA
WASHER, Plain.....	64 01 (WES)	17.814	1	G446188	NA

NOTE 5.350-1: Two types of Tow Start Linkage were used on the 62 01 (WES) Series. They can be identified by the printing on the Handle as follows:
Type 1: Shift in Gear, Pull and Rotate to Park.
Type 2: Shift in Gear, Pull to Park.

Copyright 1963 American Motors Corp.

GROUP NO. — DESCRIPTION — YEAR and MODEL	PRIMARY GROUP NO.	PER CAR	PART NO.	CODE
Brace To Instrument Panel				
SCREW, Machine..... 64 01 (WES)	17.610	1	G157728	NA
NUT, Hexagon..... 64 01 (WES)	17.412	1	G271172	
WASHER, Plain..... 64 01 (WES)	17.814	1	G120392	NA
HANDLE, Tow Start Lever Assembly				
62 01 (WES–Note 5.350–1 Type 2): 63 01 (WES): 63–64 10 (WES)	.....	1	316 6798	
CONTROL ASSEMBLY, Tow Start (Incl. Lock, Washer And Nut)				
62 01 (WES–Note 5.350–1 Type 1)	.....	1	316 3739	
ATTACHING PARTS				
Control To Dash Brace				
WASHER, Lock..... 62 01 (WES–Note 5.350–1 Type 1)	17.822	1	G138502	NA
NUT, Jam..... 62 01 (WES–Note 5.350–1 Type 1)	17.410	1	G124944	NA
5.355 BRACKET, Tow Start Control Mounting				
62 01 (WES–Note 5.350–1 Type 1)	.....	1	316 3740	
63–64 10 (WES)	.....	1	316 7490	
ATTACHING PARTS				
Bracket To Body				
NUT, Lock..... 62 01 (WES–Note 5.350–1 Type 1)	17.416	1	G442828	NA
NUT, Hexagon..... 63–64 10 (WES)	17.046	1	G120368	
WASHER, Bite..... 62 01 (WES–Note 5.350–1 Type 1)	10.003	1	310 8995	
WASHER, Lock..... 63–64 10 (WES)	17.820	1	G120214	NA
SCREW, Hexagon..... 63–64 10 (WES)	17.038	1	G181595	NA
PLATE, Tow Start Control Mounting Bracket				
63–64 10 (WES)	.....	1	316 7491	
ATTACHING PARTS				
Plate To Bracket				
SCREW, Machine..... 63–64 10 (WES)	17.598	2	G160536	NA
NUT, Hexagon..... 63–64 10 (WES)	17.406	2	G120375	
WASHER, Lock..... 63–64 10 (WES)	17.820	2	G120380	NA
5.360 ANCHOR, Tow Start Control To Upper Lever				
62 01 (WES–Note 5.350–1 Type 1)	.....	1	316 3745	
ATTACHING PARTS				
Anchor To Control				
NUT, Hexagon..... 62 01 (WES–Note 5.350–1 Type 1)	17.412	1	G120614	NA
5.365 LEVER, Tow Start Upper				
62 01 (WES–Note 5.350–1 Type 1)	.....	1	316 3741	
ATTACHING PARTS				
Lever To Anchor				
WASHER, Plain..... 62 01 (WES–Note 5.350–1 Type 1).....*(Replaces 800 0145)*	17.814	1	400 1085	
WASHER, Lock..... 62 01 (WES–Note 5.350–1 Type 1)	17.820	1	G120380	NA
NUT, Jam..... 62 01 (WES–Note 5.350–1 Type 1)	17.410	1	G120613	NA
Lever To Pedal Shaft				
WASHER, Plain..... 62 01 (WES–Note 5.350–1 Type 1).....*(Replaces 800 0441)*	17.814	1	400 1163	
SPRING..... 62 01 (WES–Note 5.350–1 Type 1)	17.710	1	G148149	

Copyright 1963 American Motors Corp.

GROUP NO. — DESCRIPTION — YEAR and MODEL		PRIMARY GROUP NO.	PER CAR	PART NO.	CODE
BUSHING, Tow Start Upper Lever					
62 01 (WES-Note 5.350-1 Type 1)		5.135	1	314 5488	
5.370 CABLE, Tow Start					
62 01 (WES-Note 5.350-1 Type 1)		.....	1	316 3747	
62 01 (WES-Note 5.350-1 Type 2): 63 01-10 (WES): 64 10 (WES)		.....	1	316 6362	
64 01 (WES)		.....	1	317 2169	
ATTACHING PARTS					
Cable To Upper Lever					
BOLT	62 01 (WES-Note 5.350-1 Type 1)	.....	1	316 3749	
WASHER, Lock	62 01 (WES-Note 5.350-1 Type 1)	17.820	1	G120380	NA
NUT, Jam	62 01 (WES-Note 5.350-1 Type 1)	17.410	1	G120613	NA
GROMMET	62 01 (WES-Note 5.350-1 Type 1)	22.018	1	438 8864	
Cable To Bracket					
WASHER, Lock	62 01 (WES-Note 5.350-1 Type 1)	17.820	1	G120214	NA
NUT, Jam	62 01 (WES-Note 5.350-1 Type 1)	17.410	1	G124920	NA
Cable To Lower Lever					
PIN, Clevis	62 01 (WES-Note 5.350-1 Type 2): 64 01-10 (WES)	.....	1	316 6365	
PIN, Cotter	62 01 (WES-Note 5.350-1 Type 2): 63-64 01-10 (WES)	17.460	1	G103361	NA
WASHER, Plain	62 01 (WES-Note 5.350-1 Type 2): 63-64 01-10 (WES)	17.814	1	G120392	NA
GROMMET	62 01 (WES-Note 5.350-1 Type 2): 63 01 (WES)	15.030	1	313 5435	
GROMMET	64 01 (WES)	22.018	1	438 8864	
GROMMET	63-64 10 (WES)	3.166	1	312 7192	
Cable To Bracket					
WASHER, Lock	63-64 01 (WES)	17.820	1	G120214	NA
NUT, Jam	63-64 01-10 (WES)	17.410	1	G124920	NA
Cable To Front Crossmember					
CLIP	63-64 01-10 (WES)	4.160	3	15 708	
SCREW, Tapping	(WES) 63-64 01-10	17.670	1	G445656	NA
SCREW, Tapping	64 01 (WES)	17.671	3	G9414012	NA
BOOT, Tow Start Cable To Trunnion					
62 01 (WES-Note 5.350-1 Type 1)		8.192	1	313 0356	
62 01 (WES-Note 5.350-1 Type 2): 63-64 01-10 (WES)		5.370	1	316 6363	
CLEVIS, Tow Start Cable					
62 01 (WES-Note 5.350-1 Type 2): 63-64 01-10 (WES)		.....	1	316 7345	
BRACKET, Tow Start Cable					
62-63 01 (WES-OHV)		13.440	1	315 8227	
ATTACHING PARTS					
Bracket To Oil Pan					
STUD	62 Thru 64 01 (WES-OHV): 63-64 10 (WES-OHV)	5.178	1	312 2698	
CLIP	62-63 01 (WES-OHV)	4.152	1	47 272	
WASHER, Lock	62-63 01 (WES-OHV)	17.820	1	G120214	NA
NUT, Hexagon	62-63 01 (WES-OHV)	17.406	1	G120368	NA
5.375 BRACKET, Tow Start Cable Support					
62 01 (WES-Note 5.350-1 Type 1)	***(Replaces 348 9413)***	.....	1	316 5940	

Copyright 1963 American Motors Corp.

GROUP NO. — DESCRIPTION — YEAR and MODEL	PRIMARY GROUP NO.	PER CAR	PART NO.	CODE
ATTACHING PARTS				
Bracket To Body				
SCREW, Tapping..... 62 01 (WES-Note 5.350-1 Type 1).....*(Replaces 800 0095)*	17.671	2	G456766	
5.380 TRUNNION, Tow Start Cable To Lever				
62 01 (WES-Note 5.350-1 Type 1).....	.....	1	316 3746	
ATTACHING PARTS				
Trunnion To Lever				
SCREW ..... 62 01 (WES-Note 5.350-1 Type 1).....	7.255	1	315 4031	
5.385 LEVER, Tow Start Cable Lower				
62 01 (WES-Note 5.350-1 Type 1).....	.....	1	316 3750	
62 01 (WES-Note 5.350-1 Type 2): 63 01 (WES).....	.....	1	316 6364	
64 01 (WES): 63-64 10 (WES).....	.....	1	316 7488	
ATTACHING PARTS				
Lever To Servo And Cable Bracket Pivot				
WASHER, Plain..... 62 Thru 64 01 (WES): 63-64 10 (WES).....	17.814	1	G120393	NA
PIN, Cotter ..... 62 Thru 64 01 (WES): 63-64 10 (WES).....	17.460	1	G103373	NA
5.390 BRACKET, Tow Start Cable Lower Lever Mounting				
62 01 (WES-Note 5.350-1 Type 1).....	.....	1	316 3751	
62 01 (WES-Note 5.350-1 Type 2): 63 01 (WES).....	.....	1	316 6373	
ATTACHING PARTS				
Bracket To Steering Column				
BOLT, Hexagon ..... 62-63 01 (WES).....	17.038	1	G186307	NA
WASHER, Lock..... 62-63 01 (WES).....	17.820	1	G120382	NA
NUT, Hexagon..... 62-63 01 (WES).....	17.406	1	G120369	NA
5.395 LINK, Clutch Throwout Lever				
62 Thru 64 01 (WES).....	.....	1	316 3759	
63-64 10 (WES).....	.....	1	316 7492	
ATTACHING PARTS				
Link To Lever				
WASHER, Plain..... 62 Thru 64 01 (WES): 63-64 10 (WES).....	17.814	1	G120392	NA
PIN, Cotter ..... 62 Thru 64 01 (WES): 63-64 10 (WES).....	17.460	1	G103361	NA
Link To Extension				
NUT, Jam..... 62 Thru 64 01 (WES): 63-64 10 (WES).....	17.410	1	G120613	NA
EXTENSION, Clutch Throwout Lever Link				
62 Thru 64 01 (WES): 63-64 10 (WES).....	.....	1	316 3758	

Copyright 1963 American Motors Corp.

TRANSMISSION 60 thru 63 01 (WST)

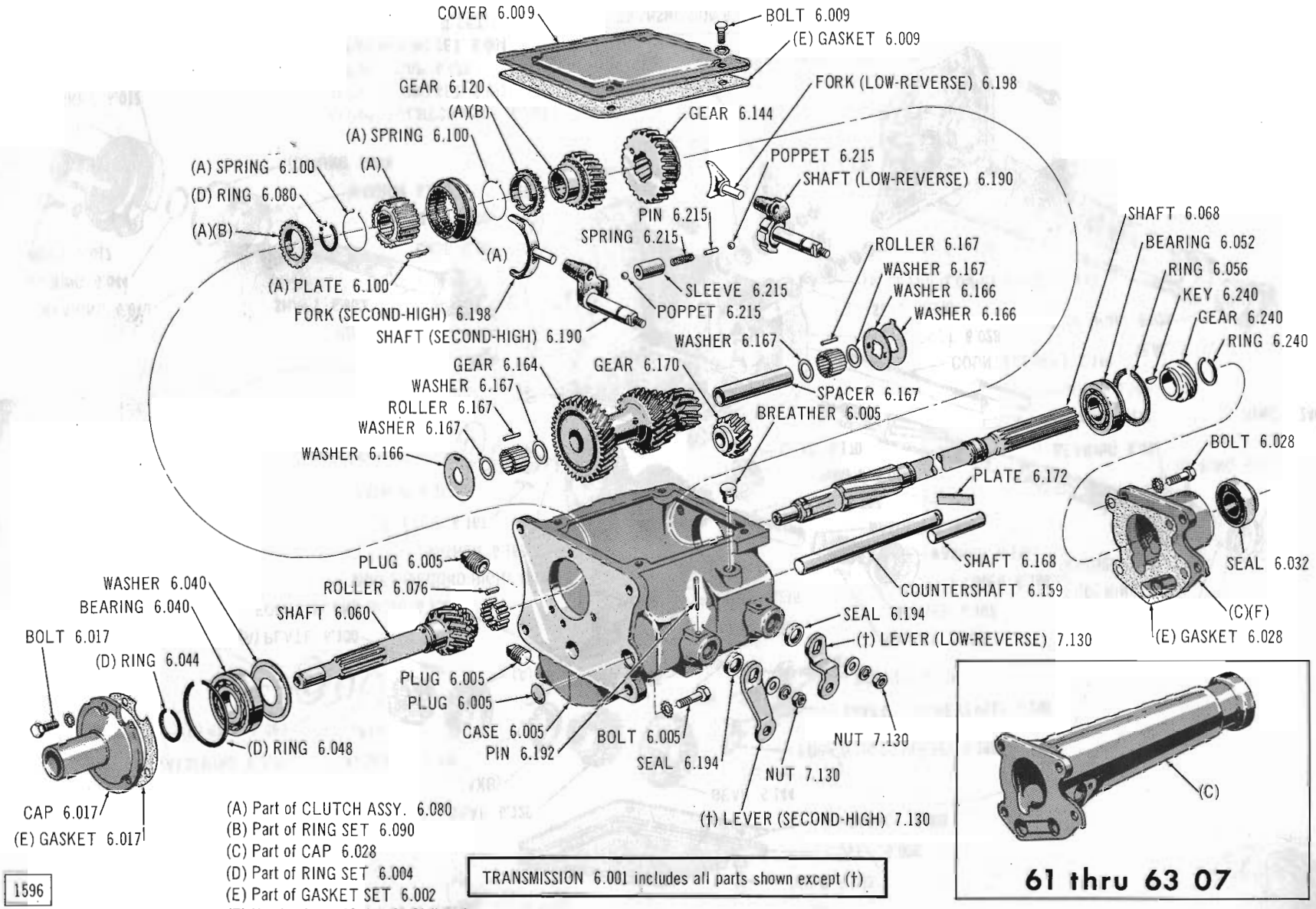

(A) Part of CLUTCH ASSY. 6.080
(B) Part of RING SET 6.090
(C) Part of CAP 6.028
(D) Part of RING SET 6.004
(E) Part of GASKET SET 6.002
(F) Used only on 60 thru 63 01 (LCV)

TRANSMISSION 6.001 includes all parts shown except (†)

61 thru 63 07

1596

Copyright 1963 American Motors Corp.

Printed in U.S.A.

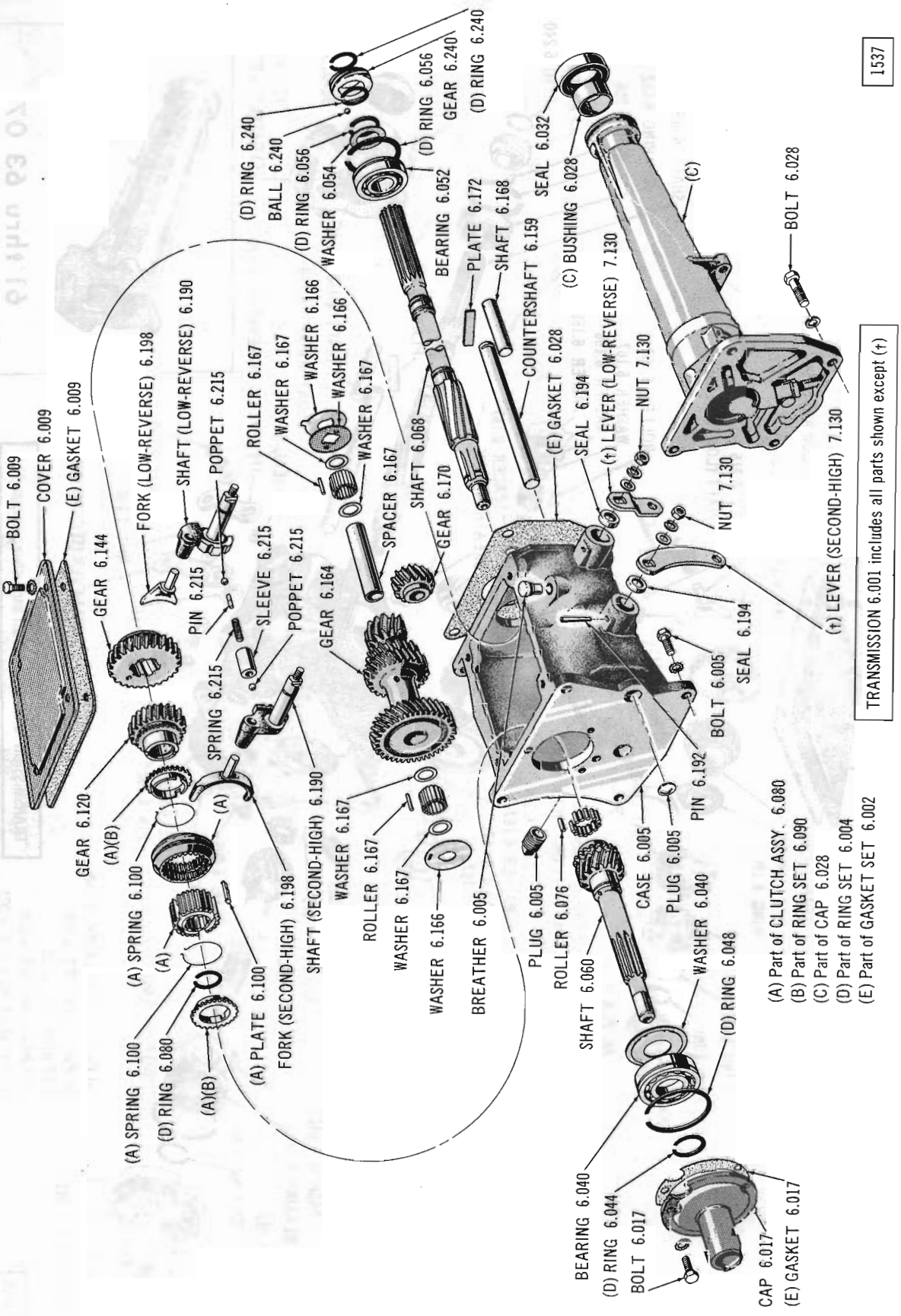

TRANSMISSION 64-65 01 (WST)

Copyright 1963 American Motors Corp.



Copyright 1963 American Motors Corp.

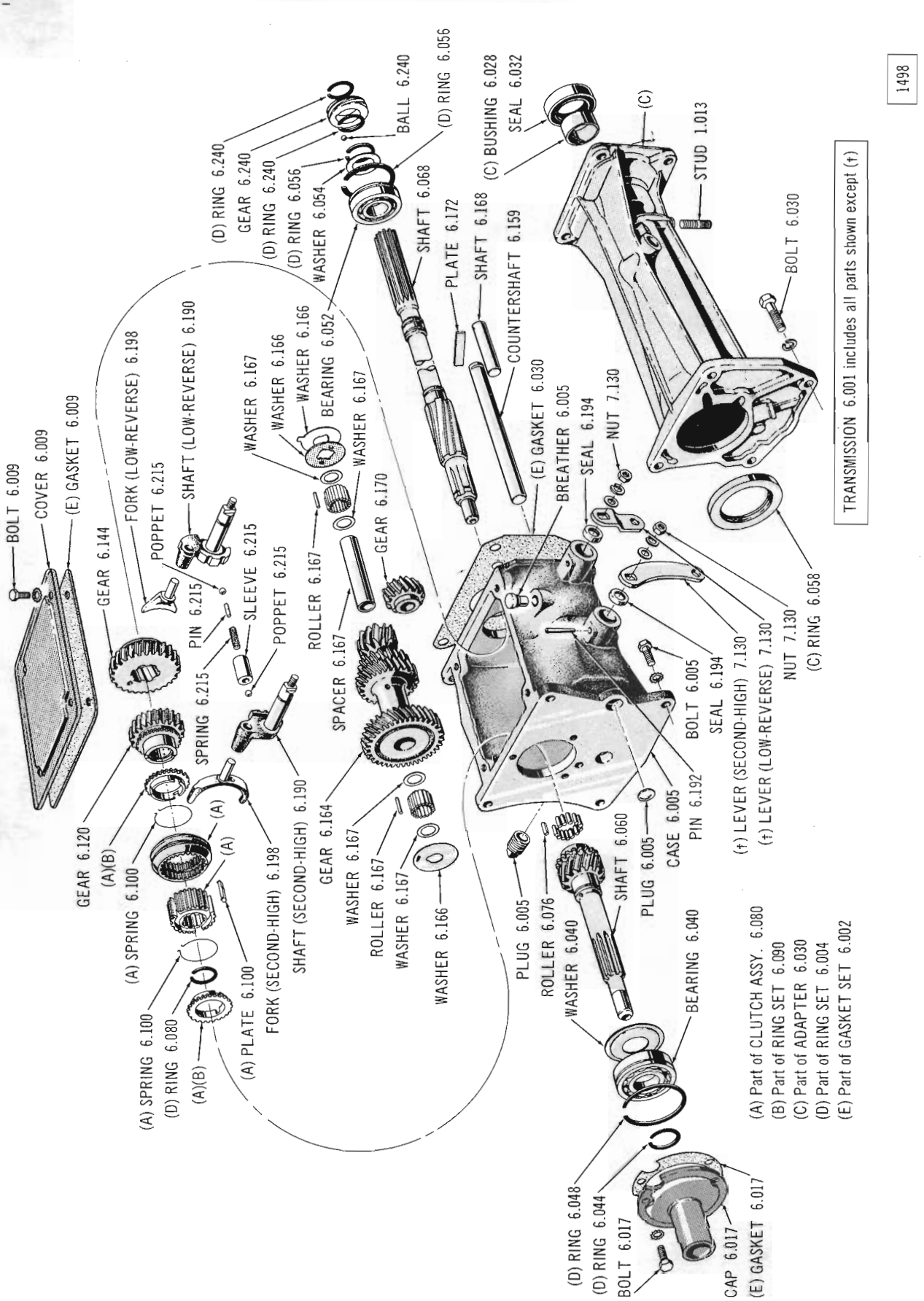

TRANSMISSION 60 thru Current 10 (196-WST)

Copyright 1963 American Motors Corp.

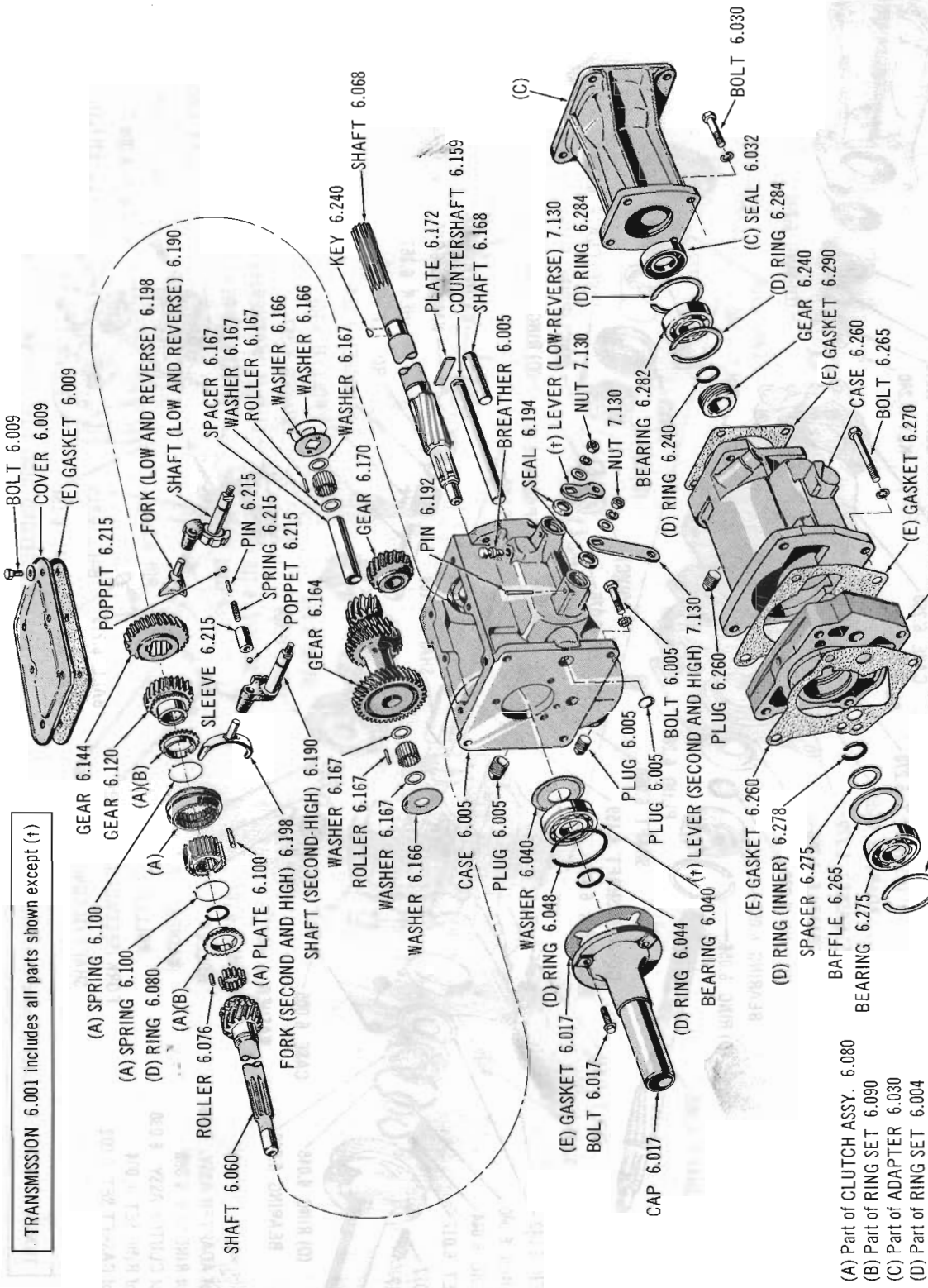

TRANSMISSION 63 10 (V8-WST): 64 10 (1st. type-V8-WST)

Copyright 1963 American Motors Corp.

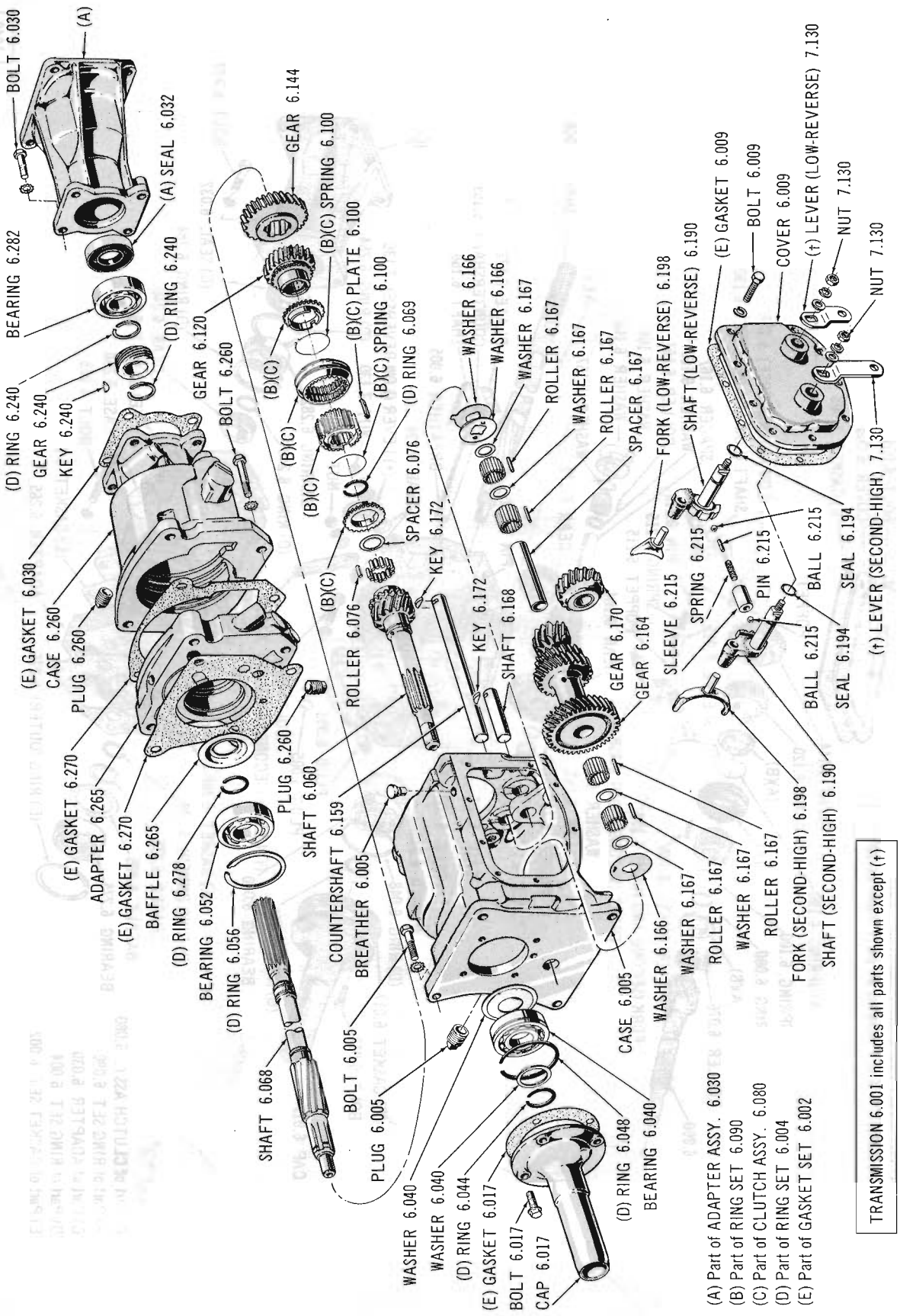

TRANSMISSION 60 thru Current 80 (WST)

Copyright 1963 American Motors Corp.

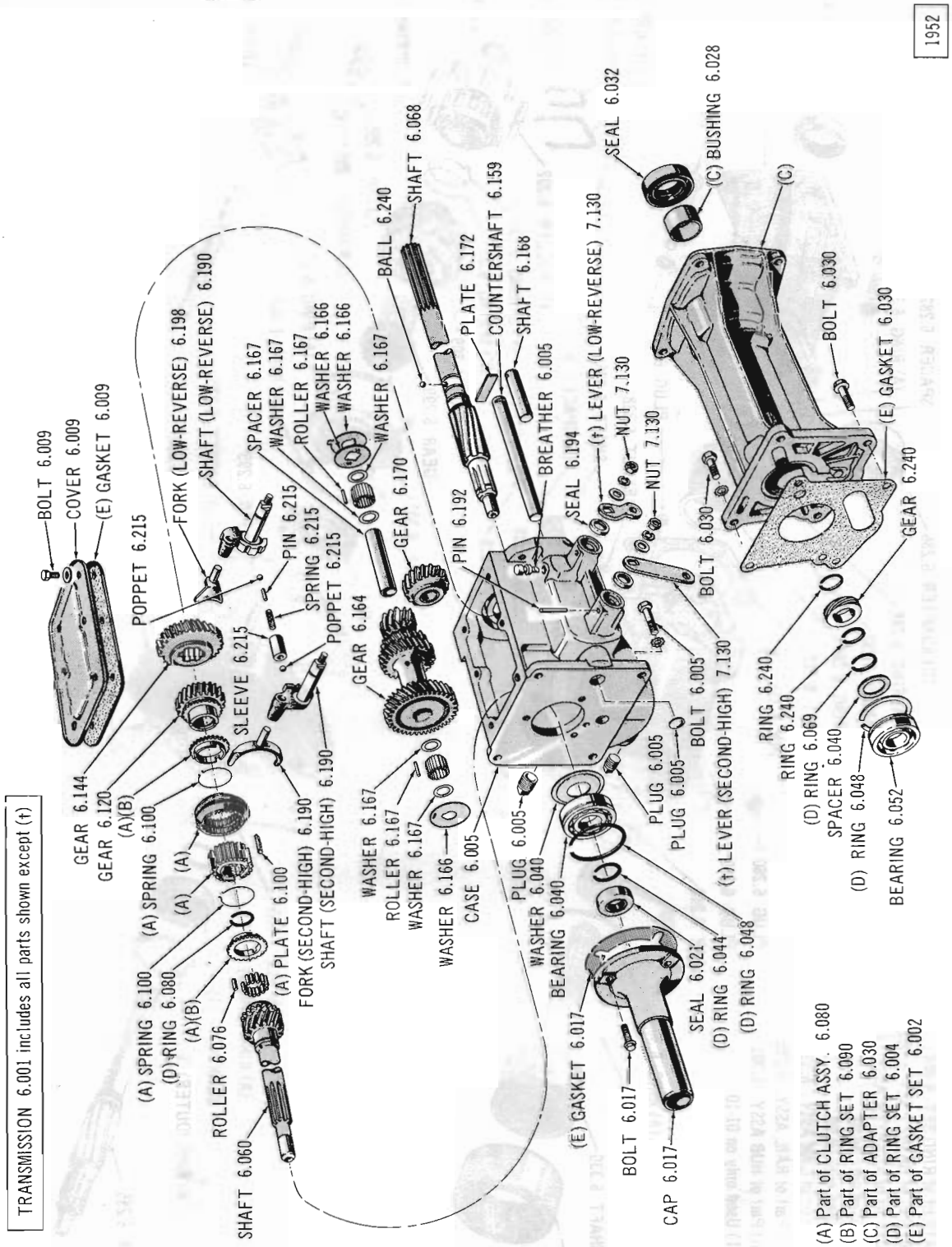

TRANSMISSION 64-65 10 (OHV-232-WST): 65 80 (OHV-232-WST)

Copyright 1963 American Motors Corp.

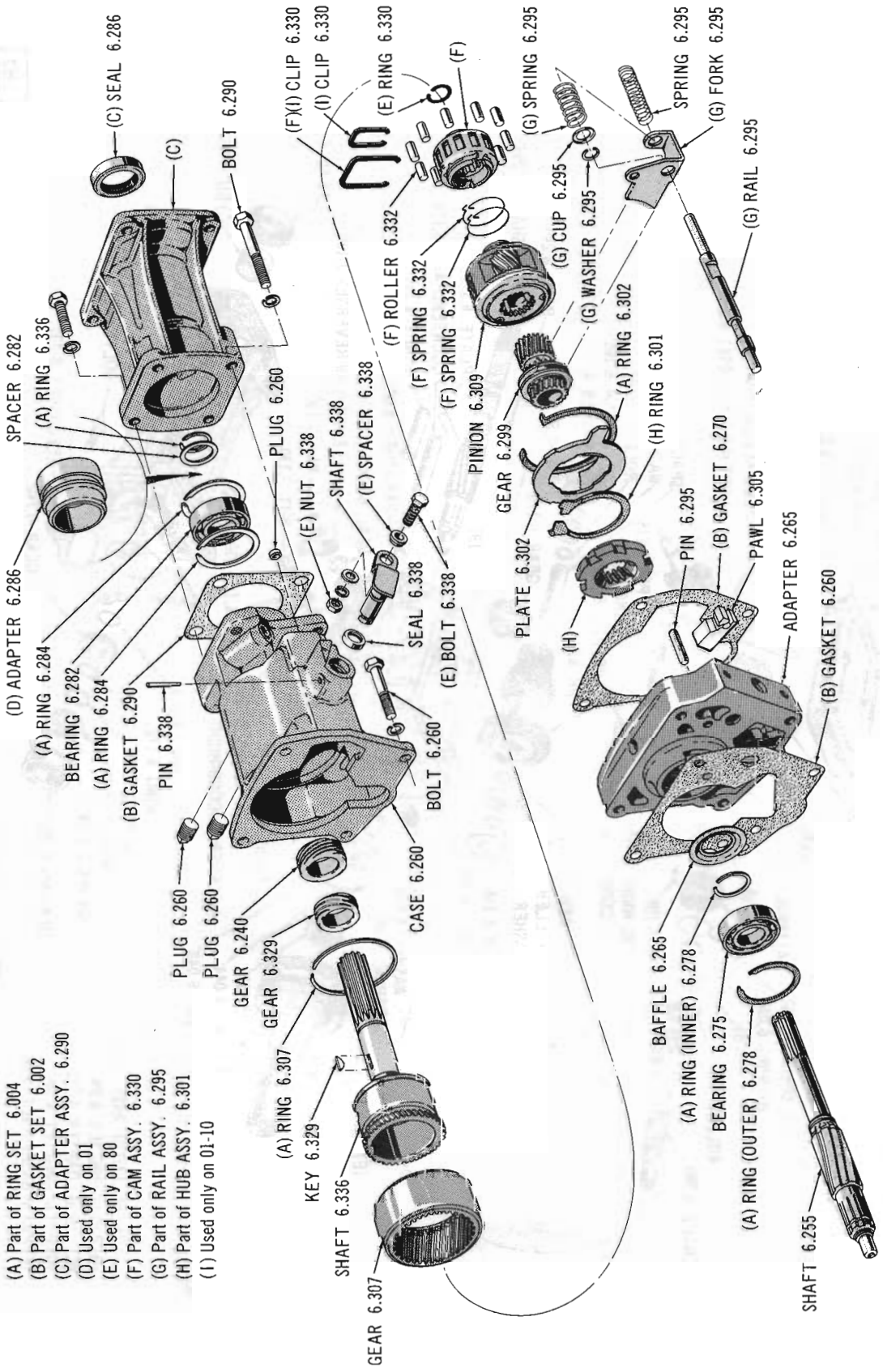

OVERDRIVE 60 thru Current ALL MODELS

Copyright 1963 American Motors Corp.

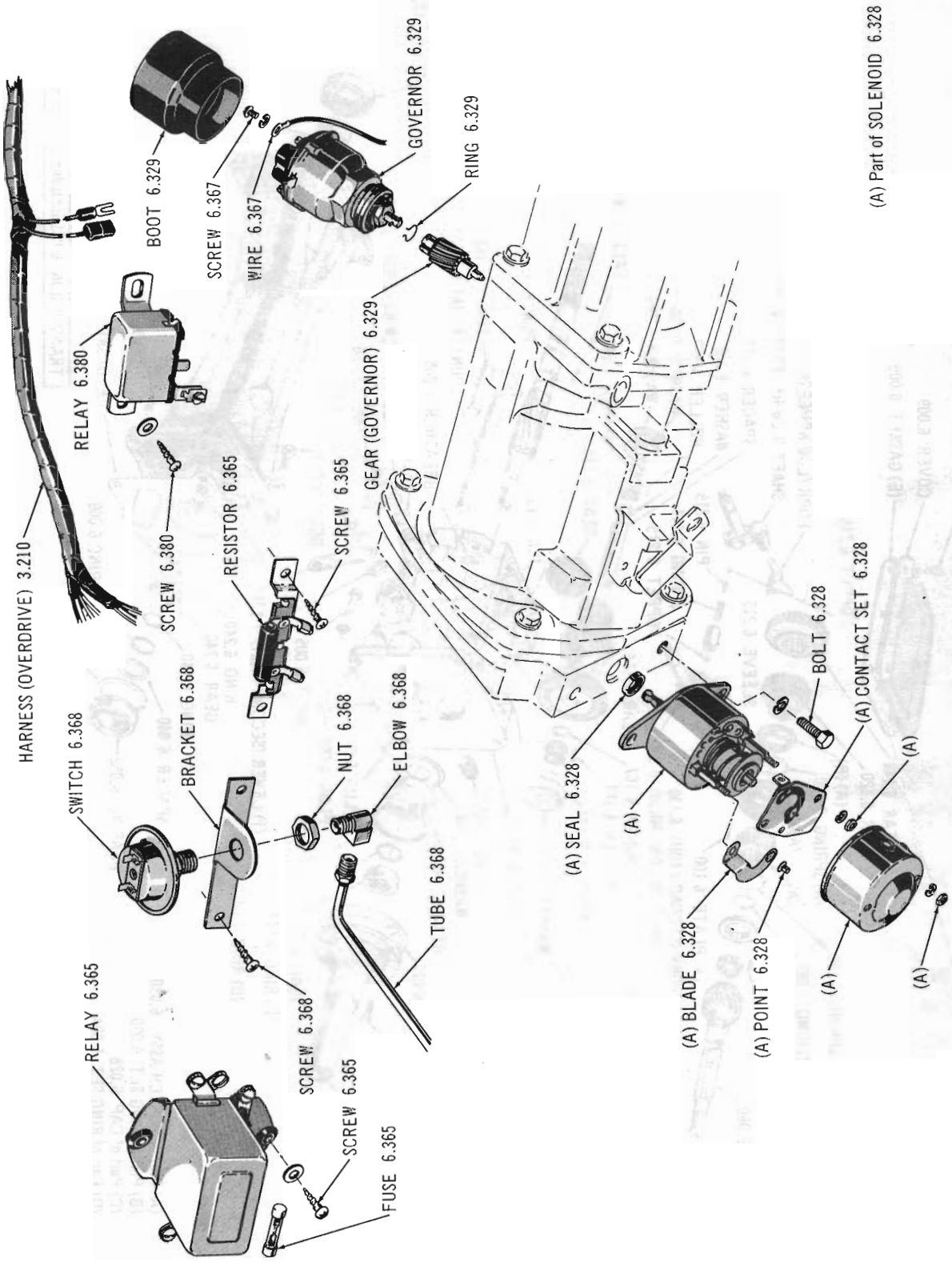

OVERDRIVE ELECTRICAL ACTUATING SYSTEM 60 thru 63 ALL MODELS

Copyright 1963 American Motors Corp.

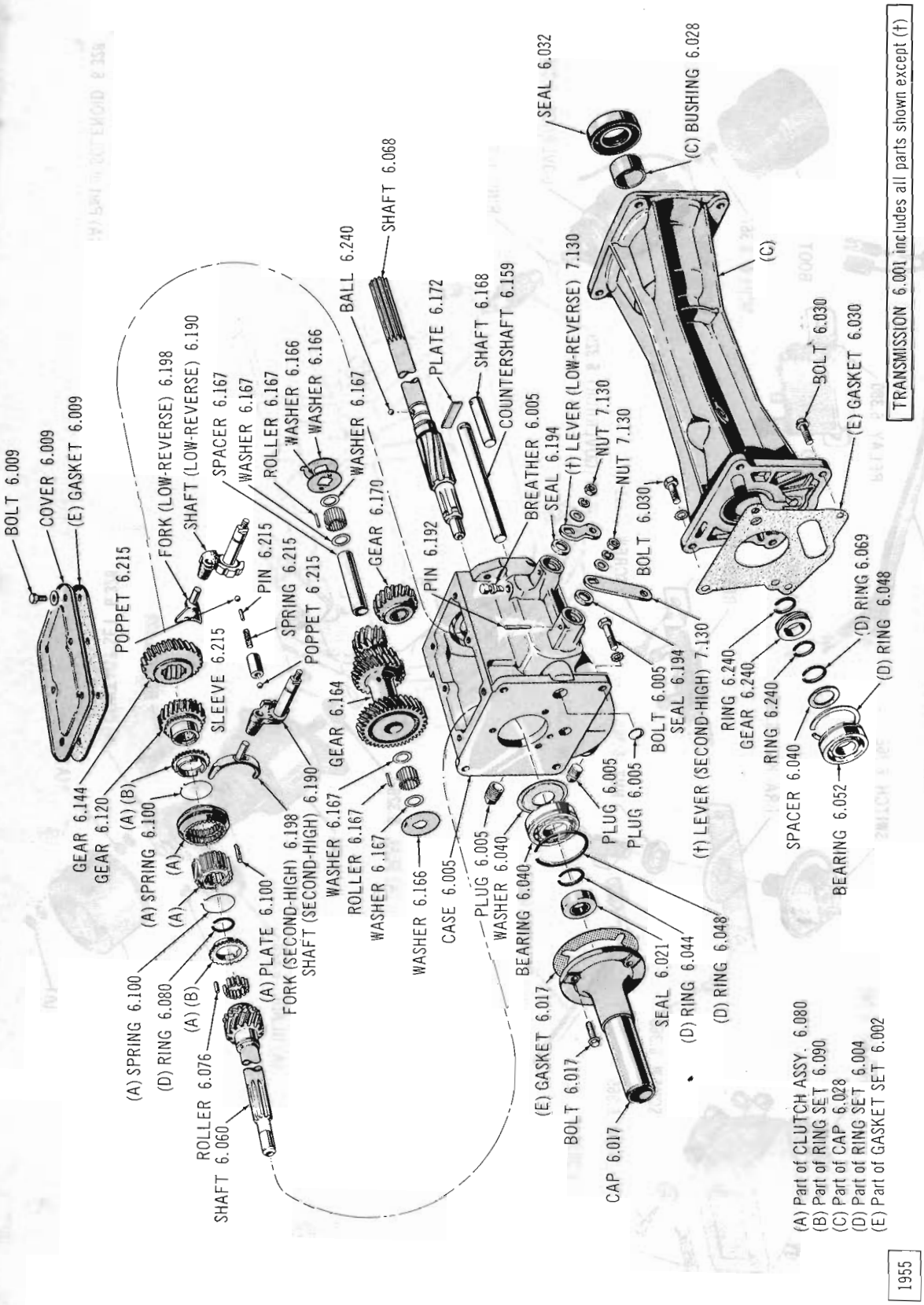

TRANSMISSION 64 10 (2 nd type-V8-WST): 65 10 (V8-WST)

Copyright 1963 American Motors Corp.

SPEEDOMETER DRIVE GEARS

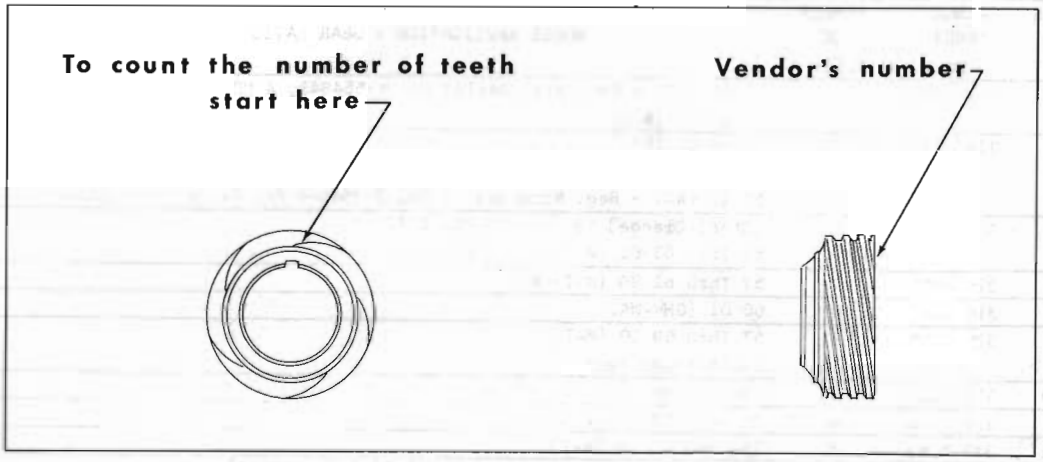

NOTE: This chart does not include Hudson Drive Gears Prior to 1955 models.

(Refer Group 3.000 For Driven Gear Chart)

VENDOR'S PART NO.	A.M.C. PART NO.	NUMBER OF TEETH	MODEL APPLICATION - GEAR RATIO
447011	310 5429	5	46 60 (WOD - 9/40)(Manual Controlled Type Overdrive) 46 60 (WOD - 10/41)(Manual Controlled Type Overdrive)
447012	310 5462	5	46 Thru 48 60 (LOD)
447069	312 1138	5	46 Thru 48 40 (LOD - 8/35) 46 Thru 50 40 (LOD - 9/37)
447125	312 4217	5	47-48 40 (LOD - 8/39) 52 Thru 54 40 (WST) 53 10 (WST - Beg. With Serial No. D-150580) 54 06-14-16-17-21-24-27 (WST - Prior To Serial No. D-172751 And DKD-3001) 54 15-25-28 (WST Prior To Serial No. D-172945)
447130	311 2156	5	46 Thru 51 40 (WOD) 52 40 (WOD - Prior To Serial No. K-554841, 4KD-4709, El Segundo KC-42074) 55-56 40 (WOD) 56 50 (WOD) 46 60 (WOD)(Governor Controlled Type Overdrive) 47 Thru 56 60 (WOD) 355-356 40-60 (WOD) 356 50 (WOD) 50 Thru 62 10 (WOD) 58 Thru 62 01 (LHE-WOD)(OHV-WOD-9/34): 63 01 (WOD) 57 Thru 61 20 (WOD)
447152	311 3035	5	49 Thru 56 60 (WST) 56 50 (WST) 355-356 60 (WST) 356 50 (WST) 57 Thru 61 20 (WST)
447157	312 6561	5	49 Thru 51 40 (LOD - 8/35) 49 Thru 51 40 (LOD - 8/39)
447181	311 3830	5	50 10
447198	311 4550	6	50 Thru 52 10 (WST) 53 10 (WST - Prior To Serial No. D-150580) 54 06-14-16-17-21-24-27 (WST - Beg. With Serial No. D-172751 And DKD-3001) 54 15-25-28 (WST - Beg. With Serial No. D-172945) 55 10 (WST) 58 Thru 60 01 (WST - 9/34) 61 Thru 63 01 (WST-LCV-9/34)

VENDOR'S PART NO.	A.M.C. PART NO.	NUMBER OF TEETH	MODEL APPLICATION - GEAR RATIO
447256	313 6258	6	52 40 (WOD - Beg. With Serial No. K-554841, 4 KD-4709, El Segundo KC-42074) 53-54 40 (WOD)
447258	314 2759	5	55-56 40 (WST) 355-356 40 (WST) 57 10 (WST - Beg. With Serial No. D-354549 And Prior To D-356529)
447404	315 5848	6	(Steel-Orange) 58 Thru 60 01 (WST) 61 Thru 63 01 (WST-LCV-13/43)
447439	315 8687	7	57 Thru 62 80 (WST)(WOD)
447471	316 0549	8	60 01 (OHV-WAT)
3B-169	315 0749	8	57 Thru 59 10 (WAT) 58-59 20-80 (WAT)
5AB-169	316 0127	8	(Nylon-Green) 60-61 01 (WAT)
5X-169	315 5162	8	(Steel) 58-59 01 (WAT)
5X-169A	315 5163	8	(Nylon) 60 01 (WAT)
7T-1315449	311 3672	8	51 40 (WHT - Trans. Serial No. E-50-1 Or Higher) 50 60 (WHT)
			51 60 (WHT - Trans. Serial No. N-50-1 Or Higher) 357 80 (WST)(WOD) 57 30 (WST)(WOD)
8-169	315 9979	8	(Nylon-Pink): 60 80 (Trans. Model No. AS16-8): 61-62 80 (WAT)
AR10B-169V	315 9962	8	(Steel-Yellow) 60-61 01 (OHV-WOD): 62 01 (OHV-WOD-LCV) 63 01 (OHV-LCV-WOD-LES)
R-11-169F	315 0719	5	57 Thru 60 80 (WST)(WOD)
T-85C-169	315 7264	8	60-61 10-20: 60 80 (Trans. Model No. AS10-8)
T-90G-169B	315 6635	5	59 Thru 62 10 (WST-Heavy Duty)
T-96-169P	314 6791	5	(Steel-White) 56 10 (WST) 57 10 (WST - Prior To Serial No. D-354549 And Beg. With D-356529) 58 Thru 61 10 (WST)
---	811 1845	5	540 - 560
---	811 0469	8	540
---	811 2354	9	560
---	645 0308	8	(NYLON) 55-56 80 (WUT) (NYLON) 355-356 80 (WUT)
T-96-169L	316 1389	6	61 Thru 63 07 (WST)
T-96-169X	316 1329	6	61 07 (WST)
T-96-169	316 2939	8	(Steel) 61-62 01 (WST-OHV-LCV): 63 01 (OHV-LCV-WST-LES)
T-96-169B	316 4269	5	(Nylon) 62 10 (WST)
T-90G-169D	316 8264	7	(Steel) 63-64 10 (WST-Heavy Duty)
R-10B-169X	316 7454	7	(Steel) 64 01 (WOD): 65 01 (LHD-WOD-WCGS-9/34-9/37 Ratio)(WOD-WFGS): 63-64 10 (OHV-196-WOD): 65 10 (OHV-199-WOD)
R-11-169K	316 7460	7	(Steel) 63 Thru 65 80 (V8-WST)(V8-WOD)
T-96C-169C	316 7457	7	(Nylon-D-Blue) 64-65 01 (WST): 65 01 (WAT-8/24): 63-64 10 (OHV-196-WST) (OHV-196-WAT-9/34): 65 01 (OHV-199-WST-WAT)
35-169D	316 7456	8	(Nylon-D-Brown)(Nylon-D-Green) 65 01 (WST)(WAT): 63-64 10 (OHV-196-WST) (Six-WAT-13/43): 65 10 (OHV-199-WAT): 65 10 (LHD-OHV-199-WST)
8-169A	316 7462	8	(Nylon-L-Green) 63 Thru 65 10-80 (V8-WAT)
35-169	316 4207	8	(Nylon-Black) 62-63 01 (WAT)
35-169B	316 4208	8	(Nylon-Neutral) 62 01-10 (WAT): 63 01 (WAT)
R10B-169Y	317 0766	7	(Steel) 63 10 (V8-WST): 65 01 (LHD-WOD-WCGS): 63 Thru 65 10 (V8-WOD): 65 10-80 (OHVC-232): 65 10-50-80 (V8-W4ST)
35-169E	317 1548	8	(Nylon-Pink) 64-65 01 (WST)(WAT): 64-65 10 (LHD-OHVC-232-WST) 63-64 10 (OHV-196-WOD): 65 10 (OHV-199-WOD) (OHV-232-WAT-13/41): 65 80 (OHV-232-WAT-13/41 or 15/41 Ratio)
35-169F	317 1549	7	(Nylon-Orange)(Nylon-Brown) 64-65 01 (WST)(WAT)(14'' Wheel): 64-65 10 (V8-WST): 165 01 (CAN-WAT)
R10B-169Z	316 7453	8	(Steel) 64-65 01 (WOD): 64 10 (OHV-232-WOD): 65 10-50-80 (V8-W4ST)
EX-29041D	316 8101	7	62 10 Renault
447571	317 3534	7	63 10 Renault

GROUP NO. — DESCRIPTION — YEAR and MODEL	PRIMARY GROUP NO.	PER CAR	PART NO.	CODE
6.001 TRANSMISSION (Less Shift Levers)				
61-62 01 (WST-LCV) ***(Use 320 4257)(Replaces 320 2653, 320 2917)***	.....	1	320 3633	
60 10 (WST): 61 10 (WST-Note 6.001-2 Type 1) ***(Order Comp.)***	.....	1	320 1230	
61 10 (WST-Note 6.001-2 Type 2) ***(Order Comp.)***	.....	1	320 2924	
60 Thru 62 10 (WST-Heavy Duty-Note 6.001): (Replaces 320 1273)	.....	1	320 2928	
63-64 10 (WST-Heavy Duty-Note 6.001-1)	.....	1	320 4447	
63 Thru 65 10 (V8-287-WST): 65 80 (V8-287-WST)	.....	1	320 4581	
64-65 10 (LHD-OHV-232-WST): 65 80 (LHD-OHV-232-WST) ***(Replaces 320 5220)***	.....	1	320 6565	#
65 10 (WST-Heavy Duty-Note 6.001-5)	.....	1	320 5859	
65 10 (RHD-OHV-232-WOD)	.....	1	317 6498	
60 20 (WST): 61 20 (WST-Note 6.001-2 Type 1) ***(Order Comp.)***	.....	1	320 1275	
61 20 (WST-Note 6.001-2 Type 2) ***(Order Comp.)***	.....	1	320 2926	
60 Thru 62 80 (WST)	.....	1	320 2084	
64-65 10 (V8-327-WST): 63 Thru 65 80 (V8-327-WST) ***(Replaces 320 3941)***	.....	1	320 4643	
60 Thru 62 01 (WST-LCV) ***(Replaces 320 2652)(Order Comp.)***	.....	1	320 3634	
(9/34) 63 01 (WST-LCV)	.....	1	320 4293	
(9/34) 61 07 (WST-Note 6.001-2 Type 1)	.....	1	320 2537	
(9/34) 61 07 (WST-Note 6.001-2 Type 2)	.....	1	320 2921	
(9/34) 63 07 (WST-Note 6.001-3 Type 2)	.....	1	320 4295	
(9/34-6.00 x 15) 64 01 (LHD-LHE-WST)	.....	1	320 5081	
(9/34-6.00 x 15) 64 01 (LHD-OHV-WST)	.....	1	320 4884	
(9/34-6.00 x 14) 64 01 (LHD-OHV-WST)	.....	1	320 5408	
(9/34-6.50 x 14) 64 01 (LHD-OHV-WST)	.....	1	320 5408	
(9/34-6.00 x 14) 64 01 (LHD-LHE-WST)	.....	1	320 5407	
(9/34-6.50 x 14) 64 01 (LHD-LHE-WST)	.....	1	320 5407	
(9/34) 65 01 (LHD-LHE-WST)	.....	1	320 5407	
(9/34) 65 01 (LHD-OHV-WST-Note 6.028-1 Type 1)	.....	1	320 5408	
(9/34) 65 01 (LHD-OHV-196-WST-Note 6.028-1 Type 2)(LHD-OHV-199-WST)	.....	1	320 6194	
(9/34) 63-64 10 (LHD-OHV-196-WST): 65 10 (LHD-OHV-199-WST)	.....	1	320 4296	
(9/34) 63 10 (Six-RHD-WST)	.....	1	317 0205	
(9/34-6.00 x 15) 64 01 (RHD-WST)	.....	1	317 4433	
(9/34) 65 01 (RHD-WST-Note 6.028-1 Type 1): 165 01 (Can-RHD-WST-Note 6.001-10)	.....	1	317 8909	
(9/34) 65 01 (RHD-OHV-WST-Note 6.028-1 Type 2): 165 01 (Can-RHD-WST-Note 6.001-11)	.....	1	317 9103	
(9/34) 64 10 (Six-RHD-WST)	.....	1	317 4435	
(9/37-6.00 x 14) 64 01 (LHD-OHV-WST)	.....	1	320 5408	
(9/37-6.50 x 14) 64 01 (LHD-OHV-WST)	.....	1	320 5408	
(9/37-6.00 x 15) 64 01 (LHD-OHV-WST)	.....	1	320 5408	
(9/37) 65 01 (LHD-OHV-WST-Note 6.028-1 Type 1)	.....	1	320 5408	
(9/37) 65 01 (LHD-OHV-196-WST-Note 6.028-1 Type 2)(LHD-OHV-199-WST)	.....	1	320 6194	

NOTE 6.001-1: Cars having a production installed Heavy Duty Package may be identified in the following way: The Transmission Case Cover is mounted to the Transmission with 6 Bolts instead of 4.

NOTE 6.001-2: Two Types of Transmissions were used on the 61 01-10-20 (WST)(WOD) Series. They can be identified as follows:

Type 1: DOES NOT have a Metal Tag bearing any one of the following letters LL, PP, H, MM, G, JJ, KK, NN.

Type 2: DOES have a Metal Tag bearing any one of the following letters LL, PP, H, MM, G, JJ, KK, NN.

NOTE 6.001-3: Two Types of Transmissions were used on the 63 01-10 (WST)(WOD). They can be identified as follows:

Type 1: The O. D. of the Transmission Clutch Shaft Pilot End is 5/8".

Type 2: The O. D. of the Transmission Clutch Shaft Pilot End is 3/4".

NOTE 6.001-4: Two Types of Transmissions were used on the 63-64 10 (V8-WOD-WFGS) Cars. They can be identified as follows:

Type 1: The Second Speed Gear in the Center Shaft Gear (Cluster) has 25 Teeth.

Type 2: The Second Speed Gear in the Center Shaft Gear (Cluster) has 23 Teeth.

NOTE 6.001-5: Cars having a production installed Heavy Duty Package on the 65 10 (OHV-199) can be identified as follows: The Transmission to Torque Tube Adapter overall length is 12-3/4" long.

NOTE 6.001-6: Used prior to Car Serial No. E-001744.

NOTE 6.001-7: Used beginning with Car Serial No. E-001744 and E-005231.

NOTE 6.001-8: Used prior to Car Serial No. QT-501071.

NOTE 6.001-9: Used beginning with Car Serial No. QT-501071 - Except QT-501260, 501256 and 501258.

NOTE 6.001-10: Used prior to Car Serial No. 501112, except QT 501023, 501024, 501025, 501030, 501041, 501044 and 501049.

NOTE 6.001-11: Used beginning with Car Serial No. 501112, except QT-501257.

Copyright 1963 American Motors Corp.

GROUP NO. — DESCRIPTION — YEAR and MODEL	PRIMARY GROUP NO.	PER CAR	PART NO.	CODE
(9/37) 63-64 10 (LHD-OHV-196-WST): 65 10 (LHD-OHV-199-WST) ***(Replaces 320 4296)***	.....	1	320 4448	
(11/39) 65 10 (OHV-232-Export)	.....	1	317 9781	
(11/39-7.75 x 15) 65 10-50-80 (V8-W4ST)	.....	1	320 6783	
(11/39-7.35 x 14 or 15)(11/39-7.75 x 14) 65 10-50-80 (V8-W4ST)	.....	1	320 6753	
(13/40-6.00 x 14) 64 01 (LHD-OHV-WST)	.....	1	320 4884	
(13/40-6.50 x 14) 64 01 (LHD-LHE-WST)	.....	1	320 5080	
(13/40-6.50 x 14) 64 01 (LHD-OHV-WST)	.....	1	320 4883	
(13/40-6.00 x 15) 64 01 (LHD-OHV-WST)	.....	1	320 4883	
(13/40-6.00 x 15) 64 01 (RHD-WST): 65 01 (RHD-WST-Note 6.028-1 Type 1): 165 01 (Can-RHD-WST-Note 6.001-10)	.....	1	317 4339	
(13/40-6.50 x 14) 64 01 (RHD-WST): 65 01 (RHD-WST-Note 6.028-1 Type 1). 165 01 (Can-RHD-WST-Note 6.001-10)	.....	1	317 4339	
(13/40-6.00 x 14) 64 01 (RHD-WST)	.....	1	317 4433	
(13/40) 65 01 (RHD-WST-Note 6.028-1 Type 1): 165 01 (Can-RHD-WST-Note 6.001-10)	.....	1	317 8909	
(13/40) 65 01 (LHD-LHE-WST-Note 6.001-7): ***165 01 (Can-OHV-199-Note 6.001-8)***	.....	1	320 5958	
(13/40) 65 01 (LHD-LHE-WST-Note 6.001-6)	.....	1	320 5081	
(13/40) 65 01 (LHD-OHV-WST-Note 6.028-1 Type 1)	.....	1	320 5959	
(13/40) 65 01 (LHD-OHV-196-WST-Notes 6.028-1 Type 2 And 6.001-7) (LHD-OHV-199-WST-Note 6.001-7)	.....	1	320 6192	
(13/40) 65 01 (LHD-OHV-WST-Note 6.001-6)	.....	1	320 4884	
(13/40) 65 01 (RHD-OHV-WST-Note 6.028-1 Type 2): 165 01 (Can-RHD-WST-Note 6.001-11)	.....	1	317 9103	
(13/41-7.75 x 14 or 15) 65 10-50-80 (V8-327-W4ST)	.....	1	320 6783	
(13/41-7.35 x 14 or 15) 65 10-50-80 (V8-327-W4ST)	.....	1	320 6753	
(13/43) 60 01 (WST)	.....	1	320 1279	
(13/43) 61 07 (WST)	.....	1	320 2984	
(13/43) 63 01 (WST-LCV-Note 6.001-3 Type 1)	.....	1	320 4257	
(13/43) 63 01 (WST-LCV-Note 6.001-3 Type 2)	.....	1	320 4294	
(13/43-6.00 x 15) 64 01 (LHD-LHE-WST)	.....	1	320 5080	
(13/43-6.50 x 14) 64 01 (LHD-LHE-WST)	.....	1	320 5081	
(13/43-6.00 x 14) 64 01 (LHD-OHV-WST)	.....	1	320 4884	
(13/43-6.50 x 14) 64 01 (LHD-OHV-WST)	.....	1	320 4884	
(13/43-6.00 x 15) 64 01 (LHD-OHV-WST)	.....	1	320 4883	
(13/43-6.00 x 15) 64 01 (RHD-WST): 65 01 (RHD-WST-Note 6.028-1 Type 1): 165 01 (Can-RHD-WST-Note 6.001-10)	.....	1	317 4339	
(13/43-6.00 x 15) 64 01 (RHD-WST): 65 01 (RHD-WST-Note 6.028-1 Type 1): 165 01 (Can-RHD-WST-Note 6.001-10)	.....	1	317 4339	
(13/43-6.00 x 14) 64 01 (RHD-WST)	.....	1	317 4433	
(13/43-6.50 x 14) 64 01 (RHD-WST)	.....	1	317 4433	
(13/43) 65 01 (LHD-LHE-WST-Note 6.001-6): ***165 01 (Can-OHV-199-Note 6.001-8)***	.....	1	320 5958	
(13/43) 65 01 (LHD-LHE-WST-Note 6.001-6)	.....	1	320 5958	
(13/43) 65 01 (LHD-OHV-WST-Note 6.028-1 Type 1): ***165 01 (Can-OHV-199-Note 6.001-8)***	.....	1	320 5959	
(13/43) 65 01 (LHD-LHE-WST-Note 6.001-6)	.....	1	320 5081	
(13/43) 65 01 (LHD-OHV-WST-Note 6.001-6)	.....	1	320 4884	
(13/43) 65 01 (LHD-OHV-196-WST-Notes 6.028-1 Type 2 And 6.001-7) (LHD-OHV-199-WST-Note 6.001-7): ***165 01 (Can-OHV-199-Note 6.001-9)***	.....	1	320 6192	
(13/43) 65 01 (RHD-WST-Note 6.028-1 Type 1): 165 01 (Can-RHD-WST-Note 6.001-10)	.....	1	317 8909	
(13/43) 65 01 (RHD-OHV-WST-Note 6.028-1 Type 2): 165 01 (Can-RHD-WST-Note 6.001-11)	.....	1	317 9103	
(13/43) 63 10 (LHD-WST-Note 6.001-3 Type 1) ***(Use 320 4472)***	.....	1	320 4252	
(13/43) 63 10 (Six-LHD-WST-Note 6.001-3 Type 2): 64 10 (LHD-OHV-196-WST): 65 10 (OHV-199-WST) ***(Replaces 320 4297)***	.....	1	320 4449	#
(13/43) ***63 10 (Six-RHD-WST) (Replaces 316 8945)***	.....	1	317 0204	
(13/43) ***64 10 (Six-RHD-WST)***	.....	1	317 3610	
(15/41-6.00 x 14) 64 01 (LHD-OHV-WST)	.....	1	320 4883	
(15/41-6.50 x 14) 64 01 (LHD-OHV-WST)	.....	1	320 4883	
(15/41-6.00 x 14) 64 01 (RHD-WST): 65 01 (RHD-WST-Note 6.028-1 Type 1): 165 01 (Can-RHD-WST-Note 6.001-10)	.....	1	317 4339	
(15/41-6.50 x 14) 64 01 (RHD-WST): 65 01 (RHD-WST-Note 6.028-1 Type 1): 165 01 (Can-RHD-WST-Note 6.001-10)	.....	1	317 4339	

Copyright 1963 American Motors Corp.

GROUP NO. — DESCRIPTION — YEAR and MODEL	PRIMARY GROUP NO.	PER CAR	PART NO.	CODE
(15/41) 65 01 (LHD-OHV-WST-Note 6.028-1 Type 1)	.....	1	320 4883	
(15/41) 65 01 (LHD-OHV-196-WST-Note 6.028-1 Type 2)(LHD-OHV-199-WST)	.....	1	320 6193	
(15/41) 65 01 (RHD-OHV-WST-Note 6.028-1 Type 2): 165 01 (Can-RHD-WST-Note 6.001-11)	.....	1	317 9104	#
(15/43) 61-62 01 (WST-OHV-LCV): 63 01 (OHV-LCV-WST-LES-Note 6.001-3 Type 1)	.....	1	320 2983	
(15/43) 63 01 (OHV-LCV-WST-LES-Note 6.001-3 Type 2)	.....	1	320 4298	
TRANSMISSION (Less Shift Levers)(Incl. Overdrive)				
60 01 (LHE-WOD)	.....	1	320 1280	
64-65 01 (WOD-WFGS)	.....	1	320 4895	
60-61 10 (WOD) ***(Replaces 320 1274)***	.....	1	320 2925	
62 10 (WOD)	.....	1	320 3298	
63 10 (Six-LHD-WOD-Note 6.001-3 Type 1)	.....	1	320 4255	
63 10 (Six-LHD-WOD-Note 6.001-3 Type 2) ***(Use 320 4446)***	.....	1	320 4303	
63 10 (V8-WOD-WCGS) ***(Use 320 4638)***	.....	1	320 4580	
63 10 (V8-WOD-WFGS-Note 6.001-4 Type 1)	.....	1	320 4638	
63 10 (V8-WOD-WFGS-Note 6.001-4 Type 2)	.....	1	320 4579	
63 10 (Six-RHD-WOD) ***(Replaces 316 8950)***	.....	1	317 0211	
64 10 (Six-RHD-WOD)	.....	1	317 3611	
64 10 (LHD-OHV-196-WOD): 65 10 (LHD-OHV-199-WOD-WFGS)	.....	1	320 5061	
64 10 (OHVC-232-WOD-WCGS)	.....	1	320 5223	
64 10 (OHVC-232-WOD-WFGS)	.....	1	320 5224	
64 10 (V8-287-WOD-WCGS) ***(Use 320 5374)***	.....	1	320 5014	#
64-65 10 (V8-287-WOD-WFGS): 65 80 (V8-287-WOD-WFGS)	.....	1	320 5964	
64-65 10 (V8-327-WOD): 64 80 (WOD): 65 80 (V8-327-WOD-WFGS)	.....	1	320 5015	
65 10 (LHD-OHV-199-WOD-WCGS)	.....	1	320 5795	
65 10-80 (V8-287-WOD-WCGS)	.....	1	320 5712	
65 10 (V8-327-WOD-WCGS): 65 80 (V8-327-WOD-WCGS)	.....	1	320 5713	
65 10-80 (LHD-OHV-232-WOD-WCGS)	.....	1	320 5796	
65 10-80 (LHD-OHV-232-WOD-WFGS)	.....	1	320 5714	
65 10 (RHD-OHV-232-WST) ***(Use 320 6566)***	.....	1	317 6499	#
60 20 (WOD): 61 20 (WOD-Note 6.001-2 Type 1)	.....	1	320 1276	
61 20 (WOD-Note 6.001-2 Type 2)	.....	1	320 2927	
60 Thru 62 80 (WOD)	.....	1	320 2085	
63 80 (WOD) ***(Replaces 320 3942)***	.....	1	320 4451	
(9/34) 60 01 (OHV-WOD)	.....	1	320 1280	
(9/34) (9/37) 61 01 (WOD) ***(Replaces 320 2692)***	.....	1	320 2922	
(9/34)(9/37) 62 01 (WOD)	.....	1	320 3636	
(9/34)(9/37) 63 01 (WOD-WCGS-Note 6.001-3 Type 1)	.....	1	320 4256	
(9/34)(9/37) 63 01 (WOD-WCGS-Note 6.001-3 Type 2)	.....	1	320 4299	
(9/34)(9/37) 63 01 (LHE-WOD-WFGS-Note 6.001-3 Type 1): 63 07 (WOD-WFGS-Note 6.001-3 Type 1)	.....	1	320 4018	
(9/34)(9/37) 63 01 (LHE-WOD-WFGS-Note 6.001-3 Type 2): 63 07 (WOD-WFGS-Note 6.001-3 Type 2)	.....	1	320 4302	
(9/34-6.00 x 14) 64 01 (LHD-OHV-WOD-WCGS)	.....	1	320 4894	
(9/34-6.50 x 14) 64 01 (LHD-OHV-WOD-WCGS)	.....	1	320 4894	
(9/34-6.00 x 15) 64 01 (LHD-OHV-WOD-WCGS)	.....	1	320 4894	
(9/34-6.00 x 14) ***64-65 01 (RHD-WOD)***	.....	1	317 4434	
(9/34-6.50 x 14) ***64-65 01 (RHD-WOD)***	.....	1	317 4434	
(9/34) 65 01 (LHD-WOD-WCGS)	.....	1	320 4894	
(9/37-6.00 x 15) 64 01 (LHD-OHV-WOD-WCGS)	.....	1	320 4894	
(9/37-6.00 x 15) ***64-65 01 (RHD-WOD)***	.....	1	317 4434	
(9/37) 65 01 (LHD-WOD-WCGS)	.....	1	320 4894	
(13/40-6.00 x 14) 64 01 (LHD-OHV-WOD-WCGS)	.....	1	320 4893	
(13/40-6.50 x 14) 64 01 (LHD-OHV-WOD-WCGS)	.....	1	320 4893	
(13/40-6.00 x 15) 64 01 (LHD-OHV-WOD-WCGS)	.....	1	320 4893	
(13/40-6.00 x 14) ***64 01 (RHD-WOD)***	.....	1	317 4340	
(13/40-6.50 x 14) ***64 01 (RHD-WOD)***	.....	1	317 4340	
(13/40) 65 01 (LHD-WOD-WCGS)	.....	1	320 4893	
(13/43) 60 01 (OHV-WOD)	.....	1	320 2422	
(13/43) 61 01 (OHV-WOD): 62 01 (OHV-WOD-LES-LCV): 63 01 (OHV-LCV-WOD-LES-WCGS-Note 6.001-3 Type 1)	.....	1	320 2923	
(13/43) 63 01 (OHV-LCV-WOD-LES-WCGS-Note 6.001-3 Type 2)	.....	1	320 4300	
(13/43) 63 01 (OHV-LCV-WOD-LES-WFGS)	.....	1	320 4301	

Copyright 1963 American Motors Corp.

GROUP NO. — DESCRIPTION — YEAR and MODEL	PRIMARY GROUP NO.	PER CAR	PART NO.	CODE
(13/43-6.00 × 14) 64 01 (LHD-OHV-WOD-WCGS)	.....	1	320 4893	
(13/43-6.50 × 14) 64 01 (LHD-OHV-WOD-WCGS)	.....	1	320 4893	
(13/43-6.00 × 15) 64 01 (LHD-OHV-WOD-WCGS)	.....	1	320 4893	
(13/43-6.00 × 14) ***64 01 (RHD-WOD)***	.....	1	317 4340	
(13/43-6.50 × 14) ***64 01 (RHD-WOD)***	.....	1	317 4340	
(13/43-6.00 × 15) ***64 01 (RHD-WOD)***	.....	1	317 4340	
(13/43) 65 01 (LHD-WOD-WCGS)	.....	1	320 4893	

6.002 GASKET SET, Transmission Overhaul

60 Thru 65 01 (WST)(WOD)...(Incl. 1-311 3823, 1-314 2756, 1-310 8335, 1-311 4532, 1-311 1263, 1-312 3649, 1-316 3961 & 1-317 2103)	.....	1	311 3825	
60-61 10 (WST)(WOD)...(Incl. 1-311 1236, 1-310 8335, 1-312 3649, 1-312 3673 1-312 1137, 1-311 1263, 1-312 1595, 1-311 3823, 1-314 2756, 1-311 4532, 1-312 4535 & 2-313 0590)	.....	1	311 3412	
62 Thru 64 10 (OHV-196-WST)(OHV-196-WOD): 65 10 (OHV-199-WST) (OHV-199-WOD)...(Incl. 1-310 8335, 1-312 3649, 1-316 3961, 1-316 3950, 1-312 1595, 1-311 3823, 1-311 4532 & 1-317 2103)	.....	1	320 3376	
60 Thru 62 10 (WST-Heavy Duty-Note 6.001-1): 60-61 20 (WST)(WOD)...(Incl. 1-314 2699, 2-91 174, 1-91 175, 1-312 3649, 1-311 3005, 1-311 1263, 1-312 1595 & 1-312 3673)	.....	1	311 8938	
63 10 (Six-RHD-WST)(Six-RHD-WOD)...(Incl. 1-310 8335, 2-316 9072, 1-312 3649, 1-311 4532, 1-316 3950 & 1-316 3961)	.....	1	320 4262	
63-64 10 (Six-WST-Heavy Duty-Note 6.001-1)...(Incl. 1-314 2699, 1-91 174, 1-91 175 & 1-311 4532)	.....	1	320 4263	
63-64 10 (V8-287-WST-Note 6.017-2 Types 1 And 3)(V8-287-WOD-Note 6.017-1 Type 1)...(Incl. 1-317 1842, 1-91 174, 1-91 175, 1-312 3647, 1-311 3005, 1-316 3950)	.....	1	320 4639	
64 10 (V8-287-WST-Note 6.017-2 Type 2)(V8-287-WOD-Note 6.017-1 Type 2): 64-65 10 (OHV-232-WST)(OHV-232-WOD): 65 10 (V8-287-WST) (V8-287-WOD): ***65 10 (Six-WST-Heavy Duty-Not 6.001-5):*** 65 80 (OHV-232-WST)(OHV-232-WOD)(V8-287-WST)(V8-287-WOD)...(Incl. 1-320 5225, 1-91174, 1-317 4607, 1-312 3649, 1-311 3005, 1-316 3950	.....	1	320 5483	
64-65 10 (V8-327-WST)(V8-327-WOD): 60 Thru 65 80 (V8-327-WST) (V8-327-WOD)...(Incl. 1-315 0618, 1-315 0650, 2-315 0649, 1-315 0671, 1-315 0672 & 1-315 0676)	.....	1	320 0335	

6.004 RING SET, Transmission Overhaul Snap

60 Thru 65 01 (WST)(WOD): 60 Thru 64 10 (OHV-196-WST)(OHV-196-WOD): 65 10 (OHV-199-WST)(OHV-199-WOD)	.....	1	320 2291	
60 Thru 62 10 (WST-Heavy Duty-Note 6.001-1): 60-61 20 (WST)(WOD)	.....	1	320 2293	
63 Thru 65 10 (V8-287-WST)(V8-287-WOD)(OHV-232-WST)(OHV-232-WOD) ***(Six-WST-Heavy Duty-Note 6.001-5):*** 65 80 (OHV-232-WST)(OHV-232-WOD)	.....	1	320 5575	
64-65 10 (V8-327-WST)(V8-327-WOD): 60 Thru 65 80 (V8-327-WST) (V8-327-WOD)	.....	1	320 2292	

6.005 CASE, Transmission

60 Thru 63 01 (WST-Note 6.005-1 Type 1): 60-61 10 (WST-Note 6.005-1 Type 1) ***(Replaces 311 3826)***	.....	1	320 6180	#
60 Thru 63 01 (WOD): 60 Thru 62 10 (WOD) ***(Replaces 311 4529)***	.....	1	320 6181	#
60 Thru 63 01 (WST-Note 6.005-1 Type 2): 60-61 10 (WST-Note 6.005-1 Type 2) ***(Replaces 320 5134)***	.....	1	320 6182	#
60 Thru 62 10 (WST-Heavy Duty-Note 6.001-1): 60-61 20 (WST) ***(Replaces 311 2967)***	.....	1	320 6183	#
62 10 (WST) ***(Replaces 316 3963)***	.....	1	320 6184	#
64-65 01 (WST): 63 10 (Six-LHD-WST): 64 10 (OHV-196-WST): 65 10 (OHV-199-WST) ***(Use 320 6185)(Replaces 316 7506)***	.....	1	320 5135	#
64 01 (RHD-WST): 63-64 10 (RHD-WST) ***(Use 317 0339)***	.....	1	320 4235	
64-65 01 (WOD): 63 10 (Six-LHD-WOD): 64 10 (OHV-196-WOD): 65 10 (OHV-199-WOD) ***(Use 320 6186)(Replaces 316 7507)***	.....	1	320 5136	#

NOTE 6.005-1: Two Types of Transmission Cases were used. They can be identified as follows:
Type 1: The Case does not have a Breather as part of it. A Vent is used in the Cover.
Type 2: The Case has a Breather as a part of it. No Vent is used in the Cover.

Copyright 1963 American Motors Corp.

GROUP NO. — DESCRIPTION — YEAR and MODEL	PRIMARY GROUP NO.	PER CAR	PART NO.	CODE
63-64 10 (RHD-WOD) ..... ***(Use 317 0340)***	.....	1	320 4236	
63-64 10 (WST-Heavy Duty-Notes 6.001-1 and 6.005-1 Type 1): 60-61 20 (WOD-Note 6.005-1 Type 1) ..... ***(Replaces 311 2968)***	.....	1	320 6187	#
63-64 10 (WST-Heavy Duty-Notes 6.001-1 And 6.005-1 Type 2): 60-61 20 (WOD-Note 6.005-1 Type 2) ..... ***(Replaces 320 5137)***	.....	1	320 6188	#
63 10 (V8-287): 64-65 10 (V8-287-WOD)(V8-287-WST-Note 6.017-2 Type 3): 64-65 10 (OHV-232-WOD)(OHV-232-WST-Note 6.017-2 Type 3): 65 80 (OHV-232-WOD)(OHV-232-WST-Note 6.017-2 Type 3)(V8-287-WOD) (V8-287-WST-Note 6.017-2 Type 3) ..... ***(Replaces 317 1337)***	.....	1	320 6189	#
64-65 10 (V8-287-WST-Note 6.017-2 Type 2)(OHV-232-WST-Note 6.017-2 Type 2): 64-65 10 ***(Six-WST-Heavy Duty-Note 6.001-5):*** 65 80 (OHV-232-WST-Note 6.017-2 Type 2)(V8-287-WST-Note 6.017-2 Type 2) ..... ***(Replaces 317 4538)***	.....	1	320 6190	#
64-65 10 (V8-327-WST)(V8-327-WOD): 60 Thru 65 80 (V8-327-WST) (V8-327-WOD)	.....	1	315 1676	
ATTACHING PARTS Transmission To Clutch Housing				
BOLT, Hexagon ..... 60 Thru 65 01-10-20-80	17.038	4	G179861	NA
WASHER, Lock ..... 60 Thru 65 01-10-20-80	17.822	4	G114607	NA
BREATHER, Transmission Case				
60 Thru 65 01 (WST)(WOD): 63-64 10 (OHV-196-WST)(OHV-196-WOD): 65 10 (OHV-199-WST)(OHV-199-WOD): 60-61 20 (WST)(WOD): 64-65 10 (V8-327-WST)(V8-327-WOD): 60 Thru 65 80 (V8-327-WST)(V8-327-WOD) ...	.....	1	315 0594	#
63 Thru 65 10 (V8-287-WST)(V8-287-WOD): 64-65 10 (OHV-232-WST) (OHV-232-WOD)***(Six-WST-Heavy Duty-Note 6.001-5):*** 65 80 (OHV-232-WST) (OHV-232-WOD)(V8-287-WST)(V8-287-WOD)	.....	1	317 1841	
PLUG, Drain And Filler Pipe				
60 Thru 65 01-10-20-80: ***63-64 10 (Six-WST-Heavy Duty-Note 6.001-1)***	17.512	2	G438159	NA
PLUG, Drain Expansion				
60 Thru 62 01-10-20 (WST)(WOD): 63-64 01: 63 Thru 65 10 (Six-WST) (LHD-Six-WOD)	17.500	1	G105602	NA
64 01 (RHD-WOD): 63-64 10 (RHD-WOD)	17.500	1	G117919	NA
PLUG, Drain & Filler Magnetic				
60 Thru 65 01-10-20-80 (WST)(WOD)	.....	1	315 5923	
6.009 COVER, Transmission Case				
60 thru 63 01-10 (Six-WST-Note 6.009-1 Type 1)(Six-WOD-Note 6.009-1 Type 1)	.....	1	311 3827	
63 01-10 (Six-WST-Note 6.009-1 Type 2)(Six-WOD-Note 6.009-1 Type 2): 64-65 01 (WST)(WOD): 64 10 (OHV-196-WST)(OHV-196-WOD): 65 10 (OHV-199-WST)(OHV-199-WOD) ..... ***(Replaces 317 2102)***	.....	1	317 3617	
63 10 (V8-WST-Note 6.009-1 Type 1)(V8-WOD-Note 6.009-1 Type 1)	.....	1	317 0795	
60 Thru 64 10 (Six-WST-Heavy Duty-Note 6.001-1): 60-61 20 (WST)(WOD)	.....	1	314 2698	
63 10 (V8-WST-Note 6.009-1 Type 2)(V8-WOD-Note 6.009-1 Type 2): 64-65 10 (V8-287-WST)(V8-287-WOD): 65 80 (V8-287-WST)(V8-287-WOD): 64-6510 (OHV-232-WST)(OHV-232-WOD)***(Six-WST-Heavy Duty-Note 6.001-5):*** 65 80 (OHV-232-WST)(OHV-232-WOD) ..... ***(Replaces 317 1843)***	.....	1	317 4617	
64-65 10 (V8-327-WST)(V8-327-WOD): 60 Thru 65 80 (V8-327-WST) (V8-327-WOD)	.....	1	315 0607	

NOTE 6.009-1: Two Types of Case Covers and Case Cover Gaskets were used on 63 01-10 (WST-WOD). They can be identified as follows:

Type 1: The Case Cover has the Word "Front" stamped on it and has a Breather Hole in front.

Type 2: The Case Cover does not have the Word "Front" stamped on it and does not have a Breather Hole.

Copyright 1963 American Motors Corp.

GROUP NO. — DESCRIPTION — YEAR and MODEL	PRIMARY GROUP NO.	PER CAR	PART NO.	CODE
ATTACHING PARTS				
Cover To Case				
BOLT, Hexagon ..... 60 Thru 63 01-10-20 (WST)(WOD)	17.038	4	G179814	NA
BOLT, Hexagon ..... 64-65 01-10 (Six-WST)(Six-WOD): 64-65 10-80 (V8-287-WST)(V8-287-WOD)	16.015	5	317 2050	
BOLT, Hexagon ..... 64-65 10 (V8-327-WST)(V8-327-WOD): 60 Thru 65 80 (V8-327-WST)(V8-327-WOD)	17.038	9	G179817	NA
BOLT, Hexagon 65 10-50-80 (V8-W4ST)	17.038	9	G179816	NA
WASHER, Lock ..... 60 Thru 63 01-10-20 (WST)(WOD)	17.822	4	G114605	NA
WASHER, Lock ..... ***62 Thru 64 10 (Six-WST-Heavy Duty-Note 6.001-1):*** 62-63 80 (WST)(WOD)	17.822	6	G114605	NA
WASHER, Lock ..... 64-65 10 (V8-327-WST)(V8-327-WOD): 60 Thru 65 80 (V8-327-WST)(V8-327-WOD)	17.820	8	G108579	NA
GASKET, Transmission Case Cover				
60 Thru 63 01-10 (Six-WST-Note 6.009-1 Type 1)(Six-WOD-Note 6.009-1 Type 1) ***(Replaces 311 3823)***	.....	1	320 5180	
63 01-10 (Six-WST-Note 6.009-1 Type 2)(Six-WOD-Note 6.009-1 Type 2): 64-65 01 (WST)(WOD): 64 10 (OHV-196-WST)(OHV-196-WOD): 65 10 (OHV-199-WST)(OHV-199-WOD)	.....	1	317 2103	
63 10 (V8-WST-Note 6.009-1 Type 2)(V8-WOD-Note 6.009-1 Type 2): 64-65 10 (OHV-232-WST)(OHV-232-WOD)(V8-287-WST)(V8-287-WOD)***(Six-WST-Heavy Duty-Note 6.001-5):*** 65 80 (OHV-232-WST)(OHV-232-WOD)(V8-287-WST)(V8-287-WOD) ***(Replaces 317 1842)***	.....	1	320 5225	
60 Thru 64 10 (Six-WST-Heavy Duty-Note 5.001-1): 63 10 (V8-WST-Note 6.009-1 Type 1)(V8-WOD-Note 6.009-1 Type 1): 60-61 20 (WST-WOD)	.....	1	314 2699	
60 Thru 65 80 (V8-327-WST)(V8-327-WOD)	.....	1	315 0618	#
6.017 CAP, Transmission Front Bearing				
60 Thru 62 01-10 (WST)(WOD) ***(Use 320 4274)***	.....	1	310 8334	
60 Thru 65 01 (WST)(WOD): 60 Thru 64 10 (OHV-196-WST)(OHV-196-WOD): 65 10 (OHV-199-WST)(OHV-199-WOD) ***(Replaces 320 4274)***	.....	1	317 2120	
64-65 10 (OHV-232-WST)(OHV-232-WOD)***(Six-WST-Heavy Duty-Note 6.001-5):*** 65 80 (OHV-232-WST)(OHV-232-WOD)	.....	1	317 4535	
60 Thru 64 10 (Six-WST-Heavy Duty-Note 6.001-1): 60-61 20 (WST)(WOD)	.....	1	314 2753	
64 10 (V8-287-WST-Note 6.017-2 Types 2 And 3)(V8-287-WOD-Note 6.017-1 Type 2): 65 10-80 (V8-287-WST)(V8-287-WOD)	.....	1	317 5412	
63-64 10 (V8-287-WST-Note 6.017-1 Type 1)(V8-287-WOD-Note 6.017-1 Type 1)	.....	1	317 0793	
64-65 10 (V8-327-WST)(V8-327-WOD): 60 Thru 65 80 (V8-327-WST)(V8-327-WOD)	.....	1	315 0648	#
GASKET, Transmission Front Bearing Cap				
60 Thru 65 01-10 (Six-WST)(Six-WOD): 63 Thru 65 10 (V8-287-WST)(V8-287-WOD): 65 80 (V8-287-WST)(V8-287-WOD)	.....	1	310 8335	

NOTE 6.017-1: Two Types of Front Bearing Caps were used on the 64 10 (V8-WOD). They can be identified as follows:

Type 1: No Oil Seal is used in cap.

Type 2: An Oil Seal is used in cap.

NOTE 6.017-2: Three Types of Transmissions were used on the 64 10 (V8-WST). They can be identified as follows:

Type 1: The front Bearing Cap does not have an Oil Seal. An Overdrive Case and Overdrive Adapter Housing is used. The Adapter to Torque Tube is 9-13/16" long.

Type 2: The Bearing Cap has an Oil Seal. The Adapter to Torque Tube is 18-3/4" long.

Type 3: The Bearing Cap has an Oil Seal. The Adapter to Torque Tube is 9-13/16" long and was used intermittently on Cars with following Serial Numbers:

Z211470	Z211734	Z211815	Z212007	Z212149	Z212314	Z212488
Z211550	Z211791	Z211879	Z212019	Z212149	Z212321	Z212525
Z211645	Z211792	Z211890	Z212055	Z212149	Z212326	Z212527
Z211693	Z211796	Z211912	Z212076	Z212196	Z212404	Z212528
Z211711	Z211799	Z212001	Z212093	Z212257	Z212440	Z212697
Z211724	Z211803	Z212004	Z212121	Z212258	Z212432	

Copyright 1963 American Motors Corp.

GROUP NO. — DESCRIPTION — YEAR and MODEL	PRIMARY GROUP NO.	PER CAR	PART NO.	CODE
64-65 10 (V8-327-WST .010" Thick)(V8-327-WOD .010" Thick): 60 Thru 65 80 (V8-327-WST .010" Thick)(V8-327-WOD .010" Thick)	.....	AR	315 0649	#
64-65 10 (V8-327-WOD .015" Thick)(V8-327-WOD .015" Thick): 60 Thru 65 80 (V8-327-WST .015" Thick)(V8-327-WOD .015" Thick)	.....	AR	315 0650	#
ATTACHING PARTS Cap To Case				
BOLT, Hexagon ..... 60 Thru 63 01-10-20-80 (WST)(WOD)	17.038	4	G179817	NA
BOLT, Hexagon ..... 64-65 01-10-80 (WST)(WOD)	.....	3	317 1599	
WASHER, Lock ..... 60 Thru 63 01-10-20-80 (WST)(WOD)	17.822	4	G114605	NA
6.021 SEAL, Transmission Front Bearing Cap Oil				
60 Thru 64 10 (Six-WST-Heavy Duty-Note 6.001-1): 60-61 20 (WST)(WOD)	.....	1	311 3029	
64 10 (V8-287-WST-Note 6.017-2 Types 2 And 3)(V8-287-WOD-Note 6.017-1 Type 2): 64-65 10 (OHV-232-WST)(OHV-232-WOD)***(Six-WST-Heavy Duty-Note 6.001-5):*** 65 10-80 (V8-287-WST)(V8-287-WOD): 65 80 (OHV-232-WST)(OHV-232-WOD)	.....	1	317 4533	
6.024 SHIM, Transmission Front Bearing Cap				
60 Thru 65 10 (Six-WST .010" Thick-Heavy Duty-Note 6.001-1 And 6.001-5): 60-61 20 (WST .010" Thick)(WOD .010" Thick): 63 Thru 65 10 (V8-WST .010" Thick)(V8-WOD .010" Thick)(OHV-232 .010" Thick)(OHV-232 .010" Thick): 65 80 (OHVC-232-WST-.010" Thick)(OHVC-232-WOD-.010" Thick)(V8-287-WST-.010" Thick)(V8-287-WOD-.010" Thick)	.....	AR	91 174	
60 Thru 64 10 (Six-WST .015" Thick-Heavy Duty-Note 6.001-1 And 6.001-5): 60-61 20 (WST .015" Thick): 63 Thru 65 10 (V8-287-WST .015" Thick)(V8-287-WOD .015" Thick)(OHV-232-WST .015" Thick)(OHV-232-WOD .015" Thick): 65 80 (OHVC-232-WST-.015" Thick)(OHVC-232-WOD-.015" Thick)(V8-287-WST-.015" Thick)(V8-287-WOD-.015 Thick)	.....	AR	91 175	
64-65 10 (V8-327-WST .010" Thick)(V8-327-WOD .010" Thick): 60 Thru 65 80 (V8-327-WST .010" Thick)(V8-327-WOD .010" Thick)	6.017	AR	315 0649	
64-65 10 (V8-327-WST .015" Thick)(V8-327-WOD .015" Thick): 60 Thru 65 80 (V8-327-WST .015" Thick)(V8-327-WOD .015" Thick)	6.017	AR	315 0650	
6.028 CAP, Transmission Rear Bearing				
60 01 (WST): 61 Thru 63 01 (WST-LCV)	.....	1	311 3829	
61 Thru 63 07 (WST)	.....	1	316 2101	
64-65 01 (WST-LHE)...(Incl. Bushing)	.....	1	320 5091	
64 01 (WST-OHV)...(Incl. Bushing): 65 01 (WST-OHV-Notes 6.028-1 Type 1 And 6.001-6)...(Incl. Bushing)	.....	1	320 5090	
60-61 10 (WST)	.....	1	314 5082	
65 01 (WST-OHV-196-Notes 6.028-1 Type 2 And 6.001-8)(OHV-199-WST-Note 6.001-8)...(Incl. Bushing)	.....	1	320 6216	
60 Thru 62 10 (WST-Heavy Duty-Note 6.001-1)...(Incl. Bushing And Felt): 60-61 20 (WST)...(Incl. Bushing And Felt)	.....	1	313 2500	
60-61 80 (WST)(WOD)	9.156	1	315 0675	
ATTACHING PARTS Cap To Case				
BOLT, Hexagon ..... 60-61 01 (WST): 61 10 (WST): 62-63 01 (WST-LCV)	17.038	1	G179868	NA
BOLT, Hexagon ..... 60-61 01-10 (WST): 62-63 01 (WST-LCV): 62-63 07 (WST)	17.038	4	G179857	NA
BOLT, Hexagon ..... 60 10 (WST)	17.038	1	G179863	NA
BOLT, Hexagon ..... ***60 Thru 62 10 (WST-Heavy Duty-Note 6.001-1):*** 60-61 20 (WST)	17.038	1	G179839	NA
BOLT, Hexagon ..... ***60 Thru 64 10 (Six-Heavy Duty-Note 6.001-1)*** 60-61 20 (WST)	17.038	3	G179840	NA

NOTE 6.028-1: Two Types of Transmission Rear Bearing Caps were used on the 65 01 (OHV-196-WST). They can be identified as follows:
Type 1: The overall length of Cap is 20-5/32" long and used prior to Car Sequence No.
Type 2: The overall length of Cap is 17-29/32" long and used beginning with Car Sequence No.

Copyright 1963 American Motors Corp.

GROUP NO. — DESCRIPTION — YEAR and MODEL		PRIMARY GROUP NO.	PER CAR	PART NO.	CODE
BOLT, Hexagon	64-65 01 (WST): 60-61 80 (WST)(WOD)	17.038	4	G179860	NA
WASHER, Lock	60 Thru 63 01 (WST): 61 10 (WST): 60-61 80 (WST) (WOD)	17.822	3	G114607	NA
WASHER, Lock	64-65 01 (WST)	17.820	4	G120383	
WASHER, Lock	***62 10 (WST-Heavy Duty-Note 6.001-1)***	17.822	3	G114606	NA
WASHER, Plain	60 Thru 63 01 (WST): 60-61 10 (WST)	.....	1	314 2758	
WASHER, Plain	***60 Thru 62 10 (WST-Heavy Duty-Note 6.001-1):*** 60-61 20 (WST)	.....	1	314 2761	

GASKET, Transmission Rear Bearing Cap

60 Thru 63 01 (WST): 60-61 10 (WST)	.....	1	314 2756	
64-65 01 (WST)	.....	1	317 2406	
60 Thru 62 10 (WST-Heavy Duty-Note 6.001-1): 60-61 20 (WST)	.....	1	311 3242	
60-61 80 (WST)(WOD)	6.040	1	315 0656	

BUSHING, Transmission Rear Bearing Cap

62 10 (WST-Heavy Duty-Note 6.001-1): 60-61 20 (WST)	6.032	1	312 6502	
64-65 01 (WST) ..... ***(Use 320 4721)***	.....	1	315 5167	

FELT, Transmission Rear Bearing Cap

62 10 (WST-Heavy Duty-Note 6.001-1): 60-61 20 (WST)	6.032	1	312 6516	

6.030 ADAPTER, Transmission To Torque Tube

61 Thru 63 07 (WST)	6.028	1	316 2101	
64-65 01 (WST-LHE) ... (Incl. Bushing)	6.028	1	320 5091	
64 01 (WST-OHV) ... (Incl. Bushing): 65 01 (WST-OHV-196-Note 6.028-1 Type 1) ... (Incl. Bushing)	6.028	1	320 5090	
65 01 (WST-OHV-196-Note 6.028-1 Type 2)(WST-OHV-199) ... (Incl. Bushing) ..	6.028	1	320 6216	
62 10 (WST) ... (Incl. Bushing And Pilot Ring)	.....	1	320 4046	
63 10 (Six-WST) ... (Incl. Bushing And Pilot Ring): 64 10 (OHV-196-WST) ... (Incl. Bushing And Pilot Ring): 65 10 (OHV-199-WST) ... (Incl. Bushing And Pilot Ring) ..... ***(Replaces 320 4783, 320 4047)***	.....	1	320 5826	
63-64 10 (Six-WST-Heavy Duty-Note 6.001-1) ... (Incl. Bushing)	.....	1	320 4234	
64-65 10 (OHV-232-WST) ... (Incl. Bushing): ***65 10 (Six-WST-Heavy Duty-Note 6.001-5)*** ... (Incl. Seal): 65 80 (OHV-232-WST) ... (Incl. Bushing)	.....	1	317 4299	
63 10 (V8-WST) ... (Incl. Seal): 64 10 (V8-287-WST-Note 6.017-2 Types 1 And 3) ... (Incl. Seal)	.....	1	320 4597	
64 10 (V8-287-WST-Note 6.017-2 Type 2) ... (Incl. Bushing): 65 10 (V8-287-WST) ... (Incl. Bushing): 65 80 (V8-287-WST) ... (Incl. Bushing) ...	.....	1	320 5442	
60 Thru 62 80 (WST)	9.156	1	315 0675	
63 80 (WST) ... (Incl. Seal)	.....	1	316 6495	
64-65 10 (V8-327-WST) ... (Incl. Seal): 64-65 80 (V8-327-WST) ... (Incl. Seal) ..	.....	1	317 2270	

ATTACHING PARTS

Adapter To Case

BOLT, Hexagon	62 Thru 65 10-80 (WST)	17.038	4	G179860	NA
BOLT, Hexagon	***63 10 (1" Long-WST-Heavy Duty-Note 6.001-1)***	17.038	1	G179839	NA
BOLT, Hexagon	***63 10 (1-1/8" Long-WST-Heavy Duty-Note 6.001-1)*** ..	17.038	3	G179840	NA
BOLT, Hexagon	63 10 (V8-WST): 64 10 (V8-287-Note 6.017-2 Types 1 And 3)	17.038	4	G179861	NA
BOLT, Hexagon	64-65 10 (OHV-232-WST): ***65 10 (Six-WST-Heavy Duty-Note 6.001-5):*** 65 80 (OHV-232-WST)	17.038	3	G179859	
BOLT, (Oil Seal)	64-65 10 (OHV-232-WST): 64 10 (V8-287-WST-Note 6.017-2 Type 2): 65 10 (V8-287-WST): 65 80 (OHV-232-WST)(V8-287-WST)	.....	1	320 5234	
BOLT, Hexagon	64-65 10 (V8-327-WST-1-1/4" Long): 60 Thru 65 80 (V8-327-WST-1-1/4" Long): 65 10-50-80 (V8-327-WST-1-1/4" Long)	17.038	2	G179860	NA#
BOLT, Hexagon	63 Thru 65 80 (V8-327-WST-1-3/4" Long)	17.038	2	G179864	NA#
WASHER, Lock	***63-64 10 (Six-WST-Heavy Duty-Note 6.001-1)***	17.822	3	G114606	NA
WASHER, Lock	60 Thru 65 80 (WST)	17.822	4	G114607	NA

Copyright 1963 American Motors Corp.

ROUP NO. — DESCRIPTION — YEAR and MODEL	PRIMARY GROUP NO.	PER CAR	PART NO.	CODE
'ASHER, Lock ..... 62 Thru 65 10 (WST-Six): 63 10 (V8-WST): 64 10 (V8-287-WST-Note 6.017-2 Types 1 And 3) 63 Thru 65 10 (V8-287-WOD): 62 80 (WST): 65 80 65 80 (V8-287-WOD).....	17.820	4	G103322	NA
/ASHER, Plain..... 64-65 10 (OHV-232-WST): 64 10 (V8-WST-Note 6.017-2 Type 2): 64 10 (V8-327-WST): ***65 10 (Six-WST-Heavy Duty-Note 6.001-5):*** 60 Thru 65 80 (WST): 65 10 (V8-WST).....	17.822	4	G114607	NA#
/ASHER, Plain..... ***63-64 10 (Six-WST-Heavy Duty-Note 6.001-1)***.....	6.028	1	314 2761	
BUSHING, Transmission To Torque Tube Adapter				
)2 Thru 65 10 (WST-Six): ***63-64 10 (Six-WST-Heavy Duty-Note 6.001-1):*** 64 10 (V8-287-WST-Note 6.017-2 Type 2): 65 10 (V8-287-WST): 65 80 (OHV-232-WST)(V8-287-WST)	16.175	1	320 2124	
GASKET, Transmission To Adapter				
64-65 01 (WST)	6.028	1	317 2406	
62 Thru 64 10 (OHV-196-WST).....	.....	1	316 3961	
63-64 10 (Six-WST-Heavy Duty-Note 6.001-1).....	6.260	1	311 4532	
64 10 (V8-287-WST-Note 6.017-2 Type 2): 64-65 10 (OHV-232-WST): 65 10 (V8-287-WST): 65 80 (OHV-232-WST) .....***(Replaces 320 5443)***	.....	1	317 4607	
63 10 (V8-WST): 64 10 (V8-287-WST-Note 6.017-2 Types 1 And 3).....	6.290	1	316 3950	
64-65 10 (V8-327-WST): 62 Thru 65 80 (V8-327-WST)	9.156	1	315 0676	#

Copyright 1963 American Motors Corp.

GROUP NO. — DESCRIPTION — YEAR and MODEL	PRIMARY GROUP NO.	PER CAR	PART NO.	CODE
6.032 SEAL, Transmission Rear Bearing Cap Oil				
60 Thru 63 01 (WST)	.....	1	311 3831	
61 Thru 63 07 (WST): 64-65 01 (WST)	.....	1	315 8703	
62 Thru 65 10 (Six-WST)(V8-287-WST)(V8-WOD): 65 80 (OHV-232-WST) (OHV-232-WOD)(V8-287-WST)(V8-287-WOD)	16.175	1	315 3482	#
60-61 10-20 (WST)(WOD): ***62 10 (WST-Heavy Duty-Note 6.001-1)***	.....	1	310 5459	
64-65 10 (V8-327-WST)(V8-327-WOD): 60 Thru 65 80 (V8-327-WST) (V8-327-WOD) ***(Use 315 3482)***	6.021	1	315 0677	
BUSHING, Transmission Rear Bearing Cap Oil Seal (Oilite)				
60-61 10 (WST-Heavy Duty-Note 6.001-1): 60-61 20 (WST)	.....	1	312 6502	
FELT, Transmission Rear Bearing Cap Oil				
60-61 10 (WST-Heavy Duty-Note 6.001-1): 60-61 20 (WST)	.....	1	312 6516	
6.040 BEARING, Transmission Front Ball				
60 01-10-20 (WST)(WOD): ***60 Thru 64 10 (Six-WST-Heavy Duty-Note 6.001-1)*** (WST-Note 6.001-2 Type 1)(WOD): 61 01 (WST-Note 6.001-2 Type 1) (WOD-Note 6.001-2 Type 1): 63 Thru 65 10 (V8-287-WST)(V8-287-WOD) (V8-287-WST)(V8-287-WOD): ***65 10 (Six-WST-Heavy Duty-Note 6.001-5):*** 61 20 (WST)(WOD): 65 10-80 (OHV-232)	.....	1	315 6627	
61 01 (WST-Note 6.001-2 Type 2)(WOD-Note 6.001-2 Type 2): 62 Thru 65 01 (WST)(WOD): 61 10 (WST-Note 6.001-2 Type 2): 62 Thru 64 10 (OHV-196-(WST)(OHV-196-WOD): 65 10 (OHV-199-WST)(OHV-199-WOD)	6.040	1	316 2711	
64-65 10 (V8-327-WST)(V8-327-WOD): 60 Thru 65 80 (V8-327-WST) (V8-327-WOD)	6.040	1	315 0654	
WASHER, Transmission Front Ball Bearing				
60 Thru 63 01-10 (WST-LES)(WOD-LES): 64-65 01 (WST)(WOD): 60 Thru 65 10 (WST)(WOD): 65 80 (OHV-232-WST)(OHV-232-WOD)(V8-287-WST) (V8-287-WOD)	.....	1	311 3033	
62-63 01 (WST-WES)(WOD-WES)	.....	1	316 4761	
64-65 10 (V8-327-WST)(V8-327-WOD)***(Six-WST-Heavy Duty-Note 6.001-5):*** 60 Thru 65 80 (V8-327-WST)(V8-327-WOD)	.....	1	315 0656	#
WASHER, Transmission Front Ball Bearing Oil Retaining				
64-65 10 (V8-327-WST)(V8-327-WOD): 60 Thru 65 80 (V8-327-WST) (V8-327-WOD)	.....	1	315 0662	
6.044 RING, Transmission Front Ball Bearing Snap				
(.087) 60 Thru 65 01 (WST)(WOD): 64 10 (OHV-196-WST)(OHV-196-WOD): 65 10 (OHV-199-WST)(OHV-199-WOD)	.....	1	311 3833	
(.087) ***60 Thru 62 10 (WST-Heavy Duty-Note 6.001-1):*** 60-61 20 (WST)(WOD)	.....	1	310 4169	
(.087) 63 Thru 65 10 (V8-WST)(V8-WOD): 64-65 10 (OHV-232-WST) (OHV-232-WOD): 60 Thru 65 80 (WST)(WOD): ***63 Thru 65 10 (Six-WST-Heavy Duty-Notes 6.001-1 And 6.001-5)***	6.080	1	315 0622	#
(.090) ***60 Thru 62 10 (WST-Heavy Duty-Note 6.001-1):*** 60-61 20 (WST)(WOD)	.....	1	310 4170	
(.090) ***63 Thru 65 10 (Six-WST-Heavy Duty-Notes 6.001-1 And 6.001-5):*** 63 Thru 65 10 (V8-WST)(V8-WOD)(OHV-232-WST)(OHV-232-WOD): 60 Thru 65 80 (WST)(WOD)	6.069	1	315 0657	
(.092) 60 Thru 65 01 (WST)(WOD): 60 Thru 64 10 (OHV-196-WST) (OHV-196-WOD): 65 10 (OHV-199-WOD)	.....	1	310 8339	
(.093) ***60 Thru 62 10 (WST-Heavy Duty-Note 6.001-1):*** 60-61 20 (WST)(WOD)	.....	1	310 4171	
(.093) ***63 Thru 65 10 (Six-WST-Heavy Duty-Notes 6.001-1 And 6.001-5):*** 63 Thru 65 10 (V8-WST)(V8-WOD)(OHV-232-WOD): 60 Thru 65 80 (WST)(WOD)	6.069	1	315 0658	
(.095) 60 Thru 65 01 (WST)(WOD): 60 Thru 64 10 (OHV-196-WST) (OHV-196-WOD): 65 10 (OHV-199-WST)(OHV-199-WOD)	.....	1	310 8340	
(.096) ***60 Thru 62 10 (WST-Heavy Duty-Note 6.001-1):*** 60-61 20 (WST)(WOD)	.....	1	310 4172	

Copyright 1963 American Motors Corp.

4653-18001

~~4653~~

6463190

6037

Anderson, S. C., 3-1 1976



IN ACCOUNT WITH

IDEAL LAUNDRY

109 W. Reed St.

Telephone 224-3325

2	Fuel 17099 E30012	
	wash pa	
	~~Cover~~	11121-E3001
	oil pa	13042-A3510
	seal	

GROUP NO. — DESCRIPTION — YEAR and MODEL	PRIMARY GROUP NO.	PER CAR	PART NO.	CODE
(.096) ***63 Thru 65 10 (Six-WST-Heavy Duty-Notes 6.001-1 And 6.001-5):*** 63 Thru 65 10 (V8-WST)(V8-WOD)(OHV-232-WST)(OHV-232-WOD): 60 Thru 65 80 (WST)(WOD)	6.069	1	315 0659	
(.98) 60 Thru 65 01 (WST)(WOD): 60 Thru 64 10 (OHV-196-WST)(OHV-196-WOD): 65 10 (OHV-199-WST)(OHV-199-WOD)	.....	1	310 8341	
(.099) ***63 Thru 65 10 (Six-WST-Heavy Duty-Notes 6.001-1 And 6.001-5):*** 63 Thru 65 10 (V8-WST)(V8-WOD)(OHV-232-WST)(OHV-232-WOD): 60 Thru 65 80 (WST)(WOD)	6.069	1	315 0660	
(.100) 61 Thru 65 01-10 (Six-WST)(Six-WOD)	.....	1	314 2752	
(.101) ***63 Thru 65 10 (Six-WST-Heavy Duty-Notes 6.001-1 And 6.001-5):*** 63 Thru 65 10 (V8-WST)(V8-WOD)(OHV-232-WST)(OHV-232-WOD): 60 Thru 65 80 (WST)(WOD)	6.069	1	315 0661	
(.101) ***60 Thru 62 10 (WST-Heavy Duty-Note 6.001-1):*** 60-61 20 (WST)(WOD)	.....	1	314 2755	

6.048 RING, Transmission Front Ball Bearing Lock

60 Thru 64 10 (Six-WST-Heavy Duty-Note 6.001-1): 63 Thru 65 10 (V8-287-WST)(V8-287-WOD)(OHV-232-WST)(OHV-232-WOD)***(Six-WST-Heavy Duty-Note 6.001-5):*** 60-61 20 (WST)(WOD): 65 80 (OHV-232-WST)(OHV-232-WOD)(V8-287-WST)(V8-287-WOD)	.....	1	91 182	
64-65 10 (V8-327-WST)(V8-327-WOD): 60 Thru 65 80 (V8-327-WST)(V8-327-WOD)	.....	1	315 0655	#
(.073-.075) 60 Thru 65 01 (WST)(WOD): 60 Thru 64 10 (OHV-196-WST)(OHV-196-WOD): 65 10 (OHV-199-WST)(OHV-199-WOD)	.....	1	311 3832	
(.076-.078) 60 Thru 65 01 (WST)(WOD): 60 Thru 64 10 (OHV-196-WST)(OHV-196-WOD): 65 10 (OHV-199-WST) (OHV-199-WOD)	.....	1	310 8338	

6.052 BEARING, Transmission Rear Ball

60 Thru 65 01 (WST): 60 Thru 64 10 (OHV-196-WST): 65 10 (OHV-199-WST)	.....	1	310 8320	
60 Thru 65 01-10 (Six-WOD): 63 10 (V8-WST)(V8-WOD): 64 10 (V8-287-WST-Note 6.017-2 Types 1 And 3)	.....	1	312 1135	
60 Thru 64 10 (Six-WST-Heavy Duty-Note 6.001-1): 60-61 20 (WST)(WOD): ***65 10 (Six-WST-Heavy Duty-Note 6.001-5)*** ***(Replaces 315 6628)***	6.040	1	315 6627	
64-65 10 (OHV-232-WST): 64 10 (V8-287-WST-Note 6.017-2 Type 2): 65 10 (V8-287-WST): 65 80 (OHV-232-WST)(V8-287-WST)	.....	1	317 4608	
64-65 10 (V8-327-WST)(V8-327-WOD): 60 Thru 65 80 (V8-327-WST)(V8-327-WOD)	.....	1	315 0664	

6.054 WASHER, Transmission Rear Ball Bearing

64-65 01 (WST)(WOD): 62 Thru 65 10 (Six-WST)	6.282	1	311 5977	
63 Thru 65 10 (V8-287-WST): 65 80 (OHV-232-WST)(V8-287-WST)	6.275	1	315 0656	

6.056 RING, Transmission Rear Ball Bearing Snap

(.062) 60 01 (WOD)	6.278	1	311 6069	
(.065) 60 01 (WOD)	6.278	1	311 6070	
(.068) 60 01 (WOD)	6.278	1	311 6071	
(.071) 60 01 (WOD)	6.278	1	311 6072	
(.074) 60 Thru 65 01-10 (Six-WST): 63 Thru 65 10 (V8-WST): 65 80 (OHVC-232-WST)(V8-287-WST)	.....	1	311 3844	
(.074) ***60 Thru 64 10 (Six-WST-Heavy Duty-Note 6.001-1):*** 60-61 20 (WST)(WOD)	.....	1	91 942	
(.087) 60 Thru 65 01 (WST)(WOD): 61 Thru 64 10 (OHV-196-WST)(OHV-196-WOD): 65 10 (OHV-199-WST)(OHV-199-WOD)	6.069	1	310 8405	
(.088) ***60 Thru 64 10 (Six-WST-Heavy Duty-Note 6.001-1):*** 60-61 20 (WST)(WOD)	.....	1	91 943	
(.088) 64-65 10 (V8-327-WST)(V8-327-WOD): 60 Thru 65 80 (V8-327-WST)(V8-327-WOD)	.....	1	315 0665	
(.090) 60 Thru 65 01 (WST)(WOD): 61 Thru 64 10 (OHV-196-WST)(OHV-196-WOD): 65 10 (OHV-199-WST)(OHV-199-WOD)	6.069	1	310 8406	
(.090) 63 Thru 65 10 (V8-WST)(V8-WOD): 64-65 10 (OHV-232-WST)(OHV-232-WOD): ***63 Thru 65 10 (Six-WST-Heavy Duty-Notes 6.001-1 And 6.001-5):*** 60 Thru 65 80 (WST)(WOD)	6.069	1	315 0657	
(.091) 64-65 10 (V8-327-WST)(V8-327-WOD): 60 Thru 65 80 (V8-327-WST)(V8-327-WOD)	.....	1	315 0666	
(.093) 60 Thru 65 01 (WST)(WOD): 61 Thru 64 10 (OHV-196-WST)(OHV-196-WOD): 65 10 (OHV-199-WOD)	6.069	1	310 8407	

Copyright 1963 American Motors Corp.

GROUP NO. — DESCRIPTION — YEAR and MODEL	PRIMARY GROUP NO.	PER CAR	PART NO.	CODE
(.096) ***63 Thru 65 10 (Six-WST-Heavy Duty-Notes 6.001-1 And 6.001-5):*** 63 Thru 65 10 (V8-WST)(V8-WOD)(OHV-232-WST)(OHV-232-WOD): 60 Thru 65 80 (WST)(WOD)	6.069	1	315 0659	
(.98) 60 Thru 65 01 (WST)(WOD): 60 Thru 64 10 (OHV-196-WST)(OHV-196-WOD): 65 10 (OHV-199-WST)(OHV-199-WOD)	.....	1	310 8341	
(.099) ***63 Thru 65 10 (Six-WST-Heavy Duty-Notes 6.001-1 And 6.001-5):*** 63 Thru 65 10 (V8-WST)(V8-WOD)(OHV-232-WST)(OHV-232-WOD): 60 Thru 65 80 (WST)(WOD)	6.069	1	315 0660	
(.100) 61 Thru 65 01-10 (Six-WST)(Six-WOD)	.....	1	314 2752	
(.101) ***63 Thru 65 10 (Six-WST-Heavy Duty-Notes 6.001-1 And 6.001-5):*** 63 Thru 65 10 (V8-WST)(V8-WOD)(OHV-232-WST)(OHV-232-WOD): 60 Thru 65 80 (WST)(WOD)	6.069	1	315 0661	
(.101) ***60 Thru 62 10 (WST-Heavy Duty-Note 6.001-1):*** 60-61 20 (WST)(WOD)	.....	1	314 2755	

6.048 RING, Transmission Front Ball Bearing Lock

60 Thru 64 10 (Six-WST-Heavy Duty-Note 6.001-1): 63 Thru 65 10 (V8-287-WST)(V8-287-WOD)(OHV-232-WST)(OHV-232-WOD)***(Six-WST-Heavy Duty-Note 6.001-5):*** 60-61 20 (WST)(WOD): 65 80 (OHV-232-WST)(OHV-232-WOD)(V8-287-WST)(V8-287-WOD)	.....	1	91 182	
64-65 10 (V8-327-WST)(V8-327-WOD): 60 Thru 65 80 (V8-327-WST)(V8-327-WOD)	.....	1	315 0655	#
(.073-.075) 60 Thru 65 01 (WST)(WOD): 60 Thru 64 10 (OHV-196-WST)(OHV-196-WOD): 65 10 (OHV-199-WST)(OHV-199-WOD)	.....	1	311 3832	
(.076-.078) 60 Thru 65 01 (WST)(WOD): 60 Thru 64 10 (OHV-196-WST)(OHV-196-WOD): 65 10 (OHV-199-WST) (OHV-199-WOD)	.....	1	310 8338	

6.052 BEARING, Transmission Rear Ball

60 Thru 65 01 (WST): 60 Thru 64 10 (OHV-196-WST): 65 10 (OHV-199-WST)	.....	1	310 8320	
60 Thru 65 01-10 (Six-WOD): 63 10 (V8-WST)(V8-WOD): 64 10 (V8-287-WST-Note 6.017-2 Types 1 And 3)	.....	1	312 1135	
60 Thru 64 10 (Six-WST-Heavy Duty-Note 6.001-1): 60-61 20 (WST)(WOD): ***65 10 (Six-WST-Heavy Duty-Note 6.001-5)*** ***(Replaces 315 6628)***	6.040	1	315 6627	
64-65 10 (OHV-232-WST): 64 10 (V8-287-WST-Note 6.017-2 Type 2): 65 10 (V8-287-WST): 65 80 (OHV-232-WST)(V8-287-WST)	.....	1	317 4608	
64-65 10 (V8-327-WST)(V8-327-WOD): 60 Thru 65 80 (V8-327-WST)(V8-327-WOD)	.....	1	315 0664	

6.054 WASHER, Transmission Rear Ball Bearing

64-65 01 (WST)(WOD): 62 Thru 65 10 (Six-WST)	6.282	1	311 5977	
63 Thru 65 10 (V8-287-WST): 65 80 (OHV-232-WST)(V8-287-WST)	6.275	1	315 0656	

6.056 RING, Transmission Rear Ball Bearing Snap

(.062) 60 01 (WOD)	6.278	1	311 6069	
(.065) 60 01 (WOD)	6.278	1	311 6070	
(.068) 60 01 (WOD)	6.278	1	311 6071	
(.071) 60 01 (WOD)	6.278	1	311 6072	
(.074) 60 Thru 65 01-10 (Six-WST): 63 Thru 65 10 (V8-WST): 65 80 (OHVC-232-WST)(V8-287-WST)	.....	1	311 3844	
(.074) ***60 Thru 64 10 (Six-WST-Heavy Duty-Note 6.001-1):*** 60-61 20 (WST)(WOD)	.....	1	91 942	
(.087) 60 Thru 65 01 (WST)(WOD): 61 Thru 64 10 (OHV-196-WST)(OHV-196-WOD): 65 10 (OHV-199-WST)(OHV-199-WOD)	6.069	1	310 8405	
(.088) ***60 Thru 64 10 (Six-WST-Heavy Duty-Note 6.001-1):*** 60-61 20 (WST)(WOD)	.....	1	91 943	
(.088) 64-65 10 (V8-327-WST)(V8-327-WOD): 60 Thru 65 80 (V8-327-WST)(V8-327-WOD)	.....	1	315 0665	
(.090) 60 Thru 65 01 (WST)(WOD): 61 Thru 64 10 (OHV-196-WST)(OHV-196-WOD): 65 10 (OHV-199-WST)(OHV-199-WOD)	6.069	1	310 8406	
(.090) 63 Thru 65 10 (V8-WST)(V8-WOD): 64-65 10 (OHV-232-WST)(OHV-232-WOD): ***63 Thru 65 10 (Six-WST-Heavy Duty-Notes 6.001-1 And 6.001-5):*** 60 Thru 65 80 (WST)(WOD)	6.069	1	315 0657	
(.091) 64-65 10 (V8-327-WST)(V8-327-WOD): 60 Thru 65 80 (V8-327-WST)(V8-327-WOD)	.....	1	315 0666	
(.093) 60 Thru 65 01 (WST)(WOD): 61 Thru 64 10 (OHV-196-WST)(OHV-196-WOD): 65 10 (OHV-199-WOD)	6.069	1	310 8407	

Copyright 1963 American Motors Corp.

GROUP NO. — DESCRIPTION — YEAR and MODEL	PRIMARY GROUP NO.	PER CAR	PART NO.	CODE
(.093) 63 Thru 65 10 (V8-WST)(V8-WOD): 64-65 10 (OHV-232-WST) (OHV-232-WOD): ***63 Thru 65 10 (Six-WST-Heavy Duty-Notes 6.001-1 And 6.001-5):*** 60 Thru 65 80 (WST)(WOD)	6.069	1	315 0658	
(.094) 64 01 (WOD): 60 Thru 65 10 (WOD) ***(Replaces 314 3101)***	.....	1	314 3100	
(.094) 64-65 10 (V8-327-WST)(V8-327-WOD): 60 Thru 65 80 (V8-327-WST) (V8-327-WOD)	.....	1	315 0667	
(.096) 60 Thru 65 01 (WST)(WOD): 61 Thru 64 10 (OHV-196-WST) (OHV-196-WOD): 65 10 (OHV-199-WST)(OHV-199-WOD)	6.278	1	310 8408	
(.096) 63 Thru 65 10 (V8-WST)(V8-WOD): 64-65 10 (OHV-232-WST) (OHV-232-WOD): ***63 Thru 65 10 (Six-WST-Heavy Duty-Notes 6.001-1 And 6.001-5):*** 60 Thru 65 80 (WST)(WOD)	6.069	1	315 0659	
(.097) 64-65 10 (V8-327-WST)(V8-327-WOD): 60 Thru 65 80 (V8-327-WST) (V8-327-WOD)	.....	1	315 0668	
(.098) 60 01-10 (WST)(WOD)	6.040	1	310 8341	
(.098) 64-65 01 (WOD): 60 Thru 65 10 (Six-WOD): 63 Thru 65 10 (V8-287-WOD): 65 80 (OHV-232-WOD)(V8-287-WOD)	.....	1	314 3102	
(.099) 63 Thru 65 10 (V8-WST) (V8-WOD): 64-65 10 (OHV-232-WST) (OHV-232-WOD): ***63 Thru 65 10 (Six-WST-Heavy Duty-Notes 6.001-1 And 6.001-5):*** 60 Thru 65 80 (WST)(WOD)	6.069	1	315 0660	
(.100) 60 01-10 (WST)(WOD)	6.044	1	314 2752	
(.100) 64-65 10 (V8-327-WST)(V8-327-WOD): 60 Thru 65 80 (V8-327-WST) (V8-327-WOD)	.....	1	315 0669	
(.101) ***60 Thru 62 10 (WST-Heavy Duty-Note 6.001-1):*** 60-61 20 (WST)(WOD)	6.044	1	314 2755	
(.101) 63 Thru 65 10 (V8-WST)(V8-WOD): 64-65 10 (OHV-232-WST) (OHV-232-WOD): ***63 Thru 65 10 (Six-WST-Heavy Duty-Notes 6.001-1 And 6.001-5):*** 60 Thru 65 80 (WST)(WOD)	6.069	1	315 0661	
(.102) ***60 Thru 64 10 (Six-WST-Heavy Duty-Note 6.001-1):*** 60-61 20 (WST)(WOD)	.....	1	91 944	
(.103) 63 Thru 65 10 (V8-287-WOD): 64-65 01 (WOD): 60 Thru 65 10 (Six-WOD): 65 80 (OHV-232-WOD)(V8-287-WOD)	.....	1	314 3103	

6.058 RING, Transmission Rear Ball Bearing Pilot

62 Thru 64 10 (OHV-196-WST): 65 10 (OHV-199-WST)	.....	1	316 3960	

6.060 SHAFT, Transmission Clutch

60 01-10 (WST)(WOD) ***(Use 320 2323)***	.....	1	314 2748	
61 01-10 (WST-Note 6.001-2 Type 1)(WOD-Note 6.001-2 Type 1)	.....	1	320 2323	
61 01-10 (WST-Note 6.001-2 Type 2)(WOD-Note 6.001-2 Type 2) ***(Use 316 4742)***	.....	1	316 2732	
62 01-10 (WST)(WOD): 63 01-10 (Six-WST-Note 6.001-3 Type 1)(Six-WOD-Note 6.001-3 Type 1)	.....	1	316 4742	
63 01-10 (Six-WST-Note 6.001-3 Type 2)(Six-WOD-Note 6.001-3 Type 2): 64-65 01 (WST)(WOD): 64 10 (OHV-196-WST)(OHV-196-WOD): 65 10 (OHV-199-WST)(OHV-199-WOD)	.....	1	316 9077	
60 10 (WST-Heavy Duty-Note 6.001-1): 61 10 (WST-Heavy Duty-Notes 6.001-1 And 6.001-2 Type 1): 60 20 (WST)(WOD): 61 20 (WST-Note 6.001-2 Type 1) (WOD-Note 6.001-2 Type 1)	.....	1	314 3107	
61 10 (WST-Heavy Duty-Notes 6.001-1 And 6.001-2 Type 2): 62 10 (WST-Heavy Duty-Note 6.001-1): 61 20 (WST-Note 6.001-2 Type 2)(WOD-Note 6.001-2 Type 2)	.....	1	316 2731	
63 10 (V8-WST)(V8-WOD): 64 10 (V8-287-WST-Note 6.017-2 Types 1 And 3) (V8-287-WOD-Note 6.017-1 Type 1)	.....	1	317 1336	
63-64 10 (Six-WST-Heavy Duty-Note 6.001-1).	.....	1	316 9153	
64 10 (V8-287-WST-Note 6.017-2 Type 2)(V8-287-WOD-Note 6.017-1 Type 2): 65 10 (V8-287-WST)(V8-287-WOD): 65 80 (V8-287-WST)(V8-287-WOD)	.....	1	317 5413	
64-65 10 (OHV-232-WST)(OHV-232-WOD)***(Six-WST-Heavy Duty-Note 6.001-5):*** 65 80 (OHV-232-WST)(OHV-232-WOD)	.....	1	317 4601	
64-65 10 (V8-327-WST)(V8-327-WOD): 60 Thru 65 80 (V8-327-WST) (V8-327-WOD)	.....	1	315 0653	
65 10-50-80 (V8-W4ST)	.....	1	318 2320	

6.064 BUSHING, Transmission Clutch Shaft

60 Thru 62 01-10 (WST)(WOD): 63 01-10 (WST-Note 6.001-3 Type 1) (WOD-Note 6.001-3 Type 1) ***(Replaces 310 6507)***	1.043	1	316 8006	

Copyright 1963 American Motors Corp.

GROUP NO. — DESCRIPTION — YEAR and MODEL	PRIMARY GROUP NO.	PER CAR	PART NO.	CODE
63 01-10 (WST-Note 6.001-3 Type 2)(WOD-Note 6.001-3 Type 2): 64 01: 65 01 (LHE)(OHV-196): 64 10 (OHV-196): ***63-64 10 (Six-WST-Heavy Duty-Note 6.001-1)***	1.043	1	315 1388	
60 Thru 62 10 (WST-Heavy Duty-Note 6.001-1): 60 Thru 64 10-20-80 (V8-WST) (V8-WOD): 65 10-80 (V8-WST)(V8-WOD)	1.043	1	59 789	
64-65 10 (OHV-232-WST)(OHV-232-WOD): 65 10 (OHV-199-WST)(OHV-199-WOD): 65 80 (OHV-232-WST)(OHV-232-WOD)	1.043	1	317 4730	

6.068 SHAFT, Transmission Spline

60 01-10 (WOD): 61 01-10 (WOD-Note 6.001-2 Type 1)	.....	1	311 4530	
60 01-10 (WST): 61 01-10 (WST-LCV-Note 6.001-2 Type 1)	.....	1	311 3849	
61 01-10 (WST-LCV-Note 6.001-2 Type 2): 62-63 01 (WST-LCV)	.....	1	316 2726	
61 01-10 (WOD-Note 6.001-2 Type 2): 62-63 01 (WOD): 64-65 01 (WOD): 62 10 (WOD): 62 Thru 64 10 (LHD-OHV-196-WOD): 65 10 (OHV-199-WOD)	.....	1	316 2728	
61 07 (WST-Note 6.001-2 Type 1)	.....	1	316 2100	
61 07 (WST-Note 6.001-2 Type 2): 62-63 07 (WST)	.....	1	316 2727	
64 01 (WST): 65 01 (LHE-WST)(OHV-196-WST-Notes 6.028-1 Type 1 And 6.001-6)	.....	1	317 1021	
65 01 (OHV-196-Notes 6.028-1 Type 2 And 6.001-7)(OHV-199-WST-Note 6.001-7)	.....	1	318 0047	
64 01 (RHD-WST): 62 Thru 64 10 (OHV-196-WST): 65 10 (OHV-199-WST)	.....	1	316 3962	
60 Thru 62 10 (WST-Heavy Duty-Note 6.001-1)	.....	1	315 6632	
64-65 10 (OHV-232-WST): 65 80 (OHV-232-WST)	.....	1	317 4602	
63 10 (V8-WST): 64 10 (V8-287-WST-Note 6.017-2 Types 1 And 3)	.....	1	317 0797	
63 Thru 65 10 (RHD-WOD)	.....	1	317 0556	
64 10 (V8-287-WST-Note 6.017-2 Type 2): 65 10-80 (V8-287-WST)	.....	1	317 5423	
63-64 10 (Six-WST-Heavy Duty-Note 6.001-1)	.....	1	316 9051	
63 Thru 65 10 (V8-287-WOD): 60-61 20 (WOD): 64-65 10 (OHV-232-WOD): 65 80 (OHV-232-WOD)(V8-287-WOD)	.....	1	311 2986	
65 10 (WST-Heavy Duty-Note 6.001-5)	.....	1	320 5858	
60-61 20 (WST)	.....	1	311 2985	
64-65 10 (V8-327-WOD): 60 Thru 65 80 (V8-327-WOD)	.....	1	315 0632	
60 Thru 62 80 (WST)	.....	1	315 0634	
64-65 10 (V8-327-WST): 63 Thru 65 80 (V8-327-WST)	.....	1	316 7504	

6.076 ROLLER, Transmission Spline Shaft Pilot Bearing

60 01-10 (WST)(WOD): 61 01-10 (WST-Note 6.001-2 Type 1)(WOD-Note 6.002-2 Type 1)	.....	13	310 8343	
61 01-10 (WST-Note 6.001-2 Type 2)(WOD-Note 6.001-2 Type 2): 62 Thru 65 01 (WST)(WOD): 62 10 (WST)(WOD): 63-64 10 (OHV-196-WST)(OHV-196-WOD): 65 10 (OHV-199-WST)(OHV-199-WOD)	.....	13	316 2712	
60 Thru 64 10 (Six-WST-Heavy Duty-Note 6.001-1): 63 Thru 65 10 (V8-287-WST) (V8-287-WOD)(OHV-232-WST)(OHV-232-WOD)***(Six-WST-Heavy Duty-Note 6.001-5):*** 60-61 20 (WST)(WOD): 65 80 (OHV-232-WST)(OHV-232-WOD) (V8-287-WST)(V8-287-WOD)	.....	14	91 947	
64-65 10 (V8-327-WST)(V8-327-WOD): 60 Thru 65 80 (V8-327-WST) (V8-327-WOD)	.....	14	315 0619	#

SPACER, Transmission Spline Shaft Pilot Bearing Roller

64-65 10 (V8-327-WST)(V8-327-WOD): 60 Thru 65 80 (V8-327-WST) (V8-327-WOD)	.....	1	315 0620	#

6.080 CLUTCH ASSEMBLY, Transmission Synchronizer (Incl. Friction Ring)

60 01-10 (WST)(WOD): 61 01-10 (WST-Note 6.001-2 Type 1)(WOD-Note 6.001-2 Type 1)	.....	1	312 7226	
61 01-10 (WST-Note 6.001-2 Type 2)(WOD-Note 6.001-2 Type 2): 62 Thru 65 01 (WST)(WOD): 62 Thru 64 10 (OHV-196-WST)(OHV-196-WOD): 65 10 (OHV-199-WST)(OHV-199-WOD)	.....	1	320 3012	
60 10 (WST-Heavy Duty-Note 6.001-1): 61 10 (WST-Heavy Duty-Notes 6.001-1 And 6.001-2 Type 1): 60 20 (WST)(WOD): 61 20 (WST-Note 6.001-2 Type 1) (WOD-Note 6.001-2 Type 1)	.....	1	311 3036	

Copyright 1963 American Motors Corp.

GROUP NO. — DESCRIPTION — YEAR and MODEL	PRIMARY GROUP NO.	PER CAR	PART NO.	CODE
61 10 (WST-Heavy Duty-Notes 6.001-1 And 6.001-2 Type 2): 61 20 (WST-Note 6.001-2 Type 2)(WOD-Note 6.001-2 Type 2): ***62 Thru 64 10 (Six-WST-Note 6.001-1):*** 64-65 10 (OHV-232-WST)(OHV-232-WOD)***(Six-WST-Heavy Duty-Note 6.001-5):*** 65 80 (OHV-232-WST)(OHV-232-WOD)	.....	1	320 3013	
63 Thru 65 10 (V8-287-WST)(V8-287-WOD): 65 80 (V8-287-WST)(V8-287-WOD)	.....	1	320 4598	
64-65 10 (V8-327-WST)(V8-327-WOD): 60 Thru 65 80 (V8-327-WST) (V8-327-WOD)	.....	1	315 0631	
RING, Transmission Synchronizer Clutch Snap				
60 Thru 65 01 (WST)(WOD): 60 Thru 64 10 (OHV-196-WST)(OHV-196-WOD): 65 10 (OHV-199-WST)(OHV-199-WOD)	6.105	1	310 8318	
63 Thru 65 10 (V8-WST)(V8-WOD): 60 Thru 65 80 (V8-WST)(V8-WOD): 64-65 10 (OHV-232-WST)(OHV-232-WOD): ***63-64 10 (Six-WST-Heavy Duty-Note 6.001-1): 65 10 (Six-WST-Heavy Duty-Note 6.001-5):*** 65 80 (OHV-232-WST) (OHV-232-WOD)	.....	1	315 0622	
6.090 RING SET, Transmission Synchronizer Clutch Friction (Incl. 2 Rings)				
60 Thru 62 01-10 (WST)(WOD) ***(Use 320 4224)***	.....	1	311 7001	
63 Thru 65 01 (WST)(WOD): 63-64 10 (OHV-196-WST)(OHV-196-WOD): 65 10 (OHV-199-WST)(OHV-199-WOD)	.....	1	320 4224	
60 Thru 64 10 (Six-Heavy Duty-Note 6.001-1): 64-65 10 (OHV-232-WST) (OHV-232-WOD)***(Six-WST-Heavy Duty-Note 6.001-5):*** 60-61 20 (WST)(WOD): 65 80 (OHV-232-WST)(OHV-232-WOD)	.....	1	311 3247	
63 Thru 65 10 (V8-287-WST)(V8-287-WOD): 65 80 (V8-287-WST)(V8-287-WOD)	.....	1	320 4717	
64-65 10 (V8-327-WST)(V8-327-WOD): 60 Thru 65 80 (V8-327-WST) (V8-327-WOD)	.....	1	320 0045	#
6.100 PLATE, Transmission Synchronizer Clutch Shaft				
60 Thru 65 01 (WST)(WOD): 60 Thru 64 10 (OHV-196-WST)(OHV-196-WOD): 65 10 (OHV-199-WST)(OHV-199-WOD)	.....	3	311 3847	
60 Thru 64 10 (Six-WST-Heavy Duty-Note 6.001-1): 63 Thru 65 10 (V8-287-WST) (V8-287-WOD): 64-65 10 (OHV-232-WST)(OHV-232-WOD): 60-61 20 (WST)(WOD): 65 80 (OHV-232-WST)(OHV-232-WOD)(V8-287-WST) (V8-287-WOD)	.....	3	310 8241	
64-65 10 (V8-327-WST)(V8-327-WOD): 60 Thru 65 80 (V8-327-WST) (V8-327-WOD)	.....	3	315 0628	
SPRING, Transmission Synchronizer Clutch Shaft Plate Retaining				
60 Thru 65 01 (WST)(WOD): 60 Thru 64 10 (OHV-196-WST)(OHV-196-WOD): 65 10 (OHV-199-WST)(OHV-199-WOD)	.....	2	310 8317	
60 Thru 64 10 (Six-Heavy Duty-Note 6.001-1): 64-65 10 (OHV-232-WST) (OHV-232-WOD)***(Six-WST-Heavy Duty-Note 6.001-5):*** 60 Thru 61 20 (WST) (WOD): 65 80 (OHV-232-WST)(OHV-232-WOD)	.....	2	310 8242	
63 Thru 65 10 (V8-287-WST)(V8-287-WOD): 65 80 (V8-287-WST)(V8-287-WOD)	.....	2	320 4599	
64-65 10 (V8-327-WST)(V8-327-WOD): 60 Thru 65 80 (V8-327-WST) (V8-327-WOD) ***(Replaces 317 8692)***	.....	2	315 0627	

Copyright 1963 American Motors Corp.

GROUP NO. — DESCRIPTION — YEAR and MODEL	PRIMARY GROUP NO.	PER CAR	PART NO.	CODE
6.120 GEAR, Transmission Second Speed (Incl. Bushing)				
60 01-10 (WST)(WOD): 61 01-10 (WST-Note 6.001-2 Type 1)(WOD-Note 6.001-2 Type 1)	.....	1	314 2734	
61 01-10 (WST-Note 6.001-2 Type 2)(WOD-Note 6.001-2 Type 2): 62 Thru 65 01-10 (Six-WST-24 Teeth)(Six-WOD-24 Teeth-Note 6.120-2 Type 1)	.....	1	316 2785	
63 01-10 (Six-WOD-WFGS-26 Teeth-Note 6.120-2 Type 2): 64-65 01 (WOD-WFGS): 64 10 (OHV-196-WOD-WFGS): 65 10 (OHV-199-WOD-WFGS)	.....	1	320 4383	
60 10 (WST-Heavy Duty-Note 6.001-1): 61 10 (WST-Heavy Duty-Note 6.001-1 And 6.001-2 Type 1): 60 20 (WST)(WOD): 61 20 (WST-Note 6.001-2 Type 1) (WOD-Note 6.001-2 Type 1)	.....	1	314 7623	
61 10 (WST-Heavy Duty-Notes 6.001-1 And 6.001-2 Type 2): 62 Thru 64 10 (Six-WST-Heavy Duty-Note 6.001-1): 64-65 10 (OHV-232-WST)(OHV-232-WOD-WCGS)***(Six-WST-Heavy Duty-Note 6.001-5):*** 61 20 (WST-Note 6.001-2 Type 2)(WOD-Note 6.001-2 Type 2): 65 80 (OHV-232-WST)(OHV-232-WOD-WCGS)	.....	1	316 3603	
64-65 10 (OHV-232-WOD-WFGS): 65 80 (OHV-232-WOD-WFGS)	.....	1	320 5230	
63-64 10 (V8-287-WST-WCGS)(V8-WOD-WFGS)(V8-WOD-WFGS) (V8-WOD-WFGS-23-Teeth-Note 6.001-4 Type 1): 65 10-80 (V8-287-WST) (V8-287-WOD-WCGS)	.....	1	320 4568	
63-64 10 (V8-287-WOD-WFGS-25 Teeth-Note 6.001-4 Type 2): 65 10-80 (V8-287-WOD-WFGS)	.....	1	320 4602	
64-65 10 (V8-327-WST)(V8-327-WOD-WCGS): 60 Thru 62 80 (WST)(WOD): 63-64 80 (WST-26-Teeth-Note 6.120-1 Type 1)(WOD-26-Teeth-Note 6.120-1): 65 80 (V8-327-WST)(V8-327-WOD-WCGS)	.....	1	315 0626	
64-65 10 (V8-327-WOD-WFGS): 63-64 80 (WST-28-Teeth-Note 6.120-1 Type 2) (WOD-28-Teeth-Note 6.120-1 Type 2): 65 80 (V8-327-WOD-WFGS)	.....	1	320 4385	
6.144 GEAR, Transmission Low And Reverse				
60 01-10 (WST)(WOD): 61 01-10 (WST-Note 6.001-2 Type 1)(WOD-Note 6.001-2 Type 1) ***(Use 316 2719)***	.....	1	314 2737	
61 01-10 (WST-Note 6.001-2 Type 2)(WOD-Note 6.001-2 Type 2): 62 Thru 65 01 (WST)(WOD): 62 Thru 64 10 (OHV-196-WST)(OHV-196-WOD): 65 10 (OHV-199-WST)(OHV-199-WOD)	.....	1	316 2719	
60 Thru 64 10 (Six-WST-Heavy Duty-Note 6.001-1): 65 10 (Six-WST-Heavy Duty-Note 6.001-5)	.....	1	315 6634	
63 Thru 65 10 (V8-287-WST)(V8-287-WOD)(OHV-232-WST)(OHV-232-WOD): 60-61 20 (WST)(WOD): 65 80 (OHV-232-WST)(OHV-232-WOD)(V8-287-WST) (V8-287-WOD)	.....	1	314 7622	
64-65 10 (V8-327-WST)(V8-327-WOD): 60 Thru 65 80 (V8-327-WST) (V8-327-WOD)	.....	1	315 0621	

NOTE 6.120-1: Two Types of Second Speed Gears were used in the 63-64 80 Standard and Overdrive Transmissions. They can be identified as follows:

Type 1: The Gear has 26 Teeth and must be used with Counter Shaft Gear 3150644 (Second Speed Drive Gear 25 Teeth.)

Type 2: The Gear has 28 Teeth and must be used with Counter Shaft Gear 3169158 (Second Speed Drive Gear 23 Teeth.)

NOTE 6.120-2: Two Types of Second Speed Gear were used on the 63 01-10 (Six-WOD-WFGS). They can be identified as follows:

Type 1: The Gear has 24 Teeth and must be used with Countershaft Gear 316 2729 (Second Speed Drive Gear 27 Teeth).

Type 2: The Gear Has 26 Teeth and must be used with Countershaft Gear 316 9160 (Second Speed Drive Gear 25 Teeth.)

Copyright 1963 American Motors Corp.

GROUP NO. — DESCRIPTION — YEAR and MODEL	PRIMARY GROUP NO.	PER CAR	PART NO.	CODE
6.159 COUNTERSHAFT, Transmission				
60 Thru 65 01 (WST)(WOD): 60 Thru 64 10 (OHV-196-WST)(OHV-196-WOD): 65 10 (OHV-199-WST)(OHV-199-WOD)	.....	1	311 3837	
60 10 (WST-Heavy Duty-Notes 6.001-1): 61 10 (WST-Heavy Duty-Notes 6.001-1 And 6.001-2 Type 1): 60 20 (WST)(WOD): 61 20 (WST-Note 6.001-2 Type 1) (WOD-Note 6.001-2 Type 1) ***(Use 316 2279)***	.....	1	311 3025	
61 10 (WST-Heavy Duty-Notes 6.001-1 And 6.001-2 Type 2): 62 Thru 64 10 (Six-WST-Heavy Duty-Note 6.001-1): 61 20 (WST-Note 6.001-2 Type 2) (WOD-Note 6.001-2 Type 2): 63 Thru 65 10 (V8-287-WST)(V8-287-WOD) (OHV-232-WST)(OHV-232-WOD)***(Six-WST-Heavy Duty-Note 6.001-5):***				
65 80 (OHV-232-WST)(OHV-232-WOD)(V8-287-WST)(V8-287-WOD)	.....	1	316 2279	
64-65 10 (V8-327-WST)(V8-327-WOD): 60 Thru 65 80 (V8-327-WST) (V8-327-WOD)	.....	1	315 0637	#
6.164 GEAR, Transmission Countershaft (Cluster Gear)				
60 01-10 (WST)(WOD): 61 01-10 (WST-Note 6.001-2 Type 1)(WOD-Note 6.001-2 Type 1) ***(Use 316 2729)***	.....	1	314 2738	
61 01-10 (WST-Note 6.001-2 Type 2)(WOD-Note 6.001-2 Type 2): 62 Thru 65 01 (WST)(WOD-Second Speed Gear-27 Teeth-Note 6.120-2 Type 1): 62-63 10 (WST)(WOD-OHV-196-Second Speed Gear-27 Teeth-Note 6.120-2 Type 1): 64 10 (OHV-196-WST)(OHV-196-WOD-WCGS): 65 10 (OHV-199-WST)(OHV-199-WOD-WCGS)	.....	1	316 2729	
63 01-10 (Six-WOD-WFGS-Second Speed Drive Gear-25 Teeth-Note 6.120-2 Type 2): 64-65 01 (WOD-WFGS): 64 10 (OHV-196-WOD-WFGS): 65 10 (OHV-199-WOD-WFGS)	.....	1	316 9160	
60 Thru 64 10 (Six-WST-Heavy Duty-Note 6.001-1): 65 10 (Six-WST-Heavy Duty-Note 6.001-5)	.....	1	315 6633	
63-64 10 (V8-287-WOD-WFGS-Note 6.001-4 Type 2): 64-65 10 (OHV-232-WOD-WFGS): 65 80 (OHV-232-WOD-WFGS): 65 10-80 (V8-287-WOD-WFGS)	.....	1	317 2115	
60-61 20 (WST)(WOD): 63 Thru 65 10 (V8-287-WST-WCGS)(V8-287-WOD-WCGS) (V8-287-WOD-WFGS-Note 6.001-4 Type 1)(OHV-232-WST) (OHV-232-WOD-WCGS): 65 80 (OHV-232-WST)(OHV-232-WOD-WCGS) (V8-287-WST)(V8-287-WOD-WCGS)	.....	1	314 7624	
64-65 10 (V8-327-WST)(V8-327-WOD-WCGS): 60 Thru 62 80 (WST)(WOD): 63-64 80 (V8-327-WST-Note 6.120-1 Type 1)(V8-327-WOD-Note 6.120-1 Type 1): 65 80 (V8-327-WST)(V8-327-WOD-WCGS)	.....	1	315 0644	
64-65 10 (V8-327-WOD-WFGS): 63-64 80 (WST-Note 6.120-1 Type 2)(WOD-Note 6.120-1 Type 2) 65 80 (V8-327-WOD-WFGS)	.....	1	316 9158	
6.166 WASHER, Transmission Countershaft Gear Thrust (Front)				
60 Thru 64 10 (Six-WST-Heavy Duty-Note 6.001-1)	.....	1	315 6630	
60 Thru 65 01 (WST)(WOD): 60 Thru 64 10 (OHV-196-WST)(OHV-196-WOD): 65 10 (OHV-199-WST)(OHV-199-WOD)	.....	1	311 3840	
63 Thru 65 10 (V8-287-WST)(V8-287-WOD)(OHV-232-WST)(OHV-232-WOD): ***65 10 (Six-WST-Heavy Duty-Note 6.001-5):*** 60-61 20 (WST)(WOD): 65 80 (OHV-232-WST)(OHV-232-WOD)(V8-287-WST)(V8-287-WOD)	.....	1	311 2994	
64-65 10 (V8-327-WST)(V8-327-WOD): 60 Thru 65 80 (V8-327-WST) (V8-327-WOD)	.....	1	315 0641	
WASHER, Transmission Countershaft Gear Thrust (Rear)(Less Lip)				
60 Thru 65 01 (WST)(WOD): 60 Thru 64 10 (OHV-196-WST)(OHV-196-WOD): 65 10 (OHV-199-WST)(OHV-199-WOD)	.....	1	311 3839	

Copyright 1963 American Motors Corp.

GROUP NO. — DESCRIPTION — YEAR and MODEL	PRIMARY GROUP NO.	PER CAR	PART NO.	CODE
60 Thru 64 10 (Six-WST-Heavy Duty-Note 6.001-1): 63-64 10 (V8-287-WST)(V8-287-WOD)(OHV-232-WST)(OHV-232-WOD): ***65 10 (Six-WST-Heavy Duty-Note 6.001-5):*** 60-61 20 (WST)(WOD): 65 80 (OHV-232-WOD)(V8-287-WST)(V8-287-WOD)	.....	1	311 2995	
65 10 (V8-287-WST)(V8-287-WOD)	.....	1	318 0058	
64-65 10 (V8-327-WST)(V8-327-WOD): 60 Thru 65 80 (V8-327-WST)(V8-327-WOD)	.....	1	315 0640	
WASHER, Transmission Countershaft Gear Thrust (Rear)(With Lip)				
60 Thru 65 01 (WST)(WOD): 60 Thru 64 10 (OHV-196-WST)(OHV-196-WOD): 65 10 (OHV-199-WST)(OHV-199-WOD)	.....	1	311 3838	
60 Thru 64 10 (Six-WST-Heavy Duty-Note 6.001-1): 63 Thru 65 10 (V8-287-WST)(V8-287-WOD)(OHV-232-WST)(OHV-232-WOD): ***65 10 (Six-WST-Heavy Duty-Note 6.001-5):*** 60-61 20 (WST)(WOD): 65 80 (OHV-232-WST)(OHV-232-WOD)(V8-287-WST)(V8-287-WOD)	.....	1	311 2996	
64-65 10 (V8-327-WST)(V8-327-WOD): 60 Thru 65 80 (V8-327-WST)(V8-327-WOD)	.....	1	315 0639	
6.167 ROLLER, Transmission Countershaft Gear Bearing				
60 Thru 65 01 (WST)(WOD): 60 Thru 64 10 (OHV-196-WST)(OHV-196-WOD): 65 10 (OHV-199-WST)(OHV-199-WOD)	.....	40	311 2997	
60 Thru 64 10 (Six-WST-Heavy Duty-Note 6.001-1): 63 Thru 65 10 (V8-287-WST)(V8-287-WOD)(OHV-232-WST)(OHV-232-WOD): ***65 10 (Six-WST-Heavy Duty-Note 6.001-5):*** 60-61 20 (WST)(WOD): 65 80 (OHV-232-WST)(OHV-232-WOD)(V8-287-WST)(V8-287-WOD)	.....	44	311 2997	
64-65 10 (V8-327-WST)(V8-327-WOD): 60 Thru 65 80 (V8-327-WST)(V8-327-WOD)	.....	80	315 0638	#
SPACER, Transmission Countershaft Gear Roller Bearing				
60 Thru 64 01-10 (Six): 65 01 (OHV-196): 65 10 (OHV-199) ***(Replaces 311 3842, 316 5513)***	.....	1	320 5825	
60 Thru 64 10 (Six-WST-Heavy Duty-Note 6.001-1): 63 Thru 65 10 (V8-287-WST)(V8-287-WOD): (OHV-232-WST)(OHV-232-WOD): ***65 10 (Six-WST-Heavy Duty-Note 6.001-5):*** 60-61 20 (WST)(WOD): 65 80 (OHV-232-WST)(OHV-232-WOD)(V8-287-WST)(V8-287-WOD)	.....	1	314 2739	
64-65 10 (V8-327-WST)(V8-327-WOD): 60 Thru 65 80 (V8-327-WST)(V8-327-WOD)	.....	1	315 0643	
WASHER, Transmission Countershaft Gear Bearing Roller				
60 Thru 65 01 (WST)(WOD): 60 Thru 64 10 (OHV-196-WST)(OHV-196-WOD): 65 10 (OHV-199-WST)(OHV-199-WOD)	.....	4	311 3841	
60 Thru 64 10 (Six-WST-Heavy Duty-Note 6.001-1): 63 Thru 65 10 (V8-287-WST)(V8-287-WOD)(OHV-232-WST)(OHV-232-WOD): 60-61 20 (WST)(WOD): 65 80 (OHV-232-WST)(OHV-232-WOD)(V8-287-WST)(V8-287-WOD)	.....	4	311 2993	
64-65 10 (V8-327-WST)(V8-327-WOD): 60 Thru 65 80 (V8-327-WST)(V8-327-WOD)	.....	4	315 0642	#
6.168 SHAFT, Transmission Idler Gear				
60 Thru 65 01 (WST)(WOD): 60 Thru 64 10 (OHV-196-WST)(OHV-196-WOD): 65 10 (OHV-199-WST)(OHV-199-WOD)	.....	1	311 3836	
60 Thru 64 10 (Six-WST-Heavy Duty-Note 6.001-1): 63 Thru 65 10 (V8-287-WST)(V8-287-WOD)(OHV-232-WST)(OHV-232-WOD)***(Six-WST-Heavy Duty-Note 6.001-5):*** 60-61 20 (WST)(WOD): 65 80 (OHV-232-WST)(OHV-232-WST)(V8-287-WOD)	.....	1	311 3026	
64-65 10 (V8-327-WST)(V8-327-WOD): 60 Thru 65 80 (V8-327-WST)(V8-327-WOD)	.....	1	315 0636	
6.170 GEAR, Transmission Reverse Idler (Incl. Bushing)				
60 01-10 (WST)(WOD): 61 01-10 (WST-Note 6.001-2 Type 1)(WOD-Note 6.001-2 Type 1) ***(Use 316 2786)***	.....	1	311 3835	

Copyright 1963 American Motors Corp.

GROUP NO. — DESCRIPTION — YEAR and MODEL	PRIMARY GROUP NO.	PER CAR	PART NO.	CODE
61 01-10 (WST-Note 6.001-2 Type 2)(WOD-Note 6.001-2 Type 2): 62 Thru 65 01 (WST)(WOD): 62 Thru 64 10 (OHV-196-WST)(OHV-196-WOD): 65 10 (OHV-199-WST)(OHV-199-WOD)	.....	1	316 2786	
60 Thru 64 10 (Six-WST-Heavy Duty-Note 6.001-1): 65 10 (Six-WST-Heavy Duty-Note 6.001-5)	.....	1	315 6669	
63 Thru 65 10 (V8-287-WST)(V8-287-WOD)(OHV-232-WST)(OHV-232-WOD): 60-61 20 (WST)(WOD): 65 80 (OHV-232-WST)(OHV-232-WOD)(V8-287-WST)(V8-287-WOD)	.....	1	311 2990	
64-65 10 (V8-327-WST)(V8-327-WOD): 60 Thru 65 80 (V8-327-WST)(V8-327-WOD)	.....	1	315 0647	

6.172 PLATE, Transmission Reverse Idler Shaft And Countershaft

60 Thru 63 01-10 (Six-WST)(Six-WOD)	.....	1	310 8333	
64-65 01 (WST)(WOD): 64 10 (OHV-196-WST)(OHV-196-WOD): 65 10 (OHV-199-WST)(OHV-199-WOD)	.....	1	317 4537	
60 Thru 64 10 (Six-WST-Heavy Duty-Note 6.001-1): 63 10 (V8-WST)(V8-WOD): 60-61 20 (WST)(WOD)	.....	1	311 3027	
64-65 10 (V8-287-WST)(V8-287-WOD)(OHV-232-WST)(OHV-232-WOD): ***65 10 (Six-WST-Heavy Duty-Note 6.001-5):*** 65 80 (OHV-232-WST)(OHV-232-WOD)(V8-287-WST)(V8-287-WOD)	.....	1	317 4536	

KEY, Transmission Reverse Idler Shaft And Countershaft

64-65 10 (V8-327-WST)(V8-327-WOD): 60 Thru 65 80 (V8-327-WST)(V8-327-WOD)	17.344	2	G103905	#

6.190 SHAFT, Transmission Shifter Fork (Low And Reverse)

60 Thru 62 01-10 (WST)(WOD): 63 Thru 65 01 (WST)(WOD): 63-64 10 (OHV-196-WST): 63-64 10 (OHV-196-LHD-WOD): 65 10 (OHV-199-WST)(LHD-OHV-199-WOD)	.....	1	311 3855	
64-65 10 (OHV-232-WST)(OHV-232-WOD): ***65 10 (Six-WST-Heavy Duty-Note 6.001-5):*** 65 80 (OHV-232-WST)(OHV-232-WOD)	.....	1	317 4611	
60 Thru 64 10 (Six-WST-Heavy Duty-Note 6.001-1): 63 Thru 65 10 (V8-287-WST)(V8-287-WOD): 60-61 20 (WST)(WOD): 65 80 (V8-287-WST)(V8-287-WOD)	.....	1	311 2973	
64 01 (RHD-WOD): 63-64 10 (RHD-WOD)	.....	1	316 9056	
60 Thru 62 80 (WST)(WOD)	.....	1	315 0604	
64-65 10 (V8-327-WST)(V8-327-WOD): 63 Thru 65 80 (V8-327-WST)(V8-327-WOD)	.....	1	317 2116	

SHAFT, Transmission Shifter Fork (Second And High)

60 Thru 65 01 (WST)(WOD): 60 Thru 64 10 (OHV-196-WST)(OHV-196-WOD): 65 10 (OHV-199-WST)(OHV-199-WOD)	.....	1	311 3856	

Copyright 1963 American Motors Corp.

GROUP NO. — DESCRIPTION — YEAR and MODEL	PRIMARY GROUP NO.	PER CAR	PART NO.	CODE
64-65 10 (OHV-232-WST)(OHV-232-WOD): ***65 10 (Six-WST-Heavy Duty-Note 6.001-5):*** 65 80 (OHV-232-WST)(OHV-232-WOD)	.....	1	317 4610	
60 Thru 64 10 (Six-WST-Heavy Duty-Note 6.001-1): 60-61 20 (WST)(WOD)	.....	1	311 2972	
63 Thru 65 10 (V8-287-WST)(V8-287-WOD): 65 80 (V8-287-WST)(V8-287-WOD)	.....	1	320 4601	
60 Thru 62 80 (WST)(WOD)	.....	1	315 0606	
64-65 10 (V8-327-WST)(V8-327-WOD): 63 Thru 65 80 (V8-327-WST) (V8-327-WOD)	.....	1	317 2117	

6.192 PIN, Transmission Shifter Fork Sleeve Taper Lock

60 Thru 62 01-10 (WST)(WOD): 63 Thru 65 01-10 (WST)(LHD-WOD): ***63-64 10 (RHD-WOD):*** 65 80 (OHV-232-WST)(OHV-232-WOD)(V8-287-WST) (V8-287-WOD)	17.470	2	G103565	#

6.194 SEAL, Transmission Shifter Fork Shaft

60 Thru 65 01-10 (Six-WST)(Six-WOD): 60-61 20 (WST)(WOD): 63 Thru 65 10 (V8-287-WST)(V8-287-WOD): 65 80 (OHV-232-WST)(OHV-232-WOD) (V8-287-WST)(V8-287-WOD)	6.338	2	312 3668	
64-65 10 (V8-327-WST)(V8-327-WOD): 60 Thru 65 80 (V8-327-WST) (V8-327-WOD)	.....	2	315 0617	#

6.196 RAIL, Shifter Fork (Second And High)

64-65 01 (RHD-WST)(RHD-WOD): 63-64 10 (RHD-WST)(RHD-WOD)	.....	1	316 9063	

RAIL, Shifter Fork (Low And Reverse)

64-65 01 (RHD-WST)(RHD-WOD): 63-64 10 (RHD-WST)(RHD-WOD)	.....	1	316 9064	

6.198 FORK, Transmission Shifter (Low And Reverse)

60 Thru 62 01-10 (WST)(WOD): 63 01 (WST)(WOD): 64-65 01 (LHD-WST) (LHD-WOD): 63-64 10 (LHD-OHV-196-WST)(LHD-OHV-196-WOD): 65 10 (LHD-OHV-199-WST)(LHD-OHV-199-WOD)	.....	1	311 3850	
60 Thru 64 10 (Six-WST-Heavy Duty-Note 6.001-1): 60-61 20 (WST)(WOD): 63 Thru 65 10 (V8-287-WST)(V8-287-WOD): 64-65 10 (OHV-232-WST) (OHV-232-WOD): ***65 10 (Six-WST-Heavy Duty-Note 6.001-5):*** 65 80 (OHV-232-WST)(OHV-232-WOD)(V8-287-WST)(V8-287-WOD)	.....	1	311 2977	
64-65 01 (RHD-WST): 63-64 10 (RHD-WST)	.....	1	316 9070	
63 10 (RHD-WOD): 64-65 01 (RHD-WOD)	.....	1	316 9059	
64-65 10 (V8-327-WST)(V8-327-WOD): 60 Thru 65 80 (V8-327-WST) (V8-327-WOD)	.....	1	315 0610	

FORK, Transmission Shifter (Second And High)

60 Thru 62 01-10 (WST)(WOD): 63 Thru 65 01 (WST)(WOD): 63-64 10 (LHD-OHV-196-WST)(LHD-OHV-196-WOD): 65 10 (LHD-OHV-199-WST) (LHD-OHV-199-WOD)	.....	1	311 3851	
63 Thru 65 10 (V8-287-WST)(V8-287-WOD): 65 80 (V8-287-WST)(V8-287-WOD)	.....	1	320 4604	
60 Thru 64 10 (Six-WST-Heavy Duty-Note 6.001-1): 60-61 20 (WST)(WOD): 64-65 10 (OHV-232-WST)(OHV-232-WOD): ***65 10 (Six-WST-Heavy Duty-Note 6.001-5):*** 65 80 (OHV-232-WST)(OHV-232-WOD)	.....	1	311 2976	
64-65 01 (RHD-WST)(RHD-WOD): 63-64 10 (RHD-WST)	.....	1	316 9069	
63 10 (RHD-WOD)	.....	1	316 9060	
60-61 80 (WST)(WOD)	.....	1	315 0609	
64-65 10 (V8-327-WST)(V8-327-WOD): 62 Thru 65 80 (V8-327-WST) (V8-327-WOD)	.....	1	316 2992	#

PIN, Transmission Shifter (Fork To Rail)

64-65 01 (RHD-WST)(RHD-WOD): 63-64 10 (RHD-WST)(RHD-WOD)	.....	2	316 9071	

Copyright 1963 American Motors Corp.

GROUP NO. — DESCRIPTION — YEAR and MODEL	PRIMARY GROUP NO.	PER CAR	PART NO.	CODE
6.215 PIN, Transmission Speed Finder Interlock				
60 Thru 65 01-10 (Six-WST)(Six-WOD): 63-64 10 (V8-287-WST)(V8-287-WOD): 65 80 (OHV-232-WST)(OHV-232-WOD)(V8-287-WST)(V8-287-WOD)	.....	1	311 3852	
64-65 10 (V8-327-WST)(V8-327-WOD): 60 Thru 65 80 (V8-327-WST) (V8-327-WOD)	.....	1	315 0616	#
SLEEVE, Transmission Speed Finder Interlock				
(1.008) 64-65 10 (V8-327-WST)(V8-327-WOD): 60 Thru 65 80 (V8-327-WST) (V8-327-WOD)	.....	1	315 0614	#
(1.013) 64-65 10 (V8-327-WST)(V8-327-WOD): 60 Thru 65 80 (V8-327-WST) (V8-327-WOD)	.....	1	315 0613	#
(1.018) 64-65 10 (V8-327-WST)(V8-327-WOD): 64-65 80 (V8-327-WST) (V8-327-WOD)	.....	1	315 0612	#
(1.023) 64-65 10 (V8-327-WST)(V8-327-WOD): 60 Thru 65 80 (V8-327-WST) (V8-327-WOD)	.....	1	315 0615	#
(1.287) 60 Thru 65 01-10 (Six-WST)(Six-WOD): 60-61 20: 63 Thru 65 10 (V8-287-WST)(V8-287-WOD): 65 80 (OHV-232-WST)(OHV-232-WOD)	.....	1	311 2982	
(1.291) 60 Thru 65 01-10 (Six-WST)(Six-WOD): 60-61 20: 63 Thru 65 10 (V8-287-WST)(V8-287-WOD): 65 80 (OHV-232-WST)(OHV-232-WOD) (V8-287-WST)(V8-287-WOD)	.....	1	311 2981	
(1.295) 60 Thru 65 01-10 (Six-WST)(Six-WOD): 60-61 20: 63 Thru 65 10 (V8-287-WST)(V8-287-WOD): 65 80 (OHV-232-WST)(OHV-232-WOD) (V8-287-WST)(V8-287-WOD)	.....	1	311 2980	
(1.299) 60 Thru 65 01-10 (Six-WST)(Six-WOD): 60-61 20: 63 Thru 65 10 (V8-287-WST)(V8-287-WOD): 65 80 (OHV-232-WST)(OHV-232-WOD) (V8-287-WST)(V8-287-WOD)	.....	1	311 2979	
(1.303) 60 Thru 65 01-10 (Six-WST)(Six-WOD): 60-61 20: 63 Thru 65 10 (V8-287-WST)(V8-287-WOD): 65 80 (OHV-232-WST)(OHV-232-WOD) (V8-287-WST)(V8-287-WOD)	.....	1	311 2983	
POPPET, Transmission Speed Finder Interlock				
60 Thru 62 01-10-20 (WST)(WOD): 63 Thru 65 01 (WST)(WOD): 63-64 10 (Six-LHD-WST)(Six-LHD-WOD): 63 Thru 65 10 (V8-287-WST)(V8-287-WOD): 65 10 (Six-WST)(Six-WOD): 65 80 (OHV-232-WST)(OHV-232-WOD) (V8-287-WST)(V8-287-WOD)	17.018	2	G169110	
64 01 (RHD-WST)(RHD-WOD): 63-64 10 (RHD-WST)(RHD-WOD)	.....	1	316 9065	
64-65 10 (V8-327-WST)(V8-327-WOD): 60 Thru 65 80 (V8-327-WST) (V8-327-WOD)	17.018	2	G147500	#
SPRING, Transmission Speed Finder Interlock Poppet				
64-65 10 (OHV-232-WST)(OHV-232-WOD): ***65 10 (Six-WST-Heavy Duty-Note 6.001-5):*** 65 80 (OHV-232-WST)(OHV-232-WOD): 60 Thru 62 01-10-20 (WST)(WOD): 63 Thru 65 01 (WST)(WOD): 63-64 10 (OHV-196-WST)(OHV-196-WOD): 63 Thru 65 10 (V8-287-WST)(V8-287-WOD): 65 10 (OHV-199-WST)(OHV-199-WOD): 65 80 (V8-287-WST) (V8-287-WOD) ***(Replaces 317 5728)***	.....	1	311 2984	
63 10 (RHD-WST)(RHD-WOD)	.....	1	316 9068	
64-65 10 (V8-327-WST)(V8-327-WOD): 60 Thru 65 80 (V8-327-WST) (V8-327-WOD)	.....	1	315 0611	#
PLUG, Transmission Speed Finder Taper				
64 01 (RHD-WST)(RHD-WOD): 63-64 10 (RHD-WST)(RHD-WOD)	6.260	1	314 5192	
6.240 GEAR, Speedometer Drive (Refer To Speedometer Drive Gear Chart)				
KEY, Speedometer Drive Gear				
60 Thru 62 01-10-20-80 (WST)(WOD): 64-65 01-80 (WST)(WOD): 63-64 10 (WOD): 64 10 (V8-287-WST-Note 6.017-2 Type 2): 64-65 10 (V8-327-WST) (V8-327-WOD): 64-65 10 (OHV-232-WST)(OHV-232-WOD): ***65 10 (Six-WST-Heavy Duty-Note 6.001-5):*** 65 10 (V8-WST)(V8-WOD): 65 10-50-80 ***(Six-WST-Heavy Duty-Note 6.001-5):*** 65 10 (V8-WST)(V8-WOD)	17.344	1	G106749	#

Copyright 1963 American Motors Corp.

GROUP NO. — DESCRIPTION — YEAR and MODEL	PRIMARY GROUP NO.	PER CAR	PART NO.	CODE
RING, Speedometer Drive Gear				
60 Thru 65 10-80 (V8-WST)(V8-WOD)	6.080	2	315 0622	
64-65 01 (WST): 60 Thru 65 10 (Six-WST)(Six-WOD): 65 80 (OHV-232-WST) (OHV-232-WOD)	.....	2	310 8405	#
BALL, Speedometer Drive Gear				
64-65 01 (WST): 63 Thru 65 10 (Six-WST): 63 Thru 65 10 (V8-287-WST): 65 80 (OHV-232-WST)(OHV-287-WST)	17.018	1	G147485	
6.250 OVERDRIVE (Incl. Transmission)				
60 01 (LHE-WOD)	6.001	1	320 1280	
64-65 01 (WOD-WFGS)	6.001	1	320 4895	
60-61 10 (WOD) ***(Replaces 320 1274)***	6.001	1	320 2925	
62 10 (WOD)	6.001	1	320 3298	
63 10 (Six-LHD-WOD-Note 6.001-3 Type 1)	6.001	1	320 4255	
63 10 (Six-LHD-WOD-Note 6.001-3 Type 2) ***(Use 320 4446)***	6.001	1	320 4303	
63 10 (RHD-WOD) ***(Replaces 316 8950)***	6.001	1	317 0211	
63-64 10 (V8-287-WOD-WCGS) ***(Use 320 4638)***	6.001	1	320 4580	
63 10 (V8-WOD-WFGS-Note 6.001-4 Type 1)	6.001	1	320 4638	
64 10 (LHD-OHV-196-WOD): 65 10 (LHD-OHV-199-WOD-WFGS)	6.001	1	320 5061	
64 10 (V8-287-WOD-WCGS)	6.001	1	320 5014	
64 10 (OHVC-232-WOD-WCGS)	6.001	1	320 5223	
64 10 (OHVC-232-WOD-WFGS)	6.001	1	320 5224	
64-65 10 (V8-327-WOD): 64 80 (WOD): 65 80 (V8-327-WOD-WFGS)	6.001	1	320 5015	
64-65 10 (V8-287-WOD-WFGS): 65 80 (V8-287-WOD-WFGS)	6.001	1	320 5964	
65 10 (LHD-OHV-199-WOD-WCGS)	6.001	1	320 5795	
65 10-80 (LHD-OHV-232-WOD-WCGS)	6.001	1	320 5796	
65 10-80 (V8-287-WOD-WCGS)	6.001	1	320 5712	
65 10 (V8-327-WOD-WCGS): 65 80 (V8-327-WCGS)	6.001	1	320 5713	
65 10-80 (LHD-OHV-232-WOD-WFGS)	6.001	1	320 5714	
65 10 (RHD-WOD)	6.001	1	317 6498	
60 20 (WOD): 61 20 (WOD-Note 6.001-2 Type 1)	6.001	1	320 1276	
61 20 (WOD-Note 6.001-2 Type 2)	6.001	1	320 2927	
60 Thru 62 80 (WOD)	6.001	1	320 2085	
63 80 (WOD)	6.001	1	320 3942	
(9/34-6.00 x 14) 64 01 (LHD-OHV-WOD-WCGS)	6.001	1	320 4894	
(9/34-6.50 x 14) 64 01 (LHD-OHV-WOD-WCGS)	6.001	1	320 4894	
(9/34-6.00 x 15) 64 01 (LHD-OHV-WOD-WCGS)	6.001	1	320 4894	
(9/34-6.00 x 14) ***64 01 (RHD-WOD)***	6.001	1	317 4434	
(9/34-6.50 x 14) ***64 01 (RHD-WOD)***	6.001	1	317 4434	
(9/34) 65 01 (LHD-WOD-WCGS)	6.001	1	320 4894	
(9/37) 65 01 (LHD-WOD-WCGS)	6.001	1	320 4894	
(9/34)(9/37) 60 01 (OHV-WOD)	6.001	1	320 1280	
(9/34) (9/37) 61 01 (WOD) ***(Replaces 320 2692)***	6.001	1	320 2922	
(9/34)(9/37) 62 01 (WOD)	6.001	1	320 3636	
(9/34)(9/37) 63 01 (WOD-WCGS-Note 6.001-3 Type 1)	6.001	1	320 4256	
(9/34)(9/37) 63 01 (WOD-WCGS-Note 6.001-3 Type 2)	6.001	1	320 4299	
(9/34)(9/37) 63 01 (LHE-WOD-WFGS-Note 6.001-3 Type 1): 63 07 (WOD-WFGS-Note 6.001-3 Type 1)	6.001	1	320 4018	
(9/34)(9/37) 63 01 (LHE-WOD-WFGS-Note 6.001-3 Type 2): 63 07 (WOD-WFGS-Note 6.001-3 Type 2)	6.001	1	320 4302	
(9/34)(9/37) 60 20 (WOD)	6.001	1	320 1276	
(9/34)(9/37) 60 80 (WOD)	6.001	1	320 2085	
(9/37-6.00 x 15) 64 01 (LHD-OHV-WOD-WCGS)	6.001	1	320 4894	
(9/37-6.00 x 15) ***64 01 (RHD-WOD)***	6.001	1	317 4434	
(13/40-6.00 x 14) 64 01 (LHD-OHV-WOD-WCGS)	6.001	1	320 4893	
(13/40-6.50 x 14) 64 01 (LHD-OHV-WOD-WCGS)	6.001	1	320 4893	
(13/40-6.00 x 15) 64 01 (LHD-OHV-WOD-WCGS)	6.001	1	320 4893	
(13/40-6.00 x 14) ***64 01 (RHD-WOD)***	6.001	1	317 4340	
(13/40-6.50 x 14) ***64 01 (RHD-WOD)***	6.001	1	317 4340	
(13/40) 65 01 (LHD-WOD-WCGS)	6.001	1	320 4893	
(13/43) 60 01 (OHV-WOD)	6.001	1	320 2422	
(13/43) 61 01 (OHV-WOD-Note 6.001-2 Type 1)	6.001	1	320 2693	

Copyright 1963 American Motors Corp.

GROUP NO. — DESCRIPTION — YEAR and MODEL	PRIMARY GROUP NO.	PER CAR	PART NO.	CODE
(13/43) 61 01 (OHV-WOD-Note 6.001-2 Type 2): 62 01 (OHV-WOD-LES-LCV): 63 01 (OHV-WOD-LES-LCV-WCGS-Note 6.001-3 Type 1)	6.001	1	320 2923	
(13/43) 63 01 (OHV-LCV-WOD-WCGS-Note 6.001-3 Type 2)	6.001	1	320 4300	
(13/43) 63 01 (OHV-LCV-WOD-LES-WFGS)	6.001	1	320 4301	
(13/43) 65 01 (LHD-WOD-WCGS)	6.001	1	320 4893	
(13/43-6.00 x 14) 64 01 (LHD-OHV-WOD-WCGS)	6.001	1	320 4893	
(13/43-6.50 x 14) 64 01 (LHD-OHV-WOD-WCGS)	6.001	1	320 4893	
(13/43-6.00 x 15) 64 01 (LHD-OHV-WOD-WCGS)	6.001	1	320 4893	
(13/43-6.00 x 14) ***64 01 (RHD-WOD)***	6.001	1	317 4340	
(13/43-6.50 x 14) ***64 01 (RHD-WOD)***	6.001	1	317 4340	
(13/43-6.00 x 15) ***64 01 (RHD-WOD)***	6.001	1	317 4340	

6.255 SHAFT, Overdrive Spline (Transmission Spline Shaft)

60 01-10 (WOD): 61 01-10 (WOD-Note 6.001-2 Type 1)	6.068	1	311 4530	
61 01-10 (WOD-Note 6.001-2 Type 2): 62 Thru 65 01 (WOD): 62 Thru 65 10 (LHD-OHV-196-WOD): 65 10 (LHD-OHV-199-WOD)	6.068	1	316 2728	
63-64 10 (RHD-WOD)	6.068	1	317 0556	
63 Thru 65 10 (V8-287-WOD): 60-61 20 (WOD): 64-65 10 (OHV-232-WOD): 65 80 (OHV-232-WOD)(V8-287-WOD)	6.068	1	311 2986	
64-65 10 (V8-327-WOD): 60 Thru 65 80 (V8-327-WOD)	6.068	1	315 0632	

6.260 CASE, Overdrive

60 Thru 62 01 (WOD) ***(Use 315 8609)***	.....	1	315 8608	
63 01 (WOD): 62 10 (WOD)	.....	1	316 3958	
60-61 10-20 (WOD)	.....	1	315 8609	
64-65 01 (WOD): 63-64 10 (OHV-196-WOD): 65 10 (OHV-199-WOD)	.....	1	316 7510	
64-65 10 (OHVC-232-WOD): 65 80 (OHV-232-WOD)	.....	1	317 4600	
63 Thru 65 10 (V8-287-WOD): 65 80 (V8-287-WOD)	.....	1	320 4603	
63 10 (V8-WST): 64 10 (V8-287-WST-Note 6.017-2 Types 1 And 3)	.....	1	317 0799	
60 Thru 62 80 (WOD)	.....	1	315 0680	
60 Thru 62 80 (WST)	.....	1	315 0673	
64-65 10 (V8-327-WOD): 63 Thru 65 80 (V8-327-WOD)	.....	1	316 7505	
64-65 10 (V8-327-WST): 63 Thru 65 80 (V8-327-WST)	.....	1	316 7511	

ATTACHING PARTS

Transmission To Overdrive

BOLT, Hexagon	60 Thru 65 01-10 (Six-WOD): 60-61 20 (WOD): 63 Thru 65 10 (V8-287-WOD): 65 80 (V8-287-WOD)	17.038	4	G179868	NA
BOLT, Hexagon	60 Thru 62 80 (WOD)(WST)	17.038	2	G179892	NA
BOLT, Hexagon	64-65 10 (V8-327-WST)(V8-327-WOD): 63 Thru 65 80 (V8-327-WST)(V8-327-WOD)	.....	2	317 2100	
BOLT (Oil Seal)	64-65 10 (OHV-232-WOD): 65 80 (OHV-232-WOD)	.....	1	317 4616	
WASHER, Lock	60 Thru 65 01-10 (Six-WOD): 60-61 20 (WOD): 63 Thru 65 10 (V8-287-WOD): 65 80 (V8-287-WOD)	17.820	4	G103322	NA
WASHER, Lock	64-65 10 (V8-327-WST)(V8-327-WOD): 60 Thru 65 80 (V8-327-WST)(V8-327-WOD)	17.820	4	G114608	NA

GASKET, Transmission To Overdrive Adapter

60 Thru 65 01 (WOD): 60 Thru 64 10 (OHV-196-WOD): 65 10 (OHV-199-WOD)	.....	1	311 4532	
63 Thru 65 10 (V8-287-WOD): 63 10 (V8-WST): 64 10 (V8-287-WST-Note 6.017-2 Type 2): 64-65 10 (OHV-232-WOD): 60-61 20 (WOD): 65 80 (OHV-232-WOD)(V8-287-WOD)	.....	1	311 3005	

PLUG, Overdrive Transmission Case Drain

60 Thru 65 01-10 (WOD-Magnetic): 60-61 20 (WOD-Magnetic): 63 Thru 65 10 (V8-287-WOD-Magnetic): 65 80 (V8-287-WOD-Magnetic)	.....	1	315 5924	
60-61 01-10-20 (WOD-Non-Magnetic)	17.512	1	G445686	NA
64 10 (V8-327-WOD): 62 Thru 65 80 (V8-327-WOD)	6.005	1	315 5923	

PLUG, Overdrive Transmission Case Filler

60 Thru 65 01-10-20 (WOD-3/4" Dia.): 65 80 (OHV-232-WOD-3/4" Dia.) (V8-287-WOD-3/4" Dia.)	17.512	1	G444592	NA

Copyright 1963 American Motors Corp.

GROUP NO. — DESCRIPTION — YEAR and MODEL	PRIMARY GROUP NO.	PER CAR	PART NO.	CODE
62 Thru 65 01-10 (WOD-3/8" Dia.): 65 80 (OHV-232-WOD-3/4" Dia.) (V8-287-WOD-3/4" Dia.)	17.512	1	G445673	NA
64-65 10 (V8-327-WOD-1/2" Dia.): 60 Thru 65 80 (V8-327-WOD-1/2" Dia.)	17.512	1	G438159	NA
PLUG, Overdrive Transmission Case Oil Seal				
60 Thru 65 01-10-20-80	.....	1	314 5192	
6.265 ADAPTER, Overdrive Housing				
60 Thru 65 01 (WOD): 60 Thru 62 10 (OHV-196-WOD): 63-64 10 (LHD-OHV-196-WOD): 65 10 (OHV-199-WOD)	.....	1	314 3098	
63-64 10 (RHD-WOD)	.....	1	317 0555	
63 10 (V8-287-WST): 64-65 10 (V8-287-WST-Note 6.017-2 Type 3): 65 80 (V8-287-WST)	.....	1	317 0794	#
63 Thru 65 10 (V8-287-WOD): 64-65 10 (OHV-232-WOD): 60-61 20 (WOD): 65 80 (OHV-232-WOD)(V8-287-WOD)	.....	1	312 3650	
64-65 10 (V8-327-WOD): 60 Thru 65 80 (V8-327-WOD)	.....	1	315 0681	
64-65 10 (V8-327-WST): 60 Thru 65 80 (V8-327-WST)	.....	1	315 0663	
ATTACHING PARTS Adapter To Overdrive Housing				
BOLT, Hexagon ..... 63 Thru 65 10 (V8-287-WST): 65 80 (V8-287-WST) ..	17.038	4	G179861	NA
WASHER, Lock ..... 63 Thru 65 10 (V8-287-WST): 65 80 (V8-287-WST) ..	17.820	4	G103322	NA
BAFFLE, Overdrive Housing Adapter Oil				
60 Thru 65 01-10 (Six-WOD): 65 80 (OHVC-232-WOD)	.....	1	311 4534	
63 Thru 65 (V8-287-WOD): 60-61 20 (WOD): 65 80 (V8-287-WOD)	.....	1	312 3651	
64-65 10 (V8-327-WOD): 60 Thru 65 80 (V8-327-WST)(V8-327-WOD)	.....	1	315 0670	
63 10 (V8-WST): 64 10 (V8-WST-Note 6.017-2 Types 1 And 3)	.....	1	320 5847	
6.270 GASKET, Overdrive Housing Adapter				
60 Thru 65 01-10 (Six-WOD): 63 10 (V8-WST): 64 10 (V8-287-WST-Note 6.017-2 Type 1): 63 Thru 65 10 (V8-287-WOD): 60-61 20 (WOD): 65 80 (V8-287-WOD)	.....	1	312 3649	
(Front) 64-65 10 (V8-327-WST)(V8-327-WOD): 60 Thru 65 80 (V8-327-WST) (V8-327-WOD)	.....	1	315 0671	
(Rear) 64-65 10 (V8-327-WST)(V8-327-WOD): 60 Thru 65 80 (V8-327-WST) (V8-327-WOD)	.....	1	315 0672	
6.275 BEARING, Overdrive Front Ball				
60 Thru 65 01-10 (Six-WOD)	6.052	1	312 1135	
64-65 10 (V8-327-WST)(V8-327-WOD): 60 Thru 65 80 (V8-327-WST) (V8-327-WOD)	6.052	1	315 0664	
63 10 (V8-WST): 64 10 (V8-287-WST-Note 6.017-2 Types 1 And 3): 63 Thru 65 10 (V8-287-WOD): 65 80 (V8-287-WOD)	6.040	1	315 6627	
SPACER, Overdrive Front Ball Bearing				
63 10 (V8-WST): 64 10 (V8-WST-Note 6.017-2 Type 1): 64-65 10 (V8-327-WST) (WOD): 60 Thru 65 80 (V8-327-WST)(V8-327-WOD)	.....	1	315 0656	
6.278 RING, Overdrive Front Ball Bearing Snap				
(.062) 60 01 (WOD)	.....	1	311 6069	
(.065) 60 01 (WOD)	.....	1	311 6070	
(.068) 60 01 (WOD)	.....	1	311 6071	
(.068) 60 01 (WOD)	.....	1	311 6072	
RING, Overdrive Front Ball Bearing Snap (Inner)				
(.086) 63 Thru 65 10 (V8-WOD): 63 10 (V8-WST): 64 10 (V8-WST-Note 6.017-2 Type 1): 60 Thru 65 80 (V8-WOD)	6.080	1	315 0622	
(.087) 61 Thru 65 01 (WOD): 60 Thru 65 10 (WOD): 65 80 (OHV-232-WOD)	6.069	1	310 8405	

Copyright 1963 American Motors Corp.

GROUP NO. — DESCRIPTION — YEAR and MODEL	PRIMARY GROUP NO.	PER CAR	PART NO.	CODE
(.087) 60-61 20 (WOD)	6.044	1	310 4169	
(.089) 64-65 10 (OHV-232-WOD): 64-65 10 (V8-327-WOD): 60 Thru 65 80 (OHV-232-WOD)(V8-327-WOD)	6.069	1	315 0657	
(.090) 61 Thru 65 01: 60 Thru 64 10 (OHV-196-WOD): 65 10 (OHV-199-WOD)	6.069	1	310 8406	
(.090) 60-61 20 (WOD)	6.044	1	310 4170	
(.092) 64-65 10 (OHV-232-WOD): 64-65 10 (V8-327-WOD): 60 Thru 65 80 (OHV-232-WOD)(V8-327-WOD)	6.069	1	315 0658	
(.093) 61 Thru 65 01 (WOD): 60 Thru 64 10 (OHV-196-WOD): 65 10 (OHV-199-(WOD)	6.069	1	310 8407	
(.093) 60-61 20 (WOD)	6.044	1	310 4171	
(.095) 64-65 10 (OHV-232-WOD): 64-65 10 (V8-327-WOD): 60 Thru 65 80 (OHV-232-WOD)(V8-327-WOD)	6.069	1	315 0659	
(.096) 61 Thru 65 01 (WOD): 60 Thru 64 10 (OHV-196-WOD): 65 10 (OHV-199-WOD)	.....	1	310 8408	
(.096) 60-61 20 (WOD)	6.044	1	310 4172	

RING, Overdrive Front Ball Bearing Snap (Outer)

(.087) 63 10 (V8-WST): 63 Thru 65 10 (V8-287-WOD): 64 10 (V8-287-WST-Note 6.017-2 Types 1 And 3): 64-65 10 (OHV-232-WOD): 60-61 20 (WOD): 65 80 (OHV-232-WOD)(V8-287-WOD)	6.056	1	91 942	
(.088) 64-65 10 (V8-327-WOD): 60 Thru 65 80 (V8-327-WOD)	6.056	1	315 0665	
(.090) 63 10 (V8-WST): 63 Thru 65 10 (V8-287-WOD): 64 10 (V8-287-WST-Notes 6.017-2 Types 1 And 3): 64-65 10 (OHV-232-WOD): 60-61 20 (WOD): 65 80 (OHV-232-WOD)(V8-287-WOD)	6.056	1	91 943	
(.091) 64-65 10 (V8-327-WOD): 60 Thru 65 80 (V8-327-WOD)	6.056	1	315 0666	
(.093) 63 10 (V8-WST): 63 Thru 65 10 (V8-287-WOD): 64 10 (V8-287-WST-Notes 6.017-2 Types 1 And 3): 64-65 10 (OHV-232-WOD): 60-61 20 (WOD): 65 80 (OHV-232-WOD)(V8-287-WOD)	6.056	1	91 944	
(.094) 61 Thru 65 01 (WOD): 60 Thru 64 10 (OHV-196-WOD): 65 10 (OHV-199-WOD) ***(Replaces 314 3101)***	6.056	1	314 3100	
(.094) 64-65 10 (V8-327-WOD): 60 Thru 65 80 (V8-327-WOD)	6.056	1	315 0667	
(.097) 64-65 10 (V8-327-WOD): 60 Thru 65 80 (V8-327-WOD)	6.056	1	315 0668	
(.098) 61 Thru 65 01 (WOD): 60 Thru 64 10 (OHV-196-WOD): 65 10 (OHV-199-WOD)	6.056	1	314 3102	
(.100) 64-65 10 (V8-327-WOD): 60 Thru 65 80 (V8-327-WOD)	6.056	1	315 0669	
(.103) 61 Thru 65 01 (WOD): 60 Thru 64 10 (OHV-196-WOD): 65 10 (OHV-199-WOD)	6.056	1	314 3103	

6.282 BEARING, Overdrive Rear Ball

60 Thru 65 01-10 (Six-WOD): 63 10 (V8-WST)(V8-WOD): 64 10 (V8-287-WST-Note 6.017-2 Types 1 And 3): 64-65 10 (V8-287-WOD): 60-61 20 (WOD): 65 80 (V8-287-WOD)	6.052	1	312 1135	
64-65 10 (V8-327-WOD): 60 Thru 65 80 (V8-327-WOD) ***(Replaces 91 951)***	6.040	1	315 6627	

SPACER, Overdrive Rear Ball Bearing

60 Thru 65 01-10 (Six-WOD): 64-65 10 (V8-287-WOD): 60-61 20 (WOD): 65 80 (V8-287-WOD)	.....	1	311 5977	
64-65 10 (V8-327-WOD): 60 Thru 65 80 (V8-327-WOD)	6.040	1	315 0656	
64 10 (V8-287-WST-Note 6.017-2 Type 2)	6.275	1	320 5846	

6.284 RING, Overdrive Rear Ball Bearing Snap (Inner And Outer)

(.062) 60 Thru 65 01-10-20 (Six-WOD): 63 10 (V8-WST)(V8-WOD): 64 10 (V8-287-WST-Note 6.017-1 Type 1): 64-65 10 (V8-287-WOD): 60-61 20: 65 80 (OHV-232-WOD)(V8-287-WOD)	.....	2	310 8331	
(.065) 60 Thru 65 01-10-20 (Six-WOD): 63 10 (V8-WST)(V8-WOD): 64 10 (V8-287-WST-Note 6.017-1 Type 1): 64-65 10 (V8-287-WOD): 60-61 20: 65 80 (OHV-232-WOD)(V8-287-WOD)	.....	2	310 8336	
(.068) 60 Thru 65 01-10-20 (Six-WOD): 63 10 (V8-WST)(V8-WOD): 64 10 (V8-287-WST-Note 6.017-1 Type 1): 64-65 10 (V8-287-WOD): 60-61 20: 65 80 (OHV-232-WOD)(V8-287-WOD)	.....	2	310 8346	
(.071) 60 Thru 65 01-10-20 (Six-WOD): 63 10 (V8-WST)(V8-WOD): 64 10 (V8-287-WST-Note 6.017-1 Type 1): 64-65 10 (V8-287-WOD): 60-61 20: 65 80 (OHV-232-WOD)(V8-287-WOD)	.....	2	310 8347	

Copyright 1963 American Motors Corp.

GROUP NO. — DESCRIPTION — YEAR and MODEL	PRIMARY GROUP NO.	PER CAR	PART NO.	CODE
RING, Overdrive Rear Ball Bearing Snap				
(.086) 64-65 10 (V8-327-WOD): 60 Thru 65 80 (V8-327-WOD)	6.080	1	315 0622	
(.089) 64-65 10 (V8-327-WOD): 60 Thru 65 80 (V8-327-WOD)	6.069	1	315 0657	
(.092) 64-65 10 (V8-327-WOD): 60 Thru 65 80 (V8-327-WOD)	6.069	1	315 0658	
(.095) 64-65 10 (V8-327-WOD): 60 Thru 65 80 (V8-327-WOD)	6.069	1	315 0659	
(.099) 64-65 10 (V8-327-WOD): 60 Thru 65 80 (V8-327-WOD)	6.069	1	315 0660	
(.101) 64-65 10 (V8-327-WOD): 60 Thru 65 80 (V8-327-WOD)	6.069	1	315 0661	
6.286 SEAL, Overdrive Rear Oil				
60 Thru 65 01 (WOD)	6.032	1	311 3831	
60-61 10-20 (WOD)	6.032	1	310 5459	
62 Thru 65 10 (Six-WOD): 64-65 (V8-287-WOD): 65 80 (OHV-232-WOD) (V8-287-WOD)	16.175	1	315 3482	
64-65 10 (V8-327-WOD): 60 Thru 65 80 (V8-327-WOD)	6.021	1	315 0677	
ADAPTER, Overdrive Rear Oil Seal				
60 Thru 65 01 (WOD): 60-61 10-20 (WOD)	.....	1	312 6342	
6.290 ADAPTER, Overdrive Case To Torque Tube				
62 10 (WOD)	9.156	1	316 3144	
63-64 10 (OHV-196-WOD): 65 10 (OHV-199-WOD) ***(Replaces 316 6487)***	.....	1	320 4954	
64-65 10 (OHV-232-WOD)...(Incl. Seal): 65 80 (OHV-232-WOD)...(Incl. Seal).	.....	1	320 5245	
63 Thru 65 10 (V8-287-WOD)...(Incl. Seal): 65 80 (V8-287-WOD)...(Incl. Seal)	6.030	1	320 4597	
60 Thru 62 80 (WOD)	9.156	1	315 0675	
63 80 (WOD)...(Incl. Seal)	6.030	1	316 6495	
64-65 10 (V8-327-WOD)...(Incl. Seal): 64-65 80 (V8-327-WOD)...(Incl. Seal).	6.030	1	317 2270	
ATTACHING PARTS				
Adapter To Case				
BOLT, Hexagon ..... 63 Thru 65 10 (Six-WOD): 63 Thru 65 10 (V8-287-WOD): 65 80 (OHV-232-WOD) (V8-287-WOD)	17.038	2	G179861	NA
BOLT, Hexagon ..... 62 10 (WOD)	17.038	2	G179870	NA
BOLT, Hexagon ..... 64-65 10 (V8-327-WOD): 62 Thru 65 80 (V8-327-WOD)	17.038	2	G179860	NA
WASHER, Lock ..... 62 Thru 65 10 (Six-WOD): 63 Thru 65 10 (V8-287-WOD): 65 80 (OHV-232-WOD) (V8-287-WOD)	17.820	4	G103322	NA
WASHER, Lock ..... 64-65 10 (V8-327-WOD): 62 Thru 65 80 (V8-327-WOD)	17.822	4	G179864	NA
GASKET, Overdrive Case To Torque Tube Adapter				
62 Thru 65 10 (Six-WOD): 63 Thru 65 10 (V8-287-WOD): 65 80 (OHV-287-WOD) (V8-287-WOD)	.....	1	316 3950	
64-65 10 (V8-327-WOD): 62 Thru 65 80 (V8-327-WOD)	9.156	1	315 0676	
6.295 RAIL ASSEMBLY, Overdrive Shift				
60 Thru 65 01 (WOD): 60 Thru 64 10 (OHV-196-WOD): 65 10 (OHV-199-WOD)	.....	1	314 9958	
64-65 10 (OHV-232-WOD): 63 Thru 65 10 (V8-287-WOD): 60-61 20 (WOD): 65 80 (OHV-232-WOD)(V8-287-WOD)	.....	1	314 9957	
64-65 10 (V8-327-WOD): 60 Thru 65 80 (V8-327-WOD)	.....	1	315 0716	
FORK, Overdrive Shift				
60 Thru 65 01-10-20-80 (WOD)	.....	1	315 0714	
RAIL, Overdrive Shift				
60 Thru 65 01 (WOD): 60 Thru 64 10 (OHV-196-WOD): 65 10 (OHV-199-WOD)	.....	1	314 4614	
63 Thru 65 10 (V8-287-WOD): 64-65 10 (OHVC-232-WOD): 60-61 20 (WOD): 65 80 (OHV-232-WOD)(V8-287-WOD)	.....	1	314 4609	
64-65 10 (V8-327-WOD): 60 Thru 65 80 (V8-327-WOD)	.....	1	315 0715	

Copyright 1963 American Motors Corp.

GROUP NO. — DESCRIPTION — YEAR and MODEL	PRIMARY GROUP NO.	PER CAR	PART NO.	CODE
WASHER, Overdrive Shift Rail Assembly "C"				
60 Thru 65 01-10-20-80 (WOD)	.....	1	314 2802	
CUP, Overdrive Shift Rail Assembly "C" Washer				
60 Thru 65 01-10-20-80 (WOD)	.....	1	314 2803	
SEAL, Overdrive Shift Rail				
64-65 10 (OHV-232-WOD): 64-65 10 (V8-327-WOD): 60 Thru 65 80 (V8-WOD) (OHV-232-WOD)	6.194	1	315 0617	
PIN, Overdrive Shift Guide				
60 Thru 65 01-10-20-80 (WOD)	.....	1	312 3666	
SPRING, Overdrive Shift Rail Reverse Lockup				
60 Thru 65 01-10-20-80 (WOD)	.....	1	314 2801	
SPRING, Overdrive Shift Rail Retractor				
60 Thru 65 01-10-20-80 (WOD)	6.288	1	312 4351	
6.299 GEAR ASSEMBLY, Overdrive Sun (Incl. Snap Ring)				
60 Thru 65 01-10 (Six-WOD): 63 Thru 65 10 (V8-287-WOD): 60-61 20 (WOD): 65 80 (OHV-232-WOD)(V8-287-WOD)	.....	1	312 3658	
64-65 10 (V8-327-WOD): 60 Thru 65 80 (V8-327-WOD)	.....	1	315 0689	
6.301 HUB ASSEMBLY, Overdrive Sun Gear (Incl. Balk Ring)				
60 Thru 65 01-10 (Six-WOD): 63 Thru 65 10 (V8-287-WOD): 60-61 20: 65 80 (OHV-232-WOD)(V8-287-WOD)	.....	1	312 3652	
64-65 10 (V8-327-WOD): 60 Thru 65 80 (V8-327-WOD)	.....	1	315 0683	
6.302 RING, Overdrive Sun Gear Balk				
60 Thru 65 01-10-20-80 (WOD)	.....	1	314 2762	
RING, Overdrive Sun Gear Balk Snap				
(.063) 60 Thru 65 01-10-20-80 (WOD)	.....	1	312 3654	
(.067) 60 Thru 65 01-10-20-80 (WOD)	.....	1	312 3656	
(.071) 60 Thru 65 01-10-20-80 (WOD)	.....	1	312 3655	
PLATE, Overdrive Sun Gear Balk Snap Ring (Incl. Trough)				
60 Thru 65 01-10 (Six-WOD): 63 Thru 65 10 (V8-287-WOD): 60-61 20: 65 80 (OHV-232-WOD)(V8-287-WOD)	.....	1	312 3653	
64-65 10 (V8-327-WOD): 60 Thru 65 80 (V8-327-WOD)	.....	1	315 0685	
6.305 PAWL, Overdrive Sun Gear Locking				
60 Thru 65 01-10 (Six-WOD): 63 Thru 65 10 (V8-287-WOD): 60-61 20: 65 80 (OHV-232-WOD)(V8-287-WOD)	.....	1	311 2915	
64-65 10 (V8-327-WOD): 60 Thru 65 80 (V8-327-WOD)	.....	1	315 0684	
6.307 GEAR, Overdrive Ring				
60 Thru 65 01-10 (Six-WOD): 63 Thru 65 10 (V8-287-WOD): 60-61 20: 65 80 (OHV-232-WOD)(V8-287-WOD)	.....	1	311 3999	
64-65 10 (V8-327-WOD): 60 Thru 65 80 (V8-327-WOD)	.....	1	315 0707	

Copyright 1963 American Motors Corp.

GROUP NO. — DESCRIPTION — YEAR and MODEL	PRIMARY GROUP NO.	PER CAR	PART NO.	CODE
RING, Overdrive Ring Gear Snap				
(.055) 64 10 (V8-327-WOD): 60 Thru 65 80 (V8-327-WOD)	.....	1	315 0708	
(.057) 64 10 (V8-327-WOD): 60 Thru 65 80 (V8-327-WOD)	.....	1	315 0709	
(.059) 64 10 (V8-327-WOD): 60 Thru 65 80 (V8-327-WOD)	.....	1	315 0710	
(.062) 60 Thru 65 01-10 (Six-WOD): 63 Thru 65 10 (V8-287-WOD): 60-61 20 (WOD): 65 80 (OHV-232-WOD)(V8-287-WOD)	.....	1	312 3664	
6.309 PINION, Overdrive (Planetary Gear)				
60 Thru 65 01-10 (Six-WOD): 63 Thru 65 10 (V8-287-WOD): 60-61 20: 65 80 (OHV-232-WOD)(V8-287-WOD)	.....	1	312 3659	
64-65 10 (V8-327-WOD): 60 Thru 65 80 (V8-327-WOD)	.....	1	315 0697	
6.328 SOLENOID, Overdrive				
60 Thru 63 01-10-20-80 (WOD)	.....	1	314 6816	
64-65 01-10-80 (WOD)	.....	1	317 2742	
ATTACHING PARTS Solenoid To Overdrive Case				
BOLT, Hexagon — 60 Thru 63 01: 60 Thru 62 10-20-80 (WOD)	17.038	2	G179814	NA
BOLT, Hexagon — 64-65 01 (WOD): 63 Thru 65 10-80 (WOD)	17.038	2	G179816	NA
WASHER, Lock — 60 Thru 65 01-10-20-80 (WOD)	17.822	2	G114605	NA
CONTACT SET, Overdrive Solenoid (Upper)(Delco Remy)				
60 Thru 63 01-10-20-80 (WOD)	.....	1	311 7451	
POINT, Overdrive Solenoid Contact (Delco Remy)				
60 Thru 63 01-10-20-80 (WOD)	.....	1	311 9648	
BLADE, Overdrive Solenoid Contact (Delco Remy)				
60 Thru 63 01-10-20-80 (WOD)	.....	1	311 9662	
SEAL, Overdrive Solenoid Pawl Operating Rod Oil				
60 Thru 65 01-10-20-80 (WOD)	.....	1	312 3416	
WIRE, Overdrive Solenoid Extension				
64 10-80 (WST-WCGS-7" Long-Orange)(WOD-WCGS-7" Long-Orange)	.....	1	317 4395	
64 10-80 (WST-WCGS-8" Long-Red)(WOD-WCGS-8" Long-Red)	.....	1	317 4349	
6.329 GOVERNOR, Overdrive				
60 01 (LHE-WOD): 60 Thru 63 10-20 (WOD): 64 10 (OHVC-232-WOD): 65 10-80 (LHD-OHVC-232-WOD-WFGS)	.....	1	311 2914	
64-65 01 (WOD-WFGS): 64 10 (OHV-196-WOD): 65 10 (OHV-199-WOD-WFGS)	.....	1	317 4448	
60 Thru 63 80 (WOD)	.....	1	315 7033	
64 10-80 (V8-WOD): 65 10-80 (V8-WOD-WFGS)	.....	1	317 4449	
65 10 (LHD-OHV-199-WOD-WCGS)	.....	1	317 4450	
65 10-80 (OHV-232-WOD-WCGS)	.....	1	317 7000	
65 10-80 (V8-WOD-WCGS)	.....	1	317 2554	
(9/34)(9/37) 61 Thru 63 01 (WOD)	.....	1	311 2914	
(9/34)(9/37) 64-65 01 (WOD-WCGS)	.....	1	317 4450	
(13/43) 60 Thru 62 01 (OHV-WOD): 63 01 (WOD)	.....	1	316 0000	
(13/40)(13/43) 64-65 01 (WOD-WCGS)	.....	1	317 2554	
GEAR, Overdrive Governor				
60 Thru 65 01-10-20-80 (WOD)	.....	1	312 3670	

Copyright 1963 American Motors Corp.

GROUP NO. — DESCRIPTION — YEAR and MODEL	PRIMARY GROUP NO.	PER CAR	PART NO.	CODE
RING, Overdrive Ring Gear Snap				
(.055) 64 10 (V8-327-WOD): 60 Thru 65 80 (V8-327-WOD)	.....	1	315 0708	
(.057) 64 10 (V8-327-WOD): 60 Thru 65 80 (V8-327-WOD)	.....	1	315 0709	
(.059) 64 10 (V8-327-WOD): 60 Thru 65 80 (V8-327-WOD)	.....	1	315 0710	
(.062) 60 Thru 65 01-10 (Six-WOD): 63 Thru 65 10 (V8-287-WOD): 60-61 20 (WOD): 65 80 (OHV-232-WOD)(V8-287-WOD)	.....	1	312 3664	
6.309 PINION, Overdrive (Planetary Gear)				
60 Thru 65 01-10 (Six-WOD): 63 Thru 65 10 (V8-287-WOD): 60-61 20: 65 80 (OHV-232-WOD)(V8-287-WOD)	.....	1	312 3659	
64-65 10 (V8-327-WOD): 60 Thru 65 80 (V8-327-WOD)	.....	1	315 0697	
6.328 SOLENOID, Overdrive				
60 Thru 63 01-10-20-80 (WOD)	.....	1	314 6816	
64-65 01-10-80 (WOD)	.....	1	317 2742	
ATTACHING PARTS Solenoid To Overdrive Case				
BOLT, Hexagon ..... 60 Thru 63 01: 60 Thru 62 10-20-80 (WOD)	17.038	2	G179814	NA
BOLT, Hexagon ..... 64-65 01 (WOD): 63 Thru 65 10-80 (WOD)	17.038	2	G179816	NA
WASHER, Lock ..... 60 Thru 65 01-10-20-80 (WOD)	17.822	2	G114605	NA
CONTACT SET, Overdrive Solenoid (Upper)(Delco Remy)				
60 Thru 63 01-10-20-80 (WOD)	.....	1	311 7451	
POINT, Overdrive Solenoid Contact (Delco Remy)				
60 Thru 63 01-10-20-80 (WOD)	.....	1	311 9648	
BLADE, Overdrive Solenoid Contact (Delco Remy)				
60 Thru 63 01-10-20-80 (WOD)	.....	1	311 9662	
SEAL, Overdrive Solenoid Pawl Operating Rod Oil				
60 Thru 65 01-10-20-80 (WOD)	.....	1	312 3416	
WIRE, Overdrive Solenoid Extension				
64 10-80 (WST-WCGS-7" Long-Orange)(WOD-WCGS-7" Long-Orange)	.....	1	317 4395	
64 10-80 (WST-WCGS-8" Long-Red)(WOD-WCGS-8" Long-Red)	.....	1	317 4349	
6.329 GOVERNOR, Overdrive				
60 01 (LHE-WOD): 60 Thru 63 10-20 (WOD): 64 10 (OHVC-232-WOD): 65 10-80 (LHD-OHVC-232-WOD-WFGS)	.....	1	311 2914	
64-65 01 (WOD-WFGS): 64 10 (OHV-196-WOD): 65 10 (OHV-199-WOD-WFGS)	.....	1	317 4448	
60 Thru 63 80 (WOD)	.....	1	315 7033	
64 10-80 (V8-WOD): 65 10-80 (V8-WOD-WFGS)	.....	1	317 4449	
65 10 (LHD-OHV-199-WOD-WCGS)	.....	1	317 4450	
65 10-80 (OHV-232-WOD-WCGS)	.....	1	317 7000	
65 10-80 (V8-WOD-WCGS)	.....	1	317 2554	
(9/34)(9/37) 61 Thru 63 01 (WOD)	.....	1	311 2914	
(9/34)(9/37) 64-65 01 (WOD-WCGS)	.....	1	317 4450	
(13/43) 60 Thru 62 01 (OHV-WOD): 63 01 (WOD)	.....	1	316 0000	
(13/40)(13/43) 64-65 01 (WOD-WCGS)	.....	1	317 2554	
GEAR, Overdrive Governor				
60 Thru 65 01-10-20-80 (WOD)	.....	1	312 3670	

Copyright 1963 American Motors Corp.

GROUP NO. — DESCRIPTION — YEAR and MODEL	PRIMARY GROUP NO.	PER CAR	PART NO.	CODE
GEAR, Overdrive Governor Drive				
60 Thru 65 01-10 (Six-WOD): 63 Thru 65 10 (V8-287-WOD): 60-61 20: 65 80 (OHV-232-WOD)(V8-287-WOD)	.....	1	311 2157	
64-65 10 (V8-327-WOD): 60 Thru 65 80 (V8-327-WOD)	.....	1	315 0720	
KEY, Overdrive Governor Drive Gear (Woodruff)				
60 Thru 65 01-10-20-80 (WOD)	17.344	1	G106749	
RING, Overdrive Governor Gear Retaining				
60 Thru 65 01-10-20-80 (WOD)	.....	1	312 3674	
BOOT, Overdrive Governor				
60 Thru 65 01-10-20-80 (WOD)	.....	1	313 1032	
6.330 CAM ASSEMBLY, Overdrive Free Wheeling				
60 Thru 65 01-10 (Six-WOD): 63 Thru 65 10 (V8-287-WOD): 60-61 20: 65 80 (OHV-232-WOD)(V8-327-WOD)	.....	1	312 3660	
64-65 10 (V8-327-WOD): 60 Thru 65 80 (V8-327-WOD)	.....	1	315 0704	
CLIP, Overdrive Cam Retainer				
60 Thru 65 01-10 (Six-WOD): 63 Thru 65 10 (V8-287-WOD): 60-61 20: 65 80 (OHV-232-WOD)(V8-287-WOD)	.....	1	312 3661	
CLIP, To Pinion Case Retainer				
60 Thru 65 01-10 (Six-WOD): 63 Thru 65 (V8-287-WOD): 60-61 20: 65 80 (OHV-232-WOD)(V8-287-WOD)	.....	1	312 3676	
RING, Overdrive Cam Snap				
(.062) 64-65 10 (V8-327-WOD): 60 Thru 65 80 (V8-327-WOD)	.....	1	315 0700	
(.068) 64-65 10 (V8-327-WOD): 60 Thru 65 80 (V8-327-WOD)	.....	1	315 0699	
(.074) 64-65 10 (V8-327-WOD): 60 Thru 65 80 (V8-327-WOD)	.....	1	315 0698	
6.332 ROLLER, Overdrive Free Wheeling Set (Incl. 12 Rollers)				
60 Thru 65 01-10 (WOD): 63 Thru 65 10 (V8-287-WOD): 60-61 20: 65 80 (OHV-232-WOD)(V8-287-WOD)	.....	1	310 8236	
64-65 10 (V8-327-WOD): 60 Thru 65 80 (V8-327-WOD)	.....	1	320 0061	
SPRING, Overdrive Roller Set Retaining				
60 Thru 65 01-10-20-80 (WOD)	6.330	2	91 237	
6.336 SHAFT, Overdrive Main				
60 01-10-20 (WOD) ***(Use 311 2916)***	.....	1	311 4002	
61 Thru 63 01 (WOD): 61 10-20 (WOD)	.....	1	311 2916	
64-65 01 (WOD): 62 Thru 65 10 (Six-WOD): 65 80 (OHV-232-WOD)	.....	1	320 3308	
63 Thru 65 10 (V8-287-WOD): 65 80 (V8-287-WOD)	.....	1	317 0798	
60 Thru 62 80 (WOD)	.....	1	315 0706	
64-65 10 (V8-327-WOD): 63 Thru 65 80 (V8-327-WOD)	.....	1	320 5032	
RING, Overdrive Main Shaft Snap				
(.086) 60 80 (WOD)	6.080	1	315 0622	
(.087) 60 Thru 65 01-10 (Six-WOD): 63 Thru 65 10 (V8-287-WOD): 60-61 20: 65 80 (OHV-232-WOD)(V8-287-WOD)		1	310 8405	
(.089) 60 80 (WOD)		1	315 0657	

Copyright 1963 American Motors Corp.

GROUP NO. — DESCRIPTION — YEAR and MODEL	PRIMARY GROUP NO.	PER CAR	PART NO.	CODE
(.090) 60 Thru 65 01-10 (Six-WOD): 63 Thru 65 10 (V8-287-WOD): 60-61 20: 65 80 (OHV-232-WOD)(V8-287-WOD)		1	310 8406	
(.092) 60 80 (WOD)		1	315 0658	
(.093) 60 Thru 65 01-10 (Six-WOD): 63 Thru 65 10 (V8-287-WOD): 60-61 20: 65 80 (OHV-232-WOD)(V8-287-WOD)		1	310 8407	
(.095) 60 80 (WOD)		1	315 0659	
(.096) 60 Thru 65 01-10 (Six-WOD): 63 Thru 65 10 (V8-287-WOD): 60-61 20: 65 80 (OHV-232-WOD)(V8-287-WOD)	6.278	1	310 8408	

SLEEVE, Overdrive Main Shaft Spacer

60 01-10-20 (WOD)	.....	1	311 4000	

6.338 SHAFT ASSEMBLY, Overdrive Control

60 Thru 65 01-10-20 (WOD-WCGS): ***64 01 (RHD):*** 63 Thru 65 10 (V8-287-WOD): 65 80 (OHV-232-WOD)(V8-287-WOD)	.....	1	314 4612	
63 01 (WOD-WFGS)	.....	1	316 7270	
64-65 01 (WOD-WFGS): 63-64 10 (OHV-196-WOD-WFGS): 65 10 (OHV-199-WOD-WFGS)	.....	1	316 8811	
64-65 10 (OHVC-232-WOD): 65 80 (OHV-232-WOD)	.....	1	317 4615	
64-65 10 (V8-327-WOD-WCGS): 60 Thru 65 80 (V8-327-WOD-WCGS)	.....	1	315 0713	
64-65 10 (V8-327-WOD-WFGS): 63 Thru 65 80 (V8-327-WOD-WFGS)	.....	1	316 7283	

ATTACHING PARTS
Shaft To Case

PIN, Taper	60 Thru 65 01-10-20-80 (WOD). ***(Replaces 312 3669)***	17.470	1	G103565	
WASHER, Lock	64-65 10 (V8-327-WOD): 65 80 (V8-327-WOD)	17.822	1	G114605	NA
WASHER, Plain	64-65 10 (V8-327-WOD): 65 80 (V8-327-WOD)	17.814	1	G103340	NA
NUT, Hexagon	64-65 10 (V8-327-WOD): 65 80 (V8-327-WOD)	17.406	1	G103025	NA

SEAL, Shaft Assembly Oil

60 Thru 65 01-10-20-80 (WOD)	.....	1	312 3668	

SPACER, Shaft Assembly Lever

60 Thru 65 01-10 (Six-WOD-WCGS): 63 Thru 65 10 (V8-287-WOD-WCGS): 60-61 20 (WOD-WCGS): 65 80 (OHV-232-WOD-WCGS)(V8-287-WOD-WCGS)	6.363	1	312 1626	
64-65 10 (V8-327-WOD): 60 Thru 65 80 (V8-327-WOD)	.....	1	315 0721	

ATTACHING PARTS
Overdrive Control Cable To Shaft

BOLT, Hexagon	60 Thru 65 01-10 (Six-WOD-WCGS): 63 Thru 65 10 (V8-287-WOD-WCGS): 60-61 20 (WOD): 65 80 (OHV-232-WOD-WCGS)(V8-287-WOD-WCGS)	6.363	1	312 1627	
BOLT, Hexagon	64-65 10 (V8-327-WOD): 60 Thru 65 80 (V8-327-WOD)	.....	1	315 0722	
WASHER, Lock	60 Thru 65 01-10 (Six-WOD-WCGS): 63 Thru 65 10 (V8-287-WOD-WCGS): 60-61 20 (WOD): 65 80 (OHV-232-WOD-WCGS)(V8-287-WOD-WCGS)	17.820	1	G120380	NA
WASHER, Lock	64-65 10 (V8-327-WOD): 60 Thru 65 80 (V8-327-WOD)	17.822	1	G114605	NA
WASHER, Plain	60 Thru 65 01-10 (Six-WOD-WCGS): 63 Thru 65 10 (V8-287-WOD-WCGS): 60-61 20 (WOD): 65 80 (OHV-232-WOD-WCGS)(V8-287-WOD-WCGS)	17.814	1	G120392	NA
WASHER, Plain	64-65 10 (V8-327-WOD): 60 Thru 65 80 (V8-327-WOD)	17.814	1	G103340	NA
NUT, Hexagon	60 Thru 65 01-10 (Six-WOD-WCGS): 63 Thru 65 10 (V8-287-WOD-WCGS): 60-61 20 (WOD): 65 80 (OHV-232-WOD-WCGS)(V8-287-WOD-WCGS)	17.406	1	G120367	

Copyright 1963 American Motors Corp.

GROUP NO. — DESCRIPTION — YEAR and MODEL	PRIMARY GROUP NO.	PER CAR	PART NO.	CODE
6.350 CONTROL ASSEMBLY, Overdrive Cable (Incl. Knob And Armor)				
63 01 (WOD-WCGS)	.....	1	315 1213	
64 01 (WOD-WCGS): 65 01 (LHE-WCGS)(OHV-196-WCGS): ***63 10 (RHD-WOD): 64 10 (RHD-OHV-196-WOD-WCGS): 65 10 (RHD-OHV-232-WOD-WCGS)***	.....	1	316 8835	
65 01 (OHV-199-WCGS)	.....	1	318 0393	
63 10-80 (LHD-WOD-WCGS): 64 10 (OHV-196-LHD-WOD-WCGS): 64 10-80 (V8-LHD-WOD-WCGS): 65 10-80 (V8-WOD-WCGS-Note 6.350-2 Type 1)	.....	1	316 7004	
65 10-80 (V8-WOD-WCGS-Note 6.350-2 Type 2)	.....	1	317 8734	
64 10 (OHV-232-WOD-WCGS): 65 10 (LHD-Six-WOD-WCGS-Note 6.350-3 Type 1): 65 80 (LHD-OHV-232-WOD-WCGS-Note 6.350-3 Type 1) ***(Use 317 8735)***	.....	1	317 5737	#
65 10 (LHD-Six-WOD-WCGS-Note 6.350-3 Type 2): 65 80 (LHD-OHV-232-WOD-WCGS-Note 6.350-3 Type 2)	.....	1	317 8735	
CABLE, Overdrive Control				
63 01 (WOD-WFGS)	.....	1	316 8819	
64-65 01 (WOD-WFGS): 63 Thru 65 10 (Six-WOD-WFGS)(V8-287-WOD-WFGS): 65 80 (OHV-232-WOD-WFGS)(V8-287-WOD-WFGS)	.....	1	316 8815	
64-65 10 (V8-327-WOD-WFGS): 63 Thru 65 80 (V8-327-WOD-WFGS)	.....	1	316 8818	
ATTACHING PARTS				
Cable To Bracket				
NUT, Hexagon ..... 60 Thru 65 01-10-20-80 (WOD-WCGS)	17.410	1	G114499	NA
WASHER, Lock ..... 60 Thru 65 01-10-20-80 (WOD-WCGS)	17.824	1	G115554	NA
Cable To Lever				
PIN, Clevis ..... 63 Thru 65 01-10-80 (WOD-WFGS)	.....	1	316 7260	
PIN, Cotter ..... 63 Thru 65 01-10-80 (WOD-WFGS)	17.460	1	G137127	NA
WASHER, Plain ..... 63 Thru 65 01-10-80 (WOD-WFGS)	17.814	1	G9416128	NA
Cable To Trunnion				
NUT, Hexagon ..... 63-64 01-10-80 (WOD-WFGS)	17.412	1	G120614	NA
Cable To Toeboard				
CLIP ..... 63-64 10-80 (WOD-WCGS)	4.160	1	15 708	
SCREW, Tapping ..... 63-64 10-80 (WOD-WCGS)	17.671	2	G274773	NA
CORE, Overdrive Control (Incl. Knob)				
61 01-10-20-80 (WOD)...(Incl. Gray Knob) ***(Use 320 2973)***	.....	1	320 2738	
60 Thru 63 01 (WOD): 60 Thru 62 10 (WOD): 61-62 20-80 (WOD)...(Incl. Black Knob) ***(Replaces 311 7470)***	.....	1	320 2973	#
60 20 (WOD)	.....	1	320 0281	
60 80 (WOD)	.....	1	320 0774	
ARMOR, Overdrive Control Core				
60 01-10 (WOD)	.....	1	311 9134	
61-62 01 (WOD)	.....	1	320 2735	
61 10 (WOD): 62 10 (WOD-Note 6.350-1 Type 1) ***(Use 315 1213)***	.....	1	320 2737	
62 10 (RHD-WOD-Note 6.350-1 Type 2) ***(Use 315 1213)***	.....	1	320 3720	

NOTE 6.350-1: Two Types of Overdrive Control Cables and Brackets are used on the 62 01 (RHD-WOD). They can be identified as follows:
Type 1: Cable and Bracket are located on the Left side of Instrument Panel.
Type 2: Cable and Bracket are located on the Right side of Instrument Panel.

NOTE 6.350-2: Two Types of Overdrive Control Cables were used on the 65 10 (V8-WOD-WCGS): They can be identified as follows:
Type 1: The Overall Length excluding Knob 45-1/4" length and used prior to Car Sequence No.
Type 2: The Overall Length excluding Knob is 46/1/2" length and used after Car Sequence No.

NOTE 6.350-3: Two Types of Overdrive Control Cables were used on the 65 10-80 (LHD-WOD-WCGS). They can be identified as follows:
Type 1: The Overall Length excluding Knob is 47-1/4" length and used prior to Car Sequence No.
Type 2: The overall Length excluding Knob is 48-1/2" length and used beginning with car Sequence No.

Copyright 1963 American Motors Corp.

GROUP NO. — DESCRIPTION — YEAR and MODEL	PRIMARY GROUP NO.	PER CAR	PART NO.	CODE
60 20 (WOD)	.....	1	320 0282	
61 20 (WOD)	.....	1	320 2739	
60 80 (WOD)	.....	1	320 0775	
61 80 (WOD)	.....	1	320 2741	
62 80 (WOD) ***(Use 315 1213)***	.....	1	320 3697	
BUSHING, Overdrive Control				
61 Thru 65 01 (WOD-WCGS): 60 Thru 65 10-20-80 (WOD-WCGS)	.....	1	314 6956	
BRACKET, Overdrive Control Cable Clip				
64 01 (RHD): 62 Thru 64 10 (WOD-WCGS): 60-61 20 (WOD): 61-62 80 (WOD)	.....	1	314 5191	
63-64 10 (WOD-WFGS)	.....	1	316 8920	
63-64 80 (WOD)	.....	1	316 4281	
63 80 (WOD-WFGS)	16.020	1	316 8854	
ATTACHING PARTS				
Cable Bracket To Gear Shift Mounting Bracket Support				
BOLT, Hexagon ..... 63-64 01-10-80 (WOD-WFGS)	17.038	1	G180018	NA
WASHER, Lock ..... 63-64 01-10-80 (WOD-WFGS)	17.820	1	G120380	NA
NUT, Hexagon ..... 63-64 01-10-80 (WOD-WFGS)	17.406	1	G120375	
Cable Bracket To Transmission Bracket				
BOLT, Hexagon..... 63-64 01-10-80 (WOD-WFGS)	17.038	1	G180018	NA
NUT, Hexagon..... 63-64 01-10-80 (WOD-WFGS)	17.406	1	G120375	
CLIP, Overdrive Control (To Front Suspension Mounting Bracket)				
60-61 20 (WOD): 61-62 80 (WOD)	4.152	1	47 272	
CLIP, Overdrive Control (To Upper Left Half Flywheel)				
62-63 10 (WOD-WCGS)	3.163	1	99 478	
CLIP, Overdrive Control Cable To Bracket				
64-65 01 (WOD)	4.160	1	15 708	
CLIP, Overdrive Control (Under Clutch Throwout Lever Seal Retainer Screw)				
64-65 01 (WOD-WCGS)	29.294	1	316 9685	
64 10 (WOD-WCGS)	3.165	1	99 477	
CLIP, Overdrive Control Cable				
63 01 (WOD-WFGS)	13.440	1	400 0443	
63 10-80 (WOD)	3.312	1	79 394	
ATTACHING PARTS				
Cable Clip To Floor Pan				
SCREW, Tapping..... 63 01 (WOD-WFGS)	17.672	1	G9411526	NA
KNOB, Overdrive Control				
64-65 01 (WOD-WFGS): 63-64 10-80 (WOD-WFGS)	.....	1	316 7305	
65 10-80 (WOD-WFGS)	.....	1	317 6481	
LEVER, Overdrive Control (Less Knob)				
63 01 (WOD-WFGS): 63-64 10 (OHV-196-WOD-WFGS): 64-65 10 (V8-327-WOD-WFGS): 65 10 (OHV-199-WOD-WFGS): 63 Thru 65 80 (V8-327-WOD-WFGS)	.....	1	316 7301	
64-65 01 (WOD-WFGS): 63 Thru 65 10 (V8-287-WOD-WFGS): 65 10-80 (OHV-232-WOD-WFGS)(V8-287-WOD-WFGS)	.....	1	316 9940	
ATTACHING PARTS				
Lever To Gear Shift Mounting Bracket				
WASHER, Spring ..... 63 Thru 65 01-10-80 (WOD-WFGS)	7.125	2	316 7670	

Copyright 1963 American Motors Corp.

GROUP NO. — DESCRIPTION — YEAR and MODEL		PRIMARY GROUP NO.	PER CAR	PART NO.	CODE
WASHER, Plain	63 Thru 65 01-10-80 (WOD-WFGS)	17.814	1	400 1100	
PIN, Cotter	63 01-10-80 (WOD-WFGS)	17.460	1	G137159	NA
NUT, Lock	63 Thru 65 01-10-80 (WOD-WFGS)	17.416	1	G443336	NA
COVER, Overdrive Control Lever					
63 01-10-80 (WOD-WFGS)	*(Use 316 9222)*		1	316 7382	
64-65 01-10-80 (WOD-WFGS)		7.013	1	317 2582	
TRUNNION, Overdrive Control (Cable To Transmission Lever)					
63 Thru 65 01-10-80 (WOD-WFGS)			1	316 8816	
ATTACHING PARTS Trunnion To Shift Lever					
PIN, Cotter	63 Thru 65 01-10-80 (WOD-WFGS)	17.460	1	G137127	NA
WASHER, Plain	63 Thru 65 01-10-80 (WOD-WFGS)	23.039	1	400 0481	
NUT, Hexagon	63 Thru 65 01-10-80 (WOD-WFGS)	17.412	1	G120614	NA
6.352 BUTTON, Overdrive Control					
60 01-10-20-80 (WOD)			1	320 1929	
6.357 BRACKET, Overdrive Control Shaft To Instrument Panel					
60 01 (WOD)			1	313 0969	
61 Thru 63 01 (LHD-WOD-WCGS): 60 10 (LHD-WOD): 62 10-80 (WOD-Note 6.350-1 Type 2): 60-61 20-80 (WOD)			1	310 7109	
61 Thru 63 01 (RHD-WOD)			1	316 2206	
64-65 01 (WCGS)			1	317 1682	
61 10 (RHD-WOD): 62 10 (RHD-WOD-Note 6.350-1 Type 1)			1	316 2294	
63 Thru 64 10-80 (WOD-WCGS): 65 10-80 (WOD-WCGS-Notes 6.350-2 Type 1 And 6.350-3 Type 1)			1	348 2518	
65 10-80 (WOD-WCGS-Notes 6.350-2 Type 2 And 6.350-3 Type 2)			1	317 8752	
BRACKET, Overdrive Control Cable To Transmission					
63 01 (WOD-WFGS)			1	316 7384	
64-65 10 (V 8-327-WOD-WFGS): 63 Thru 65 80 (V8-327-WOD-WFGS)			1	316 7298	
64-65 01 (WOD-WCGS)			1	315 0579	
BRACKET, Overdrive Control Cable To Floor Pan					
64-65 01 (WOD-WFGS-2 Holes): 63 Thru 65 10-80 (Six-WOD-WFGS) (V8-287-WOD-WFGS)			1	316 8814	
64 01 (WOD-WFGS-1 Hole)			1	317 2846	
ATTACHING PARTS Bracket To Floor Pan					
BOLT, Hexagon	64 01 (WOD-WFGS)	17.038	2	G180016	NA
SCREW, Tapping	64-65 01 (WOD-WFGS)	17.670	2	G178781	NA
SCREW, Tapping	64-65 10-80 (WOD-WFGS)	17.671	2	400 1042	
WASHER, Lock	64 01 (WOD-WFGS)	17.820	2	G120380	NA
NUT, Hexagon	64 01 (WOD-WFGS)	17.406	2	G120375	
ATTACHING PARTS Bracket To Dash					
SCREW, Machine	60 01 (WOD)	17.598	2	G190332	NA
SCREW, Machine	60-61 10-20-80 (WOD): 62 10-80 (WOD-Note 6.350-1 Type 1)	17.586	2	G156249	NA
SCREW, Machine	62 10 (LHD-WOD-Note 6.350-1 Type 2)	17.586	2	G156253	NA
SCREW, Tapping	61 Thru 6301 (WOD-WCGS)	17.654	2	G162502	NA
SCREW, Tapping	64-65 01 (WOD-WCGS): 63 Thru 65 10-80 (WOD-WCGS)	17.660	2	G161901	NA
NUT, Hexagon	60 01 (WOD)	17.406	2	G103025	NA
NUT, Hexagon	60 Thru 63 10-20-80 (WOD)	17.406	2	G120375	

Copyright 1963 American Motors Corp.

GROUP NO. — DESCRIPTION — YEAR and MODEL		PRIMARY GROUP NO.	PER CAR	PART NO.	CODE
WASHER, Lock	60 01 (WOD)	17.824	4	G115548	NA
WASHER, Lock	60 Thru 62 10-20-80 (WOD)	17.820	2	G120380	NA
	Bracket To Transmission				
BOLT, Hexagon	63 01 (WOD-WFGS)	17.038	1	G180143	NA
BOLT, Hexagon	63 80 (WOD-WFGS-1-1/4" Long)	17.038	1	G179860	NA
BOLT, Hexagon	63 80 (WOD-WFGS-1-3/4" Long)	17.038	1	G179864	NA
WASHER, Lock	63 01 (WOD-WFGS)	17.820	1	G131100	NA
WASHER, Lock	63 80 (WOD-WFGS)	17.822	2	G114607	NA

6.358 CLAMP, Overdrive Control Cable Lower

60 Thru 65 01-10-20-80 (WOD-WCGS)		.....	1	530 6722	
	ATTACHING PARTS				
	Clamp To Cable				
BOLT, Hexagon	63 Thru 65 01-10-20-80 (WOD-WCGS)	17.038	1	G180020	NA
WASHER, Lock	63 Thru 65 01-10-20-80 (WOD-WCGS)	17.820	1	G120380	NA
NUT, Hexagon	63 Thru 65 01-10-20-80 (WOD-WCGS)	17.406	1	G120375	

6.363 SPACER, Overdrive Control (At Control Shaft)

60 Thru 65 01-10-20 (WOD-WCGS)		.....	1	312 1626	
	ATTACHING PARTS				
	Spacer To Lever				
BOLT, Hexagon	60 Thru 65 01-10-20 (WOD-WCGS)	.....	1	312 1627	
WASHER, Lock	60 Thru 65 01-10-20 (WOD-WCGS)	17.820	1	G120380	NA
WASHER, Plain	60 Thru 65 01-10-20 (WOD-WCGS)	17.814	1	G120392	NA
NUT, Hexagon	60 Thru 65 01-10-20 (WOD-WCGS)	17.406	1	G120367	

6.365 RELAY, Overdrive Kickdown

60 Thru 62 01-10-20-80 (WOD)		.....	1	315 6019	
63 01 (WOD-WCGS): 63-64 10-80 (WOD-WCGS)		.....	1	316 7442	
63 Thru 65 01-10-80 (WOD-WFGS)		.....	1	316 7318	
	ATTACHING PARTS				
	Relay To Panel				
SCREW, Tapping	60 Thru 63 01 (WOD) ***(Replaces 800 0103)***	17.671	2	G9411563	
SCREW, Tapping	60-61 10-20-80 (WOD) ***(Replaces 800 0105)***	17.671	2	400 1042	
SCREW, Tapping	62 Thru 64 10-80 (WOD-WCGS) ***(Replaces 800 0129)***	17.671	2	400 1066	
SCREW, Tapping	64-65 01 (WOD-WFGS): 63 Thru 65 10-80 (WOD-WFGS)	17.671	2	G445702	NA
WASHER, Plain	64-65 01 (WOD-WFGS): 63 Thru 65 10-80 (WOD-WFGS)	17.814	2	G120392	NA
	WIRE, Overdrive Kickdown Relay To Junction Block				
61-62 10 (WOD): 61 20-80 (WOD)		.....	1	316 1335	
	RESISTOR, Overdrive Kickdown Relay				
63 Thru 65 01-10-80 (WOD-WFGS)		.....	1	316 7315	
	ATTACHING PARTS				
	Resistor To Relay				
SCREW, Tapping	63 10-80 (WOD-WFGS)	17.671	2	G9411563	
SCREW, Tapping	64-65 01 (WOD-WFGS)	17.671	2	G274773	NA
SCREW, Tapping	64-65 10-80 (WOD-WFGS)	17.671	2	400 1040	
	FUSE, Overdrive Kickdown Relay (15 AMP)				
60 Thru 65 01-10-20-80 (WOD-WCGS)		17.300	1	G120151	
63 Thru 65 01-10-80 (WOD-WFGS)		17.300	1	G120114	

Copyright 1963 American Motors Corp.

GROUP NO. — DESCRIPTION — YEAR and MODEL	PRIMARY GROUP NO.	PER CAR	PART NO.	CODE
6.366 BUTTON, Overdrive Kickdown Switch Control				
63 Thru 65 01 (WOD-WFGS): 63-64 10-80 (WOD-WFGS)	.....	1	316 7306	
65 10-80 (WOD-WFGS)	.....	1	317 8568	
PLUG, Overdrive Kickdown Switch Wire Contact				
63 Thru 65 01-10-80 (WOD-WFGS)	.....	1	316 7309	
PLATE, Overdrive Kickdown Switch Contact				
63 Thru 65 01-10-80 (WOD-WFGS)	.....	1	316 7320	
SPRING, Overdrive Kickdown Switch Contact Plate				
63 Thru 65 01-10-80 (WOD-WFGS)	.....	1	316 7313	
INSULATOR, Overdrive Kickdown Switch Button				
63 01-10-80 (WOD-WFGS)	.....	1	316 7308	
64-65 01-10-80 (WOD-WFGS)	.....	1	317 0898	
WIRE, Overdrive Kickdown Switch				
63 Thru 65 01-10-80 (WOD-WFGS)	.....	1	316 7310	
BUSHING, Overdrive Kickdown Switch				
63 Thru 65 01-10-80 (WOD-WFGS)	.....	1	317 0897	
6.367 SWITCH, Overdrive Kickdown				
60 Thru 63 01 (LHE-WOD) ***(Replaces 313 8276, 313 6724)***	.....	1	312 5901	
60 Thru 62 01 (OHV-WOD): 60 Thru 62 10-20-80 (WOD)	.....	1	314 6726	
63 01 (OHV-WOD-WCGS): 64-65 01 (WOD-WCGS): 63 Thru 65 10-80 (WOD-WCGS)	.....	1	316 6620	
ATTACHING PARTS				
Switch To Bracket				
SCREW, Tapping..... 60-61 01 (LHE-WOD): ***62-63 01 (RHD-WOD)***	17.670	2	G445656	NA
SCREW, Tapping..... 62-63 01 (LHD-LHE-WOD-WCGS)	17.671	2	G274773	NA
SCREW, Tapping..... 63 80 (WOD-WCGS)	17.671	2	G443794	NA
NUT, Speed ..... 60 Thru 63 01 (LHE-WOD)	15.022	2	312 6533	
NUT, Speed ..... 63 01 (OHV-WOD-WCGS): 64-65 01 (WOD-WCGS): 63 Thru 65 10-80 (WOD-WCGS)	.....	2	316 6650	
NUT, Jam..... 60 Thru 62 01 (OHV-WOD): 60 10-20-80 (WOD): 62 10-80 (WOD)	17.410	1	G272123	NA
WASHER, Lock ..... 60 Thru 63 01 (OHV-WOD): 64-65 01 (WOD-WCGS): 63 Thru 65 10-80 (WOD-WCGS): 60 10-20-80 (WOD)	17.824	2	G115550	NA
WASHER, Plain..... 60 Thru 62 01 (OHV-WOD): 60 Thru 62 10-20-80 (WOD) ***(Replaces 800 0179)***	17.814	3	400 1116	
RETAINER, Overdrive Kickdown Switch				
60 Thru 63 01 (LHE-WOD)	.....	1	315 4600	
SPRING, Overdrive Kickdown Switch				
60 Thru 63 01 (LHE-WOD)	.....	1	315 4601	
SPRING, Overdrive Kickdown Switch Retainer				
60 Thru 63 01 (LHE-WOD)	17.710	1	G455563	
WIRE, Overdrive Kickdown Switch (To Governor)				
60 Thru 65 01-10-20-80 (WOD)	3.210	1	314 7515	

Copyright 1963 American Motors Corp.

GROUP NO. — DESCRIPTION — YEAR and MODEL	PRIMARY GROUP NO.	PER CAR	PART NO.	CODE
WIRE, Overdrive Kickdown Switch (To Coil)				
60-61 01-10-20 (WOD): 62 01 (LHE-WOD-11" Long): 61-62 80 (WOD)	.....	1	315 4314	
62 01 (LHE-WOD-15" Long): 63-64 01 (LHD-LHE-WOD-WCGS)	.....	1	316 6205	
ATTACHING PARTS Wire To Terminal				
SCREW, Machine..... 60 Thru 63 01-10-20-80 (WOD)	17.612	1	G447119	NA
PELLET, Overdrive Kickdown Switch Cable				
60 Thru 63 01 (LHE-WOD)	.....	1	312 5873	
ATTACHING PARTS Pellet To Cable				
SCREW, Machine..... 60 Thru 63 01 (LHE-WOD)	12.061	1	310 8350	
CLIP, Overdrive Kickdown Switch Wire				
60 Thru 62 01-10-20-80 (WOD)	.....	1	315 1713	
63-64 01-10-80 (WOD)	3.615	1	310 8634	
CONNECTOR, Overdrive Kickdown Switch				
60 Thru 62 01 (WOD): 60-61 10-20-80 (WOD): 63 80 (WOD)	13.170	1	312 7171	
6.368 SWITCH, Overdrive Vacuum				
63 Thru 65 01-10-80 (WOD-WFGS)	.....	1	316 7316	
ATTACHING PARTS Switch To Bracket				
NUT, Stamped..... 63-64 01-10-80 (WOD-WFGS)	17.428	1	G107826	NA
NUT, Stamped..... 65 01-10-80 (WOD-WFGS)	17.428	1	G9420174	NA
ADAPTER, Overdrive Vacuum Switch (In Switch)				
63 Thru 65 01 (WOD-WFGS-1 Req.): 63 Thru 65 10 (Six-WOD-WFGS-1 Req.) (V8-287-WOD-WFGS-2 Req.): 65 80 (V8-287-WOD-WFGS-2 Req.): 64-65 10 (V8-327-WOD-WFGS-2 Req.): 63 Thru 65 80 (V8-327-WOD-WFGS-2 Req.)	.....	2	316 8083	
BUSHING, Overdrive Vacuum Switch Pipe				
63 Thru 65 01 (LPB-WOD-WFGS): 63 Thru 65 10-80 (V8-WOD-WFGS)	17.086	1	G119923	
ELBOW, Overdrive Vacuum Switch Pipe Bushing				
63 Thru 65 01-10-80 (WOD-WFGS)	.....	1	317 0686	
TUBE, Overdrive Vacuum Switch (Manifold To Hose)				
63 Thru 65 01 (WOD-WFGS): 63-64 10 (OHV-196-WOD-WFGS)	.....	1	316 7957	
64 10 (OHVC-232-WOD-WFGS): 65 10 (Six-WOD-WFGS)	.....	1	317 5699	
63 80 (WOD-WFGS)	.....	1	316 7956	
65 80 (OHV-232-WOD-WFGS)	.....	1	317 7389	

Copyright 1963 American Motors Corp.

GROUP NO. — DESCRIPTION — YEAR and MODEL	PRIMARY GROUP NO.	PER CAR	PART NO.	CODE
CLIP, Overdrive Vacuum Switch Tube				
65 01 (WOD-WFGS): 64 10 (OHVC-196-WOD-WFGS)	5.255	2	316 9437	
65 10 (Six-WOD-WFGS): 65 80 (OHV-232-WOD-WFGS)	17.134	2	G105245	
BRACKET, Overdrive Vacuum Switch				
63 Thru 64 01 (WOD-WFGS): 65 01 (OHV-196-WOD-WFGS): 63 Thru 65 10-80 (WOD-WFGS)	.....	1	316 7947	
65 01 (OHV-199-WOD-WFGS)	.....	1	317 8917	
ATTACHING PARTS				
Bracket To Wheelhouse				
SCREW, Tapping..... 63-64 01 (WOD-WFGS): 63 Thru 65 10-80 (WOD-WFGS) ***(Replaces 800 0103)***	17.671	2	G9411563	
SCREW, Tapping..... 65 01 (WOD-WFGS-OHV-196)	17.672	2	400 1040	
SCREW, Tapping..... 65 01 (OHV-199-WOD-WFGS)	17.672	2	400 1042	
HOSE, Overdrive Vacuum (Bulk)				
63 Thru 65 01-10-80 (WOD-WFGS)	4.141	AR	320 3865	
6.370 BRACKET, Overdrive Kickdown Switch				
60 01 (OHV-WOD): 60 10 (LHD-LDT-WOD) ***(Use 316 2245)***	.....	1	315 6274	
60 Thru 63 01 (LHD-LHE-WOD)	.....	1	313 6723	
61-62 01 (OHV-WOD): 61-62 10 (WOD-LDT): ***63-64 10 (OHV-196-RHD-WOD)***	.....	1	316 2245	
61 Thru 63 01 (RHD-WOD)	.....	1	316 1240	
63 01 (OHV-LDT-WOD-WCGS): ***64 01 (RHD-LDT-WOD): 65 01 (RHD-WDT-WOD):*** 63-64 10 (OHV-WDT-WOD-WCGS)	.....	1	316 8893	
63 01 (OHV-LDT-WOD-WCGS): ***64 01 (RHD-LDT-WCGS-WOD)***: 63-64 10 (OHV-196-LDT-WOD-WCGS)	.....	1	316 6871	#
64-65 01 (LHE-WOD)	.....	1	317 2228	
60-61 10 (WOD-WDT) ***(Use 316 2387)***	.....	1	315 4256	
62 10 (WOD-WDT)	.....	1	316 2387	
64-65 10 (OHVC-232-WOD-WCGS): 65 80 (OHV-232-WOD-WCGS)	.....	1	317 5757	
65 01 (RHD-OHV-196-LDT-WOD): 65 10 (RHD-OHV-232-WOD)	.....	1	317 6055	#
64-65 10 (V8-WOD-WCGS): 63 Thru 65 80 (V8-WOD-WCGS)	.....	1	316 7858	
60-61 20 (WOD-WDT): 60 Thru 62 80 (WOD-WDT)	.....	1	315 8343	
60-61 20 (WOD-W4B): 60 Thru 62 80 (WOD-W4B)	.....	1	315 4269	
ATTACHING PARTS				
Bracket To Cylinder				
NUT, Hexagon..... 63 01 (LHE-WOD) ***(Replaces 800 0292)***	17.406	1	400 1247	
Bracket To Exhaust Manifold				
BOLT, Hexagon ..... 63 01-10-80 (WOD)	17.038	2	G180022	NA
Bracket To Dash Panel				
SCREW, Tapping..... 64-65 10-80 (V8-WOD-WCGS)	.....	2	G443794	
LEVER, Kickdown Switch (On Carburetor)				
64-65 01 (LHE-WOD)	.....	1	317 2234	

NOTE 6.380-1: Two Types of Lenses were used in 63 Series Cars. They can be identified as follows:
Type 1: Is Amber Lucite.
Type 2: Is Red Cellulose Acetate

Copyright 1963 American Motors Corp.

GROUP NO. — DESCRIPTION — YEAR and MODEL	PRIMARY GROUP NO.	PER CAR	PART NO.	CODE
ATTACHING PARTS				
Lever To Carburetor				
SCREW, Machine..... 64-65 01 (LHE-WOD)	17.626	1	G451280	NA
WASHER, Lock..... 64-65 01 (LHE-WOD)	17.820	1	G131095	NA
NUT, Hexagon..... 64-65 01 (LHE-WOD)	17.412	1	G120622	NA
CLIP, Overdrive Kickdown Switch (Vacuum Tube To Positive Crankcase Ventilation Tube)				
63 01 (OHV-WOD-WFGS)	5.255	2	316 9437	
6.380 HOOD, Overdrive Indicator Light (Incl. Support)				
63 01-10-80 (WOD-WFGS)	.....	1	320 4179	
64 01-10-80 (WOD-WFGS)	.....	1	320 5138	
65 01-10-80 (WOD-WFGS)	.....	1	317 6692	
ATTACHING PARTS				
Hood To Console				
SCREW, Tapping..... 65 01-10-80 (WOD-WFGS)	17.660	1	G161860	NA
LENS, Overdrive Indicator Light				
63 01-10-80 (WOD-WFGS-Note 6.380-1 Type 1)	.....	1	316 7311	
63 01-10-80 (WOD-WFGS-Note 6.380-1 Type 2): 64-65 01-10-80 (WOD-WFGS)	.....	1	317 0531	
PLATE, Overdrive Indicator Light Lens				
63 01-10-80 (WOD-WFGS-Note 6.380-1 Type 2): 64-65 01-10-80 (WOD-WFGS)	.....	1	317 0530	
WIRE, Overdrive Indicator Light (Incl. Socket)				
63 01-10-80 (WOD-WFGS)	.....	1	320 4180	
64-65 01-10-80 (WOD-WFGS)	.....	1	320 5139	
BULB, Overdrive Indicator Light				
63-64 01-10-80 (WOD-WFGS)	3.215	1	320 4552	
65 01-10-80 (WOD-WFGS)	3.215	1	G454626	
RELAY, Overdrive Indicator Light				
63 Thru 65 01-10-80 (WOD-WFGS)	.....	1	316 7552	
ATTACHING PARTS				
Relay To Left Wheelhouse				
SCREW, Tapping..... 63 Thru 65 01-10-80 (WFGS)	17.671	1	G274773	NA
RETAINER, Overdrive Indicator Light				
63 01-10-80 (WOD-WFGS)	.....	1	349 0093	
64 01-10-80 (WOD-WFGS)	.....	1	352 0767	
ATTACHING PARTS				
Retainer to Bezel				
SCREW, Tapping..... 63 01-10-80 (WQD-WFGS)	17.660	1	G161162	NA
SCREW, Tapping..... 64 01-10-80 (WOD-WFGS)	17.660	1	G161860	NA

Copyright 1963 American Motors Corp.

GROUP NO. — DESCRIPTION — YEAR and MODEL	PRIMARY GROUP NO.	PER CAR	PART NO.	CODE

Copyright 1963 American Motors Corp.

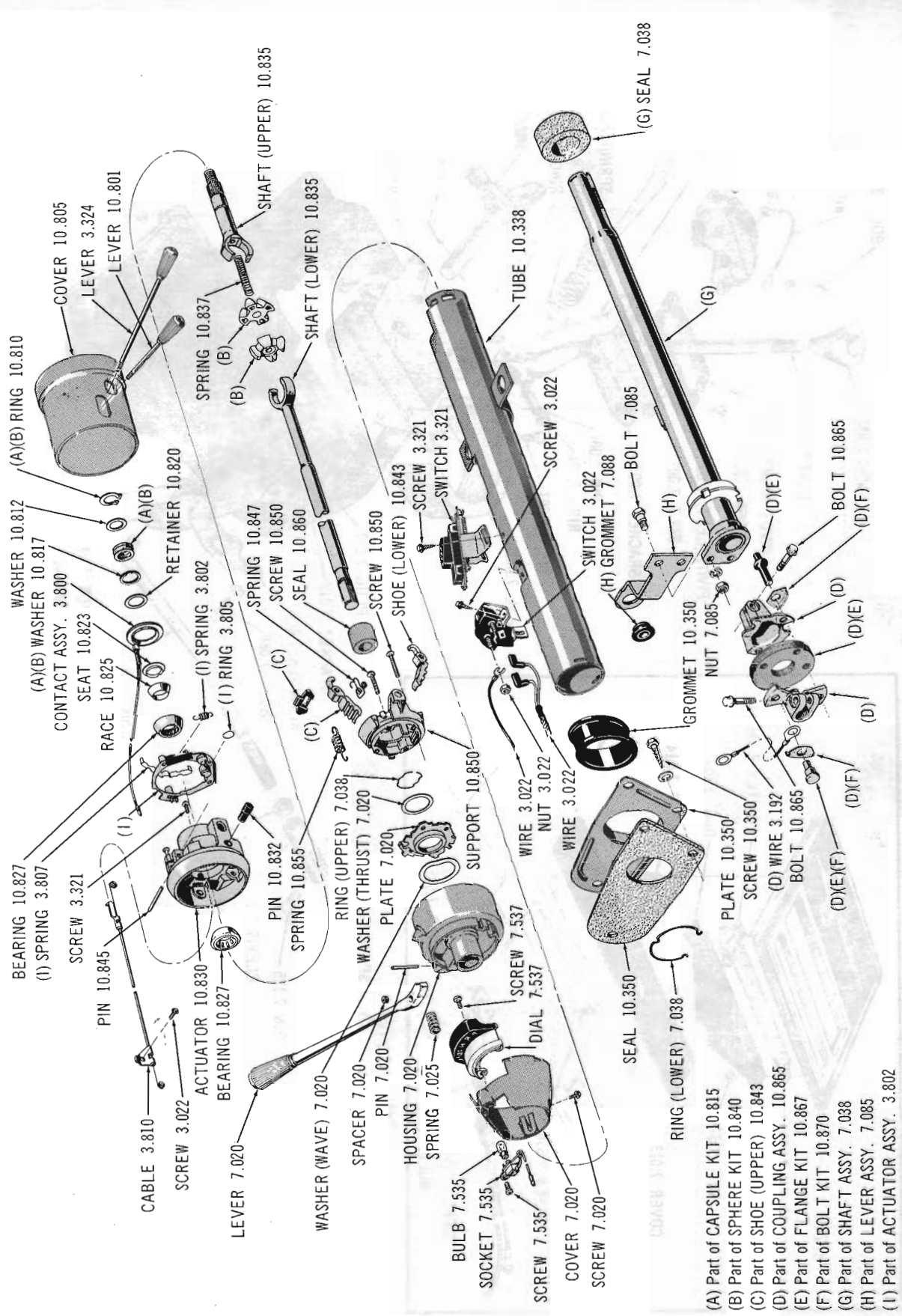

COLUMN GEAR SHIFT SHAFT AND STEERING TUBE 64-65 10-80 (WAT-WAW)

Copyright 1963 American Motors Corp.

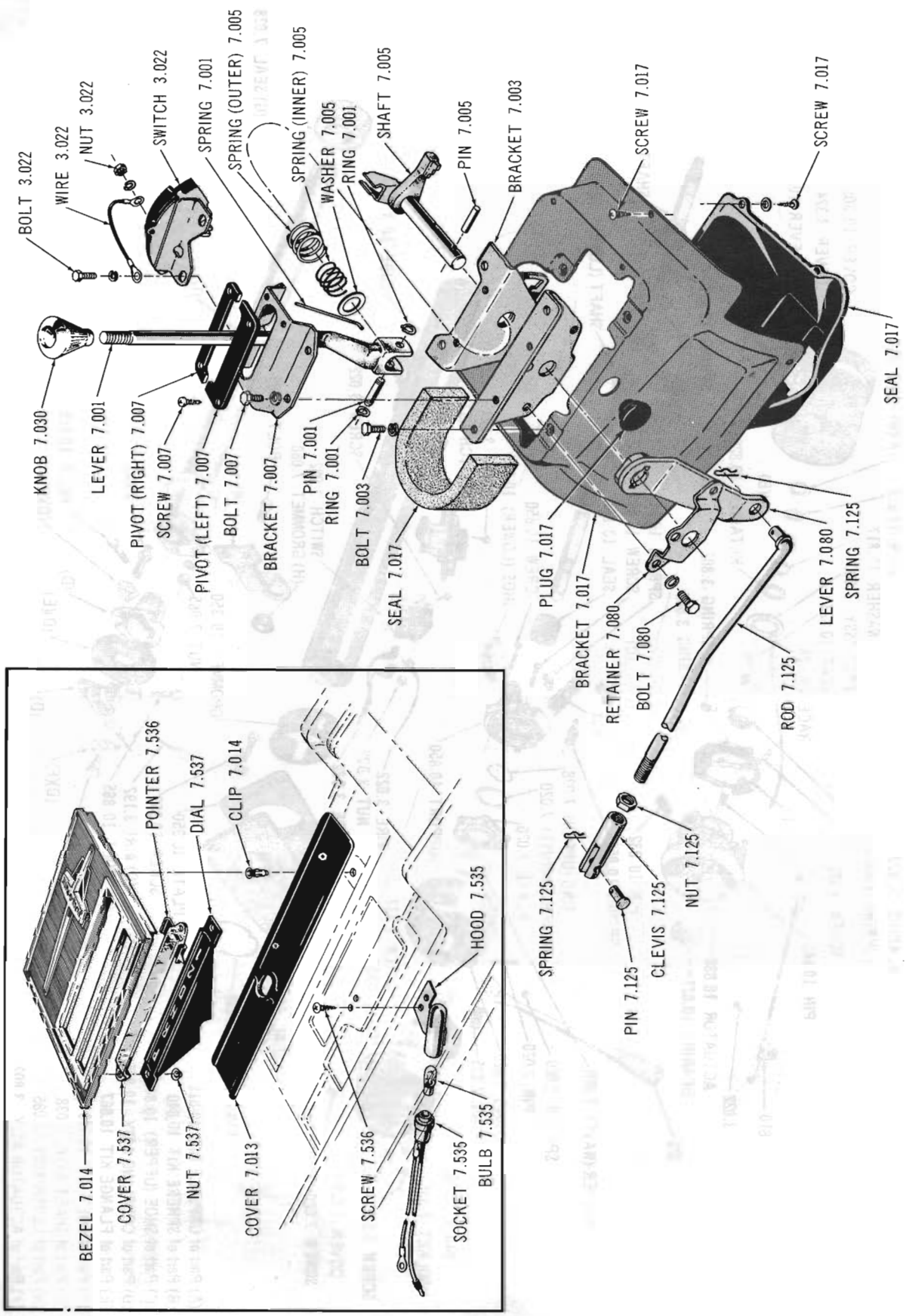

FLOOR GEAR SHIFT 64-65 10-80 (V8-WAT)

Copyright 1963 American Motors Corp.

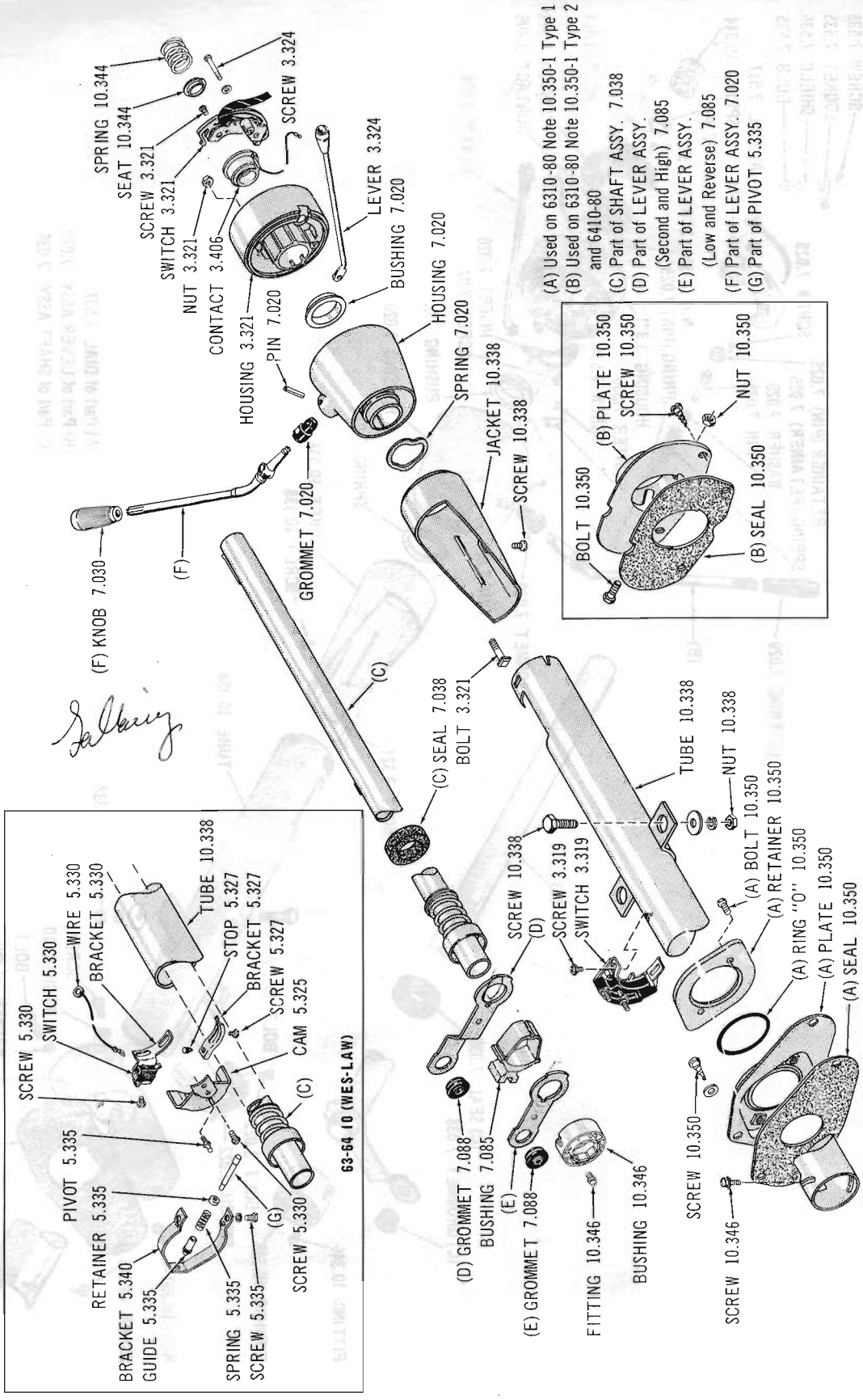

COLUMN GEAR SHIFT SHAFT AND STEERING TUBE 63-64 10 (WES-LAW): 63-64 10-80 (WST-LAW)(WOD-LAW)

Copyright 1963 American Motors Corp.

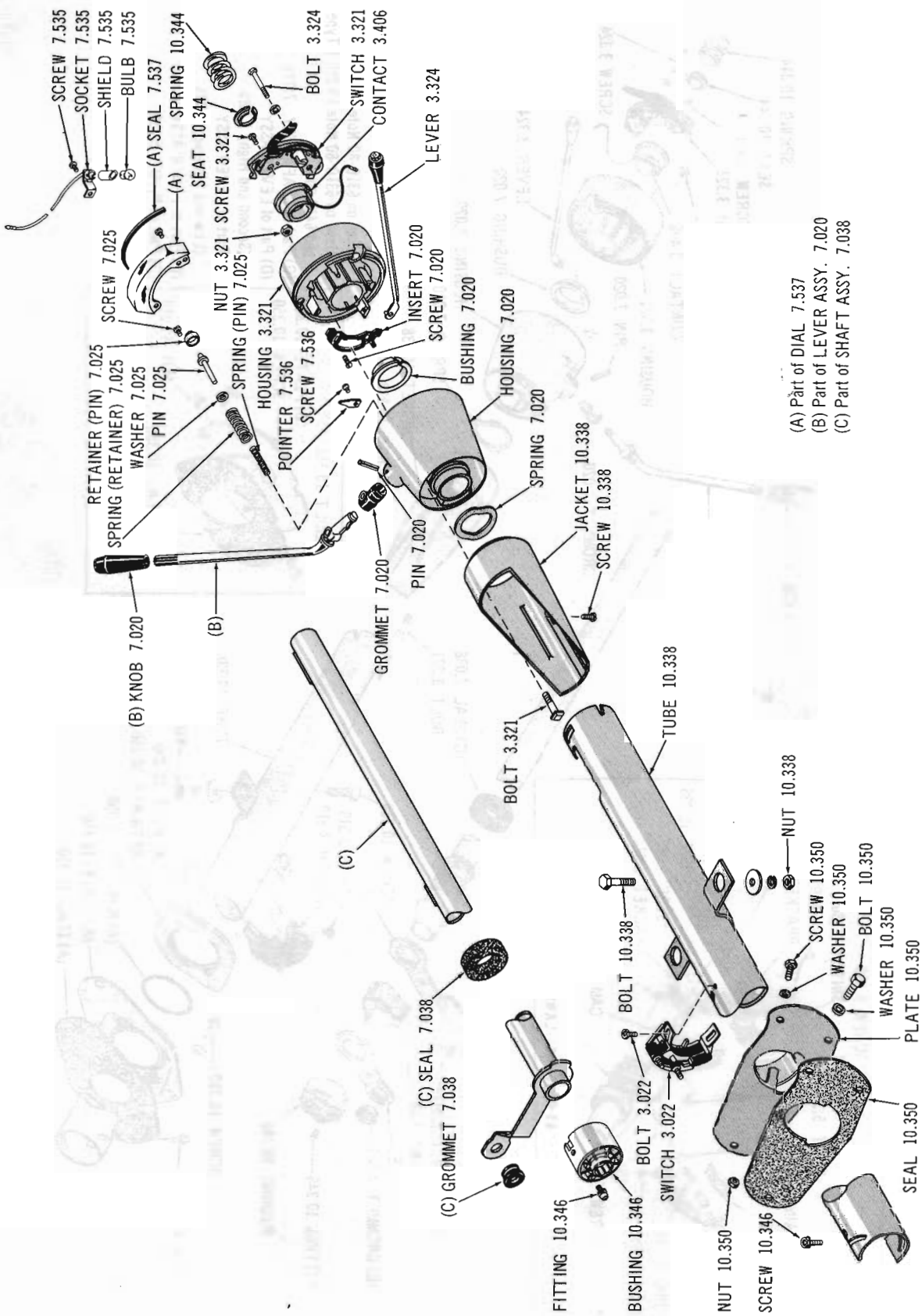

COLUMN GEAR SHIFT SHAFT AND STEERING TUBE 64 10-80 (LHD-WAT-LAW)

Copyright 1963 American Motors Corp.

COLUMN GEAR SHIFT SHAFT AND STEERING TUBE 64 01 (LHD-WST-LES)(LHD-WOD-LES)

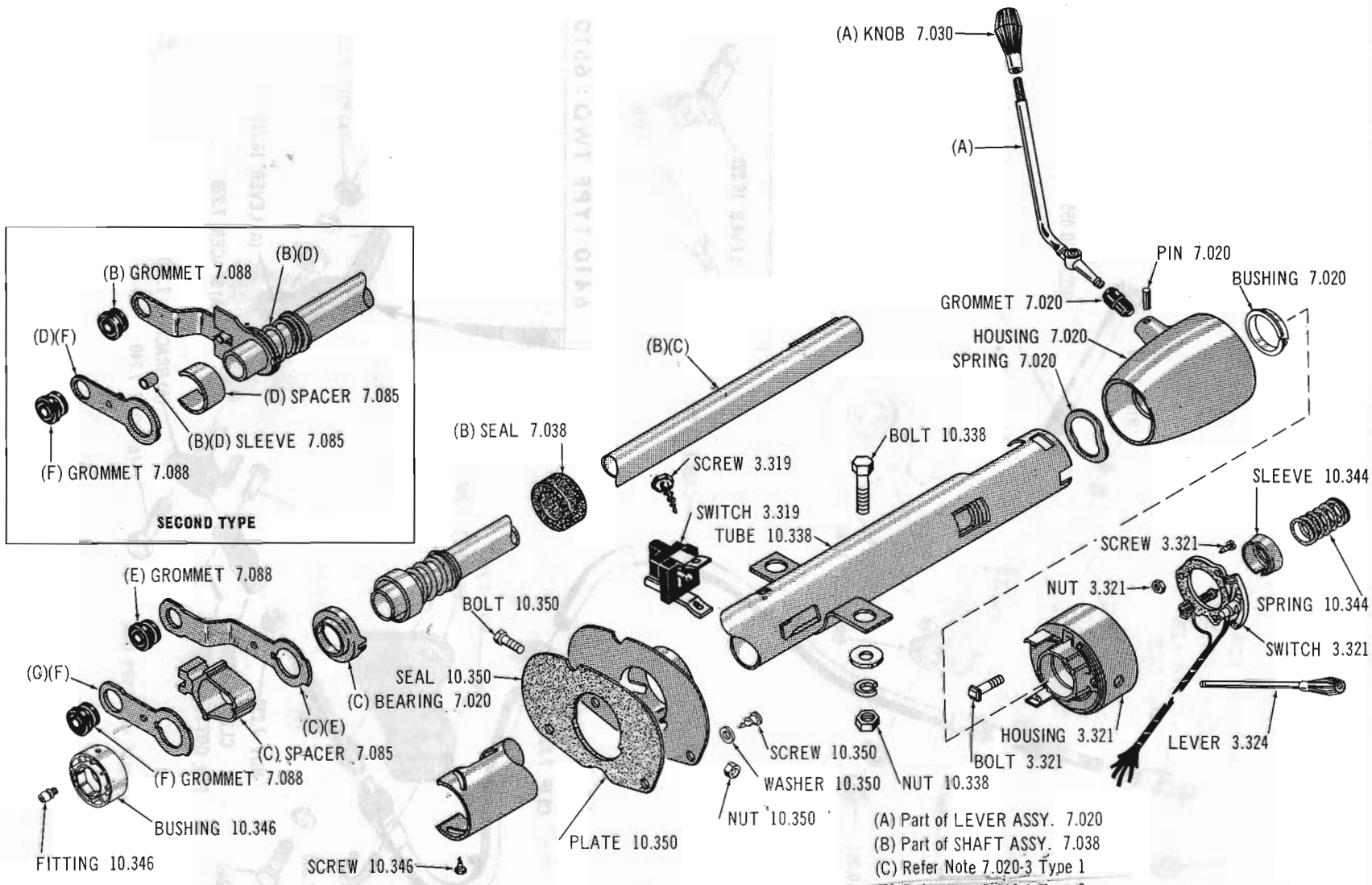

(A) Part of LEVER ASSY. 7.020
(B) Part of SHAFT ASSY. 7.038
(C) Refer Note 7.020-3 Type 1
(D) Refer Note 7.020-3 Type 2
(E) Part of LEVER ASSY. (Second and High) 7.085
(F) Part of LEVER ASSY. (Low and Reverse) 7.085

Copyright 1963 American Motors Corp.

Printed in U.S.A.

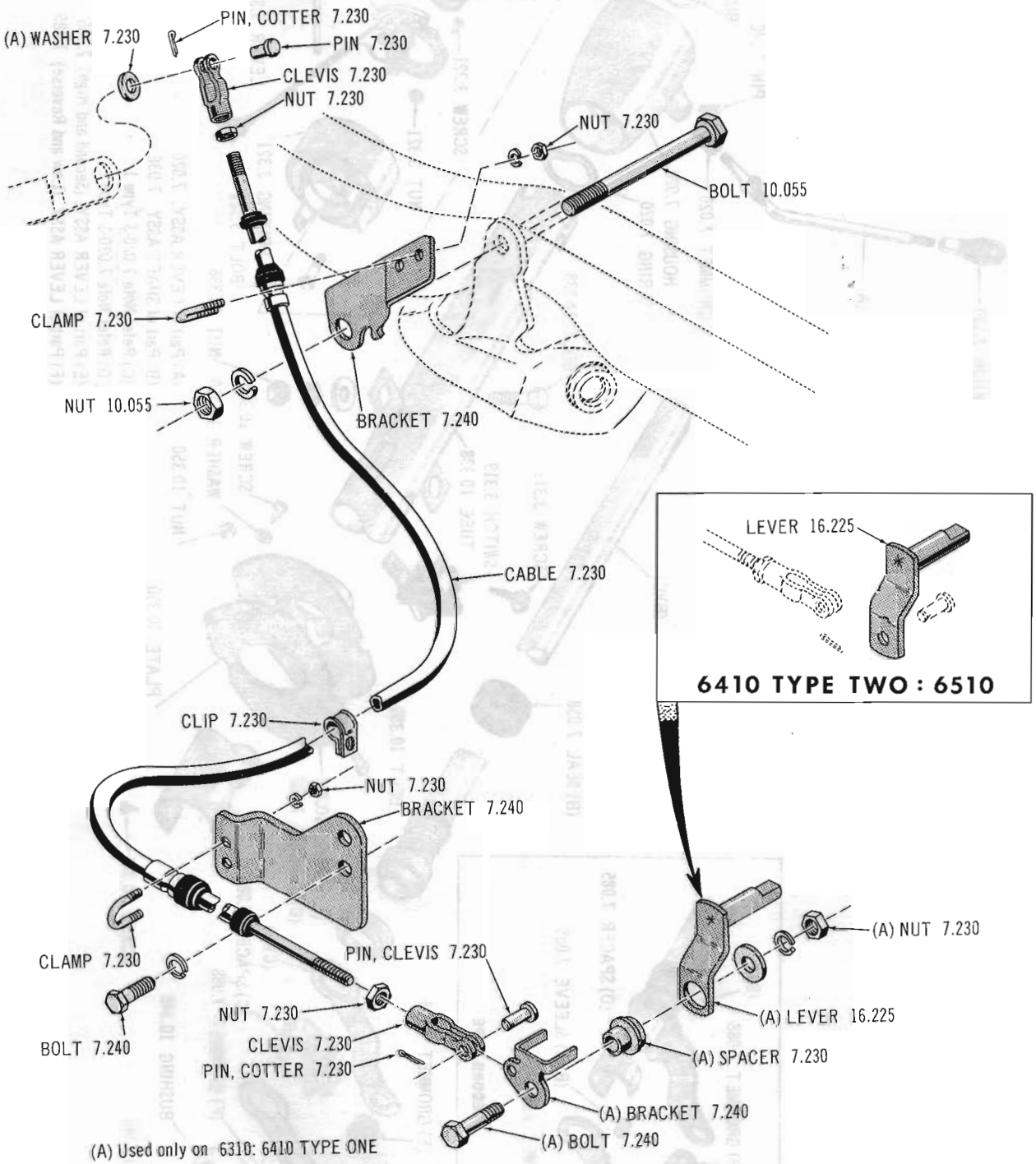

1942

TRANSMISSION GEAR SELECTOR CABLE 63 thru Current 10 (RHD-WAT)

Copyright 1963 American Motors Corp.

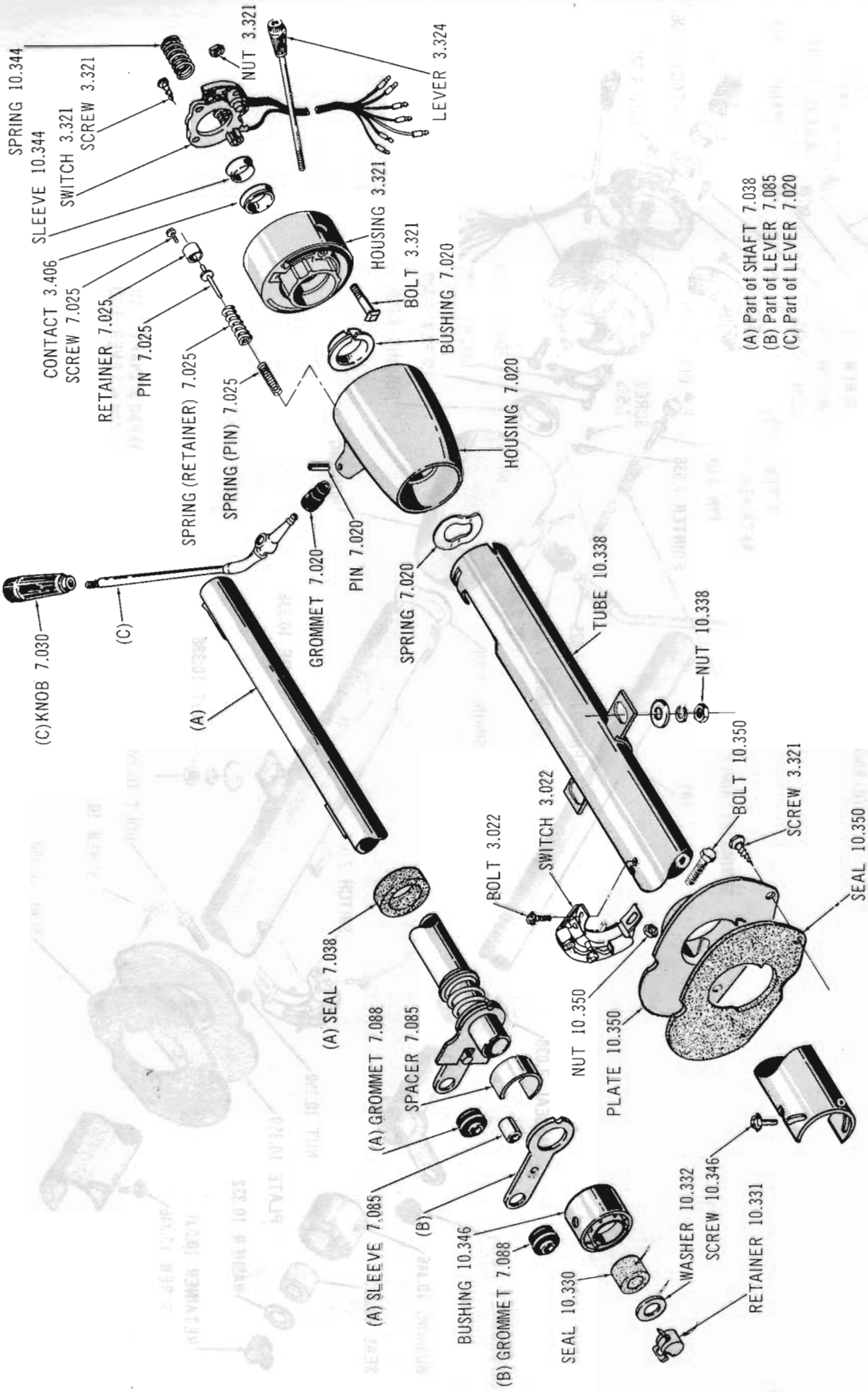

COLUMN GEAR SHIFT SHAFT AND STEERING TUBE 65 01 (WST)(WOD)

Copyright 1963 American Motors Corp.

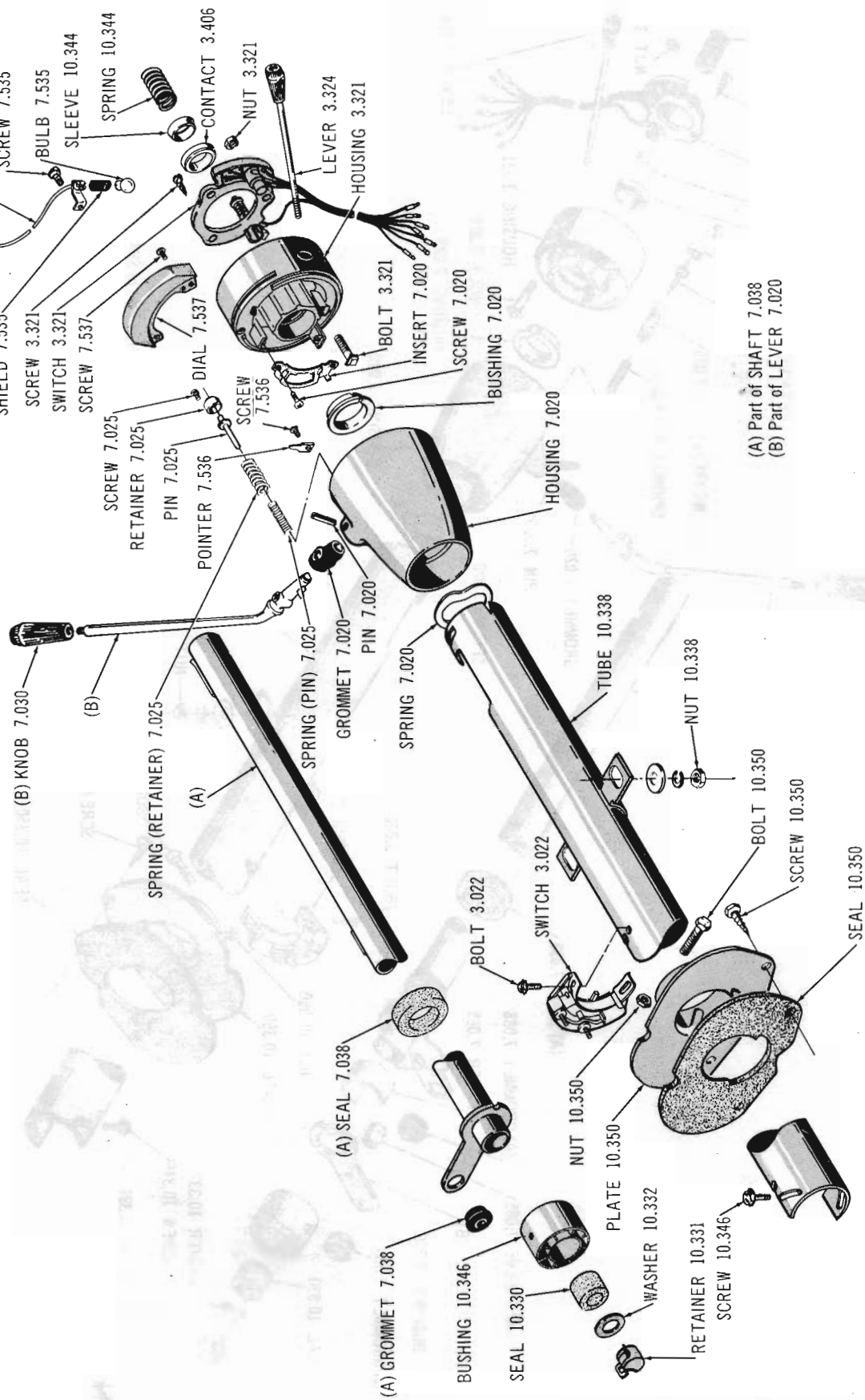

COLUMN GEAR SHIFT SHAFT AND STEERING TUBE 65 01 (WAT)

Copyright 1963 American Motors Corp.

Copyright 1963 American Motors Corp.

Printed in U.S.A.

COLUMN GEAR SHIFT SHAFT AND STEERING TUBE 65 10-80 (WST-LAW)(WOD-LAW)

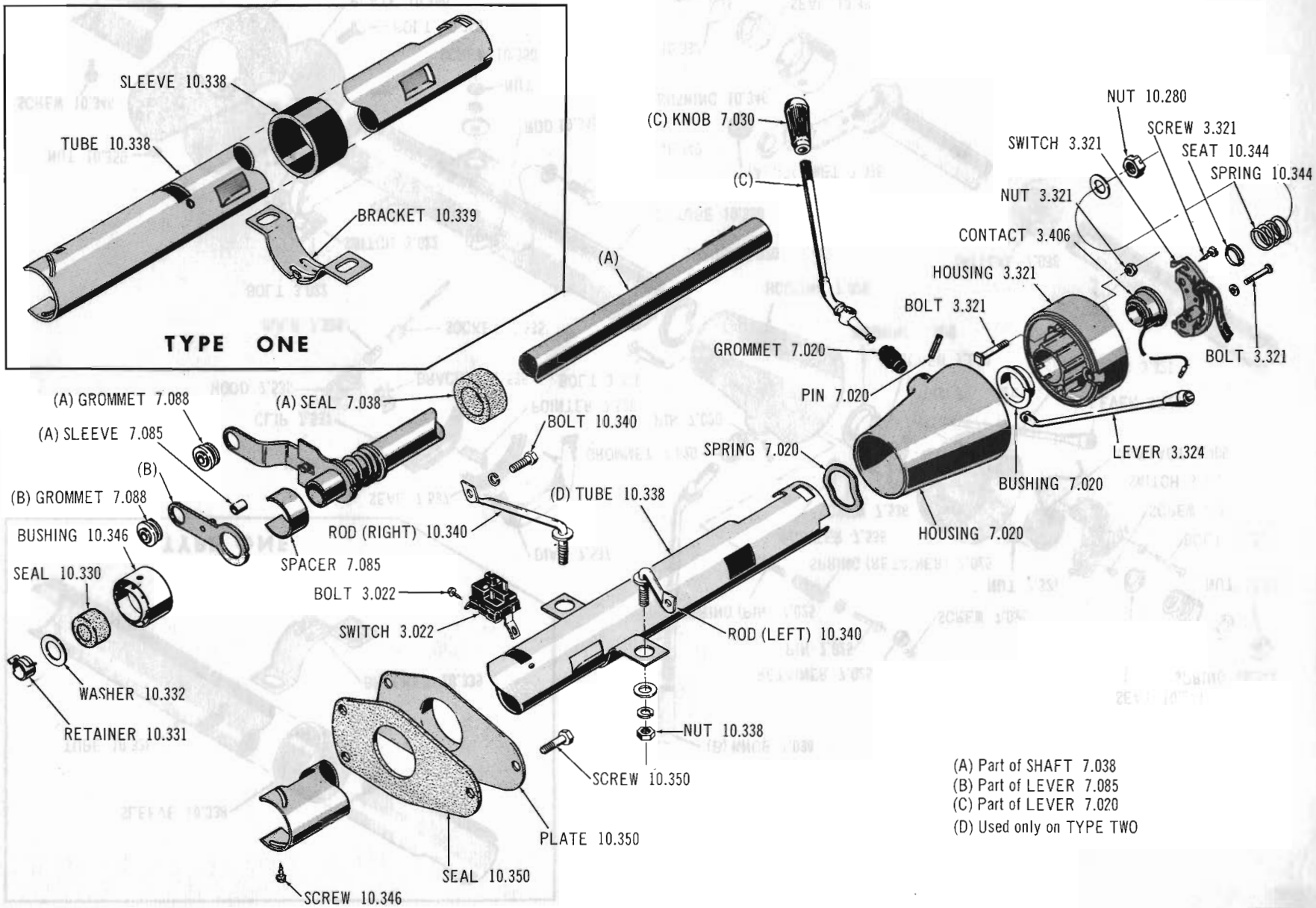

COLUMN GEAR SHIFT SHAFT AND STEERING TUBE 65 10-80 (LHD-WAT-LAW)

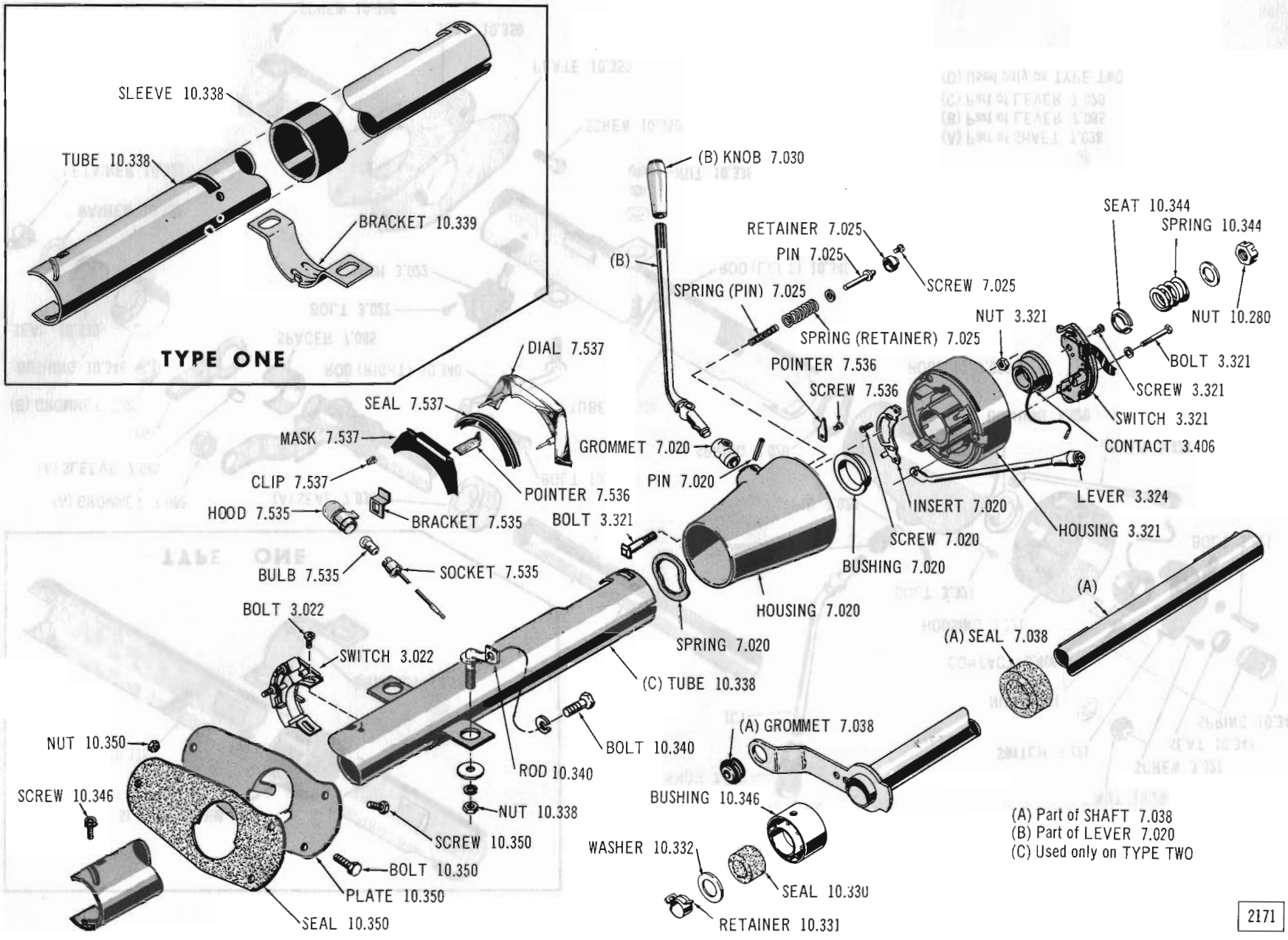

Copyright 1963 American Motors Corp.

Printed in U.S.A.

FLOOR GEAR SHIFT 65 10-80 (V8-W4ST)

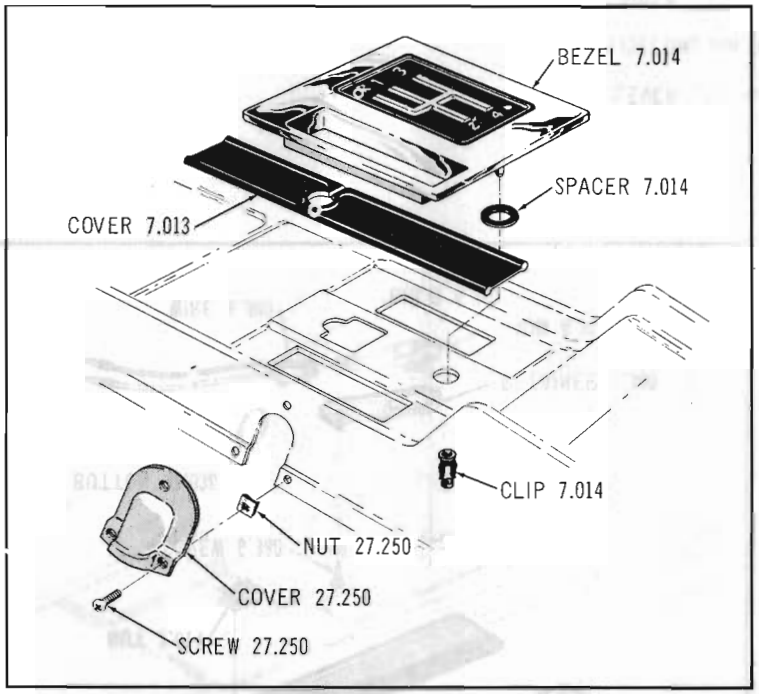

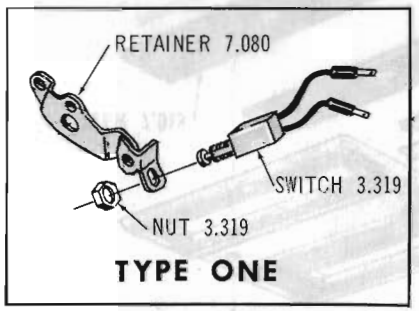

(A) Part of LEVER 7.001
(B) Used only on TYPE TWO

2239

Copyright 1963 American Motors Corp.

Printed in U.S.A.

FLOOR GEAR SHIFT 63 thru Current ALL MODELS (WOD)

Copyright 1963 American Motors Corp.

Printed in U.S.A.

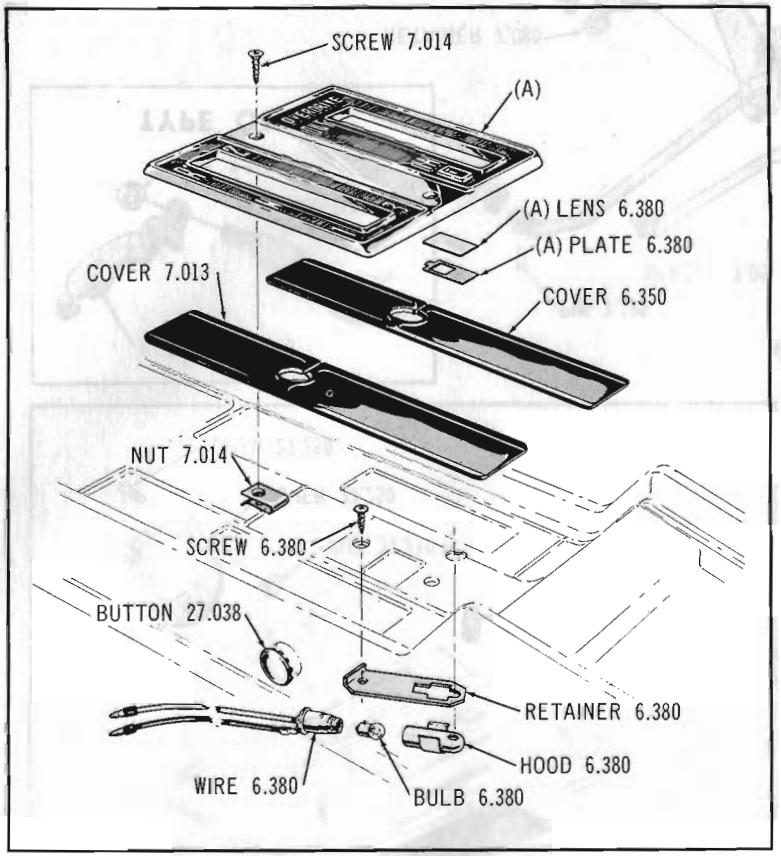

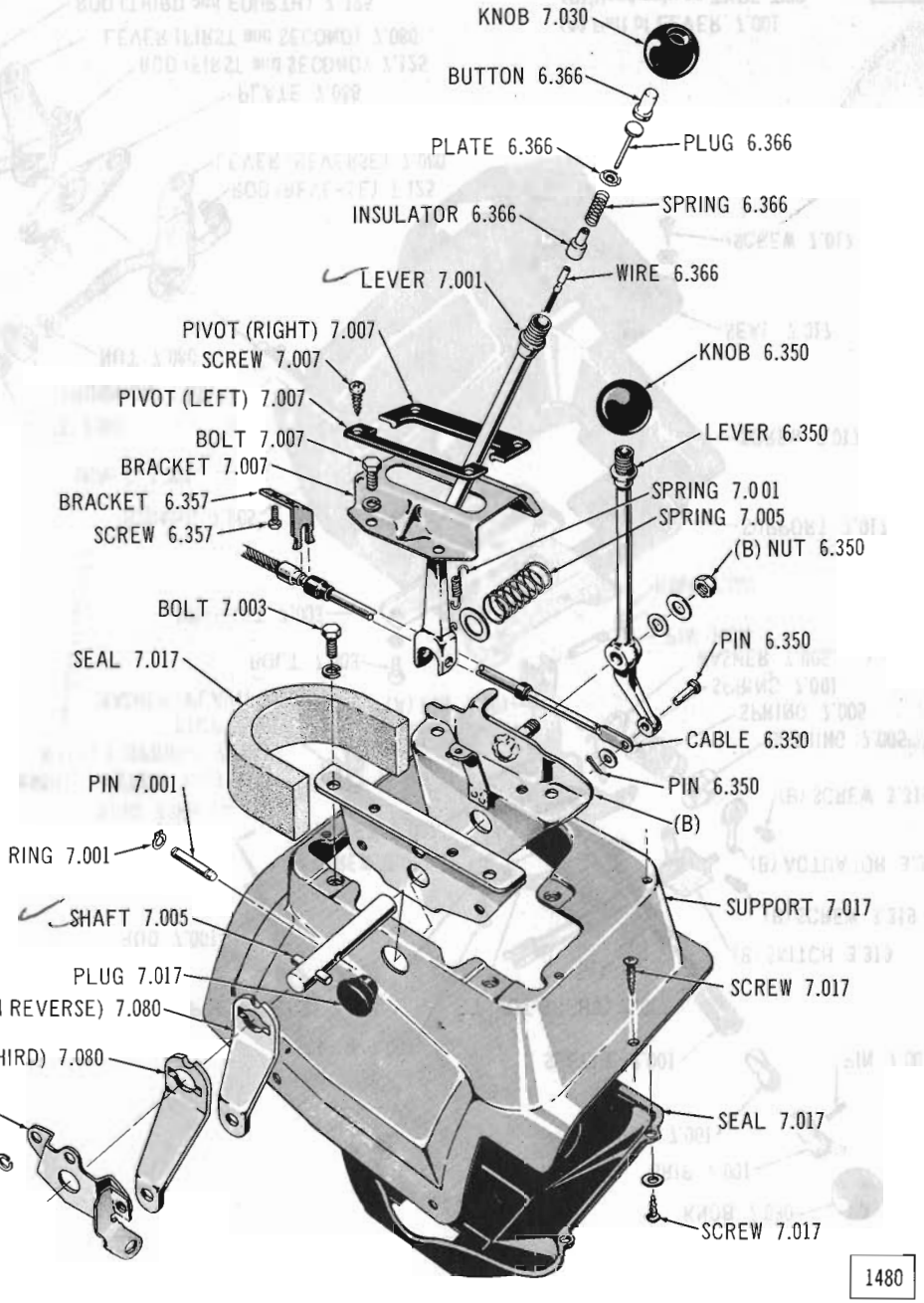

(A) Part of BEZEL ASSY. 7.014
(B) Part of BRACKET ASSY. 7.003

1480

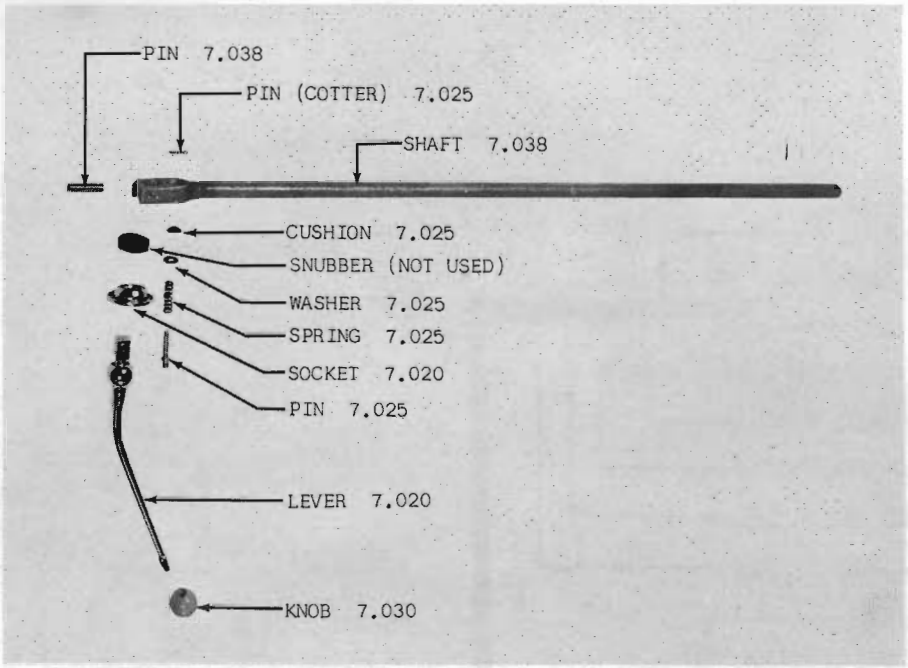

COLUMN GEAR SHIFT LINKAGE (Upper) 60 01 (WST)(WOD)

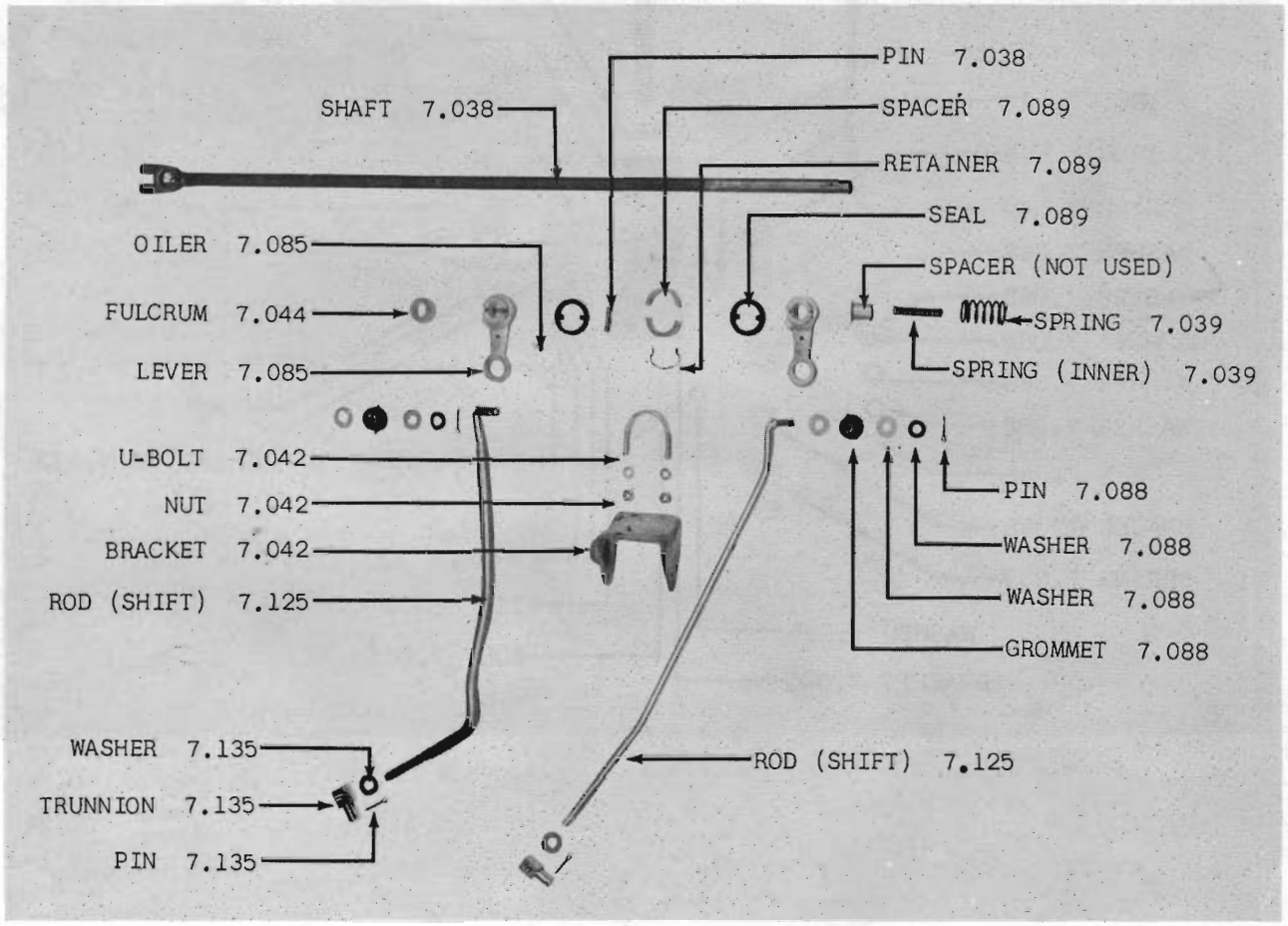

COLUMN GEAR SHIFT LINKAGE (Lower) 60 01 (WST)(WOD)

Copyright 1963 American Motors Corp.

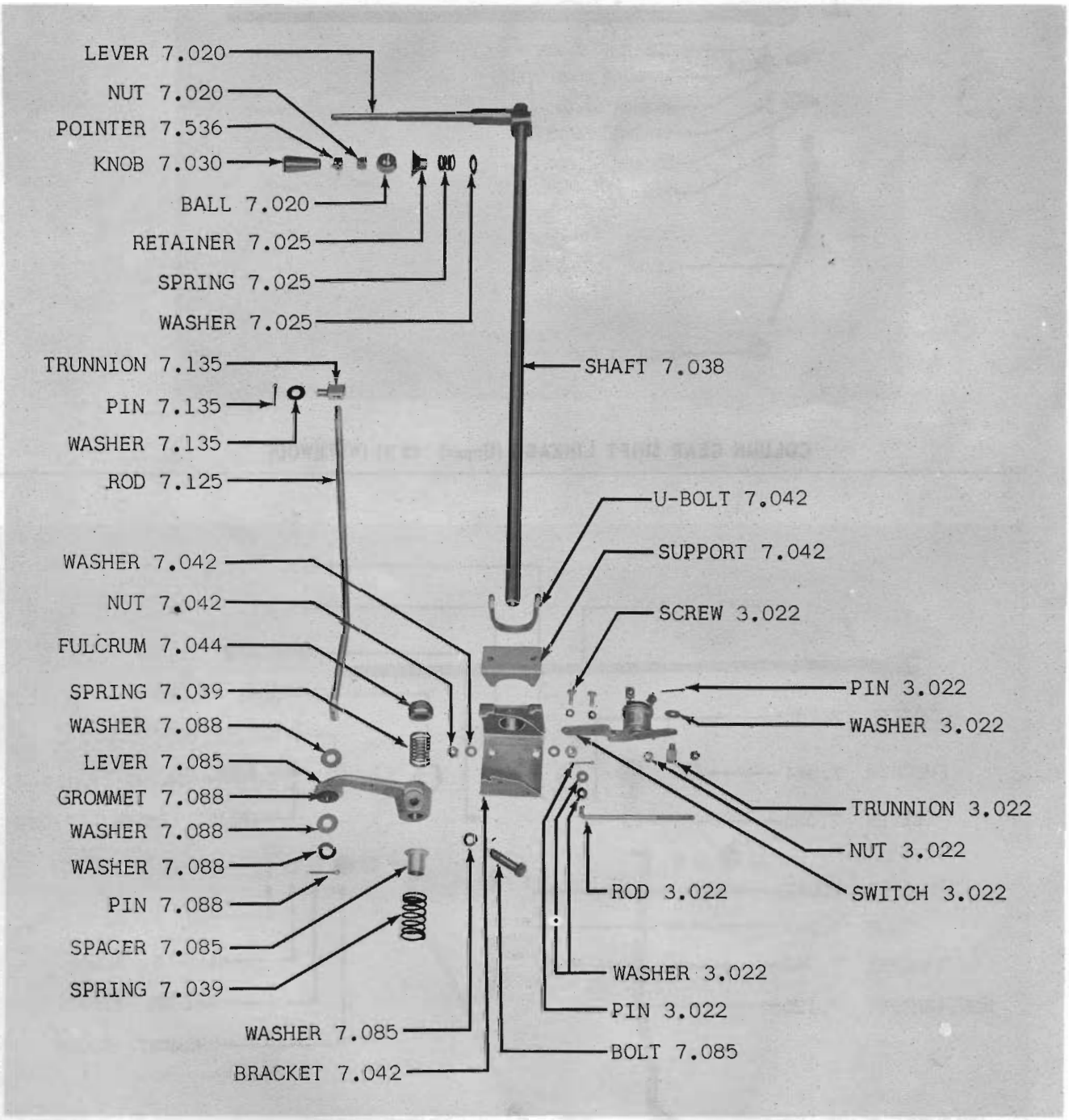

COLUMN GEAR SHIFT LINKAGE 60 01 (WAT)

Copyright 1963 American Motors Corp.

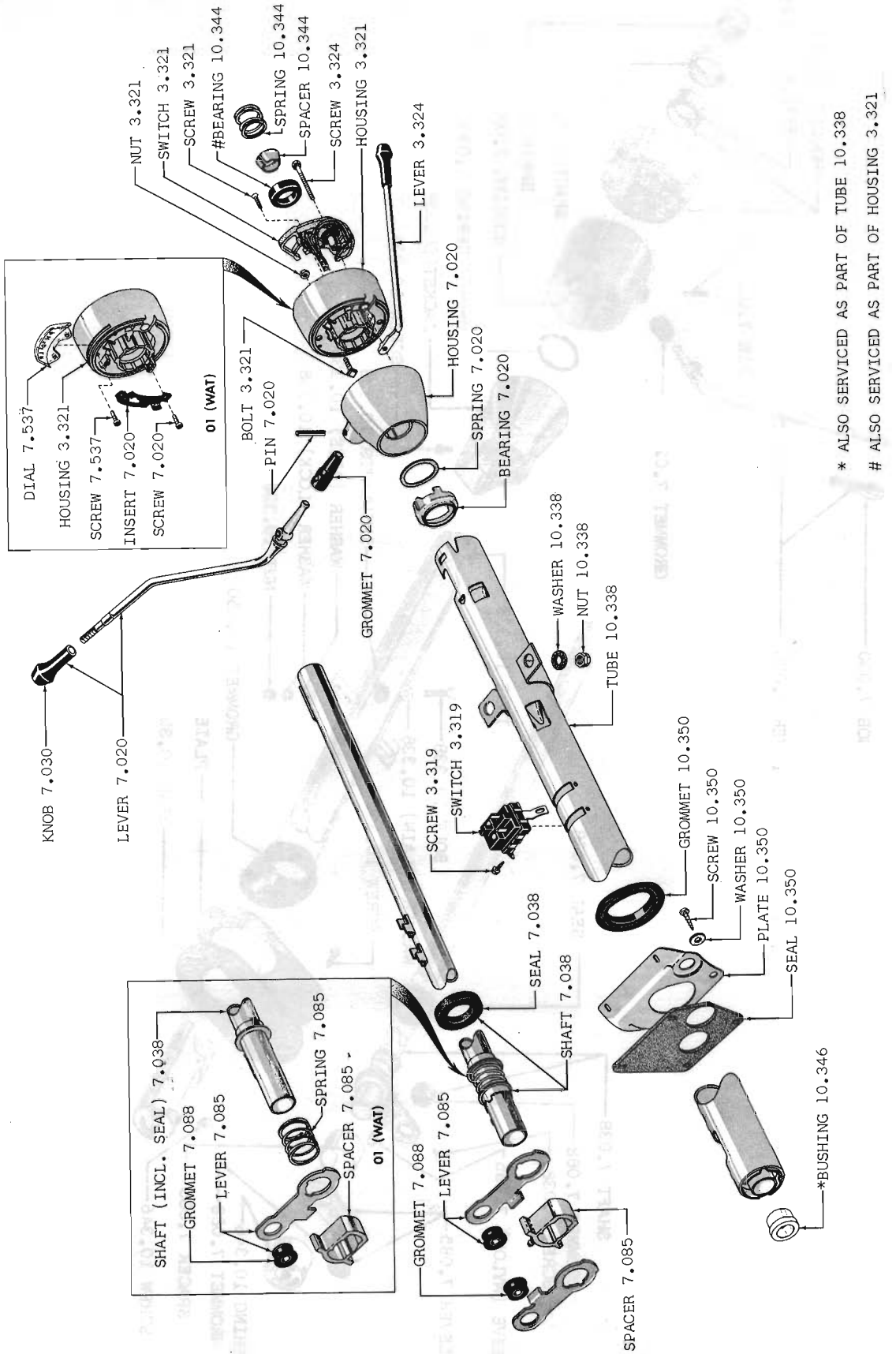

COLUMN GEAR SHIFT SHAFT AND STEERING TUBE 61 thru 63 01

Copyright 1963 American Motors Corp.

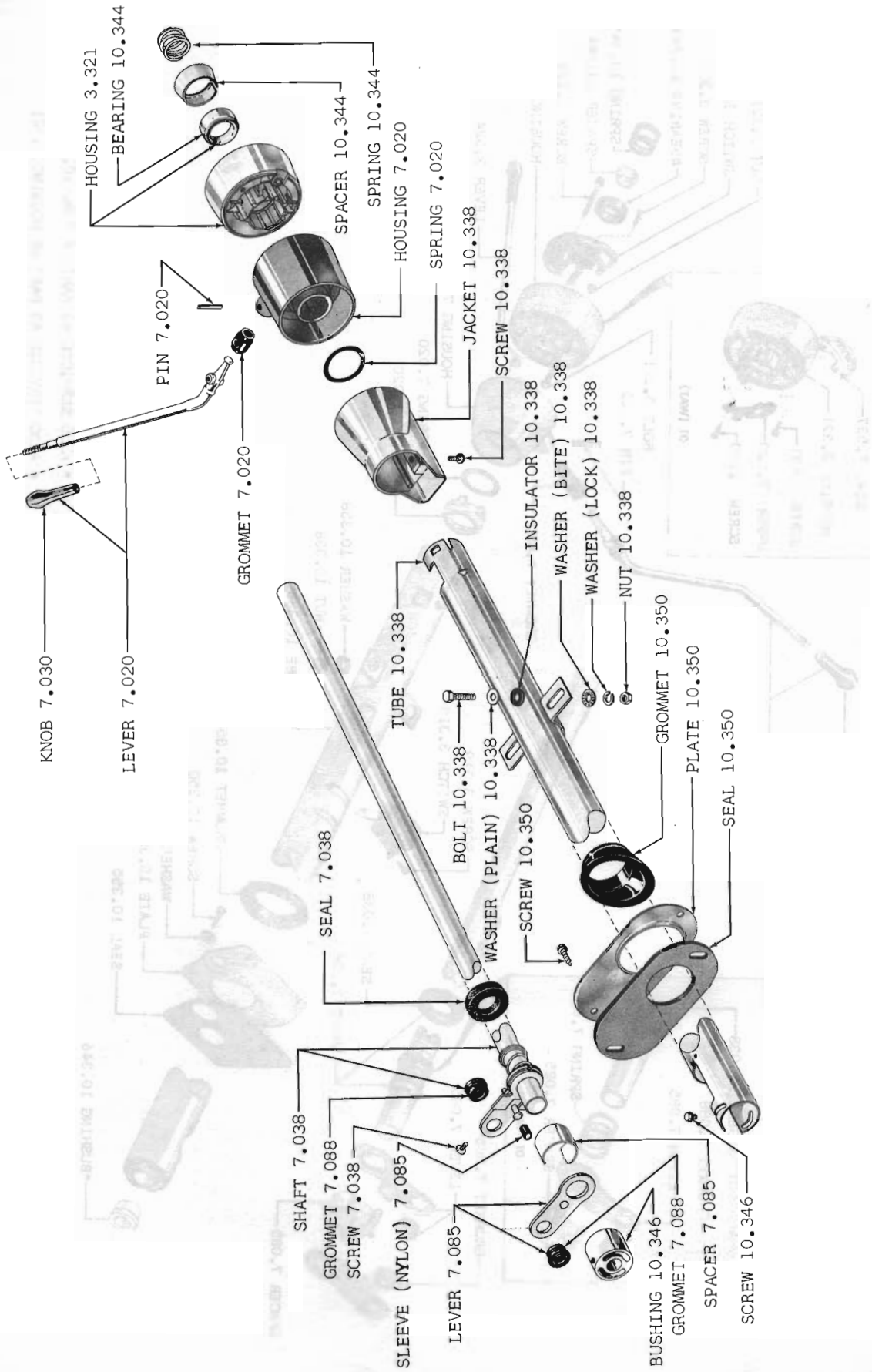

COLUMN GEAR SHIFT SHAFT AND STEERING TUBE 60 thru 62 10-80 (WST)(WOD)

Copyright 1963 American Motors Corp.

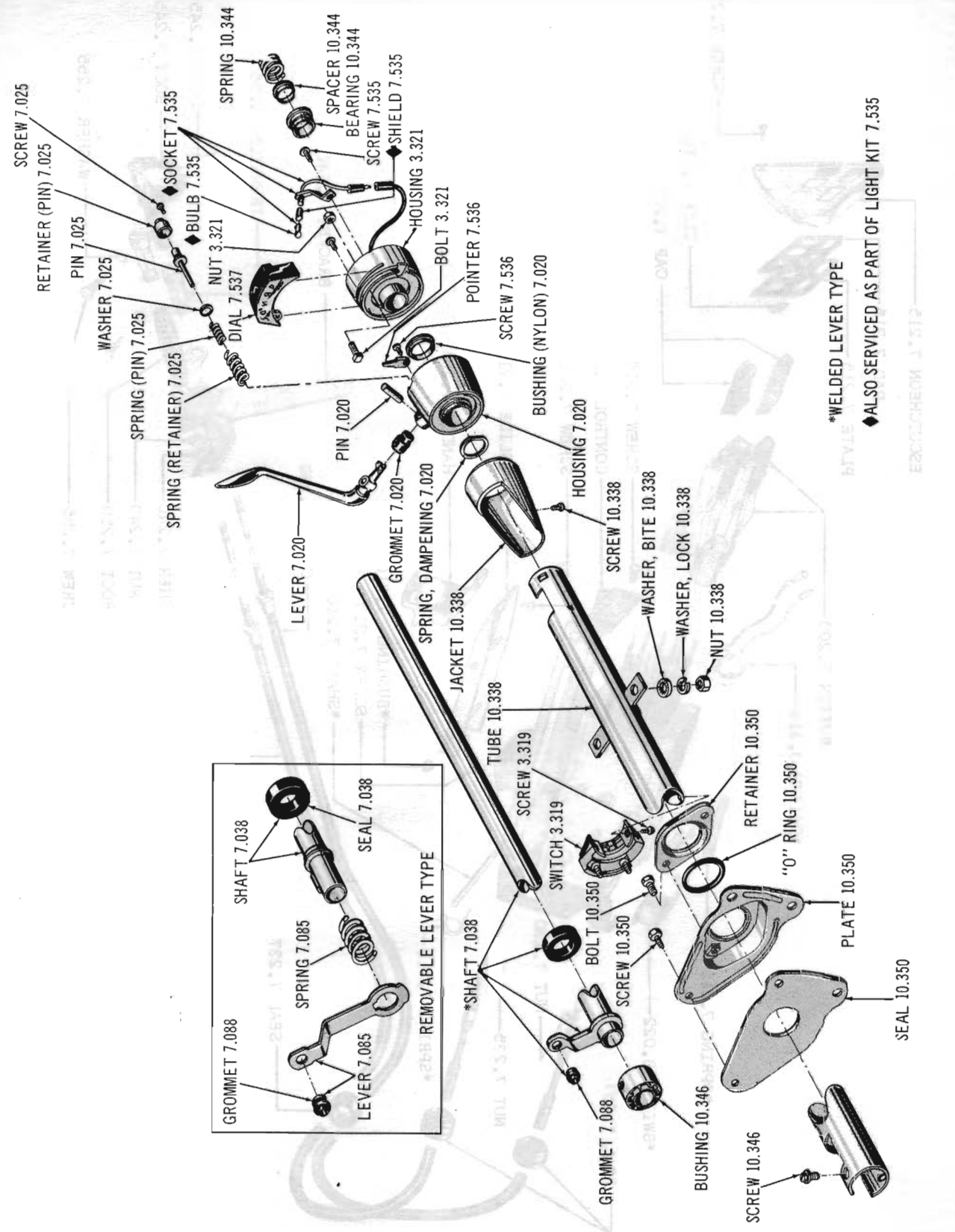

COLUMN GEAR SHIFT SHAFT AND STEERING TUBE 63 10-80 (WAT)

Copyright 1963 American Motors Corp.

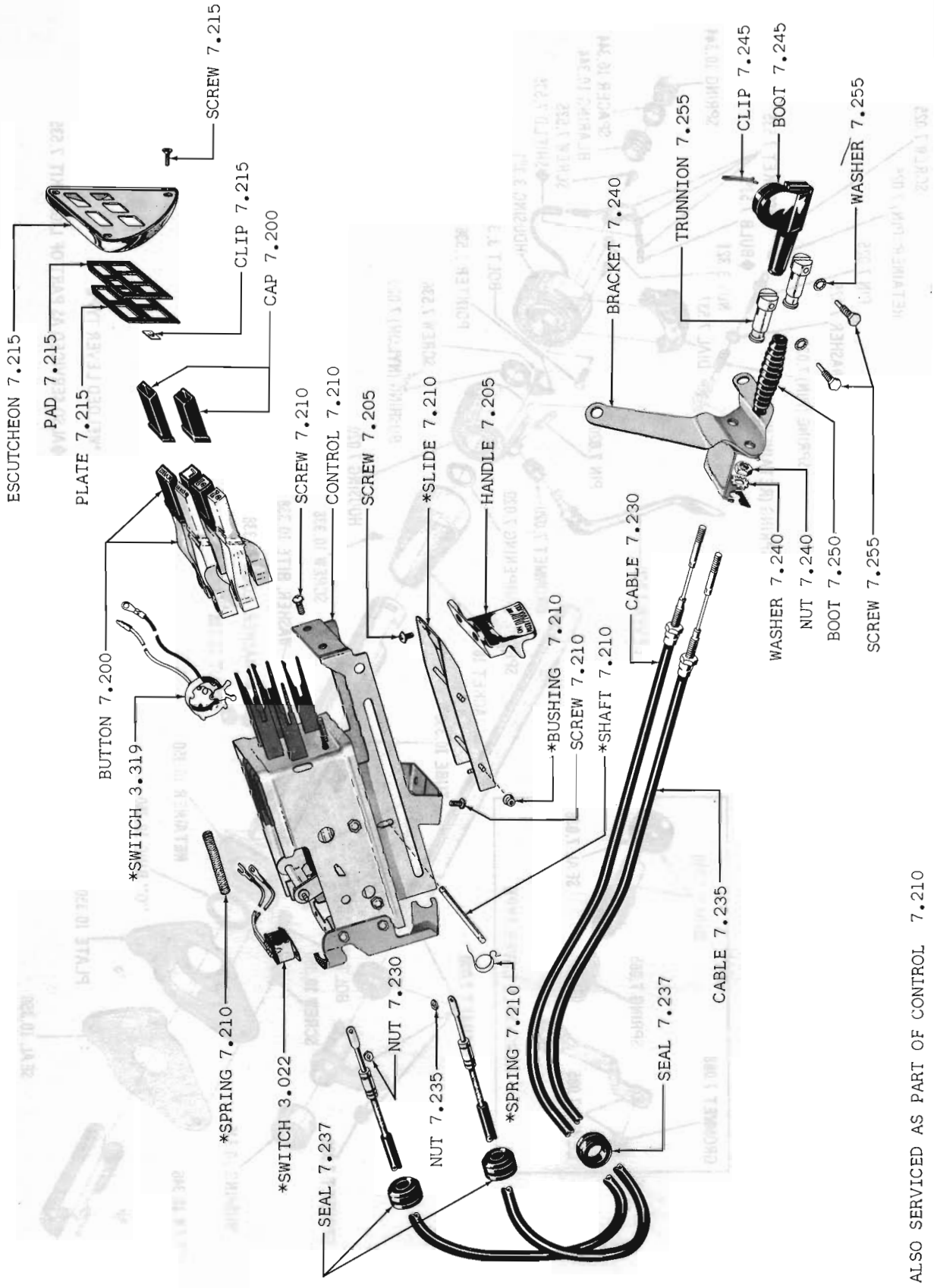

* ALSO SERVICED AS PART OF CONTROL 7.210

PUSH BUTTON SHIFTING 60 thru 62 10-80 (WAT)

Copyright 1963 American Motors Corp.

GROUP NO. — DESCRIPTION — YEAR and MODEL	PRIMARY GROUP NO.	PER CAR	PART NO.	CODE
7.001 LEVER, Gear Shift				
63 01-80 (WFGS): 63 10 (LHD-WFGS)	.....	1	316 7297	
64-65 01-10-80 (WOD-WFGS)	.....	1	317 2586	
64-65 10-80 (WAT-WFGS)	.....	1	317 2606	
(Upper) ***63 10 (Six-RHD-WFGS)***	.....	1	316 8277	
ATTACHING PARTS				
Lever To Pivot Shaft				
PIN ..... 63 Thru 65 01-80 (WFGS): 63 Thru 65 10 (LHD-Six-WFGS) ***(Replaces 316 7256, 320 4565)***	.....	1	320 4594	
RING, Snap ..... 63 Thru 65 01-10-80 (WFGS-7/32" I. D.)	.....	2	317 1582	
PIN, Gear Shift Lever Return Spring				
65 01-10-80 (WOD-WFGS)	.....	1	316 7269	#
SPRING, Gear Shift Lever Anti-Rattle				
65 01 (OHVC-232-WAT-WFGS): 64-65 10-80 (WAT-WFGS)	.....	1	317 2603	
LEVER ASSEMBLY, Gear Shift				
(Lower) ***63 10 (RHD-WFGS)*** ..(Incl. Fulcrum Ball And Pin)	.....	1	316 9061	
BALL, Gear Shift Lower Lever Fulcrum				
63 10 (RHD-WFGS)	.....	1	320 4260	
ATTACHING PARTS				
Fulcrum Ball To Lever				
PIN ..... ***63 10 (RHD-WFGS)***	.....	1	320 4261	
SPRING, Gear Shift Lower Lever				
63 10 (RHD-WFGS)	.....	1	316 9073	
SPRING, Gear Shift Lever Return				
63 Thru 65 01 (WOD-WFGS): 63 Thru 65 10 (Six-LHD-WOD-WFGS): 63 Thru 65 10-80 (V8-WOD-WFGS)	.....	1	316 7255	#
7.002 HOUSING, Transmission Gear Shift				
63 10 (RHD-WFGS)	.....	1	316 9058	
ATTACHING PARTS				
Housing To Transmission				
BOLT, Hexagon ..... ***63 10 (RHD-WFGS)***	17.038	4	G179823	NA
WASHER, Lock ..... ***63 10 (RHD-WFGS)***	17.820	4	G108579	NA
SPACER, Gear Shift Housing To Transmission				
63 10 (RHD-WFGS-WOD)	.....	1	316 9062	
GASKET, Gear Shift Housing To Transmission				
63 10 (RHD-WFGS-WST-1 Req.): 63 10 (RHD-WFGS-WOD-2 Req.)	.....	AR	317 2103	

Copyright 1963 American Motors Corp.

GROUP NO. — DESCRIPTION — YEAR and MODEL	PRIMARY GROUP NO.	PER CAR	PART NO.	CODE
CAP, Gear Shift Rail (In Housing)				
63 10 (RHD-WFGS)	.....	2	316 9066	
7.003 BRACKET, Gear Shift Lever Mounting				
63 Thru 65 01-10-80 (WOD-WFGS) ***(Replaces 316 7273)***	.....	1	320 4441	
65 01 (OHV-232-WAT-WFGS): 64-65 10-80 (WAT-WFGS)	.....	1	317 2986	
ATTACHING PARTS Bracket To Support				
BOLT, Hexagon ..... 63 Thru 65 01-10-80 (WFGS)	17.038	4	G180020	NA
WASHER, Lock ..... 63 Thru 65 01-10-80 (WFGS)	17.820	4	G120380	NA
7.005 SHAFT, Gear Shift Lever Pivot				
63 Thru 65 01-10-80 (WOD-WFGS)...(Incl. Pin)	.....	1	316 7263	
65 01 (OHV-232-WAT-WFGS): 64-65 10-80 (WAT-WFGS)	.....	1	317 3332	
SPRING, Gear Shift Lever Pivot Shaft Compression				
63 Thru 65 01-10-80 (WOD-WFGS)	.....	1	316 7257	
(Inner) 65 01 (OHVC-232-WAT-WFGS): 64-65 10-80 (WAT-WFGS)	.....	1	317 2605	
(Outer) 65 01 (OHVC-232-WAT-WFGS): 64-65 10-80 (WAT-WFGS)	.....	1	317 2983	
WASHER, Gear Shift Lever Pivot Shaft Compression Spring				
63 Thru 65 01-10-80 (WAT-WFGS)(WOD-WFGS) ***(Replaces 800 0264)***	17.814	1	400 1151	
WASHER, Gear Shift Lever Pivot Shaft Spring				
63 Thru 65 01-10-80 (WOD-WFGS)	.....	1	316 7594	
65 01 (OHVC-232-WAT-WFGS): 64-65 10-80 (WAT-WFGS)	.....	1	400 0879	
PIN, Gear Shift Lever Pivot Shaft				
64-65 10-80 (V8-WOD-WFGS-1'' Long)	7.080	1	316 7264	
7.007 PIVOT, Gear Shift Lever				
(Left) 63 Thru 65 01-10-80 (WFGS)	.....	1	316 7286	
(Right) 63 Thru 65 01-10-80 (WFGS)	.....	1	316 7287	
ATTACHING PARTS Pivot To Pivot Bracket				
SCREW, Tapping..... 63 Thru 65 01-10-80 (WFGS)	17.660	4	G161895	NA
BRACKET, Gear Shift Lever Pivot				
63 Thru 65 01-10-80 (WOD-WFGS)	.....	1	316 7271	
65 01 (OHVC-232-WAT-WFGS): 64-65 10-80 (WAT-WFGS)	.....	1	317 2610	
ATTACHING PARTS Bracket To Gear Shift Lever Mounting Bracket				
BOLT, Hexagon ..... 63 Thru 65 01-10-80 (WOD-WFGS)	17.038	4	G180018	NA
BOLT, Hexagon ..... 65 01 (OHVC-232-WAT-WFGS): 64-65 10-80 (WAT-WFGS)	17.038	2	G180016	NA
WASHER, Lock ..... 63 Thru 65 01-10-80 (WFGS)	17.820	AR	G120380	NA

Copyright 1963 American Motors Corp.

GROUP NO. — DESCRIPTION — YEAR and MODEL	PRIMARY GROUP NO.	PER CAR	PART NO.	CODE
7.011 BOOT, Gear Shift Lever				
63 10 (Six-RHD-WFGS)	.....	1	316 8265	
RETAINER, Gear Shift Lever Boot				
63 10 (Six-RHD-WFGS)	.....	1	316 8177	
ATTACHING PARTS Retainer To Floor Pan				
SCREW, Tapping..... *63-64 10 (Six-RHD-WFGS) .....(Replaces 800 0095)*	17.671	8	G456766	
SEAL, Gear Shift Lever Boot To Floor Pan				
63 10 (Six-RHD-WFGS)	.....	1	317 0512	
7.013 COVER, Gear Shift Lever				
63 01-10-80 (WFGS) *(Replaces 316 7383)*	.....	1	316 9223	
64-65 01-10-80 (WOD-WFGS)	.....	1	317 2582	
65 01 (OHVC-232-WAT-WFGS): 64-65 10-80 (WAT-WFGS)	.....	1	317 2596	
7.014 BEZEL, Gear Shift Lever				
63 01-10-80 (WOD-WFGS)...(Incl. O.D. Signal Lens) *(Replaces 316 7300)*	.....	1	317 0529	
64-65 01-10-80 (WOD-WFGS)...(Incl. O.D. Signal Lens)	.....	1	350 9561	
65 01 (OHVC-232-WAT-WFGS): 64-65 10-80 (WAT-WFGS)	.....	1	350 9563	
ATTACHING PARTS Bezel To Console				
SCREW, Tapping..... 63 01-10-80 (WFGS)	17.655	2	G168593	NA
NUT, Spring "U" Shape. 63 01-10-80 (WFGS)	.....	2	316 7425	
CLIP, Tubular..... 64-65 01-10-80 (WFGS-WOD)(WFGS-WAT)	27.261	2	400 0856	
7.017 SUPPORT, Gear Shift Lever Mounting Bracket (On Floor Pan)				
63 01 (WFGS)...(Incl. Clinch Nuts)	.....	1	349 0281	
64 01 (WFGS)...(Incl. Clinch Nuts)	.....	1	350 0005	
65 01 (WFGS)...(Incl. Clinch Nuts)	.....	1	317 6923	
63 10-80 (WFGS)...(Incl. Clinch Nuts) *(Replaces 316 8858)*	.....	1	349 0280	
64 10-80 (WFGS): 65 10-80 (V8-327-WOD-WFGS)...(Incl. Clinch Nuts)	.....	1	317 3343	
ATTACHING PARTS Support To Floor Pan				
SCREW, Tapping..... 63 Thru 65 01-10-80 (WFGS-1/2" Long)	17.671	6	G274773	NA
SCREW, Tapping..... 64-65 01-10-80 (WFGS-5/8" Long)	2.050	2	400 0738	
SEAL, Gear Shift Lever Mounting Bracket Support To Floor Pan				
63 Thru 65 01-10-80 (WOD-WFGS)	.....	1	316 7450	
65 01 (OHVC-232-WAT-WFGS): 64-65 10-80 (WAT-WFGS)	.....	1	317 2595	
ATTACHING PARTS Seal To Support				
SCREW, Tapping..... 63 Thru 65 01-10-80 (WOD-WFGS)	17.660	4	G163216	NA#
WASHER, Plain..... 63 Thru 65 01-10-80 (WOD-WFGS)	17.814	4	G9416128	NA#
SEAL, Gear Shift Lever Mounting Bracket Support				
63 Thru 65 01-10-80 (WOD-WFGS-Plastic Foam)	13.028	1	316 0310	

Copyright 1963 American Motors Corp.

GROUP NO. — DESCRIPTION — YEAR and MODEL	PRIMARY GROUP NO.	PER CAR	PART NO.	CODE
PLUG, Gear Shift Lever Mounting Bracket Support Hole (Rubber)				
63 Thru 65 01-10-80 (WOD-WFGS)		1	316 9687	
7.020 LEVER, Gear Shift Upper				
60 01 (WST-Note 7.020-1) (WOD-Note 7.020-1)	.....	1	315 8216	
60 01 (WST-Note 7.020-2) (WOD-Note 7.020-2)	.....	1	315 8757	
60 01 (WAT-Note 7.020-1)	.....	1	315 8217	
60 01 (WAT-Note 7.020-2)	.....	1	315 8758	
61 01 (LHD-WST) (LHD-WOD) ...(Incl. Gray Knob)	.....	1	316 0467	
61 01 (WAT) ...(Incl. Gray Knob)	.....	1	316 0727	
61 01 (RHD-WST)(RHD-WOD) ...(Incl. Gray Knob ..... ***(Use 316 2300)***	.....	1	316 1076	
61 Thru 63 01 (LHD-WST-WCGS) (LHD-WOD-WCGS) ...(Incl. Black Knob)	.....	1	316 2299	
61 Thru 63 01 (WAT) ...(Incl. Black Knob)	.....	1	316 2298	
61 Thru 63 01 (RHD-WST)(RHD-WOD) ...(Incl. Black Knob)	.....	1	316 2300	
64-65 01 (WST-WCGS)(WOD-WCGS) ...(Incl. Knob)	.....	1	317 1809	
64-65 01 (LHD-WAT) ...(Incl. Knob)	.....	1	317 1812	
64-65 01 (RHD-WAT)...(Incl. Knob)	.....	1	317 1011	
60 10-20-80 (WST) (WOD)	.....	1	315 7681	
61 10-20-80 (WST) (WOD) ...(Incl. Gray Knob)	.....	1	316 0770	
61-62 10-80 (WST) (WOD): 61 20 (WST) (WOD) ...(Incl. Black Knob)	.....	1	316 2301	
63 10-80 (WAT)...(Incl. Knob) .....***(Replaces 316 7096)***	.....	1	317 1481	
63 10-80 (WST-WCGS)(WOD-WCGS) ...(Incl. Knob)	.....	1	316 7117	
64 10-80 (WAT-WCGS-LAW): ***65 10 (RHD-WAT-WCGS)***...(Incl. Knob)	.....	1	317 2907	
64 10-80 (WST-WCGS-LAW)(WOD-WCGS-LAW): ***65 10 (RHD-WOD-WCGS) (RHD-WST-WCGS)***...(Incl. Knob)	.....	1	317 2909	
64-65 10-80 (WAT-WCGS-WAW) ...(Incl. Knob)	.....	1	317 2939	
65 10-80 (LHD-WST-WCGS-LAW)(LHD-WOD-WCGS-LAW)...(Incl. Knob)	.....	1	317 5481	
65 10-80 (LHD-WAT-WCGS-LAW)...(Incl. Knob)	.....	1	317 5479	
GROMMET, Gear Shift Upper Lever				
61 Thru 63 01 (WCGS): 60 Thru 63 10-20-80 (WCGS): 64-65 01-10-80 (LHD-WST-WCGS)(LHD-WOD-WCGS)(WAT-WCGS-LAW) ***(Replaces 315 7910)***	.....	1	316 2336	

NOTE 7.020-1: Used prior to Car Code No. 10915.

NOTE 7.020-2: Used beginning with Car Code No. 10915.

NOTE 7.020-3: Two Types of Gear Shift Lever Housings were used on the 64 01 (WAT)(LHD-WST-WCGS-LES) (LHD-WOD-WCGS-LES): They can be identified as follows:
Type 1: The Steering Gear Jacket Tube is 6 inches long from the center of the welded bracket to the center of the slot for mounting the Back-up Lamp Switch.
Type 2: The Steering Gear Jacket Tube is 3 inches long from the center of the welded bracket to the center of the slot for mounting the Back-up Lamp Switch.

NOTE 7.020-4: Two Types of Gear Shift Upper Lever Housing Bushings were used on the 63-64 01-10-80 Series. They can be identified as follows:
Type 1: The width to edge of Lip Surface is 1-11/16".
Type 2: The width to edge of Lip Serface is 1-13/16".

NOTE 7.020-5: Two Types of Gear Shift Upper Housings were used on the 65 01 (WAT)(LHD-WST-WCGS) (LHD-WOD-WCGS): They can be identified as follows:
Type 1: The Vendors Part Numbers 43492 or 43490 appear in casting in inside of Housing.
Type 2: The Vendors Part Numbers CB-710 or CB-712 appear in casting in inside of Housing.

NOTE 7.020-6: Two Types of Gear Shift Upper Lever Housings were used on the 64 10-80 (LHD-WAT-WCGS-LAW). They can be identified as follows:
Type 1: The Vendor Part Number CB-701 appears on the casting inside the Housing.
Type 2: The Vendor Part Number 43080A appears on the casting inside the Housing.

Copyright 1963 American Motors Corp.

GROUP NO. — DESCRIPTION — YEAR and MODEL	PRIMARY GROUP NO.	PER CAR	PART NO.	CODE
CUSHION, Gear Shift Upper Lever Anti-Rattle				
63 10-80 (WST-WCGS)(WOD-WCGS)	.....	1	316 7339	
PIN, Gear Shift Upper Lever Pivot				
61 Thru 65 01 (WCGS): 60 Thru 65 10-20-80 (WCGS-LAW)	.....	1	315 7685	
64-65 10-80 (WAT-WCGS-WAW)	.....	1	317 2934	
BALL, Gear Shift Upper Lever				
60 01 (Note 7.020-1)	.....	1	315 8215	
60 01 (Note 7.020-2)	.....	1	315 8759	
RING, Gear Shift Upper Lever Ball Retaining				
60 01 (Note 7.020-2)	.....	1	315 8724	
SPACER, Gear Shift Upper Lever				
64-65 10-80 (WAT-WCGS-WAW)	.....	1	317 2935	
BRACKET, Gear Shift Upper Lever				
60 01...(Incl. Trim Ring)	.....	1	437 6769	
RING, Gear Shift Upper Lever Bracket Trim				
60 01 ...*(Replaces 340 0589)*	.....	1	435 5155	
HOUSING, Gear Shift Upper Lever				
61 Thru 63 01 (WAT)	.....	1	320 2640	
61 Thru 63 01 (WST-WCGS)(WOD-WCGS)	.....	1	320 2637	
64 01 (WAT-Note 7.020-3 Type 1): 65 01 (WAT-Note 7.020-5 Type 1)	.....	1	320 4898	
64 01 (WAT-Note 7.020-3 Type 2): 65 01 (WAT-Note 7.020-5 Type 2)	.....	1	320 4973	
64 01 (WST-WCGS-Note 7.020-3 Type 1)(WOD-WCGS-Note 7.020-3 Type 1): 65 01 (WST-WCGS-Note 7.020-5 Type 1)(WOD-WCGS-Note 7.020-5 Type 1)	.....	1	320 4712	
64 01 (LHD-WST-WCGS-Note 7.020-3 Type 2)(LHD-WOD-WCGS-Note 7.020-3 Type 2): 65 01 (LHD-WST-WCGS-Note 7.020-5 Type 2)(LHD-WOD-WCGS-Note 7.020-5 Type 2)	.....	1	320 4908	
60 Thru 62 10-20-80 (WST)(WOD)(LHD-WOD-WCGS-Note 7.020-3 Type 1)	.....	1	320 1939	
63 10-80 (LHD-WST-WCGS)(LHD-WOD-WCGS): 64 10-80 (WST-WCGS)(WOD-WCGS) *(Replaces 320 4016)*	.....	1	320 5228	
63 10-80 (LHD-WAT-WCGS-LAW-Note 7.038-5 Types 1 And 3)	.....	1	320 4014	
63 10-80 (LHD-WAT-WCGS-LAW-Note 7.038-5 Type 2): 64 10-80 (LHD-WAT-WCGS-LAW-Note 7.020-6 Type 1)	.....	1	320 5438	
64 10-80 (LHD-WAT-WCGS-LAW-Note 7.020-6 Type 2)	.....	1	320 5229	
64-65 10-80 (WAT-WCGS-WAW)	.....	1	320 5133	
65 10-80 (WST-WCGS-LAW)(WOD-WCGS-LAW)	.....	1	317 5525	
65 10-80 (WAT-WCGS-LAW)	.....	1	317 5526	
65 10 (RHD-WAT-WCGS)	.....	1	320 4014	#
65 10 (RHD-Six-232-WST-WCGS)(RHD-Six-232-WOD-WCGS)	.....	1	320 5228	#
BEARING, Gear Shift Upper Lever Housing				
60 Thru 62 01: 63 01 (LHD-WAT)(WST-WES)(WOD-WES)***(RHD-WST)(RHD-WOD):*** 64 01 (WAT-Note 7.020-3 Type 1)(WST-WCGS-Note 7.020-3 Type 1)(WOD-WCGS-Note 7.020-3 Type 1): 65 01-10-80 (WAT-WCGS): 60-61 10-20-80 (LHD-WST-Note 7.038-1 Type 1): 62 10-80 (LHD-WST-Note 7.038-3 Type 2)(LHD-WOD-Note 7.038-3 Type 2): 63-64 10-80 (WST-WCGS-Note 7.038-1 Type 2): 63-64 10-80 (LHD-WAT-WCGS-Notes 7.038-5 Type 2 And 7.125-4 Type 2) *(Replaces 320 2776)*	.....	1	317 5539	
65 10 (RHD-Six-232-WST-WCGS)(RHD-Six-232-WOD-WCGS)	.....	1	317 5539	#

Copyright 1963 American Motors Corp.

GROUP NO. — DESCRIPTION — YEAR and MODEL	PRIMARY GROUP NO.	PER CAR	PART NO.	CODE
BUSHING, Gear Shift Upper Lever Housing (Nylon)				
63-64 01-10-80 (Note 7.020-4 Type 1)	.....	1	320 4311	
63-64 01-10-80 (Note 7.020-4 Type 2): ***165 01 (Can-Note 7.125-6)***	.....	1	320 5403	
65 01-10-80 (WCGS): ***165 01 (Can-Note 7.125-7)***	.....	1	317 5546	
65 10 (RHD-WAT-WCGS)(RHD-Six-232-WST-WCGS)(RHD-Six-232-WOD-WCGS)	.....	1	320 5403	#
COVER, Gear Shift Upper Lever Housing				
64-65 10-80 (WAT-WCGS-WAW)	.....	1	320 5042	
PLATE, Gear Shift Upper Lever Housing Lock				
64-65 10-80 (WAT-WCGS-WAW)	.....	1	320 5043	
WASHER, Gear Shift Upper Lever Housing (Wave)				
64-65 10-80 (WAT-WCGS-WAW)	.....	1	320 5146	
WASHER, Gear Shift Upper Lever Housing (Thrust)				
64-65 10-80 (WAT-WCGS-WAW)	.....	1	320 5145	
ATTACHING PARTS				
Cover To Gear Shift Upper Lever Housing				
SCREW, Tapping..... 64 10-80 (WAT-WCGS-WAW)	.....	2	320 5045	
INSERT, Gear Shift Upper Lever Positioning				
61 01 (WAT): 60-61 10-20-80	.....	1	320 2779	
62-63 01 (WAT): 63-64 10-80 (WAT-Notes 7.038-5 Type 2 And 3 And 7.125-4 Type 1)	.....	1	320 3502	
64-65 01 (WAT-WCGS-Note 7.020-3 Type 1): 64 10 (LHD-OHV-196-WAT-LAW-Notes 7.038-5 Types 2 And 7.125-4 Type 2)	.....	1	320 4902	
64-65 01 (WAT-Note 7.020-3 Type 2)	.....	1	320 4909	
63-64 10-80 (WAT-Note 7.038-5 Type 1)	.....	1	320 4911	
65 10-80 (WAT-LAW)	.....	1	317 5527	
65 10 (RHD-WAT-WCGS)	.....	1	320 4902	#
ATTACHING PARTS				
Insert To Directional Signal Switch Housing				
SCREW, Tapping..... 61 Thru 65 01 (WAT-WCGS): 63-64 10-80 (WAT-WCGS): ***65 10 (RHD-WAT-WCGS)***	.....	2	320 2780	#
SPRING, Gear Shift Upper Lever Housing Vibration Dampening				
61 01: 60-61 10-20-80 (WST)(WOD)	.....	1	320 1953	
62 01: 63 01 (LHD-WAT)(WST-WES)(WOD-WES)***(RHD-WST)(RHD-WOD):*** 64 01 (WCGS): 63-64 10-80 (WST-WCGS)(WOD-WCGS): 62 10-80 (WST)(WOD): 63 10-80 (LHD-WAT-Note 7.038-5 Type 2)***(Replaces 320 3505)***	.....	1	320 3677	
64-65 01 (RHD-WST-WCGS)(RHD-WOD-WCGS): 64 10 (RHD-OHV-196-WST-WCGS) (RHD-OHV-196-WOD-WCGS): 64 10 (LHD-OHV-196-WAT-LAW-Notes 7.038-5 Type 3 And 7.125-4 Type 2)	.....	1	320 5206	
65 01 (WCGS): 65 10-80 (WCGS-LAW)	.....	1	317 5545	
RING, Gear Shift Upper Lever Housing "O"				
60-61 01: 60 10-20-80	16.060	1	315 3486	
62 01 (LHD-WST-LES)***(RHD-WST)(RHD-WOD): 63 01 (RHD-WST)(RHD-WOD):*** 62 10-80 (LHD-WST)(LHD-WOD): 63-64 10 (LHD-WST-LES-WCGS-Note 7.038-1 Type 2)(LHD-WOD-LES-WCGS-Note 7.038-1 Type 2): 63-64 80 (WST-WCGS)(WOD-WCGS)	.....	1	320 3257	

Copyright 1963 American Motors Corp.

GROUP NO. — DESCRIPTION — YEAR and MODEL	PRIMARY GROUP NO.	PER CAR	PART NO.	CODE
SHIM, Gear Shift Upper Lever Housing				
(.005) 61 01: 60-61 10-20-80 (WST)(WOD)	.....	1	320 2742	
(.020) 61 01: 60-61 10-20-80 (WST)(WOD)	.....	1	320 2743	
7.025 PIN, Gear Shift Upper Lever Pressure				
64 01 (WAT-Note 7.020-3 Type 1): 65 01 (WAT-WCGS-Note 7.020-5 Type 1): 63-64 10-80 (WAT-WCGS): 65 10-80 (WAT-WCGS-LAW). ***(Replaces 320 4062)***	.....	1	317 5529	
64 01 (WAT-Note 7.020-3 Type 2): 65 01 (WAT-Note 7.020-5 Type 2)	.....	1	320 4907	
RETAINER, Gear Shift Upper Lever Pressure Pin				
64-65 01 (WAT-WCGS): 63-64 10-80 (WAT-WCGS): ***65 10 (RHD-WAT-WCGS)***	.....	1	320 4064	#
65 10-80 (WAT-WCGS-LAW)	.....	1	317 5530	
ATTACHING PARTS Retainer To Gear Shift Lever Housing				
SCREW, Tapping..... 64-65 01 (WAT-WCGS): 63 Thru 65 10-80 (WAT-WCGS)	17.660	2	G166985	NA
SPRING, Gear Shift Upper Lever Pressure Pin Retainer				
64 01 (WAT-Note 7.020-3 Type 1): 65 01 (WAT-Note 7.020-5 Type 1): 63-64 10-80 (WAT-WCGS)	.....	1	320 4060	
64 01 (WAT-Note 7.020-3 Type 2): 65 01 (WAT-Note 7.020-5 Type 2)	.....	1	320 4905	
65 10-80 (WAT-WCGS-LAW)	.....	1	317 5477	
65 10 (RHD-WAT-WCGS)	.....	1	320 4060	#
SPRING, Gear Shift Upper Lever Pressure Pin				
64 01 (WAT-Note 7.020-3 Type 2): 65 01 (WAT-Note 7.020-5 Type 2)	.....	1	320 4906	
63-64 10-80 (WAT-WFGS)	.....	1	320 4060	
63-64 10-80 (WAT-WCGS-LAW): 64 01 (WAT-Note 7.020-3 Type 1): 65 01 (WAT-WCGS-Note 7.020-5 Type 2) ***(Replaces 320 4532)(Use 317 9338)***	.....	1	317 5478	
65 10-80 (WAT-WCGS-LAW)	.....	1	317 9338	
SPRING, Gear Shift Upper Lever				
64-65 10-80 (WAT-WCGS-WAW)	.....	1	317 2979	
WASHER, Gear Shift Upper Lever Pressure Pin Retainer Spring				
64-65 01 (WAT-WCGS): 63-64 10-80 (WAT-WCGS): 65 10-80 (WAT-WCGS-LAW) ***(Replaces 320 4063)***	.....	1	317 5531	
7.030 KNOB, Gear Shift Lever				
60 01	.....	1	315 5840	
60 10-20-80 (WST)(WOD)	.....	1	315 7682	
61 01 (Gray): 61 10-20-80 (WST-Gray)(WOD-Gray)	.....	1	316 0769	
61-62 01 (Black): 63 01 (WST-WCGS)(WOD-WCGS): 61 Thru 63 10-20-80 (Black-WST-WCGS)(Black-WOD-WCGS) ***(Replaces 316 2297)***	.....	1	316 7116	
64-65 01 (WCGS)	.....	1	317 1810	
65 01 (OHV-232-WAT-WFGS): 64-65 10-80 (WAT-WFGS)	.....	1	317 2747	
63 10 (Six-RHD-WFGS)	.....	1	316 8821	
63 Thru 65 01 (WOD-WFGS): 63-64 80 (WOD-WFGS): 63-64 (LHD-WOD-WFGS)	.....	1	316 7307	
64-65 10-80 (WCGS)	.....	1	317 2906	
65 10-80 (WOD-WFGS)	.....	1	317 6478	

Copyright 1963 American Motors Corp.

GROUP NO. — DESCRIPTION — YEAR and MODEL	PRIMARY GROUP NO.	PER CAR	PART NO.	CODE
7.038 SHAFT, Gear Shift Operating				
60 01 (WST)(WOD)	.....	1	315 6384	
60 01 (WAT)	.....	1	315 6401	
61 01 (LHD-WST)(LHD-WOD)...(Incl. Seal)	.....	1	320 2999	
61 01 (LHD-WAT)...(Incl. Seal) ***(Replaces 320 2695)***	.....	1	320 3000	
61-62 01 (RHD)...(Incl. Seal)	.....	1	320 2696	
62 01 (LHD-WST-LES)(LHD-WOD-LES)...(Incl. Seal)	.....	1	320 3133	
62-63 01 (WST-WES)(WOD-WES)...(Incl. Seal)	.....	1	320 3504	~
62-63 01 (WAT)...(Incl. Seal)	.....	1	320 3501	

NOTE 7.038-1: Two Types of Gear Shift Operating Shafts were installed on 60 10-20-80 (WST)(WOD): 61 10-20-80 (LHD-WST)(LHD-WOD) and 63-64 10 (LHD-WST-LES-WCGS)(LHD-WOD-LES-WCGS) They can be identified as follows:

Type 1; The Low and Reverse Shift Lever is removable from Gear Shift Operating Shaft and the Second and High Shift Lever is brazed to the Shaft.

Type 2: The Low and Reverse and the Second and High Shift Levers are removable from the Gear Shift Operating Shaft.

NOTE 7.038-2: Two Types of Gear Shift Operating Shafts were used on the 61 01 (LHD). They can be identified as follows:

Type 1: The Slot on the Steering Jacket Tube for mounting the Back-Up Light and Neutral Safety Switch is located 5-1/8" from the Steering Gear Jacket Tube Mounting Bracket.

Type 2: The Slot on the Steering Jacket Tube for mounting the Back-Up Light and Neutral Safety Switch is located 6-5/8" from the Steering Gear Jacket Tube Mounting Bracket.

NOTE 7.038-3: Four Types of Gear Shift Operating Shafts were installed on the 62 10-80 (LHD-WST)(LHD-WOD). They are identified as follows:

Type 1: The Low and Reverse Shift Lever is removable from Gear Shift Operating Shaft and the Second and High Shift Lever is brazed to the Shaft. The Jacket Tube is 21-3/16" long from center of Welded Bracket to bottom of Tube.

Type 2: The Low and Reverse and the Second and High Shift Levers are removable from the Gear Shift Operating Shaft. The Jacket Tube is 21-3/4" long from Center of welded Bracket to bottom of Tube.

Type 3: The Low and Reverse Shift Lever is removable from Gear Shift Operating Shaft and the Second and High Shift Lever is brazed to the Shaft. The Jacket Tube is 20-13/16" long from center of welded Bracket to bottom of Tube.

Type 4: The Low and Reverse and the Second and High Levers are removable from the Gear Shift Operating Shaft. The Jacket Tube is 21-1/8" long from center of welded Bracket to bottom of Tube.

NOTE 7.038-4: Two Types of Gear Shift Operating Shafts were installed on 62 10 (RHD-WST)(RHD-WOD). They are identified as follows:

Type 1: The Jacket Tube is 21-3/16" long from center of welded Bracket to bottom of Tube.

Type 2: The Jacket Tube is 20-13/16" long from center of welded Bracket to bottom of Tube.

NOTE 7.038-5: Three Types of Gear Shift Operating Shafts were installed on 63-64 10-80 (WAT). They are identified as follows:

Type 1: The Gear Shift Lever is brazed to the Gear Shift Operating Shaft and is not removable and the Lever is 1-5/16" wide.

Type 2: The Gear Shift Lever is removable from the Gear Shift Operating Shaft and the Lever is 7/8" wide.

Type 3: The Gear Shift Lever is brazed to the Gear Shift Operating Shaft and is not removable and is 7/8" wide.

NOTE 7.038-6: Three Types of Steering Gear Jacket Tube were installed on 64 10 (V8-287-WST-WCGS) (V8-287-WOD-WCGS). They can be identified as follows:

Type 1: The Back-Up Light Switch Mounting Holes are located 14-3/8" from bottom of Tube.

Type 2: The Back-Up Light Switch Mounting Holes are located 15-1/2" from bottom of Tube and the Tube is 18-13/16" long from center of Welded Bracket to the bottom of Tube.

Type 3: The Back-Up Light Switch Mounting Holes are located 15-1/2" from bottom of Tube and the Tube is 18-1/2" long from center of Welded Bracket to the bottom of Tube.

NOTE 7.038-7: Two Types of Gear Shift Operating Shafts were installed on the 64 10 (RHD-OHV-196-WAT) (V8-RHD-WAT). They can be identified as follows:

Type 1: The Toeboard Support Plate has Two 5/16-24 Projection Weld Nuts and is used with an "O" Ring and an "O" Ring Retainer and Gasket.

Type 2: The Toeboard Support Plate has a Welded Clamp that is Fastened to the Jacket Tube and uses a Gasket only.

Copyright 1963 American Motors Corp.

GROUP NO. — DESCRIPTION — YEAR and MODEL	PRIMARY GROUP NO.	PER CAR	PART NO.	CODE
63 01 (LHD-WST-LES-WCGS)(LHD-WOD-LES-WCGS)...(Incl. Seal)	.....	1	320 4315	
63 01 (RHD)...(Incl. Seal)	.....	1	320 3132	
64 01 (LHD-WAT-Note 7.020-3 Type 1)...(Incl. Seal)	.....	1	320 4706	
64 01 (LHD-LES-WST-WCGS-Note 7.020-3 Type 1)(LHD-LES-WOD-WCGS-Note 7.020-3 Type 1)...(Incl. Seal): ***165 01 (Can-WST-WCGS-Note 7.125-6) (Can-WOD-WCGS)***...(Incl. Seal)	.....	1	320 4708	
64 01 (LHD-WES-WST-Note 7.020-3 Type 1)(LHD-WES-WOD-WCGS-Note 7.020-3 Type 1)...(Incl. Seal)	.....	1	320 4709	
64 01 (LHD-WST-WCGS-Note 7.020-3 Type 2)(LHD-WOD-WCGS-Note 7.020-3 Type 2)...(Incl. Seal)	.....	1	320 4710	
64 01 (LHD-WAT-Note 7.020-3 Type 2)...(Incl. Seal)	.....	1	320 4711	
64 01 (RHD-WAT-Note 7.020-3 Type 1)...(Incl. Seal)	.....	1	320 4707	
64 01 (RHD-WST-WCGS)(RHD-WOD-WCGS)...(Incl. Seal)	.....	1	320 5283	
65 01 (LHD-WST-WCGS)(LHD-WOD-WCGS)...(Incl. Seal): ***165 01 (Can-WST-WCGS-Note 7.125-7)(Can-WOD-WCGS-Note 7.125-7)***...(Incl. Seal)	.....	1	320 5793	
65 01 (LHD-WAT-WCGS)...(Incl. Seal)	.....	1	320 5794	
65 01 (RHD-WST-WCGS)(RHD-WOD-WCGS)...(Incl. Seal)	.....	1	320 6124	
65 01 (RHD-OHV-196-WAT)	.....	1	320 6125	
60 10-20-80-(Note 7.038-1 Type 2)...(Incl. Seal): 61 10-20-80 (LHD-WST-Note 7.038-1 Type 2)(LHD-WOD-Note 7.038-1 Type 2)...(Incl. Seal)	.....	1	320 2585	
60-61 10-20-80 (LHD-WST-Note 7.038-1 Type 1)(LHD-WOD-Note 7.038-1 Type 1)...(Incl. Seal): 62 10-80 (LHD-WST-Note 7.038-3 Type 1)(LHD-WOD-Note 7.038-3 Type 1)...(Incl. Seal)	.....	1	320 1933	
60-61 10 (RHD-WST)(RHD-WOD)...(Incl. Seal): ***62 10 (RHD-WST-Note 7.038-4 Type 1)(RHD-WOD-Note 7.038-1)***...(Incl. Seal)	.....	1	320 2104	
62 10-80 (LHD-WST-Note 7.038-3 Type 2)(LHD-WOD-Note 7.038-3 Type 2)...(Incl. Seal)	.....	1	320 3131	
62 10-80 (LHD-WST-Note 7.038-3 Type 3)(LHD-WOD-Note 7.038-3 Type 3)...(Incl. Seal)	.....	1	320 3743	
62 10-80 (LHD-WST-Note 7.038-3 Type 4)(LHD-WOD-Note 7.038-3 Type 4)...(Incl. Seal)	.....	1	320 3755	
62 10 (RHD-WST-Note 7.038-4 Type 2)(RHD-WOD-Note 7.038-4 Type 2)...(Incl. Seal)	.....	1	320 3744	
63 10-80 (V8-WST-WCGS)(V8-WOD-WCGS)...(Incl. Seal): 64 10 (V8-WST-WCGS-Note 7.038-6 Type 1)(V8-WOD-WCGS-Note 7.038-6 Type 1)...(Incl. Seal)	.....	1	320 4011	
63-64 10 (LHD-OHV-196-WST-LES-WCGS-Note 7.038-1 Type 1)(LHD-OHV-196-LES-WCGS-Note 7.038-1 Type 1)...(Incl. Seal)	.....	1	320 4313	
63-64 10 (LHD-OHV-196-WST-LES-WCGS-Note 7.038-1 Type 2)(LHD-OHV-196-WOD-LES-WCGS-Note 7.038-1 Type 2)...(Incl. Seal)	.....	1	320 4013	
63-64 10 (WST-WES)(WOD-WES)...(Incl. Seal)	.....	1	320 4012	
64 10 (OHVC-232-WST-LAW)(OHVC-232-WOD-LAW)***(OHV-196-WST-LAW-Heavy Duty)(OHV-196-WOD-LAW-Heavy Duty)***...(Incl. Seal)	.....	1	320 5437	
63-64 10-80 (LHD-WAT-WCGS-LAW-Notes 7.038-5 Type 1 And 7.125-4 Type 1)...(Incl. Seal)	.....	1	320 4309	
63 10-80 (LHD-WAT-Note 7.038-5 Type 2)...(Incl. Seal)	.....	1	320 4010	
63 10-80 (RHD-WAT): 64 10-80 (RHD-WAT-Notes 7.038-5 Type 3 & 7.038-7 Type 1)...(Incl. Seal) ***(Replaces 320 4340)***	.....	1	320 4522	
63-64 10-80 (LHD-WAT-WCGS-LAW-Notes 7.038-5 Type 3 And 7.125-4 Type 1)...(Incl. Seal)	.....	1	320 4531	
64 10 (LHD-OHV-196-WAT-LAW-Notes 7.038-5 Type 1 & 7.125-4 Type 2)...(Incl. Seal)	.....	1	320 5208	
64-65 10 (V8-WAT-WCGS-WAW)...(Incl. Seal): 64 80 (V8-WAT-WCGS-WAW)...(Incl. Seal)	.....	1	320 5140	
64 10 (RHD-OHV-196-WST-WCGS)(RHD-OHV-196-WOD-WCGS): 65 10 (RHD-OHV-232-WST)(RHD-OHV-232-WOD)...(Incl. Seal)	.....	1	320 5284	
64 10 (OHV-196-RHD-WAT-Notes 7.038-5 Type 3 And 7.038-7 Type 2) (V8-RHD-WAT-Note 7.038-5 Type 3 & 7.038-7 Type 2)...(Incl. Seal)	.....	4	320 5276	
64-65 10 (Six-WAT-WCGS-WAW)...(Incl. Seal)	.....	1	320 5141	
64 10 (LHD-OHV-196-WAT-LAW-Note 7.038-5 Type 3 & 7.125-4 Type 2)...(Incl. Seal)	.....	1	320 5203	
64 10-80 (V8-WST-WCGS-Note 7.038-6 Type 2)(V8-WOD-WCGS-Note 7.038-6 Type 2)...(Incl. Seal)	.....	1	320 5257	

Copyright 1963 American Motors Corp.

GROUP NO. — DESCRIPTION — YEAR and MODEL	PRIMARY GROUP NO.	PER CAR	PART NO.	CODE
64 10-80 (V8-WST-WCGS-Note 7.038-6 Type 3)(V8-WOD-WCGS-Note 7.038-6 Type 3)...(Incl. Seal)	.....	1	320 5256	
64 10 (LHD-OHVC-232-WAT-LAW)...(Incl. Seal)	.....	1	320 5436	
65 10 (LHD-Six-WAT-WCGS-LAW): 65 80 (OHV-232-WAT-WCGS-LAW)...(Incl. Seal)	.....	1	317 5534	
65 10-80 (LHD-V8-WAT-WCGS-LAW)...(Incl. Seal)	.....	1	317 5509	
65 10 (LHD-Six-WST-WCGS-LAW)(LHD-Six-WOD-WCGS-LAW)...(Incl. Seal): 65 80 (OHV-232-WST-LAW)(OHV-232-WOD-LAW)...(Incl. Seal)	.....	1	317 5501	
65 10-80 (LHD-V8-WST-WCGS-LAW)(LHD-V8-WOD-WCGS-LAW)...(Incl. Seal).	.....	1	317 5505	
65 80 (OHV-232-WAT-WCGS-WAW)...(Incl. Seal)	.....	1	320 5790	
65 80 (V8-WAT-WCGS-WAW)...(Incl. Seal)	.....	1	320 5791	
65 10 (RHD-WAT-WCGS)	.....	1	320 7383	#
65 10 (RHD-Six-232-WST-WCGS)(RHD-Six-232-WOD-WCGS)	.....	1	320 7384	#

SEAL, Gear Shift Operating Shaft

61 Thru 64 01 (WCGS): 60 10-20-80 (WST-Note 7.038-1 Type 1)(WOD-Note 7.038-1 Type 1): 61-62 10-20-80 (WST)(WOD): 63-64 10-80 (WCGS-LAW) ***(Replaces 320 1969)***	.....	1	317 5514	
64-65 10-80 (WAW)	.....	1	320 5142	
65 01 (WCGS): 65 10-80 (WCGS-LAW)	.....	1	317 7560	

ATTACHING PARTS

Shaft To Jacket Tube

SCREW, Tapping	60 Thru 62 10-20-80 (WST)(WOD)	17.660	1	G449721	NA
(Upper) SCREW, Tapping	63-64 01 (LHD-LES-WCGS)(LHD-WOD-LES-WCGS)	23.074	1	400 0051	
(Lower) SCREW, Tapping	65 01 (LHD-WST-WCGS)(LHD-WOD-WCGS)	17.660	1	G167024	NA

PIN, Gear Shift Operating Shaft (Lower)

60 01 (WST)(WOD)	.....	1	312 5489

PIN, Gear Shift Operating Shaft Spring

60 01 (WST)(WOD)	.....	1	312 5486

RING, Gear Shift Operating Shaft Retainer

(Lower) 64-65 10-80 (WAT-WCGS-WAW)	.....	1	320 5143
(Upper) 64-65 10-80 (WAT-WCGS-WAW)	.....	1	320 5144

YOKE, Gear Shift Operating Shaft

60 01	.....	1	313 0245

7.039 SPRING, Gear Shift Operating Shaft

(Inner) 60 01 (WST)(WOD)	.....	1	312 5483
(Inner) 60 01 (WAT)	.....	1	312 8632
(Outer) 60 01 (WST)(WOD)	.....	1	315 6386
(Outer) 60 01 (WAT)	.....	1	312 7191

7.042 BRACKET, Gear Shift Operating Shaft Bearing

60 01 (WAT) ***(Discontinued)***	.....	1	315 6398
60 01 (WST)(WOD)	.....	1	315 6300

ATTACHING PARTS

Bracket To Jacket Tube

U-BOLT	60 01 (WAT)	.....	1	314 6377	
U-BOLT	60 01 (WST)(WOD)	.....	1	315 6385	
WASHER, Lock	60 01	17.824	2	G120423	NA
NUT, Hexagon	60 01	17.406	2	G120367	

7.044 FULCRUM, Gear Shift Operating Shaft

60 01	.....	1	312 5484

Copyright 1963 American Motors Corp.

GROUP NO. — DESCRIPTION — YEAR and MODEL	PRIMARY GROUP NO.	PER CAR	PART NO.	CODE
7.080 LEVER, Gear Shift Selector (At Gear Shift Lever Shaft)				
(2nd And 3rd) 63 01 (WFGS)	.....	1	316 7277	
(2nd And 3rd) 64-65 01 (WOD-WFGS): 63 Thru 65 10-80 (WOD-WFGS)	.....	1	316 7278	
(Low And Reverse) 63 01 (WFGS)	.....	1	316 7276	
(Low And Reverse) 64-65 01 (WOD-WFGS): 64 10 (Six-WOD-WFGS): 63-64 80 (WOD-WFGS): 64-65 10 (V8-327-WOD-WFGS): 65 10 (OHV-199-WOD-WFGS): 65 80 (V8-327-WOD-WFGS)	.....	1	316 7275	
(Low And Reverse) 63 Thru 65 10 (V8-287-WOD-WFGS): 65 10-80 (OHV-232-WOD-WFGS): 65 50 (Marlin-WOD-WFGS): 65 80 (V8-287-WOD-WFGS)	.....	1	317 1298	
65 01-10 (OHV-232-WAT-WFGS): 65 10 (V8-WAT-WFGS): 65 80 (WAT-WFGS)	.....	1	317 2614	
PIN, Gear Shift Selector Lever				
64-65 10 (V8-WAT-WFGS)	.....	1	316 7264	
RETAINER, Gear Shift Selector Lever				
63 01 (WFGS)	.....	1	316 8885	
64-65 01 (WOD-WFGS): 63 Thru 65 10-80 (WOD-WFGS)	.....	1	316 8886	
65 01 (OHVC-232-WAT-WFGS): 64-65 10-80 (WAT-WFGS)	.....	1	317 2611	
ATTACHING PARTS Retainer To Gear Shift Lever Mounting Bracket				
BOLT, Hexagon ..... 63 Thru 65 01-10-80 (WOD-WFGS)	17.038	2	G181561	NA#
WASHER, Lock ..... 63 Thru 65 01-10-80 (WFGS)	17.820	2	G120380	NA
7.085 LEVER, Gear Shift Operating Shaft (Incl. Grommet)				
60 01 (WAT)	.....	1	315 4781	
61 01 (WST)(WOD): 60-61 10-20-80 (WST-Note 7.038-1 Type 2): 62 10-80 (WST-Note 7.038-3 Type 2)(WOD-Note 7.038-3 Type 2). ***(Replaces 320 2581)***	.....	2	320 3141	
61 Thru 63 01 (WAT): ***63 10-80 (RHD-WAT-Note 7.038-5 Type 2)*** ***(Replaces 320 2697)***	.....	1	320 3698	
62 01 (WST-LES)(WOD-LES): ***63 01 (RHD-WST)(RHD-WOD)***	.....	2	320 3696	
62-63 01 (WST-WES)(WOD-WES)	.....	2	320 3506	
64 01 (RHD-WST-WCGS)(RHD-WOD-WCGS): 64 10 (RHD-OHV-196-WST-WCGS) (RHD-OHV-196-WOD-WCGS): 65 10 (RHD-OHV-232-WST-WCGS)(RHD-OHV-232-WOD-WCGS)	.....	2	320 5282	
63 10-80 (LHD-WAT-Note 7.038-5 Type 2)	.....	1	320 4006	
64 10 (OHV-196-WAT-WCGS-WAW): 64-65 10-80 (V8-WAT-WCGS-WAW)	.....	1	317 2941	
(Second And High) 60 01 (WST)(WOD)	.....	1	315 6368	
(Second And High) 64 01 (LHD-WST-WCGS-Note 7.020-3 Type 1) (LHD-WOD-WCGS-Note 7.020-3 Type 1): 63-64 10-80 (LHD-WST-WCGS-Note 7.038-1 Type 2)(LHD-WOD-WCGS-Note 7.038-1 Type 2)	.....	1	320 4007	
(Second And High) 65 10 (Six-WST-WCGS-LAW)(Six-WOD-WCGS-LAW): 65 80 (OHV-232-WST-WCGS-LAW)(OHV-232-WOD-WCGS-LAW)	.....	1	317 5500	
(Second And High) 65 10-80 (V8-WST-WCGS-LAW)(V8-WOD-WCGS-LAW)	.....	1	317 5504	
(Low And Reverse) 60 01 (WST)(WOD)	.....	1	315 6367	
(Low And Reverse) 63 01 (LHD-WST-LES-WCGS)(LHD-WOD-LES-WCGS): 64 01 (LHD-WST-WCGS-Note 7.020-3 Type 2)(LHD-WOD-WCGS-Note 7.020-3 Type 2): 63-64 10 (LHD-WST-LES-WCGS-Note 7.038-1 Type 1) (LHD-WOD-LES-WCGS-Note 7.038-1 Type 1)	.....	1	320 4314	
(Low And Reverse) 64 01 (LHD-WST-WCGS-Note 7.020-3 Type 1) (LHD-WOD-WCGS-Note 7.020-3 Type 1): 63-64 10-80 (LHD-WST-WCGS-Note 7.038-1 Type 2)(LHD-WOD-WCGS-Note 7.038-1 Type 2): 65 01 (LHD-WST-WCGS)(LHD-WCGS): ***165 01 (Can-WST-WCGS-Note 7.125-6)***	.....	1	320 4008	
(Low And Reverse) ***65 01 (RHD-WST-WCGS)(RHD-WOD-WCGS)***	.....	1	320 6123	
(Low And reverse) 60-61 10-20-80 (WST-Note 7.038-1 Type 1)(WOD-Note 7.038-1 Type 1): 62 10-80 (WST-Note 7.038-3 Types 1 And 3) (WOD-Note 7.038-3 Types 1 And 3)	.....	1	320 1932	
(Low And Reverse) 65 10-80 (WST-WCGS-LAW)(WOD-WCGS-LAW): ***165 01 (Can-WOD-WCGS-Note 7.125-7)***	.....	1	317 5523	

Copyright 1963 American Motors Corp.

GROUP NO. — DESCRIPTION — YEAR and MODEL	PRIMARY GROUP NO.	PER CAR	PART NO.	CODE
ATTACHING PARTS				
Lever To Operating Shaft				
BOLT, Hexagon..... 60 01 (WAT)	.....	1	312 8665	
BOLT, Hexagon ..... 64-65 10-80 (WAT-WCGS-WAW)	7.038	2	317 2936	
WASHER, Lock ..... 60 01 (WAT)	17.820	1	G120214	NA
WASHER, Lock ..... 64-65 10-80 (WAT-WCGS-WAW)	17.820	2	G120380	NA
NUT, Hexagon..... 64-65 10-80 (WAT-WCGS-WAW)	17.406	2	G120367	
SPACER, Gear Shift Operating Shaft Lever				
60 01 (WAT)	.....	1	315 4777	
60 01 (WST)(WOD)	.....	1	315 8682	
61 Thru 63 01 (WAT)	.....	1	320 2698	
61 01 (WST)(WOD): 61 10-20-80 (WST-Note 7.038-1 Type 2)(WOD-Note 7.038-1 Type 2) ***(Replaces 320 2584)***	.....	1	320 2834	
62-63 01 (WST-WES)(WOD-WES)	.....	1	320 3519	
62 01 (WST-LES)(WOD-LES): 62 10-80 (WST-Note 7.038-3 Type 2 And 4) (WOD-Note 7.038-3 Type 2 And 4)	.....	1	320 3134	#
63 01 (LHD-WST-LES-WCGS)(LHD-WOD-LES-WCGS): 64 01 (LHD-WST-WCGS-Note 7.020-3 Type 2)(LHD-WOD-WCGS-Note 7.020-3 Type 2): 60-61 10-20-80 (WST-Note 7.038-1 Type 1): 63-64 10 (LHD-WST-LES-WCGS-Note 7.038-1 Type 1)(LHD-WOD-LES-WCGS-Note 7.038-1 Type 1)	.....	1	320 1952	
64 01 (LHD-WST-WCGS-Note 7.020-3 Type 1)(LHD-WOD-WCGS-Note 7.020-3 Type 1): 63-64 10-80 (LHD-WST-WCGS-Note 7.038-1 Type 2) (LHD-WOD-WCGS-Note 7.038-1 Type 2): ***63 01 (RHD-WST)(RHD-WOD): 64 01 (RHD-WST-WCGS)(RHD-WOD-WCGS): 64 10 (RHD-OHV-196-WST-WCGS)(RHD-OHV-196-WOD-WCGS): 165 01 (Can-WST-WCGS-Note 7.125-6) (Can-WOD-WCGS-Note 7.125-6)..... (Replaces 320 4366)***	.....	1	320 4009	
65 01 (WST-WCGS)(WOD-WCGS): 65 10-80 (WST-WCGS-LAW) (WOD-WCGS-LAW): ***165 01 (Can-WST-WCGS-Note 7.125-7) (Can-WOD-WCGS-Note 7.125-7)***	.....	1	317 5522	
SLEEVE, Gear Shift Operating Shaft Lever (Nylon)				
63 01 (LHD-WST-LES-WCGS)(LHD-WOD-LES-WCGS): 64-65 01 (LHD-WST-WCGS)(LHD-WOD-WCGS): 62 10-80 (WST-Note 7.038-3 Type 1 And 3) (WOD-Note 7.038-3 Type 1 And 3): 63-64 10 (LHD-WST-LES-WCGS-Note 7.038-1 Type 1)(LHD-WOD-LES-WCGS-Note 7.038-1 Type 1)	.....	1	320 2193	#
65 10-80 (LHD-WST-WCGS-LAW)(LHD-WOD-WCGS-LAW)	.....	1	317 5519	
64 10 (OHV-232-WAT-WCGS-WAW): 65 10 (Six-WCGS-WAW): 65 80 (OHV-232-WCGS-WAW)	.....	1	317 6011	
SPRING, Gear Shift Operating Shaft Lever Compression				
61 Thru 63 01 (WAT): 63 10-80 (WAT-Note 7.038-5 Type 2)	.....	1	320 3279	
SPRING, Gear Shift Operating Shaft Lever Centering				
62-63 01 (WST-WES)(WOD-WES)	.....	1	320 3520	
OILER, Gear Shift Operating Shaft Lever				
60 01 (WST)(WOD)	.....	1	315 6388	
7.088 GROMMET, Gear Shift Operating Shaft Lever				
60 01 (WAT-1 Req.)(WST-2 Req.)(WOD-2 Req.)	.....	AR	312 9623	
61 Thru 63 01 (WAT-1 Req.)(WST-2 Req.)(WOD-2 Req.): 64-65 01 (WCGS): 60 10-80 (WST-2 Req.-Note 7.038-1 Type 1)(WOD-2 Req.-Note 7.038-1 Type 1): 61-62 10-20-80 (WST-2 Req.)((WOD-2 Req.): 63-64 10-80 (WCGS-LAW-2 Req.) ***(Use 315 7677)***	.....	AR	320 1931	
64 10-80 (WAT-WCGS-WAW): 65 10-80 (WCGS-LAW)(WCGS-LAW)	.....	1	315 7677	

Copyright 1963 American Motors Corp.

GROUP NO. — DESCRIPTION — YEAR and MODEL	PRIMARY GROUP NO.	PER CAR	PART NO.	CODE
7.089 SEAL, Gear Shift Operating Shaft Lever Dirt				
60 01 (WST)(WOD)	.....	1	315 6387	
7.105 SHAFT, Gear Shift Bellcrank Pivot				
61 Thru 63 01 (RHD-WST)(RHD-WOD): 60 Thru 62 10 (RHD-WST)(RHD-WOD)	.....	1	313 0630	
63-64 10 (OHV-196-WST-WES)(OHV-196-WOD-WES)	.....	1	316 7426	
ATTACHING PARTS				
Shaft To Bracket (Welded On Dash Panel)				
WASHER, Plain ..... ***61 Thru 63 01 (RHD-WST)(RHD-WOD): 60 Thru 62 10 (RHD-WST)(RHD-WOD) .....(Replaces 800 0193)***	17.814	1	400 1132	
WASHER, Lock ..... ***61 Thru 63 01 (RHD-WST)(RHD-WOD): 60 Thru 62 10 (RHD-WST)(RHD-WOD)***	17.820	1	G131100	NA
Shaft To Strut Rod Bracket				
WASHER, Lock ..... 63-64 10 (WST-WES)(WOD-WES)	17.820	1	G131100	NA
NUT, Hexagon ..... 63-64 10 (WST-WES)(WOD-WES)	17.406	1	G120370	NA
7.110 BELLCRANK, Gear Shift				
61 Thru 63 01 (RHD-WOD): 60 Thru 62 10 (RHD-WST)(RHD-WOD)	.....	1	313 4681	
63-64 10 (Six-WST-WES)(Six-WOD-WES)	.....	1	316 7862	
63-64 10 (Six-LHD-WAT): 64 10 (LHD-OHV-196-WAT-Note 7.125-4 Type 1)	.....	1	316 7401	
63 10 (RHD-WAT)	.....	1	317 0583	
63-64 10 (V8-RHD-WAT): 63 80 (RHD-WAT)	.....	1	316 8915	
ATTACHING PARTS				
Bellcrank To Pivot Shaft				
CLIP, Spring ..... 63 10 (WST-WES)(WOD-WES): 63-64 10 (Six-WST-WES) (OHV-196-WST-WOD)	.....	1	316 7428	
WASHER, Plain ..... ***61 Thru 63 01 (RHD-WST)(RHD-WOD): 60 Thru 62 10 (RHD-WST)(RHD-WOD)***	17.814	1	G120394	NA
WASHER, Plain ..... 63-64 10 (Six-WST-WES) (Six-WOD-WES) .....***(Replaces 800 0161)***	17.814	2	400 1100	
WASHER, Spring ..... 63-64 10 (Six-WST-WES)(Six-WOD-WES)	7.125	1	316 7670	
NUT, Jam ..... ***61 Thru 63 01 (RHD-WST)(RHD-WOD): 60 Thru 62 10 (RHD-WST)(RHD-WOD)***	17.410	1	G124925	NA
NUT, Stamped ..... ***61 Thru 63 01 (RHD-WST)(RHD-WOD): 60 Thru 62 10 (RHD-WST)(RHD-WOD)***	17.428	1	G107823	NA
PIN, Cotter ..... 63-64 10 (Six-WST-WES)(Six-WOD-WES)	17.460	1	G103373	NA
Bellcrank To Bracket				
WASHER, Plain ..... 63 10 (Six-LHD-WAT): 64 10 (LHD-OHV-196-WAT-Note 7.125-4 Type 1) .....***(Replaces 800 0161)***	17.814	1	400 1100	
WASHER, Plain ..... 63 10 (Six-LHD-WAT-Spacer): 64 10 (LHD-OHV-196-WAT-Spacer-Note 7.125-4 Type 1)	17.814	1	G446212	NA
WASHER, Spring ..... 63 10 (Six-LHD-WAT): 64 10 (LHD-OHV-196-WAT-Note 7.125-4 Type 1)	7.125	1	316 7670	
PIN, Cotter ..... 63 10 (Six-LHD-WAT): 64 10 (LHD-OHV-196-WAT-Note 7.125-4 Type 1)	17.460	1	G103373	NA
Bellcrank To Converter Housing				
BOLT, Hexagon ..... ***63 80 (RHD-WAT)***	17.038	2	G179883	NA
WASHER, Lock ..... ***63 80 (RHD-WAT)***	17.820	2	G103323	NA
BRACKET, Gear Shift Bellcrank				
60-61 10 ***(RHD-WST)(RHD-WOD)***	.....	1	341 6924	
63 10 (WST-WES)(WOD-WES)(LHD-WAT): 63-64 10 (Six-WST-WES) (Six-WOD-WES-LHD-OHV-196-WAT-Note 7.125-4 Type 1)	.....	1	316 7403	
63 10 (RHD-Six-WAT)	.....	1	316 8859	
63 10-80 (RHD-V8-WAT): 64 10 (RHD-V8-WAT)	.....	1	316 8916	

Copyright 1963 American Motors Corp.

GROUP NO. — DESCRIPTION — YEAR and MODEL	PRIMARY GROUP NO.	PER CAR	PART NO.	CODE
SPACER, Gear Shift Bellcrank				
61 Thru 63 10 (RHD-WST)(RHD-WOD): 60 Thru 62 10 (RHD-WST)(RHD-WOD)	.....	1	310 7638	
BEARING, Gear Shift Bellcrank To Bracket (Nylon)				
63-64 10 (OHV-196-WST-WES)(OHV-196-WOD-WES)	.....	1	316 7427	
BEARING, Gear Shift Bellcrank Shaft To Bracket (Delrin)				
63 01 (RHD-WAT): 63-64 10 (V8-RHD-WAT): 63 80 (RHD-WAT)	.....	1	316 8888	
BUSHING, Gear Shift Bellcrank To Pivot Shaft (Rubber)				
63-64 10 (Six-WST-WES)(Six-WOD-WES)	.....	1	316 7524	
7.115 ROD, Gear Shift Operating Shaft Lever To Bellcrank				
63 10 (Six-LHD-WAT): 64 10 (LHD-OHV-196-WAT-Note 7.125-4 Type 1)	.....	1	316 7404	
63 10 (RHD-Six-WAT)	.....	1	317 0582	
63-64 10 (RHD-V8-WAT): 63 80 (RHD-WAT)	.....	1	316 8918	
(Second And High) ***61 Thru 63 01 (RHD-WST)(RHD-WOD)***	.....	1	316 1062	
(Second And High) ***60-61 10 (RHD-WST)(RHD-WOD)***	.....	1	315 8649	
(Second And High) ***62 10 (RHD-WST)(RHD-WOD)***	.....	1	316 3565	
(Low And Reverse) ***61 Thru 63 01 (RHD-WST)(RHD-WOD)***	.....	1	316 1061	
(Low And Reverse) ***60-61 10 (RHD-WST)(RHD-WOD)***	.....	1	315 8641	
(Low And Reverse) ***62 10 (RHD-WST)(RHD-WOD)***	.....	1	316 3566	
(Low And Reverse) 63-64 10 (Six-WST-WES)(Six-WOD-WES)	.....	1	316 7896	
ATTACHING PARTS				
Rod To Lever				
WASHER, Plain ..... ***61-62 01 (RHD-WST-4 Req.)(RHD-WOD-4 Req.): 63 01 RHD-WST-2 Req.)(RHD-WOD-2 Req.): 60 Thru 62 10 (RHD-WST-4 Req.)(RHD-WOD-4 Req.):*** 63-64 10 (Six-LHD-WAT-2 Req.)	17.814	AR	800 0161	
WASHER, Spring ..... ***61-62 01 (RHD-WST)(RHD-WOD): 60 Thru 62 10 (RHD-WST)(RHD-WOD)***	7.088	2	312 1635	
WASHER, Spring ..... ***63 01 (RHD-WST-2 Req.)(RHD-WOD-2 Req.):*** 63-64 10 (Six-LHD-WAT-1 Req.)	7.125	AR	316 7670	
PIN, Cotter ..... ***61 Thru 63 01 (RHD-WST-2 Req.)(RHD-WOD-2 Req.): 60 Thru 62 10 (RHD-WST-2 Req.)(RHD-WOD-2 Req.):*** 63-64 10 (Six-LHD-WAT-1 Req.)	17.460	AR	G103373	NA
Rod To Bellcrank				
WASHER, Plain ..... ***61 Thru 63 01 (RHD-WST-2 Req.)(RHD-WOD-2 Req.): 62 10 (RHD-WST-2 Req.)(RHD-WOD-2 Req.):*** 63-64 10 (Six-WST-WES-1 Req.)(Six-WOD-WES-1 (Req.): ***63-64 10-80 (RHD-WAT-1 Req.)*** ..... ***(Replaces 800 0161)***	17.814	AR	400 1100	
WASHER, Plain ..... ***60-61 10 (RHD-WST)(RHD-WOD) (Replaces 800 0163)***	17.814	4	400 1102	
WASHER, Spring ..... ***61-62 01 (RHD-WST)(RHD-WOD): 62 10 (RHD-WST) (RHD-WOD)***	7.088	2	312 1635	
WASHER, Spring ..... ***63 01 (RHD-WST-2 Req.)(RHD-WOD-2 Req.):*** 63 01 (WST-WES-1 Req.): ***63-64 10-80 (RHD-WAT-1 Req.):*** 63-64 10 (Six-WST-WES-1 Req.) (Six-WOD-WES-1 Req.)	7.125	AR	316 7670	
Pin, Cotter ..... ***61 Thru 63 01 (RHD-WST-2 Req.)(RHD-WOD-2 Req.): 60 Thru 62 10 (RHD-WST-2 Req.)(RHD-WOD-2 Req.):*** 63-64 10 (Six-WST-WES-1 Req.) (Six-WOD-WES-1 Req.): ***63 10-80 (RHD-WAT-1 Req.)***	17.460	AR	G103373	NA

Copyright 1963 American Motors Corp.

GROUP NO. — DESCRIPTION — YEAR and MODEL	PRIMARY GROUP NO.	PER CAR	PART NO.	CODE
7.125 ROD, Gear Shift				
60 01 (WAT)		1	315 6408	
61 01 (WAT)		1	316 0470	
62-63 01 (WAT)		1	316 3415	
64-65 01 (LHD-WAT-WCGS)		1	317 1191	
65 01 10-80 (OHV-232-WAT-WFGS)		1	317 5605	
63 10 (RHD-WAT)		1	316 8865	
63 10 (Six-LHD-WAT): 64 10 (LHD-OHV-196-WAT-Note 7.125-4 Type 1)		1	316 7405	
63-64 10 (V8-RHD-WAT): 63 80 (RHD-WAT)		1	316 8919	
63 Thru 65 10-80 (V8-LHD-WAT-WCGS)		1	316 8032	
64 10 (LHD-OHV-196-WAT-Note 7.125-4 Type 2)		1	317 3008	
64 10 (OHV-232-WAT): 65 10-80 (OHV-232-LHD-WAT-WCGS) (OHV-199-LHD-WAT-WCGS)		1	317 5607	
64-65 10-80 (V8-WAT-WFGS)		1	317 2594	
(Second And High) 60 01 (WST)(WOD)		1	315 6418	
(Second And High) 61 Thru 63 01 (LHD-WST-WCGS)(LHD-WOD-WCGS)		1	316 0468	
(Second And High) ***61 Thru 63 01 (RHD-WST)(RHD-WOD)***		1	316 1034	
(Second And High) 63 01 (WFGS)		1	316 7290	
(Second And High) 64 01 (LHD-WST-WCGS)(LHD-WOD-WCGS): ***165 01 (Can-WST-WCGS-Note 7.125-6)(Can-WOD-WCGS-Note 7.125-6)***		1	316 9680	
(Second And High) 64-65 01 (WFGS)		1	316 9938	
(Second And High) 65 01 (LHD-LHE-WST-WCGS)(LHD-LHE-WOD-WCGS) (LHD-OHV-196-WST-WCGS)(LHD-OHV-196-WOD-WCGS): ***165 01 (Can-WST-WCGS-Note 7.125-7)(Can-WOD-WCGS-Note 7.125-7)***		1	317 6245	
(Second And High) 65 01 (LHD-OHV-199-WST-WCGS) (LHD-OHV-199-WOD-WCGS)		1	317 8582	
(Second And High) 60-61 10 (LHD-WST)(LHD-WOD)		1	315 7820	

NOTE 7.125-1: 60-61 10 (WST) cars having a production installed Heavy Duty Package may be identified in the following way:
The Trunnion at the Transmission End of the Torque Tube is welded instead of threaded to the Torque Tube.

NOTE 7.125-2: 62 Thru 64 10 cars having a production installed Heavy Duty Package may be identified in the following way:
The Trunnion at the Transmission End of the Torque Tube is connected to the Transmission by 6 Bolts instead of 4.

NOTE 7.125-3: Two Types of Gear Shift Rods were used on the 63 10 (V8-WFGS). They can be identified as follows:
Type 1: The Gear Shift Rod adjustment is made at the Gear Shift Selector Lever.
Type 2: The Gear Shift Rod adjustment is made at the Gear Shift Lever (on Transmission).

NOTE 7.125-4: Two Types of Steering Gear Jacket Tubes were installed on 64 10 (LHD-OHV-196-WAT-LAW). They can be identified as follows:
Type 1: Has Two Shift Rods. One is used from Gear Shift Operating Shaft to Bellcrank and the other is used from the Bellcrank to Transmission.
Type 2: Has One Gear Shift Rod that runs directly from the Gear Shift Operating Shaft to the Transmission.

NOTE 7.125-5: Cars having a Production Installed Heavy Duty Package on the 65 10 (OHV-199) can be identified as follows:
The Transmission to Torque Tube Adapter overall length is 12-3/4" long.

NOTE 7.125-6: Used prior to Car Serial No. 500279 and beginning with Serial No. 500817 and prior to Serial No. 500916 on the 165 01 (LHE) and on the 165 01 (OHV). Used prior to Serial No. 500280 and beginning with Serial No. 500803 and prior to Serial No. 500935.

NOTE 7.125-7: Used beginning with Serial No. 500279 and prior to Serial No. 500817 and beginning with Serial No. 500937 on the 165 01 (LHE), and on the 165 01 (OHV) Used beginning with Serial No. 50028 and prior to Serial No. 500803 and beginning with Serial No. 500995.

NOTE 7.125-8: Two Types of Low and Reverse Gear Shift Rods were used on the 63 Thru 65 10-80 (V8-WCGS). They can be identified as follows:
Type 1: The Low and Reverse Gear Shift Rod connects directly to the Steering Column and Transmission.
Type 2: Has an Upper and Lower, Low and Reverse Gear Shift Rod. The Upper Rod connects to the Steering Column and Bellcrank, while the Lower Rod connects to the Bellcrank and Transmission.

Copyright 1963 American Motors Corp.

GROUP NO. — DESCRIPTION — YEAR and MODEL	PRIMARY GROUP NO.	PER CAR	PART NO.	CODE
(Second And High) ***60-61 10 (WST-Heavy Duty-Note 7. 125-1):*** 60-61 20 (WST) (WOD)	.....	1	315 7822	
(Second And High) ***60-61 10 (WST-Heavy Duty-Note 7. 125-1):*** 60-61 20 (WST)				
(Second And High) ***60-61 10 (RHD-WST)(RHD-WOD)***	.....	1	314 6338	
(Second And High) 62 10 (WST)(WOD)	.....	1	316 3020	
(Second And High) ***62 10 (WST-Heavy Duty-Note 7. 125-2)***	.....	1	316 4240	
(Second And High) 63 10 (V8-WFGS-Note 7. 125-3 Type 1)	.....	1	317 1295	
(Second And High) 63 10 (V8-WFGS-Note 7. 125-3 Type 2): 64-65 10-80 (V8-287-WOD-WFGS)	.....	1	317 2178	
(Second And High) 63-64 10 (OHV-196-WST-LES-WCGS) (OHV-196-WOD-LES-WCGS)	.....	1	316 7811	
(Second And High) 63-64 10 (Six-WST-WES)(Six-WOD-WES)	.....	1	316 8142	
(Second And High) 63-64 10 (OHV-196-WFGS): 65 10 (OHV-199-WOD-WFGS)	.....	1	316 7288	
(Second And High) ***63-64 10 (Six-WST-Heavy Duty-Note 7. 125-2)***	.....	1	316 7867	
(Second And High) 63 Thru 65 10-80 (V8-287-WST-WCGS)(V8-287-WOD-WCGS)	.....	1	317 1175	
(Second And High) 64 10 (OHV-232-WST-WCGS)(OHV-232-WOD-WCGS)	.....	1	317 5561	
(Second And High) 64-65 10-80 (OHV-232-WOD-WFGS)	.....	1	317 1715	
(Second And High) 64-65 10 (V8-327-WST-WCGS)(V8-327-WOD-WCGS): 63 Thru 65 80 (V8-WST-WCGS)	.....	1	316 8031	
(Second And High) 64-65 10 (V8-327-WOD-WFGS): 63-64 80 (WOD-WFGS): 63 Thru 65 80 (V8-WOD-WFGS)	.....	1	316 7289	
(Second And High) 65 10 (OHV-199-WST-WCGS)(OHV-199-WOD-WCGS)	.....	1	317 4642	
(Second And High) 65 10-80 (OHV-232-WST-WCGS)(LHD-OHV-232-WOD-WCGS) ***(OHV-199-WST-Heavy Duty-Note 7. 125-5)***	.....	1	317 7438	
(Second And High) 60-61 80 (WST)(WOD)	.....	1	315 7824	
(Second And High) 62 80 (WST)(WOD)	.....	1	316 3118	
(Low And Reverse) 60 01 (WST)(WOD)	.....	1	315 6419	
(Low And Reverse) 61 Thru 63 01 (LHD-WST-WCGS)(LHD-WOD-WCGS)	.....	1	316 0469	
(Low And Reverse) ***61 Thru 63 01 (RHD-WST)(RHD-WOD)***	.....	1	316 1035	
(Low And Reverse) 63 01 (WFGS)	.....	1	316 7291	
(Low And Reverse) 64 01 (LHD-WST-WCGS)(LHD-WOD-WCGS): ***165 01 (Can-WST-WCGS-Note 7. 125-6)(Can-WOD-WCGS-Note 7. 125-6)***	.....	1	316 9681	
(Low And Reverse) 64-65 01 (WOD-WFGS)	.....	1	316 9939	
(Low And Reverse) 65 01 (LHD-WST-WCGS)(LHD-WOD-WCGS): ***165 01 (Can-WST-WCGS-Note 7. 125-7)(Can-WOD-WCGS-Note 7. 125-7)***	.....	1	317 6244	
(Low And Reverse) 60-61 10 (LHD-WST)(LHD-WOD)	.....	1	315 7819	
(Low And Reverse) ***60-61 10 (WST-Heavy Duty- Note 7. 125-1):*** 60-61 20 (WST) (WOD)	.....	1	315 7821	
(Low And Reverse) ***60-61 10 (RHD-WST) (RHD-WOD)***	.....	1	315 6247	
(Low And Reverse) 62 10 (WST) (WOD)	.....	1	316 3021	
(Low And Reverse) ***62 10 (WST-Heavy Duty-Note 7. 125-2)***	.....	1	316 4241	
(Low And Reverse) 63 10 (WST-WES) (WOD-WES)	.....	1	316 7861	
(Low And Reverse) ***63-64 10 (Six-Heavy Duty-Note 7. 125-2)***	.....	1	316 7868	
(Low And Reverse) 63-64 10 (OHV-196-WST-LES-WCGS) (OHV-196-WOD-LES-WCGS)	.....	1	316 7816	
(Low And Reverse) 63-64 10 (OHV-196-WOD-WFGS): 65 10 (OHV-199-WOD-WFGS)	.....	1	316 7293	
(Low And Reverse) 63 Thru 65 10-80 (V8-287-WST-WCGS-Note 7. 125-8 Type 1) (V8-287-WOD-WCGS-Note 7. 125-8 Type 1)	.....	1	317 1176	
(Low And Reverse) 63 Thru 65 10 (V8-287-WOD-WFGS): 65 80 (V8-287-WOD-WFGS)	.....	1	317 1294	
(Low And Reverse) 64 10 (Six-WST-WES)(Six-WOD-WES)	.....	1	317 1695	
(Low And Reverse) 64 10 (OHV-232-WST-WCGS)(OHV-232-WOD-WCGS)	.....	1	317 5572	
(Low And Reverse) 64 10 (OHVC-232-WST-WFGS)(OHVC-232-WOD-WFGS)	.....	1	317 1714	
(Low And Reverse) 64-65 10 (V8-327-WST-WCGS-Note 7. 125-8 Type 1) (V8-327-WOD-WCGS-Note 7. 125-8 Type 1): 63 Thru 65 80 (V8-327-WST-WCGS-Note 7. 125-8 Type 1)(V8-327-WOD-WCGS-Note 7. 125-8 Type 1)	.....	1	316 8030	
(Low And Reverse) 64-65 10 (V8-327-WOD-WFGS): 63 Thru 65 80 (V8-WOD-WFGS)	.....	1	316 7292	
(Low And Reverse) 65 10 (OHV-199-WST-WCGS)(OHV-199-WOD-WCGS)	.....	1	317 4643	
(Low And Reverse) 65 10-80 (OHV-232-WST-WCGS) (LHD-OHV-232-WOD-WCGS): ***65 10 (OHV-199-WST-Heavy Duty-Note 7. 125-5)***	.....	1	317 7439	

Copyright 1963 American Motors Corp.

GROUP NO. — DESCRIPTION — YEAR and MODEL	PRIMARY GROUP NO.	PER CAR	PART NO.	CODE
(Low And Reverse) 60-61 80 (WST) (WOD)	.....	1	315 7823	
(Low And Reverse) 62 80 (WST) (WOD)	.....	1	316 3117	
(Low And Reverse)(Lower) 63 Thru 65 10-80 (V8-WCGS-Note 7.125-8 Type 2)	.....	1	318 0723	
(Low And Reverse)(Upper) 63-64 10-80 (V8-WCGS-Note 7.125-8 Type 2)	.....	1	320 6937	
(Low And Reverse)(Upper) 65 10 (V8-WCGS-Note 7.125-8 Type 2)	.....	1	320 6938	
(Low And Reverse)(Upper) 65 80 (V8-WCGS-Note 7.125-8 Type 2)	.....	1	320 6939	
ATTACHING PARTS				
Rod To Operating Shaft Lever				
WASHER, Plain ..... 60 Thru 62 01 (WAT-2 Req.): 60 01-10-20-80 (WST-4 Req.)(WOD-4 Req.): 61-62 01-10-20-80 (LHD-WST-4 Req.)(LHD-WOD-4 Req.): 63 01-80 (WCGS-2 Req.): 63 10 (V8-WCGS-2 Req.) ***(Replaces 800 0161)***	17.814	AR	400 1100	
WASHER, Spring ..... 60 Thru 62 01 (WAT-2 Req.): 60 01-10-20-80 (WST-4 Req.): (WOD-4 Req.): 61-62 01-10-20-80 (LHD-WST-4 Req.)(LHD-WOD-4 Req.): 63 01-80 (WCGS)	7.088	AR	312 1635	
WASHER, Spring ..... 63 01-80 (WCGS): 63 10 (V8-WCGS)	.....	AR	316 7670	
PIN, Cotter ..... 60 Thru 62 01 (WAT-1 Req.): 60 01-10-20-80 (WST-2 Req.)(WOD-2 Req.): 61-62 01-10-20-80 (LHD-WST-2 Req.)(LHD-WOD-2 Req.): 63 01-80 (WCGS-2 Req.): 63 10 (V8-WCGS-WST-2 Req.) (V8-WCGS-WOD-2 Req.)(V8-WAT-1 Req.)	17.460	AR	G103373	NA
Rod To Bellcrank				
WASHER, Plain ..... ***61-62 01 (RHD-WST-2 Req.)(RHD-WOD-2 Req.):*** 63-64 10 (Six-WST-WES-1 Req.)(Six-WOD-WES): 63-64 10 (Six-WAT-1 Req.): ***63 80 (RHD-WAT-1 Req.)*** ***(Replaces 800 0161)***	17.814	AR	400 1100	
WASHER, Plain ..... 63 Thru 65 10-80 (V8-WCGS)	17.814	1	G120394	NA
WASHER, Spring ..... ***61-62 01 (RHD-WST)(RHD-WOD)***	17.088	2	312 1635	
WASHER, Spring ..... 63-64 10 (Six-WST-WES)(Six-WOD-WES)(Six-WAT): ***63 80 (RHD-WAT)***	.....	1	316 7670	
PIN, Cotter ..... ***61-62 01-10 (RHD-WST-2 Req.)(RHD-WOD-2 Req.):*** 63-64 10 (Six-WST-WES-1 Req.)(Six-WOD-WES-1 Req.)(Six-WAT-1 Req.): ***63 80 (RHD-WAT-1 Req.)***	17.406	AR	G103373	NA
Rod To Gear Shift Selector Lever				
SPRING, Retaining ..... 63-64 01-10-80 (WFGS)	.....	AR	316 8869	#
Rod To Transmission Lever				
WASHER, Plain ..... 63-64 10 (Six-WST-WCGS-2 Req.)(Six-WOD-WCGS-2 Req.)(Six-WAT-1 Req.): ***63 80 (RHD-WAT-1 Req.)*** ***(Replaces 800 0161)***	17.814	AR	400 1100	
WASHER, Plain ..... 63 Thru 65 10-80 (V8-WCGS)	17.814	3	400 1100	
WASHER, Spring ..... 63-64 10 (Six-WST-WCGS-2 Req.)(Six-WOD-WCGS-2 Req.)(Six-WAT-1 Req.): ***63 80 (RHD-WAT-1 Req.)***	.....	AR	316 7670	
PIN, Cotter ..... 63-64 10 (Six-WST-WCGS-2 Req.)(Six-WOD-WCGS-2 Req.)(Six-WAT-1 Req.): ***63 80 (RHD-WAT-1 Req):*** 65 10-80 (V8-WCGS)	17.460	AR	G103373	NA
CLEVIS, Gear Shift Selector Lever Rod To Transmission Lever				
63 Thru 65 01-10-80 (WOD-WFGS)	.....	2	316 7261	
65 01 (OHVV-232-WAT-WFGS): 64-65 10-80 (WAT-WFGS)	.....	1	317 2601	
ATTACHING PARTS				
Clevis To Transmission Lever				
PIN, Clevis ..... 63 Thru 65 01-10-80 (WAT-WFGS)(WOD-WFGS)	.....	2	316 7258	
SPRING, Retaining ..... 63 Thru 65 01-10-80 (WAT-WFGS)(WOD-WFGS)	.....	2	316 8869	

Copyright 1963 American Motors Corp.

GROUP NO. — DESCRIPTION — YEAR and MODEL	PRIMARY GROUP NO.	PER CAR	PART NO.	CODE
Clevis To Rod Adjusting				
NUT, Jam..... 63 Thru 65 01-10-80 (WFGS).....	17.410	2	G124925	NA
RING, Gear Shift Rod "O"				
62-63 01 (RHD-WST)(RHD-WOD): 62 10 (RHD-WST)(RHD-WOD).....	2.082	2	314 4684	
CLAMP, Gear Shift Rod "O" RING				
62 01 (RHD-WST)(RHD-WOD)	17.108	2	G272841	
63 01 (RHD-WST)(RHD-WOD)	17.108	4	G272843	
62 10 (RHD-WST)(RHD-WOD)	17.108	2	G272842	
LINKAGE KIT, Panograph Shifting				
63-64 10-80 (V8-287).....	.....	1	320 6958	
63-64 10-80 (V8-327).....	.....	1	320 6959	
65 10 (V8-287).....	.....	1	320 6960	
65 10 (V8-327).....	.....	1	320 6961	
65 80 (V8-287).....	.....	1	320 6962	
65 80 (V8-327).....	.....	1	320 6963	
7. 130 LEVER, Gear Shift (On Transmission)				
(Second And High) 60 Thru 63 01 (WST-WCGS)(WOD-WCGS).....	.....	1	315 5836	
(Second And High) 63-64 01-10 (OHV-196-WOD-WFGS): 65 01 (WOD-WFGS): 65 10 (OHV-199-WOD-WFGS)	.....	1	316 7281	
(Second And High) 64 01 (LHD-WST)(LHD-WOD-WCGS): 63-64 10 (LHD-OHV-196-WST-LES-WCGS)(LHD-OHV-196-WOD-LES-WCGS): 65 10 (LHD-OHV-199-WST)(LHD-OHV-199-WOD-WCGS): ***165 01 (Can-WST-WCGS-Note 7. 125-6)(Can-WOD-WCGS-Note 7. 125-6)***	.....	1	316 7501	
(Second And High) ***64-65 01 (RHD-WST)(RHD-WOD): 64 10 (RHD-OHV-196-WST) (RHD-OHV-196-WOD)***	.....	1	317 5188	
(Second And High) 65 01 (LHD-WST)(LHD-WOD-WCGS): ***165 01 (Can-WST-Note 7. 125-7)(Can-WOD-Note 7. 125-7)***	.....	1	320 5799	
(Second And High) 60-61 10 (WST)(WOD).....	.....	1	315 5838	
(Second And High) ***60-61 10 (WST-Heavy Duty-Note 7. 125-1):*** 60-61 20 (WST) (WOD)	.....	1	315 5834	
(Second And High) 62 10 (WST)(WOD).....	.....	1	316 3953	
(Second And High) ***62 10 (WST-Heavy Duty Note 7. 125-2)***.....	.....	1	316 3952	
(Second And High) 63-64 10 (Six-WST-WES)(Six-WOD-WES).....	.....	1	316 9151	
(Second And High) 63 Thru 65 10 (V8-287-WOD-WFGS).....	.....	1	317 1721	
(Second And High) ***63-64 10 (Six-WST-Heavy Duty-Note 7. 125-2)***	.....	1	316 9055	
(Second And High) 63 Thru 65 10 (V8-287-WST-WCGS-Note 7. 130-1 Type 1) (V8-287-WOD-WCGS-Note 7. 130-1 Type 1).....	.....	1	317 1332	
(Second And High) 63 Thru 65 10 (V8-287-WST-WCGS-Note 7. 130-1 Type 2) (V8-287-WOD-WCGS-Note 7. 130-1 Type 2).....	.....	1	320 6987	
(Second And High) 63 Thru 65 10-80 (V8-327-WFGS).....	.....	1	316 7282	
(Second And High) 64-65 10 (LHD-OHV-232-WST)(LHD-OHV-232-WOD-WCGS): 65 80 (OHV-232-WST)(OHV-232-WOD-WCGS)	.....	1	317 4606	
(Second And High) 64-65 10 (OHV-232-WOD-WFGS): 65 80 (OHV-232-WOD-WFGS)	.....	1	317 4574	
(Second And High) 64-65 10-80 (V8-327-WST)(V8-327-WOD-WCGS)	.....	1	316 7650	
(Second And High) ***65 10 (RHD-OHV-232-WST)(RHD-OHV-232-WOD)***	.....	1	317 7368	
(Second And High) 60-61 80 (WST)(WOD).....	.....	1	315 5833	
(Second And High) 62 80 (WST)(WOD).....	.....	1	316 4142	
(Low And Reverse) 60 01-80 (WST)(WOD)	.....	1	315 5837	
(Low And Reverse) 61 Thru 63 01 (WST-WCGS)(WOD-WCGS).....	.....	1	316 1259	

NOTE 7. 130-1: Two Types of Gear Shift Levers (Second and High) were used on the 63 Thru 65 10 (V8-287-WST-WCGS)(V8-287-WOD-WCGS). They are identified as follows:
Type 1: The distance between hole centers is 3-7/16".
Type 2: The distance between hole centers is 4-1/4".

Copyright 1963 American Motors Corp.

GROUP NO. — DESCRIPTION — YEAR and MODEL	PRIMARY GROUP NO.	PER CAR	PART NO.	CODE
(Low And Reverse) 63 Thru 65 01 (OHV-WOD-WFGS): 63-64 10 (OHV-196-WOD-WFGS): 65 10 (OHV-199-WOD-WFGS)	.....	1	316 7279	
(Low And Reverse) 64-65 01 (LHD-WST-WCGS): (LHD-WOD-WCGS): ***62 10 (WST-Heavy Duty-Note 7.125-2):*** 63-64 10 (OHV-196-LHD-WST-LES-WCGS) (OHV-196-LHD-WOD-LES-WCGS): 65 10 (LHD-OHV-199-WST) (LHD-OHV-199-WOD-WCGS)	.....	1	316 3951	
(Low And Reverse) ***64-65 01 (RHD-WST)(RHD-WOD): 64 10 (RHD-OHV-196-WST) (RHD-OHV-196-WOD)***	.....	1	317 5189	
(Low And Reverse) 60-61 10-20 (WST)(WOD)	.....	1	315 5835	
(Low And Reverse) 62 10 (WST)(WOD)	.....	1	316 3954	
(Low And Reverse) 63-64 10 (Six-WST-WES)(Six-WOD-WES)	.....	1	316 9152	
(Low And Reverse) ***63-64 10 (Six-WST-Heavy Duty-Note 7.125-2)***	.....	1	316 9054	
(Low And Reverse) 63 Thru 65 10 (V8-287-WFGS): 64-65 10-80 (OHV-232-WFGS)	.....	1	317 1720	
(Low And Reverse) 63 Thru 65 10 (V8-287-WST-Note 7.125-8 Type 1) (V8-287-WOD-WCGS-Note 7.125-8 Type 1): 64-65 10-80 (OHV-232-WST) (OHV-232-WOD-WCGS)	.....	1	317 1333	
(Low And Reverse) 63 Thru 65 10-80 (V8-287-WCGS-Note 7.125-8 Type 2)	.....	1	317 9729	
(Low And Reverse) 63 Thru 65 10-80 (V8-327-WCGS-Note 7.125-8 Type 2)	.....	1	318 0741	
(Low And Reverse) 64-65 10 (V8-327-WST-Note 7.125-8 Type 1) (V8-327-WOD-WCGS-Note 7.125-8 Type 1): 62 Thru 65 80 (V8-WST-Note 7.125-8 Type 1)(V8-WOD-WCGS-Note 7.125-8 Type 1)	.....	1	316 4143	
(Low And Reverse) 64-65 10 (V8-327-WFGS): 63 Thru 65 80 (V8-WFGS)	.....	1	316 7280	
(Low And Reverse) ***65 10 (RHD-OHV-232-WST)(RHD-OHV-232-WOD)***	.....	1	317 7365	
(Low And Reverse) 61 80 (WST)(WOD)	.....	1	315 5833	

ATTACHING PARTS
Lever To Transmission

WASHER, Plain.....	61 Thru 65 01-10-20-80 (WST)(WOD).....	17.814	2	G103340	NA
WASHER, Lock.....	61 Thru 65 01-10-20-80 (WST)(WOD).....	17.820	2	G108579	NA
NUT, Hexagon.....	61 Thru 65 01-10-20-80 (WST)(WOD).....	17.406	2	G118614	NA
NUT, Jam.....	62 01-10-80 (WST)(WOD).....	17.410	2	G124925	NA

7.135 TRUNNION, Gear Shift Rod

60 Thru 63 01 (WAT): 63 Thru 65 10-80 (LHD-V8-WAT-WCGS)	.....	1	315 1188	
60 Thru 62 01-10-20-80 (WST-2 Req.)(WOD-2 Req.): 63 01-80 (WST-WCGS-2 Req.)(WOD-WCGS-2 Req.): 63 10 (Six-LHD-WAT-1 Req.): 64 10 (LHD-OHV-196-WAT-1 Req.-Note 7.125-4 Type 1): 63-64 10 (V8-LHD-WAT-1 Req.): 64 10 (V8-327-WST-WCGS-2 Req.) (V8-327-WOD-WCGS): 64 80 (WST-WCGS-2 Req.)(WOD-WCGS-2 Req.)	.....	AR	315 5096	
64-65 01 (WCGS): 63-64 10 (WST-WCGS-2 Req.)(WOD-WCGS-6 Cyl.-2 Req.): 64 10 (LHD-OHV-196-WAT-2 Req.-Note 7.125-4 Type 2): 64 10 (OHVC-232-1 Req.): ***63 10-80 (RHD-WAT-1 Req.):*** 65 10-80 (LHD-Six-WCGS)	.....	AR	316 7840	
63 10 (V8-WFGS-Note 7.125-3 Type 1)	.....	2	317 1297	
63 10 (V8-WFGS-Note 7.125-3 Type 2): 64-65 10 (V8-287-WOD-WFGS): 65 10-80 (OHV-232-WOD-WFGS)	.....	1	317 2125	#
63 Thru 64 10 (V8-287-WST-WCGS)(V8-287-WOD-WCGS): 65 10-80 (V8-WST-WCGS)(V8-WOD-WCGD)	.....	2	317 1186	

ATTACHING PARTS
Trunnion To Transmission Lever

WASHER, Plain.....	60 Thru 62 01-10-20-80 (WST-2 Req.)(WOD-2 Req.): 60 Thru 64 01 (WAT-1 Req.): 63-64 01-80 (WST-WCGS-4 Req.)(WOD-WCGS-4 Req.): 64 10 (LHD-OHV-196-WAT-1 Req.-Note 7.125-4 Type 2): 63 80 (WAT-1 Req.): 63 10 (V8-WAT-1 Req.): 64 10 (V8-327-WFGS-2 Req.): 64 10 (OHV-232-2 Req.): 65 01-10-80 (LHD-1 Req.-25/64 I.D.) ..... ***(Replaces 800 0161)***	17.814	AR	400 1100	
WASHER, Plain.....	64 10 (LHD-OHV-196-WAT-Note 7.125-4 Type 2): 64 10 (OHV-232-1 Req.): 65 01-10 (LHD-2 Req.) (LHD-2 Req.)	7.125	1	316 7670	

Copyright 1963 American Motors Corp.

GROUP NO. — DESCRIPTION — YEAR and MODEL		PRIMARY GROUP NO.	PER CAR	PART NO.	CODE
WASHER, Plain.....	65 10-50-80 (LHD-V8-13/32 I.D.)	17.814	1	400 1161	
PIN, Cotter.....	60 Thru 62 01-10-20-80 (WST-2 Req.)(WOD-2 Req.): 60 Thru 63 01 (WAT-1 Req.): 63 01-10 (WST-WCGS-2 Req.)(WOD-WCGS-2 Req.): 64 10 (LHD-OHV-196-WAT-1 Req. -Note 7.125-4 Type 2): 63 80 (WAT-1 Req.): 63 10 (V8-WAT-1 Req.): 64 10 (V8-327-WOD-WFGS-2 Req.): 64 10 (OHV-232-1 Req.): 65 01-10-80 (LHD-2 Req.) (LHD-2 Req.)	17.460	AR	G103373	NA
CLIP.....	63 10 (V8-WST-2 Req. -Note 7.125-3 Type 1) (V8-WOD-2 Req. -Note 7.125-3 Type 1).....	5.160	2	316 7609	
Trunnion To Rod Adjusting					
NUT, Jam.....	60 Thru 62 01-10-20-80 (WST-2 Req.(WOD-2 Req.): 60 Thru 62 01 (WAT-1 Req.): 63 01-80 (WST-WCGS-2 Req.): 63-64 01-10-80 (LHD-WAT-1 Req.): 63-64 10 (WST-WCGS-4 Req.): ***63 10-80 (RHD-WAT-2 Req.):*** 63 10 (V8-WST-4 Req.)(V8-WOD-4 Req.)(V8-WAT-1 Req.).....	17.410	AR	G124925	NA
Trunnion To Operating Shaft Lever					
CLIP.....	63-64 10 (WST-WCGS-2 Req.)(WOD-WCGS-2 Req.): 64 10 (LHD-OHV-196-WAT-1 Req. -Note 7.125-4 Type 2): 64 10 (OHV-232-1 Req.): ***63-64 10-80 (RHD-WAT-1 Req.):*** 65 01-10-80 (Six-WST-WCGS-2 Req.)(Six-WOD-WCGS-2 Req.): 65 10 (V8-287-WST-WCGS-2 Req.)(V8-287-WOD-WCGS-2 Req.).....	5.160	AR	316 7609	
NUT, Jam.....	64 10 (LHD-OHV-196-WAT-Note 7.125-4 Type 2): 64 10 (OHV-232): 65 01-10-80 (Six-WST-WCGS-4 Req.)(Six-WOD-WCGS-4 Req): 65 10 (V8-287-WST-WCGS-4 Req.)(V8-287-WOD-WCGS-4 Req.): 65 10-80 (V8-327-WST-WCGS-1 Req.)(V8-327-WOD-WCGS-1 Req.)	17.410	2	G124925	NA
Trunnion To Bellcrank					
WASHER, Plain.....	63 10 (Six-LHD-WAT): 64 10 (LHD-OHV-196-WAT-Note 7.125-4 Type 1)	17.814	1	G446212	NA
WASHER, Spring	63 10 (Six-LHD-WAT): 64 10 (LHD-OHV-196-WAT-Note 7.125-4 Type 1)	7.125	1	316 7670	
PIN, Cotter.....	63 10 (Six-LHD-WAT): 64 10 (LHD-OHV-196-WAT-Note 7.125-4 Type 1)	17.460	1	G103373	NA
NUT, Jam.....	63 10 (Six-LHD-WAT): 64 10 (LHD-OHV-196-WAT-Note 7.125-4 Type 1)	17.410	1	G124925	NA

7.200 BUTTON, Transmission Gear Shifting Selector

"Neutral Start" 60 10-20-80 (WAT)...(Incl. Gray Cap)	.....	1	344 0485
"Neutral Start" 61 10-20-80 (WAT)...(Incl. Gray Cap)	.....	1	345 5201
"Neutral Start" 61-62 01-10-20-80 (WAT)...(Incl. Black Cap).....	.....	1	346 6087
"Reverse" 60 10-20-80 (WAT)...(Incl. Gray Cap)	.....	1	344 0486
"Reverse" 61 10-20-80 (WAT)...(Incl. Gray Cap).....	.....	1	345 5202
"Reverse" 61-62 10-20-80 (WAT)...(Incl. Black Cap)	.....	1	346 6088
"Low" 60 10-20-80 (WAT)...(Incl. Gray Cap).....	.....	1	344 0487
"Low" 61 10-20-80 (WAT)...(Incl. Gray Cap).....	.....	1	345 5203
"Low" 61-62 10-20-80 (WAT)...(Incl. Black Cap)	.....	1	346 6089
"D-1" 60 10-20-80 (WAT)...(Incl. Gray Cap).....	.....	1	344 0488
"D-1" 61 10-20-80 (WAT)...(Incl. Gray Cap).....	.....	1	345 5204
"D-1" 61-62 10-20-80 (WAT)...(Incl. Black Cap).....	.....	1	346 6090
"D-2" 60 10-20-80 (WAT)...(Incl. Gray Cap).....	.....	1	344 0489
"D-2" 61 10-20-80 (WAT)...(Incl. Gray Cap).....	.....	1	345 5205
"D-2" 61-62 10-20-80 (WAT)...(Incl. Black Cap).....	.....	1	346 6091

Copyright 1963 American Motors Corp.

GROUP NO. — DESCRIPTION — YEAR and MODEL	PRIMARY GROUP NO.	PER CAR	PART NO.	CODE
CAP, Transmission Gear Shifting Selector Button				
"Neutral Start And Reverse" 60 10-20-80 (WAT-Gray)	.....	2	320 2298	
"Neutral Start And Reverse" 61 10-20-80 (WAT-Gray)	.....	2	320 2700	
"Neutral Start And Reverse" 61-62 10-20-80 (WAT-Black)	.....	2	320 2909	
"Low, D-1 And D-2" 60 10-20-80 (WAT-Gray)	.....	3	320 2297	
"Low, D-1 And D-2" 61 10-20-80 (WAT-Gray)	.....	3	320 2701	
"Low, D-1 And D-2" 61-62 10-20-80 (WAT-Black)	.....	3	320 2910	
7.205 HANDLE, Transmission Brake Lever				
60 10-20-80 (LHD-WAT-With Tapped Holes) ***(Ref. Pr. List)***	.....	1	320 2302	
60 10-80 (RHD-WAT-With Tapped Holes) ***(Ref. Pr. List)***	.....	1	320 2303	
60 Thru 62 10-20-80 (LHD-WAT-Less Tapped Holes)	.....	1	344 0743	
60 Thru 62 10-20-80 (RHD-WAT-Less Tapped Holes)	.....	1	344 0742	
ATTACHING PARTS Handle To Park Slide				
SCREW, Tapping..... 60 Thru 62 10-20-80 (WAT) ***(Replaces 800 0095)***	17.671	2	G456766	NA
SCREW, Machine..... 60 10-20-80 (WAT)	17.616	2	G187483	NA
NUT, Spring..... 60 Thru 62 10-20-80 (WAT)	17.426	2	G445445	
7.210 CONTROL, Transmission Gear Selector				
60 10-20-80 (LHD-WAT): 61 10-20-80 (LHD-WAT-Note 7.210-1 Type 1)... (Incl. Back-Up Light Switch)	.....	1	344 0483	
60 10-80 (RHD-WAT)...(Incl. Back-Up Light Switch)	.....	1	344 0482	
61 10-20-80 (LHD-WAT-Note 7.210-1 Type 2)...(Incl. Back-Up Light Switch)	.....	1	320 3006	
61 10-80 (RHD-WAT)...(Incl. Back-Up Light Switch)	.....	1	346 5421	
62 10-80 (RHD-WAT)...(Incl. Back-Up Light Switch)	.....	1	347 6722	
62 10-80 (LHD-WAT) ***(Replaces 347 0807)***	.....	1	320 3687	
ATTACHING PARTS Control To Instrument Panel				
SCREW, Machine..... 60-61 10-20-80 (WAT-3 Req.): 62 10-80 (WAT-4 Req.)	17.610	AR	G451271	NA
SLIDE, Transmission Gear Selector Control Park				
60 Thru 62 10-20-80 (WAT)	.....	1	320 1974	
SHAFT, Transmission Gear Selector Control Lock				
60 Thru 62 10-20-80 (WAT)	.....	1	320 1568	
SPRING, Transmission Gear Selector Control Lock Shaft Torsion				
60-61 10-20-80 (WAT)	.....	2	320 1569	
62 10-80 (WAT)	.....	2	320 3594	
SPRING, Transmission Gear Selector Control Push Button Arm Compression				
60 Thru 62 10-20-80 (WAT)	.....	5	320 1570	
BUSHING, Transmission Gear Selector Control (Nylon)				
60 Thru 62 10-20-80 (WAT)	.....	4	320 2199	

NOTE 7.210-1: Two Types of Transmission Controls were used on 61 10-20-80 (LHD-WAT). They can be identified as follows:
Type 1: Starter Switch Wire's are attached to the Starter Relay and to the Junction Block.
Type 2: Starter Switch Wire's are attached to the Starter Relay and to the Neutral Safety Switch.

Copyright 1963 American Motors Corp.

GROUP NO. — DESCRIPTION — YEAR and MODEL	PRIMARY GROUP NO.	PER CAR	PART NO.	CODE
CAP, Transmission Gear Shifting Selector Button				
"Neutral Start And Reverse" 60 10-20-80 (WAT-Gray)	.....	2	320 2298	
"Neutral Start And Reverse" 61 10-20-80 (WAT-Gray)	.....	2	320 2700	
"Neutral Start And Reverse" 61-62 10-20-80 (WAT-Black)	.....	2	320 2909	
"Low, D-1 And D-2" 60 10-20-80 (WAT-Gray)	.....	3	320 2297	
"Low, D-1 And D-2" 61 10-20-80 (WAT-Gray)	.....	3	320 2701	
"Low, D-1 And D-2" 61-62 10-20-80 (WAT-Black)	.....	3	320 2910	
7.205 HANDLE, Transmission Brake Lever				
60 10-20-80 (LHD-WAT-With Tapped Holes) ***(Ref. Pr. List)***	.....	1	320 2302	
60 10-80 (RHD-WAT-With Tapped Holes) ***(Ref. Pr. List)***	.....	1	320 2303	
60 Thru 62 10-20-80 (LHD-WAT-Less Tapped Holes)	.....	1	344 0743	
60 Thru 62 10-20-80 (RHD-WAT-Less Tapped Holes)	.....	1	344 0742	
ATTACHING PARTS Handle To Park Slide				
SCREW, Tapping..... 60 Thru 62 10-20-80 (WAT) ***(Replaces 800 0095)***	17.671	2	G456766	NA
SCREW, Machine..... 60 10-20-80 (WAT)	17.616	2	G187483	NA
NUT, Spring..... 60 Thru 62 10-20-80 (WAT)	17.426	2	G445445	
7.210 CONTROL, Transmission Gear Selector				
60 10-20-80 (LHD-WAT): 61 10-20-80 (LHD-WAT-Note 7.210-1 Type 1)... (Incl. Back-Up Light Switch)	.....	1	344 0483	
60 10-80 (RHD-WAT)...(Incl. Back-Up Light Switch)	.....	1	344 0482	
61 10-20-80 (LHD-WAT-Note 7.210-1 Type 2)...(Incl. Back-Up Light Switch)	.....	1	320 3006	
61 10-80 (RHD-WAT)...(Incl. Back-Up Light Switch)	.....	1	346 5421	
62 10-80 (RHD-WAT)...(Incl. Back-Up Light Switch)	.....	1	347 6722	
62 10-80 (LHD-WAT) ***(Replaces 347 0807)***	.....	1	320 3687	
ATTACHING PARTS Control To Instrument Panel				
SCREW, Machine..... 60-61 10-20-80 (WAT-3 Req.): 62 10-80 (WAT-4 Req.)	17.610	AR	G451271	NA
SLIDE, Transmission Gear Selector Control Park				
60 Thru 62 10-20-80 (WAT)	.....	1	320 1974	
SHAFT, Transmission Gear Selector Control Lock				
60 Thru 62 10-20-80 (WAT)	.....	1	320 1568	
SPRING, Transmission Gear Selector Control Lock Shaft Torsion				
60-61 10-20-80 (WAT)	.....	2	320 1569	
62 10-80 (WAT)	.....	2	320 3594	
SPRING, Transmission Gear Selector Control Push Button Arm Compression				
60 Thru 62 10-20-80 (WAT)	.....	5	320 1570	
BUSHING, Transmission Gear Selector Control (Nylon)				
60 Thru 62 10-20-80 (WAT)	.....	4	320 2199	

NOTE 7.210-1: Two Types of Transmission Controls were used on 61 10-20-80 (LHD-WAT). They can be identified as follows:
Type 1: Starter Switch Wire's are attached to the Starter Relay and to the Junction Block.
Type 2: Starter Switch Wire's are attached to the Starter Relay and to the Neutral Safety Switch.

Copyright 1963 American Motors Corp.

GROUP NO. — DESCRIPTION — YEAR and MODEL	PRIMARY GROUP NO.	PER CAR	PART NO.	CODE
7.215 ESCUTCHEON, Gear Selector Push Button				
60 10-20-80 (LHD-WAT)	.....	1	344 0491	
60 10-20-80 (RHD-WAT)	.....	1	344 0490	
61 10-20-80 (LHD-WAT-Note 7.215-1)	.....	1	344 7582	
61 10-20-80 (LHD-WAT-Note 7.125-2): 62 10-80 (LHD-WAT)	.....	1	346 6099	
61-62 10-80 (RHD-WAT-Bright Finish)	.....	1	346 6098	
PAD, Gear Selector Push Button Control Escutcheon				
60 Thru 62 10-20-80 (WAT) ***(Discontinued)***	.....	1	344 0494	
PLATE, Gear Selector Control Push Button Backing				
60 Thru 62 10-20-80 (WAT)	.....	1	344 0495	
ATTACHING PARTS				
Pad And Plate To Escutcheon				
NUT, Spring ..... 60-61 10-20-80 (WAT)	17.421	2	G173137	
NUT, Stamped ..... 62 10-80 (WAT)	.....	2	400 0459	
Escutcheon To Instrument Panel				
SCREW, Tapping ..... 60-61 10-20-80 (WAT)	17.655	3	G168499	NA
SCREW, Tapping ..... 62 10-80 (WAT)	17.655	3	G168496	NA
7.230 CABLE, Transmission Gear Selector				
64-65 01 (RHD-WAT-WCGS)	.....	1	317 4561	
60-61 10-80 (RHD-WAT): 62 80 (RHD-WAT)	.....	1	342 9745	
60 Thru 62 10-20-80 (LHD-WAT) ***(Replaces 342 6382)***	.....	1	347 7447	
62 10 (RHD-WAT)	.....	1	347 5198	
64-65 10 (RHD-WAT-WCGS)	.....	1	317 4236	
(Second And High) ***64-65 01 (RHD-WST-WCGS)(RHD-WOD-WCGS): 64 10 (RHD-OHV-196-WST-WCGS)(RHD-OHV-196-WOD-WCGS)***	.....	1	317 4396	
(Low And Reverse) ***64-65 01 (RHD-WST-WCGS)(RHD-WOD-WCGS): 64 10 RHD-OHV-196-WST-WCGS)(RHD-OHV-196-WOD-WCGS)***	.....	1	317 4562	
(Low And Reverse) ***65 10 (RHD-OHV-232-WST-WCGS)(RHD-OHV-232-WOD-WCGS)***	.....	1	317 6606	
(Second And High) ***65 10 (RHD-OHV-232-WST-WCGS)(RHD-OHV-232-WOD-WCGS)***	.....	1	317 6607	
ATTACHING PARTS				
Gear Selector Cable To Transmission Lever (On Transmission)				
PIN, Cotter ..... ***64-65 01-10 (RHD-WCGS)(RHD-WCGS)***	17.460	2	G103361	
PIN, Cotter ..... ***64 10 (V8-RHD-WAT)***	17.400	1	G137127	NA
BOLT, Hexagon ..... ***64 01-10 (RHD-WAT)***	17.038	1	G180024	NA
WASHER, Lock ..... ***64 01-10 (RHD-WAT)***	17.814	1	400 1089	
WASHER, Plain ..... ***64 01-10 (RHD-WAT)***	17.820	1	G103319	NA
NUT, Hexagon ..... ***64 01-10 (RHD-WAT)***	17.406	1	G120375	
NUT, Jam ..... ***64-65 01-10 (RHD-WCGS)(RHD-WCGS)***	17.410	2	G120613	
GUIDE, Transmission Gear Selector Cable				
60 Thru 62 80 (RHD-WAT)	.....	1	315 4602	
CLEVIS, Transmission Gear Selector Cable To Lever (On Transmission)				
64 01-10 (RHD-WST-WCGS)(RHD-WOD-WCGS)	.....	2	317 3543	
65 01 (RHD-WAT): 64-65 10 (RHD-WAT)	.....	1	317 4250	
PIN, Transmission Gear Selector Cable To Lever (On Transmission)				
64-65 01-10 (RHD-WST-WCGS)(RHD-WOD-WCGS)	17.474	2	G138077	NA
65 01 (RHD-WAT): 64-65 10 (RHD-WAT)	.....	1	317 4249	

NOTE 7.215-1: Used prior to Body No. 109252.
NOTE 7.215-2: Used beg. with Body No. 109252.

Copyright 1963 American Motors Corp.

GROUP NO. — DESCRIPTION — YEAR and MODEL		PRIMARY GROUP NO.	PER CAR	PART NO.	CODE
SPACER, Transmission Gear Selector Cable To Lever (On Transmission)					
64 01 (RHD-WAT)		.....	1	317 4553	
64 10 (RHD-WAT)		.....	1	317 4238	
WASHER, Transmission Gear Selector Cable To Lever (On Transmission)					
64 01-10 (Six-RHD-WAT)		7.080	1	317 4239	
CLAMP, Transmission Gear Selector Cable To Bracket					
64-65 01-10 (RHD-WCGS)		.....	2	317 3579	
ATTACHING PARTS					
Clamp To Bracket					
WASHER, Lock	*64-65 01-10 (RHD-WCGS)*	17.820	4	G120214	NA
NUT, Hexagon	*64-65 01-10 (RHD-WCGS)*	17.406	4	G120368	
CLEVIS, Transmission Gear Selector Cable To Gear Shift Operating Lever					
64-65 01-10 (RHD-Six-WST-WCGS)(RHD-Six-WOD-WCGS)		.....	1	317 4250	
WASHER, Transmission Gear Selector Cable To Gear Shift Operating Lever					
64 01-10 (RHD-Six-WAT)		.....	1	317 4239	
PIN, Transmission Gear Selector Cable To Gear Shift Lever Clevis					
64-65 01-10 (RHD-Six-WST-WCGS)(RHD-Six-WOD-WCGS)		.....	1	317 4249	
ATTACHING PARTS					
Cable To Control					
NUT	60-61 10-20-80 (WAT)	26.032	1	343 5050	
NUT	62 10-80 (WAT)	.....	1	400 0401	
Cable To Bracket					
NUT, Jam	*64 01 (RHD-OHV-WCGS)(RHD-OHV-WCGS): 64 10 (RHD-OHV-196-WCGS)(RHD-OHV-196-WCGS): 65 10 (RHD-V8-WAT-WCGS)*	17.410	1	G120613	
NUT, Jam	60 Thru 62 10-20-80 (WAT)	17.410	1	G124920	NA
WASHER, Lock	60 Thru 62 10-20-80 (WAT)	17.822	1	G138485	NA
Cable To Gear Shift Operating Shaft Lever					
PIN, Cotter	*64 01 (RHD-OHV-WCGS)(RHD-OHV-WCGS): 64 10 (RHD-OHV-196-WCGS)(RHD-OHV-196-WCGS)*	17.460	1	G103361	NA
CLIP, Transmission Gear Selector Cable					
61-62 10-80 (RHD-WAT)		17.134	1	G105251	
64 10 (RHD-WAT)		8.320	1	313 5224	
65 01-10 (RHD-WST-WCGS)(RHD-WOD-WCGS)		6.631	1	314 9613	
7.235 CABLE, Transmission Brake					
60-61 10-20-80 (LHD-WAT): 62 80 (LHD-WAT)		.....	1	342 6381	
60-61 10-80 (RHD-WAT): 62 80 (RHD-WAT)		.....	1	342 9744	
62 10 (LHD-WAT)		.....	1	347 7446	
62 10 (RHD-WAT)		.....	1	347 5195	
ATTACHING PARTS					
Cable To Control					
NUT	60 Thru 62 10-20-80 (WAT) ***(Replaces 343 5050)***	26.032	1	400 0401	

Copyright 1963 American Motors Corp.

GROUP NO. — DESCRIPTION — YEAR and MODEL	PRIMARY GROUP NO.	PER CAR	PART NO.	CODE
Cable To Bracket				
NUT, Jam ..... 60 Thru 62 10-20-80 (WAT)	17.410	1	G124920	NA
WASHER, Lock ..... 60 Thru 62 10-20-80 (WAT)	17.822	1	G138485	NA
7.237 SEAL, Transmission Brake And Gear Selector Hole				
60 Thru 62 10-20-80 (WAT) ..... ***(Replaces 343 1223)***	27.038	3	400 0328	
7.240 BRACKET, Gear Selector Cable (Lower)				
60-61 10-20-80 (WAT)	.....	1	315 8701	
62 10 (WAT)	.....	1	316 3551	
62 80 (WAT)	.....	1	316 4780	
ATTACHING PARTS				
Bracket To Transmission				
BOLT, Hexagon ..... 62 10 (WAT)	17.038	2	G179812	NA
WASHER, Lock ..... 62 10 (WAT)	17.820	2	G120214	NA
BRACKET, Gear Selector Cable To Transmission Case				
64-65 01 (RHD-OHV-WST)	.....	1	317 3588	
64-65 01 (RHD-OHV-WOD)	.....	1	317 4295	
65 10 (RHD-WST-WCGS)(RHD-WOD-WCGS)	.....	1	317 6463	
64-65 01-10 (RHD-Six-WAT)	.....	1	317 4242	
64 10 (V8-RHD-WAT)	.....	1	317 4298	
(Upper) ***64-65 10 (V8-RHD-WAT)***	.....	1	317 4316	
(Lower) ***64-65 10 (V8-RHD-WAT)***	.....	1	317 4292	
ATTACHING PARTS				
Bracket To Case				
BOLT, Hexagon ..... ***64-65 01-10 (RHD-OHV-WST)***	17.038	1	G179861	NA
BOLT, Hexagon ..... ***64-65 01-10 (RHD-OHV-WOD)***	17.038	1	G179869	NA
BOLT, Hexagon ..... ***64 10 (RHD-WAT)***	17.626	1	400 0987	
BRACKET, Gear Selector Cable To Oil Pan				
64-65 10 (RHD-V8-WAT)	.....	1	317 4599	
BRACKET, Gear Selector Cable To Side Sill				
64 10 (RHD-OHV-196-WST)(RHD-OHV-196-WOD)	.....	1	352 9129	
BRACKET, Gear Selector Cable To Lever (On Transmission)				
64 01-10 (RHD-Six-WAT)	.....	1	317 4237	
BRACKET, Gear Selector Cable To Strut Rod				
64-65 10 (RHD-Six-WAT)	.....	1	317 4240	
BRACKET, Gear Selector Cable To Steering Column				
64-65 10 (RHD-V8-WAT)	.....	1	317 4326	
BRACKET, Gear Selector Cable To Crossmember				
64-65 01 (RHD-WST-"U" Shape)(RHD-WOD-"U" Shape)	.....	1	317 4546	
64-65 01 (RHD-WOD-"L" Shape)	.....	1	317 4558	
CLAMP, Transmission Gear Selector Cable To Wheelhouse Panel				
64-65 01-10 (RHD-WST-WCGS)(RHD-WOD-WCGS)	.....	1	317 4545	
ATTACHING PARTS				
Clamp To Wheelhouse				
WASHER, Lock ..... ***64 01-10 (Six-RHD-WST)(Six-RHD-WOD)***	17.820	2	G120368	
NUT, Hexagon ..... ***64 01-10 (Six-RHD-WST)(Six-RHD-WOD)***	.....	2	G120214	NA

Copyright 1963 American Motors Corp.

GROUP NO. — DESCRIPTION — YEAR and MODEL	PRIMARY GROUP NO.	PER CAR	PART NO.	CODE
ATTACHING PARTS				
Gear Selector Cable Bracket To Steering Column				
BOLT, Hexagon ..... *64 01-10 (RHD-WAT)*	17.038	1	G180024	
STUD..... *64-65 10 (V8-RHD-WAT-1/4")*	.....	1	317 4408	
STUD..... *64 10 (V8-RHD-WAT-5/16")*	.....	1	317 4333	
PIN, Cotter ..... *64-65 10 (V8-RHD-WAT)*	.....	1	G103362	NA
NUT, Hexagon..... *64-65 10 (V8-RHD-WAT)*	17.406	1	G120375	
NUT, Hexagon..... *64 10 (V8-RHD-WAT)*	17.406	1	G120368	
WASHER, Plain..... *64-65 10 (V8-RHD-WAT-13/32" x 11/16")*	17.814	1	400 1102	
WASHER, Plain..... *64 10 (V8-RHD-WAT-11/32" x 1")*	27.208	1	400 0883	
WASHER, Spring..... *64-65 10 (V8-RHD-WAT)*	7.125	1	312 8654	
WASHER, Lock..... *64-65 10 (V8-RHD-WAT-1/4")*	17.820	1	G103319	
WASHER, Lock..... *64 10 (V8-RHD-WAT-5/16")*	17.820	1	G120214	
7.245 BOOT, Gear Selector Lever				
60-61 10-20-80 (WAT): 62 80 (WAT)	.....	1	315 4029	
62 10 (WAT).....	.....	1	316 3552	
CLIP, Gear Selector Lever Boot				
60-61 10-20-80 (WAT): 62 80 (WAT)	.....	2	315 4734	
62 10 (WAT).....	.....	2	316 3548	
7.250 BOOT, Transmission Brake Cable				
60 Thru 62 10-20-80 (WAT).....	8.192	1	313 0356	
7.255 TRUNNION, Gear Selector Cable				
60 Thru 62 10-20-80.....	.....	2	315 4030	
ATTACHING PARTS				
Trunnion To Transmission Lever				
SCREW..... 60 Thru 62 10-20-80 (WAT).....	.....	2	315 4031	
WASHER, Lock..... 62 10-20-80 (WAT).....	17.824	2	G120423	NA
7.535 LAMP KIT, Gear Selector Dial				
63 10-80 (WAT-Note 7.536-1 Type 2)...(Incl. 1-3170868, 1-3170864, 1-3170865, 1-3451933, 1-3204523).....	.....	1	320 4524	
LAMP, Gear Selector Dial				
64 01 (WAT)	.....	1	320 4903	
SOCKET, Gear Selector Dial Light				
60 01 (WAT).....	.....	1	343 6064	
65 01 (WAT-WCGS)	.....	1	320 5863	
60 Thru 62 10-20-80 (WAT).....	.....	1	344 5846	
63 10-80 (WAT-Note 7.536-1 Type 2): 64 10-80 (WAT-LAW): *65 10 (RHD-WAT-WCGS)*	.....	1	317 0869	
64-65 10-80 (WAT-WCGS-WAW)	.....	1	317 2951	
65 01 (OHV-232-WAT-WFGS): ...(Incl. Wire): 64-65 10-80 (V8-WAT-WFGS)...(Incl. Wire)	.....	1	317 4486	
65 10-80 (LHD-WAT-WCGS-LAW)	.....	1	320 5864	

Copyright 1963 American Motors Corp.

GROUP NO. — DESCRIPTION — YEAR and MODEL	PRIMARY GROUP NO.	PER CAR	PART NO.	CODE
ATTACHING PARTS				
Socket To Control				
WASHER, Lock ..... 62 10-80 (WAT)	17.820	2	G131096	NA#
NUT, Hexagon ..... 61-62 10-20-80 (WAT)	17.412	2	G271169	
Socket To Cover				
SCREW, Machine ..... 64-65 10-80 (WAT-WCGS-WAW)	17.598	1	G273228	NA
BRACKET, Gear Selector Dial Lamp To Instrument Panel				
65 10-80	.....	1	351 6806	
WIRE, Gear Selector Dial Light				
63 10-80 (WAT-Note 7.536-1 Type 2): 64 10-80 (WAT-WCGS-LAW)	.....	1	320 4523	
64 10-80 (WAT-WCGS-LAW): ***65 10 (RHD-WAT-WCGS)***	.....	1	320 5204	#
SUPPORT, Gear Selector Dial Light				
60 01 (WAT)	.....	1	313 8299	
SHIELD, Gear Selector Dial Light				
62 10-80 (WAT)	.....	1	346 2507	
63 10-80 (WAT-Note 7.536-1 Type 2): 64 10-80 (WAT-WCGS-LAW): ***65 10 (RHD-WAT-WCGS)***	.....	1	317 0865	
64 10-80 (V8-WAT-WFGS)	6.380	1	320 5138	
BULB, Gear Selector Dial Light				
(GE 1893) 60 01-10-20-80 (WAT): 64 10-80 (V8-WAT-WFGS) ..... ***(Replaces G456985)***	3.215	1	345 1933	
61 Thru 63 10-20-80 (WAT-Note 7.536-1 Type 2): 64-65 01-10-80 (WAT-WCGS-LAW)	3.215	1	320 4552	
(GE 1816) 65 01 (OHV-232-WAT-WFGS): 64-65 10-80 (V8-WAT-WFGS)	3.215	1	G454626	
64-65 10-80 (WAT-WCGS-WAW)	3.215	1	G9415969	
HOOD, Gear Selector Dial Light				
65 01 (WAT-WCGS)	.....	1	320 5862	
65 01 (OHV-232-WAT-WFGS): 64 10-80 (V8-WAT-WFGS): 65 10-80 (LHD-WAT-WFGS-LAW) ..... ***(Replaces 317 4485)***	.....	1	317 6431	
65 10-80 (LHD-WAT-WCGS-LAW)	.....	1	320 5865	
ATTACHING PARTS				
Hood To Console				
SCREW, Tapping ..... 65 01-10-80 (LHD-WAT-WFGS)	17.660	1	G161790	NA
7.536 POINTER, Gear Selector				
60 01 (WAT)	.....	1	313 7355	
65 01 (WAT) ..... ***(Discontinued)***	.....	1	317 0509	
63-64 10-80 (WAT-WCGS) ..... ***(Replaces 316 7236)***	.....	1	317 0864	
64 10-80 (V8-WAT-WFGS)	.....	1	317 2598	
65 10-80 (WAT-WFGS)	.....	1	317 6434	
65 10-80 (LHD-WAT-WCGS-LAW)	.....	1	317 5812	#
65 10 (RHD-WAT-WCGS)	.....	1	317 0864	#
ATTACHING PARTS				
Pointer To Lever Housing				
SCREW, Machine ..... 63-64 10-80 (WAT-WCGS): ***65 10 (RHD-WAT-WCGS)*** ..	17.598	1	G273876	NA#

NOTE 7.536-1: Two Types of Gear Selector Pointers and Dials were installed on 63 10-80 (WAT) Series. They are identified as follows:
Type 1: The Pointer and Dial is used without a Dial Light.
Type 2: The Pointer and Dial is used with a Dial Light.

Copyright 1963 American Motors Corp.

GROUP NO. — DESCRIPTION — YEAR and MODEL	PRIMARY GROUP NO.	PER CAR	PART NO.	CODE
7.537 DIAL, Gear Selector Pointer				
60 01 (WAT)	.....	1	315 4780	
61 01 (WAT)	.....	1	316 1058	
62-63 01 (WAT)	.....	1	316 3790	
64-65 01 (WAT-WCGS)	.....	1	317 1569	
63 10-80 (WAT-Note 7.536-1 Type 1) ***(Ref. Pr. List)***	.....	1	316 7237	
63 10-80 (WAT-Note 7.536-1 Type 2)...(Incl. Seal): 64 10-80 (WAT-WCGS-LAW): ***65 10 (RHD-WAT-WCGS)***	.....	1	317 0868	
64-65 10-80 (WAT-WCGS-WAW)	.....	1	317 2953	
64 10-80 (V8-WAT-WFGS)	.....	1	317 2597	
65 10-80 (WAT-WFGS)	.....	1	317 6433	
65 10 (550-LHD-WAT-WCGS-LAW)(Except Marlin)	.....	1	353 0451	
65 10 (660-770-LHD-WAT-WCGS-LAW): 65 80 (LHD-WAT-WCGS-LAW)	.....	1	351 6803	
ATTACHING PARTS Dial To Directional Signal Switch Housing				
CLIP, Tubular..... 65 10-80 (LHD-WAT-WCGS-LAW)	.....	2	400 1355	
SCREW, Machine..... 61 Thru 63 01 (WAT)	17.596	2	G193257	NA
SCREW, Machine..... 63-64 10-80 (WAT-WCGS-LAW)	17.598	2	G273876	NA
SCREW, Machine..... 64-65 01 (WAT-WCGS)	17.616	1	G271085	NA
SCREW, Machine..... 64-65 10-80 (WAT-WCGS-WAW)	17.598	2	G273228	NA
SEAL, Gear Selector Pointer Dial				
65 10-80 (LHD-WAT-WCGS-LAW-Lip Type) ***(Replaces 351 5419)***	.....	1	351 6353	
65 10-80 (LHD-WAT-WCGS-LAW-Flat Type) ***(Use 351 6353)***	.....	1	317 9783	
SHROUD, Gear Selector Pointer Dial				
60 01 (WAT)	.....	1	343 2298	
ATTACHING PARTS Shroud To Housing				
STUD..... 60 01 (WAT)	.....	2	313 8332	
WASHER, Rubber ..... 60 01 (WAT)	5.198	2	313 0998	
WASHER, Plain..... 60 01 (WAT) ***(Replaces 800 0139)***	23.039	1	400 0481	
WASHER, Lock ..... 60 01 (WAT)	17.820	2	G131096	NA
NUT, Hexagon..... 60 01 (WAT)	17.412	2	G103088	NA
COVER, Gear Selector Pointer Dial				
64 10-80 (V8-WAT-WFGS) ***(Use 317 6435)***	.....	1	317 2599	
65 10-80 (WAT-WFGS)	.....	1	317 6435	
ATTACHING PARTS Cover To Bezel				
NUT, Speed..... 64-65 10-80 (WAT-WFGS)	7.215	2	400 0459	
SEAL, Gear Selector Dial To Jacket Tube				
63 10-80 (WAT)(Note 7.537-1 Type 2): 64 10-80 (WAT-WCGS-LAW): ***65 10 (RHD-WAT-WCGS)***	.....	1	317 0867	
MASK, Gear Selector Dial				
65 10-80 (LHD-WAT-WCGS-LAW)	.....	1	351 6827	
PAD, Gear Selector Pointer Dial Retaining				
60 01 (WAT)	.....	1	313 8344	

Copyright 1963 American Motors Corp.

GROUP NO. — DESCRIPTION — YEAR and MODEL	PRIMARY GROUP NO.	PER CAR	PART NO.	CODE

Copyright 1963 American Motors Corp.

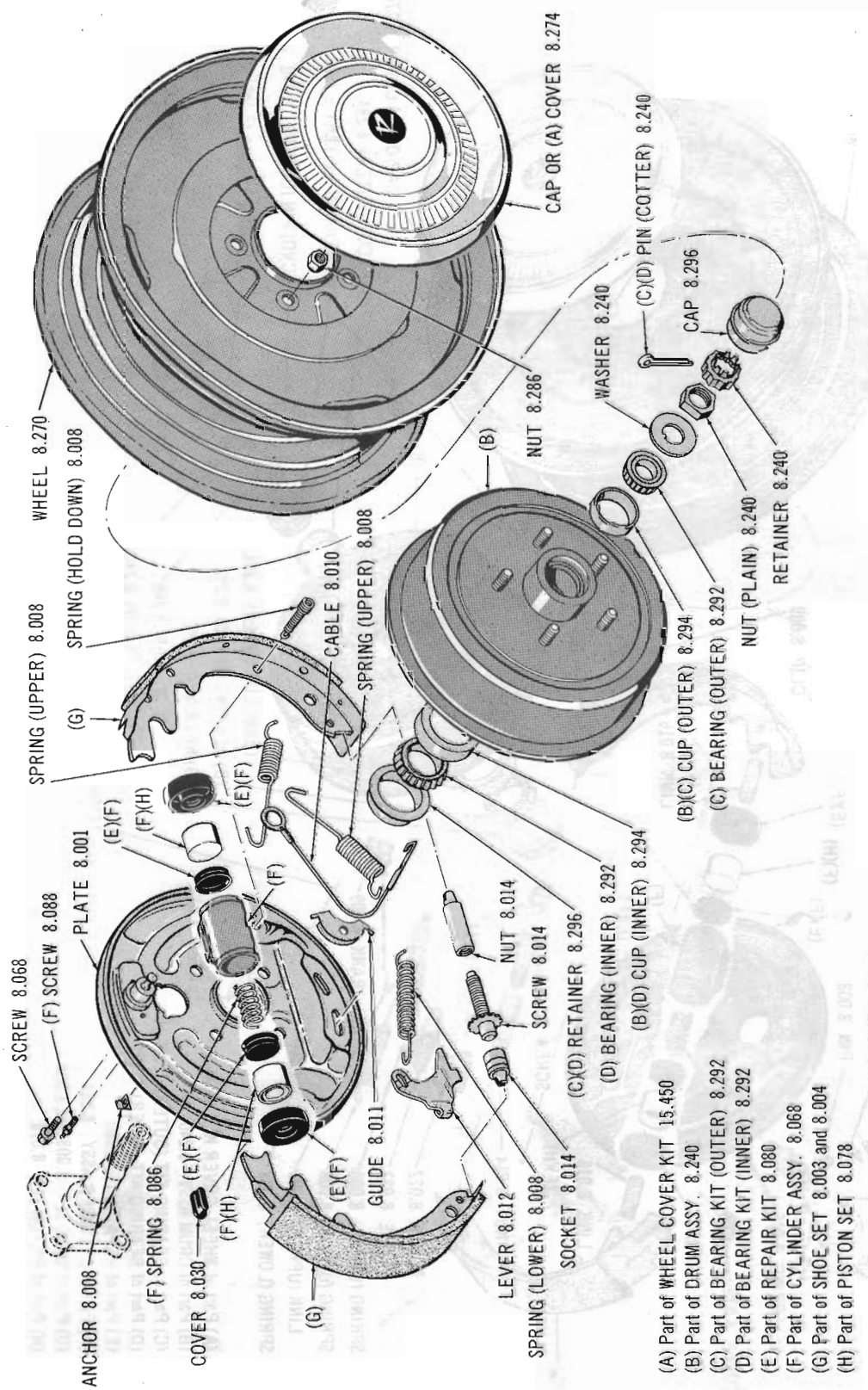

FRONT BRAKE AND WHEEL 64-65 01 (LHE)(OHV-196)(OHV-199)

Copyright 1963 American Motors Corp.

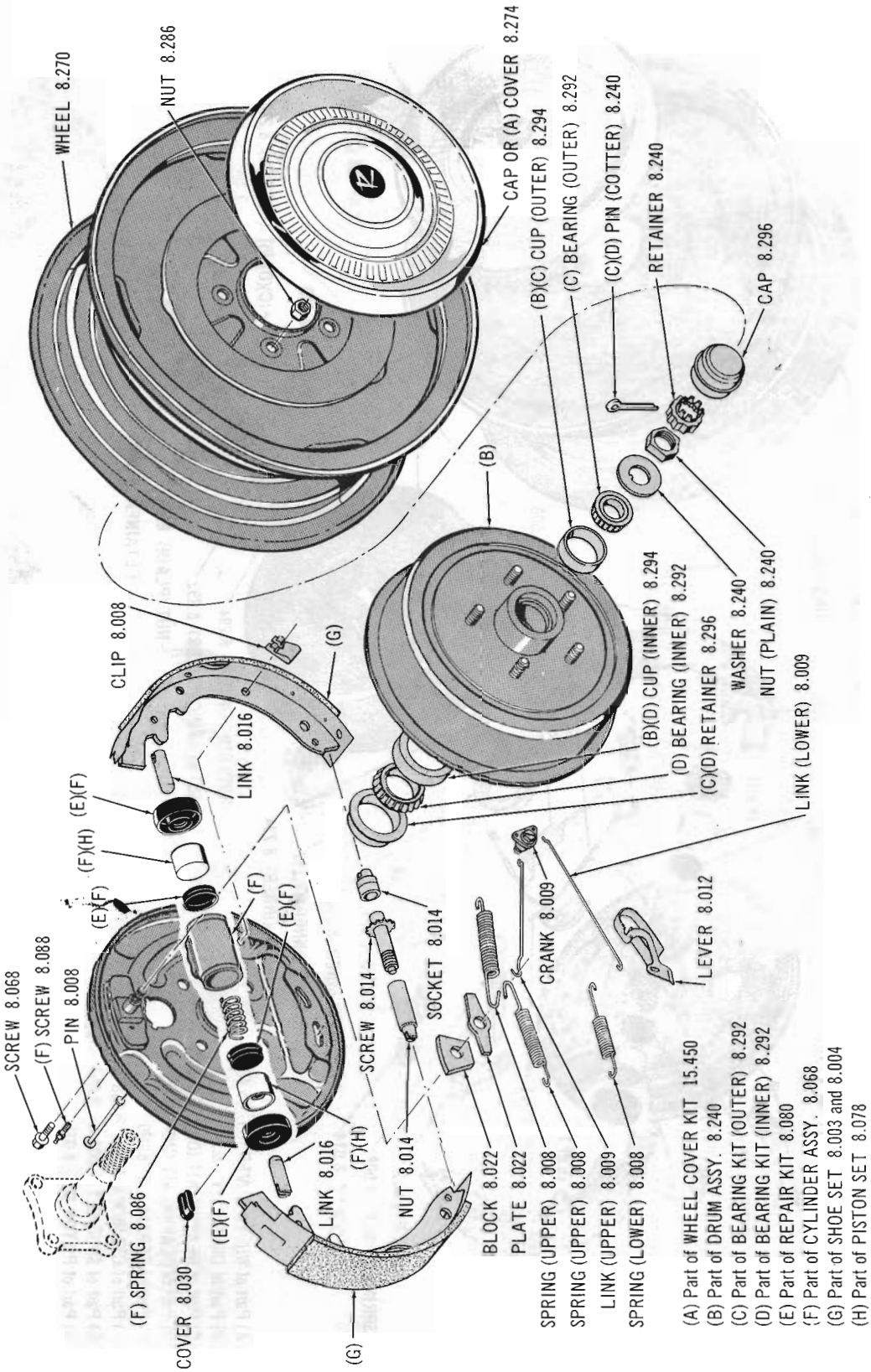

FRONT BRAKE AND WHEEL 65 01 (OHV-232): 64-65 10 (SIX-LDB)

Copyright 1963 American Motors Corp.

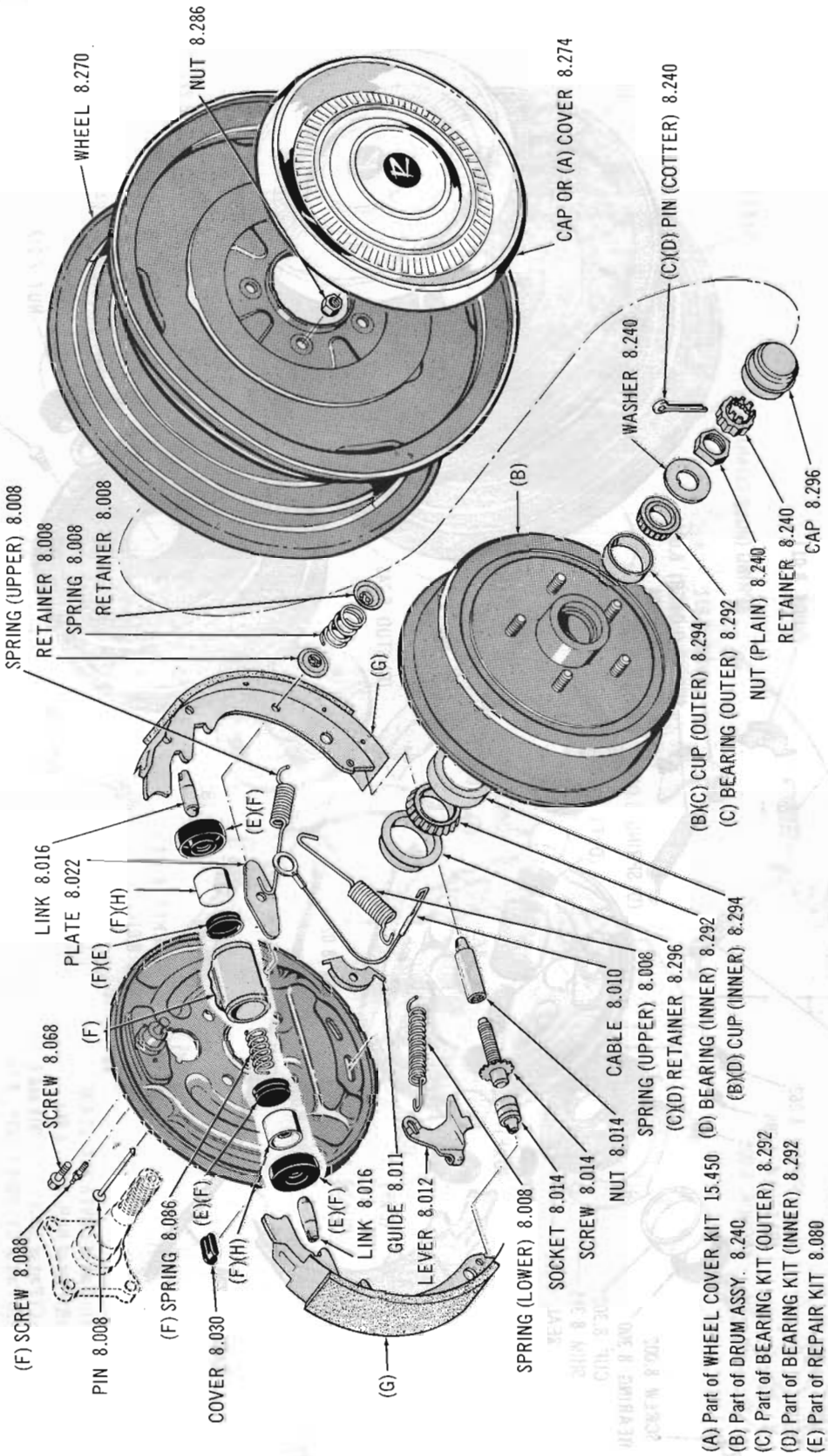

FRONT BRAKE AND WHEEL 63 thru Current 10 (V8-LDB): 63 thru Current 80 (LDB)

Copyright 1963 American Motors Corp.

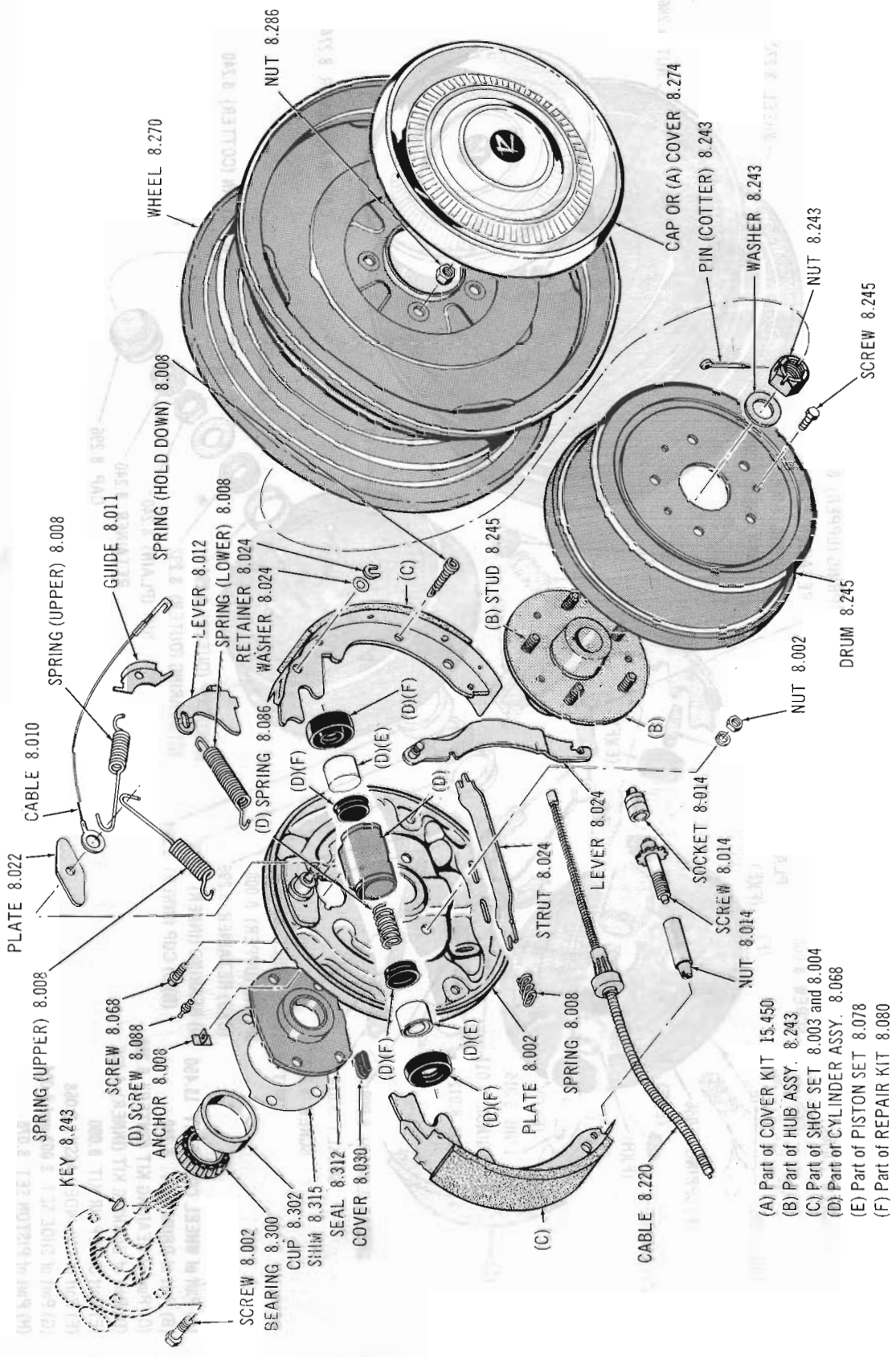

REAR BRAKE AND WHEEL 64-65 01 (LHE)(OHV-196)(OHV-199)

Copyright 1963 American Motors Corp.

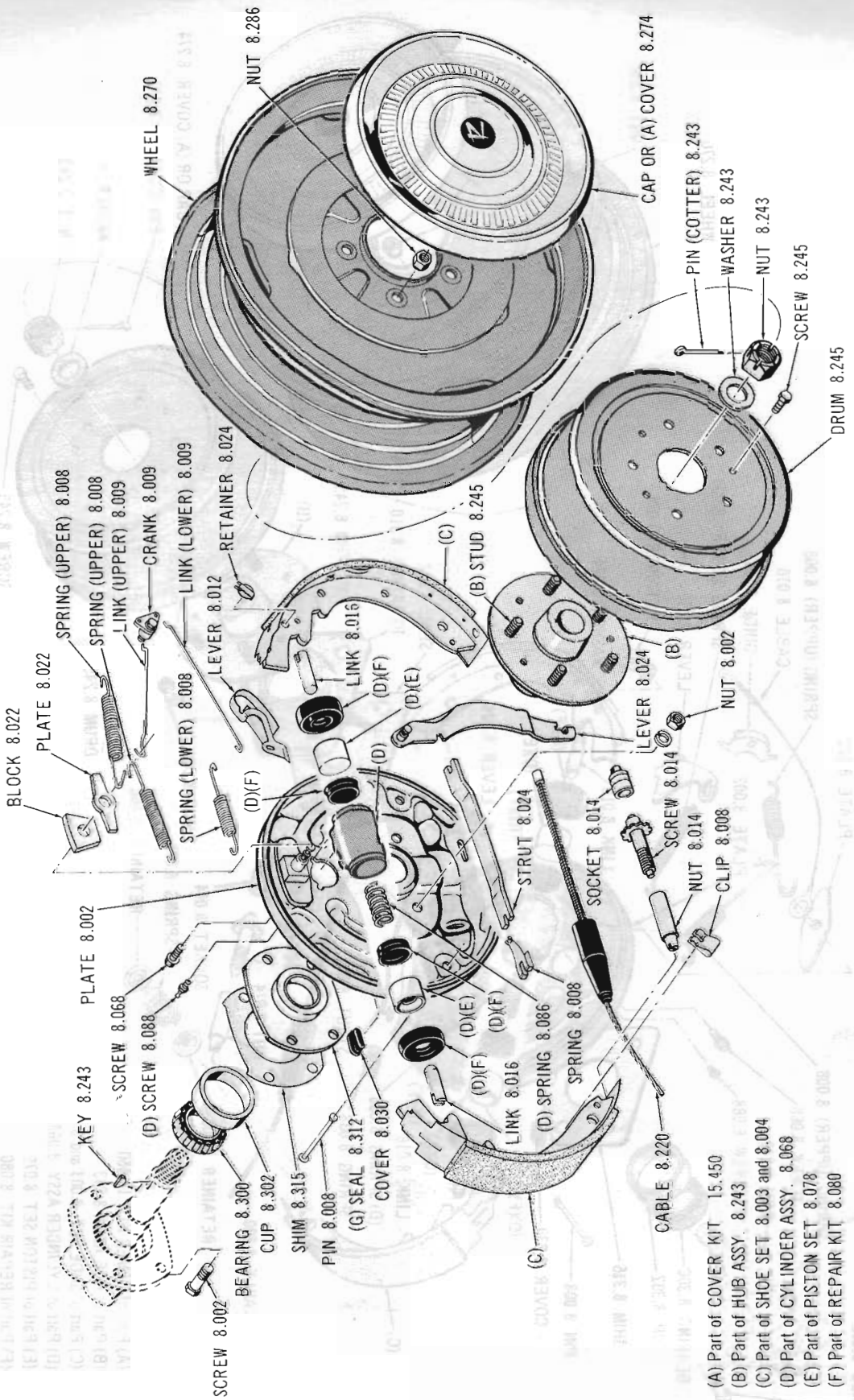

REAR BRAKE AND WHEEL 65 01 (OHV-232): 64-65 10 (SIX-LDB)

Copyright 1963 American Motors Corp.

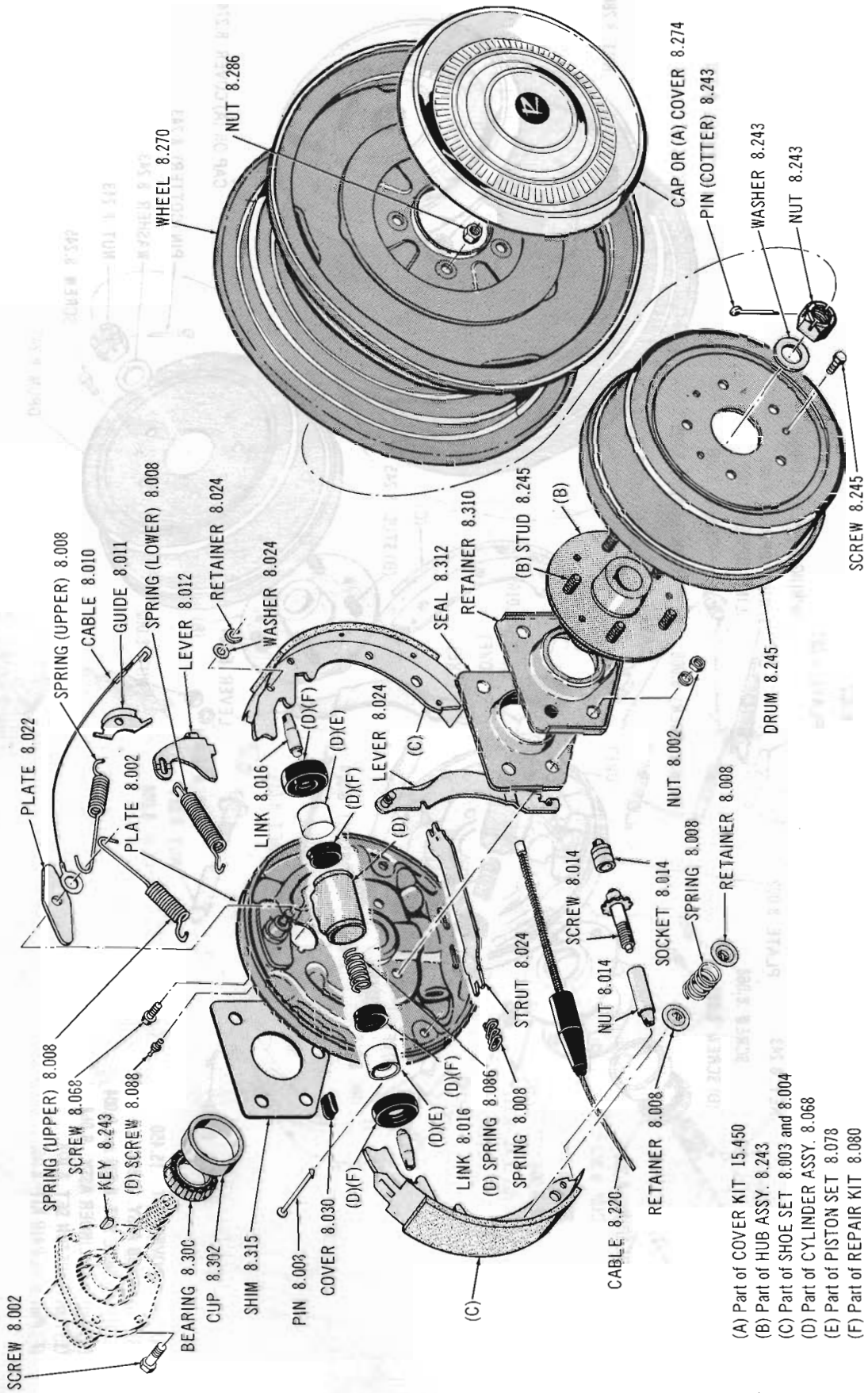

REAR BRAKE AND WHEEL 63 thru Current 10 (V8-LDB): 63 thru Current 80 (LDB)

Copyright 1963 American Motors Corp.

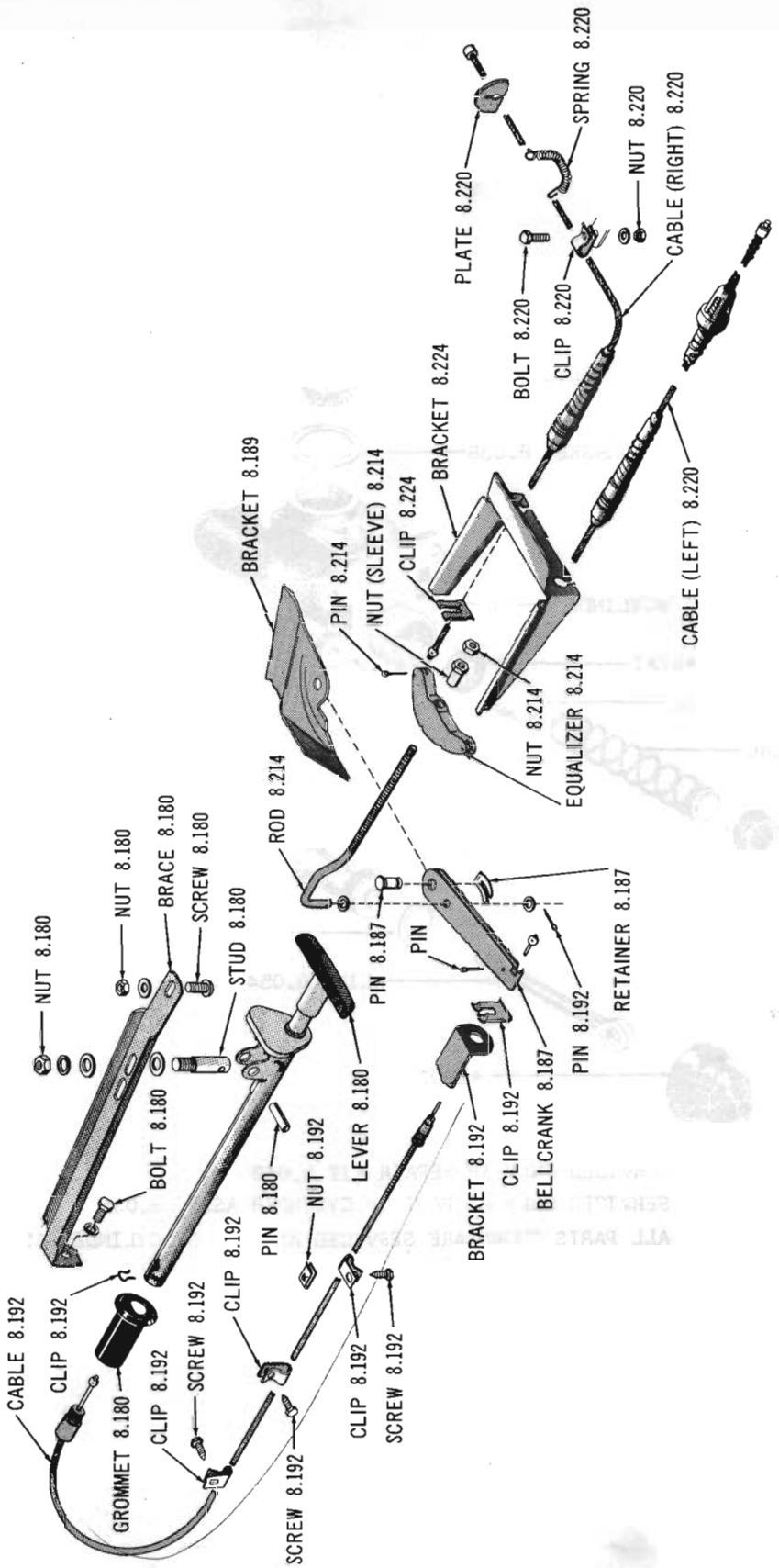

HAND OPERATED PARKING BRAKE 64-65 01

Copyright 1963 American Motors Corp.

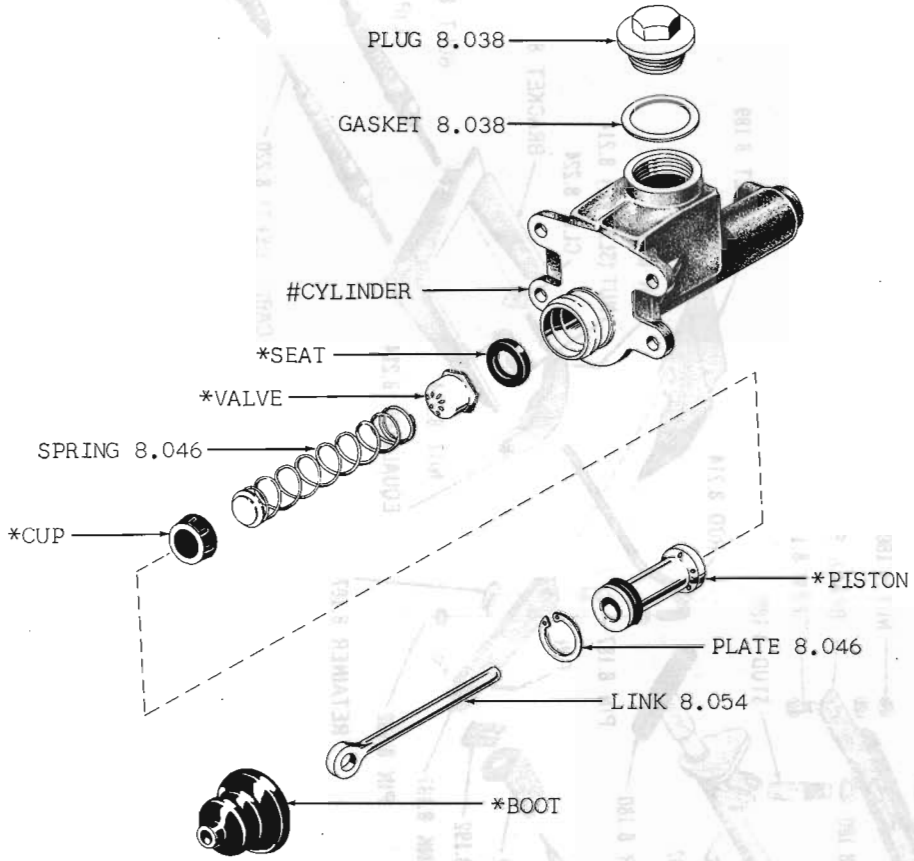

* SERVICED ONLY IN REPAIR KIT 8.048
\# SERVICED ONLY AS PART OF CYLINDER ASSY. 8.035
ALL PARTS SHOWN ARE SERVICED AS PART OF CYLINDER ASSY. 8.035

BRAKE MASTER CYLINDER 60-61 ALL MODELS (LPB)

Copyright 1963 American Motors Corp.

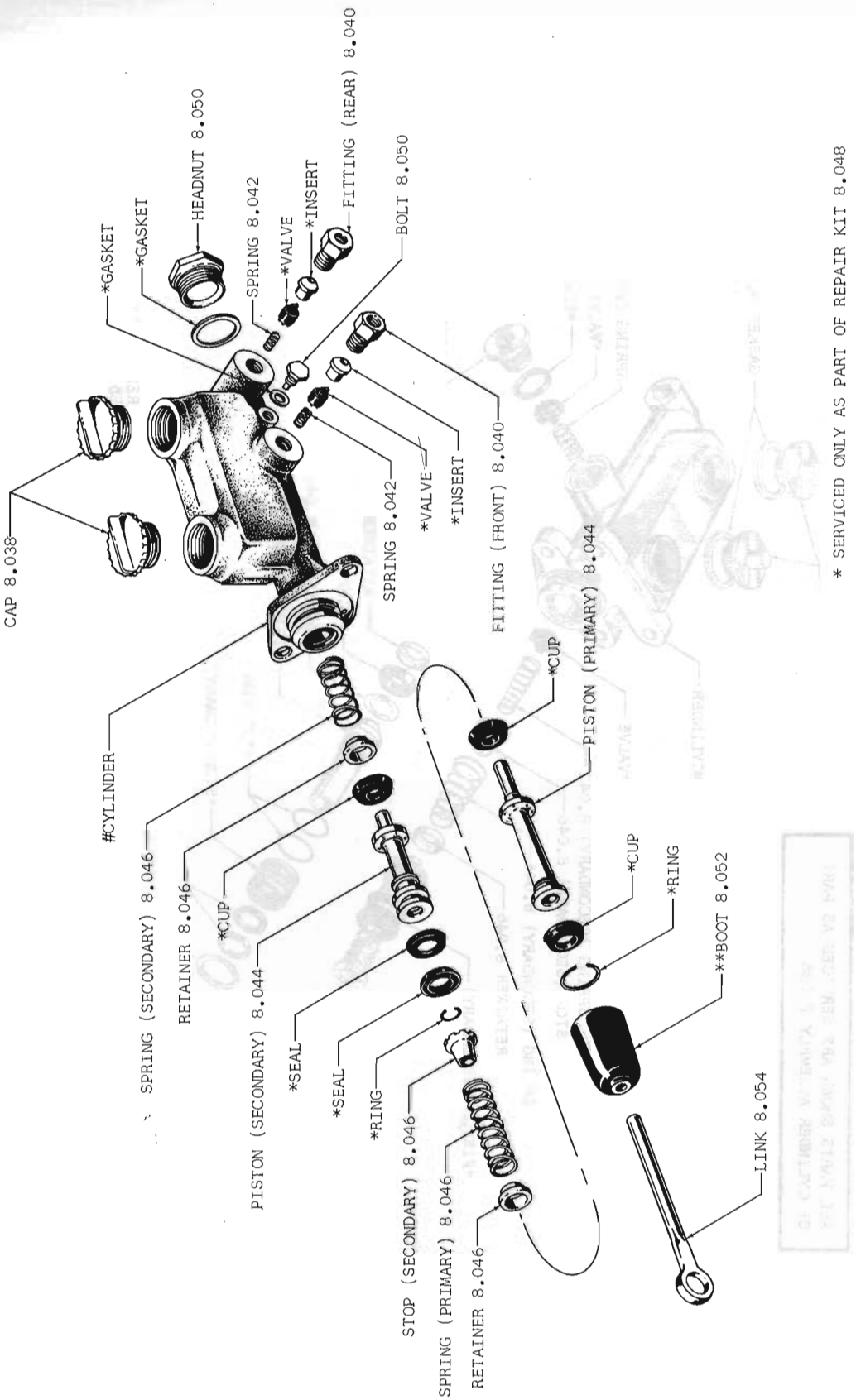

* SERVICED ONLY AS PART OF REPAIR KIT 8.048
** ALSO SERVICED AS PART OF REPAIR KIT 8.048
\# NOT SERVICED, IF REPLACEMENT IS NECESSARY ORDER CYLINDER ASSEMBLY 8.035

BRAKE MASTER CYLINDER (DELCO-MORAINE) 62 ALL MODELS (LHD-LPB)

Copyright 1963 American Motors Corp.

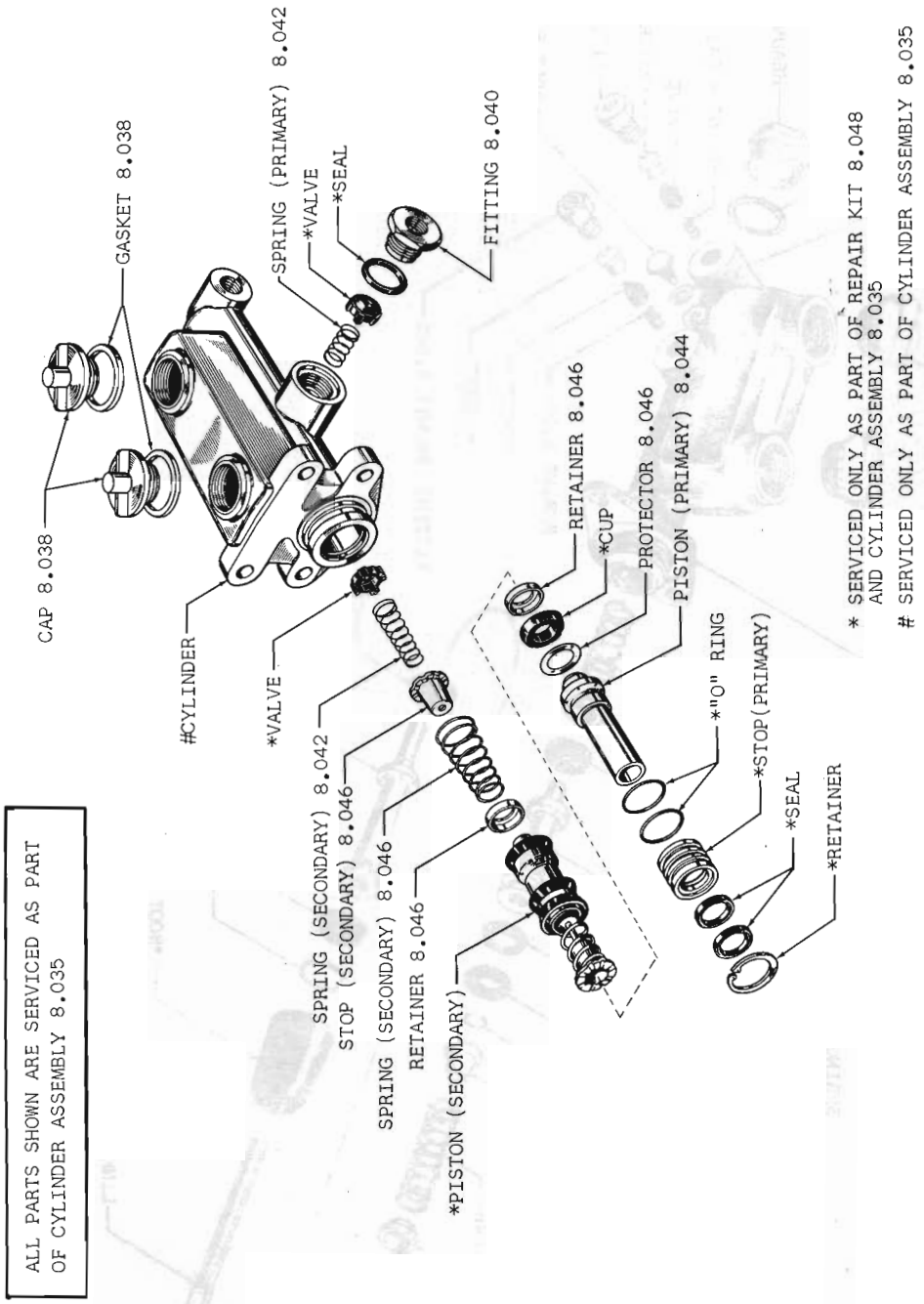

BRAKE MASTER CYLINDER (BENDIX) 62 ALL MODELS (LPB)

Copyright 1963 American Motors Corp.

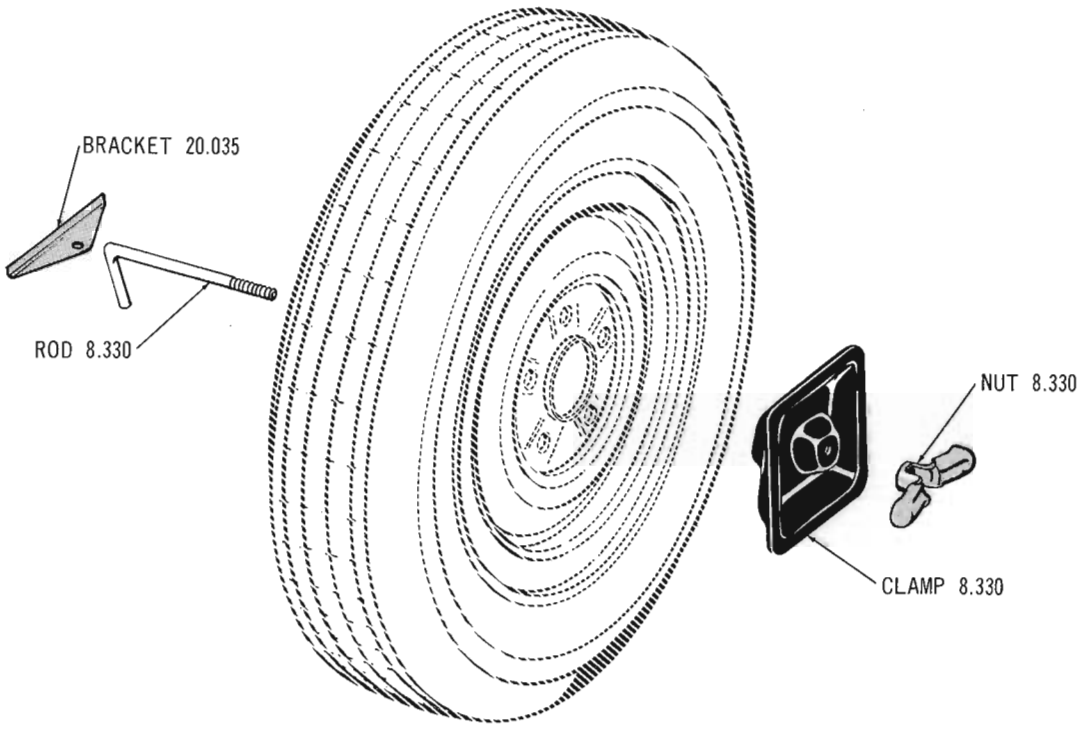

SPARE WHEEL MOUNTING 60 thru Current ALL MODELS

Copyright 1963 American Motors Corp.

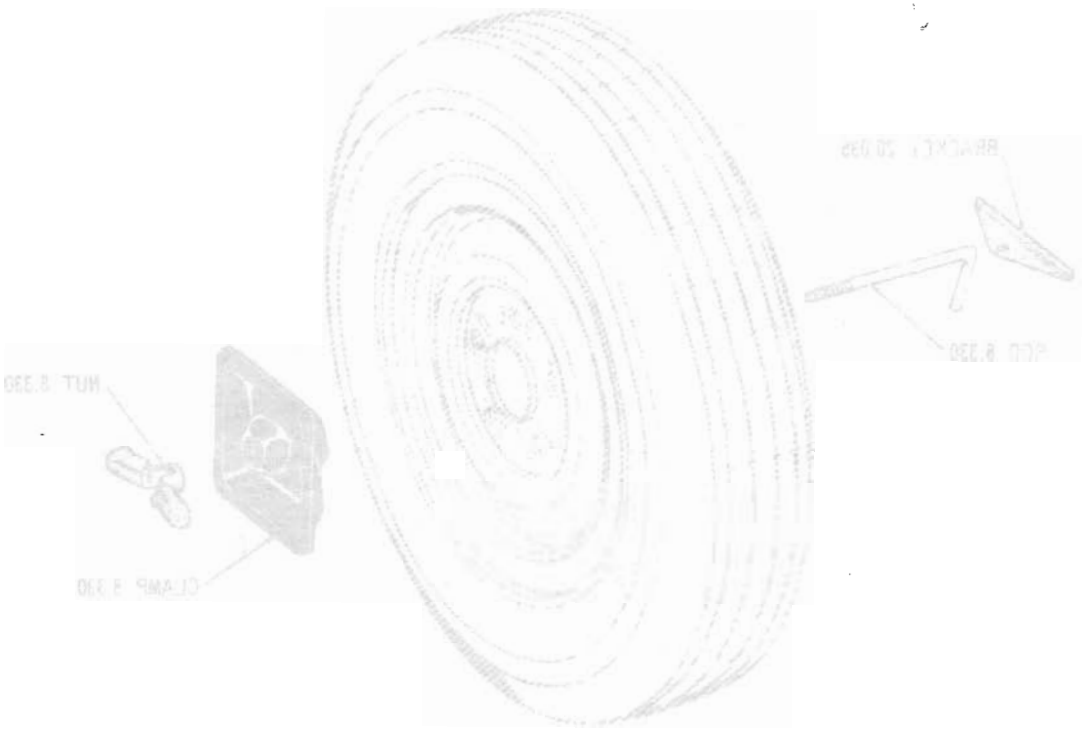

Copyright 1963 American Motors Corp.

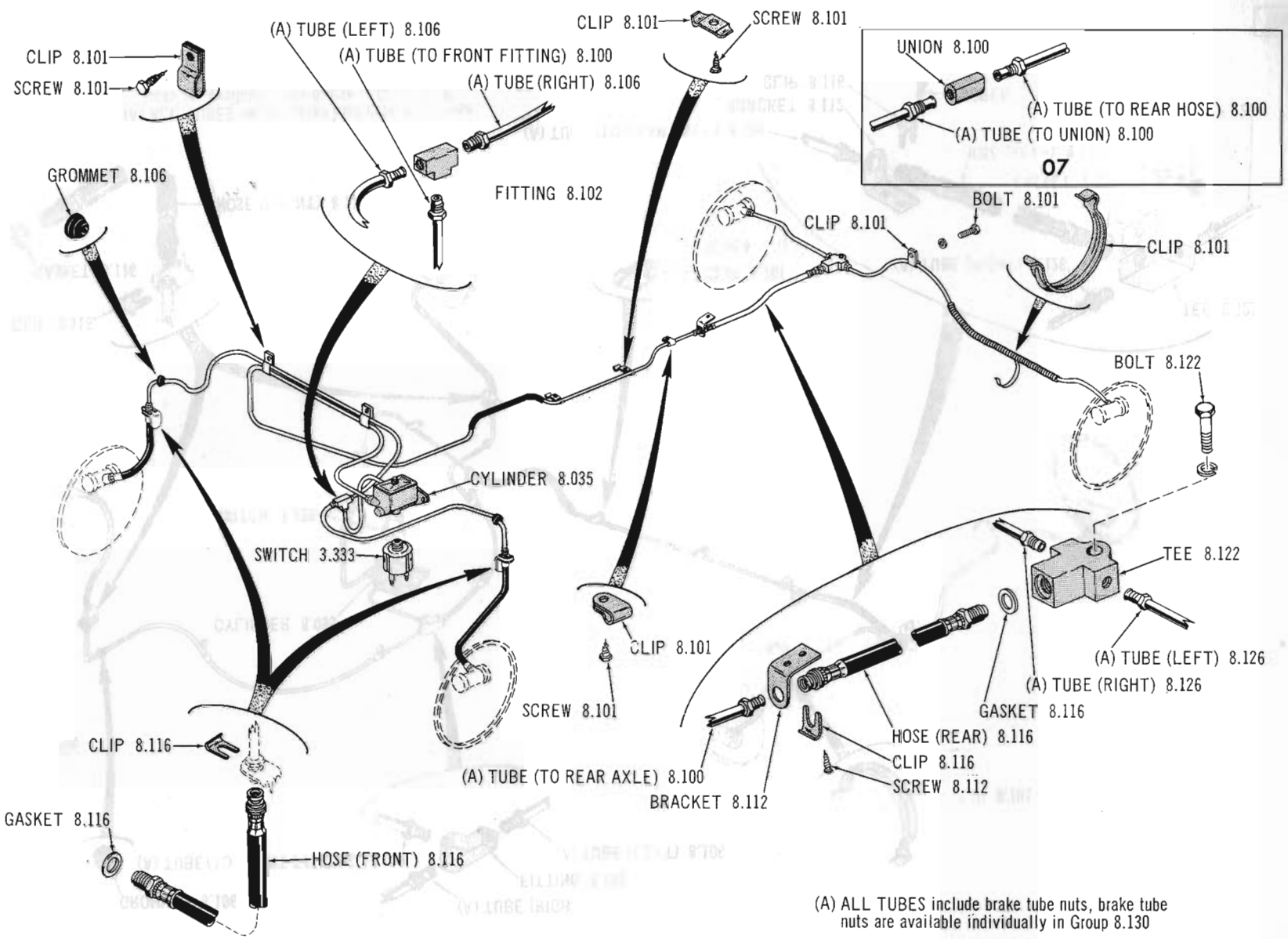

(A) ALL TUBES include brake tube nuts, brake tube nuts are available individually in Group 8.130

Copyright 1963 American Motors Corp.

Printed in U.S.A.

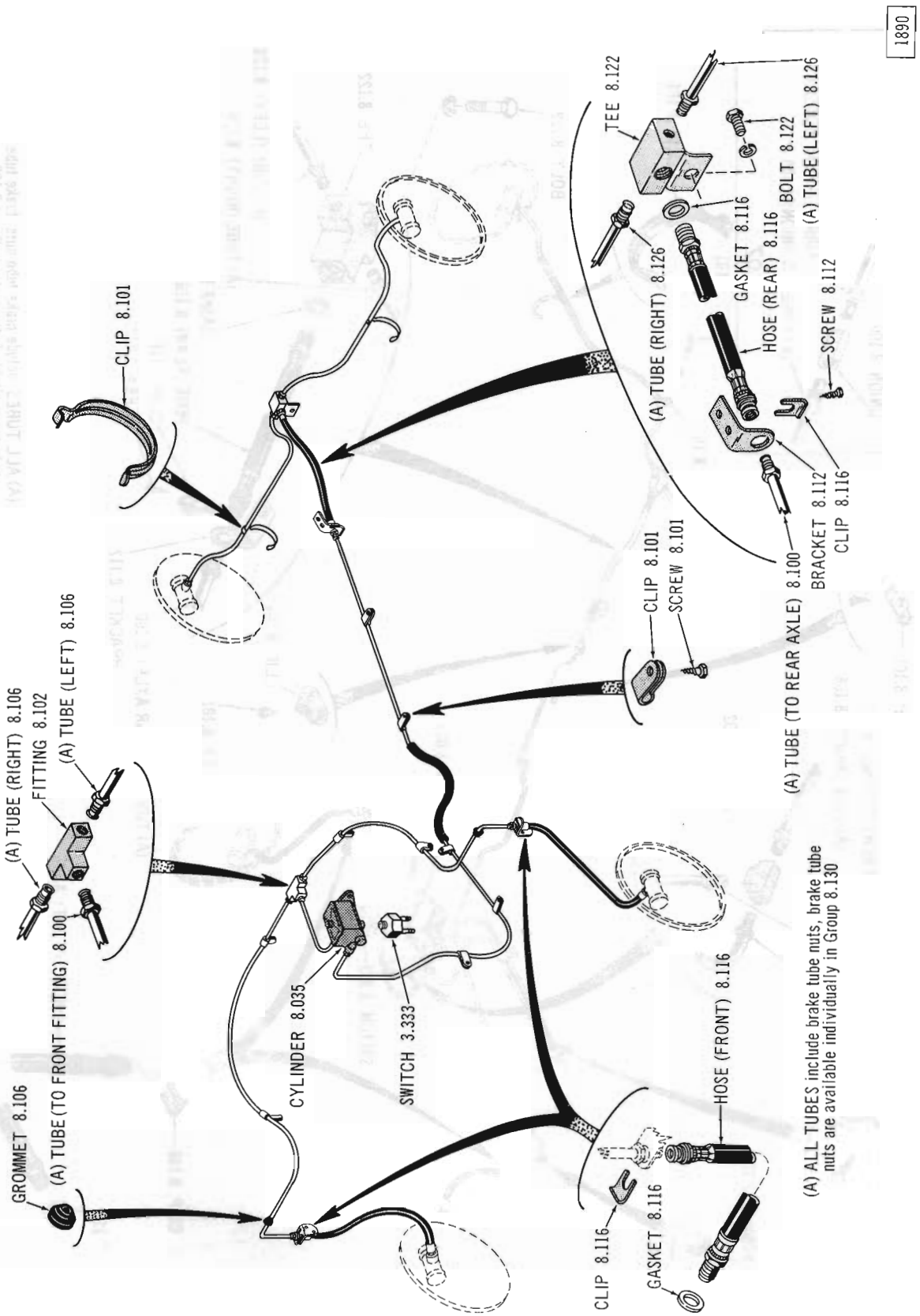

BRAKE LINES AND ATTACHING PARTS 63-64 10-80 (LDB)

Copyright 1963 American Motors Corp.

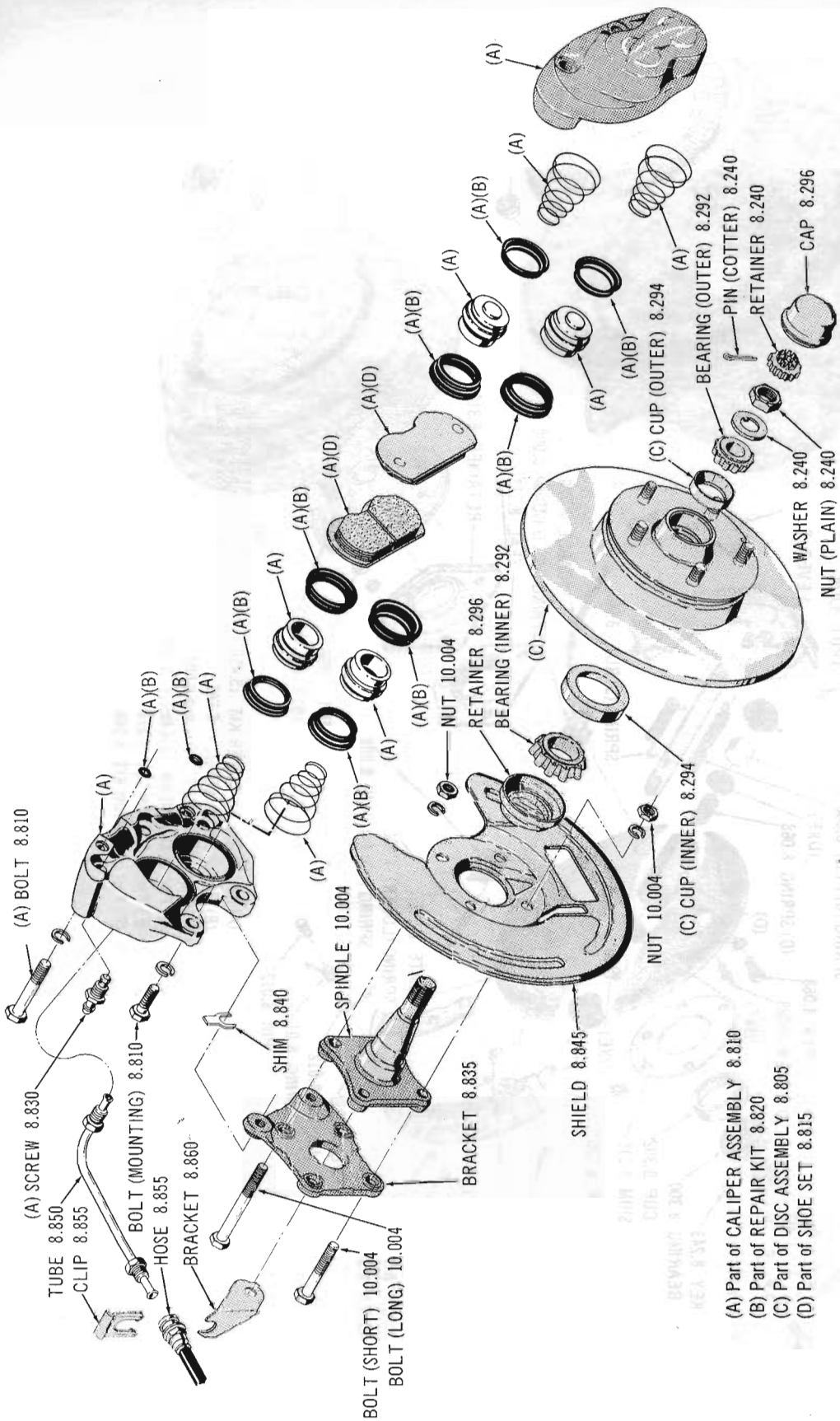

CALIPER DISC FRONT BRAKE 65 10-80 (WDB)

Copyright 1963 American Motors Corp.

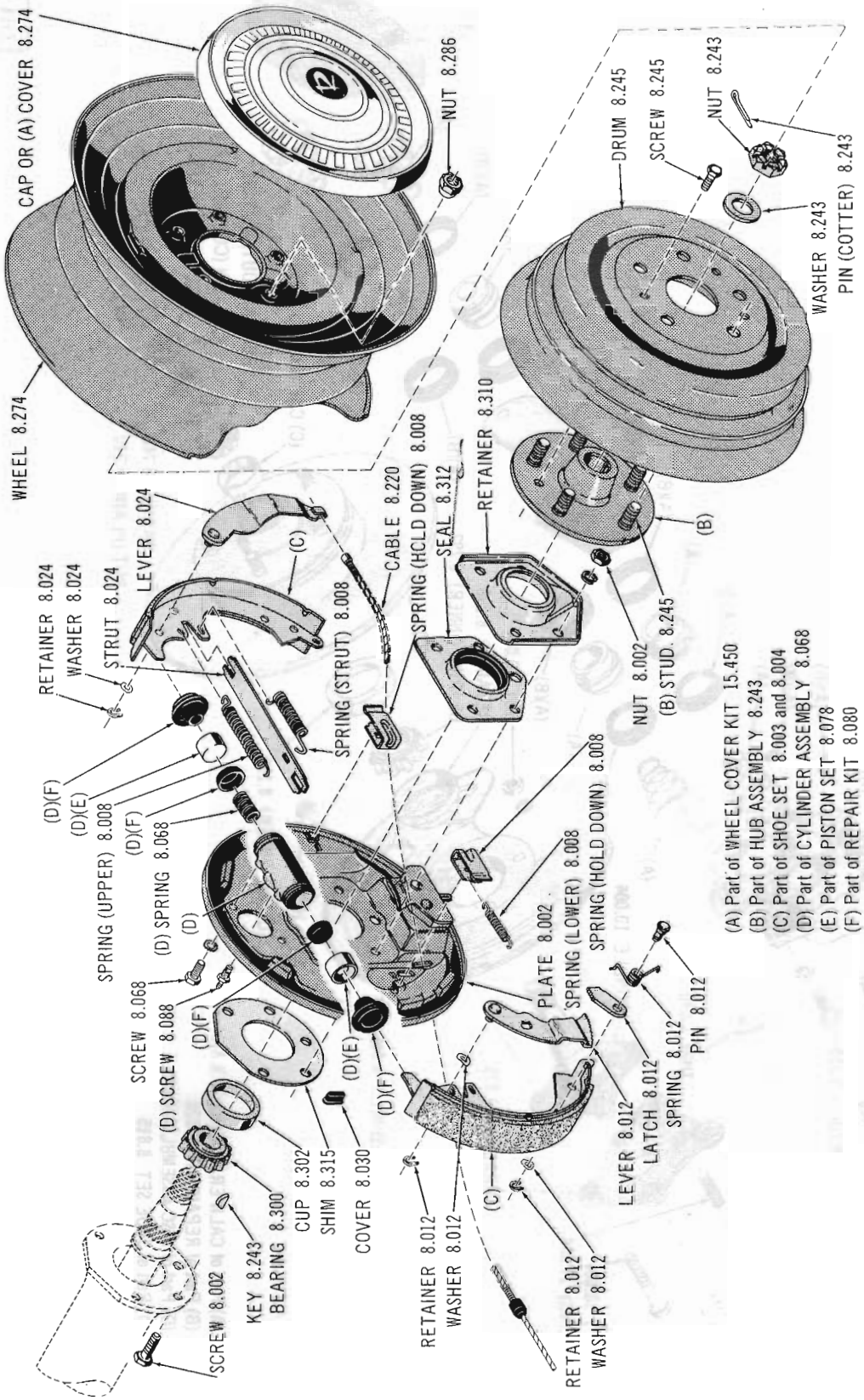

REAR BRAKE AND WHEEL 65 10-80 (WDB)

Copyright 1963 American Motors Corp.

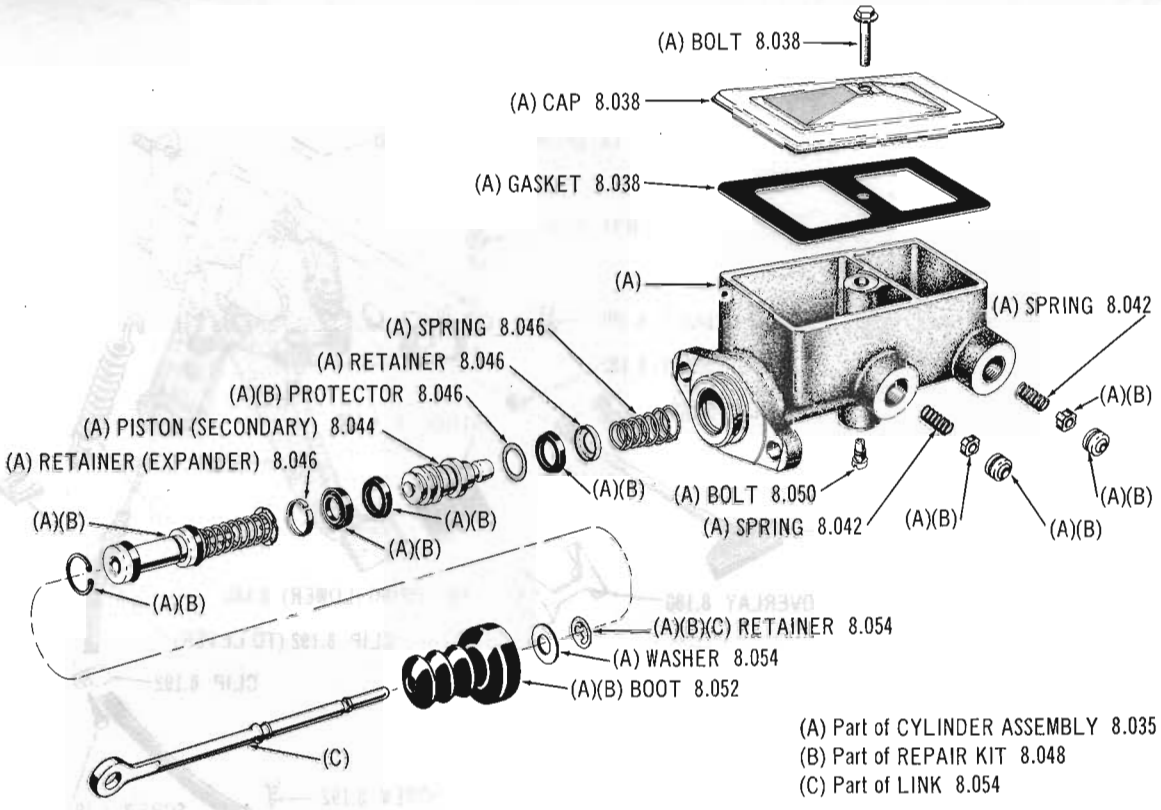

(A) Part of CYLINDER ASSEMBLY 8.035
(B) Part of REPAIR KIT 8.048
(C) Part of LINK 8.054

BRAKE MASTER CYLINDER 63 thru 65 ALL MODELS (LPB)

Copyright 1963 American Motors Corp.

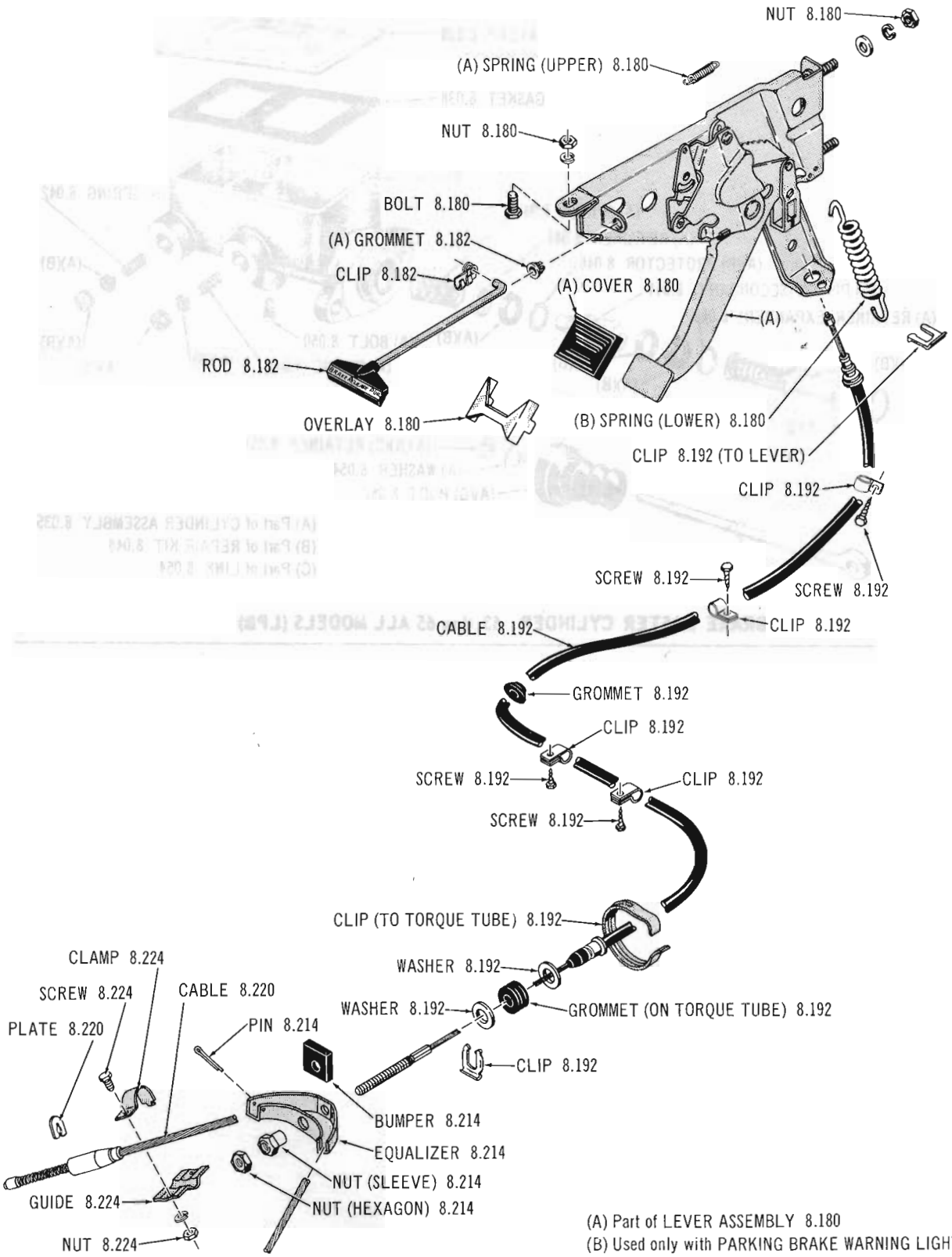

(A) Part of LEVER ASSEMBLY 8.180
(B) Used only with PARKING BRAKE WARNING LIGHT

1943

PARKING BRAKE LINKAGE 65 10-80

Copyright 1963 American Motors Corp.

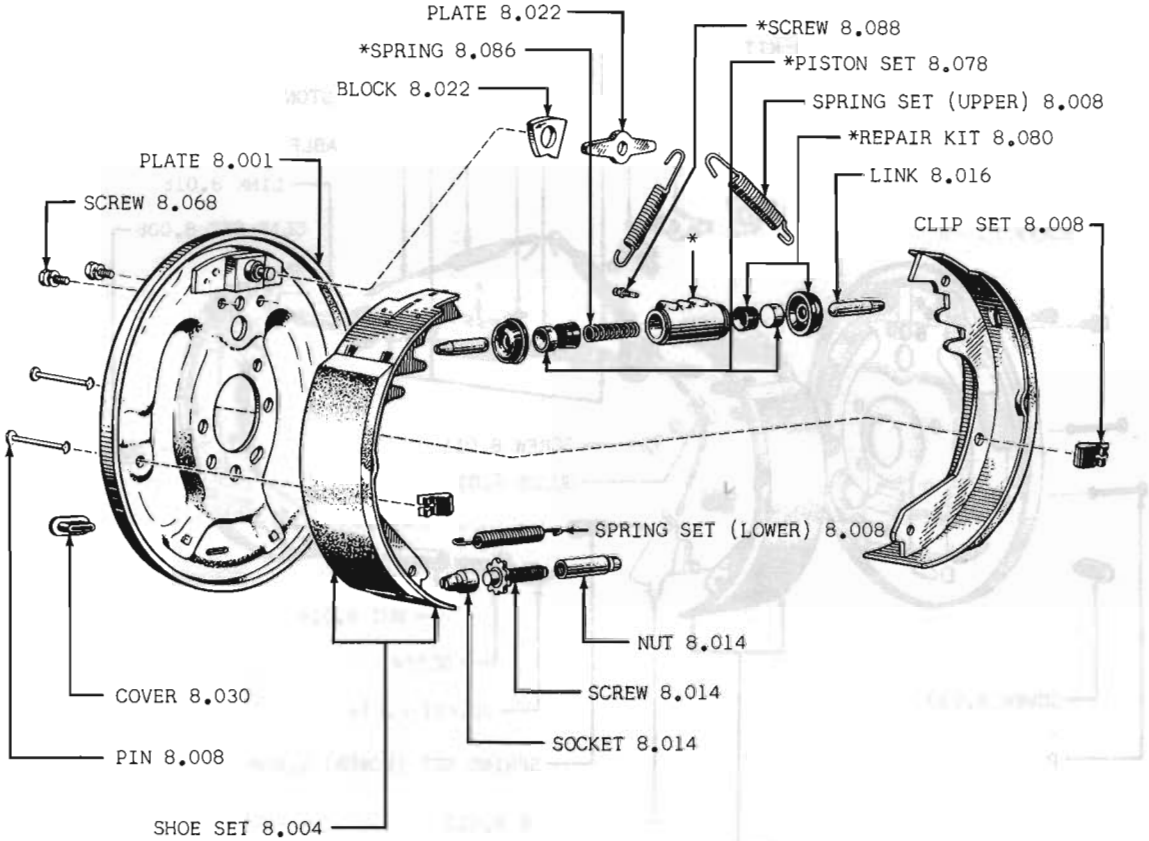

* ALSO SERVICED AS PART OF CYLINDER ASSEMBLY 8.068

Copyright 1963 American Motors Corp.

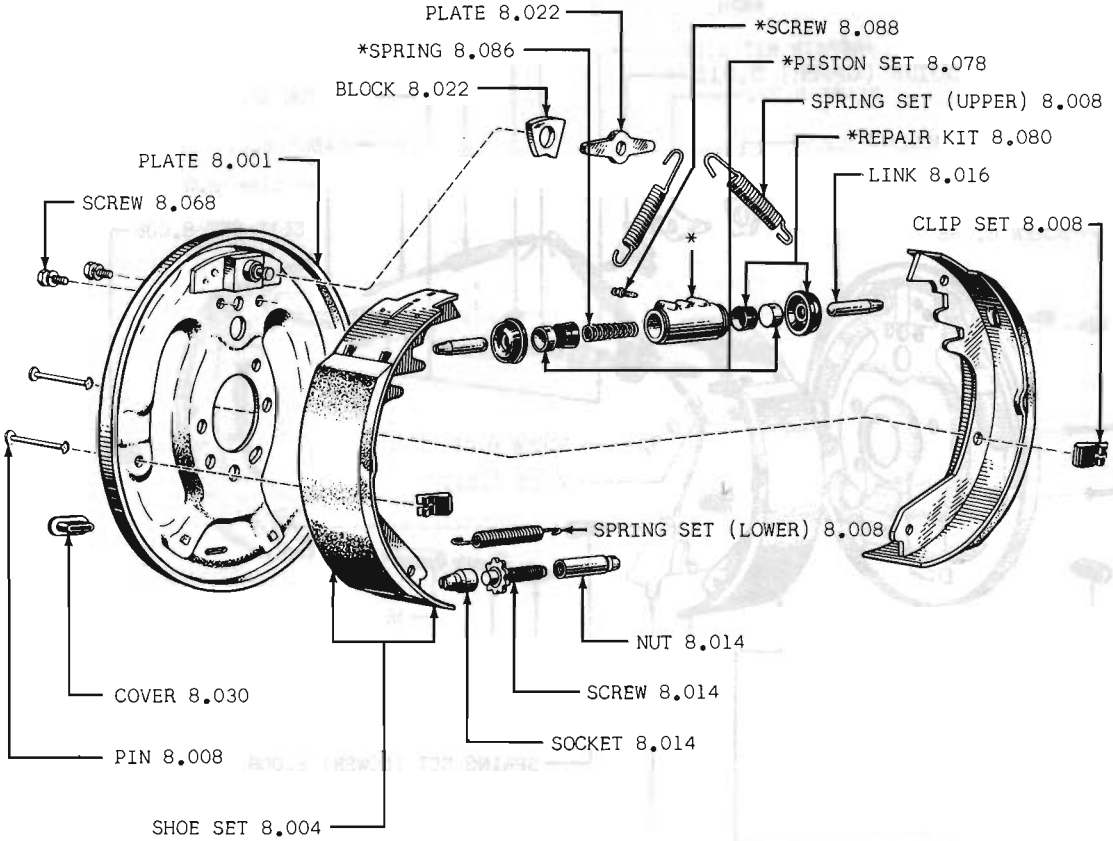

* ALSO SERVICED AS PART OF CYLINDER ASSEMBLY 8.068

Copyright 1963 American Motors Corp.

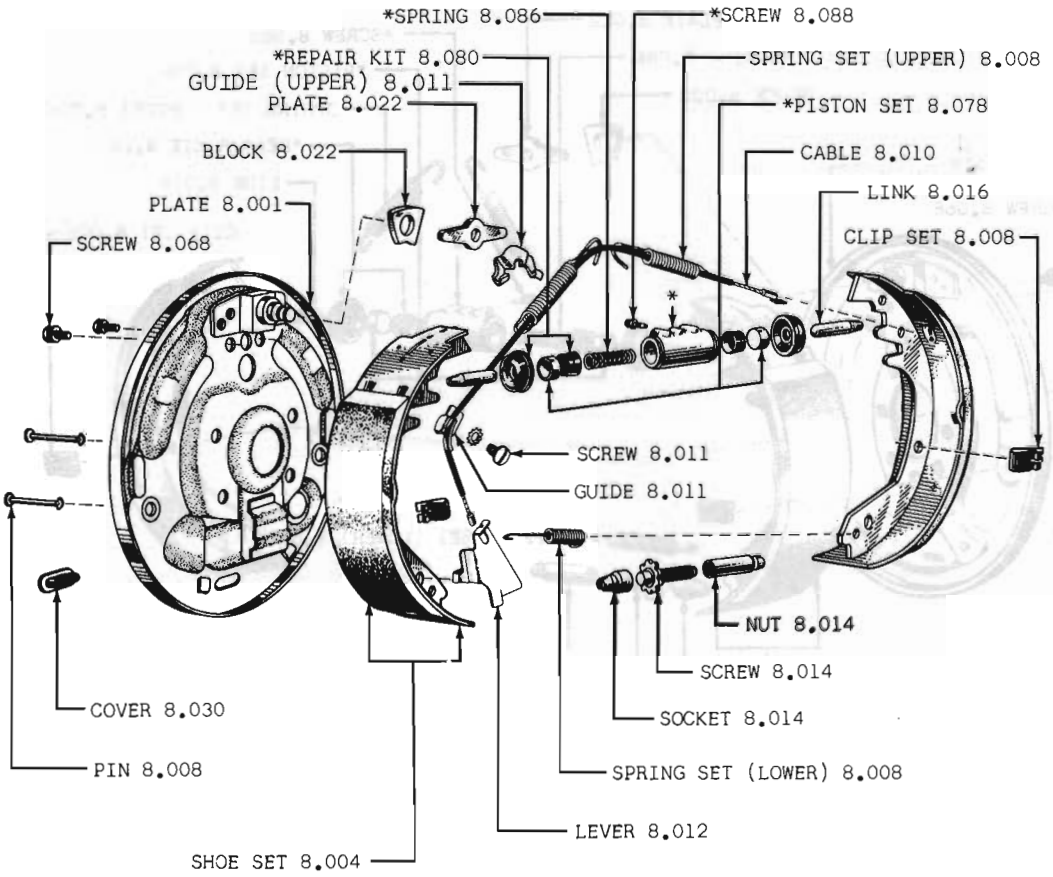

* ALSO SERVICED AS PART OF CYLINDER ASSEMBLY 8.068

Copyright 1963 American Motors Corp.

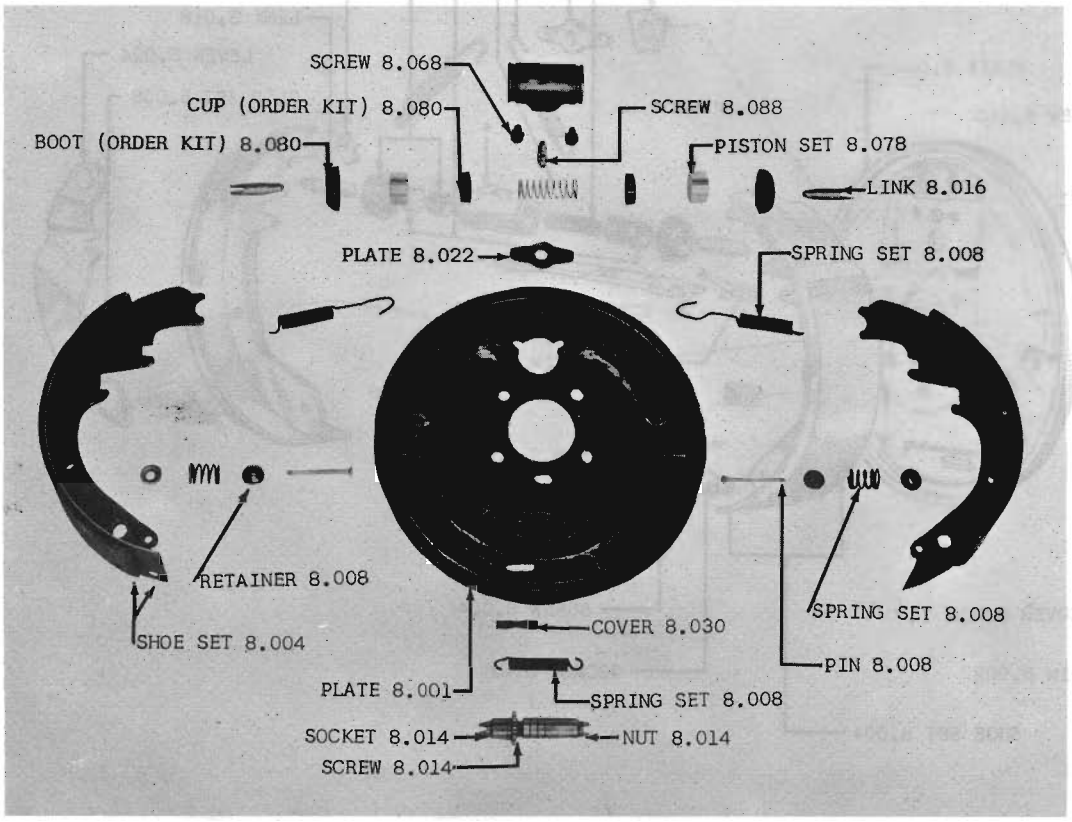

Copyright 1963 American Motors Corp.

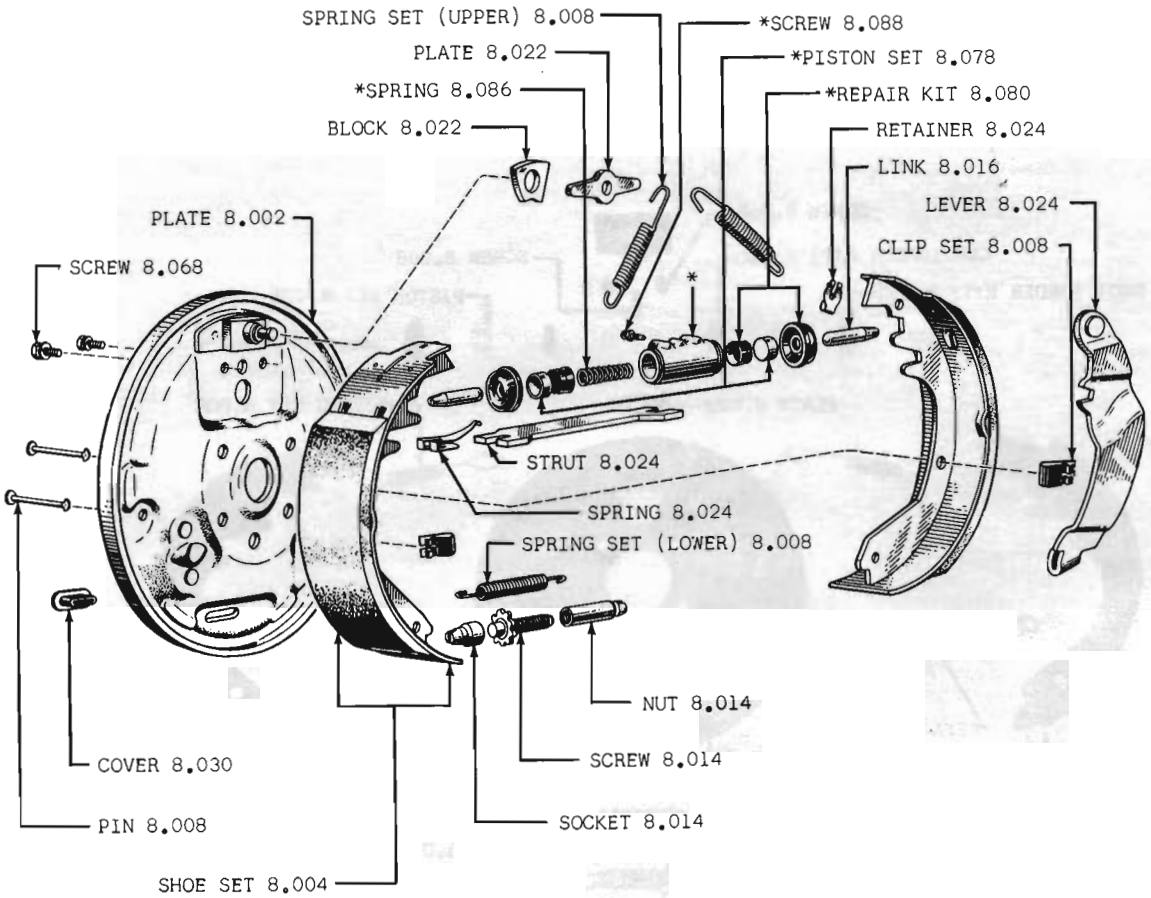

* ALSO SERVICED AS PART OF CYLINDER ASSEMBLY 8.068

Copyright 1963 American Motors Corp.

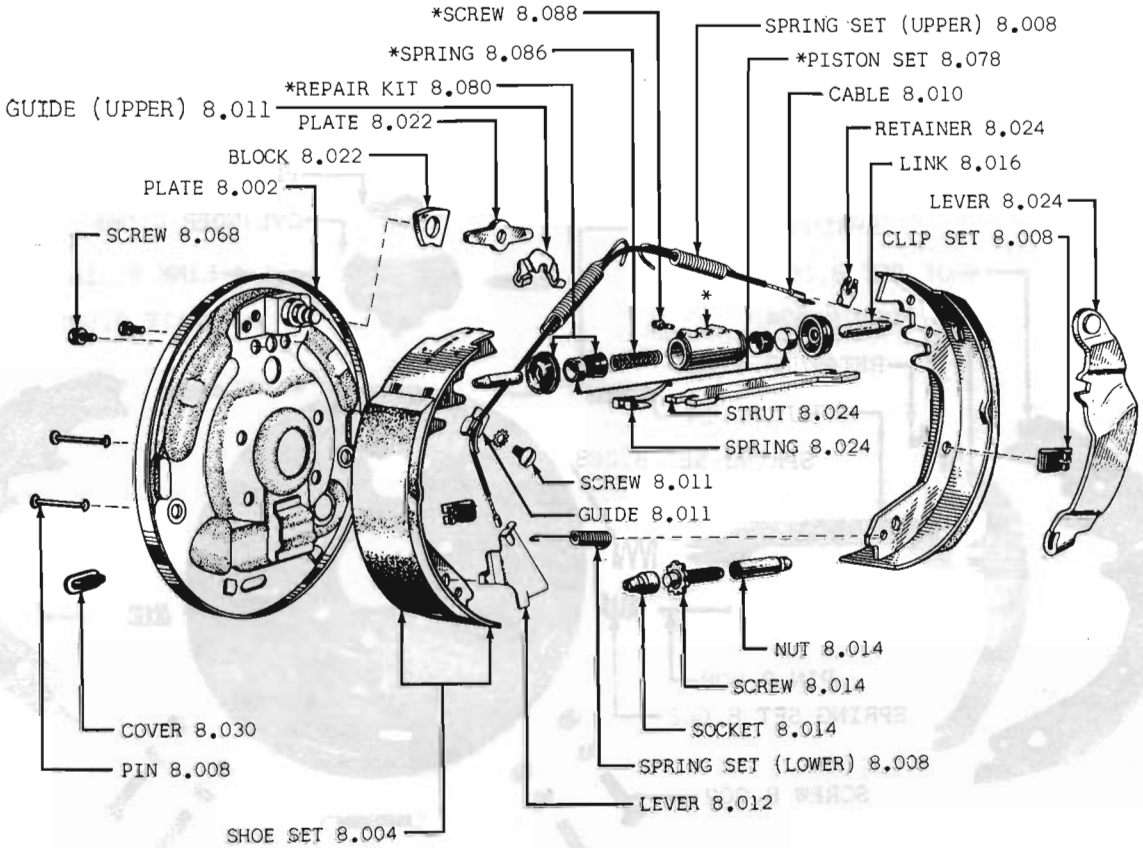

* ALSO SERVICED AS PART OF CYLINDER ASSEMBLY 8.068

Copyright 1963 American Motors Corp.

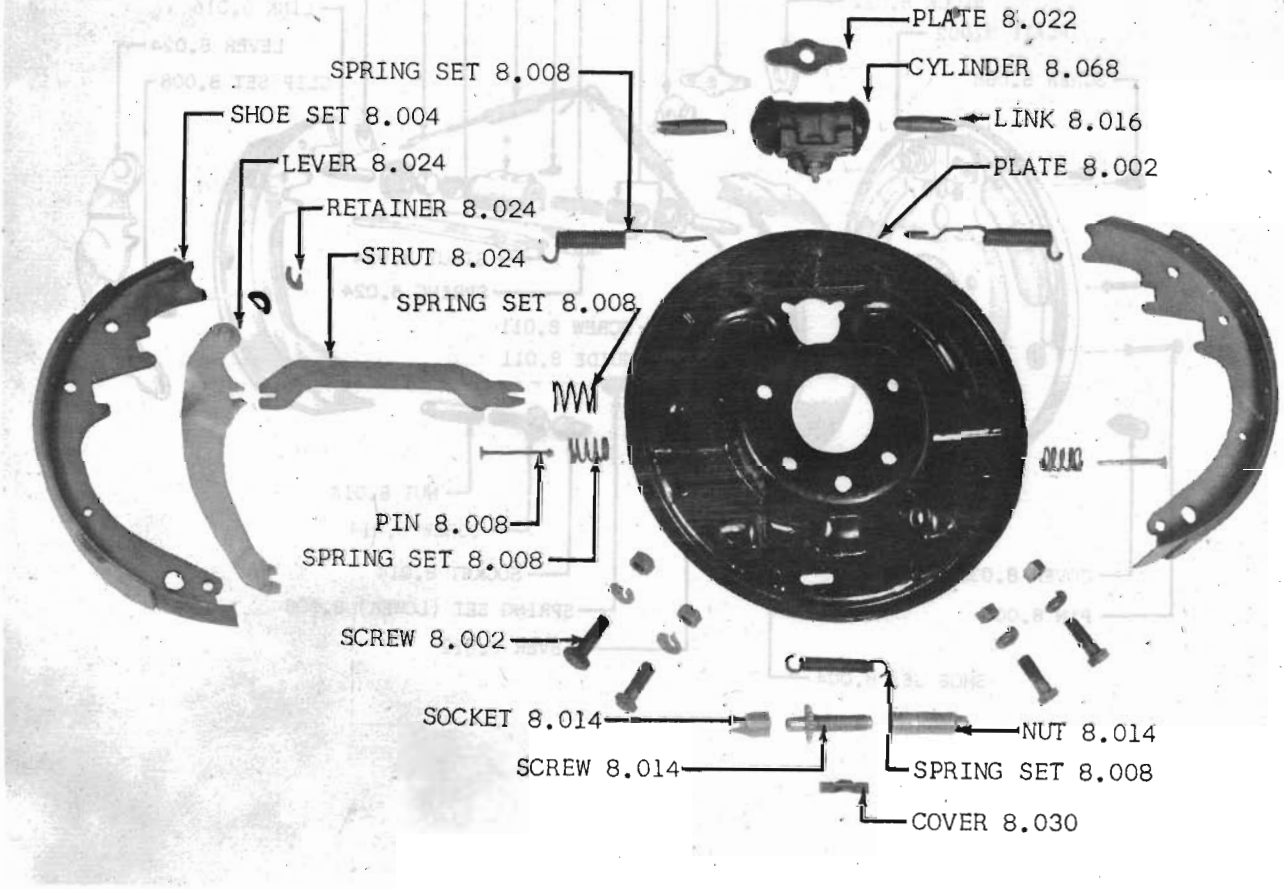

Copyright 1963 American Motors Corp.

CYLINDER ASSEMBLY 8.068 INCLUDES ALL PARTS SHOWN EXCEPT THOSE DESIGNATED (x)

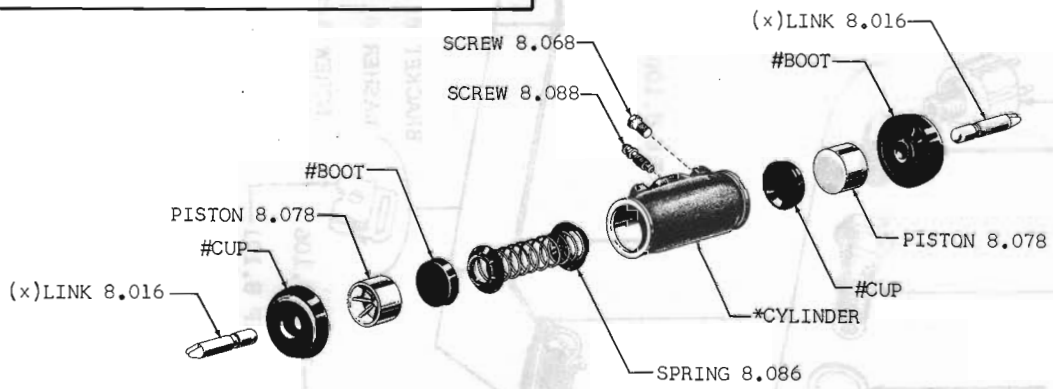

* SERVICED ONLY AS PART OF CYLINDER ASSEMBLY 8.068

\# SERVICED ONLY AS PART OF REPAIR KIT 8.080 AND CYLINDER ASSEMBLY 8.068

BRAKE WHEEL CYLINDER 60 thru Current ALL MODELS

Copyright 1963 American Motors Corp.

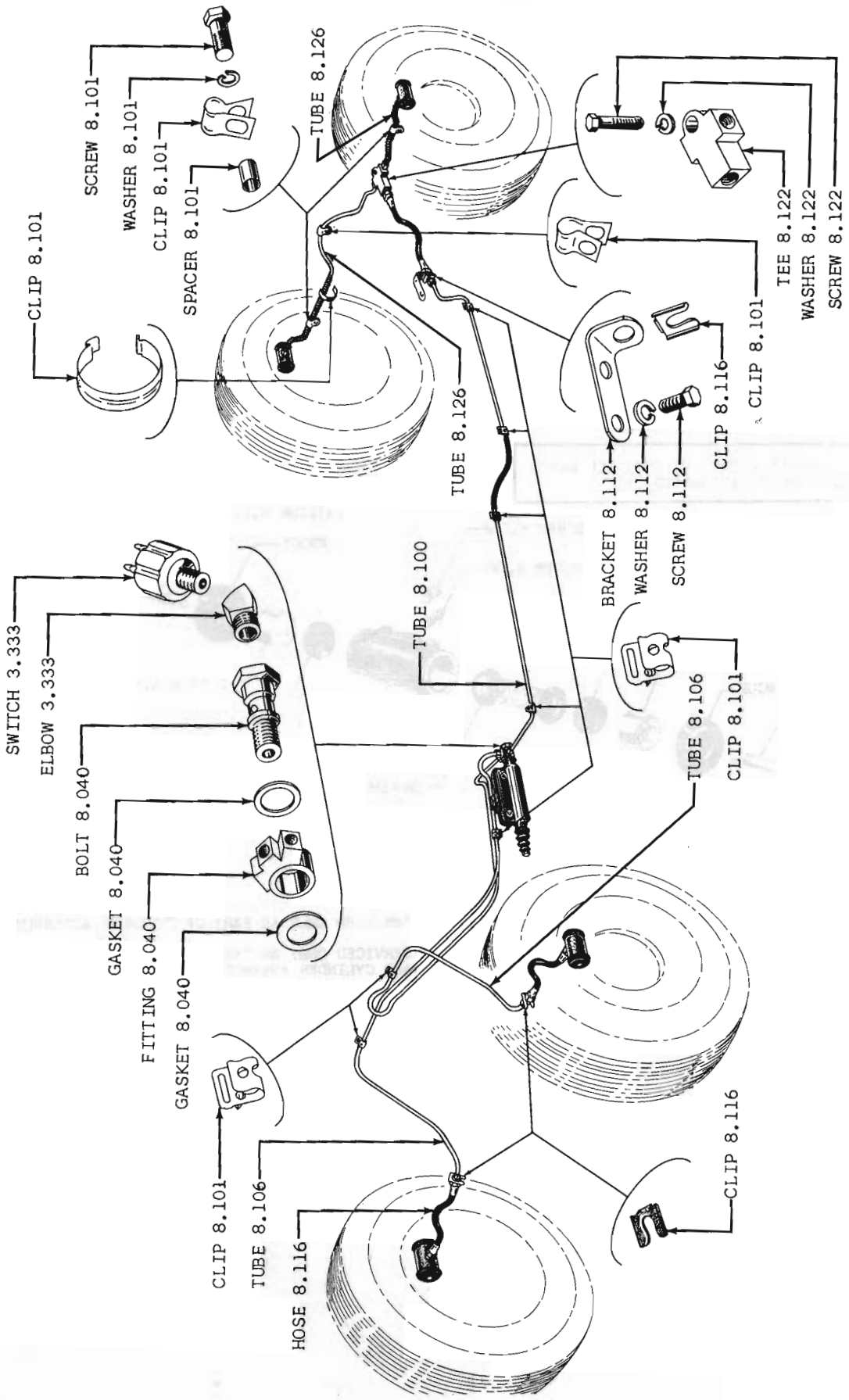

BRAKE LINES AND ATTACHING PARTS 60-61 01

Copyright 1963 American Motors Corp.

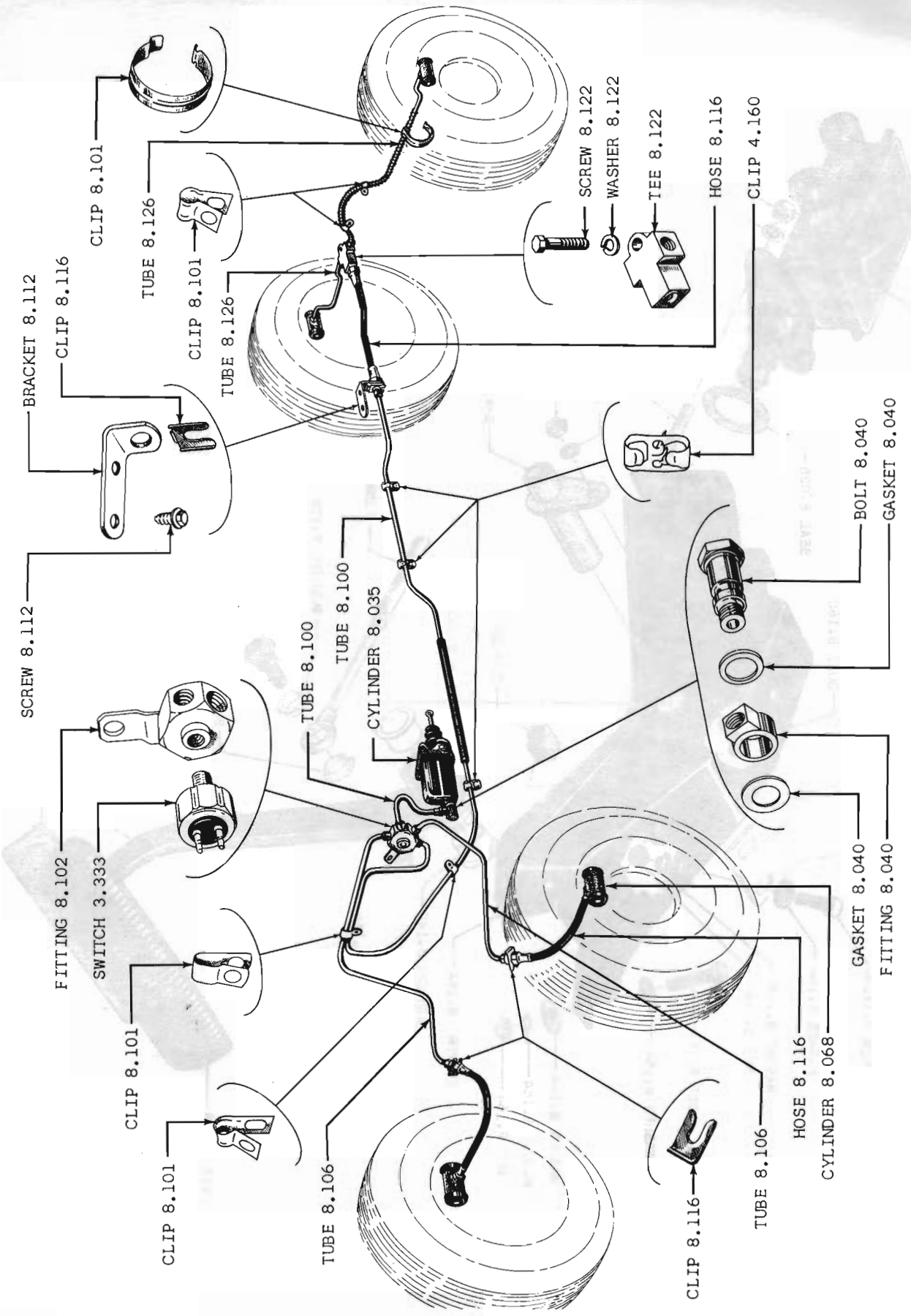

BRAKE LINES AND ATTACHING PARTS 60-61 10-20-80

Copyright 1963 American Motors Corp.

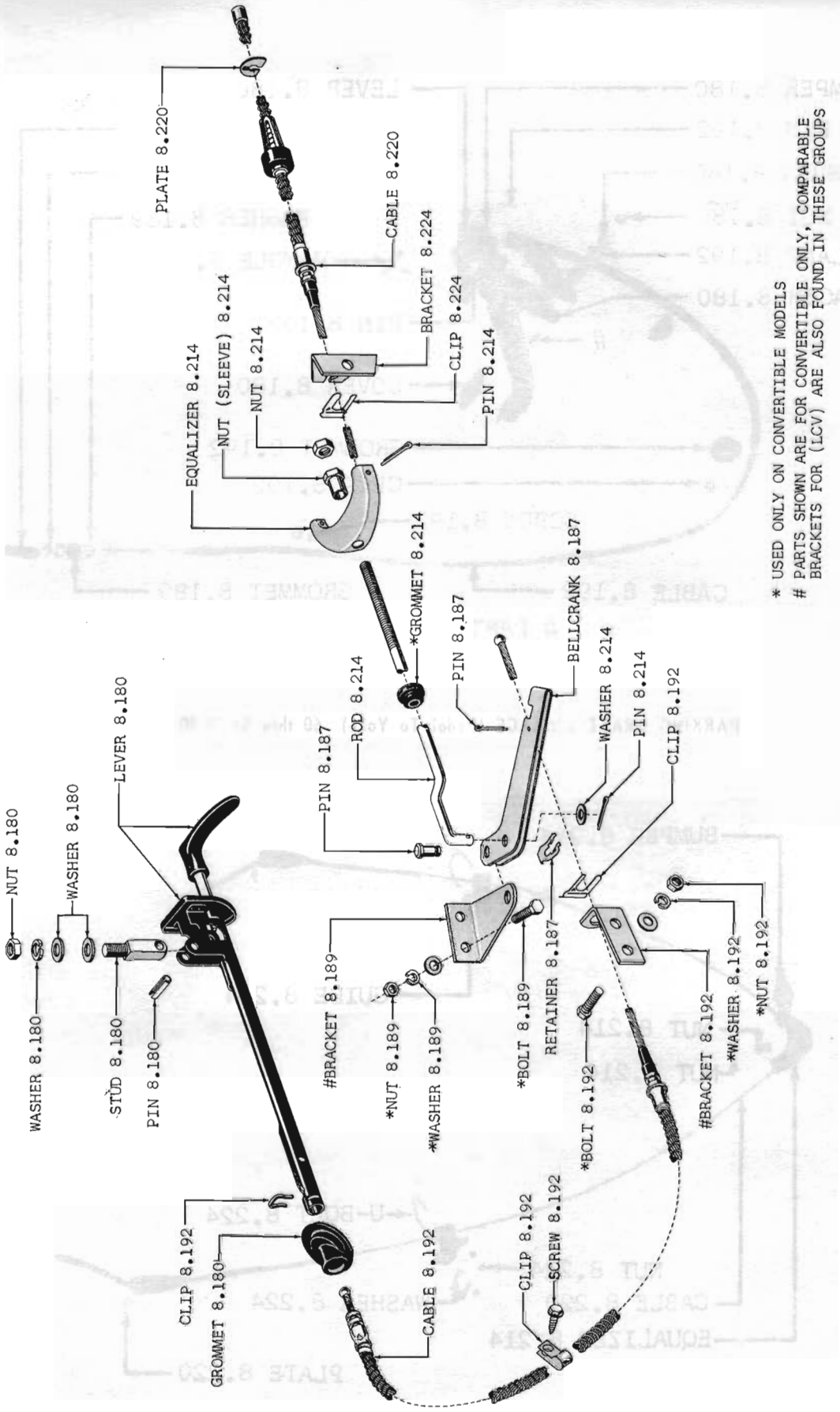

PARKING BRAKE LINKAGE 61 thru 63 01

Copyright 1963 American Motors Corp.

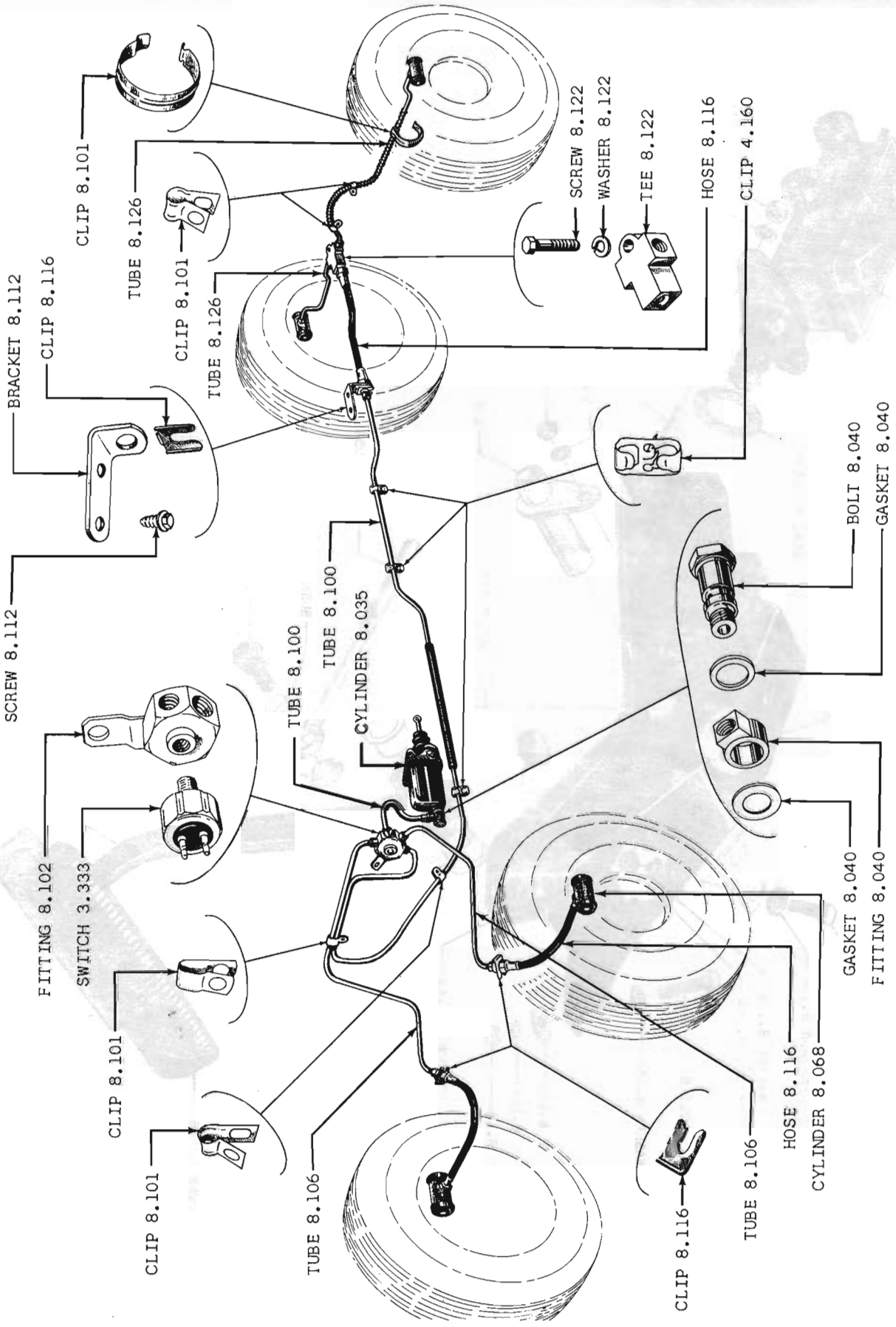

BRAKE LINES AND ATTACHING PARTS 60-61 10-20-80

Copyright 1963 American Motors Corp.

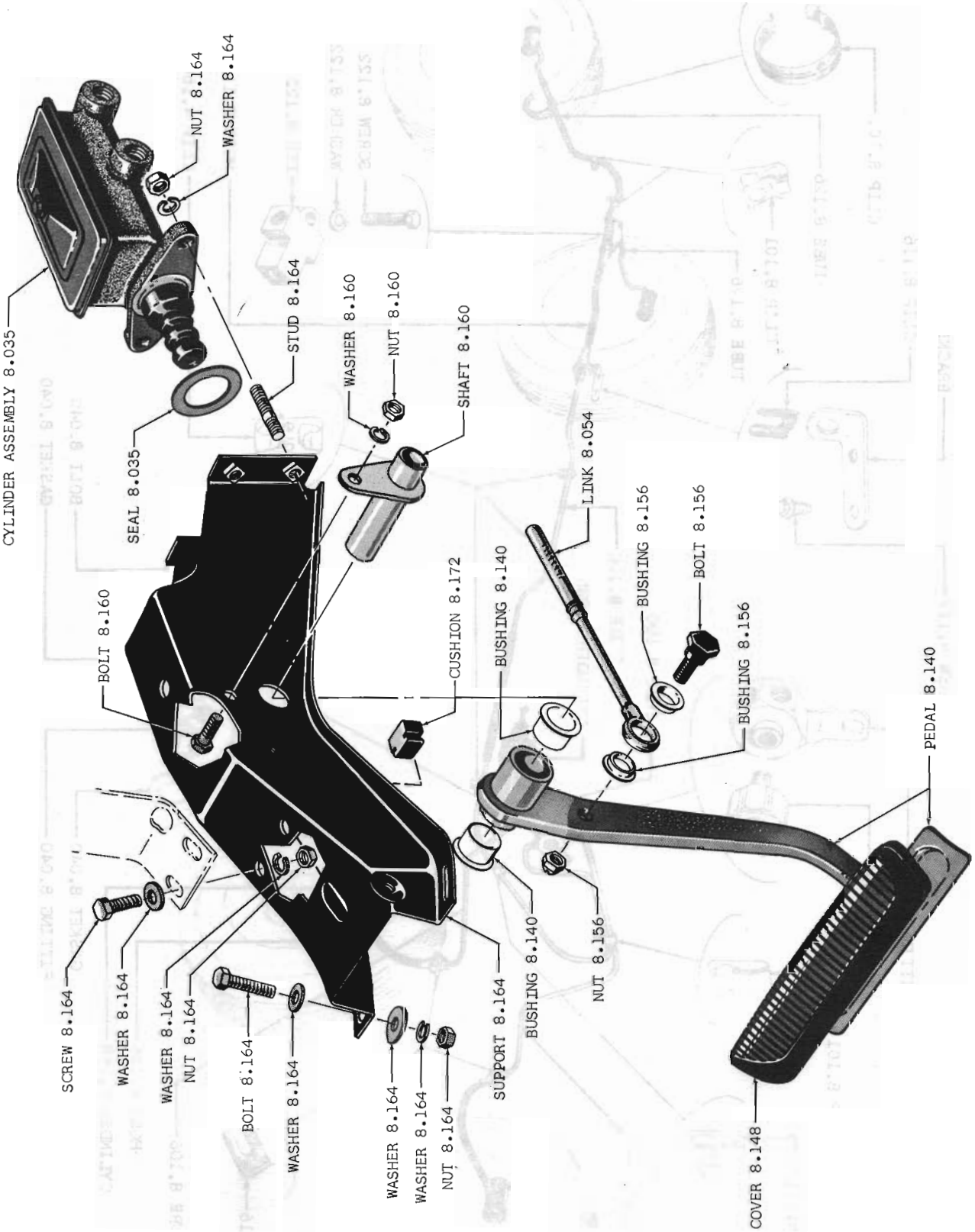

BRAKE PEDAL AND SUPPORT 63 thru 65 10-80

Copyright 1963 American Motors Corp.

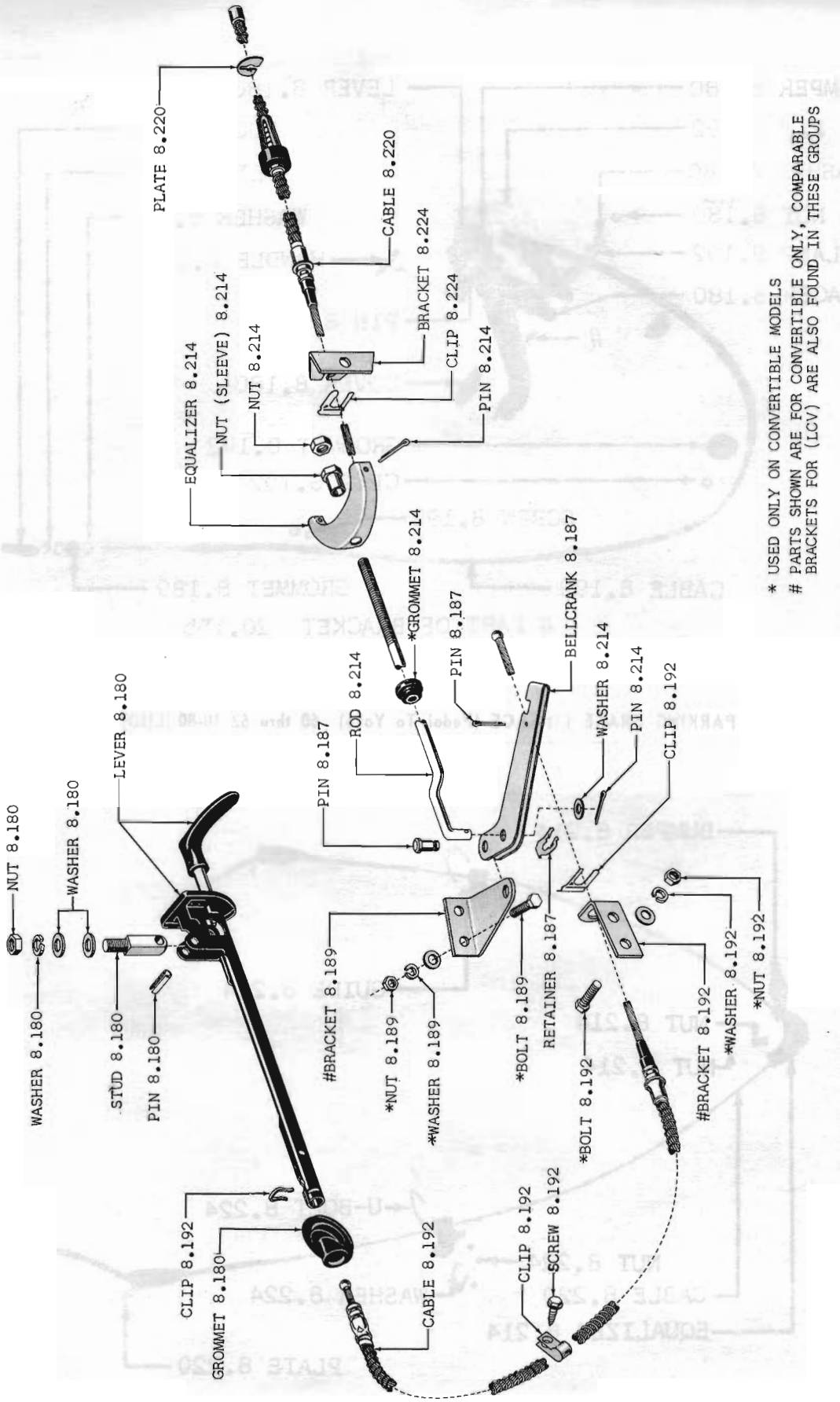

PARKING BRAKE LINKAGE 61 thru 63 01

Copyright 1963 American Motors Corp.

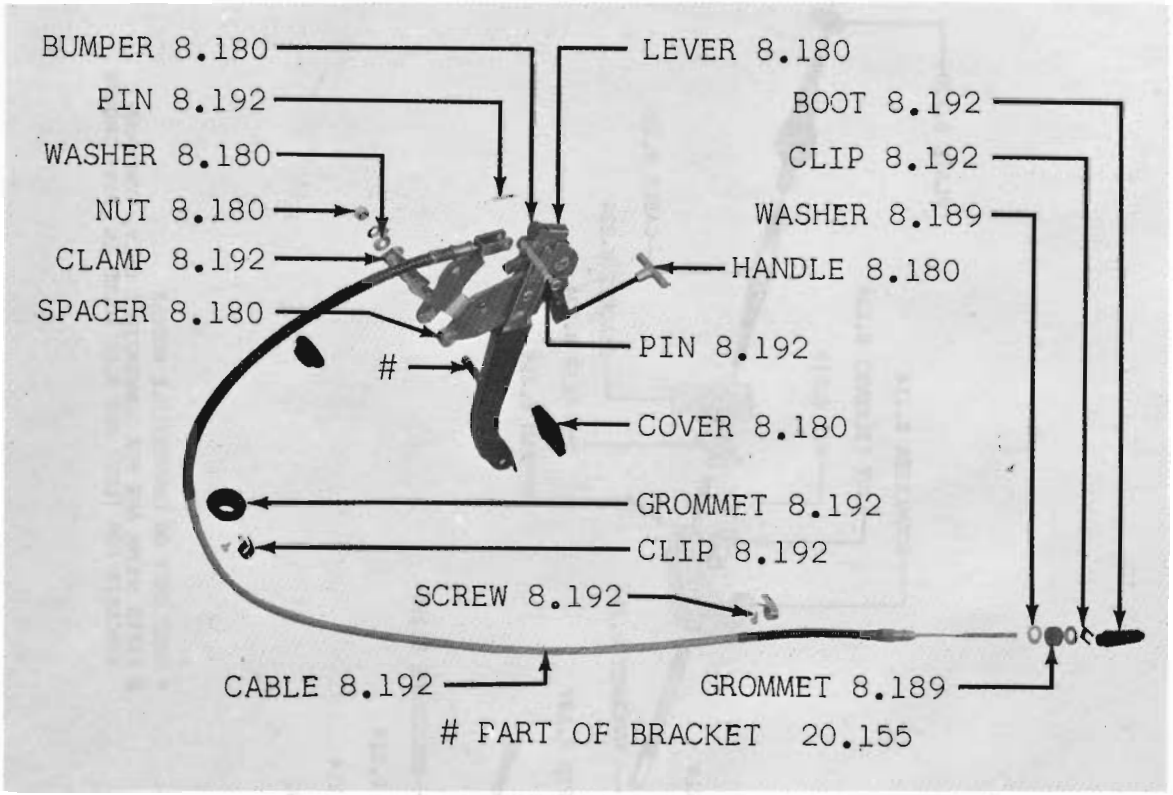

PARKING BRAKE LINKAGE (Pedal To Yoke) 60 thru 62 10-80 (LHD)

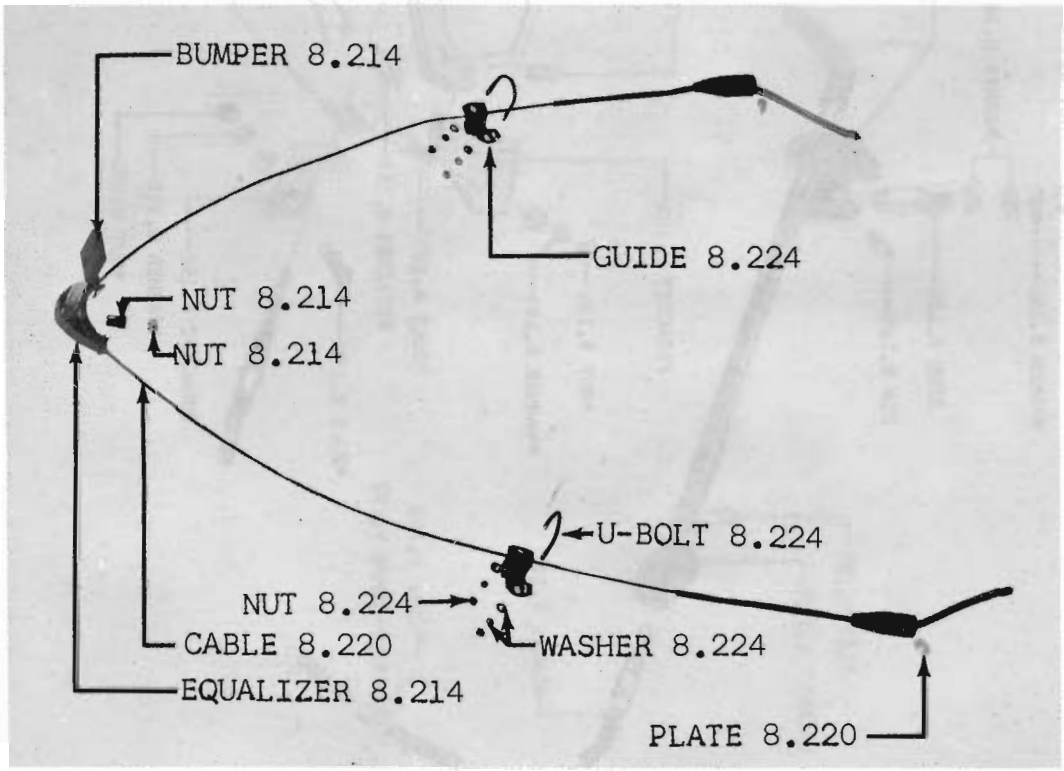

PARKING BRAKE LINKAGE (Yoke To Drum) 60 thru 62 10-80 (LHD)

Copyright 1963 American Motors Corp.

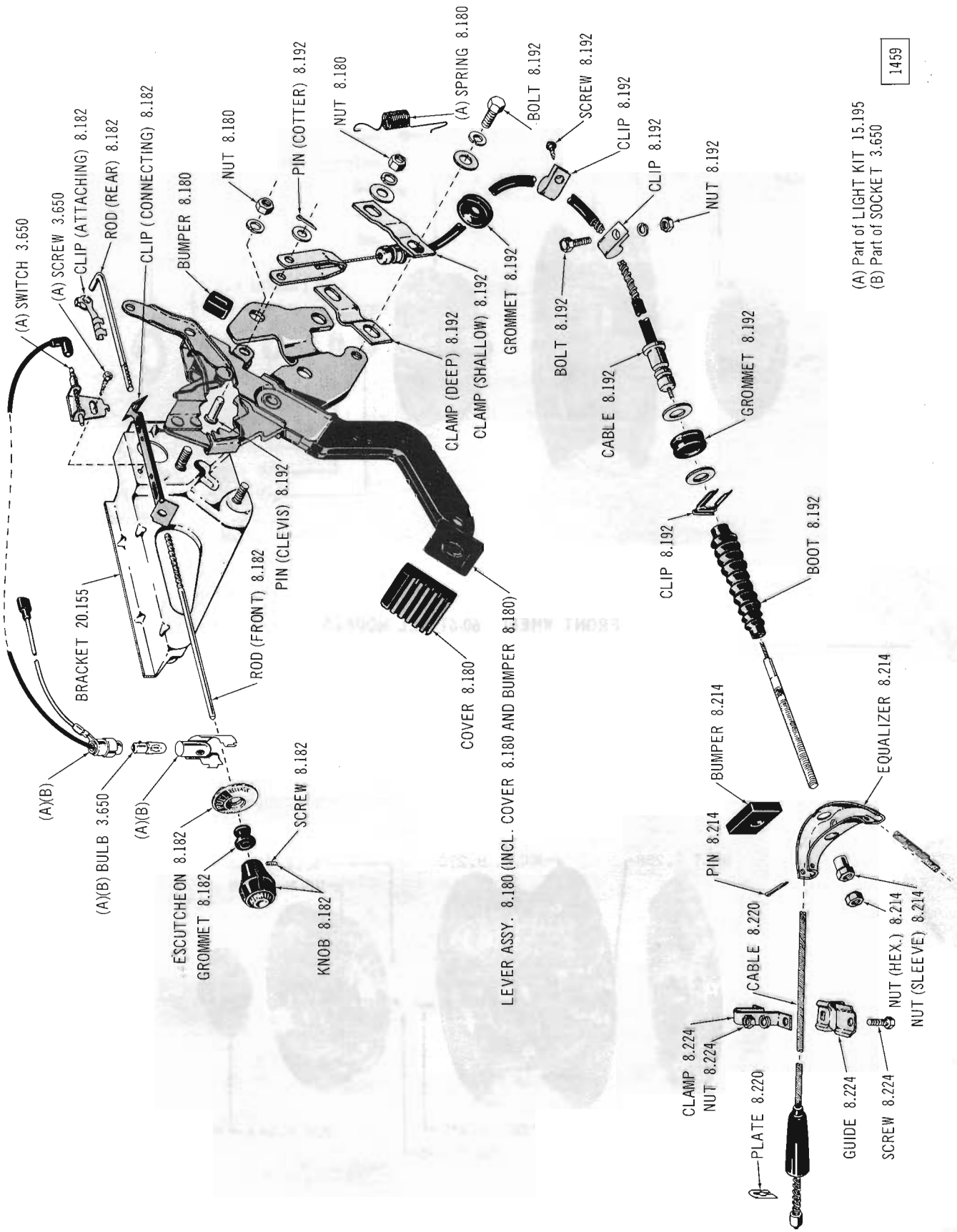

PARKING BRAKE LINKAGE 63 10-80

Copyright 1963 American Motors Corp.

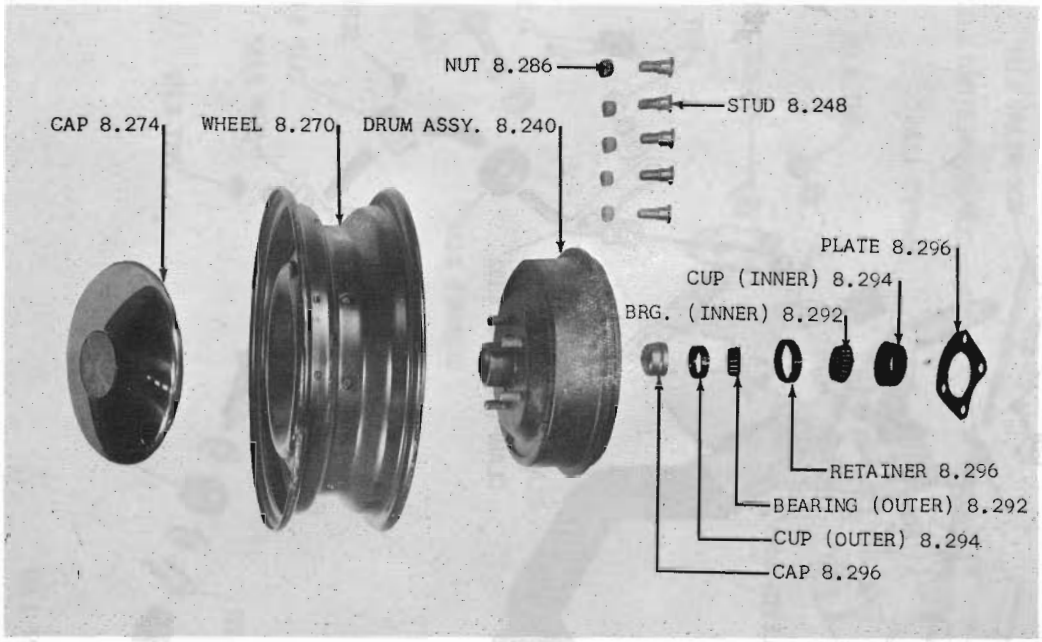

FRONT WHEEL 60-61 ALL MODELS

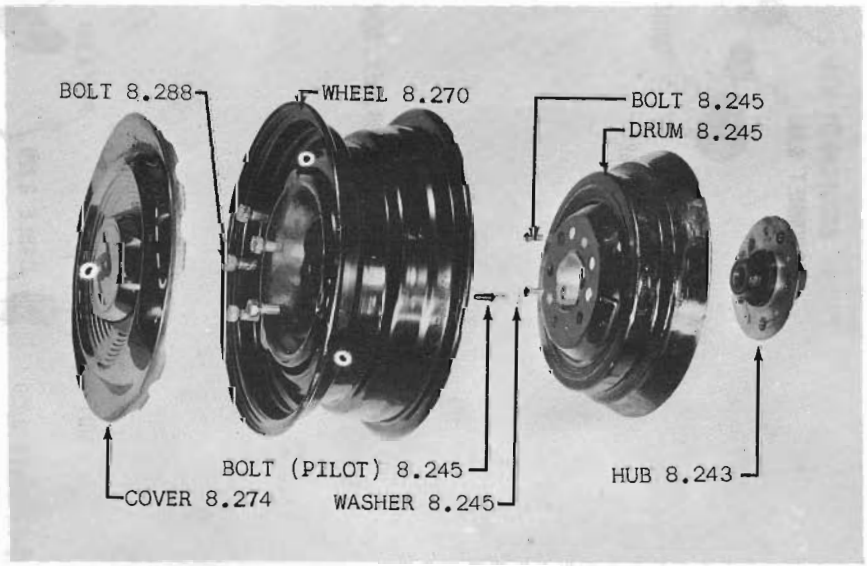

REAR HUB AND DRUM 60-61 20-80

Copyright 1963 American Motors Corp.

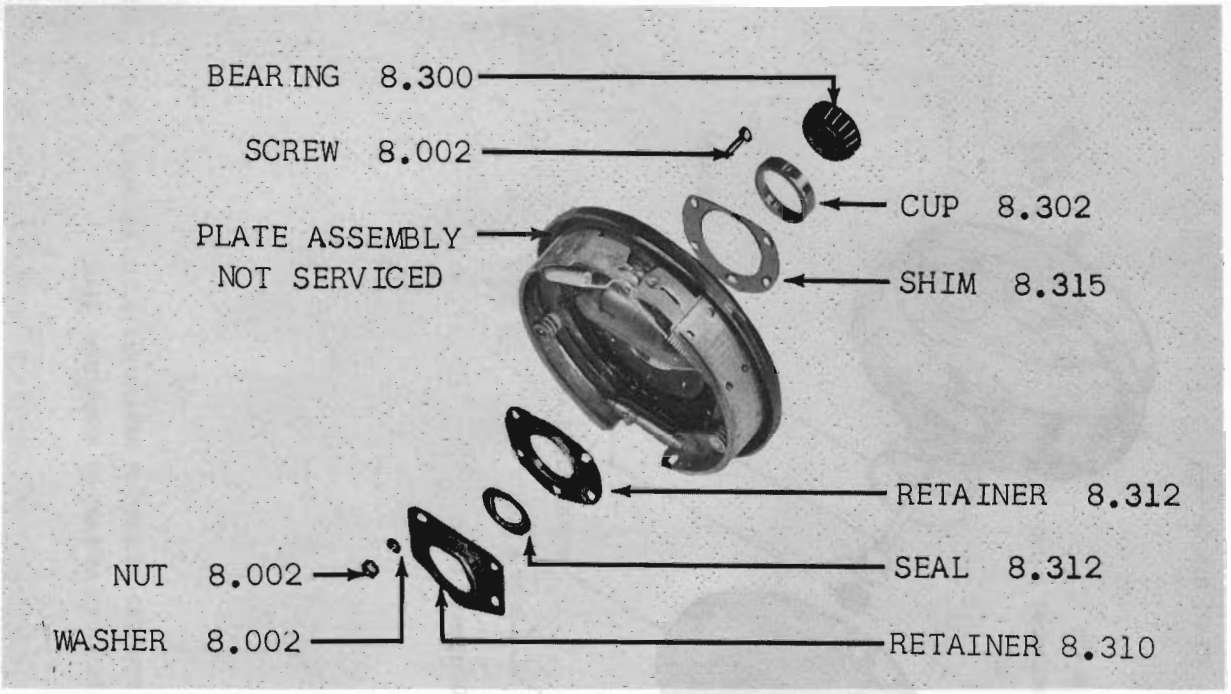

BRAKE SHIMS, RETAINER AND SEAL 60-61 20: 60 thru 62 80

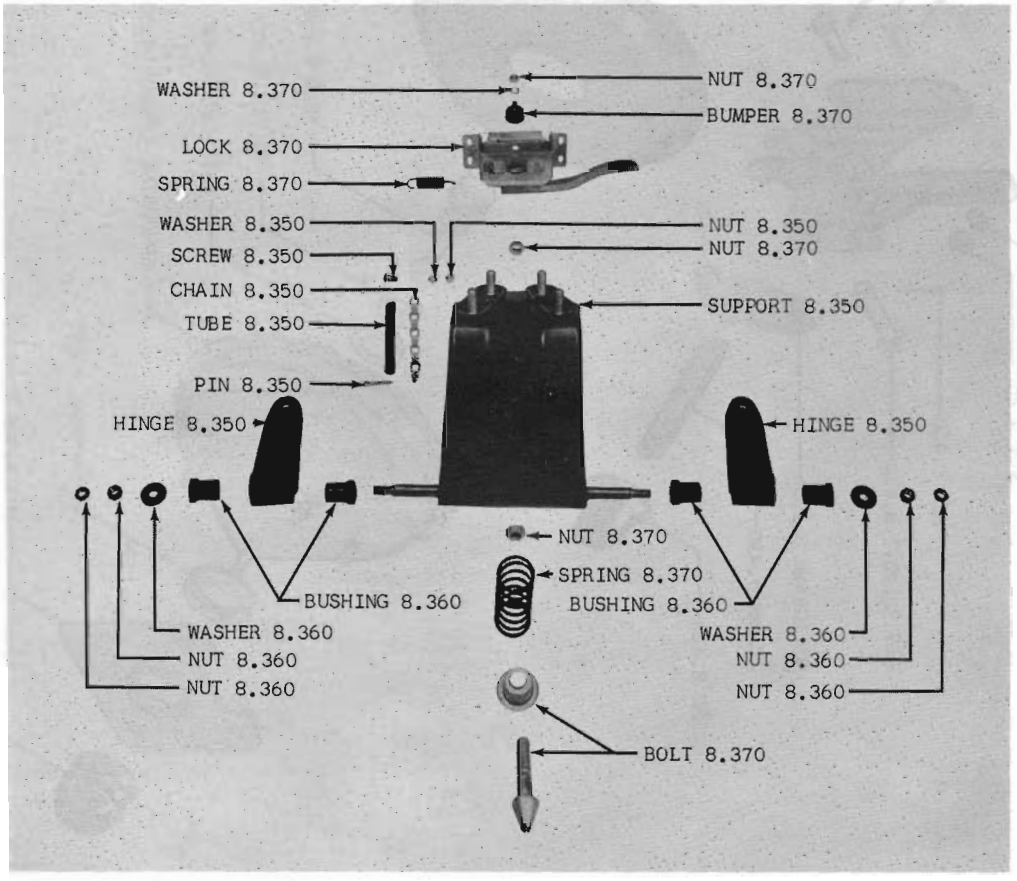

SPARE WHEEL CARRIER SUPPORT 60 01 (WWC)

Copyright 1963 American Motors Corp.

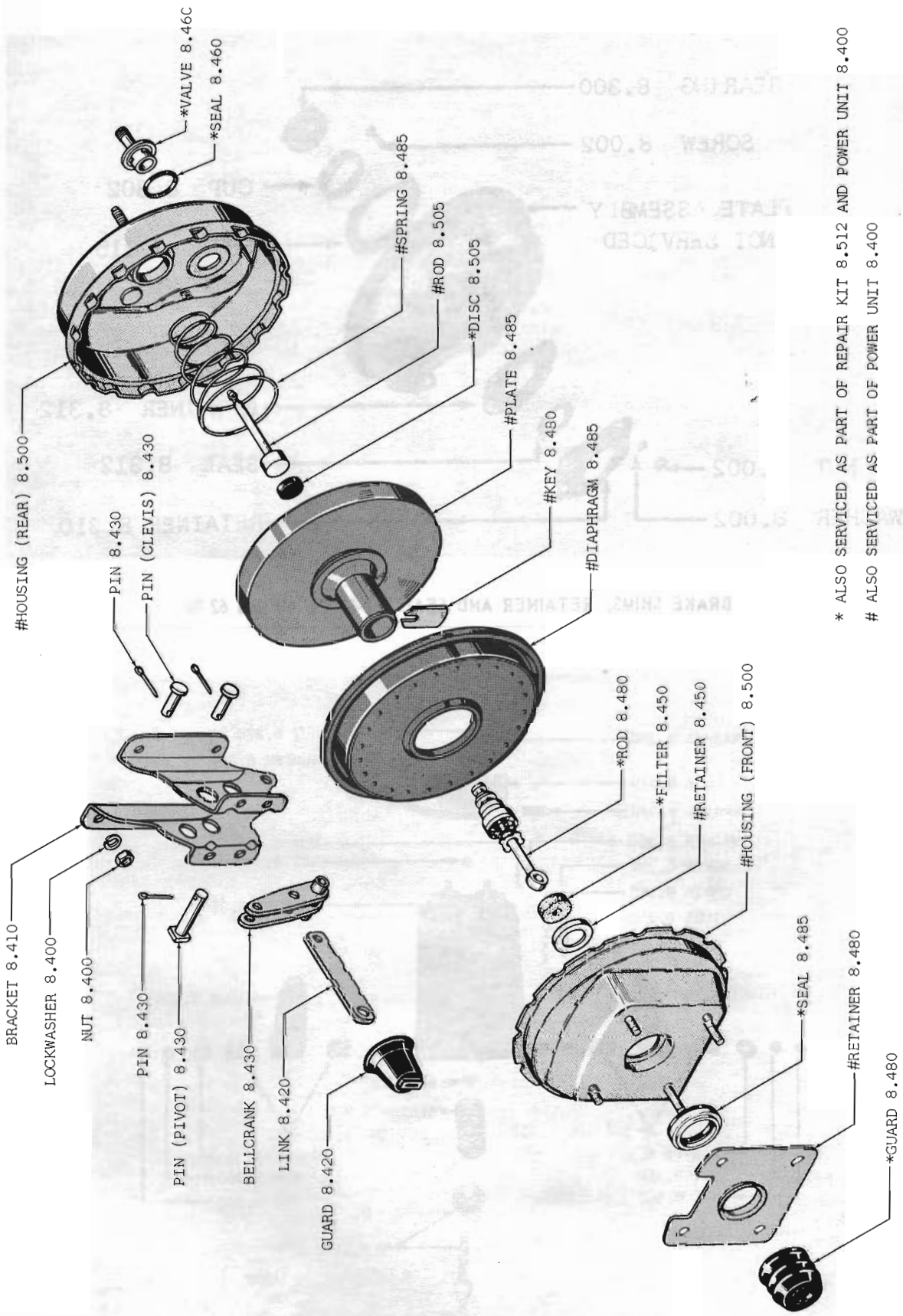

POWER BRAKE POWER UNIT 62 thru 65 ALL MODELS (LHD-WPB)

Copyright 1963 American Motors Corp.

ALL PARTS SHOWN ARE SERVICED AS PART OF CYLINDER ASSEMBLY 8.510

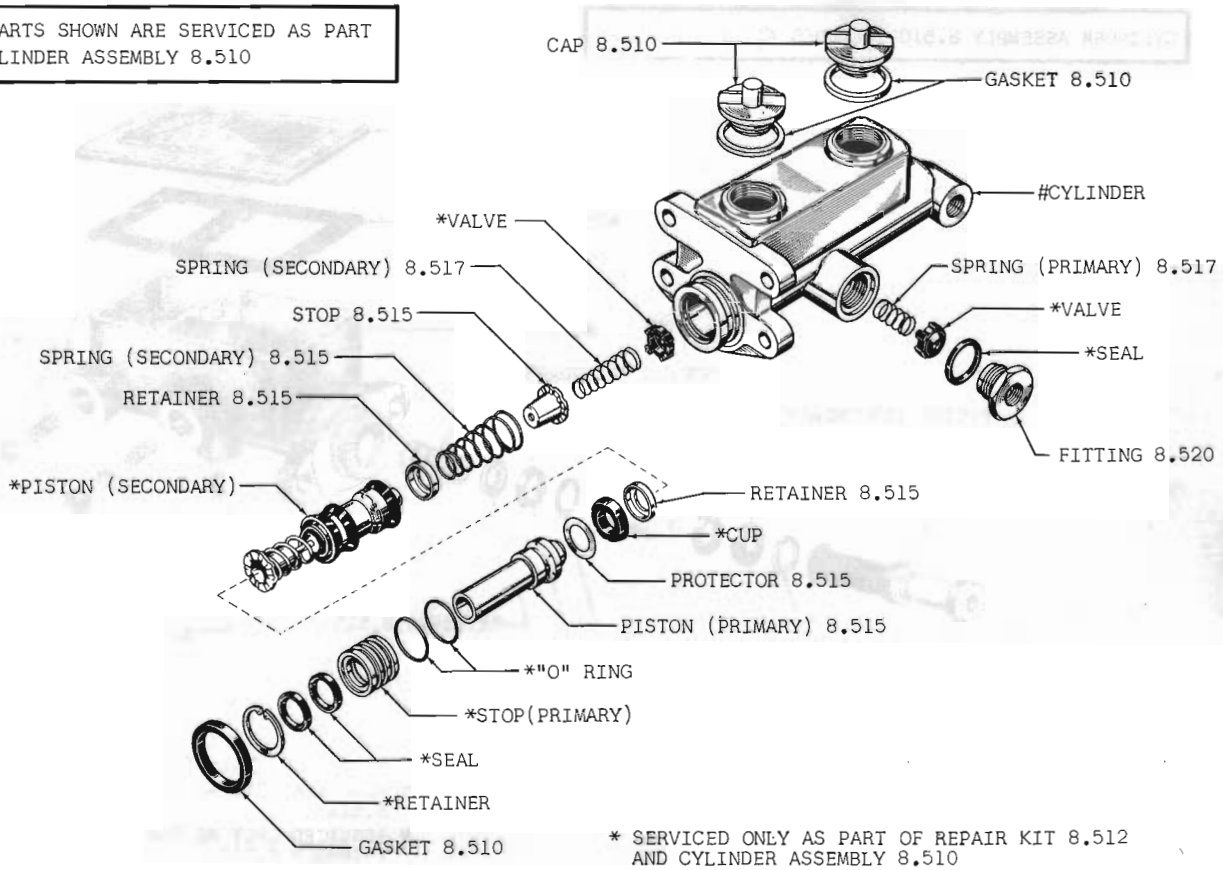

* SERVICED ONLY AS PART OF REPAIR KIT 8.512 AND CYLINDER ASSEMBLY 8.510

SERVICED ONLY AS PART OF CYLINDER ASSEMBLY 8.510

POWER BRAKE MASTER CYLINDER (BENDIX) 62 ALL MODELS (LHD-WPB)

Copyright 1963 American Motors Corp.

CYLINDER ASSEMBLY 8.510 INCLUDES ALL PARTS SHOWN

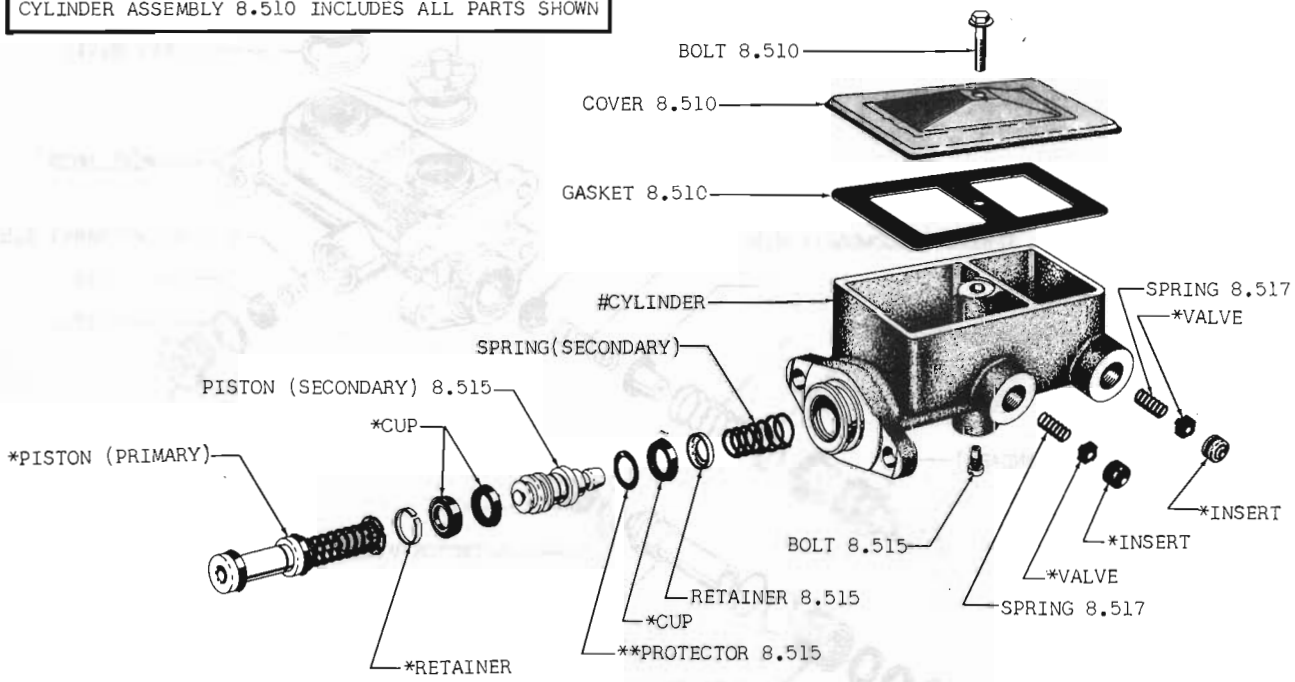

* SERVICED ONLY AS PART OF REPAIR KIT 8.512 AND CYLINDER ASSEMBLY 8.510

** ALSO SERVICED AS PART OF REPAIR KIT 8.512

\# SERVICED ONLY AS PART OF CYLINDER ASSEMBLY 8.510

POWER BRAKE MASTER CYLINDER 63-64 ALL MODELS (WPB)

Copyright 1963 American Motors Corp.

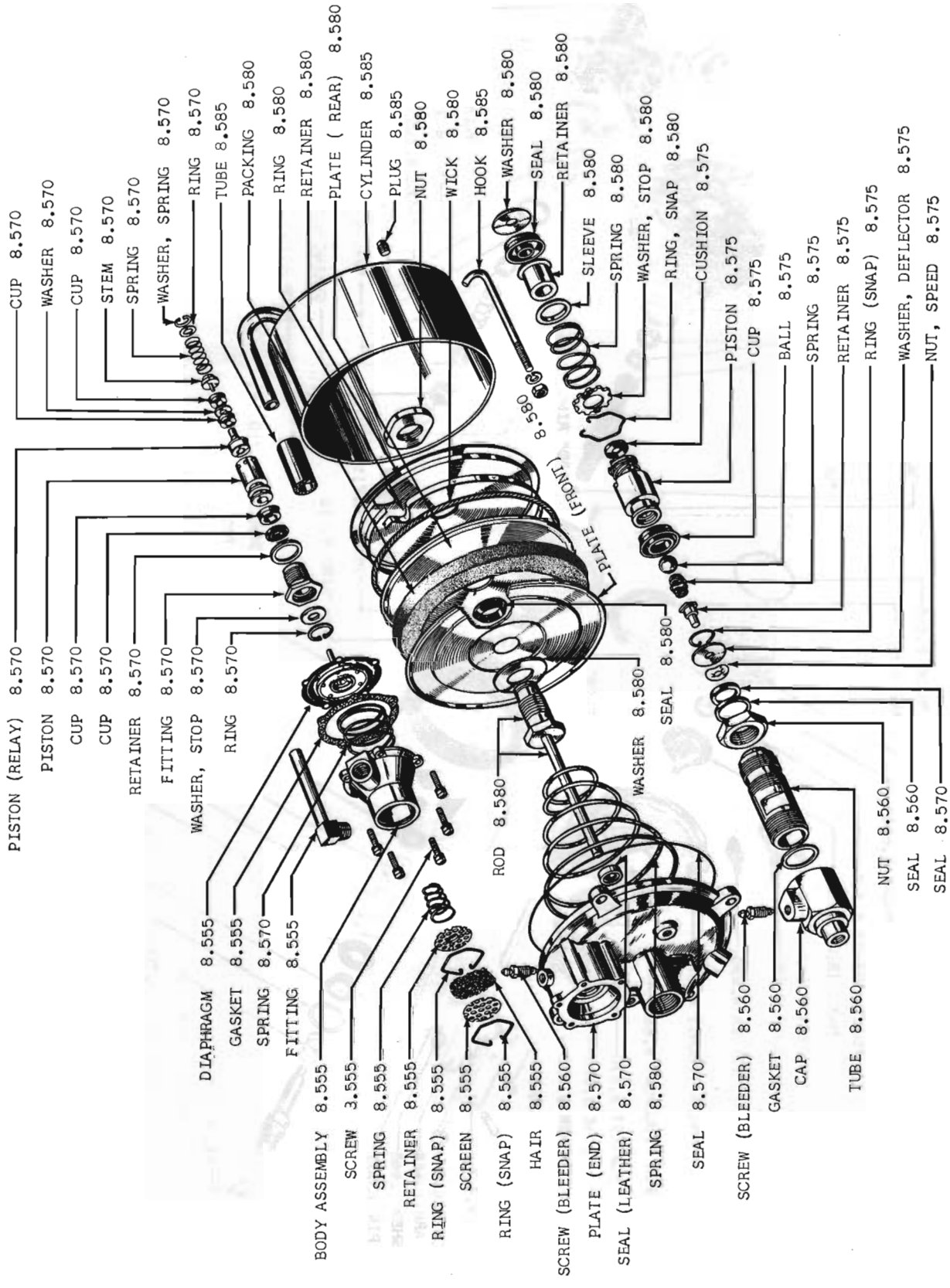

POWER BRAKE HYDROVAC 60 thru 62 10-80 (RHD-WPB): 63 thru 65 10-80 (V8-RHD-WPB-LDB)

Copyright 1963 American Motors Corp.

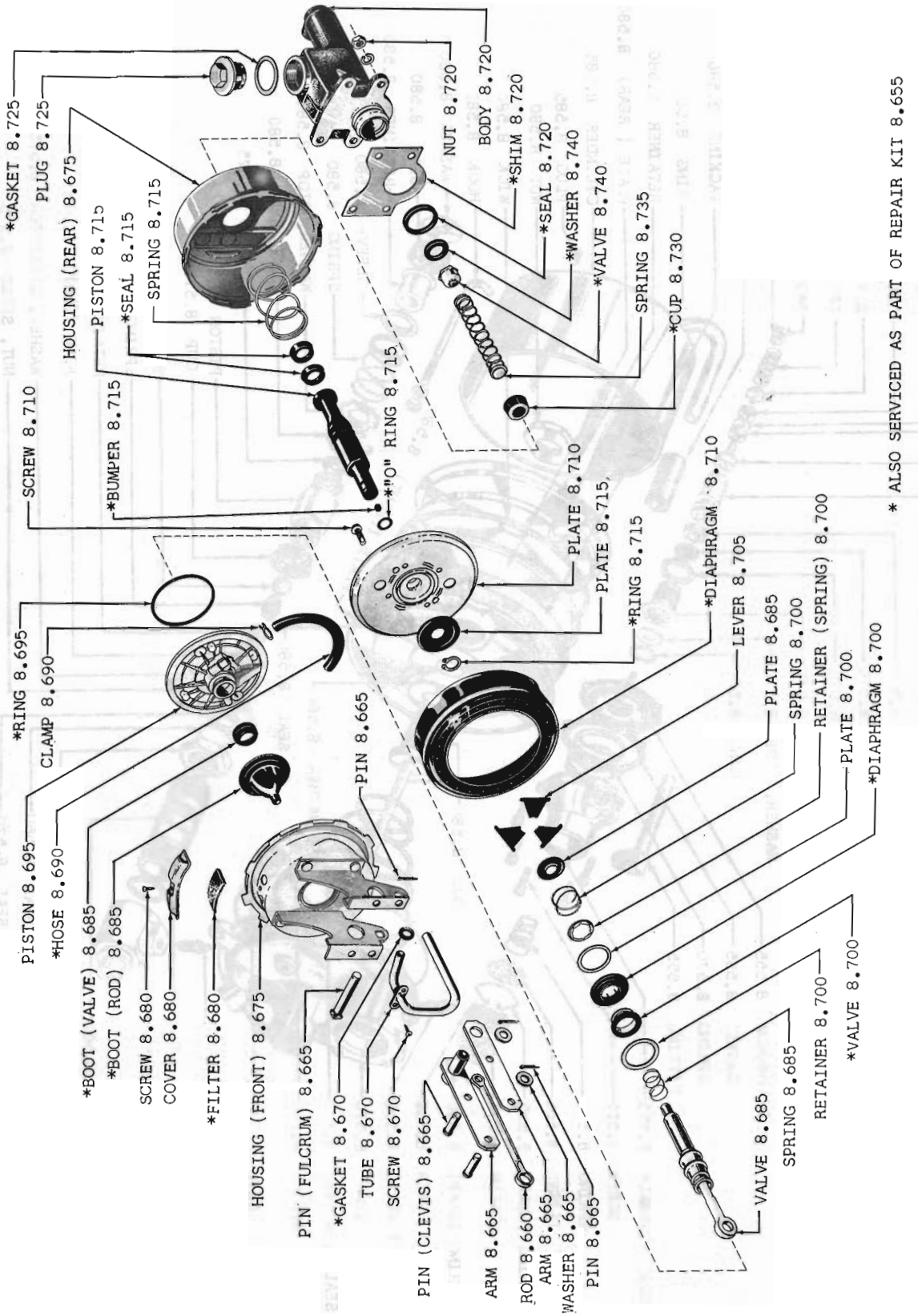

POWER BRAKE UNIT 61 01 (LHD-WPB): 60-61 ALL MODELS (LHD-WPB)

Copyright 1963 American Motors Corp.

GROUP NO. — DESCRIPTION — YEAR and MODEL	PRIMARY GROUP NO.	PER CAR	PART NO.	CODE
8.001 PLATE, Front Brake Support				
60 Thru 64 01 (Six-196) ***(Replaces 320 1910)***	.....	2	320 5323	#
65 01 (Six-196-Note 8.001-5 Type 1)(Six-199-Note 8.001-5 Type 1)	.....	2	320 5323	
165 01 (Can-Six-196)(Can-Six-199)	.....	2	320 5323	
60-61 10 (LAB)	.....	2	320 2458	
165 01 (Can-Six-232): 163-164 10 (Can-Six): 165 10 (Can-Six-Note 8.001-5 Type 1)	.....	2	320 9002	
60-61 20-80 (LAB) ***(Replaces 320 0590)***	.....	2	320 5319	
(Left) 65 01 (Six-232): 65 01 (Six-196-Note 8.001-5 Type 2): 65 01 (Six-199-Note 8.001-5 Type 1): ***165 01 (Can-Six-196)... (Replaces 320 3721)***	.....	1	320 4587	
(Left) 62 10 (Note 8.001-4): 63 Thru 65 10 (Six-LDB): ***165 10 (Can-Six-Note 8.001-5 Type 2)*** ***(Replaces 320 3731)***	.....	1	320 4587	
(Left) 60 10 (WAB-Note 8.001-1)	.....	1	320 1533	
(Left) 60 10 (WAB-Note 8.001-2): 61 10 (WAB)	.....	1	320 2458	
(Left) 62 10 (Note 8.001-3)	.....	1	320 3384	
(Left) 63-64 10 (V8): 65 15-16-17-19 (Note 8.068-2 Type 1): 60-61 20-80 (WAB): 62 Thru 64 80: ***63-64 10 (Renault)***	.....	1	320 1021	
(Left) 65 18 (V8-LDB): 65 15-16-17-19 (V8-LDB-Note 8.068-2 Type 2): 65 80 (LDB)	.....	1	320 5701	
(Right) 65 01 (Six-232): 65 01 (Six-196-Note 8.001-5 Type 2): 65 01 (Six-199-Note 8.001-5 Type 5) ***(Replaces 320 3732)***	.....	1	320 4588	#
(Right) 60 10 (WAB-Note 8.001-1)	.....	1	320 1534	
(Right) 60 10 (WAB-Note 8.001-2): 61 10 (WAB)	.....	1	320 2459	
(Right) 62 10 (Note 8.001-3)	.....	1	320 3385	
(Right) 62 10 (Note 8.001-4): 63 Thru 65 10 (Six-LDB): ***165 10 (Can-Six-Note 8.001-5 Type 2)*** ***(Replaces 320 3732)***	.....	1	320 4588	
(Right) 63-64 10 (V8-WAB): 60-61 20-80 (WAB): 62 Thru 64 80: 65 15-16-17-19 (Note 8.068-2 Type 1): ***63-64 10 (Renault)*** ***(Use 320 5319)***	.....	1	320 0590	
(Right) 65 18 (V8-LDB): 65 15-16-17-19 (V8-LDB-Note 8.068-2 Type 2): 65 80 (LDB)	.....	1	320 5700	
8.002 PLATE, Rear Brake Support				
(Left) 60 01 (LAB-Note 8.002-1): 60 01 (WAB) ***(Ref. Pr. List)***	.....	1	320 1911	
(Left) 60 01 (LAB-Note 8.002-2)	.....	1	320 2468	
(Left) 61 Thru 64 01 ***(Use 320 5321)***	.....	1	320 2781	
(Left) 65 01 (Six-196-Note 8.001-5 Type 1)(Six-199-Note 8.001-5 Type 1) ***(Use 320 5321)***	.....	1	320 2781	
(Left) 65 01 (Six-232)(Six-196-Note 8.001-5 Type 2)(Six-199-Note 8.001-5 Type 2)	.....	1	320 6133	
(Left) ***165 01 (Can-Six-196)(Can-Six-199)***	.....	1	320 2781	
(Left) 60 10 (LAB) ***(Ref. Pr. List)***	.....	1	320 0244	
(Left) 60 10 (WAB-Note 8.001-1)	.....	1	320 1535	
(Left) 60 10 (WAB-Note 8.001-2)	.....	1	320 2463	
(Left) 61 10 ***(Replaces 320 2783)***	.....	1	320 2785	
(Left) 62 10 (Note 8.001-3)	.....	1	320 3260	
(Left) 62 10 (Note 8.001-4): 63 Thru 65 10 (Six-LDB): ***165 10 (Can-Six-Note 8.001-5 Type 2)*** ***(Replaces 320 3723)***	.....	1	320 4463	
(Left) 65 10 (Six-WDB)(Except Marlin)	.....	1	320 5727	

NOTE 8.001-1: On 60 10 (WAB) used prior to Car Code No. 20327.

NOTE 8.001-2: On 60 10 (WAB) used beginning with Car Code No. 20327.

NOTE 8.001-3: On 62 10 used prior to Car Sequence Nos. E-51962 and W-54336, on 162 10 used prior to Serial No. CT-208011.

NOTE 8.001-4: On 62 10 used beginning with Car Sequence Nos. E-51962 and W-54336. On 162 10 used beginning with Serial No. C. T. -208011.

NOTE 8.001-5: Two Types of Brake Assemblies were used on the 65 01 (Six-196)(Six-199), and 165 10 (Can-Six). They can be identified as follows:

Type 1: Uses a Bendix Brake Assembly and the self-adjusting mechanism uses a Wire Cable. On 165 10 (Can-Six) used prior to Serial No. JT-501730 and LT-506101 and beginning with Serial No. JT-502353 and LT-508541.

Type 2: Uses a Wagner Brake Assembly and the self-adjusting mechanism uses two Wire Links. On 165 10 (Can-Six) used beginning with Serial No. JT-501730 and LT-506101 and prior to Serial No. JT-502353 and LT-508541.

NOTE 8.002-1: On 60 01 (LAB) used prior to Car Code No. 20215.

NOTE 8.002-2: On 60 01 (LAB) used beginning with Car Code No. 20215.

Copyright 1963 American Motors Corp.

GROUP NO. — DESCRIPTION — YEAR and MODEL	PRIMARY GROUP NO.	PER CAR	PART NO.	CODE
(Left) ***165 01 (Can-Six-232): 163-164 10 (Can-Six): 165 10 (Can-Six-Note 8. 001-5 Type 1)***	.....	1	320 9007	
(Left) ***63-64 10 (Renault)*** ***(Replaces 320 4941)***	.....	1	320 4463	
(Left) 63-64 10 (V8): 60 Thru 64 20-80: ***65 10-80 (Heavy Duty-V8)***	.....	1	320 1019	#
(Left) 65 10 (V8-LDB): 65 80 (LDB)	.....	1	320 5765	
(Left) 65 10 (V8-WDB): 65 80 (WDB): 65 50 (Marlin)	.....	1	320 5729	
(Right) 60 01 (LAB-Note 8. 002-1): 60 01 (WAB) ***(Ref. Pr. List)***	.....	1	320 1912	
(Right) 60 01 (LAB-Note 8. 002-2)	.....	1	320 2469	
(Right) 61 Thru 64 01 ***(Use 320 5322)***	.....	1	320 2782	
(Right) 65 01 (Six-196-Note 8. 001-5 Type 1)(Six-199-Note 8. 001-5 Type 1) ***(Use 320 5322)***	.....	1	320 2782	
(Right) 65 01 (Six-232)(Six-196-Note 8. 001-5 Type 2)(Six-199-Note 8. 001-5 Type 2)	.....	1	320 6132	
(Right) ***165 01 (Can-Six-196)(Can-Six-199)***	.....	1	320 2782	
(Right) 60 10 (LAB) ***(Replaces 320 0245)***	.....	1	320 5836	
(Right) 60 10 (WAB-Note 8. 001-1)	.....	1	320 1536	
(Right) 60 10 (WAB-Note 8. 001-2)	.....	1	320 2464	
(Right) 61 10 ***(Replaces 320 2784)***	.....	1	320 2786	
(Right) 62 10 (Note 8. 001-3)	.....	1	320 3261	
(Right) 62 10 (Note 8. 001-4): 63 Thru 65 10 (Six-LDB): ***(165 10 (Can-Six-Note 8. 001-5 Type 2)*** ***(Replaces 320 3724)***	.....	1	320 4464	
(Right) 65 10 (Six-WDB)(Except Marlin)	.....	1	320 5726	
(Right) ***165 01 (Can-Six-232): 163-164 10 (Can-Six): 165 10 (Can-Six-Note 8. 001-5 Type 1)***	.....	1	320 9008	
(Right) ***63-64 10 (Renault)*** ***(Replaces 320 4942)***	.....	1	320 4464	
(Right) 63-64 10 (V8): 60 Thru 64 20-80: ***65 10-80 (Heavy Duty-V8)***	.....	1	320 1020	#
(Right) 65 10 (V8-LDB): 65 80 (LDB)	.....	1	320 5764	
(Right) 65 10 (V8-WDB): 65 80 (WDB): 65 50 (Marlin)	.....	1	320 5728	
ATTACHING PARTS				
Plate To Axle Tube				
SCREW, Machine ..... 60 Thru 65 01 (8 Req.): 60 Thru 65 10-20-80 (7 Req. -1-1/8" Long)	.....	AR	314 3794	
SCREW, Machine ..... 60 Thru 65 10-20-80 (1-3/8" Long)	.....	1	314 2072	
WASHER, Lock ..... 60 Thru 65 01-10-20-80	17.820	8	G103321	NA
NUT, Hexagon ..... 60 Thru 65 01-10-20-80	17.406	8	400 1239	
PLATE, Parking Brake Cable Retaining				
60 Thru 63 01-10-20-80: 64-65 10-80	.....	2	310 7823	
PLUG, Parking Brake Cable Hole				
60 01	.....	2	320 3175	
8. 003 SHOE SET, Brake (Std.)(Axle Set Of 4 Shoes)(Incl. Linings)(Exchange)				
(Front) 60 Thru 64 01	.....	1	320 2993	
(Front) 65 01 (Six-196-Note 8. 001-5 Type 1)(Six-199-Note 8. 001-5 Type 1)	.....	1	320 2993	
(Front) 65 01 (Six-232)(Six-196-Note 8. 001-5 Type 2)(Six-199-Note 8. 001-5 Type 2) ***(Replaces 320 2991)***	.....	1	320 3379	✓
(Front) ***165 01 (Can-Six-196)(Can-Six-199)***	.....	1	320 2993	
(Front) 60-61 10 (Regular And Heavy Duty): 62 Thru 65 10 (Six-LDB): ***165 10 (Can-Six-Note 8. 001-5 Type 2)*** ***(Replaces 320 2991)***	.....	1	320 3379	
(Front) ***165 01 (Can-Six-232): 163-164 10 (Can-Six): 165 10 (Can-Six-Note 8. 001-5 Type 1)(Exchanges Made In Canada Only)***	.....	1	320 9068	
(Front) 63 Thru 65 10 (V8-LDB): 60 Thru 65 20-80 (LDB)	.....	1	320 2996	
(Rear) 60 Thru 64 01	.....	1	320 2993	
(Rear) 65 01 (Six-196-Note 8. 001-5 Type 1)(Six-199-Note 8. 001-5 Type 1)	.....	1	320 2993	
(Rear) 65 01 (Six-232)(Six-196-Note 8. 001-5 Type 2)(Six-199-Note 8. 001-5 Type 2)	.....	1	320 3380	
(Rear) ***165 01 (Can-Six-196)(Can-Six-199)***	.....	1	320 2993	
(Rear) 60-61 10 (Regular And Heavy Duty) ***(Use 320 3380)***	.....	1	320 2992	
(Rear) 62 Thru 65 10 (Six-LDB): ***165 10 (Can-Six-Note 8. 001-5 Type 2)***	.....	1	320 3380	
(Rear) ***165 01 (Can-Six-232): 163-164 10 (Can-Six): 165 10 (Can-Six-Note 8. 001-5 Type 1)(Exchange Made In Canada Only)***	.....	1	320 9069	
(Rear) 63 Thru 65 10 (V8-LDB): 60 Thru 65 20-80 (LDB)	.....	1	320 2997	

Copyright 1963 American Motors Corp.

GROUP NO. — DESCRIPTION — YEAR and MODEL	PRIMARY GROUP NO.	PER CAR	PART NO.	CODE
8.004 SHOE SET, Brake (Std.)(Axle Set Of 4 Shoes)(Incl. Linings)(Warranty)				
(Front) 60 Thru 64 01	.....	1	320 1907	
(Front) 65 01 (Six-196-Note 8.001-5 Type 1)(Six-199-Note 8.001-5 Type 1)	.....	1	320 1907	
(Front) 65 01 (Six-232)(Six-196-Note 8.001-5 Type 2)(Six-199-Note 8.001-5 Type 2)	.....	1	320 6130	
(Front) ***165 01 (Can-Six-196)(Can-Six-199)***	.....	1	320 1907	
(Front) ***165 01 (Can-Six-232): 163-164 10 (Can-Six): 165 10 (Can-Six-Notes 8.001-5 Type 1 And Note 8.004-1)***	.....	1	320 9003	
(Front) ***165 10 (Can-Six-Note 8.004-2)***	.....	1	320 9212	
(Front) 60-61 10 (Regular And Heavy Duty)	.....	1	320 1892	
(Front) 62 Thru 64 10 (Six)	.....	1	320 3377	
(Front) 65 10 (Six-LDB): ***165 10 (Can-Six-Note 8.001-5 Type 2)***	.....	1	320 6130	
(Front) ***62 10 (Renault)***	.....	1	320 4389	
(Front) ***63-64 10 (Renault)***	.....	1	320 4933	
(Front) 63-64 10 (V8): 60 Thru 64 20-80	.....	1	320 1908	
(Front) 65 10 (V8-LDB): 65 80 (LDB)	.....	1	320 5757	
(Front) ***63 Thru 65 10 (Heavy Duty-V8): 61 Thru 65 80 (Heavy Duty)***	.....	1	320 3057	
(Rear) 60 Thru 64 01	.....	1	320 1907	
(Rear) 65 01 (Six-196-Note 8.001-5 Type 1)(Six-199-Note 8.001-5 Type 1)	.....	1	320 1907	
(Rear) 65 01 (Six-232)(Six-196-Note 8.001-5 Type 2)(Six-199-Note 8.001-5 Type 2)	.....	1	320 6131	
(Rear) ***165 01 (Can-Six-196)(Can-Six-199)***	.....	1	320 1907	
(Rear) ***165 01 (Can-Six-232): 163-164 10 (Can-Six): 165 10 (Can-Six-Notes 8.001-5 Type 1 And 8.004-1)***	.....	1	320 9009	
(Rear) ***165 10 (Can-Six-Note 8.004-2)***	.....	1	320 9213	
(Rear) 60-61 10 (Regular And Heavy Duty)	.....	1	320 1893	
(Rear) 62 Thru 64 10 (Six)	.....	1	320 3378	
(Rear) 65 10 (Six-LDB): ***165 10 (Can-Six-Note 8.001-5 Type 2)***	.....	1	320 6131	
(Rear) ***62 Thru 64 10 (Renault)***	.....	1	320 4390	
(Rear) 63-64 10 (V8): 60 Thru 64 20-80	.....	1	320 1909	
(Rear) 65 10 (V8-LDB): 65 80 (LDB)	.....	1	320 5758	
(Rear) 65 10-80 (WDB)	.....	1	320 5725	
(Rear) ***63 Thru 65 10 (Heavy Duty-V8): 60 Thru 65 80 (Heavy Duty)***	.....	1	320 3058	
8.005 DAMPER KIT, Front Brake Noise				
60 Thru 65 01 (Six-196)	.....	1	320 7107	
DAMPER KIT, Rear Brake Noise				
65 10 (Six-WDB)	.....	1	320 7260	#
65 10 (V8-WDB): 65 50-80 (WDB)	.....	1	320 7261	#
8.008 SPRING, Brake Shoe Return (Upper)				
60 Thru 64 01: ***165 01 (Can): 163-164 10 (Can-Six): 165 10 (Can-Note 8.001-5 Type 1)***	.....	8	320 1928	
65 01 (Six-232)(Six-196-Note 8.001-5 Type 2)(Six-199-Note 8.001-5 Type 2)	.....	8	320 1934	
60-61 10 (LAB): 60 10 (WAB-Note 8.001-1): 62 10 (Note 8.001-4): 63 Thru 65 10 (Six-LDB): ***165 10 (Can-Six-Note 8.001-5 Type 2)***	.....	8	320 1934	
60 10 (WAB-Note 8.001-2-Red): 61 10 (WAB-Red): 62 10 (Note 8.001-3-Red)	.....	4	320 1934	
60 10 (WAB-Note 8.001-2-Blue): 61 10 (WAB-Blue): 62 10 (Note 8.001-3-Blue)	.....	4	320 2461	
63 Thru 65 10 (V8-LDB): 60 Thru 65 20-80 (LDB)	.....	8	311 2780	
60 Thru 65 20-80 (Heavy Duty): 63 Thru 65 10 (Heavy Duty-V8)	.....	8	320 3059	
(Front) ***63-64 10 (Renault)***	.....	4	311 2780	
(Rear) ***63-64 10 (Renault)***	.....	4	320 1934	
(Rear) 65 10-80 (WDB)	.....	2	320 5738	
SPRING, Brake Shoe Automatic Adjusting Lever (Lower)				
60 Thru 64 01 (WAB): ***165 01 (Can): 163-164 10 (Can-Six): 165 10 (Can-Six-Note 8.001-5 Type 1)***	.....	4	320 1927	
65 01 (Six-196-Note 8.001-5 Type 1)(Six-199-Note 8.001-5 Type 1)	.....	4	320 1927	
65 01 (Six-232)(Six-196-Note 8.001-5 Type 2)(Six-199-Note 8.001-5 Type 2)	.....	4	320 3727	

NOTE 8.004-1: On 165 10 (Can-Six) used prior to Serial No. JT-502653 and LT-509568.
NOTE 8.004-2: On 165 10 (Can-Six) used beginning with Serial No. JT-502653 and LT-509568.

Copyright 1963 American Motors Corp.

GROUP NO. — DESCRIPTION — YEAR and MODEL	PRIMARY GROUP NO.	PER CAR	PART NO.	CODE
60-61 10 (WAB): 62 10 (WAB-Note 8.001-3)		4	320 1938	
62 10 (WAB-Note 8.001-4): 63 Thru 65 10 (Six-WAB-LDB): ***165 10 (Can-Six-Note 8.001-5 Type 2)***		4	320 3727	
63 Thru 65 10 (V8-WAB-LDB): 60 Thru 65 20-80 (WAB-LDB)		4	320 1937	#
(Front) ***63-64 10 (Renault)***		2	320 1937	
(Rear) ***63-64 10 (Renault)***		2	320 3727	
SPRING, Brake Shoe Retaining (Lower)				
60-61 01-20-80 (LAB)		4	49 561	
60-61 10 (LAB)		4	320 1935	
(Rear) 65 10-80 (WDB)		2	320 5737	
SPRING, Brake Shoe Hold Down				
60 Thru 64 01 (Six-196): ***165 01 (Can): 163-164 10 (Can-Six): 165 10 (Can-Six-Note 8.001-5 Type 1)***		8	320 2296	
65 01 (Six-196-Note 8.001-5 Type 1)(Six-199-Note 8.001-5 Type 1)		8	320 2296	
60-61 20-80 (LAB)		8	26 865	
63 Thru 65 10 (V8-LDB): 60-61 20-80 (WAB): 62 Thru 65 80 (LDB) ***(Replaces 320 1956)***		8	320 5979	
63 Thru 65 10 (Heavy Duty-V8): 61 Thru 65 20-80 (Heavy Duty)		8	320 3060	
(Front) ***63-64 10 (Renault)***		4	320 1956	
(Rear) 65 10-80 (WDB)		2	320 5736	
CLIP, Brake Shoe Hold Down				
65 01 (Six-232)(Six-196-Note 8.001-5 Type 2)(Six-199-Note 8.001-5 Type 2)		8	320 1936	
60 Thru 65 10 (Six-LDB): ***165 10 (Can-Six-Note 8.001-5 Type 2)***		8	320 1936	
(Rear) ***63-64 10 (Renault)***		4	320 1936	
SPRING, Parking Brake Lever Strut				
60 Thru 64 01: ***165 01 (Can): 163-164 10 (Can-Six): 165 10 (Can-Six-Note 8.001-5 Type 1)***		2	320 1958	
65 01 (Six-196-Note 8.001-5 Type 1)(Six-199-Note 8.001-5 Type 1)		2	320 1958	
65 01 (Six-232)(Six-196-Note 8.001-5 Type 2)(Six-199-Note 8.001-5 Type 2)		2	320 0264	
60 Thru 65 10 (Six-LDB): ***165 10 (Can-Six-Note 8.001-5 Type 2): 63-64 10 (Renault)***		2	320 0264	
63 Thru 65 10 (V8-LDB): 60 Thru 65 20-80 (LDB)		2	311 2779	
(Left) 65 10-80 (WDB)		1	320 5741	
(Right) 65 10-80 (WDB)		1	320 5740	
PIN, Brake Shoe Hold Down Spring Or Clip Retaining				
65 01 (Six-232)(Six-196-Note 8.001-5 Type 2)(Six-199-Note 8.001-5 Type 2)		8	320 0257	
60 Thru 65 10 (Six-LDB)		8	320 0257	
(Front) 63 Thru 65 10 (V8-LDB): 60 Thru 65 20-80 (LDB): ***63-64 10 (Renault)***		4	311 5381	
(Rear) 63 Thru 65 10 (V8-LDB): 60 Thru 65 20-80 (LDB)		4	314 3612	
(Rear) ***63-64 10 (Renault)***		4	320 0257	
ANCHOR, Brake Shoe Hold Down Spring				
60 Thru 64 01: ***165 01 (Can): 163-164 10 (Can-Six): 165 10 (Can-Six-Note 8.001-5 Type 1)***		8	320 1954	
65 01 (Six-196-Note 8.001-5 Type 1)(Six-199-Note 8.001-5 Type 1)		8	320 1954	
RETAINER, Brake Shoe Hold Down Spring				
63 Thru 65 10 (V8-LDB): 60 Thru 65 10-80 (LDB): ***63-65 10 (Heavy Duty-V8): 61 Thru 65 20-80 (Heavy Duty)*** ***(Replaces 320 1962)***		16	89 259	
(Front) ***63-64 10 (Renault)***		8	89 259	
8.009 LINK, Brake Shoe Automatic Adjusting (Upper)				
65 01 (Six-232)(Six-196-Note 8.001-5 Type 2)(Six-199-Note 8.001-5 Type 2)		4	320 3733	
62 10 (Note 8.001-4): 63 Thru 65 10 (Six-LDB)		4	320 3733	
(Rear) ***63-64 10 (Renault)***		2	320 3733	

Copyright 1963 American Motors Corp.

GROUP NO. — DESCRIPTION — YEAR and MODEL	PRIMARY GROUP NO.	PER CAR	PART NO.	CODE
LINK, Brake Shoe Automatic Adjusting Actuator (Lower)				
65 01 (Six-232)(Six-196-Note 8.001-5 Type 2)(Six-199-Note 8.001-5 Type 2)	.....	4	320 3734	
62 10 (Note 8.001-4): 63 Thru 65 10 (Six-LDB)	.....	4	320 3734	
(Rear) ***63-64 10 (Renault)***	.....	2	320 3734	
CRANK, Brake Shoe Automatic Adjusting Link				
(Left) 65 01 (Six-232)(Six-196-Note 8.001-5 Type 2)(Six-199-Note 8.001-5 Type 2)	.....	2	320 3731	
(Left) 62 10 (Note 8.001-4): 63 Thru 65 10 (Six-LDB)	.....	2	320 3731	
(Right) 65 01 (Six-232)(Six-196-Note 8.001-5 Type 2)(Six-199-Note 8.001-5 Type 2)	.....	2	320 3732	
(Right) 62 10 (Note 8.001-4): 63 Thru 65 10 (Six-LDB)	.....	2	320 3732	
(Left-Rear) ***63-64 10 (Renault)***	.....	1	320 3731	
(Right-Rear) ***63-64 10 (Renault)***	.....	1	320 3732	
8.010 CABLE, Brake Shoe Automatic Adjusting				
60 Thru 64 01 (WAB): ***165 01 (Can): 163 Thru 165 10 (Can-Six)***	.....	4	320 1961	
65 01 (Six-196-Note 8.001-5 Type 1)(Six-199-Note 8.001-5 Type 1)	.....	4	320 1961	
60 10 (WAB-Note 8.001-1)	.....	4	320 9515	
60 10 (WAB-Note 8.001-2): 61 10 (WAB): 62 10 (Note 8.001-3)	.....	4	320 2462	
63 Thru 65 10 (V8-LDB): 60 Thru 65 20-80 (WAB-LDB)	.....	4	320 1027	
(Front) ***63-64 10 (Renault)***	.....	2	320 1027	
8.011 GUIDE, Brake Shoe Automatic Adjusting Cable				
(Left) 60 Thru 64 01 (WAB): ***165 01 (Can):*** 63 Thru 65 10 (V8-LDB): 60 Thru 65 20-80 (WAB-LDB): ***163 Thru 165 10 (Can-Six)***	.....	4	320 1947	
65 01 (Six-196-Note 8.001-5 Type 1)(Six-199-Note 8.001-5 Type 1)	.....	4	320 1947	
(Left) 60-61 10 (WAB): 62 10 (Note 8.001-3)	.....	2	320 1537	
(Right) 60-61 10 (WAB): 62 10 (Note 8.001-3)	.....	2	320 1538	
(Top) 60 10 (WAB-Note 8.001-2): 61 10 (WAB): 62 10 (WAB-Note 8.001-3)	.....	4	320 2460	
(Front) ***63-64 10 (Renault)***	.....	2	320 1947	
ATTACHING PARTS				
Guide To Brake Shoe				
SCREW..... 60-61 10 (WAB): 62 10 (Note 8.001-3)	.....	4	320 1539	
8.012 LEVER, Brake Shoe Automatic Adjusting				
60 Thru 64 01 (WAB): ***165 01 (Can):*** 63 Thru 65 10 (V8-LDB): 60 Thru 65 20-80 (WAB-LDB): ***163-164 10 (Can-Six): 165 10 (Can-Six-Note 8.001-5 Type 1)***	.....	2	320 1029	
(Left) 65 01 (Six-196-Note 8.001-5 Type 1)(Six-199-Note 8.001-5 Type 1)	.....	2	320 1029	
(Left) 65 01 (Six-232)(Six-196-Note 8.001-5 Type 2)(Six-199-Note 8.001-5 Type 2)	.....	2	320 3725	
(Left) 60-61 10 (WAB): 62 10 (Note 8.001-3) .....***(Replaces 320 1544)***	.....	2	320 3703	
(Left) 62 10 (Note 8.001-4): 63 Thru 65 10 (Six-LDB): ***165 10 (Can-Six-Note 8.001-5 Type 2)***	.....	2	320 3725	
(Left-Front) ***63-64 10 (Renault)***	.....	1	320 1029	
(Left-Rear) ***63-64 10 (Renault)***	.....	1	320 3725	
(Left-Rear) 65 10-80 (WDB)...(Incl. Pin)	.....	1	320 5731	
(Right-Front) ***63-64 10 (Renault)***	.....	1	320 1030	
(Right-Rear) ***63-64 10 (Renault)***	.....	1	320 3726	
(Right-Rear) 65 10-80 (WDB)...(Incl. Pin)	.....	1	320 5730	
(Right) 60 Thru 64 01 (WAB): ***165 01 (Can):*** 63 Thru 65 10 (V8-WAB-LDB): 60 Thru 65 20-80 (WAB-LDB): ***163-164 10 (Can-Six: 165 10 (Can-Six-Note 8.001-5 Type 1)***	.....	2	320 1030	
(Right) 65 01 (Six-196-Note 8.001-5 Type 1)(Six-199-Note 8.001-5 Type 1)	.....	2	320 1030	
(Right) 65 01 (Six-232)(Six-196-Note 8.001-5 Type 2)(Six-199-Note 8.001-5 Type 2)	.....	2	320 3726	
(Right) 60-61 10 (WAB): 62 10 (Note 8.001-3) .....***(Replaces 320 1545)***	.....	2	320 3704	
(Right) 62 10 (Note 8.001-4): 63 Thru 65 10 (Six-LDB): ***165 10 (Can-Six-Note 8.001-5 Type 2)***	.....	2	320 3726	

Copyright 1963 American Motors Corp.

GROUP NO. — DESCRIPTION — YEAR and MODEL	PRIMARY GROUP NO.	PER CAR	PART NO.	CODE
LATCH, Rear Brake Shoe Automatic Adjusting Lever				
65 10-80 (WDB)	.....	2	320 5732	
ATTACHING PARTS Latch To Shoe				
RETAINER..... 65 10-80 (WDB)	8.024	2	310 8202	
WASHER, Spring ..... 65 10-80 (WDB)	8.024	2	310 8203	
SPRING, Rear Brake Shoe Automatic Adjusting Lever Latch				
(Left) 65 10-80 (WDB)	.....	1	320 5735	
(Right) 65 10-80 (WDB)	.....	1	320 5734	
PIN, Rear Brake Shoe Automatic Adjusting Lever Latch				
65 10-80 (WDB)	.....	2	320 5733	
ATTACHING PARTS Lever To Brake Shoe				
RETAINER..... 65 10-80 (WDB)	8.024	2	310 8202	
WASHER, Spring ..... 65 10-80 (WDB)	8.024	2	310 8203	
8.014 SCREW, Brake Shoe Adjusting				
60-61 01 (LAB)	.....	4	320 1913	
60-61 10-20-80 (LAB)	.....	4	320 0258	
61 20-80 (Heavy Duty)	.....	4	49 554	
(Left) 60 Thru 64 01 (WAB): ***165 01 (Can):*** 63 Thru 65 10 (V8-WAB-LDB): 60 Thru 65 20-80 (WAB-LDB): ***163-164 10 (Can-Six): 165 10 (Can-Six-Note 8.001-5 Type 1)***	.....	2	320 1022	
(Left) 65 01 (Six-196-Note 8.001-5 Type 1)(Six-199-Note 8.001-5 Type 1)	.....	2	320 1022	
(Left) 65 01 (Six-232)(Six-196-Note 8.001-5 Type 2)(Six-199-Note 8.001-5 Type 2)	.....	2	320 3728	
(Left) 60-61 10 (WAB): 62 10 (Note 8.001-3) ***(Replaces 320 1540)***	.....	2	320 3729	
(Left) 62 10 (Note 8.001-4): 63 Thru 65 10 (Six-LDB)	.....	2	320 3728	
(Left-Front) ***63-64 10 (Renault)***	.....	1	320 1022	
(Left-Rear) ***63-64 10 (Renault)***	.....	1	320 3728	
(Right) 60 Thru 64 01 (WAB): ***165 01 (Can):*** 63 Thru 65 10 (V8-WAB-LDB): 60 Thru 65 20-80 (WAB-LDB): ***163-164 10 (Can-Six): 165 10 (Can-Six-Note 8.001-5 Type 1)***	.....	2	320 1023	
(Right) 65 01 (Six-196-Note 8.001-5 Type 1)(Six-199-Note 8.001-5 Type 1)	.....	2	320 1023	#
(Right) 65 01 (Six-232)(Six-196-Note 8.001-5 Type 2)(Six-199-Note 8.001-5 Type 2)	.....	2	320 3729	
(Right) 60-61 10 (WAB): 62 10 (Note 8.001-3) ***(Replaces 320 1540)***	.....	2	320 3728	
(Right) 62 10 (Note 8.001-4): 63 Thru 65 10 (Six-LDB): ***165 10 (Can-Six-Note 8.001-5 Type 2)***	.....	2	320 3729	
(Right-Front) ***63-64 10 (Renault)***	.....	1	320 1023	
(Right-Rear) ***63-64 10 (Renault)***	.....	1	320 3729	
SOCKET, Brake Shoe Adjusting Screw				
60-61 01 (LAB)	.....	4	320 1915	
60 Thru 64 01 (WAB): ***165 01 (Can):*** 63 Thru 65 10 (V8-WAB-LDB): 60 Thru 65 20-80 (WAB-LDB): ***163-164 10 (Can-Six): 165 10 (Can-Six-Note 8.001-5 Type 1)***	.....	4	320 1919	
65 01 (Six-196-Note 8.001-5 Type 1)(Six-199-Note 8.001-5 Type 1)	.....	4	320 1919	
65 01 (Six-232)(Six-196-Note 8.001-5 Type 2)(Six-199-Note 8.001-5 Type 2)	.....	4	320 3730	
60-61 10: 62 10 (Note 8.001-3): 60-61 20-80: ***63-64 10 (Heavy Duty): 61 Thru 64 20-80 (Heavy Duty)*** ***(Replaces 311 2777)***	.....	4	320 0260	
62 10 (Note 8.001-4): 63 Thru 65 10 (Six-LDB): ***165 10 (Can-Six-Note 8.001-5 Type 2)***	.....	4	320 3730	
(Front) ***63-64 10 (Renault)***	.....	2	320 1919	
(Rear) ***63-64 10 (Renault)***	.....	2	320 3730	

Copyright 1963 American Motors Corp.

GROUP NO. — DESCRIPTION — YEAR and MODEL	PRIMARY GROUP NO.	PER CAR	PART NO.	CODE
NUT, Brake Shoe Adjusting Screw				
60-61 01 (LAB)	.....	4	320 1914	
60-61 10-20-80 (LAB): ***63-64 10 (Heavy Duty-V8): 61 Thru 64 20-80 (Heavy Duty)*** ***(Replaces 311 2781)***	.....	4	320 0259	
(Left) 60 Thru 64 01 (WAB): ***165 01 (Can):*** 63 Thru 65 10 (V8-LDB): 60 Thru 65 20-80 (WAB-LDB): ***163-164 10 (Can-Six): 165 10 (Can-Six-Note 8.001-5 Type 1)***	.....	2	320 1917	
(Left) 65 01 (Six-196-Note 8.001-5 Type 1)(Six-199-Note 8.001-5 Type 1)	.....	2	320 1917	
(Left) 65 01 (Six-232)(Six-196-Note 8.001-5 Type 2)(Six-199-Note 8.001-5) Type 2)	.....	2	320 0259	
(Left) 60-61 10: 62 10 (Note 8.001-3)	.....	2	320 1541	
(Left) 62 10 (Note 8.001-4): 63 Thru 65 10 (Six): ***165 10 (Can-Six-Note 8.001-5 Type 2)***	.....	2	320 0259	
(Left-Front) ***63-64 10 (Renault)***	.....	1	320 1917	
(Left-Rear) ***63-64 10 (Renault)***	.....	1	320 0259	
(Right) 60 Thru 64 01 (WAB): ***165 01 (Can):*** 63 Thru 65 10 (V8-WAB): 60 Thru 65 20-80 (WAB-LDB): ***163-164 10 (Can-Six): 165 10 (Can-Six-Note 8.001-5 Type 1)***	.....	2	320 1918	
(Right) 65 01 (Six-196-Note 8.001-5 Type 1)(Six-199-Note 8.001-5 Type 1)	.....	2	320 1918	
(Right) 65 01 (Six-232)(Six-196-Note 8.001-5 Type 2)(Six-199-Note 8.001-5 Type 2)	.....	2	320 1541	
(Right) 60-61: 62 10 (Note 8.001-3)	.....	2	320 0259	
(Right) 62 10 (Note 8.001-4): 63 Thru 65 10 (Six-LDB): ***165 10 (Can-Six-Note 8.001-5 Type 2)***	.....	2	320 1541	
(Right-Front) ***63-64 10 (Renault)***	.....	1	320 1918	
(Right-Rear) ***63-64 10 (Renault)***	.....	1	320 1541	
8.016 LINK, Brake Shoe To Cylinder Operating				
65 01 (Six-232)(Six-196-Note 8.001-5 Type 2)(Six-199-Note 8.001-5 Type 2)	.....	8	320 0272	
60 Thru 65 10 (Six-LDB)	.....	8	320 0272	
63 Thru 65 10 (V8-LDB): 60 Thru 65 80 (LDB)	.....	8	48 331	
(Front) ***63-64 10 (Renault)***	.....	4	48 331	
(Rear) ***63-64 10 (Renault)***	.....	4	320 0272	
8.022 PLATE, Brake Shoe Anchor Pin Guide				
60 01 (LAB-Note 8.002-2): 61 Thru 64 01	.....	2	320 2470	
65 01 (Six-196-Note 8.001-5 Type 1)(Six-199-Note 8.001-5 Type 1)	.....	2	320 2470	
65 01 (Six-232)(Six-196-Note 8.001-5 Type 2)(Six-199-Note 8.001-5 Type 2)	.....	4	320 0262	
60 Thru 65 10 (Six-LDB)	.....	4	320 0262	
60-61 20-80 (LAB)	.....	4	311 3929	
63 Thru 65 10 (V8-LDB): 60 Thru 65 20-80 (WAB-LDB)	.....	4	320 1032	
(Front) ***63-64 10 (Renault)***	.....	2	320 1032	
(Rear) ***63-64 10 (Renault)***	.....	2	320 0262	
BLOCK, Brake Shoe Anchor Pin Guide				
65 01 (Six-232)(Six-196-Note 8.001-5 Type 2)(Six-199-Note 8.001-5 Type 2)	.....	4	320 4589	
60 Thru 62 10 ***(Ref. Pr. List)***	.....	4	320 0261	
63 Thru 65 10 (Six-LDB) ***(Replaces 320 4465)***	.....	4	320 4589	
(Front) ***63-64 10 (Renault)*** ***(Replaces 320 4465)***	.....	2	320 4589	
8.024 LEVER, Brake Shoe Parking Brake				
(Left) 60 Thru 64 01: ***165 01 (Can): 163-164 10 (Can-Six): 165 10 (Can-Six-Note 8.001-5 Type 1)***	.....	1	320 1959	
(Left) 65 01 (Six-196-Note 8.001-5 Type 1)(Six-199-Note 8.001-5 Type 1)	.....	1	320 1959	
(Left) 65 01 (Six-232)(Six-196-Note 8.001-5 Type 2)(Six-199-Note 8.001-5 Type 2)	.....	1	320 3262	
(Left) 60-61 10	.....	1	320 1373	

Copyright 1963 American Motors Corp.

GROUP NO. — DESCRIPTION — YEAR and MODEL	PRIMARY GROUP NO.	PER CAR	PART NO.	CODE
(Left) 62 Thru 65 10 (Six-LDB): ***165 10 (Can-Six-Note 8.001-5 Type 2): 63 10 (Renault)***	.....	1	320 3262	
(Left) 63 Thru 65 10 (V8-LDB): 60 Thru 65 20-80 (LDB)	.....	1	320 1033	
(Left) 65 10-80 (WDB)	.....	1	320 5743	
(Right) 60 Thru 64 01: ***165 01 (Can): 163-164 10 (Can-Six): 165 10 (Can-Six-Note 8.001-5 Type 1)***	.....	1	320 1960	
(Right) 65 01 (Six-196-Note 8.001-5 Type 1)(Six-199-Note 8.001-5 Type 1)	.....	1	320 1960	
(Right) 65 01 (Six-232)(Six-196-Note 8.001-5 Type 2)(Six-199-Note 8.001-5 Type 2)	.....	1	320 3263	
(Right) 60-61 10	.....	1	320 1374	
(Right) 62 Thru 65 10 (Six-LDB): ***165 10 (Can-Six-Note 8.001-5 Type 2): 63 10 Renault)***	.....	1	320 3263	
(Right) 63 Thru 65 10 (V8-LDB): 60 Thru 65 20-80 (LDB)	.....	1	320 1034	
(Right) 65 10-80 (WDB)	.....	1	320 5742	
STRUT, Brake Shoe Parking Brake Lever				
60 Thru 64 01: ***165 01 (Can): 163-164 10 (Can-Six): 165 10 (Can-Six-Note 8.001-5 Type 1)***	.....	2	320 1944	
65 01 (Six-196-Note 8.001-5 Type 1)(Six-199-Note 8.001-5 Type 1)	.....	2	320 1944	
65 01 (Six-232)(Six-196-Note 8.001-5 Type 2)(Six-199-Note 8.001-5 Type 2)	.....	2	320 3393	
60-61 10	.....	2	320 0263	
62 Thru 65 10 (Six-LDB): ***165 10 (Can-Six-Note 8.001-5 Type 2): 63 10 (Renault)***	.....	2	320 3393	
63 Thru 65 10 (V8-LDB): 60 Thru 65 20-80 (LDB)	.....	2	311 2778	
65 10-80 (WDB)	.....	2	320 5739	
RETAINER, Brake Shoe Parking Brake Lever Strut				
60 Thru 64 01: 63 Thru 65 10 (V8-LDB): 60 Thru 65 20-80 (LDB): ***163-164 10 (Can-Six): 165 10 (Can-Six-Note 8.001-5 Type 1)***	.....	2	310 8202	
65 01 (Six-196-Note 8.001-5 Type 1)(Six-199-Note 8.001-5 Type 1)	.....	2	310 8202	
65 01 (Six-232)(Six-196-Note 8.001-5 Type 2)(Six-199-Note 8.001-5 Type 2)	.....	2	320 0253	
60 Thru 65 10 (Six-LDB): ***165 10 (Can-Six-Note 8.001-5 Type 2)***	.....	2	320 0253	
WASHER, Brake Shoe Parking Brake Lever Strut Spring				
60 Thru 64 01: ***165 01 (Can):*** 63 Thru 65 10 (V8-LDB): 60 Thru 65 20-80 (LDB): ***163-164 10 (Can-Six): 165 10 (Can-Six-Note 8.001-5 Type 1)***	.....	2	310 8203	
65 01 (Six-196-Note 8.001-5 Type 1)(Six-199-Note 8.001-5 Type 1)	.....	2	310 8203	
8.030 COVER, Brake Adjusting Hole				
60 Thru 64 01: ***165 01 (Can):*** 63 Thru 65 10 (V8-LDB): 60 Thru 65 20-80 (LDB): ***163-164 10 (Can-Six): 165 10 (Can-Six-Note 8.001-5 Type 1)***	.....	4	320 1957	
65 01 (Six-196-Note 8.001-5 Type 1)(Six-199-Note 8.001-5 Type 1)	.....	4	320 1957	
65 01 (Six-232)(Six-196-Note 8.001-5 Type 2)(Six-199-Note 8.001-5 Type 2)	.....	4	320 0265	
60 Thru 65 10 (Six-LDB): ***165 10 (Can-Six-Note 8.001-5 Type 2)***	.....	4	320 0265	
63-64 10 (Heavy Duty-V8): 60 Thru 64 20-80 (Heavy Duty)	.....	4	78 986	
(Front) ***63-64 10 (Renault)***	.....	2	320 1957	
(Rear) ***63-64 10 (Renault)***	.....	2	320 0265	
(Rear) 65 10-80 (WDB)	.....	2	320 1957	

Copyright 1963 American Motors Corp.

GROUP NO. — DESCRIPTION — YEAR and MODEL	PRIMARY GROUP NO.	PER CAR	PART NO.	CODE
8.035 CYLINDER ASSEMBLY, Brake Master				
60 01: ***61 Thru 63 01 (RHD): 60 Thru 62 10-80 (RHD)***	.....	1	311 6920	
60 10-20-80 (LHD-LPB-Note 8.035-1)	.....	1	320 2152	
61 01-10-20-80 (LHD-LPB): 60 10-20-80 (LHD-LPB-Note 8.035-2)	.....	1	315 9418	
62 01-10-80 (LHD-LPB) ***(Replaces 316 5695)***	.....	1	320 3914	
63 01 (LHD-LPB)	.....	1	320 4161	
64 01 (LPB): 64 10-80 (LPB): 65 01-10 (Six-LPB-Note 8.035-4 Type 2)	.....	1	320 5103	—
65 01-10 (Six-LPB-Note 8.035-4 Type 1): 65 10 (V8-LPB): 65 80 (LPB)	.....	1	320 5766	—
62 10-80 (Heavy Duty) ***(Replaces 320 3652)***	.....	1	320 3915	—
63 10-80 (LPB)	.....	1	320 4162	
61 20-80 (Heavy Duty)	.....	1	320 3056	
63-64 10-80 (RHD-V8-WPB): 65 10 (RHD-V8-WPB-LDB)	.....	1	320 4468	#
65 10 (RHD-V8-WDB)	.....	1	320 6270	#
ATTACHING PARTS Cylinder To Dash Panel				
BOLT, Hexagon ..... 60 01: ***60-61 10-80 (RHD)***	17.038	2	G181652	NA
BOLT, Hexagon ..... ***61 Thru 63 01 (RHD-1 Req. -3-1/2" Long): 62-63 10-80 (RHD-2 Req.)***	17.038	AR	G189329	NA
BOLT, Hexagon ..... ***61 Thru 63 01 (RHD-3-1/4" Long)***	17.038	1	G187044	NA
STUD ..... 61 01 (LHD): 60 Thru 62 10-20-80 (LHD-4 Req.): 64-65 01 (LHD-LPB-2 Req.): 63 Thru 65 10-80 (2 Req.)	.....	AR	315 7870	
SCREW ..... 61 Thru 63 01 (LHD)	.....	2	316 2760	
WASHER, Plain 64-65 01-10-80	.....	2	400 1104	
WASHER, Plain ..... ***61 Thru 63 01 (RHD)*** ***(Replaces 800 0169)***	17.814	2	400 1107	
WASHER, Lock ..... ***60 Thru 62 10-80 (RHD)***	17.820	2	G120382	NA
WASHER, Bite ..... ***60 Thru 62 10-80 (RHD)***	1.010	2	313 8264	
WASHER, Lock ..... 60 Thru 62 01-10-80 (LHD): 64-65 01: 63 Thru 65 10-80	17.820	4	G120382	NA
NUT, Hexagon ..... 61 Thru 65 01 (LHD-2 Req.): 60 Thru 62 10-20-80 (LHD-4 Req.): 63 Thru 65 10-80 (2 Req.)	17.406	AR	G120369	NA
SEAL, Brake Master Cylinder To Dash				
61 Thru 65 01 (LHD): 60 Thru 62 10-20-80 (LHD): 63 Thru 65 10-80	.....	1	314 7257	
BAFFLE, Brake Master Cylinder Heat				
61 Thru 63 01 (RHD)	.....	1	313 1732	

NOTE 8.035-1: On 60 10-20-80 (LPB) used prior to Car Code 20527.

NOTE 8.035-2: On 60 10-20-80 (LPB) used beginning with Car Code 20527.

NOTE 8.035-3: Two Types of Master Cylinders were used on the 62 01-10-80 (LHD-LPB). They can be identified as follows:

Type 1: Cylinder does not have Stop Screw protruding from the outlet side.

Type 2: Cylinder has Stop Screw protruding from the outlet side.

NOTE 8.035-4: Two Types of Brake Master Cylinders were used on the 65 01 (LPB) and the 65 10 (Six-LPB). They can be identified as follows:

Type 1: Master Cylinder Push Rod does not have a groove for Master Cylinder Boot and the Secondary Piston uses two Rubber Cups and an O-Ring. On 65 01 (LPB) used prior to Car Sequence Code E-000290 and beginning with Car Sequence Code E-004833 and on 65 10 (LPB) used prior to Car Sequence Codes E-000469 and W-000251 and beginning with Car Sequence Codes E-004838 and W-007307.

Type 2: Master Cylinder Push Rod has groove for Master Cylinder Boot and the Secondary Piston uses three Rubber Cups. On 65 01 (LPB) used beginning with Car Sequence Code E-000290 and prior to Car Sequence Code E-004833 and on 65 10 (Six-LPB) used beginning with Car Sequence Codes E-000469 and W-000251 and prior to Car Sequence Codes E-004838 and W-007307.

Copyright 1963 American Motors Corp.

GROUP NO. — DESCRIPTION — YEAR and MODEL	PRIMARY GROUP NO.	PER CAR	PART NO.	CODE
SHIELD, Brake Master Cylinder Heat				
60 Thru 62 80 (RHD)	.....	1	315 4309	
ATTACHING PARTS Shield To Body				
60 Thru 62 80 (RHD) ...(Replaces 800 0091)	17.671	2	400 1031	
SHIELD, Brake Master Cylinder Dust				
63 01 (LHD)	.....	1	320 4138	
8.036 BRACE, Brake Master Cylinder				
60 01	.....	1	314 0840	
60-61 10 (RHD)	.....	1	314 7751	
(Left) *61 Thru 63 01 (RHD)*	.....	1	313 4026	
(Right) *61 Thru 63 01 (RHD)*	.....	1	313 4027	
ATTACHING PARTS Brace To Toeboard				
SCREW, Machine..... 60 01 ...*(Replaces 800 0113)*	17.598	4	400 1231	
SCREW, Tapping..... 60 01	17.670	1	G172473	NA
BOLT, Hexagon..... *61 Thru 63 01 (RHD)*	17.038	1	G181636	NA
WASHER, Plain..... 60 01 ...*(Replaces 800 0153)*	17.814	1	400 1093	
WASHER, Plain..... *61 Thru 63 01 (RHD)*	17.814	1	G120394	NA
WASHER, Lock 60 01	17.820	1	G120214	NA
WASHER, Lock ..... *61 Thru 63 01 (RHD)*	17.820	1	G120382	NA
WASHER, Bite..... *61 Thru 63 01 (RHD)*	10.003	2	310 8995	
SPACER, Brake Master Cylinder To Toeboard				
60 01	10.069	AR	312 4317	
8.038 CAP, Brake Master Cylinder Filler				
60 01: *61 Thru 63 01 (RHD): 60 Thru 62 10-80 (RHD)*	.....	1	311 8690	
60 10-20-80 (LHD-LPB-Note 8.035-1): 61 01-10-20-80 (LHD-LPB-Wagner) ...*(Replaces 320 0359)*	.....	1	320 2903	
60 10-20-80 (LHD-LPB-Note 8.035-2): 61 01-10-20-80 (LHD-LPB-Bendix)...	.....	1	320 2481	
62 01-10-80 (LHD-LPB-Bendix)	.....	2	320 4344	
62 01-10-80 (LHD-LPB-Delco Moraine)	.....	2	320 3666	
63 01 (LHD-LPB): 64 01 (LPB): 63-64 10-80 (LPB): 65 01-10-80 (LPB)	.....	1	320 4126	
61 20-80 (Heavy Duty)	.....	1	320 3271	
63-64 10-80 (RHD-V8-WPB): 65 10 (RHD-V8-WPB)(RHD-V8-WDB)	.....	1	320 2481	#
ATTACHING PARTS Cap To Cylinder				
BOLT..... 63 01 (LHD-LPB): 63 10-80 (LPB): 64 01-10-80 (LHD): 65 01-10-80 (LPB)	.....	1	320 4128	
GASKET, Brake Master Cylinder Filler Cap				
60 01: *61 Thru 63 01 (RHD): 60 Thru 62 10-80 (RHD)*	.....	1	310 5213	
61 01-10-20-80 (LHD-LPB-Bendix): 60 10-20-80 (LHD-LPB-Note 8.035-2) ...	.....	1	320 2482	
61 01-10-20-80 (LHD-LPB-Wagner): 60 10-20-80 (LHD-LPB-Note 8.035-1) ..	8.510	1	311 6783	
62 01-10-80 (LHD-LPB-Bendix)	.....	2	320 3610	
63 01 (LHD-LPB): 63 10-80 (LPB): 64-65 01 (LPB): 64-65 10-80 (LHD-LPB)	.....	1	320 4127	
61 20-80 (Heavy Duty)	.....	1	320 3270	
63-64 10-80 (RHD-V8-WPB): 65 10 (RHD-V8-WPB)(RHD-V8-WDB)	.....	1	320 2482	#

Copyright 1963 American Motors Corp.

GROUP NO. — DESCRIPTION — YEAR and MODEL	PRIMARY GROUP NO.	PER CAR	PART NO.	CODE
TAG, Brake Master Cylinder Instruction				
62 01-10-80 (LHD-LPB-Delco Moraine)	.....	1	316 5972	
8.040 FITTING, Brake Master Cylinder Outlet				
60 01	.....	1	311 3918	
61 Thru 63 01 (RHD)	.....	1	310 8070	
62 01-10-80 (LHD-LPB-Bendix): 63 01 (LHD-LPB): 63 10-80 (LPB)	.....	1	320 3140	
60 Thru 63 10-80 (RHD)	.....	1	312 5300	
(Front) 62 01-10-80 (LHD-LPB-Delco Moraine)	.....	1	315 7514	
(Rear) 62 01-10-80 (LHD-LPB-Delco Moraine)	.....	1	316 5884	
GASKET, Brake Master Cylinder Outlet Fitting To Cylinder				
60 01: ***61 Thru 63 01 (RHD): 60 Thru 62 10-80 (RHD)***	.....	1	47 768	
BOLT, Brake Master Cylinder Outlet Fitting				
60 01	.....	1	311 3919	
61 Thru 63 01 (RHD): 60 Thru 62 10-80 (RHD)	.....	1	310 8068	
GASKET, Brake Master Cylinder Outlet Fitting Bolt To Fitting				
60 01: ***61 Thru 63 01 (RHD): 60 Thru 62 10-80 (RHD)***	.....	1	47 771	
8.042 SPRING, Brake Master Cylinder Check Valve				
62 01-10-80 (LHD-LPB-Delco Moraine)	.....	2	320 3673	
63 01 (LHD-LPB): 63 10-80 (LPB)	.....	2	320 4170	
64-65 01-10-80 (LPB)	.....	2	320 4994	
(Primary) 62 01-10-80 (LHD-LPB-Bendix)	8.510	1	311 6788	
(Secondary) 62 01-10-80 (LHD-LPB-Bendix)	.....	1	320 3602	
8.044 PISTON, Brake Master Cylinder				
(Primary) 62 01-10-80 (LHD-LPB-Bendix) ***(Replaces 320 3596)***	.....	1	320 3920	
(Primary) 62 01-10-80 (LHD-LPB-Delco Moraine)	.....	1	320 3674	
(Primary) ***62 10-80 (Heavy Duty) (Replaces 320 3651)***	.....	1	320 3921	
(Secondary) 62 01-10-80 (LHD-LPB-Delco Moraine)	.....	1	320 3675	
(Secondary) 63 01 (LHD-LPB)	.....	1	320 4137	
(Secondary) 64 01 (LPB): 63-64 10-80 (LPB): 65 01-10 (Six-LPB-Note 8.035-4 Type 2)	.....	1	320 4123	
(Secondary) 65 01-10 (Six-LPB-Note 8.035-4 Type 1): 65 10 (V8-LPB): 65 80 (LPB)	.....	1	320 5768	
8.046 PLATE, Brake Master Cylinder Piston Stop				
60 01: ***61 Thru 63 01 (RHD): 60 Thru 62 10-80 (RHD)***	.....	1	311 8693	
61 01 (LHD-LPB-Wagner): 60-61 10-20-80 (LHD-LPB-Wagner)	.....	1	320 2155	
60 10-20-80 (LHD-LPB-Bendix-Note 8.035-1)	.....	1	320 2153	
60 10-20-80 (LHD-LPB-Bendix-Note 8.035-2): 61 10-20-80 (LHD-LPB-Bendix): ***63 Thru 65 10 (RHD-V8-WPB): 63 80 (RHD-WPB)***	.....	1	320 2480	
STOP, Brake Master Cylinder Secondary Piston				
62 01-10-80 (LHD-LPB-Bendix)	.....	1	320 3601	
62 01-10-80 (LHD-LPB-Delco Moraine)	.....	1	320 3668	

Copyright 1963 American Motors Corp.

GROUP NO. — DESCRIPTION — YEAR and MODEL	PRIMARY GROUP NO.	PER CAR	PART NO.	CODE
SPRING, Brake Master Cylinder Piston Return				
61 01 (LHD-LPB-Bendix): 60-61 10-20-80 (LHD-LPB-Bendix)	.....	1	320 2156	
60 10-20-80 (LHD-LPB-Delco Moraine)	8.735	1	320 2072	
60 01: 60 10-20-80 (LHD-LPB-Wagner): 61 01-10-20-80 (LPB-Wagner):				
60 10-80 (RHD-LPB): 62 01-10-20-80 (RHD) .....(Replaces 311 3917)	.....	1	320 2158	
61 20-80 (Heavy Duty)	.....	1	320 3267	
63 Thru 65 10 (RHD-V8-WPB): 63 80 (RHD-WPB)	.....	1	320 2156	
(Primary) 62 01-10-80 (LHD-LPB-Delco Moraine)	.....	1	320 3669	
(Secondary) 62 01-10-80 (LHD-LPB-Delco Moraine)	.....	1	320 3670	
(Secondary) 62 01-10-80 (LHD-LPB-Bendix)	.....	1	320 3600	
(Secondary) 63-64 01 (LHD-LPB): 65 01-10 (Six-LPB-Note 8.035-4 Type 2): 63-64 10-80 (LPB)	8.515	1	320 4124	
(Secondary) 65 01-10 (Six-LPB-Note 8.035-4 Type 1): 65 10 (V8-LPB): 65 80 (LPB)	.....	1	320 5769	
RETAINER, Brake Master Cylinder Piston Cup				
62 01-10-80 (LHD-LPB-Delco Moraine)	.....	1	320 3667	
62 01-10-80 (LHD-LPB-Bendix)	.....	1	320 3599	
63-64 01 (LHD-LPB): 63-64 10-80 (LPB)(Expander): 65 01-10-80 (LPB) (Expander)	8.515	1	320 4125	
64 01 (LHD-LPB): 64 10-80 (LPB): 65 01-10-80 (LPB)	.....	1	320 5110	
PROTECTOR, Brake Master Cylinder Piston Cup				
62 01-10-80 (LHD-LPB-Bendix): 63-64 01 (LHD-LPB): 63-64 10-80 (LPB): 65 01-10-80 (LPB)	.....	1	320 3597	
8.048 REPAIR KIT, Brake Master Cylinder				
60 01: ***61 Thru 63 01 (RHD-LPB): 60 Thru 62 10-80 (RHD-LPB)***	.....	1	311 3921	
61 01 (LHD-LPB-Wagner): 60-61 10-20-80 (LHD-LPB-Wagner)	.....	1	320 2161	
62 01-10-80 (LHD-LPB-Bendix) ***(Replaces 320 3917)***	.....	1	320 3917	
62 01-10-80 (LHD-LPB-Delco Moraine)	.....	1	320 3663	
63 01 (LHD-LPB)	.....	1	320 4136	
64 01 (LHD-LPB): 65 01-10 (Six-LPB-Note 8.035-4 Type 2): 64 10-80 (LPB)	.....	1	320 5092	
65 01-10 (Six-LPB-Note 8.035-4 Type 1): 65 10 (V8-LPB): 65 80 (LPB)	.....	1	320 5767	
60 10-20-80 (LHD-LPB-Bendix-Note 8.035-1)	.....	1	320 2159	
60 10-20-80 (LHD-LPB-Bendix-Note 8.035-2): 61 01-10-20-80 (LHD-LPB-Bendix)	.....	1	320 2483	
60 10-20-80 (LHD-LPB-Delco Moraine)	.....	1	320 2160	
63 10-80 (LPB)	.....	1	320 4163	
61 20-80 (Heavy Duty)	.....	1	320 3266	
62 10-80 (Heavy Duty) .....(Replaces 320 3650)	.....	1	320 3918	
63 Thru 65 10 (RHD-V8-WPB-LDB): 63 80 (RHD-WPB)	.....	1	320 2483	#
65 10 (RHD-V8-WDB)	.....	1	320 6271	#
8.050 BOLT, Brake Master Cylinder				
62 01-10-80 (LHD-LPB-Delco Moraine)	.....	1	320 3671	
62 01-10-80 (LHD-LPB-Bendix-Note 8.035-3 Type 2)	.....	1	320 3919	
63-64 01 (LHD-LPB): 63-64 10-80 (LPB): 65 01-10-80 (LPB)	.....	1	320 4129	
HEADNUT, Brake Master Cylinder				
62 01-10-80 (LHD-LPB-Delco Moraine)	.....	1	320 3672	
8.052 BOOT, Brake Master Cylinder				
61 Thru 64 01 (LHD-LPB-Bendix): 60 Thru 62 10-20-80 (LHD-LPB-Bendix): 63-64 10-80 (LPB): 65 01-10-80 (LPB): ***63 Thru 65 10 (RHD-V8-WPB)***	.....	1	320 3691	
60 10-20-80 (LHD-LPB-Delco Moraine)	.....	1	320 3694	
60-61 10-20-80 (Heavy Duty-LHD-LPB)	.....	1	320 3693	

Copyright 1963 American Motors Corp.

GROUP NO. — DESCRIPTION — YEAR and MODEL	PRIMARY GROUP NO.	PER CAR	PART NO.	CODE
8.054 LINK, Brake Master Cylinder				
60 01: ***61 Thru 63 01 (RHD-LPB): 60 Thru 62 10-80 (RHD-LPB)***	.....	1	311 3914	
61 01 (LHD-LPB-Wagner): 60-61 10-20-80 (LHD-LPB-Wagner)	.....	1	320 2163	
61-62 01-10-20-80 (LHD-LPB-Bendix): 60 10-20-80 (LHD-LPB-Bendix-Note 8.035-2)	.....	1	320 2479	
63 01 (LHD-LPB)	.....	1	320 4469	
64 01 (LPB): 65 01 (LPB-Note 8.035-4 Type 2)...(Incl. Retainer)	.....	1	320 5105	
65 01 (LPB-Note 8.035-4 Type 1)...(Incl. Retainer)	.....	1	320 5952	
60 10-20-80 (LHD-LPB-Bendix-Note 8.035-1)	.....	1	320 2157	
60 10-20-80 (LHD-LPB-Delco Moraine): 62 01-10-80 (LHD-LPB-Delco Moraine)	.....	1	320 2162	
61 20-80 (Heavy Duty)	.....	1	320 3269	
63 10-80 (LPB)	.....	1	320 4470	
63 Thru 65 10 (RHD-V8-WPB): 63 80 (RHD-WPB)	.....	1	320 4471	
64 10-80 (LPB): 65 10 (Six-LPB-Note 8.035-4 Type 2)...(Incl. Retainer)	.....	1	320 5106	
65 10 (Six-LPB-LDB-Note 8.035-4 Type 1): 65 10 (V8-LPB-LDB): 65 80 (LPB-LDB)...(Incl. Retainer)	.....	1	320 5953	
ATTACHING PARTS				
Link To Cylinder				
WASHER ..... 64 01 (LHD-LPB): 64 10-80 (LPB): 65 01-10-80 (LPB)	.....	1	320 5107	
RETAINER ..... 64 01 (LHD-LPB): 64 10-80 (LPB): 65 01-10-80 (LPB)	.....	1	320 5104	
8.068 CYLINDER ASSEMBLY, Brake Wheel				
(Front-Left) 60 Thru 63 01	.....	1	320 1975	
(Front-Left) 64 01: ***165 01 (Can): 163-164 10 (Can-Six): 165 10 (Can-Six-Note 8.001-5 Type 1)***	.....	1	316 9664	

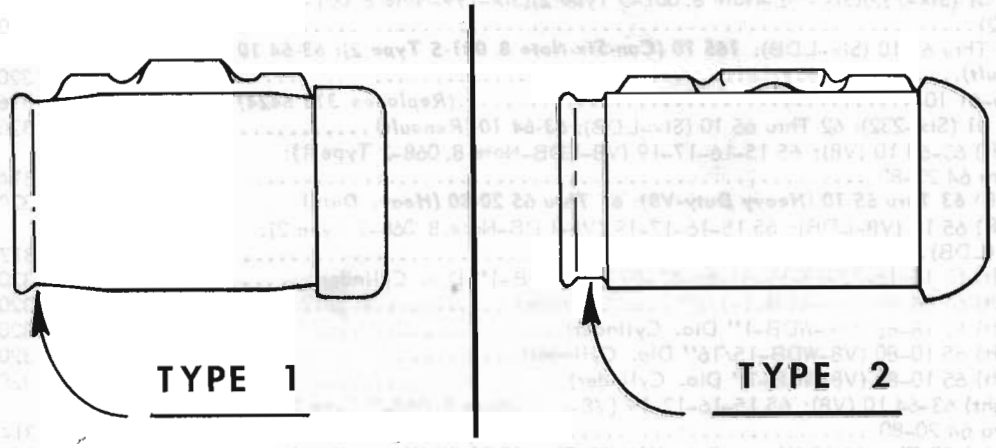

NOTE 8.068-1: Two Types of Front Wheel Cylinder Assemblies were used on the 64 10-80 (V8). They can be identified by the following notes and illustrations:

Type 1: Wheel Cylinder Assembly is Morraine Cylinder and has a Cast Lip to Retain Boots. On 64 10-80 (V8) used prior to Car Sequence No. W-112558.

Type 2: Wheel Cylinder Assembly is a Wagner or Bendix Cylinder and has a machine Lip to Retain Boots. On 64 10-80 (V8) used beginning with Car Sequence No. W-112558.

NOTE 8.068-2: Two Types of Brake Wheel Cylinder Assembly were used on the 65 15-16-19 (V8-LDB). They can be identified as follows:

Type 1: On 65 15-16-17-19 (V8-LDB) used beginning with Car Sequence No. W-000336 and E-000001 thru W-034301 and E-037224 and beginning with W-159472 thru W-178346. Brake Assembly uses a 1-1/8" diameter Front Wheel Cylinder and a 7/8" diameter Rear Wheel Cylinder. The size 1-1/8" or 7/8" appears on Wheel Cylinder Cups.

Type 2: On 65 15-16-17-19 (V8-LDB) used prior to Car Sequence No. W-000336 and beginning with Car Sequence No. W-034302 and E-037224 thru W-159471 and beginning with W-178347 thru balance of production. Brake Assembly uses a 1-3/16" diameter Front Wheel Cylinder and a 1-5/16" diameter Rear Wheel Cylinder. The size 1-3/16" or 15/16" appears on Wheel Cylinder Cups.

Copyright 1963 American Motors Corp.

GROUP NO. — DESCRIPTION — YEAR and MODEL	PRIMARY GROUP NO.	PER CAR	PART NO.	CODE
(Front-Left) 65 01 (Six-196-Note 8.001-5 Type 1)(Six-199-Note 8.001-5 Type 1)	.....	1	316 9664	
(Front-Left) 65 01 (Six-232)(Six-196-Note 8.001-5 Type 2)(Six-199-Note 8.001-5 Type 2)	.....	1	320 3388	
(Front-Left) 60-61 10	.....	1	320 0297	
(Front-Left) 62 Thru 65 10 (Six-LDB): ***165 10 (Can-Six-Note 8.001-5 Type 2)***	.....	1	320 3388	
(Front-Left) 63 10 (V8): 60 Thru 63 20-80: 64 10-80 (V8-Note 8.068-1 Type 1)	.....	1	315 7520	
(Front-Left) 64 10-80 (V8-Note 8.068-1 Type 2): 65 15-16-17-19 (V8-LDB-Note 8.068-2 Type 1): ***63 Thru 65 10 (Heavy Duty-V8): 61 Thru 65 20-80 (Heavy Duty): 63-64 10 (Renault)***	.....	1	320 3309	
(Front-Left) 65 18 (V8-LDB): 65 15-16-17-19 (V8-LDB-Note 8.068-2 Type 2): 65 80 (V8-LDB)	.....	1	317 6911	
(Front-Left) 65 80 (Six-LDB)	.....	1	317 6913	
(Front-Right) 60 Thru 63 01	.....	1	320 1976	
(Front-Right) 64 01: ***165 01 (Can): 163-164 10 (Can-Six): 165 10 (Can-Six-Note 8.001-5 Type 1)***	.....	1	316 9665	
(Front-Right) 65 01 (Six-196-Note 8.001-5 Type 1)(Six-199-Note 8.001-5 Type 1)	.....	1	316 9665	
(Front-Right) 65 01 (Six-232)(Six-196-Note 8.001-5 Type 2)(Six-199-Note 8.001-5 Type 2)	.....	1	320 3389	
(Front-Right) 60-61 10	.....	1	320 0298	
(Front-Right) 62 Thru 65 10 (Six-LDB): ***165 10 (Can-Six-Note 8.001-5 Type 2)***	.....	1	320 3389	
(Front-Right) 63 10 (V8): 60 Thru 63 20-80: 64 10-80 (V8-Note 8.068-1 Type 1)	.....	1	315 7521	
(Front-Right) 64 10-80 (V8-Note 8.068-1 Type 2): 65 15-16-17-19 (V8-LDB-Note 8.068-2 Type 1): ***63 Thru 65 10 (Heavy Duty-V8): 61 Thru 65 20-80 (Heavy Duty): 63-64 10 (Renault)***	.....	1	320 3310	
(Front-Right) 65 18 (V8-LDB): 65 15-16-17-19 (V8-LDB-Note 8.068-2 Type 2): 65 80 (V8-LDB)	.....	1	317 6912	
(Front-Right) 65 80 (Six-LDB)	.....	1	317 6914	
(Rear) 60 Thru 63 01	.....	2	320 1977	
(Rear) 64 01: ***165 01 (Can): 163-164 10 (Can-Six): 165 10 (Can-Six-Note 8.001-5 Type 1)***	.....	2	316 9654	
(Rear) 65 01 (Six-196-Note 8.001-5 Type 1)(Six-199-Note 8.001-5 Type 1)	.....	2	316 9654	
(Rear) 65 01 (Six-232)(Six-196-Note 8.001-5 Type 2)(Six-199-Note 8.001-5 Type 2)	.....	2	320 3390	
(Rear) 62 Thru 65 10 (Six-LDB): ***165 10 (Can-Six-Note 8.001-5 Type 2): 63-64 10 (Renault)***	.....	2	320 3390	
(Rear) 60-61 10 ***(Replaces 315 6424)***	.....	2	316 1372	
(Rear) 65 01 (Six-232): 62 Thru 65 10 (Six-LDB): ***63-64 10 (Renault)***	.....	2	320 3390	#
(Rear-Left) 63-64 10 (V8): 65 15-16-17-19 (V8-LDB-Note 8.068-2 Type 1): 60 Thru 64 20-80	.....	1	314 6138	
(Rear-Left) ***63 Thru 65 10 (Heavy Duty-V8): 61 Thru 65 20-80 (Heavy Duty)***	.....	1	320 3311	
(Rear-Left) 65 18 (V8-LDB): 65 15-16-17-19 (V8-LDB-Note 8.068-2 Type 2): 65 80 (LDB)	.....	1	317 6736	
(Rear-Left) 65 15-16-17-19-59-85-86-87-89 (Six-WDB-1" Dia. Cylinder)	.....	1	320 6101	
(Rear-Left) 65 18-88 (Six-WDB-1-1/8" Dia. Cylinder)	.....	1	320 6103	
(Rear-Left) 65 18-88 (Six-WDB-1" Dia. Cylinder)	.....	1	320 6101	
(Rear-Left) 65 10-80 (V8-WDB-15/16" Dia. Cylinder)	.....	1	320 6105	
(Rear-Left) 65 10-80 (V8-WDB-1" Dia. Cylinder)	.....	1	320 6101	
(Rear-Right) 63-64 10 (V8): 65 15-16-17-19 (V8-LDB-Note 8.068-2 Type 1): 60 Thru 64 20-80	.....	1	314 6139	
(Rear-Right) ***63 Thru 65 10 (Heavy Duty-V8): 61 Thru 65 20-80 (Heavy Duty)***	.....	1	320 3312	
(Rear-Right) 65 18 (V8-LDB): 65 15-16-17-19 (V8-LDB-Note 8.068-2 Type 2): 65 80 (LDB)	.....	1	317 6737	
(Rear-Right) 65 15-16-17-19-59-85-86-87-89 (Six-WDB-1" Dia. Cylinder)	.....	1	320 6100	
(Rear-Right) 65 18-88 (Six-WDB-1-1/8" Dia. Cylinder)	.....	1	320 6102	
(Rear-Right) 65 18-88 (Six-WDB-1" Dia. Cylinder)	.....	1	320 6100	
(Rear-Right) 65 10-80 (V8-WDB-15/16" Dia. Cylinder)	.....	1	320 6104	
(Rear-Right) 65 10-80 (V8-WDB-1" Dia. Cylinder)	.....	1	320 6100	

Copyright 1963 American Motors Corp.

GROUP NO. — DESCRIPTION — YEAR and MODEL	PRIMARY GROUP NO.	PER CAR	PART NO.	CODE
ATTACHING PARTS				
Cylinder To Plate				
SCREW, Machine..... 60 Thru 64 01: ***163 10 (Can-Six)***.....	17.626	8	G423333	NA
SCREW, Machine..... 65 01 (Six-196-Note 8.001-5 Type 1)(Six-199-Note 8.001-5 Type 1).....	17.626	8	G4233333	NA
SCREW, Machine..... 65 01 (Six-232)(Six-196-Note 8.001-5 Type 2) (Six-199-Note 8.001-5 Type 2).....	.....	8	320 0266	
SCREW, Machine..... 60 Thru 65 10 (Six-LDB): ***63-64 10 (Renault)***.....	.....	8	320 0266	
SCREW, Machine..... 63-64 10 (V8): 60 Thru 64 20-80.....	17.626	8	G423560	NA
SCREW, Machine..... 65 10-80 (WDB).....	.....	4	320 5744	
8.078 PISTON SET, Brake Wheel Cylinder (Set Of 2)				
(Front) 60 Thru 63 01.....	.....	2	320 1978	
(Front) 64 01: ***165 01 (Can): 163-164 10 (Can-Six): 165 10 (Can-Six-Note 8.001-5 Type 1)***.....	.....	2	320 9004	
(Front) 65 01 (Six-196-Note 8.001-5 Type 1)(Six-199-Note 8.001-5 Type 1).....	.....	2	320 9004	
(Front) 65 01 (Six-232)(Six-196-Note 8.001-5 Type 2)(Six-199-Note 8.001-5 Type 2).....	.....	2	320 3314	
(Front) 60-61 10.....	.....	2	320 0269	
(Front) 62 Thru 65 10 (Six-LDB): ***165 10 (Can-Six-Note 8.001-5 Type 2):*** 64 10-80 (V8-Note 8.068-1 Type 2) 65 15-16-17-19 (V8-LDB-Note 8.068-2 Type 1): ***63 Thru 65 10 (Heavy Duty-V8): 61 Thru 65 20-80 (Heavy Duty): 63-64 10 (Renault)***.....	.....	2	320 3314	
(Front) 63 10 (V8): 60 Thru 63 80: 64 10-80 (V8-Note 8.068-1 Type 1).....	.....	2	320 2101	
(Front) 65 18 (V8-LDB): 65 15-16-17-19 (V8-LDB-Note 8.068-2 Type 2): 65 80 (V8-LDB).....	.....	2	320 5759	
(Front) 65 80 (Six-LDB).....	.....	2	320 5755	
(Rear) 60 Thru 63 01.....	.....	2	320 1979	
(Rear) 64 01: ***165 01 (Can): 163-164 10 (Can-Six): 165 10 (Can-Six-Note 8.001-5 Type 1)***.....	.....	2	320 9010	
(Rear) 65 01 (Six-196-Note 8.001-5 Type 1)(Six-199-Note 8.001-5 Type 1).....	.....	2	320 9010	
(Rear) 65 01 (Six-232)(Six-196-Note 8.001-5 Type 2)(Six-199-Note 8.001-5 Type 2).....	.....	2	311 8524	
(Rear) 60-61 10.....	.....	2	320 1315	
(Rear) 62 Thru 65 10 (Six-LDB): ***165 10 (Can-Six-Note 8.001-5 Type 2):*** 65 18 (V8-LDB): 65 15-16-17-19 (V8-LDB-Note 8.068-2 Type 2): 65 80 (LDB): ***63-64 (Renault)***.....	.....	2	311 8524	
(Rear) 63-64 10 (V8): 65 15-16-17-19 (V8-LDB-Note 8.068-2 Type 1): 60 Thru 64 80.....	.....	2	311 7438	
(Rear) 65 15-16-17-19-85-86-87-89 (Six-WDB-1" Dia. Cylinder).....	.....	2	320 1978	
(Rear) 65 18-88 (Six-WDB-1-1/8" Dia. Cylinder).....	.....	2	320 9004	
(Rear) 65 18-88 (Six-WDB-1" Dia. Cylinder).....	.....	2	320 1978	
(Rear) 65 10-80 (V8-WDB-15/16" Dia. Cylinder).....	.....	2	320 9010	
(Rear) 65 10-80 (V8-WDB-1" Dia. Cylinder).....	.....	2	320 1978	
8.080 REPAIR KIT, Brake Wheel Cylinder (Incl. 2 Boots And 2 Cups)				
(Front) 60 Thru 63 01.....	.....	2	320 1980	
(Front) 64 01: ***165 01 (Can): 163-164 10 (Can-Six): 165 10 (Can-Six-Note 8.001-5 Type 1)***.....	.....	2	320 9005	
(Front) 65 01 (Six-196-Note 8.001-5 Type 1)(Six-199-Note 8.001-5 Type 1).....	.....	2	320 9005	
(Front) 65 01 (Six-232)(Six-196-Note 8.001-5 Type 2)(Six-199-Note 8.001-5 Type 2).....	.....	2	320 3391	
(Front) 60-61 10.....	.....	2	320 0267	
(Front) 62 Thru 65 10 (Six-LDB): ***165 10 (Can-Six-Note 8.001-5 Type 2)***.....	.....	2	320 3391	
(Front) 63 10 (V8): 60 Thru 63 20-80: 64 10-80 (V8-Note 8.068-1 Type 1).....	.....	2	320 2100	
(Front) 64 10-80 (V8-Note 8.068-1 Type 2): 65 15-16-17-19 (V8-LDB-Note 8.068-2 Type 2): ***63 Thru 65 10 (Heavy Duty-V8): 61 Thru 65 20-80 (Heavy Duty): 63-64 10 (Renault)***.....	.....	2	304 326	
(Front) 65 18 (V8-LDB): 65 15-16-17-19 (V8-LDB-Note 8.068-2 Type 2): 65 80 (V8-LDB).....	.....	2	320 5760	
(Front) 65 80 (Six-LDB).....	.....	2	320 5756	
(Rear) 60 Thru 63 01.....	.....	2	320 1981	
(Rear) 64 01: ***165 01 (Can): 163-164 10 (Can-Six): 165 10 (Can-Six-Note 8.001-5 Type 1)***.....	.....	2	320 9011	

Copyright 1963 American Motors Corp.

GROUP NO. — DESCRIPTION — YEAR and MODEL	PRIMARY GROUP NO.	PER CAR	PART NO.	CODE
(Rear) 65 01 (Six-196-Note 8.001-5 Type 1)(Six-199-Note 8.001-5 Type 1)	.....	2	320 9011	
(Rear) 65 01 (Six-232)(Six-196-Note 8.001-5 Type 2)(Six-199-Note 8.001-5 Type 2)	.....	2	320 3392	
(Rear) 60-61 10	.....	2	320 1271	
(Rear) 62 Thru 65 10 (Six-LDB): ***165 10 (Can-Six-Note 8.001-5 Type 2): 63-64 10 (Renault)***	.....	2	320 3392	
(Rear) 63-64 10 (V8): 65 15-16-17-19 (V8-LDB-Note 8.068-2 Type 1): 60 Thru 64 20-80	.....	2	311 9141	
(Rear) 65 18 (V8-LDB): 65 15-16-17-19 (V8-LDB-Note 8.068-2 Type 2): 65 80 (LDB)	.....	2	311 8525	
(Rear) 65 15-16-17-19-85-86-89 (Six-WDB-1" Dia. Cylinder)	.....	2	320 1980	
(Rear) 65 18-88 (Six-WDB-1-1/8" Dia. Cylinder)	.....	2	320 9005	
(Rear) 65 18-88 (Six-WDB-1" Dia. Cylinder)	.....	2	320 1980	
(Rear) 65 10-80 (V8-WDB-1" Dia. Cylinder)	.....	2	320 1980	
(Rear) 65 10-80 (V8-WDB-15/16" Dia. Cylinder)	.....	2	320 6109	

8.086 SPRING, Brake Wheel Cylinder Piston Return

(Front) 60 Thru 63 01	.....	2	311 8518	
(Front) 64 01: ***165 01 (Can): 163-164 10 (Can-Six): 165 10 (Can-Six-Note 8.001-5 Type 1)*** ***(Replaces 320 9006)***	.....	2	311 8521	
(Front) 65 01 (Six-196-Note 8.001-5 Type 1)(Six-199-Note 8.001-5 Type 1) ***(Replaces 320 9006)***	.....	2	311 8521	
(Front) 65 01 (Six-232)(Six-196-Note 8.001-5 Type 2)(Six-199-Note 8.001-5 Type 2) ***(Use 311 8521)***	.....	2	48 031	
(Front) 60-61 10	.....	2	310 8071	
(Front) 62 Thru 65 10 (Six-LDB): ***165 10 (Can-Six-Note 8.001-5 Type 2):*** 64 10-80 (V8-Note 8.068-1 Type 2): ***63 Thru 65 10 (Heavy Duty-V8): 61 Thru 65 80 (Heavy Duty): 63-64 10 (Renault)*** ***(Use 311 8521)***	.....	2	48 031	
(Front) 63 10 (V8): 60 Thru 63 20-80: 64 10-80 (V8-Note 8.068-1 Type 1)	.....	2	320 2103	
(Rear) 60 Thru 63 01: ***165 01 (Can): 163-164 10 (Can-Six): 165 10 (Can-Six-Note 8.001-5 Type 1)***	.....	2	320 1984	
(Rear) 64 01: 65 10 (V8-LDB): 65 80 (LDB)	.....	2	311 8518	
(Rear) 65 01 (Six-196-Note 8.001-5 Type 1)(Six-199-Note 8.001-5 Type 1)	.....	2	311 8518	
(Rear) 65 01 (Six-232)(Six-196-Note 8.001-5 Type 2)(Six-199-Note 8.001-5 Type 2)	.....	2	310 8071	
(Rear) 60-61 10	.....	2	310 8057	
(Rear) 62 Thru 65 10 (LDB): ***165 10 (Can-Six-Note 8.001-5 Type 2):*** 60 Thru 64 20-80 (LDB): ***63-64 10 (Renault)***	.....	2	310 8071	
(Rear) 65 15-16-17-19-85-86-87-89 (WDB): 65 18-88 (V8-WDB)	.....	2	311 8518	
(Rear) 65 18-88 (Six-WDB-1-1/8" Dia. Cylinder)	.....	2	311 8521	
(Rear) 65 18-88 (Six-WDB-1" Dia. Cylinder)	.....	2	311 8518	

8.088 SCREW, Brake Wheel Cylinder Bleeder

60 Thru 65 01-10 (Six-LDB)	.....	4	311 2184	
63 Thru 65 10 (V8-LDB): 60 Thru 65 20-80 (LDB)	.....	4	320 2102	
64 10-80 (V8-Note 8.068-1 Type 2): ***63 Thru 65 10 (Heavy Duty-V8): 61 Thru 65 20-80 (Heavy Duty)***	.....	4	320 3313	
(Front) ***63-64 10 (Renault)***	.....	2	320 2102	
(Rear) 65 10-80 (WDB) ***(Use 320 3313)***	.....	2	311 8522	
(Rear) ***63-64 10 (Renault)***	.....	2	311 2184	

8.100 TUBE, Brake Master Cylinder To Front Fitting

61 01 (LHD-LPB)	.....	1	315 9822	
61 01 (LHD-WPB)	8.106	1	315 9834	
61 Thru 63 01 (RHD)	.....	1	316 2150	
62 01 (LHD-LPB) ***(Replaces 316 5699)***	.....	1	316 5887	
62 01 (LHD-WPB)	.....	1	316 4756	
63 01 (LHD-LPB)	.....	1	316 7701	
63 01 (LHD-WPB)	.....	1	316 7702	

NOTE 8.100-1: Two Types of Brake Tube Clip Fastenings were used on the 63 10-80 Series. They can be identified as follows:
Type 1: Clips attached to Body Floor Weld Studs.
Type 2: Clips attached to Body Floor with Tapping Screws.

Copyright 1963 American Motors Corp.

GROUP NO. — DESCRIPTION — YEAR and MODEL	PRIMARY GROUP NO.	PER CAR	PART NO.	CODE
64-65 01 (LHD-LPB)	.....	1	317 1950	
64-65 01 (LHD-WPB)	.....	1	317 1896	
64-65 01 (RHD-LPB-LCV)	.....	1	317 2243	
60 10-20-80 (LHD-LPB-Note 8.035-1)	.....	1	315 7943	
60 Thru 62 10 (RHD-LPB)	.....	1	315 4548	
60-61 10-20-80 (LHD-WPB)	8.106	1	315 7944	
62 10-80 (LHD-LPB) ***(Replaces 316 5704)***	.....	1	316 5888	
62 10-80 (LHD-WPB)	.....	1	316 4758	
63 10-80 (LHD-LPB)	.....	1	316 7695	
63 10 (Six-LHD-WPB): 63 10-80 (V8-LHD-WPB-Note 8.400-1 Type 1) ***(Replaces 316 7696)***	.....	1	317 0981	
63 10-80 (V8-LHD-WPB-Note 8.400-1 Type 2): 64-65 10-80 (LHD-WPB)	.....	1	317 1903	
64-65 10-80 (LHD-LPB)	.....	1	317 1900	
60 Thru 62 80 (RHD-LPB)	.....	1	315 4503	
63 10 (RHD-WPB)	.....	1	316 8275	
64-65 10 (RHD-LPB)	.....	1	317 1901	
64-65 10 (RHD-WPB)	.....	1	317 1902	

TUBE, Brake Master Cylinder To Rear Axle

60 01 ***(Replaces 314 2355)***	.....	1	315 9501	
64-65 01 (RHD-LPB-LCV)	.....	1	317 2284	
64-65 01 (LHD-LPB-LCV)	.....	1	317 1910	
64-65 01 (LHD-WPB-LCV)	.....	1	317 1943	
62 15-16 (LHD-LPB)	.....	1	316 5958	
62 15-16 (LHD-WPB)	.....	1	316 5959	
63 10-80 (LHD-LPB-Note 8.100-1 Type 1) ***(Replaces 316 7731)***	.....	1	316 9855	
63 10-80 (LHD-LPB-Note 8.100-1 Type 2)	.....	1	317 2096	
63 10 (Six-LHD-WPB-Note 8.100-1 Type 2): 63 10-80 (V8-LHD-WPB-Note 8.400-1 Type 1) ***(Replaces 316 7732, 317 2097)***	.....	1	316 9856	
64-65 10-80 (LHD-LPB)	.....	1	317 1904	
63 10-80 (V8-LHD-WPB-Note 8.400-1 Type 2): 64-65 10-80 (LHD-WPB)	.....	1	317 1905	
64-65 10 (RHD-LPB)	.....	1	317 1898	
64-65 10 (RHD-WPB)	.....	1	317 1899	

TUBE, Front Fitting To Rear Axle

61 01 (LHE)	.....	1	315 9818	
61 01 (OHV-LCV): ***62-63 01 (RHD)***	.....	1	316 0800	
61 07	.....	1	316 0790	
60-61 10-20-80 (LHD)	.....	1	315 1629	
60 Thru 62 10 (RHD)	.....	1	315 4549	
60 Thru 62 80 (RHD)	.....	1	315 4286	

TUBE, Brake Master Cylinder To Union

62 01 (LHD-LPB)	.....	1	316 5727	
62 01 (LHD-WPB)	.....	1	316 5726	
63 01 (LHD-LPB)	.....	1	316 7705	
63 01 (LHD-WPB)	.....	1	316 7706	
64-65 07 (LHD-WPB)(Front Half)	.....	1	317 2179	
64-65 07 (LHD-LPB)(Front Half)	.....	1	317 2185	
64-65 07 (RHD-LPB)	.....	1	317 6996	
64 01-10-80 (LHD-WPB)	.....	1	320 4885	
62 15-16 (LHD-LPB) ***(Ref. Pr. List)***	.....	1	316 5723	
62 15-16 (LHD-WPB) ***(Replaces 316 5720)***	.....	1	316 5959	
62 18-80 (LHD-LPB)	.....	1	316 5724	
62 18-80 (LHD-WPB)	.....	1	316 5721	
63 10-80 (LHD-WPB)	.....	1	320 4420	
63 10-80 (RHD-LPB)	.....	1	316 8253	
63 10 (RHD-WPB)	.....	1	316 8299	

Copyright 1963 American Motors Corp.

GROUP NO. — DESCRIPTION — YEAR and MODEL	PRIMARY GROUP NO.	PER CAR	PART NO.	CODE
TUBE, Union To Rear Hose				
62-63 01 (LHD-LHE)	.....	1	316 5700	
62 01 (LHD-OHV-LCV)	.....	1	316 5701	
62 07 (LHD)	.....	1	316 5702	
63 01 (OHV-LCV)	8.106	1	316 7703	
63 07	8.102	1	316 7700	
64-65 07	.....	1	317 2184	
62 15-16 (LHD) ***(Ref. Pr. List)***	.....	1	316 5722	
62 18-80 (LHD)	.....	1	316 4056	
63 10-80 (RHD-Note 8.100-1 Type 1)	.....	1	316 7999	
63 10-80 (RHD-Note 8.100-1 Type 2): 64-65 10 (RHD)	.....	1	316 9956	
UNION, Brake Master Cylinder To Rear Hose				
62-63 01 (LHD): 64-65 07: 62 10-80 (LHD): ***63 Thru 65 10-80 (RHD)***	.....	1	316 4092	
63 10-80 (LHD-WPB)	.....	1	320 4421	
UNION, Brake Master Cylinder To Brake Tube				
64-65 01-10-80 (LHD-WPB)	.....	1	320 4886	
8.101 CLIP, Brake Tube				
(On Dash Panel) 60 Thru 62 01 (LHD-LCV-LHE): 63 01 (LHD)	.....	1	312 6541	
(On Dash Panel) 62 01 (OHV)(***RHD***): 60 Thru 62 10-80	.....	1	314 1309	
(On Dash Panel) 63 01 (OHV)	.....	1	316 8875	
(On Dash Panel) 63 01 (LHD): ***64-65 01 (RHD)***	17.134	1	G120520	
(On Dash Panel) ***60-61 10-80 (RHD)***	3.165	1	15 898	
(On Dash Panel) ***62 10-80 (RHD)***	17.134	1	G120520	
(On Dash Panel) ***62 01 (RHD)***	17.134	1	G105245	
(On Dash Panel) 63-64 10-80	17.134	3	G120520	
(On Dash Panel) ***63 10 (RHD-2 Req.): 63 80 (RHD-LPB-2 Req.):*** 64-65 01 (3 Req.)	.....	AR	314 1309	
(On Dash Panel(Right) 61 01 (OHV)	.....	1	314 1309	
(On Dash Panel)(Right) ***62-63 01 (RHD)***	17.134	1	G105245	
(On Dash Panel)(Right) 63 01 (LHE)	17.134	1	G120520	
(On Dash Panel)(Right) 63 01 (OHV)(***RHD***)	.....	1	314 1309	
(On Toeboard) 60 01	.....	1	314 1309	
(On Toeboard) 60-61 10-20: 60-61 80 (LHD)	3.165	1	15 898	
(On Toeboard) 62-63 10-80	17.134	1	G120520	
(On Toeboard) ***60-61 10 (RHD)***	3.165	1	15 898	
(On Toeboard) ***62-63 10 (RHD)***	17.134	1	G120520	
(On Toeboard) ***60 Thru 63 10-80 (RHD-LPB)***	4.160	2	15 708	
(On Side Sill) 60-61 01 (LCV): 62-63 01 (LHD-LCV-LHE)	.....	4	312 8541	
(On Right Side Sill) 61 Thru 63 01 (LCV-OHV): ***62-63 01 (RHD):*** 64-65 01	.....	4	312 6110	
(On Right Side Sill) 61 07: 62-63 01 (LHD-LHE-3 Req.): 64-65 01 (2 Req.)	.....	AR	312 6110	
(On Front Floor Pan) ***60-61 10 (RHD)***	3.165	1	15 898	
(On Front Floor Pan) ***60-61 10-80 (RHD-LPB)***	4.160	1	15 708	
(On Front Floor Pan) ***62-63 10-80 (RHD)***	17.134	1	G120520	
(On Floor Pan) 63 Thru 65 10-80	17.134	5	G120520	
(On Floor Pan At Loom) 63-64 10-80	17.134	2	G105245	
(On Floor Stringer) 64-65 01	17.134	1	G120250	
(On Floor Stringer) 63 10-80	.....	1	312 8541	
(To Left Front Wheel Tube) ***63 01 (RHD)***	17.134	1	G120520	

Copyright 1963 American Motors Corp.

GROUP NO. — DESCRIPTION — YEAR and MODEL	PRIMARY GROUP NO.	PER CAR	PART NO.	CODE
(On Left Wheelhouse Panel) 61 01	3.165	1	15 898	
(On Left Wheelhouse Panel) 64 01 (LHD): 64-65 10-80	.....	1	314 1309	
(On Left Whellhouse Panel) ***64-65 01 (RHD)***	17.134	1	G120250	
(On Right Wheelhouse Panel) 64-65 01: 63 Thru 65 10-80	17.134	1	G120520	
(On Rear Floor Pan) 61 Thru 63 07	6..631	1	314 9613	
(On Rear Floor Pan) 62-63 01 (LHD-LCV): 64-65 01	17.134	1	G120520	
(On Right Rear Floor Pan) 62-63 07	17.134	1	G120520	
(Rear Axle Tube Wrap-A-Round) 60 Thru 65 01-10-20-80	.....	1	315 4076	
(Rear Axle Tube)(To Speedometer Cable) 63 Thru 65 10-80	3.210	1	63 045	
(Rear Axle Tube) (On Spring Seat) 60 01-10 (2 Req.): 61 01-10 (1 Req.)	3.165	1	15 898	
(Rear Axle Tube) (On Spring Seat) 61 01-10	3.192	AR	47 740	
(Rear Axle Tube)(On Spring Seat) 62 Thru 65 01	17.134	2	G120520	
(Rear Axle Tube)(On Spring Seat) 60-61 20-80	17.134	2	G140579	
(Rear Axle Tube) (Under Housing Cover Screw) 60-61 01	3.165	1	15 898	
(Rear Axle Tube)(Under Housing Cover Screw) 62 10	17.134	1	G120520	
(Rear Axle Tube)(Under Housing Cover Screw) 62 80	17.134	1	G140578	NA
(Rear Axle Tube)(Under Housing Cover Screw) 65 01	17.134	1	G427026	NA
(Rear Axle Tube)(To Junction) 62 01 (LHD-OHV): 65 01	17.134	1	G120520	
SCREW, Brake Tube Clip				
(On Dash Panel) 62 01 (OHV) ***(RHD):*** 60 Thru 62 10-80 ***(Replaces 800 0095)***	17.671	1	G456766	
(On Dash Panel) 63 01 (LHD) ***(Replaces 800 0091)***	17.671	1	400 1031	
(On Dash Panel) 64-65 01-10-80	17.671	3	400 1042	
(On Dash Panel) ***62 01 (RHD)***	17.648	1	G162688	NA
(On Dash Panel) ***60 Thru 62 10-80 (RHD)*** ***(Replaces 800 0091)***	17.671	1	400 1031	
(On Dash Panel) 63 10-80 ***(Replaces 800 0091)***	17.671	3	400 1031	
(On Dash Panel) ***63 10 (RHD): 63 80 (RHD-LPB)*** ***(Replaces 800 0091)***	17.671	2	400 1031	
(On Dash Panel) (Right) 61 01 (OHV): ***62-63 01 (RHD)*** ***(Replaces 800 0091)***	17.671	1	400 1031	
(On Dash Panel) (Right) ***62-63 01 (RHD)***	17.671	1	G162688	NA
(On Dash Panel) (Right) 63 01 ***(Replaces 800 0095)***	17.671	1	G456766	
(On Toeboard) 60 01 ***(Replaces 800 0103)***	17.671	1	G9411563	
(On Toeboard) 60-61 10-20: 60-61 80 (LHD): 62-63 10-80. ***(Replaces 800 0091)***	17.671	1	400 1031	
(On Toeboard) ***60 Thru 63 10 (RHD)*** ***(Replaces 800 0091)***	17.671	1	400 1031	
(On Toeboard) ***60 Thru 63 10-80 (RHD-LPB)*** ***(Replaces 800 0091)***	17.671	2	400 1031	
(On Front Floor Pan) ***60-61 10 (RHD): 62-63 10-80 (RHD)*** ***(Replaces 800 0091)***	17.671	1	400 1031	
(On Front Floor Pan) ***60-61 80 (RHD-LPB)*** ***(Replaces 800 0091)***	17.671	1	400 1031	
(On Floor Pan) 63-64 10-80 ***(Replaces 800 0091)***	17.671	5	400 1031	
(On Floor Pan) 65 10-80	17.671	6	400 1042	
(To Left Front Wheel Tube) ***63 01 (RHD)***	17.648	1	G162688	NA
(On Left Wheelhouse Panel) ***64-65 01 (RHD):*** 64-65 10-80 (V8)	17.671	1	400 1042	
(On Left Wheelhouse Panel) 61 01 ***(Replaces 800 0091)***	17.671	1	400 1031	
(On Left Wheelhouse Panel) 63-64 10-80	17.671	1	G274773	NA
(On Right Wheelhouse Panel) 63 10-80 ***(Replaces 800 0091)***	17.671	1	400 1031	
(On Right Wheelhouse Panel) 64-65 01-10-80	17.671	1	400 1042	
(On Rear Floor Pan) 61 Thru 63 07 ***(Replaces 800 0103)***	17.671	1	G9411563	
(On Rear Floor Pan) 64-65 01	17.671	1	400 1042	
(On Rear Floor Pan) 62-63 01 (LHD-LCV) ***(Replaces 800 0091)***	17.671	1	400 1031	
(On Right Rear Floor Pan) 62-63 07	17.671	1	G274773	NA
(Rear Axle Tube) (To Junction) 63 01 (LHD-OHV)	17.670	2	G172427	NA
(Rear Axle Tube)(To Junction) 64-65 01	17.671	1	400 1042	
(Rear Axle Tube)(On Spring Seat) 64-65 01	17.670	2	G172427	
BRACKET, Brake And Gas Tube Support				
64-65 07	.....	1	317 2172	
ATTACHING PARTS				
Bracket To Side Sill Reinforcement				
SCREW, Tapping..... 64-65 07	17.671	2	400 1042	
SPACER, Brake Tube (On Axle)				
60 10	.....	2	315 4148	

Copyright 1963 American Motors Corp.

GROUP NO. — DESCRIPTION — YEAR and MODEL	PRIMARY GROUP NO.	PER CAR	PART NO.	CODE
8.102 FITTING, Front Brake Tube				
61 01: ***62 01 (RHD)***	.....	1	316 1262	
62 01 (LHD)	.....	1	316 5708	
63 01-10 (Six): 63 10-80 (V8-LPB): 63 10-80 (LHD-V8-WPB-Note 8.400-1 Type 1)	.....	1	316 7925	
64-65 01-10-80: 63 10-80 (LHD-V8-WPB-Note 8.400-1 Type 2)	17.756	1	G178654	
60-61 10-20-80 (LHD) ***(Replaces 315 7871)***	.....	1	316 0449	
62 10-80 (LHD-Note 8.102-1)	.....	1	316 5698	
62 10-80 (LHD-Note 8.102-2)	.....	1	316 5934	
60 Thru 62 10 (RHD): 60 80 (RHD)	.....	1	314 4419	
61-62 80 (RHD)	.....	1	316 2780	
63 Thru 65 10-80 (RHD-V8-WPB)	.....	1	316 9098	
ATTACHING PARTS				
Fitting To Dash				
SCREW, Tapping ..... 61-62 01: 61-62 10-20-80 (LHD)	17.671	1	G455702	NA
SCREW, Machine ..... 60 10-20-80 (LHD) ***(Replaces 800 0110)***	17.598	1	400 1008	
WASHER, Lock ..... 60 10-20-80 (LHD)	17.820	1	G120380	NA
NUT, Spring ..... 61 01: 61-62 10-20-80 (LHD)	17.426	1	G446726	
NUT, Hexagon ..... 60 10-20-80 (LHD)	17.406	1	G120375	
NUT, Jam ..... 60 10-20-80 (LHD)	13.015	1	341 7026	
8.106 TUBE, Front Brake Fitting To Front Wheels				
(Left) 64-65 01 (LHD)	.....	1	317 1894	
(Left) ***64-65 01 (RHD)***	.....	1	317 2249	
(Left) 60 Thru 62 10-20 (LHD): 62 80	8.100	1	315 7945	
(Left) ***60 Thru 62 10 (RHD)***	.....	1	315 4550	
(Left) 63-64 10-80 (LHD): 65 10 (LHD)	.....	1	316 7757	
(Left) ***63-64 10-80 (RHD-LPB): 65 10 (RHD-Six)(RHD-V8-LPB)***	.....	1	316 8267	#
(Left) ***63 Thru 65 10-80 (RHD-V8-WPB)***	.....	1	316 9078	
(Left) 60-61 80	.....	1	315 7946	
(Left) 65 80	.....	1	317 6612	
(Right) 61-62 01	.....	1	316 0451	
(Right) 63 01	.....	1	316 7704	
(Right) 64-65 01 (LHD)	.....	1	317 1882	
(Right) ***64-65 01 (RHD-WPB)***	.....	1	317 2244	
(Right) 60-61 10-20	.....	1	315 1332	
(Right) 62 10 (LHD-Note 8.102-1): 62 80 (Note 8.102-1)	.....	1	316 5719	
(Right) 62 10 (LHD-Note 8.102-2): 62 80 (Note 8.102-2)	.....	1	316 5932	
(Right) ***60 Thru 62 10 (RHD)***	8.100	1	315 4551	
(Right) 63-64 10-80 (LHD): 65 10 (LHD)	.....	1	316 7718	
(Right) ***63-64 10-80 (RHD-LPB): 65 10 (RHD)***	.....	1	316 8276	
(Right) ***63 Thru 65 10-80 (RHD-V8-WPB)***	.....	1	316 9115	
(Right) 60-61 80	.....	1	315 3630	
(Right) 65 80	.....	1	317 6613	
TUBE, Master Cylinder To Front Wheels				
(Left) 60 01	.....	1	315 4581	
(Right) 60 01	.....	1	314 2375	

NOTE 8.102-1: Used on 62 10-80 (LHD) prior to Car Sequence Nos. E-93295 & W-93953. Used on 162 10 prior to Serial No. CT-209546.

NOTE 8.102-2: Used on 62 10-80 (LHD) beginning with Car Sequence Nos. E-93295 & W-93953. Used on 162 10 beginning with Serial No. CT-209546.

Copyright 1963 American Motors Corp.

GROUP NO. — DESCRIPTION — YEAR and MODEL	PRIMARY GROUP NO.	PER CAR	PART NO.	CODE
GROMMET, Brake Tubes (In Wheelhouse)				
64-65 01: 60 Thru 65 10-20-80	20.085	2	312 6237	
8.112 BRACKET, Rear Brake Tube				
60 Thru 63 01: 60 Thru 62 10-20-80	.....	1	312 8545	
64-65 01: 63 Thru 65 10-80	.....	1	316 7937	
ATTACHING PARTS Bracket To Floor Pan				
SCREW, Tapping..... 60 Thru 62 01-10-20-80.....*(Replaces 800 0127)*	17.671	2	400 1064	
SCREW, Tapping..... 63-64 01-10-80	17.671	2	G9414012	NA
NUT, Acorn ..... 63 Thru 65 18-88	.....	1	317 1906	
SCREW, Tapping..... 65 01-10-80	17.671	2	400 1064	
8.116 HOSE, Brake Tube				
(Front) 60 Thru 65 01-10-20-80: 60 Thru 62 10: 63 10 (Six-Note 8.116-1): 63 Thru 65 10 (V8-LDB)	.....	2	310 6725	
(Front) 63 10 (Six-Note 8.116-2): 64-65 10 (Six-LDB)	.....	2	317 1041	#
(Rear) 60 Thru 64 01: 60 Thru 62 10-80	.....	1	310 6725	
(Rear) 63 Thru 65 10-80	.....	1	316 7719	
GASKET, Brake Tube Hose				
60 Thru 65 01-10-20-80	.....	3	310 7540	
CLIP, Brake Tube Hose Fastening				
60 Thru 65 01-10-20-80	8.102	3	47 774	
WASHER, Brake Tube Hose (Front)				
60 Thru 63 01-10-20-80.....*(Replaces 800 0205)*	17.814	2	400 1145	
8.122 TEE, Rear Brake Tube				
60 Thru 65 01: 60 Thru 62 10-20-80	.....	1	310 6729	
63 10 (OHV-196)	.....	1	316 7866	
64 10 (OHV-196): 65 10 (Six-199)	.....	1	317 2509	#
64 10 (Six-232): 63-64 10-80 (V8)	.....	1	316 7839	
65 10 (Six-232)(V8): 65 80	.....	1	317 5226	
ATTACHING PARTS Tee To Axle				
BOLT, Hexagon ..... 60 Thru 65 01: 60 Thru 62 10-20-80	17.038	1	G180022	NA
WASHER, Lock ..... 60 Thru 65 01: 60 Thru 62 10-20-80	17.820	1	G103319	NA
WASHER, Lock 63 10 (OHV-196)	17.820	1	G120380	NA
WASHER, Lock ..... 64 10 (Six): 65 10 (Six-199)	17.820	1	G103320	NA
WASHER, Lock ..... 64 10 (Six-232): 63-64 10-80 (V8)	17.820	1	G103321	NA
NUT, Hexagon..... 63 10 (OHV-196)	17.406	1	G120375	
NUT, Hexagon..... 64 10 (Six): 65 10 (Six-199)	17.406	1	G120368	
NUT, Hexagon..... 64 10 (Six-232): 63-64 10-80 (V8)	17.406	1	G120369	NA
8.126 TUBE, Rear Brake				
(Left) 60 Thru 63 01 (LHD-LHE)	.....	1	315 7591	
(Left) 61 Thru 63 01 (OHV)*(RHD)*	.....	1	316 0541	
(Left) 64-65 01	.....	1	317 1221	
(Left) 60 Thru 62 10.....*(Replaces 315 4022)*	.....	1	316 1413	

NOTE 8.116-1: On 63 10 (Six) used prior to Car Sequence No. E-69129 and A-58634.
NOTE 8.116-2: On 63 10 (Six) used beginning with Car Sequence No. E-69129 and W-58634.

Copyright 1963 American Motors Corp.

GROUP NO. — DESCRIPTION — YEAR and MODEL	PRIMARY GROUP NO.	PER CAR	PART NO.	CODE
(Left) 63-64 10 (Six) ***(Replaces 316 7813)***	.....	1	317 4489	
(Left) 60 Thru 62 20-80 ***(Replaces 315 4035)***	.....	1	316 1414	
(Left) 65 10 (Six-199-LDB)	.....	1	317 4489	
(Left) 65 10 (Six-199-WDB)	.....	1	318 0066	
(Left) 65 10 (Six-232-LDB)	.....	1	317 7768	
(Left) 65 10 (Six-232-WDB): 65 10 (V8-WDB): 65 80 (WDB)	.....	1	318 0068	
(Left) 63-64 10-80 (V8)	.....	1	316 7763	
(Left) 65 10 (V8-LDB): 65 80 (LDB)	.....	1	317 7776	
(Right) 60 Thru 63 01 (LHD-LHE)	.....	1	315 7592	
(Right) 61 Thru 63 01 (OHV)***(RHD)***	.....	1	316 0542	
(Right) 64-65 01	.....	1	317 1222	
(Right) 60 Thru 62 10	.....	1	315 4024	
(Right) 63-64 10 (Six)	.....	1	316 7812	
(Right) 65 10 (Six-199-LDB)	.....	1	317 4488	
(Right) 65 10 (Six-199-WDB)	.....	1	318 0067	
(Right) 65 10 (Six-232-LDB)	.....	1	317 7769	
(Right) 60 Thru 62 20-80	.....	1	315 4018	
(Right) 63-64 10-80 (V8)	.....	1	316 7764	
(Right) 65 10 (V8-LDB): 65 80 (LDB)	.....	1	317 7775	
(Right) 65 10 (Six-232-WDB): 65 10 (V8-WDB): 65 80 (WDB)	.....	1	318 0069	

8.130 NUT, Brake Tube

60 Thru 63 01-10-20-80 (3/8" Hex. Head-For 3/16" Tube)	17.446	AR	G137396	
60 Thru 63 01-10-20-80 (7/16" Hex. Head-For 1/4" Tube)	17.446	AR	G137397	
63 01-10-80 (11/16" Hex. Head-For 3/16" Tube): 64 10 (Six)(11/16" Hex. Head-For 3/16" Tube): 64 10-80 (V8-LHD)(11/16" Hex. Head-For 3/16" Tube)	.....	AR	316 7600	
63 01-10-80 (5/8" Hex. Head-For 1/4" Tube): 64 10 (Six)(5/8" Hex. Head-For 1/4" Tube): 64 10-80 (LHD-V8)(5/8" Hex. Head-For 1/4" Tube)	.....	AR	316 7601	#
64 01-10-80 (1/2" Hex. Head-For 3/16" Tube)	.....	AR	317 2068	

8.140 PEDAL, Brake

60 01	.....	1	314 0741	
61 01 (LHD-WST)(LHD-WOD)(LHD-WAT-LPB): 62-63 01 (LHD-WST-LES) (LHD-WOD-LES) ***(Replaces 316 0471)***	.....	1	316 2859	
61 Thru 63 01 (LHD-WAT-WPB)(LHD-WES-WPB)	.....	1	316 0472	
61 Thru 63 01 (RHD)	.....	1	313 4357	
62-63 01 (LHD-WAT-LPB)(LHD-WES-LPB)	.....	1	316 3828	
64-65 01 (LHD-WST-LES)(LHD-WOD-LES)	.....	1	317 1686	
64-65 01 (LHD-WAT)(LHD-WES)	.....	1	316 9339	
64-65 01 (RHD)	.....	1	317 2504	
60 10-20-80 (LHD-WST)(LHD-WOD)(LHD-WAT-LPB)	.....	1	315 3007	
60 10-20-80 (LHD-WAT-WPB)	.....	1	315 0521	
60-61 10-80 (RHD)	.....	1	314 6531	
61 10-20-80 (LHD-WST)(LHD-WOD)(LHD-WAT-LPB): 62 10-80 (LHD-WST) (LHD-WOD) ***(Replaces 316 0351)***	.....	1	316 3333	
61 10-20-80 (LHD-WAT-WPB): 62 10-80 (LHD-WAT) ***(Replaces 316 0353)***	.....	1	316 3334	
62 10-80 (RHD)	.....	1	316 3358	
63-64 10-80 (LHD-WST-LES)(LHD-WOD-LES) ***(Replaces 316 7007)***	.....	1	316 9337	
63-64 10-80 (LHD-WAT)(LHD-WES) ***(Replaces 316 7025)***	.....	1	316 9339	
63-64 10 (RHD-Six-WST)(RHD-Six-WOD)	.....	1	316 8968	
63-64 10-80 (RHD-WAT) ***(Replaces 316 8990)***	.....	1	316 9338	
65 10-80 (LHD-WST)(LHD-WOD)	.....	1	317 6314	
65 10-80 (LHD-WAT)	.....	1	317 6302	
65 10 (RHD-WST)(RHD-WOD)	.....	1	317 4444	
65 10 (RHD-WAT)	.....	1	316 9338	

Copyright 1963 American Motors Corp.

GROUP NO. — DESCRIPTION — YEAR and MODEL	PRIMARY GROUP NO.	PER CAR	PART NO.	CODE
BUSHING, Brake Pedal				
60 Thru 63 01 (LHD): 60 Thru 62 10-20-80 (LHD)	5.135	2	314 5488	
64-65 01-10-80: 63 10-80 (LHD)	.....	2	316 7019	
FITTING, Brake Pedal Lubrication				
60 Thru 62 10-80 (RHD)	17.290	1	G125696	
8.145 ROD, Brake Pedal				
60 01	.....	1	315 7583	
60 Thru 62 10-80 (RHD)	.....	1	313 4839	
SCREW, Brake Pedal Rod				
60 01: **61 Thru 63 01 (RHD): 60 Thru 62 10-80 (RHD)**	5.140	1	313 3781	
8.148 COVER, Brake Pedal Pad Rubber				
60 01: ***61 Thru 63 01 (RHD): 60 Thru 63 10-80 (RHD)***	5.144	1	310 6732	
62-63 01-10-80 (LHD-WST-LES)(LHD-WOD-LES): 60-61 10-20-80 (LHD-WST) (LHD-WOD)(LHD-WAT-LPB): 64 10-80 (WST)(WOD): ***164 01 (Can)***	.....	1	314 8572	
61 Thru 65 01 (LHD-WAT-WPB)(LHD-WES-WPB): 60 Thru 64 10-20-80 (LHD-WAT-WPB)(LHD-WES-WPB): ***65 10 (RHD-WAT-WPB)***	.....	1	315 0734	
62 Thru 64 01-10-80 (WAT-LPB)(LHD-WES-LPB): ***65 10 (RHD-WAT-LPB)***	.....	1	316 3826	
64-65 01 (LHD-WST)(LHD-WOD)	.....	1	317 1670	
65 10 (WST)(WOD): 65 80 (WST)(WOD)	.....	1	317 5994	
65 10 (LHD-WAT-LPB)(Except Marlin): 65 80 (880-WAT-LPB)	.....	1	317 5997	
65 10 (LHD-WAT-WPB)(Except Marlin): 65 80 (880-WAT-WPB)	.....	1	317 5996	
65 80 (990-WAT-LPB)	.....	1	317 6303	
65 50 (Marlin-WAT): 65 80 (990-WAT-WPB)	.....	1	317 6308	
OVERLAY, Brake Pedal Pad Rubber Cover				
65 50 (WST)(WOD): 65 80 (990-WST)(990-WOD)	.....	1	317 6315	
8.152 LINK, Brake Pedal To Master Cylinder				
60 01: ***60-61 10-80 (RHD)***	.....	1	312 3583	
61 Thru 63 01 (RHD)	.....	1	312 8213	
62-63 10-80 (RHD)	.....	1	316 3403	
ATTACHING PARTS Link To Pedal				
NUT, Hexagon — 60 01: ***61 Thru 63 01 (RHD): 60 Thru 62 10-80 (RHD)***	17.406	1	G120370	NA
CLIP — ***61 Thru 63 01 (RHD)***	8.168	1	312 8214	
8.156 BOLT, Brake Pedal To Link				
60 01: ***60 Thru 62 10-80 (RHD)***	8.060	1	91 788	
61 Thru 63 01 (LHD): 60 Thru 62 10-20-80 (LHD)	.....	1	314 5917	
64-65 01	.....	1	317 0588	
63 Thru 65 10-80 (LHD)	.....	1	316 7027	
ATTACHING PARTS Bolt To Pedal				
WASHER, Plain — ***60 Thru 62 10-80 (RHD) .....(Replaces 800 0193)***	17.814	1	400 1132	
WASHER, Lock — 60 01: ***60 Thru 62 10-80 (RHD)***	17.820	1	G120382	NA
NUT, Hexagon — 60 01: ***60 Thru 62 10-80 (RHD)***	17.406	1	G103026	NA
NUT, Lock — 64-65 01-10-80	.....	1	G443336	NA

Copyright 1963 American Motors Corp.

GROUP NO. — DESCRIPTION — YEAR and MODEL	PRIMARY GROUP NO.	PER CAR	PART NO.	CODE
BUSHING, Brake Pedal				
60 Thru 63 01 (LHD): 60 Thru 62 10-20-80 (LHD)	5.135	2	314 5488	
64-65 01-10-80: 63 10-80 (LHD)	.....	2	316 7019	
FITTING, Brake Pedal Lubrication				
60 Thru 62 10-80 (RHD)	17.290	1	G125696	
8.145 ROD, Brake Pedal				
60 01	.....	1	315 7583	
60 Thru 62 10-80 (RHD)	.....	1	313 4839	
SCREW, Brake Pedal Rod				
60 01: **61 Thru 63 01 (RHD): 60 Thru 62 10-80 (RHD)**	5.140	1	313 3781	
8.148 COVER, Brake Pedal Pad Rubber				
60 01: ***61 Thru 63 01 (RHD): 60 Thru 63 10-80 (RHD)***	5.144	1	310 6732	
62-63 01-10-80 (LHD-WST-LES)(LHD-WOD-LES): 60-61 10-20-80 (LHD-WST) (LHD-WOD)(LHD-WAT-LPB): 64 10-80 (WST)(WOD): ***164 01 (Can)***	.....	1	314 8572	
61 Thru 65 01 (LHD-WAT-WPB)(LHD-WES-WPB): 60 Thru 64 10-20-80 (LHD-WAT-WPB)(LHD-WES-WPB): ***65 10 (RHD-WAT-WPB)***	.....	1	315 0734	
62 Thru 64 01-10-80 (WAT-LPB)(LHD-WES-LPB): ***65 10 (RHD-WAT-LPB)***	.....	1	316 3826	
64-65 01 (LHD-WST)(LHD-WOD)	.....	1	317 1670	
65 10 (WST)(WOD): 65 80 (WST)(WOD)	.....	1	317 5994	
65 10 (LHD-WAT-LPB)(Except Marlin): 65 80 (880-WAT-LPB)	.....	1	317 5997	
65 10 (LHD-WAT-WPB)(Except Marlin): 65 80 (880-WAT-WPB)	.....	1	317 5996	
65 80 (990-WAT-LPB)	.....	1	317 6303	
65 50 (Marlin-WAT): 65 80 (990-WAT-WPB)	.....	1	317 6308	
OVERLAY, Brake Pedal Pad Rubber Cover				
65 50 (WST)(WOD): 65 80 (990-WST)(990-WOD)	.....	1	317 6315	
8.152 LINK, Brake Pedal To Master Cylinder				
60 01: ***60-61 10-80 (RHD)***	.....	1	312 3583	
61 Thru 63 01 (RHD)	.....	1	312 8213	
62-63 10-80 (RHD)	.....	1	316 3403	
ATTACHING PARTS Link To Pedal				
NUT, Hexagon — 60 01: ***61 Thru 63 01 (RHD): 60 Thru 62 10-80 (RHD)***	17.406	1	G120370	NA
CLIP — ***61 Thru 63 01 (RHD)***	8.168	1	312 8214	
8.156 BOLT, Brake Pedal To Link				
60 01: ***60 Thru 62 10-80 (RHD)***	8.060	1	91 788	
61 Thru 63 01 (LHD): 60 Thru 62 10-20-80 (LHD)	.....	1	314 5917	
64-65 01	.....	1	317 0588	
63 Thru 65 10-80 (LHD)	.....	1	316 7027	
ATTACHING PARTS Bolt To Pedal				
WASHER, Plain — ***60 Thru 62 10-80 (RHD) .....(Replaces 800 0193)***	17.814	1	400 1132	
WASHER, Lock — 60 01: ***60 Thru 62 10-80 (RHD)***	17.820	1	G120382	NA
NUT, Hexagon — 60 01: ***60 Thru 62 10-80 (RHD)***	17.406	1	G103026	NA
NUT, Lock — 64-65 01-10-80	.....	1	G443336	NA

Copyright 1963 American Motors Corp.

GROUP NO. — DESCRIPTION — YEAR and MODEL	PRIMARY GROUP NO.	PER CAR	PART NO.	CODE
BUSHING, Brake Pedal To Link				
61 Thru 63 01 (LHD): 60 Thru 65 10-20-80 (LHD)	.....	2	31 4 5487	
64-65 01	.....	2	317 0589	
8.160 SHAFT, Brake Pedal				
60 01 (WST)(WOD)	5.148	1	312 9550	
60 01 (WAT)	.....	1	313 9838	
61 Thru 63 01 (LHD-WST)(LHD-WOD): 60 Thru 62 10-20-80 (LHD-WST) (LHD-WOD)	.....	1	314 9728	
61 Thru 63 01 (LHD-WAT): 60 Thru 62 10-20-80 (LHD-WAT)	.....	1	314 9729	
64-65 01: 64 10 (LHD-Six-WAT)(LHD-Six-WES): 64 10-80 (V8-WAT):				
64 10 (RHD-Six): 65 10-80 (WAT)	.....	1	317 2018	
63 10-80: 64 10 (LHD-Six-WST)(LHD-Six-WOD): 65 10 (Six-199-WST) (Six-199-WOD)	.....	1	316 7023	
64 10-80 (LHD-V8-WST)(LHD-V8-WOD): 65 10 (Six-232-WST)(V8-WST) (V8-WOD)				
(Heavy Duty-Six-199): 65 80 (WST)(WOD)	.....	1	317 3432	#
61 Thru 63 01 (RHD)	5.148	1	314 0269	
ATTACHING PARTS				
Shaft To Pedal				
BOLT, Hexagon..... 60 01	17.038	1	G181659	NA
BOLT, Hexagon 63 10-80: 64-65 01-10-80	17.038	1	G181593	NA
WASHER, Plain..... 60 01 ***(Replaces 800 0207)***	17.814	1	400 1147	
WASHER, Lock 60 01	17.820	1	G131100	NA
WASHER, Lock 63 10-80: 64-65 01-10-80	17.820	1	G120214	NA
NUT, Lock..... 61 Thru 63 01 (LHD): 60 Thru 62 10-20-80 (LHD)	.....	1	G442828	NA
NUT, Hexagon..... 63 10-80: 64-65 01-10-80	17.406	1	G120368	
Shaft To Spacer				
WASHER, Plain..... ***62 10 (RHD-WAT)*** ***(Replaces 800 0207)***	17.814	1	400 1147	
SPRING, Brake Pedal Shaft				
60 01	.....	1	312 9696	
60 Thru 62 10-80 (RHD)	.....	1	314 1453	
SPACER, Brake Pedal Shaft				
61 Thru 63 01 (RHD)	.....	2	313 4023	
60-61 10-80 (RHD)	.....	1	315 2986	
62 10 (RHD-WAT)	.....	1	316 3782	
RING, Brake Pedal Shaft Lock				
60 01	5.148	1	310 6815	
61 Thru 63 01 (RHD)	5.148	2	314 0270	
FITTING, Brake Pedal Shaft Lubrication				
60 01	17.290	1	G273323	

Copyright 1963 American Motors Corp.

GROUP NO. — DESCRIPTION — YEAR and MODEL	PRIMARY GROUP NO.	PER CAR	PART NO.	CODE
8.164 SUPPORT, Brake Pedal				
61 01 (LHD-Note 8.140-1)	.....	1	345 8053	
61 01 (LHD-Note 8.140-2)	.....	1	346 4765	
61 01 (RHD)	.....	1	316 1233	
62-63 01 (RHD)	.....	1	316 2835	
63 01 (LHD)	.....	1	350 5101	
64 01 (LHD-LPB)(LHD-WPB-Note 8.164-1 Type 1): 65 01 (LHD-LPB)	.....	1	316 9776	
64 01 (LHD-WPB-Note 8.164-1 Type 2): 65 01 (LHD-WPB)	.....	1	317 3418	
64 01 (RHD-WST)(RHD-WOD): 65 01 (RHD)	.....	1	317 1197	
60 Thru 62 10-20-80 (LHD)	.....	1	315 7651	
63 10-80 ***(Replaces 316 7573)***	.....	1	317 1561	
64 10 (Six): 64 10-80 (V8-LHD): ***64 10 (RHD-V8-LPB)***	.....	1	317 2629	#
65 10-80 (LHD): ***65 10 (RHD-LPB)***	.....	1	317 6876	
65 10 (RHD-WPB)	.....	1	317 6875	#
ATTACHING PARTS				
Support To Dash Panel				
BOLT, Hexagon ***61 Thru 63 01 (RHD)***	17.033	4	G181596	NA
SCREW, Tapping 60-61 10-20-80 (LHD) ***(Replaces 344 4626)***	.....	4	400 0032	
SCREW, Tapping 62 10-80 (LHD)	22.056	4	400 0032	
SCREW, Machine 61 Thru 63 01 (LHD)	8.035	4	316 2760	
STUD 61 01 (LHD-2 Req.): 62-63 01 (LHD-4 Req.): 64-65 01 (LHD-LPB-4 Req.)(LHD-WPB-2 Req.): 61 Thru 65 10-20-80 (LHD-4 Req.)	.....	AR	315 7870	
WASHER, Plain ***61 Thru 63 01 (RHD-7/8" O.D.)***	17.814	2	400 1093	
WASHER, Plain ***61 Thru 63 01 (RHD-1-1/8" O.D.)***	17.814	2	400 0480	
WASHER, Lock 61 01 (LHD-2 Req.): 62-63 01 (LHD-4 Req.): 61 (LHD-4 Req.) ***(Replaces 800 0153)*** Thru 63 10-20-80	17.820	AR	G120382	NA
WASHER, Lock ***61 Thru 63 01 (RHD) (Replaces 800 0157)***	17.820	4	G120214	NA
NUT, Hexagon 61 01 (LHD-2 Req.): 62-63 01 (LHD-4 Req.): 61 Thru 63 10-20-80 (LHD-4 Req.)	17.406	AR	G120369	NA
NUT, Hexagon ***61 Thru 63 01 (RHD)***	17.406	4	G120368	NA
Support To Instrument Panel				
BOLT, Hexagon 60-61 80 (LHD)	17.038	1	G180120	NA
WASHER, Lock 60-61 80 (LHD)	17.820	1	G103321	NA
WASHER, Plain 64 80	17.814	1	400 1104	
Support To Brace				
BOLT, Hexagon 61 Thru 63 01 (LHD)	17.038	1	G189329	NA
BOLT, Hexagon 65 01: 63 Thru 65 10-80	17.038	2	G181635	NA
SCREW, Tapping 60 Thru 63 10-20-80 (LHD) ***(Replaces 344 4626)***	22.056	2	400 0032	
WASHER, Plain 61 Thru 65 01 (LHD)	17.814	1	G120394	NA
WASHER, Plain 63 10-80 ***(Replaces 800 0163)***	.....	2	400 1102	
WASHER, Lock 61 Thru 65 01 (LHD)	17.820	1	G120382	NA
WASHER, Lock 63 10-80	.....	2	G120382	NA
NUT, Hexagon 61 Thru 65 01 (LHD)	17.406	1	G120369	
NUT, Hexagon 64 Thru 65 10-80	17.412	2	G271193	NA
Support To Brace (At Instrument Panel)				
BOLT, Hexagon 61 01 (LHD): 60 Thru 62 10-20-80 (LHD)	17.038	2	G181641	NA
BOLT, Hexagon 63 10-80	17.038	1	G181638	NA
BOLT, Hexagon 65 01	17.038	2	G181637	NA

NOTE 8.164-1: Two Types of Supports were used on the 64 01 (LHD-WPB). They can be identified as follows:
Type 1: Has 4 Weld Nuts on front of Support.
Type 2: Has 2 Weld Nuts on front of Support.

Copyright 1963 American Motors Corp.

GROUP NO. — DESCRIPTION — YEAR and MODEL	PRIMARY GROUP NO.	PER CAR	PART NO.	CODE
BOLT, Hexagon 64-65 10-80	17.038	2	400 1412	NA
WASHER, Plain..... 65 01: 63 Thru 65 10-80 (13/16" O. D.)	17.814	2	G120394	NA
WASHER, Plain..... 63-64 10-80 (1-1/8" O. D.) ***....(Replaces 800 0169)***	17.814	2	400 1107	
WASHER, Lock..... 63 10-80	17.820	1	G120214	NA
NUT, Speed ..... 61 01 (LHD): 60-61 10-20-80 (LHD)	.....	2	345 0012	
NUT, Stamped ..... 65 01 (2 Req.): 62 10-80 (LHD-2 Req.): 63 10-80 (1 Req.)	17.428	AR	G454385	NA
NUT, Hexagon..... 63 Thru 65 10-80	17.406	2	G120369	NA
BRACE, Brake Pedal Support To Dash Panel				
(Left) 61 Thru 63 01 (LHD)	.....	1	316 0464	
(Left) 60 Thru 62 10-20-80 (LHD)	.....	1	344 5961	
(Right) 61 Thru 63 01 (LHD)	.....	1	316 0465	
(Right) 60 10-20-80 (LHD)	.....	1	344 5960	
(Right) 61-62 10-20-80 (LHD)	.....	1	344 7766	
BRACKET, Brake Pedal (Incl. Shaft)				
60-61 10-80 (RHD)	8.036	1	341 0274	
62 10-80 (RHD)	.....	1	347 0037	
8.168 SPRING, Brake Pedal Return				
60 01	.....	1	314 0844	
61-62 01 (LHD-LPB): 60 Thru 62 10-20-80 (LHD-LPB)	.....	1	314 9904	
61 Thru 63 01 (RHD)	.....	1	312 9680	
60 Thru 63 10-80 (RHD)	.....	1	314 2088	
ANCHOR, Brake Pedal Return Spring				
60 01	.....	1	312 3535	
8.172 CUSHION, Brake Pedal Stop				
60 01: ***61 Thru 63 01 (RHD): 60 Thru 63 10-80 (RHD)***	.....	1	312 8937	
61 Thru 63 01 (LHD-LPB): 61-62 10-20-80 (LHD-LPB)	.....	1	315 8398	
64 01-10-80 (LHD-WST-LES)(LHD-WOD-LES): ***62 10 (Heavy Duty-LPB):*** 63 10-80	.....	1	316 5745	
60 10-20-80 (LHD-LPB)	.....	1	314 6763	
64 10 (RHD-V8-WPB): 65 10 (RHD-WAT-WPB)	.....	1	316 9453	
BRACKET, Brake Pedal Stop				
64-65 10 (RHD-V8-WPB)	.....	1	317 2748	
ATTACHING PARTS Bracket To Support				
BOLT, Hexagon ..... ***64 10 (RHD-V8-WPB): 65 10 (RHD-WAT-WPB)***	17.038	2	G181593	NA
WASHER, Lock ..... ***64 10 (RHD-V8-WPB): 65 10 (RHD-WAT-WPB)***	17.820	2	G120214	NA
NUT, Hexagon..... ***64 10 (RHD-V8-WPB): 65 10 (RHD-WAT-WPB)***	17.406	2	G120368	
8.175 PAN, Brake Pedal Splash				
60 01 (LHE)	.....	1	313 0971	
60 01 (OHV)	.....	1	315 9996	
ATTACHING PARTS Pan To Body				
SCREW, Tapping..... 60 01	17.670	3	G445656	NA

Copyright 1963 American Motors Corp.

GROUP NO. — DESCRIPTION — YEAR and MODEL	PRIMARY GROUP NO.	PER CAR	PART NO.	CODE
8.180 LEVER ASSEMBLY, Foot Operated Parking Brake				
60 10-20-80	.....	1	315 8045	
61 10-20-80 (With Gray Handle)	.....	1	316 0289	
61 10-20-80 (With Black Handle): 62 10-80 (LHD) ***(Replaces 316 2304)***	.....	1	316 4774	
63-64 10-80 (LHD)	.....	1	316 6920	
65 10-80 (LHD)	.....	1	320 5623	
ATTACHING PARTS				
Lever To Bracket				
WASHER, Plain ..... 60-61 10-20-80: 62 Thru 64 10-80 (LHD)	17.814	3	G120394	NA
WASHER, Lock ..... 60-61 10-20-80: 62 Thru 64 10-80 (LHD)	17.820	3	G120382	NA
NUT, Hexagon ..... 60-61 10-20-80: 62 Thru 64 10-80 (LHD)	17.406	3	G120369	NA
Lever To Dash				
WASHER, Plain ..... 65 10-80 (LHD)	27.208	2	400 0883	
NUT, Hexagon ..... 65 10-80 (LHD)	12.035	2	400 0596	
Lever To Instrument Panel				
NUT, Hexagon ..... 65 10-80 (LHD)	12.035	1	400 0596	
SCREW, Machine ..... 65 10-80 (LHD)...(Incl. Washer)	23.020	1	400 0608	
STOP KIT, Foot Operated Parking Brake Lever				
65 10-80 (LHD)	.....	1	320 6856	#
BUMPER, Foot Operated Parking Brake Lever Stop Bracket				
65 10-80 (LHD)	23.019	1	434 8105	#
SPACER, Parking Brake Lever To Bracket				
60-61 10-20-80: 62 10-80 (LHD)	.....	3	315 3390	
ATTACHING PARTS				
Spacer To Lever				
WASHER, Plain ..... 60-61 10-20-80: 62 10-80 (LHD)	17.814	1	800 0165	
LEVER, Hand Operated Parking Brake				
60 01	.....	1	315 7816	
61 01 ***(Replaces 315 9606)***	.....	1	316 2305	
62 Thru 65 01: ***61 Thru 65 10-80 (RHD)***	.....	1	316 2333	
ATTACHING PARTS				
Lever To Instrument Panel				
STUD ..... 60 01: 61 Thru 65 01 (LHD)	.....	1	315 4677	
STUD ..... ***61 Thru 63 01 (RHD-1-1/2" Long): 61 Thru 65 10-80 (RHD)***	.....	1	316 2228	
STUD ..... ***62-63 01 (RHD-2-3/8" Long)***	.....	1	316 5841	
PIN ..... 60 Thru 65 01: ***61 Thru 65 10-80 (RHD)***	.....	1	313 4717	
WASHER, Plain ..... 61 Thru 65 01 (LHD-2 Req.) ***(RHD-1 Req.)***	17.814	AR	G120394	NA
WASHER, Plain ..... ***61 Thru 65 10-80 (RHD)***	17.814	1	400 1102	
WASHER, Lock ..... 60 01: 61 Thru 65 01: ***63 Thru 65 10 (RHD): 63 80 (RHD)***	17.820	1	G120382	NA
WASHER, Lock ..... ***61 Thru 63 01 (RHD)***	17.822	1	G114606	NA
WASHER, Lock ..... ***61-62 10-80 (RHD)***	17.826	1	G178556	NA
NUT, Hexagon ..... 60 Thru 65 01	17.406	1	G120369	NA
NUT, Jam ..... ***61 Thru 65 10 (RHD): 63 80 (RHD)***	17.410	1	G124925	NA

NOTE 8.180-1: Two size Rivets were used on the foot operated parking brake on the 64 10-80. They can be identified as follows:
Type 1: Rivet Head is 3/4" in diameter.
Type 2: Rivet Head is 1/2" in diameter.

Copyright 1963 American Motors Corp.

GROUP NO. — DESCRIPTION — YEAR and MODEL	PRIMARY GROUP NO.	PER CAR	PART NO.	CODE
HANDLE, Foot Operated Parking Brake Lever Release				
60 10-20-80: 61-62 10-20-80 (Black) ***(Replaces 315 7236)***	.....	1	315 8044	
61 10-20-80 (Gray)	.....	1	316 0290	
SPRING KIT, Foot Operated Parking Brake Lever (Incl. Rivet)				
60-61 10-20-80: 62 10-80 (LHD)	.....	1	320 1916	
63 10-80: 64 10-80 (Note 8.180-1 Type 1)	.....	1	320 5420	
64 10-80 (Note 8.180-1 Type 2)	.....	1	320 5395	
COVER, Foot Operated Parking Brake Lever Rubber				
60-61 10-20-80: 62 Thru 64 10-80 (LHD)	.....	1	320 0803	
65 10-80 (LHD)	.....	1	317 5995	
OVERLAY, Foot Operated Parking Brake Lever Cover				
65 50 (Marlin): 65 80 (990)	.....	1	317 6024	
BUMPER, Foot Operated Parking Brake Stop Rubber				
60-61 10-20-80: 62 10-80 (LHD)	.....	1	320 1363	
64 10-80	.....	1	320 5414	
SPRING, Foot Operated Parking Brake Return				
60-61 10-20-80 (With Warning Light): 62 Thru 64 10-80 (With Warning Light)	.....	1	315 8203	
(Upper) 65 10-80 (LHD)	.....	1	320 5625	
(Lower) 65 10-80 (LHD-With Warning Light)	.....	1	317 7442	
GROMMET, Hand Operated Parking Brake Lever				
60 01: ***61-62 10-80 (RHD)***	.....	1	314 7597	
61 Thru 63 01	.....	1	316 1063	
64-65 01	.....	1	317 1663	
63-64 10-80 (RHD): 65 10 (RHD)	.....	1	316 9274	
BRACE, Hand Operated Parking Brake Lever				
64 01: ***65 01 (RHD)***	.....	1	317 0708	
65 01	.....	1	317 5727	
62 10-80 (RHD)	.....	1	316 5981	
63 Thru 65 10-80 (RHD)	.....	1	316 7641	
ATTACHING PARTS				
Brace To Dash Panel				
WASHER, Lock ..... ***63-65 10 (RHD): 63 80 (RHD)***	17.820	2	G120382	NA
BOLT, Hexagon ..... ***63 Thru 65 10 (RHD): 63 80 (RHD)***	17.038	2	G181636	NA
WASHER, Plain..... ***63 Thru 65 10 (RHD): 63 80 (RHD) ...(Replaces 800 0163)***	17.814	2	400 1102	
NUT, Hexagon..... ***63-65 10 (RHD): 63 80 (RHD)***	17.406	2	G120369	NA
Brace To Dash Panel Brace				
BOLT, Hexagon 64-65 01	17.038	1	G180018	NA
SCREW, Machine..... 65 01	.....	1	400 0757	
WASHER, Lock 64-65 01	17.820	1	G120380	NA
WASHER, Sealing 65 01	12.125	1	400 0360	

Copyright 1963 American Motors Corp.

GROUP NO. — DESCRIPTION — YEAR and MODEL	PRIMARY GROUP NO.	PER CAR	PART NO.	CODE
Brace To Instrument Panel				
SCREW, Machine..... 64 01	17.610	1	G157728	NA
SCREW, Machine..... 65 01	.....	1	400 0757	
NUT, Hexagon..... 64-65 01	17.412	1	G271172	
WASHER, Plain..... 64-65 01	17.814	1	G120392	
SLEEVE, Hand Operated Parking Lever (At Dash)				
63 Thru 65 10-80 (RHD)	.....	1	314 6408	
8.182 ROD, Parking Brake Release				
65 10-80...(Incl. Handle)	.....	1	320 5624	
(Front) 63 10-80 (LHD)...(Incl. Knob)	.....	1	349 2110	
(Front) 64 10-80 (LHD)...(Incl. Knob)	.....	1	350 9544	
(Rear) 63-64 10-80 (LHD)	.....	1	316 6934	
KNOB, Parking Brake Release Rod (Incl. Set Screw)				
63 10-80 (LHD-Note 8.182-1)	13.080	1	348 2942	
ATTACHING PARTS				
Knob To Rod				
SCREW, Set..... 63 10-80 (LHD-Note 8.182-1) ***(Replaces G9400811)***	17.638	1	G435146	
ESCUTCHEON, Parking Brake Release Rod Knob				
63-64 10-80 (LHD)	.....	1	348 2943	
GROMMET, Parking Brake Release Rod				
63 10-80 (LHD): 64 10 (LHD-550)(LHD-660): 64 80 (LHD)	.....	1	348 2944	#
64 10 (LHD-770)	.....	1	353 6231	
65 10-80 (LHD)	.....	1	320 5626	
CLIP, Parking Brake Release Rods Connecting				
63-64 10-80 (LHD)	.....	1	316 6927	
65 10-80 (LHD)	.....	1	320 5627	
CLIP, Parking Brake Release Rod Attaching				
63-64 10-80 (LHD) ***(Replaces 313 1561)***	4.256	1	316 5000	
8.187 BELLCRANK, Hand Operated Parking Brake				
60 01: ***61 Thru 63 10-80 (RHD): 64-65 10 (RHD)***	.....	1	315 2623	
61 Thru 63 01	.....	1	316 0721	
64-65 01	.....	1	317 2990	
SPRING, Hand Operated Parking Brake Bellcrank Return				
60 01	.....	1	315 4793	
61 Thru 65 10-80 (RHD)	.....	1	314 3516	

NOTE 8.182-1: Two Kinds of Knobs were used on the 63 10-80 (LHD). The First Cars built used a Knob attached to Rod with a Set Screw and Serviced separately. The Second Type Knob is Swedged to the Rod and Serviced as part of the Rod.

Copyright 1963 American Motors Corp.

GROUP NO. — DESCRIPTION — YEAR and MODEL	PRIMARY GROUP NO.	PER CAR	PART NO.	CODE
PIN, Hand Operated Parking Brake Bellcrank				
60 01 (37/64" Long): 61 Thru 63 07: ***61 Thru 65 10-80 (RHD-37/64" Long)***	.....	1	313 4064	#
60 01 (49/64" Long): ***61 Thru 65 10-80 (RHD-49/64" Long)***	.....	1	313 4065	
62-63 01 (LCV)	.....	1	316 3695	
64-65 01	.....	1	317 2033	
RETAINER, Hand Operated Parking Brake Bellcrank Pin				
60 Thru 65 01 (1 Req.): ***61 Thru 63 10-80 (RHD-2 Req.): 64-65 10 (RHD-2 Req.)***	.....	AR	313 4066	
ATTACHING PARTS				
Retainer To Bellcrank				
PIN, Cotter ..... 62 Thru 65 01 (1 Req.): ***62 10-80 (RHD-2 Req.)***	.....	AR	G103373	NA
8.189 BRACKET, Hand Brake Cable Bellcrank				
60 01	.....	1	343 1659	
61 01 (WAT-LCV)	.....	1	316 0811	
61 Thru 63 07	.....	1	316 0971	
61 Thru 63 01 (WST-LCV) (WOD-LCV) ***(Replaces 316 0810)***	.....	1	316 5088	
62-63 01 (WAT-LCV)	.....	1	316 3694	
64-65 01	.....	1	317 1979	
61 Thru 63 10-80 (RHD): 64-65 10 (RHD)	.....	1	313 7361	
ATTACHING PARTS				
Bracket To Bellcrank				
BOLT, Hexagon ..... 61 Thru 63 07	17.038	2	G181595	NA
BOLT, Hexagon ..... ***61 Thru 63 10-80 (RHD): 64-65 10 (RHD)***	17.038	2	G181610	NA
WASHER, Lock ..... 61 Thru 63 07	17.820	2	G120214	NA
WASHER, Lock ..... ***61 Thru 63 10-80 (RHD): 64-65 10 (RHD)***	17.820	2	G103320	NA
NUT, Hexagon ..... 61 Thru 63 07: ***61 Thru 63 10-80 (RHD): 64 10 (RHD)***	17.406	2	G120368	NA
PIN, Cotter ..... ***61 Thru 63 10-80 (RHD): 64-65 10 (RHD)***	17.460	1	G103373	NA
SUPPORT, Hand Brake Cable Bellcrank (On Torque Tube)				
63-64 10-80 (RHD)	.....	1	316 7847	
SPACER, Hand Operated Parking Brake Bellcrank Bracket				
61 Thru 65 10-80 (RHD)	.....	2	316 0867	
8.192 CABLE, Foot Operated Parking Brake Lever To Equalizer				
60-61 10-20-80	.....	1	315 3386	
62 Thru 64 10-80 (LHD) ***(Replaces 316 4773)***	.....	1	317 1412	
65 10-80 (LHD)	.....	1	317 6667	
ATTACHING PARTS				
Cable To Clip Bracket				
CLIP ..... 60-61 10-20-80 ***(Replaces 314 1026)***	17.134	1	G105251	NA
CLIP ..... 62 10-80 (LHD)	8.330	1	313 5224	
SCREW, Tapping ..... 60-61 10-20-80: 62 10-80 (LHD) ***(Replaces 800 0091)***	17.671	2	400 1031	
Cable To Floor Pan				
CLIP ..... 60-61 10-20-80 (2 Req.): 63-64 10-80 (LHD-1 Req.-1-1/16" Long): 65 10-80 (LHD-4 Req.)	.....	AR	313 5224	

Copyright 1963 American Motors Corp.

GROUP NO. — DESCRIPTION — YEAR and MODEL		PRIMARY GROUP NO.	PER CAR	PART NO.	CODE
CLIP	62 10-80 (LHD-1 Req.): 63-64 10-80 (LHD-3 Req. -1" Long)	4.160	AR	15 708	
SCREW, Tapping	60-61 10-20-80 (2 Req.): 62 10-80 (LHD-2 Req.): 63 10-80 (LHD-3 Req. -3/8" Long) ***(Replaces 800 0091)***	17.671	AR	400 1031	
SCREW, Tapping	63-64 10-80 (LHD-5/8" Long)	17.671	1	G172468	NA
SCREW, Tapping	65 10-80 (LHD)	17.671	4	400 1042	
BOLT, Hexagon	63 10-80 (LHD)	17.038	1	G180016	NA
WASHER, Plain	63 10-80 (LHD)	17.814	1	G120393	NA
WASHER, Lock	63 10-80 (LHD-1/4" I.D.)	17.820	1	G120380	NA
WASHER, Lock	63-64 10-80 (LHD-5/16" I.D.)	17.820	1	G120214	NA
NUT, Hexagon	63 10-80 (LHD-1/4" Dia.)	17.406	1	G120375	
NUT, Hexagon	63-64 10-80 (LHD-5/16" Dia.)	17.406	1	G120368	
	Cable To Seat Reinforcement				
CLIP	63-64 10-80 (LHD-1-1/4" Long)	.....	1	317 1840	
SCREW, Tapping	63-64 10-80	.....	1	400 1064	
	Cable To Torque Tube Bracket				
CLIP	60-61 10-20-80: 62 Thru 64 10-80 (LHD)	.....	1	312 8734	
WASHER, Plain	64-65 10-80	.....	2	400 0483	
	Cable To Torque Tube				
CLIP	63 Thru 65 10 (Six-LHD-2-1/2" I.D.)	.....	1	317 1838	
CLIP	63 Thru 65 10 (V8-LHD-3-1/8" I.D.): 63 Thru 65 80 (LHD-3-1/8" I.D.)	.....	1	317 1839	
	Cable To Lever				
PIN, Clevis	60-61 10-20-80	17.474	1	G120690	NA
PIN, Clevis	62-63 10-80 (LHD)	8.180	1	316 4772	
PIN, Cotter	60-61 10-20-80: 62-63 10-80 (LHD-3/32" Dia.)	17.460	1	G103373	NA
PIN, Cotter	63-64 10-80 (LHD-1/16" Dia.)	17.460	1	G103362	NA
WASHER, Plain	60-61 10-20-80: 62 Thru 64 10-80 (LHD)	17.814	1	G120393	NA
CLIP	65 10-80	.....	1	312 8734	
	CABLE, Hand Operated Parking Brake Lever To Equalizer				
60 01		.....	1	315 4531	
61 01 (LHD-LCV)		.....	1	316 0818	
61 01 (RHD)	***(Discontinued)***	.....	1	316 1284	
61 07		.....	1	316 0974	
62-63 01 (LHD-LCV)		.....	1	316 4931	
62-63 07		.....	1	316 5093	
62-63 01 (RHD)		.....	1	316 4932	
64-65 01 (LHD)		.....	1	317 2036	
64-65 01 (RHD)		.....	1	317 2997	
61-62 10-80 (RHD)		.....	1	316 4781	
63-64 10-80 (RHD-L3S)		.....	1	316 7635	
63-64 18-88 (RHD-W3S)		.....	1	316 9288	
65 10 (RHD-L3S)		.....	1	317 8352	
65 18 (RHD-W3S)		.....	1	317 8353	
	ATTACHING PARTS				
	Cable To Wheelhouse				
CLIP	60-61 01	8.330	1	313 5224	
CLIP	62 Thru 65 01: ***64-65 10-80 (RHD)***	.....	1	15 708	
SCREW, Tapping	60-61 01	17.671	1	800 0093	NA
SCREW, Tapping	62 01	17.671	1	G274773	NA
SCREW, Tapping	63 Thru 65 01: ***63 10-80 (RHD): 64 10 (RHD)***	17.671	1	G9414012	NA

Copyright 1963 American Motors Corp.

GROUP NO. — DESCRIPTION — YEAR and MODEL	PRIMARY GROUP NO.	PER CAR	PART NO.	CODE
Cable To Lever				
CLIP ..... 60 Thru 65 01: ***61 Thru 65 10-80 (RHD)***	.....	1	313 0165	
Cable To Side Sill				
CLIP 64-65 01	.....	1	15 708	
SCREW, Tapping..... 64-65 01	.....	1	400 1042	
Cable To Front Floor Pan				
CLIP ..... 64-65 01 (LHD)	.....	1	15 708	
CLIP ..... ***64 01 (RHD)***	8.330	1	313 5224	
NUT, Spring..... 64-65 01 (LHD)	.....	1	G477026	
SCREW, Tapping..... 64 01 .....***(Replaces 800 0103)***	17.671	1	400 1042	
Cable To Fuel Line				
CLIP ..... ***64-65 01 (RHD)***	.....	1	79 394	
Cable To Bellcrank				
PIN, Cotter ..... 60 Thru 65 01: ***61 Thru 63 10-80 (RHD)***	17.460	1	G103373	NA
Cable Clip				
SCREW, Tapping..... ***62-63 10-80 (RHD): 64-65 10 (RHD)***	17.671	1	400 1042	
SCREW, Tapping..... ***62-63 10-80 (RHD): 64-65 10 (RHD)*** .....***(Replaces 800 0095)***	17.671	1	G456766	
BOLT, Hexagon ..... ***62-63 10-80 (RHD): 64-65 10 (RHD)***	17.038	1	G180022	NA
NUT, Hexagon..... ***62-63 10-80 (RHD): 64-65 10 (RHD)***	17.406	1	G120375	
BOOT, Parking Brake Cable				
60 01: 60 Thru 64 10-20-80	.....	1	313 0356	
GROMMET, Foot Operated Parking Brake Cable				
(In Floor Pan) 65 10-80	.....	1	317 6666	
(In Dash) 64 10-80	27.038	1	400 0328	
(In Wheelhouse) 60-61 10-20-80 (2 Req.): 62 10-80 (LHD-2 Req.): 63-64 10-80 (LHD-1 Req.) .....***(Replaces 315 3393)***	.....	AR	317 0237	
(On Torque Tube) 60-61 10-20-80: 62-63 10-80 (LHD): 64-65 10-80	.....	1	313 7359	
ATTACHING PARTS **Grommet To Bracket**				
WASHER, Plain..... 62 Thru 64 10-80 (LHD) .....***(Replaces 800 0453)***	17.814	2	400 1172	
CLAMP, Foot Operated Parking Brake Cable To Lever				
(Deep) 60-61 10-20-80: 62 Thru 64 10-80 (LHD).....	.....	1	315 3389	
(Shallow) 60-61 10-20-80: 62 Thru 64 10-80 (LHD).....	.....	1	315 3388	
ATTACHING PARTS **Clamp To Body**				
WASHER, Plain..... 60-61 10 20-80: 62-63 10-80 (LHD).....	17.814	1	G120394	NA
WASHER, Lock..... 60-61 10 20-80: 62-63 10-80 (LHD)	17.820	1	G120382	NA
NUT, Hexagon..... 60-61 10 20-80: 62-63 10-80 (LHD).....	17.406	1	G120369	NA
Clamp To Lever				
BOLT, Hexagon ..... 60-61 10-20-80: 60 Thru 64 10-80 (LHD)	17.038	1	G180120	NA
WASHER, Plain..... 60-61 10-20-80: 60 Thru 64 10-80 (LHD)	17.814	1	G120394	NA
WASHER, Lock..... 60-61 10-20-80: 62 Thru 64 10-80 (LHD)	17.820	1	G120382	NA
BRACKET, Foot Operated Parking Brake Cable Clip				
60-61 10-20-80: 62 10-80 (LHD) .....***(Replaces 315 3392)***	4.024	1	316 4029	

Copyright 1963 American Motors Corp.

GROUP NO. — DESCRIPTION — YEAR and MODEL	PRIMARY GROUP NO.	PER CAR	PART NO.	CODE
BRACKET, Hand Operated Parking Brake Cable				
61 Thru 63 01 (LCV)	.....	1	316 0516	
61 Thru 63 07	.....	1	316 0976	
64-65 01	.....	1	317 1977	
63 18-88 (RHD-W3S)	.....	1	316 9420	
ATTACHING PARTS				
Bracket To Crossmember				
BOLT, Hexagon..... 61 Thru 63 07	17.038	2	G181595	NA
WASHER, Lock..... 61 Thru 63 07	17.820	2	G120214	NA
NUT, Hexagon..... 61 Thru 63 07	17.406	2	G120368	NA
Bracket To Transmission Extension				
SCREW, Tapping..... ***(63 18-88 (RHD-W3S):***	17.671	1	400 1031	#
Bracket To Cable				
CLIP..... ***63 18-88 (RHD-W3S):***	17.134	1	G105245	#
CLIP..... 64-65 01 ***(Replaces 316 4299)***	.....	1	312 8734	
8.214 EQUALIZER, Parking Brake				
60 Thru 63 01-10-20-80: 64-65 10-80	.....	1	315 3385	
64-65 01	.....	1	317 2989	
ATTACHING PARTS				
Equalizer To Rear Cable				
PIN, Cotter..... 60 Thru 63 01-10-20-80: 65 10-80	17.460	2	G108630	NA
PIN, Cotter..... 64-65 01	17.460	2	G103375	NA
WASHER, Plain..... 64-65 01-10-80	17.814	1	400 1116	
ROD, Parking Brake Cable Adjusting				
60 01: ***61 Thru 65 10-80 (RHD)***	.....	1	315 5108	
61 Thru 63 07	.....	1	316 0973	
61 Thru 63 01 (LCV) ***(Replaces 316 0806)***	.....	1	316 3696	
64-65 01	.....	1	317 1975	
ATTACHING PARTS				
Rod To Equalizer				
WASHER, Plain..... 61 Thru 65 01 (1/16" Thick)	17.814	1	G120393	NA
WASHER, Plain..... 61 Thru 64 01 (LCV-1/8" Thick) ***(Replaces 800 0155)***	17.814	1	400 1095	
WASHER, Plain..... 64-65 01-10-80	.....	1	400 1285	
PIN, Cotter..... 61 Thru 65 01	17.460	1	G103362	NA
NUT, Sleeve..... 60 Thru 65 01-10-20-80	.....	1	313 0642	
NUT, Hexagon..... 60 Thru 65 01-10-20-80	17.406	1	G120368	NA
BUMPER, Parking Brake Equalizer Rubber				
60-61 10-20-80: 62 Thru 65 10-80 (LHD)	.....	1	312 8677	
GROMMET, Parking Brake Cable Adjusting Rod				
61 Thru 63 07	.....	1	316 2203	

Copyright 1963 American Motors Corp.

GROUP NO. — DESCRIPTION — YEAR and MODEL	PRIMARY GROUP NO.	PER CAR	PART NO.	CODE
8.220 CABLE, Parking Brake Equalizer To Rear Wheels				
60 01	.....	1	315 9439	
61 Thru 63 01 (LCV)	.....	1	316 0809	
61 Thru 63 07	.....	1	316 0975	
60-61 10-20-80 (On Cars With Foot Operated Parking Brake): 62 10-80 (LHD): 63 Thru 65 10-80 (LDB)	.....	1	315 3391	
65 10-80 (WDB)	.....	1	317 7141	
61 10-20-80 (RHD-On Cars With Hand Operated Parking Brake): 62 10-80 RHD)	.....	1	314 4963	
(Left) 64-65 01	.....	1	317 2991	
(Right) 64-65 01	.....	1	317 2992	
ATTACHING PARTS Cable To Rear Axle				
CLIP, Closed 65 01	17.134	1	G127879	
BOLT, Hexagon 65 01	17.038	1	G181595	NA
WASHER, Lock 65 01	17.820	1	G120214	NA
NUT, Hexagon 65 01	17.406	1	G120368	
PLATE, Parking Brake Rear Cable Retaining				
60 Thru 63 01-10-20-80: 64-65 10-80	8.002	2	310 7823	
SPRING, Parking Brake Rear Cable Retaining (At Leaf Spring)				
64-65 01	.....	2	317 2248	
8.224 GUIDE, Rear Brake Cable				
60 01	8.204	1	310 6538	
60 10-20-80: 61 10-20-80 (Note 8.224-1)	.....	1	312 5517	
61 10-20-80 (Note 8.224-2): 62 Thru 65 10-80	.....	1	316 2181	
ATTACHING PARTS Guide To Bracket				
SCREW, Tapping 60 01	17.670	6	G172429	NA
Guide To Truss Rods				
U-BOLT ..... 60 10-20-80: 61 10-20-80 (Note 8.224-1)	.....	2	312 5514	
CLAMP ..... 61 10-20-80 (Note 8.224-2): 62 Thru 65 10-80	.....	2	316 2195	
SCREW, Machine ..... 61 10-20-80 (Note 8.224-2): 62 Thru 65 10-80	17.726	2	G442279	NA
WASHER, Plain ..... 60 10-20-80: 61 10-20-80 (Note 8.224-1)	17.814	4	G120391	NA
WASHER, Lock ..... 60 10-20-80: 61 10-20-80 (Note 8.224-1)	17.820	4	G131096	NA
WASHER, Lock ..... 61 10-20-80 (Note 8.224-2): 62 Thru 65 10-80	17.820	2	G131096	NA
NUT, Hexagon ..... 60 10-20-80: 61 10-20-80 (Note 8.224-1)	17.412	4	G120614	NA
NUT, Square ..... 61 10-20-80 (Note 8.224-2): 62 Thru 65 10-80	17.414	2	G120611	NA
BRACKET, Parking Brake Rear Cable Guide				
60 01	.....	3	315 5003	
61 Thru 63 01	.....	2	316 0820	
64-65 01	.....	1	317 1976	
ATTACHING PARTS Bracket To Spring Bracket				
CLIP ..... 61 Thru 65 01 ***(Replaces 316 4299)***	.....	2	312 8734	

NOTE 8.224-1: Guide is Attached with a U-Bolt.
NOTE 8.224-2: Guide is Attached with a Clamp.

Copyright 1963 American Motors Corp.

GROUP NO. — DESCRIPTION — YEAR and MODEL	PRIMARY GROUP NO.	PER CAR	PART NO.	CODE
8.240 DRUM ASSEMBLY, Front Brake (Incl. Hub)				
60 Thru 63 01	.....	2	315 4540	
64 01	.....	2	316 9786	
65 01 (LHE-Note 8.001-5 Type 1)(OHV-196-Note 8.001-5 Type 1); (Six-199-Note 8.001-5 Type 1)	.....	2	316 9786	#
65 01 (Six-232)(LHE-Note 8.001-5 Type 2)(Six-196-Note 8.001-5 Type 2) (Six-199-Note 8.001-5 Type 2)	.....	2	315 3621	#
60 Thru 63 10 (Six): 64 10 (Six-Note 8.240-3 Type 1): 65 10 (Six-LDB)	.....	2	315 3621	
60-61 10 (Heavy Duty)	.....	2	315 5756	
64 10 (Six-Note 8.240-3 Type 2): ***62 Thru 65 10 (Heavy Duty-Six)***	.....	2	317 0560	
60-61 20-80: 62 80 (Note 8.240-1 Type 1)	.....	2	315 3560	
63-64 10 (V8-LDB): 62 80 (Note 8.240-1 Type 2): 63-64 80 (LDB): ***63-64 10 (Renault)***	.....	2	316 4613	
65 10 (V8-LDB): 65 80 (LDB)	.....	2	317 6894	
ATTACHING PARTS Drum To Front Wheel Spindle				
PIN, Cotter ..... 60 Thru 65 01-10-20-80	17.460	2	G108635	NA
RETAINER ..... 64 01-10-80 (Note 8.240-2 Type 2): 65 01-10-80	10.007	2	317 3401	
NUT, Hexagon (Plain) .. 64 01-10-80 (Note 8.240-2 Type 2): 65 01-10-80	10.007	2	317 3399	
NUT, Hexagon (Slotted). 60 Thru 63 01-10-20-80: 64 01-10-80 (Note 8.240-2 Type 1)	10.007	2	15 159	
WASHER, Plain ..... 60 Thru 65 01-10-20-80	10.007	2	314 2118	
SPRING, Brake Drum Anti-Squeak				
63 Thru 65 10 (V8-LDB): 60 Thru 65 20-80 (LDB)	.....	2	320 2262	
8.243 HUB ASSEMBLY, Rear Wheel				
60 Thru 62 01-10: 63 01-10 (Six-Note 8.243-1 Type 1)...(Incl. Studs) ***(Use 320 4657)***	.....	2	320 2627	
63 01-10 (Six-Note 8.243-1 Type 2): 64-65 01-10 (Six)(Except Marlin)...(Incl. Studs)	.....	2	320 4657	
60-61 20-80: 62 80 (Note 8.240-1 Type 1)...(Less Studs)	.....	2	320 2633	
62 80 (Note 8.240-1 Type 2): 63 80 (Note 8.243-1 Type 1)...(Incl. Studs) ***(Use 320 4658)***	.....	2	320 3471	#
63 10-80 (V8-Note 8.243-1 Type 2): 64-65 10 (V8): 64-65 80: 65 50 (Marlin)...(Incl. Studs)	.....	2	320 4658	

NOTE 8.240-1: Two Types of Drum Assemblies were used on the 62 80 series. They can be identified as follows:
Type 1: Wheels are fastened to Drum by Bolts and was used prior to Car Sequence No. W-5510.
Type 2: Wheels are fastened to Drum by Nuts and was used beginning with Car Sequence No. W-5510.

NOTE 8.240-2: Two Types of Drum Assembly to Spindle Attachment were used on the 64 01-10-80 Series. They can be identified as follows:
Type 1: Drum Assembly is Attached with a Slotted Hexagon Nut.
Type 2: Drum Assembly is Attached with a Plain Nut and Nut Retainer.

NOTE 8.240-3: Two Types of Drum Assemblies were used on the 64 10 (Six). They can be identified as follows:
Type 1: Drum does not have a Heat Shield.
Type 2: Drum has a Heat Shield.

NOTE 8.243-1: Two Types of Drum to Hub Attachments were used on the 63 01-10-80 Series. They are be identified as follows:
Type 1: Attachment is made by 5 Studs and 5 Speed Nuts.
Type 2: Attachment is made by 5 Studs and 3 Machine Screws.

Copyright 1963 American Motors Corp.

GROUP NO. — DESCRIPTION — YEAR and MODEL	PRIMARY GROUP NO.	PER CAR	PART NO.	CODE
ATTACHING PARTS				
Hub To Rear Axle				
NUT, Lock ..... 60 Thru 65 01-10-20-80	9.068	2	315 5675	
WASHER, Plain ..... 60 Thru 65 01-10-20-80	9.068	2	18 737	
PIN, Cotter ..... 60 Thru 65 01-10-20-80	17.460	2	G103387	NA
KEY, Woodruff ..... 60 Thru 65 01-10-20-80	17.344	2	G103905	
8.245 DRUM, Rear Brake				
60 Thru 63 01-10 (Six-Note 8.243-1 Type 1)	.....	2	320 0798	
63 01-10 (Six-Note 8.243-1 Type 2): 64-65 01-10 (Six-LDB-Note 8.245-1 Type 1)	.....	2	320 4659	
64-65 01-10 (Six-LDB-Note 8.245-1 Type 2)	.....	2	320 6708	
60 Thru 65 10 (Six-Heavy Duty): 63-64 10 (Renault) .....(Replaces 320 1511)	.....	2	320 4691	
60-61 20-80: 62 80 (Note 8.240-1 Type 1)	.....	2	320 0792	
62 80 (Note 8.240-1 Type 2): 63-64 10-80 (V8): 65 10 (V8-LDB): 65 80 (LDB) .....***(Replaces 320 3472)***	.....	2	320 4660	
65 10 (Six-WDB)(Except Marlin)	.....	2	320 5808	
65 10 (V8-WDB): 65 80 (WDB): 65 50 (Marlin)	.....	2	320 5809	
ATTACHING PARTS				
Drum To Hub				
BOLT, Pilot ..... 60-61 20-80: 62 80 (Note 8.240-1 Type 1)	.....	2	320 0793	
BOLT ..... 60-61 20-80: 62 80 (Note 8.240-1 Type 1)	.....	4	320 0794	
STUD ..... 60 Thru 65 01-10: 62 80 (Note 8.240-1 Type 2): 63 Thru 65 10-80 (V8)	8.245	10	320 0800	
NUT, Speed ..... 60 Thru 63 01-10 (Note 8.243-1 Type 1): 62 80 (Note 8.240-1 Type 2): 63 80 (Note 8.243-1 Type 1)	8.248	10	320 0682	
SCREW, Machine ..... 63-64 01-10-80 (Note 8.243-1 Type 2): 65 01-10-80	.....	6	320 4667	
WASHER ..... 60-61 20-80: 62 80 (Note 8.240-1 Type 1	.....	6	320 0795	
SPACER, Rear Brake Drum				
60 Thru 65 01-10-20-80	.....	AR	320 0966	
SPRING, Brake Drum Anti-Squeak				
63 Thru 65 10 (V8-LDB): 60 Thru 65 20-80 (LDB)	8.240	2	320 2262	
8.270 WHEEL, Road				
(14") 64-65 05-06-07-09 (LHE)(OHV-196)(Six-199)	.....	5	316 9756	#
(14") 64-65 08: 65 05-06-07-09 (Six-232): 63 Thru 65 10 (Six-LDB)	.....	5	316 6732	#
(14") ***164-165 01 (Can): 163 Thru 165 10 (Can-Six)***	.....	5	316 9511	
(14") 60 Thru 64 20-80: 63-64 10 (V8) .....***(Replaces 315 5878)***	.....	5	316 0528	
(14") 65 10 (Six-WDB): 65 10 (V8): 65 80	.....	5	317 7122	
(14") ***163-164 10 (Can-V8): 165 10 (Can-V8-LDB): 163-164 80 (Can): 165 80 (Can-LDB)***	.....	5	316 9512	
(14") ***63-64 10 (Renault)***	.....	5	320 5304	
(15") 60 Thru 63 01	.....	5	315 4337	
(15") 64-65 01: 62 10: ***63 Thru 65 10 (Heavy Duty-Six-L3S)***	.....	5	316 3151	
(15") ***162-163 01 (Can): 162 10 (Can): 163 10 (Can-Heavy Duty)***	.....	5	316 5519	
(15") 60-61 10	.....	5	315 3618	
(15") ***63 Thru 65 10 (Heavy Duty-V8): 60 Thru 65 20-80 (Heavy Duty)***	.....	5	315 7895	

NOTE 8.245-1: **Two Types of Rear Brake Drums were used on the 64-65 01-10 (Six-LDB). They can be identified as follows:**

Type 1: Uses a Motor Wheel Drum with Part No. 35342 and Motor Wheel Trade-Mark stamped on mounting face of Drum and the Wheel Stud holes are .595" diameter.

Type 2: Uses a Kelsey-Hayes or Budd Co. Drum and the Wheel Stud holes are .610" diameter.

Copyright 1963 American Motors Corp.

GROUP NO. — DESCRIPTION — YEAR and MODEL	PRIMARY GROUP NO.	PER CAR	PART NO.	CODE
VALVE, Captive Air Tire Inflation				
60 Thru 64 10-20-80	.....	1	315 8713	
ADAPTER, Life Guard Safety Tire Pressure Check				
64-65 10-80	.....	1	317 4243	
8.274 CAP, Wheel Hub				
(14" Wheel) 64 01: 63 10	.....	4	316 6715	
(14" Wheel) ***164 01 (Can)***	.....	4	317 2521	
(14" Wheel) 65 01	.....	4	317 5287	
(14" Wheel) ***165 01 (Can)***	.....	4	317 7750	
(14" Wheel) ***163 10-80 (Can-With Emblem)***	.....	4	316 9695	
(14" Wheel) 64 10	.....	4	317 1264	
(14" Wheel) ***164 10 (Can)***	.....	4	317 2702	
(14" Wheel) 65 10	.....	4	317 6117	
(14" Wheel) ***165 10 (Can)***	.....	4	317 7751	
(14" Wheel) 60 80	.....	4	315 4153	
(14" Wheel) 61-62 80	.....	4	316 0279	
(14" Wheel) 63 80: ***163 80 (Can-"R")***	.....	4	316 6716	
(14" Wheel) 65 80	.....	4	317 5761	
(14" Wheel) ***165 80 (Can)***	.....	4	317 7752	
(15" Wheel) 60 01-10-20 (LWC-4 Req.)(WWC-5 Req.)	.....	AR	315 0841	
(15" Wheel) 61 Thru 65 01-10-80	.....	4	316 0278	#
(15" Wheel) ***162 01-10 (Can): 163 01-10 (Can-Heavy Duty)***	.....	4	316 3304	
COVER, Wheel Hub				
(14" Wheel) 64 01	.....	4	317 1263	
(14" Wheel) ***164 01 (Can)***	.....	4	317 2520	
(14" Wheel) 64 01-10-80 (With Wire Wheel)...(Incl. Hub)	15.450	4	320 5379	
(14" Wheel) 65 01 (Plain)	.....	4	317 5288	
(14" Wheel) 65 01 (With Ornament)	.....	4	317 8332	
(14" Wheel) 65 01-10-80 (With Wire Wheel) ***(Use 318 0926)***	.....	4	317 7649	
(14" Wheel) ***165 01 (Can)***	.....	4	317 7753	
(14" Wheel) 63 10	.....	4	316 6360	
(14" Wheel) ***163 10 (Can)***	.....	4	316 9696	
(14" Wheel) 64 10 (Except Typhoon)	.....	4	317 1262	
(14" Wheel) 64 19 (770-Typhoon)...(Incl. Ornament)	.....	4	317 7073	
(14" Wheel) ***164 10 (Can)***	.....	4	317 2716	
(14" Wheel) 65 10 (Plain)(Except Marlin)	.....	4	317 6116	
(14" Wheel) 65 10 (With Ornament)(Except Marlin)	.....	4	317 8334	
(14" Wheel) 65 50 (Marlin-Plain)	.....	4	317 7086	
(14" Wheel) 65 50 (Marlin-With Ornament)	.....	4	317 8337	
(14" Wheel) 60 20	.....	4	315 3557	
(14" Wheel) 61 20	.....	4	316 0525	
(14" Wheel) 60 80	.....	4	315 4160	
(14" Wheel) 61-62 80	.....	4	316 0526	
(14" Wheel) 63 80	.....	4	316 6359	
(14" Wheel) ***163 80 (Can)***	.....	4	316 9978	
(14" Wheel) 64 80	.....	4	317 1546	
(14" Wheel) ***164 80 (Can)***	.....	4	317 2717	
(14" Wheel) 65 80 (Plain)	.....	4	317 5762	
(14" Wheel) 65 80 (With Ornament)	.....	4	317 8336	
(14" Wheel) ***165 80 (Can)***	.....	4	317 7754	
(15" Wheel) 60 01-10-20 (Plain)(LWC-4 Req.)(WWC-5 Req.)	.....	AR	315 4324	
(15" Wheel) 60 01-10 (With Ornament)(LWC-4 Req.)(WWC-5 Req.)	15.450	AR	320 1463	
(15" Wheel) 61-62 01-10: 65 01-10-80 (Note 8.274-1 Type 2)	.....	4	316 0340	
(15" Wheel) 63-64 01-10-80: 65 01-10-80 (Note 8.274-1 Type 1)	.....	4	316 6221	
(15" Wheel) ***162 01-10 (Can): 163 01-10 (Can-Heavy Duty)***	.....	4	316 3289	

NOTE 8.274-1: **Two Types of Wheel Covers were used on the 65 01-10-80 with 15" Wheels. They can be identified as follows:**
Type 1: Wheel Cover has 12 embossed Ribs in Area that is painted black.
Type 2: Wheel Cover has 48 embossed Ribs in Area that is painted black.

Copyright 1963 American Motors Corp.

GROUP NO. — DESCRIPTION — YEAR and MODEL	PRIMARY GROUP NO.	PER CAR	PART NO.	CODE
ORNAMENT, Wheel Cover (Knock Off)				
60 01-10 (LWC-4 Req.)(WWC-5 Req.)	15.450	AR	315 3287	
64-65 01-10-80 (With Wire Wheel): 64 19 (770-Typhoon) ***(Replaces 320 5380)***	.....	4	317 7075	
65 01-10-80 (Except Marlin)	.....	4	317 8330	
65 50 (Marlin)	.....	4	317 8329	
ATTACHING PARTS Ornament To Wheel Cover				
SCREW, Tapping ..... 64-65 01-10-80 (Wire Wheel Cover)	15.450	16	320 5382	
SCREW, Tapping 65 01	23.074	12	400 0052	
SCREW, Tapping 64 19 (770-Typhoon)	.....	16	400 1539	
SCREW, Tapping 65 10-80	23.074	12	400 0051	
STUD 60 01-10	15.450	16	320 0484	
PLATE, Wheel Cover Ornament Reinforcement				
65 01	.....	4	317 8328	
64 19 (770-Typhoon): 65 10-80	.....	4	317 7078	
EXTENSION, TIRE VALVE				
64 01-10-80	15.450	4	320 5067	
65 01-10-80 (With Wire Wheel)	.....	4	317 8883	
8.280 WEIGHT, Wheel Balance				
(1/2 Oz.) 62 Thru 65 01-10-80	.....	AR	316 5949	
(1 Oz.) 62 Thru 65 01-10-80	.....	AR	313 1615	
(1-1/2 Oz.) 62 Thru 65 01-10-80	.....	AR	316 5783	
(2 Oz.) 62 Thru 65 01-10-80	.....	AR	312 3943	
(2-1/2 Oz.) 62 Thru 65 01-10-80	.....	AR	316 5784	
8.286 NUT, Wheel To Stud				
60 Thru 65 01-10: 62 80 (Note 8.240-1 Type 2): 63 Thru 65 80	.....	20	310 6788	
8.288 BOLT, Wheel To Hub				
60-61 20-80: 62 80 (Note 8.240-1 Type 1)	.....	20	313 8066	
8.292 BEARING, Front Wheel				
(Inner) 60 Thru 65 01-10-20-80	.....	2	314 1139	
(Outer) 60 Thru 65 01-10-20-80	.....	2	314 1140	
8.294 CUP, Front Wheel Bearing				
(Inner) 60 Thru 65 01-10-20-80	.....	2	314 3329	
(Outer) 60 Thru 65 01-10-20-80	.....	2	314 3330	
8.296 RETAINER, Front Wheel Grease				
60 Thru 65 01-10-20-80 ***(Replaces 315 6012)***	.....	2	317 3532	

Copyright 1963 American Motors Corp.

GROUP NO. — DESCRIPTION — YEAR and MODEL	PRIMARY GROUP NO.	PER CAR	PART NO.	CODE
CAP, Front Wheel Grease Retainer Outer				
60 Thru 65 01-10-20-80 (LDB)	.....	2	314 1141	
65 10-80 (WDB)...(Incl. "O" Ring) *(Replaces 317 9977)*	.....	2	320 6248	
RING, Front Wheel Grease Retainer Outer Cap "O"				
65 10-80 (WDB)	.....	2	318 0119	
8.300 BEARING, Rear Wheel				
60 Thru 65 01-10 (Six)(Except Marlin)	8.292	2	314 1139	
63 Thru 65 10 (V8): 60 Thru 65 20-80: 65 50 (Marlin)	.....	2	315 0046	
GASKET, Rear Wheel Bearing				
60 Thru 62 01-10 *(Replaces 316 0017)*	.....	2	316 1355	
60 Thru 62 80	.....	2	316 0018	
8.302 CUP, Rear Wheel Bearing				
60 Thru 65 01-10 (Six)(Except Marlin)	.....	2	314 3329	
63 Thru 65 10 (V8): 60 Thru 65 20-80: 65 50 (Marlin)	.....	2	315 0045	
8.310 RETAINER, Rear Wheel Guide				
63 Thru 65 10 (V8): 60 Thru 65 20-80	8.306	2	315 0075	
65 10 (Six-WDB)	.....	2	317 7138	
8.312 SEAL, Rear Wheel Oil				
60-61 01-10 *(Ref. Pr. List)*	.....	2	314 8513	
62 Thru 65 01-10 (Six-LDB)...(Incl. Retainer)	.....	2	316 6233	
65 10 (Six-WDB)(Except Marlin)...(Incl. Retainer)	.....	2	317 7227	
60 Thru 62 20-80 *(Ref. Pr. List)*	.....	2	315 0065	
63 Thru 65 10 (V8): 63 Thru 65 80: 65 50 (Marlin)...(Incl. Retainer)	.....	2	316 7833	
RETAINER, Rear Wheel Oil Seal				
60-61 01-10 *(Ref. Pr. List)*	.....	2	316 1356	
60 Thru 62 20-80	.....	2	315 0066	
8.315 SHIM, Rear Wheel Bearing				
(.003) 60 Thru 65 01-10 (Six)(Except Marlin) *(Replaces 315 1341)*	.....	AR	316 1352	
(.003) 63 Thru 65 10 (V8): 60 Thru 65 20-80: 65 50 (Marlin)	.....	AR	314 1319	
(.010) 60-61 01-10	.....	AR	315 1342	
(.010) 62 Thru 65 01-10 (Six)(Except Marlin)	.....	AR	316 1353	
(.010) 63 Thru 65 10 (V8): 60 Thru 65 20-80: 65 50 (Marlin) *(Replaces 314 1322)*	.....	AR	314 1320	
(.050) 60 01-10	.....	AR	315 1344	
(.050) 60 20-80 *(Use 314 1320)*	.....	AR	314 1322	
8.330 CLAMP, Spare Wheel (Jack Base)				
60 01 (Walker)	14.140	1	315 6460	
60 01 (LWC-Universal): 61-62 01: 60 Thru 62 10-20-80	14.140	1	315 8433	

NOTE 8.330-1: Two Types of Jacks were used on the 64-65 01-10-80. They can be identified as follows:
Type 1: Jack has a T-Bar Post.
Type 2: Jack has a Tubular Post.

NOTE 8.330-2: Two Types of Spare Wheel Mounting Rods were used on the 65 15-16-19-85-86-89. They can be identified as follows:
Type 1: The Jack Storage is under the Cargo Mat of the Trunk and the Rod is 6 3/4" long. On 65 15-16 used prior to Car Sequence E-129982. On 165 10-80 (Can) used prior Serial No. ST-500989 and LT-507995.
Type 2: The Jack Storage is under the Spare Tire and the Rod is 9 7/8" long. On 65 15-16 used prior to Car Sequence E-129982. On 165 10-80 (Can) used beginning with Serial No. ST-500989 and LT-507995.

Copyright 1963 American Motors Corp.

GROUP NO. — DESCRIPTION — YEAR and MODEL	PRIMARY GROUP NO.	PER CAR	PART NO.	CODE
60 01 (WWC-Universal)	14.140	1	315 9597	
63 01-10-80	14.140	1	316 7949	
64-65 01-10-80 (Note 8.330-1 Type 1)	14.140	1	317 5193	
64-65 01-10-80 (Note 8.330-1 Type 2)	14.140	1	317 1803	
ROD, Spare Wheel Mounting				
60 04 (5/16-18)	.....	1	315 9998	
60 02-04-05-06 (LWC-7/16-20) ***(Replaces 314 5162)***	.....	1	315 7555	
60 02-05-06 (LWC-5/16-18) ***(Discontinued)***	.....	1	315 9997	
61 Thru 63 02-05-06	.....	1	316 0774	
64-65 05-06-07-09	.....	1	317 0742	
64-65 08	.....	1	317 1861	
60 Thru 62 15-16-19: 60 25-29-85-89: 61 25-85 (14" Wheel) ***(Replaces 315 9304)***	.....	1	315 9502	
60 18-28-83-88 (7/16-20): 60 85-89 (15" Wheel)	.....	1	315 4255	
60 18-28-83-88 (5/16-18): 61-62 18-28-88 (L3S): 61 25-85 (15" Wheel)	.....	1	315 9995	
63-64 15-16-19-85-86-89 (14" Wheel)	.....	1	316 8897	
63 Thru 65 18-88 (L3S-14" Wheel)	.....	1	316 7943	
63-64 10-80 (V8-L3S-15" Wheel)	.....	1	316 8898	
65 15-16-19-85-86-89 (14" Wheel-Note 8.330-2 Type 1)	.....	1	317 6929	
65 15-16-19-59-85-86-89 (Note 8.330-2 Type 2)	.....	1	318 0941	
65 17-87	.....	1	317 7018	
ATTACHING PARTS Rod To Wheel				
WASHER, Plain ..... 61 02-05-06: 60-61 15-19-25-29-85-89 ***(Replaces 800 0159)***	17.814	1	400 1098	
NUT, Wing ..... 60 01 (LWC-7/16-20): 60 18-28-83-88 (7/16-20): 60 85-89 (15" Wheel)	17.432	1	G219219	
NUT, Wing ..... 60 Thru 65 01-10-20-80 (5/16-18)	.....	1	315 9865	
BOLT, Spare Wheel Mounting Carriage				
61 Thru 63 07: 61 04-08	17.046	1	G126957	NA
62-63 04-08	17.046	1	G126691	NA
ATTACHING PARTS Bolt To Wheel				
WASHER, Plain ..... 61 Thru 63 07: 61 04-08 ***(Replaces 800 0155)***	17.814	1	400 1095	
WASHER, Plain 62-63 04-08	1.067	1	314 4571	
PLATE, Retainer 61 04-07-08	.....	1	316 0958	
INSULATOR, Spare Wheel Mounting Bolt				
60 01 (LWC-4-3/4" Long): 61 07 (4-3/4" Long)(Bulk-Order Per Foot) ***(Replaces 375 0497)***	13.050	AR	320 3739	
8.350 SUPPORT, Spare Wheel Carrier (Incl. Shaft)				
60 01 (WWC)	.....	1	315 5574	
ATTACHING PARTS Support To Wheel				
BOLT, Drive ..... 60 01 (WWC)	.....	3	313 6780	
NUT, Lock ..... 60 01 (WWC-1-5/32" Long)	8.370	1	313 6775	
NUT, Lock ..... 60 01 (WWC-9/16" Long)	8.286	2	310 6788	
HINGE, Spare Wheel Carrier Support				
60 01 (WWC)	.....	2	313 6776	

Copyright 1963 American Motors Corp.

GROUP NO. — DESCRIPTION — YEAR and MODEL	PRIMARY GROUP NO.	PER CAR	PART NO.	CODE
ATTACHING PARTS				
Hinge To Body				
BOLT, Hexagon..... 60 01 (WWC)	17.038	4	G181668	NA
WASHER, Lock..... 60 01 (WWC)	17.820	4	G131100	NA
Hinge To Shaft				
WASHER, Plain..... 60 01 (WWC) ***(Replaces 800 0173)***	17.814	2	400 1111	
NUT, Hexagon..... 60 01 (WWC)	17.406	2	G103026	NA
NUT, Jam..... 60 01 (WWC)	17.410	2	G114494	NA
GROMMET, Spare Wheel Carrier Support Hinge				
60 01 (WWC)	.....	2	313 68 2	
CHAIN, Spare Wheel Carrier Support Stop				
60 01 (WWC)	.....	1	313 6877	
ATTACHING PARTS				
Chain To Lock				
SCREW, Machine..... 60 01 (WWC)	.....	1	313 6873	
WASHER, Lock..... 60 01 (WWC)	17.820	1	G120380	NA
NUT, Hexagon..... 60 01 (WWC)	17.406	1	G120375	
Chain To Support				
PIN, Cotter..... 60 01 (WWC)	17.460	1	G120169	NA
TUBE, Spare Wheel Carrier Support Stop Chain				
60 01 (WWC)	.....	1	313 6878	
8.360 BUSHING, Spare Wheel Carrier Support Hinge				
60 01 (WWC)	.....	4	312 9665	
8.370 LOCK, Spare Wheel Carrier				
60 01 (WWC)	.....	1	313 6783	
ATTACHING PARTS				
Lock To Body				
BOLT, Hexagon..... 60 01 (WWC)	17.038	4	G180020	NA
WASHER, Plain..... 60 01 (WWC)	17.814	8	G120392	NA
WASHER, Lock..... 60 01 (WWC)	17.820	4	G120380	NA
NUT, Hexagon..... 60 01 (WWC)	17.406	4	G120375	
SPRING, Spare Wheel Carrier Lock To Support				
60 01 (WWC)	.....	1	313 6827	
BOLT, Spare Wheel Carrier Lock To Wheel (Dovetail)				
60 01 (WWC)	12.060	1	314 3026	
ATTACHING PARTS				
Bolt To Lock				
NUT, Jam..... 60 01 (WWC)	17.410	1	G124934	NA
SPRING, Spare Wheel Carrier Lock To Wheel Bolt				
60 01 (WWC)	12.060	1	314 1482	

Copyright 1963 American Motors Corp.

GROUP NO. — DESCRIPTION — YEAR and MODEL	PRIMARY GROUP NO.	PER CAR	PART NO.	CODE
BUMPER, Spare Wheel Carrier Support To Lock				
60 01 (WWC)	.....	1	313 8187	
ATTACHING PARTS Bumper To Lock				
WASHER, Lock ..... 60 01 (WWC)	17.820	1	G120214	NA
NUT, Hexagon ..... 60 01 (WWC)	17.406	1	G120368	NA
8.375 LOCK, Spare Wheel (Coded)(Incl. Keys)				
60 01 (WWC)	.....	1	313 6773	
CYLINDER ASSEMBLY, Spare Wheel Lock				
60 01 (WWC) ..... *(Discontinued)*	.....	1	311 6319	
8.376 KEY, Spare Wheel Lock Cylinder				
60 01 (WWC-Coded-Specify Key No.) ..... *(Discontinued)*	.....	2	311 6321	
60 01 (WWC-Blank) ..... *(Discontinued)*	.....	2	311 6320	
8.380 COVER, Spare Wheel Tire				
(Sidewall) 60 01 (WWC)	.....	1	315 4761	
(Tread) 60 01 (WWC)	.....	1	313 6962	
8.400 POWER UNIT, Power Brake				
62 01-10-80 (LHD)	.....	1	320 3355	
63 01 (LHD)	.....	1	320 4109	
64 01 (LHD)	.....	1	320 4998	
65 01 (LHD)	.....	1	320 5898	
63 10 (Six)	.....	1	320 4351	
64 10 (Six)	.....	1	320 5001	
65 10 (Six-LDB)	.....	1	320 5900	
63 10-80 (V8-LHD-Note 8.400-1 Type 1)	.....	1	320 4130	
63 10-80 (V8-LHD-Note 8.400-1 Type 2): 64 10 (V8-LHD-Note 8.400-2): 64 80	.....	1	320 5003	
65 10 (V8-LHD-LDB-Note 8.400-3): 65 80 (LDB)	.....	1	320 5902	
65 10-80 (Six-WDB)	.....	1	320 6145	
65 10-80 (V8-WDB)	.....	1	320 6141	
ATTACHING PARTS Power Unit To Bracket				
WASHER, Lock ..... 62 Thru 64 01-80 (LHD): 62 10 (LHD): 63 10	15.310	4	311 7180	
NUT, Hexagon ..... 62 Thru 64 01-80 (LHD): 62 10 (LHD): 63 10	15.310	4	311 7181	

NOTE 8.400-1: Two Types of Power Brake Units were used on the 63 10-80 (V8). They can be identified as follows:
Type 1: The Brake Tube Nuts to the Master Cylinder are different sizes. The rear Brake Tube fitting is 11/16-18 and the front Brake Tube fitting is 5/8-18.
Type 2: The Brake Tube Nut to the Master Cylinder are the same size (1/2-20).
NOTE 8.400-2: On 65 10 (V8-WPB) used prior to Car Sequence No. W-010253.
NOTE 8.400-3: On 65 10 (V8-WPB) used beginning with Car Sequence No. W-010253.

Copyright 1963 American Motors Corp.

GROUP NO. — DESCRIPTION — YEAR and MODEL	PRIMARY GROUP NO.	PER CAR	PART NO.	CODE
8.405 REPAIR KIT, Power Brake Power Unit				
62 01-10-80 (LHD)	.....	1	320 3358	
63 01 (LHD)	.....	1	320 4135	
64 01 (LHD)	.....	1	320 5005	
65 01 (LHD)	.....	1	320 5954	
63 10 (Six)	.....	1	320 4353	
64 10 (Six)	.....	1	320 5010	
65 10 (Six-LDB)	.....	1	320 5955	
63 10-80 (LHD-V8-Note 8.400-1 Type 1)	.....	1	320 4115	
63 10-80 (LHD-V8-Note 8.400-1 Type 2): 64 10 (LHD-V8-Note 8.400-3): 64 80	.....	1	320 5011	
65 10 (LHD-V8-LDB-Note 8.400-3): 65 80 (LDB)	.....	1	320 5956	
65 10-80 (Six-WDB) ***(Replaces 320 5771)***	.....	1	320 6144	
65 10-80 (V8-WDB) ***(Replaces 320 5771)***	.....	1	320 6140	
8.410 BRACKET, Power Brake Unit Power Mounting				
(Left) 62-63 01 (LHD): 62 10-80 (LHD)	.....	1	320 3352	
(Left) 64-65 01 (LHD)	.....	1	320 5009	
(Left) 63 Thru 65 10 (Six): 63 Thru 65 10 (LHD-V8): 63 Thru 65 80 (LHD)	.....	1	320 4113	
(Right) 62-63 01 (LHD): 62 10-80 (LHD)	.....	1	320 3353	
(Right) 64-65 01 (LHD)	.....	1	320 5008	
(Right) 63 Thru 65 10 (Six): 63 Thru 65 10 (LHD-V8): 63 Thru 65 80 (LHD)	.....	1	320 4114	
ATTACHING PARTS Bracket To Dash				
SCREW ..... 62-63 01 (LHD)	8.035	4	316 2760	
STUD ..... 64-65 01 (2 Req.): 62 10 (LHD-4 Req.): 63 10 (4 Req.): 62-63 80 (LHD-4 Req.): 64-65 10-80 (4 Req.)	8.035	AR	315 7870	
WASHER, Lock ..... 62 Thru 65 01-80 (LHD): 62 10 (LHD): 63 Thru 65 10 (Six): 63 Thru 65 10 (LHD-V8)	17.814	4	G120382	NA
NUT, Hexagon ..... 62 Thru 65 01-80 (LHD): 62 10 (LHD): 63 Thru 65 10 (Six): 63 Thru 65 10 (LHD-V8)	17.406	4	G120369	NA
8.420 LINK, Power Brake Bellcrank To Brake Pedal				
62-63 01 (LHD): 62 10-80 (LHD)	.....	1	320 3343	
63 Thru 65 10 (Six-LDB): 63 Thru 65 10 (LHD-V8-LDB): 63 Thru 65 80				
63 Thru 65 10 (Six-LDB): 63 Thru 65 10 (V8-LHD-LDB): 63 Thru 65 80 (LHD-LDB)	.....	1	320 4112	
65 10-80 (WDB)	.....	1	320 5750	
ATTACHING PARTS Link To Bellcrank				
PIN, Clevis ..... 62 Thru 65 01-80 (LHD): 62 10 (LHD): 63 Thru 65 (Six): 63 Thru 65 10 (LHD-V8)	.....	1	320 3342	
PIN, Cotter ..... 62 Thru 65 01-80 (LHD): 62 10 (LHD): 63 Thru 65 10 (Six): 63 Thru 65 10 (LHD-V8)	17.460	1	G103373	NA
WASHER, Bowed ..... 62 Thru 65 01-80 (LHD): 62 10 (LHD): 63 Thru 65 10 (Six): 63 Thru 65 10 (LHD-V8)	.....	2	320 3344	
GUARD, Power Brake Bellcrank To Brake Pedal Link				
62 Thru 65 01-80 (LHD): 62 10 (LHD): 63 Thru 65 10 (Six): 63 Thru 65 10 (LHD-V8)	.....	1	320 3341	#

Copyright 1963 American Motors Corp.

GROUP NO. — DESCRIPTION — YEAR and MODEL	PRIMARY GROUP NO.	PER CAR	PART NO.	CODE
8.430 BELLCRANK, Power Brake Operating				
62-63 01 (LHD): 62 10-80 (LHD)	.....	1	320 3354	
64-65 01 (LHD)	.....	1	320 5006	
63 Thru 65 10 (Six): 63 Thru 65 10 (LHD-V8): 63 Thru 65 80 (LHD)	.....	1	320 4111	
ATTACHING PARTS				
Bellcrank To Brackets				
PIN, Pivot — 62 Thru 65 01-80 (LHD): 62 10 (LHD): 63 Thru 65 10 (Six): 63 Thru 65 10 (LHD-V8)	.....	1	320 3347	
PIN, Clevis — 62 Thru 65 01-80 (LHD): 62 10 (LHD): 63 Thru 65 10 (Six): 63 Thru 65 10 (LHD-V8)	8.420	1	320 3342	
PIN, Cotter — 62 Thru 65 01-80 (LHD): 62 10 (LHD): 63 Thru 65 10 (Six): 63 Thru 65 10 (LHD-V8)	17.460	2	G103373	NA
WASHER, Bowed — 62 Thru 65 01-80 (LHD): 62 10 (LHD): 63 Thru 65 10 (Six): 63 Thru 65 10 (LHD-V8)	.....	1	320 3348	
8.440 TANK, Power Brake Vacuum Reserve				
60 10-20-80 (LHD)	.....	1	315 8224	
61 01-10-20 (LHD)	.....	1	316 1080	
61 80 (LHD)	.....	1	316 1254	
ATTACHING PARTS				
Tank To Wheelhouse Panel				
SCREW, Tapping — 60 10-20-80 (LHD) ***(Replaces 800 0103)***	17.671	3	G9411563	
NUT, Speed — 60 10-20-80 (LHD) ***(Replaces 313 4220)***	.....	3	400 0340	
Tank To Crossmember				
BOLT, Hexagon — 61 01-10 (LHD)	17.038	2	G180018	NA
BOLT, Hexagon — 61 20	17.038	2	G180034	NA
SCREW, Tapping — 61 80 (LHD)	17.670	2	G443923	NA
WASHER, Plain — 61 01-10-20 (LHD) ***(Replaces 800 0149)***	17.814	2	400 1089	
WASHER, Plain — 61 80 (LHD)	17.814	2	G120392	NA
WASHER, Lock — 61 01-10-20 (LHD)	17.820	2	G120380	NA
NUT, Hexagon — 61 01-10-20 (LHD)	17.406	2	G120375	
NUT, Hexagon — 61 80 (LHD) ***(Replaces 313 4420)***	.....	2	400 0340	
8.450 FILTER, Power Brake Air				
62 Thru 65 01-80 (LHD): 62 10 (LHD): 63 Thru 65 10 (Six): 62 Thru 65 10 (LHD-V8)	.....	1	320 3375	
RETAINER, Power Brake Air Filter				
62 Thru 65 01-80 (LHD): 62 10 (LHD): 63 Thru 65 10 (Six): 63 Thru 65 10 (LHD-V8)	.....	1	320 3364	
8.460 VALVE, Power Brake Vacuum Check				
60-61 10-20-80 (LHD)	.....	1	315 6491	
61 01 (LHD)	.....	1	316 1469	
62 01-10-80 (LHD)	.....	1	320 3367	
63 Thru 65 01-80 (LHD): 63 Thru 65 10 (Six): 63 Thru 65 10 (LHD-V8)	.....	1	320 4195	
SEAL, Power Brake Vacuum Check Valve				
62 Thru 65 01-80 (LHD): 62 10 (LHD): 63 Thru 65 10 (Six): 63 Thru 65 10 (LHD-V8)	.....	1	320 3561	

Copyright 1963 American Motors Corp.

GROUP NO. — DESCRIPTION — YEAR and MODEL	PRIMARY GROUP NO.	PER CAR	PART NO.	CODE
NIPPLE, Power Brake Vacuum (On Intake Manifold)				
61-62 01 (LHD-1-5/8" Long): 63-64 01 (LHD-OHV-WCGS): 65 01 (LHD-OHV-196-WCGS): 65 01 (LHD-Six-199-WCGS)	.....	1	315 3667	
60 Thru 62 10-20-80 (LHD-1-5/8" Long): 63 10 (WCGS): 63 80 (LHD-WCGS)	.....	1	315 3667	
64 10 (OHV-196-LES): 64-65 10-80 (V8-WAT)(V8-WST-WCGS)	.....	1	315 3667	
62 01-10-80 (LHD-2-1/16" Long): 63 01-80 (LHD-WFGS): 64-65 01 (LHD-OHV-WFGS-WPB): 63 10 (LHD-WFGS): 64-65 10-80 (V8-WOD-WFGS)	.....	1	316 5770	
63 Thru 65 01 (LHD-LHE)	.....	1	316 7162	
64 10 (Six-232): 65 10 (Six-WPB): 65 80 (Six-WPB)	.....	1	317 5744	
HOSE, Power Brake Vacuum Check Valve To Nipple				
61 Thru 65 01 (LHD): 60 Thru 62 10-20-80 (LHD): 63 Thru 65 10: 63 Thru 65 80 (LHD)	.....	1	315 3670	
PLUG, Power Brake Vacuum Nipple				
62 01-10-80 (LHD)	.....	1	320 3735	
ADAPTER, Power Brake Vacuum Nipple				
62 01-10-80 (LHD)	15.310	1	311 7248	
CLAMP, Power Brake Vacuum Check To Nipple Hose				
61 Thru 65 01 (LHD): 60 Thru 62 10-20-80 (LHD): 63 10 (Six): 63 Thru 65 10-80 (LHD)	17.108	2	320 3076	
CLIP, Power Brake Vacuum Check Valve To Nipple Hose				
63-64 01 (LHE): 65 01 (Six-196)	13.440	1	400 0443	
BRACKET, Power Brake Vacuum Hose At Coil				
64-65 01 (LHE)	13.440	1	315 8227	
ATTACHING PART Clip To Bracket				
BOLT, Hexagon ..... 64-65 01 (LHE)	17.038	1	G180016	NA
WASHER, Lock ..... 64-65 01 (LHE)	17.820	1	G120380	NA
NUT, Hexagon ..... 64-65 01 (LHE)	17.406	1	G120375	
8.470 CLIP, Power Brake Vacuum Hose				
61 01 (LHD)	17.134	1	G120526	
60-61 10-20-80 (LHD)	8.460	1	315 6488	
ATTACHING PARTS Clip To Wheelhouse Panel				
SCREW, Tapping ..... 61 01 (LHD): 60-61 10-20-80 (LHD)	17.671	1	800 0103	
8.475 HOSE, Power Brake Vacuum (Bulk-Order Per Foot)				
61 01 (LHD): 60-61 10-20-80 (LHD)	.....	AR	320 0573	
CLAMP, Power Brake Vacuum Hose				
61 01 (LHD): 60-61 10-20-80 (LHD)	17.108	3	320 3076	

Copyright 1963 American Motors Corp.

GROUP NO. — DESCRIPTION — YEAR and MODEL	PRIMARY GROUP NO.	PER CAR	PART NO.	CODE
GROMMET, Power Brake Vacuum Hose				
60 10-20-80 (LHD)	13.172	1	312 8983	
8.480 ROD, Power Brake Valve Push				
62 01-10-80 (LHD)	.....	1	320 3557	
63 01 (LHD)	.....	1	320 4165	
64 01 (LHD)	.....	1	320 4999	
65 01 (LHD)	.....	1	320 5899	
63 10 (Six)	.....	1	320 4352	
64 10 (Six)	.....	1	320 5002	
65 10 (Six-LDB)	.....	1	320 5901	
63 10-80 (LHD-V8-Note 8.400-1 Type 1)	.....	1	320 4119	
63 10-80 (LHD-V8-Note 8.400-1 Type 2): 64 10 (LHD-V8-Note 8.400-2): 64 80	.....	1	320 5004	
65 10 (LHD-V8-LDB-Note 8.400-3): 65 80 (LDB)	.....	1	320 5903	
65 10-80 (Six-WDB)	.....	1	320 6147	
65 10-80 (V8-WDB)	.....	1	320 6143	
GUARD, Power Brake Valve Push Rod				
62 Thru 65 01-80 (LHD): 62 10 (LHD): 63 Thru 65 10 (Six): 63 Thru 65 10 (LHD-V8)	.....	1	320 3345	
RETAINER, Power Brake Valve Push Rod Guard				
62 Thru 65 01-80 (LHD): 62 10 (LHD): 63 Thru 65 10 (Six): 63 Thru 65 10 (LHD-V8)	.....	1	320 3346	
KEY, Power Brake Valve Push Rod Stop				
62 Thru 65 01-80 (LHD): 62 10 (LHD): 63 Thru 65 10 (Six): 63 Thru 65 10 (LHD-V8)	.....	1	320 3363	
8.485 DIAPHRAGM, Power Brake Valve Body				
62 Thru 65 01 (LHD): 62 10 (LHD): 63 Thru 65 10 (Six-LDB): 63-64 10 (LHD-V8): 62 Thru 64 80	.....	1	320 3362	#
PLATE, Power Brake Valve Body Diaphragm				
62 Thru 65 01 (LHD): 62 10 (LHD): 63 Thru 65 10 (Six): 63-64 10 (LHD-V8): 62 Thru 64 80	.....	1	320 3370	
65 10 (V8-LDB): 65 80 (LDB)	.....	1	320 5976	
65 10-80 (Six-WDB)	.....	1	320 6146	
65 10-80 (V8-WDB)	.....	1	320 6142	
SEAL, Power Brake Valve Body Diaphragm				
62 Thru 65 01-80 (LHD): 62 10 (LHD): 63 Thru 65 10 (Six): 63 Thru 65 10 (LHD-V8)	.....	1	320 3371	
SPRING, Power Brake Valve Body Diaphragm				
62 Thru 65 01-80 (LHD): 62 10 (LHD): 63 Thru 65 10 (Six): 63 Thru 65 10 (LHD-V8)	.....	1	320 3368	
8.500 HOUSING, Power Brake Power Unit				
(Front) 62 01-10-80 (LHD)	.....	1	320 3558	
(Front) 63 01 (LHD): 63 Thru 65 10 (Six): 63 Thru 65 10 (LHD-V8): 63 Thru 65 80 (LHD)	.....	1	320 4121	

Copyright 1963 American Motors Corp.

GROUP NO. — DESCRIPTION — YEAR and MODEL	PRIMARY GROUP NO.	PER CAR	PART NO.	CODE
(Front) 64-65 01 (LHD)	.....	1	320 5000	
(Rear) 63 01 (LHD)	.....	1	320 4166	
(Rear) 64-65 01 (LHD): 63 Thru 65 10 (Six): 63 Thru 65 10 (V8): 63 Thru 65 80 (LHD)	.....	1	320 4120	

8.505 ROD, Power Brake Master Cylinder Piston Push

62 01-10-80 (LHD)	.....	1	320 3553	
63 Thru 65 01 (LHD): 63 Thru 65 10 (Six): 63 Thru 65 10-80 (LHD-V8)	.....	1	320 4116	

DISC, Power Brake Master Cylinder Piston Reaction

62-63 01-80 (LHD)	.....	1	320 3554	

DISC KIT, Power Brake Master Cylinder Piston Reaction

62 10 (LHD): 64 01 (LHD)	.....	1	320 4350	

PLATE, Power Brake Master Cylinder Piston Push Rod

63 Thru 65 01-80 (LHD): 63 Thru 65 10 (Six): 63 Thru 65 10 (LHD-V8)	.....	1	320 4169	#

8.510 CYLINDER ASSEMBLY, Power Brake Master

62 01-10-80 (LHD) ***(Replaces 320 3360)***	.....	1	320 3913	
63 01 (LHD): 63 10 (Six): 63 10-80 (LHD-V8-Note 8.400-1 Type 1)	.....	1	320 4110	
64 01 (LHD): 63 10-80 (LHD-V8-Note 8.400-1 Type 2): 64 10 (Six): 64 10 (LHD-V8-Note 8.400-2): 64 80	.....	1	320 4992	
65 01 (LHD): 65 10 (Six-LDB): 65 10 (LHD-V8-LDB-Note 8.400-3): 65 80 (LHD-LDB)	8.035	1	320 5766	
65 10-80 (WDB) ***(Use 320 6898)***	.....	1	320 5748	

ATTACHING PARTS
Cylinder To Power Unit

WASHER, Lock	62 01-10-80 (LHD-4 Req.): 63 Thru 65 01-80 (LHD-2 Req.): 63 Thru 65 10 (Six-2 Req.): 63 Thru 65 10 (LHD-V8)	17.820	AR	G120382	NA
NUT, Hexagon	62 01-10-80 (LHD-4 Req.): 63 01-80 (LHD-2 Req.): 63 10 (Six-2 Req.): 63 10 (V8-LHD-2 Req.)	17.406	AR	G120369	NA
NUT, Hexagon	64-65 01 (LHD): 64-65 10 (Six) 64-65 10-80 (LHD-V8)	17.406	2	G120377	NA

CAP, Power Brake Master Cylinder Filler

62 01-10-80 (LHD)	8.038	2	320 4344	

COVER, Power Brake Master Cylinder Filler

63 Thru 65 01-80 (LHD-LDB): 63 Thru 65 10 (Six-LDB): 63 Thru 65 10 (LHD-V8-LDB)	8.038	1	320 4126	
65 10-80 (WDB)	.....	1	320 5773	

ATTACHING PARTS
Cover To Cylinder

BOLT, Hexagon	63 Thru 65 01-80 (LHD-LDB): 63 Thru 65 10 (Six-LDB): 63 Thru 65 10 (LHD-V8-LDB)	8.038	1	320 4128	
BOLT, Hexagon	65 10-80 (WDB)	.....	1	320 5806	

Copyright 1963 American Motors Corp.

GROUP NO. — DESCRIPTION — YEAR and MODEL	PRIMARY GROUP NO.	PER CAR	PART NO.	CODE
GASKET, Power Brake Master Cylinder Filler Cap Or Cover				
62 01-10-80 (LHD)	8.038	2	320 3610	
63 Thru 65 01-80 (LHD): 63 Thru 65 10 (Six-LDB): 63 Thru 65 10 (LHD-V8-LDB)	8.038	1	320 4127	
65 10-80 (WDB)	.....	1	320 5774	
SHIELD, Power Brake Master Cylinder Dust				
65 01-10-80 (LDB)	.....	1	320 6920	
65 10-80 (WDB)	.....	1	320 5807	
GASKET, Power Brake Master Cylinder To Power Unit				
62 01-10-80 (LHD)	.....	1	320 3361	
8.512 REPAIR KIT, Power Brake Master Cylinder				
62 01-10-80 (LHD) ***(Replaces 320 3560)***	.....	1	320 3916	
63 01 (LHD): 63 10 (Six): 63 10-80 (LHD-V8-Note 8.400-1 Type 1)	.....	1	320 4122	
64 01 (LHD): 63 10-80 (LHD-V8-Note 8.400-1 Type 2): 64 10 (Six): 64 10 (LHD-V8-Note 8.400-2): 64 80	.....	1	320 4993	
65 01 (LHD-WPB): 65 10 (Six): 65 10 (LHD-V8-Note 8.400-3): 65 80	8.048	1	320 5767	
65 10-80 (WDB)	.....	1	320 5772	
8.515 PISTON, Power Brake Master Cylinder				
(Primary) 62 01-10-80 (LHD) ***(Replaces 320 3596)***	8.044	1	320 3920	
(Secondary) 63-64 01-80 (LHD): 63-64 10 (Six): 63 10 (V8-LHD): 64 10 (LHD-V8-Note 8.400-2)	8.044	1	320 4123	
(Secondary) 65 01 (LHD): 65 10 (Six): 65 10 (V8-LHD-Note 8.400-3): 65 80 (LHD)	8.044	1	320 5768	
STOP, Power Brake Master Cylinder Piston				
62 01-10-80 (LHD)	8.046	1	320 3601	
BOLT, Power Brake Master Cylinder Piston Stop				
63 Thru 65 01-80 (LHD): 63 Thru 65 10 (Six): 63 Thru 65 10 (LHD-V8)	8.050	1	320 4129	
SPRING, Power Brake Master Cylinder Secondary Piston Return				
62 01-10-80 (LHD)	8.046	1	320 3600	
63-64 01-80 (LHD): 63-64 10 (Six): 63-64 10 (LHD-V8-Note 8.400-2)	.....	1	320 4124	
65 01 (LHD): 65 10 (Six): 65 10 (LHD-V8-Note 8.400-3): 65 80 (LHD)	8.046	1	320 5769	
RETAINER, Power Brake Master Cylinder Primary Piston Cup				
62 01-10-80 (LHD)	8.046	1	320 3599	
63 Thru 65 01-80 (LHD): 63 Thru 65 10 (Six): 63 Thru 65 10 (LHD-V8)	.....	1	320 4125	
RETAINER, Power Brake Master Cylinder Secondary Piston Cup				
62 Thru 64 01-80 (LHD): 62 10 (LHD): 63-64 10 (Six): 63-64 10 (LHD-V8)	8.046	1	320 3599	
PROTECTOR, Power Brake Master Cylinder Secondary Piston Cup				
62 Thru 65 01-80 (LHD): 62 10 (LHD): 63 Thru 65 10 (Six): 63 Thru 65 10 (LHD-V8)	8.046	1	320 3597	

Copyright 1963 American Motors Corp.

GROUP NO. — DESCRIPTION — YEAR and MODEL	PRIMARY GROUP NO.	PER CAR	PART NO.	CODE
8.517 SPRING, Power Brake Master Cylinder Residual Valve				
63 01 (LHD): 63 10 (Six): 63 10-80 (V8-LHD-Note 8.400-1 Type 1)	8.042	2	320 4170	
64-65 01 (LHD): 63 10-80 (V8-LHD-Note 8.400-1 Type 2): 64-65 10 (Six): 64 10 (V8-LHD): 64-65 80 (LHD)	.....	2	320 4994	
(Primary) 62 10-20-80 (LHD)	8.510	1	311 6788	
(Secondary) 62 10-20-80 (LHD)	8.042	1	320 3602	
8.520 FITTING, Power Brake Master Cylinder Outlet				
62 01-10-80 (LHD)	8.040	1	320 3140	
8.550 HYDROVAC ASSEMBLY, Power Brake				
60 Thru 62 10-80 (RHD): 63 Thru 65 10 (V8-RHD-LDB): 63 80 (RHD)	.....	1	315 3861	
65 10 (V8-RHD-WDB)	.....	1	317 8612	
ATTACHING PARTS Hydrovac To Bracket				
WASHER, Lock — *60 Thru 62 10-80 (RHD): 63 Thru 65 10 (V8-RHD): 63 80 (RHD)*	17.820	3	G120214	NA
NUT, Hexagon — *60 Thru 62 10-80 (RHD): 63 Thru 65 10 (V8-RHD): 63 80 (RHD)*	17.406	3	G120368	
8.552 REPAIR KIT, Hydrovac				
60 Thru 62 10-80 (RHD): 63 Thru 65 10 (V8-RHD-LDB): 63 80 (RHD)	.....	1	320 0744	
65 10 (V8-RHD-WDB)	.....	1	320 6149	
PACKING KIT, Hydrovac Piston				
60 Thru 62 10-80 (RHD): 63 Thru 65 10 (V8-RHD-LDB): 63 80 (RHD)	15.310	1	311 7386	
65 10 (V8-RHD-WDB)	.....	1	320 6150	
REPLACEMENT KIT, Hydrovac Poppet				
60 Thru 62 10-80 (RHD): 63 Thru 65 10 (V8-RHD-LDB): 63 80 (RHD)	.....	1	320 0745	
8.555 BODY ASSEMBLY, Hydrovac Valve				
60 Thru 62 10-80 (RHD): 63 Thru 65 10 (V8-RHD-LDB): 63 80 (RHD)	15.310	1	311 7145	
65 10 (V8-RHD-WDB)	.....	1	320 6546	
ATTACHING PARTS Body To Plate				
SCREW — *60 Thru 62 10-80 (RHD): 63 Thru 65 10 (V8-RHD-LDB): 63 80 (RHD)*	15.310	5	311 7179	
SCREW — *65 10 (V8-RHD-WDB)*	.....	5	320 6549	
GASKET, Hydrovac Valve Body				
60 Thru 62 10-80 (RHD): 63 Thru 65 10 (V8-RHD-LDB): 63 80 (RHD)	15.310	1	311 7175	
DIAPHRAGM, Hydrovac Relay Valve				
60 Thru 62 10-80 (RHD): 63 Thru 65 10 (V8-RHD): 63 80 (RHD)	.....	1	320 0739	
PLATE, Hydrovac Relay Valve Diaphragm				
65 10 (V8-RHD-WDB)	.....	1	320 6548	

Copyright 1963 American Motors Corp.

GROUP NO. — DESCRIPTION — YEAR and MODEL	PRIMARY GROUP NO.	PER CAR	PART NO.	CODE
FITTING, Hydrovac Valve Body To Tube				
60 Thru 62 10-80 (RHD): 63 Thru 65 10 (V8-RHD-LDB): 63 80 (RHD)	15.310	1	311 7146	
SCREEN, Hydrovac Air Cleaner				
60 Thru 62 10-80 (RHD): 63 Thru 65 10 (V8-RHD): 63 80 (RHD)	15.310	1	311 7150	
HAIR, Hydrovac Air Cleaner				
60 Thru 62 10-80 (RHD): 63 Thru 65 10 (V8-RHD): 63 80 (RHD)	8.450	AR	43 910	
RETAINER, Hydrovac Air Cleaner Hair				
60 Thru 62 10-80 (RHD): 63 Thru 65 10 (V8-RHD): 63 80 (RHD)	15.310	1	311 7149	
SPRING, Hydrovac Air Cleaner Poppet Valve				
60 Thru 62 10-80 (RHD): 63 Thru 65 10 (V8-RHD-LDB): 63 80 (RHD)	15.310	1	311 7147	
65 10 (V8-RHD-WDB)		1	320 6547	
RING, Hydrovac Valve Body Snap				
60 Thru 62 10-80 (RHD): 63 Thru 65 10 (V8-RHD): 63 80 (RHD)	15.310	2	311 7148	
8.560 **CAP, Hydrovac Hydraulic Cylinder**				
60 Thru 62 10-80 (RHD): 63 Thru 65 10 (V8-RHD-LDB): 63 80 (RHD)	15.310	1	311 7167	
GASKET, Hydrovac Hydraulic Cylinder Tube				
60 Thru 62 10-80 (RHD): 63 Thru 65 10 (V8-RHD-LDB): 63 80 (RHD)	15.310	1	311 7169	
SCREW, Hydrovac Hydraulic Cylinder Cap Bleeder				
60 Thru 62 10-80 (RHD): 63 Thru 65 10 (V8-RHD): 63 80 (RHD)	15.310	1	311 7139	
TUBE, Hydrovac Hydraulic Cylinder				
60 Thru 62 10-80 (RHD): 63 Thru 65 10 (V8-RHD-LDB): 63 80 (RHD)	15.310	1	311 7166	
65 10 (V8-RHD-WDB)		1	320 6556	
SEAL, Hydrovac Hydraulic Cylinder Tube				
60 Thru 62 10-80 (RHD): 63 Thru 65 10 (V8-RHD-LDB): 63 80 (RHD)	15.310	1	320 0530	
NUT, Hydrovac Hydraulic Cylinder Tube Lock				
60 Thru 62 10-80 (RHD): 63 Thru 65 10 (V8-RHD-LDB): 63 80 (RHD)	15.310	1	311 7168	
8.570 **PLATE ASSEMBLY, Hydrovac End**				
60 Thru 62 10-80 (RHD): 63 Thru 65 10 (V8-RHD-LDB): 63 80 (RHD)		1	320 0729	
65 10 (V8-RHD-WDB)...(Incl. Fitting)		1	320 6294	
SEAL, Hydrovac Hydraulic Cylinder Tube				
60 Thru 62 10-80 (RHD): 63 Thru 65 10 (V8-RHD-LDB): 63 80 (RHD)	15.310	1	311 7177	

Copyright 1963 American Motors Corp.

GROUP NO. — DESCRIPTION — YEAR and MODEL	PRIMARY GROUP NO.	PER CAR	PART NO.	CODE
SEAL, Hydrovac Push Rod Leather				
60 Thru 62 10-80 (RHD): 63 Thru 65 10 (V8-RHD-LDB): 63 80 (RHD)	15.310	1	311 7132	
SEAL, Hydrovac Valve Fitting				
60 Thru 62 10-80 (RHD): 63 Thru 65 10 (V8-RHD-LDB): 63 80 (RHD)	15.310	1	311 7130	
SEAL, Hydrovac End Plate To Cylinder				
60 Thru 62 10-80 (RHD): 63 Thru 65 10 (V8-RHD-LDB): 63 80 (RHD)	15.310	1	311 7172	
FITTING, Hydrovac Relay Valve				
60 Thru 62 10-80 (RHD): 63 Thru 65 10 (V8-RHD-LDB): 63 80 (RHD)		1	320 0730	
65 10 (V8-RHD-WDB)		1	320 6290	
SCREW, Hydrovac End Plate Bleeder				
60 Thru 62 10-80 (RHD): 63 Thru 65 10 (V8-RHD-LDB): 63 80 (RHD)	15.310	1	311 7139	
PISTON, Hydrovac				
60 Thru 62 10-80 (RHD): 63 Thru 65 10 (V8-RHD-LDB): 63 80 (RHD)		1	320 0720	
PISTON, Hydrovac Relay Valve				
60 Thru 62 80 (RHD): 63 Thru 65 10 (V8-RHD-LDB): 63 80 (RHD)		1	320 0724	
65 10 (V8-RHD-WDB)		1	320 6153	
CUP, Hydrovac Piston				
60 Thru 62 10-80 (RHD): 63 Thru 65 10 (V8-RHD-LDB): 63 80 (RHD)		2	320 0726	
CUP, Hydrovac Relay Valve Piston				
(Front) *60 Thru 62 10-80 (RHD): 63 Thru 65 10 (V8-RHD-LDB): 63 80 (RHD)*		1	320 0723	
(Rear) *60 Thru 62 10-80 (RHD): 63 Thru 65 10 (V8-RHD-LDB): 63 80 (RHD)*		1	320 0728	
WASHER, Hydrovac Relay Valve Piston Stop				
60 Thru 62 10-80 (RHD): 63 Thru 65 10 (V8-RHD-LDB): 63 80 (RHD)	15.310	1	311 7128	
65 10 (V8-RHD-WDB)		1	320 6555	
RING, Hydrovac Relay Valve Piston Stop Washer Retaining				
60 Thru 62 10-80 (RHD): 63 Thru 65 10 (V8-RHD-LDB): 63 80 (RHD)		1	320 0719	
65 10 (V8-RHD-WDB)		1	320 6289	
RETAINER, Hydrovac Relay Valve Piston				
60 Thru 62 10-80 (RHD): 63 Thru 65 10 (V8-RHD-LDB): 63 80 (RHD)	15.310	1	311 7127	
SPRING, Hydrovac Relay Valve Return				
65 10 (V8-RHD-WDB)		1	320 6551	
60 Thru 62 10-80 (RHD): 63 Thru 65 10 (V8-RHD-LDB): 63 80 (RHD)		1	320 0742	

Copyright 1963 American Motors Corp.

GROUP NO. — DESCRIPTION — YEAR and MODEL	PRIMARY GROUP NO.	PER CAR	PART NO.	CODE
RETAINER, Hydrovac Relay Valve Return Spring				
65 10 (V8-RHD-WDB)	.....	1	320 6685	
SPRING, Hydrovac Piston				
60 Thru 62 10-80 (RHD): 63 Thru 65 10 (V8-RHD-LDB): 63 80 (RHD)	.....	1	320 0721	
STEM, Hydrovac Relay Valve				
60 Thru 62 10-80 (RHD): 63 Thru 65 10 (V8-RHD-LDB): 63 80 (RHD)	.....	1	320 0722	
WASHER, Hydrovac Piston Spring				
60 Thru 62 10-80 (RHD): 63 Thru 65 (V8-RHD-LDB): 63 80 (RHD)	.....	1	320 0727	
WASHER, Hydrovac Piston Cup				
60 Thru 62 10-80 (RHD): 63 Thru 65 10 (V8-RHD-LDB): 63 80 (RHD)	.....	1	320 0725	
8.575 PISTON, Hydrovac Hydraulic Master				
60 Thru 62 10-80 (RHD): 63 Thru 65 10 (V8-RHD-LDB): 63 80 (RHD)	.....	1	320 0733	
65 10 (V8-RHD-WDB)	.....	1	320 6295	
CUSHION, Hydrovac Hydraulic Master Piston				
60 Thru 62 10-80 (RHD): 63 Thru 65 10 (V8-RHD-LDB): 63 80 (RHD)	.....	1	320 0737	
CUP, Hydrovac Hydraulic Master Piston				
60 Thru 62 10-80 (RHD): 63 Thru 65 10 (V8-RHD-LDB): 63 80 (RHD)	15.310	1	311 7165	
BALL, Hydrovac Hydraulic Master Piston				
60 Thru 62 10-80 (RHD): 63 Thru 65 10 (V8-RHD-LDB): 63 80 (RHD)	15.310	1	311 7163	
SPRING, Hydrovac Hydraulic Master Piston Ball				
60 Thru 62 10-80 (RHD): 63 Thru 65 10 (V8-RHD-LDB): 63 80 (RHD)	15.310	1	311 7162	
RETAINER, Hydrovac Hydraulic Master Piston Ball Spring				
60 Thru 62 10-80 (RHD): 63 Thru 65 10 (V8-RHD-LDB): 63 80 (RHD)	.....	1	320 0735	
RING, Hydrovac Hydraulic Master Piston Snap				
60 Thru 62 10-80 (RHD): 63 Thru 65 10 (V8-RHD-LDB): 63 80 (RHD)	.....	1	320 0743	
65 10 (V8-RHD-WDB)	.....	1	320 6550	
WASHER, Hydrovac Hydraulic Master Piston Deflector				
60 Thru 62 10-80 (RHD): 63 Thru 65 10 (V8-RHD-LDB): 63 80 (RHD)	15.310	1	320 0734	
NUT, Hydrovac Hydraulic Master Piston Ball Spring Retainer Speed				
60 Thru 62 10-80 (RHD): 63 Thru 65 10 (V8-RHD-LDB): 63 80 (RHD)	.....	1	320 0736	

Copyright 1963 American Motors Corp.

GROUP NO. — DESCRIPTION — YEAR and MODEL	PRIMARY GROUP NO.	PER CAR	PART NO.	CODE
8.580 ROD, Hydrovac Vacuum Piston				
60 Thru 62 10-80 (RHD): 63 Thru 65 10 (V8-RHD-LDB): 63 80 (RHD)	15.310	1	311 7159	
65 10 (V8-RHD-WDB)...(Incl. Ball)	.....	1	320 6296	
WASHER, Hydrovac Vacuum Piston Rod To Plate				
(Front) *60 Thru 62 10-80 (RHD): 63 Thru 65 10 (V8-RHD-LDB): 63 80 (RHD)*	15.310	1	311 7158	#
(Rear) *65 10 (V8-RHD-WDB)*	.....	1	320 6560	
SEAL, Hydrovac Vacuum Piston Rod (Between Plates)				
60 Thru 62 10-80 (RHD): 63 Thru 65 10 (V8-RHD-LDB): 63 80 (RHD)	15.310	1	311 7157	
NUT, Hydrovac Vacuum Piston Rod				
60 Thru 62 10-80 (RHD): 63 Thru 65 10 (V8-RHD-LDB): 63 80 (RHD)	15.310	1	311 7154	
65 10 (V8-RHD-WDB)	.....	1	320 6562	
PLATE, Hydrovac Vacuum Piston Front				
60 Thru 62 10-80 (RHD): 63 Thru 65 10 (V8-RHD-LDB): 63 80 (RHD)	15.310	1	311 7156	
65 10 (V8-RHD-WDB)	.....	1	320 6559	
PACKING, Hydrovac Vacuum Piston Plate				
60 Thru 62 10-80 (RHD): 63 Thru 65 10 (V8-RHD-LDB): 63 80 (RHD)	15.310	1	311 7151	
PLATE, Hydrovac Vacuum Piston Rear				
60 Thru 62 10-80 (RHD): 63 Thru 65 10 (V8-RHD-LDB): 63 80 (RHD)	15.310	1	311 7155	
65 10 (V8-RHD-WDB)	.....	1	320 6558	
WICK, Hydrovac Vacuum Piston Packing				
60 Thru 62 10-80 (RHD): 63 Thru 65 10 (V8-RHD-LDB): 63 80 (RHD)	8.490	1	311 6834	
RING, Hydrovac Vacuum Piston Packing Wick				
60 Thru 62 10-80 (RHD): 63 Thru 65 10 (V8-RHD-LDB): 63 80 (RHD)	15.310	1	311 7152	
RETAINER, Hydrovac Vacuum Piston Plate				
60 Thru 62 10-80 (RHD): 63 Thru 65 10 (V8-RHD-LDB): 63 80 (RHD)	15.310	1	311 7153	
65 10 (V8-RHD-WDB)	.....	1	320 6557	
RING, Hydrovac Hydraulic Piston Snap				
60 Thru 62 10-80 (RHD): 63 Thru 65 10 (V8-RHD-LDB): 63 80 (RHD)	.....	1	320 0731	
SPRING, Hydrovac Hydraulic Piston				
60 Thru 62 10-80 (RHD): 63 Thru 65 10 (V8-RHD-LDB): 63 80 (RHD)	.....	1	320 0741	
65 10 (V8-RHD-WDB)	.....	1	320 6553	
SEAL, Hydrovac Hydraulic Piston				
60 Thru 62 10-80 (RHD): 63 Thru 65 10 (V8-RHD-LDB): 63 80 (RHD)	15.310	1	311 7137	

Copyright 1963 American Motors Corp.

GROUP NO. — DESCRIPTION — YEAR and MODEL	PRIMARY GROUP NO.	PER CAR	PART NO.	CODE
RETAINER, Hydrovac Hydraulic Piston Seal				
60 Thru 62 10-80 (RHD): 63 Thru 65 10 (V8-RHD-LDB): 63 80 (RHD)	15.310	1	320 0076	
65 10 (V8-RHD-WDB)	.....	1	320 6291	
SPRING, Hydrovac Hydraulic Piston Seal				
60 Thru 62 10-80 (RHD): 63 Thru 65 10 (V8-RHD-LDB): 63 80 (RHD)	15.310	1	320 0077	
65 10 (V8-RHD-WDB)	.....	1	320 6293	
PIN, Hydrovac Hydraulic Piston				
60 Thru 62 10-80 (RHD): 63 Thru 65 10 (V8-RHD-LDB): 63 80 (RHD)	15.310	1	311 7176	
65 10 (V8-RHD-WDB)	.....	1	320 6554	
SLEEVE, Hydrovac Hydraulic Piston Seal				
60 Thru 62 10-80 (RHD): 63 Thru 65 10 (V8-RHD-LDB): 63 80 (RHD)	15.310	1	320 0078	
WASHER, Hydrovac Hydraulic Piston Seal				
60 Thru 62 10-80 (RHD): 63 Thru 65 10 (V8-RHD-LDB): 63 80 (RHD)	15.310	1	311 7138	
WASHER, Hydrovac Hydraulic Piston Stop				
60 Thru 62 10-80 (RHD): 63 Thru 65 10 (V8-RHD-LDB): 63 80 (RHD)	.....	1	320 0732	
65 10 (V8-RHD-WDB)	.....	1	320 6292	
8.585 CYLINDER, Hydrovac Vacuum				
60 Thru 62 10-80 (RHD): 63 Thru 65 10 (V8-RHD-LDB): 63 80 (RHD)	.....	1	320 0740	
65 10 (V8-RHD-WDB)	.....	1	320 6564	
PLUG, Hydrovac Vacuum Cylinder Pipe				
60 Thru 62 10-80 (RHD): 63 Thru 65 10 (V8-RHD-LDB): 63 80 (RHD)	15.310	1	311 7182	
65 10 (V8-RHD-WDB)	.....	1	320 6552	
HOOK, Hydrovac Vacuum Cylinder				
60 Thru 62 10-80 (RHD): 63 Thru 65 10 (V8-RHD-LDB): 63 80 (RHD)	15.310	4	311 7173	
65 10 (V8-RHD-WDB)	.....	4	320 6191	
ATTACHING PARTS				
Hook To End Plate				
WASHER, Lock ..... *60 Thru 62 10-80 (RHD): 63 Thru 65 10 (V8-RHD): 63 80 (RHD)*	15.310	4	311 7180	
NUT, Hexagon ..... *60 Thru 62 10-80 (RHD): 63 Thru 65 10 (V8-RHD): 63 80 (RHD)*	15.310	4	311 7181	
TUBE, Hydrovac Vacuum				
60 Thru 62 10-80 (RHD): 63 Thru 65 10 (V8-RHD-LDB): 63 80 (RHD)	15.310	1	311 7178	
65 10 (V8-RHD-WDB)	.....	1	320 6563	
8.590 BRACKET, Hydrovac Mounting (To Wheelhouse)				
63-64 10 (V8-RHD): 63 80 (RHD)	.....	1	316 9046	
65 10 (V8-RHD)	.....	1	317 8611	
(Rear) *60-61 80 (RHD)*	.....	1	315 4016	

Copyright 1963 American Motors Corp.

GROUP NO. — DESCRIPTION — YEAR and MODEL		PRIMARY GROUP NO.	PER CAR	PART NO.	CODE
ATTACHING PARTS					
Bracket To Wheelhouse					
SCREW, Tapping.....	*60-61 10-80 (RHD) .....(Replaces 800 0103)*	17.671	4	G9411563	
BOLT, Hexagon	*63 Thru 65 10 (V8-RHD): 63 80 (RHD)*.....	17.038	2	G181593	NA
WASHER, Plain.....	*63 Thru 65 10 (V8-RHD): 63 80 (RHD) .....(Replaces 800 0153)*	17.814	2	400 1093	
WASHER, Lock	*63 Thru 65 10 (V8-RHD): 63 80 (RHD)*.....	17.820	2	G120214	NA
NUT, Hexagon.....	*63 Thru 65 10 (V8-RHD): 63 80 (RHD)*.....	17.406	2	G120368	
PLATE, Hydrovac Mounting Bracket (To Wheelhouse)					
65 10 (V8-RHD).....		.....	1	317 8609	
BRACE, Hydrovac Mounting Bracket (To Wheelhouse)					
65 10 (V8-RHD).....		.....	1	317 6810	
ATTACHING PARTS					
Brace To Hydrovac Mounting Bracket					
BOLT, Hexagon.....	*65 10 (V8-RHD)*.....	17.038	1	G180018	NA
WASHER, Lock.....	*65 10 (V8-RHD)*.....	17.820	1	G120380	NA
WASHER, Plain.....	*65 10 (V8-RHD)*.....	17.814	1	G120392	NA
NUT, Hexagon.....	*65 10 (V8-RHD)*.....	17.406	1	G120375	
Brace To Wheelhouse					
BOLT, Hexagon	*65 10 (V8-RHD)*.....	17.038	1	G180018	NA
WASHER, Lock.....	*65 10 (V8-RHD)*.....	17.820	1	G120380	NA
WASHER, Plain.....	*65 10 (V8-RHD)*.....	17.814	1	G120392	NA
NUT, Hexagon.....	*65 10 (V8-RHD)*.....	17.406	1	G120375	
BRACKET, Hydrovac Mounting (To Dash)					
62 10-80 (RHD).....		.....	1	316 4402	
ATTACHING PARTS					
Bracket To Dash					
BOLT, Hexagon.....	*62 10-80 (RHD)*.....	17.038	4	G181636	NA
WASHER, Plain.....	*62 10-80 (RHD) .....(Replaces 800 0157)*	17.814	8	400 0480	
WASHER, Lock	*62 10-80 (RHD)*	17.820	4	G120382	NA
NUT, Speed	*62 10-80 (RHD)*.....	.....	4	400 0235	
NUT, Hexagon.....	*62 10-80 (RHD)*.....	17.406	4	G120369	NA
BRACKET, Hydrovac Mounting (To Radiator Baffle)					
63-64 10 (V8-RHD): 63 80 (RHD)		.....	1	316 9045	#
ATTACHING PARTS					
Bracket To Baffle					
BOLT, Hexagon	*63-64 10 (V8-RHD): 63 80 (RHD)*	17.038	2	G181636	NA
WASHER, Plain	*63-64 10 (V8-RHD): 63 80 (RHD) .....(Replaces 800 0167)*	17.814	4	400 1107	
WASHER, Lock.....	*63-64 10 (V8-RHD): 63 80 (RHD)*	17.820	2	G120382	NA
NUT, Hexagon.....	*63-64 10 (V8-RHD): 63 80 (RHD)*	17.406	2	G120369	NA
BRACE, Hydrovac Mounting (To Radiator Baffle)					
65 10 (V8-RHD-WPB)		.....	1	317 9708	#

Copyright 1963 American Motors Corp.

GROUP NO. — DESCRIPTION — YEAR and MODEL	PRIMARY GROUP NO.	PER CAR	PART NO.	CODE
SUPPORT, Hydrovac Mounting (To Bracket)				
63-64 10 (V8-RHD): 63 80 (RHD)	.....	1	316 9047	#
ATTACHING PARTS Support To Bracket				
BOLT, Hexagon ..... *63 Thru 65 10 (V8-RHD): 63 80 (RHD)*	17.038	4	G181636	NA
WASHER, Plain..... *63 Thru 65 10 (V8-RHD): 63 80 (RHD) ....(Replaces 800 0167)*	17.814	8	400 1107	
WASHER, Lock ..... *63 Thru 65 10 (V8-RHD): 63 80 (RHD)*	17.820	4	G120382	NA
NUT, Hexagon..... *63 Thru 65 10 (V8-RHD): 63 80 (RHD)*	17.406	4	G120369	NA
NUT, Speed ..... *63 Thru 65 10 (V8-RHD): 63 80 (RHD)*	.....	2	400 0235	
8.595 ADAPTER, Hydrovac Fitting				
60 10-80 (RHD-1 Req.): 61-62 10-80 (RHD-2 Req.)	.....	AR	315 4073	
63 Thru 65 10 (V8-RHD): 63 80 (RHD)	.....	2	316 9048	
8.600 VALVE, Hydrovac Check				
60-61 10-80 (RHD)	8.460	1	314 3240	
62 10 (RHD): 63 Thru 65 10 (V8-RHD): 62-63 80 (RHD)	.....	1	316 4581	
ELBOW, Hydrovac Vacuum (At Manifold)				
60-61 10-80 (RHD)	8.460	1	314 3829	
FITTING, Hydrovac Vacuum				
62 10 (RHD): 62-63 80 (RHD): 64-65 10 (V8-RHD)	8.460	2	315 3667	
HOSE, Check Valve To Hydrovac				
63 10-80 (RHD-V8): 64-65 10 (V8-RHD)	8.400	1	314 3302	
HOSE, Hydrovac To Master Cylinder				
62 10-80 (RHD)	8.460	1	315 3670	
HOSE, Manifold To Check Valve				
61-62 10-80 (RHD)(Bulk-Order Per Foot)	8.475	AR	320 0573	
62 Thru 65 10 (RHD): 62-63 80 (RHD)	8.460	1	315 3670	
CLAMP, Hydrovac Vacuum Hose				
61-62 10-80 (RHD-2 Req.): 62 10 (RHD-3 Req.): 62-63 80 (RHD-3 Req.)	17.108	AR	320 3076	
CLAMP, Hydrovac Vacuum Hose To Wheelhouse				
62 10 (RHD): 63 Thru 65 10 (V8-RHD): 62-63 80 (RHD)	.....	1	315 6488	
ATTACHING PARTS Clamp To Wheelhouse				
SCREW, Tapping..... *62 10 (RHD): 63 Thru 65 10 (V8-RHD): 62-63 80 (RHD) ....(Replaces 800 0103)*	17.671	1	G9411563	
8.605 TUBE, Master Cylinder To Hydrovac				
60-61 10 (RHD)	.....	1	315 4538	
62 10-80 (RHD)	.....	1	316 4243	
60-61 80 (RHD)	.....	1	315 4395	
63 Thru 65 10 (V8-RHD): 63 80 (RHD)	.....	1	316 9103	

Copyright 1963 American Motors Corp.

GROUP NO. — DESCRIPTION — YEAR and MODEL	PRIMARY GROUP NO.	PER CAR	PART NO.	CODE
CLIP, Master Cylinder To Hydrovac Tube				
60 Thru 62 10-80 (RHD)	4.160	2	15 708	
63 Thru 65 10 (V8-RHD): 63 80 (RHD)	8.330	2	313 5224	
ATTACHING PARTS Clip To Floor Pan				
SCREW, Tapping ..... *60 Thru 62 10-80 (RHD): 63 Thru 65 10 (V8-RHD): 63 80 (RHD) .....(Replaces 800 0091)*	17.671	2	400 1031	
8.610 TUBE, Hydrovac To 5-Way Fitting				
60-61 80 (RHD)	.....	1	315 4369	
63 Thru 65 10 (V8-RHD): 63 80 (RHD)	.....	1	316 9096	
CLIP, Hydrovac To 5-Way Fitting Tube				
60 Thru 62 10-80 (RHD)	4.160	1	15 708	
63 Thru 65 10 (V8-RHD): 63 80 (RHD)	17.134	3	G105245	
ATTACHING PARTS Clip To Toeboard				
SCREW, Tapping ..... *60 Thru 62 10-80 (RHD) .....(Replaces 800 0091)*	17.671	1	400 1031	
GASKET, Hydrovac Adapter				
60 Thru 62 10-80 (RHD): 63 Thru 65 10 (V8-RHD): 63 80 (RHD)	8.040	2	47 768	
8.650 BRAKE UNIT, Power				
61 01 (LHD): 60 10 (LHD): 60-61 20-80 (LHD)	.....	1	315 7906	
61 10 (LHD)	.....	1	316 1492	
ATTACHING PARTS Brake Unit To Dash				
SCREW ..... 61 01 (LHD)	8.035	2	316 2760	
BOLT, Hexagon ..... 61 01 (LHD)	17.038	2	G181636	NA
STUD ..... 60-61 10-20-80 (LHD)	8.035	4	315 7870	
WASHER, Lock ..... 61 01 (LHD): 60-61 10-20-80 (LHD)	17.820	4	G120382	NA
NUT, Hexagon ..... 61 01 (LHD): 60-61 10-20-80 (LHD)	17.406	4	G120369	NA
8.655 REPAIR KIT, Power Brake Unit				
61 01 (LHD): 60-61 10-20-80 (LHD)	.....	1	320 2036	
8.660 ROD, Power Brake Auxiliary Push				
61 01 (LHD): 60-61 10-20-80 (LHD)	.....	1	320 2077	
GUARD, Power Brake Auxiliary Push Rod Rubber				
61 01 (LHD): 60-61 10-20-80 (LHD)	8.240	1	315 7905	
8.665 ARM, Power Brake Lever				
61 01 (LHD): 60-61 10-20-80 (LHD)	.....	2	320 2058	

Copyright 1963 American Motors Corp.

GROUP NO. — DESCRIPTION — YEAR and MODEL	PRIMARY GROUP NO.	PER CAR	PART NO.	CODE
ATTACHING PARTS				
Arms To Brake Unit				
PIN, Cotter..... 61 01 (LHD): 60-61 10-20-80 (LHD).....	17.460	1	G103373	NA
Arms To Auxiliary Push Rod				
PIN, Cotter..... 61 01 (LHD): 60-61 10-20-80 (LHD).....	17.460	1	G103373	NA
WASHER, Plain..... 61 01 (LHD): 60-61 10-20-80 (LHD).....	17.814	1	G120394	NA
Arms To Power Brake Push Rod				
PIN, Cotter..... 61 01 (LHD): 60-61 10-20-80 (LHD).....	17.460	1	G103373	NA
GASKET, Power Brake Exhaust Tube To Housing				
61 01 (LHD): 60-61 10-20-80 (LHD).....	.....	1	320 2040	
8.675 HOUSING, Power Brake				
(Front) 61 01 (LHD): 60-61 10-20-80 (LHD).....	.....	1	320 2044	
(Rear) 61 01 (LHD): 60-61 10-20-80 (LHD).....	.....	1	320 2037	
8.680 FILTER, Power Brake Air				
61 01 (LHD): 60-61 10-20-80 (LHD).....	.....	1	320 2042	
8.685 SPRING, Power Brake Air Valve Return				
61 01 (LHD): 60-61 10-20-80 (LHD).....	.....	1	320 2055	
BOOT, Power Brake Air Valve (On Valve)				
61 01 (LHD): 60-61 10-20-80 (LHD).....	.....	1	320 2059	
BOOT, Power Brake Air Valve (On Push Rod)				
61 01 (LHD): 60-61 10-20-80 (LHD).....	.....	1	320 2075	
8.690 HOSE, Power Brake Exhaust				
61 01 (LHD): 60-61 10-20-80 (LHD).....	.....	1	320 2057	
ATTACHING PARTS				
Hose To Piston				
CLAMP..... 61 01 (LHD): 60-61 10-20-80 (LHD).....	.....	1	320 2051	
Hose To Tube				
CLAMP..... 61 01 (LHD): 60-61 10-20-80 (LHD).....	.....	1	320 2833	
8.695 PISTON, Power Brake Power				
61 01 (LHD): 60-61 10-20-80 (LHD).....	.....	1	320 2045	
RING, Power Brake Piston Seal				
61 01 (LHD): 60-61 10-20-80 (LHD).....	.....	1	320 2048	

Copyright 1963 American Motors Corp.

GROUP NO. — DESCRIPTION — YEAR and MODEL	PRIMARY GROUP NO.	PER CAR	PART NO.	CODE
8.700 VALVE, Power Brake Floating				
61 01 (LHD): 60-61 10-20-80 (LHD)	.....	1	320 2049	
SPRING, Power Brake Floating Valve Return				
61 01 (LHD): 60-61 10-20-80 (LHD)	.....	1	320 2056	
8.705 LEVER, Power Brake Reaction				
61 01 (LHD): 60-61 10-20-80 (LHD)	.....	3	320 2046	
8.710 DIAPHRAGM, Power Brake Power Piston				
61 01 (LHD): 60-61 10-20-80 (LHD)	.....	1	320 2047	
8.715 PISTON, Power Brake Master Cylinder				
61 01 (LHD): 60-61 10-20-80 (LHD)	.....	1	320 2063	
RING, Power Brake Master Cylinder Piston Retaining				
61 01 (LHD): 60-61 10-20-80 (LHD)	.....	1	320 2062	
PLATE, Power Brake Master Cylinder Piston Reaction				
61 01 (LHD): 60 10 (LHD): 60-61 20-80 (LHD)	.....	1	320 2061	
61 10 (LHD)	.....	1	320 2747	
RING, Power Brake Master Cylinder Piston "O"				
61 01 (LHD): 60-61 10-20-80 (LHD)	.....	1	320 2064	
BUMPER, Power Brake Master Cylinder Piston Rubber				
61 01 (LHD): 60-61 10-20-80 (LHD)	.....	1	320 2065	
SEAL, Power Brake Master Cylinder Piston Secondary				
61 01 (LHD): 60-61 10-20-80 (LHD)	.....	2	320 2066	
SPRING, Power Brake Master Cylinder Piston Retainer				
61 01 (LHD): 60-61 10-20-80 (LHD)	.....	1	320 2069	
8.720 BODY, Power Brake Master Cylinder				
61 01 (LHD): 60-61 10-20-80 (LHD)	.....	1	320 2070	
ATTACHING PARTS				
Body To Housing				
WASHER, Lock ..... 61 01 (LHD): 60-61 10-20-80 (LHD)	17.820	4	G120381	NA
NUT, Hexagon ..... 61 01 (LHD): 60-61 10-20-80 (LHD)	17.406	4	G120369	NA
SHIM, Power Brake Master Cylinder To Housing (.010)				
61 01 (LHD): 60-61 10-20-80 (LHD)	.....	AR	320 2076	

Copyright 1963 American Motors Corp.

GROUP NO. — DESCRIPTION — YEAR and MODEL	PRIMARY GROUP NO.	PER CAR	PART NO.	CODE
SEAL, Power Brake Master Cylinder				
61 01 (LHD): 60-61 10-20-80 (LHD)	.....	1	320 2071	
8.725 PLUG, Power Brake Master Cylinder Filler				
61 01 (LHD): 60-61 10-20-80 (LHD) ***(Replaces 320 2033)***	.....	1	320 2903	
61 01 (LHD): 60-61 10-20-80 (LHD) ***(Replaces 320 2032)***	.....	1	311 6783	
8.730 CUP, Power Brake Master Cylinder Primary (Incl. Ring)				
61 01 (LHD): 60-61 10-20-80 (LHD)	.....	1	320 2039	
8.735 SPRING, Power Brake Master Cylinder Piston Return (Incl. Retainer)				
61 01 (LHD): 60-61 10-20-80 (LHD)	.....	1	320 2072	
8.740 VALVE, Power Brake Cylinder Check				
61 01 (LHD): 60-61 10-20-80 (LHD)	.....	1	320 2073	
WASHER, Power Brake Master Cylinder Check Valve Seat				
61 01 (LHD): 60-61 10-20-80 (LHD)	.....	1	320 2074	
8.805 DISC. ASSEMBLY, Front Wheel Brake (Incl. Hub)				
65 10-80 (WDB)	.....	2	320 5715	
8.810 CALIPER ASSEMBLY, Front Wheel Disc Brake				
65 10-80 (WDB) ***(Replaces 320 5718, 320 5719, 317 7057)***	.....	2	317 7056	#
ATTACHING PARTS				
Inner Caliper Cylinder To Outer Caliper Cylinder				
BOLT, Hexagon ..... 65 10-80 (WDB)	.....	6	320 5721	
Caliper To Mounting Bracket				
BOLT, Hexagon ..... 65 10-80 (WDB)	.....	4	400 0777	
WASHER, Lock ..... 65 10-80 (WDB)	17.820	4	G120384	NA
8.815 SHOE SET, Front Wheel Disc Brake (Axle Set Of 4 Shoes)				
65 10-80 (WDB)	.....	1	320 5722	
8.820 REPAIR KIT, Front Wheel Disc Brake Caliper				
65 10-80 (WDB)	.....	2	320 5723	
8.830 SCREW, Front Wheel Disc Brake Caliper Bleed				
65 10-80 (WDB)	8.088	2	311 8522	

Copyright 1963 American Motors Corp.

GROUP NO. — DESCRIPTION — YEAR and MODEL	PRIMARY GROUP NO.	PER CAR	PART NO.	CODE
8.835 BRACKET, Front Wheel Disc Brake Caliper Mounting				
(Left) 65 10-80 (WDB)	.....	1	320 5717	
(Right) 65 10-80 (WDB)	.....	1	320 5716	
ATTACHING PARTS				
Bracket To Caliper				
BOLT, Hexagon ..... 65 10-80 (WDB)	.....	4	400 0777	
WASHER, Lock ..... 65 10-80 (WDB)	17.820	4	G120384	NA
8.840 SHIM, Front Wheel Disc Brake Caliper To Bracket				
(.002) 65 10-80 (WDB)	.....	AR	317 7137	
(.005) 65 10-80 (WDB)	.....	AR	317 7136	
(.010) 65 10-80 (WDB)	.....	AR	317 7135	
(.020) 65 10-80 (WDB)	.....	AR	317 7134	
(.040) 65 10-80 (WDB)	.....	AR	317 7133	
8.845 SHIELD, Front Wheel Disc Brake Splash				
(Left) 65 10-80 (WDB)	.....	1	317 7059	
(Right) 65 10-80 (WDB)	.....	1	317 7060	
8.850 TUBE, Front Wheel Disc Brake Caliper To Hose				
(Left) 65 10-80 (WDB)	.....	1	317 7123	
(Right) 65 10-80 (WDB)	.....	1	317 7124	
8.855 HOSE, Front Wheel Disc Brake				
65 10-80 (WDB)	.....	2	317 7126	
CLIP, Front Wheel Disc Brake Hose Fastening				
65 10-80 (WDB)	8.102	2	47 774	
8.860 BRACKET, Front Wheel Disc Brake Inlet Hose				
(Left) 65 10-80 (WDB)	.....	1	317 7127	
(Right) 65 10-80 (WDB)	.....	1	317 7128	

Copyright 1963 American Motors Corp.

GROUP NO. — DESCRIPTION — YEAR and MODEL	PRIMARY GROUP NO.	PER CAR	PART NO.	CODE

Copyright 1963 American Motors Corp.

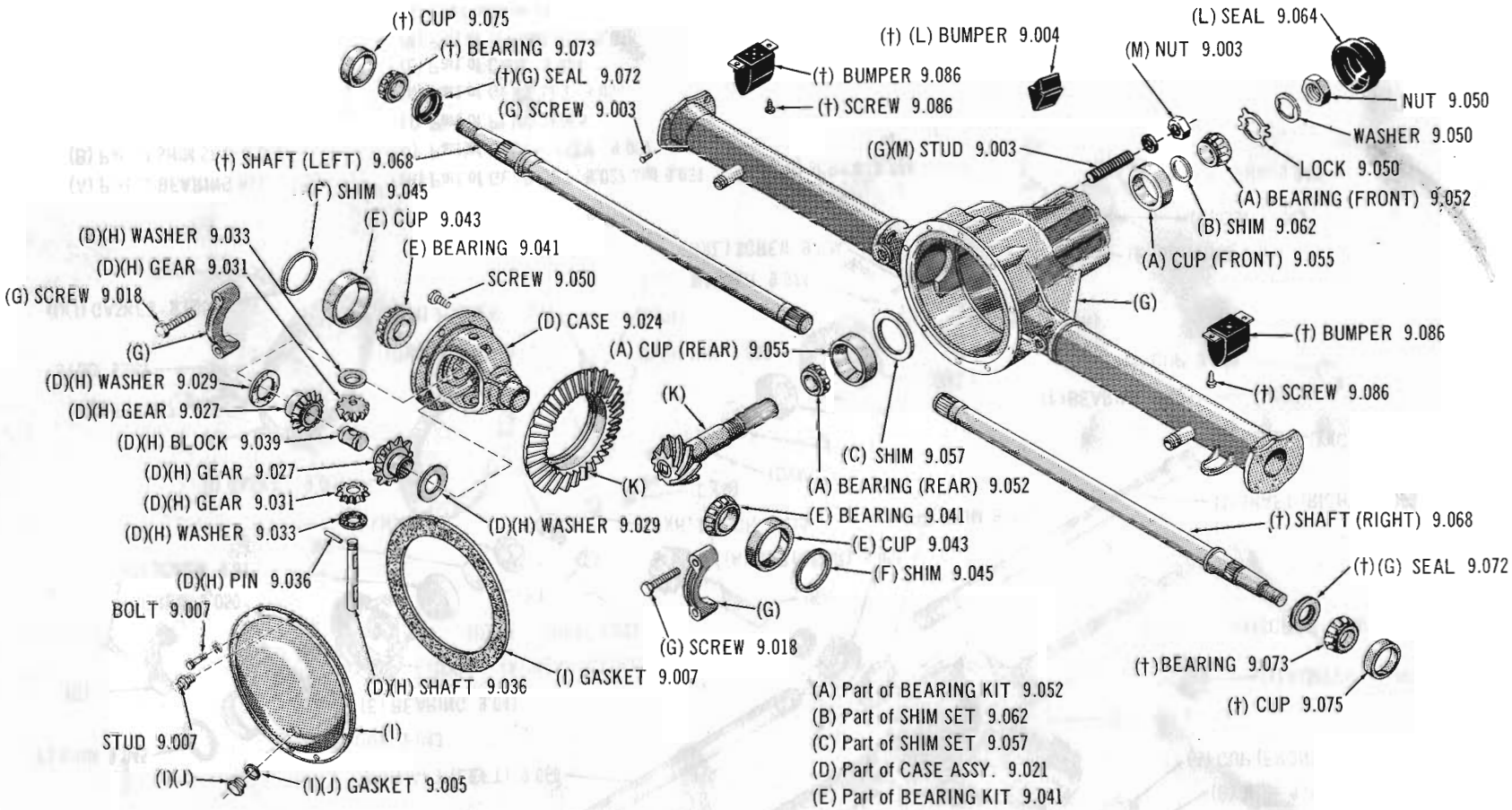

AXLE ASSY. 9.001 includes all parts shown except (†).

(A) Part of BEARING KIT 9.052
(B) Part of SHIM SET 9.062
(C) Part of SHIM SET 9.057
(D) Part of CASE ASSY. 9.021
(E) Part of BEARING KIT 9.041
(F) Part of SHIM SET 9.045
(G) Part of HOUSING 9.003
(H) Part of GEAR SET 9.027 and 9.031
(I) Part of COVER ASSY. 9.007
(J) Part of PLUG 9.005
(K) Part of GEAR SET 9.050
(L) Used only on 01
(M) Used only on 10-80

Copyright 1963 American Motors Corp.

Printed in U.S.A.

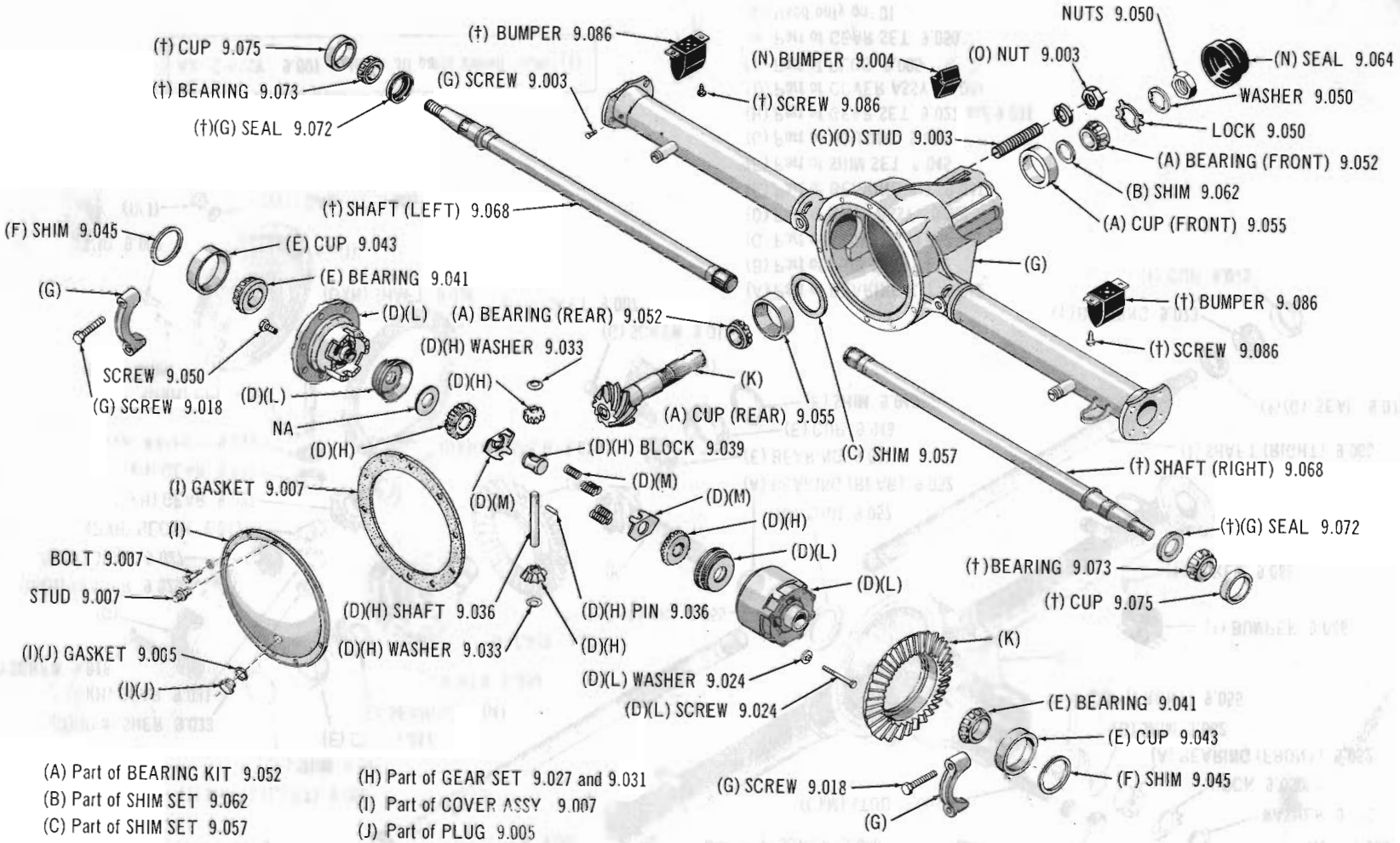

(A) Part of BEARING KIT 9.052
(B) Part of SHIM SET 9.062
(C) Part of SHIM SET 9.057
(D) Part of CASE ASSY. 9.021
(E) Part of BEARING KIT 9.041
(F) Part of SHIM SET 9.045
(G) Part of HOUSING 9.003
(H) Part of GEAR SET 9.027 and 9.031
(I) Part of COVER ASSY 9.007
(J) Part of PLUG 9.005
(K) Part of GEAR SET 9.050
(L) Part of CASE 9.024
(M) Part of SPRING KIT 9.038
(N) Used only on 01
(O) Used only on 10

AXLE ASSY. 9.001 includes all parts shown except (†).

Copyright 1963 American Motors Corp.

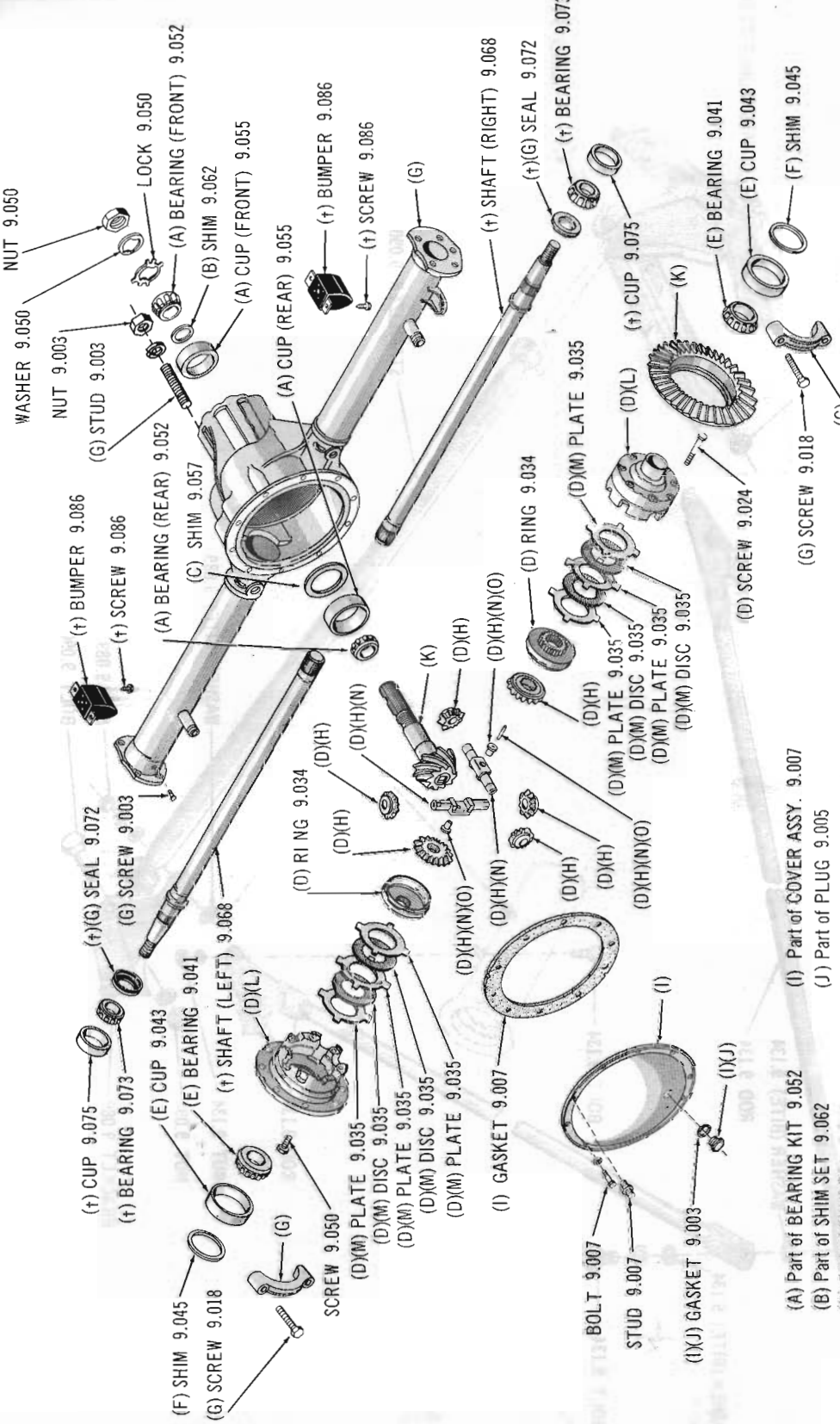

REAR AXLE 60 thru 64 10-20-80 (V8-WLD)

Copyright 1963 American Motors Corp.

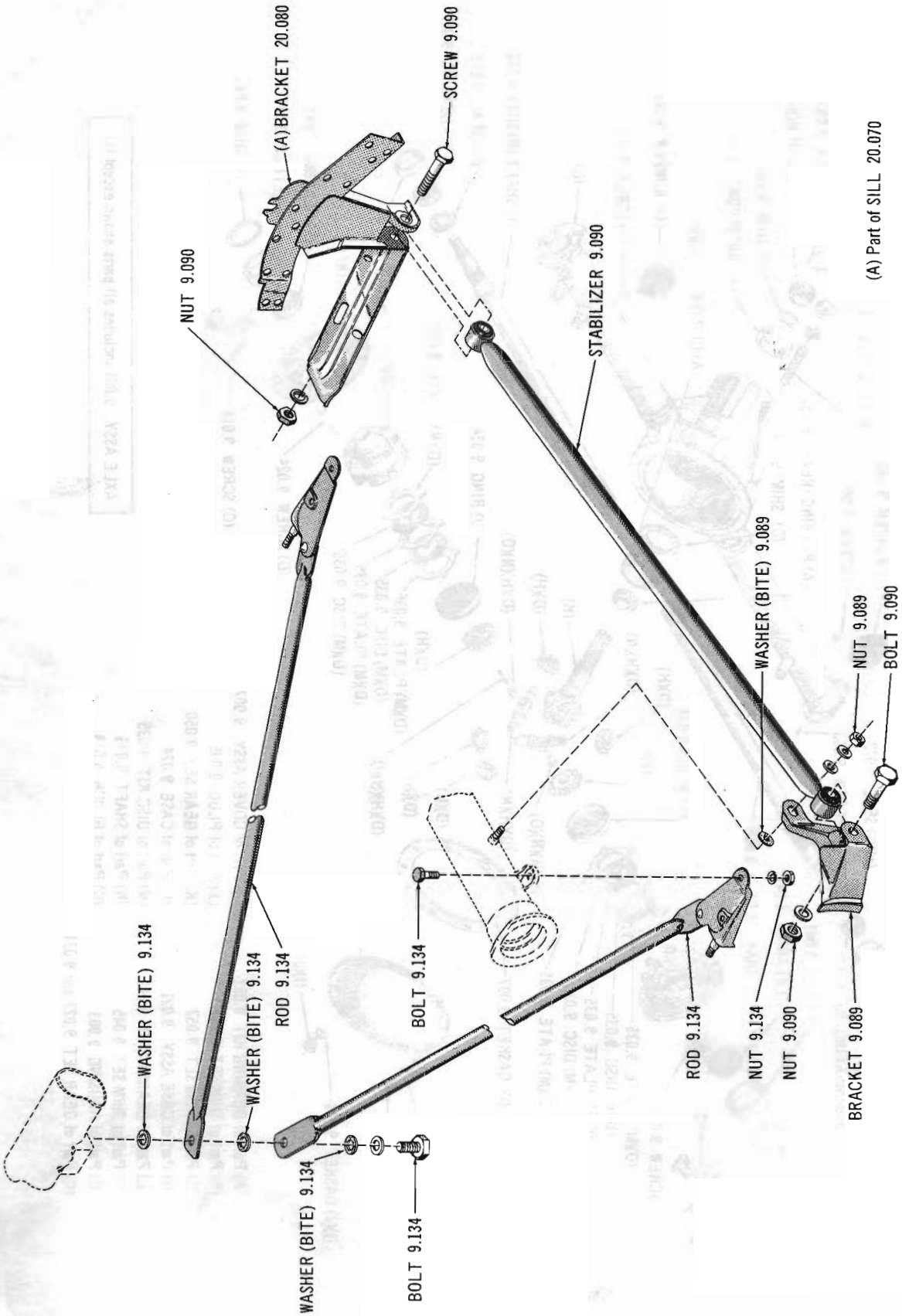

SWAY STABILIZER AND TRUSS RODS 62 thru Current 10-20-80

Copyright 1963 American Motors Corp.

Copyright 1963 American Motors Corp.

Printed in U.S.A.

PROPELLER SHAFT 60 thru Current 01

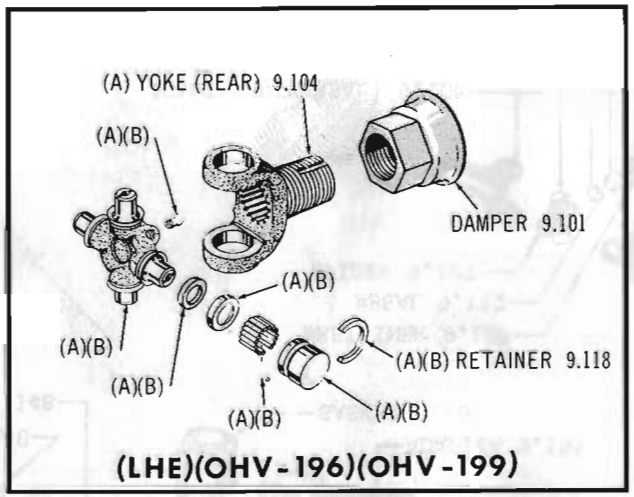

(A) Part of SHAFT ASSY. 9.100
(B) Part of SPIDER ASSY. 9.107
(C) Used only on OHV-232

2252

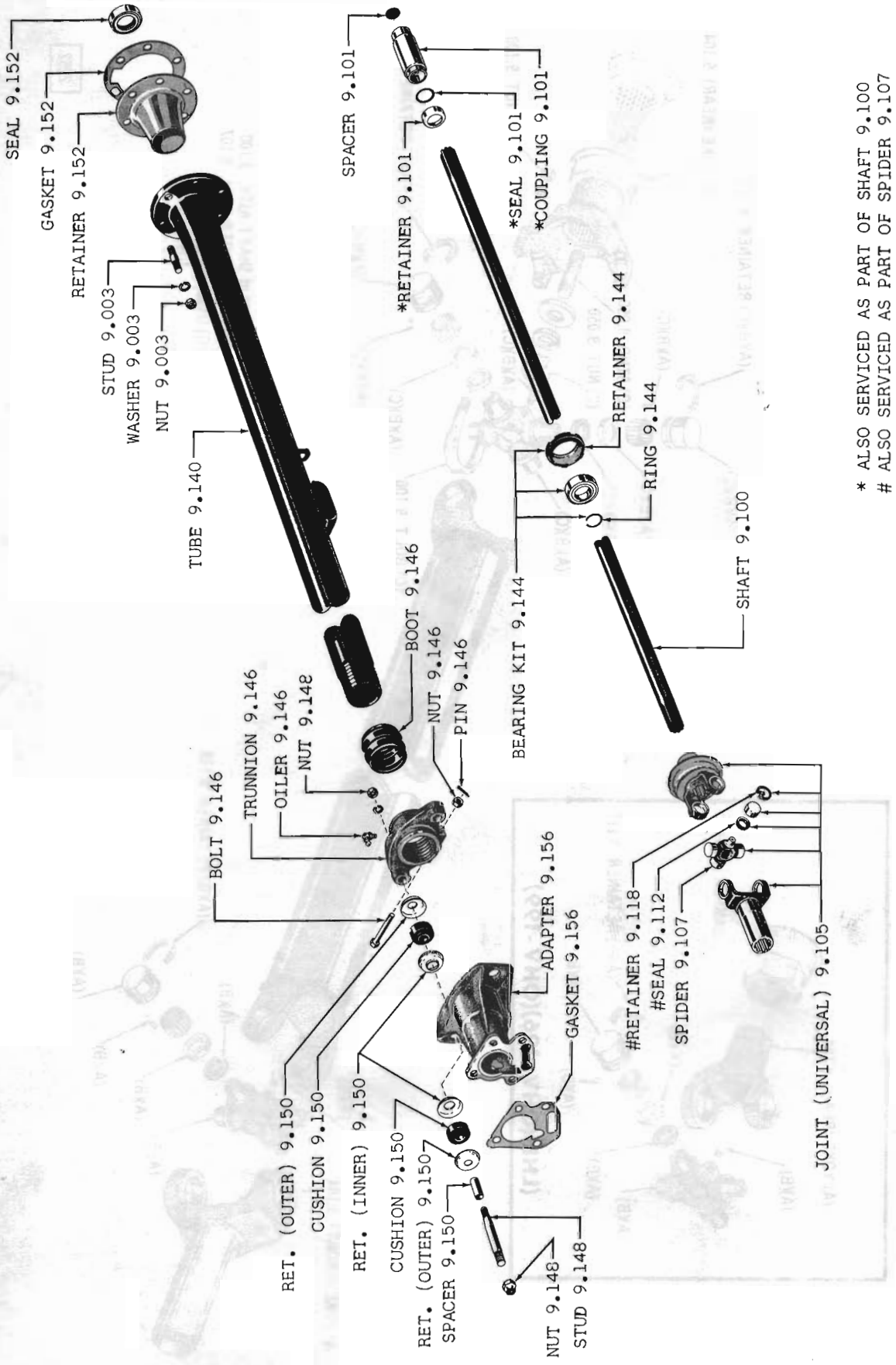

TORQUE TUBE AND PROPELLER SHAFT 60-61 10 (WST)(WOD)

Copyright 1963 American Motors Corp.

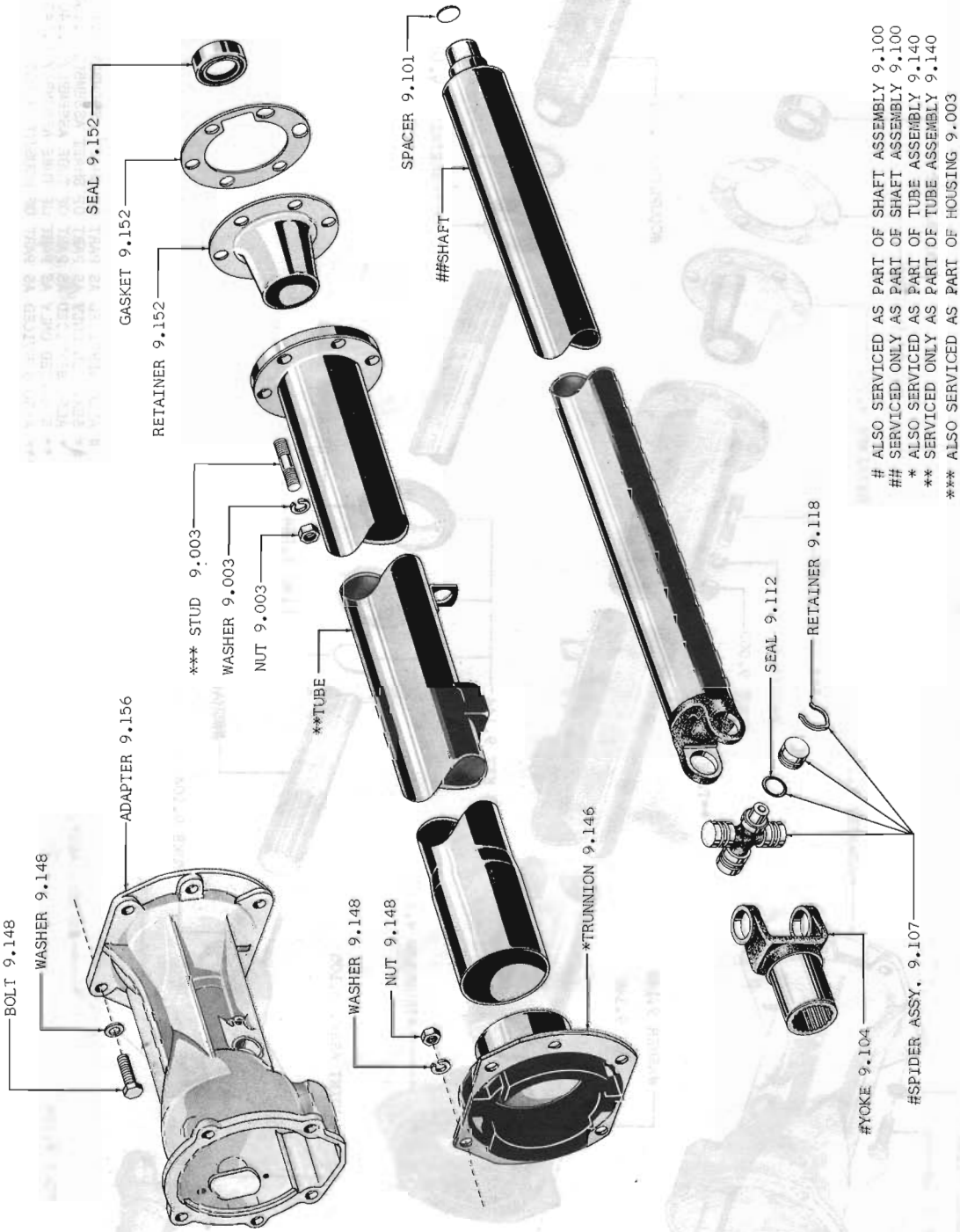

TORQUE TUBE AND PROPELLER SHAFT 61 10 (WAT): 62 10 (9/34) or (13/43) Ratio

Copyright 1963 American Motors Corp.

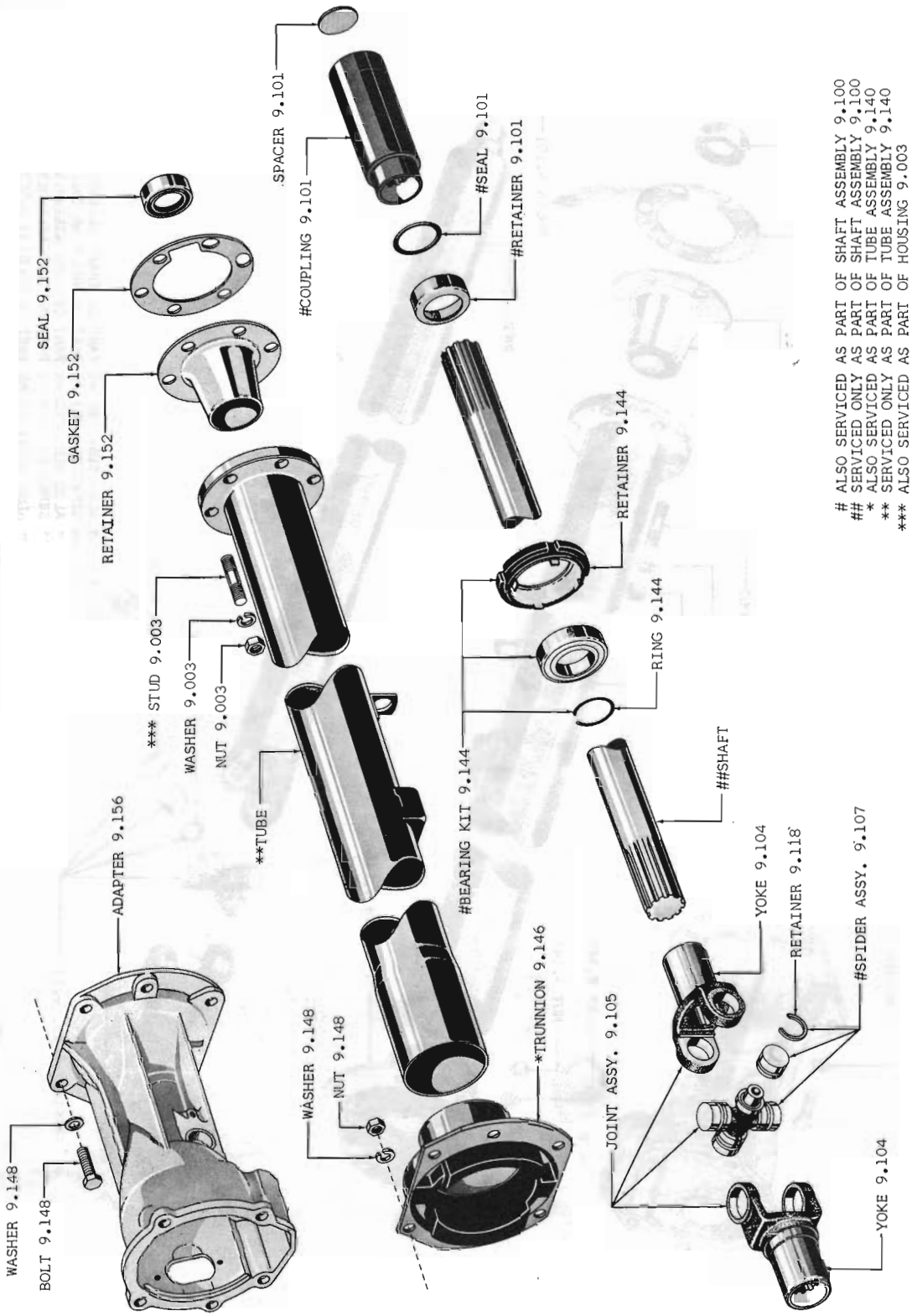

\# ALSO SERVICED AS PART OF SHAFT ASSEMBLY 9.100
SERVICED ONLY AS PART OF SHAFT ASSEMBLY 9.100
* ALSO SERVICED AS PART OF TUBE ASSEMBLY 9.140
** SERVICED ONLY AS PART OF TUBE ASSEMBLY 9.140
*** ALSO SERVICED AS PART OF HOUSING 9.003

TORQUE TUBE AND PROPELLER SHAFT 62 10 (8/35) or (9/37) Ratio: 61-62 20-80 (WST)(WOD)

Copyright 1963 American Motors Corp.

TORQUE TUBE AND PROPELLER SHAFT 61-62 20-80 (WAT)

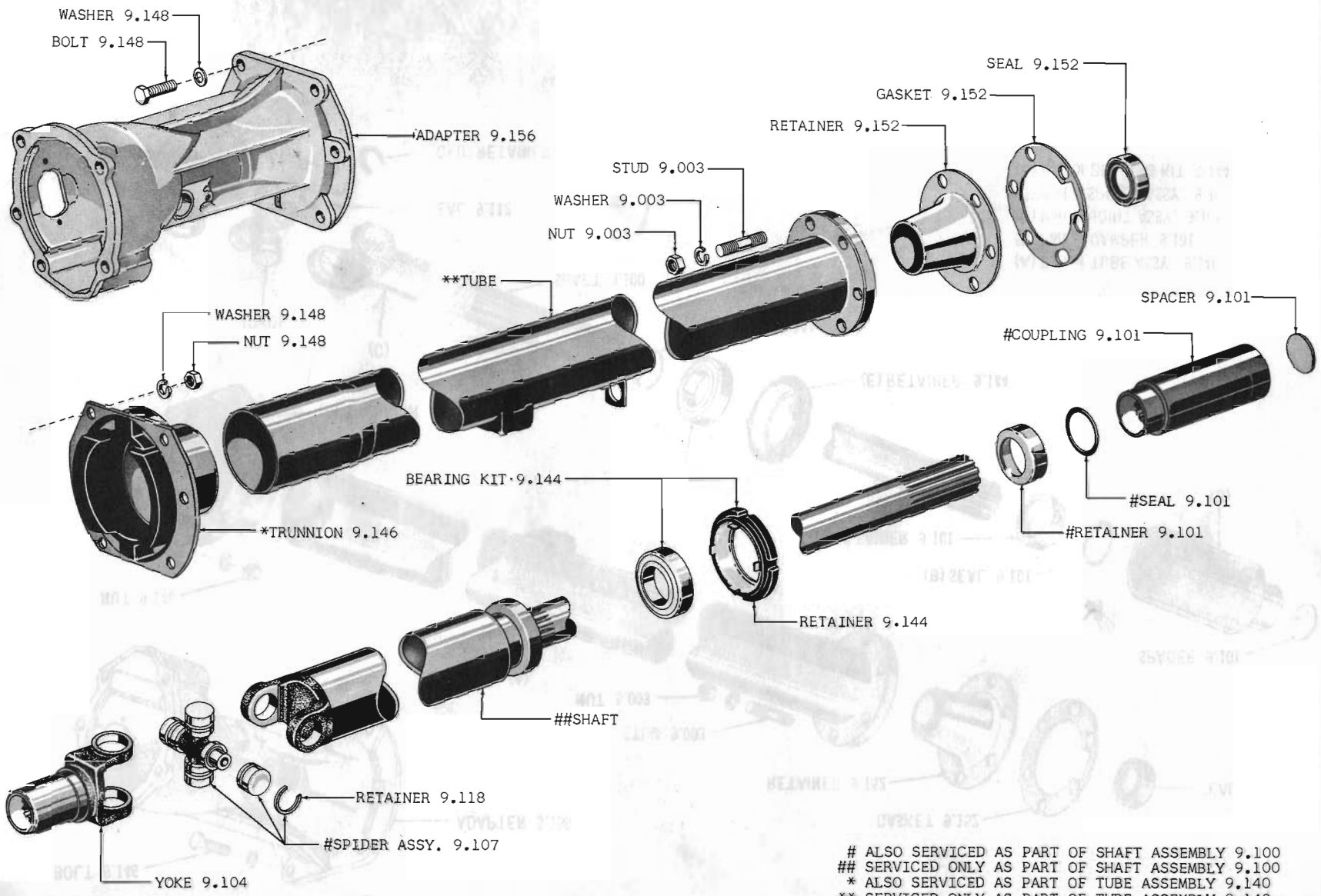

\# ALSO SERVICED AS PART OF SHAFT ASSEMBLY 9.100
\## SERVICED ONLY AS PART OF SHAFT ASSEMBLY 9.100
* ALSO SERVICED AS PART OF TUBE ASSEMBLY 9.140
** SERVICED ONLY AS PART OF TUBE ASSEMBLY 9.140

Copyright 1963 American Motors Corp.

Printed in U.S.A.

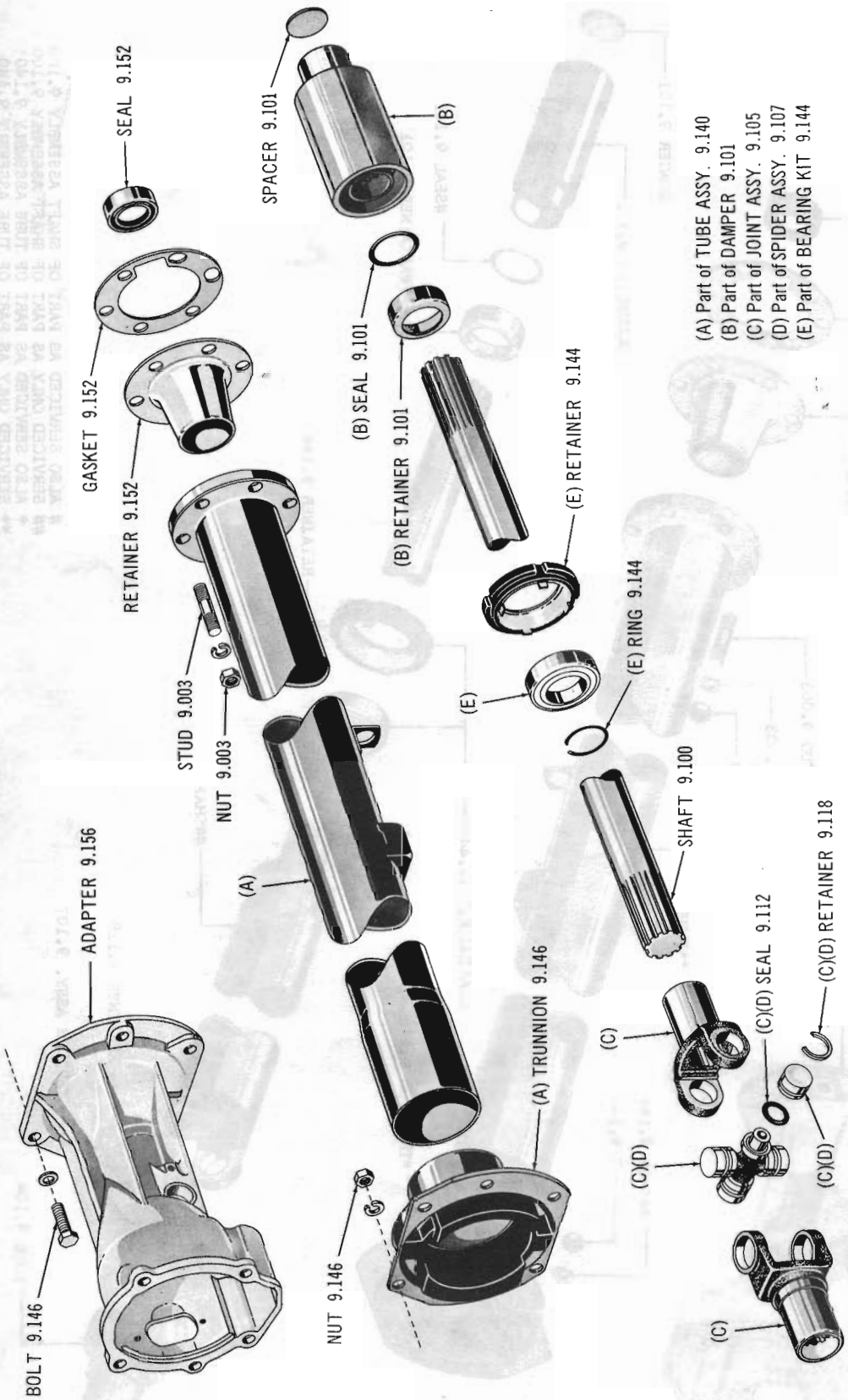

TORQUE TUBE AND PROPELLER SHAFT 63 thru Current 10-80 (SIX)

Copyright 1963 American Motors Corp.

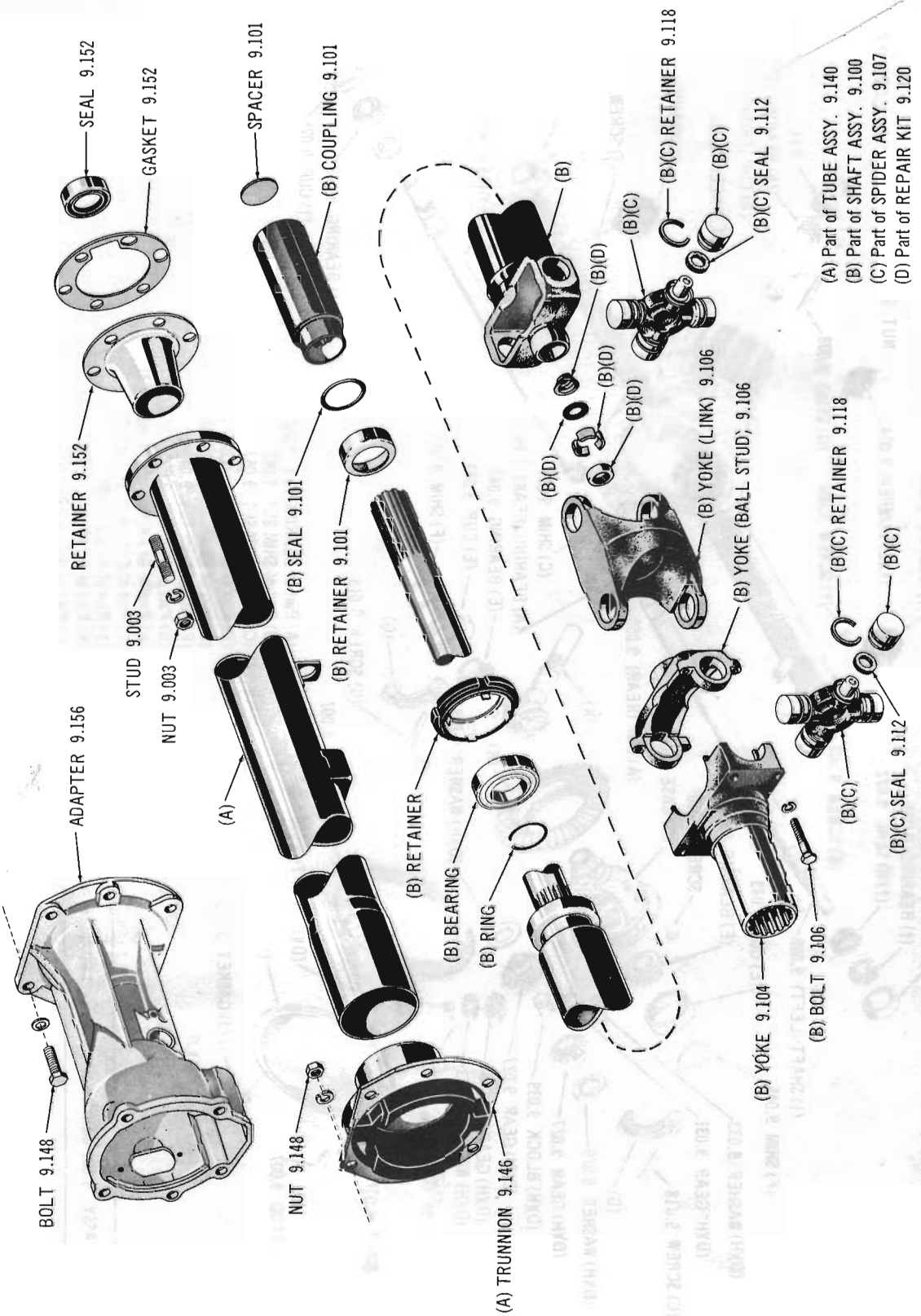

TORQUE TUBE AND PROPELLER SHAFT 63 thru Current 10-80 (V8)

Copyright 1963 American Motors Corp.

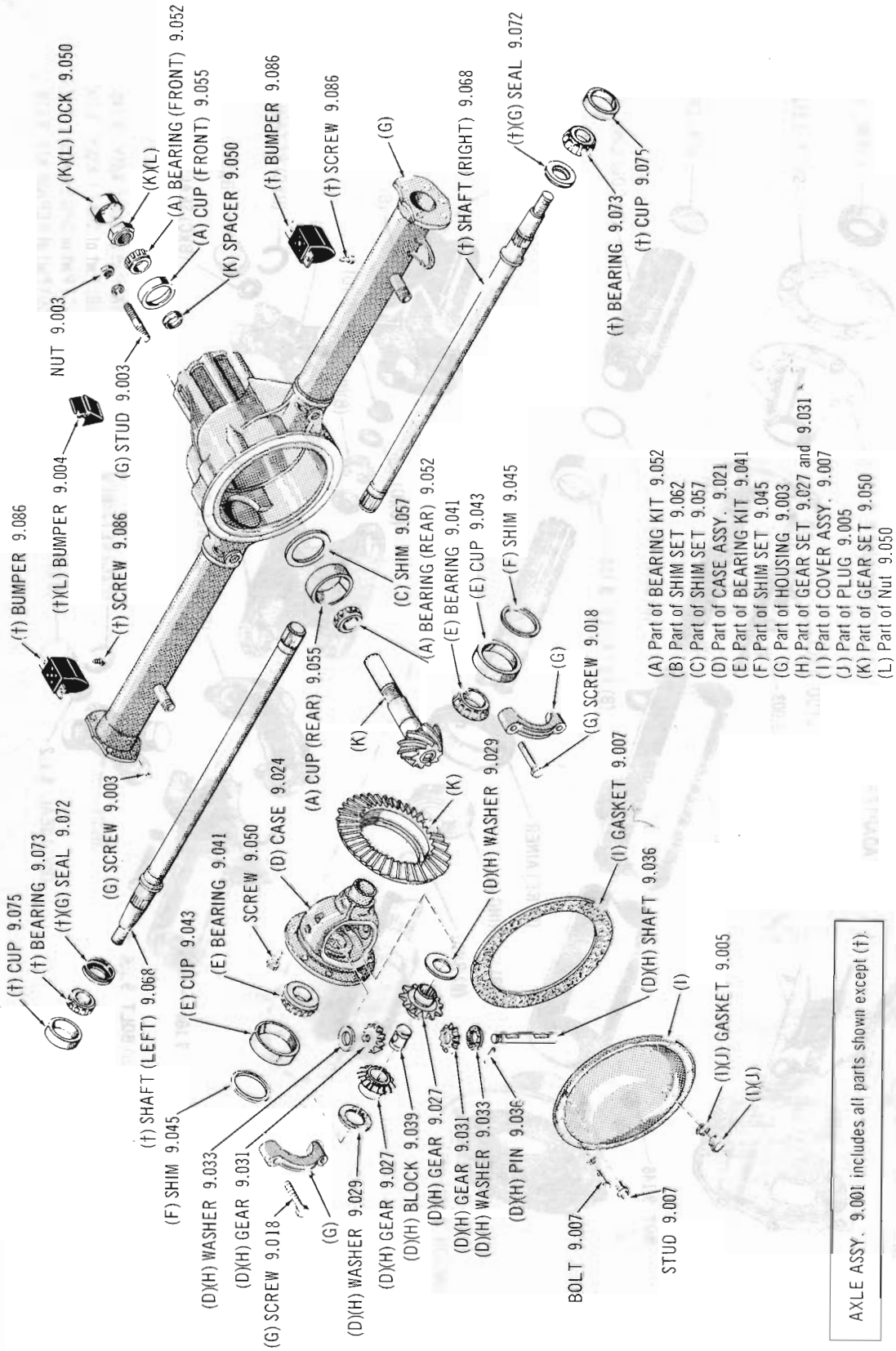

REAR AXLE 65 ALL MODELS (LLD)

Copyright 1963 American Motors Corp.

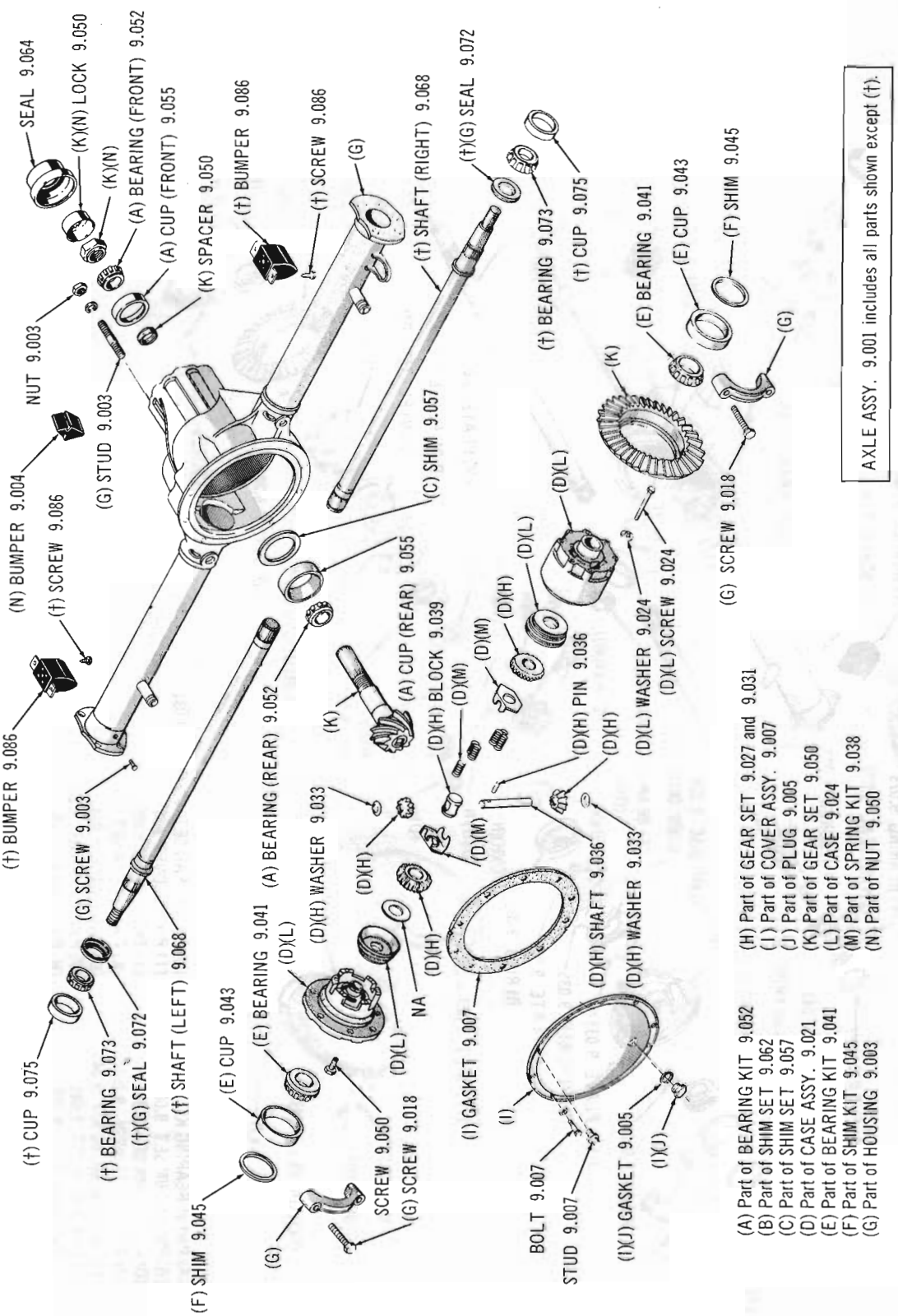

REAR AXLE 65 10-80 (OHV-232-WLD)

Copyright 1963 American Motors Corp.

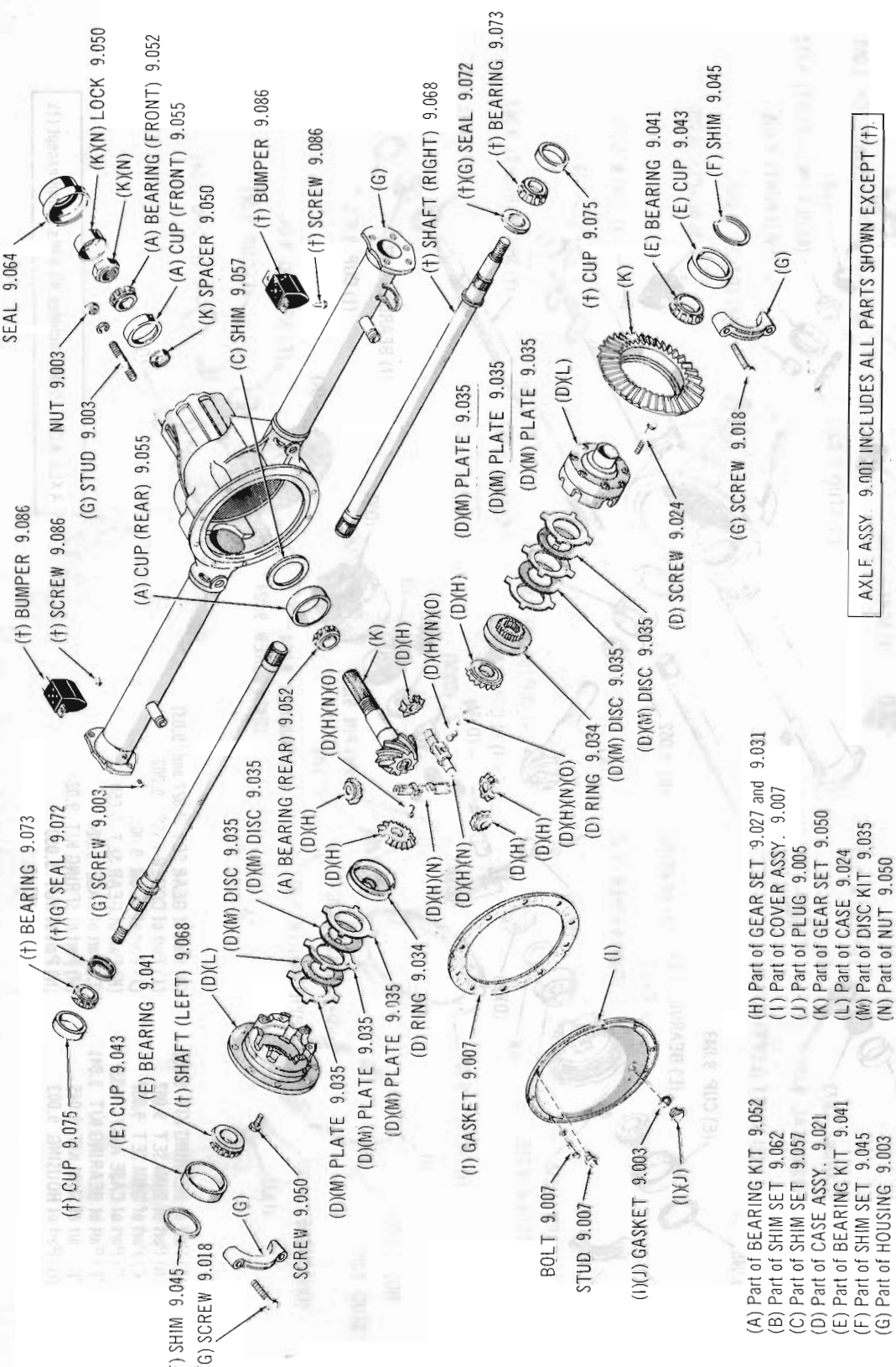

REAR AXLE 65 10-80 (V8-WLD)

Copyright 1963 American Motors Corp.

GROUP NO. — DESCRIPTION — YEAR and MODEL	PRIMARY GROUP NO.	PER CAR	PART NO.	CODE
9.001 AXLE, Conventional Differential Rear (LLD)(Less Shafts)				
(8/35 Ratio) 60 10 (Note 9.001-1 Type 1) ..... *(Order Comp.)*	.....	1	320 0521	
(8/35 Ratio) 60 10 (Note 9.001-1 Type 2) ..... *(Order Comp.)*	.....	1	320 1879	
(8/35 Ratio) 60 10 (Note 9.001-1 Type 3) ..... *(Order Comp.)*	.....	1	320 1218	
(8/35 Ratio) 61 10 ..... *(Order Comp.)*	.....	1	320 2570	
(9/34 Ratio) 60 01 (Note 9.001-1 Type 3) ..... *(Order Comp.)*	.....	1	320 1214	
(9/34 Ratio) 61 01 ..... *(Order Comp.)*	.....	1	320 2550	
(9/34 Ratio) 62-63 01 ..... *(Replaces 320 3534)*	.....	1	320 3533	
(9/34 Ratio) 64 01: 65 01 (LHE)(OHV-196)(OHV-199) ..... *(Replaces 320 4761)*	.....	1	320 4751	
(9/34 Ratio) 60 10 (Note 9.001-1 Types 1 & 2) ..... *(Replaces 320 1877)*	.....	1	320 1876	
(9/34 Ratio) 60 10 (Note 9.001-1 Type 3): 61 10 (Note 9.001-3) . *(Order Comp.)*	.....	1	320 1217	
(9/34 Ratio) 61 10 (Note 9.001-3) ..... *(Order Comp.)*	.....	1	320 2566	
(9/34 Ratio) 62 10 ..... *(Order Comp.)*	.....	1	320 3542	
(9/34 Ratio) 63 10 (Six) ..... *(Replaces 320 4076)*	.....	1	320 4075	
(9/34 Ratio) 64 10 (OHV-196): 65 10 (Six-199) ..... *(Replaces 320 4777)*	.....	1	320 4771	
(9/37 Ratio) 60 01 (Note 9.001-1 Type 1)	.....	1	320 0901	
(9/37 Ratio) 60 01 (Note 9.001-1 Type 2) ..... *(Order Comp.)*	.....	1	320 1867	
(9/37 Ratio) 60 01 (Note 9.001-1 Type 3) ..... *(Order Comp.)*	.....	1	320 1215	
(9/37 Ratio) 61 01 ..... *(Order Comp.)*	.....	1	320 2552	
(9/37 Ratio) 62-63 01 ..... *(Replaces 320 3536)*	.....	1	320 3535	
(9/37 Ratio) 64 01: 65 01 (LHE)(OHV-196)(OHV-199) ..... *(Replaces 320 4762)*	.....	1	320 4752	
(9/37 Ratio) 60 10 (Note 9.001-1 Type 3) ..... *(Order Comp.)*	.....	1	320 1398	
(9/37 Ratio) 61 10 ..... *(Order Comp.)*	.....	1	320 2568	
(9/37 Ratio) 62 10 ..... *(Replaces 320 3544)(Order Comp.)*	.....	1	320 3543	#
(9/37 Ratio) 63 10 (Six) ..... *(Replaces 320 4078)*	.....	1	320 4077	
(9/37 Ratio) 64 10 (OHV-196): 65 10 (Six-199) ..... *(Replaces 320 4778)*	.....	1	320 4772	
(9/40 Ratio) 60 20 (Note 9.001-1 Type 1) ..... *(Order Comp.)*	.....	1	320 1831	
(9/40 Ratio) 60 20 (Note 9.001-1 Type 2): 61 20 ..... *(Order Comp.)*	.....	1	320 1736	
(10/41 Ratio) 63 10-80 (V8) ..... *(Replaces 320 4088)*	.....	1	320 4087	
(10/41 Ratio) 60 20 (Note 9.001-1 Type 2): 61 20 ..... *(Order Comp.)*	.....	1	320 1738	
(10/41 Ratio) 60 80 (Note 9.001-1 Type 1) ..... *(Order Comp.)*	.....	1	320 1847	
(10/41 Ratio) 60 80 (Note 9.001-1 Type 2): 61-62 80 ..... *(Order Comp.)*	.....	1	320 1752	
(11/39 Ratio) 63-64 10-80 (V8) ..... *(Replaces 320 4094)*	.....	1	320 4093	

NOTE 9.001-1: Three Types of Axles were used on the 60 01-10 Series and Two Types of Axles were used on the 60 20-80 Series. They can be identified as follows:

Type 1: On 60 01-10 Differential Bearing Cup is Timken #24721 and Axle Shafts have 16 Cut Splines. On 60 20-80 Axle Shafts have 16 Cut Splines. Refer Illustration.

Type 2: On 60 01-10 Differential Bearing Cup is Timken #LM501311 and Axle Shafts have 16 Cut Splines. On 60 20-80 Axle Shafts have 29 Rolled Splines. Refer Illustration.

Type 3: On 60 01-10 Differential Bearing Cup is Timken #LM 501311 and Axle Shafts have 27 Rolled Splines. Refer Illustration.

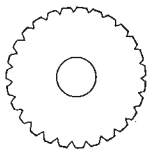

ROLLED SPLINE

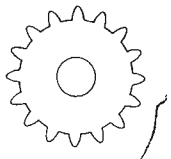

CUT SPLINE

NOTE 9.001-2: Identified on Right Rear Side of Housing by the letter "S" outside of Location Hole. On 61 01 used prior to E-4415. On 61 10 used prior to E-7629 and W-8020.

NOTE 9.001-3: Identified on Right Rear Side of Housing, outside of Location Hole by one of the following letters: "T" thru "X" or "A" thru "G". On 61 01 used beginning with E-4415. On 61 10 used beginning with E-7629 and W-8020.

Copyright 1963 American Motors Corp.

GROUP NO. — DESCRIPTION — YEAR and MODEL	PRIMARY GROUP NO.	PER CAR	PART NO.	CODE
(11/39 Ratio) 64 10 (OHVC-232) ***(Replaces 320 5309)***	.....	1	320 5310	
(11/39 Ratio) ***65 10 (Six-199-Heavy Duty)*** (Six-232)(Except Marlin)	.....	1	320 5529	
(11/39 Ratio) 65 10 (V8): 65 50 (Marlin): 65 80 ***(Use 320 5543)***	.....	1	320 5542	#
(11/39 Ratio) 60 20 (Note 9.001-1 Type 1) ***(Order Comp.)***	.....	1	320 1835	
(11/39 Ratio) 60 20 (Note 9.001-1 Type 2): 61 20 ***(Order Comp.)***	.....	1	320 1740	
(11/39 Ratio) 60 80 (Note 9.001-1 Type 1) ***(Order Comp.)***	.....	1	320 1853	
(11/39 Ratio) 60 80 (Note 9.001-1 Type 2): 61-62 80	.....	1	320 1758	
(13/40 Ratio) 64 01: 65 01 (LHE)(OHV-196)(OHV-199) ***(Replaces 320 4765)***	.....	1	320 4755	
(13/41 Ratio) 63-64 10-80 (V8) ***(Replaces 320 4090)***	.....	1	320 4089	
(13/41 Ratio) 64 10 (OHVC-232) ***(Replaces 320 5311)***	.....	1	320 5312	
(13/41 Ratio) 65 10 (Six-232)(Except Marlin) ***(Replaces 320 5530)***	.....	1	320 5531	
(13/41 Ratio) 65 10 (V8): 65 50 (Marlin): 65 80 ***(Replaces 320 5544)***	.....	1	320 5545	
(13/41 Ratio) 60 20 (Note 9.001-1 Type 1) ***(Order Comp.)***	.....	1	320 1837	
(13/41 Ratio) 60 20 (Note 9.001-1 Type 2): 61 20 ***(Order Comp.)***	.....	1	320 1742	
(13/41 Ratio) 60 80 (Note 9.001-1 Type 1) ***(Order Comp.)***	.....	1	320 1849	
(13/41 Ratio) 60 80 (Note 9.001-1 Type 2): 61-62 80 ***(Order Comp.)***	.....	1	320 1754	
(13/43 Ratio) 60 01 (Note 9.001-1 Types 1 & 2) ***(Order Comp.)***	.....	1	320 1869	
(13/43 Ratio) 60 01 (Note 9.001-1 Type 2) ***(Order Comp.)***	.....	1	320 1219	
(13/43 Ratio) 60 01 (Note 9.001-1 Type 3): 61 01 (Note 9.001-2) ***(Order Comp.)***	.....	1	320 1216	
(13/43 Ratio) 61 01 (Note 9.001-3) ***(Order Comp.)***	.....	1	320 2554	
(13/43 Ratio) 62-63 01 ***(Replaces 320 3538)***	.....	1	320 3537	
(13/43 Ratio) 64 01: 65 01 (LHE)(OHV-196)(OHV-199) ***(Replaces 320 4763)***	.....	1	320 4753	
(13/43 Ratio) 65 01 (OHV-232)	.....	1	320 6201	
(13/43 Ratio) 60 10 (Note 9.001-1 Types 1 & 2) ***(Order Comp.)***	.....	1	320 1883	
(13/43 Ratio) 61 10 ***(Order Comp.)***	.....	1	320 2572	
(13/43 Ratio) 62 10 ***(Replaces 320 3548)***	.....	1	320 3547	
(13/43 Ratio) 64 10 (OHV-196): 65 10 (Six-199) ***(Replaces 320 4729)***	.....	1	320 4773	
(15/41 Ratio) 64 01: 65 01 (OHV-196)(OHV-199) ***(Replaces 320 4764)***	.....	1	320 4754	
(15/43 Ratio) 62-63 01 ***(Replaces 320 3540)***	.....	1	320 3539	
(15/43 Ratio) 63-64 10-80 (V8) ***(Replaces 320 4092)***	.....	1	320 4091	
(15/43 Ratio) 65 10-80 (V8-287)	.....	1	320 5547	
(15/43 Ratio) 60 80 (Note 9.001-1 Type 1) ***(Order Comp.)***	.....	1	320 1851	
(15/43 Ratio) 60 80 (Note 9.001-1 Type 2): 61-62 80 ***(Order Comp.)***	.....	1	320 1756	
AXLE, Locking Differential Rear (WLD)(Less Shafts)				
(8/35 Ratio) 60 10 (Note 9.001-1 Type 2) ***(Order Comp.)***	.....	1	320 1891	
(8/35 Ratio) 60 10 (Note 9.001-1 Type 3) ***(Order Comp.)***	.....	1	320 1734	
(8/35 Ratio) 61-62 10 ***(Order Comp.)***	.....	1	320 2578	
(9/34 Ratio) 60 01 (Note 9.001-1 Type 2) ***(Order Comp.)***	.....	1	320 1871	
(9/34 Ratio) 61 Thru 63 01 ***(Replaces 320 2558)***	.....	1	320 2557	
(9/34 Ratio) 64 01: 65 01 (LHE)(OHV-196)(OHV-199) ***(Replaces 320 4766)***	.....	1	320 4756	
(9/34 Ratio) 60 10 (Note 9.001-1 Types 1 & 2) ***(Order Comp.)***	.....	1	320 1885	
(9/34 Ratio) 60 10 (Note 9.001-1 Type 3) ***(Order Comp.)***	.....	1	320 1728	
(9/34 Ratio) 61-62 10 ***(Replaces 320 2574)***	.....	1	320 2573	
(9/34 Ratio) 63 10 (Six) ***(Replaces 320 4082)***	.....	1	320 4081	
(9/34 Ratio) 64 10 (OHV-196): 65 10 (Six-199) ***(Replaces 320 4780)***	.....	1	320 4774	
(9/37 Ratio) 60 01 (Note 9.001-1 Type 2) ***(Order Comp.)***	.....	1	320 1873	
(9/37 Ratio) 60 01 (Note 9.001-1 Type 3) ***(Order Comp.)***	.....	1	320 1724	
(9/37 Ratio) 61 Thru 63 01 ***(Replaces 320 2560)***	.....	1	320 2559	
(9/37 Ratio) 64 01: 65 01 (LHE)(OHV-196)(OHV-199) ***(Replaces 320 4767)***	.....	1	320 4757	
(9/37 Ratio) 60 10 (Note 9.001-1 Type 3) ***(Order Comp.)***	.....	1	320 1730	
(9/37 Ratio) 63 10 (Six) ***(Replaces 320 4048)***	.....	1	320 4083	
(9/37 Ratio) 64 10 (OHV-196): 65 10 (Six-199) ***(Replaces 320 4781)***	.....	1	320 4775	

Copyright 1963 American Motors Corp.

GROUP NO. — DESCRIPTION — YEAR and MODEL	PRIMARY GROUP NO.	PER CAR	PART NO.	CODE
(9/40 Ratio) 60 20 (Note 9.001-1 Type 1) ***(Order Comp.)***	.....	1	320 1839	
(9/40 Ratio) 60 20 (Note 9.001-1 Type 2): 61 20 ***(Order Comp.)***	.....	1	320 1744	
(10/41 Ratio) 63 10-80 (V8) ***(Replaces 320 4096)***	.....	1	320 4095	
(10/41 Ratio) 60 20 (Note 9.001-1 Type 1) ***(Replaces 320 1841)***	.....	1	320 1840	
(10/41 Ratio) 60 80 (Note 9.001-1 Type 1) ***(Order Comp.)***	.....	1	320 1855	
(11/39 Ratio) 63-64 10-80 (V8) ***(Replaces 320 4102)***	.....	1	320 4101	
(11/39 Ratio) 64 10 (OHVC-232) ***(Replaces 320 5313)***	.....	1	320 5314	
(11/39 Ratio) 65 10 (Six-232)(Except Marlin)	.....	1	320 5539	
(11/39 Ratio) 65 10 (V8): 65 50 (Marlin): 65 80	.....	1	320 5549	
(11/39 Ratio) 60 20 (Note 9.001-1 Type 1) ***(Order Comp.)***	.....	1	320 1843	
(11/39 Ratio) 60 20 (Note 9.001-1 Type 2): 61 20 ***(Order Comp.)***	.....	1	320 1748	
(13/40 Ratio) 64 01: 65 01 (LHE)(OHV-196)(OHV-199) ***(Replaces 320 4770)***	.....	1	320 4760	
(13/41 Ratio) 63-64 10-80 (V8) ***(Replaces 320 4098)***	.....	1	320 4097	
(13/41 Ratio) 64 10 (OHVC-232) ***(Replaces 320 5315)***	.....	1	320 5316	
(13/41 Ratio) 65 10 (Six-232)(Except Marlin)	.....	1	320 5541	
(13/41 Ratio) 65 10 (V8): 65 50 (Marlin): 65 80	.....	1	320 5551	
(13/41 Ratio) 60 20 (Note 9.001-1 Type 2): 61 20	.....	1	320 1750	
(13/43 Ratio) 60 01 (Note 9.001-1 Types 1 & 2) ***(Replaces 320 1875)***	.....	1	320 1874	
(13/43 Ratio) 60 01 (Note 9.001-1 Type 3) ***(Replaces 320 1726)***	.....	1	320 1725	
(13/43 Ratio) 61 Thru 63 01 ***(Replaces 320 2562)***	.....	1	320 2561	
(13/43 Ratio) 64 01: 65 01 (LHE)(OHV-196)(OHV-199) ***(Replaces 320 4768)***	.....	1	320 4758	
(13/43 Ratio) 65 01 (OHV-232)	.....	1	320 6202	
(13/43 Ratio) 60 10 (Note 9.001-1 Types 1 & 2) ***(Order Comp.)***	.....	1	320 1889	
(13/43 Ratio) 60 10 (Note 9.001-1 Type 3) ***(Order Comp.)***	.....	1	320 1732	
(13/43 Ratio) 61-62 10 ***(Replaces 320 2580)***	.....	1	320 2579	
(13/43 Ratio) 63 10 (Six) ***(Replaces 320 4086)***	.....	1	320 4085	
(13/43 Ratio) 64 10 (OHV-196): 65 10 (Six-199) ***(Replaces 320 4782)***	.....	1	320 4776	
(15/41 Ratio) 64 01: 65 01 (OHV-196)(OHV-199) ***(Replaces 320 4769)***	.....	1	320 4759	
(15/43 Ratio) 61 Thru 63 01 ***(Replaces 320 2564)***	.....	1	320 2563	
(15/43 Ratio) 63-64 10 (V8): 63 80 ***(Replaces 320 4100)***	.....	1	320 4099	
(15/43 Ratio) 65 10-80 (V8-287)	.....	1	320 5553	
(15/43 Ratio) 60 80 (Note 9.001-1 Type 2): 61-62 80 ***(Replaces 320 1863)***	.....	1	320 1862	
LUBRICANT, Rear Axle (1 Quart Can)				
60 Thru 65 01-10-80	15.260	AR	899 1018	
PLATE, Rear Axle Locking Differential Identification				
60 Thru 64 01-10-80: 65 01: 65 10 (OHV-199)	.....	1	315 5433	
65 10-80 (OHV-232)(V8)	.....	1	317 7202	
STICKER, Rear Axle Locking Differential				
60 Thru 65 01-10-20-80	.....	1	315 7268	
9.003 HOUSING, Rear Axle (Incl. Tubes)				
60 01 (Note 9.001-1 Type 1)	.....	1	320 0903	
60 01 (Note 9.001-1 Types 2 & 3): 61 01 (Note 9.001-2)	.....	1	320 1720	
60 01 (15/43 Ratio Only)	.....	1	320 2410	
61 01 (Note 9.001-3): 62-63 01	.....	1	320 2453	
64-65 01	.....	1	320 4785	
60 10 (Note 9.001-1 Type 1)	.....	1	320 0523	
60 10 (Note 9.001-1 Types 2 & 3): 61 10 (Note 9.001-2)	.....	1	320 1213	
61 10 (Note 9.001-3): 62 10	.....	1	320 2454	
63 10 (Six)	.....	1	320 4073	
64 10 (OHV-196): 65 10 (Six-199)	.....	1	320 4786	
63-64 10-80 (V8)	.....	1	320 4167	
64 10 (OHV-232)	.....	1	320 5317	

Copyright 1963 American Motors Corp.

GROUP NO. — DESCRIPTION — YEAR and MODEL		PRIMARY GROUP NO.	PER CAR	PART NO.	CODE
65 10 (OHV-232)***(OHV-199-Heavy Duty)***(Except Marlin)		.....	1	320 5619	
65 10-80 (V8): 65 50 (Marlin): 65 80 (OHV-232)		.....	1	320 5499	
60-61 20		.....	1	320 1180	
60 Thru 62 80		.....	1	320 1191	
ATTACHING PARTS					
Rear Axle To Torque Tube					
STUD	60 Thru 65 10-20-80	9.148	6	312 1398	
WASHER, Lock	60 Thru 65 10-20-80	17.820	6	G103328	NA
NUT, Hexagon	60 Thru 65 10-20-80	17.406	6	G103027	NA
SCREW, Rear Axle Tube Grease Hole					
60 Thru 65 01-10-20-80		.....	4	400 0222	
SHIM SET, Alignment (Under Spring Seat)					
63 01		.....	AR	320 4512	
9.004 BUMPER, Rear Axle Housing					
60 Thru 63 01		.....	1	313 3687	
64-65 01 (Push-On Type)		.....	1	316 9743	
65 01 (Screw-On Type)		11.075	1	316 9720	
ATTACHING PARTS					
Bumper To Housing					
SCREW, Tapping	60 Thru 63 01	17.670	2	G455451	NA
WASHER, Plain	60 Thru 63 01	17.814	2	800 0141	
9.005 PLUG, Rear Axle Filler					
60 Thru 64 01-10-20-80: 65 01: 65 10 (Six-199)...(Incl. Gasket)		1.151	1	314 6316	
65 10 (Six-199-Heavy Duty): 65 10-80 (Six-232-LLD)(V8-LLD)		17.526	1	G444872	NA
65 10-80 (OHV-232-WLD)(V8-WLD)		17.526	1	G444630	NA
GASKET, Rear Axle Filler Plug					
60 Thru 63 01-10-20-80		1.151	1	314 6289	
64 01-10-80		1.151	1	316 7984	
9.007 COVER ASSEMBLY, Rear Axle Housing					
60 01-10: 61 01-10 (Note 9.001-2)...(Incl. Plug Assembly & Gasket)		.....	1	311 9166	
61 01-10 (Note 9.001-3): 62-63 01-10 (Six)...(Incl. Plug Assembly & Gasket)		.....	1	320 2261	
64-65 01: 64 10 (OHV-196): 65 10 (OHV-199)...(Incl. Plug Assembly & Gasket)		.....	1	320 4722	
60 Thru 64 10-20-80 (V8): 64 10 (OHVC-232)...(Incl. Plug Assembly & Gasket)		.....	1	311 9185	
65 10 (Six-199-Heavy Duty): 65 10-80 (Six-232)(V8)		.....	1	317 2123	
ATTACHING PARTS					
Cover To Housing					
SCREW, Machine	60 Thru 62 01 (10 Req.): 60 10 (LAS-8 Req.): 60 10 (WAS-7 Req.): 61 10 (8 Req.): 62 10 (10 Req.) ***(Replaces 800 0161)***	17.814	AR	400 1100	
SCREW, Hexagon	65 01	17.626	1	400 0987	
SCREW, Machine	60 10 (LAS-2 Req.): 60 10 (WAS-3 Req.): 61 10 (2 Req.) ***(Replaces 800 0459)***	17.626	AR	400 0994	
SCREW, Machine	63 01 (10 Req.): 63 10 (Six-9 Req.)	.....	AR	400 0709	
SCREW, Machine	64-65 01 (9 Req.): 64 10 (OHV-196-9 Req.): 65 10 (12 Req.): 65 80 (11 Req.)	.....	AR	400 0722	#
BOLT, Hexagon	65 80	17.038	1	G180077	NA#

Copyright 1963 American Motors Corp.

GROUP NO. — DESCRIPTION — YEAR and MODEL	PRIMARY GROUP NO.	PER CAR	PART NO.	CODE
BOLT, Hexagon ..... 60 20-80 (LAS-8 Req.): 60 20-80 (WAS-7 Req.): 61 Thru 64 10-20-80 (V8-10 Req.): 64 10 (OHVC-232)	17.038	AR	G179835	NA
BOLT, Hexagon ..... 60 20-80 (LAS-2 Req.): 60 20-80 (WAS-3 Req.)	17.038	AR	G180121	NA
STUD..... 63 10 (Six)	13.410	1	313 8484	
STUD..... 64 10 (OHV-196): 65 10 (OHV-199)	5.178	1	312 2698	
STUD..... 63-64 10-80 (V8): 64 10 (OHVC-232)	.....	1	316 8196	
WASHER, Lock ..... 64 10 (OHV-196): 65 80	17.820	1	G103320	NA#
WASHER, Lock ..... 60 Thru 64 10-20-80 (V8): 64 10 (OHVC-232)	17.820	10	G103321	NA
WASHER, Lock ..... ***65 10 (OHV-199-Heavy Duty):*** 65 10-80 (OHV-232)(V8)	17.820	12	G103320	NA

GASKET, Rear Axle Housing Cover

60 01-10: 61 01-10 (Note 9.001-2)	.....	1	310 5344	
61 01-10 (Note 9.001-3): 62-63 01-10 (Six)	.....	1	316 0235	
64-65 01: 64 10 (OHV-196): 65 10 (OHV-199)	.....	1	317 2510	
60 Thru 64 10-20-80 (V8): 64 10 (OHVC-232)	.....	1	98 537	
65 10 (Six-199-Heavy Duty): 65 10-80 (Six-232)(V8)	.....	1	317 2122	

9.018 SCREW, Rear Axle Differential Side Bearing Cap

60 Thru 65 01 (Except 15/43 Ratio): 60 Thru 64 10 (OHV-196): 65 10 (OHV-199)	.....	4	22 620	
60 01 (15/43 Ratio-2" Long)	.....	2	315 9987	
60 01 (15/43 Ratio-2-1/4 Long)	.....	2	22 620	
65 10 (Six-199-Heavy Duty): 64-65 10-80 (Six-232): 60 Thru 65 10-20-80 (V8)	.....	4	98 536	

9.021 CASE ASSEMBLY, Rear Axle Differential

65 10-80 (OHV-232-LLD)(V8-LLD): ***65 10 (OHV-199-Heavy Duty)***	.....	1	317 4532	
65 10-80 (OHV-232-WLD)(V8-WLD)	.....	1	320 5630	
(All Except 15/41 Ratio) 64-65 01 (LLD): 64 10 (OHV-196-LLD): 65 10 (OHV-199-LLD)	.....	1	317 1252	
(All Except 15/41 Ratio) 64-65 01 (WLD): 64 10 (OHV-196-WLD): 65 10 (OHV-199-WLD)	.....	1	320 4928	
(All Except 15/43 Ratio) 60 01-10 (LLD-Note 9.001-1 Type 1)	.....	1	314 2116	
(All Except 15/43 Ratio) 60 01-10 (LLD-Note 9.001-1 Type 2)	.....	1	315 8356	
(All Except 15/43 Ratio) 60 01-10 (LLD-Note 9.001-1 Type 3): 61 01-10 (LLD-Note 9.001-2)	.....	1	315 6049	
(All Except 15/43 Ratio) 60 01-10 (WLD-Note 9.001-1 Types 1 & 2)	.....	1	320 1576	
(All Except 15/43 Ratio) 60 01-10 (WLD-Note 9.001-1 Type 3)	.....	1	320 1652	
(All Except 15/43 Ratio) 61 01-10 (LLD-Note 9.001-3): 62-63 01-10 (Six-LLD) ***(Replaces 316 0211)***	.....	1	316 4378	
(All Except 15/43 Ratio) 61 Thru 63 01-10 (Six-WLD) ***(Replaces 320 2587)***	.....	1	320 4173	#
(All Except 15/43 Ratio) 60 20-80 (LLD-Note 9.001-1 Type 1)	.....	1	315 8357	
(All Except 15/43 Ratio) 60 20-80 (LLD-Note 9.001-1 Type 2): 61 Thru 64 10-20-80 (V8): 64 10 (OHVC-232-LLD)	.....	1	315 7888	
(All Except 15/43 Ratio) 60 20-80 (WLD-Note 9.001-1 Type 1)	.....	1	320 0816	
(All Except 15/43 Ratio) 60 20-80 (WLD-Note 9.001-1 Type 2): 61 Thru 64 10-20-80 (V8): 64 10 (OHVC-232-WLD)	.....	1	320 1653	
(15/41 Ratio) 64 01 (LLD): 65 01 (OHV-196-LLD)(OHV-199-LLD)	.....	1	317 1251	
(15/41 Ratio) 64 01 (WLD): 65 01 (OHV-196-WLD)(OHV-199-WLD)	.....	1	320 4929	
(15/43 Ratio) 60 01 (LLD)	.....	1	315 9985	
(15/43 Ratio) 61 Thru 63 01 (LLD) ***(Replaces 316 0232)***	.....	1	316 4379	
(15/43 Ratio) 61 Thru 63 01 (WLD) ***(Replaces 320 2586)***	.....	1	320 4172	
(15/43 Ratio) 60 80 (LLD-Note 9.001-1 Type 1)	.....	1	315 8358	
(15/43 Ratio) 60 80 (LLD-Note 9.001-1 Type 2): 63-64 10 (V8-LLD): 61 Thru 64 80 (LLD)	.....	1	315 7889	
(15/43 Ratio) 60 80 (WLD-Note 9.001-1 Type 1)	.....	1	320 2133	
(15/43 Ratio) 60 80 (WLD-Note 9.001-1 Type 2): 63-64 10 (V8-WLD): 61 Thru 64 80 (WLD)	.....	1	320 2134	

Copyright 1963 American Motors Corp.

GROUP NO. — DESCRIPTION — YEAR and MODEL	PRIMARY GROUP NO.	PER CAR	PART NO.	CODE
9.024 CASE, Rear Axle Differential				
65 10-80 (OHVC-232-LLD)(V8-LLD): ***65 10 (OHV-199-Heavy Duty)***	.....	1	317 4531	
65 10-80 (OHVC-232-WLD)(V8-WLD)	.....	1	320 5811	
(All Except 15/41 Ratio) 64 01-10 (Six-LLD): 65 01 (LLD): 65 10 (OHV-199-LLD)	.....	1	317 1167	
(All Except 15/41 Ratio) 64 01-10 (Six-WLD): 65 01 (WLD): 65 10 (OHV-199-WLD)	.....	1	320 4926	
(All Except 15/43 Ratio) 60 01-10 (LLD-Note 9.001-1 Type 1)	.....	1	314 1106	
(All Except 15/43 Ratio) 60 01-10 (LLD-Note 9.001-1 Types 2 & 3): 61 01-10 (LLD-Note 9.001-2)	.....	1	315 6048	
(All Except 15/43 Ratio) 60 01-10 (WLD-Note 9.001-1 Types 1 & 2)	.....	1	320 2183	
(All Except 15/43 Ratio) 60 01-10 (WLD-Note 9.001-1 Type 3)	.....	1	320 2443	
(All Except 15/43 Ratio) 61 Thru 63 01-10 (Six-WLD) ***(Replaces 320 2748)***	.....	1	320 4279	
(All Except 15/43 Ratio) 61 01-10 (LLD-Note 9.001-3)	.....	1	316 0210	
(All Except 15/43 Ratio) 62-63 01-10 (Six-LLD)	.....	1	316 4368	
(All Except 15/43 Ratio) 60 Thru 64 10-20-80 (V8-LLD): 64 10 (OHVC-232-LLD)	.....	1	315 7968	
(All Except 15/43 Ratio) 60 Thru 64 10-20-80 (V8-WLD)	.....	1	320 0817	
(15/41 Ratio) 64 01 (LLD): 65 01 (OHV-196-LLD)(OHV-199-LLD)	.....	1	317 1195	
(15/41 Ratio) 64-65 01 (WLD)	.....	1	320 4927	
(15/43 Ratio) 60 01 (LLD)	.....	1	315 9984	
(15/43 Ratio) 61 01 (LLD)	.....	1	316 0231	
(15/43 Ratio) 61-62 01 (WLD)	.....	1	320 2749	
(15/43 Ratio) 62-63 01 (LLD)	.....	1	316 4367	
(15/43 Ratio) 63 01 (WLD)	.....	1	320 4278	
(15/43 Ratio) 63-64 10 (V8-LLD): 60 Thru 64 80 (LLD)	.....	1	315 7933	
(15/43 Ratio) 63-64 10 (V8-WLD): 60 Thru 63 80 (WLD)	.....	1	320 2136	
ATTACHING PARTS **Front Half To Rear Half**				
SCREW, Machine..... 60 Thru 64 01-10 (Six-WLD)	.....	6	320 2191	
SCREW, Machine..... 60 Thru 65 10-20-80 (V8-WLD): 65 10-80 (OHVC-232-WLD)	.....	8	320 0818	
WASHER, Lock..... 60 Thru 64 01-10 (Six-WLD)	17.824	6	G138538	NA
9.027 GEAR SET, Rear Axle Differential Side (Incl. Side Gears, Pinion Gears, Thrust Washers, Block, Pin And Shaft)				
60 01-10 (LLD-Note 9.001-1 Type 1)	.....	1	311 8578	
60 01-10 (LLD-Note 9.001-1 Type 2)	.....	1	320 1664	
60 01-10 (LLD-Note 9.001-1 Type 3): 61 01-10 (LLD)	.....	1	320 1687	
60 01-10 (WLD-Note 9.001-1 Types 1 & 2)	.....	1	320 2184	
62 Thru 65 01 (LLD): 62 Thru 64 10 (OHV-196-LLD): 65 10 (OHV-199-LLD)	.....	1	320 3394	
60 01-10 (WLD-Note 9.001-1 Type 3): 61 Thru 64 01-10 (Six-WLD): 65 01 (WLD): 65 10 (OHV-199-WLD) ***(Replaces 320 2444)***	.....	1	320 4277	
60 20-80 (LLD-Note 9.001-1 Type 1)	.....	1	311 1911	
60 20-80 (LLD-Note 9.001-1 Type 2): 61 Thru 65 10-20-80 (V8-LLD): 64 10 (OHVC-232-LLD): ***65 10 (OHV-199-Heavy Duty):*** 65 10-80 (OHV-232-LLD)	.....	1	320 1688	
60 20-80 (WLD-Note 9.001-1 Type 1)	.....	1	320 0815	
60 20-80 (WLD-Note 9.001-1 Type 2): 61 Thru 65 10-20-80 (V8-WLD): 65 10-80 (OHVC-232-WLD)	.....	1	320 2135	
GEAR, Rear Axle Differential Side				
60 01-10 (LLD-Note 9.001-1 Type 2)	.....	2	315 8336	
60 01-10 (LLD-Note 9.001-1 Type 3): 61 Thru 65 01 (LLD): 61 Thru 64 10 (OHV-196-LLD): 65 10 (OHV-199-LLD)	.....	2	315 7664	
60 20-80 (LLD-Note 9.001-1 Type 1)	.....	2	312 1441	

Copyright 1963 American Motors Corp.

GROUP NO. — DESCRIPTION — YEAR and MODEL	PRIMARY GROUP NO.	PER CAR	PART NO.	CODE
61 Thru 65 10-20-80 (V8-LLD): 64-65 10-80 (OHVC-232-LLD): ***65 10 (OHV-199-Heavy Duty):*** 60 20-80 (LLD-Note 9.001-1 Type 2 And 3)	.....	2	315 7773	
9.029 WASHER, Rear Axle Differential Side Gear Thrust				
60 Thru 65 01 (LLD-.0325 Thick): 60 Thru 64 10 (OHV-196-LLD-.0325 Thick): 65 10 (OHV-199-LLD-.0325 Thick)	.....	2	310 5325	
60 Thru 65 01 (LLD-.0425 Thick): 60 Thru 64 10 (OHV-196-LLD-.0425 Thick) 65 10 (OHV-199-LLD-.0425 Thick)	.....	2	320 2272	#
60 Thru 65 10-20-80 (V8-LLD-.0635 Thick): 64-65 10-80 (OHVC-232-LLD-.0635 Thick): ***65 10 (OHV-199-Heavy Duty)***	.....	2	87 048	
60 Thru 65 10-20-80 (V8-LLD-.0735 Thick): 64-65 10-80 (OHV-232-LLD-.0735 Thick)	.....	2	320 2273	#
9.031 GEAR SET, Rear Axle Differential Pinion (Incl. Pinion Gears, Side Gears, Thrust Washers, Block, Pin And Shaft)				
60 01-10 (LLD-Note 9.001-1 Type 1)	9.027	1	311 8578	
60 01-10 (LLD-Note 9.001-1 Type 2)	9.027	1	320 1664	
60 01-10 (LLD-Note 9.001-1 Type 3): 61 01-10 (LLD)	9.027	1	320 1687	
60 01-10 (WLD-Note 9.001-1 Types 1 & 2)	9.027	1	320 2184	
62 Thru 65 01 (LLD): 62 Thru 64 10 (OHV-196-LLD): 65 10 (OHV-199-LLD)...	.....	1	320 3394	
60 01-10 (WLD-Note 9.001-1 Type 3): 61 Thru 64 01-10 (Six-WLD): 65 01 (WLD): 65 10 (OHV-199-WLD) ..... ***(Replaces 320 2444)***	9.027	1	320 4277	
60 20-80 (LLD-Note 9.001-1 Type 1)	9.027	1	311 1911	
60 20-80 (LLD-Note 9.001-1 Type 2): 61 Thru 65 10-20-80 (V8-LLD): 64 10 (OHVC-232-LLD): ***65 10 (OHV-199-Heavy Duty):*** 65 10-80 (OHV-232-LLD) .	9.027	1	320 1688	
60 20-80 (WLD-Note 9.001-1 Type 1)	9.027	1	320 0815	
60 20-80 (WLD-Note 9.001-1 Type 2): 61 Thru 64 10-20-80 (V8-WLD)	9.027	1	320 2135	
GEAR, Rear Axle Differential Pinion				
60-61 01-10 (LLD)	.....	2	314 1108	
62 Thru 65 01 (LLD): 62 Thru 64 10 (OHV-196-LLD): 65 10 (OHV-199-LLD)...	.....	2	316 4366	
60 Thru 65 10-20-80 (V8-LLD): 64-65 10-80 (OHVC-232-LLD): ***65 10 (OHV-199-Heavy Duty)***	.....	2	315 3597	
9.033 WASHER, Rear Axle Differential Pinion Thrust				
60-61 01-10 (LLD)	.....	2	314 1110	
62 Thru 65 01 (LLD): 62 Thru 64 10 (OHV-196-LLD): 65 10 (OHV-199-LLD)...	.....	2	316 4365	
60 Thru 65 01 (WLD): 60 Thru 64 10 (OHV-196-WLD): 65 10 (OHV-199-WLD) ..	.....	2	320 2190	
60 Thru 65 10-20-80 (V8-LLD): 64-65 10-80 (OHVC-232-LLD): ***65 10 (OHV-199-Heavy Duty)***	.....	2	87 044	
9.034 RING, Rear Axle Differential Side Gear				
60 20-80 (WLD-Note 9.001-1 Type 1)	.....	2	320 0811	
60 20-80 (WLD-Note 9.001-1 Type 2): 61 Thru 65 10-20-80 (V8-WLD): 65 10-80 (OHVC-232-WLD)	.....	2	320 2138	
9.035 DISC KIT, Rear Axle Differential Clutch Friction (Includes Plate)				
60 Thru 65 10-20-80 (V8-WLD): 64-65 10-80 (OHV-232-WLD)	.....	1	320 4715	
DISC, Rear Axle Differential Clutch Friction				
60 Thru 65 10-20-80 (V8-WLD): 65 10-80 (OHVC-232-WLD)	.....	4	320 0812	

Copyright 1963 American Motors Corp.

GROUP NO. — DESCRIPTION — YEAR and MODEL	PRIMARY GROUP NO.	PER CAR	PART NO.	CODE
PLATE, Rear Axle Differential Clutch Friction				
60 Thru 65 10-20-80 (V8-WLD-3/32" Thick)	.....	2	320 0813	
60 Thru 65 10-20-80 (V8-WLD-1/16" Thick): 65 10-80 (OHVC-232-WLD-1/16" Thick)	.....	2	320 2901	
60 Thru 65 10-20-80 (V8-WLD-Dished): 65 10-80 (OHVC-232-WLD-Dished)	.....	2	320 2889	
9.036 SHAFT, Rear Axle Differential				
60-61 01-10 (LLD) ***(Replaces 310 5323)***	.....	1	316 4700	
60 Thru 64 01-10 (Six-WLD): 65 01 (WLD): 65 10 (OHV-199-WLD)	.....	1	320 2188	
62 Thru 65 01 (LLD): 62 Thru 64 10 (OHV-196-LLD): 65 10 (OHV-199-LLD)	.....	1	316 4363	
60 Thru 65 10-20-80 (V8-LLD): 64 10 (OHVC-232-LLD): ***65 10 (OHV-199-Heavy Duty):*** 65 10-80 (OHVC-232-LLD)	.....	1	315 3596	
60 Thru 65 10-20-80 (V8-WLD): 65 10-80 (OHVC-232-WLD)	.....	1	320 0810	
PIN, Rear Axle Differential Shaft				
60 Thru 65 01-10-20-80 (LLD)	.....	1	315 3437	
60 Thru 64 01-10 (Six-WLD): 65 01 (WLD): 65 10 (OHV-199-WLD)	.....	1	320 2189	
9.038 SPRING KIT, Rear Axle Differential Preload				
60 Thru 62 01-10 (WLD)	.....	1	320 2185	
63-64 01-10 (Six-WLD): 65 01 (WLD): 65 10 (OHV-199-WLD)	.....	1	320 4275	#
9.039 BLOCK, Rear Axle Differential Pinion Shaft Thrust				
60 01-10 (Note 9.001-1 Types 1 & 2)	.....	1	314 3482	
60 01-10 (Note 9.001-1 Type 3): 61 01-10: 62 01 (WLD)	.....	1	316 2322	
62 Thru 65 01 (LLD): 62 Thru 64 10 (OHV-196-LLD): 65 10 (OHV-199-LLD)	.....	1	316 4364	
63-64 01-10 (Six-WLD): 65 01 (WLD): 65 10 (OHV-199-WLD)	.....	1	320 4280	
60 20-80 (LLD-Note 9.001-1 Type 1)	.....	1	315 9325	
60 20-80 (LLD-Note 9.001-1 Type 2): 61 Thru 65 10-20-80 (V8-LLD): 64 10 (OHV-232-LLD): ***65 10 (OHV-199-Heavy Duty):*** 65 10-80 (OHVC-232-LLD)	.....	1	316 2323	
60 Thru 65 10-20-80 (V8-WLD): 65 10-80 (OHVC-232-WLD)	.....	1	320 0814	
9.041 BEARING KIT, Rear Axle Differential Side (Incl. Bearing And Cup)				
60 01-10 (Note 9.001-1 Type 2 & 3): 61 Thru 63 01-10 (Six) ***(Ref. Pr. List)***	.....	2	320 4856	
64 01: 64 10 (OHV-196) ***(Ref. Pr. List)***	.....	2	320 4972	
60 Thru 64 10-20-80 (V8) ***(Ref. Pr. List)***	.....	2	320 4857	
BEARING, Rear Axle Differential Side				
60 01-10 (Note 9.001-1 Type 1)	.....	2	310 5346	
60 01-10 (Note 9.001-1 Types 2 & 3): 61 Thru 65 01: 61 Thru 64 10 (OHV-196): 65 10 (OHV-199)	.....	2	315 6052	
60 Thru 64 10-20-80 (V8): 64 10 (OHVC-232)	.....	2	98 557	
65 10 (OHV-199-Heavy Duty): 65 10-80 (OHV-232)(V8)	.....	2	317 2565	
9.043 CUP, Rear Axle Differential Side Bearing				
60 01-10 (Note 9.001-1 Type 1)	.....	2	310 5347	
60 01-10 (Note 9.001-1 Types 2 & 3): 61 Thru 63 01-10 (Six)	.....	2	315 7273	
64-65 01: 64 10 (OHV-196): 65 10 (OHV-199)	.....	2	317 1166	
60 Thru 64 10-20-80 (V8): 64 10 (OHVC-232)	.....	2	98 556	
65 10 (OHV-199-Heavy Duty): 65 10-80 (OHV-232)(V8)	.....	2	317 2566	

Copyright 1963 American Motors Corp.

GROUP NO. — DESCRIPTION — YEAR and MODEL	PRIMARY GROUP NO.	PER CAR	PART NO.	CODE
9.045 SHIM SET, Rear Axle Differential Side Bearing (Incl. 1 Each Of Shims Listed For Respective Models)				
60 01-10 (Note 9.001-1 Type 1)	.....	AR	320 2501	
60 01-10 (Note 9.001-1 Types 2 & 3): 61 Thru 65 01: 61 Thru 64 10 (OHV-196): 65 10 (OHV-199)	.....	AR	320 2344	
60 Thru 64 10-20-80 (V8): 64 10 (OHVC-232)	.....	AR	320 2500	
65 10-80 (OHVC-232)(V8)	.....	AR	320 5532	
SHIM, Rear Axle Differential Side Bearing				
(.003) 60 01-10 (Note 9.001-1 Type 1)	9.057	AR	311 2620	
(.003) 60 Thru 64 10-20-80 (V8)	.....	AR	98 526	
(.005) 60 01-10 (Note 9.001-1 Type 1)	9.057	AR	311 2621	
(.005) 60 Thru 64 10-20-80 (V8)	.....	AR	98 527	
(.010) 60 01-10 (Note 9.001-1 Type 1)	9.057	AR	311 2622	
(.010) 60 Thru 64 10-20-80 (V8)	.....	AR	98 528	
(.070) 60 01-10 (Note 9.001-1 Type 1)	.....	AR	311 6296	
(.070) 60 Thru 64 10-20-80 (V8)	.....	AR	311 5306	
(.072) 60 01-10 (Note 9.001-1 Type 1)	.....	AR	311 6297	
(.072) 60 Thru 64 10-20-80 (V8)	.....	AR	311 5307	
(.074) 60 01-10 (Note 9.001-1 Type 1)	.....	AR	311 6298	
(.074) 60 Thru 64 10-20-80 (V8)	.....	AR	311 5308	
(.076) 60 01-10 (Note 9.001-1 Type 1)	.....	AR	311 6299	
(.076) 60 Thru 64 10-20-80 (V8)	.....	AR	311 5309	
(.078) 60 01-10 (Note 9.001-1 Type 1)	.....	AR	311 6300	
(.078) 60 Thru 64 10-20-80 (V8)	.....	AR	311 5310	
(.080) 60 01-10 (Note 9.001-1 Type 1)	.....	AR	310 8472	
(.080) 60 Thru 64 10-20-80 (V8)	.....	AR	311 4674	
(.080) 65 10-80 (OHVC-232)(V8)	.....	AR	320 5512	
(.082) 60 01-10 (Note 9.001-1 Type 1)	.....	AR	311 2014	
(.082) 60 Thru 64 10-20-80 (V8)	.....	AR	311 4675	
(.082) 65 10-80 (OHVC-232)(V8)	.....	AR	320 5513	
(.084) 60 01-10 (Note 9.001-1 Type 1)	.....	AR	311 2015	
(.084) 60 Thru 64 10-20-80 (V8)	.....	AR	311 4676	
(.084) 65 10-80 (OHVC-232)(V8)	.....	AR	320 5514	
(.085) 60 01-10 (Note 9.001-1 Type 1)	.....	AR	310 8473	
(.086) 60 01-10 (Note 9.001-1 Type 1)	.....	AR	311 2016	
(.086) 60 Thru 64 10-20-80 (V8)	.....	AR	311 4677	
(.086) 65 10-80 (OHVC-232)(V8)	.....	AR	320 5515	
(.088) 60 01-10 (Note 9.001-1 Type 1)	.....	AR	311 2017	
(.088) 60 Thru 64 10-20-80 (V8)	.....	AR	311 4678	
(.088) 65 10-80 (OHVC-232)(V8)	.....	AR	320 5516	
(.090) 60 01-10 (Note 9.001-1 Type 1)	.....	AR	310 8474	
(.090) 60 Thru 64 10-20-80 (V8)	.....	AR	311 4679	
(.090) 65 10-80 (OHVC-232)(V8)	.....	AR	320 5517	
(.092) 60 01-10 (Note 9.001-1 Type 1)	.....	AR	311 2018	
(.092) 60 Thru 64 10-20-80 (V8)	.....	AR	311 4680	
(.092) 65 10-80 (OHVC-232)(V8)	.....	AR	320 5518	
(.094) 60 01-10 (Note 9.001-1 Type 1)	.....	AR	311 2019	
(.094) 60 Thru 64 10-20-80 (V8)	.....	AR	311 4681	
(.094) 65 10-80 (OHVC-232)(V8)	.....	AR	320 5519	
(.095) 60 01-10 (Note 9.001-1 Type 1)	.....	AR	310 8475	
(.096) 60 01-10 (Note 9.001-1 Type 1)	.....	AR	311 2020	
(.096) 60 Thru 64 10-20-80 (V8)	.....	AR	311 4682	
(.096) 65 10-80 (OHVC-232)(V8)	.....	AR	320 5520	
(.098) 60 01-10 (Note 9.001-1 Type 1)	.....	AR	311 2021	
(.098) 60 Thru 64 10-20-80 (V8)	.....	AR	311 4683	
(.098) 65 10-80 (OHVC-232)(V8)	.....	AR	320 5521	
(.100) 60 Thru 64 10-20-80 (V8)	.....	AR	311 4684	
(.100) 65 10-80 (OHVC-232)(V8)	.....	AR	320 5522	
(.102) 65 10-80 (OHVC-232)(V8)	.....	AR	320 5523	
(.104) 65 10-80 (OHVC-232)(V8)	.....	AR	320 5524	

Copyright 1963 American Motors Corp.

GROUP NO. — DESCRIPTION — YEAR and MODEL	PRIMARY GROUP NO.	PER CAR	PART NO.	CODE
(.106) 65 10-80 (OHVC-232)(V8)	.....	AR	320 5525	
(.108) 65 10-80 (OHVC-232)(V8)	.....	AR	320 5526	
(.110) 65 10-80 (OHVC-232)(V8)	.....	AR	320 5527	
(.142) 60 01-10 (Note 9.001-1 Types 2 & 3): 61 Thru 64 01-10 (Six): 65 01: 65 10 (OHV-199)	.....	AR	320 2326	
(.144) 60 01-10 (Note 9.001-1 Types 2 & 3): 61 Thru 64 01-10 (Six): 65 01: 65 10 (OHV-199)	.....	AR	320 2327	
(.146) 60 01-10 (Note 9.001-1 Types 2 & 3): 61 Thru 64 01-10 (Six): 65 01: 65 10 (OHV-199)	.....	AR	320 2328	
(.148) 60 01-10 (Note 9.001-1 Types 2 & 3): 61 Thru 64 01-10 (Six): 65 01: 65 10 (OHV-199)	.....	AR	320 2329	
(.150) 60 01-10 (Note 9.001-1 Types 2 & 3): 61 Thru 64 01-10 (Six): 65 01: 65 10 (OHV-199)	.....	AR	320 2330	
(.152) 60 01-10 (Note 9.001-1 Types 2 & 3): 61 Thru 64 01-10 (Six): 65 01: 65 10 (OHV-199)	.....	AR	320 2331	
(.154) 60 01-10 (Note 9.001-1 Types 2 & 3): 61 Thru 64 01-10 (Six): 65 01: 65 10 (OHV-199)	.....	AR	320 2332	
(.156) 60 01-10 (Note 9.001-1 Types 2 & 3): 61 Thru 64 01-10 (Six): 65 01: 65 10 (OHV-199)	.....	AR	320 2333	
(.158) 60 01-10 (Note 9.001-1 Types 2 & 3): 61 Thru 64 01-10 (Six): 65 01: 65 10 (OHV-199)	.....	AR	320 2334	
(.160) 60 01-10 (Note 9.001-1 Types 2 & 3): 61 Thru 64 01-10 (Six): 65 01: 65 10 (OHV-199)	.....	AR	320 2335	
(.162) 60 01-10 (Note 9.001-1 Types 2 & 3): 61 Thru 64 01-10 (Six): 65 01: 65 10 (OHV-199)	.....	AR	320 2336	
(.164) 60 01-10 (Note 9.001-1 Types 2 & 3): 61 Thru 64 01-10 (Six): 65 01: 65 10 (OHV-199)	.....	AR	320 2337	
(.166) 60 01-10 (Note 9.001-1 Types 2 & 3): 61 Thru 64 01-10 (Six): 65 01: 65 10 (OHV-199)	.....	AR	320 2338	
(.168) 60 01-10 (Note 9.001-1 Types 2 & 3): 61 Thru 64 01-10 (Six): 65 01: 65 10 (OHV-199)	.....	AR	320 2339	
(.170) 60 01-10 (Note 9.001-1 Types 2 & 3): 61 Thru 64 01-10 (Six): 65 01: 65 10 (OHV-199)	.....	AR	320 2340	
(.172) 60 01-10 (Note 9.001-1 Types 2 & 3): 61 Thru 64 01-10 (Six): 65 01: 65 10 (OHV-199)	.....	AR	320 2341	
(.174) 60 01-10 (Note 9.001-1 Types 2 & 3): 61 Thru 64 01-10 (Six): 65 01: 65 10 (OHV-199)	.....	AR	320 2342	
(.176) 60 01-10 (Note 9.001-1 Types 2 & 3): 61 Thru 64 01-10 (Six): 65 01: 65 10 (OHV-199)	.....	AR	320 2343	

9.050 GEAR SET, Rear Axle Ring (Incl. Pinion)

(8/35 Ratio) 60 10 (Note 9.001-1 Type 1)	.....	1	314 9924	
(8/35 Ratio) 60 10 (Note 9.001-1 Types 2 & 3): 61-62 10	.....	1	315 6061	
(9/34 Ratio) 60 01-10 (Note 9.001-1 Type 1)	.....	1	313 2638	
(9/34 Ratio) 60 01-10 (Note 9.001-1 Types 2 & 3): 61 Thru 63 01-10 (Six)	.....	1	315 6055	
(9/34 Ratio) 64 01: 65 01 (LHE)(OHV-196)(OHV-199): 64 10 (OHV-196): 65 10 (OHV-199)	.....	1	317 1189	
(9/37 Ratio) 60 01-10 (Note 9.001-1 Type 1) ***(Use 320 6500)***	.....	1	313 0382	
(9/37 Ratio) 60 01-10 (Note 9.001-1 Types 2 & 3)	.....	1	315 6057	
(9/37 Ratio) 61 Thru 63 01-10 (Six)	.....	1	316 0660	
(9/37 Ratio) 64 01: 65 01 (LHE)(OHV-196)(OHV-199): 64 10 (OHV-196): 65 10 (OHV-199)	.....	1	317 1190	
(9/40 Ratio) 60-61 20	.....	1	315 3083	
(10/41 Ratio) 60 Thru 63 10-20-80 (V8)	.....	1	315 0114	
(11/39 Ratio) 60 Thru 64 10-20-80 (V8): 64 10 (OHVC-232) ***(Use 320 6521)***	.....	1	315 3085	
(11/39 Ratio) ***65 10 (OHV-199-Heavy Duty):*** 65 10-80 (OHVC-232)(V8)	.....	1	317 3052	
(13/40 Ratio) 64 01: 65 01 (OHV-196)(OHV-199)	.....	1	317 0984	
(13/41 Ratio) 60 Thru 64 10-20-80 (V8): 64 10 (OHVC-232) ***(Use 320 6519)***	.....	1	315 3081	
(13/41) 65 10-80 (OHVC-232)(V8)	.....	1	317 3051	
(13/43 Ratio) 60 01-10 (Note 9.001-1 Type 1)	.....	1	314 4127	
(13/43 Ratio) 60 01-10 (Note 9.001-1 Types 2 & 3): 61 Thru 63 01-10 (Six)	.....	1	315 6059	
(13/43 Ratio) 64 01: 65 01 (LHE)(OHV-196)(OHV-199): 64 10 (OHV-196): 65 10 (OHV-199)	.....	1	317 1188	
(13/43 Ratio) 65 01 (OHV-232)	.....	1	317 8733	
(15/41 Ratio) 64 01: 65 01 (OHV-196)(OHV-199) ***(Use 320 6532)***	.....	1	317 1338	#

Copyright 1963 American Motors Corp.

GROUP NO. — DESCRIPTION — YEAR and MODEL	PRIMARY GROUP NO.	PER CAR	PART NO.	CODE
(15/43 Ratio) 60 Thru 63 01	.....	1	315 9960	
(15/43 Ratio) 63-64 10 (V8): 64 10 (Six-232): 60 Thru 64 80 .... ***(Use 320 6522)***	.....	1	315 6025	
(15/43 Ratio) 65 10 (V8-287): 65 80 (V8)	.....	1	317 3053	
ATTACHING PARTS				
Ring Gear To Differential Case				
SCREW, Machine..... 60 Thru 65 01 (21/32" Long): 60 Thru 64 10 (OHV-196-21/32" Long): 65 10 (OHV-199)	.....	8	314 7577	
SCREW, Machine..... 60 01-10 (13/16" Long): 60 Thru 65 10-20-80 (V8-13/16" Long): 64 10 (OHVC-232): ***65 10 (OHV-199-Heavy Duty):*** 65 10-80 (OHVC-232)	.....	8	314 7576	
Pinion To Rear Yoke				
STUD..... 65 01 (OHV-232) ..... ***(Replaces 317 8630)***	.....	1	317 8644	
WASHER, Lock..... 65 01 (OHV-232)	17.820	1	G103323	
WASHER, Plain..... 65 01 (OHV-232)	17.814	1	400 1293	
NUT, Hexagon..... 65 01 (OHV-232)	17.406	1	G120371	
NUT, Rear Axle Pinion				
60 Thru 65 01: 60 Thru 64 10 (OHV-196): 65 10 (OHV-199)	9.080	1	310 5331	
60 Thru 64 10-20-80 (V8): 64 10 (OHVC-232)	.....	1	315 4105	
65 10 (OHV-199-Heavy Duty): 65 10-80 (OHV-232)(V8)..... ***(Use 320 6699)***	.....	1	317 6968	
WASHER, Rear Axle Pinion				
60 Thru 65 01: 60 Thru 64 10 (OHV-196): 65 10 (OHV-199)	.....	1	313 0372	
60 Thru 64 10-20-80 (V8): 64 10 (OHVC-232)	.....	1	315 4152	
SPACER, Rear Axle Pinion Collapsible				
65 10 (OHV-199-Heavy Duty): 65 10-80 (OHVC-232)(V8)	.....	1	317 2269	
LOCK, Rear Axle Pinion				
65 10 ***(OHV-199-Heavy Duty):*** 65 10-80 (V8)(OHV-232)	.....	1	318 0724	
WASHER, Rear Axle Pinion Lock				
60 Thru 65 01: 60 Thru 64 10 (OHV-196): 65 10 (OHV-199)	.....	1	313 0373	
60 Thru 64 10-20-80 (V8): 64 10 (OHVC-232)	.....	1	315 4151	
RING, Rear Axle Pinion Snap				
65 10-50-80 (OHV-232)(V8)	.....	1	318 2445	
9.052 BEARING KIT, Rear Axle Pinion (Incl. Bearing & Cup)				
(Front) 60 01-10 (Note 9.001-1 Types 2 & 3): 61 Thru 64 01-10 (Six) ..... ***(Ref. Pr. List)***	.....	1	320 4858	
(Front) 60 Thru 64 10-20-80 (V8) ..... ***(Ref. Pr. List)***	.....	1	320 4860	
(Rear) 60 01-10 (Note 9.001-1 Types 2 & 3): 61 Thru 63 01-10 (Six) ..... ***(Ref. Pr. List)***	.....	1	320 4859	
(Rear) 64 01: 64 10 (OHV-196) ..... ***(Ref. Pr. List)***	.....	1	320 4970	
(Rear) 60 Thru 64 10-20-80 (V8) ..... ***(Ref. Pr. List)***	.....	1	320 4861	
BEARING, Rear Axle Pinion				
(Front) 60 01-10 (Note 9.001-1 Type 1)	.....	1	310 5340	
(Front) 60 01-10 (Note 9.001-1 Types 2 & 3): 61 Thru 65 01: 61 Thru 64 10 (OHV-196): 65 10 (OHV-199)	.....	1	315 6063	
(Front) 60 Thru 64 10-20-80 (V8): 64 10 (OHVC-232)	.....	1	98 553	
(Front) 65 10-80 (OHVC-232)(V8): ***65 10 (OHV-199-Heavy Duty)***	.....	1	317 2135	
(Rear) 60 01-10 (Note 9.001-1 Type 1)	.....	1	310 5338	
(Rear) 60 01-10 (Note 9.001-1 Types 2 & 3): 61 Thru 63 01-10 (Six)	.....	1	315 6066	
(Rear) 64 01-10 (Six): 65 01: 65 10 (OHV-199)	.....	1	317 0947	
(Rear) 60 Thru 64 10-20-80 (V8): 64 10 (OHVC-232)	.....	1	98 555	
(Rear) ***65 10 (OHV-199-Heavy Duty):*** 65 10-80 (OHVC-232)(V8)	.....	1	317 2563	

Copyright 1963 American Motors Corp.

GROUP NO. — DESCRIPTION — YEAR and MODEL	PRIMARY GROUP NO.	PER CAR	PART NO.	CODE
9.055 CUP, Rear Axle Pinion Bearing				
(Front) 60 01-10 (Note 9.001-1 Type 1)	.....	1	310 5341	
(Front) 60 01-10 (Note 9.001-1 Types 2 & 3): 61 Thru 65 01: 61 Thru 64 10 (OHV-196): 65 10 (OHV-199)	.....	1	315 6062	
(Front) 60 Thru 64 10-20-80 (V8): 64 10 (OHVC-232)	.....	1	98 552	
(Front) ***65 10 (OHV-199-Heavy Duty):*** 65 10-80 (OHVC-232)(V8)	.....	1	317 2134	
(Rear) 60 01-10 (Note 9.001-1 Type 1)	.....	1	310 5339	
(Rear) 60 01-10 (Note 9.001-1 Types 2 & 3): 61 Thru 65 01: 61 Thru 64 10 (OHV-196): 65 10 (OHV-199)	.....	1	315 6065	
(Rear) 60 Thru 64 10-20-80 (V8): 64 10 (OHVC-232)	.....	1	98 554	
(Rear) ***65 10 (OHV-199-Heavy Duty):*** 65 10-80 (OHVC-232)(V8)	.....	1	317 2564	
9.057 SHIM SET, Rear Axle Pinion Adjusting (Incl. 1 Each Of Shims Listed For Respective Models)				
60 Thru 65 01: 60 Thru 64 10 (OHV-196): 65 10 (OHV-199)	.....	AR	320 2345	
60 Thru 64 10-20-80 (V8): 64 10 (OHVC-232) ***(Replaces 320 2346)***	.....	AR	320 6135	#
65 10-80 (OHVC-232)(V8)	.....	AR	320 5567	
SHIM, Rear Axle Pinion Adjusting				
(.003) 60 Thru 65 01: 60 Thru 64 10 (OHV-196): 65 10 (OHV-199)	.....	AR	314 4245	
(.003) 60 Thru 64 10-20-80 (V8): 64 10 (OHVC-232)	.....	AR	314 4170	
(.005) 60 Thru 65 01: 60 Thru 64 10 (OHV-196): 65 10 (OHV-199)	.....	AR	314 4246	
(.005) 60 Thru 64 10-20-80 (V8): 64 10 (OHVC-232)	.....	AR	314 4171	
(.007) 60 Thru 65 01: 60 Thru 64 10 (OHV-196): 65 10 (OHV-199)	.....	AR	314 4483	
(.007) 60 Thru 64 10-20-80 (V8): 64 10 (OHVC-232)	.....	AR	314 4484	
(.010) 60 Thru 65 01: 60 Thru 64 10 (OHV-196): 65 10 (OHV-199)	.....	AR	314 4247	
(.010) 60 Thru 64 10-20-80 (V8): 64 10 (OHVC-232)	.....	AR	314 4172	
(.020) 60 Thru 65 01: 60 Thru 64 10 (OHV-196): 65 10 (OHV-199)	.....	AR	314 4248	
(.020) 60 Thru 64 10-20-80 (V8): 64 10 (OHVC-232)	.....	AR	314 4173	
(.093) 65 10-80 (OHVC-232)(V8)	.....	AR	320 5533	
(.094) 65 10-80 (OHVC-232)(V8)	.....	AR	320 5534	
(.095) 65 10-80 (OHVC-232)(V8)	.....	AR	320 5535	
(.096) 65 10-80 (OHVC-232)(V8)	.....	AR	320 5536	
(.098) 65 10-80 (OHVC-232)(V8)	.....	AR	320 5537	
(.099) 65 10-80 (OHVC-232)(V8)	.....	AR	320 5555	
(.100) 65 10-80 (OHVC-232)(V8)	.....	AR	320 5556	
(.101) 65 10-80 (OHVC-232)(V8)	.....	AR	320 5557	
(.102) 65 10-80 (OHVC-232)(V8)	.....	AR	320 5558	
(.103) 65 10-80 (OHVC-232)(V8)	.....	AR	320 5559	
(.104) 65 10-80 (OHVC-232)(V8)	.....	AR	320 5560	
(.105) 65 10-80 (OHVC-232)(V8)	.....	AR	320 5561	
(.106) 65 10-80 (OHVC-232)(V8)	.....	AR	320 5562	
(.107) 65 10-80 (OHVC-232)(V8)	.....	AR	320 5563	
(.108) 65 10-80 (OHVC-232)(V8)	.....	AR	320 5564	
(.109) 65 10-80 (OHVC-232)(V8)	.....	AR	320 5565	
(.110) 65 10-80 (OHVC-232)(V8)	.....	AR	320 5566	
9.062 SHIM SET, Rear Axle Pinion Shaft Bearing (Incl. 1 Each Of Shims Listed For Respective Models)				
60 01-10 (Note 9.001-1 Type 1)	.....	AR	320 2502	
60 01-10 (Note 9.001-1 Types 2 & 3): 61 Thru 65 01: 61 Thru 64 10 (OHV-196): 65 10 (OHV-199)	.....	AR	320 2290	
60 Thru 64 10-20-80 (V8): 64 10 (OHVC-232) ***(Replaces 320 2503)***	.....	AR	320 3037	
SHIM, Rear Axle Pinion Shaft Bearing				
(.002) 60 01-10 (Note 9.001-1 Types 2 & 3): 61 Thru 65 01: 61 Thru 64 10 (OHV-196): 65 10 (OHV-199)	.....	AR	320 2286	
(.003) 60 01-10 (Note 9.001-1 Types 2 & 3): 61 Thru 65 01: 61 Thru 64 10 (OHV-196): 65 10 (OHV-199)	.....	AR	320 2287	
(.003) 62 Thru 64 10-80 (V8): 64 10 (OHVC-232)	.....	AR	98 530	
(.005) 60 01-10 (Note 9.001-1 Types 2 & 3): 61 Thru 65 01: 61 Thru 64 10 (OHV-196): 65 10 (OHV-199)	.....	AR	320 2288	

Copyright 1963 American Motors Corp.

GROUP NO. — DESCRIPTION — YEAR and MODEL	PRIMARY GROUP NO.	PER CAR	PART NO.	CODE
(.010) 60 01-10(Note 9.001-1 Types 2 & 3): 61 Thru 65 01: 61 Thru 64 10 (OHV-196): 65 10 (OHV-199)	.....	AR	320 2289	
(.010) 62 Thru 64 10-80 (V8): 64 10 (OHVC-232)	.....	AR	98 532	
(.053) 60 01-10 (Note 9.001-1 Type 1)	.....	AR	311 3873	
(.053) 60-61 20-80	.....	AR	311 4619	
(.054) 60 01-10 (Note 9.001-1 Type 1)	.....	AR	311 3874	
(.054) 60-61 20-80	.....	AR	311 4620	
(.056) 60 01-10 (Note 9.001-1 Type 1)	.....	AR	311 3875	
(.056) 60-61 20-80	.....	AR	311 4621	
(.058) 60 01-10 (Note 9.001-1 Type 1)	.....	AR	311 3876	
(.058) 60-61 20-80	.....	AR	311 4622	
(.059) 60 01-10 (Note 9.001-1 Type 1)	.....	AR	311 3877	
(.059) 60-61 20-80	.....	AR	311 4623	
(.063) 60 01-10 (Note 9.001-1 Type 1)	.....	AR	311 3878	
(.063) 60-61 20-80	.....	AR	311 4624	
(.064) 60 01-10 (Note 9.001-1 Type 1)	.....	AR	311 3879	
(.064) 60-61 20-80	.....	AR	311 4625	
(.066) 60 01-10 (Note 9.001-1 Type 1)	.....	AR	311 3880	
(.066) 60-61 20-80	.....	AR	311 4626	
(.068) 60 01-10 (Note 9.001-1 Type 1)	.....	AR	311 3881	
(.068) 60-61 20-80	.....	AR	311 4627	
(.069) 60 01-10 (Note 9.001-1 Type 1)	.....	AR	311 3882	
(.069) 60-61 20-80	.....	AR	311 4628	
(.090) 62 Thru 64 10-80 (V8): 64 10 (OHVC-232)	.....	AR	320 3034	
(.091) 62 Thru 64 10-80 (V8): 64 10 (OHVC-232)	.....	AR	320 3035	
(.092) 62 Thru 64 10-80 (V8): 64 10 (OHVC-232)	.....	AR	320 3036	
(.170) 60 01-10 (Note 9.001-1 Types 2 & 3): 61 Thru 65 01: 61 Thru 64 10 (OHV-196): 65 10 (OHV-199)	.....	AR	320 2285	

9.064 SEAL, Rear Axle Pinion Oil

60 Thru 65 01: ***(Replaces 312 8171)***	.....	1	320 3580	
60 Thru 64 10 (OHV-196): 65 10 (OHV-199)	.....	1	313 8143	
60 Thru 65 10-20-80 (V8): 64 10 (OHVC-232): ***65 10 (OHV-199-Heavy Duty):*** 65 10-80 (OHVC-232)	.....	1	315 3825	

RETAINER, Rear Axle Pinion Oil Seal

65 01: 60 Thru 64 10 (OHV-196): 65 10 (OHV-199)	.....	1	313 8144	
60 Thru 65 10-20-80 (V8): 64 10 (OHVC-232): ***65 10 (OHV-199-Heavy Duty):*** 65 10-80 (OHVC-232)	.....	1	315 0112	

GASKET, Rear Axle Pinion Oil Seal

60 Thru 64 10 (OHV-196): 65 10 (OHV-199)	.....	1	314 9899	
60 Thru 64 10-20-80 (V8): 64 10 (OHVC-232)	.....	1	312 3593	
65 10 (OHV-199-Heavy Duty): 65 10-80 (OHVC-232)(V8)	.....	1	317 5195	

9.068 SHAFT, Rear Axle Drive

60 01 (Less Keyway-Note 9.001-1 Types 1 & 2)	.....	2	315 4254	
60 01 (Less Keyway-Note 9.001-1 Type 3): 61 01 (Less Keyway) ***(Ref. Pr. List)***	.....	2	315 7665	
61 Thru 63 01 (With Keyway)	.....	2	316 0730	
64-65 01 (With Keyway)	.....	2	316 9489	
60 10 (Less Keyway-Note 9.001-1 Types 1 & 2)	.....	2	315 3151	
60 10 (Less Keyway-Note 9.001-1 Type 3): 61 10 (Less Keyway) ***(Ref. Pr. List)***	.....	2	315 7666	
61-62 10 (With Keyway)	.....	2	316 0731	
(Left) 63-64 10 (OHV-196-With Keyway): 65 10 (OHV-199-With Keyway)	.....	1	316 0731	
(Left) 64-65 10 (OHVC-232-With Keyway)(Except Marlin): ***65 10 (OHV-199-Heavy Duty)***	.....	1	317 0881	
(Left) 60 20 (Less Keyway-Note 9.001-1 Type 1)	.....	1	315 3157	
(Left) 60 20 (Less Keyway-Note 9.001-1 Type 2): 61 20 (Less Keyway) ***(Ref. Pr. List)***	.....	1	315 7829	

Copyright 1963 American Motors Corp.

GROUP NO. — DESCRIPTION — YEAR and MODEL	PRIMARY GROUP NO.	PER CAR	PART NO.	CODE
(Left) 61 20 (With Keyway)	.....	1	316 0665	
(Left) 60 80 (Less Keyway-Note 9.001-1 Type 1)	.....	1	315 3155	
(Left) 60 80 (Less Keyway-Note 9.001-1 Type 2): 61 80 (Less Keyway) ***(Ref. Pr. List)***	.....	1	315 7774	
(Left) 61-62 80 (With Keyway)	.....	1	316 0663	
(Left) 63 Thru 65 10 (V8-With Keyway): 65 50 (Marlin-With Keyway): 63 Thru 65 80 (With Keyway)	.....	1	316 6747	
(Right) 63-64 10 (OHV-196-With Keyway): 65 10 (OHV-199-With Keyway)	.....	1	316 6621	
(Right) 63 Thru 65 10 (V8-With Keyway): 65 50 (Marlin-With Keyway): 63 Thru 65 80 (With Keyway)	.....	1	316 7860	
(Right) 64-65 10 (OHVC-232-With Keyway)(Except Marlin): ***65 10 (OHV-199-Heavy Duty)***	.....	1	317 0882	
(Right) 60 20 (Less Keyway-Note 9.001-1 Type 1)	.....	1	315 3158	
(Right) 60 20 (Less Keyway-Note 9.001-1 Type 2): 61 20 (Less Keyway) ***(Ref. Pr. List)***	.....	1	315 7830	
(Right) 61 20 (With Keyway)	.....	1	316 0666	
(Right) 60 80 (Less Keyway-Note 9.001-1 Type 1)	.....	1	315 3156	
(Right) 60 80 (Less Keyway-Note 9.001-1 Type 2): 61 80 (Less Keyway) ***(Ref. Pr. List)***	.....	1	315 7775	
(Right) 61-62 80 (With Keyway)	.....	1	316 0664	
ATTACHING PARTS Shaft To Hub				
KEY, Woodruff ..... 61 Thru 65 01-10-20-80	17.344	2	G103905	
PIN, Cotter ..... 60 Thru 65 01-10-20-80	17.460	2	G103387	NA
WASHER, Plain ..... 60 Thru 65 01-10-80	.....	2	18 737	
NUT, Lock ..... 60 Thru 65 01-10-20-80	.....	2	315 5675	
9.072 SEAL, Rear Axle Drive Shaft Inner Oil				
60 Thru 65 01-10 (Six)(Except Marlin) ***(Replaces 315 0548)***	.....	2	317 0699	
60 Thru 64 10-20-80 (V8)	.....	2	315 0815	
65 10-80 (V8): 65 50 (Marlin): 65 80 (OHVC-232)	.....	2	317 0700	
9.073 BEARING, Rear Axle Drive Shaft				
60 Thru 65 01-10 (Six)(Except Marlin)	8.292	2	314 1139	
60 Thru 65 10-20-80 (V8): 65 50 (Marlin): 65 80 (Six)	8.300	2	315 0046	
GASKET, Rear Axle Drive Shaft Bearing				
60 Thru 62 01-10	8.300	2	316 1355	
60 Thru 62 20-80	8.300	2	316 0018	
9.075 CUP, Rear Axle Drive Shaft Bearing				
60 Thru 65 01-10 (Six)(Except Marlin)	8.294	2	314 3329	
60 Thru 65 10 (V8): 60 Thru 65 20-80: 65 50 (Marlin)	8.302	2	315 0045	
9.076 RETAINER, Rear Axle Drive Shaft				
60 Thru 65 10 (V8): 60 Thru 65 20-80	8.306	2	315 0075	#
65 10 (Six-WDB)	8.310	2	317 7138	#
9.077 SEAL, Rear Axle Drive Shaft Outer Oil				
60-61 01-10 ***(Ref. Pr. List)***	8.312	2	314 8513	
62 Thru 64 01-10 (Six): 65 01: 65 10 (Six-LDB)(Except Marlin)...(Incl. Retainer)	8.312	2	316 6233	
63 Thru 65 10 (V8): 63 Thru 65 80: 65 50 (Marlin)...(Incl. Retainer)	8.312	2	316 7833	
65 10 (Six-WDB)(Except Marlin)	8.312	2	317 7227	
60 Thru 62 20-80	8.312	2	315 0065	
RETAINER, Rear Axle Drive Shaft Outer Oil Seal				
60-61 01-10 ***(Ref. Pr. List)***	.....	2	316 1356	
60 Thru 62 20-80	8.312	2	315 0066	

Copyright 1963 American Motors Corp.

GROUP NO. — DESCRIPTION — YEAR and MODEL		PRIMARY GROUP NO.	PER CAR	PART NO.	CODE
9.086 BUMPER, Rear Axle					
60 Thru 63 01		.....	2	313 0052	
64-65 01		.....	2	316 9750	
60 18-28-83-88 (LAS): 60 15-19-25-29-85-89: 61-62 10-20-80		.....	2	314 4957	
63 Thru 65 10-80		.....	2	316 6622	
ATTACHING PARTS					
Bumper To Side Sill					
SCREW, Tapping.....	60 Thru 65 01-10-20-80	17.670	4	G172475	NA
9.089 BRACKET, Rear Axle Sway Stabilizer					
60 Thru 62 10		.....	1	315 8199	
63 Thru 65 10 (Six)(Except Marlin)		.....	1	316 6815	
60 Thru 62 20-80		.....	1	315 6099	
63 Thru 65 10-80 (V8): 65 50 (Marlin): 65 80 (OHV-232)		.....	1	316 6816	
ATTACHING PARTS					
Bracket To Axle					
WASHER, Bite.....	60 Thru 65 10-20-80	9.134	1	312 5060	
WASHER, Lock.....	60 Thru 65 10-20-80	17.820	1	G120898	NA
WASHER, Plain.....	60 Thru 65 10-20-80 ***(Replaces 800 0453)***	17.814	1	400 1172	
NUT, Hexagon.....	60 Thru 65 10-20-80	17.406	1	G124634	NA
9.090 STABILIZER, Rear Axle Sway					
60-61 10-20-80..(Less Replaceable Grommets And Spacers) ***(Ref. Pr. List)***		.....	1	315 0175	
61-62 10-20-80...(Incl. Non-Replaceable Grommets And Spacers)		.....	1	316 2276	
63 Thru 65 10-80		.....	1	316 6521	
ATTACHING PARTS					
Stabilizer To Bracket On Side Sill					
SCREW, Machine.....	60 Thru 65 10-20-80	.....	1	314 5050	
WASHER, Lock.....	60 Thru 65 10-20-80	17.820	1	G121574	NA
NUT, Hexagon.....	60 Thru 65 10-20-80	17.406	2	G9413970	
Stabilizer To Rear Axle					
BOLT, Hexagon	60 Thru 65 10-20-80	17.038	1	G271751	NA
WASHER, Lock.....	60 Thru 65 10-20-80	17.820	2	G121574	NA
NUT, Hexagon.....	60 Thru 65 10-20-80	17.406	1	G121358	NA
GROMMET, Rear Axle Sway Stabilizer					
60-61 10-20-80 (Use With Replaceable Grommet Type Stabilizer)		.....	4	312 4400	
SPACER, Rear Axle Sway Stabilizer					
60-61 10-20-80 (Use With Replaceable Spacer Type Stabilizer)		.....	2	313 6080	
9.092 ROD, Rear Axle Sway Stabilizer Bracket Support					
60 Thru 62 18-28-80 (L3S)		.....	1	315 6672	
60 Thru 62 18-28-80 (W3S)		.....	1	315 8702	
ATTACHING PARTS					
Rod To Bracket					
BOLT, Hexagon	60 Thru 62 18-28-80	17.038	1	G181668	NA
WASHER, Lock.....	60 Thru 62 18-28-80	17.820	1	G131100	NA
WASHER, Bite.....	60 Thru 62 18-28-80	10.003	1	310 8995	
NUT, Hexagon.....	60 Thru 62 18-28-80	17.406	1	G120370	NA
Rod To Floor Pan					
WASHER, Plain.....	60 Thru 62 18-28-80 (L3S) ***(Replaces 800 0179)***	17.814	1	400 1117	
WASHER, Lock.....	60 Thru 62 18-28-80 (L3S)	17.820	1	G131100	NA
NUT, Hexagon.....	60 Thru 62 18-28-80 (L3S)	17.406	1	G120370	NA

Copyright 1963 American Motors Corp.

GROUP NO. — DESCRIPTION — YEAR and MODEL	PRIMARY GROUP NO.	PER CAR	PART NO.	CODE
9.100 SHAFT ASSEMBLY, Propeller				
60 Thru 63 01 (WAT): ***163 01 (Can-WAT-Note 9.100-3)***...(Incl. 2 Spider Assemblies And 2 Yokes) ***(Replaces 315 4661)***	.....	1	317 1075	
60 Thru 63 01 (WOD)...(Incl. 2 Spider Assemblies And 2 Yokes) ***(Replaces 315 4262)***	.....	1	317 1076	#
60 Thru 62 01 (WST-LCV)...(Incl. 2 Spider Assemblies & 2 Yokes)	.....	1	315 4263	
61 Thru 63 07 (WST)...(Incl. 2 Spider Assemblies & 2 Yokes) ***(Replaces 317 1078)***	.....	1	316 0928	
63 01 (WST-LCV): ***163 01 (CAN-WST-Note 9.001-1)***...(Incl. 2 Spider Assemblies And 2 Yokes)	.....	1	317 1077	✓
163 01 (CAN-WST-Note 9.100-2)...(Incl. 2 Spider Assemblies And 2 Yokes)	.....	1	316 9538	
163 01 (CAN-WAT-Note 9.100-4) ...(Incl. 2 Spider Assemblies And 2 Yokes)	.....	1	316 9534	
64 01 (WST): ***164 01 (Can):*** 65 01 (LHE-WST)(OHV-196-WST-Note 9.100-5)(OHV-199-WST-Note 9.100-5)***(Can-OHV-196-WST)(Can-OHV-196-WAT-Note 9.100-7)***...(Incl. 2 Spider Assemblies And 2 Yokes) ***(Replaces 317 2849)***	.....	1	320 6686	#
64 01 (WOD): 65 01 (LHE-WOD)(OHV-196-WOD)(OHV-199-WOD)...(Incl. 2 Spider Assemblies & 2 Yokes) ***(Use 320 6689)***	.....	1	317 0369	
64 01 (WAT): 65 01 (LHE-WAT)(OHV-196-WAT)(OHV-199-WAT)...(Incl. 2 Spider Assemblies And 2 Yokes) ***(Replaces 317 2003)***	.....	1	320 6687	#
65 01 (OHV-196-WST-Note 9.100-6)(OHV-199-WST-Note 9.100-6): ***165 01 (Can-OHV-196-WAT-Note 9.100-8)***...(Incl. 2 Spider Assemblies And 2 Yokes)	.....	1	317 9111	#
65 01 (OHV-232-WAT) ***(Replaces 317 8607)***	.....	1	320 6688	#
165 01 (Can-Six-199-WST)	.....	1	318 2064	#
165 01 (Can-LHE-WAT)(Can-LHE-WST)(Can-Six-199-WAT)	.....	1	318 2065	#
60-61 10 (WST)...(Incl. Coupling, Seal & Retainer)	.....	1	311 9150	
60-61 10 (WOD)...(Incl. Coupling, Seal & Retainer)	.....	1	311 9151	
60 Thru 62 10 (WAT): 62 10 (WST-9/34 Ratio)...(Incl. Spider Assembly & Yoke)	.....	1	315 2911	
60 Thru 62 10 (WST-Heavy-Duty-Note 9.140-1)...(Incl. Spider Assembly & Yoke)	.....	1	315 5762	
62 10 (WST-9/37 Ratio)(WOD)...(Incl. Coupling, Seal, Retainers, Center Bearing & Lock Ring)	.....	1	316 3473	
63 10 (Six)...(Incl. Damper)	.....	1	316 8270	
63-64 10 (V8-WST)(V8-WOD)...(Incl. 2 Spider Assemblies, 3 Yokes, Coupling, Seal, Retainers, Center Bearing And Lock Ring)	.....	1	317 0917	
63-64 10 (V8-WAT)***(V8-WST-Heavy Duty)(V8-WOD-Heavy Duty)***: 63-64 80...(Incl. 2 Spider Assemblies, 3 Yokes, Coupling, Seal, Retainers, Center Bearing And Lock Ring)	.....	1	316 6712	
64 10 (OHV-196): 65 10 (OHV-199)	.....	1	317 0370	
64 10 (OHVC-232-WOD)	.....	1	317 2792	
64 10 (OHVC-232-WST)(OHVC-232-WAT)	.....	1	317 2791	
65 10 (OHV-199-Heavy Duty): 65 10-80 (OHVC-232-WAT)(OHVC-232-WST)	.....	1	317 5159	
65 10-80 (OHVC-232-WOD)	.....	1	317 5160	
65 10-80 (V8-287-WAT)(V8-327)...(Incl. 2 Spider Assemblies, 3 Yokes, Coupling, Seal, Retainers, Center Bearing And Lock Ring	.....	1	317 5168	✓
65 10-80 (V8-287-WST)(V8-287-WOD) 65 10-80 (V8-W4ST-WFGS)...(Incl. 2 Spider Assemblies, 3 Yokes, Coupling, Seal, Retainers, Center Bearing & Lock Ring)	.....	1	317 5167	
60-61 20 (WST)(WOD)...(Incl. Coupling, Seal, Retainers, Center Bearing & Lock Ring)	.....	1	315 3715	

NOTE 9.100-1: On 163 01 (CAN-WST) use prior to Serial No. B. T. 111172.
NOTE 9.100-2: On 163 01 (CAN-WST) use beg. with Serial No. B. T. 111172.
NOTE 9.100-3: On 163 01 (CAN-WAT) use prior to Serial No. B. T. 111150.
NOTE 9.100-4: On 163 01 (CAN-WAT) use beg. with Serial No. B. T. 111150.
NOTE 9.100-5: Shaft Assembly is 53" Long and used prior to Body Serial No. E-105188.
NOTE 9.100-6: Shaft Assembly is 53" Long and used beginning with Body Serial No. E-105188.
NOTE 9.100-7: Shaft Assembly is 53" Long and used prior to Body Serial No. QT-501071 except on QT-501256, QT-501258 and QT-501260 for LHD and used prior to Engine Serial No. QT-501112 except for Serial Nos. QT-501023, QT-501024, QT-501025, QT-501030, QT-501041, QT-501044 and QT-501049 for RHD.
NOTE 9.100-8: Shaft Assembly is 55" Long and used beginning with Engine Serial No. QT-501071 except on QT-501256, QT-501258 and QT-501260 for LHD and used beginning with Engine Serial No. QT-501112 except for Serial Nos. QT-501023, QT-501024, QT-501025, QT-501030, QT-501041, QT-501044 and QT-501049 for RHD.

Copyright 1963 American Motors Corp.

GROUP NO. — DESCRIPTION — YEAR and MODEL	PRIMARY GROUP NO.	PER CAR	PART NO.	CODE
60-61 20 (WAT): 62 80 (WAT)...(Incl. Spider Assembly, Yoke, Coupling, Seal, Retainers, Center Bearing & Lock Ring) ***(Replaces 315 3605)***	.....	1	316 5986	
60-61 80 (WAT)...(Incl. Spider Assembly, Yoke, Coupling, Seal, Retainers, Center Bearing & Lock Ring)	.....	1	315 6291	
60-61 80 (WST)(WOD)...(Incl. Coupling, Seal, Retainers, Center Bearing & Lock Ring)	.....	1	315 3716	
62 80 (WST)(WOD)...(Incl. Coupling, Seal, Retainers, Center Bearing & Lock Ring)	.....	1	316 3900	
ATTACHING PARTS				
Propeller Shaft To Pinion Yoke				
BOLT, "U"..... 65 01 (OHV-232)	.....	2	317 8343	
WASHER, Lock..... 65 01 (OHV-232)	17.820	4	G120214	NA
NUT, Hexagon..... 65 01 (OHV-232)	17.406	4	G120368	
9.101 COUPLING, Propeller Shaft				
60-61 10 (WST)(WOD): 62 10 (WST-9/37 Ratio (WOD): 63 10 (Six-WOD)	.....	1	313 8142	
60 Thru 64 10-20-80 (V8): 64 10 (OHVC-232)	.....	1	315 3585	
65 10 (OHV-199-Heavy Duty): 65 10-80 (OHVC-232)(V8)	.....	1	317 5163	
DAMPER, Propeller Shaft				
60 Thru 65 01 (LHE)(OHV-196): 65 01 (OHV-199)...(Incl. Shield And Nut)	.....	1	312 9564	
63 10 (Six-WST)(Six-WAT)	.....	1	320 4452	
64 10 (OHV-196): 65 10 (OHV-199) ***(Replaces 317 0563)***	.....	1	320 4787	
64 10 (OHVC-232-WAT)	.....	1	320 5484	
65 10-80 (OHVC-232-WAT)	.....	1	320 5800	
SEAL, Propeller Shaft Oil				
60 Thru 64 10 (OHV-196): 65 10 (OHV-199)	.....	1	313 8146	
60 Thru 65 10-20-80 (V8): 64 10 (OHVC-232): ***65 10 (OHV-199-Heavy Duty):*** 65 10-80 (OHVC-232)	.....	1	315 3601	
RETAINER, Propeller Shaft Oil Seal				
60 Thru 64 10 (OHV-196): 65 10 (OHV-199)	.....	1	313 8147	
60 Thru 65 10-20-80 (V8): 64 10 (OHVC-232): ***65 10 (OHV-199-Heavy Duty):*** 65 10-80 (OHVC-232)	.....	1	315 3602	
SPACER, Propeller Shaft To Pinion				
60 Thru 63 10 (Six)	.....	1	313 8466	
64 10 (OHV-196): 65 10 (OHV-199)	.....	1	317 1293	
60 Thru 64 10-20-80 (V8): 64 10 (OHVC-232)	.....	1	315 3078	
65 10 (OHV-199-Heavy Duty): 65 10-80 (OHVC-232)(V8)	.....	1	317 5164	
9.104 YOKE, Universal Joint				
165 01 (Can-LHE-Note 9.104-5 Type 1)(Can-Six-196-Note 9.104-5 Type 1) (Can-Six-199-Note 9.104-5 Type 1)	.....	1	320 4921	
165 01 (Can-LHE-Note 9.104-5 Type 2)(Can-Six-196-Note 9.104-5 Type 2) (Can-Six-199-Note 9.104-5 Type 2)	.....	1	320 9210	

NOTE 9.104-1: Bearing has O. D. of 1".
NOTE 9.104-2: Bearing has O. D. of 1".010. Spider has word "Detroit" on it.
NOTE 9.104-3: Bearing has O. D. of 1-1/8".
NOTE 9.104-4: Bearing has O. D. of 1-1/16". Bearing and Yoke have word "Spicer" on them.
NOTE 9.104-5: Two Types of Universal Joint Yokes were used on the 165 01 (Can-LHE)(Can-Six-196) (Can-Six-199). They can be identified as follows:
Type 1: Has no marking.
Type 2: Has the word "Spicer" forged on its side.

Copyright 1963 American Motors Corp.

GROUP NO. — DESCRIPTION — YEAR and MODEL	PRIMARY GROUP NO.	PER CAR	PART NO.	CODE
60 Thru 62 10 (WAT-Note 9.104-1): 62 10 (WST-9/34 Ratio-Note 9.104-1)	.....	1	320 0536	
60 Thru 62 10 (WAT-Note 9.104-2): 62 10 (WST-9/34 Ratio-Note 9.104-2)	.....	1	320 2423	
60 Thru 62 10 (WST-Heavy Duty-Note 9.140-1)	.....	1	320 1561	
60-61 20 (WAT-Note 9.104-1): 62 80 (WAT-Note 9.104-1)	.....	1	320 0852	
60 Thru 62 20-80 (WAT-Note 9.104-3)	.....	1	320 0853	
60-61 80 (WAT-Note 9.104-4)	.....	1	320 2654	
63 Thru 65 10 (V8-WAT)***(V8-WST-Heavy Duty)(V8-WOD-Heavy Duty):*** 63 Thru 65 80	.....	1	320 3987	
63 Thru 65 10 (V8-WST)(V8-WOD)	.....	1	320 4582	
(Front) 60 Thru 63 01 (WST-LCV-Note 9.104-1): ***163 01 (CAN-WST-Notes 9.100-1 And 9.104-1)***	.....	1	311 6954	
(Front) 60 Thru 63 01 (WST-LCV-9.104-2): ***163 01 (CAN-WST-Notes 9.100-1 And 9.104-2)***	.....	1	320 2426	
(Front) ***163 01 (CAN-WST-Note 9.100-2)***	.....	1	320 9073	
(Front) 61 Thru 63 07 (WST)	.....	1	320 2772	
(Front) 60 Thru 63 01 (WOD-Note 9.104-1)	.....	1	311 6953	
(Front) 60 Thru 63 01 (WOD-Note 9.104-2)	.....	1	320 2427	
(Front) 60 Thru 63 01 (WAT-Note 9.104-1): ***163 01 (CAN-WAT-Notes 9.100-3 And 9.104-1)***	.....	1	320 0934	
(Front) 60 Thru 63 01 (WAT-Note 9.104-2): ***163 01 (CAN-WAT-Notes 9.100-3 And 9.104-2)***	.....	1	320 2425	
(Front) 64 01: 65 01 (LHE)(OHV-196)(OHV-199)	.....	1	320 4920	
(Front) ***163 01 (CAN-WST-Note 9.100-4)***	.....	1	320 9074	
(Front) 65 01 (OHV-232-WAT)	.....	1	320 6120	
(Rear) 60 Thru 63 01 (Note 9.104-1): ***163 01 (CAN-WST-Notes 9.100-1 And (9.104-1)(CAN-WAT-Notes 9.100-3 And 9.104-1)***	.....	1	311 6957	
(Rear) 60 Thru 63 01 (Note 9.104-2): ***163 01 (CAN-WST-Notes 9.100-1 And 9.104-2)(CAN-WAT-Notes 9.100-3 And 9.104-2)***	.....	1	311 5779	
(Rear) ***163 01 (CAN-WST-Note 9.100-2)(CAN-WAT-Note 9.100-4)***	.....	1	320 9075	
(Rear) 64 01: 65 01 (OHV-196) (LHE)(OHV-199)	.....	1	320 4921	
(Rear) 65 01 (OHV-232-WAT) ***(Replaces 317 8613)***	.....	1	317 9309	

SPACER, Propeller Shaft Rear Yoke

65 01 (OHV-232)	.....	1	317 9952	

9.105 JOINT ASSEMBLY, Universal (Incl. Spider Assembly)

60-61 10 (WST)(WOD)	.....	1	314 5473	
62 10 (WST-9/37 Ratio)(WOD): 63 10 (Six)	.....	1	316 3514	
64 10 (OHV-196): 65 10 (OHV-199)	.....	1	317 1348	
64 10 (OHVC-232): ***65 10 (OHV-199-Heavy Duty):*** 65 10-80 (OHV-232)	.....	1	317 2840	
60-61 20 (WST)(WOD)	.....	1	313 8316	
60 Thru 62 80 (WST)(WOD)	.....	1	315 6293	

9.106 YOKE, Universal Joint Ball Stud

63 Thru 65 10-80 (V8)	.....	1	320 3989	

YOKE, Universal Joint Link

63 Thru 65 10-80 (V8)	.....	1	320 3991	

ATTACHING PARTS

Yoke To Yoke

BOLT, Hexagon	63 Thru 65 10-80 (V8)	17.038	4	G454832	
WASHER, Lock	63 Thru 65 10-80 (V8)	17.820	4	G113114	NA

9.107 SPIDER ASSEMBLY, Universal Joint (Incl. Retainers & Seals)

60 Thru 62 01 (WST-Heavy Duty)(WOD-Heavy Duty): 63-64 01 (Heavy Duty): 65 01 (OHV-196-WST-Heavy Duty)(LHE-WST-Heavy Duty)(OHV-199-WST-Heavy Duty)	.....	2	320 6247	

Copyright 1963 American Motors Corp.

GROUP NO. — DESCRIPTION — YEAR and MODEL	PRIMARY GROUP NO.	PER CAR	PART NO.	CODE
60 Thru 63 01 (LCV-Note 9.104-2): ***163 01 (CAN-WST-Notes 9.100-1 And 9.104-1)(CAN-WAT-Notes 9.100-3 And 9.104-2)***	.....	2	311 9116	
60 Thru 64 01 (Note 9.104-1): ***163 01 (CAN-WST-Notes 9.100-1 And 9.104-1) (Can-WAT-Note 9.100-3 & 9.104-1):*** 65 01 (LHE)(OHV-196)(OHV-199)	.....	2	320 0854	
163 01 (Can-WST-Note 9.100-2)(Can-WAT-Note 9.100-4): 63 10 (Six): 64 10 (OHV-196): 65 10 (OHV-199) ***(Replaces 320 9076)***	.....	1	320 4918	
60-61 10 (WST): 62 10 (WST-9/37 Ratio): 60 Thru 62 10 (WOD)	.....	1	311 9752	
60 Thru 62 10 (WAT-Heavy Duty): 62 10 (WST-Heavy Duty)	.....	1	320 6247	
60 Thru 62 10 (WST-Heavy Duty-Note 9.140-1): 60-61 20 (Note 9.104-1): 62 80 (WAT-Note 9.104-1)	.....	1	320 0855	
60 Thru 62 10 (WAT-Note 9.104-1): 62 10 (WST-9/34 Ratio-Note 9.104-1)	.....	1	320 0854	
60 Thru 62 10 (WAT-Note 9.104-2): 62 10 (WST-9/34 Ratio-Note 9.104-2)	.....	1	311 9116	
63 Thru 65 10-80 (V8)	.....	2	320 3992	
64 10 (OHVC-232): ***65 10 (OHV-199-Heavy Duty):*** 65 10-80 (OHVC-232)	.....	1	320 5371	
60 Thru 62 20-80 (WAT-Note 9.104-3): 60 Thru 62 80 (WST)(WOD)	.....	1	320 0856	
60-61 80 (WAT-Note 9.104-4)	.....	1	320 2655	
(Front) 65 01 (OHV-232-WAT)	.....	1	320 6121	
(Rear) 65 01 (OHV-232-WAT) ***(Use 320 6980)***	.....	1	320 6122	

9.112 SEAL, Universal Joint Bearing Neoprene

60-61 10 (WST): 62 10 (WST-9/37 Ratio): 60 Thru 62 10 (WOD): 63-64 10 (Six): 65 10-80 (Six)	.....	4	320 2275	
60 Thru 63 01 (LCV-Note 9.104-2): 60 Thru 62 10 (WAT-Note 9.104-2): 62 10 (WST-9/34 Ratio-Note 9.104-2)	.....	4	320 2381	
60-61 80 (WAT-Note 9.104-4)	.....	4	320 2657	
63 Thru 65 10-80 (V8)	.....	8	320 4105	

9.118 RETAINER, Universal Joint Bearing

60 Thru 64 01 (8 Req. -Note 9.104-1): 65 01 (8 Req. -LHE)(8 Req. -OHV-196) (8 Req. -OHV-199): 65 01 (OHV-232-WAT-4 Req. -Has 1-1/8" O. D.): 60 Thru 62 10 (WAT-4 Req. -Note 9.104-1)***(WST-Heavy Duty-4 Req. -Note 9.104-1):*** 62 10 (WST-9/34 Ratio-4 Req. -Note 9.104-1): 60-61 20 (4 Req.): 62 80 (WAT-4 Req.)	.....	AR	310 8182	
60 Thru 63 01 (LCV-8 Req. -Note 9.104-2): 60 Thru 62 10 (WAT-4 Req. -Note 9.104-2): 62 10 (WST-9/34 Ratio-4 Req. -Note 9.104-2)	.....	AR	311 4715	
65 01 (OHV-232-WAT-Has 1-1/4" O. D.): 60 Thru 62 80 (WST)(WOD)(WAT-Note 9.104-3)	.....	4	311 9733	
60-61 10 (WST): 62 10 (WST-9/37 Ratio): 60 Thru 62 10 (WOD): 63 10 (Six)	.....	4	311 9754	
64 10 (Six): 65 10-80 (Six)	.....	4	320 4919	
60-61 80 (WAT-Note 9.104-4)	.....	4	320 2656	
63 Thru 65 10-80 (V8)	.....	8	320 3990	

9.120 REPAIR KIT, Universal Joint Ball Stud

63 Thru 65 10-80 (V8)	.....	1	320 3988	

9.134 ROD, Rear Axle Truss

(Left) 60 Thru 62 10-20-80	.....	1	315 0241	
(Left) 63 Thru 65 10-80	.....	1	316 6818	
(Right) 60 Thru 62 10-20-80	.....	1	315 0242	
(Right) 63 Thru 65 10-80	.....	1	316 6819	

ATTACHING PARTS

Rod To Torque Tube

BOLT, Hexagon	60 Thru 65 10-20-80	17.038	1	G181457	NA
WASHER, Lock	60 Thru 65 10-20-80	17.820	1	G120898	NA
WASHER, Bite	60 Thru 65 10-20-80	.....	3	312 5060	

Rod Bracket To Rear Axle

BOLT, Hexagon	60 Thru 65 10-20-80	17.038	4	G181697	NA
WASHER, Lock	60 Thru 65 10-20-80	17.820	4	G120384	NA
NUT, Hexagon	60 Thru 65 10-20-80	17.406	4	G120371	NA

Copyright 1963 American Motors Corp.

GROUP NO. — DESCRIPTION — YEAR and MODEL	PRIMARY GROUP NO.	PER CAR	PART NO.	CODE
9.140 TUBE ASSEMBLY, Torque (Incl. Trunnion)				
60 10 (WAT): 61 10 (LHD-WAT)***(RHD-WAT-Note 9.140-2)***	.....	1	315 6277	
60 Thru 62 10 (WST-Heavy Duty-Note 9.140-1)	.....	1	315 5753	
61 10 (RHD-WAT-Note 9.140-3)	.....	1	316 4634	
62 10 (LHD-WST-9/34 Ratio)(LHD-WAT)	.....	1	316 3223	
62 10 (RHD-WST-9/34 Ratio)(RHD-WAT)	.....	1	316 4646	
62 10 (LHD-WST-9/37 Ratio)(LHD-WOD)	.....	1	316 3484	
62 10 (RHD-WST-9/37 Ratio)(RHD-WOD)	.....	1	316 4645	
63-64 10 (OHV-196-LHD): 65 10 (OHV-199-LHD)	.....	1	316 6693	
63-64 10 (OHV-196-RHD-L3S)	.....	1	316 7869	
63-64 10 (OHV-196-RHD-W3S) ..... ***(Use 316 7870)***	.....	1	316 9253	
64 10 (OHVC-232-WOD): 65 10-80 (OHVC-232-WOD)	.....	1	317 5131	
64 10 (OHVC-232-WST)(OHVC-232-WAT): ***65 10 (OHV-199-Heavy Duty):*** 65 10-80 (OHVC-232-WST) (OHVC-232-WAT)	.....	1	317 5129	
65 10 (RHD-OHVC-232-WOD)	.....	1	317 7311	
65 10 (RHD-OHVC-232-WST)(RHD-OHVC-232-WAT)	.....	1	317 7298	
60-61 20 (WST)(WOD)	.....	1	315 6278	
60-61 20 (WAT): 62 80 (LHD-WAT)	.....	1	315 6279	
60-61 80 (WST)(WOD)	.....	1	315 6280	
60 80 (WAT): 61 80 (LHD-WAT)***(RHD-WAT-Note 9.140-2)***	.....	1	315 6281	
61 80 (RHD-WAT-Note 9.140-3)	.....	1	316 4635	
62 80 (WST)(WOD)	.....	1	316 3306	
62 80 (RHD-WAT)	.....	1	316 4740	
63 Thru 65 10-80 (V8-LHD)	.....	1	316 6714	
63-64 10 (OHV-199-RHD-W3S): 63-64 10-80 (V8-RHD-L3S): ***65 10 (V8-287-RHD)*** ..... ***(Replaces 316 9253)***	.....	1	316 7870	
63-64 10-80 (V8-RHD-W3S)	.....	1	316 9252	
BAR, Torque Tube Stabilizer				
165 10-80 (Can-V8-WST)	.....	1	318 1832	
TUBE, Torque				
60 10 (WST): 61 10 (LHD-WST)***(RHD-WST-Note 9.140-2)***	.....	1	315 3376	
60 10 (WOD): 61 10 (LHD-WOD)***(RHD-WOD-Note 9.140-2)***	.....	1	315 3377	
61 10 (RHD-WST-Note 9.140-3)	.....	1	315 2629	
61 10 (RHD-WOD-Note 9.140-3)	.....	1	315 2630	
9.144 BEARING KIT, Propeller Shaft Center (Incl. Retainer And Lock Ring)				
64 10 (OHVC-232): ***65 10 (OHV-199-Heavy Duty):*** 65 10-80 (OHVC-232)	.....	1	320 5370	
60-61 10 (WST): 62 10 (WST-9/37 Ratio): 60 Thru 62 10 (WOD): 63-64 10 (OHV-196): 65 10 (OHV-199)	.....	1	311 6741	
60 Thru 62 80	.....	1	311 5751	
RING, Propeller Shaft Center Bearing Lock				
60-61 10 (WST): 62 10 (WST-9/37 Ratio): 60 Thru 62 10 (WOD): 63-64 10 (OHV-196): 65 10 (OHV-199)	.....	1	313 3653	
64 10 (OHVC-232): 65 10 (OHV-199-Heavy Duty): 65 10-80 (OHVC-232): 60 Thru 62 80 (WST)(WOD)	.....	1	312 7812	

NOTE 9.140-1: On 60-61 10 (WST) Cars having a production installed Heavy Duty Package can be identified in the following way:
The Trunnion at the Transmission end of the Torque Tube is Welded instead of Threaded to the Torque Tube.
On 62-63 10 (WST) Cars having a production installed Heavy Duty Package can be identified in the following way:
The Transmission Case Cover is mounted to the Transmission with 6 Bolts instead of 4.

NOTE 9.140-2: Used on Cars having Foot Operated Parking Brake.

NOTE 9.140-3: Used on Cars having Hand Operated Parking Brake.

Copyright 1963 American Motors Corp.

GROUP NO. — DESCRIPTION — YEAR and MODEL		PRIMARY GROUP NO.	PER CAR	PART NO.	CODE
RETAINER, Propeller Shaft Center Bearing					
60–61 10 (WST): 62 10 (WST–9/37 Ratio): 60 Thru 62 10 (WOD): 63–64 10 (Six): 65 10 (OHV–199): 65 10–80 (OHV–232)		.....	1	313 5192	
60 Thru 62 80: 65 10–80 (V8)		.....	1	312 3590	
9.146 TRUNNION KIT, Torque Tube (Incl. Rivets)					
60 Thru 62 10 (WST-Heavy Duty-Note 9.140-1): 60–61 10 (WAT): 60 Thru 62 20–80		.....	1	320 1512	
TRUNNION, Torque Tube					
60–61 10 (WST)(WOD)		.....	1	313 5186	
62 Thru 64 10 (OHV–196): 65 10 (OHV–199)		.....	1	316 3191	
63 Thru 65 10–80 (V8)		.....	1	316 6378	
64 10 (OHVC–232): ***65 10 (OHV-199-Heavy Duty):*** 65 10–80 (OHVC–232)		.....	1	317 2841	
ATTACHING PARTS					
Trunnion To Adapter					
STUD	60–61 10 (WST)(WOD)	.....	2	310 6425	
BOLT, Hexagon	60–61 10 (WAT–6 Req.): 62 Thru 64 10 (Six–4 Req.): ***60 Thru 64 10 (Six-6 Req. -WST-Heavy Duty-Note 9.140-1):*** 60 Thru 64 10–20–80 (V8–6 Req.)	17.038	AR	G181639	NA
BOLT, Hexagon	65 10–80 (Six)	17.038	4	G181643	NA
BOLT, Hexagon	65 10–80 (V8)	17.038	4	G181670	NA
WASHER, Lock	60–61 10 (WST)(WOD)	17.820	2	G103328	NA
WASHER, Lock	60–61 10 (WAT–6 Req.): 62 Thru 64 10 (Six–4 Req.): ***60 Thru 64 10 (Six-6 Req. -WST-Heavy Duty-Note 9.140-1):*** 60 Thru 64 10–20–80 (V8–6 Req.): 65 10–80 (Six–4 Req.)	17.820	AR	G120382	NA
WASHER, Lock	65 10–80 (V8)	17.820	4	G131100	NA
WASHER, Plain	60–61 10 (WAT–6 Req.): 62 Thru 64 10 (Six–4 Req.): ***60 Thru 64 10 (Six-6 Req. -WST-Heavy Duty-Note 9.140-1):*** 60 Thru 64 10–20–80 (V8–6 Req.): 65 10–80 (Six–6 Req.) ***(Replaces 800 0163)***	17.814	AR	400 1102	
WASHER, Plain	65 10–80 (V8)	17.814	4	400 1116	
NUT, Hexagon	60–61 10 (WST)(WOD)	17.406	2	G103027	NA
NUT, Hexagon	60–61 10 (WAT–6 Req.): 62 Thru 64 10 (Six–4 Req.): ***60 Thru 64 10 (Six-6 Req. -WST-Heavy Duty-Note 9.140-1):*** 60 Thru 64 10–20–80 (V8–6 Req.): 65 10–80 (Six–4 Req.)	17.406	AR	G120369	NA
NUT, Lock	60–61 10 (WST)(WOD)	17.416	2	G442834	
NUT, Hexagon	65 10–80 (V8)	17.406	4	G120370	NA
Trunnion Clamp					
BOLT, Hexagon	60–61 10 (WST)(WOD)	.....	1	310 5515	
NUT, Slotted	60–61 10 (WST)(WOD)	17.408	1	G119252	NA
PIN, Cotter	60–61 10 (WST)(WOD)	17.460	1	G103373	NA
BOOT, Torque Tube Trunnion Rubber					
60–61 10 (WST)(WOD)		.....	1	313 6949	
FITTING, Torque Tube Trunnion Lubrication					
60–61 10 (WST)(WOD)		17.290	1	G271285	
9.150 CUSHION, Torque Tube To Adapter					
60–61 10 (WST)(WOD)		.....	4	312 6205	
RETAINER, Torque Tube To Adapter					
(Inner) 60–61 10 (WST)(WOD)		.....	4	312 6206	
(Outer) 60–61 10 (WST)(WOD)		.....	4	312 6207	

Copyright 1963 American Motors Corp.

GROUP NO. — DESCRIPTION — YEAR and MODEL	PRIMARY GROUP NO.	PER CAR	PART NO.	CODE
SPACER, Torque Tube To Adapter				
60-61 10 (WST)(WOD)	.....	2	312 6595	
9.152 SEAL, Torque Tube				
60 Thru 65 01 ***(Replaces 312 8171)***	9.064	1	320 3580	
60 Thru 64 10 (OHV-196): 65 10 (Six-199)	9.064	1	313 8143	
60 Thru 65 10-20-80 (V8): 64 10 (OHVC-232): ***65 10 (OHV-199-Heavy Duty):*** 65 10-80 (OHVC-232)	9.064	1	315 3825	
RETAINER, Torque Tube Seal				
65 01: 60 Thru 64 10 (OHV-196): 65 10 (OHV-199)	9.064	1	313 8144	
60 Thru 65 10-20-80 (V8): 64 10 (OHVC-232): ***65 10 (OHV-199-Heavy Duty):*** 65 10-80 (OHVC-232)	9.064	1	315 0112	
GASKET, Torque Tube To Axle				
60 Thru 64 10 (OHV-196): 65 10 (OHV-199)	9.064	1	314 9899	
60 Thru 64 10-20-80 (V8): 64 10 (OHVC-232)	9.064	1	312 3593	
65 10 (OHV-199-Heavy Duty): 65 10-80 (OHV-232)(V8)	9.064	1	317 5195	
9.156 ADAPTER, Torque Tube (For Component And Attaching Parts Refer To Groups 6.030 (WST), 6.290 (WOD) And 16.175 (WAT)				
60-61 10 (WOD)	.....	1	314 5358	
60-61 10-20-80 (WAT): 62 80 (WAT)...(Incl. Bushing)	16.175	1	315 3480	
60-61 10 (WST)	6.028	1	314 5082	
62 10 (WAT)...(Incl. Bushing)	16.175	1	320 3563	
62 10 (WOD)	.....	1	316 3144	
62 10 (WST)...(Incl. Bushing & Pilot Ring) ***(Replaces 316 5087)***	6.030	1	320 4046	
60 Thru 62 10 (Heavy Duty-WST-Note 9.140-1) ...(Incl. Bushing & Felt)	6.028	1	313 2500	
63 10 (Six-WAT-Note 9.156-1)...(Incl. Bushing)	16.175	1	316 6491	
63 10 (Six-WAT-Note 9.156-1 Type 2): 64 10 (OHV-196-WAT): 65 10 (OHV-199-WAT)...(Incl. Bushing)	16.175	1	320 4567	
63 10 (V8-WST): 64 10 (V8-WST-Note 9.156-2 Type 1)...(Incl. Seal)	6.030	1	320 4597	
63-64 10 (Six-196-WOD): 65 10 (OHV-199-WOD)	6.290	1	320 4954	
63-64 10 (Six-196-WST): 65 10 (OHV-199-WST)...(Incl. Bushing & Pilot Ring)	6.030	1	320 5826	
63-64 10-80 (V8-WAT)...(Incl. Bushing)	16.175	1	316 6493	
63-64 10 (V8-WST)(V8-WOD)...(Incl. Seal)	6.030	1	320 4597	
63 Thru 65 10-80 (V8-287-WOD)...(Incl. Seal)	6.030	1	320 4597	
63-64 10 (Heavy Duty-Six-WST-Note 9.140-1)...(Incl. Bushing)	6.030	1	320 4234	
64 10 (V8-287-WST-Note 9.156-2 Type 2): 65 10-80 (V8-287-WST)...(Incl. Bushing)	6.030	1	320 5442	
64-65 10-80 (OHV-232-WAT)...(Incl. Bushing)	16.175	1	317 2884	
64-65 10-80 (OHV-232-WOD)...(Incl. Seal)	6.290	1	320 5245	
64-65 10-80 (OHV-232-WST): ***65 10 (Heavy Duty-Six-WST-Note 9.156-3)*** ...(Incl. Bushing)	6.030	1	317 4299	
64-65 10-80 (V8-327-WOD)(V8-327-WST)...(Incl. Seal)	6.030	1	317 2270	
65 10-80 (V8-WAT)...(Incl. Bushing)	16.175	1	317 2393	
60-61 20 (WOD)	.....	1	312 6144	
60-61 20 (WST)...(Incl. Bushing & Felt)	6.028	1	313 2500	
60 Thru 62 80 (WST)(WOD)	.....	1	315 0675	
63 80 (WST)(WOD)...(Incl. Seal)	6.030	1	316 6495	

NOTE 9.156-1: Two Types of Torque Tube Adapters were used on the 63 10 (Six-WAT). They can be identified as follows:
Type 1: Fastens to the Transmission Case with a 5/16" Bolt.
Type 2: Fastens to the Transmission Case with a 7/16" Bolt.

NOTE 9.156-2: Two Types of Torque Tube Adapters were used on the 64 10 (V8-WST). They can be identified as follows:
Type 1: The Adapter to Torque Tube is 9-13/16" long.
Type 2: The Adapter to Torque Tube is 18-3/4" long.

NOTE 9.156-3: Cars having a 65 10 (OHV-199) Heavy Duty Package can be identified as follows: The Transmission to Torque Tube Adapter overall length is 12-3/4" long.

Copyright 1963 American Motors Corp.

(A) Part of TRUNNION ASSY. 10.042
(B) Part of ARM ASSY. 10.066
(C) Part of ARM ASSY. 10.045
(D) Part of TRUNNION ASSY. 10.044
(E) Part of TRUNNION KIT 10.044
(F) Part of SHOCK ASSY. 11.200
(G) Used only on TYPE ONE
(H) Part of PIN KIT 10.013
(I) Part of TRUNNION KIT 10.042
(J) Part of BEARING (NEEDLE) 10.042

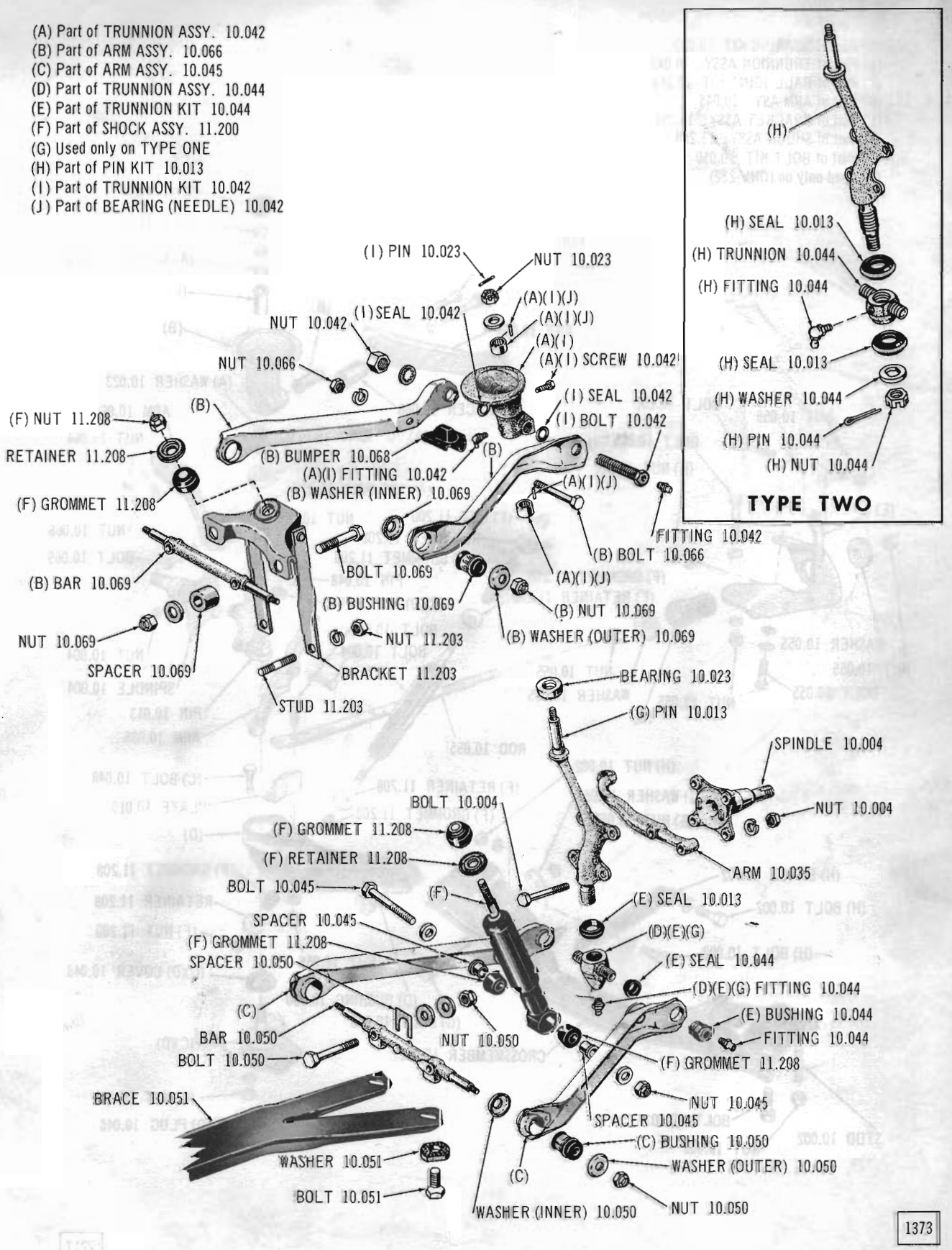

FRONT SUSPENSION 60 thru 63 01

Copyright 1963 American Motors Corp.

(A) Part of BEARING KIT 10.023
(B) Part of TRUNNION ASSY. 10.042
(C) Part of BALL JOINT KIT 10.048
(D) Part of ARM ASY. 10.045
(E) Part of BRACKET ASSY. 10.055
(F) Part of SHOCK ASSY. 11.200
(G) Part of BOLT KIT 10.050
(H) Used only on (OHV-232)

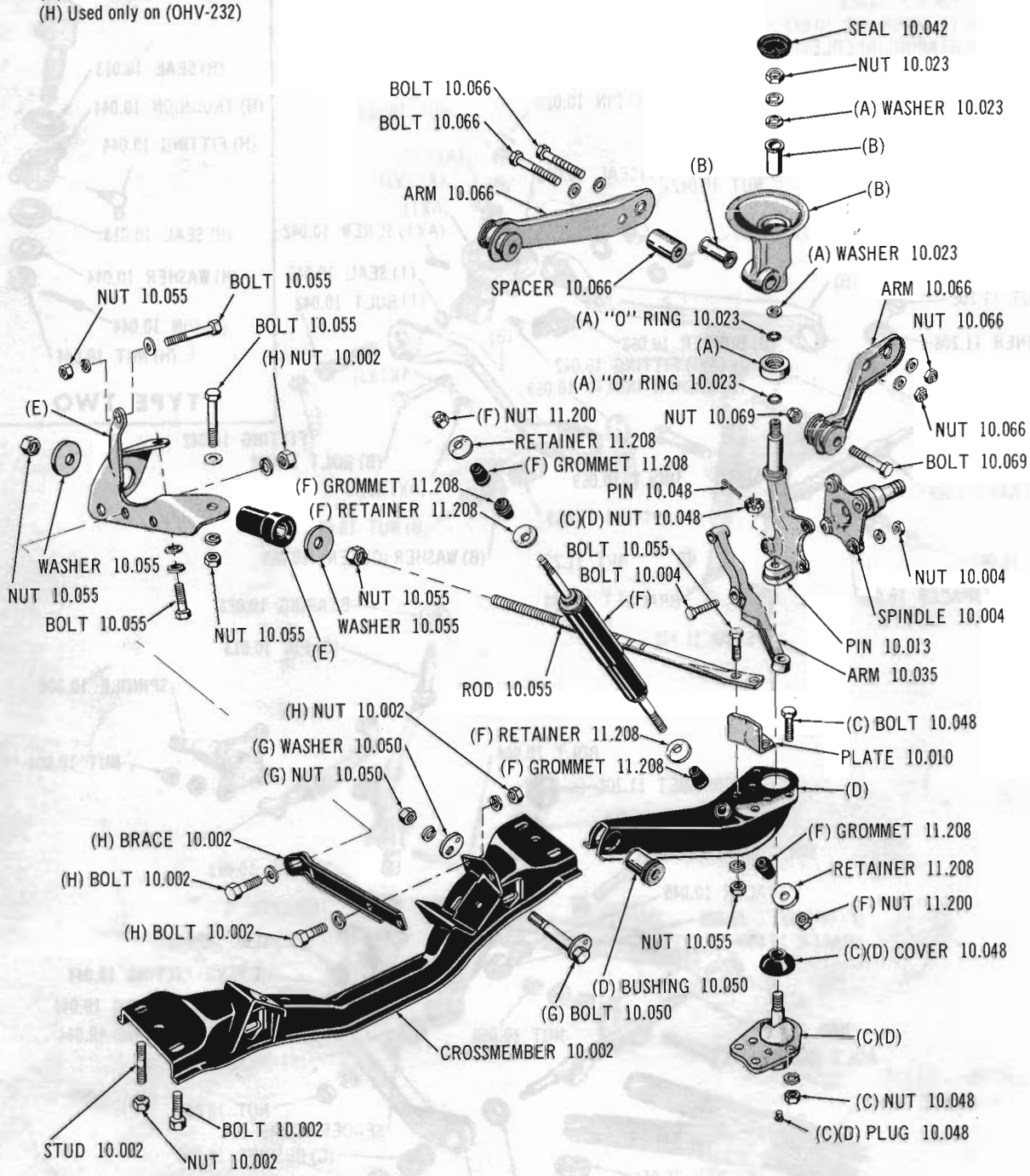

2217

FRONT SUSPENSION 64-65 01

Copyright 1963 American Motors Corp.

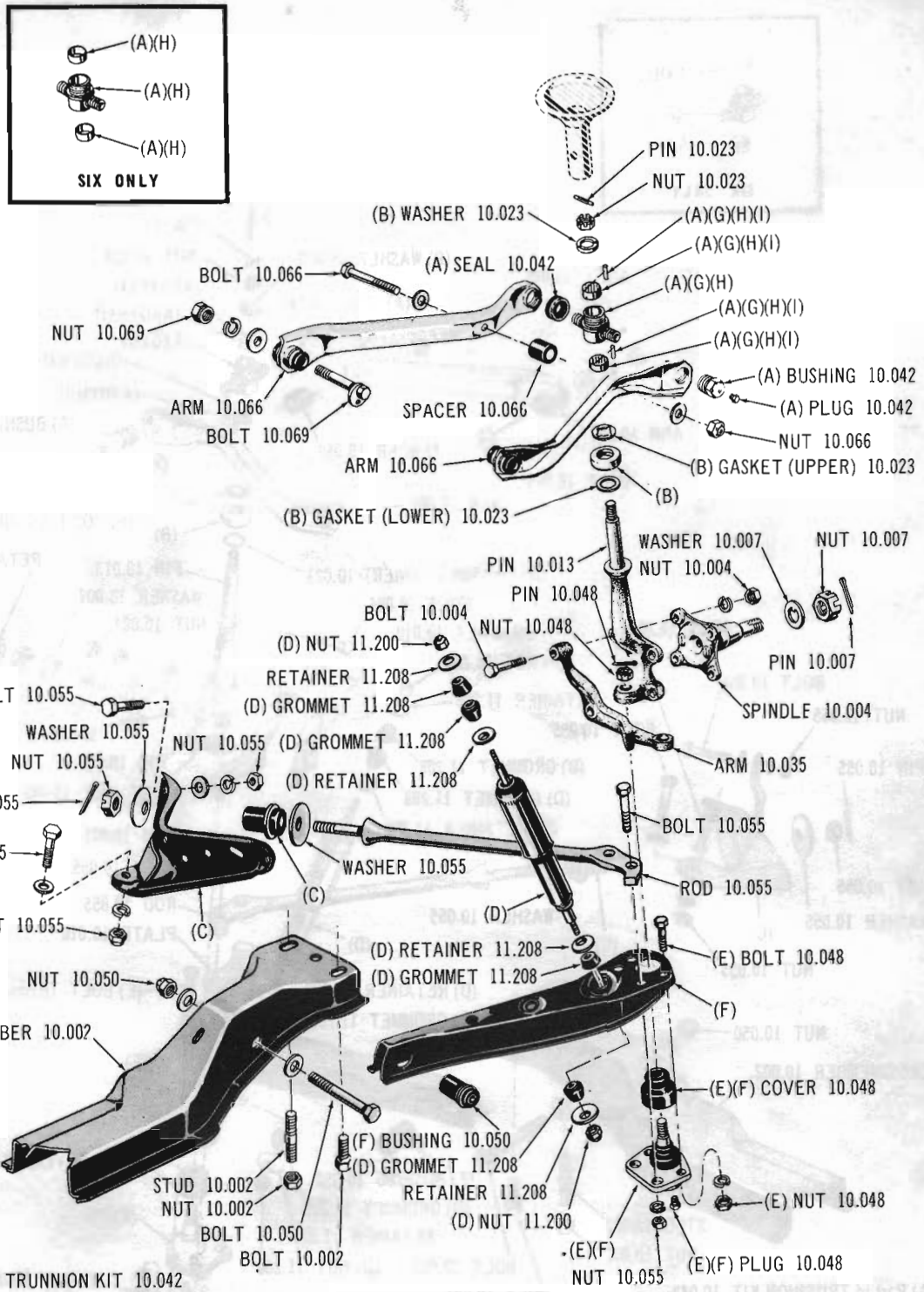

(A) Part of TRUNNION KIT 10.042
(B) Part of BEARING KIT 10.023
(C) Part of BRACKET ASSY. 10.055
(D) Part of SHOCK ASSY. 11.200
(E) Part of BALL JOINT KIT 10.048
(F) Part of ARM ASSY. 10.045
(G) Used only on (V8)
(H) Part of TRUNNION 10.042
(I) Part of BEARING (NEEDLE) 10.042

1372

FRONT SUSPENSION 62-63 10-80

Copyright 1963 American Motors Corp.

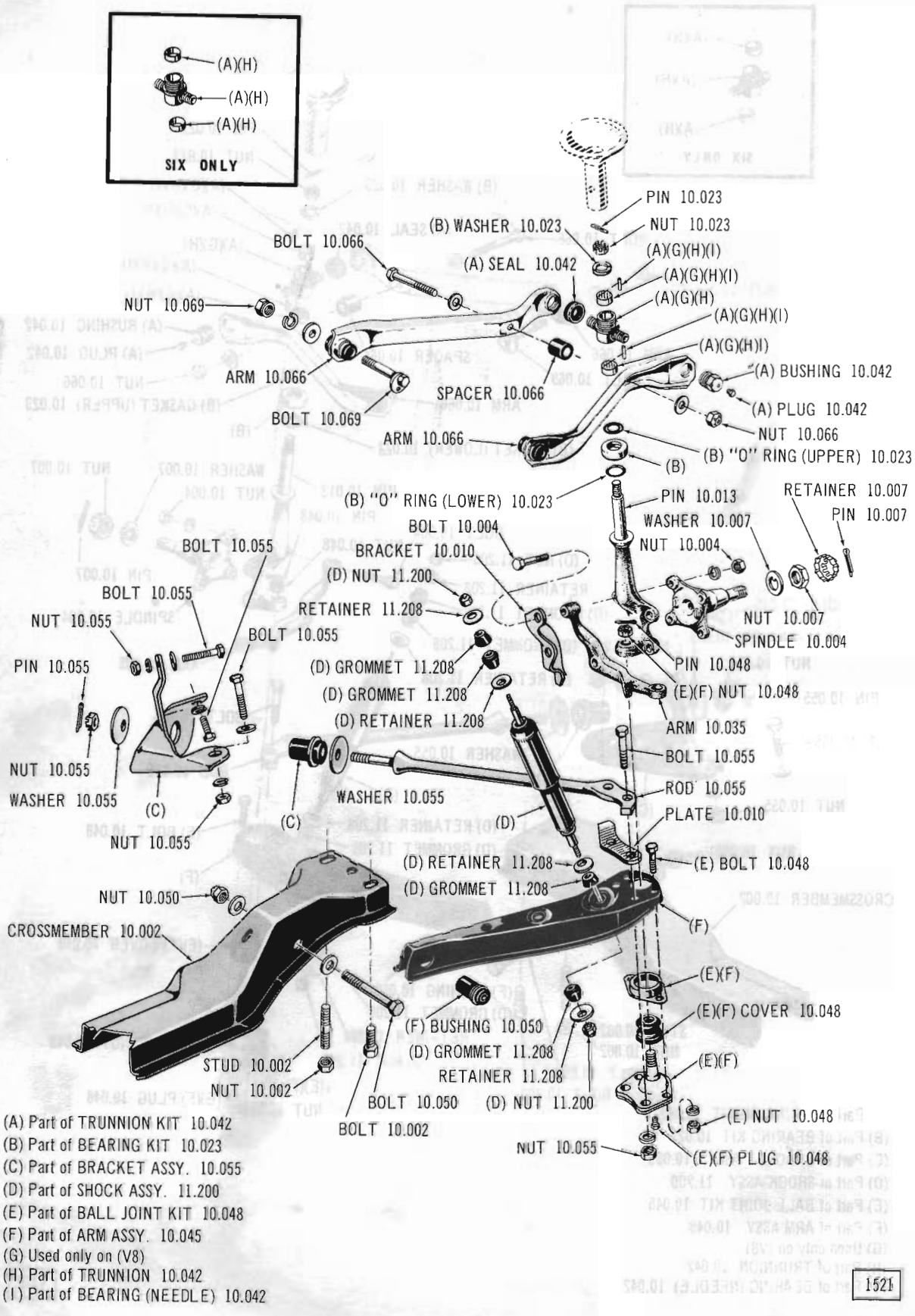

(A) Part of TRUNNION KIT 10.042
(B) Part of BEARING KIT 10.023
(C) Part of BRACKET ASSY. 10.055
(D) Part of SHOCK ASSY. 11.200
(E) Part of BALL JOINT KIT 10.048
(F) Part of ARM ASSY. 10.045
(G) Used only on (V8)
(H) Part of TRUNNION 10.042
(I) Part of BEARING (NEEDLE) 10.042

1521

FRONT SUSPENSION 64-65 10-80

Copyright 1963 American Motors Corp.

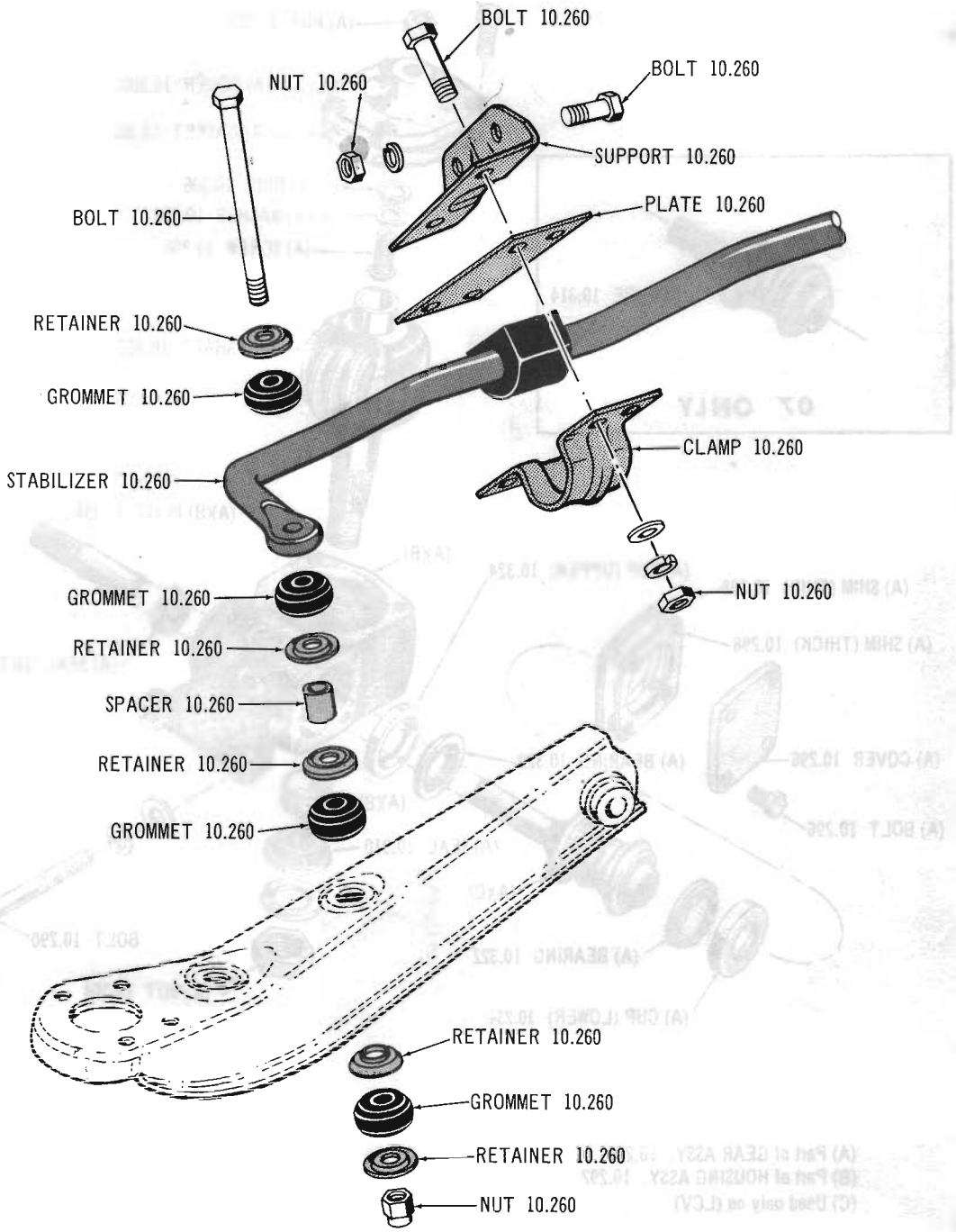

FRONT SUSPENSION SWAY STABILIZER 63 thru Current 10-80 (V8)

Copyright 1963 American Motors Corp.

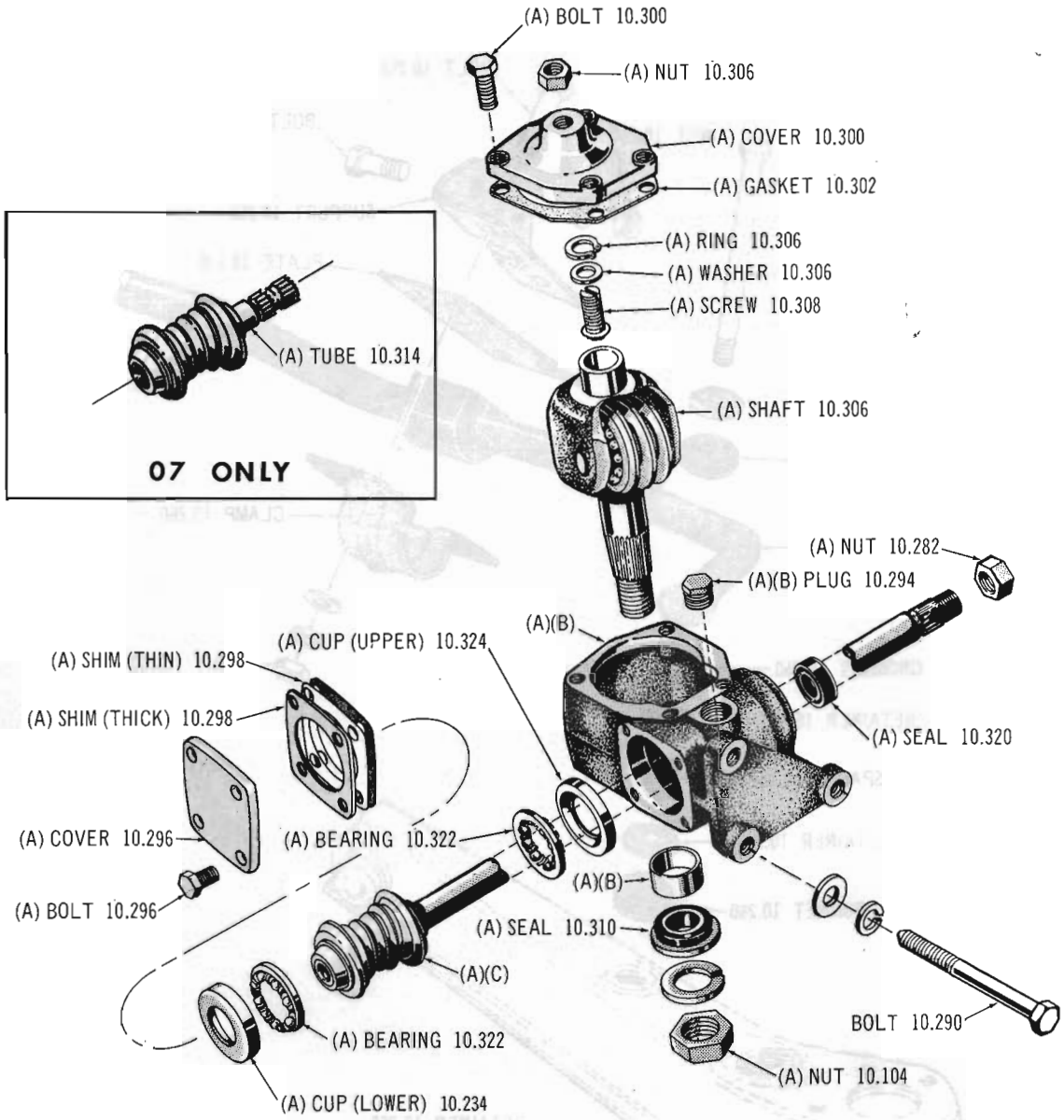

(A) Part of GEAR ASSY. 10.290
(B) Part of HOUSING ASSY. 10.292
(C) Used only on (LCV)

1645

Copyright 1963 American Motors Corp.

Copyright 1963 American Motors Corp.

Printed in U.S.A.

STEERING GEAR 64-65 ALL MODELS (WPS)

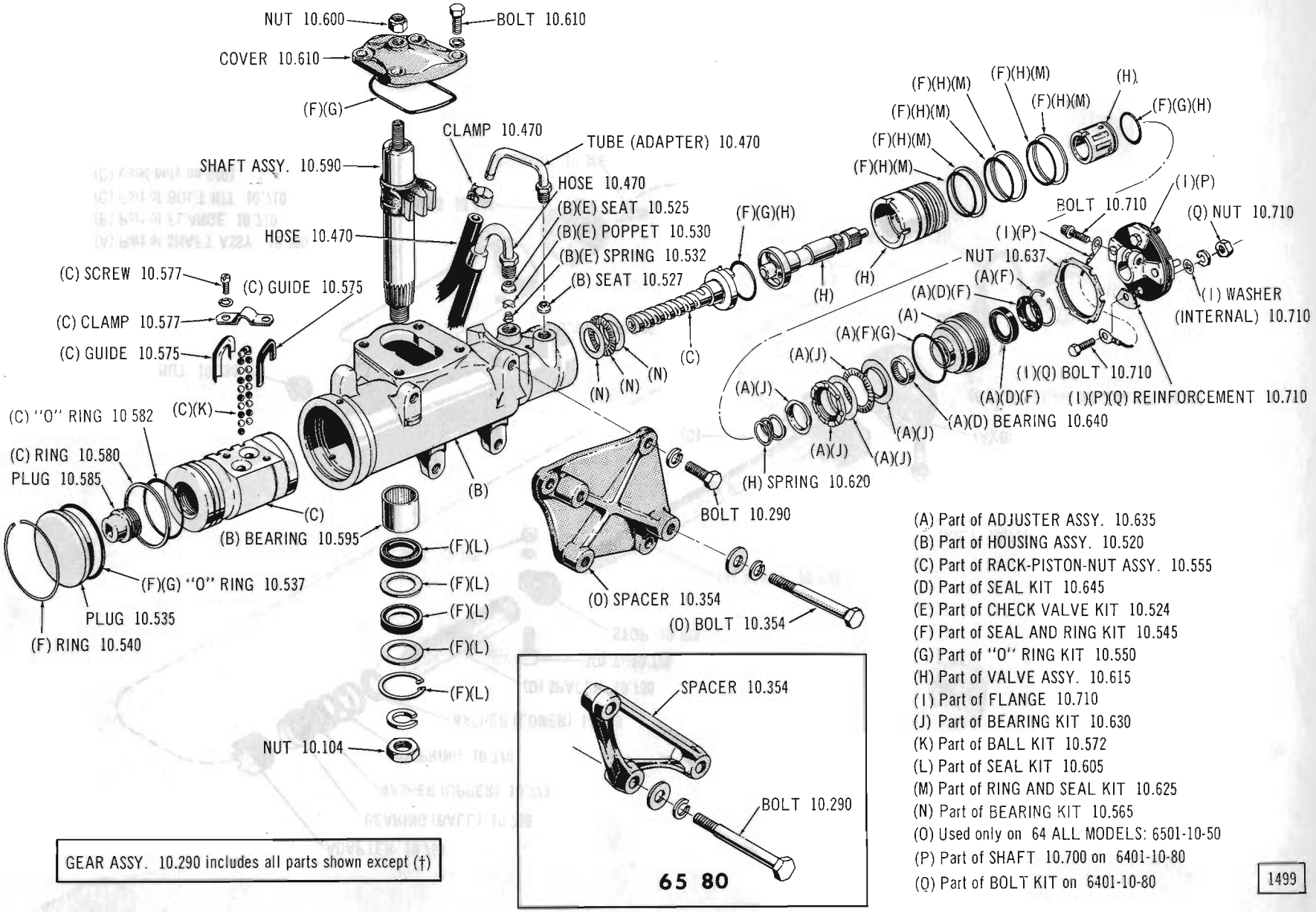

GEAR ASSY. 10.290 includes all parts shown except (†)

(A) Part of ADJUSTER ASSY. 10.635
(B) Part of HOUSING ASSY. 10.520
(C) Part of RACK-PISTON-NUT ASSY. 10.555
(D) Part of SEAL KIT 10.645
(E) Part of CHECK VALVE KIT 10.524
(F) Part of SEAL AND RING KIT 10.545
(G) Part of "O" RING KIT 10.550
(H) Part of VALVE ASSY. 10.615
(I) Part of FLANGE 10.710
(J) Part of BEARING KIT 10.630
(K) Part of BALL KIT 10.572
(L) Part of SEAL KIT 10.605
(M) Part of RING AND SEAL KIT 10.625
(N) Part of BEARING KIT 10.565
(O) Used only on 64 ALL MODELS: 6501-10-50
(P) Part of SHAFT 10.700 on 6401-10-80
(Q) Part of BOLT KIT on 6401-10-80

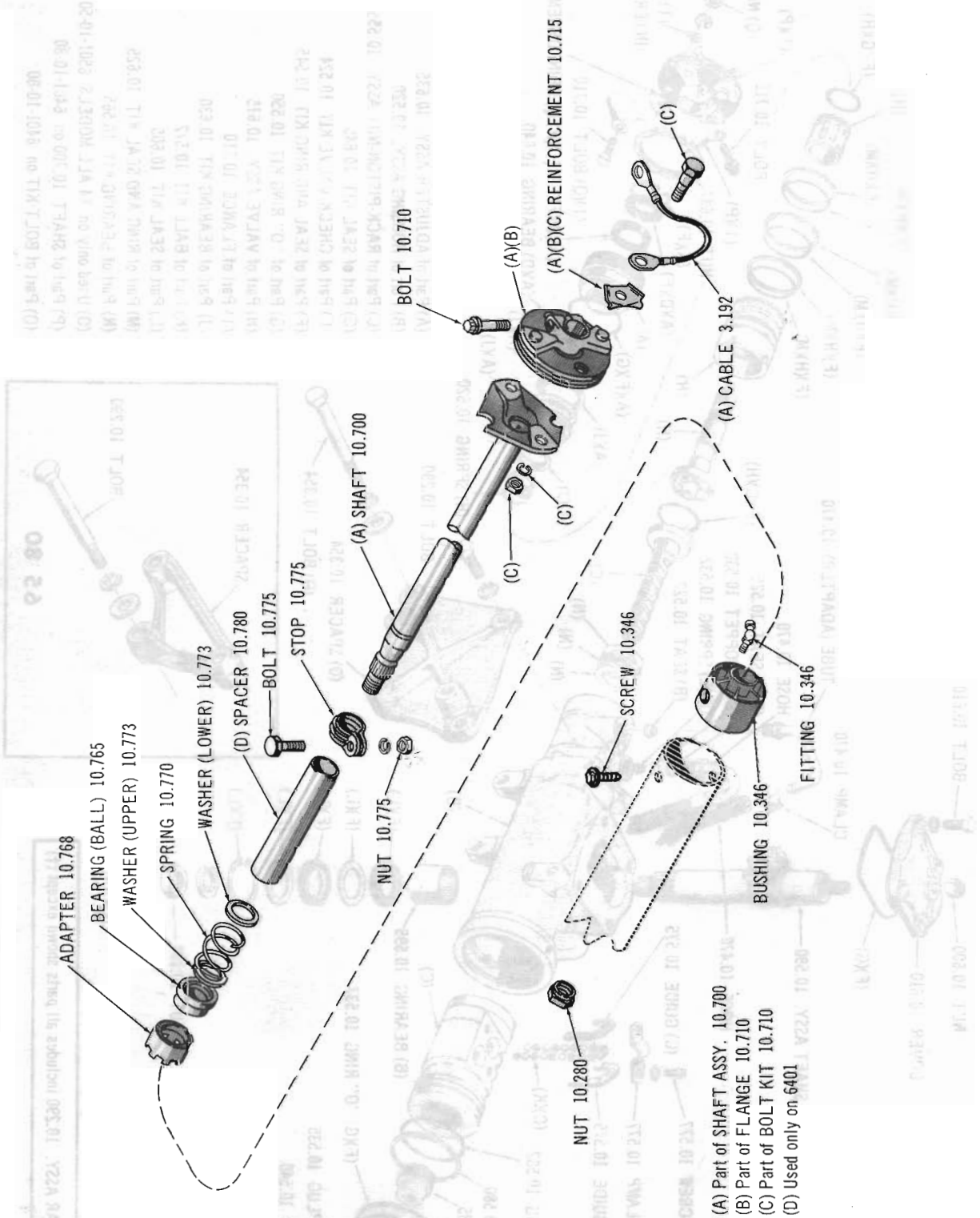

STEERING GEAR SHAFT 64 01-10-80 (WPS-LAW)

Copyright 1963 American Motors Corp.

Copyright 1963 American Motors Corp.

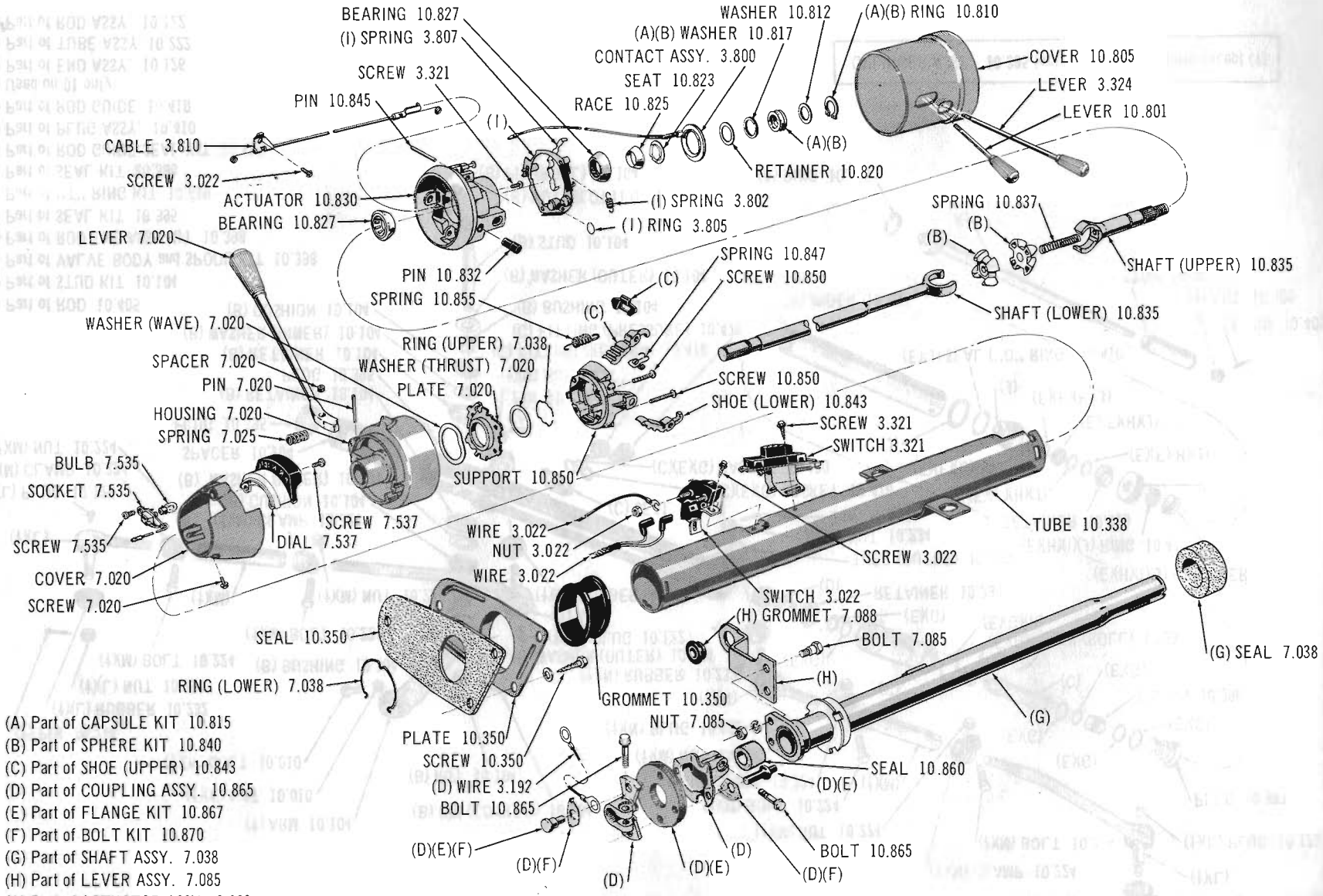

(A) Part of CAPSULE KIT 10.815
(B) Part of SPHERE KIT 10.840
(C) Part of SHOE (UPPER) 10.843
(D) Part of COUPLING ASSY. 10.865
(E) Part of FLANGE KIT 10.867
(F) Part of BOLT KIT 10.870
(G) Part of SHAFT ASSY. 7.038
(H) Part of LEVER ASSY. 7.085
(I) Part of ACTUATOR ASSY. 3.802

Printed in U.S.A.

POWER STEERING POWER CYLINDER AND LINKAGE 63 ALL MODELS (WPS)

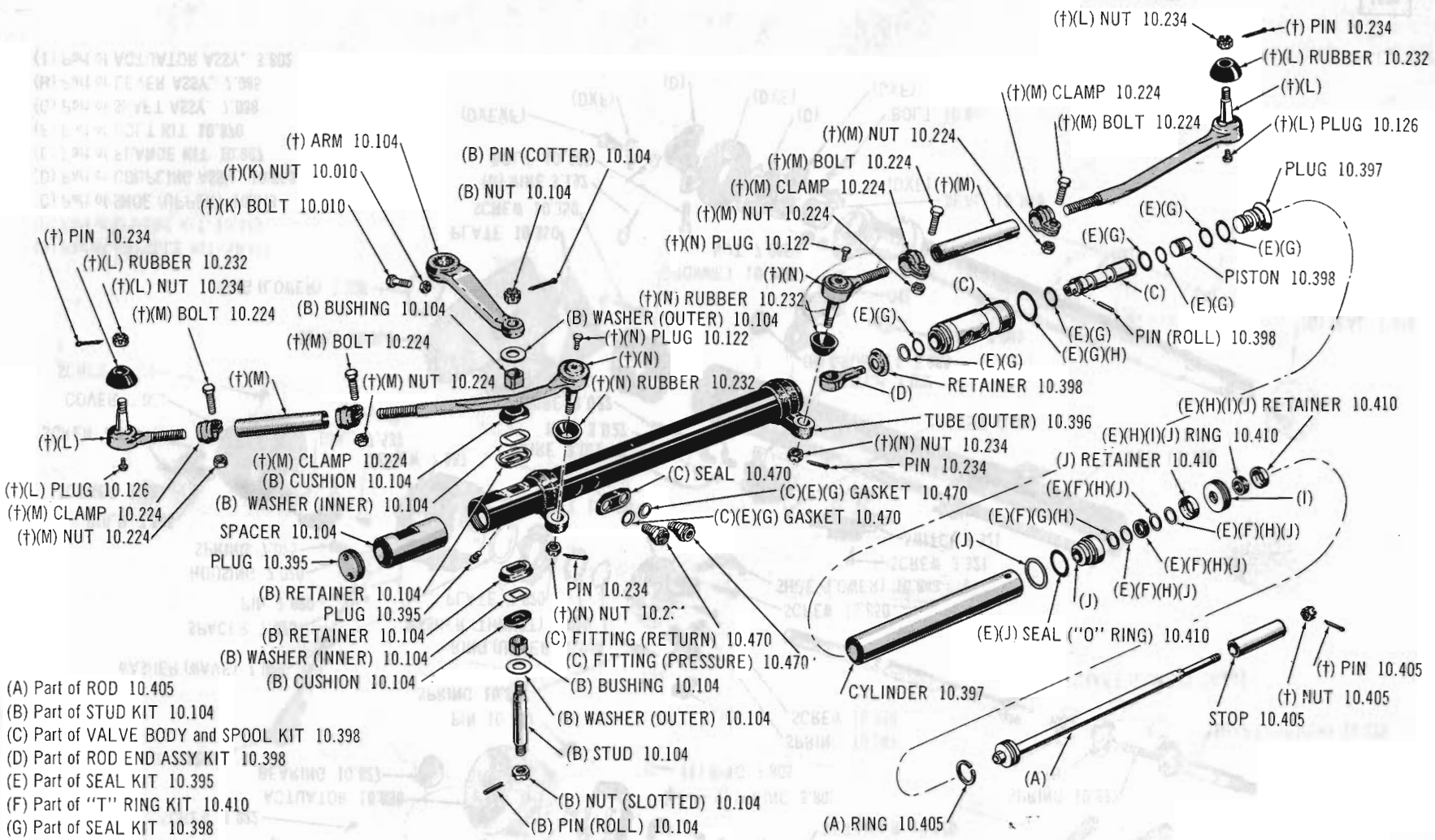

(A) Part of ROD 10.405
(B) Part of STUD KIT 10.104
(C) Part of VALVE BODY and SPOOL KIT 10.398
(D) Part of ROD END ASSY KIT 10.398
(E) Part of SEAL KIT 10.395
(F) Part of "T" RING KIT 10.410
(G) Part of SEAL KIT 10.398
(H) Part of ROD GUIDE SEAL KIT 10.410
(I) Part of PLUG ASSY. 10.410
(J) Part of ROD GUIDE 10.410
(K) Used on 01 only
(L) Part of END ASSY. 10.126
(M) Part of TUBE ASSY. 10.222
(N) Part of ROD ASSY. 10.122

CYLINDER ASSY. 10.395 includes all parts shown except (†).

Copyright 1963 American Motors Corp.

Printed in U.S.A.

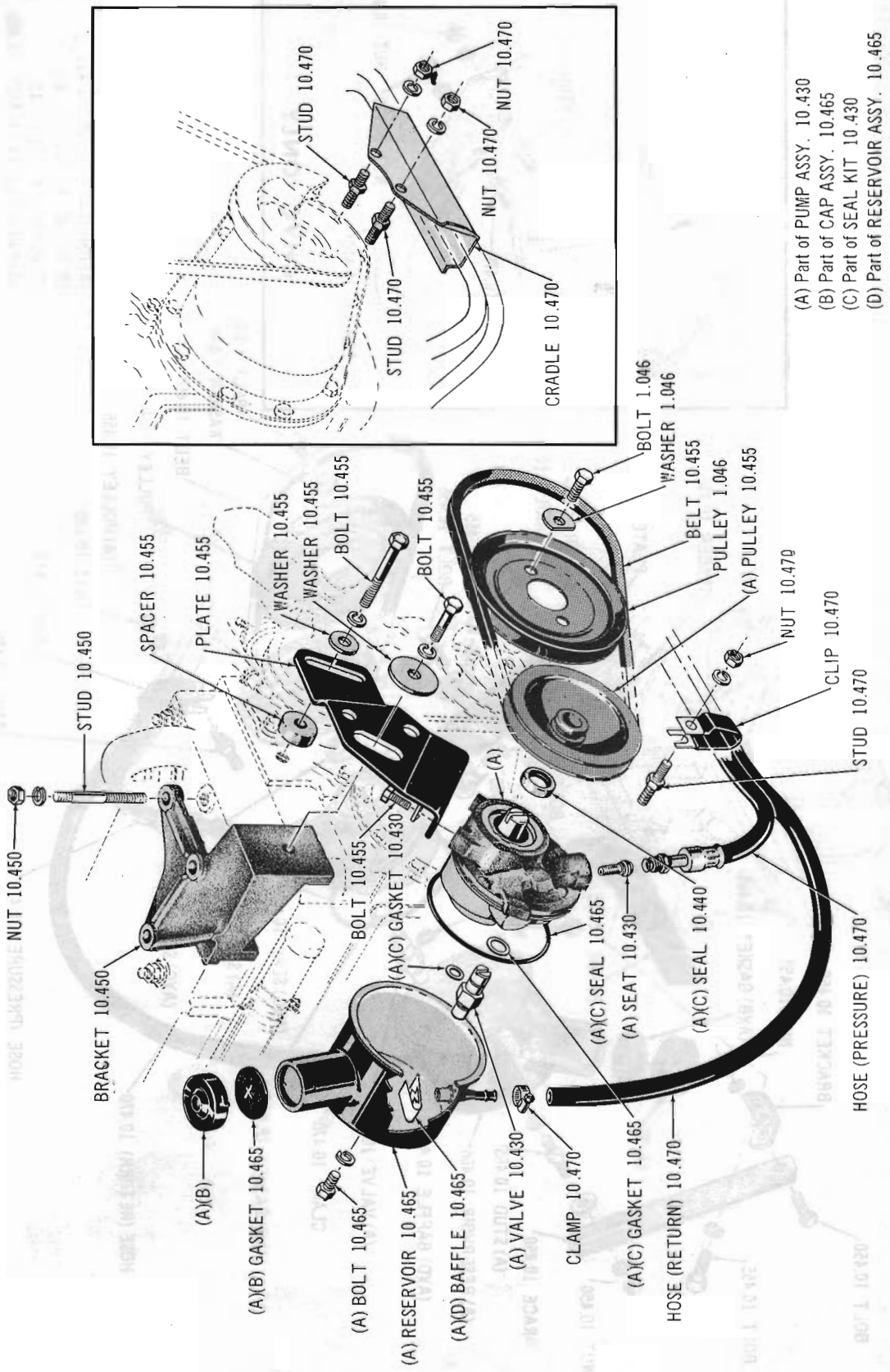

POWER STEERING PUMP, RESERVOIR AND HOSES 62 thru Current 01 (LHE-LAC)

Copyright 1963 American Motors Corp.

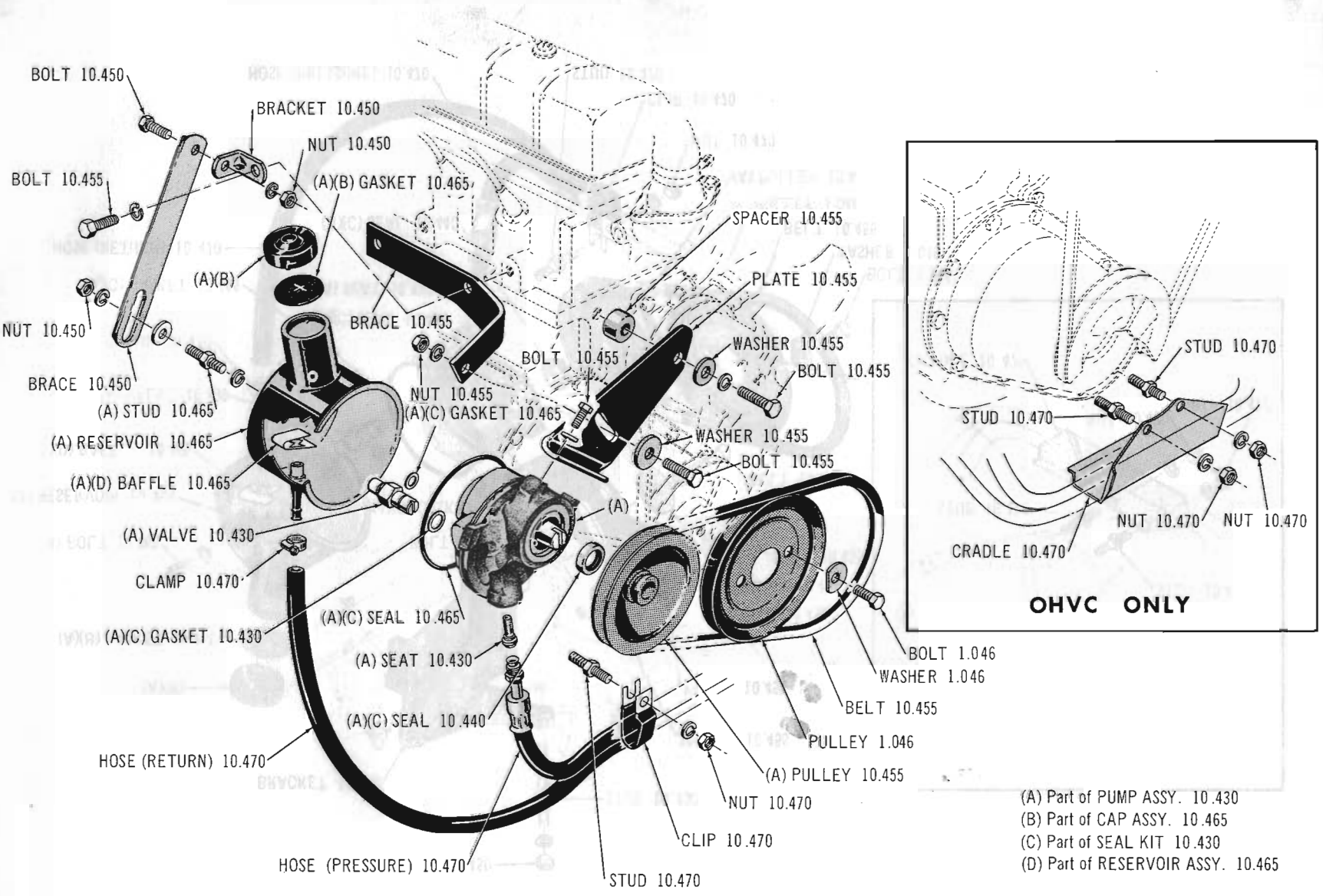

(A) Part of PUMP ASSY. 10.430
(B) Part of CAP ASSY. 10.465
(C) Part of SEAL KIT 10.430
(D) Part of RESERVOIR ASSY. 10.465

Copyright 1963 American Motors Corp.

Printed in U.S.A.

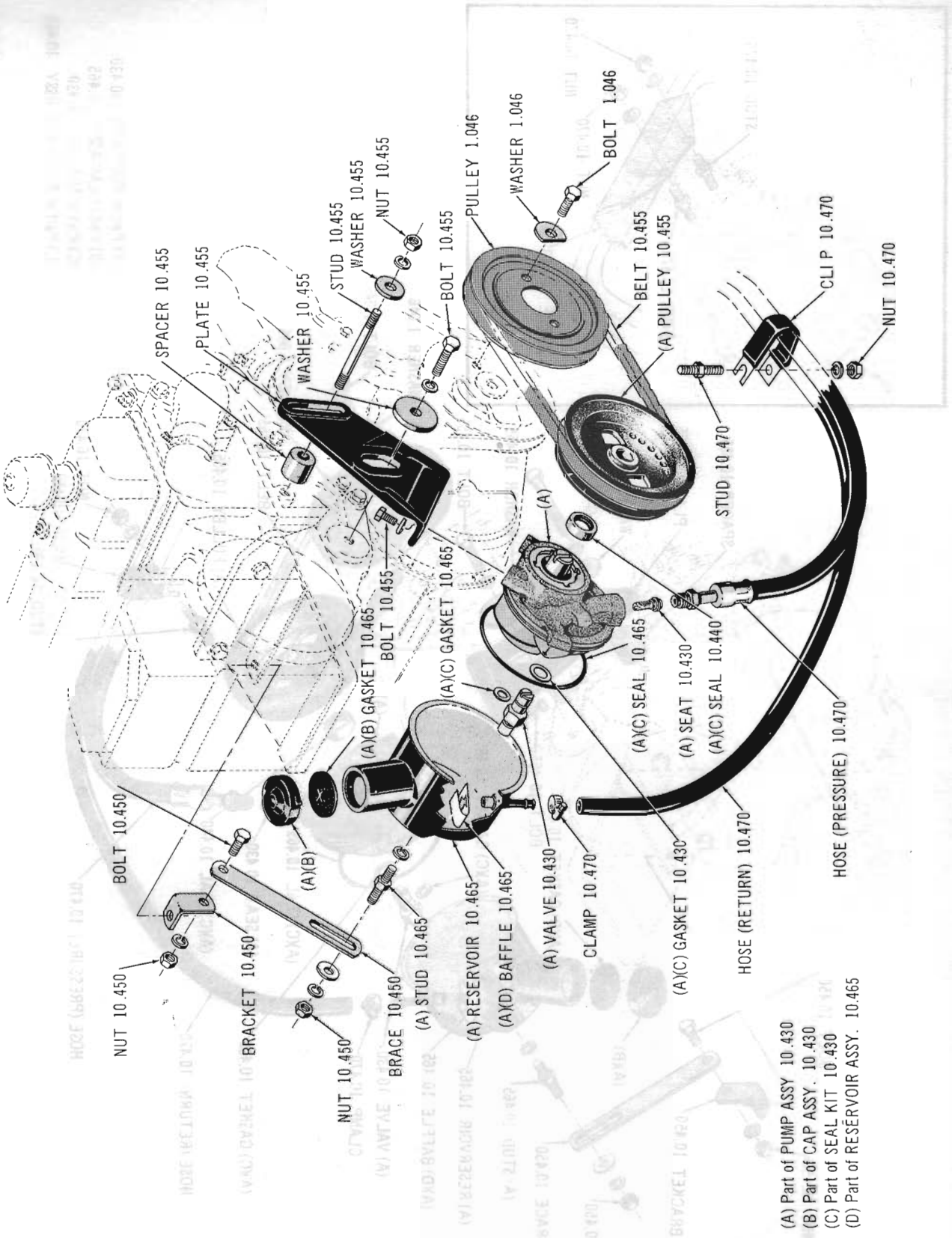

POWER STEERING PUMP, RESERVOIR AND HOSES 62 thru 64 10 (OHVA-WAC)

Copyright 1963 American Motors Corp.

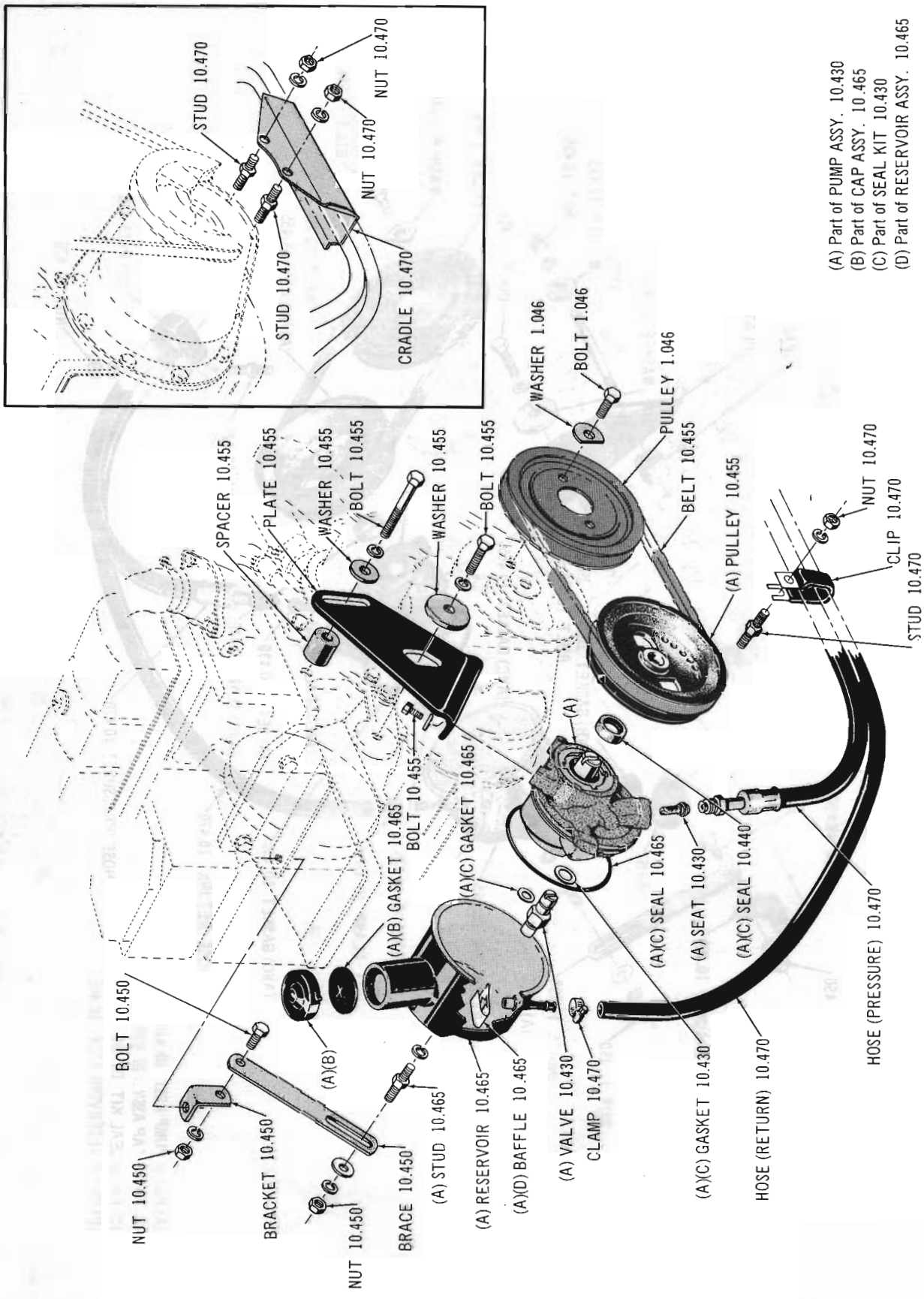

POWER STRG. PUMP, RES. AND HOSES 62 thru Current 01 (OHVC-WAC): 62 thru 64 10 (OHVC-196-WAC)

Copyright 1963 American Motors Corp.

Copyright 1963 American Motors Corp.

Printed in U.S.A.

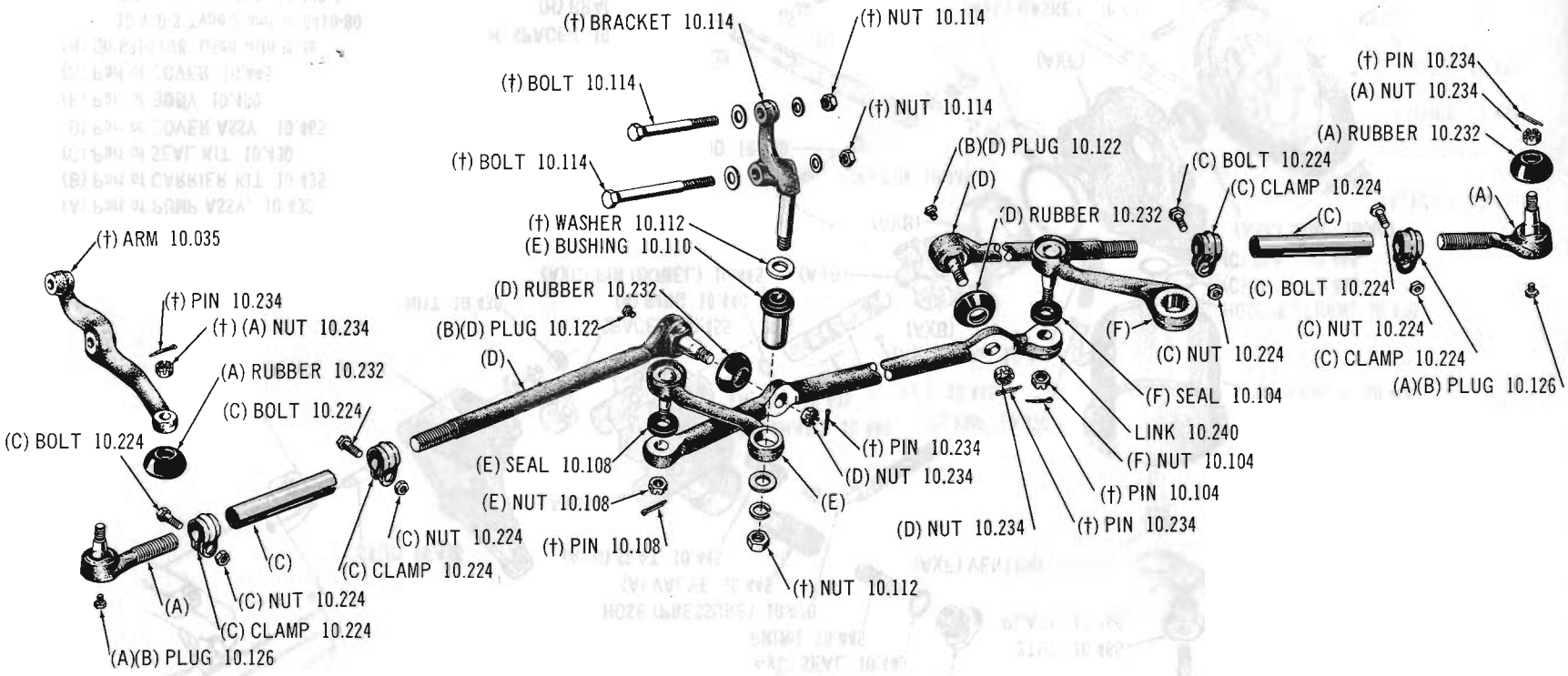

LINKAGE ASSY. 10.100 includes all parts except (†)

(A) Part of END ASSY. 10.126
(B) LUBRICATION FITTING TYPE
(C) Part of TUBE ASSY. 10.222
(D) Part of ROD ASSY. 10.122
(E) Part of IDLER ARM ASSY. 10.108
(F) Part of PITMAN ARM ASSY. 10.104

1845

POWER STEERING PUMP, RESERVOIR AND PULLEY 63 thru 65 10-80 (V8)

Copyright 1963 American Motors Corp.

Printed in U.S.A.

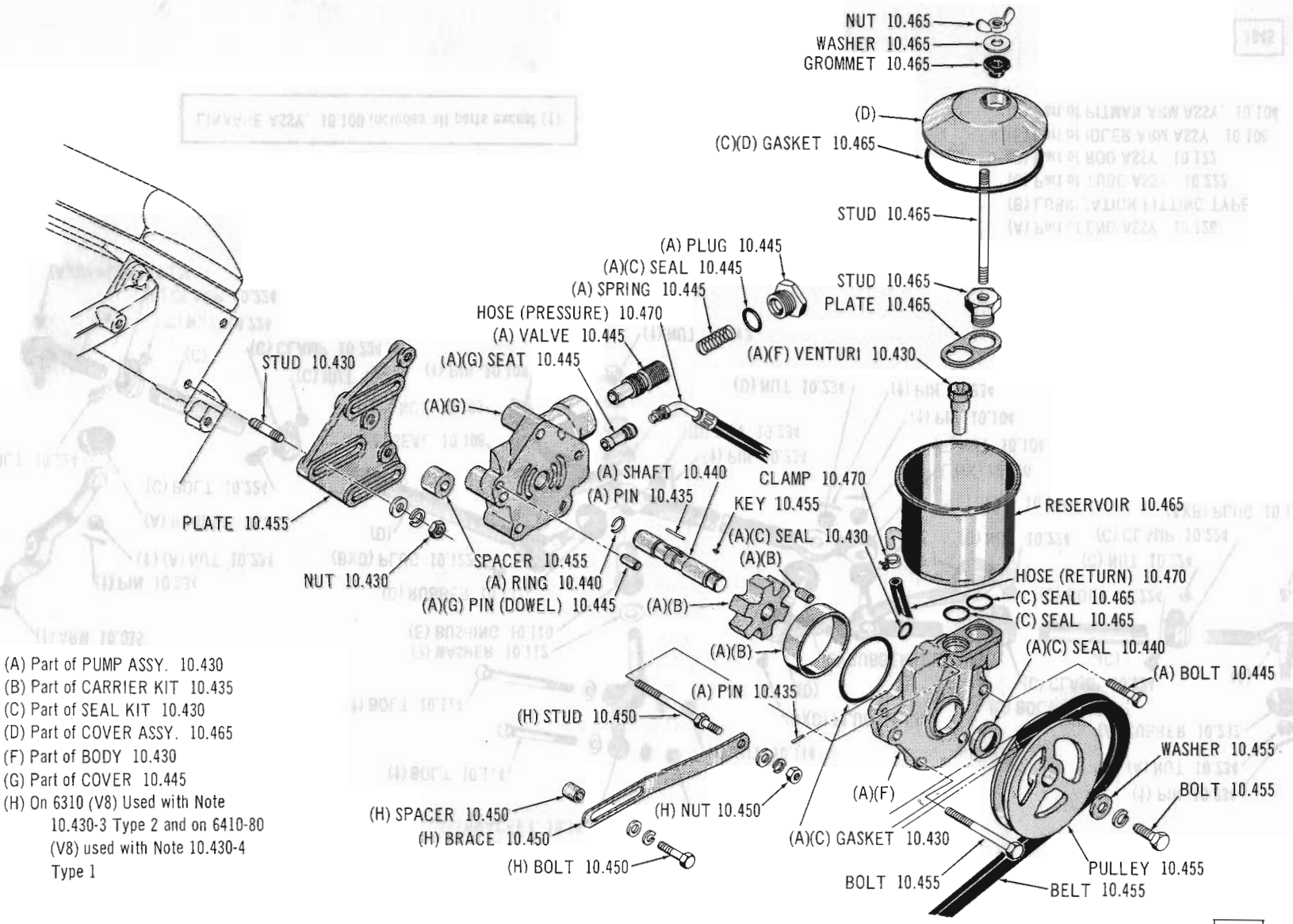

(A) Part of PUMP ASSY. 10.430
(B) Part of CARRIER KIT 10.435
(C) Part of SEAL KIT 10.430
(D) Part of COVER ASSY. 10.465
(F) Part of BODY 10.430
(G) Part of COVER 10.445
(H) On 6310 (V8) Used with Note 10.430-3 Type 2 and on 6410-80 (V8) used with Note 10.430-4 Type 1

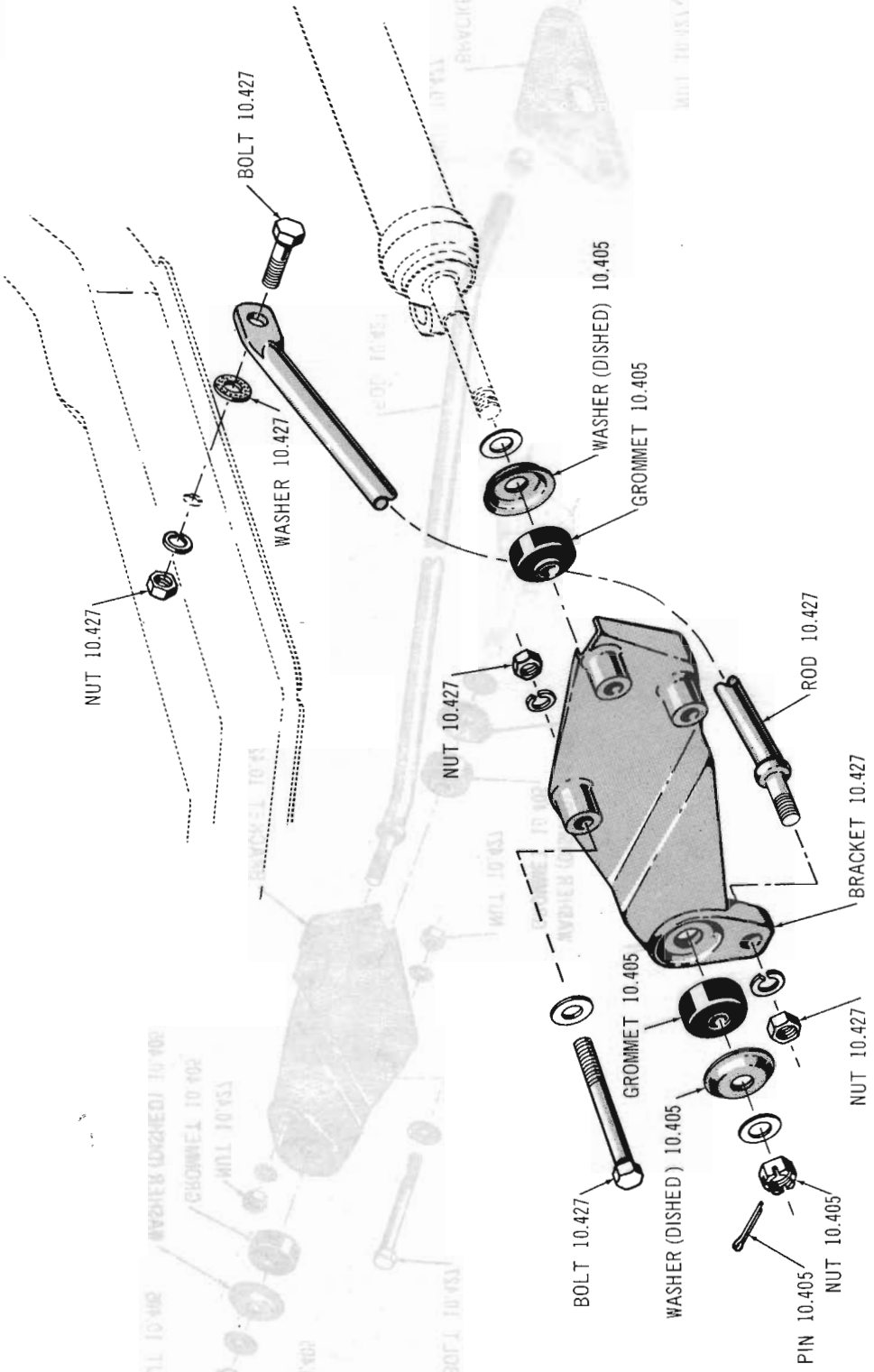

POWER STEERING POWER CYLINDER MOUNTING 63 10-80 (1st. type)

Copyright 1963 American Motors Corp.

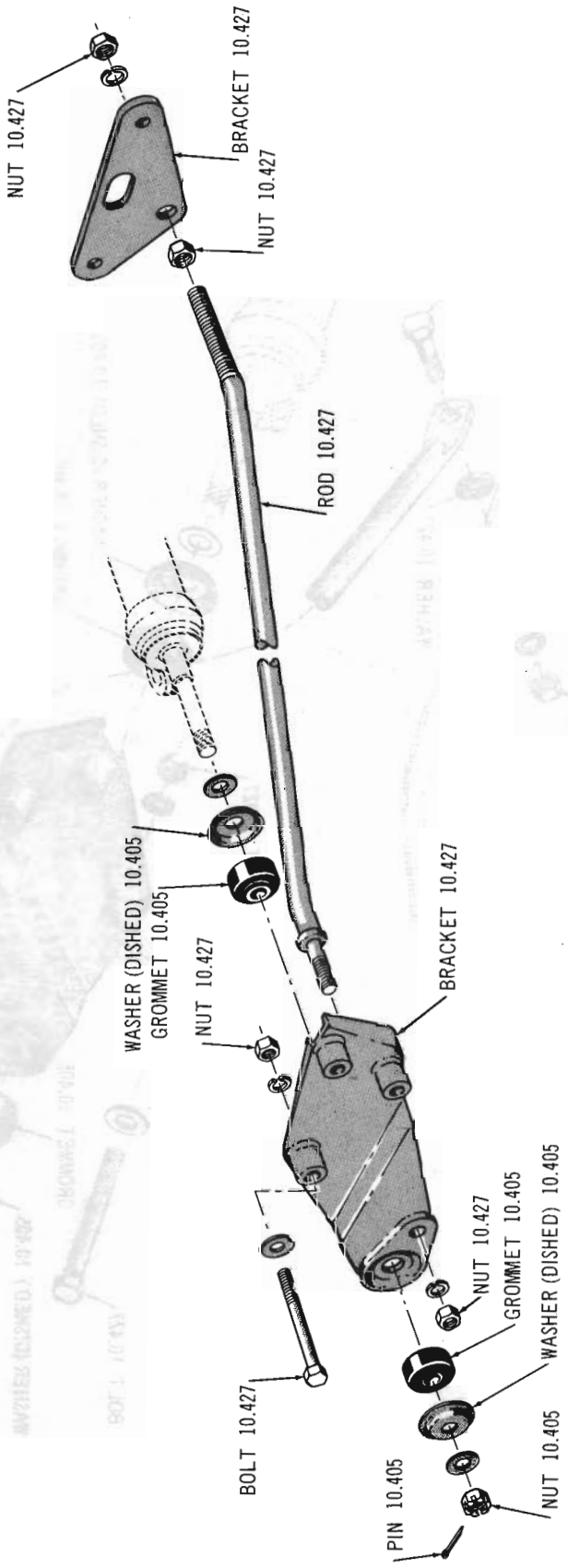

POWER STEERING POWER CYLINDER MOUNTING 63 10-80 (2nd. type)

Copyright 1963 American Motors Corp.

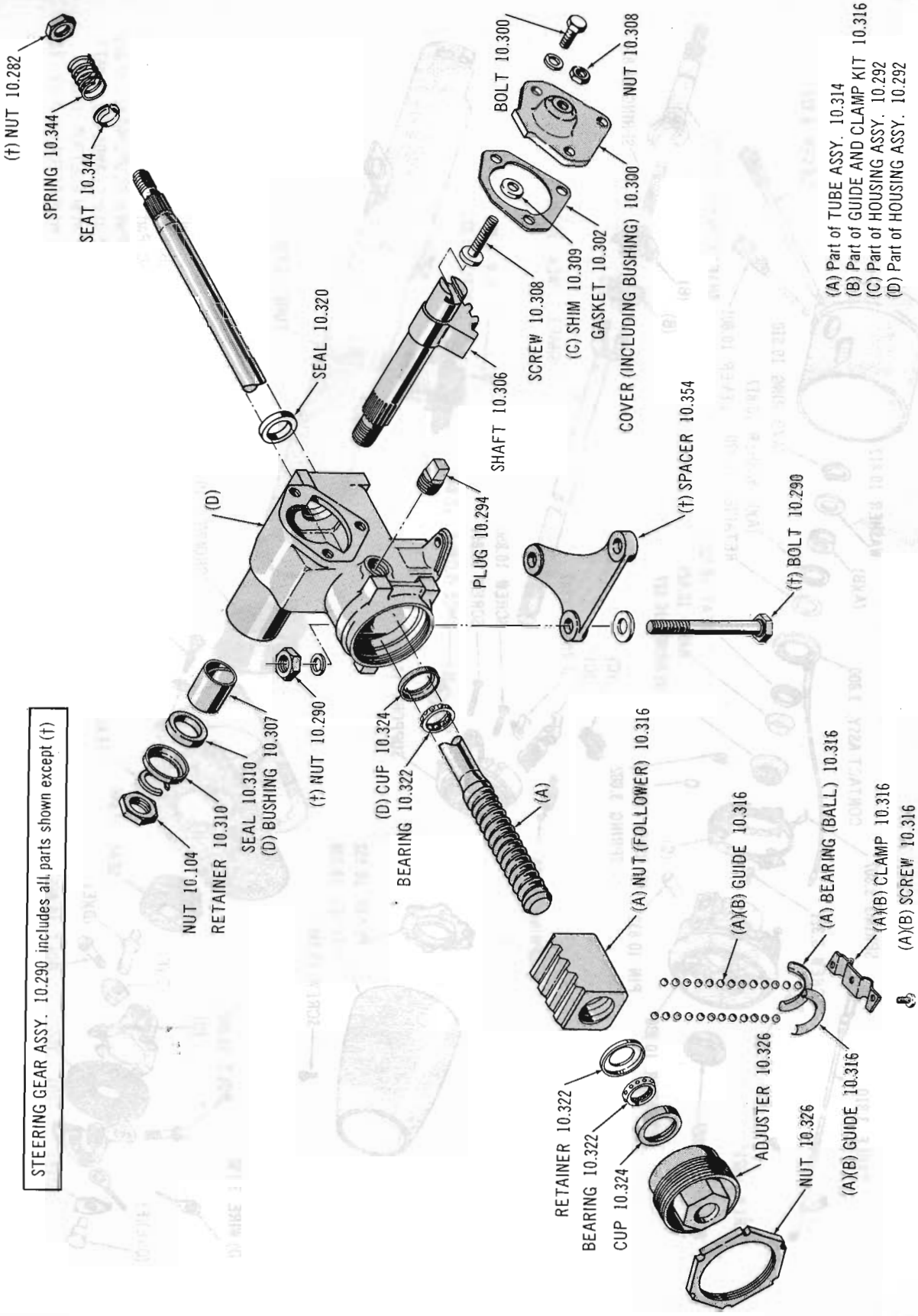

STEERING GEAR 64-65 10-80 (LPS)

Copyright 1963 American Motors Corp.

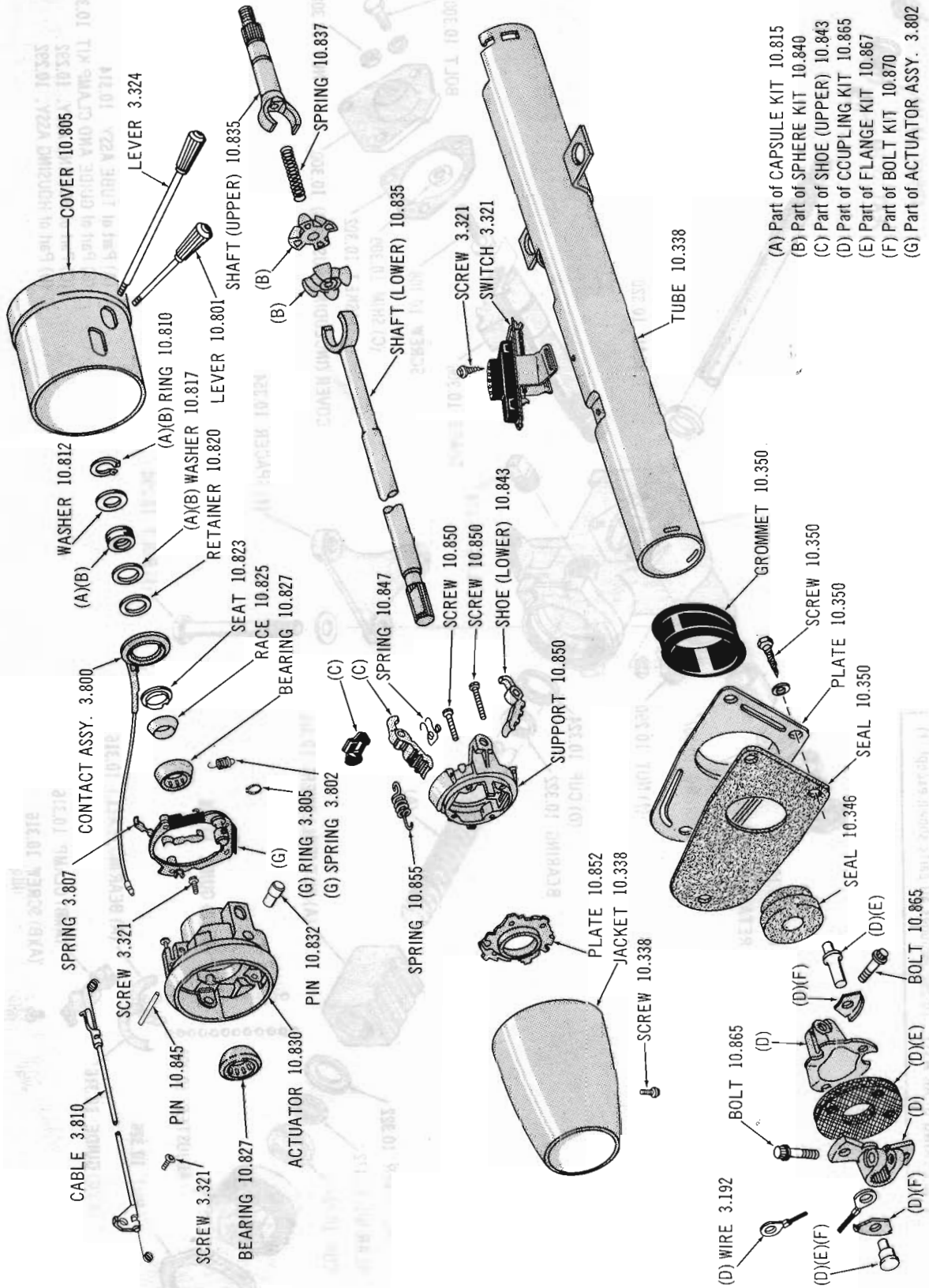

ADJUSTING STEERING WHEEL COLUMN 64 10-80 (WFGS-WAW-WPS)

Copyright 1963 American Motors Corp.

ADJUSTING STEERING WHEEL COLUMN 65 10 (LCV-WCGS-WAW)

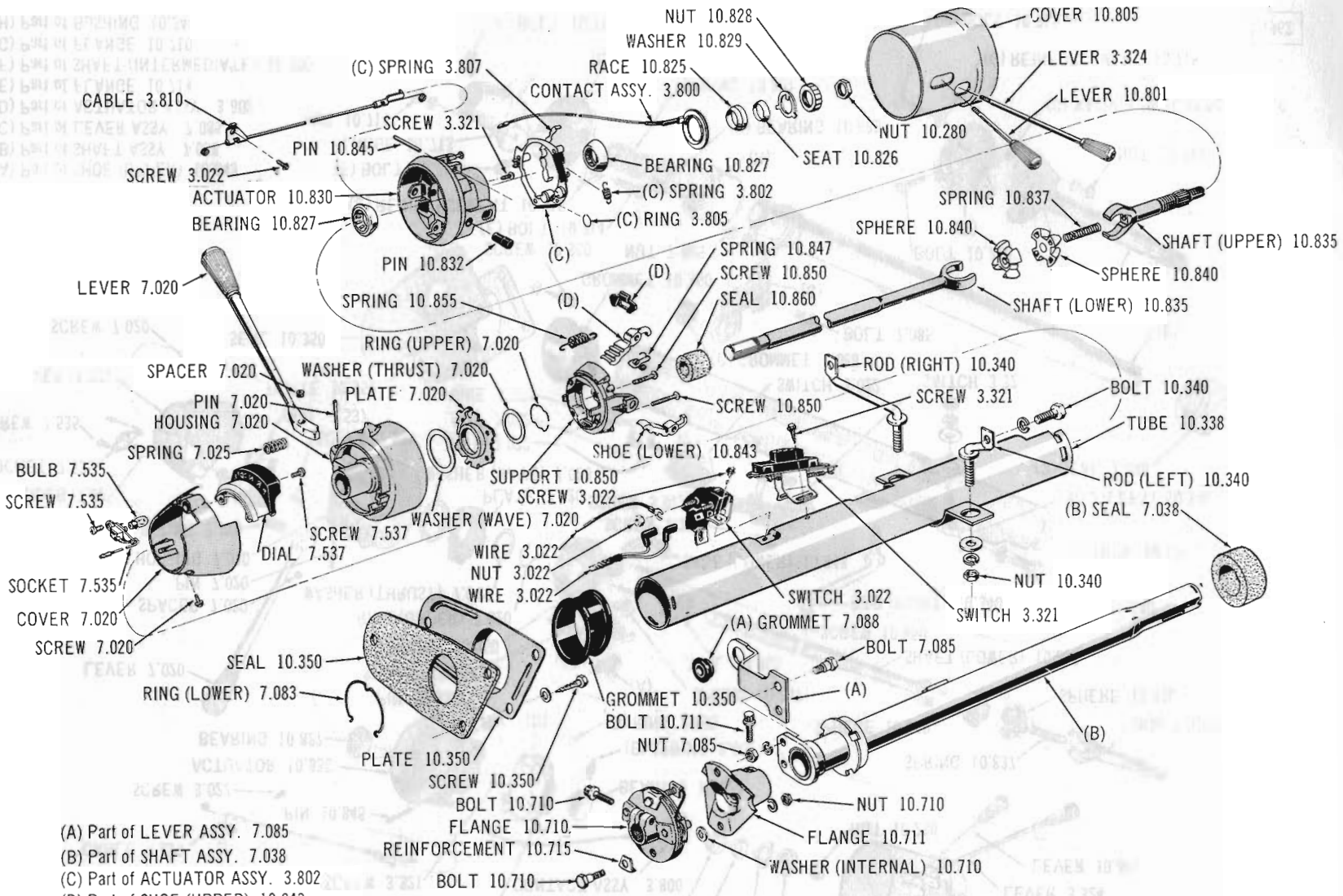

(A) Part of LEVER ASSY. 7.085
(B) Part of SHAFT ASSY. 7.038
(C) Part of ACTUATOR ASSY. 3.802
(D) Part of SHOE (UPPER) 10.843

1981

Copyright 1963 American Motors Corp.

Printed in U.S.A.

ADJUSTING STEERING WHEEL COLUMN 65 17 (WCGS-WAW): 65 80 (WCGS-WAW)

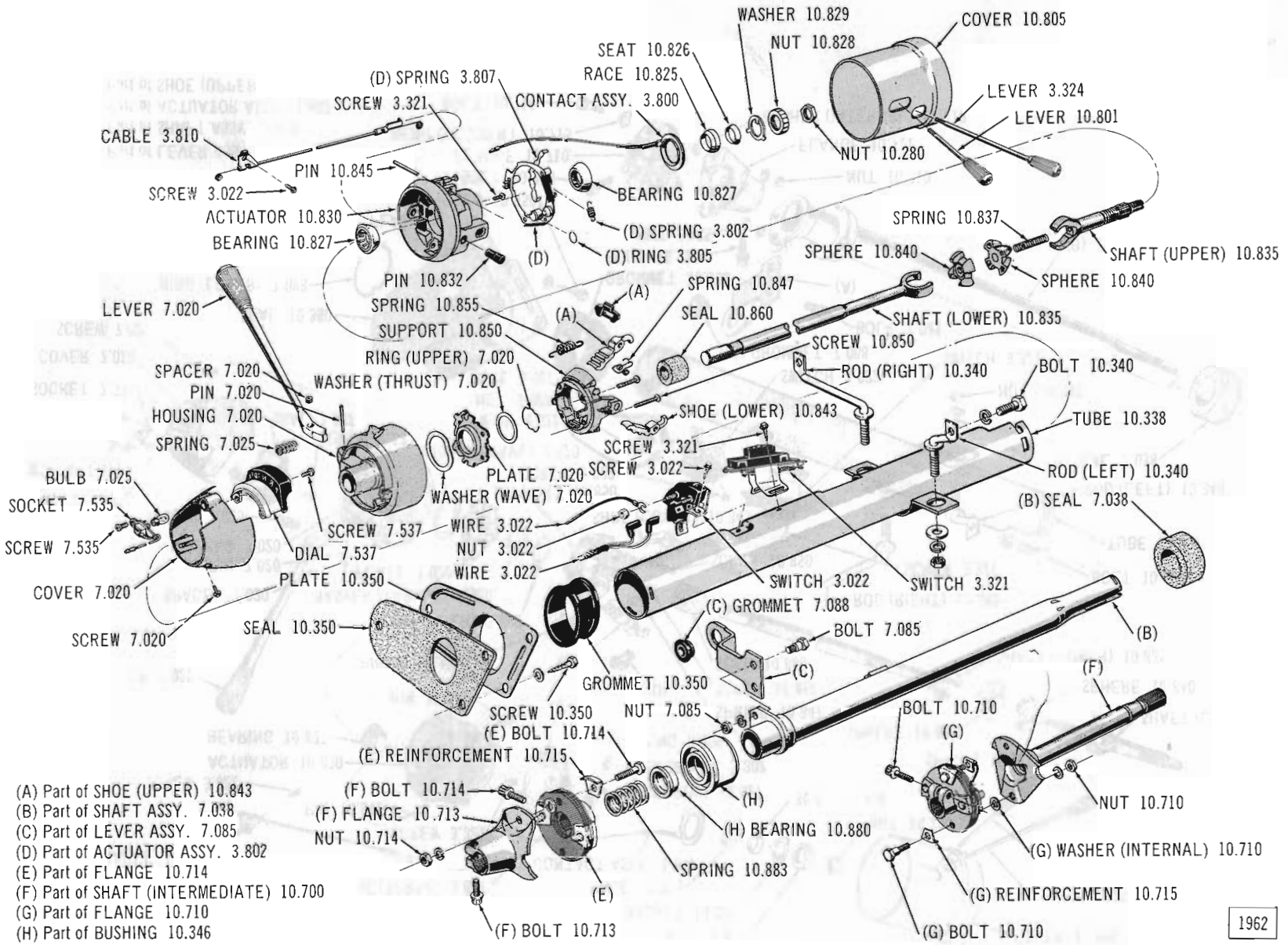

(A) Part of SHOE (UPPER) 10.843
(B) Part of SHAFT ASSY. 7.038
(C) Part of LEVER ASSY. 7.085
(D) Part of ACTUATOR ASSY. 3.802
(E) Part of FLANGE 10.714
(F) Part of SHAFT (INTERMEDIATE) 10.700
(G) Part of FLANGE 10.710
(H) Part of BUSHING 10.346

Copyright 1963 American Motors Corp.

Printed in U.S.A.

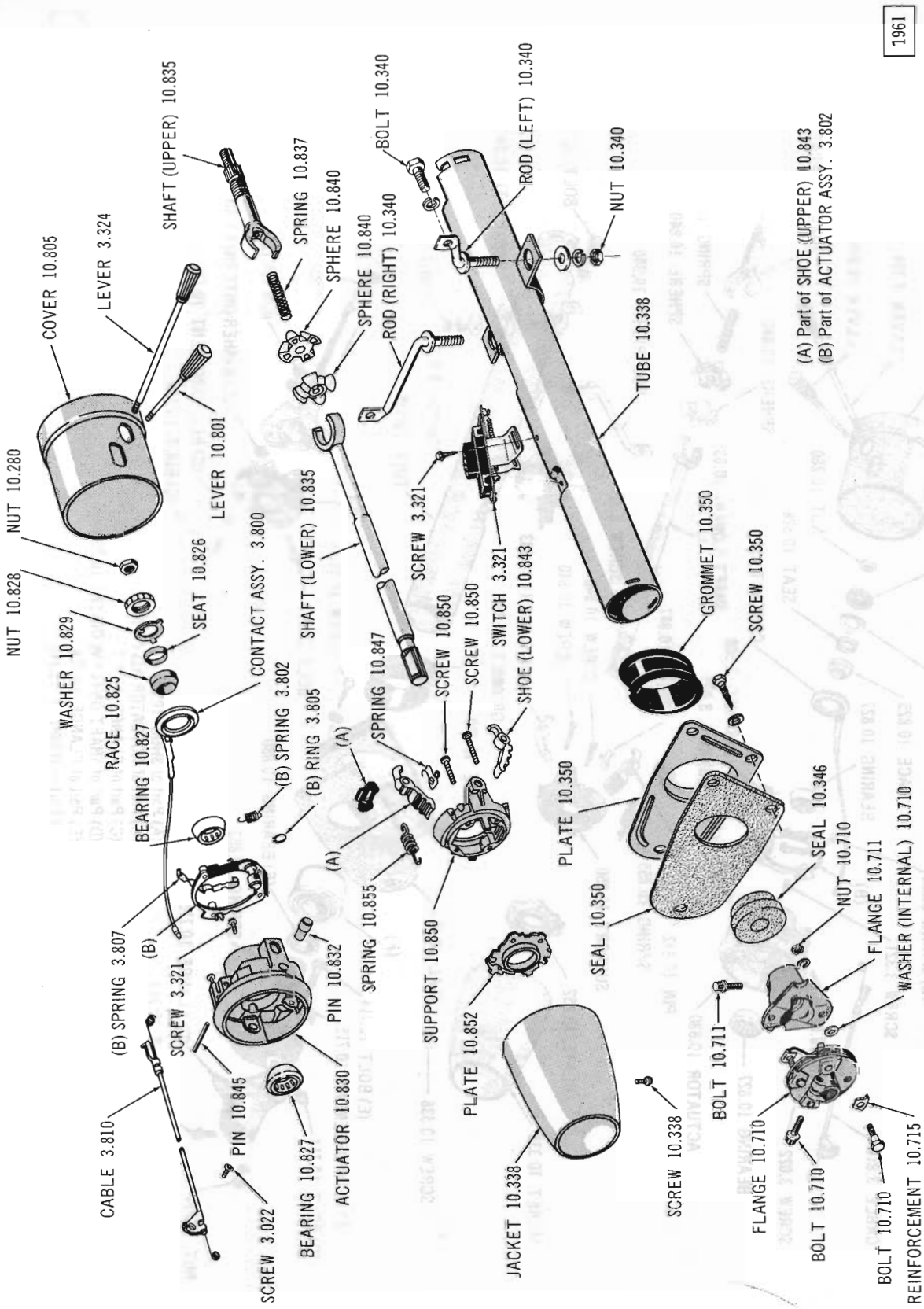

ADJUSTING STEERING WHEEL COLUMN 65 10 (LCV-WFGS-WAW)

Copyright 1963 American Motors Corp.

ADJUSTING STEERING WHEEL COLUMN 65 17 (WFGS-WAW): 65 80 (WFGS-WAW)

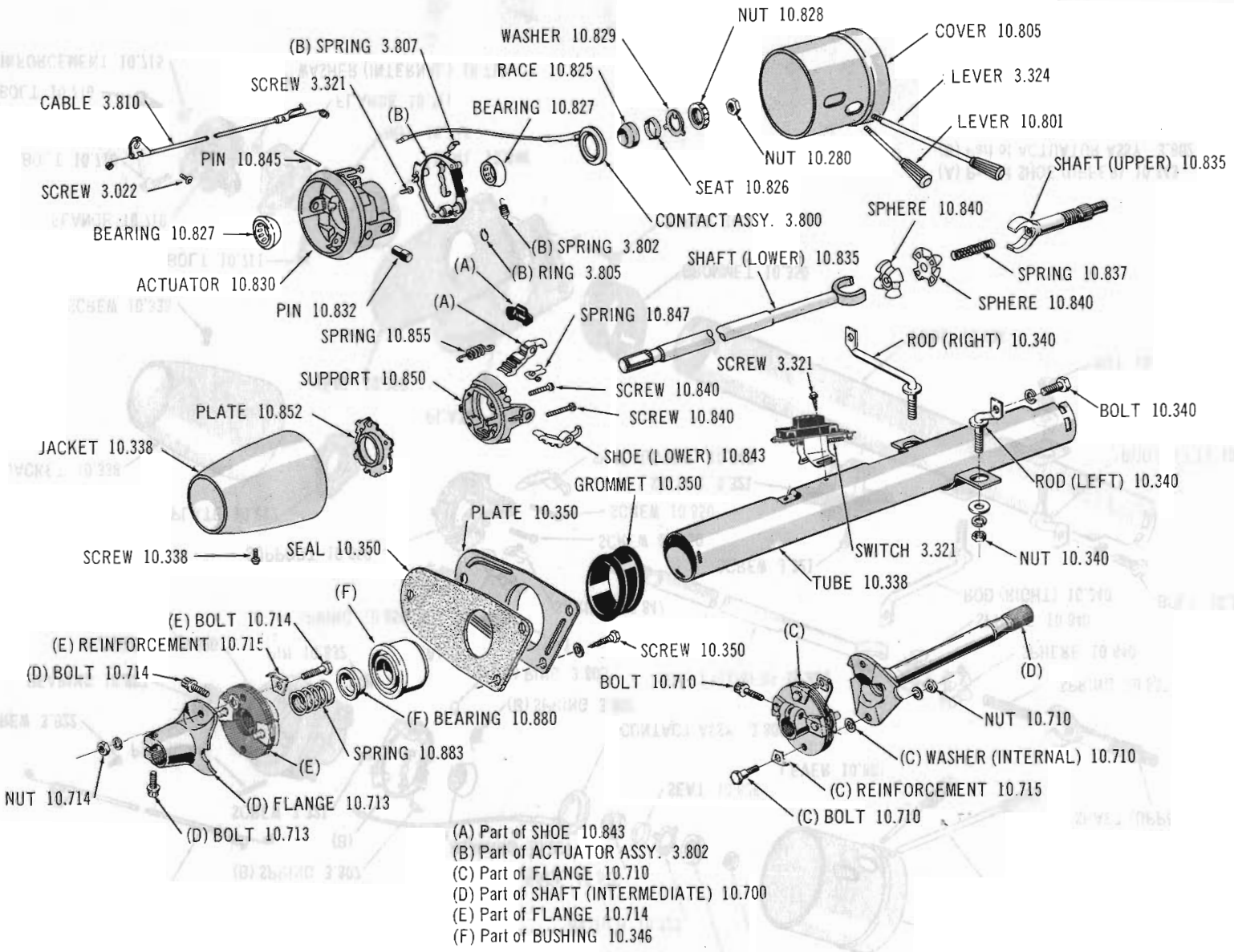

(A) Part of SHOE 10.843
(B) Part of ACTUATOR ASSY. 3.802
(C) Part of FLANGE 10.710
(D) Part of SHAFT (INTERMEDIATE) 10.700
(E) Part of FLANGE 10.714
(F) Part of BUSHING 10.346

1982

Copyright 1963 American Motors Corp.

Printed in U.S.A.

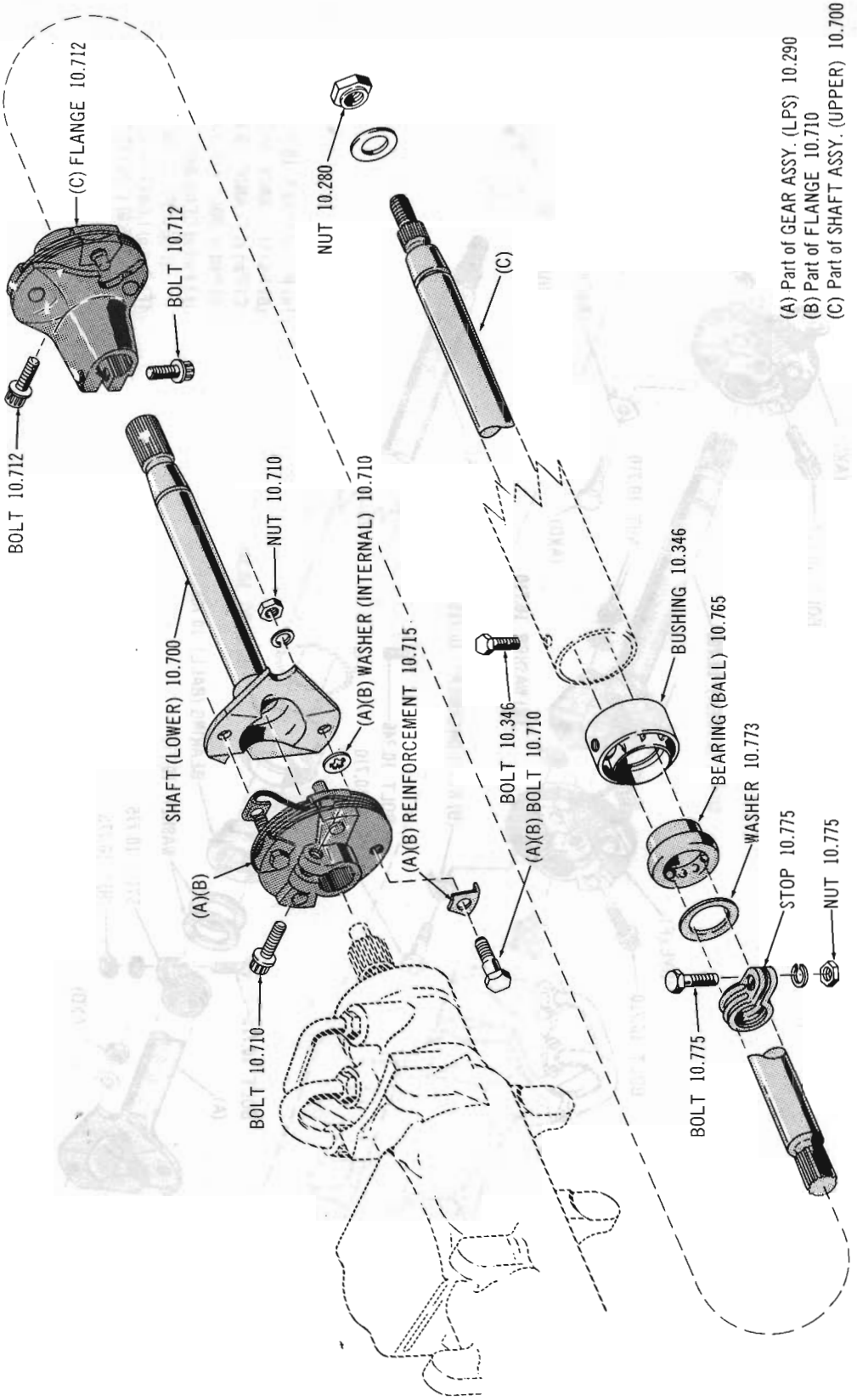

STEERING GEAR SHAFT 65 80 (LAW)(1 st. Type)

Copyright 1963 American Motors Corp.

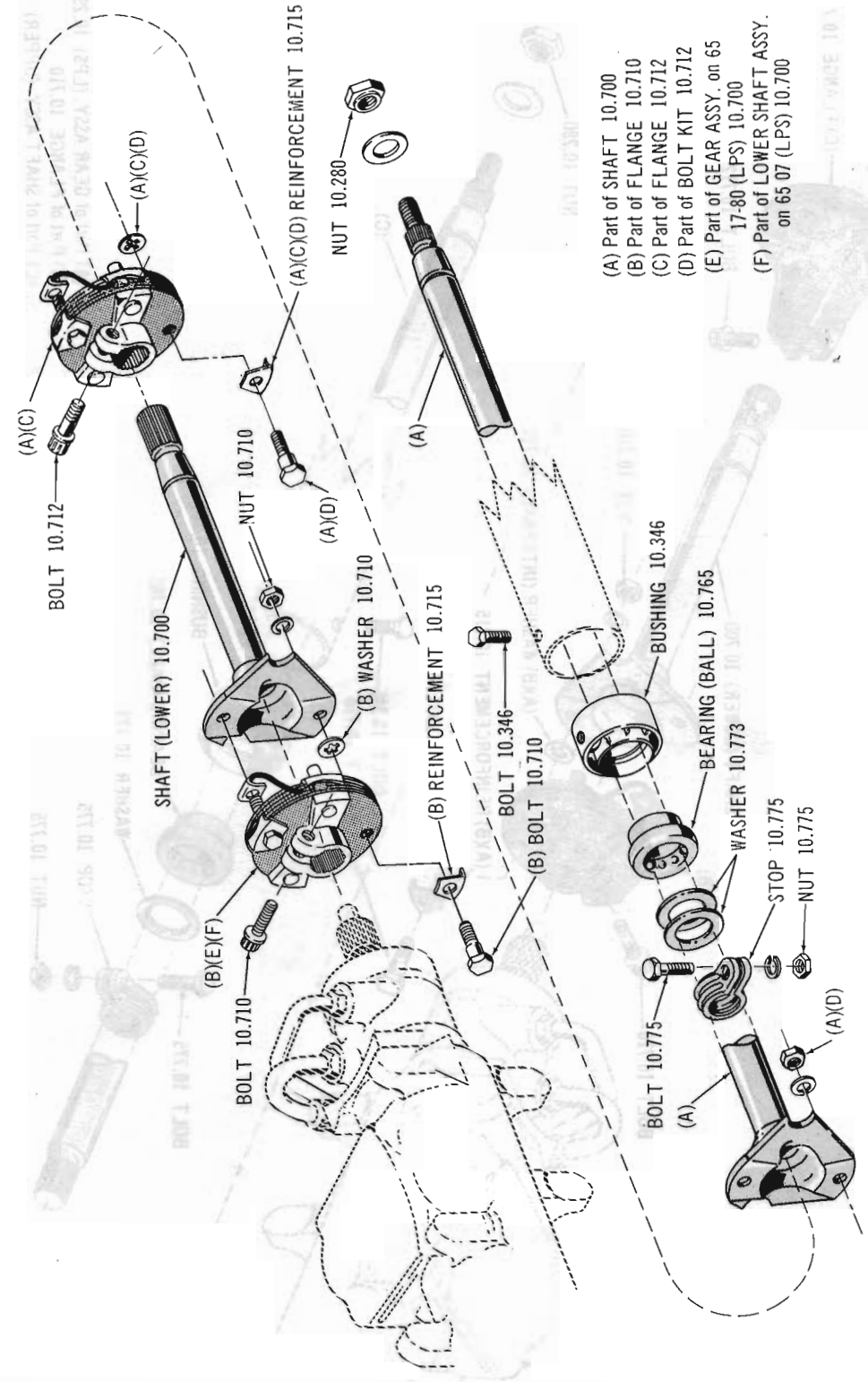

STEERING GEAR SHAFT 65 07-17 (LAW): 65 80 (LAW)(2 nd. Type)

Copyright 1963 American Motors Corp.

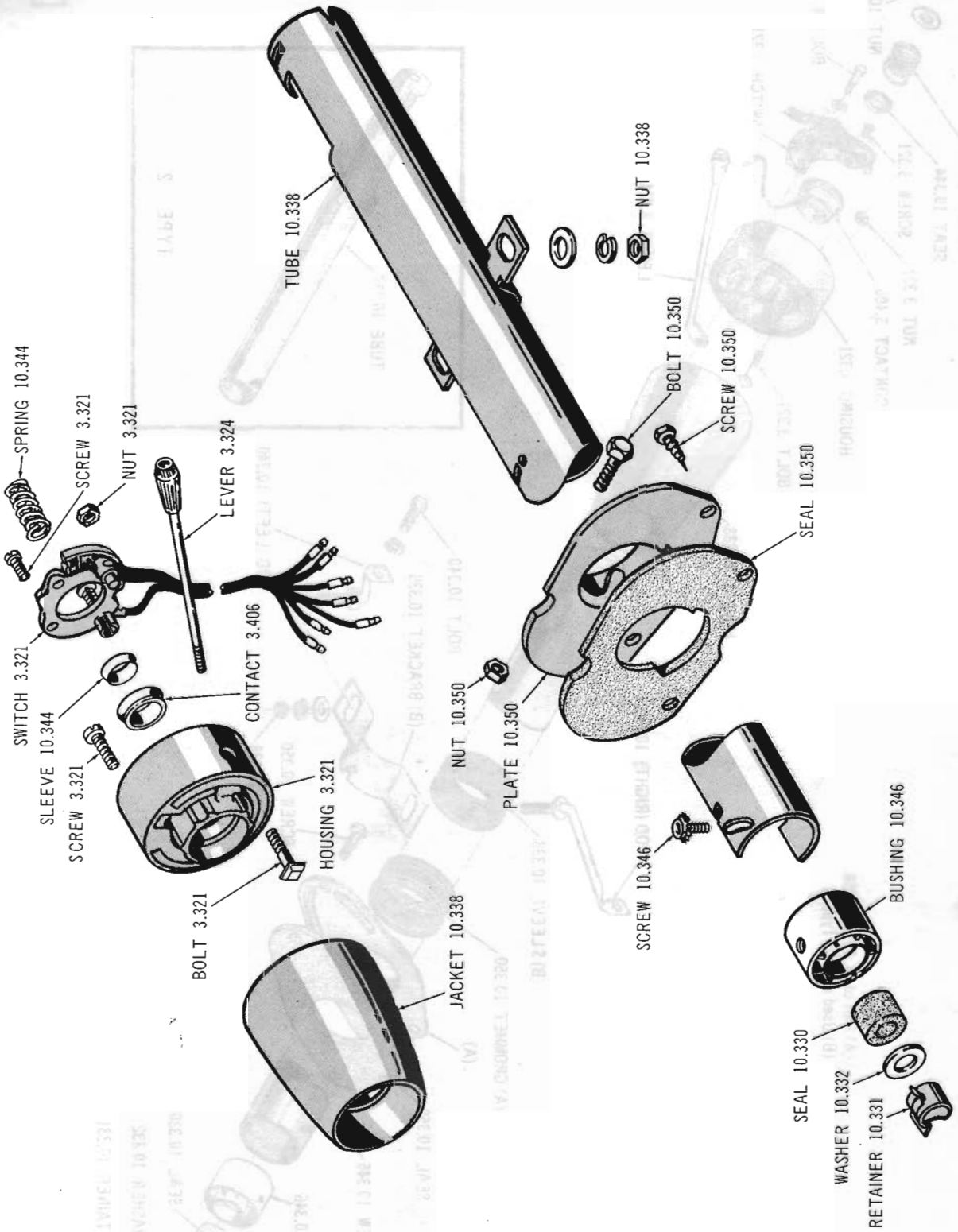

STEERING WHEEL COLUMN 65 01 (WFGS)

Copyright 1963 American Motors Corp.

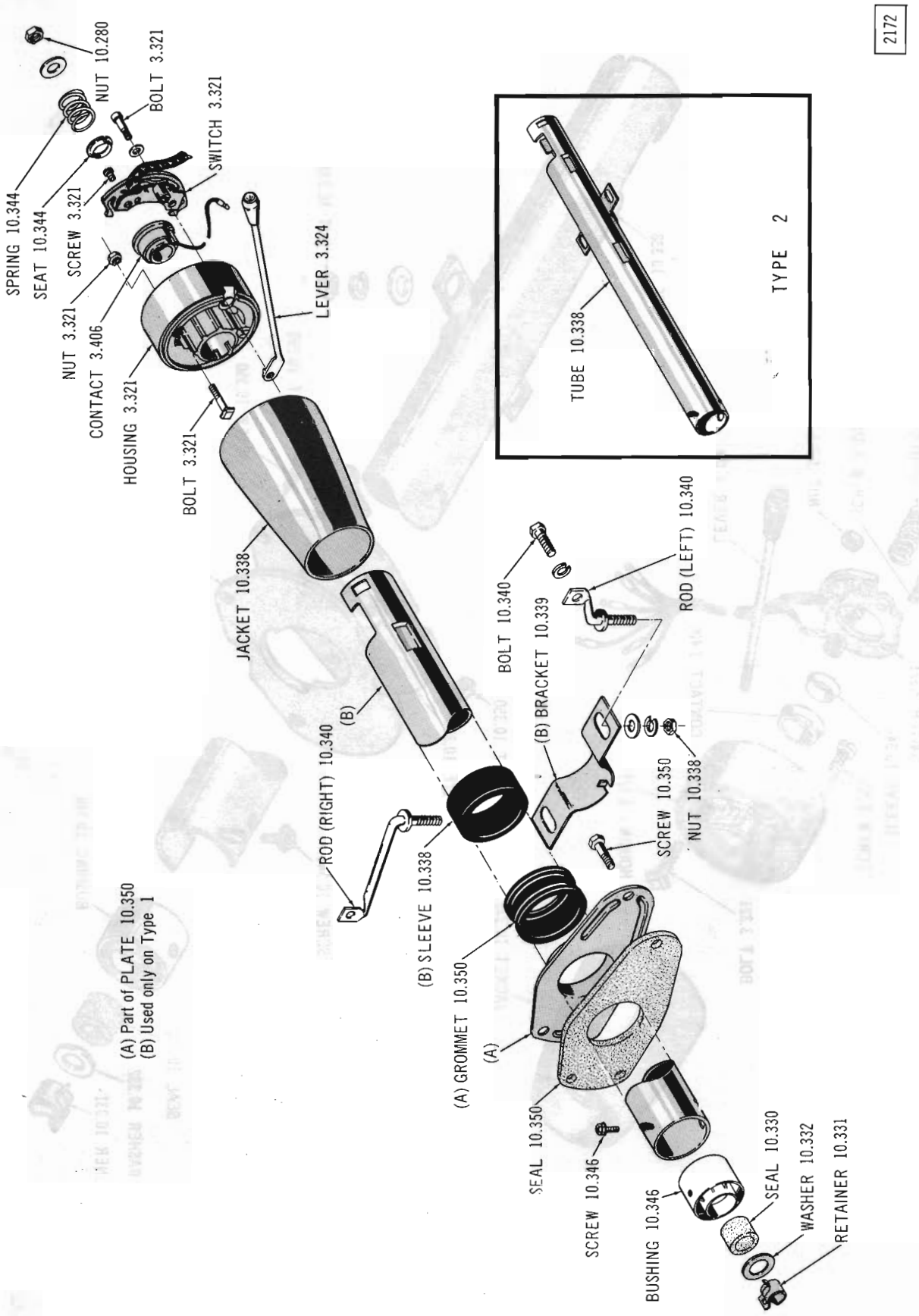

STEERING WHEEL COLUMN 65 10-80 (WFGS-LAW)

Copyright 1963 American Motors Corp.

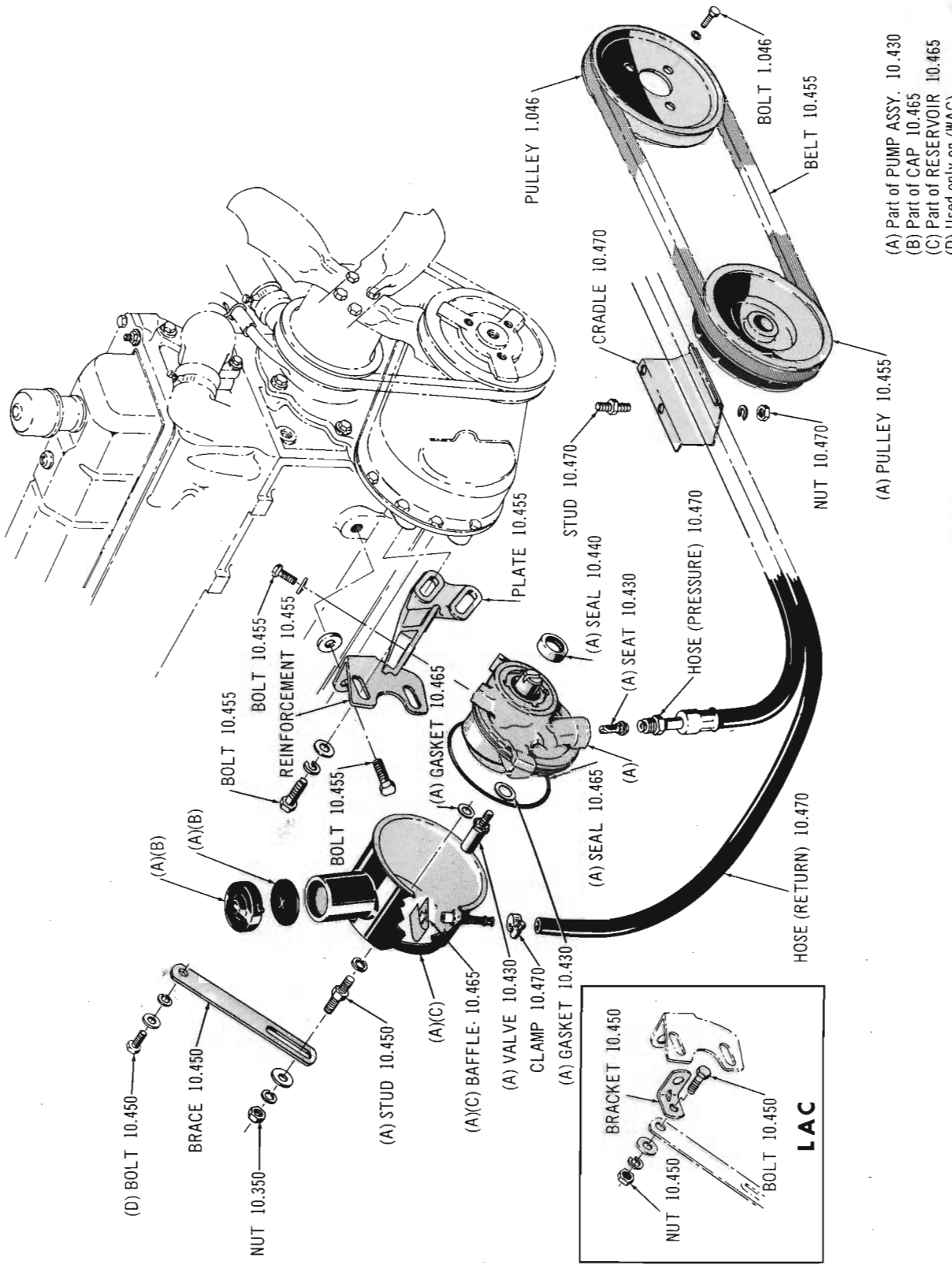

POWER STEERING PUMP, RESERVOIR AND HOSES 65 ALL MODELS (199)(232)

Copyright 1963 American Motors Corp.

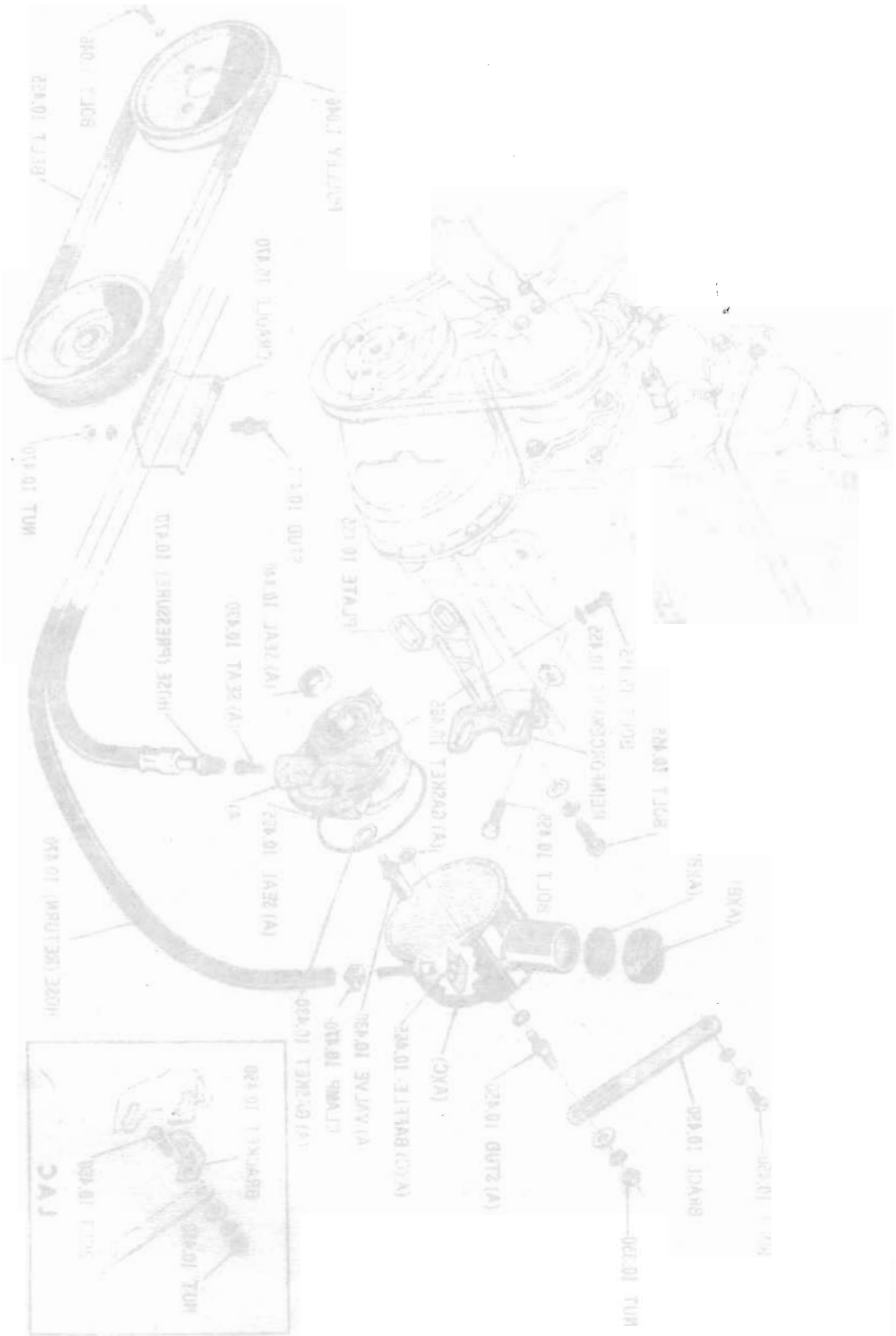

Copyright 1963 American Motors Corp.

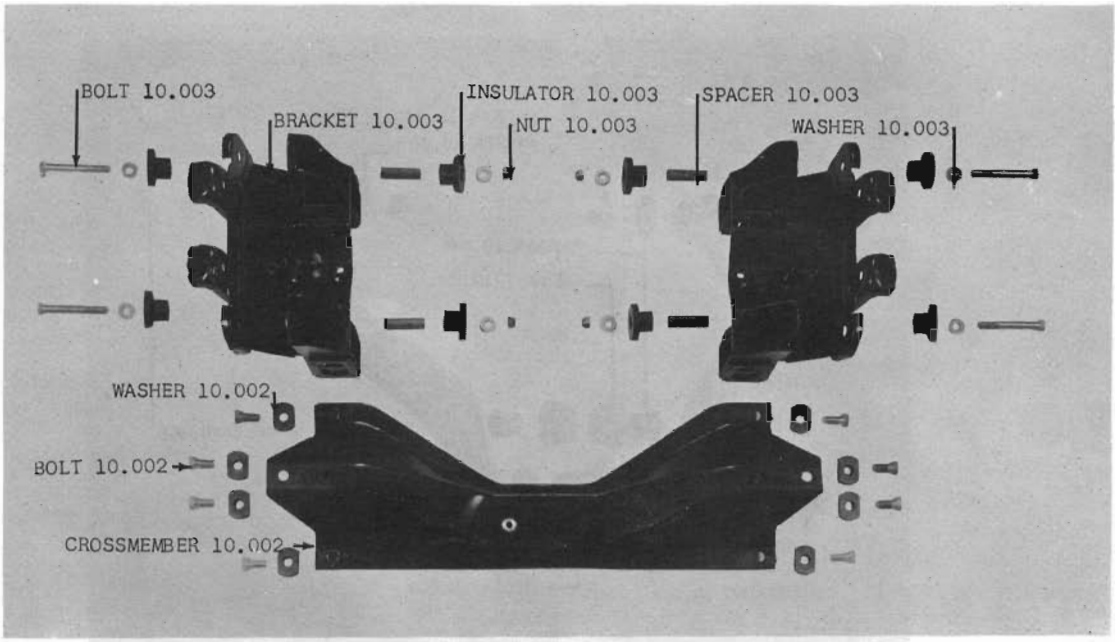

FIG. 10.002-3 FRONT SUSPENSION CROSSMEMBER AND MOUNTING 60-61 10-20-80

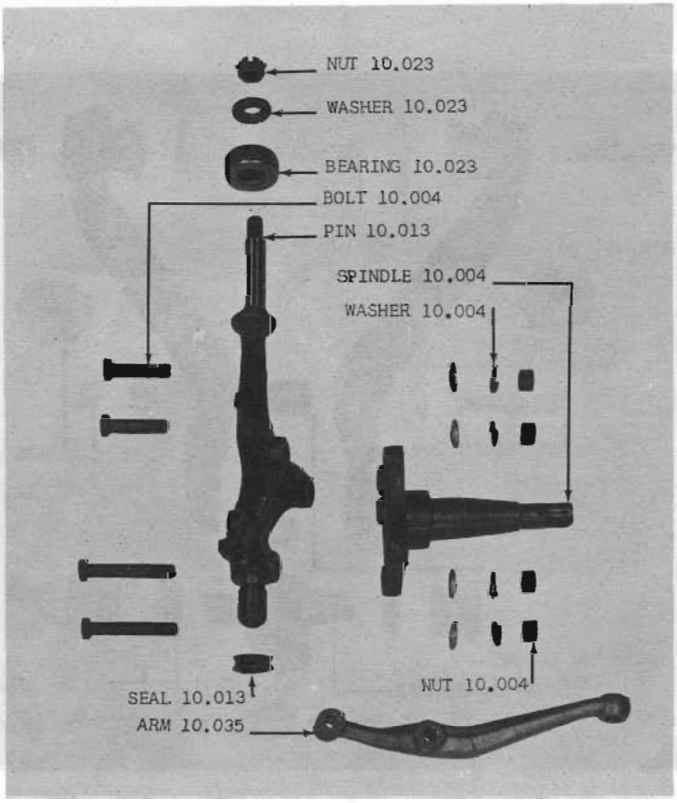

FIG. 10.013-3 STEERING KNUCKLE SPINDLE AND PIN 60-61 10-20-80

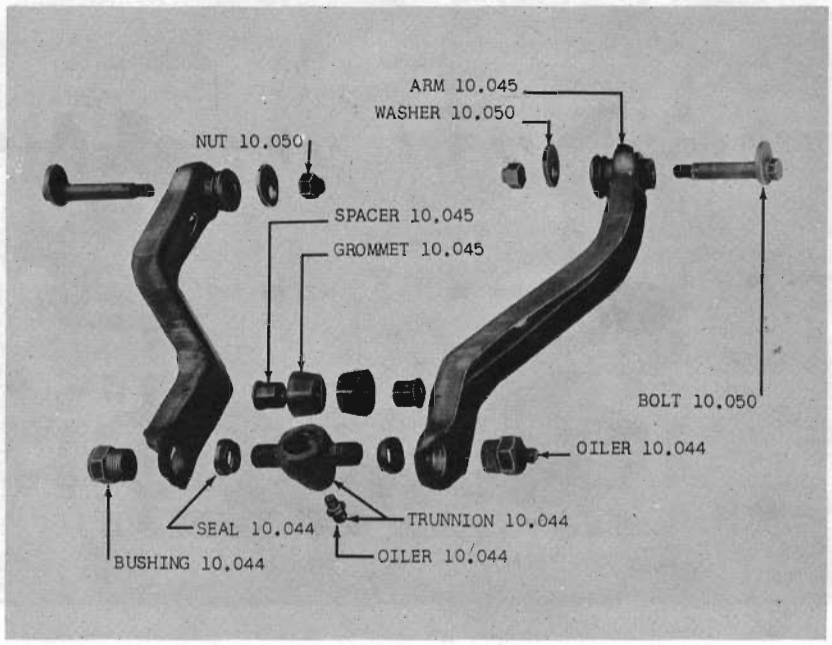

FIG. 10.045-3 LOWER CONTROL ARM 60-61 10-20-80

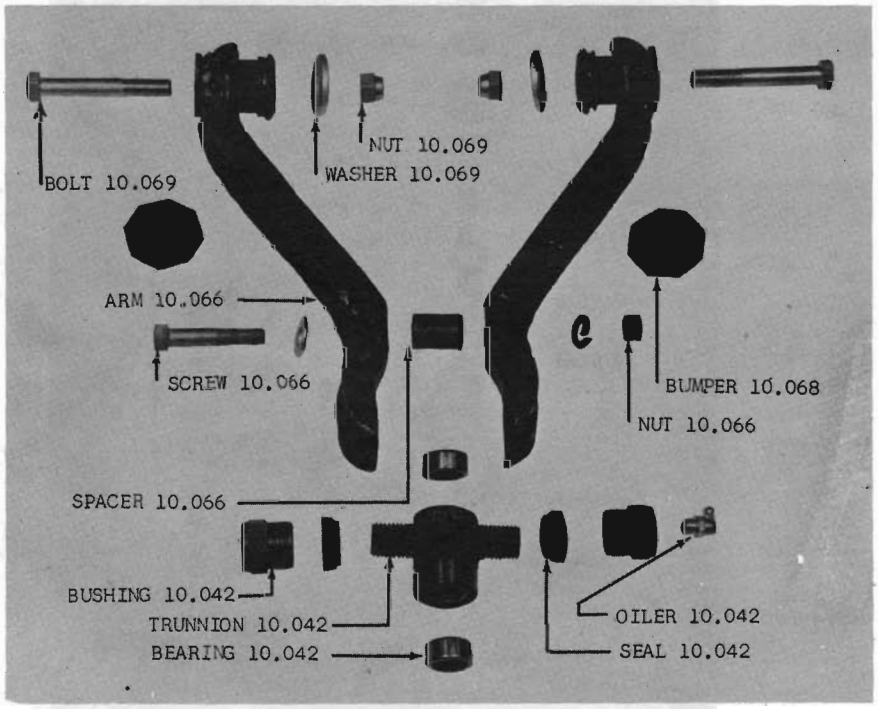

FIG. 10.066-3 UPPER CONTROL ARM 60-61 10-20-80

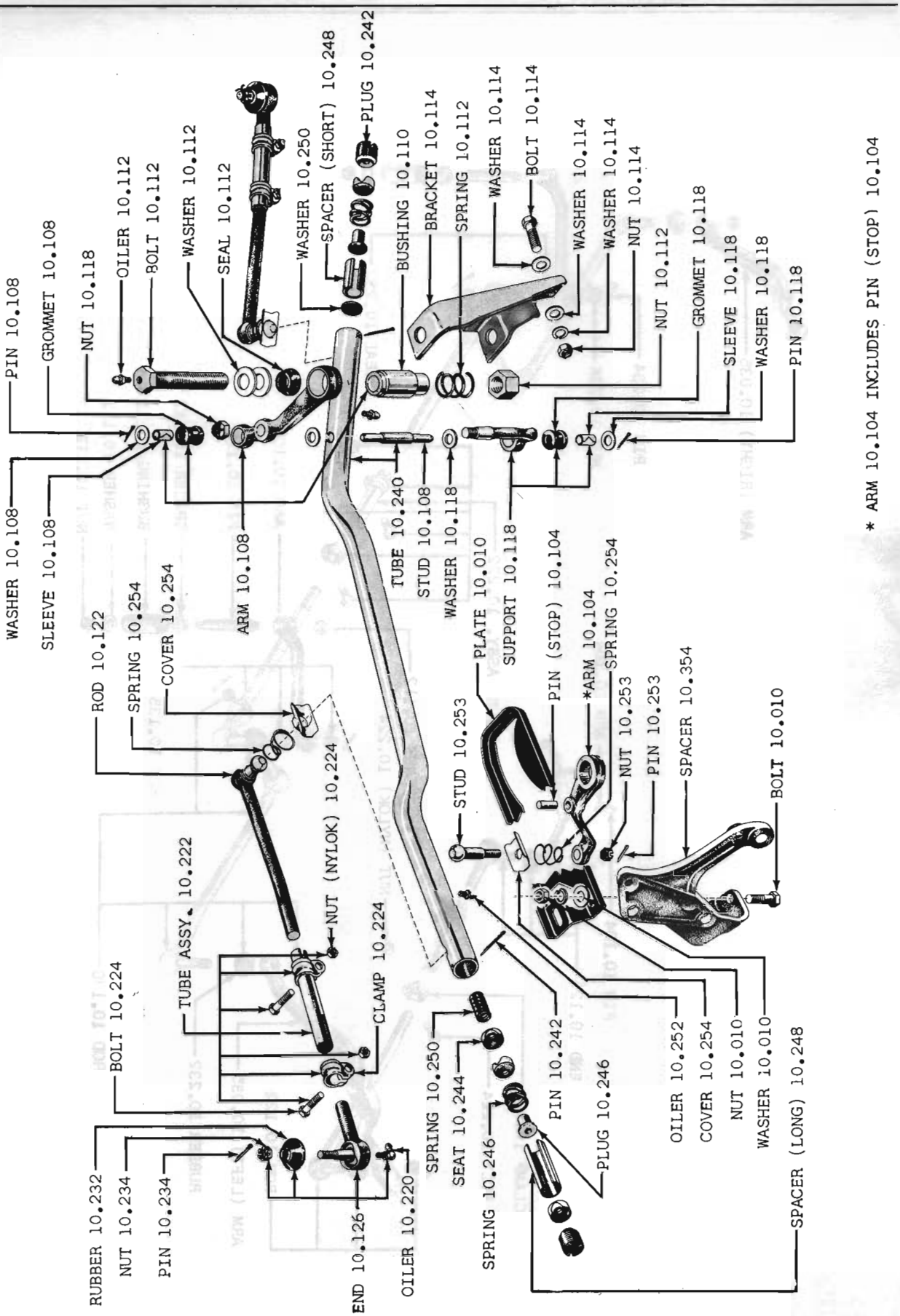

FIG. 10.100-3 STEERING LINKAGE 60-61 10 (LHD-LPS)

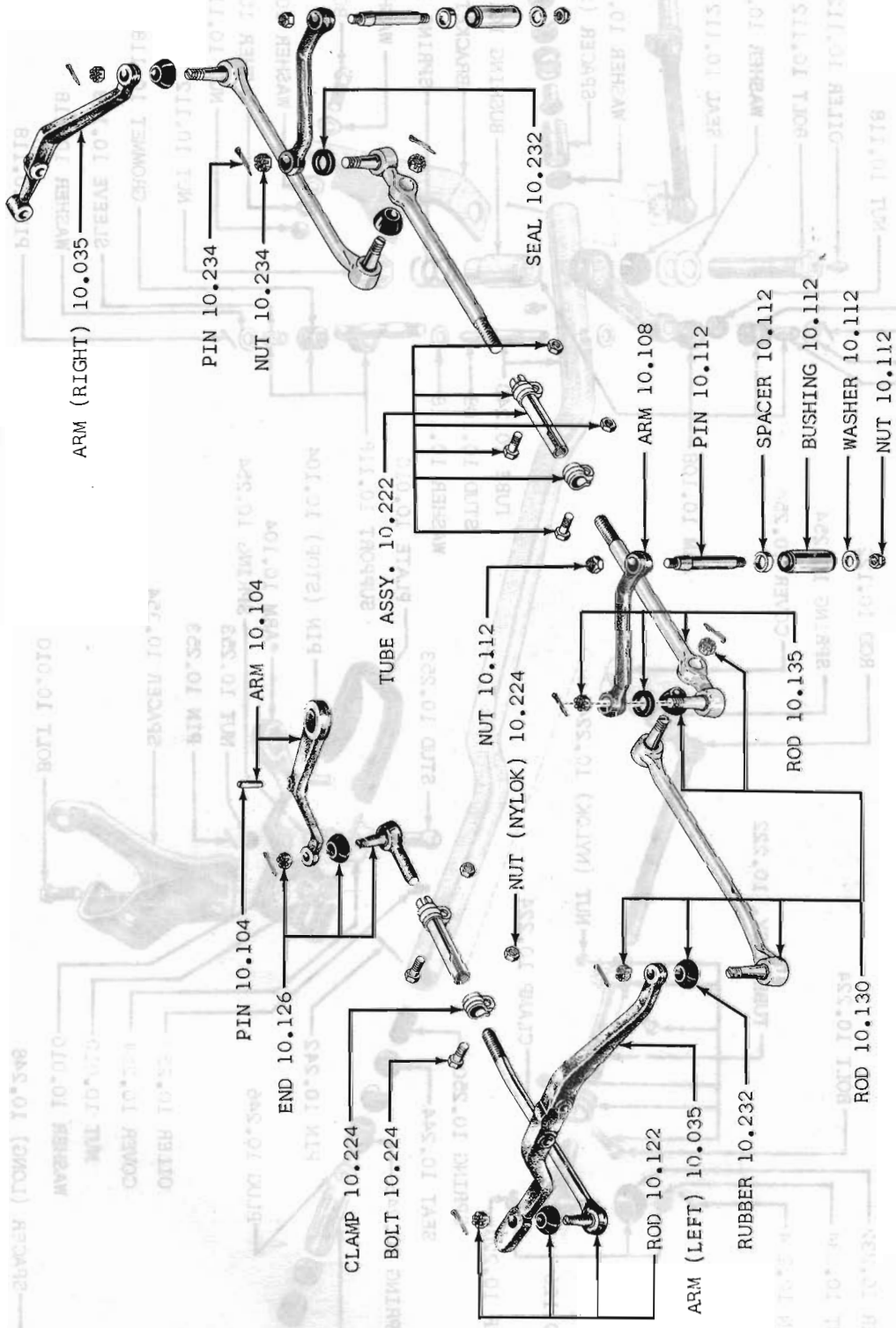

FIG. 10.100-4 STEERING LINKAGE 60-61 20 (LHD-LPS)



FIG. 10.100-5 STEERING LINKAGE 62-63 10-80 (LHD-LPS)(REFER IL 10-15)

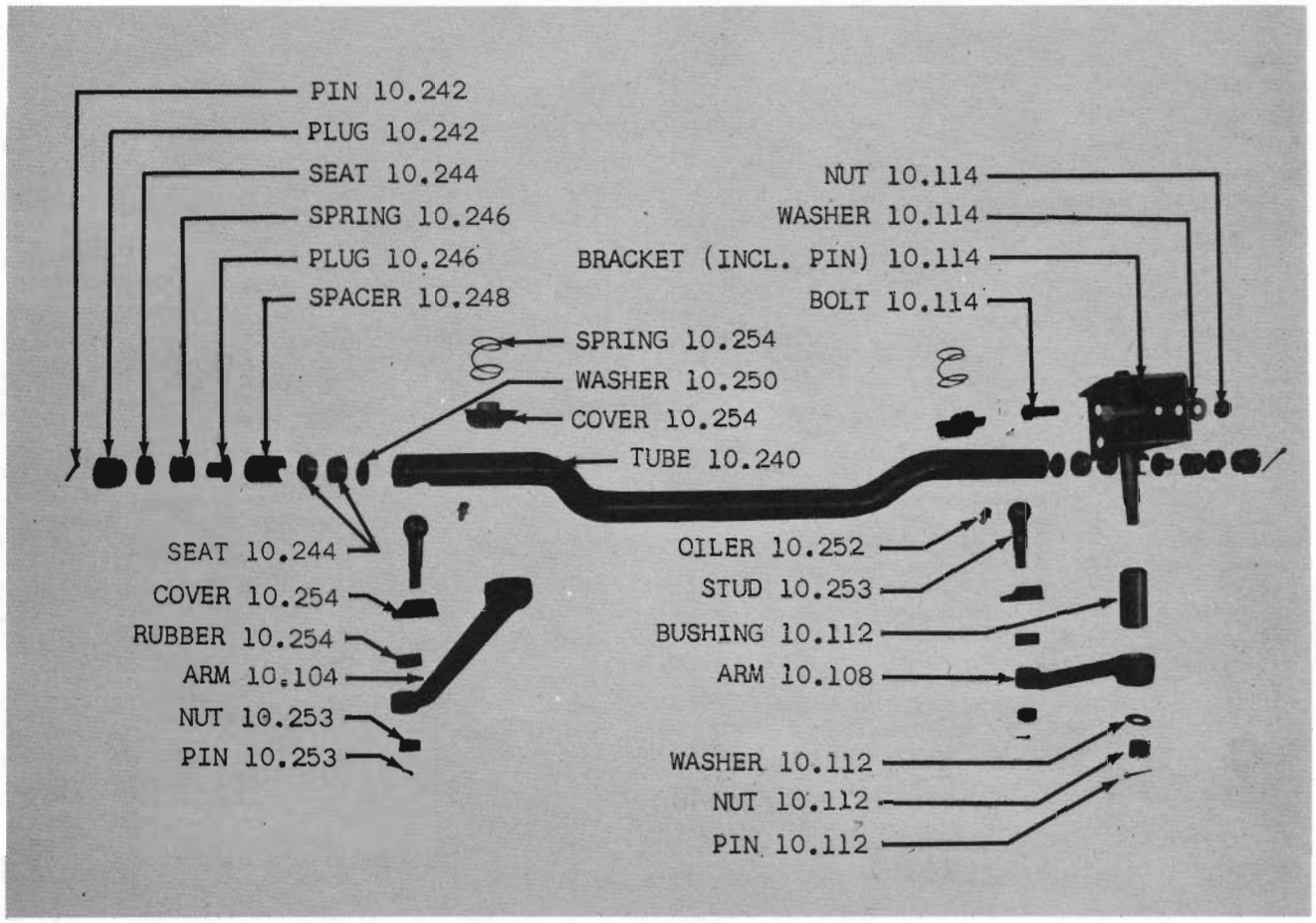

FIG. 10.100-6 STEERING LINKAGE CROSS TUBE 60-61 80 (LPS)

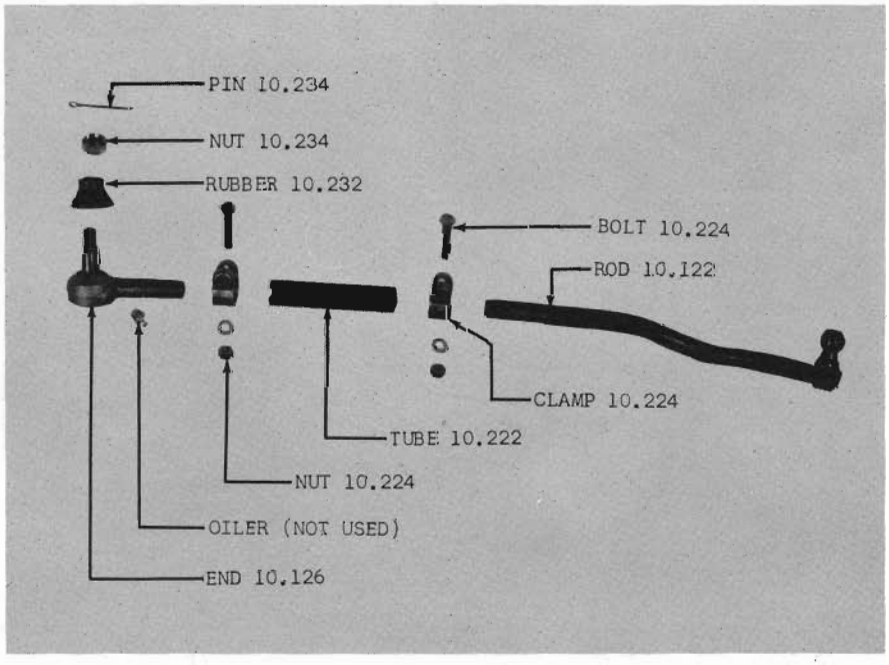

FIG. 10.122-1 STEERING LINKAGE TIE ROD 60-61 01-10-20; 60-61 80 (LPS)

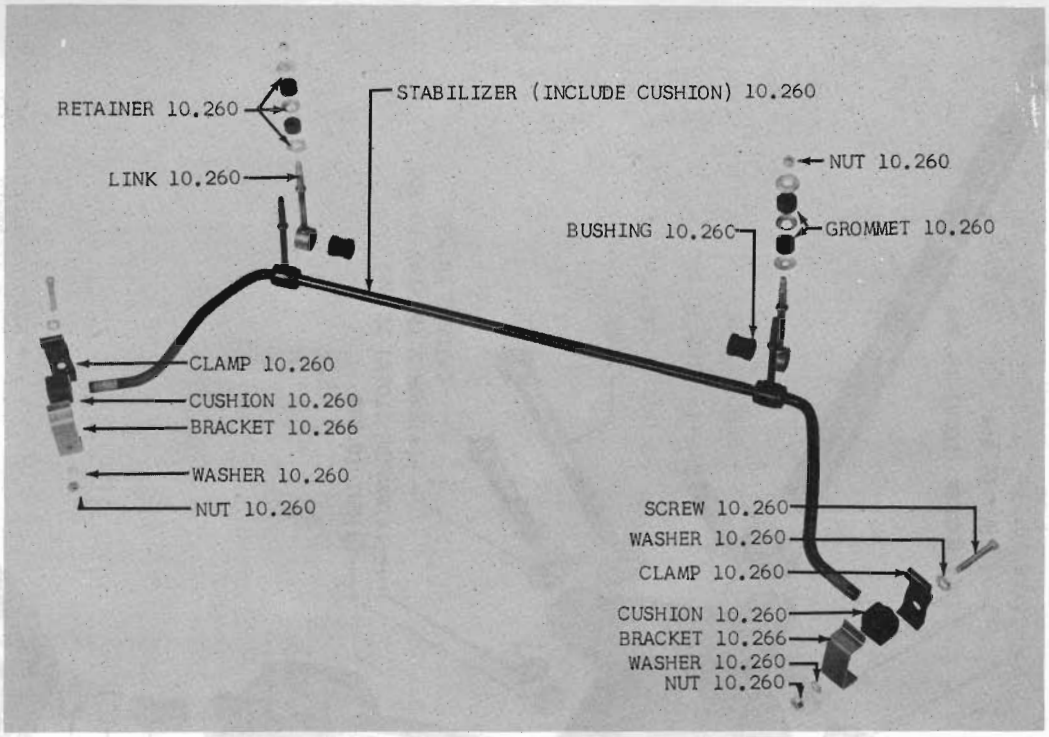

FIG. 10.260-7 FRONT SUSPENSION SWAY STABILIZER 60-61 80

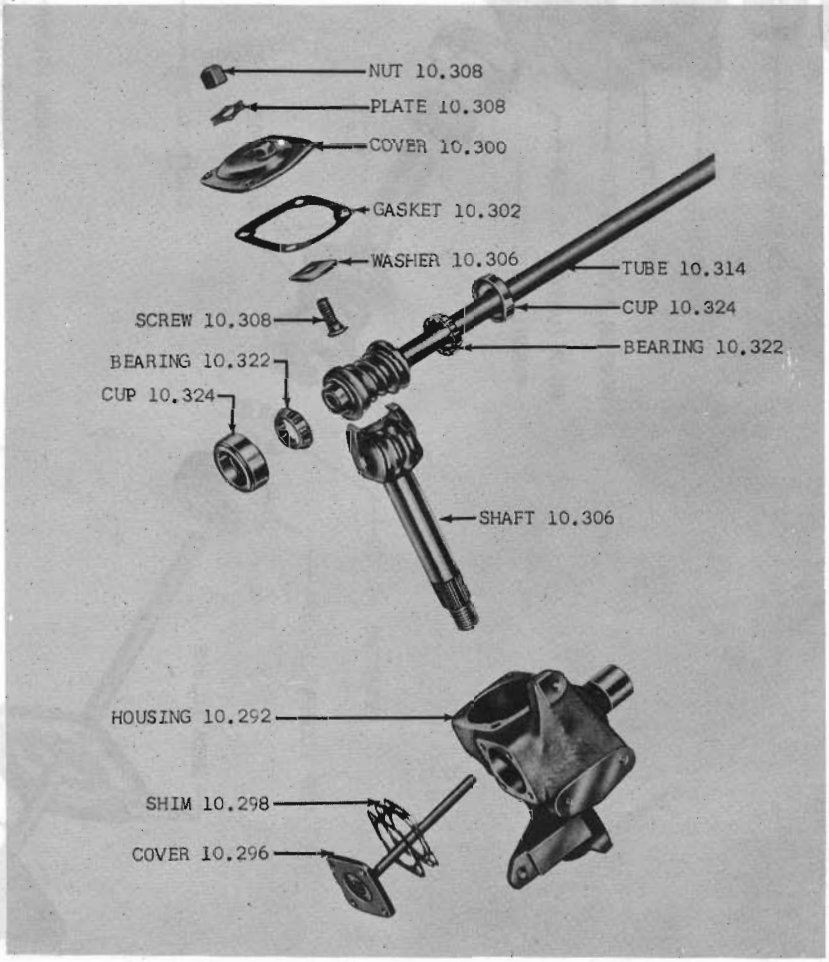

FIG. 10.290-1 STEERING GEAR 60-61 01

Printed in U.S.A.

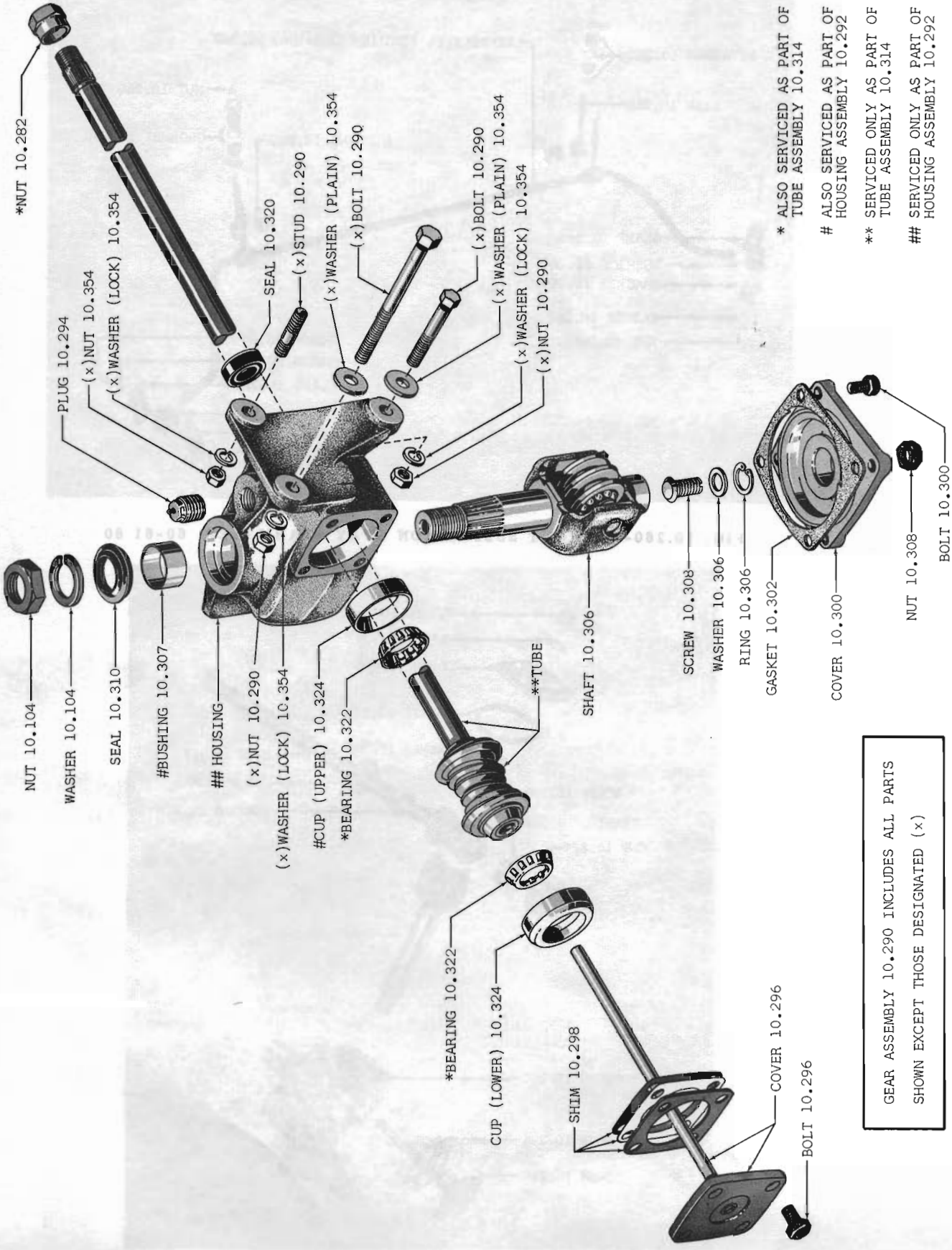

FIG. 10.290-2 STEERING GEAR 62-63 01 (LHD)

Printed in U.S.A.

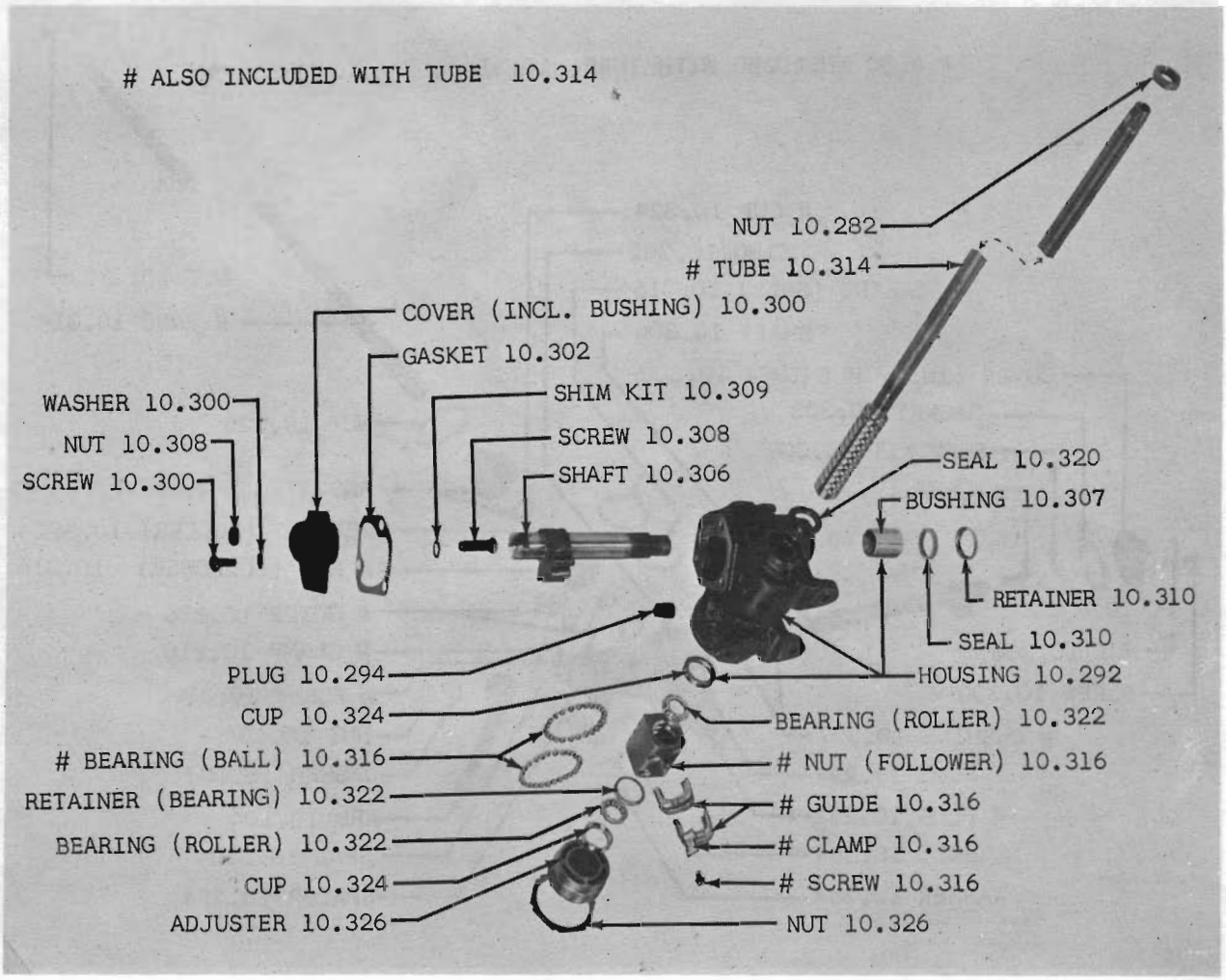

FIG. 10.290-3 STEERING GEAR 60-61 10-20; 62-63 80

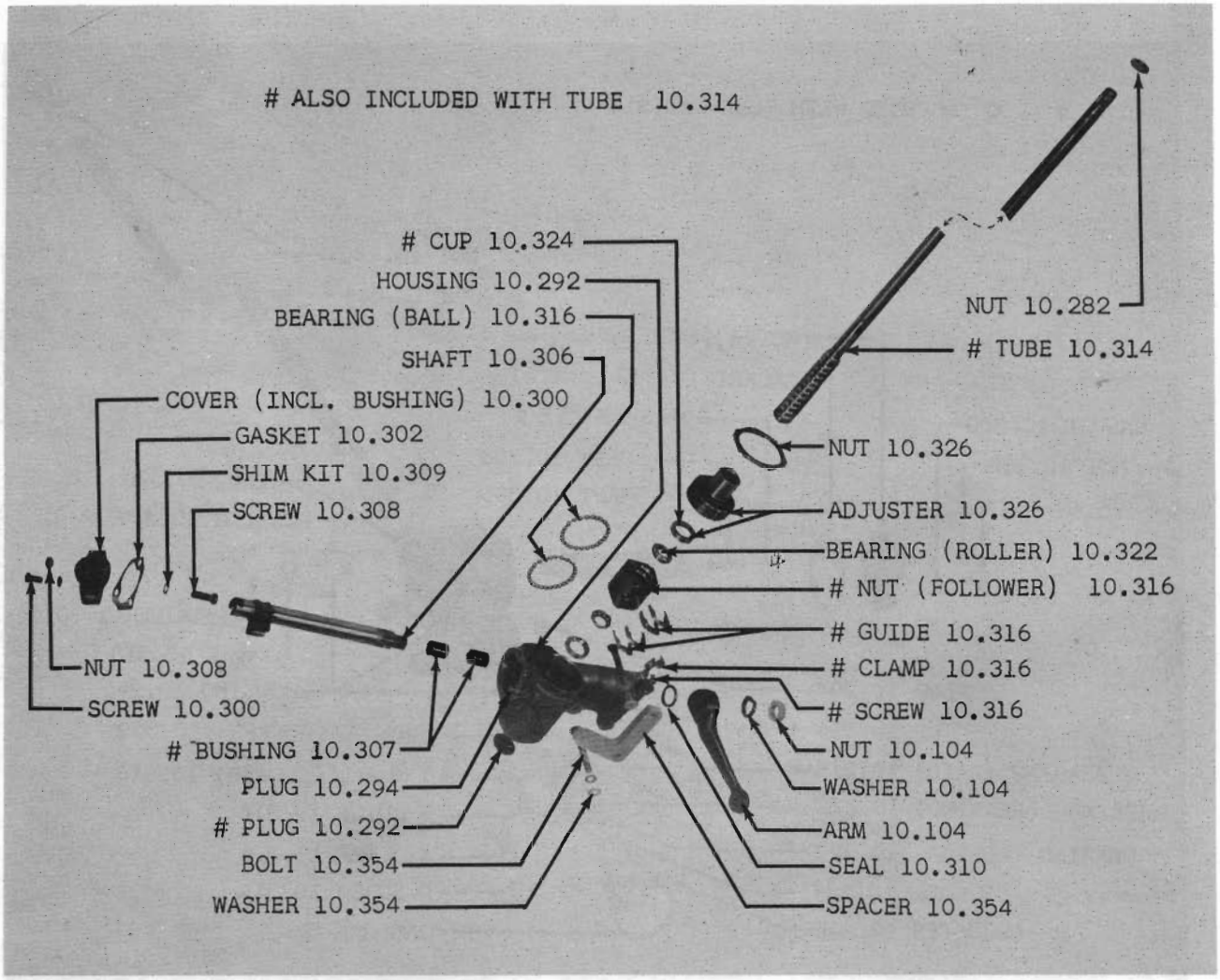

FIG. 10.290-7 STEERING GEAR 60-61 80 (LHD)

Printed In U.S.A.

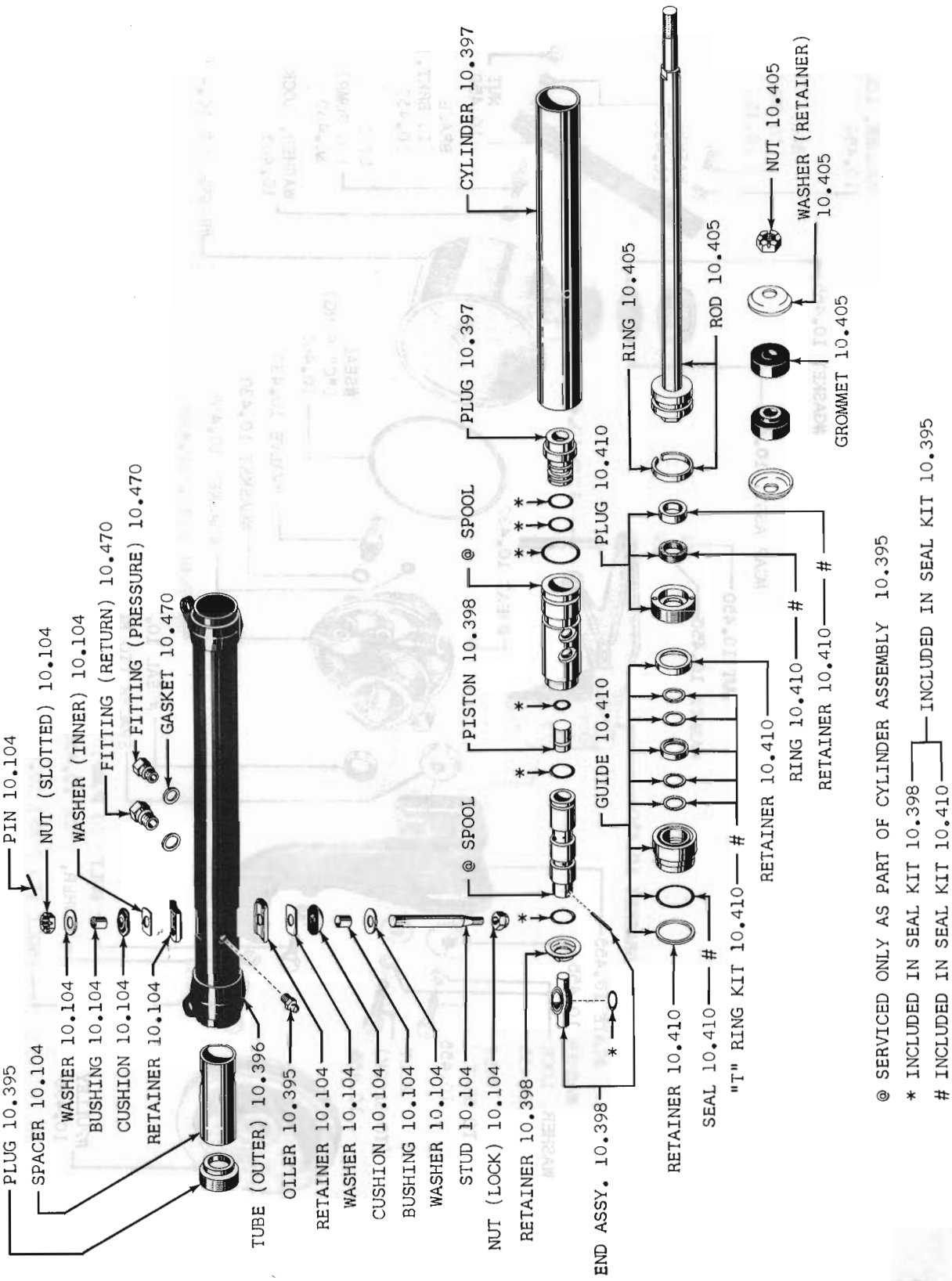

FIG. 10.395-3 POWER STEERING POWER CYLINDER 60-61 ALL MODELS (WPS)

Printed in U.S.A.

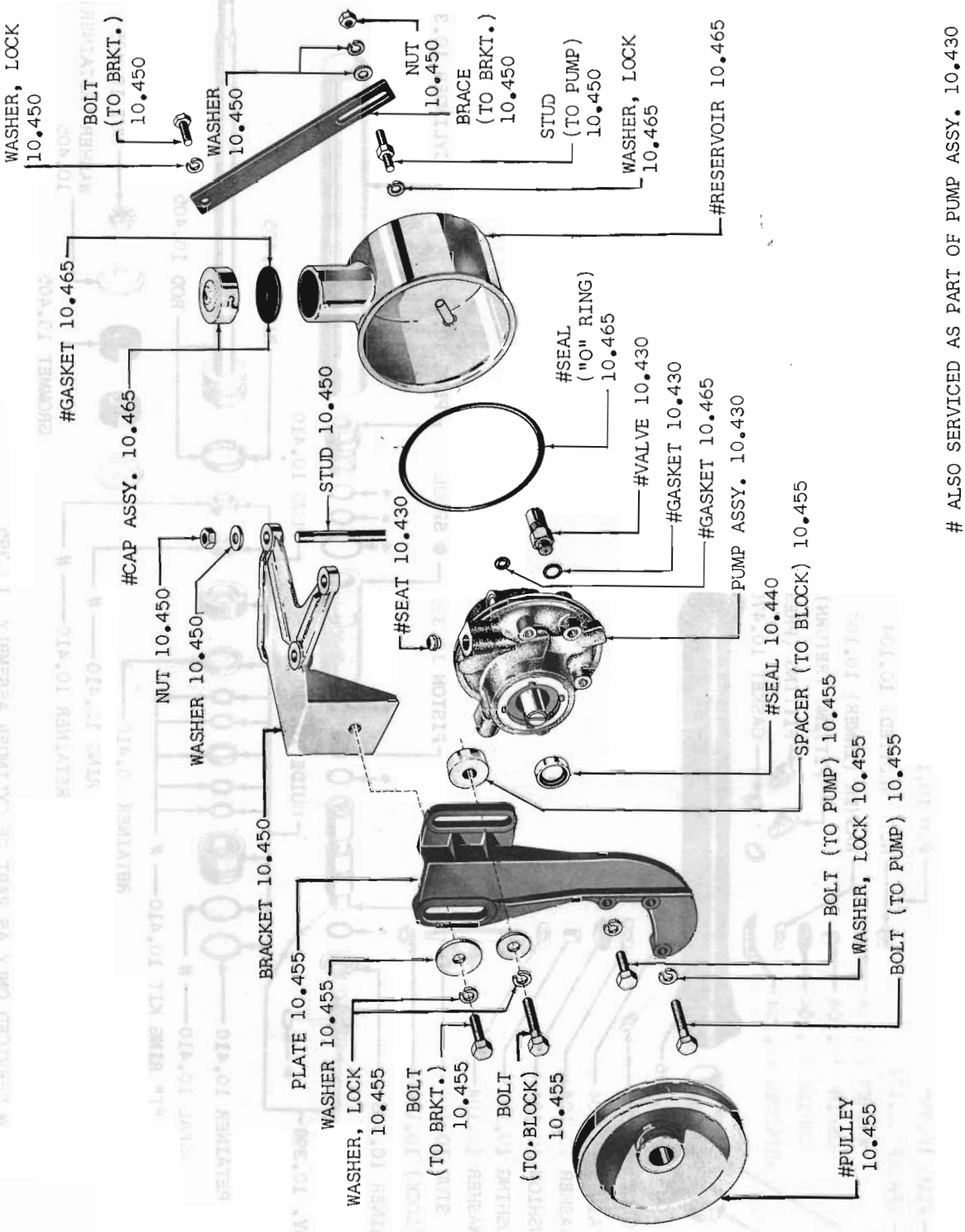

FIG. 10.430-1 POWER STEERING PUMP AND RESERVOIR 61 01(LHE-WPS-LAC)

Printed in U.S.A.

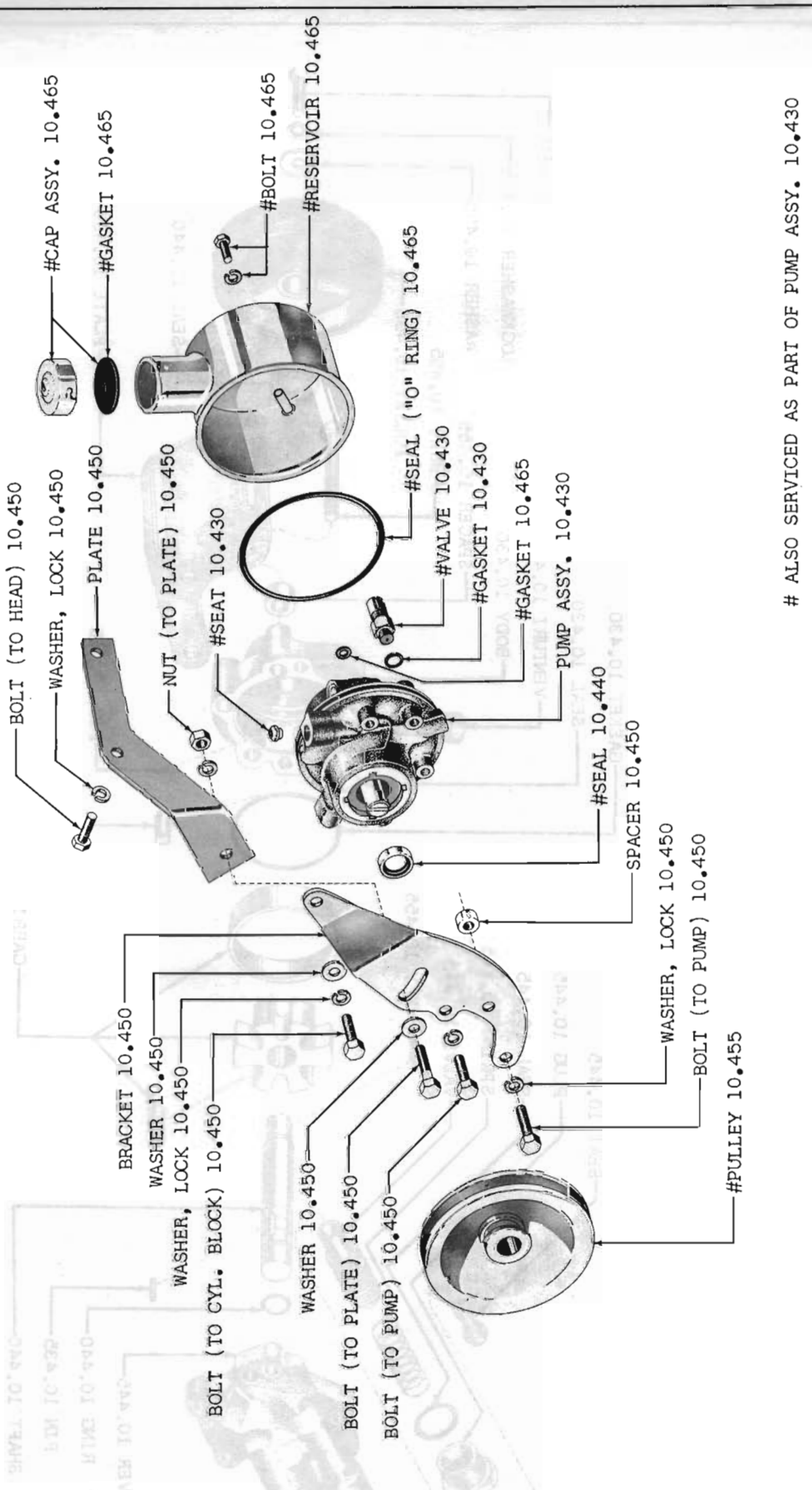

FIG. 10.430-2 POWER STEERING PUMP AND RESERVOIR 61 C1-10 (OHV-WPS-LAC)

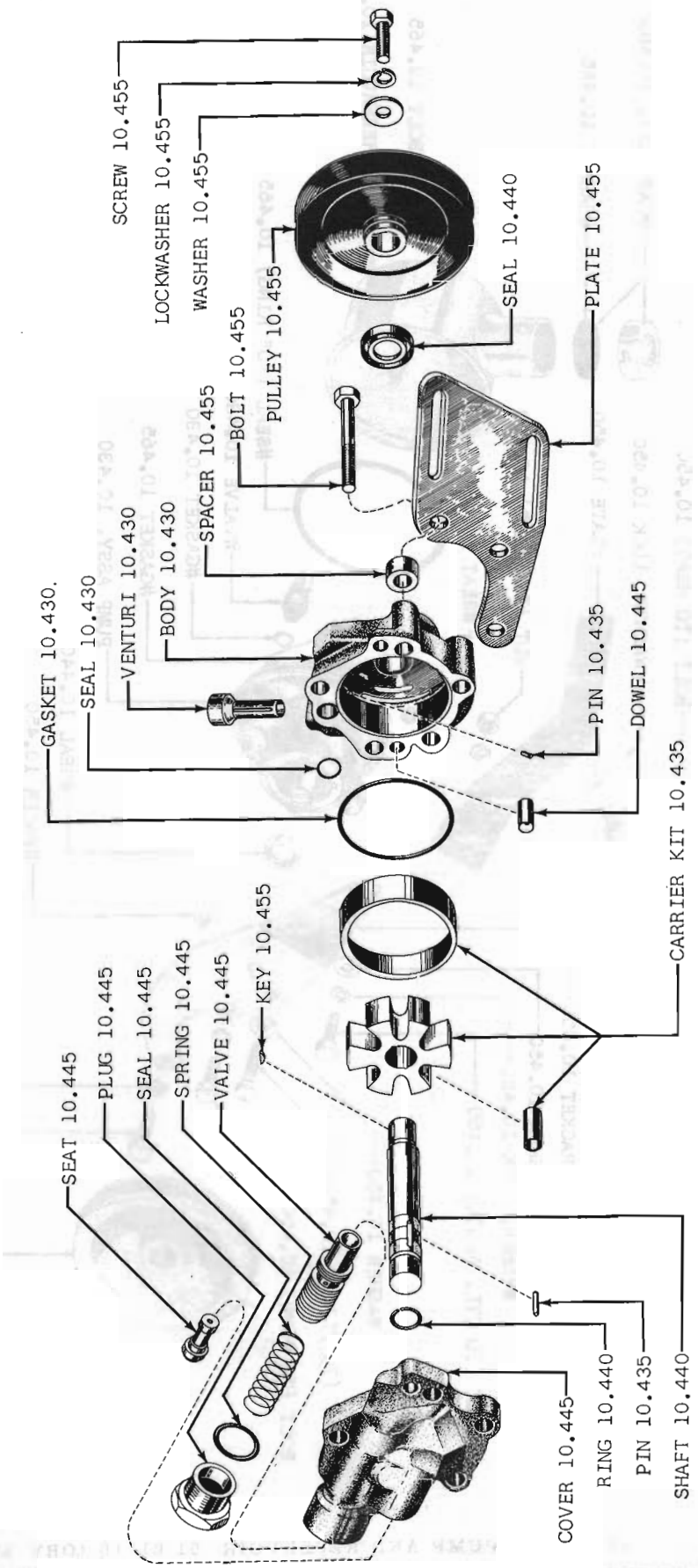

FIG. 10.430-7 POWER STEERING PUMP (EATON) 60 THRU 62 20-80 (WPS)

Printed in U.S.A.

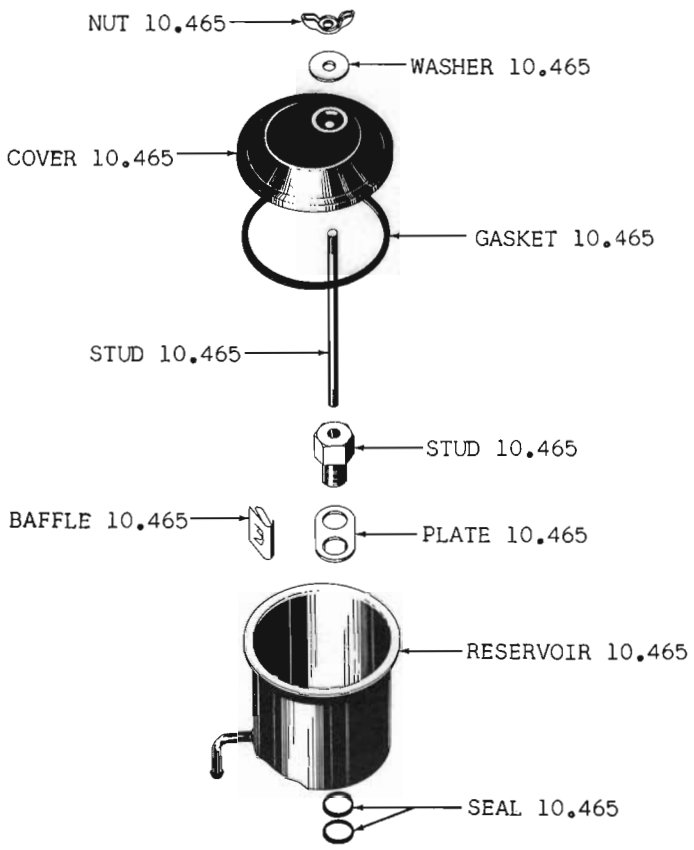

FIG. 10.465-5 POWER STEERING PUMP RESERVOIR (EATON) 60 THRU 62 20-80 (WPS)

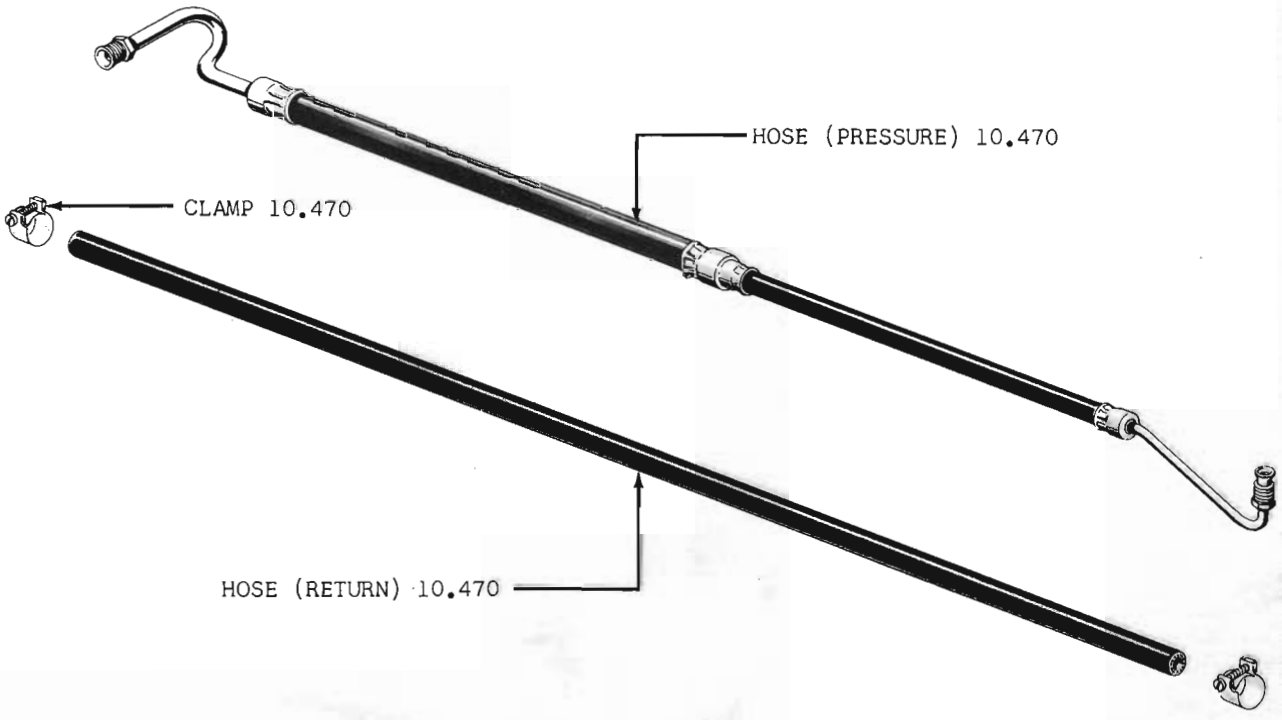

FIG. 10.470-1 POWER STEERING HOSES - TYPICAL

Printed in U.S.A.

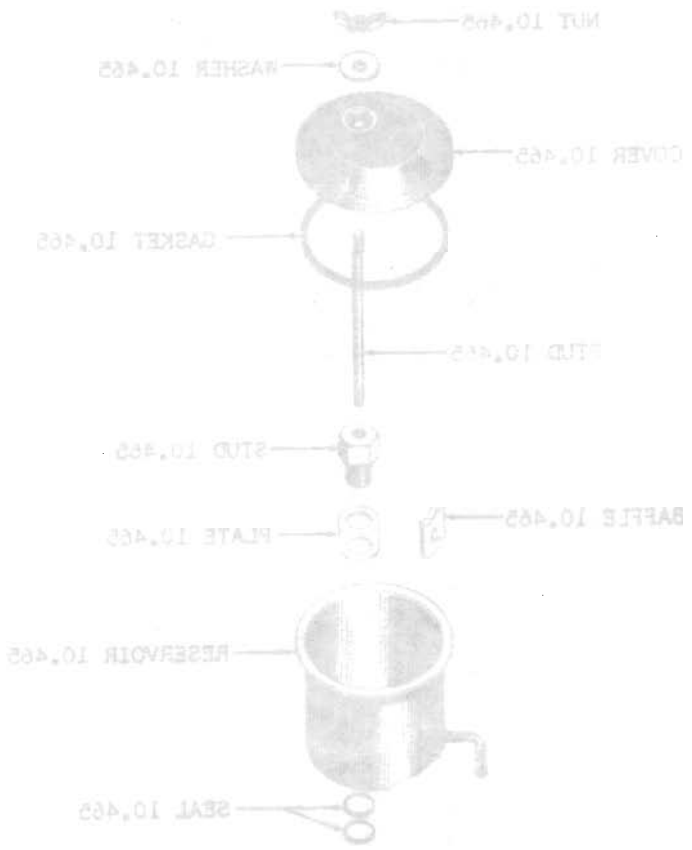
NUT 10.465
WASHER 10.465
COVER 10.465
GASKET 10.465
STUD 10.465
STUD 10.465
BAFFLE 10.465
PLATE 10.465
RESERVOIR 10.465
SEAL 10.465

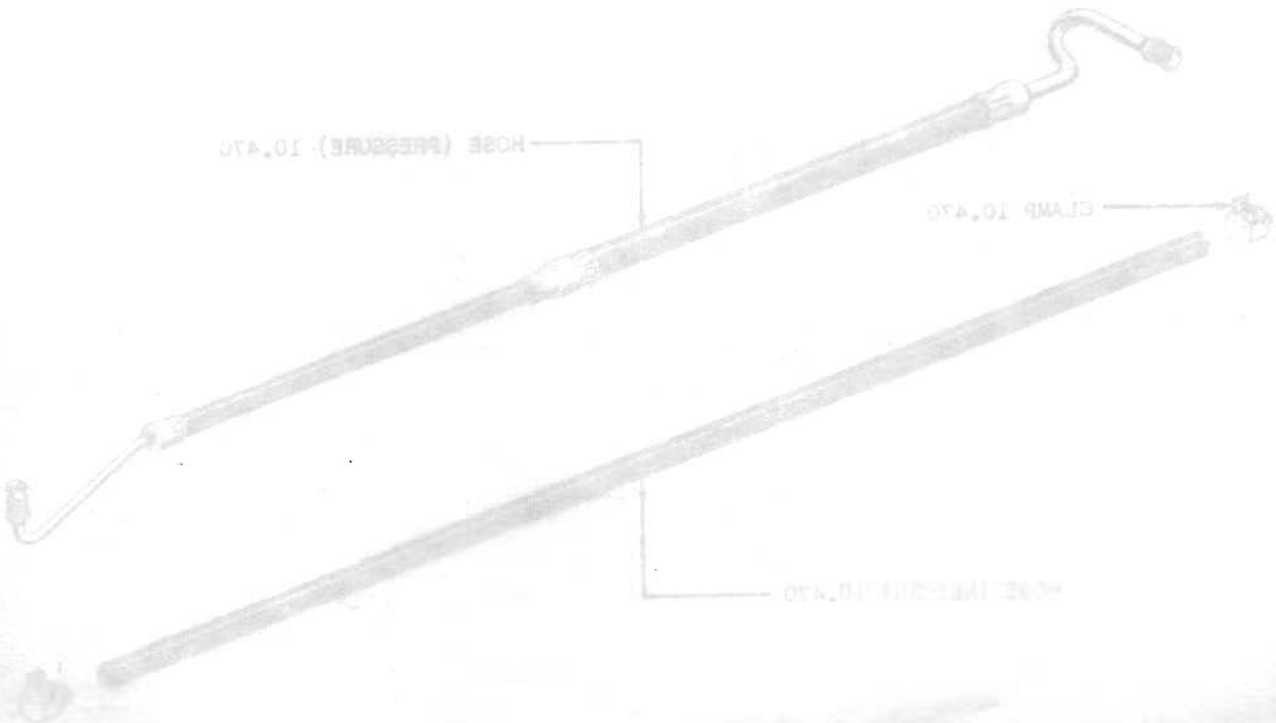
HOSE (PRESSURE) 10.470
CLAMP 10.470

GROUP NO. — DESCRIPTION — YEAR and MODEL	PRIMARY GROUP NO.	PER CAR	PART NO.	CODE
10.002 CROSSMEMBER, Front Suspension				
64-65 01 (LHE)(OHV-196) ***(Replaces 317 0482)***	.....	1	317 3414	
65 01 (OHV-232)(OHV-199)	.....	1	317 8402	
60-61 10-20	.....	1	315 3040	
62 10-80	.....	1	316 2820	
63-64 10 (OHV-196)	.....	1	316 6349	
64-65 10 (OHV-232-LAC): 65 10 (OHV-199-LAC)	.....	1	317 3677	
64-65 10 (OHV-232-WAC): 65 10 (OHV-199-WAC)	.....	1	317 6322	
65 80 (OHV-232) ***(Replaces 317 4542)***	.....	1	317 8390	
63 Thru 65 10 (V8): 63-64 80 (V8)	.....	1	316 6790	
60-61 80	.....	1	315 3041	
65 80 (V8)	.....	1	317 7107	
ATTACHING PARTS				
Crossmember To Side Sill				
BOLT, Hexagon ..... 64 01 (2 Req.): 60-61 10-20-80 (8 Req.): 62 10-80 (4 Req.): 63-64 10-80 (2 Req.)	8.288	AR	313 8066	
BOLT, Hexagon ..... 65 01-10-80 (1/2-20 x 1-7/8)	.....	1	317 8643	
BOLT, Hexagon ..... 65 01-10-80 (9/16-18 x 1-1/8) ***(Discontinued)***	.....	AR	318 2121	#
STUD 64 01: 63-64 10-80	.....	2	316 3195	
STUD 65 01-10-80	.....	1	317 8644	
WASHER, Bite 60-61 10-20-80	6.120	4	313 3603	
NUT, Lock ..... 64-65 01: 63 Thru 65 10-80	8.286	2	310 6788	
ROD, Front Suspension Crossmember To Strut Rod Bracket Brace				
(Left) 65 80 (V8)	.....	1	317 7105	
(Right) 65 80 (V8)	.....	1	317 7106	
ATTACHING PARTS				
Rod To Crossmember				
BOLT, Hexagon 65 80 (V8)	17.038	2	G181638	NA
WASHER, Lock 65 80 (V8)	17.820	2	G120382	NA
NUT, Hexagon 65 80 (V8)	17.406	2	G120370	NA
Rod To Strut Rod Bracket				
BOLT, Hexagon 65 80 (V8)	17.038	2	G454975	NA
WASHER, Bite 65 80 (V8)	10.003	2	310 8995	
WASHER, Plain 65 80 (V8)	17.814	4	400 1120	
WASHER, Lock 65 80 (V8)	17.820	2	G131100	NA
NUT, Hexagon 65 80 (V8)	17.406	2	G120370	NA
BRACE, Front Suspension Crossmember To Strut Rod Bracket				
65 01 (OHV-232)(OHV-199)	.....	1	317 8380	
ATTACHING PARTS				
Brace To Crossmember				
BOLT, Hexagon ..... 65 01 (OHV-232)(OHV-199)	17.038	2	G181636	NA
WASHER, Plain ..... 65 01 (OHV-232)(OHV-199)	17.814	2	400 1104	
WASHER, Lock ..... 65 01 (OHV-232)(OHV-199)	17.820	2	G120382	NA
NUT, Hexagon ..... 65 01 (OHV-232)(OHV-199)	17.406	2	G120369	NA
Brace To Strut Rod Bracket				
BOLT, Hexagon ..... 65 01 (OHV-232)(OHV-199)	17.038	1	G181638	NA
WASHER, Lock ..... 65 01 (OHV-232)(OHV-199)	17.820	1	G120382	NA
NUT, Hexagon ..... 65 01 (OHV-232)(OHV-199)	17.406	1	G120369	NA

NOTE 10.004-1: Two Types of steering knuckle spindles were installed on the 64 01-10-80 series. They can be identified as follows:

Type 1: The Hub and Drum is attached to the Spindle with a slotted Hexagon Nut.

Type 2: The Hub and Drum is attached to spindle with a Plain Hexagon Nut and a Nut Retainer

Copyright 1963 American Motors Corp.

GROUP NO. — DESCRIPTION — YEAR and MODEL		PRIMARY GROUP NO.	PER CAR	PART NO.	CODE
10.003 BRACKET, Front Suspension To Sill Mounting					
60 20-80: ***61 20-80 (Export)***		.....	2	315 0403	
61 20-80 (Domestic)		.....	2	316 0626	
(Left) 60 10 (LHD): ***61 10 (LHD-Export)***		.....	1	315 0403	
(Left) ***60-61 10 (RHD)***		.....	1	315 0561	
(Left) 61 10 (LHD-Domestic)		.....	1	316 0626	
(Right) 60 10 (LHD): ***61 10 (LHD-Export)***		.....	1	315 0560	
(Right) ***60-61 10 (RHD)***		.....	1	315 0403	
(Right) 61 10 (LHD-Domestic)		.....	1	316 0651	
ATTACHING PARTS Bracket To Sill					
BOLT, Hexagon	60-61 10-20-80	17.038	4	G181682	NA
INSULATOR	60-61 10-20-80	10.002	8	314 7739	
SPACER	60-61 10-20-80	.....	4	314 1132	
WASHER, Bite	60-61 10-20-80 ***(Replaces 800 0183)***	17.814	8	400 1120	
NUT, Lock	60-61 10-20-80	17.416	4	G272712	NA
STRUT, Front Suspension To Sill Mounting Bracket To Body "A" Brace					
60-61 20		.....	2	315 5520	
ATTACHING PARTS Strut To Body "A" Brace					
BOLT, Hexagon	60 20 (1-1/8" Long)	8.002	2	314 3794	
BOLT, Hexagon	60-61 20 (1-1/4" Long)	17.038	2	G181639	NA
WASHER, Bite	60-61 20	.....	AR	310 8995	
WASHER, Plain	60 20 (7/8" O.D.) ***(Replaces 800 0165)***	17.814	4	400 1104	
WASHER, Plain	60-61 20 (13/16" O.D.)	17.814	4	G120394	NA
WASHER, Lock	60-61 20	17.820	2	G103321	NA
NUT, Hexagon	60-61 20	17.406	2	G120369	NA
NUT, Jam	60 20	17.410	2	G124925	NA
10.004 SPINDLE, Steering Knuckle					
60 Thru 64 01-10 (Six-Note 10.004-1 Type 1)		.....	2	315 0258	
64-65 01 (Note 10.004-1 Type 2): 64 10 (Six-Note 10.004-1 Type 2): 65 10 (OHV-199-LDB)(OHV-232-LDB)		.....	2	317 3440	
62 Thru 64 10-80 (V8-Note 10.004-1 Type 1): ***63 10 (Renault)***		.....	2	316 2989	
64 10 (Renault): 64 10-80 (V8-Note 10.004-1 Type 2): 65 10 (V8-LDB): 65 80 (LDB)		.....	2	317 3441	
65 10-80 (WDB)		.....	2	317 7129	
60-61 20-80		.....	2	315 3045	
ATTACHING PARTS Spindle To Steering Knuckle Pin					
BOLT, Hexagon	60 Thru 63 01 (1-1/2" Long)	.....	4	313 2721	
BOLT, Hexagon	60 Thru 63 01 (2-9/16" Long)	.....	4	313 2722	
BOLT, Hexagon	60-61 10 (1-5/8" Long)	.....	4	314 4954	
BOLT, Hexagon	60-61 10 (2-3/8" Long): 62 80 (With 8.00 x 14 Tires-2-3/8" Long)	.....	4	313 9894	
BOLT, Hexagon	64-65 01: 62 10 (1-7/8" Long): 63 10 (1-7/8" Long-Note 10.010-1 Type 1)	.....	4	313 9892	
BOLT, Hexagon	64-65 01: 62 10 (3" Long): 63 10 (3" Long-Note 10.010-1 Type 1)	.....	4	316 2998	
BOLT, Hexagon	63-64 10 (Six-2-1/8" Long-Note 10.010-1 Type 2): 65 10 (Six-LDB-2-1/8" Long)	.....	4	317 0316	
BOLT, Hexagon	63-64 10 (Six-3-1/4" Long-Note 10.010-1 Type 2): 65 10 (Six-LDB-3-1/4" Long)	.....	4	317 0317	
BOLT, Hexagon	63-64 10-80 (V8-2-1/2" Long-Note 10.010-1 Type 2): 65 10 (OHV-199-WDB-2-1/2" Long) (OHV-232-WDB-2-1/2" Long): 65 10 (V8-2-1/2" Long): 65 80 (2-1/2" Long): ***64 10 (Renault 2 1/2" Long)***	.....	4	317 0319	

Copyright 1963 American Motors Corp.

GROUP NO. — DESCRIPTION — YEAR and MODEL		PRIMARY GROUP NO.	PER CAR	PART NO.	CODE
BOLT, Hexagon	63-64 10-80 (V8-3-5/8" Long-Note 10.010-1 Type 2): ***64 10 (Renault):*** 65 10 (OHV-199-WDB-3 5/8" Long)(OHV-232-WDB-3-5/8" Long): 65 10 (V8-3-5/8" Long): 65 80 (3-5/8" Long)	.....	4	317 0318	
BOLT, Hexagon	60-61 20-80 (2" Long) ***(Replaces 315 3046)***	.....	4	317 0316	
BOLT, Hexagon	60-61 20-80 (2-3/4" Long)	.....	4	315 3047	
BOLT, Hexagon	62 80 (2-1/4" Long): 63 80 (2-1/4" Long-Note 10.010-1 Type 1): ***63 10 (Renault).***	.....	4	316 2990	
BOLT, Hexagon	62 80 (3/3/8" Long): 63 80 (3-3/8" Long-Note 10.010-1 Type 1): ***63 10 (Renault).***	.....	4	316 2991	
BOLT, Hexagon	62 80 (With 8.00 x 14 Tires-3-1/2" Long)	.....	4	316 6545	
SPACER	62 80 (With 8.00 x 14 Tires)	.....	2	316 6546	
WZSHER, Lock	60 Thru 65 01-10-20-80	17.820	8	G103328	NA
NUT, Hexagon	60 Thru 65 01-10-20-80 ***(Replaces 800 0247)***	17.406	8	400 1241	

10.007 NUT, Steering Knuckle Spindle

60 Thru 64 01-10-20-80 (Note 10.004-1 Type 1)		.....	2	15 159	
64-65 01-10-80 (Note 10.004-1 Type 2)		.....	2	317 3399	

RETAINER, Steering Knuckle Spindle Nut

64-65 01-10-80 (Note 10.004-1 Type 2)		.....	2	317 3401	

WASHER, Steering Knuckle Spindle

60 Thru 65 01-10-20-80		.....	2	314 2118	

PIN, Steering Knuckle Spindle Cotter

60 Thru 65 01-10-20-80		17.460	2	G108635	NA

10.010 PLATE, Turning Radius Stop

60-61 10 (LHD): 60-61 20		.....	1	315 5107	
60-61 10 (RHD).		.....	1	315 5875	
63 Thru 65 10-80 (Note 10.010-1 Type 2)		.....	2	317 0315	
60-61 80 (WPS)		.....	1	315 3405	
(Left) 64-65 01		.....	1	317 1014	
(Right) 64-65 01		.....	1	317 1015	

ATTACHING PARTS
Plate To Side Sill

BOLT, Hexagon	60-61 10-20: 60-61 80 (WPS)	17.038	2	G181668	NA
WASHER, Plain	60-61 10-20: 60-61 80 (WPS) ***(Replaces 800 0183)***	17.814	2	400 1120	
WASHER, Bite	60-61 80 (WPS)	10.003	2	310 8995	
WASHER, Lock	60-61 10-20: 60-61 80 (WPS)	17.820	2	G131100	NA
NUT, Hexagon	60-61 10-20	17.406	2	G120370	NA

BRACKET, Turning Radius Stop

(Left) 63 Thru 65 10-80 (Note 10.010-1 Type 2)		.....	1	317 0313	
(Right) 63 Thru 65 10-80 (Note 10.010-1 Type 2)		.....	1	317 0314	

BOLT, Turning Radius Stop (On Pitman Arm)

BOLT, Hexagon	60 Thru 63 01	17.038	2	G181595	NA

NUT, Turning Radius Stop Bolt (On Pitman Arm)

NUT, Jam	60 Thru 63 01	17.410	2	G124920	NA

NOTE 10. 010: Two Types of Turning Radius Stops were used on 63 10-80 series. They can be identified as follows:

Type 1: The Strut Rod is used as a Turning Radius Stop.

Type 2: Has Stop Brackets which are bolted to Steering Knuckle Spindles and a Stop Plate that is mounted to the Lower Control Arm.

Copyright 1963 American Motors Corp.

GROUP NO. — DESCRIPTION — YEAR and MODEL	PRIMARY GROUP NO.	PER CAR	PART NO.	CODE
NUT, Turning Radius Stop (On Lower Control Arm Spacer Screw)				
60-61 80 (LPS)	.....	2	315 3048	
WASHER, Turning Radius Stop Adjusting Shim Nut (On Lower Control Arm Spacer Screw)				
WASHER, Plain..... 60-61 80 (LPS) ***(Replaces 800 0453)***	17.814	6	400 1172	
SPACER, Turning Radius Stop Adjusting (On Lower Control Arm Spacer Screw)				
61 80 (Note 10.045-2)	.....	2	315 5343	
10.013 PIN, Steering Knuckle				
60 Thru 63 01 (Note 10.013-1 Type 1) ***(Replaces 315 4161)***	.....	2	320 4433	
64-65 01	.....	2	317 1598	
60-61 10-20-80 (Note 10.013-1 Type 1)	.....	2	315 0322	
62 Thru 65 10-80	.....	2	316 2825	
PIN KIT, Steering Knuckle				
60 Thru 63 01 (Note 10.013-1 Type 2)(Incl. Pin, Trunnion, Washer, Nut, Cotter Pin, Seals, Lubrication Fittings And Bushings)	.....	2	320 7017	
60-61 10-20-80 (Note 10.013-1 Type 2)(Incl. Pin, Trunnion, Washer, Nut, Cotter Pin, Seals, Lubrication Fittings And Bushings)	.....	2	320 7018	
SEAL, Steering Knuckle Pin Dirt				
60 Thru 63 01: 60-61 10-20-80 ***(Replaces 313 2982)***	.....	2	316 6758	
10.023 BEARING, Steering Knuckle Pin Thrust				
60 Thru 63 01 (Ball): 60-61 10-20-80 (Ball)	.....	2	17 681	
60 01-10-20-80 (Fabric 1/16" Thick)	.....	2	320 2281	
62-63 10-80 ***(Use 320 4435)***	.....	2	316 3284	#
ATTACHING PARTS				
Bearing To Steering Knuckle Pin				
WASHER, Plain..... 60-61 01-10-20-80 ***(Ref. Pr. List)***	.....	2	313 3528	
WASHER, Plain..... 62 01-10-20-80 (.156" Thick) ***(Ref. Pr. List)***	.....	2	320 3135	
WASHER, Plain..... 62 Thru 65 01-10-80 (.120" Thick)	.....	2	316 5955	
WASHER, Lock..... 64-65 01	17.820	2	G120384	NA
NUT, Hexagon..... 60 Thru 63 01: 60 Thru 65 10-80	17.408	2	G102647	NA
NUT, Hexagon..... 64-65 01	17.406	2	G120371	NA
PIN, Grove..... 60 Thru 63 01: 60 Thru 65 10-80	.....	2	313 5387	
BEARING KIT, Steering Knuckle Pin Thrust				
64-65 01...(Incl. 1-3163284 Bearing, 1-3171678 "O" Ring, 1-3446974 "O" Ring, 1-3171679 Washer, 1-3165955 Washer)	.....	2	320 4934	
60 01-10-20-80...(Incl. 2-3202281 Bearing, 2-3202280 Race, 2-3202278 Race)	.....	1	320 2283	
62-63 10-80...(Incl. 1-3163284 Bearing, 1-3165956 Gasket, 1-3165957 Gasket, 1-3165955 Washer) ***(Use 320 4935)***	.....	2	320 3719	
64-65 10-80...(Incl. 1-3163284 Bearing, 1-3171678 "O" Ring, 1-3446974 "O" Ring, 1-3165955 Washer)	.....	2	320 4935	
RACE, Steering Knuckle Pin Thrust Bearing				
(Upper) 60 01-10-20-80	.....	2	320 2280	
(Lower) 60 01-10-20-80	.....	2	320 2278	

NOTE 10.013-1: Two Types of Steering Knuckle Pins and Lower Trunnion were installed on 60 thru 63 01 and 60-61 10-20-80. They can be identified as follows:
Type 1: The Trunnion has a Lubrication Fitting directly below the lower Trunnion.
Type 2: The Steering Knuckle Pin has an additional 5/8-18 thread at lower end to secure the lower Trunnion to the Knuckle Pin. The lower Trunnion has a Lubrication Fitting on the side instead of the bottom.

Copyright 1963 American Motors Corp.

GROUP NO. — DESCRIPTION — YEAR and MODEL	PRIMARY GROUP NO.	PER CAR	PART NO.	CODE
GASKET, Steering Knuckle Pin Thrust Bearing				
(Upper) 62 10-80 (.015" Thick)	.....	2	316 5766	
(Lower) 62-63 10-80 (.030" Thick) *(Ref. Pr. List)*	.....	2	316 5956	
(Lower) 62 10-80 (.015" Thick)	.....	2	316 5767	
(Lower) 62-63 10-80 (.030" Thick) *(Ref. Pr. List)*	.....	2	316 5957	
"O" RING, Steering Knuckle Pin Thrust Bearing				
(Upper) 64-65 01-10-80	.....	2	317 1678	
(Lower) 64-65 01: 63 Thru 65 10-80	23.081	2	344 6974	
(Upper) 63 10-80	10.460	2	313 8543	
WASHER, Steering Knuckle Pin Thrust Bearing (Upper)				
64-65 01 (Delrin)	.....	2	317 1679	
10.035 ARM, Steering Knuckle				
(Left) 60 Thru 63 01	.....	1	315 8425	
(Left) 64-65 01	.....	1	317 1003	
(Left) 60-61 10	.....	1	315 8283	
(Left) 62-63 10-80 (Note 10.010-1 Type 1)	.....	1	316 2821	
(Left) 63 Thru 65 10-80 (Note 10.010-1 Type 2)	.....	1	317 0309	
(Left) 60-61 20 (LPS)	.....	1	315 3250	
(Left) 60-61 20 (WPS)	.....	1	315 3360	
(Left) 60-61 80 (LPS)	.....	1	315 3184	
(Left) 60-61 80 (WPS)	.....	1	315 3406	
(Right) 60 Thru 63 01	.....	1	315 8426	
(Right) 64-65 01	.....	1	317 1004	
(Right) 60-61 10	.....	1	315 8284	
(Right) 62-63 10-80 (Note 10.010-1 Type 1)	.....	1	316 2822	
(Right) 63 Thru 65 10-80 (Note 10.010-1 Type 2)	.....	1	317 0310	
(Right) 60-61 20	.....	1	315 3251	
(Right) 60-61 80 (LPS)	.....	1	315 3185	
(Right) 60-61 80 (WPS)	.....	1	315 3407	
10.042 TRUNNION, Front Suspension Upper Control Arm				
64-65 01...(Incl. Bushings)	.....	2	~~317 1521~~ 315 4108	
60 Thru 63 01...(Incl. Needle Bearings) *(Use 320 6277)*	.....	2	314 2767 320627	
60 Thru 64 10 (Six): 65 10-80 (OHV-232): 65 10 (OHV-199)...(Incl. Oil Groove Bronze Bushing) *(Replaces 315 5439)*	.....	2	316 7698	
60 Thru 65 10-20-80 (V8)	.....	2	313 4705	
TRUNNION KIT, Front Suspension Upper Control Arm				
60 Thru 63 01...(Incl. 1-314 2767, 1-313 1679, 2-313 2457, 1-313 5387)	.....	2	320 6277	
60-61 10 (Bushing Type)...(Incl. 1-3155439, 2-3153531, 2-3133771, 2-G271287)	.....	2	320 1163	
62 Thru 64 10 (Six): 65 10-80 (OHV-232): 65 10 (OHV-199)(Bushing Type)...(Incl. 1-3167698, 2-3153531, 2-3163689, And 2-3164636) *(Replaces 320 3137)*	.....	2	320 3970	
60-61 20-80 (Needle Bearing Type)...(Incl. 1-3134705, 2-3153531, 2-3133771, 2-G271435)	.....	2	311 6626	
62 Thru 65 10-80 (V8)(Needle Bearing Type)...(Incl. 1-3134705, 2-3153531, 2-3163689, 2-G271435)	.....	2	320 3924	
SCREW, Thrust Bearing Groove Pin Access Hole Tapping (In Trunnion)				
60 Thru 63 01	17.670	4	G172401	NA
BEARING, Front Suspension Upper Control Arm Trunnion Needle				
60 Thru 63 01: 60 Thru 65 10-20-80 (V8)	.....	4	313 3514	

Copyright 1963 American Motors Corp.

GROUP NO. — DESCRIPTION — YEAR and MODEL	PRIMARY GROUP NO.	PER CAR	PART NO.	CODE
BUSHING, Front Suspension Upper Control Arm Trunnion				
60 Thru 63 01 (Bolt)	.....	2	313 1679	
60 10 (Oil Groove Bronze) ***(Ref. Pr. List)***	.....	4	315 5455	
60 Thru 65 10-20-80	.....	4	315 3531	
ATTACHING PARTS Trunnion Bushing To Control Arm				
WASHER, Lock ..... 60 Thru 63 01	17.824	2	G115553	NA
NUT, Hexagon ..... 60 Thru 63 01	17.406	2	G102639	
FITTING, Front Suspension Upper Control Arm Trunnion Lubrication				
60 Thru 63 01	17.290	2	G273323	
FITTING, Front Suspension Upper Control Arm Trunnion Bushing Lubrication				
60 Thru 63 01: 60-61 10-20-80	17.290	2	G271287	
PLUG, Front Suspension Upper Control Arm Trunnion Bushing Lubrication Fitting Hole				
62 Thru 65 10-80	5.170	4	316 4636	
SEAL, Front Suspension Upper Control Arm Trunnion Dirt				
60 Thru 63 01	.....	4	313 2457	
64-65 01 (In Trunnion)	.....	2	317 2032	
60 Thru 65 10-20-80 ***(Replaces 313 3771)***	.....	4	316 3689	
10.044 TRUNNION ASSEMBLY, Front Suspension Lower Control Arm				
60 Thru 63 01 (Note 10.013-1 Type 1): 60-61 10-20-80 (Note 10.013-1 Type 1)...(Incl. Oiler)	.....	2	320 2511	#
60 Thru 63 01 (Note 10.013-1 Type 2): 60-61 10-20-80 (Note 10.013-1 Type 2).	.....	2	320 6793	#
ATTACHING PARTS Trunnion To Steering Knuckle Pin				
WASHER, Plain ..... 60 Thru 63 01 (Note 10.013-1 Type 2): 60-61 10-20-80 (Note 10.013-1 Type 2)	.....	2	320 6897	#
NUT, Slotted ..... 60 Thru 63 01 (Note 10.013-1 Type 2): 60-61 10-20-80 (Note 10.013-1 Type 2)	17.408	2	G125267	NA#
PIN, Cotter ..... 60 Thru 63 01 (Note 10.013-1 Type 2): 60-61 10-20-80 (Note 10.013-1 Type 2)	17.460	2	G103387	NA#
TRUNNION KIT, Front Suspension Lower Control Arm				
60 Thru 63 01 (Note 10.013-1 Type 1): 60-61 10-20-80 (Note 10.013-1 Type 1) ...(Incl. 1-3202511, 2-3133771, 1-3132982, 2-3153531, 2-G271287)	.....	2	320 2484	#
BUSHING, Front Suspension Lower Control Arm Trunnion				
60 Thru 63 01: 60-61 10-20-80	10.042	4	315 3531	
FITTING, Front Suspension Lower Control Arm Trunnion Lubrication				
60 Thru 63 01 (Note 10.013-1 Type 1): 60-61 10-20-80 (Note 10.013-1 Type 1) ***(Replaces G271291)***	17.290	2	G271287	#
60 Thru 63 01 (Note 10.013-1 Type 2): 60-61 10-20-80 (Note 10.013-1 Type 2).	17.290	2	G191350	#
61 10 (Heavy Duty)	17.290	2	G271290	
FITTING, Front Suspension Lower Control Arm Trunnion Bushing Lubrication				
60 Thru 63 01: 60-61 10-20-80	17.290	4	G271287	
SEAL, Front Suspension Lower Control Arm Trunnion Dirt				
60 Thru 63 01: 60-61 10-20-80 ***(Replaces 313 3771)***	10.042	4	316 3689	

Copyright 1963 American Motors Corp.

GROUP NO. — DESCRIPTION — YEAR and MODEL	PRIMARY GROUP NO.	PER CAR	PART NO.	CODE
SEAL, Steering Knuckle Pin To Trunnion Dirt				
60 Thru 63 01: 60-61 10-20-80 .....*(Replaces 313 2982)*	10.013	2	316 6758	
10.045 ARM, Front Suspension Lower Control (Incl. Bushings)				
60-61 10-20 (4 Req. Note 10.045-1 Type 1): 60-61 80 (Rear-2 Req. Note 10.045-1 Type 1) .....*(Replaces 315 4770)*	.....	AR	315 4768	
60 Thru 63 01...(Incl. Bushing).....	.....	4	315 4759	
64-65 01...(Incl. Ball Joint And Pivot Bushing).....	.....	2	317 1319	
62-63 10-80 (Note 10.045-2 Type 1)...(Incl. Ball Joint And Pivot Bushing)....	.....	2	316 2824	
63-64 10-80 (Note 10.045-2 Type 2)...(Incl. Ball Joint And Pivot Bushing) .....*(Use 317 5448)*	.....	2	316 9127	
64 10-80 (Heavy Duty)(Export)...(Incl. Ball Joint And Pivot Bushing).....	.....	2	317 5448	
65 10-80...(Incl. Ball Joint And Pivot Bushing).....	.....	2	317 8614	
(Left-Front) 60-61 10-20-80 (Note 10.045-1 Type 2) .....*(Replaces 315 5337)*	.....	1	315 5328	
(Left-Front) 60-61 80 (Note 10.045-1 Type 1).....	.....	1	315 4768	
(Left-Rear) 60-61 10-20 (Note 10.045-1 Type 2) .....*(Replaces 315 5338)*	.....	1	315 5329	
(Left-Rear) 60-61 80 (Note 10.045-1 Type 2) .....*(Replaces 315 5341)*	.....	1	315 5328	
(Right-Front) 60-61 10-20-80 (Note 10.045-1 Type 2) .....*(Replaces 315 5338)*	.....	1	315 5329	
(Right-Front) 60-61 80 (Note 10.045-1 Type 1).....	.....	1	315 4769	
(Right-Rear) 60-61 10-20 (Note 10.045-1 Type 2) .....*(Replaces 315 5337)*	.....	1	315 5328	
(Right-Rear) 60-61 80 (Note 10.045-1 Type 2) .....*(Replaces 315 5342)*	.....	1	315 5329	
ARM KIT, Front Suspension Lower Control				
60 10 (Domestic-Heavy Duty-Note 10.045-1 Type 2)...(Incl. 1-3155337, 1-3155338, 1-3155580, 1-3155317, 1-3200857, 1-3202484	.....	2	320 2937	
SPACER, Front Suspension Lower Control Arm				
60 Thru 63 01: 60-61 10-20-80 (Note 10.045-1 Type 1).....	.....	4	315 0290	
60-61 10-20-80 (Note 10.045-1 Type 2).....	.....	4	315 5580	
ATTACHING PARTS				
Spacer To Lower Control Arm				
BOLT, Hexagon..... 60 Thru 63 01: 60-61 10-20 (Note 10.045-1 Type 1).	.....	2	315 0285	
BOLT, Hexagon..... 60-61 10-20-80 (Note 10.045-1 Type 2).....	.....	2	315 5317	
BOLT, Hexagon..... 60-61 80 (Note 10.045-1 Type 1).....	.....	2	315 3049	
GROMMET..... 60 Thru 63 01: 60-61 10-20-80 (Note 10.045-1 Type 1).....	11.208	4	313 3578	
GROMMET..... 60-61 10-20-80 (Note 10.045-1 Type 2).....	11.208	4	95 205	
WASHER, Plain..... 60 Thru 63 01: 60-61 10-20-80. *(Replaces 800 0443)*	17.814	4	400 1165	
NUT, Lock..... 60 Thru 63 01: 60-61 10-20 (Note 10.045-1 Type 1).	17.416	2	G442834	
NUT, Lock..... 60-61 10-20-80 (Note 10.045-1 Type 2).....	17.416	2	G272712	NA
NUT, Hexagon..... 60-61 80 (Note 10.045-1 Type 1).....	17.406	2	G124634	NA
10.048 BALL JOINT KIT, Front Suspension Lower Control Arm				
64-65 01...(Incl. Bolts, Lock Washers And Nuts).....	.....	2	320 4662	
62 Thru 64 10-80...(Incl. Bolts, Lock Washer And Nuts).....	.....	2	320 3042	
64-65 10 (Heavy Duty)(Export): 65 10-80 ...(Incl. Bolts, Retainers, Lockwashers And Nuts) .....*(Replaces 320 5406)*	.....	2	320 5866	#

NOTE 10.045-1: Two Types of Front Suspension Lower Control Arms and Front Shocks are being used on 60-61 10-20-80. They can be identified as follows:

Type 1: Used on Domestic and Export. The Lower End of the Shock is attached to a Bolt which goes thru the Lower Control Arms.

Type 2: Used on Export only and 60 10 (Domestic-Heavy Duty) having kit 320 2937 previously installed. The Lower End of the Shock is attached to a bolt which goes thru a Bracket mounted on the Lower Control Arms.

NOTE 10.045-2: Two Types of Lower Control Arms were installed on 63 10-80 Series. They can be identified as follows:

Type 1: The Shock Grommet used with Arm are Rectangular Shape.

Type 2: The Shock Grommets used with Arm are Cone Shape.

Copyright 1963 American Motors Corp.

GROUP NO. — DESCRIPTION — YEAR and MODEL	PRIMARY GROUP NO.	PER CAR	PART NO.	CODE
ATTACHING PARTS				
Ball Joint To Steering Knuckle Pin				
NUT, Slotted ..... 64-65 01: 62 Thru 65 10-80	17.408	2	G119255	NA
PIN, Cotter ..... 64-65 01: 62 Thru 65 10-80	17.460	2	G108630	NA
Ball Joint To Lower Control Arm				
BOLT, Hexagon ..... 64-65 01: 62 Thru 65 10-80	17.038	4	G454884	NA
WASHER, Lock ..... 64-65 01: 62 Thru 65 10-80	17.820	4	G120214	NA
NUT, Hexagon ..... 64-65 01: 62 Thru 65 10-80	17.406	4	G120368	
COVER, Front Suspension Lower Control Arm Ball Joint Dust				
64-65 01	.....	2	320 4736	
62 Thru 65 10-80 (Plain Type)	.....	2	320 3050	
65 10-80 (Accordian Type)	.....	1	320 5867	
PLUG, Front Suspension Lower Control Arm Ball Joint Lubrication Fitting Hole				
64-65 01	.....	2	320 4737	
62 Thru 65 10-80	5.170	2	316 4636	
10.050 BAR, Front Suspension Lower Control Arm Pivot				
60 Thru 63 01	.....	2	313 5833	
ATTACHING PARTS				
Pivot Bar To Body				
BOLT, Hexagon ..... 60 Thru 63 01 (4-1/8" Long)	17.038	3	G180843	NA
BOLT, Hexagon ..... 60 Thru 63 01 (4-3/4" Long)	17.038	1	G191695	NA
WASHER, Plain ..... 60 Thru 63 01	.....	8	315 4534	
SPACER ("U") ..... 60 Thru 63 01 (1/8" Thick)	10.069	6	312 4317	
SPACER ("U") ..... 60 Thru 63 01 (1/32" Thick)	10.069	12	312 4316	
NUT, Lock ..... 60 Thru 63 01	17.416	4	G442832	
Pivot Bar To Control Arm				
BUSHING ..... 60 Thru 63 01	.....	4	315 4730	
WASHER, Plain ..... 60 Thru 63 01 (Inner)	10.069	4	313 3507	
WASHER, Plain ..... 60 Thru 63 01 (Outer)	10.069	4	313 3506	
NUT, Lock ..... 60 Thru 63 01	17.416	4	G442832	
BOLT KIT, Front Suspension Lower Control Arm Pivot				
64-65 01 ...(Incl. 1-3169729, 1-3169732, 1-G120898, 1-3169731) ..... *(Replaces 316 9729)*	.....	2	320 5113	#
60-61 10-20-80...(Incl. 1-3149192, 1-3140769, 1-3149195)	.....	4	320 5111	
BOLT, Front Suspension Lower Control Arm Pivot				
60-61 10-20-80	.....	4	314 9192	
62 Thru 65 10-80	17.038	2	G181737	NA
ATTACHING PARTS				
Pivot Bolt To Front Suspension To Sill Mounting Bracket				
WASHER, Eccentric 60-61 10-20-80	.....	4	314 0769	
NUT, Lock 60-61 10-20-80	.....	4	314 9195	
Pivot Bolt To Front Suspension Crossmember				
BUSHING 64-65 01	.....	2	316 9723	
BUSHING ..... 62 Thru 65 10-80 ..... *(Replaces 316 2841)*	.....	2	316 6214	
WASHER, Eccentric 64-65 01	.....	2	316 9732	
WASHER, Plain ..... 62 Thru 65 10-80 ..... *(Replaces 800 0443)*	17.814	4	400 1165	
WASHER, Lock 64-65 01	17.820	2	G120898	NA
NUT, Hexagon 64-65 01	.....	2	316 9731	
NUT, Lock ..... 62 Thru 65 10-80	17.416	2	G442834	

Copyright 1963 American Motors Corp.

GROUP NO. — DESCRIPTION — YEAR and MODEL	PRIMARY GROUP NO.	PER CAR	PART NO.	CODE
10.051 BRACE, Front Suspension Lower Control Arm Pivot Bar				
60-61 01: 62-63 01 (LHD): ***62-63 01 (RHD)(Heavy Duty) ...(Replaces 315 4319)***	.....	1	316 6641	
ATTACHING PARTS				
Brace To Pivot Bar				
BOLT, Hexagon..... 60 Thru 63 01	8.288	4	313 8066	
WASHER, Bite..... 60 Thru 63 01	.....	4	313 3603	
10.055 ROD, Front Suspension Lower Control Arm To Side Sill Strut				
64-65 01	.....	2	316 9734	
(Left) 62-63 10-80 (Note 10.010-1 Type 1)	.....	1	316 5550	
(Left) 63-64 10-80 (Note 10.010-1 Type 2): 65 10-80 (Note 10.055-1 Type 1) ***(Replaces 317 0311)***	.....	1	320 5475	
(Left) 65 10-80 (Note 10.055-1 Type 2)	.....	1	317 9301	
(Right) 62-63 10-80 (Note 10.010-1 Type 1)	.....	1	316 5551	
(Right) 63-64 10-80 (Note 10.010-1 Type 2): 65 10-80 (Note 10.055-1 Type 1) ***(Replaces 317 0312)***	.....	1	320 5476	
(Right) 65 10-80 (Note 10.055-1 Type 2)	.....	1	317 9302	
ATTACHING PARTS				
Rod To Lower Control Arm				
BOLT, Hexagon ..... 64-65 01: 62 Thru 64 10-80 (Note 10.010-1 Type 1)	17.038	4	G454975	NA
BOLT, Hexagon ..... 63 10-80 (Note 10.010-1 Type 2): 65 10-80	17.038	4	G454977	NA
WASHER, Lock ..... 64-65 01: 62 Thru 65 10-80	17.820	4	G131100	NA
NUT, Hexagon..... 62-63 10-80 (Note 10.010-1 Type 1) ***(Replaces 800 0247)***	17.406	4	400 1241	
NUT, Hexagon..... 64-65 01: 63 Thru 65 10-80 (Note 10.010-1 Type 2)	17.412	4	G9415570	NA
Rod To Bracket (At Side Sill)				
WASHER, Plain..... 62 Thru 65 10-80 (Note 10.055-1 Type 1)	.....	4	316 3301	
WASHER, Plain..... 64-65 01: 65 10-80 (Note 10.055-1 Type 2)	.....	4	317 1581	
NUT, Hexagon..... 64-65 01: 65 10-80 (Note 10.055-1 Type 2)	.....	4	317 2207	
NUT, Hexagon..... 62 Thru 64 10-80 (Slotted)	17.408	2	G125267	NA
NUT, Hexagon..... 64-65 10-80 (Self-Locking-Note 10.055-1 Type 1) ***(Replaces 317 6129)***	17.416	2	G9413970	
PIN, Cotter..... 62 Thru 64 10-80	17.460	2	G108635	NA
BRACKET, Front Suspension Lower Control Arm Strut Rod To Side Sill (Incl. Bushing)				
(Left) 64-65 01 ...(Incl. Bushing)	.....	1	317 3002	
(Left) 62 10-80 (WAT): ***62 10 (RHD-WST)(RHD-WOD)***...(Incl. Bushing)	.....	1	316 3398	
(Left) 62 10 (LHD-WST)(LHD-WOD)...(Incl. Bushing)	.....	1	316 5736	
(Left) 63-64 10-80 ...(Incl. Bushing) ***(Use 317 7206)***	.....	1	316 7557	#
(Left) 65 10 (Note 10.055-1 Type 1): 65 80 (WAT-Note 10.055-1 Type 1)...(Incl. Bushing)	.....	1	317 7206	
(Left) 65 10 (Note 10.055-1 Type 2): 65 80 (WAT-Note 10.055-1 Type 2)...(Incl. Bushing)	.....	1	317 6750	
(Left) 62 80 (WST)(WOD)...(Incl. Bushing)	.....	1	316 5738	
(Left) 65 80 (WST-Note 10.055-1 Type 1)(WOD-Note 10.055-1 Type 1)...(Incl. Bushing)	.....	1	317 5649	
(Left) 65 80 (WST-Note 10.055-1 Type 2)(WOD-Note 10.055-1 Type 2)...(Incl. Bushing)	.....	1	318 0310	

NOTE 10.055-1: Two Types of Lower Control Arm Strut Rods and Brackets were installed on 65 10-80. They can be identified as follows:

Type 1: The Strut Rod has a 5/8-18 Thread at the Side Sill end and is used prior to Car Sequence No. W-117084, on 65 10 (V8); W-117551 on 65 10 (OHV-199)(OHV-232); W-117325 on 65 80 (V8). On 165 10 (Can-OHV-199) used prior to Car Serial No. JT-502033; on 165 10 (Can-OHV-232) used prior to LT-507348; on 165 10 (Can-V8-287) used prior to ZT-503005.

Type 2: The Strut Rod has a 11/16-18 Thread at the Side Sill end and is used beginning with Car Sequence No. W-117084 on 65 10 (V8); W-117551 on 65 10 (OHV-199)(OHV-232); W-117325 on 65 80 (V8). On 165 10 (Can-OHV-199) used beginning with Car Serial No. JT-502033, on 165 10 (Can-OHV-232) used beginning with LT-507348; on 165 10 (Can-V8-287) used beginning with ZT-503005.

Copyright 1963 American Motors Corp.

GROUP NO. — DESCRIPTION — YEAR and MODEL	PRIMARY GROUP NO.	PER CAR	PART NO.	CODE
(Right) 64-65 01 (LHD)...(Incl. Bushing)	.....	1	317 3003	
(Right) ***64-65 01 (RHD-WST)(RHD-WOD)***...(Incl. Bushing)	.....	1	317 4256	
(Right) ***64-65 01 (RHD-WAT)***...(Incl. Bushing)	.....	1	317 4294	
(Right) 62 10-80...(Incl. Bushing)	.....	1	316 3399	
(Right) 63 10 (LHD): 63 80: 63-64 10 (LHD-Six): 63-64 10 (V8): 63 80 (LHD): 64 80...(Incl. Bushing) ***(Use 317 7207)***	.....	1	316 7558	#
(Right) ***63 10-80 (RHD)***...(Incl. Bushing)	.....	1	316 9172	
(Right) ***64 10 (Six-RHD)***...(Incl. Bushing)	.....	1	317 2502	
(Right) 65 10 (OHV-199-Note 10.055-1 Type 2)(LHD-OHV-232-Note 10.055-1 Type 2): 65 10 (V8-Note 10.055-1 Type 2): 65 80 (Note 10.055-1 Type 2): ***65 10 (RHD-OHV-232-Note 10.055-1 Type 2)...(Replaces 317 9392)***	.....	1	317 6751	#
(Right) 65 10 (OHV-199-Note 10.055-1 Type 1)(LHD-OHV-232-Note 10.055-1 Type 1)(V8-Note 10.055-1 Type 1) 65 80 (Note 10.055-1 Type 1)...(Incl. Bushing)	.....	1	317 7207	#
(Right) ***65 10 (RHD-OHV-232-Note 10.055-1 Type 1)***...(Incl. Bushing)	.....	1	317 7336	
(Right) ***65 10 (RHD-OHV-232-Note 10.055-1 Type 2)***...(Incl. Bushing) ***(Use 317 6751)***	.....	1	317 9392	
ATTACHING PARTS				
Bracket To Side Sill				
BOLT, Hexagon ..... 64-65 01-10-80 (1-1/8" Long)	17.038	2	G181667	NA
BOLT, Hexagon ..... 64-65 01 (4-1/4" Long): 63 Thru 65 10-80 (4-1/4" Long)	17.038	2	G193490	NA
BOLT, Hexagon ..... 64-65 01-10-80 (4" Long)	17.038	2	G454985	NA
BOLT, Hexagon..... 62 10-80 (Front)	17.038	2	G181679	NA
BOLT, Hexagon..... 62 10-80 (Rear)	10.427	2	313 1165	
BOLT, Hexagon ..... 63 10-80 (4" Long)	17.038	2	G181682	NA
WASHER, Plain ..... 64-65 01: 63 Thru 65 10-80 ***....(Replaces 800 0183)***	17.814	6	400 1120	
WASHER, Plain..... 62 10-80 ***.....(Replaces 800 0482)***	17.814	4	400 1188	
WASHER, Lock..... 64-65 01: 62 Thru 65 10-80	17.820	6	G131100	NA
NUT, Hexagon..... 64-65 01: 62 Thru 65 10-80	17.406	4	G120370	NA
Bracket To Crossmember				
BOLT, Hexagon..... 62 10-80	17.038	2	G181669	NA
BOLT, Hexagon 63 10-80	17.038	2	G181667	NA
WASHER, Plain..... 62 10-80 ***.....(Replaces 800 0482)***	17.814	2	400 1188	
WASHER, Plain..... 62-63 10-80 ***.....(Replaces 800 0183)***	17.814	2	400 1120	
WASHER, Lock 62-63 10-80	17.820	2	G131100	NA
NUT, Lock..... 62 10-80	17.416	2	G272712	NA
NUT, Lock..... 63 10-80	17.406	2	G120370	NA
BUSHING, Front Suspension Lower Control Arm Strut Rod To Side Sill				
64 01 ***.....(Ref. Pr. List)***	.....	2	317 1493	
62 Thru 64 10-80 ***.....(Ref. Pr. List)***	.....	2	316 5549	

10.066 ARM ASSEMBLY, Front Suspension Upper Control

60 Thru 63 01...(Incl. Pivot Bar, Bushings, Washers, Bumper And Spacer Bolt)	.....	2	313 5246	
ATTACHING PARTS				
Left Control Arm To Right Control Arm				
BOLT, Hexagon..... 60 Thru 63 01	17.038	2	G189344	NA
WASHER, Plain..... 63 01 (Left Side Only-2 Req.): 64 01-10-80 (4 Req.)	.....	AR	317 0473	NA
WASHER, Lock ..... 60 Thru 63 01	17.820	2	G103328	NA
NUT, Hexagon..... 60 Thru 63 01	17.406	2	G103027	NA
ARM, Front Suspension Upper Control (Incl. Bushing)				
64-65 01 ***.....(Replaces 317 1497)***	.....	4	317 6088	#

NOTE 10.066-1: Two Types of Upper Control Arm Spacers were installed on 62 10-80 series. They can be identified as follows:
Type 1: The O. D. of the Spacer is 1".
Type 2: The O. D. of the Spacer is 1-1/4".

Copyright 1963 American Motors Corp.

GROUP NO. — DESCRIPTION — YEAR and MODEL		PRIMARY GROUP NO.	PER CAR	PART NO.	CODE
62 Thru 65 10-80	***(Replaces 316 4203)***	.....	4	317 6087	#
(Left-Front) 60-61 10-20-80		.....	1	314 9642	
(Right-Front) 60-61 10-20-80		.....	1	314 9643	
(Left-Rear) 60-61 10-20-80		.....	1	314 9643	
(Right-Rear) 60-61 10-20-80		.....	1	314 9642	
ATTACHING PARTS					
Arm To Trunnion					
BOLT, Hexagon	64-65 01	17.038	2	G455032	NA
WASHER, Plain.....	64-65 01	.....	2	317 0473	
NUT, Lock.....	64-65 01	17.416	2	G442832	
Left Control Arm To Right Control Arm					
BOLT, Hexagon	64-65 01	17.038	1	G455032	NA
BOLT, Hexagon.....	60-61 10-20-80	17.038	2	G181675	NA
BOLT, Hexagon.....	62-10-80 (Note 10.066-1 Type 1)	17.038	2	G181707	NA
BOLT, Hexagon	62 Thru 65 10-80 (Note 10.066-1 Type 2)	17.038	2	G455017	NA
SPACER	64-65 01	.....	2	317 1492	
SPACER	60-61 10-20-80	.....	2	313 3532	
SPACER	62 10-80 (Note 10.066-1 Type 1)***(Replaces 316 4145)***	.....	2	320 4287	
SPACER	62 Thru 65 10-80 (Note 10.066-1 Type 2)	.....	2	316 9234	
WASHER, Plain.....	64-65 01: 63 Thru 65 10-80	.....	4	317 0473	
WASHER, Plain.....	60-61 10-20-80 ***(Replaces 800 0183)***	.....	2	400 1120	
WASHER, Plain.....	62-10-80 (2 Req. -Note 10.066-1 Type 1): 62 10-80 (4 Req. -Note 10.066-1 Type 2)	17.814	AR	800 0195	NA
WASHER, Lock	60-61 10-20-80	17.820	2	G131100	NA
WASHER, Lock	62-63 10: 62 80	17.820	2	G120384	NA
NUT, Hexagon.....	60-61 10-20-80	17.406	2	G271506	NA
NUT, Hexagon.....	62 10-80 (Note 10.066-1 Type 1)	17.406	2	G120371	NA
NUT, Hexagon.....	62 10-80 (Note 10.066-1 Type 2)	17.406	2	G225857	
NUT, Hexagon.....	64-65 01: 63 Thru 65 10-80 ***(Replaces 316 9556)***	17.406	2	G442832	
SPACER KIT, Front Suspension Upper Control Arm					
62 10-80 (Note 10.066-1 Type 2)...(Incl. 2-3169234, 2-G455017, 2-G225857, 4-8000195, 2-G120384)	***(Replaces 320 4354)***	.....	1	320 4287	
10.068 BUMPER, Front Suspension Upper Control Arm					
60 Thru 63 01	***(Replaces 314 2584)***	.....	2	315 9330	
60-61 10-20-80 (Note 10.045-1 Type 2)		.....	4	313 3531	
10.069 BAR, Front Suspension Upper Control Arm Pivot					
60 Thru 63 01		.....	2	313 3598	
ATTACHING PARTS					
Pivot Bar To Arm					
BUSHING.....	60 Thru 63 01	.....	4	313 3508	
WASHER, Dished.....	60 Thru 63 01 (Inner)	.....	4	313 3507	
WASHER, Dished.....	60 Thru 63 01 (Outer)	.....	4	313 3506	
NUT, Lock.....	60 Thru 63 01	17.416	4	G443340	
Pivot Bar To Body					
BOLT, Hexagon.....	60 Thru 63 01	17.038	4	G180843	NA
SPACER	60 Thru 63 01	.....	4	315 7984	
WASHER, Plain.....	60 Thru 63 01 ***(Replaces 800 0197)***	17.814	4	400 1136	
NUT, Lock.....	60 Thru 63 01	17.416	4	G442832	NA
BOLT KIT, Front Suspension Upper Control Arm Pivot					
62 Thru 65 10-80...(Incl. 1-3163429, 1-3163431, 1-G120384, And 1-3163433)		.....	4	320 5112	

NOTE 10.068-1: On 60 01 used prior to Car Code No. 20108.
NOTE 10.068-2: On 60 01 used beginning with Car Code No. 20108.

Copyright 1963 American Motors Corp.

GROUP NO. — DESCRIPTION — YEAR and MODEL	PRIMARY GROUP NO.	PER CAR	PART NO.	CODE
BOLT, Front Suspension Upper Control Arm Pivot				
BOLT, Hexagon 64-65 01: 60-61 10-20-80	17.038	4	G181712	NA
BOLT, Hexagon ..... 62 Thru 65 10-80	.....	4	316 3429	
ATTACHING PARTS				
Pivot Bolt To Wheelhouse Panel				
WASHER, Eccentric .... 62 Thru 65 10-80 (Inner)	.....	4	316 3431	
WASHER, Lock ..... 62 Thru 65 10-80	17.820	4	G120384	NA
NUT, Lock 64-65 01: 60-61 10-20-80	17.416	4	G442832	
NUT, Lock ..... 62 Thru 65 10-80	.....	4	316 3433	
10.100 LINKAGE ASSEMBLY, Steering				
60 01 (LPS)...(Less Pitman And Idler Arm)	.....	1	315 8427	
61 01 (LHD-LPS)...(Less Pitman And Idler Arm)	.....	1	316 0766	
61 Thru 63 01 (RHD)...(Less Pitman And Idler Arm)	.....	1	315 9554	
62-63 01 (LHD-LPS)...(Less Pitman And Idler Arm)	.....	1	316 4642	
64-65 01 (LHD-LPS)...(Incl. Pitman And Idler Arm)	.....	1	317 0945	
64-65 01 (WPS)...(Incl. Pitman And Idler Arm)	.....	1	317 1192	
64-65 01 (RHD)...(Incl. Pitman And Idler Arm)	.....	1	317 1748	
60-61 10 (LHD-LPS)...(Less Pitman And Idler Arm)	.....	1	315 8278	
62 10-80 (LHD-LPS)...(Incl. Pitman And Idler Arm)	.....	1	316 3492	
63 Thru 65 10 (RHD): 63 80 (RHD)...(Incl. Pitman And Idler Arm)	.....	1	316 6943	
63 Thru 65 10 (LHD-LPS): 63-64 80 (LHD-LPS)...(Incl. Pitman And Idler Arm)	.....	1	316 6459	
64-65 10 (WPS): 64 80 (WPS)	.....	1	317 1193	
65 80 (LPS)	.....	1	317 5125	
65 80 (WPS)	.....	1	317 5126	
10.104 ARM, Steering Linkage Pitman				
60 01 (LPS): 61 01 (LHD-LPS)	.....	1	315 4188	
60-61 01 (WPS)	.....	1	315 8664	
61 Thru 63 01 (RHD)	.....	1	315 9555	
62-63 01 (LHD-LPS)	.....	1	316 4035	
62-63 01 (LHD-WPS)	.....	1	316 4117	
64-65 01 (LHD-LPS)...(Incl. Stud Nut And Seal)	.....	1	320 4740	
64-65 01 (WPS)...(Incl. Stud Nut And Seal	.....	1	320 4747	
64-65 01 (RHD)...(Incl. Stud Nut And Seal)	.....	1	320 4748	
60-61 10 (LHD-LPS)...(Incl. Stop Pin)	.....	1	315 7657	
60-61 10 (LHD-WPS)...(Incl. Stop Pin)	.....	1	315 7659	
60-61 10 (RHD)...(Incl. Stop Pin)	.....	1	315 8573	
62 Thru 65 10 (LHD-LPS): 62 Thru 64 80 (LHD-LPS)...(Incl. Stud Nut And Seal)	.....	1	316 3012	
62 Thru 65 10 (RHD): 62-63 10-80 (V8-RHD)...(Incl. Stud Nut And Seal)	.....	1	316 3487	
62 10-80 (LHD-WPS)	.....	1	316 3025	
63 10-80 (LHD-WPS)	.....	1	316 6701	
64-65 10 (WPS): 64 80 (WPS)	.....	1	317 0433	
60-61 20 (LPS)...(Incl. Stop Pin)	.....	1	315 7661	
60-61 20 (WPS)...(Incl. Stop Pin)	.....	1	315 7663	
60-61 80 (LHD-LPS)	.....	1	315 7671	
60-61 80 (WPS)...(Incl. Stop Pin)	.....	1	315 7673	
60-61 80 (RHD)	.....	1	315 8634	
65 80 (LPS)	.....	1	317 4626	
65 80 (WPS)	.....	1	317 4225	
ATTACHING PARTS				
Pitman Arm To Cylinder Stud				
NUT, Slotted ..... 60 Thru 63 01-10-20-80 (WPS)	17.408	1	G125250	NA
PIN, Cotter ..... 60 Thru 63 01-10-20-80 (WPS)	17.460	1	G108635	NA
Pitman Arm To Cross Shaft				
WASHER, Lock ..... 60 Thru 63 01: 64-65 01 (LPS)	.....	1	320 0956	
WASHER, Lock ..... 64-65 01 (WPS): 60 Thru 65 10-20-80	17.820	1	G103336	NA
NUT, Jam ..... 60 Thru 63 01: 64-65 01 (LPS)	10.334	1	56 642	
NUT, Hexagon ..... 60-61 10-20-80: 62 Thru 65 10-80 (LPS)	.....	1	320 0501	

Copyright 1963 American Motors Corp.

GROUP NO. — DESCRIPTION — YEAR and MODEL		PRIMARY GROUP NO.	PER CAR	PART NO.	CODE
NUT, Hexagon	62-63 10-80 (WPS): ***64-65 10 (LHD-Export-LPS-Special Equipment-20 To 1 Ratio): 64 80 (LHD-Export-LPS-Special Equipment-20 To 1 Ratio)***	.....	1	320 3306	
NUT, Hexagon	64-65 01-10-80 (WPS)	.....	1	320 4819	
	Pitman Arm Stud To Center Cross Link				
NUT, Slotted	64-65 01	17.408	1	G272073	NA
NUT, Slotted	62-63 10-80 (LPS): 64-65 10-80	10.234	1	311 3061	
PIN, Cotter	62-63 10-80 (LPS): 64-65 01-10-80	17.406	1	G103374	NA
60-61 10-20: 60-61 80 (WPS)		.....	1	315 3266	
PIN, Pitman Arm Stop					
60-61 10-20: 60-61 80 (WPS)		.....	1	315 3266	#
STUD, Steering Linkage Pitman Arm					
60 Thru 63 01-10-20-80 (WPS)	***(Replaces 320 1352)***	.....	1	320 2406	
ATTACHING PARTS					
	Pitman Arm Stud To Adjusting Plug				
SPACER	60 01-10-20 (WPS-Notes 10.395-1 And 2 Type 1): 61 01-10-20 (WPS-Note 10.395-1 Type 1)	.....	1	320 1354	
SPACER	60 01 (WPS-Note 10.395-2 Type 2): 61 Thru 63 01 (WPS-Note 10.395-1 Types 2 And 3): 60-61 10-20 (WPS-Note 10.395-1 Types 2 And 3)	.....	1	320 3028	
SPACER	62-63 10-80 (WPS-Note 10.395-4 Type 1): 60 80 (WPS-Note 10.395-2 Type 2): 61 80 (WPS-Note 10.395-1 Types 2 And 3)	.....	1	320 3027	
SPACER	63 10-80 (WPS-Note 10.395-4 Type 2)	.....	1	320 4189	
SPACER	60 80 (WPS-Note 10.395-2 Type 1): 61 80 (WPS-Note 10.395-1 Type 1)	.....	1	320 1353	
	Stud To Cylinder				
BUSHING	60-61 01-10-20-80 (WPS-Note 10.395-1 And 2 Type 1)	.....	1	311 9802	
BUSHING	60 01-80 (WPS-Note 10.395-2 Type 2): 60 10-20 (WPS-Note 10.395-1 Types 2 And 3): 61 01-10-20-80 (WPS-Note 10.395-1 Types 2 And 3): 62-63 01-10-20-80 (WPS)	.....	2	320 3030	
CUSHION	60 01-10-20-80 (WPS-Note 10.395-1 And 2 Type 1): 61 01-10-20-80 (WPS-Note 10.395-1 Type 1)	.....	2	311 8797	
CUSHION	60 01-80 (WPS-Note 10.395-2): 60 10-20 (WPS-Note 10.395-1 Types 2 And 3): 61 01-10-20-80 (WPS-Note 10.395-1 Types 2 And 3): 62-63 01-10-80 (WPS) ***(Replaces 320 3033)***	.....	2	320 3145	
RETAINER, Cushion	60 01-10-20-80 (WPS-Note 10.395-1 And 2 Type 1): 61 01-10-20-80 (WPS-Note 10.395-1 Type 1)	.....	2	320 1347	
RETAINER, Cushion	60 01-80 (WPS-Note 10.395-2 Type 2): 60 10-20 (WPS-Note 10.395-1 Types 2 And 3): 61 01-10-20-80 (WPS-Note 10.395-1 Types 2 And 3): 62 01-10-80 (WPS)	.....	2	320 3029	
WASHER, Outer	60 Thru 63 01-10-80 (WPS)	.....	2	311 6988	
WASHER, Inner	60 01-10-20-80 (WPS-Note 10.395-1 And 2 Type 1): 61 01-10-20-80 (WPS-Note 10.395-1 Type 1)	.....	1	311 8796	#
WASHER, Inner	60 01-80 (WPS-Note 10.395-2 Type 2): 60 10-20 (WPS-Note 10.395-1 Types 2 And 3): 61 01-10-20-80 (WPS-Note 10.395-1 Types 2 And 3): 62-63 01-10-80 (WPS)	.....	1	320 3032	
NUT, Slotted	60 Thru 63 01-10-20-80 (WPS)	.....	1	311 9808	
PIN, Roll	60 Thru 63 01-10-20-80 (WPS)	.....	1	311 9809	

Copyright 1963 American Motors Corp.

GROUP NO. — DESCRIPTION — YEAR and MODEL	PRIMARY GROUP NO.	PER CAR	PART NO.	CODE
STUD KIT, Steering Linkage Pitman Arm				
60 01-10-20-80 (WPS-Note 10.395-1 And 2 Type 1): 61 01-10-20-80 (WPS-Note 10.395-1 Type 1)...(Incl. Retainers, Bushings, Washers, Cushions, Nuts And Pins	.....	1	320 2407	
60 01-80 (WPS-10.395-2 Type 2): 60 10-20 (WPS-Note 10.395-1 Types 2 And 3): 61 01-10-20-80 (WPS-Note 10.395-1 Types 2 And 3): 62-63 01-10-20-80 (WPS)...(Incl. Retainers, Bushings, Washers, Cushions, Nuts, And Pins	.....	1	320 3086	
SEAL, Pitman Arm Stud To Center Cross Link Dust				
64-65 01	.....	1	320 4741	
62-63 10-80 (LPS): 64-65 10-80	10.232	1	315 8345	
10.108 ARM, Steering Linkage Idler				
60-61 01 (LHD-LPS)...(Incl. Bushing)	.....	1	315 4187	
61 01 (RHD)...(Incl. Bushing)	.....	1	315 9618	
62-63 01 (LHD-LPS)...(Incl. Bushing)	.....	1	316 4034	
62-63 01 (RHD)...(Incl. Bushing)	.....	1	316 3099	
64-65 01...(Incl. Bushing, Stud Nut And Seal)	.....	1	317 0946	
60-61 10 (LHD-LPS)...(Incl. Grommet, Sleeve And Bushing)	.....	1	315 4390	
60-61 01 (RHD)...(Incl. Grommet, Sleeve And Bushing)	.....	1	315 4529	
62 10-80 (LHD-LPS)...(Incl. Bushing, Stud Nut And Seal)	.....	1	316 4138	
62 10-80 (RHD)...(Incl. Bushing, Stud Nut And Seal)	.....	1	316 4519	
63 10-80 (LPS): 64-65 10: 64 80...(Incl. Bushing, Stud Nut And Seal)	.....	1	316 6458	
60-61 20	.....	2	315 7595	
60-61 80 (LPS)...(Incl. Bushing)	.....	1	315 3581	
65 80	.....	1	317 5124	
ATTACHING PARTS				
Idler Arm To Cross Tube				
STUD — 60-61 10 (LPS-In Cross Tube)	.....	1	320 1052	
GROMMET — 60-61 10 (LPS)	10.425	1	313 7255	
SLEEVE — 60-61 10 (LPS)	10.425	1	313 7262	
WASHER, Plain — 60-61 10 (LPS-33/64" I.D.)	1.047	1	28 575	
WASHER, Plain — 60-61 10 (LPS-13/32" I.D.)	17.814	1	G120394	NA
PIN, Cotter — 60-61 10 (LPS)	17.460	1	G103362	NA
Idler Arm Stud To Center Cross Link				
NUT, Slotted — 64-65 01	17.408	1	G272073	NA
NUT, Slotted — 62-63 10-80 (LPS): 64-65 10-80	10.234	1	311 3061	
PIN, Cotter — 62-63 10-80 (LPS): 64-65 01-10-80	17.406	1	G103374	NA
SEAL, Steering Linkage Idler Arm Stud To Center Cross Link				
64-65 01	10.104	1	320 4741	
62-63 10-80 (LPS): 64-65 10-80	10.232	1	315 8345	
10.110 BUSHING, Steering Linkage Idler Arm				
60-61 01-80 (LPS)	.....	1	315 3573	
62-63 01-10-80 (LPS): 64-65 01-10-80	.....	1	316 3094	
60-61 10 (LPS)	.....	1	315 4563	
60-61 20 (In Crossmember)	.....	2	315 3573	

Copyright 1963 American Motors Corp.

GROUP NO. — DESCRIPTION — YEAR and MODEL		PRIMARY GROUP NO.	PER CAR	PART NO.	CODE
10.112 PIN, Steering Linkage Idler Arm Pivot					
60-61 20		.....	2	315 5534	
ATTACHING PARTS					
Pin To Idler Arm					
SPACER	60-61 20	.....	2	315 5535	
BUSHING	60-61 20 (In Crossmember)	10.110	2	315 3573	
WASHER, Plain	60-61 20 ***(Replaces 800 0193)***	17.814	2	400 1132	
NUT, Hexagon	60-61 20	17.406	2	G120371	NA
Pin To Crossmember					
WASHER, Plain	60-61 20 ***(Replaces 800 0193)***	17.814	2	400 1132	
WASHER, Lock	60-61 20	17.820	2	G120384	NA
NUT, Lock	60-61 20	17.416	2	G442832	
ATTACHING PARTS, Steering Linkage Idler Arm To Bracket Pivot					
Idler Arm To Bracket					
BUSHING	62-63 01-10-80 (LPS): 64-65 01-10-80	10.110	1	316 3094	
WASHER, Plain	60 01 (LHD): 61 01: 62 01 (LPS-1-1/4" O.D.) ***(Replaces 800 0207)***	17.814	1	400 1147	
WASHER, Plain	62-63 01-10-80 (LPS-1-3/8" O.D.): 64 01-10-80	17.814	1	800 0480	NA
WASHER, Plain	65 01-10-80	17.814	1	400 1186	
WASHER, Plain	60-61 80 (LPS) ***(Replaces 800 0193)***	17.814	1	400 1132	
WASHER, Plain	63 01 (LPS-1-15/16" O.D.): 62-63 10-80 (LPS-1-15/16" O.D.): 64-65 01-10-80	17.814	1	G131016	NA
WASHER, Lock	60 01 (LHD): 61 01: 62-63 01-10-80 (LPS): 64-65 01-10-80	17.820	1	G121574	NA
NUT, Hexagon	60 01 (LHD): 61 01	17.406	1	G121358	NA
NUT, Jam	62-63 01-10-80 (LPS): 64-65 01-10-80	17.410	1	G124944	NA
NUT, Slotted	60-61 80 (LPS)	17.408	1	G125250	NA
PIN, Cotter	60-61 80 (LPS)	17.460	1	G103374	NA
BOLT, Steering Linkage Idler Arm To Bracket Pivot					
60-61 10 (LPS-Hollow)		10.042	1	313 1679	
ATTACHING PARTS					
Bolt To Bracket					
BUSHING	60-61 10 (LPS-In Idler Arm)	10.110	1	315 4563	
SPRING	60-61 10 (LPS)	.....	1	315 4562	
SEAL	60-61 10 (LPS) ***(Replaces 313 3771)***	.....	1	316 3689	
WASHER, Plain	60-61 10 (LPS)	.....	2	800 0207	
NUT, Hexagon	60-61 10 (LPS)	17.406	1	G102639	NA
FITTING, Steering Linkage Idler Arm To Bracket Pivot Bolt Lubrication					
60-61 10 (LPS)		17.290	1	G271287	
10.114 BRACKET, Steering Linkage Idler Arm					
60 01 (LPS)...(Incl. Pin)		.....	1	315 4185	
61 01 (LHD-LPS)...(Incl. Pin)		.....	1	316 0765	
61 01 (RHD)...(Incl. Pin)		.....	1	315 9552	
62-63 01 (LHD-LPS)		.....	1	316 4032	
62-63 01 (RHD)		.....	1	316 3098	
64-65 01		.....	1	316 9789	

Copyright 1963 American Motors Corp.

GROUP NO. — DESCRIPTION — YEAR and MODEL	PRIMARY GROUP NO.	PER CAR	PART NO.	CODE
60-61 10 (LHD-LPS)	.....	1	315 3567	
60-61 10 (RHD)	.....	1	315 3575	#
62 10-80 (LHD-LPS)	.....	1	316 4237	
62 10-80 (RHD)	.....	1	316 4505	#
63 10-80 (LHD-LPS)	.....	1	316 6456	
63 10-80 (RHD)	.....	1	316 6639	
64-65 10 (RHD)	.....	1	317 1885	
64-65 10 (LHD): 64 80 (LHD)	.....	1	317 1886	
60-61 80 (LHD-LPS)...(Incl. Pin)	.....	1	315 3584	
60-61 80 (RHD)...(Incl. Pin)	.....	1	315 3588	
65 80	.....	1	317 5120	

ATTACHING PARTS

Bracket To Side Sill

BOLT, Hexagon	***61 Thru 63 01 (RHD-5" Long):*** 65 80 (5" Long)	17.038	1	G180796	NA
BOLT, Hexagon.....	***61 Thru 63 01 (RHD-1-3/4" Long)***	17.038	1	G181672	NA
BOLT, Hexagon	64-65 01-10-80 (3-3/4" Long)	17.038	1	G181681	NA
BOLT, Hexagon	64-65 01-10 (4-3/4" Long): 64 80 (4-3/4" Long) ...	17.038	1	G187317	NA
BOLT, Hexagon.....	60-61 10 (LPS)	17.038	2	G181639	NA
BOLT, Hexagon.....	62 10-80 (LHD-LPS-4-1/4" Long)	17.038	1	G189333	NA
BOLT, Hexagon.....	62 10-80 (LHD-LPS-3-1/2" Long)	17.038	1	G189329	NA
BOLT, Hexagon.....	***62 10-80 (RHD)***	9.136	2	310 7555	
BOLT, Hexagon.....	63 10-80 (LPS-4-3/4" Long)	17.038	1	G180768	NA
BOLT, Hexagon.....	63 10-80 (LPS-3-3/4" Long)	17.038	1	G189330	NA
BOLT, Hexagon.....	60-61 80 (LPS-3" Long)	17.038	1	G181678	NA
BOLT, Hexagon	60-61 80 (LPS-3-1/4" Long) ...***(Replaces 800 0041)***	17.038	1	400 0938	
WASHER, Plain.....	***61 Thru 63 01 (RHD)*** .....***(Replaces 800 0187)***	17.814	1	400 1124	
WASHER, Plain.....	64-65 01-10-80 .....***(Replaces 800 0183)***	17.814	2	400 1120	
WASHER, Plain.....	60-61 10 (LPS-4 Req.): 63 10-80 (LPS-2 Req.) .....***(Replaces 800 0165)***	17.814	AR	400 1104	
WASHER, Plain.....	62 10-80 (LPS) .....***(Replaces 800 0169)***	17.814	2	400 1107	
WASHER, Plain.....	60-61 80 (LPS) .....***(Replaces 800 0181)***	17.814	2	400 1118	
WASHER, Lock	***61 Thru 63 01 (RHD)***: 64-65 01-10-80: 60-61 80 (LPS)	17.820	2	G131100	NA
WASHER, Lock	60 Thru 63 10 (LPS): 61 Thru 63 80 (LPS)	17.820	2	G120382	NA
NUT, Hexagon.....	***61 Thru 63 01 (RHD-1 Req.):*** 64-65 01-10-80 (2 Req.): 60-61 80 (LPS-1 Req.)	17.406	1	G120370	NA
NUT, Hexagon.....	60 Thru 63 10 (LPS): 62-63 80 (LPS)	17.406	2	G120369	NA

10.118 SUPPORT, Steering Linkage Anti-Roll

60-61 10 (LPS)	.....	1	315 4392	

ATTACHING PARTS

Support To Cross Tube Stud

GROMMET.....	60-61 10 (LPS)	10.425	1	313 7255	
SLEEVE	60-61 10 (LPS)	10.425	1	313 7262	
WASHER, Plain.....	60-61 10 (LPS-33/64" I.D.)	1.047	1	28 575	
WASHER, Plain.....	60-61 10 (LPS-13/32" I.D.)	17.814	1	G120394	NA
PIN, Cotter.....	60-61 10 (LPS)	17.460	1	G103362	NA

Support To Idler Arm

NUT, Lock.....	60-61 10 (LPS)	17.416	1	G272712	NA

Copyright 1963 American Motors Corp.

GROUP NO. — DESCRIPTION — YEAR and MODEL	PRIMARY GROUP NO.	PER CAR	PART NO.	CODE
10.122 ROD, Steering Linkage Tie				
64-65 01...(Incl. Rubber And Nut)(Non-Lubication Fitting Design)	.....	2	320 4743	
64-65 01...(Incl. Rubber And Nut)(Lubrication Fitting Design)	.....	2	320 5500	
62-63 10-80 (LPS): 64-65 10-80 ***(Replaces 320 3484)***	.....	2	320 5501	#
60-61 20 (LPS-Pitman Arm To Steering Arm)	.....	1	320 1598	
60-61 20 (WPS-Cylinder To Steering Arm)	.....	1	320 2177	
(Left) 60 01 (LPS)	.....	1	320 2107	
(Left) 60 01 (WPS)	.....	1	320 2179	
(Left) 61 Thru 63 01 (LHD-LPS)	.....	1	320 2625	
(Left) ***61 Thru 63 01 (RHD)***	.....	1	320 2497	
(Left) 61 Thru 63 01 (LHD-WPS)	.....	1	320 2651	
(Left) 60-61 10 (LPS)	.....	1	320 2110	
(Left) 60-61 10 (WPS)	.....	1	320 2115	
(Left) 62 10-80 (WPS)	.....	1	320 3296	
(Left) 63 10-80 (WPS)	.....	1	320 4037	
(Left) 60-61 80 (LPS)	.....	1	320 2112	
(Left) 60-61 80 (WPS)	.....	1	320 2117	
(Right) 60 01 (LPS)	.....	1	320 2108	
(Right) 60 01 (WPS)	.....	1	320 2180	
(Right) 61 Thru 63 01 (LHD-LPS)	.....	1	320 2624	
(Right) ***61 Thru 63 01 (RHD)***	.....	1	320 2498	
(Right) 61 Thru 63 01 (LHD-WPS)	.....	1	320 2650	
(Right) 60-61 10 (LPS)	.....	1	320 2109	
(Right) 60-61 10 (WPS)	.....	1	320 2116	
(Right) 62 10-80 (WPS)	.....	1	320 3297	
(Right) 63 10-80 (WPS)	.....	1	320 4038	
(Right) 60-61 80 (LPS)	.....	1	320 2111	
(Right) 60-61 80 (WPS)	.....	1	320 2119	
PLUG, Steering Linkage Tie Rod Lubrication Fitting Hole				
64 01: 60-61 80 (LPS): 62 Thru 64 10-80	5.170	2	316 4636	
10.126 END ASSEMBLY, Steering Linkage Tie Rod (Incl. Dust Cover Rubber And Nut)				
60-61 01-10-80 (LPS): 62 Thru 65 10-80: 60-61 20 (Non-Lubrication Fitting Design) ***(Replaces 320 1599)(Use 320 5503)***	.....	2	320 2118	
60-61 01-10 (WPS): 62-63 01	.....	2	320 2114	
64-65 01 (Non-Lubrication Fitting Design)	.....	2	320 4744	
64-65 01 (Lubrication Fitting Design)	.....	2	320 5502	
60-61 80 (LPS): 62 Thru 65 10-80 (Lubrication Fitting Design)	.....	2	320 5503	
60-61 80 (WPS) ***(Replaces 320 2120)***	.....	2	320 2118	
PLUG, Steering Linkage Tie Rod End Lubrication Fitting Hole				
64 01: 60-61 80 (LPS): 62 Thru 64 10-80	5.170	2	316 4636	
10.130 ROD, Steering Linkage Idler Arm Tie Rod To Steering Arm Tie				
(Left) 60-61 20	.....	1	320 1595	
(Right) 60-61 20	.....	1	320 1596	
10.135 ROD, Steering Linkage Idler Arm To Idler Arm Tie				
(Left) 60-61 20	.....	1	320 1593	
(Right) 60-61 20	.....	1	320 1594	

Copyright 1963 American Motors Corp.

GROUP NO. — DESCRIPTION — YEAR and MODEL	PRIMARY GROUP NO.	PER CAR	PART NO.	CODE
10.222 TUBE ASSEMBLY, Steering Linkage Tie Rod Adjusting (Incl. Clamps, Bolts And Nuts)				
64-65 01	.....	2	320 4745	
60 Thru 63 01-10-20-80: 64-65 10-80 (2 Req.)	.....	AR	320 0671	
10.224 CLAMP, Steering Linkage Tie Rod Adjusting Tube				
60 Thru 63 01-10-20-80: 64-65 10-80 (4 Req.)	.....	AR	91 607	
64-65 01	.....	4	320 4746	
ATTACHING PARTS Clamp To Adjusting Tube				
BOLT, Hexagon ..... 60 Thru 65 01-10-20-80	17.038	AR	G181613	NA
NUT, Nylock ..... 60 Thru 65 01-10-20-80	.....	AR	320 1068	
10.232 RUBBER, Steering Linkage Tie Rod End Dust Cover				
60 Thru 63 01-10-20-80: 64-65 10-80 (4 Req.)	.....	AR	320 1597	
64-65 01	.....	4	320 4742	
SEAL, Steering Linkage Tie Rod End To Idler Arm Dust				
60-61 20	.....	2	315 8345	
10.234 NUT, Steering Linkage Tie Rod End To Steering Arm				
NUT, Slotted ..... 60 Thru 63 01-10-80 (2 Req.): 60-61 20 (3 Req.): 64-65 10-80 (2 Req.)	.....	AR	311 3061	
NUT, Slotted 64-65 01	17.408	2	G272073	NA
ATTACHING PARTS Nut To Tie Rod End				
PIN, Cotter ..... 60 Thru 65 01-10-80 (2 Req.): 60-61 20 (3 Req.)	17.460	2	G103374	NA
NUT, Steering Linkage Tie Rod End To Pitman Arm				
60-61 20 (LPS)	.....	1	311 3061	
ATTACHING PARTS Nut To Tie Rod End				
PIN, Cotter..... 60-61 20 (LPS)	17.460	1	G103374	NA
NUT, Steering Linkage Tie Rod End To Idler Arm				
60-61 20	.....	2	311 3061	
ATTACHING PARTS Nut To Tie Rod End				
PIN, Cotter..... 60-61 20	17.460	2	G103374	NA
NUT, Steering Linkage Tie Rod End To Idler Arm Tie Rod				
60-61 20	.....	2	311 3061	
ATTACHING PARTS Nut To Tie Rod End				
PIN, Cotter..... 60-61 20	17.460	2	G103374	NA

Copyright 1963 American Motors Corp.

GROUP NO. — DESCRIPTION — YEAR and MODEL	PRIMARY GROUP NO.	PER CAR	PART NO.	CODE
NUT, Steering Linkage Tie Rod End To Center Cross Link				
NUT, Slotted 64-65 01	17.408	2	G272073	NA#
NUT, Slotted ..... 62-63 10-80 (LPS): 64-65 10-80	.....	2	311 3061	#
ATTACHING PARTS Nut To Tie Rod End				
PIN, Cotter ..... 62-63 10-80 (LPS): 64-65 10-80	17.406	2	G103374	NA#
NUT, Steering Linkage Tie Rod End To Cylinder				
60 Thru 63 01-10-80 (WPS-2 Req.): 60-61 20 (WPS-1 Req.)	.....	AR	315 3361	
ATTACHING PARTS Nut To Tie Rod End				
PIN, Cotter..... 60 Thru 63 01-10-80 (WPS-2 Req.): 60-61 20 (WPS-1 Req.).....	17.406	AR	G103374	NA
10.240 TUBE, Steering Linkage Center Cross				
60 01 (LHD-LPS).....	.....	1	311 8646	
61 01 (LHD-LPS).....	.....	1	320 2621	
61 Thru 63 01 (RHD).....	.....	1	320 2496	
62-63 01 (LHD-LPS).....	.....	1	320 3476	
60-61 10 (LHD-LPS).....	.....	1	320 0805	
60-61 10 (RHD).....	.....	1	320 1051	
60-61 80 (LHD-L PS)	.....	1	320 0688	
60-61 80 (RHD).....	.....	1	320 0804	
LINK, Steering Linkage Center Cross				
64-65 01 (LHD).....	.....	1	320 4739	#
64-65 01 (RHD).....	.....	1	320 4749	#
62 10-80 (LHD-LPS).....	.....	1	320 3487	
62 10-80 (RHD).....	.....	1	320 3488	
63 10-80 (LHD-LPS): 64-65 10 (LHD): 64 80 (LHD).....	.....	1	320 4036	#
63 Thru 65 10 (RHD): 63-64 80 (RHD).....	.....	1	320 4019	#
65 80.....	.....	1	320 5792	#
10.242 PLUG, Steering Linkage Cross Tube Adjusting				
60 Thru 63 01 (LPS): 60-61 10 (LPS).....	.....	2	311 5477	
60-61 80 (LPS).....	.....	2	311 5811	
ATTACHING PARTS Plug To Cross Tube				
PIN, Cotter..... 60 Thru 63 01 (LPS).....	17.460	2	G103376	NA
PIN, Cotter..... 60-61 80 (LPS).....	17.460	2	G103386	NA
10.244 SEAT, Steering Linkage Cross Tube Ball				
60 Thru 63 01 (LPS-For Tie Rods, Pitman And Idler Arm).....	.....	6	311 3949	
60-61 10 (LPS-For Tie Rods And Pitman Arm).....	.....	4	311 3949	
60-61 80 (LPS-For Tie Rods).....	.....	4	311 5807	
60-61 80 (LPS-For Pitman And Idler Arm).....	.....	2	311 5808	

Copyright 1963 American Motors Corp.

GROUP NO. — DESCRIPTION — YEAR and MODEL	PRIMARY GROUP NO.	PER CAR	PART NO.	CODE
10.246 PLUG, Steering Linkage Cross Tube Safety				
60-61 10 (LHD-LPS-2 Req.): 62-63 01 (LHD-LPS-3 Req.): ***62-63 01 (RHD-2 Req.):*** 60-61 10 (LPS-3 Req.)	.....	AR	311 8650	
60-61 80 (LPS)	.....	2	320 0692	
SPRING, Steering Linkage Cross Tube Safety Plug				
60-61 01 (LHD-LPS-2 Req.): 62-63 01 (LHD-LPS-3 Req.): ***62-63 01 (RHD-2 Req.):*** 60-61 10 (LPS-3 Req.)	.....	AR	311 8651	
60-61 80 (LPS)	.....	2	310 4339	
10.248 SPACER, Steering Linkage Cross Tube				
(Pitman Arm End) 60 01 (LPS-2-15/64" Long): 60-61 10 (LHD-LPS-2-15/64" Long)	.....	1	311 8649	
(Pitman Arm End) 61 Thru 63 01 (LHD-LPS)	.....	1	320 2623	
(Pitman Arm End) ***61 Thru 63 01 (RHD)***	.....	1	311 9045	
(Pitman Arm End) 60-61 10 (LPS-2-21/32" Long)	.....	1	320 0806	
(Pitman Arm End) 60-61 80 (LPS)	.....	1	320 0691	
(Idler Arm End) 60 01 (LPS)	.....	1	311 8648	
(Idler Arm End) 61 Thru 63 01 (LHD-LPS)	.....	1	320 2622	
(Idler Arm End) ***61 Thru 63 01 (RHD)***	.....	1	320 2499	
(Idler Arm End) 60-61 10 (LHD-LPS)	.....	1	320 1057	
(Idler Arm End) 60-61 80 (LPS)	.....	1	320 0690	
10.250 WASHER, Steering Linkage Cross Tube (Inner)				
60 Thru 63 01 (LPS): 60-61 10 (LPS)	.....	2	311 8647	
60-61 80 (LPS)	.....	2	320 0689	
10.252 FITTING, Steering Linkage Cross Tube Lubrication				
60 Thru 63 01 (LPS): 60-61 10 (LPS)	17.290	2	G271287	
60-61 80 (LPS)	5.083	2	95 399	
10.253 STUD, Steering Linkage Cross Tube Ball				
(For Pitman And Idler Arm) 60 Thru 63 01 (LPS)	.....	2	320 0650	
(For Pitman And Idler Arm) 60-61 80 (LPS)	.....	2	311 5806	
(For Pitman Arm) 60-61 10 (LPS)	.....	1	320 0650	
ATTACHING PARTS				
Stud To Pitman And Idler Arm				
NUT, Slotted ..... 60 Thru 63 01 (LPS-2 Req.): 60-61 10 (LPS-1 Req.)	17.408	AR	G272073	NA
NUT, Slotted ..... 60-61 80 (LPS) .....***(Replaces 311 3060)***	10.395	2	312 6361	
PIN, Cotter..... 60 Thru 63 01-80 (LPS-2 Req.): 60-61 10 (LPS-1 Req.)	17.406	AR	G103374	NA
10.254 COVER, Steering Linkage Cross Tube Ball Stud (Metal)				
(For Tie Rods) 60 Thru 63 01 (LPS): 60-61 10 (LPS)	.....	2	311 3964	
(For Tie Rods) 60-61 80 (LPS)	.....	2	311 5816	
(For Pitman Arm) 60-61 10 (LPS)	.....	1	315 4082	
(For Pitman And Idler Arm) 60 Thru 63 01 (LPS)	.....	2	315 4082	
(For Pitman And Idler Arm) 60-61 80 (LPS)	.....	2	311 5814	

Copyright 1963 American Motors Corp.

GROUP NO. — DESCRIPTION — YEAR and MODEL		PRIMARY GROUP NO.	PER CAR	PART NO.	CODE
COVER, Steering Linkage Cross Tube Ball Stud Dust (Rubber)					
(For Pitman And Idler Arm) 60-61 80 (LPS)		.....	2	311 5815	
SPRING, Steering Linkage Cross Tube Ball Stud Cover					
(For Tie Rods) 60 Thru 63 01 (LPS): 60-61 10 (LPS)		.....	2	311 3965	
(For Tie Rods) 60-61 80 (LPS)		.....	2	310 4338	
(For Pitman Arm) 60-61 10 (LPS)		.....	1	315 4083	
(For Pitman And Idler Arm) 60 Thru 63 01 (LPS)		.....	2	315 4083	
10.260 STABILIZER, Front Suspension Sway					
62 80		.....	1	316 3269	
63 Thru 65 10 (V8): 63-64 80		.....	1	316 6350	
60-61 80...(Incl. Link, Bushing And Cushions)		.....	1	315 3149	
65 80		.....	1	317 4224	
ATTACHING PARTS					
Stabilizer To Strut Rod Bracket					
CLAMP	62 80	.....	2	316 3127	
PLATE, Reinforcement	62 80	.....	2	316 3125	
BOLT, Hexagon	62 80	8.035	4	316 2760	
WASHER, Lock	62 80	17.820	4	G120382	NA
NUT, Hexagon	62 80	17.406	4	G120369	NA
Stabilizer To Support					
CLAMP	63-64 10-80 (V8): 65 10 (V8): 65 80	.....	2	316 3127	
PLATE, Reinforcement	63-64 10-80 (V8): 65 10 (V8): 65 80	.....	2	316 3125	
BOLT, Hexagon	63-64 10-80 (V8): 65 10 (V8): 65 80	8.035	4	316 2760	
WASHER, Plain	63-64 10-80 (V8): 65 10 (V8): 65 80 ***(Replaces 800 0163)***	17.814	4	400 1102	
WASHER, Lock	63-64 10-80 (V8): 65 10 (V8): 65 80	17.820	4	G120382	NA
NUT, Hexagon	63-64 10-80 (V8): 65 10 (V8): 65 80	17.406	4	G120369	NA
Stabilizer To Lower Control Arm					
CLAMP	60-61 80	.....	2	315 3123	
BOLT, Hexagon	62 Thru 64 10-80 (V8): 65 10 (V8): 65 80 ***(Replaces 316 3119)***	.....	2	316 5953	
BOLT, Hexagon	60-61 80	17.038	2	G181650	NA
GROMMET	62 Thru 64 10-80 (V8): 65 10 (V8): 65 80	11.208	8	316 3485	
RETAINER	62 Thru 64 10-80 (V8): 65 10 (V8): 65 80 (For Grommet)	.....	8	315 2907	
RETAINER	62 Thru 64 10-80 (V8): 65 10 (V8): 65 80 (For Grommet-At Underside Of Control Arm)	1.017	2	316 3498	
SPACER	62 Thru 64 10-80 (V8): 65 10 (V8): 65 80 (For Grommet)	.....	2	316 3120	#
WASHER, Plain	60-61 80 ***(Replaces 800 0165)***	17.814	2	400 1104	
WASHER, Lock	60-61 80	17.820	2	G120382	NA
NUT, Lock	62 Thru 64 10-80 (V8): 65 10 (V8): 65 80	17.416	2	G442828	NA
NUT, Hexagon	60-61 80	17.406	2	G120369	NA
BRACKET, Front Suspension Sway Stabilizer To Lower Control Arm					
60-61 80 (Welded To Lower Control Arm)		.....	2	315 3050	
CUSHION, Front Suspension Sway Stabilizer					
60-61 80		.....	2	313 3768	

Copyright 1963 American Motors Corp.

GROUP NO. — DESCRIPTION — YEAR and MODEL		PRIMARY GROUP NO.	PER CAR	PART NO.	CODE	
BUSHING, Front Suspension Sway Stabilizer Link						
60-61 80		.....	2	315 2904		
LINK, Front Suspension Sway Stabilizer To Crossmember						
60-61 80		.....	2	315 3244		
ATTACHING PARTS Link To Crossmember						
GROMMET	60-61 80	.....	4	315 2909		
RETAINER	60-61 80 (Lower Grommet (Lower)	.....	2	315 2906		
RETAINER	60-61 80 (Upper Grommet (Upper)	.....	2	315 2907		
RETAINER	60-61 80 (Upper Grommet (Lower)	.....	2	315 2908		
NUT, Hexagon	60-61 80	17.416	2	G442828	NA	
SUPPORT, Front Suspension Sway Stabilizer To Strut Rod Bracket						
63-64 10-80 (V8): 65 10 (V8): 65 80		.....	2	316 7636		
ATTACHING PARTS Support To Strut Rod Bracket						
BOLT, Hexagon	63-64 10-80 (V8): 65 10 (V8): 65 80	17.038	4	G181638	NA	
WASHER, Lock	63-64 10-80 (V8): 65 10 (V8): 65 80	17.820	4	G120382	NA	
NUT, Hexagon	63-64 10-80 (V8): 65 10 (V8): 65 80	17.406	4	G120369	NA	
10.266 BRACKET, Front Suspension Sway Stabilizer Lower						
60-61 80 (Welded To Lower Control Arm)		.....	2	315 3050		
10.280 WHEEL, Steering						
(T-001) (LHR)	(Incl. Trim Ring) *(Replaces 315 8671)*	.....	1	315 8672		
(T-001) (WHR)		.....	1	315 7701		
(T-002) (LHR)	(Incl. Trim Ring) *(Replaces 315 8671)*	.....	1	315 8672		
(T-002) (WHR)		.....	1	315 7701		
(T-003) (LHR)	(Incl. Trim Ring) *(Replaces 315 9576)*	.....	1	315 9580		
(T-003) (WHR)		.....	1	315 9578		
(T-004) (LHR)	(Incl. Trim Ring) *(Replaces 315 9577)*	.....	1	315 9581		
(T-004) (WHR)		.....	1	315 9579		
(T-005) (LHR)	(Incl. Trim Ring) *(Replaces 315 8671)*	.....	1	315 8672	#	
(T-005) (WHR)		.....	1	315 7701	#	
(T-010) (LHR)	(Incl. Trim Ring) *(Replaces 315 8671)*	.....	1	315 8672		
(T-010) (WHR)		.....	1	315 7701		
(T-011) (LHR)	(Incl. Trim Ring) *(Replaces 315 8671)*	.....	1	315 8672		
(T-011) (WHR)		.....	1	315 7701		
(T-012) (LHR)	(Incl. Trim Ring) *(Replaces 315 8671)*	.....	1	315 8672		
(T-012) (WHR)		.....	1	315 7701		
(T-013) (LHR)	(Incl. Trim Ring) *(Replaces 315 9576)*	.....	1	315 9580		
(T-013) (WHR)		.....	1	315 9578		
(T-014) (LHR)	(Incl. Trim Ring) *(Replaces 315 9577)*	.....	1	315 9581		
(T-014) (WHR)		.....	1	315 9579		
(T-.015) (LHR)	(Incl. Trim Ring) *(Replaces 315 8671)*	.....	1	315 8672	#	
(T-.015) (WHR)		.....	1	315 7701		
(T-021)		.....	1	315 7618		
(T-022)		.....	1	315 7618		

NOTE 10.280: Two Types of Steering Wheels were installed on 63 10-80 series. They can be identified as follows:

Type 1: The Wheel uses a Horn Ring with an extension at the end.

Type 2: The Wheel uses a Horn Ring less an extension at the end.

Copyright 1963 American Motors Corp.

GROUP NO. — DESCRIPTION — YEAR and MODEL	PRIMARY GROUP NO.	PER CAR	PART NO.	CODE
(T-023)		1	315 7776	#
(T-024)		1	315 7777	#
(T-025)		1	315 7618	#
(T-027) 01		1	315 7701	#
(T-027) 10-20-80		1	315 7778	#
(T-028) 01		1	315 7701	#
(T-028) 10-20-80		1	315 7778	#
(T-029) 01		1	315 7701	#
(T-029) 10-20-80		1	315 7779	#
(T-030)		1	315 7618	#
(T-031)		1	315 7618	#
(T-032)		1	315 7618	#
(T-033)		1	315 7776	#
(T-034)		1	315 7777	#
(T-035)		1	315 7618	#
(T-037) 01		1	315 7701	#
(T-037) 10-20-80		1	315 7778	#
(T-038) 01		1	315 7701	#
(T-038) 10-20-80		1	315 7778	#
(T-039) 01		1	315 7701	#
(T-039) 10-20-80		1	315 7779	#
(T-041) 01		1	315 9587	#
(T-041) 10-20-80		1	315 7787	#
(T-042) 01		1	315 7701	#
(T-042) 10-20-80		1	315 7780	#
(T-043) 01		1	315 9578	#
(T-043) 10-20-80		1	315 7785	#
(T-044) 01		1	315 9579	#
(T-044) 10-20-80		1	315 7786	#
(T-045) 01		1	315 7701	#
(T-045) 10-20-80		1	315 7781	#
(T-046) 01		1	315 7701	#
(T-046) 10-20-80		1	315 7782	#
(T-047) 01		1	315 7701	#
(T-047) 10-20-80		1	315 7783	#
(T-048) 01		1	315 7701	#
(T-048) 10-20-80		1	315 7783	#
(T-049) 01		1	315 7701	#
(T-049) 10-20-80		1	315 7784	#
(T-051) 01		1	315 9587	#
(T-051) 10-20-80		1	315 7787	#
(T-052) 01		1	315 7701	#
(T-052) 10-20-80		1	315 7780	#
(T-053) 01		1	315 9578	#
(T-053) 10-20-80		1	315 7785	#
(T-054) 01		1	315 9579	#
(T-054) 10-20-80		1	315 7786	#
(T-055) 01		1	315 7701	#
(T-055) 10-20-80		1	315 7781	#
(T-056) 01		1	315 7701	#
(T-056) 10-20-80		1	315 7782	#
(T-057) 01		1	315 7701	#
(T-057) 10-20-80		1	315 7783	#
(T-058) 01		1	315 7701	#
(T-058) 10-20-80		1	315 7783	#
(T-059) 01		1	315 7701	#
(T-059) 10-20-80		1	315 7784	#

Copyright 1963 American Motors Corp.

GROUP NO. — DESCRIPTION — YEAR and MODEL	PRIMARY GROUP NO.	PER CAR	PART NO.	CODE
(T-062)	.....	1	315 7618	#
(T-063)	.....	1	315 7776	#
(T-064)	.....	1	315 7777	#
(T-065)	.....	1	315 7618	#
(T-067)	.....	1	315 7778	#
(T-068)	.....	1	315 7778	#
(T-069)	.....	1	315 7779	#
(T-072)	.....	1	315 7618	#
(T-073)	.....	1	315 7776	#
(T-074)	.....	1	315 7777	#
(T-075)	.....	1	315 7618	#
(T-077)	.....	1	315 7778	#
(T-078)	.....	1	315 7778	#
(T-079)	.....	1	315 7779	#
(T-081)	.....	1	315 7787	#
(T-082)	.....	1	315 7780	#
(T-083)	.....	1	315 7785	#
(T-084)	.....	1	315 7786	#
(T-085)	.....	1	315 7781	#
(T-086)	.....	1	315 7782	#
(T-087)	.....	1	315 7783	#
(T-088)	.....	1	315 7783	#
(T-089)	.....	1	315 7784	#
(T-091)	.....	1	315 7787	#
(T-092)	.....	1	315 7780	#
(T-093)	.....	1	315 7785	#
(T-094)	.....	1	317 7786	#
(T-095)	.....	1	315 7781	#
(T-096)	.....	1	315 7782	#
(T-097)	.....	1	315 7783	#
(T-098)	.....	1	315 7784	#
(T-099)	.....	1	315 7784	#
(T-101)	.....	1	316 0169	#
(T-102)	.....	1	316 0169	#
(T-103)	.....	1	316 0172	#
(T-104)	.....	1	316 0174	#
(T-105)	.....	1	316 0169	#
(T-106)	.....	1	316 0176	#
(T-110)	.....	1	316 0169	#
(T-111)	.....	1	316 0169	#
(T-112)	.....	1	316 0169	#
(T-113)	.....	1	316 0172	#
(T-114)	.....	1	316 0174	#
(T-115)	.....	1	316 0169	#
(T-116)	.....	1	316 0176	#
(T-121)	.....	1	316 0169	#
(T-122)	.....	1	316 0169	#
(T-123)	.....	1	316 0172	#
(T-124)	.....	1	316 0174	#
(T-125)	.....	1	316 0169	#
(T-126)	.....	1	316 0176	#
(T-127)	.....	1	316 0178	#
(T-1272)	.....	1	316 3850	#
(T-128)	.....	1	316 0178	#
(T-1282)	.....	1	316 3850	#
(T-129)	.....	1	316 0184	#
(T-1292)	.....	1	316 3853	#

Copyright 1963 American Motors Corp.

GROUP NO. — DESCRIPTION — YEAR and MODEL	PRIMARY GROUP NO.	PER CAR	PART NO.	CODE
(T-130)		1	316 0169	
(T-131)		1	316 0169	
(T-132)		1	316 0169	
(T-133)		1	316 0172	
(T-134)		1	316 0174	
(T-135)		1	316 0169	
(T-136)		1	316 0176	
(T-137)		1	316 0184	
(T-1372)		1	316 3853	
(T-138)		1	316 0178	
(T-1382)		1	316 3850	
(T-139)		1	316 0184	
(T-1392)		1	316 3853	
(T-140)		1	316 0194	
(T-141)		1	316 0194	
(T-142)		1	316 0188	
(T-1422)		1	316 3855	
(T-143)		1	316 0190	
(T-144)		1	316 0192	
(T-145)		1	316 0180	
(T-1452)		1	316 3851	
(T-146)		1	316 0186	
(T-1462)		1	316 3854	
(T-147)		1	316 0188	
(T-1472)		1	316 3855	
(T-148)		1	316 0190	
(T-149)		1	316 0182	
(T-1492)		1	316 3852	
(T-150)		1	316 0192	
(T-151)		1	316 0194	
(T-152)		1	316 0188	
(T-1522)		1	316 3855	
(T-153)		1	316 0190	
(T-154)		1	316 0192	
(T-155)		1	316 0180	
(T-1552)		1	316 3851	
(T-156)		1	316 0186	
(T-1562)		1	316 3854	
(T-157)		1	316 0180	
(T-1572)		1	316 3851	
(T-158)		1	316 0186	
(T-1582)		1	316 3854	
(T-159)		1	316 0182	
(T-1592)		1	316 3852	
(T-160)		1	316 0182	
(T-1602)		1	316 3852	
(T-162)		1	316 0169	
(T-163)		1	316 0172	
(T-164)		1	316 0174	
(T-165)		1	316 0169	
(T-166)		1	316 0176	
(T-168)		1	316 0178	
(T-1682)		1	316 3850	
(T-1683)		1	316 3850	
(T-169)		1	316 0184	
(T-1692)		1	316 3853	
(T-1693)		1	316 3853	

Copyright 1963 American Motors Corp.

GROUP NO. — DESCRIPTION — YEAR and MODEL	PRIMARY GROUP NO.	PER CAR	PART NO.	CODE
(T-172)	.....	1	316 0169	
(T-173)	.....	1	316 0172	
(T-174)	.....	1	316 0174	
(T-175)	.....	1	316 0169	
(T-176)	.....	1	316 0176	
(T-178)	.....	1	316 0178	
(T-1783)	.....	1	316 3850	
(T-179)	.....	1	316 0184	
(T-1793)	.....	1	316 3853	
(T-181)	.....	1	316 0194	
(T-182)	.....	1	316 0188	
(T-1822)	.....	1	316 3855	
(T-1823)	.....	1	316 3855	
(T-183)	.....	1	316 0190	
(T-184)	.....	1	316 0192	
(T-185)	.....	1	316 0180	
(T-1852)	.....	1	316 3851	
(T-1853)	.....	1	316 3851	
(T-186)	.....	1	316 0186	#
(T-1862)	.....	1	316 3854	
(T-1863)	.....	1	316 3854	
(T-189)	.....	1	316 0182	
(T-1892)	.....	1	316 3852	
(T-1893)	.....	1	316 3852	
(T-190)	.....	1	316 0194	
(T-191)	.....	1	316 0194	
(T-192)	.....	1	316 0188	
(T-1922)	.....	1	316 3855	
(T-1923)	.....	1	316 3855	
(T-193)	.....	1	316 0190	
(T-194)	.....	1	316 0192	
(T-195)	.....	1	316 0180	
(T-1953)	.....	1	316 3851	
(T-196)	.....	1	316 0186	
(T-1963)	.....	1	316 3854	
(T-197)	.....	1	316 3855	
(T-198)	.....	1	316 3851	
(T-199)	.....	1	316 3852	
(T-1993)	.....	1	316 3852	
(T-201) (LHR)(LES-LHR)	.....	1	316 3675	
(T-201) (WHR)(LES-WHR)(WES)	.....	1	316 3061	
(T-202) (LHR)(LES-LHR)	.....	1	316 3675	
(T-202) (WHR)(LES-WHR)(WES)	.....	1	316 3061	
(T-203)	.....	1	316 3318	#
(T-212)	.....	1	316 3061	#
(T-213)	.....	1	316 3318	
(T-214)	.....	1	316 3317	
(T-215)	.....	1	316 3061	
(T-216)	.....	1	316 3316	
(T-222)	.....	1	316 5791	
(T-223)	.....	1	316 5862	
(T-224)	.....	1	316 5863	
(T-225)	.....	1	316 5859	
(T-226)	.....	1	316 5864	
(T-228)	.....	1	316 5860	
(T-229)	.....	1	316 5861	
(T-232)	.....	1	316 5791	#
(T-233)	.....	1	316 5862	
(T-234)	.....	1	316 5863	

Copyright 1963 American Motors Corp.

GROUP NO. — DESCRIPTION — YEAR and MODEL	PRIMARY GROUP NO.	PER CAR	PART NO.	CODE
(T-235)	.....	1	316 5869	
(T-236)	.....	1	316 5864	
(T-238)	.....	1	316 5860	
(T-239)	.....	1	316 5861	
(T-242)	.....	1	316 5791	
(T-243)	.....	1	316 5862	
(T-244)	.....	1	316 5863	
(T-245)	.....	1	316 5859	
(T-246)	.....	1	316 5864	
(T-248)	.....	1	316 5860	
(T-249)	.....	1	316 5861	
(T-251)	.....	1	316 3675	
(T-252)	.....	1	316 3675	
(T-262)	.....	1	316 3061	
(T-263)	.....	1	316 3318	
(T-264)	.....	1	316 3317	
(T-265)	.....	1	316 3061	
(T-266)	.....	1	316 3316	
(T-272)	.....	1	316 5791	
(T-273)	.....	1	316 5862	
(T-274)	.....	1	316 5863	
(T-275)	.....	1	316 5859	
(T-276)	.....	1	316 5864	
(T-278)	.....	1	316 5860	
(T-279)	.....	1	316 5861	
(T-282)	.....	1	316 3061	
(T-283)	.....	1	316 3318	
(T-284)	.....	1	316 3317	
(T-285)	.....	1	316 3061	
(T-286)	.....	1	316 3316	
(T-292)	.....	1	316 5791	
(T-293)	.....	1	316 5862	
(T-294)	.....	1	316 5863	
(T-295)	.....	1	316 5859	
(T-296)	.....	1	316 5864	
(T-298)	.....	1	316 5860	
(T-299)	.....	1	316 5861	
(T-301)(220-LES-LHR)(220-LHD)	.....	1	316 6834	
(T-301)(220-LES-WHR)(220-WHR)(330)	.....	1	316 6835	
(T-302)(220-LES-LHR)(220-LHR)	.....	1	316 6834	
(T-302)(220-LES-WHR)(220-WHR)(330)	.....	1	316 6835	
(T-312)	.....	1	316 6835	
(T-313)	.....	1	316 6837	
(T-314)	.....	1	316 6839	
(T-315)	.....	1	316 6835	
(T-316)	.....	1	316 6840	
(T-322)	.....	1	316 6841	
(T-323)	.....	1	316 6842	
(T-324) *(Replaces 316 5860)*	.....	1	316 6843	
(T-325)	.....	1	316 6844	
(T-326)	.....	1	316 5861	
(T-327)	.....	1	316 6845	
(T-335)	.....	1	316 6844	
(T-336)	.....	1	316 5861	
(T-337)	.....	1	316 6845	
(T-342)(440)	.....	1	316 6841	
(T-342)(770)(990)	.....	1	316 6626	
(T-343)(440)	.....	1	316 6842	
(T-343)(770)(990)	.....	1	316 6733	
(T-344)(440)	.....	1	316 6843	
(T-344)(770)(990)	.....	1	316 6734	

Copyright 1963 American Motors Corp.

GROUP NO. — DESCRIPTION — YEAR and MODEL	PRIMARY GROUP NO.	PER CAR	PART NO.	CODE
(T-345)(440)	.....	1	316 6844	
(T-345)(770)(990)	.....	1	316 6736	
(T-346)(440)	.....	1	316 5861	
(T-346)(770)(990)	.....	1	316 6735	
(T-347)(440)	.....	1	316 6845	
(T-347)(770)(990)	.....	1	316 6737	
(T-351)(550-LES)(800)...(Incl. Cancelling Pin)	.....	1	316 6628	
(T-351)(550-WES)(660)(Note 10.280-1 Type 1)...(Incl. Cancelling Pin)	.....	1	316 6627	
(T-352)(550-LES)(800)...(Incl. Cancelling Pin)	.....	1	316 6628	
(T-352)(550-WES)(660)(Note 10.380-1 Type 1)...(Incl. Cancelling Pin)	.....	1	316 6627	
(T-352)(Note 10.280-1 Type 2)...(Incl. Canceling Pin) ***....(Replaces 320 4540)***	.....	1	317 2093	
(T-353)(550-LES)...(Incl. Cancelling Pin)	.....	1	316 6741	
(T-353)(550-WES)(660)(Note 10.280-1 Type 1)...(Incl. Cancelling Pin) ***....(Ref. Pr. List)***	.....	1	316 6738	
(T-353)(550-WES)(660)(Note 10.280-1 Type 2)...(Incl. Cancelling Pin)	.....	1	320 4546	
(T-354)(550-LES)...(Incl. Cancelling Pin)	.....	1	316 6742	
(T-354)(550-WES)(660)(Note 10.280-1 Type 1)...(Incl. Cancelling Pin) ***....(Ref. Pr. List)***	.....	1	316 6739	
(T-354)(550-WES)(660)(Note 10.280-1 Type 2)...(Incl. Cancelling Pin)	.....	1	320 4547	
(T-362)(Note 10.280-1 Type 1)...(Incl. Cancelling Pin)	.....	1	316 6627	
(T-362)(Note 10.280-1 Type 2)...(Incl. Cancelling Pin) ***...(Replaces 320 4540)***	.....	1	317 2093	
(T-363)(Note 10.280-1 Type 1)...(Incl. Cancelling Pin) ***.....(Ref. Pr. List)***	.....	1	316 6738	
(T-363)(Note 10.280-1 Type 2)...(Incl. Cancelling Pin)	.....	1	320 4546	
(T-364)(Note 10.280-1 Type 1)...(Incl. Cancelling Pin)	.....	1	316 6739	
(T-364)(Note 10.280-1 Type 2)...(Incl. Cancelling Pin)	.....	1	320 4547	
(T-365)(Note 10.280-1 Type 1)...(Incl. Cancelling Pin)	.....	1	316 6627	
(T-365)(Note 10.280-1 Type 2)...(Incl. Cancelling Pin)***...(Replaces 320 4540)***	.....	1	317 2093	
(T-366)(Note 10.280-1 Type 1)...(Incl. Cancelling Pin)	.....	1	316 6740	
(T-366)(Note 10.280-1 Type 2)...(Incl. Cancelling Pin)	.....	1	320 4548	
(T-372)(Note 10.280-1 Type 1)...(Incl. Cancelling Pin) ***.....(Ref. Pr. List)***	.....	1	316 6626	
(T-372)(Note 10.280-1 Type 2)...(Incl. Cancelling Pin)	.....	1	320 4539	
(T-373)(Note 10.280-1 Type 1)...(Incl. Cancelling Pin) ***.....(Ref. Pr. List)***	.....	1	316 6733	
(T-373)(Note 10.280-1 Type 2)...(Incl. Cancelling Pin)	.....	1	320 4541	
(T-374)(Note 10.280-1 Type 1)...(Incl. Cancelling Pin) ***.....(Ref. Pr. List)***	.....	1	316 6734	
(T-374)(Note 10.280-1 Type 2)...(Incl. Cancelling Pin)	.....	1	320 4542	
(T-375)(Note 10.280-1 Type 1)...(Incl. Cancelling Pin) ***.....(Ref. Pr. List)***	.....	1	316 6736	
(T-375)(Note 10.280-1 Type 2)...(Incl. Cancelling Pin)	.....	1	320 4544	
(T-376)(Note 10.280-1 Type 1)...(Incl. Cancelling Pin) ***.....(Ref. Pr. List)***	.....	1	316 6735	
(T-376)(Note 10.280-1 Type 2)...(Incl. Cancelling Pin) ***..... (Use 320 5178)***	.....	1	320 4543	#
(T-377)(Note 10.280-1 Type 1)...(Incl. Cancelling Pin) ***.....(Ref. Pr. List)***	.....	1	316 6737	
(T-377)(Note 10.280-1 Type 2)...(Incl. Cancelling Pin)	.....	1	320 4545	
(T-382)...(Incl. Cancelling Pin)	.....	1	316 6627	
(T-383)...(Incl. Cancelling Pin)	.....	1	316 6738	
(T-384)...(Incl. Cancelling Pin)	.....	1	316 6739	
(T-385)(Note 10.280-1 Type 1)...(Incl. Cancelling Pin)	.....	1	316 9325	
(T-385)(Note 10.280-1 Type 2)...(Incl. Cancelling Pin)	.....	1	320 4549	
(T-386)...(Incl. Cancelling Pin)	.....	1	316 6740	
(T-392)...(Incl. Cancelling Pin)	.....	1	316 6626	
(T-393)...(Incl. Cancelling Pin)	.....	1	316 6733	
(T-394)...(Incl. Cancelling Pin)	.....	1	316 6734	
(T-395)...(Incl. Cancelling Pin)	.....	1	316 6736	
(T-396)...(Incl. Cancelling Pin)	.....	1	316 6735	
(T-397)...(Incl. Canceling Pin) ***.....(Ref. Pr. List)***	.....	1	316 6737	
(T-422)(LHD-220-LES-LHR)...(Incl. Cancelling Pin)	.....	1	316 9942	
(T-422)(LHD-220-LES-WHR)(LHD-220-WES)(LHD-330)(LHD-440) ***(RHD-WAT)***...(Incl. Cancelling Pin)	.....	1	317 1997	
(T-422)***(RHD-220-WST-LHR)(RHD-WOD-LHR)***...(Incl. Cancelling Pin)	.....	1	317 4354	
(T-422)***(RHD-220-WST-WHR)(RHD-220-WOD-WHR)(RHD-330-WST)(RHD-330-WOD) (RHD-440-WST)(RHD-440-WOD)***...(Incl. Cancelling Pin)	.....	1	317 4353	
(T-432)(LHD-220-LES-WHR)(LHD-220-WES)(LHD-440) ***(RHD-WAT)***...(Incl. Cancelling Pin)	.....	1	317 1997	

Copyright 1963 American Motors Corp.

GROUP NO. — DESCRIPTION — YEAR and MODEL	PRIMARY GROUP NO.	PER CAR	PART NO.	CODE
(T-432) ***(RHD-220-WST-WHR)(RHD-220-WOD-WHR)(RHD-330-WST)(RHD-330-WOD) (RHD-440-WST)(RHD-440-WOD)***...(Incl. Cancelling Pin)	.....	1	317 4353	
(T-433) (LHD-330)(LHD-440)(LHD-440H)***(RHD-WAT)***...(Incl. Cancelling Pin)..	.....	1	317 2136	
(T-433) ***(RHD-330)(RHD-440)(RHD-440H)***...(Incl. Cancelling Pin).....	.....	1	317 4357	
(T-434) (LHD-330)(LHD-440)(LHD-440H)***(RHD-WAT)***...(Incl. Cancelling Pin)..	.....	1	317 2138	
(T-434) ***(RHD-330-WST)(RHD-330-WOD)(RHD-440-WST)(RHD-440-WOD) (RHD-440H-WST)(RHD-440H-WOD)***...(Incl. Cancelling Pin).....	.....	1	317 4359	
(T-435) (LHD)...(Incl. Cancelling Pin).....	.....	1	317 2142	
(T-435) ***(RHD)***...(Incl. Cancelling Pin).....	.....	1	317 4363	
(T-436) (LHD)...(Incl. Cancelling Pin).....	.....	1	317 2144	
(T-436) ***(RHD)***...(Incl. Cancelling Pin).....	.....	1	317 4365	
(T-438) (LHD-330)(LHD-440)(LHD-440H)***(RHD-WAT)***...(Incl. Cancelling Pin)..	.....	1	317 2140	
(T-438) ***(RHD-330-WST)(RHD-330-WOD)(RHD-440-WST)(RHD-440-WOD) (RHD-440H-WST)(RHD-440H-WOD)***...(Incl. Cancelling Pin).....	.....	1	317 4361	
(T-441) (LHD-220-LES-WHR)(LHD-220-WES)(LHD-330)(LHD-440) ***(RHD-WAT)***...(Incl. Cancelling Pin)	.....	1	317 1997	
(T-441) ***(RHD-220-WST-WHR)(RHD-220-WOD-WHR)(RHD-330-WST)(RHD-330-WOD) (RHD-440-WST)(RHD-440-WOD)(RHD-440H-WST)(RHD-440H-WOD)*** ...(Incl. Cancelling Pin)	.....	1	317 4353	
(T-442C) (LHD-220-LES-WHR)(LHD-220-WES)(LHD-330)(LHD-440) ***(RHD-WAT)***...(Incl. Cancelling Pin)	.....	1	317 1997	
(T-442C) ***(RHD-220-WST-WHR)(RHD-220-WOD-WHR)(RHD-330-WST) (RHD-330-WOD)(RHD-440-WST)(RHD-440-WOD)(RHD-440H-WST) (RHD-440H-WOD)***...(Incl. Cancelling Pin)	.....	1	317 4353	
(T-442D) (LHD-440)(LHD-440H)***(RHD-WAT)***...(Incl. Cancelling Pin).....	.....	1	317 2374	
(T-442D) ***(RHD-440-WST)(RHD-440-WOD)(RHD-440H-WST) (RHD-440H-WOD)***...(Incl. Cancelling Pin)	.....	1	317 4369	
(T-442E) (LHD-440)(LHD-440H)***(RHD-WAT)***...(Incl. Cancelling Pin).....	.....	1	317 2374	
(T-442E) ***(RHD-440-WST)(RHD-440-WOD)(RHD-440H-WST) (RHD-440H-WOD)***...(Incl. Cancelling Pin)	.....	1	317 4369	
(T-442G) (LHD-220-LES-WHR)(LHD-220-WES)(LHD-330)(LHD-440) ***(RHD-WAT)***...(Incl. Cancelling Pin)	.....	1	317 1997	
(T-442G) ***(RHD-220-WST-WHR)(RHD-220-WOD-WHR)(RHD-330-WST) (RHD-330-WOD)(RHD-440-WST)(RHD-440-WOD)(RHD-440H-WST) (RHD-440H-WOD)***...(Incl. Cancelling Pin)	.....	1	317 4353	
(T-442H) (LHD-220-LES-WHR)(LHD-220-WES)(LHD-330)(LHD-440) ***(RHD-WAT)***...(Incl. Cancelling Pin)	.....	1	317 1997	
(T-442H) ***(RHD-220-WST-WHR)(RHD-220-WOD-WHR)(RHD-330-WST) (RHD-330-WOD)(RHD-440-WST)(RHD-440-WOD)(RHD-440H-WST) (RHD-440H-WOD)***...(Incl. Cancelling Pin)	.....	1	317 4353	
(T-442P) (LHD-220-LES-WHR)(LHD-220-WES)(LHD-330)(LHD-440) ***(RHD-WAT)***...(Incl. Cancelling Pin)	.....	1	317 1997	
(T-442P) ***(RHD-220-WST-WHR)(RHD-220-WOD-WHR)(RHD-330-WST) (RHD-330-WOD)(RHD-440-WST)(RHD-440-WOD)(RHD-440H-WST) (RHD-440H-WOD)***...(Incl. Cancelling Pin)	.....	1	317 4353	
(T-442V (LHD-220-LES-WHR)(LHD-220-WES)(LHD-330)(LHD-440) ***(RHD-WAT)***...(Incl. Cancelling Pin)	.....	1	317 1997	
(T-442V) ***(RHD-220-WST-WHR)(RHD-220-WOD-WHR)(RHD-330-WST) (RHD-330-WOD)(RHD-440-WST)(RHD-440-WOD)(RHD-440H-WST) (RHD-440H-WOD)***...(Incl. Cancelling Pin)	.....	1	317 4353	
(T-443) (LHD-330)(LHD-440)(LHD-440H)***(RHD-WAT)***...(Incl. Cancelling Pin)..	.....	1	317 2136	
(T-443) ***(RHD-330-WST)(RHD-330-WOD)(RHD-440-WST)(RHD-440-WOD) (RHD-440H-WST)(RHD-440H-WOD)***...(Incl. Cancelling Pin).....	.....	1	317 4357	
(T-444) (LHD-330)(LHD-440)(LHD-440H)***(RHD-WAT)***...(Incl. Cancelling Pin)..	.....	1	317 2138	
(T-444) ***(RHD-330-WST)(RHD-330-WOD)(RHD-440-WST)(RHD-440-WOD) (RHD-440H-WST)(RHD-440H-WOD)***...(Incl. Cancelling Pin).....	.....	1	317 4359	

Copyright 1963 American Motors Corp.

GROUP NO. — DESCRIPTION — YEAR and MODEL	PRIMARY GROUP NO.	PER CAR	PART NO.	CODE
(T-445) (LHD)...(Incl. Cancelling Pin)		1	317 2142	
(T-445) ***(RHD)***...(Incl. Cancelling Pin)		1	317 4363	
(T-446) (LHD)...(Incl. Cancelling Pin)		1	317 2144	
(T-446) ***(RHD)***...(Incl. Cancelling Pin)		1	317 4365	
(T-447) (LHD-440)(LHD-440H)***(RHD-WAT)***...(Incl. Cancelling Pin)		1	317 2146	
(T-447) ***(RHD-440-WST)(RHD-440-WOD)(RHD-440H-WST)(RHD-440H-WOD)*** ...(Incl. Cancelling Pin)		1	317 4369	
(T-448) (LHD-330)(LHD-440)(LHD-440H)***(RHD-WAT)***...(Incl. Cancelling Pin)		1	317 2140	
(T-448) ***(RHD-330-WST)(RHD-330-WOD)(RHD-440-WST)(RHD-440-WOD) (RHD-440H-WST)(RHD-440H-WOD)***...(Incl. Cancelling Pin)		1	317 4363	
(T-452)(LHD-550-LES-LAW)***(RHD-550-WAT)***		1	316 6628	
(T-452) (LHD-550-LES-WHR-LAW)(550-WES-LAW)(660-LAW) ***(RHD-660-WAT)***...(Incl. Cancelling Pin)		1	317 2093	
(T-452) (LHD-550-WAW)...(Incl. Cancelling Pin)...***(Replaces 317 2950)***		1	320 5173	
(T-452) ***(RHD-550-WST-LHR)(RHD-550-WOD-LHR)***...(Incl. Cancelling Pin)		1	317 4352	
(T-452) ***(RHD-550-WST-WHR)(RHD-550-WOD-WHR)***...(Incl. Cancelling Pin)		1	317 4350	
(T-453) (LHD-550-LES-LAW)***(RHD-550-WOD)***...(Incl. Cancelling Pin)		1	317 2155	
(T-453) (LHD-550-WHR-LES-LAW)(LHD-550-WES-LAW)(LHD-660-LAW) ***(RHD-660-WAT)***...(Incl. Cancelling Pin)		1	317 2150	
(T-453) (LHD-550-WAW)...(Incl. Cancelling Pin)...***(Replaces 317 2971)***		1	317 5174	
(T-453) ***(RHD-550-WST-LHR)(RHD-550-WOD-LHR)***...(Incl. Cancelling Pin)		1	317 4385	
(T-453) ***(RHD-550-WST-WHR)(RHD-550-WOD-WHR)***...(Incl. Cancelling Pin)		1	317 4380	
(T-454) (LHD-550-LES-LAW)***(RHD-550-WAT)***...(Incl. Cancelling Pin)		1	317 2156	
(T-454) (LHD-550-WHR-LES-LAW)(LHD-550-WES-LAW)(LHD-660-LAW) ***(RHD-660-WAT)***...(Incl. Cancelling Pin)		1	317 2151	
(T-454) (LHD-550-WAW)...(Incl. Cancelling Pin)...***(Replaces 317 2972)***		1	320 5175	
(T-454) ***(RHD-550-WST-LHR)(RHD-550-WOD-LHR)***...(Incl. Cancelling Pin)		1	317 4386	
(T-454) ***(RHD-550-WST-WHR)(RHD-550-WOD-WHR)***...(Incl. Cancelling Pin)		1	317 4381	
(T-462) (LHD-LAW)...(Incl. Cancelling Pin And Spoke Trim Plate)		1	317 2093	
(T-462) (WAW)...(Incl. Cancelling Pin And Spoke Trim Plate) ...***(Replaces 317 2950)***		1	320 5173	
(T-462) ***(RHD)***...(Incl. Cancelling Pin And Spoke Trim Plate)		1	317 4350	
(T-463) (LHD-LAW)...(Incl. Cancelling Pin And Spoke Trim Plate)		1	317 2150	
(T-463) (WAW)...(Incl. Cancelling Pin And Spoke Trim Plate) ...***(Replaces 317 2971)***		1	320 5174	
(T-463) ***(RHD)***...(Incl. Cancelling Pin And Spoke Trim Plate)		1	317 4380	
(T-464) (LHD-LAW)...(Incl. Cancelling Pin And Spoke Trim Plate)		1	317 2151	
(T-464) (WAW)...(Incl. Cancelling Pin And Spoke Trim Plate) ...***(Replaces 317 2972)***		1	320 5175	
(T-464) ***(RHD)***...(Incl. Cancelling Pin And Spoke Trim Plate)		1	317 4381	
(T-465) (LHD-LAW)...(Incl. Cancelling Pin And Spoke Trim Plate)		1	317 2153	
(T-465) (WAW)...(Incl. Cancelling Pin And Spoke Trim Plate) ...***(Replaces 317 2974)***		1	320 5177	
(T-465) ***(RHD)***...(Incl. Cancelling Pin And Spoke Trim Plate)		1	317 4383	
(T-466) (LHD-LAW)...(Incl. Cancelling Pin and Spoke Trim Plate)...***(Replaces 320 4548)***		1	317 2154	
(T-466) (WAW)...(Incl. Cancelling Pin And Spoke Trim Plate) ...***(Replaces 317 2975)***		1	320 5178	
(T-466) ***(RHD)***...(Incl. Cancelling Pin And Spoke Trim Plate)		1	317 4384	
(T-468) (LHD-LAW)...(Incl. Cancelling Pin And Spoke Trim Plate)		1	317 2152	
(T-468) (WAW)...(Incl. Cancelling Pin And Spoke Trim Plate) ...***(Replaces 317 2973)***		1	320 5176	
(T-468) ***(RHD)***...(Incl. Cancelling Pin And Spoke Trim Plate)		1	317 4382	
(T-471) (LHD-770-LAW)***(RHD-770-WAT)***(LHD-990-LAW)...(Incl. Cancelling Pin And Spoke Trim Plate) ...***(Use 320 5173)***		1	317 2094	
(T-471) (770-WAW)(990-WAW)...(Incl. Cancelling Pin And Spoke Trim Plate) ...***(Replaces 317 2950)***		1	320 5173	
(T-471) ***(RHD-770-WST)(RHD-770-WOD)***...(Incl. Cancelling Pin And Spoke Trim Plate)		1	317 4351	

Copyright 1963 American Motors Corp.

GROUP NO. — DESCRIPTION — YEAR and MODEL	PRIMARY GROUP NO.	PER CAR	PART NO.	CODE
(T-472) (LHD-770-LAW)***(RHD-770-WAT)***(LHD-990-LAW)...(Incl. Cancelling Pin And Spoke Trim Plate) ... ***(Use 320 5173)***	.....	1	317 2094	#
(T-472) (770-WAW)(990-WAW)...(Incl. Cancelling Pin And Spoke Trim Plate) ... ***(Replaces 317 2950)***	.....	1	320 5173	
(T-472) ***(RHD-770-WST)(RHD-770-WOD)***...(Incl. Cancelling Pin And Spoke Trim Plate) ...	.....	1	317 4351	
(T-473) (LHD-770-LAW)***(RHD-770-WAT)***(LHD-990-LAW)...(Incl. Cancelling Pin And Spoke Trim Plate) ...	.....	1	317 2128	
(T-473) (770-WAW)(990-WAW)...(Incl. Cancelling Pin And Spoke Trim Plate) ... ***(Replaces 317 2971)***	.....	1	320 5174	
(T-473) ***(RHD-770-WST)(RHD-770-WOD)***...(Incl. Cancelling Pin And Spoke Trim Plate) ...	.....	1	317 4374	
(T-474) (LHD-770-LAW)***(RHD-770-WAT)***(LHD-990-LAW)...(Incl. Cancelling Pin And Spoke Trim Plate) ...	.....	1	317 2129	
(T-474) (770-WAW)(990-WAW)...(Incl. Cancelling Pin And Spoke Trim Plate) ... ***(Replaces 317 2972)***	.....	1	320 5175	
(T-474) ***(RHD-770-WST)(RHD-770-WOD)***...(Incl. Cancelling Pin And Spoke Trim Plate) ...	.....	1	317 4375	
(T-475) (LHD-770-LAW)***(RHD-770-WAT)***(LHD-990-LAW)...(Incl. Cancelling Pin And Spoke Trim Plate) ...	.....	1	317 2131	
(T-475) (770-WAW)(990-WAW)...(Incl. Cancelling Pin And Spoke Trim Plate) ... ***(Replaces 317 2974)***	.....	1	320 5177	
(T-475) ***(RHD-770-WST)(RHD-770-WOD)***...(Incl. Cancelling Pin And Spoke Trim Plate) ...	.....	1	317 4377	
(T-476) (LHD-770-LAW)***(RHD-770-WAT)***(LHD-990-LAW)...(Incl. Cancelling Pin And Spoke Trim Plate) ...	.....	1	317 2132	
(T-476) (770-WAW)(990-WAW)...(Incl. Cancelling Pin And Spoke Trim Plate) ... ***(Replaces 317 2975)***	.....	1	320 5178	
(T-476) ***(RHD-770-WST)(RHD-770-WOD)***...(Incl. Cancelling Pin And Spoke Trim Plate) ...	.....	1	317 4378	
(T-477) (LHD-770-LAW)***(RHD-770-WAT)***(LHD-990-LAW)...(Incl. Cancelling Pin And Spoke Trim Plate) ...	.....	1	317 2133	
(T-477) (770-WAW)(990-WAW)...(Incl. Cancelling Pin And Spoke Trim Plate) ... ***(Replaces 317 2976)***	.....	1	320 5179	
(T-477) ***(RHD-770-WST)(RHD-770-WOD)***...(Incl. Cancelling Pin And Spoke Trim Plate) ...	.....	1	317 4379	
(T-478) (LHD-770-LAW)***(RHD-770-WAT)***(LHD-990-LAW)...(Incl. Cancelling Pin And Spoke Trim Plate) ...	.....	1	317 2130	
(T-478) (770-WAW)(990-WAW)...(Incl. Cancelling Pin And Spoke Trim Plate) ... ***(Replaces 317 2973)***	.....	1	320 5176	
(T-478) ***(RHD-770-WST)(RHD-770-WOD)***...(Incl. Cancelling Pin And Spoke Trim Plate) ...	.....	1	317 4376	
(T-491) (LHD-770-LAW)***(RHD-770-WAT)***(LHD-990-LAW)...(Incl. Cancelling Pin And Spoke Trim Plate) ... ***(Use 320 5173)***	.....	1	317 2094	#
(T-491) (770-WAW)(990-WAW)...(Incl. Cancelling Pin And Spoke Trim Plate) ... ***(Replaces 317 2950)***	.....	1	320 5173	
(T-491) ***(RHD-770-WST)(RHD-770-WOD)***...(Incl. Cancelling Pin And Spoke Trim Plate) ...	.....	1	317 4351	
(T-492) (LHD-770-LAW)***(RHD-770-WAT)***(LHD-990-LAW)...(Incl. Cancelling Pin And Spoke Trim Plate) ...	.....	1	317 2090	
(T-492) (770-WAW)(990-WAW)...(Incl. Cancelling Pin And Spoke Trim Plate) ... ***(Replaces 317 2950)***	.....	1	320 5173	
(T-492) ***(RHD-770-WST)(RHD-770-WOD)***...(Incl. Cancelling Pin And Spoke Trim Plate) ...	.....	1	317 4351	
(T-493) (LHD-770-LAW)***(RHD-770-WAT)***(LHD-990-LAW)...(Incl. Cancelling Pin And Spoke Trim Plate) ...	.....	1	317 2128	
(T-493) (770-WAW)(990-WAW)...(Incl. Cancelling Pin And Spoke Trim Plate) ... ***(Replaces 317 2971)***	.....	1	320 5174	

Copyright 1963 American Motors Corp.

GROUP NO. — DESCRIPTION — YEAR and MODEL	PRIMARY GROUP NO.	PER CAR	PART NO.	CODE
(T-493) ***(RHD-770-WST)(RHD-770-WOD)***	.....	1	317 4374	
(T-494) (LHD-770-LAW)***(RHD-770-WAT)***(LHD-990-LAW)...(Incl. Cancelling Pin And Spoke Trim Plate)	.....	1	317 2129	
(T-494) (770-WAW)(990-WAW)...(Incl. Cancelling Pin And Spoke Trim Plate) ***(Replaces 317 2972)***	.....	1	320 5175	
(T-494) ***(RHD-770-WST)(RHD-770-WOD)***...(Incl. Cancelling Pin And Spoke Trim Plate)	.....	1	317 4375	
(T-495) (LHD-770-LAW)***(RHD-770-WAT)***(LHD-990-LAW)...(Incl. Cancelling Pin And Spoke Trim Plate)	.....	1	317 2131	
(T-495) (770-WAW)(770-WAW)...(Incl. Cancelling Pin And Spoke Trim Plate) ***(Replaces 317 2974)***	.....	1	320 5177	
(T-495) ***(RHD-770-WST)(RHD-770-WOD)***...(Incl. Cancelling Pin And Spoke Trim Plate)	.....	1	317 4377	
(T-496) (LHD-770-LAW)***(RHD-770-WAT)***(LHD-990-LAW)...(Incl. Cancelling Pin And Spoke Trim Plate)	.....	1	317 2132	
(T-496) (770-WAW)(990-WAW)...(Incl. Cancelling Pin And Spoke Trim Plate) ***(Replaces 317 2975)***	.....	1	320 5178	
(T-496) ***(RHD-770-WST)(RHD-770-WOD)***...(Incl. Cancelling Pin And Spoke Trim Plate)	.....	1	317 4378	
(T-497) (LHD-770-LAW)***(RHD-770-WAT)***(LHD-990-LAW)...(Incl. Cancelling Pin And Spoke Trim Plate)	.....	1	317 2133	
(T-497) (770-WAW)(990-WAW)...(Incl. Cancelling Pin And Spoke Trim Plate) ***(Replaces 317 2976)***	.....	1	320 5179	
(T-497) ***(RHD-770-WST)(RHD-770-WOD)***...(Incl. Cancelling Pin And Spoke Trim Plate)	.....	1	317 4379	
(T-498) (LHD-770-LAW)***(RHD-770-WAT)***(LHD-990-LAW)...(Incl. Cancelling Pin And Spoke Trim Plate)	.....	1	317 2130	
(T-498) (770-WAW)(990-WAW)...(Incl. Cancelling Pin And Spoke Trim Plate) ***(Replaces 317 2973)***	.....	1	320 5176	
(T-498) ***(RHD-770-WST)(RHD-770-WOD)***...(Incl. Cancelling Pin And Spoke Trim Plate)	.....	1	317 4376	
(T-522) (LHD-220-LHR)***(RHD-220-WAT)***...(Incl. Cancelling Pin)	.....	1	316 9942	
(T-522) ***(RHD-220-WST-LHR)(RHD-220-WOD-LHR)***...(Incl. Cancelling Pin)	.....	1	317 4354	
(T-522) (LHD-220-WHR)***(RHD-WAT)***(LHD-330)(LHD-440)...(Incl. Cancelling Pin)	.....	1	317 1997	
(T-522) ***(RHD-220-WST-WHR)(RHD-220-WOD-WHR)(RHD-330-WST)(RHD-330-WOD)(RHD-440-WST)(RHD-440-WOD)***...(Incl. Cancelling Pin)	.....	1	317 4353	
(T-532) (LHD-220)***(RHD-WAT)***(LHD-330)(LHD-440)...(Incl. Cancelling Pin)	.....	1	317 1997	
(T-532) ***(RHD-220-WST)(RHD-220-WOD)(RHD-330-WST)(RHD-330-WOD)(RHD-440-WST)(RHD-440-WOD)***...(Incl. Cancelling Pin)	.....	1	317 4353	
(T-533) (LHD-330)(LHD-440)(LHD-440H)***(RHD-WAT)***...(Incl. Cancelling Pin)	.....	1	317 6159	
(T-533) ***(RHD-330-WST)(RHD-330-WOD)(RHD-440-WST)(RHD-440-WOD)(RHD-440H-WST)(RHD-440H-WOD)***...(Incl. Cancelling Pin)	.....	1	317 6154	
(T-534) (LHD-330)(LHD-440)(LHD-440H)***(RHD-WAT)***...(Incl. Cancelling Pin)	.....	1	317 6158	
(T-534) ***(RHD-330-WST)(RHD-330-WOD)(RHD-440-WST)(RHD-440-WOD)(RHD-440H-WST)(RHD-440H-WOD)***...(Incl. Cancelling Pin)	.....	1	317 6153	
(T-535) (LHD-330)(LHD-440)(LHD-440H)***(RHD-WAT)***...(Incl. Cancelling Pin)	.....	1	317 6156	
(T-535) ***(RHD-330-WST)(RHD-330-WOD)(RHD-440-WST)(RHD-440-WOD)(RHD-440H-WST)(RHD-440H-WOD)***...(Incl. Cancelling Pin)	.....	1	317 6151	
(T-536) (LHD-330)(LHD-440)(LHD-440H)***(RHD-WAT)***...(Incl. Cancelling Pin)	.....	1	317 6155	
(T-536) ***(RHD-330-WST)(RHD-330-WOD)(RHD-440-WST)(RHD-440-WOD)(RHD-440H-WST)(RHD-440H-WOD)***...(Incl. Cancelling Pin)	.....	1	317 6150	
(T-537) (LHD-330)(LHD-440)(LHD-440H)***(RHD-WAT)***...(Incl. Cancelling Pin)	.....	1	317 6157	
(T-537) ***(RHD-330-WST)(RHD-330-WOD)(RHD-440-WST)(RHD-440-WOD)(RHD-440H-WST)(RHD-440H-WOD)***...(Incl. Cancelling Pin)	.....	1	317 6152	
(T-541) (LHD-220-WHR)(LHD-330)(LHD-440)***(RHD-WAT)***...(Incl. Cancelling Pin)	.....	1	317 1997	

Copyright 1963 American Motors Corp.

GROUP NO. — DESCRIPTION — YEAR and MODEL	PRIMARY GROUP NO.	PER CAR	PART NO.	CODE
(T-541) ***(RHD-220-WST-WHR)(RHD-220-WOD-WHR)(RHD-330-WST) (RHD-330-WOD)(RHD-440-WST)(RHD-440-WOD)***...(Incl. Cancelling Pin).....	.....	1	317 4353	
(T-543) (LHD-330)(LHD-440)(LHD-440H)***(RHD-WAT)***...(Incl. Cancelling Pin)..	.....	1	317 6159	
(T-543) ***(RHD-330-WST)(RHD-330-WOD)(RHD-440-WST)(RHD-440-WOD) (RHD-440H-WST)(RHD-440H-WOD)***...(Incl. Cancelling Pin).....	.....	1	317 6154	
(T-544) (LHD-330)(LHD-440)(LHD-440H)***(RHD-WAT)***...(Incl. Cancelling Pin)..	.....	1	317 6158	
(T-544) ***(RHD-330-WST)(RHD-330-WOD)(RHD-440-WST)(RHD-440-WOD) (RHD-440H-WST)(RHD-440H-WOD)***...(Incl. Cancelling Pin).....	.....	1	317 6153	
(T-545) (LHD-330)(LHD-440)(LHD-440H)***(RHD-WAT)***...(Incl. Cancelling Pin)..	.....	1	317 6156	
(T-545) ***(RHD-330-WST)(RHD-330-WOD)(RHD-440-WST)(RHD-440-WOD) (RHD-440H-WST)(RHD-440H-WOD)***...(Incl. Cancelling Pin).....	.....	1	317 6151	
(T-546) (LHD-330)(LHD-440)(LHD-440H)***(RHD-WAT)***...(Incl. Cancelling Pin)..	.....	1	317 6155	
(T-546) ***(RHD-330-WST)(RHD-330-WOD)(RHD-440-WST)(RHD-440-WOD) (RHD-440H-WST)(RHD-440H-WOD)***...(Incl. Cancelling Pin).....	.....	1	317 6150	
(T-547) (LHD-330)(LHD-440)(LHD-440H)***(RHD-WAT)***...(Incl. Cancelling Pin)..	.....	1	317 6157	
(T-547) ***(RHD-330-WST)(RHD-330-WOD)(RHD-440-WST)(RHD-440-WOD) (RHD-440H-WST)(RHD-440H-WOD)***...(Incl. Cancelling Pin).....	.....	1	317 6152	
(T-548)(LHD-330)(LHD-440)***(RHD-WAT)***	.....	1	317 1997	#
(T-548) ***(RHD-220-WST-WHR)(RHD-220-WOD-WHR)(RHD-330-WST)(RHD-330-WOD) (RHD-440-WST)(RHD-440-WOD)***.....	.....	1	317 4353	
(T-552) (LHD-LHR)***(RHD-WAT-LHR)***...(Incl. Cancelling Pin).....	.....	1	317 5388	
(T-552) (LHD-WHR)***(RHD-WAT-WHR)***...(Incl. Cancelling Pin).....	.....	1	320 5578	
(T-552) ***(RHD-WST-LHR)(RHD-WOD-LHR)***...(Incl. Cancelling Pin).....	.....	1	317 5723	
(T-552) ***(RHD-WST-WHR)(RHD-WOD-WHR)***...(Incl. Cancelling Pin).....	.....	1	317 5722	
(T-553) (LHD-LHR)***(RHD-WAT-LHR)***...(Incl. Cancelling Pin).....	.....	1	317 6162	
(T-553) (LHD-WHR)***(RHD-WAT-WHR)***...(Incl. Cancelling Pin).....	.....	1	320 5462	
(T-553) ***(RHD-WST-LHR)(RHD-WOD-LHR)***...(Incl. Cancelling Pin).....	.....	1	317 6161	
(T-553) ***(RHD-WST-WHR)(RHD-WOD-WHR)***...(Incl. Cancelling Pin).....	.....	1	317 6173	
(T-557) (LHD-LHR)***(RHD-WAT-LHR)***...(Incl. Cancelling Pin).....	.....	1	317 6163	
(T-557) (LHD-WHR)***(RHD-WAT-WHR)***...(Incl. Cancelling Pin).....	.....	1	320 5460	
(T-557) ***(RHD-WST-LHR)(RHD-WOD-LHR)***...(Incl. Cancelling Pin).....	.....	1	317 6160	
(T-557) ***(RHD-WST-WHR)(RHD-WOD-WHR)***...(Incl. Cancelling Pin).....	.....	1	317 6171	
(T-562) (LHD)***(RHD-WAT)***...(Incl. Cancelling Pin).....	.....	1	320 5578	
(T-562) ***(RHD-WST)(RHD-WOD)***...(Incl. Cancelling Pin)	.....	1	317 5722	
(T-563) (LHD)***(RHD-WAT)***...(Incl. Cancelling Pin).....	.....	1	320 5462	
(T-563) ***(RHD-WST)(RHD-WOD)***...(Incl. Cancelling Pin)	.....	1	317 6173	
(T-564) (LHD)***(RHD-WAT)***...(Incl. Cancelling Pin).....	.....	1	320 5461	
(T-564) ***(RHD-WST)(RHD-WOD)***...(Incl. Cancelling Pin)	.....	1	317 6172	
(T-565) (LHD)***(RHD-WAT)***...(Incl. Cancelling Pin).....	.....	1	320 5459	
(T-565) ***(RHD-WST)(RHD-WOD)***...(Incl. Cancelling Pin)	.....	1	317 6170	
(T-566) (LHD)***(RHD-WAT)***...(Incl. Cancelling Pin).....	.....	1	320 5458	
(T-566) ***(RHD-WST)(RHD-WOD)***...(Incl. Cancelling Pin)	.....	1	317 6169	
(T-567) (LHD)***(RHD-WAT)***...(Incl. Cancelling Pin).....	.....	1	320 5460	
(T-567) ***(RHD-WST)(RHD-WOD)***...(Incl. Cancelling Pin)	.....	1	317 6171	
(T-571) (LHD)...(Incl. Cancelling Pin).....	.....	1	320 5852	
(T-571) ***(RHD)***...(Incl. Cancelling Pin).....	.....	1	317 5722	
(T-573) (LHD)...(Incl. Cancelling Pin).....	.....	1	320 5467	
(T-573) ***(RHD)***...(Incl. Cancelling Pin).....	.....	1	317 6188	
(T-574) (LHD)...(Incl. Cancelling Pin).....	.....	1	320 5466	
(T-574) ***(RHD)***...(Incl. Cancelling Pin).....	.....	1	317 6187	
(T-575) (LHD)...(Incl. Cancelling Pin).....	.....	1	320 5464	
(T-575) ***(RHD)***...(Incl. Cancelling Pin).....	.....	1	317 6185	
(T-576) (LHD)...(Incl. Cancelling Pin).....	.....	1	320 5463	
(T-576) ***(RHD)***...(Incl. Cancelling Pin).....	.....	1	317 6184	
(T-577) (LHD)...(Incl. Cancelling Pin).....	.....	1	320 5465	
(T-577) ***(RHD)***...(Incl. Cancelling Pin).....	.....	1	317 6186	
(T-578) (LHD)...(Incl. Cancelling Pin).....	.....	1	320 5852	

Copyright 1963 American Motors Corp.

GROUP NO. — DESCRIPTION — YEAR and MODEL	PRIMARY GROUP NO.	PER CAR	PART NO.	CODE
(T-578) ***(RHD)***...(Incl. Cancelling Pin)	.....	1	317 5722	
(T-582)...(Incl. Cancelling Pin And Spoke Trim Plate)	.....	1	320 5579	
(T-583)...(Incl. Cancelling Pin And Spoke Trim Plate)	.....	1	320 5472	
(T-584)...(Incl. Cancelling Pin And Spoke Trim Plate)	.....	1	320 5471	
(T-585)...(Incl. Cancelling Pin And Spoke Trim Plate)	.....	1	320 5469	
(T-586)...(Incl. Cancelling Pin And Spoke Trim Plate)	.....	1	320 5468	
(T-587)...(Incl. Cancelling Pin And Spoke Trim Plate)	.....	1	320 5470	
(T-591)...(Incl. Cancelling Pin And Spoke Trim Plate)	.....	1	320 5457	
(T-593)...(Incl. Cancelling Pin And Spoke Trim Plate)	.....	1	320 5456	
(T-594)...(Incl. Cancelling Pin And Spoke Trim Plate)	.....	1	320 5455	
(T-595)...(Incl. Cancelling Pin And Spoke Trim Plate)	.....	1	320 5453	
(T-596)...(Incl. Cancelling Pin And Spoke Trim Plate)	.....	1	320 5452	
(T-597)...(Incl. Cancelling Pin And Spoke Trim Plate)	.....	1	320 5454	
(T-598)(Incl. Canceling Pin And Spoke Trim Plate)	.....	1	320 5457	
(White) ***163 01 (Can-220-LES-WHR)(220-WES)(330)***	.....	1	316 9290	
(White) ***163 01 (Can-220-LES-LHR)***	.....	1	316 9285	
(Ivory) ***164-165 01 (CAN)***	.....	1	317 3355	
(Ivory) ***163 10-80 (CAN Type 1)*** ***(Ref. Pr. List)***	.....	1	316 9286	
(Ivory) ***163 10-80 (CAN Type 2): 164 10-80 (CAN)***	.....	1	317 1486	
(Ivory) ***165 15-16-18 (550-CAN)(660 CAN): 165 85-88 (880-CAN)***	.....	1	317 7533	
(Aqua) ***165 15-18-19 (770-CAN): 165 80 (CAN)***	.....	1	317 7534	
(Aqua) ***165 07 (440-CAN): 165 09 (440H-CAN)***	.....	1	317 7532	
(Blue) ***164 10-80 (CAN)***	.....	1	317 3309	
(Blue) ***164 07 (CAN)***	.....	1	317 5440	
(Blue) ***165 07-09 (CAN)***	.....	1	317 8378	
(Black) ***164 07 (CAN)***	.....	1	317 5438	
(Black) ***164 10-80 (CAN)***	.....	1	317 3308	
(Red) ***164 07 (CAN)***	.....	1	317 5444	
(Red) ***164 10-80 (CAN)***	.....	1	317 3312	
(Maroon) ***164 10-80 (CAN)***	.....	1	317 3354	
(Maroon) ***165 07 (440-CAN): 165 09 (440H-CAN)***	.....	1	317 7530	
(Maroon) ***165 15-18-19 (770-CAN): 165 80 (CAN)***	.....	1	317 7536	
(Gold) ***164 07***	.....	1	317 5446	
(Gold) ***164 10-80 (CAN)***	.....	1	317 3313	
(Green) ***164 10-80 (CAN)***	.....	1	317 3310	
(Cordovan) ***165 07 (440-CAN): 165 09 (440H-CAN)***	.....	1	317 7531	
(Cordovan) ***165 15-18-19 (770-CAN): 165 80 (CAN)***	.....	1	317 7535	
(Turquoise) ***164 07 (CAN)***	.....	1	317 5442	
(Turquoise) ***164 10-80 (CAN)***	.....	1	317 3311	
(Black And White) ***165 85-86-89 (990-CAN)***	.....	1	317 9813	
ATTACHING PARTS				
Steering Wheel To Steering Gear Tube				
NUT, Hexagon..... 60 Thru 63 01 : 60 Thru 62 10-20-80	.....	1	314 9559	
NUT, Hexagon..... 64 01 : 63-64 10-80 ***(Replaces 317 6091)***	.....	1	316 7245	
NUT, Hexagon..... 65 01-10-80	.....	1	317 6091	
WASHER, Plain..... 64-65 01 : 63 Thru 65 10-80	17.814		G103343	NA
ADAPTER, Steering Wheel				
60 01 (LHE)	.....	1	315 8341	
PLATE, Steering Wheel Spoke Trim				
64 10 (OHV-196-550-WES)(660)(770): 64 80	.....	1	317 2095	
65 80	.....	2	317 5403	
RING, Steering Wheel Trim				
60 01 (LHE-Used Less Horn Ring) ***(Replaces 315 7964)***	.....	1	314 8585	

Copyright 1963 American Motors Corp.

GROUP NO. — DESCRIPTION — YEAR and MODEL	PRIMARY GROUP NO.	PER CAR	PART NO.	CODE
ATTACHING PARTS				
Trim Ring To Steering Wheel				
SCREW, Machine..... 60 01 (LHE)	17.596	2	G436698	NA
SCREW, Tapping..... 60 01 (LHE)	17.666	3	G162872	NA
10.283 SPACER, Steering Wheel To Upper Bearing				
64 01 (WPS)***(RHD)***	.....	1	317 1881	
64 10-80 (WPS-45/64" Long) ***(Ref. Pr. List)***	10.344	1	317 1183	
64 10-80 (WPS-39/64" Long)	.....	1	317 5384	
SEAT, Steering Wheel To Upper Bearing Spacer				
64 10-80 (WPS)	10.344	1	316 8104	
10.284 CAP, Steering Wheel				
60 01	.....	1	315 3860	
61 Thru 63 01 (LES-Used With Chrome Horn Ring): 60 Thru 62 10 (Used With Chrome Horn Ring): 60-61 20 (Used With Chrome Horn Ring)	.....	1	315 7645	
61 01-10-20-80 (Used With Painted Horn Ring)	.....	1	316 0245	
62-63 01 (WES)	.....	1	316 5518	
60 10-20-80 (Used With Painted Horn Ring)	.....	1	315 7809	
60 Thru 62 80 (Used With Chrome Horn Ring)	.....	1	315 7623	
RING, Steering Wheel Cap Retaining				
60 Thru 63 01: 60 Thru 62 10-20-80	.....	1	313 1585	
10.290 GEAR ASSEMBLY, Steering (For Mechanical Steering Gear Components Refer Groups 10.292 Thru 10.326 For Power Steering Gear Components Refer Groups 10.500 Thru 10.645				
60 01	.....	1	315 4376	
61 01 (LHD)	.....	1	316 0494	
61 Thru 63 01 (RHD)	.....	1	315 9551	
62-63 01 (LHD)	.....	1	316 2941	
64-65 01 (WPS): 64-65 10 (Six-WPS): 65 80 (Six-WPS)	.....	1	317 2977	
64-65 01 (RHD) ***(Replaces 317 0905)***	.....	1	317 4443	
64 01 (LHD-LPS): 65 01 (LHD-LCV-LPS) ***(Replaces 317 0275)***	.....	1	317 4418	
65 07 (LHD-LPS)	.....	1	317 8728	
60-61 10 (LHD): 60-61 20 (WPS)	.....	1	315 7643	
60-61 10 (RHD)	.....	1	315 7981	
62 10-80 (LHD-LPS)	.....	1	316 3033	
62 10-80 (LHD-WPS)	.....	1	316 3034	
62 10-80 (RHD)	.....	1	316 3077	
63 10-80 (LHD-LPS)	.....	1	316 6352	
63 10-80 (LHD-WPS)***(LHD-Export LPS-Special Equipment-20 To 1 Ratio)***	.....	1	316 6353	
63 10-80 (RHD)	.....	1	316 6381	
64 10 (RHD): 65 10 (RHD-LCV-OHV-232)(RHD-V8-287)	.....	1	317 1694	
65 17 (RHD-OHV-232)	.....	1	317 8730	
64-65 10-80 (V8-WPS)	.....	1	317 0373	
64 10-80 ***(LHD-Export-LPS-Special Equipment-20 To 1 Ratio)***	.....	1	317 1666	
64 10-80 (LHD-LPS): 65 10 (LHD-LCV-LPS-LAW) ***(Replaces 317 1761)***	.....	1	317 6642	
65 10 (LHD-Export-LCV-LPS-Special Equipment-20 To 1 Ratio)	.....	1	317 6643	
65 17 (LHD-Export-LPS-Special Equipment-20 To 1 Ratio)...(Incl. Flange)	.....	1	317 8729	
65 17 (LHD-LPS-LAW): 65 10 (LPS-WAW): ***165 10 (Can)***	.....	1	317 8727	#
65 80 (LPS)	.....	1	317 4619	

Copyright 1963 American Motors Corp.

GROUP NO. — DESCRIPTION — YEAR and MODEL	PRIMARY GROUP NO.	PER CAR	PART NO.	CODE
ATTACHING PARTS				
Gear To Sill				
STUD — 61 Thru 63 01 (LHD)	1.010	1	314 4481	
BOLT, Hexagon — 60 01 (1" Long)	17.038	1	G181666	NA
BOLT, Hexagon — 60 01 (4-1/2" Long): 61 01 (LHD-4-1/2" Long): 62-63 01 (4-1/2" Long)	17.038	1	G187612	NA
BOLT, Hexagon — 60 01 (2-1/4" Long): 61 01 (LHD-2-1/4" Long)	17.038	1	G181675	NA
BOLT, Hexagon — ***61 01 (RHD-2 Req.): 62-63 01 (RHD-1 Req.-1-1/8" Long)***	17.038	AR	G181667	NA
BOLT, Hexagon — ***61 Thru 63 01 (RHD-2-3/4" Long)***	17.038	1	G181677	NA
BOLT, Hexagon — 62-63 01 (LHD)	17.038	1	G181676	NA
BOLT, Hexagon — 64-65 01 (LPS)	.....	3	317 1667	
BOLT, Hexagon — 62 10-80 (LHD-3 Req.): 63 10-80 (LHD-2 Req.-4" Long): ***63 10-80 (RHD-3 Req.)***	17.038	AR	G189331	NA
BOLT, Hexagon — 63 10-80 (LHD-4-1/4" Long): ***60-61 80 (RHD-1 Req.-4-1/4" Long)***	17.038	1	G189333	NA
BOLT, Hexagon — ***60-61 80 (RHD-3-1/2" Long)***	17.038	1	G187044	NA
WASHER, Plain — 60 01 (2 Req.): 61 01 (LHD-2 Req.): ***61 01 (RHD-1 Req.):*** 62-63 01 ***(Replaces 800 0187)***	17.814	AR	400 1124	
WASHER, Plain — 64-65 01 (LPS) ***(Replaces 800 0482)***	17.814	3	400 1188	
WASHER, Plain — 62 10-80 (LHD-3 Req.): 63 80 (3 Req.): ***60-61 80 (RHD-2 Req.)*** ***(Replaces 800 0165)***	17.814	AR	400 1104	
WASHER, Lock — 60-61 01 (3 Req.): 62-63 01 (LHD-3 Req.): ***62-63 01 (RHD-4 Req.):*** 64-65 01 (LPS-3 Req.)	17.820	AR	G131100	NA
WASHER, Lock — 62 10-80 (LHD-3 Req.): 63 10-80 (3 Req.): ***60-61 80 (RHD-2 Req.)***	17.820	AR	G120382	NA
WASHER, Lock — 63 10 ***(Replaces 800 0488)***	17.814	3	400 1194	
NUT, Hexagon — 60-61 01 (2 Req.): 62-63 01 (LHD-3 Req.): ***62-63 01 (RHD-2 Req.)***	17.406	AR	G120370	NA
NUT, Hexagon — 62 10-80 (LHD-3 Req.): 63 10-80 (3 Req.): ***60-61 80 (RHD-2 Req.)***	17.406	AR	G120369	NA
Gear To Spacer				
BOLT, Hexagon — 64 10 (Six-WPS)	17.038	3	G180147	NA
BOLT, Hexagon — 64-65 01 (WPS): 64 10-80 (V8-WPS): 65 10 (WPS) (LPS-WAW)	17.038	3	G179860	NA
WASHER, Lock — 64-65 01-10 (WPS): 65 10 (LPS-WAW): 64 10 (V8-WPS)	17.820	3	G131100	NA
Gear And Spacer To Sill				
BOLT, Hexagon — 60-61 80 (LHD-3" Long)	17.038	2	G180160	NA
BOLT, Hexagon — 60-61 80 (LHD-3-1/2" Long)	17.038	1	G180162	NA
BOLT, Hexagon — 64-65 10 (LHD-LPS): 64 80 (LHD-LPS)	.....	3	400 0719	
BOLT, Hexagon — ***64-65 10 (RHD): 64 80 (RHD)***	17.038	3	G454967	NA
BOLT, Hexagon — 65 80	.....	1	317 5302	
WASHER, Plain — 64 10 (LHD-LPS-3 Req.): 65 10 (LHD-LPS-15/32 × 1-1/4 × 3/16-2 Req.) 60-61 80 (LHD-3 Req.): 64 80 (LHD-LPS-3 Req.): 65 80 (3 Req.) ***(Replaces 800 0108)***	17.814	AR	400 1188	
WASHER, Plain — 64 10-80 (V8): 65 10 (LHD-LPS-15/32 × 1-1/8 × 1/8)	17.814	1	400 1122	
WASHER, Lock — 60-61 80 (LHD): 64-65 10 (LHD-LPS): 64 80 (LHD-LPS): 65 80	17.820	3	G131100	NA
NUT, Hexagon — 64-65 10 (LHD-LPS): 64 80 (LHD-LPS)	17.406	3	G120370	NA

10.292 HOUSING ASSEMBLY, Steering Gear

60 01...(Incl. Bearing Cup And Cross Shaft Bushing)	.....	1	320 0949	
61 01 (LHD)...(Incl. Bearing Cup And Cross Shaft Bushing)	.....	1	320 2619	
61 Thru 63 01 (RHD)...(Incl. Bearing Cup And Cross Shaft Bushing)	.....	1	320 2488	
62-63 01 (LHD)...(Incl. Bearing Cup And Cross Shaft Bushing)	.....	1	320 3061	
64-65 01 (LHD-LPS)...(Incl. Bushing And Filler Plug)	.....	1	320 4723	
64-65 01 (RHD)...(Incl. Bushing And Filler Plug)	.....	1	320 4789	

Copyright 1963 American Motors Corp.

GROUP NO. — DESCRIPTION — YEAR and MODEL	PRIMARY GROUP NO.	PER CAR	PART NO.	CODE
60 Thru 63 10 (LHD): 60-61 20: 62-63 80 (LHD)...(Incl. Bearing Cup And Cross Shaft Bushing)	.....	1	320 0495	
60 Thru 63 10 (RHD): 62-63 80 (RHD) ...(Incl. Bearing Cup And Cross Shaft Bushing)	.....	1	320 0509	
64 10-80 (LPS): 65 10 (LHD-LPS)...(Incl. Bearing Cap And Cross Shaft Bushing)	.....	1	320 4794	
64-65 10 (RHD)...(Incl. Bearing Cup And Cross Shaft Bushing)	.....	1	320 4795	
65 10 (LPS-WAW): 65 80 (LPS)...(Incl. Bearing Cup And Cross Shaft Bushing)	.....	1	320 5675	
60-61 80 (LHD)...(Incl. Bearing Cup And Cross Shaft Bushing)	.....	1	320 0511	
SHIELD, Steering Gear Housing Heat				
60-61 20: 60 80	.....	1	315 3055	
ATTACHING PARTS Heat Shield To Exhaust Manifold				
BOLT, Hexagon..... 60-61 20: 60 80	17.038	2	G179789	NA
WASHER, Lock..... 60-61 20: 60 80	17.820	2	G103319	NA
CAP, Steering Gear Housing Dirt Sheeder (At Cross Shaft)				
60-61 01	.....	1	312 8976	
SEAL, Steering Gear Housing Oil (Rubber)				
61 01	.....	1	320 2618	
WASHER, Steering Gear Housing (Felt)				
60 01	.....	1	311 4017	
PLUG, Steering Gear Housing Expansion				
60-61 80 (LHD)	17.500	1	G105603	NA
10.294 PLUG, Steering Gear Housing Oil Filler Pipe				
60 Thru 63 01: 64-65 01 (LPS)...(Incl. Cotter Pin)	10.292	1	311 4016	
60 Thru 65 10: 60-61 20: 62-63 80	17.486	1	G103880	NA#
60-61 80	17.486	1	G103867	NA
10.296 COVER, Steering Gear Housing Worm				
60 Thru 63 01...(Incl. Tube)***(Replaces 320 0957)***	.....	1	320 3005	
64-65 01 (LPS)	.....	1	320 4727	
ATTACHING PARTS Cover To Housing				
BOLT, Hexagon ..... 60 Thru 63 01: 64 01 (LPS)	17.038	4	G180075	NA
BOLT, Hexagon ..... 64-65 01 (LPS)	17.038	4	G180073	NA
10.298 SHIM, Steering Gear Housing Worm Cover				
60 Thru 63 01 (.010 Thick): 64-65 01 (LPS-.010 Thick)	.....	AR	24 404	
60 Thru 63 01: (.006 Thick): 64-65 01 (LPS-.006 Thick)	.....	AR	24 405	
10.300 COVER, Steering Gear Housing Cross Shaft (Side)				
60 01: 61 01 (LHD)	.....	1	320 0950	
60 Thru 63 01 (RHD)	.....	1	320 2489	
62-63 01 (LHD)	.....	1	320 3062	
64-65 01 (LPS)	.....	1	320 4725	
60 Thru 63 10-20-80: 64-65 10-80 (LPS)...(Incl. Cross Shaft Bushing)	.....	1	320 0494	

Copyright 1963 American Motors Corp.

GROUP NO. — DESCRIPTION — YEAR and MODEL	PRIMARY GROUP NO.	PER CAR	PART NO.	CODE
ATTACHING PARTS Cover To Housing				
BOLT, Hexagon..... 60-61 01: ***63 01 (RHD)***	17.038	4	G180075	NA
BOLT, Hexagon ..... 62 01: 63 01 (LHD): 64-65 01 (LPS)	17.038	4	G180077	NA
BOLT, Hexagon ..... 60 Thru 63 10-20-80 (3/4" Long): 64-65 10-80 (LPS-3 Req.)	.....	AR	320 0499	
BOLT, Hexagon..... 60-61 10-20 (7/8" Long): ***60-61 80 (RHD-7/8" Long)***	17.038	1	G180121	NA
WASHER, Bite..... 61 10-20	10.003	1	310 8995	
WASHER, Lock..... 60 Thru 63 10-20-80: 64-65 10-80 (LPS)	17.820	3	G187120	NA
10.302 GASKET, Steering Gear Housing Cross Shaft Cover				
60-61 01: ***62-63 01 (RHD)***	.....	1	320 0951	
62-63 01 (LHD)	.....	1	320 3063	
64-65 01 (LPS)	.....	1	320 4731	
60 Thru 63 10-20-80: 64-65 10-80 (LPS)	.....	1	320 0500	
10.306 SHAFT, Steering Gear Cross (Pitman Shaft)				
60 01: 61 01 (LHD)	.....	1	320 0953	
61 Thru 63 01 (RHD)	.....	1	311 5874	
62-63 01 (LHD)	.....	1	320 3462	
64-65 01 (LHD-LPS)	.....	1	320 4724	
64-65 01 (RHD)	.....	1	320 4790	
60 Thru 63 10: 60-61 20: 62-63 80: 64-65 10-80 (LPS)	.....	1	320 0503	
60-61 80	.....	1	320 0513	
WASHER, Steering Gear Cross Shaft Thrust				
60-61 01: ***62-63 01 (RHD)***	.....	1	320 0954	
62-63 01 (LHD): 64-65 01 (LPS)	.....	1	320 0389	
RING, Steering Gear Cross Shaft Snap				
62-63 01 (LHD): 64-65 01 (LPS)	.....	1	320 0390	
10.307 BUSHING, Steering Gear Housing Cross Shaft				
60-61 01 (2 Req.): ***62-63 01 (RHD-1 Req.)***	.....	AR	320 0952	
62-63 01 (LHD)	.....	1	320 3064	
60 Thru 63 10 (1 Req.): 60-61 20 (1 Req.): 60-61 80 (2 Req.): 62-63 80 (1 Req.): 64-65 10-80 (LPS-1 Req.)	.....	AR	320 0496	
10.308 SCREW, Steering Gear Cross Shaft Adjusting				
60 01	.....	1	311 9268	
61 Thru 65 01 (LPS)	.....	1	320 2616	
60 Thru 63 10-20-80: 64-65 10-80 (LPS)	.....	1	320 0498	
WASHER, Steering Gear Cross Shaft Adjusting Screw Thrust				
60-61 01: ***62-63 01 (RHD)***	10.306	1	320 0954	
62-63 01 (LHD): 64-65 01 (LPS)	10.306	1	320 0389	
NUT, Steering Gear Cross Shaft Adjusting Screw				
60 Thru 63 01 (Lock): 64-65 01 (LPS-Lock)	.....	1	311 9269	
60 Thru 63 10-20-80 (Jam): 64-65 10-80 (LPS-Jam)	17.410	1	G124929	NA

Copyright 1963 American Motors Corp.

GROUP NO. — DESCRIPTION — YEAR and MODEL	PRIMARY GROUP NO.	PER CAR	PART NO.	CODE
10.309 SHIM KIT, Steering Gear Cross Shaft Adjusting Screw				
60 Thru 63 10-20-80	.....	1	320 0507	
64-65 10-80 (LPS)...(Incl. Adjusting Screw) ***(Use 320 0507)***	.....	1	320 4797	#
10.310 SEAL, Steering Gear Cross Shaft				
60-61 01: ***62-63 01 (RHD)*** ...(Incl. Retainer)	.....	1	311 2948	
62-63 01 (LHD): 64-65 01 (LPS)...(Incl. Retainer)	.....	1	320 3459	
62-63 10-80 (LHD-WPS): ***63 10-80 (LHD-Export-LPS-Special Equipment-20 To 1 Ratio):*** 65 10-80 (LPS): 60-61 80 (LHD)...(Incl. Retainer)	.....	1	320 0514	
60-61 10-20: 62 Thru 64 10-80 (LPS): ***60-61 80 (RHD):*** 65 10 (LHD-LCV-LPS)...(Less Retainer)	.....	1	320 0504	
RETAINER, Steering Gear Cross Shaft Seal				
60-61 10-20: 62 Thru 64 10 (LPS): 65 10 (LHD-LCV-LPS): 62 Thru 64 80 (LPS): ***60-61 80 (RHD)***	.....	1	320 0505	
10.314 TUBE ASSEMBLY, Steering Gear				
60 01...(Incl. Worm, Roller Bearings And Nut)	.....	1	320 0955	
61 01 (LHD)...(Incl. Worm, Roller Bearings And Nut)	.....	1	320 2620	
61 Thru 63 01 (RHD)...(Incl. Worm, Roller Bearings And Nut)	.....	1	320 2617	
62-63 01 (LHD)...(Incl. Worm, Roller Bearings And Nut)	.....	1	320 3469	
64 01 (LHD-LPS): 65 01 (LHD-LCV-LPS)	.....	1	320 4726	
65 07 (LHD-LPS)	.....	1	320 6134	
64-65 01 (RHD)	.....	1	320 4791	
60-61 10 (LHD): 60-61 20 (WPS)...(Incl. Worm, Ball Bearings, Nuts, Guides, Clamp And Bolt)	.....	1	320 1701	
60-61 10 (RHD)...(Incl. Worm, Ball Bearings, Nuts, Guides, Clamp And Bolt)	.....	1	320 1506	
62 10-80 (LHD-LPS)...(Incl. Worm, Ball Bearings, Nuts, Guides, Clamp And Bolt)	.....	1	320 3300	
62 10-80 (LHD-WPS)...(Incl. Worm, Ball Bearings, Nuts, Guides, Clamp And Bolt)	.....	1	320 3301	
62 10-80 (RHD)...(Incl. Worms, Ball Bearings, Nuts, Guides, Clamp And Bolt)	....	1	320 3302	
63-64 10 (LHD-LPS): 65 10 (LHD-LCV-LPS-LAW): 63-64 80 (LHD-LPS)... Worm, Ball Bearings, Nuts, Guides, Clamp And Bolt)	.....	1	320 3960	
63 10-80 (LHD-WPS): ***63 10-80 (LHD-Export-LPS-Special Equipment-20 To 1 Ratio)***...(Incl. Worm, Ball Bearing, Nuts, Guides, Clamp And Bolt)	.....	1	320 3961	
63-64 10 (RHD-LCV): 65 10 (RHD-LCV-OHV-232)(RHD-V8-287): 63 80 (RHD)...(Incl. Worm, Ball Bearings, Nuts, Guides, Clamp And Bolt)	.....	1	320 3959	
64-65 10 (LHD-Export-LCV-LPS-Special Equipment-20 To 1 Ratio): 64 80 (LHD-Export-LPS-Special Equipment-20 To 1 Ratio)	.....	1	320 4798	
65 10 (LPS-WAW): ***165 10 (Can):*** 65 17 (LHD-LPS-LAW): 65 80 (LPS)...(Incl Worm, Ball Bearings, Nuts, Guides, Clamp And Bolt)	.....	1	320 5676	
65 17 (LHD-Export-LPS-Special Equipment-20 To 1 Ratio)	.....	1	320 5960	
65 17 (RHD-OHV-232)	.....	1	320 5961	
60-61 20 (LPS)...(Incl. Worm, Ball Bearings, Nuts, Guides, Clamp And Bolt)	.....	1	320 1702	
60-61 80 (LHD)...(Incl. Worm, Ball Bearings, Nuts, Guides, Clamp And Bolt)	.....	1	320 1704	
60-61 80 (RHD)...(Incl. Worm, Ball Bearings, Nuts, Guides, Clamp And Bolt)	.....	1	320 1516	
10.316 BEARING, Steering Gear Worm Ball				
60-61 10-20-80 (54 Req.): 62 Thru 65 10-80 (LPS-50 Req.): 62-63 10-80 (WPS-54 Req.): ***63 Thru 65 10 (LHD-Export-LPS-Special Equipment-20 To 1 Ratio-54 Req.): 63-64 80 (LHD-Export-LPS-Special Equipment-20 To 1 Ratio)***	.....	AR	320 0517	

NOTE 10.316-1: Two Types of Steering Gear Worm Ball Bearing Nuts (Followers) are being used on 60-61 20 (LPS). They can be identified as follows:

Type 1: The Steering Gear Worm Ball Bearings Return Guide Clamp is fastened to the Bearing Nut (Follower) with one screw.

Type 2: The Steering Gear Worm Ball Bearings Return Guide Clamp is fastened to the Bearing Nut (Follower) with three screws.

Copyright 1963 American Motors Corp.

GROUP NO. — DESCRIPTION — YEAR and MODEL	PRIMARY GROUP NO.	PER CAR	PART NO.	CODE
NUT, Steering Gear Worm Ball Bearing (Follower)				
60-61 10 (LHD): 60-61 20 (WPS): ***60-61 80 (RHD)***	.....	1	320 0639	
60-61 10 (RHD): 62-63 10-80 (LHD-LPS): ***62 Thru 65 10 (LHD-Export-LPS-Special Equipment-20 To 1 Ratio): 63-64 80 (LHD-Export-LPS-Special Equipment-20 To 1 Ratio)***	.....	1	320 0638	
62 Thru 64 10-80 (LHD-LPS): 62 Thru 65 10 (LHD-LPS): 62 Thru 64 80 (LHD-LPS): 65 80 (LPS)	.....	1	320 3303	
62 Thru 65 10 (RHD): 60-61 20 (LPS-Note 10.316-1 Type 2): ***62-63 80 (RHD)***	.....	1	320 2130	
60-61 20 (LPS-Note 10.316-1 Type 1) ***(Ref. Pr. List)***	.....	1	320 1467	
GUIDE AND CLAMP KIT, Steering Gear Worm Ball Bearing Return (Incl. Guide, Clamp And Bolt)				
64 10-80 (LHD-LPS): 65 10 (LHD-LCV-LPS-LAW)	.....	1	320 4796	
64-65 10 (RHD)	.....	1	320 4801	
64-65 10 (LHD-Export-LPS-Special Equipment-20 To 1 Ratio): 64 80 (LHD-Export-LPS-Special Equipment-20 To 1 Ratio)	.....	1	320 4800	
65 10 (LDS-WAW): 65 17 (LHD-LPS-LAW): 65 80 (LPS)	.....	1	320 5677	
GUIDE, Steering Gear Worm Ball Bearing Return				
60-61 10 (LHD): 60-61 20 (WPS): ***60-61 80 (RHD)***	.....	4	320 0516	
60-61 10 (RHD): 60-61 80 (LHD): 62-63 10-80 (LHD-WPS): ***63-64 10-80 (LHD-Export-LPS-Special Equipment-20 To 1 Ratio)***	.....	4	320 0515	
62 Thru 64 10 (LHD-LPS)	.....	4	320 3304	
62 Thru 64 10 (RHD): 60-61 20 (LPS): ***62-63 80 (RHD)***	.....	4	320 1466	
CLAMP, Steering Gear Worm Ball Bearing Return Guide				
60-61 10 (LHD): 60-61 20 (WPS): ***60-61 80 (RHD)***	.....	1	320 0519	
60-61 10 (RHD): 60-61 80 (LHD): 62-63 10-80 (LHD-WPS): ***63-64 10-80 (LHD-Export-LPS-Special Equipment-20 To 1 Ratio)***	.....	1	320 0518	
62 Thru 64 10-80 (LHD-LPS)	.....	1	320 3305	
62 Thru 64 10 (RHD): 60-61 20 (LPS-Note 10.316-1 Type 2): ***62-63 80 (RHD)***	.....	1	320 2129	
60-61 20 (LPS-Note 10.316-1 Type 1)	.....	1	320 1465	
ATTACHING PARTS Clamp To Nut (Follower)				
60-61 10-20-80 (Note 10.316-1 Type 1): 62-63 10-80 (WPS): ***63 Thru 65 10 (LHD-Export-Special Equipment-20 To 1 Ratio): 63-64 80 (LHD-Export-Special Equipment-20 To 1 Ratio)***	.....	1	320 0637	
SCREW, Machine..... 62 Thru 65 10-80 (LPS): 60-61 20 (LPS-Note 10.316-1 Type 2)	.....	3	320 2128	
10.320 SEAL, Steering Gear Tube Oil				
60 Thru 63 01: 64-65 01 (LPS)	10.202	1	320 2618	
60 Thru 63 10-20-80: 64-65 10-80 (LPS)	.....	1	320 0636	
10.322 BEARING, Steering Gear Worm				
60 Thru 63 01 (Roller)	.....	2	49 315	
64-65 01 (LPS)...(Incl. Cage)	.....	2	320 4730	
60 Thru 63 10-20-80: 64-65 10-80 (LPS-Ball)	.....	2	320 0491	
RETAINER, Steering Gear Worm Bearing				
60 Thru 63 10: 60-61 20: ***60-61 80 (RHD):*** 62-63 80: 64-65 10-80 (LPS)	.....	1	320 0493	

Copyright 1963 American Motors Corp.

GROUP NO. — DESCRIPTION — YEAR and MODEL	PRIMARY GROUP NO.	PER CAR	PART NO.	CODE
10.324 CUP, Steering Gear Worm Bearing				
60 Thru 63 01 (Upper)	.....	1	24 416	
64-65 01 (LPS-Upper)	.....	1	320 4729	
60 Thru 63 01 (Lower)	.....	1	28 523	
64 01 (LPS-Lower)	.....	1	320 4728	
60 Thru 63 10-20-80: 64-65 10-80 (LPS)	.....	2	320 0492	
10.326 ADJUSTER, Steering Gear Worm Ball Bearing				
60 Thru 63 10: 60-61 20: ***60-61 80 (RHD):*** 62-63 80: 64-65 10-80 (LPS)	.....	1	320 0490	
60-61 80 (LHD)...(Incl. Cup)	10.322	1	320 1703	
NUT, Steering Gear Worm Ball Bearing Adjuster Lock				
60 Thru 63 10-20-80: 64-65 10-80 (LPS)	.....	1	320 0502	
10.330 SEAL, Steering Shaft (Foam)				
65 01-10 (LHD-LCV-LPS-LAW)	.....	1	317 7457	
10.331 RETAINER, Steering Shaft Seal (Clip)				
65 01-10 (LHD-LCV-LPS-LAW)	.....	1	317 8454	
10.332 WASHER, Steering Shaft Seal Retainer				
65 01-10 (LHD-LCV-LPS-LAW)	.....	1	317 8441	
10.338 TUBE, Steering Gear Jacket (Notes Listed On Pages 41 And 42)				
60 01	.....	1	315 6393	
61 01 (LHD-LCV) ..(Replaces 320 2638)	.....	1	320 3002	
61 07 (LHD) ..(Replaces 320 2931)	.....	1	320 3009	

NOTE 10.338-1: Two Types of Steering Gear Jacket Tubes were installed on 60-61 10-20-80 (LHD-WST) (LHD-WOD). They can be identified as follows:

- Type 1: The Low And Reverse Shift Lever is removable from Gear Shift Operating Shaft and the Second and High Shift Lever is Brazed to the Shaft.
- Type 2: The Low and Reverse and the Second and High Shift Levers are removable from the Gear Shift Operating Shaft.

NOTE 10.338-2: Two Types of Steering Gear Jacket Tubes were installed on 60-61 10-20-80 (WAT). They can be identified as follows:

- Type 1: Has a Zinc Die Cast Bushing located at the bottom of the Jacket Tube and is fastened with Two Screws and is Replaceable.
- Type 2: Has a Nylon Bearing Spun into a Metal Bushing that is welded to the bottom of the Jacket Tube and is not Replaceable.

NOTE 10.338-3: Two Types of Steering Gear Jacket Tubes were installed on the 61 01 (LHD-LCV). They can be identified as follows:

- Type 1: The Slot for mounting the Back-Up Light and Neutral Safety Switch is located 5-1/8" from Steering Gear Jacket Tube Mounting Bracket.
- Type 2: The Slot for mounting the Back-Up Light and Neutral Safety Switch is located 6-5/8" from Steering Gear Jacket Tube Mounting Bracket.

NOTE 10.338-4: Four Types of Steering Gear Jacket Tubes were installed on 62 10-80 (LHD-WST)(LHD-WOD): They can be identified as follows:

- Type 1: The Low And Reverse Shift Lever is removable from Gear Shift Operating Shaft and Second and High Shift Lever is Brazed to the Shaft. The Tube is 21-3/16" long from Center of welded Bracket to Bottom of Tube.
- Type 2: The Low and Reverse And Second and High Shift Levers are removable from the Gear Shift Operating Shaft. The Tube is 21-3/4" long from Center of welded bracket to bottom of Tube.
- Type 3: The Low and Reverse Shift Lever is removable from Gear Shift Operating Shaft and Second and High Shift Lever is Brazed to the Shaft. The Tube is 20-13/16" long from Center of welded Bracket to bottom of Tube.
- Type 4: The Low and Reverse and Second and High Shift Levers are removable from the Gear Shift Operating Shaft. The Tube is 21-1/8" long from Center of welded bracket to bottom of Tube.

Copyright 1963 American Motors Corp.

GROUP NO. — DESCRIPTION — YEAR and MODEL	PRIMARY GROUP NO.	PER CAR	PART NO.	CODE

NOTE 10.338-5: Two Types of Steering Gear Jacket Tubes were installed on 62 10-80 (WAT). They can be identified as follows:
- Type 1: The Steering Gear Jacket Tube Lower Bushing fastening Hole on Tube is located 3/8 inches from bottom of Tube and is round.
- Type 2: The Steering Gear Jacket Tube Lower Bushing fastening Hole on Tube is located 15/16 inches from bottom of Tube and is slotted.

NOTE 10.338-6: Two Types of Steering Gear Jacket Tubes were installed on 62 10 (RHD-WST)(RHD-WOD). They can be identified as follows:
- Type 1: The Tube is 21-3/16" long from Center of welded bracket to bottom of tube.
- Type 2: The Tube is 20-13/16" long from Center of welded bracket to bottom of Tube.

NOTE 10.338-7: Two Types of Steering Gear Jacket Tubes were installed on 63 10 (LHD-WST-LES-WCGS) (LHD-WOD-LES-WCGS) and 64 10 (LHD-OHV-196-WST-LES-WCGS) (LHD-OHV-196-WOD-LES-WCGS).
- Type 1: The Low and Reverse Shift Lever is removable from the Gear Shift Operating Shaft and Second and High Shift Lever is Brazrd to the Shaft.
- Type 2: The Low and Reverse and the Second and High Shift Levers are removable from the Gear Shift Operating Shaft.

NOTE 10.338-8: Three Types of Gear Shift Operating Shaft were installed on 63-64 10-80 (LHD-WAT): They can be identified as follows:
- Type 1: The Gear Shift Lever is Brazed to the Gear Shift Operating Shaft and is not removable and the Lever is 1-5/16" wide.
- Type 2: The Gear Shift Lever is removable from the Gear Shift Operating Shaft and the Lever is 7/8" wide.
- Type 3: The Gear Shift Lever is Brazed to the Gear Shift Operating Shaft and is not removable and the Lever is 7/8" wide.

NOTE 10.338-9: Two Types of Steering Gear Jacket Tubes were installed on 64 01 (LHD-WAT) (LHD-WST-WCGS-LES) (LHD-WOD-WCGS-LES-LPS). They can be identified as follows:
- Type 1: On (LHD-WST-WCGS-LES)(LHD-WOD-WCGS-LES) the Tube is 28-7/8" long; on (LHD-WAT) the Tube is 27-3/4" long.
- Type 2: On (LHD-WST-WCGS-LES)(LHD-WOD-WCGS-LES) the Tube is 28-5/8" long; on LHD-WAT) the Tube is 27-1/2" long.

NOTE 10.338-10: Two Types of Steering Gear Jacket Tubes were installed on 64 10 (LHD-OHV-196-WAT-WCGS-LAW). They can be identified as follows:
- Type 1: Has Two Shift Rods. One is used from Gear Shift Operating Shaft to Bellcrank and the other is used from the Bellcrank to Transmission.
- Type 2: Has One Gear Shift Rod That runs directly from the Gear Shift Operating Shaft to the Transmission.

NOTE 10.338-11: Two Types of Steering Gear Jacket Tube were installed on 64 10 (V8-287-WST-WCGS) (V8-287-WOD-WCGS). They can be identified as follows:
- Type 1: The Back-Up Light Switch Mounting Holes are located 14-3/8" from bottom of Tube.
  of Tube and the Tube is 18-13/16" long from center of welded bracket to the the bottom of Tube.
- Type 3: The Back-Up Light Switch Mounting Holes are located 15-1/2" from bottom of Tube and the Tube is 18-1/2" long from center of welded bracket to the bottom of Tube.

NOTE 10.338-12: On 165 01 (LHE) used prior to Car Sequence No. 500279 and beginning with 500817 and prior to 500916; on 165 01 (OHV-196) used prior to Car Sequence No. 500280 and beginning with 500803 and prior to 500935.

NOTE 10.338-13: On 165 01 (LHE) used beginning with Car Sequence No. 500279 and prior to 500817 and beginning with 500937; on 165 01 (OHV-196) used beginning with Car Sequence No. 500280 and prior to 500803 and beginning with 500995.

NOTE 10.338-14: Two Types of Steering Gear Jacket Tubes were installed on 65 10-80. They can be identified as follows:
- Type 1: The Steering Gear Jacket Tube to Instrument Panel Bracket is loose and has a Rubber Sleeve.
- Type 2: The Steering Gear Jacket Tube To Instrument Panel Bracket is welded and does not have Rubber Sleeve.

Copyright 1963 American Motors Corp.

GROUP NO. — DESCRIPTION — YEAR and MODEL	PRIMARY GROUP NO.	PER CAR	PART NO.	CODE
62 01 (LHD-WST-LES)(LHD-WOD-LES)...(Incl. Bushing)	.....	1	320 3100	
62-63 01 (WST-WES)(WOD-WES)...(Incl. Bushing)	.....	1	320 3397	
62-63 01 (WAT)...(Incl. Bushing)	.....	1	320 3395	
63 01 (WFGS)	.....	1	320 4005	
63 01 (LHD-WST-LES-WCGS)(LHD-WOD-LES-WCGS)	.....	1	320 4307	
63 01 (RHD-WST)(RHD-WOD)...(Incl. Bushing) ***(Discontinued)***	.....	1	320 3109	
64 01 (LHD-WST-WCGS-LES-Note 10.338-9 Type 2)(LHD-WOD-WCGS-LES-Note 10.338-9 Type 2)	.....	1	320 4699	
64 01 (LHD-WST-WES)(LHD-WOD-WES)	.....	1	320 4700	
64 01 (RHD-WST-WFGS)(RHD-WOD-WFGS): 65 01 (RHD-OHVC-196-WOD-WFGS)	.....	1	320 4703	
64 01 (LHD-WST-WCGS-LES-Note 10.338-9 Type 1) (LHD-WOD-LES-Note 10.338-9 Type 1): ***165 01 (Can-Note 10.338-12)***	.....	1	320 4698	
64 01 (LHD-WAT-Note 10.338-9 Type 1): ***165 01 (Can-Note 10.338-12)***	.....	1	320 4694	
64-65 01 (LHD-WAT-Note 10.338-9 Type 2): ***165 01 (Can-Note 10.338-13)***	.....	1	320 4697	
64 01 (LHD-WFGS)	.....	1	320 4701	
64 01 (RHD-WAT) ***(Use 320 5762)***	.....	1	320 4704	
64 01 (RHD-WST-WCGS)(RHD-WOD-WCGS)	.....	1	320 5211	
65 01 (LHD-WST-WCGS)(LHD-WOD-WCGS): ***165 01 (Can-Note 10.338-13)***	.....	1	320 5788	
65 01 (LHD-WFGS)	.....	1	320 5787	
65 01 (RHD-WST-WCGS)(RHD-WOD-WCGS)	.....	1	320 6116	
65 01 (RHD-WOD-WFGS)	.....	1	320 6117	
65 01 (RHD-WAT)	.....	1	320 6118	
60-61 10-20-80 (WAT-Note 10.338-2 Type 2)	.....	1	320 2542	
60-61 10-20-80 (LHD-WST-Note 10.338-1 Type 1-LHD-WOD-Note 10.338-1 Type 1)...(Incl. Bushing)	.....	1	320 1963	
60-61 10-20-80 (LHD-WST-Note 10.338-1 Type 2)(LHD-WOD-Note 10.338-1 Type 2)	.....	1	320 2541	
60-61 10-20-80 (WAT-Note 10.338-2 Type 1)...(Incl. Bushing)	.....	1	320 1970	
60-61 10 (RHD-WST)(RHD-WOD)...(Incl. Bushing)	.....	1	320 2105	
62 10-80 (LHD-WST-Note 10.338-4 Type 1)(LHD-WOD-Note 10.338-4 Type 1)	.....	1	320 3496	
62 10-80 (LHD-WST-Note 10.338-4 Type 3)(LHD-WOD-Note 10.338-4 Type 3)	.....	1	320 3741	
62 10-80 (WAT-Note 10.338-5 Type 1) ***(Replaces 320 3500)***	.....	1	320 3745	
62 10 (RHD-WST-Note 10.338-6 Type 1)(RHD-WOD-Note 10.338-6 Type 1)	.....	1	320 3497	
62 10 (RHD-WST-Note 10.338-6 Type 2)(RHD-WOD-Note 10.338-6 Type 2)	.....	1	320 3742	
60-61 10-20-80 (LHD-WST-Note 10.338-1 Type 2)(LHD-WOD-Note 10.338-1 Type 2): 62 10-80 (LHD-WST-Note 10.338-4 Type 2)(LHD-WOD-Note 10.338-4 Type 2)...(Incl. Bushing)	.....	1	320 3122	
62 10-80 (LHD-WST-Note 10.338-4 Type 4)(LHD-WOD-Note 10.338-4 Type 4)...(Incl. Bushing)	.....	1	320 3753	
62 10-80 (WAT-Note 10.338-5 Type 2)...(Incl. Bushing)	.....	1	320 3129	
63 10 (Six-LHD-WST-LES-WCGS-Note 10.338-7 Type 2) (Six-LHD-WOD-LES-WCGS-Note 10.338-7 Type 2): 64 10 (LHD-OHV-196-WST-LES-WCGS-Note 10.338-7 Type 2) (LHD-OHV-196-WOD-LES-WCGS-Note 10.338-7 Type 2)	.....	1	320 4003	
63 10 (Six-LHD-WST-LES-WCGS-Note 10.338-7 Type 1) (Six-LHD-WOD-LES-WCGS-Note 10.338-7 Type 1): 64 10 (LHD-OHV-196-WST-LES-WCGS-Note 10.338-7 Type 1) (LHD-OHV-196-WOD-LES-WCGS-Note 10.338-7 Type 1)	.....	1	320 4312	
63-64 10 (OHV-196-WST-WES)(OHV-196-WOD-WES)	.....	1	320 4002	
63 10-80 (LHD-WFGS): 64 10-80 (WFGS-LAW)	.....	1	320 4004	
63 10-80 (LHD-WAT-Note 10.338-8 Type 1): 64 10 (LHD-OHV-196-WAT-WCGS-LAW-Note 10.338-8 Type 1 and Note 10.338-10 Type 1): 64 10-80 (LHD-WAT-WCGS-LAW)	.....	1	320 4308	
63 10-80 (LHD-WAT-Note 10.338-8 Type 2)	.....	1	320 4000	
63 10-80 (LHD-WAT-Note 10.338-8 Type 3): 64 10 (LHD-OHV-196-WAT-WCGS-LAW-Note 10.338-8 Type 3 And Note 10.338-10 Type 1): 64 10-80 (LHD-V8-WAT-WCGS-LAW)	.....	1	320 4530	
63 10-80 (RHD-WAT): 64 10 (RHD-OHV-196-WAT)(RHD-V8-WAT):	.....	1	320 4339	#
65 10 (RHD-WAT-WCGS)	.....	1	320 7380	#
63 10 (RHD-WFGS): 64 10 (RHD-OHV-196-WST-WFGS)(RHD-OHV-196-WOD-WFGS)	.....	1	320 4271	#
65 10 (RHD-WFGS)	.....	1	320 7381	#
63-64 10-80 (V8-WST-WCGS)(V8-WOD-WCGS): 64 10 (V8-287-WST-WCGS-Note 10.338-11 Type 1)(V8-287-WOD-WCGS-Note 10.338-11 Type 1)	.....	1	320 4001	
64 10 (LHD-Six-WAT-WCGS-LAW-Note 10.338-8 Type 3 And Note 10.338-10 Type 2)	.....	1	320 5094	

Copyright 1963 American Motors Corp.

GROUP NO. — DESCRIPTION — YEAR and MODEL	PRIMARY GROUP NO.	PER CAR	PART NO.	CODE
64 10 (LHD-Six-WAT-WCGS-LAW-Note 10.338-8 Type 1 And Note 10.338-10 Type 2)	.....	1	320 5095	
64 10 (RHD-OHV-196-WST-WCGS)(RHD-OHV-196-WOD-WCGS):	.....	1	320 5212	#
65 10 (RHD-OHV-232-WST-WCGS)(RHD-OHV-232-WOD-WCGS)	.....	1	320 7382	#
64 10 (OHVC-232-WST-WCGS)(OHVC-232-WOD-WCGS): ***64 10 (OHV-196-Heavy Duty)***	.....	1	320 5431	
64 10-80 (V8-WST-WCGS-Note 10.338-11 Type 2)(V8-WOD-WCGS-Note 10.338-11 Type 2)	.....	1	320 5096	
64 10-80 (V8-WST-WCGS-Note 10.338-11 Type 3)(V8-WOD-WCGS-Note 10.338-11 Type 3)	.....	1	320 5213	
64 10-80 (WAT-WAW-WCGS): 65 10 (LCV-WAW-WCGS)	.....	1	320 5039	
64-65 10 (LCV-WFGS-WAW): 64 80 (WFGS-WAW)	.....	1	320 5131	
65 10-80 (LHD-WOD-WFGS-LAW-Note 10.338-14 Type 1) (LHD-WAT-WFGS-LAW-Note 10.338-14 Type 1)	.....	1	317 8506	
65 10-80 (LHD-WOD-WFGS-LAW-Note 10.338-14 Type 2)(LHD-WAT-WFGS-LAW Note 10.338-14 Type 2)	.....	1	317 5980	
65 10-80 (LHD-WST-WCGS-LAW-Note 10.338-14 Type 1) (LHD-WOD-WCGS-LAW-Note 10.338-14 Type 1) ***(Use 317 5507)***	.....	1	317 8505	
65 10-80 (LHD-WST-WCGS-LAW-Note 10.338-14 Type 2)(LHD-WOD-WCGS-LAW Note 10.338-14 Type 2)	.....	1	317 5507	
65 10-80 (LHD-V8-WAT-WCGS-LAW-Note 10.338-14 Type 1)	.....	1	317 8503	
65 10-80 (LHD-V8-WAT-WCGS-LAW-Note 10.338-14 Type 2)	.....	1	317 5511	
65 10 (LHD-OHV-199-WAT-WCGS-LAW-Note 10.338-14 Type 1): 65 10-80 (LHD-OHV-232-WAT-WCGS-LAW-Note 10.338-14 Type 1)	.....	1	317 8504	
65 10 (LHD-OHV-199-WAT-WCGS-LAW-Note 10.338-14 Type 2): 65 10-80 (LHD-OHV-232-WAT-WCGS-LAW-Note 10.338-14 Type 2)	.....	1	317 5508	
65 17 (WAW-WFGS): 65 80 (WAW-WFGS)	.....	1	320 5785	
65 80 (OHV-232-WAW-WCGS)	.....	1	320 5782	
65 17 (V8-WAW-WCGS): 65 80 (V8-327-WAW-WFGS)	.....	1	320 5783	

ATTACHING PARTS
Tube To Instrument Panel

BOLT, Hexagon	60-61 10-20-80: 63-64 10-80	17.038	2	G181641	NA
BOLT, Hexagon	***62-63 01 (RHD)***	17.038	1	G181636	NA
BOLT, Hexagon	63-64 01	17.038	1	G181638	NA
INSULATOR	60 10-20-80 ***(Discontinued)***	.....	2	315 7633	
WASHER, Plain	61 01 ***(Replaces 800 0331)***	17.814	2	400 1161	
WASHER, Plain	***62-63 01 (RHD)*** ***(Replaces 800 0165)***	17.814	2	400 1104	
WASHER, Plain	60 Thru 62 10-20-80: 63 10-80 (Upper)	17.814	2	G120394	NA
WASHER, Plain	63 10-80 (Lower): 64-65 01-10-80 (Note 10.338-14 Type 1) ***(Replaces 800 0169)***	17.814	2	400 1107	
WASHER, Plain	65 01: 64 10-80 (V8): 65 10-80 (Note 10.338-14 Type 2)	11.228	2	313 5017	
WASHER, Bite	61 Thru 63 01: 60 Thru 62 10: 63-64 10 (LHD-WST) (LHD-WOD): 60 Thru 63 20-80	10.003	2	310 8995	
WASHER, Lock	64-65 01: 60 Thru 65 10-20-80	17.820	2	G120382	NA
WASHER, Lock	64 10-80 (WAT)	17.822	2	G114608	NA
NUT, Lock	61 Thru 63 01	17.416	2	G442828	
NUT, Hexagon	64-65 01: 60 Thru 65 10-20-80	17.406	2	G120369	NA
NUT, Stamped	63 10-80	17.426	2	G454385	NA

JACKET, Steering Gear Jacket Tube

63 01 (WFGS)	.....	1	320 4017	
64-65 01 (WFGS)	.....	1	320 4702	
64 10-80 (WAT-WFGS-WAW): 65 10-80 (LHD-WFGS)	.....	1	320 5132	#
65 10-80 (LHD-WFGS-LAW)	.....	1	317 5976	
(Upper) 60 Thru 62 10-20-80 (WAT)	.....	1	320 1971	
(Upper) 63 10-80 (WFGS-LAW): 64 10-80 (WFGS-LAW): ***65 10 (RHD-WFGS)***	.....	1	320 4052	#
(Lower) 60 Thru 62 10-20-80	.....	1	320 1965	
(Lower) 63-64 10-80 (LAW): ***65 10 (RHD)***	.....	1	320 4015	#

ATTACHING PARTS
Lower Jacket To Tube

SCREW, Tapping	60 Thru 64 10-20-80 (LAW): ***65 10 (RHD)***	17.660	1	G449623	NA
SCREW, Tapping	64 10-80 (WAT-WFGS-WAW): 65 10-80 (WAW-WFGS)	7.020	2	320 5045	

Copyright 1963 American Motors Corp.

GROUP NO. — DESCRIPTION — YEAR and MODEL	PRIMARY GROUP NO.	PER CAR	PART NO.	CODE
SLEEVE, Steering Gear Jacket Tube				
65 10-80 (LHD-LAW-Note 10.338-14 Type 1)	.....	1	317 8479	
SEAL, Steering Gear Jacket Tube To Steering Gear Housing				
60 01 (Sponge Rubber)	.....	1	312 7375	
60 01 (Hard Rubber)	3.288	1	55 350	
ANTI-SLIP, Steering Gear Upper Jacket				
60 10-20-80 ("J" Shape Spring Nut)	3.245	1	312 3436	
10.339 BRACKET, Steering Gear Jacket Tube To Instrument Panel				
65 10-80 (LHD-LAW-Note 10.338-14 Type 1)	.....	1	317 8478	
ATTACHING PARTS Bracket To Tube				
SCREW, Tapping..... 65 10-80 (LHD-LAW)	17.670	1	G189119	NA#
CUSHION, Steering Gear Jacket Tube To Instrument Panel				
60 01	.....	1	312 8313	
RETAINER, Steering Gear Jacket Tube To Instrument Panel Cushion				
60 01	.....	1	312 8314	
ATTACHING PARTS, Cushion Retainer To Instrument Panel				
BOLT, Hexagon..... 60 01	17.038	3	G180034	NA
NUT, Hexagon..... 60 01	17.406	3	G120375	
10.340 ROD, Steering Gear Jacket Tube Support				
(Left) 65 10-80	.....	1	317 8391	
(Right) 65 10-80	.....	1	317 8392	
ATTACHING PARTS Rod To Dash Panel				
BOLT, Hexagon 65 10-80	17.038	2	G181608	NA
WASHER, Bite..... 65 10-80	5.164	2	94 524	
WASHER, Plain..... 65 10-80	17.814	2	G120393	NA
WASHER, Lock 65 10-80	17.816	2	G120214	NA
10.344 BEARING, Steering Gear Jacket Tube Upper				
60 01	.....	1	310 4775	
61 Thru 65 01 (In D.S. Switch Housing): 60 Thru 62 10-20-80 (In D.S. Switch Housing)	.....	1	320 2304	
63-64 10-80 (LAW-In D.S. Switch Housing): ***65 10 (RHD-In D.S. Switch Housing)***...(Incl. Horn Wire)	3.406	1	320 4049	
65 10-80 (LAW-In D.S. Switch Housing)...(Incl. Horn Wire)	3.406	1	317 5548	
SLEEVE, Steering Gear Jacket Tube Upper Bearing (Cone Shape)				
60 Thru 65 01: 60 Thru 62 10-20-80	.....	1	315 7942	

Copyright 1963 American Motors Corp.

GROUP NO. — DESCRIPTION — YEAR and MODEL	PRIMARY GROUP NO.	PER CAR	PART NO.	CODE
SPRING, Steering Gear Jacket Tube Upper Bearing				
60 01	.....	1	310 4620	
61 Thru 63 01: 60 Thru 62 10-20-80 ***(Replaces 315 7965)***	.....	1	315 9836	
64-65 01 ***(Replaces 317 0334)***	.....	1	317 6025	#
63 Thru 65 10-80	.....	1	316 8103	
SPACER, Steering Gear Jacket Tube Upper Bearing Spring				
60 01	.....	1	310 4375	
64 01 (WPS)***(RHD):***	.....	1	317 1881	
64 10-80 (WPS-45/64" Long)	10.283	1	317 1183	
64 10-80 (WPS-39/64" Long)	10.283	1	317 5384	
SEAT, Steering Gear Jacket Tube Upper Bearing Spring				
63 10-80: 64 10-80 (LPS): 65 10-80	.....	1	316 8104	
WASHER, Steering Gear Jacket Tube Upper Bearing Spring				
65 01 (RHD)	10.773	2	317 0968	
SEAT, Steering Gear Jacket Tube Upper Bearing Spacer				
64 10-80 (WPS)	.....	1	316 8104	
10.345 SOCKET, Steering Gear Jacket Tube Upper Bearing				
65 10-80 (WCGS-LAW)	.....	1	317 5539	
10.346 BUSHING, Steering Gear Jacket Tube Lower				
61 01 (Nylon)	.....	1	320 3276	
62 01: 63 01 (LHE-WAT)(WST-WES)(WOD-WES)***(RHD-WST)(RHD-WOD)***...(Less Fitting)	.....	1	320 3396	
63 01 (LHD-WST-WCGS)(LHD-WOD-LES-WCGS)...(Incl. Fitting)	.....	1	320 4316	
64 01-10-80 (LAW-1-9/16" Long): ***165 01 (Can-Note 10.338-12):*** ***65 10 (RHD)***...(Less Fitting)	.....	1	320 5093	
65 01: ***165 01 (Can-Note 10.338-13):*** 65 10-80 (LAW)	.....	1	317 5542	
62 10-80 (WST-Note 10.338-4 Types 1 And 3)(WOD-Note 10.338-4 Types 1 And 3): 63 10 (LHD-WST-LES-WCGS-Note 10.338-7 Type 1) (LHD-WOD-LES-WCGS- Note 10.338-7 Type 1): 63 10-80 (LHD-WAT- Note 10.338-8 Type 1):...(Incl. Fitting) ***(Replaces 320 3611)***	.....	1	320 4310	#
62 10-80 (Note 10.338-4 Types 2 And 4)(Note 10.338-5 Type 2): ***165 01 (Can-Note 10.338-12)***...(Incl. Fitting)	.....	1	320 3130	#
62 10-80 (WAT-Note 10.338-5 Type 1): 64 01-10-80 (LAW-1-1/8" Long)...(Less Fitting)	.....	1	320 3498	
60-61 10-20-80 (Notes 10.338-1 And 2 Type 2 - With Replaceable Nylon Bushing): 63 10-80 (Note 10.338-7 Type 2)(Note 10.338-8 Types 2 And 3): ***63 10 (RHD-WFGS)***	.....	1	320 4439	
65 17 (WAW): 65 80 (WAW)...(Incl. Bearing)	.....	1	320 5789	
ATTACHING PARTS				
Bushing To Tube				
SCREW, Machine..... 62 Thru 65 01: 62 10-80 (Note 10.338-4 And 5 Type 2): 63-64 10-80 (LAW): ***65 10 (RHD)***	.....	2	320 3603	
SCREW, Machine..... 61-62 10-20-80 (Note 10.338-1 And 2 Type 1)	17.626	2	G440402	NA
SCREW, Tapping..... 62 10-80 (Note 10.338-4 And 5 Type 1)	.....	1	320 3499	
SCREW, Tapping..... 65 10-80 (LAW)	17.671	2	G177999	NA
WASHER, Lock ..... 65 10-80 (LAW)	17.822	2	G455715	NA

Copyright 1963 American Motors Corp.

GROUP NO. — DESCRIPTION — YEAR and MODEL	PRIMARY GROUP NO.	PER CAR	PART NO.	CODE
FITTING, Steering Gear Jacket Tube Lower Bushing Lubrication				
64 01-10-80 (LPS-LAW)	17.290	1	G271431	
64 01-10-80 (WPS-LAW)	17.290	1	G271427	
SEAL, Steering Gear Jacket Tube Lower (Foam)				
64-65 10 (LCV-WAW-WFGS): 64 80 (WAW-WFGS)	.....	1	320 5064	
SEAL, Steering Gear Operating Shaft To Jacket				
61-62 01: 63-64 01 (WCGS): 60 Thru 62 10-20-80 (WST)(WOD): 63-64 10-80 (WCGS-LAW): ***65 10 (RHD-WCGS)***	7.038	1	320 1969	
65 01 (WCGS): 65 10-80 (LHD-WCGS-LAW)	.....	1	317 7560	
WASHER, Steering Gear Jacket Tube Upper Bearing				
64 01 (LHD-WAT)(LHD-WFGS-WOD)	.....	2	317 0968	
10.350 PLATE, Steering Gear Jacket Tube To Toeboard Support				
61 Thru 63 01 (LHD-WAT): 62 01 (LHD-WST-WES)(LHD-WOD-WES): 63 01 (WST-WES)(WOD-WES)	.....	1	320 2639	
61 Thru 63 01 (LHD-WST-LES)(LHD-WOD-LES)	.....	1	320 2635	
61 Thru 63 01 (RHD-WST)(RHD-WOD)	.....	1	320 2663	
64-65 01	.....	1	320 4695	
60 Thru 62 10-80: ***63 10 (RHD-WFGS-Note 10.350-2 Type 1)(RHD-WAT): 64 10 (RHD-OHV-196-WAT-Note 10.350-1 Type 1)(RHD-V8-WAT-Note 10.350-1 Type 1)***	.....	1	320 1968	
63 10-80 (Note 10.350-1 Type 2)	.....	1	320 4273	
63 10-80 (LHD-Note 10.350-1 Type 2): ***63 10 (RHD-WFGS-Note 10.350-2 Type 2):*** 64 10-80 (LAW): ***64 10 (RHD-OHV-196-Note 10.350-1 Type 2) (RHD-V8-WAT-Note 10.350-1 Type 2): 65 10 (RHD)***	.....	1	317 3213	
64 10-80 (WAW)	.....	1	317 2947	
65 10-80 (LHD-LAW)	.....	1	317 7083	
ATTACHING PARTS Plate To Toeboard				
SCREW, Tapping ..... 60 Thru 63 01 (4 Req.): 65 01 (LHD-10-12 x 5/8-1 Req.): 65 10-80 (10-12 x 5/8-1 Req.)	17.670	4	400 1054	
SCREW, Tapping ..... 64 01 (LHD-16-12 x 3/4-3 Req.): 60 Thru 64 10-20-80 (10-12 x 3/4-3 Req.): 65 10-80 (10-12 x 3/4-2 Req.)	17.671	AR	400 1037	
BOLT, Hexagon ..... ***64-65 01 (RHD)***	17.038	3	G181595	NA
WASHER, Plain ..... 60 Thru 63 01 ***(Replaces 800 0143)***	17.814	4	400 1083	

NOTE 10.350-1: Two Types of Steering Gear Jacket Tube to Toeboard Support Plates were installed on 63 10-80 (LHD) and 64 10 (RHD-OHV-196-WAT)(RHD-V8-WAT). They can be identified as follows:

Type 1: The Plate has Two (2) 5/16-24 Projection Weld Nuts and is used with a "O" Ring and a "O" Ring Retainer and Seal.

Type 2: The Plate has a Welded Clamp that is fastened to the Jacket Tube and uses a Seal only.

NOTE 10.350-2: Two Types of Steering Gear Jacket Tube to Toeboard Support Plates were installed on 63 10 (RHD-WST-WFGS)(RHD-WOD-WFGS). They can be identified as follows:

Type 1: The Plate is fastened to the Toeboard with Two (2) Screws and is used with a Grommet and a Sponge Rubber Seal.

Type 2: The Plate is fastened to the Toeboard with Three (3) Screws and has a Welded Clamp that is fastened to the Jacket Tube and uses a Gasket only.

Copyright 1963 American Motors Corp.

GROUP NO. — DESCRIPTION — YEAR and MODEL	PRIMARY GROUP NO.	PER CAR	PART NO.	CODE	
WASHER, Plain ..... 64-65 01 (LHD): 63 Thru 65 10-80 ..... ***(Replaces 800 0141)***	17.814	3	400 1081		10.350
WASHER, Plain ..... ***64-65 01 (RHD)***	17.814	3	400 1093		10.350
WASHER, Lock ..... ***64-65 01 (RHD)***	17.820	3	G120214	NA	10.350
NUT, Hexagon ..... ***64-65 01 (RHD)***	17.406	3	G120368		10.350
Plate Clamp To Jacket Tube					**10.350**
BOLT, Hexagon ..... 64-65 01 (LAW): 64 10-80 (LAW): ***65 10 (RHD)***	17.038	1	G182689	NA	10.350
NUT, Hexagon ..... 64-65 01 (LAW): 64 10-80 (LAW): ***65 10 (RHD)***	17.406	1	G115729	NA	10.350
GROMMET, Steering Gear Jacket Tube To Toeboard					**10.350**
61 Thru 63 01 (LHD)	.....	1	320 2805		10.350gr
61 Thru 63 01 (RHD-WST)(RHD-WOD)	.....	1	320 2662		10.350gr
60 Thru 62 10-20-80: ***63 10 (RHD-WFGS-Note 10.350-2 Type 1): 63 10-80 (RHD-WAT): 64 10 (RHD-OHV-196-WAT-Note 10.350-1 Type 1) (RHD-V8-WAT-Note 10.350-1 Type 1)***	.....	1	320 1966		***10.350gr*** 10.350gr
64-65 10-80 (WAW)	.....	1	317 2943		10.350
65 10-80 (LHD-LAW)	.....	1	317 7071		10.350
(Upper) 60 01	.....	1	313 0464		10.350gr
(Lower) 60 01	.....	1	315 6389		10.350gr
RING, Steering Gear Jacket Tube To Toeboard "O"					**10.350**
63 10-80 (Note 10.350-1 Type 1)	.....	1	320 4272		10.350or
SEAL, Steering Gear Jacket Tube To Toeboard					**10.350**
61 Thru 63 01 (LHD)	.....	1	320 2636		10.350se
61 Thru 63 01 (RHD-WST)(RHD-WOD)	.....	1	320 2664		10.350se
64-65 01	.....	1	320 4696		10.350
60 Thru 62 10-20-80: ***63 10 (RHD-WFGS-Note 10.350-2 Type 1): 63 10-80 (RHD-WAT): 64 10 (RHD-OHV-196-WAT-Note 10.350-1 Type 1) (RHD-V8-WAT-Note 10.350-1 Type 1)***	.....	1	320 1967		***10.350se*** ***10.350se*** 10.350se
63 10-80 (LHD): ***63 10 (RHD-WFGS-Note 10.350-2 Type 2):*** 64 10-80 (LAW): ***64 10 (RHD-OHV-196-WAT-Note 10.350-1 Type 2)(RHD-V8-WAT-Note 10.350-1 Type 2): 65 10 (RHD)***	.....	1	316 7327		10.350se ***10.350se*** 10.350
64 10-80 (WAW): 65 10-80 (LHD)	.....	1	317 2944		10.350
RETAINER, Steering Gear Jacket Tube To Toeboard "O" Ring					**10.350**
63 10-80 (Note 10.350-1 Type 1)	.....	1	316 7325		10.3½0re
ATTACHING PARTS					**10.350**
Retainer To Support Plate					**10.350**
63 10-80 (LHD)	17.038	2	G181595	NA	10.350rp

10.354 SPACER, Steering Gear To Side Sill

64-65 01 (LHD-WPS)	.....	1	317 0971		10.354
60-61 10 (LHD): 60-61 20	.....	1	315 7638		10.354sp
60-61 10 (RHD)	.....	1	315 8571		10.354sp
62 10-80 (RHD)	.....	1	316 3076		10.354sp
63 10-80 (LHD): 64-65 10 (LHD-LPS): 64 80 (LHD-LPS)	.....	1	316 7108		10.354
63 Thru 65 10 (RHD): 63 80 (RHD)	.....	1	316 7109		10.354
64-65 10 (LHD-WPS)	.....	1	317 1331	#	
60-61 80 (LHD)	.....	1	315 7637		10.354sp
60-61 80 (RHD)	.....	1	315 8618		10.354sp
65 80 (LHD)	.....	1	317 5119		10.354

Copyright 1963 American Motors Corp.

GROUP NO. — DESCRIPTION — YEAR and MODEL		PRIMARY GROUP NO.	PER CAR	PART NO.	CODE
ATTACHING PARTS					
Spacer To Sill					
BOLT, Hexagon	64-65 01 (WPS-3 Req.): 64-65 10 (WPS-2 Req. -3-1/4" Long): 65 80 (WPS-2 Req. -3-1/4" Long)	17.038	AR	G454936	
BOLT, Hexagon	60-61 10-20 (3 Req.): ***60-61 80 (RHD-1 Req.)***	17.038	AR	G181678	NA
BOLT, Hexagon	64-65 10 (WPS-3-1/2" Long 64 80 (WPS-3-1/2" Long)	10.290	1	317 1667	
BOLT, Hexagon	***62 10-80 (RHD)***	17.038	3	G186278	NA
WASHER, Plain	64-65 01-10 (WPS): 64-65 10 (WPS): 65 80 (WPS) ***(Replaces 800 0482)***	17.814	3	400 1188	
WASHER, Plain	60-61 10-20 ***(Replaces 800 0183)***	17.814	3	400 1120	
WASHER, Plain	***62 10-80 (RHD)***	17.814	3	G120394	NA
WASHER, Plain	***60 80 (RHD)*** ***(Replaces 800 0181)***	17.814	1	400 1118	
WASHER, Lock	60-61 10-20 (3 Req.): ***60-61 80 (RHD-1 Req.):*** 64-65 01 (WPS-3 Req.): 64-65 10 (WPS-3 Req.): 65 80 (WPS-3 Req.)	17.820	AR	G131100	NA
WASHER, Lock	***62 10-80 (RHD)***	17.820	3	G120382	NA
NUT, Hexagon	60-61 10-20 (3 Req.): ***60-61 80 (RHD-1 Req.)***	17.406	AR	G120370	NA
Gear And Spacer To Sill					
BOLT, Hexagon	60-61 80 (LHD-3" Long)	17.038	2	G180160	NA
BOLT, Hexagon	60-61 80 (LHD-3-1/2" Long)	17.038	1	G180162	NA
WASHER, Plain	60-61 80 (LHD) ***(Replaces 800 0181)***	17.814	3	400 1118	
WASHER, Lock	60-61 80 (LHD)	17.820	3	G131100	NA

10.357 BRACE, Steering Gear

60-61 10 (LHD): 60-61 20		.....	1	315 5685	
ATTACHING PARTS					
Brace To Cross Shaft Cover					
BOLT, Hexagon	60-61 10-20: ***60 80 (RHD)***	17.038	1	G180121	NA
WASHER, Bite	60-61 10-20	10.003	1	310 8995	
WASHER, Lock	60-61 10-20	17.822	1	G114606	NA
Brace To Wheelhouse Panel					
BOLT, Hexagon	***60-61 80 (RHD)***	17.038	1	G181637	NA
WASHER, Plain	***60-61 80 (RHD)*** ***(Replaces 800 0165)***	17.814	1	400 1104	
WASHER, Lock	***60-61 80 (RHD)***	17.820	1	G120382	NA
NUT, Hexagon	***60-61 80 (RHD)***	17.406	1	G120369	NA

10.360 POWER STEERING KIT

60 01 (LHE-LAC) ***(Order Comp.)***	.....	1	315 9967	
60 01 (OHV-LAC) ***(Order Comp.)***	.....	1	316 0162	
61 01 (LHE-LAC) ***(Order Comp.)***	.....	1	316 2111	
61 01 (LHE-WAC)	.....	1	316 2112	
61 01 (OHV-LAC) ***(Order Comp.)***	.....	1	316 2113	
61 01 (OHV-WAC)	.....	1	316 2114	
64 01 (LAC)	.....	1	320 5150	
64 01 (WAC)	.....	1	320 5151	
65 01 (LHE-LAC)(LCV-OHV-196-LAC)	.....	1	320 6241	
65 01 (LCV-OHV-196-WAC)	.....	1	320 6242	
65 01 (LCV-OHV-199-LAC)(LCV-OHV-232-LAC)	.....	1	320 6245	
65 07 (OHV-196-WAC)	.....	1	320 6244	

NOTE 10.360-1: When installing Kit on 62 01-10 (OHVC-LAC) having 40 AMP. Alternator Equipment must also order 3164042 Adjusting Plate, which is to replace Plate on Pump.

Copyright 1963 American Motors Corp.

GROUP NO. — DESCRIPTION — YEAR and MODEL	PRIMARY GROUP NO.	PER CAR	PART NO.	CODE
65 07 (OHV-196-LAC)	.....	1	320 6243	
65 07 (OHV-199-LAC)(OHV-232-LAC)	.....	1	320 6246	
60 10 (LAC) *(Order Comp.)*	.....	1	315 9671	
60 10 (WAC) *(Replaces 315 8429)(Order Comp.)*	.....	1	315 9672	
61 10 (LAC) *(Order Comp.)*	.....	1	316 2115	
61 10 (OHVA-WAC)	.....	1	316 2116	
61 10 (OHVC-WAC) *(Order Comp.)*	.....	1	316 2704	#
62 10 (LAC-Note 10.360-1) *(Order Comp.)*	.....	1	316 5621	
64 10 (OHV-196-LAC)	.....	1	320 5152	
64 10 (OHVA-WAC)	.....	1	320 5153	
64 10 (OHVC-196-WAC)	.....	1	320 5154	
64 10 (OHVC-232-LAC)	.....	1	320 5429	
64 10 (OHVC-232-WAC)	.....	1	320 5430	
65 10 (OHV-199-LAC)(OHV-232-LAC)	.....	1	320 6220	
65 10 (OHV-199-WAC)(OHV-232-WAC)	.....	1	320 6221	
65 10 (V8-287)(V8-327)	.....	1	318 0142	
60 20 (LAC-LAS): 61 20 (LAC) *(Replaces 320 2266)(Order Comp.)*	.....	1	320 2841	
60 20 (WAC-LAS): 61 20 (WAC) *(Replaces 320 2267)(Order Comp.)*	.....	1	320 2842	
60 80 (LAC-LAS) *(Order Comp.)*	.....	1	320 2268	
60 80 (WAC-LAS) *(Order Comp.)*	.....	1	320 2269	
61 80 (LAC)	.....	1	320 2843	
61 80 (WAC)	.....	1	320 2844	
64 10-80 (V8)	.....	1	317 4552	
65 80 (OHV-232-LAC)	.....	1	320 6238	
65 80 (OHV-232-WAC)	.....	1	320 6239	
65 80 (V8-287)(V8-327)	.....	1	318 0144	

10.395 CYLINDER ASSEMBLY, Power Steering (Less Pitman Arm)

60 Thru 63 01 *(Replaces 320 2314)*	.....	1	320 3019	
60-61 10 *(Replaces 320 1925, 320 3018)*	.....	1	320 3685	
62 10-80 (Note 10.395-3 Type 1)	.....	1	316 3024	
62 10-80 (Note 10.395-3 Type 2)	.....	1	320 3767	

NOTE 10.395-1: Three Types of Power Steering Cylinders were installed on 60 10-20 (WPS) and 61 01-10-20-80 (WPS) series. They can be identified as follows:

- **Type 1:** The Pitman Arm Stud Cushion Retainer is rectanglar shape and the Return Hose Fitting (at Cyl.) has 7/16-20 Thread at Male End and Pressure Hose Fitting has a 7/16-14 Thread at Male End.
- **Type 2:** The Pitman Arm Stud Cushion Retainer is oval shape and the Return and Pressure Hose Fittings (at Cyl.) has a 1/2-13 Thread at Male End.
- **Type 3:** The Pitman Arm Stud Cushion Retainer is oval shape and the Return Hose Fitting (at Cyl.) has a 7/16-20 Thread at Male End and Pressure Hose Fitting has a 7/16-14 Thread at Male End.

NOTE 10.395-2: Two Types of Power Steering Cylinders were installed on the 60 01-80 series. They can be identified as follows:

- **Type 1:** The Pitman Arm Stud Cushion Retainer is rectangular shape and the Return Hose Fitting (at Cyl.) has a 7/16-20 Thread at Male End and Pressure Hose Fitting has a 7/16-14 Thread at Male End.
- **Type 2:** The Pitman Arm Stud Cushion Retainer is oval shape and the Return and Pressure Hose Fittings (at Cyl.) has a 1/2-13 Thread at Male End.

NOTE 10.395-3: Two Types of Power Steering Cylinders were installed on 62 10-80 (WPS). They can be identified as follows:

- **Type 1:** The Piston Rod is 2-1/2" long from Shoulder to end of Rod (at mounting end).
- **Type 2:** The Piston Rod is 3" long from Shoulder to end of Rod (at mounting end).

NOTE 10.395-4: Two Types of Power Steering Cylinders were installed on 63 10-80 (WPS). They can be identified as follows:

- **Type 1:** The Hose Fittings (on Cylinder) are located on the front side of Cylinder.
- **Type 2:** The Hose Fittings (on Cylinder) are located on the rear side of Cylinder.

Copyright 1963 American Motors Corp.

GROUP NO. — DESCRIPTION — YEAR and MODEL	PRIMARY GROUP NO.	PER CAR	PART NO.	CODE
63 10-80 (Note 10.395-4 Type 1) ..... *(Ref. Pr. List)*	.....	1	320 3772	
60 10: 61 10 (Note 10.395-1 Type 1)	.....	1	320 1925	
62 10-80 (Note 10.395-3 Type 1)	.....	1	316 3024	
62 10-80 (Note 10.395-3 Type 2)	.....	1	320 3767	
63 10-80 (Note 10.395-4 Type 1)	.....	1	320 3772	
63 10-80 (Note 10.395-4 Type 2)	.....	1	320 4071	
60-61 20 ..... *(Replaces 320 1370, 320 3017)*	.....	1	320 3684	
60 80 ..... *(Replaces 320 1369)*	.....	1	320 3686	#
61 80 ..... *(Replaces 320 2631)*	.....	1	320 3016	

SEAL KIT, Power Steering Cylinder

60 01 (Note 10.395-2 Type 1): 61 01 (Note 10.395-1 Types 1 And 3)	.....	1	320 2309	
60 01 (Note 10.395-2 Type 2): 61 01 (Note 10.395-1 Type 2): 62-63 01	.....	1	320 3234	
60-61 10-20 (Note 10.395-1 Types 1 And 3): 60 80 (Note 10.395-2 Type 1): 61 80 (Note 10.395-1 Types 1 And 3)	.....	1	320 1372	
60-61 10-20-80 (Note 10.395-1 And 2 Type 2): 62-63 10-80 *(Replaces 320 3233)*	.....	1	320 3985	

PLUG, Power Steering Cylinder Lubrication Fitting Hole (On Cylinder)

60 Thru 63 01-10-20-80	5.170	1	316 4636	

PLUG, Power Steering Cylinder Adjusting

60 01-80 (Note 10.395-2 Type 2): 61 01-10-20-80 (Note 10.395-1 Type 2): 62-63 01-10-80: 60 10-20 (Note 10.395-1 Type 2)	.....	1	320 1345	

FITTING, Power Steering Cylinder Pitman Arm Valve Stud Lubrication (On Cylinder)

60-61 01-10-20-80	10.104	1	311 6987	

10.396 TUBE, Power Steering Cylinder Outer

60 01 (Note 10.395-2 Type 1): 61 01 (Note 10.395-1 Type 1)	.....	1	320 2306	
60 01 (Note 10.395-2 Type 2): 61 01 (Note 10.395-1 Type 2): 62-63 01	.....	1	320 3232	
60-61 10 (Note 10.395-1 Type 1)	.....	1	320 1794	
60-61 10 (Note 10.395-1 Type 2)	.....	1	320 3690	
60-61 10 (Note 10.395-1 Type 3)	.....	1	320 3022	
62 10-80 ..... *(Replaces 320 3024)*	.....	1	320 3976	
62 10-80 (Note 10.395-3 Type 2)	.....	1	320 3976	
63 10-80 (Note 10.395-4 Type 1)	.....	1	320 4184	
63 10-80 (Note 10.395-4 Type 2)	.....	1	320 4183	
60-61 20 (Note 10.395-1 Type 1)	.....	1	320 1427	
60-61 20 (Note 10.395-1 Type 2)	.....	1	320 3689	
60-61 20 (Note 10.395-1 Type 3)	.....	1	320 3021	
60 80 (Note 10.395-2 Type 1)	.....	1	320 1426	
60 80 (Note 10.395-2 Type 2)	.....	1	320 3688	
61 80 (Note 10.395-1 Type 1)	.....	1	320 2629	
61 80 (Note 10.395-1 Type 2)	.....	1	320 3231	
61 80 (Note 10.395-1 Type 3)	.....	1	320 3020	

10.397 CYLINDER, Power Steering Cylinder Piston Rod (Inner Tube)

60 Thru 63 01: 63 10-80 (Note 10.395-4 Type 2)	.....	1	320 2308	
60-61 10	.....	1	320 1342	
62 10-80	.....	1	320 3025	
63 10-80 (Note 10.395-4 Type 1)	.....	1	320 4185	
60-61 20	.....	1	320 1341	
60-61 80	.....	1	320 1340	

Copyright 1963 American Motors Corp.

GROUP NO. — DESCRIPTION — YEAR and MODEL	PRIMARY GROUP NO.	PER CAR	PART NO.	CODE
PLUG, Power Steering Cylinder Piston Rod Inner Cylinder End				
60 Thru 63 01-10-20-80 (To Valve Spool Reaction Piston)	.....	1	320 1349	
10.398 VALVE BODY AND SPOOL KIT, Power Steering Cylinder				
60 Thru 63 01...(Incl. Piston, Fittings, Fitting Gaskets And Fitting Seal)	.....	1	320 4237	
60 Thru 63 10-20-80...(Incl. Piston, Fittings, Fitting Gaskets And Fitting Seal)	.....	1	320 4238	
PISTON, Power Steering Cylinder Valve Spool Reaction				
60 Thru 63 01 (Between Piston Spring And Power Cylinder Base)(In Spool)	.....	1	320 2311	
60 Thru 63 10-20-80 (Between Piston Spring And Power Cylinder Base)(In Spool)	.....	1	320 1348	
SEAL KIT, Power Steering Cylinder Valve Spool "O" Ring				
60 01 (Note 10.395-2 Type 1): 61 01 (Note 10.395-1 Types 1 And 3)...(Incl. All Valve Spool And Reaction Piston Rubber Seals)	.....	1	320 2310	
60 01 (Note 10.395-2 Type 2): 61 01 (Note 10.395-1 Type 2): 62-63 01...(Incl. All Valve Spool And Reaction Piston Rubber Seals)	.....	1	320 3236	
60-61 10-20 (Note 10.395-1 Types 1 And 3): 60 80 (Note 10.395-2 Type 1): 61 80 (Note 10.395-1 Types 1 And 3)...(Incl. All Valve Spool And Reaction Piston Rubber Seals)	.....	1	320 1346	
60 10-20-80 (Note 10.395-1 And 2 Type 2): 61 10-20-80 (Note 10.395-1 Type 2): 62-63 10-80...(Incl. All Valve Spool And Reaction Piston Rubber Seals ***(Replaces 320 3235)***	.....	1	320 3986	
RETAINER, Power Steering Cylinder Valve Spool Seal				
60 Thru 63 01	.....	1	320 2312	
60-61 10-20-80: 62 10-80 (Note 10.395-3 Type 1)	.....	1	320 1350	
RETAINER, Power Steering Cylinder Valve Spool Seal And Washer				
62 10-80 (Note 10.395-3 Type 2): 63 10-80	.....	1	320 3975	
ROD END ASSEMBLY KIT, Power Steering Cylinder Valve Spool				
60 01 (Note 10.395-2 Type 2): 61 01 (Note 10.395-1 Types 1 And 3)...(Incl. Roll Pin	.....	1	320 2313	
60 01 (Note 10.395-2 Type 2): 61 01 (Note 10.395-1 Type 2): 62-63 01: 60-61 10-20 (Note 10.395-1 Type 2): 60 80 (Note 10.395-2 Type 2): 61 80 (Note 10.395-1 Type 2): 62-63 10-80 (Note 10.395-4 Type 1)...(Incl. Roll Pin) ***(Replaces 320 3237)***	.....	1	320 3238	
60-61 10-20 (Note 10.395-1 Types 1 And 3): 60 80 (Note 10.395-2 Type 1): 61 80 (Note 10.395-1 Types 1 And 3)...(Incl. Roll Pin)	.....	1	320 1351	
63 10-80 (Note 10.395-4 Type 2)...(Incl. Roll Pin)	.....	1	320 4188	
PIN, Power Steering Cylinder Valve Spool To Rod End (Roll)				
60 Thru 63 01-10-20-80	.....	1	311 9809	
10.405 ROD, Power Steering Cylinder Piston (Incl. Piston Ring And Nut)				
60 Thru 63 01: 60 Thru 62 10-20-80 (Note 10.395-3 Type 1) ***(Replaces 311 9791, 320 0770, 320 2307)***	.....	1	320 3026	
62 10-80 (Note 10.395-3 Type 2)	.....	1	320 3899	
63 10-80 (Note 10.395-4 Type 1)	.....	1	320 4187	
63 10-80 (Note 10.395-4 Type 2)	.....	1	320 4186	

Copyright 1963 American Motors Corp.

GROUP NO. — DESCRIPTION — YEAR and MODEL	PRIMARY GROUP NO.	PER CAR	PART NO.	CODE
ATTACHING PARTS Piston Rod To Mounting Bracket				
GROMMET..... 60 Thru 63 01-10-20-80.....	.....	2	313 8582	
WASHER, Dished..... 60 Thru 63 01-10-20-80.....	.....	2	313 8583	
WASHER, Plain..... 62 10-80 (Note 10.395-3 Type 2-Adjusting): 63 10-80 (Adjusting) .....*(Replaces 800 0486)*	17.814	8	400 1192	
NUT, Hexagon..... 60 Thru 63 01-10-20-80.....	.....	1	311 6972	
PIN, Cotter..... 60 Thru 63 01-10-20-80.....	17.460	1	G103374	NA
ROD KIT, Power Steering Cylinder Piston				
62 10-80...(Incl. 1-3203899, 1-3203900, 8-8000486).....	.....	1	320 3923	
STOP, Power Steering Cylinder Piston Rod				
62 10-80 (Note 10.395-3 Type 2).....	.....	1	320 3900	
63 10-80 (Note 10.395-4 Type 1).....	.....	1	320 4191	
63 10-80 (Note 10.395-4 Type 2).....	.....	1	320 4190	
RING, Power Steering Cylinder Piston Rod Piston				
60 Thru 63 01-10-20-80.....	.....	1	311 9792	
RING, Power Steering Cylinder Piston Rod Stop				
60 Thru 62 10-80.....	.....	1	320 3244	
10.410 GUIDE, Power Steering Cylinder Piston Rod				
60 Thru 63 01-10-20-80...(Incl. 1-3119796, 1-3119794, 1-3119795, 1-3119935)	.....	1	311 9793	
SEAL, Power Steering Cylinder Piston Rod Guide ("O" Ring)				
60 Thru 63 01-10-20-80.....	.....	1	311 9794	
SEAL KIT, Power Steering Cylinder End Plug And Guide				
60 Thru 63 01-10-20-80...(Incl. 1-3119794, 1-3119796, 1-3119798, 1-3119799)	.....	1	311 9945	
"T" RING KIT, Power Steering Cylinder Piston Rod Guide				
60 Thru 63 01-10-20-80.....	.....	1	311 9796	
PLUG ASSEMBLY, Power Steering Cylinder Piston Rod End				
60 Thru 63 01-10-20-80...(Incl. 1-3119798, 1-3119899).....	.....	1	320 1344	
RING, Power Steering Cylinder Piston Rod End Plug Wiping (In Plug)				
60 Thru 63 01-10-20-80.....	.....	1	311 9798	
RETAINER, Power Steering Cylinder Piston Rod Guide Seal				
60 Thru 63 01-10-20-80.....	.....	1	311 9935	
RETAINER, Power Steering Cylinder Piston Rod Guide "T" Ring				
60 Thru 63 01-10-20-80.....	.....	1	311 9795	

Copyright 1963 American Motors Corp.

GROUP NO. — DESCRIPTION — YEAR and MODEL	PRIMARY GROUP NO.	PER CAR	PART NO.	CODE
RETAINER, Power Steering Cylinder Piston Rod End Plug Wiping Ring (In Plug)				
60 Thru 63 01-10-20-80	.....	1	311 9799	
10.427 BRACKET, Power Steering Cylinder To Sill Mounting				
60 01 (Has 3 Mounting Holes) ***(Ref. Pr. List)***	.....	1	315 8667	
60 Thru 63 01 (Has 4 Mounting Holes)	.....	1	316 0576	
60-61 10-20	.....	1	315 3356	
62 10-80	.....	1	316 5086	
63 10-80 (Note 10.427-1 Type 1)	.....	1	316 6704	
63 10-80 (Note 10.427-1 Type 2)	.....	1	316 9415	
60-61 80	.....	1	315 3401	
ATTACHING PARTS				
Bracket To Sill				
STUD — 60 01 (Shoulder is 1-53/64" Long)	.....	1	315 8659	
STUD — 60 Thru 63 01 (Shoulder is 1-61/64" Long)	.....	1	315 8660	
BOLT, Hexagon — 60-61 10-20-80	17.038	2	G181678	NA
BOLT, Hexagon — 62 10-80	17.038	3	G181652	NA
BOLT, Hexagon — 63 10-80	17.038	3	G189331	NA
WASHER, Plain — 60 01 (4 Req.): 61 Thru 63 01 (2 Req.) ***(Replaces 800 0179)***	17.814	AR	400 1116	
BOLT, Hexagon — 60 80	.....	1	313 1165	
WASHER, Plain — 60-61 10-20 ***(Replaces 800 0181)***	17.814	2	400 1118	
WASHER, Plain — 62-63 10-80 ***(Replaces 800 0169)***	17.814	3	400 1107	
WASHER, Plain — 60-61 80 ***(Replaces 800 0183)***	17.814	3	400 1120	
WASHER, Lock — 60 01 (4 Req.): 61 Thru 63 01 (2 Req.): 60-61 10-20 (2 Req.): 60-61 80 (3 Req.)	17.820	AR	G131100	NA
WASHER, Lock — 62-63 10-80	17.820	3	G120382	NA
NUT, Hexagon — 60 01 (4 Req.): 61 Thru 63 01 (2 Req.): 60-61 10-20 (2 Req.): 60-61 80 (3 Req.)	17.406	AR	G120370	NA
NUT, Hexagon — 62-63 10-80	17.406	3	G120369	NA
Bracket To Front Crossmember				
BOLT, Hexagon — 60 Thru 62 01	17.038	2	G181643	NA
WASHER, Bite — 62 01	10.002	2	29 686	
WASHER, Plain — 62 01 ***(Replaces 800 0169)***	17.814	2	400 1107	
WASHER, Lock — 62 01	17.820	2	G120382	NA
NUT, Hexagon — 62 01	17.406	2	G120369	NA
BRACE, Power Steering Cylinder To Sill Mounting Bracket To Crossmember				
60-61 10-20 (To Front Crossmember)	.....	1	315 2369	
60-61 80 (To Rear Crossmember)	.....	1	315 3404	
ATTACHING PARTS				
Brace To Bracket				
BOLT, Hexagon — 60-61 80	17.038	1	G181614	NA
WASHER, Lock — 60-61 80	17.820	1	G120214	NA
NUT, Hexagon — 60-61 80	17.406	1	G120368	

NOTE 10.427-1: Two Types of Power Steering Cylinder to Sill Mounting Bracket Brace Rods were installed on 63 10-80 (WPS) series. They can be identified as follows:

Type 1: The Brace Rod is mounted from the Power Steering Cylinder Mounting Bracket to the Crossmember.

Type 2: The Brace Rod is mounted from the Power Steering Cylinder Mounting Bracket to the left side of Side Sill.

Copyright 1963 American Motors Corp.

GROUP NO. — DESCRIPTION — YEAR and MODEL		PRIMARY GROUP NO.	PER CAR	PART NO.	CODE
Brace To Rear Crossmember					
BOLT, Hexagon.....	60-61 80	17.038	1	G181595	NA
WASHER, Lock.....	60-61 80	17.820	1	G120214	NA
NUT, Hexagon.....	60-61 80	17.406	1	G120368	
ROD, Power Steering Cylinder To Sill Mounting Bracket To Crossmember Brace					
60 Thru 63 01		.....	1	315 8666	
60-61 10		.....	1	314 7153	
62 10-80		.....	1	316 3031	
63 10-80		.....	1	316 6705	
60-61 20		.....	1	315 1448	
60-61 80 (WST)(WOD)		.....	1	315 3402	
60-61 80 (WAT)		.....	1	315 3403	
ATTACHING PARTS					
Rod To Front Crossmember					
BOLT, Hexagon.....	60 Thru 63 01	17.038	1	G181666	NA
BOLT, Hexagon.....	60-61 10	17.038	1	G181639	NA
BOLT, Hexagon.....	62 10-80	17.038	1	G181672	NA
BOLT, Hexagon.....	63 10-80 (Note 10.427-1 Type 1)	17.038	1	G181668	NA
BOLT, Hexagon.....	60-61 20	17.038	1	G181634	NA
WASHER, Bite.....	62-63 10-80 (Note 10.427-1 Type 1)	10.003	1	310 8995	
WASHER, Plain.....	60 Thru 63 01: 62 10-80 ***(Replaces 800 0179)***	17.814	1	400 1116	
WASHER, Plain.....	60-61 20 ***(Replaces 800 0165)***	17.814	2	400 1104	
WASHER, Lock.....	60 Thru 63 01: 62-63 10-80 (Note 10.427-1 Type 1)	17.820	1	G131100	NA
WASHER, Lock.....	60-61 10	17.820	1	G120382	NA
NUT, Hexagon.....	60 Thru 63 01: 62 10-80 (Note 10.427-1 Type 1)	17.406	1	G120370	NA
NUT, Hexagon.....	60-61 10	17.406	1	G120369	NA
Rod To Rear Crossmember					
BOLT, Hexagon.....	60-61 80	17.038	1	G181666	NA
WASHER, Lock.....	60-61 80	17.820	1	G131100	NA
NUT, Hexagon.....	60-61 80	17.406	1	G120370	NA
Rod To Sill Mounting Bracket					
WASHER, Plain.....	60-61 10-20 ***(Replaces 800 0165)***	17.814	AR	400 1104	
WASHER, Plain.....	60-61 80 ***(Replaces 800 0443)***	17.814	AR	400 1165	
WASHER, Lock.....	60 Thru 63 01: 62 10: 60 Thru 62 80	17.820	1	G120898	NA
WASHER, Lock.....	60-61 10-20	17.820	1	G120382	NA
WASHER, Lock.....	63 10-80	17.820	1	G120384	NA
NUT, Hexagon.....	60 Thru 63 01: 62 10: 60 Thru 62 80	17.406	1	G124634	NA
NUT, Hexagon.....	60-61 10-20	17.406	1	G120369	NA
NUT, Hexagon.....	63 10-80	17.406	1	G120371	NA
ROD, Power Steering Cylinder To Sill Mounting Bracket To Side Sill Brace					
63 10-80 (Note 10.427-1 Type 2)		.....	1	316 9417	
ATTACHING PARTS					
Rod To Sill Mounting Bracket					
WASHER, Lock.....	63 10-80	17.820	1	G120384	NA
NUT, Hexagon.....	63 10-80	17.406	1	G120371	NA
Rod To Left Side Sill Bracket					
WASHER, Lock.....	63 10-80 (Note 10.427-1 Type 2)	17.820	2	G121574	NA
NUT, Hexagon.....	63 10-80 (Note 10.427-1 Type 2)	17.406	2	G121358	NA

Copyright 1963 American Motors Corp.

GROUP NO. — DESCRIPTION — YEAR and MODEL	PRIMARY GROUP NO.	PER CAR	PART NO.	CODE
BRACKET, Power Steering Cylinder To Sill Mounting Bracket Brace Rod To Side Sill				
63 10-80 (Note 10.427-1 Type 2)	.....	1	316 9416	
PLATE, Power Steering Cylinder To Sill Mounting Bracket Reinforcement				
60 01 (Has 2 Mounting Holes) ***(Ref. Pr. List)***	.....	1	315 8661	
60 Thru 63 01 (Has 1 Mounting Hole)	.....	1	316 0579	
60-61 10-20	.....	1	314 7152	
10.430 PUMP ASSEMBLY, Power Steering				
60 01-10 (LAC-Note 10.430-1 Type 1)...(Incl. Reservoir And Pulley)	.....	1	315 8270	
60 01-10 (LAC-Note 10.430-1 Type 2): 61 01 (LHE-LAC)...(Incl. Reservoir And Pulley) ***(Replaces 315 9623)***	.....	1	315 9634	
61 01-10 (OHV-LAC)...(Incl. Reservoir And Pulley). ***(Replaces 316 1447, 320 3265)***	.....	1	320 3646	
61 01 (LHE-WAC)...(Incl. Reservoir, Pulley And Bracket)	.....	1	316 0610	
61 01-10 (OHVC-WAC-Note 10.430-2 Type 1)...(Incl. Reservoir, Pulley And Bracket) ***(Ref. Pr. List)***	.....	1	316 0891	
61 01-10 (OHVC-WAC-Note 10.430-2 Type 2)...(Incl. Reservoir, Pulley And Bracket) ***(Replaces 320 3098)***	.....	1	320 3647	
62-63 01-10 (Six-LAC)...(Incl. Reservoir & Pulley) ***(Replaces 316 3775)***	.....	1	320 3646	
64-65 01 (LHE-LAC)(OHV-196-LAC): 64 10 (OHV-196-LAC)...(Incl. Reservoir & Pulley) ***(Replaces 317 3018)***	.....	1	320 5396	
62 Thru 63 01 (WAC): 62 10 (WAC): 63 10 (OHVC-WAC)...(Incl. Reservoir And Pulley)	.....	1	316 3831	
64 01 (WAC): 65 01 (OHV-196-WAC): 64 10 (OHVC-196-WAC)...(Incl. Reservoir & Pulley)	.....	1	320 5398	
60 10 (WAC-Note 10.430-1 Type 1)...(Incl. Reservoir, Pulley And Plate) ***(Ref. Pr. List)***	.....	1	315 8271	
60 10 (WAC-Note 10.430-1 Type 2)...(Incl. Reservoir, Pulley And Plate)	.....	1	315 9622	
60 10 (WAC-Note 10.430-1 Type 3)...(Incl. Reservoir, Pulley And Plate)	.....	1	320 3099	
61 10 (OHVA-WAC)...(Incl. Reservoir And Pulley)	.....	1	316 0878	
63 10 (OHVA-WAC)...(Incl. Reservoir And Pulley)	.....	1	316 9559	
64 10 (OHVA-WAC)...(Incl. Reservoir And Pulley)	.....	1	320 5397	

NOTE 10.430-1: Two Types pf Power Steering Pumps were installed on 60 01-10 (WPS-LAC) and Three Types on 60 10 (WPS-WAC). They can be identified as follows.
Type 1: The Reservoir Oil Filler Tube is 1-7/8" O. D.
Type 2: The Reservoir Oil Filler Tube is 2-1/8" O. D. and Pump Pulley (on Pump) is 5-1/2" O. D.
Type 3: The Reservoir Oil Filler Tube is 2-1/8" O. D. and Pump Pulley (on Pump) is 6-3/8" O. D.

NOTE 10.430-2: Two Types of Steering Pumps were installed on 61 01-10 (OHVC-WPS-WAC). They can be identified as follows:
Type 1: The Pump Pulley (on Pump) is 5-1/2" O. D.
Type 2: The Pump Pulley (on Pump) is 6-3/8" O. D.

NOTE 10.430-3: Two Types of Power Steering Pumps were installed on the 63 10-80 (V8) series. They can be identified as follows:
Type 1: The Front Side of Pump is mounted to Adjusting Bracket.
Type 2: The Rear Side of Pump is mounted to Adjusting Bracket.

NOTE 10.430-4: Two Types of Power Steering Pumps were installed on 64 10-80 (V8) Series. They can be identified as follows:
Type 1: The Pump Pulley (on Pump) is 4-7/16" O. D.
Type 2: The Pump Pulley (on Pump) is 4-3/4" O. D.

NOTE 10.430-5: On 65 10 (OHV-232-LAC) Used prior to Car Sequence No. W-041902 and E-047177; On 165 10 (OHV-232-Can) Used prior to Car Serial No. LT-505488; On 65 10 (OHV-199-LAC) Used prior to Car Sequence No. W-042008 and E-047209; On 165 10 (OHV-199-Can) used prior to Car Serial No. JT-501652.

NOTE 10.430-6: On 65 10 (OHV-232-LAC) Used beginning with Car Sequence No. W-041902 and E-047177; On 165 10 (OHV-232-Can) Used beginning with Car Serial No. LT-505388; On 65 10 (OHV-199-LAC) Used beginning with Car Sequence No. W-042008 and E-047209; On 165 10 (OHV-199-Can) Used beginning with Car Serial No. JT-501652.

Copyright 1963 American Motors Corp.

GROUP NO. — DESCRIPTION — YEAR and MODEL	PRIMARY GROUP NO.	PER CAR	PART NO.	CODE
64-65 10 (OHV-232-WAC): 65 10 (OHV-199-WAC)...(Incl. Pulley).....	.....	1	317 2671	
63 10-80 (V8-Note 10.430-3 Type 2): 64 10-80 (V8-Note 10.430-4 Type 1) ...(Less Reservoir And Adj. Plate).....	.....	1	320 4595	
64-65 10-80 (V8-Note 10.430-4 Type 2)...(Less Reservoir And Adj. Plate)..... ***(Use 320 7032)***	.....	1	320 5292	
60 20-80 (LAS): 61-62 20-80...(Less Reservoir, Pulley And Adj. Plate).....	.....	1	320 1902	
60 20-80 (WAS): 63 80 (Note 10.430-3 Type 1)...(Less Reservoir, Pulley And Adj. Plate)..... ***(Replaces 320 1447)***	.....	1	320 4039	
65 80 (OHV-232-WAC)...(Incl. Reservoir & Pulley).....	.....	1	317 7279	
65 01 (OHV-199-LAC)(OHV-232-LAC): 64-65 10 (OHV-232-LAC) 65 10 (OHV-199-LAC): 65 80 (OHV-232-LAC)...(Incl. Reservoir And Pulley)..... ***(Replaces 317 2669)***	.....	1	317 7278	#

ATTACHING PARTS

Pump To Bracket

BOLT, Hexagon.....	63 10-80 (V8-Note 10.430-3 Type 1).....	17.038	2	G180124	NA
WASHER, Plain.....	63 10-80 (V8-Note 10.430-1) ***...(Replaces 800 0446)***	17.814	2	400 1166	
WASHER, Lock	63 10-80 (V8-Note 10.430-3 Type 1).....	17.822	2	G114606	NA

Pump To Cylinder Head

STUD.....	60 20-80 (LAS-2 Req.): 61 Thru 65 10-20-80 (V8-3 Req.-Note 10.430-3 Type 2).....	4.190	AR	313 5884	
WASHER, Plain.....	60 20-80 (LAS-2 Req.): 61 Thru 65 10-20-80 (V8-3 Req.-Note 10.430-3 Type 2) ***(Replaces 800 0331)***	17.814	AR	400 1161	
WASHER, Lock	60 20-80 (LAS-2 Req.): 61 Thru 65 10-20-80 (V8-3 Req.-Note 10.430-3 Type 2).....	17.820	AR	G120382	
NUT, Hexagon.....	60 20-80 (LAS-2 Req.): 61 Thru 65 10-20-80 (V8-3 Req.-Note 10.430-3 Type 2).....	1.141	AR	314 9590	

VALVE, Power Steering Pump Pressure Relief

60 01-10 (Note 10.430-1 Type 1).....	.....	1	320 2168	
60-61 01-10 (Note 10.430-1 Type 2).....	.....	1	320 2386	
62 Thru 65 01-10 (Six): 65 80 (Six).....	.....	1	320 3283	

GASKET, Power Steering Pump Pressure Relief Valve

60 Thru 65 01-10 (Six): 65 80 (Six).....	.....	1	320 2169	

SEAT, Power Steering Pump Discharge Tube (For Pressure Hose)

60 Thru 63 01-10 (Six)...(Less Screen).....	.....	1	320 2171	
64-65 01-10 (Six-Ferrule): 65 80 (Six-Ferrule)...(Incl. Screen).....	.....	1	320 5221	

VENTURI, Power Steering Pump Flow Director

60-62 20-80 (Has A Round Outer Circumference).....	.....	1	320 0869	
60 Thru 65 10-20-80 (V8)(Has A Cupped Outer Circumference).....	.....	1	320 4043	

SEAL KIT, Power Steering Pump

60 01-10 (Note 10-430-1 Types 2 And 3): 61 Thru 64 01-10 (Six)...(Incl. (Incl. 1-3202387, 1-3202169, 1-3202658, 1-3202385).....	.....	1	320 5286	
63-64 10-80 (V8-Note 10.430-4 Type 1): 60 Thru 62 20-80...(Incl. 2-3118849, 1-3116438, 1-3200866, 1-3200867, 1-3204042 And 1-3201079)..... ***(Replaces 320 0943)(Use 320 5299)***	.....	1	320 4045	#
64-65 10-80 (V8-Note 10.430-4 Type 2)...(Incl. 2-3118849, 1-3116438, 1-3200866, 1-3200867, 1-3205298, And 1-3205302).....	.....	1	320 5299	

Copyright 1963 American Motors Corp.

GROUP NO. — DESCRIPTION — YEAR and MODEL	PRIMARY GROUP NO.	PER CAR	PART NO.	CODE
BODY, Power Steering Pump				
63-64 10-80 (V8-Note 10.430-4 Type 1)	.....	1	320 4040	
64-65 10-80 (V8-Note 10.430-4 Type 2)...(Incl. Shaft Bearing	.....	1	320 5295	#
60 Thru 62 20-80...(Incl. Shaft Bearing)	.....	1	320 0860	
GASKET, Power Steering Pump Body To Cover				
60 Thru 65 10-20-80 (V8)	.....	1	320 0866	
SEAL, Power Steering Pump By-Pass ("O" Ring)				
60 Thru 65 10-20-80 (V8)	.....	1	320 0867	
10.435 CARRIER KIT, Power Steering Pump				
60 Thru 65 10-20-80 (V8)...(Incl. Cam & Rollers)	.....	1	320 1143	
PIN, Power Steering Pump Rotor Lock				
60 Thru 65 10-20-80 (V8)	.....	1	311 6443	
PIN, Power Steering Pump Cam To Body Lock				
60 Thru 65 10-20-80 (V8)	.....	1	320 0874	
10.440 SHAFT, Power Steering Pump Drive				
60 Thru 65 10-20-80 (V8)...(Less Bearing) ***(Replaces 320 0863)***	.....	1	320 4041	
SEAL, Power Steering Pump Drive Shaft Oil				
60 01-10 (Note 10.430-1 Type 1)	.....	1	320 2170	
60 Thru 65 01-10 (Six-Note 10.430-1 Type 2): 65 80 (Six)	.....	1	320 2387	
60 Thru 62 20-80	.....	1	311 6442	
63-64 10-80 (V8-Note 10.430-4 Type 1)	.....	1	320 4042	
64-65 10-80 (V8-Note 10.430-4 Type 2)	.....	1	320 5298	
RING, Power Steering Pump Drive Shaft Retainer Snap				
60 Thru 65 10-20-80 (V8)	.....	1	320 0868	
10.445 COVER, Power Steering Pump Body				
60 20-80 (LAS): 61 Thru 65 10-20-80 (V8-Note 10.430-3 Type 2)...(Incl. Dowels And Bushings)	.....	1	320 1903	
60 20-80 (WAS)	.....	1	320 0861	
63-64 10-80 (V8-10.430-3 Type 1)	.....	1	320 4436	
ATTACHING PARTS				
Cover To Pump Body				
BOLT, Hexagon..... 60 20-80 (LAS-2 Req.)(WAS-2" Long-1 Req.): 61 Thru 64 20-80 (2 Req.-2" Long)	17.038	AR	G179847	NA
PIN, Dowel ..... 60 Thru 65 10-20-80 (V8)	.....	2	311 8832	
BOLT, Hexagon ..... 60 20-80 (WAS-3-3/4" Long): 63 80 (3-3/4" Long) ***(Replaces 800 0469)***	.....	1	400 0949	

Copyright 1963 American Motors Corp.

GROUP NO. — DESCRIPTION — YEAR and MODEL	PRIMARY GROUP NO.	PER CAR	PART NO.	CODE
VALVE, Power Steering Pump Control (In Cover)				
60 Thru 64 10-20-80 (V8-Note 10.430-4 Type 1)	.....	1	320 1196	
64-65 10-80 (V8-Note 10.430-4 Type 2)	.....	1	320 5296	
PLUG, Power Steering Pump Control Valve Retaining				
60 Thru 65 10-20-80 (V8)	.....	1	320 0865	
SEAL, Power Steering Pump Control Valve Retaining Plug				
60 Thru 65 10-20-80 (V8)	.....	1	311 6438	
SPRING, Power Steering Pump Control Valve Relief Valve				
60 Thru 64 10-20-80 (V8-Note 10.430-4 Type 1)	.....	1	320 0864	
64-65 10-80 (V8-Note 10.430-4 Type 2)	.....	1	320 5297	
SEAT, Power Steering Pump Discharge (In Cover)(For Pressure Hose)				
60 Thru 62 20-80	.....	1	320 0873	
63 Thru 65 10-80 (V8)	.....	1	320 4044	
10.450 BRACKET, Power Steering Pump Mounting				
60 Thru 65 01 (LHE-LAC)	.....	1	315 9431	
60-61 01-10 (OHV-LAC)	.....	1	315 4720	
60 20-80 (WAS)	.....	1	315 5445	
63 10-80 (V8-Note 10.430-3 Type 1)	.....	1	315 3535	
ATTACHING PARTS				
Bracket To Cylinder Head				
STUD ..... 60 Thru 65 01 (LHE-LAC)	1.063	3	313 4405	
BOLT, Hexagon ..... 63 10-80 (V8-Note 10.430-3 Type 1)	17.038	3	G180121	
WASHER, Plain ..... 60 Thru 65 01 (LHE-LAC)	1.034	3	24 545	
WASHER, Lock ..... 63 10-80 (V8-Note 10.430-3 Type 1)	17.822	3	G114606	NA
NUT, Hexagon ..... 60 Thru 65 01 (LHE-LAC) ..... *(Replaces 800 0292)*	17.406	3	400 1247	
Bracket To Pump				
BOLT, Hexagon ..... 60-61 01-10 (OHV-LAC-1-1/4" Long)	17.038	1	G180124	NA
BOLT, Hexagon ..... 60-61 01-10 (OHV-LAC-7/8" Long)	17.038	2	G180121	NA
SPACER ..... 60-61 01-10 (OHV-LAC)	.....	1	315 8273	
WASHER, Lock ..... 60-61 01-10 (OHVC-LAC)	17.820	3	G120382	NA
Pump And Compressor Mounting Bracket To Cylinder Head				
BOLT, Hexagon ..... 60 20-80 (WAS-7/8" Long)	17.038	3	G180121	NA
BOLT, Hexagon ..... 60 20-80 (WAS-1-3/8" Long)	17.038	1	G180125	NA
WASHER, Lock ..... 60 20-80 (WAS)	17.822	3	G138489	NA
Bracket To Support Plate				
BOLT, Hexagon ..... 60-61 01-10 (OHV-LAC)	17.038	1	G181639	NA
WASHER, Plain ..... 60-61 01-10 (OHV-LAC) ..... *(Replaces 800 0165)*	17.814	1	400 1104	
WASHER, Lock ..... 60-61 01-10 (OHV-LAC)	17.820	1	G120382	NA
NUT, Hexagon ..... 60-61 01-10 (OHV-LAC)	17.406	1	G120369	NA
Bracket To Cylinder Block				
BOLT, Hexagon ..... 60-61 01-10 (OHVC-LAC)	17.038	1	G180122	NA
BOLT, Hexagon ..... 61 10 (OHVA-LAC)	17.038	1	G180123	NA
WASHER, Plain ..... 60-61 01-10 (OHV) ..... *(Replaces 800 0165)*	17.814	1	400 1104	
WASHER, Lock ..... 60-61 01-10 (OHV)	17.820	1	G120382	NA

Copyright 1963 American Motors Corp.

GROUP NO. — DESCRIPTION — YEAR and MODEL	PRIMARY GROUP NO.	PER CAR	PART NO.	CODE
PLATE, Power Steering Pump Mounting Bracket To Cylinder Head Support ("L" Shape)				
60-61 01-10 (OHV-LAC)	.....	1	315 4700	
ATTACHING PARTS				
Plate To Cylinder Head				
BOLT, Hexagon..... 60-61 01-10 (OHV-LAC)	17.038	2	G180121	NA
WASHER, Lock ..... 60-61 01-10 (OHV-LAC)	17.820	2	G120382	NA
BRACE, Power Steering Pump To Mounting Bracket				
60 01 (LHE-LAC): 61 01 (LHE): 62-63 01 (LHE-WAC)	.....	1	315 9432	
61 01-10 (OHV-WAC)	.....	1	316 2193	
62 01-10 (OHV-WAC): 63 01-10 (OHVC-WAC)	.....	1	316 3866	
64 01 (OHV-WAC): 63 10 (OHVA-WAC): 64-65 10 (OHV-196-WAC)	.....	1	316 9561	
64 01 (LHE-WAC)	.....	1	317 0295	
ATTACHING PARTS				
Brace To Pump				
STUD..... 60 01 (LHE-LAC): 61 01 (LHE)(OHV-WAC): 62 Thru 64 01 (LHE-WAC): 62 Thru 65 01 (OHV-196-WAC): 61 Thru 65 10 (OHV-196-WAC).	10.465	1	315 9434	
WASHER, Plain..... 60 01 (LHE-LAC): 61 01 (LHE)(OHV-WAC): 62 Thru 64 01 (LHE-WAC): 62 Thru 65 01 (OHV-196-WAC): 61 Thru 65 10 (OHV-196-WAC).	17.814	1	G120393	NA
WASHER, Lock ..... 60 01 (LHE-LAC): 61 01 (LHE)(OHV-WAC): 62 Thru 64 01 (LHE-WAC): 62 Thru 65 01 (OHV-196-WAC): 61 Thru 65 10 (OHV-196-WAC).	17.820	1	G120214	NA
NUT, Hexagon..... 60 01 (LHE-LAC): 61 01 (LHE)(OHV-WAC): 62 Thru 64 01 (LHE-WAC): 62 Thru 65 01 (OHV-196-WAC): 61 Thru 65 10 (OHV-196-WAC).	17.406	1	G120368	NA
Brace To Mounting Bracket				
BOLT, Hexagon..... 60 01 (LHE-LAC): 61 01 (LHE)	17.038	1	G180077	NA
WASHER, Lock ..... 60 01 (LHE-LAC): 61 01 (LHE)	17.820	1	G120214	NA
Brace To Compressor Mounting Bracket				
BOLT, Hexagon..... 62-63 01 (LHE-WAC)	17.038	1	G179817	NA
Brace To Bracket (At Compressor Mounting Bracket)				
BOLT, Hexagon..... 61 Thru 64 01 (OHV-WAC): 64 01 (LHE-WAC): 61-62 10 (OHV-WAC)	17.038	1	G181596	NA
BOLT, Hexagon 63-64 10 (OHV-196-WAC)	17.038	1	G181595	NA
WASHER, Plain..... 61 Thru 64 01-10 (OHV-196-WAC): 64 01 (LHE-WAC)	17.814	1	G120393	NA
WASHER, Lock ..... 61 Thru 64 01-10 (OHV-196-WAC): 64 01 (LHE-WAC)	17.820	1	G120214	NA
NUT, Hexagon..... 61 Thru 64 01-10 (OHV-196-WAC): 64 01 (LHE-WAC)	17.406	1	G120368	NA
BRACE, Power Steering Pump To Block Or Compressor Mounting Bracket				
65 01-80 (OHV-232): 65 01-10 (OHV-199): 65 01-10 (OHV-232) ..... ***(Replaces 317 2666)***	.....	1	317 8304	#

Copyright 1963 American Motors Corp.

GROUP NO. — DESCRIPTION — YEAR and MODEL	PRIMARY GROUP NO.	PER CAR	PART NO.	CODE
ATTACHING PARTS				
Brace To Compressor Mounting Bracket				
BOLT, Hexagon ..... 65 01-80 (OHV-232-WAC): 64-65 10 (OHV-232-WAC): 65 01-10 (OHV-199-WAC)	17.038	1	G180077	NA
WASHER, Lock ..... 65 01-80 (OHV-232-WAC): 64-65 10 (OHV-232-WAC): 65 01-10 (OHV-199-WAC)	17.820	1	G120214	NA
Brace To Bracket (At Cylinder Block)				
BOLT, Hexagon ..... 64-65 10 (OHV-232-WAC): 65 01-10 (OHV-199-LAC): 65 80 (OHV-232-LAC)	17.038	1	G181595	NA
WASHER, Lock ..... 64-65 10 (OHV-232-LAC): 65 01-10 (OHV-199-LAC): 65 80 (OHV-232-LAC)	17.820	1	G120214	NA
NUT, Hexagon..... 64-65 10 (OHV-232-LAC): 65 01-10 (OHV-199-LAC): 65 80 (OHV-232-LAC)	17.406	1	G120368	NA
Brace To Pump				
STUD..... 65 01-80 (OHV-232): 64-65 10 (OHV-232): 65 01-10 (OHV-199).....	10.465	1	315 9434	#
WASHER, Plain..... 65 01-80 (OHV-232): 64-65 10 (OHV-232): 65 01-10 (OHV-199).....	17.814	1	G120393	NA#
WASHER, Lock ..... 65 01-80 (OHV-232): 64-65 10 (OHV-232): 65 01-10 (OHV-199).....	17.820	1	G120214	NA#
NUT, Hexagon..... 65 01-80 (OHV-232): 64-65 10 (OHV-232): 65 01-10 (OHV-199).....	17.406	1	G120368	NA#
BRACE, Power Steering Pump To Cylinder Head				
63 Thru 65 01 (OHV-196-LAC): 64 10 (OHV-196-LAC)	.....	1	317 3019	#
60 20-80 (WAS): 63 80	.....	1	315 6621	
ATTACHING PARTS				
Brace To Pump				
BOLT, Hexagon ..... 60 20-80 (WAS): 63 80 .....***(Replaces 800 0469)***	17.038	1	400 0949	
STUD..... 64 01-10 (OHV-LAC)	10.465	1	315 9434	
WASHER, Plain..... 63 80	17.814	2	G120394	NA
WASHER, Plain..... 63 Thru 65 01 (OHV-196-LAC): 64 10 (OHV-196-LAC)	17.814	1	G120393	NA#
WASHER, Lock ..... 63 Thru 65 01 (OHV-196-LAC): 64 10 (OHV-196-LAC)	17.820	1	G120214	NA#
NUT, Hexagon..... 63 Thru 65 01 (OHV-196-LAC): 64 10 (OHV-196-LAC)	17.406	1	G120368	NA#
NUT, Hexagon..... 63 80	17.406	2	G120377	NA
Brace To Bracket (At Cylinder Head)				
BOLT, Hexagon ..... 63 Thru 65 01 (OHV-196-LAC): 64 10 (OHV-196-LAC)	17.038	1	G181595	NA#
WASHER, Lock ..... 63 Thru 65 01 (OHV-196-LAC): 64 10 (OHV-196-LAC)	17.820	1	G120214	NA#
NUT, Hexagon..... 63 Thru 65 01 (OHV-196-LAC): 64 10 (OHV-196-LAC)	17.406	1	G120368	NA#
BRACE, Power Steering Pump To Water Manifold				
60 20-80 (LAS): 61 Thru 64 10-20-80 (V8-Note 10.430-3 Type 2)	.....	1	315 9328	
ATTACHING PARTS				
Brace To Pump				
STUD..... 60 20-80 (LAS): 61 Thru 64 10-20-80 (V8-Note 10.430-3 Type 2 And Note 10.430-4 Type 1)	.....	1	320 2192	
WASHER, Lock ..... 60 20-80 (LAS): 61 Thru 64 10-20-80 (V8-Note 10.430-3 Type 2 And Note 10.430-4 Type 1)	17.820	1	G120382	NA
NUT, Hexagon..... 60 20-80 (LAS): 61 Thru 64 10-20-80 (V8-Note 10.430-3 Type 2 And Note 10.430-4 Type 1)	17.406	1	G120369	NA

Copyright 1963 American Motors Corp.

GROUP NO. — DESCRIPTION — YEAR and MODEL	PRIMARY GROUP NO.	PER CAR	PART NO.	CODE
Brace To Water Manifold				
BOLT, Hexagon..... 60 Thru 64 10-20-80 (V8-LAC-Note 10.430-3 Type 2 And Note 10.430-4 Type 1).....	17.038	1	G180126	NA
SPACER..... 60 Thru 64 10-20-80 (V8-LAC-Note 10.430-3 Type 2 And Note 10.430-4 Type 1).....	8.180	1	315 3390	
WASHER, Plain..... 60 Thru 64 10-20-80 (V8-Note 10.430-3 Type 2 And Note 10.430-4 Type 1)..*(Replaces 800 0331)*	17.814	2	400 1161	
WASHER, Lock..... 60 Thru 64 10-20-80 (V8-Note 10.430-3 Type 2 And Note 10.430-4 Type 1).....	17.820	1	G120382	NA
BRACKET, Power Steering Pump Brace To Cylinder Head (At Cylinder Head)				
64-65 01 (OHV-196-LAC): 64 10 (OHV-196-LAC).....	.....	1	317 2664	
BRACKET, Power Steering Pump Brace To Compressor Mounting Bracket				
61 Thru 65 01 (OHV-196-WAC): 61 Thru 64 10 (OHV-196-WAC).....	.....	1	316 2194	
64 01 (LHE-WAC).....	.....	1	317 0294	
ATTACHING PARTS				
Bracket To Compressor Mounting Bracket				
STUD..... 61 01-10 (OHV-WAC): 62 10 (WAC).....	17.718	1	G107290	
BOLT, Hexagon..... 62 01 (LHE-WAC).....	17.038	1	G180121	NA
BOLT, Hexagon..... 64 01 (LHE-WAC).....	17.038	1	G180122	NA
WASHER, Plain..... 61 01-10 (OHV-WAC).....*(Replaces 800 0163)*	17.814	1	400 1102	
WASHER, Lock..... 61-62 01-10 (OHV-WAC): 64 01 (LHE-WAC).....	17.820	1	G120382	NA
NUT, Hexagon..... 61 01-10 (OHV-WAC): 62 10 (WAC).....	17.406	1	G120369	NA
NUT, Hexagon..... 64 01 (LHE-WAC).....	17.406	1	G120368	NA
BRACKET, Power Steering Pump Brace To Cylinder Block				
64-65 10 (OHV-232-LAC): 65 01-80 (OHV-232-LAC): 65 01-10 (OHV-199-LAC)	.....	1	317 2664	
ATTACHING PARTS				
Bracket To Cylinder Block				
BOLT, Hexagon..... 65 01-80 (OHV-232-LAC): 65 01-10 (OHV-199-LAC): 64-65 10 (OHV-232-LAC).....	17.038	1	G180122	
WASHER, Lock..... 65 01-80 (OHV-232-LAC): 65 01-10 (OHV-199-LAC): 64-65 10 (OHV-232-LAC).....	17.820	1	G120382	NA

10.455 PULLEY, Power Steering Pump

60 01-10 (LAC-Note 10.430-1 Type 1).....	.....	1	320 2164	
60 01-10 (LAC-Note 10.430-1 Type 2): 61 01 (LHE-LAC).....	.....	1	315 9625	
61 01-10 (OHV-LAC): 62 Thru 65 01 (LAC): 62 Thru 65 10 (Six-LAC): 65 80 (Six-LAC).....	.....	1	316 1448	
61-62 01 (LHE-WAC-4-7/8" Dia.).....	.....	1	315 9621	
61 01-10 (OHVC-WAC-5-1/2" Dia.): 60 10 (WAC-Note 10.430-1 Type 2).....*(Ref. Pr. List)*	.....	1	315 9620	
61 Thru 65 01 (WAC-6-3/8" Dia.): 60 10 (WAC-Note 10, 430-1 Type 3): 61 Thru 65 10 (Six-WAC-6-3/8" Dia.): 65 80 (Six-WAC).....	.....	1	316 3009	
60 10 (WAC-Note 10.430-1 Type 1).....	.....	1	315 8548	
61 10 (OHVA-WAC).....*(Ref. Pr. List)*	.....	1	316 0877	
60 20-80 (LAS): 61 Thru 64-10-20-80 (V8-Note 10.430-4 Type 1).....	.....	1	315 4656	
64-65 10-80 (V8-Note 10.430-4 Type 2): 65 80.....	.....	1	320 5293	
60 20-80 (WAS).....	.....	1	315 5388	
ATTACHING PARTS				
Pulley To Pump				
BOLT, Hexagon..... 60 20-80 (LAS): 61 Thru 65 10-20-80 (V8).....*(Replaces 800 0311)*	17.038	1	400 0942	
WASHER, Plain..... 60 20-80 (LAS): 61 Thru 65 10-20-80 (V8).....	.....	1	314 1080	
WASHER, Lock..... 60 20-80 (LAS): 61 Thru 65 10-20-80 (V8).....	17.820	1	G120214	NA

Copyright 1963 American Motors Corp.

GROUP NO. — DESCRIPTION — YEAR and MODEL	PRIMARY GROUP NO.	PER CAR	PART NO.	CODE
Pulley To Hub				
BOLT, Hexagon..... 60 20-80 (WAS)	17.038	3	G181593	NA
WASHER, Lock ..... 60 20-80 (WAS)	17.822	3	G138485	NA
KEY, Power Steering Pump Pulley				
60 20-80 (LAS): 61 Thru 65 10-20-80 (V8)	17.344	1	G106749	
HUB, Power Steering Pump Pulley				
60 20-80 (WAS)	.....	1	315 5450	
ATTACHING PARTS				
Hub To Pump Shaft				
BOLT, Hexagon ..... 60 20-80 (WAS) .....***(Replaces 800 0311)***	17.038	1	400 0942	
WASHER, Plain..... 60 20-80 (WAS).....	.....	1	314 1080	
WASHER, Lock ..... 60 20-80 (WAS).....	17.820	1	G120214	NA
KEY, Power Steering Pump Pulley Hub				
60 20-80 (WAS).....	17.344	1	G106749	
BELT, Power Steering Pump				
60 01 (LAC): 61 01 (LHE-LAC): 60 10 (LAC-Note 10.430-1 Type 2)	.....	1	315 8675	
61 01-10 (OHVC-LAC).....	.....	1	315 4658	
61-62 01 (LHE-WAC-Used With 4-7/8" Dia. Pulley).....	.....	1	315 9667	
61 01 (LHE-WAC-Used With 6-3/8" Dia. Pulley): 62 Thru 65 01 (LHE-LAC)...	13.425	1	313 9952	
61 01 (OHV-WAC-Note 10.430-1 Type 1): 60-61 10 (OHV-WAC-Note 10.430-1 Type 1): 60 Thru 62 20-80 (LAC): 63-64 10-80 (V8-LAC-Note 10.430-1): ***163 80 (Can-LAC)*** .....***(Replaces 314 5967, 320 4317)***	13.425	1	317 2681	
61 01-10 (OHVC-WAC-Note 10.430-1 Type 2): 62 01 (OHV-LAC-46"): 61 10 (OHVA-WAC-Used With 6-3/8" Dia. Pulley): 62 Thru 64 10 (OHVA-LAC-46").....	.....	1	316 2995	
62 Thru 64 01-10 (OHVC-196-44-5/8"): 65 01 (OHV-LAC)(WAC): 65 10 (OHV-199-LAC)(OHV-232-LAC) .....***(Replaces 316 3938)***	.....	1	316 9177	
62-63 01 (LHE-WAC-Used With 6-3/8" Dia. Pulley).....	13.425	1	316 9175	
60 10 (WAC-Note 10.430-1 Type 1).....	13.425	1	315 8585	
60 10 (WAC-Note 10.430-1 Type 2).....	.....	1	315 3773	
60 10 (WAC-Note 10.430-1 Type 3).....	.....	1	316 2997	
61 10 (OHVA-WAC-Used With 5-1/2" Dia. Pulley)	13.425	1	316 0871	
61 10 (OHVA-LAC).....	.....	1	314 3343	
62 01 (OHV-WAC-46"): 63-64 01 (LHD-WAC): 62 Thru 64 10 (OHVA-WAC).....***(Replaces 316 9178)***	.....	1	316 9563	
60-61 20-80 (WAC).....	.....	1	315 8530	
62 80 (WAC): 64 10-80 (V8-WAC-Note 10.430-4 Type 1) ...***(Replaces 315 3772)***	13.425	1	316 4113	
63-64 10-80 (V8-LAC-Note 10.430-4 Type 1) .....***(Replaces 320 4317)***	.....	1	317 2681	
64-65 10-80 (V8-LAC-Note 10.430-4 Type 2): 64 10 (OHV-232-WAC) .....***(Replaces 317 2668)***	.....	1	317 4413	
63 10-80 (V8-WAC).....	13.425	1	316 6915	
64-65 10-80 (V8-WAC-Note 10.430-4 Type 2)	13.425	1	317 5222	
65 10 (OHV-199-WAC)(OHV-232-WAC).....	.....	1	317 7706	
65 80 (OHV-232-WAC)	.....	1	317 7235	
65 80 (OHV-232-LAC)	.....	1	317 7281	

Copyright 1963 American Motors Corp.

GROUP NO. — DESCRIPTION — YEAR and MODEL	PRIMARY GROUP NO.	PER CAR	PART NO.	CODE
PLATE, Power Steering Pump Pulley Belt Adjusting				
60-61 01 (LHE)	.....	1	315 9429	
61 01-10 (OHVC-WAC)	.....	1	316 0894	
61 Thru 65 01 (LHE-LAC)	.....	1	316 3928	
62 Thru 65 01 (OHVC-196-WAC): 62 Thru 64 10 (OHVC-196-WAC)	.....	1	316 3815	
62 01-10 (OHVC-LAC-WAE)	.....	1	316 4042	
62 01-10 (OHVC-LAC-LAE): 63 Thru 65 01 (OHVC-196-LAC): 63-64 10 (OHVC-196-LAC): 62 10 (OHVA-LAC)	13.430	1	316 3765	
64 01 (LHE-WAC)	.....	1	317 0299	
65 01-10 (OHV-232-LAC-Note 10.430-6): 65 01-10 (OHV-199-LAC-Note 10.430-6)	.....	1	317 7759	
60 10 (WAC)	.....	1	315 8576	
61 10 (OHVA-WAC) ***(Replaces 316 0874)***	13.430	1	316 4146	
62 10 (OHVA-WAC)	.....	1	316 3814	
63-64 10 (OHVA-WAC)	.....	1	316 9555	
64 10 (OHVC-232-Used Less Reinforcement)	.....	1	317 3487	
64-65 10 (OHV-232-Note 10.430-5 Used with Reinforcement): 65 10 (OHV-199-Note 10.430-5)	.....	1	317 7680	
60 20-80 (LAS): 61 20-80 (Has Two Adjusting Slots) ***(Ref. Pr. List)***	.....	1	320 1904	
60 20-80 (WAS)	.....	2	315 5479	
61 20-80 (Has Three Adjusting Slots): 62 80: 63 Thru 65 10-80 (V8- Note 10.430-3 Type 2)	.....	1	320 2840	#
63 10-80 (V8-Note 10.430-3 Type 1)	.....	1	316 6903	
65 80 (OHV-232)	.....	1	317 7174	
ATTACHING PARTS				
Plate To Pump				
BOLT, Hexagon..... 60-61 01 (LHE-1" Long)	17.038	2	G180122	NA
BOLT, Hexagon..... 60-61 01 (LHE-1-3/8" Long)	17.038	1	G180125	NA
BOLT, Hexagon ..... 62 Thru 65 01 (LHE)(OHV-196): 63-64 10 (OHVA-WAC)(OHVC-196)	17.038	2	G179817	NA
BOLT, Hexagon..... 61 01 (OHV-WAC-1-1/4" Long): 60 10 (WAC-1-1/4" Long): 61 10 (OHVC-WAC-1-1/4" Long)	17.038	1	G180124	NA
BOLT, Hexagon..... 61 01 (OHV-WAC-7/8" Long): 60 10 (WAC-7/8" Long): 61 10 (OHVC-WAC-7/8" Long)	17.038	2	G180121	NA
BOLT, Hexagon..... 61 10 (OHVA-WAC)	17.038	2	G179818	NA
BOLT, Hexagon ..... 65 01-10-80 (OHV-232): 63-64 10 (OHVA-WAC): 65 01-10 (OHV-199)	17.038	2	G180079	NA
BOLT, Hexagon..... 60 20-80 (LAS)	17.038	2	G496641	NA
BOLT, Hexagon..... 60 20-80 (WAS)	17.038	3	G179849	NA
BOLT, Hexagon ..... 61-62 20-80: 63 10-80 (V8-Note 10.430-3 Type 2): 64 10-80 (V8-Note 10.430-4 Type 1)	17.038	2	G443319	NA
BOLT, Hexagon ..... 64-65 10-80 (V8-Note 10.430-4 Type 2)	17.038	3	400 0949	
BOLT, Hexagon..... 63 80 (Note 10.430-1 Type 1)	17.038	3	G179850	NA
STUD..... 60 20-80 (LAS): 61-62 20-80: 63 10-80 (V8-Note 10.430-3 Type 2): 64 10-80 (V8-Note 10.430-4 Type 2)	.....	1	320 2192	
WASHER, Plain..... 61 10 (OHVA-WAC)	17.814	2	G120393	NA
SPACER..... 61 01 (OHV-WAC): 60 10 (OHVC-WAC)	10.450	1	315 8273	
SPACER..... 64-65 10-80 (V8-Note 10.430-4 Type 2)	.....	3	320 5294	
WASHER, Lock..... 60-61 01 (3 Req.): 60-61 10 (WAC-3 Req.)	17.820	AR	G120382	NA
WASHER, Lock..... 62 Thru 65 01: 63-64 10 (OHVA-WAC)(OHVC): 65 10-80	17.820	2	G120214	NA
Adjusting Plate To Cylinder Block				
BOLT, Hexagon..... 60 01 (LHE): 62 Thru 64 10 (OHVA-LAC)	17.038	1	G180127	NA
BOLT, Hexagon..... 61 01 (LHE-LAC-1-5/8" Long)	17.038	1	G179844	NA
BOLT, Hexagon..... 61 01 (LHE-LAC-1-1/8" Long)	17.038	1	G179840	NA
BOLT, Hexagon..... 62 01 (LHE-WAC): 61 10 (OHVC-WAC)	17.038	1	G179839	NA

Copyright 1963 American Motors Corp.

GROUP NO. — DESCRIPTION — YEAR and MODEL		PRIMARY GROUP NO.	PER CAR	PART NO.	CODE
BOLT, Hexagon	62 Thru 65 01 (LHE-LAC)(OHVC-196-LAC): 62 Thru 64 10 (OHV-LAC)	17.038	1	G180126	NA
BOLT, Hexagon	63 01 (LHE-WAC)	17.038	1	G180122	NA
BOLT, Hexagon	62 Thru 64 01-10 (OHVC-196-WAC)	17.038	1	G189301	NA
BOLT, Hexagon	64 10 (OHVC-232-1-1/4" Long)	17.038	2	G180124	NA
BOLT, Hexagon	65 01-10-80 (OHV-232): 65 01-10 (OHV-199)	17.038	2	G180125	NA
STUD	61 10 (OHVA-WAC)	13.430	1	316 2393	
STUD	62 Thru 64 10 (OHVA-WAC)	17.718	1	G447176	
SPACER	60 01 (LHE): 62 Thru 65 01 (LHE-LAC)	.....	1	315 9437	
SPACER	62 Thru 64 01-10 (OHV-196-LAC): 65 01 (OHV-196-WPS-LAC)	13.410	1	316 0867	
SPACER	62 Thru 64 01-10 (OHVC-196-WAC)	13.430	1	316 3986	
SPACER	62 Thru 64 10 (OHVA-WAC)	13.430	1	316 9562	
WASHER, Plain	60 Thru 64 01 (LHE): 62 Thru 64 01-10 (OHV-196) 65 01 (LHE-LAC)(OHV-196-LAC): 61 10 (OHVA-WAC-1-1/8" O.D.): 64 10 (WAC) ***(Replaces 800 0169)***	.....	1	400 1107	
WASHER, Plain	61 10 (OHVA-WAC-1-1/2" O.D.)	12.038	1	313 8231	
WASHER, Plain	64 10 (OHV-232-13/32 x 1-9/16 x 1/8)	17.814	2	400 1111	#
WASHER, Plain	65 01-10-80 (OHV-232): 64 10 (OHV-232-13/32 x 7/8 x 1/8): 65 01-10 (OHV-199)	17.814	2	400 1104	
WASHER, Lock	60 Thru 64 01 (LHE-1 Req.): 62 Thru 64 01-10 (OHV-1 Req.): 65 01 (LHE-LAC)(OHV-196-LAC): 61 10 (OHVA-WAC-1 Req.): 64-65 10 (OHV-232-2 Req.): 65 01-10 (OHV-199-2 Req.): 65 01-80 (OHV-232-2 Req.)	17.820	AR	G120382	NA
WASHER, Lock	62 Thru 64 01 (OHV-WAC)	17.822	1	G114606	NA
NUT, Hexagon	61 10 (OHVA-WAC)	17.406	1	G120369	NA
Adjusting Plate To Mounting Bracket					
BOLT, Hexagon	60-61 01 (LHE-LAC)	17.038	1	G180124	NA
BOLT, Hexagon	62-63 01 (LHE-LAC)	17.038	1	G179840	NA
BOLT, Hexagon	64-65 01 (LHE-LAC)	17.038	1	G180123	NA
BOLT, Hexagon	60 20-80 (WAS)	17.038	2	G180125	NA
WASHER, Plain	60-61 01 (LHE-LAC): 60 20-80 (WAS-1-9/16" O.D.)	.....	1	315 5490	
WASHER, Plain	62 Thru 65 01 (LHE-LAC)	.....	1	316 0876	
WASHER, Plain	60 20-80 (WAS-1-1/8" O.D.) ***(Replaces 800 0169)***	17.814	1	400 1107	
WASHER, Lock	60 Thru 65 01 (LHE-LAC)	17.820	1	G120382	NA
WASHER, Lock	60 20-80 (WAS)	17.822	2	G114606	NA
Adjusting Plate To Compressor Mounting Bracket					
BOLT, Hexagon	61 01 (LHE-WAC)	17.038	1	G180123	NA
BOLT, Hexagon	62-63 01 (LHE-WAC)	17.038	1	G179840	NA
BOLT, Hexagon	61 10 (OHVC-WAC)	17.038	1	G180124	NA
BOLT, Hexagon	61 Thru 64 10 (OHVA-WAC)	17.038	1	G180126	NA
BOLT, Hexagon	62 Thru 64 01-10 (OHVC-196-WAC)	17.038	1	G180129	NA
SPACER	62 Thru 64 01-10 (OHVC-196-WAC)	13.430	1	316 3987	
WASHER, Plain	61 01 (LHE-WAC)	.....	1	315 5490	
62 Thru 64 01 (LHE): 61 Thru 64 01-10 (OHV-196-WAC-2" O.D.)		.....	1	316 0876	
WASHER, Plain	61 10 (WAC-1-1/2" O.D.)	12.038	1	313 8231	
WASHER, Lock	60 Thru 63 01 (LHE-WAC): 60 Thru 64 10 (OHV-196-WAC)	17.820	1	G120382	NA
Adjusting Plate To Brace					
BOLT, Hexagon	62 Thru 65 01 (OHV-196-LAC): 62 Thru 64 10 (OHV-196-LAC)	17.038	1	G181639	
WASHER, Plain	62 Thru 65 01 (OHV-196-LAC): 62 Thru 64 10 (OHV-196-LAC) ***(Replaces 800 0169)***	17.814	1	400 1107	

Copyright 1963 American Motors Corp.

GROUP NO. — DESCRIPTION — YEAR and MODEL	PRIMARY GROUP NO.	PER CAR	PART NO.	CODE
WASHER, Lock ..... 62 Thru 65 01 (OHV-196-LAC): 62 Thru 64 10 (OHV-196-LAC)	17.820	1	G120382	NA
NUT, Hexagon ..... 62 Thru 65 01 (OHV-196-LAC): 62 Thru 64 10 (OHV-196-LAC)	17.406	1	G120369	NA
Adjusting Plate To Cylinder Head				
STUD ..... 61 Thru 65 10-20-80 (V8-Note 10.430-3 Type 2)	4.190	3	313 5884	#
WASHER, Plain ..... 61 Thru 65 10-20-80 (V8-Note 10.430-3 Type 2)	17.814	3	400 1161	#
WASHER, Lock ..... 61 Thru 65 10-20-80 (V8-Note 10.430-3 Type 2)	17.820	3	G120382	NA#
NUT, Hexagon ..... 61 Thru 65 10-20-80 (V8-Note 10.430-3 Type 2)	1.141	3	314 9590	#
BRACE, Power Steering Pump Pulley Belt Adjusting Plate To Cylinder Head				
62 Thru 65 01 (OHV-196-LAC): 62 Thru 64 10 (OHV-196-LAC)	.....	1	316 3620	
ATTACHING PARTS				
Adjusting Plate Brace To Cylinder Head				
BOLT, Hexagon ..... 62 Thru 65 01 (OHV-196-LAC): 62 Thru 64 10 (OHV-196-LAC)	17.038	2	G180122	NA
WASHER, Lock ..... 62 Thru 65 01 (OHV-196-LAC): 62 Thru 64 10 (OHV-196-LAC)	17.820	2	G120382	NA
REINFORCEMENT, Power Steering Pump Pulley Belt Adjusting Plate To Pump Brace Bracket				
64-65 10 (OHVC-232): 65 01-10 (OHV-199): 65 01-80 (OHV-232)	.....	1	317 7670	
10.465 RESERVOIR, Power Steering Pump Oil				
60 01-10 (Note 10.430-1 Type 1)	.....	1	320 2165	
60 01-10 (Note 10.430-1 Type 2): 61 01-10 ..... *(Replaces 320 2382, 320 2659, 320 2660)*	.....	1	320 3264	
62 Thru 64 01: 65 01 (LHE)(OHV-196): 62 10: 63-64 10 (OHVC)(OHVA-LAC): 65 10 (OHV-199)(OHV-232)	.....	1	320 3278	
63-64 10 (OHVA-WAC)	.....	1	320 4394	
60 Thru 64 10-20-80 (V8-Note 10.430-4 Type 1)	.....	1	320 0882	
64 10-80 (V8-LAC-Note 10.430-4 Type 2)	.....	1	320 5300	
64-65 10-80 (V8-WAC-Note 10.430-4 Type 2)	.....	1	320 5616	
65 01 (OHV-232-LAC): 65 80 (OHV-232)	.....	1	320 5704	
ATTACHING PARTS				
Reservoir And Brace To Pump				
STUD ..... 60-61 01 (LHE): 64 01 (LHE-WAC): 61 01 (OHV-WAC): 62-63 01 (WAC): 61 Thru 63 10 (WAC): 64 01 (OHV): 64 10 (Six): 65 01-10-80 (Six)	.....	1	315 9434	
WASHER, Plain ..... 60-61 01 (LHE): 64 01 (LHE-LAC): 61 01 (OHV-WAC): 62-63 01 (WAC): 61 Thru 63 10 (WAC): 64 01 (OHV): 64 10 (Six)	17.814	1	G120393	NA
WASHER, Lock ..... 60-61 01 (LHE): 64 01 (LHE-LAC): 61 01 (OHV-WAC): 62-63 01 (WAC): 61 Thru 63 10 (WAC): 64 01 (OHV): 64 10 (Six): 65 01-10-80 (Six)	17.820	1	G120214	NA
NUT, Hexagon ..... 60-61 01 (LHE): 61 01 (OHV-WAC): 64 01 (LHE-LAC): 62-63 01 (WAC): 61 Thru 63 10 (WAC): 64 01 (OHV): 64 10 (Six)	17.406	1	G120368	NA
Reservoir To Pump				
BOLT, Hexagon ..... 60-61 01 (OHV-LAC): 60 10: 61 10 (LAC)	17.038	1	G180077	NA
BOLT, Hexagon ..... 62-63 01-10 (LAC): 64 01 (LHE-LAC)	17.038	1	G180075	NA
WASHER, Lock ..... 60-61 01 (OHV-LAC): 62-63 01 (LAC): 60 10: 61 Thru 63 10 (LAC): 64 01 (LHE-LAC)	17.820	1	G120214	NA#

Copyright 1963 American Motors Corp.

GROUP NO. — DESCRIPTION — YEAR and MODEL	PRIMARY GROUP NO.	PER CAR	PART NO.	CODE
COVER, Power Steering Pump Oil Reservoir				
60 Thru 64 10-20-80 (V8-Note 10.430-4 Type 1)...(Less Gasket)	.....	1	320 0886	
64-65 10-80 (V8-Note 10.430-4 Type 2)...(Incl. Gasket)	.....	1	320 5301	
ATTACHING PARTS Cover To Reservoir				
STUD ..... 60 Thru 65 10-20-80 (V8)	.....	1	320 0887	
GROMMET ..... 64-65 10-80 (V8-Note 10.430-4 Type 2)	.....	1	320 5617	
WASHER, Plain ..... 60 Thru 65 10-20-80 (V8)	.....	1	320 0885	
NUT, Wing ..... 60 Thru 65 10-20-80 (V8)	.....	1	320 0884	
CAP ASSEMBLY, Power Steering Pump Oil Reservoir Filler				
60 01-10 (Note 10.430-1 Type 1)...(Incl. Gasket)	.....	1	320 2172	
60 01-10 (Note 10.430-1 Type 2): 61 Thru 65 01-10 (Six): 65 80 (Six)...(Incl. Gasket)	.....	1	320 2384	
SEAL, Power Steering Pump Oil Reservoir To Pump ("O" Ring)				
60 01-10 (Note 10.430-1 Type 1)	.....	1	320 2167	
60 01-10 (Note 10.430-1 Type 2): 61 Thru 65 01-10 (Six): 65 80 (Six) ...*(Replaces 320 3280)*	.....	1	320 2385	#
SEAL, Power Steering Pump Oil Reservoir To Pump Stud				
60 Thru 65 10-20-80 (V8)	.....	2	311 8849	
GASKET, Power Steering Pump Oil Reservoir Cover				
60 Thru 64 10-20-80 (V8-Note 10.430-4 Type 1)	.....	1	320 1079	
64-65 10-80 (V8-Note 10.430-4 Type 2)	.....	1	320 5302	
GASKET, Power Steering Pump Oil Reservoir To Pump Stud Or Bolt				
60 01-10 (Note 10.430-1 Type 1)	.....	1	320 2166	
60 01-10 (Note 10.430-1 Type 2): 61 Thru 65 01-10 (Six): 65 80 (Six) ...*(Replaces 320 2383)*	.....	1	320 2658	#
GASKET, Power Steering Pump Oil Reservoir Filler Cap				
60 01-10 (Note 10.430-1 Type 1)	.....	1	320 2178	
60 01-10 (Note 10.430-1 Type 2): 61 Thru 65 01-10 (Six): 65 80 (Six)	.....	1	320 2149	
BAFFLE, Power Steering Pump Oil Reservoir				
61 Thru 63 01-10 (Six)(Used For 3/8" Tube): 60 Thru 64 10-20-80 (V8-Note 10.430-4 Type 1)	.....	1	320 0888	
61 Thru 65 01-10 (Six): 65 80 (OHV-232)(Used For 5/8" Tube)	.....	1	320 3775	
PLATE, Power Steering Pump Oil Reservoir Reinforcement				
60 Thru 65 10-20-80 (V8)(In Bottom Of Reservoir)	.....	1	320 0883	
ATTACHING PARTS Reinforcement Plate To Reservoir				
STUD ..... 60 Thru 65 10-20-80 (V8)	.....	1	311 9931	

Copyright 1963 American Motors Corp.

GROUP NO. — DESCRIPTION — YEAR and MODEL	PRIMARY GROUP NO.	PER CAR	PART NO.	CODE
10.470 HOSE, Power Steering Pump Pressure				
60 01-10 (Note 10.430-1 Type 1)	.....	1	315 8277	
60 01-10 (Note 10.430-1 Type 2): 61 01: 61 10 (LAC) (OHVC-WAC) ...(Replaces 315 9673)	.....	1	316 2273	
62-63 01	.....	1	316 5788	
64-65 01 (LHE)(OHV-196): 64 10 (OHVC-196)	.....	1	317 4217	
65 01-10 (OHV-232-Note 10.430-6): 65 01-10 (OHV-199-Note 10.430-6)	.....	1	317 8854	#
61 10 (OHVA-WAC)	.....	1	316 1438	
62 10 (OHVC)	.....	1	316 4936	
62 10 (OHVA)	.....	1	316 5961	
63 10 (Note 10.395-4 Type 1)	.....	1	316 8195	
63 10 (Note 10.395-4 Type 2)	.....	1	316 8194	
64 10 (OHVA)	.....	1	317 4216	
64-65 10 (OHV-232-Note 10.430-5): 65 10 (OHV-199-Note 10.430-5)	.....	1	317 5832	#
64-65 10-80 (V8)	.....	1	317 4228	
60 20 (Note 10.470-1 Type 1)	.....	1	315 6475	
60 20 (Note 10.470-1 Type 2): 61 20	.....	1	315 8778	
60 80	.....	1	315 4723	
61 80	.....	1	316 1084	
62 80: 63 80 (Note 10.395-4 Type 1)	.....	1	316 4794	
63 80 (Note 10.395-4 Type 2)	.....	1	316 8868	
65 80 (OHV-232)	.....	1	317 8346	
HOSE, Power Steering Pump Return				
60 Thru 65 01-10-20-80 (Bulk-Order In Feet)	.....	AR	320 2182	
TUBE, Power Steering Pump Return Hose To Cylinder (Adapter)				
60 Thru 63 01: 60 Thru 62 10-20: 63 10-80 (Note 10.395-4 Type 1): 62 80	.....	1	315 6473	
63 10 (Note 10.395-4 Type 2)	.....	1	316 7987	
60-61 80	10.460	1	315 5312	
63 10 (V8): 63 80 (Note 10.395-4 Type 2)	.....	1	316 8808	
TUBE, Power Steering Pump Return Hose To Steering Gear (Adapter)				
64-65 01: 64-65 10 (Six): 65 80 (OHV-232)	.....	1	317 1960	
64-65 10-80 (V8)	10.460	1	315 5312	
TUBE, Power Steering Pump Pressure Hose To Cylinder (Adapter)				
63 10-80 (Note 10.395-4 Type 2)	.....	1	316 8082	

NOTE 10.470-1: Two Types of Pressure Hoses were installed on the 60 20 series. They can be identified as follows:

Type 1: The Pressure and Return Hoses are routed from Cylinder Fitting to the Right side of Engine.

Type 2: The Return Hose is routed from Cylinder Fitting to the Right Side of Engine and pressure hose is routed from Cylinder Fitting to the Left Side of Engine.

NOTE 10.470-2: Two Types of Hose Routing were used on the 61 20 (WPS) series. They can be identified as follows:

Type 1: The Return Hose is routed along the Right Side of the Engine.

Type 2: The Return Hose is routed along the Left Side of the Engine.

Copyright 1963 American Motors Corp.

GROUP NO. — DESCRIPTION — YEAR and MODEL	PRIMARY GROUP NO.	PER CAR	PART NO.	CODE
FITTING, Power Steering Pump Return Hose To Cylinder (At Cylinder)				
60 01 (Note 10.395-2 Type 1): 61 01 (Note 10.395-1 Types 1 And 3): 60-61 10-20 (Note 10.395-1 Types 1 And 3)	.....	1	320 1358	
60 01-10-20 (Note 10.395-1 And 2 Type 2): 61 01-10-20 (Note 10.395-1 Type 2): 62-63 01: 63 10-80 (Note 10.395-4 Type 2)	.....	1	320 3242	
62-63 10-80 (Note 10.395-4 Type 1): 60 80 (Note 10.395-2 Type 2): 61 80 (Note 10.395-1 Type 2)	.....	1	320 3239	
60 80 (Note 10.395-2 Type 1): 61 80 (Note 10.395-1 Types 1 And 3)	.....	1	320 1356	
FITTING, Power Steering Pump Pressure Hose To Cylinder (At Cylinder)				
60 01 (Note 10.395-2 Type 1): 61 01 (Note 10.395-1 Types 1 And 3): 60-61 10-20 (Note 10.395-1 Types 1 And 3)	.....	1	320 1359	
60 01-10-20 (Note 10.395-1 And 2 Type 2): 61 01-10-20 (Note 10.395-1 Type 2): 62-63 01-10-80	.....	1	320 3243	
60-61 10 (Female End 7/16-20 Thread)(Male End 7/16-20 Thread): 61 20 (Female End 7/16-24 Thread)	.....	1	320 1773	
60 80 (Note 10.395-2 Type 1): 61 80 (Note 10.395-1 Types 1 And 3)	.....	1	320 1618	
60 80 (Note 10.395-2 Type 2): 61 80 (Note 10.395-1 Type 2)	.....	1	320 3241	
GASKET, Power Steering Pump Pressure And Return Hose Fitting (At Cylinder)				
60 01-80 (Note 10.395-2 Type 1): 61 01-80 (Note 10.395-1 Types 1 And 3): 60 10-20 (Note 10.395-1 Types 1 And 3): 61 10-20	.....	2	320 1355	
60 01-10-20-80 (Note 10.395-1 And 2 Type 2): 61 01-80 (Note 10.395-1 Type 2: 62-63 01-10-80	.....	1	320 3245	
SEAL, Power Steering Pump To Cylinder Hose Fittings Dirt (At Cylinder)				
60 01 (Note 10.395-2 Type 2): 61 01 (Note 10.395-1 Type 2): 62-63 01: 63 10-80 (Note 10.395-4 Type 2)	.....	1	320 3246	
SEAL, Power Steering Pump To Cylinder Pressure Hose Fitting Dirt (At Cylinder)				
62-63 10-80 (Note 10.395-4 Type 1)	.....	1	320 3247	
CLAMP, Power Steering Pump To Steering Gear Return Hose				
64-65 01-10-80 ***(Replaces 315 5600)***	17.108	2	320 3076	
CLAMP, Power Steering Pump To Cylinder Return Hose				
60 Thru 63 01-10-20-80 ***(Replaces 315 5600)***	17.108	2	320 3076	
CLIP, Power Steering Pump Hose Clip To Clip On Cylinder				
60 10 (Note 10.430-1 Type 1)	16.230	1	315 5174	
CLIP, Power Steering Pump Hose To Cylinder				
60 Thru 63 01: 60 Thru 62 10: 63 10 (Note 10.395-4 Type 1): 60 20 (Note 10.470-1 Type 1): 63 80 (Note 10.395-4 Type 2)	.....	1	314 8547	
63 10 (Note 10.395-4 Type 2)	.....	2	316 8193	
60 20 (4 Req.-Note 10.470-1 Type 2): 61 20 (4 Req. -Note 10.470-2 Type 1) (2 Req. -Note 10.470-2 Type 2): 62 80 (2 Req.): 63 80 (2 Req. -Note 10.395-4 Type 1)	.....	AR	315 9302	

Copyright 1963 American Motors Corp.

GROUP NO. — DESCRIPTION — YEAR and MODEL		PRIMARY GROUP NO.	PER CAR	PART NO.	CODE
ATTACHING PARTS					
Clip To Cylinder					
SCREW, Machine	60-61 01-10: 60 20 (Note 10.470-1 Type 1)	17.626	2	G450526	NA
SCREW, Tapping	61 01-10 (4 Req.): 62-63 01-10 (2 Req.): 63 80 (2 (Req. -Note 10.395-4 Type 2)***(Replaces 800 0095)***	17.671	AR	G456766	
BOLT, Hexagon	60 20 (2 Req. -Note 10.470-1 Type 2): 61 20 (2 Req. -Note 10.470-2 Type 1)(1 Req. -Note 10.470-2): 62 80 (1 Req.): 63 80 (1 Req. -Note 10.395-4 Type 1)	17.038	AR	G180022	NA
WASHER, Lock	60-61 01-10: 60 20 (Note 10.470-1 Type 1)	17.820	2	G131096	NA
WASHER, Lock	60 20 (2 Req. -Note 10.470-1 Type 2): 61 20 (2 Req. -Note 10.470-2 Type 1)(1 Req. -Note 10.470-2 Type 2)	17.820	AR	G131121	NA
WASHER, Lock	62 80: 63 80 (Note 10.395-4 Type 1)	17.820	1	G120380	NA
NUT, Spring	61 Thru 63 01-10: 63 80 (Note 10.395-4 Type 2) ***(Replaces G446965)***	17.424	2	G445349	NA
NUT, Hexagon	60-61 01-10: 60 20 (Note 10.470-1 Type 1)	17.412	2	G120614	NA
NUT, Hexagon	60 20 (2 Req. -Note 10.470-1 Type 2): 61 20 (2 Req. -Note 10.470-2 Type 1)(1 Req. -Note 10.470-2 Type 2): 62 80 (1 Req.): 63 80 (1 Req. -Note 10.395-4 Type 1)	17.406	AR	G120375	NA
CLIP, Power Steering Pump Hose (At Reservoir)					
60-61 01		3.165	1	310 8779	
CLIP, Power Steering Pump Hose (At Upper Control Arm)					
60-61 01		3.163	1	310 7341	
ATTACHING PARTS					
Clip To Spring (At Upper Control Arm)					
BOLT, Hexagon	60-61 01	17.038	1	G504256	NA
WASHER, Plain	60-61 01	17.814	1	G120393	NA
WASHER, Lock	60-61 01	17.820	1	G120214	NA
NUT, Hexagon	60-61 01	17.406	1	G120376	NA
CLIP, Power Steering Pump Hose (On Engine Support Cushion)					
60 20: 60-61 80		3.165	1	310 8779	
ATTACHING PARTS					
Clip To Bracket					
BOLT, Hexagon	60 20-80	17.038	1	G180018	NA
WASHER, Plain	60 20-80	17.814	1	G120392	NA
WASHER, Lock	60 20-80	17.820	1	G120380	NA
NUT, Hexagon	60 20-80	17.406	1	G120375	

Copyright 1963 American Motors Corp.

GROUP NO. — DESCRIPTION — YEAR and MODEL	PRIMARY GROUP NO.	PER CAR	PART NO.	CODE
CLIP, Power Steering Pump Hose (At Oil Pan)				
60 01-80 (1 Req.): 64 10 (OHVC-196-1 Req.)(OHVA-2 Req.): 60 20 (2 Req. -Note 10.470-1 Type 1)	3.165	AR	310 8779	
60 20 (Note 10.470-1 Type 2): 61 20 (Note 10.470-2 Type 1)	.....	2	315 8792	
ATTACHING PARTS				
Clip To Oil Pan				
STUD..... 61 10 (WAC-1 Req.): 64 10 (OHVC-196-1 Req.) (OHVA-2 Req.): 60 20 (WAT-1 Req.)(WST-2 Req.)(WOD-2 Req.): 60-61 80 (1 Req.)	5.178	AR	312 2698	
WASHER, Lock..... 61 10 (WAC-1 Req.): 60 20 (4 Req.): 61 80 (1 Req.)	17.820	AR	G120214	NA
WASHER, Lock..... 64 10 (OHVC-196-1 Req.)(OHVA-2 Req.)	17.820	AR	G103320	NA
WASHER, Lock..... 60 80	17.820	2	G120380	NA
NUT, Hexagon..... 61 10 (WAC-1 Req.): 64 10 (OHVC-196-1 Req.) (OHVA-2 Req.): 60 20 (2 Req.): 60-61 80 (1 Req.)	17.406	AR	G120368	
Clip To Bracket				
BOLT, Hexagon..... 60 20 (2 Req.): 61 20 (2 Req. -Note 10.470-2 Type 1): 60 80 (1 Req.)	17.038	AR	G180018	NA
WASHER, Plain..... 60 20 (2 Req.): 61 20 (2 Req. -Note 10.470-2 Type 1): 60 80 (1 Req.)	17.814	AR	G120392	NA
WASHER, Lock..... 60 20 (2 Req.): 61 20 (2 Req. -Note 10.470-2 Type 1): 60 80 (1 Req.)	17.820	AR	G120380	NA
NUT, Hexagon..... 60 20 (2 Req.): 61 20 (2 Req. -Note 10.470-2 Type 1): 60 80 (1 Req.)	17.406	AR	G120375	
CLIP, Power Steering Pump Return Hose To Pressure Hose				
61 01 (1 Req.): 62-63 01 (2 Req.): 60 10 (WAC-1 Req.): 61-62 10 (1 Req.): 61 20 (2 Req. -Note 10.470-2 Type 2): 62 80 (3 Req.): 63 80 (3 Req. -Note 10.395-4 Type 1)(2 Req. -Note 10.395-4 Type 2)	3.165	AR	310 8779	
ATTACHING PARTS				
Return Hose To Pressure Hose Clip				
BOLT, Hexagon..... 61 01 (1 Req.): 62-63 01 (2 Req.): 61 10 (WAC-1 Req.): 62 10 (1 Req.): 61 20 (2 Req. -Note 10.470-2 Type 2): 63 80 (2 Req. -Note 10.395-4 Type 1)(1 Req. -Note 10.395-4 Type 2)	17.038	AR	G180020	NA
BOLT, Hexagon..... 60 10 (WAC)	17.038	1	G504256	NA
WASHER, Plain..... 61 01 (1 Req.): 62-63 01 (2 Req.): 61 10 (WAC-1 Req.): 62 10 (2 Req.): 61 20 (2 Req. -Note 10.470-2 Type 2): 63 80 (2 Req. -Note 10.395-4 Type 1)(1 Req. -Note 10.395-4 Type 2)	17.814	AR	G120392	NA
WASHER, Plain..... 60 10 (WAC)	17.814	1	G120393	NA
WASHER, Lock..... 61 01 (1 Req.): 62-63 01 (2 Req.): 61 10 (WAC-1 Req.): 62 10 (1 Req.): 61 20 (2 Req. -Note 10.470-2 Type 2): 63 80 (2 Req. -Note 10.395-4 Type 1)(1 Req. -Note 10.395-4 Type 2)	17.820	AR	G120380	NA
WASHER, Lock..... 60 10 (WAC)	17.820	1	G120214	NA
NUT, Hexagon..... 61 01 (1 Req.): 62-63 01 (2 Req.): 61 10 (WAC-1 Req.): 62 10 (1 Req.): 61 20 (2 Req. -Note 10.470-2 Type 2): 63 80 (2 Req. -Note 10.395-4 Type 1)(1 Req. -Note 10.395-4 Type 2)	17.406	AR	G120375	
NUT, Hexagon..... 60 10 (WAC)	17.406	1	G120376	NA

Copyright 1963 American Motors Corp.

GROUP NO. — DESCRIPTION — YEAR and MODEL	PRIMARY GROUP NO.	PER CAR	PART NO.	CODE
Return And Pressure Hose Clip To Oil Pan				
STUD 62-63 80	5.178	1	312 2698	
WASHER, Lock 62-63 80	17.820	2	G120214	NA
NUT, Hexagon 62-63 80	17.406	1	G120368	NA
CLIP, Power Steering Pump Hose Pull Back Spring				
60 80	3.165	1	310 8779	
ATTACHING PARTS				
Pull Back Spring Clip				
BOLT, Hexagon 60 80	17.038	1	G180018	NA
WASHER, Plain 60 80	17.814	1	G120392	NA
WASHER, Lock 60 80	17.820	1	G120380	NA
NUT, Hexagon 60 80	17.406	1	G120375	
SPACER, Power Steering Pump Return Hose Clip				
60 20 (Note 10.470-1 Type 2)	.....	1	315 9303	
BRACKET, Power Steering Pump Hose Clip				
60-61 01 (At Reservoir)	16.240	1	315 0579	
60 01 (At Oil Pan) ..... ***(Replaces 315 9435)***	16.240	1	315 0579	
60-61 20 (Note 10.470-2 Type 1)(At Oil Pan)	4.174	2	314 6577	
60 80 (At Oil Pan) ..... ***(Ref. Pr. List)***	.....	1	315 3784	
60 80 (On Engine Support Cushion) ..... ***(Ref. Pr. List)***	.....	1	314 3529	
61 80 (On Engine Support Cushion)	8.192	1	313 5352	
ATTACHING PARTS				
Hose Clip Bracket To Oil Pan				
BOLT, Hexagon 60 01	17.038	1	G180080	NA
STUD ..... 61 20 (WAT-1 Req. -Note 10.470-2 Type 1)(WST-2 Req. -Note 10.470-2 Type 1)(WOD-2 Req. -Note 10.470-2 Type 1)	5.178	AR	312 2698	
WASHER, Plain 60 01	17.814	1	G120393	NA
WASHER, Lock ..... 60 01 (1 Req.): 61 20 (WAT-1 Req. -Note 10.470-2 Type 1)(WST-2 Req. -Note 10.470-2 Type 1) (WOD-2 Req. -Note 10.470-2 Type 1)	17.820	AR	G120214	NA
NUT, Hexagon 60 01	17.406	1	G120376	NA
NUT, Hexagon ..... 61 20 (WAT-1 Req. -Note 10.470-2 Type 1)(WST-2 Req. -Note 10.470-2 Type 1)(WOD-2 Req. -Note 10.470-2 Type 1)	17.406	AR	G120368	
BRACKET, Power Steering Pump Hose Spring				
61 10 (WAC-"L" Shape)	13.450	1	315 3673	
61 10 (WAC-Flat)	5.132	1	310 5508	

Copyright 1963 American Motors Corp.

GROUP NO. — DESCRIPTION — YEAR and MODEL	PRIMARY GROUP NO.	PER CAR	PART NO.	CODE
ATTACHING PARTS				
Bracket To Front Suspension Bracket				
61 10 (WAC)	17.664	1	G145131	NA
SPRING, Power Steering Pump Hose Pull Back				
60 80	.....	1	315 5195	
63 10-80	.....	1	316 9248	
SPRING, Power Steering Pump Hose Clip				
60-61 01	4.080	1	313 9296	
62-63 01	.....	1	315 5195	
61 10 (WAC): 61 20 (Note 10.470-2 Type 2)	5.150	1	314 6472	
ATTACHING PARTS				
Spring To Oil Pan				
STUD — 61 20 (Note 10.470-2 Type 2)	5.178	1	312 2698	
WASHER, Lock — 61 20 (Note 10.470-2 Type 2)	17.820	1	G120214	
NUT, Hexagon — 61 20 (Note 10.470-2 Type 2)	17.406	1	G120368	
PLATE, Power Steering Pump Hose Clip To Front Engine Cushion				
62 80: 63 80 (Note 10.395-4 Type 1)	.....	1	316 4918	
GUARD, Power Steering Pump Hose				
62 10 (OHVA)	.....	1	316 5971	
63 10	.....	1	316 9476	
63 80	.....	1	316 9245	
ATTACHING PARTS				
Hose Guard To Oil Pan				
STUD — 62 10 (OHVA-1 Req.): 63 10-80 (2 Req.)	5.178	AR	312 2698	
WASHER, Lock — 62 10 (OHVA-1 Req.): 63 10-80 (2 Req.)	17.820	AR	G120214	NA
NUT, Hexagon — 62 10 (OHVA-1 Req.): 63 10-80 (2 Req.)	17.406	AR	G120368	NA
CRADLE, Power Steering Pump Hose				
64-65 01 (LHE)(OHVC-196): 64 10 (OHVC-196)	.....	1	317 4487	
65 01-80 (OHV-232): 64-65 10 (OHV-232): 65 01-10 (OHV-199)	.....	1	317 6336	
ATTACHING PARTS				
Cradle To Timing Chain Cover				
STUD — 64-65 01 (LHE)(OHV-196): 64 10 (OHVC-196)	5.178	2	312 2698	
WASHER, Lock — 64-65 01 (LHE)(OHV-196): 64 10 (OHVC-196)	17.820	4	G103320	NA
NUT, Hexagon — 64-65 01 (LHE)(OHV-196): 64 10 (OHVC-196)	17.406	2	G120376	NA
Craddle To Oil Pan				
STUD — 65 01-80 (OHV-232): 64-65 10 (OHV-232): 65 01-10 (OHV-199)	.....	2	317 6335	
WASHER, Plain — 65 01-80 (OHV-232): 64-65 10 (OHV-232): 65 01-10 (OHV-199)	17.814	2	G120292	NA
WASHER, Lock — 65 01-80 (OHV-232): 64-65 10 (OHV-232): 65 01-10 (OHV-199)	17.820	4	G120380	NA
NUT, Hexagon — 65 01-80 (OHV-232): 64-65 10 (OHV-232): 65 01-10 (OHV-199)	17.406	2	G120367	

Copyright 1963 American Motors Corp.

10.475 HOSE KIT, Power Steering Pump Pressure

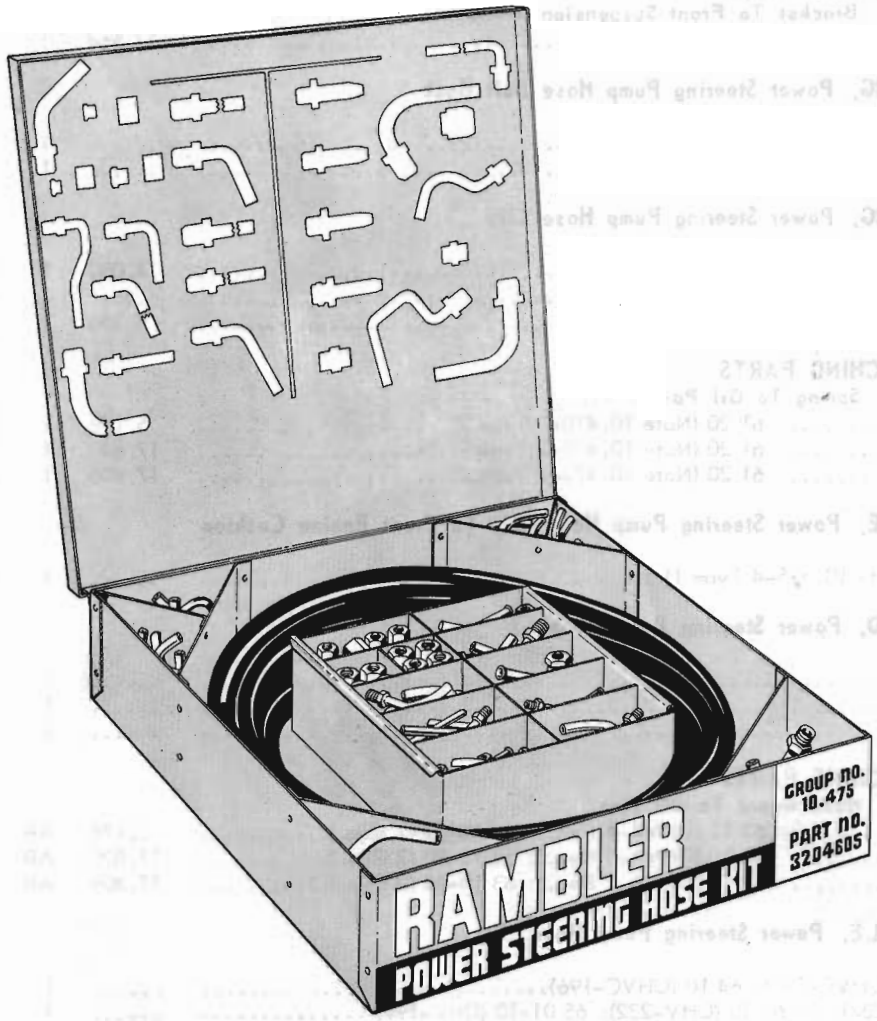

320 4605 KIT Includes All Parts Listed Below

Number Part	Description	In Kit Qty.	Number Part	Description	In Kit Qty.
320 4606	COUPLING BODY	20	320 4624	3/8" NUT And TUBE 90 Deg.	3
320 4607	1/4" INSERT	9	320 4625	3/8" NUT And TUBE 65 Deg.	1
320 4608	5/16" INSERT	3	320 4626	3/8" NUT And TUBE - Double 90 Deg.	1
320 4609	3/8" INSERT	6			
320 4610	1/4" NUT	9	320 4627	3/8" NUT And TUBE - Straight	2
320 4611	5/16" NUT	3	320 4628	3/8" NUT 11/16"-18 Thread And Tube 65 Deg.	1
320 4612	3/8" NUT	8			
320 4613	1/4" SLEEVE	9	320 4629	3/8" NUT 11/16"-18 Thread And Tube Straight	2
320 4614	5/16" SLEEVE	3			
320 4615	3/8" SLEEVE	8	320 4630	3/8" COUPLING MALE INSERT	2
320 4616	1/4" NUT And TUBE - Double 65 Deg.	4	320 4631	3/8" ADAPTER, Female 3/8" Inverted	3
320 4617	1/4" NUT And TUBE 90 Deg.	3	320 4632	1/4" TUBE And NUT (Mercury)	2
320 4618	1/4" NUT And TUBE Straight	2	320 4633	1/4" TUBE And NUT (Rambler)	5
320 4619	1/4" NUT And TUBE 130 Deg.	1	320 4634	3/8" TUBE And NUT	5
320 4620	1/4" NUT And TUBE 90 Deg.	2	320 4635	3/8" I. D. HOSE 4500# (Ft.)	25
320 4621	1/4" ADAPTER, Female Inverted	3	320 5504	11/16" NUT And TUBE 150 Deg.	2
320 4622	5/16" NUT And TUBE, Straight	1	320 5505	ADAPTER With 7/16-24" Thread	2
320 4623	5/16" NUT And TUBE 65 Deg.	2			

Copyright 1963 American Motors Corp.

GROUP NO. — DESCRIPTION — YEAR and MODEL	PRIMARY GROUP NO.	PER CAR	PART NO.	CODE
10.500 GEAR ASSEMBLY, Steering				
64-65 01: 64-65 10 (Six): 65 80 (Six)	10.290	1	317 2977	
64-65 10-80 (V8)	10.290	1	317 0373	
10.520 HOUSING ASSEMBLY, Power Steering Gear (Incl. Pitman Shaft Bearing, Connector Seats, Check Valve Poppet And Spring)				
64-65 01-10-80	.....	1	320 4805	
10.524 CHECK VALVE KIT, Power Steering Gear Pressure (Incl. Seat, Poppet And Spring)				
64-65 01-10-80	.....	1	320 4825	
10.525 SEAT, Power Steering Gear Pressure Hose Connector (In Housing)				
64-65 01-10-80	.....	1	320 4808	
10.527 SEAT, Power Steering Gear Return Hose Connector (In Housing)				
64-65 01-10-80	.....	1	320 4807	
10.530 POPPET, Power Steering Gear Pressure Check Valve (In Housing)				
64-65 01-10-80	.....	1	320 4809	
10.532 SPRING, Power Steering Gear Pressure Check Valve Poppet (In Housing)				
64-65 01-10-80	.....	1	320 4810	
10.535 PLUG, Power Steering Gear Housing End				
64-65 01-10-80	.....	1	320 4820	
10.537 RING, Power Steering Gear Housing End Plug Seal "O"				
64-65 01-10-80	.....	1	320 4823	
10.540 RING, Power Steering Gear Housing End Plug Retaining				
64-65 01-10-80	.....	1	320 4822	
10.545 SEAL AND RING KIT, Power Steering Gear				
64-65 01-10-80...(Incl. 320 4828)	.....	1	320 4827	
10.550 RING KIT, Power Steering Gear "O"				
64-65 01-10-80	.....	1	320 4828	
10.555 RACK-PISTON-NUT ASSEMBLY, Power Steering Gear (Incl. Worm, Balls, Guides, Clamp, Piston Ring And "O" Ring)				
64-65 01-10-80	.....	1	320 4811	
10.565 BEARING KIT, Power Steering Gear Lower Thrust (Incl. Races)				
64-65 01-10-80	.....	1	320 4826	

Copyright 1963 American Motors Corp.

GROUP NO. — DESCRIPTION — YEAR and MODEL	PRIMARY GROUP NO.	PER CAR	PART NO.	CODE
10.572 BALL KIT, Power Steering Gear Rack-Piston (Incl. Black And Silver Balls)				
(Size Code #6)(.28117 Dia.) 64-65 01-10-80	.....	1	320 4835	
(Size Code #7)(.28125 Dia.) 64-65 01-10-80	.....	1	320 4836	
(Size Code #8)(.28133 Dia.) 64-65 01-10-80	.....	1	320 4837	
(Size Code #9)(.28141 Dia.) 64-65 01-10-80	.....	1	320 4838	
(Size Code #10)(.28149 Dia.) 64-65 01-10-80	.....	1	320 4839	
(Size Code #11)(.28157 Dia.) 64-65 01-10-80	.....	1	320 4840	
10.575 GUIDE, Power Steering Gear Worm Ball Bearing Return				
64-65 01-10-80	.....	2	320 4813	
10.577 CLAMP, Power Steering Gear Worm Ball Bearing Return Guide				
64-65 01-10-80	.....	1	320 4812	
ATTACHING PARTS Clamp To Rack-Piston				
SCREW, Machine..... 64-65 01-10-80	.....	1	320 0637	
10.580 RING, Power Steering Gear Rack-Piston (Teflon)				
64-65 01-10-80	.....	1	320 4814	
10.582 RING, Power Steering Gear Rack-Piston Back-up Seal "O"				
64-65 01-10-80	.....	1	320 4815	
10.585 PLUG, Power Steering Gear Rack-Piston End				
64-65 01-10-80	.....	1	320 4821	
10.590 SHAFT ASSEMBLY, Power Steering Gear Pitman (Incl. Adjusting Screw, Washer)				
64-65 01-10-80	.....	1	320 4829	
10.595 BEARING, Power Steering Gear Pitman Shaft Needle				
64-65 01-10-80	.....	1	320 4806	
10.600 NUT, Power Steering Gear Pitman Shaft Adjusting Screw				
64-65 01-10-80	.....	1	320 4818	
10.605 SEAL KIT, Power Steering Gear Pitman Shaft				
64-65 01-10-80	.....	1	320 4830	
10.610 COVER, Power Steering Gear Pitman Shaft (Side)(Incl. Bushing)				
64-65 01-10-80	.....	1	320 4804	
ATTACHING PARTS Cover To Housing				
BOLT, Hexagon 64-65 01-10-80	17.038	4	G179839	NA
WASHER, Lock 64-65 01-10-80	17.820	4	G103321	NA

Copyright 1963 American Motors Corp.

GROUP NO. — DESCRIPTION — YEAR and MODEL	PRIMARY GROUP NO.	PER CAR	PART NO.	CODE
10.615 VALVE ASSEMBLY, Power Steering Gear				
64 01-10-80	.....	1	320 4834	#
65 01-10-80	.....	1	320 7058	#
10. 620 SPRING, Power Steering Gear Valve Spool				
64-65 01-10-80	.....	1	320 4816	
10.625 RING AND SEAL KIT, Power Steering Gear Valve (Incl. Piston Rings (Teflon) Rings And Back-up Rings)				
64-65 01-10-80	.....	1	320 4833	
10. 630 BEARING KIT, Power Steering Gear Upper Thrust (Incl. Races, Retainers And Spacer)				
64-65 01-10-80	.....	1	320 4832	
10. 635 ADJUSTER ASSEMBLY, Power Steering Gear Upper Thrust Bearing (Incl. Bearing, Races, Seals, Retainer And Spacer)				
64-65 01-10-80	.....	1	320 4802	
10.637 NUT, Power Steering Gear Upper Thrust Bearing Adjuster Lock				
64-65 01-10-80	.....	1	320 4817	
10. 640 BEARING, Power Steering Gear Upper Thrust Bearing Adjuster Needle				
64-65 01-10-80	.....	1	320 4803	
10.645 SEAL KIT, Power Steering Gear Upper Thrust Bearing Adjuster				
64-65 01-10-80	.....	1	320 4824	
10.700 SHAFT, Steering Gear				
64 01 (WPS)	.....	1	320 4848	
64 01 (WPS)...(Incl. Upper And Lower Flange And Ground Cable)	.....	1	317 2197	
65 01 (LCV-WPS)	.....	1	317 7444	
64 10-80 (WPS-LAW)...(Incl. Upper And Lower Flange And Ground Cable)	.....	1	317 2227	
64 10-80 (WPS-LAW)	.....	1	320 4851	
65 10 (WPS-LAW): ***165 10 (Can)***	.....	1	317 7473	
(Upper) ***64 01 (RHD)***...(Incl. Coupling, Bearing, Seal And Clamp)	.....	1	317 1704	
(Upper) ***64 01 (RHD)***	.....	1	320 4874	
(Upper) ***65 01 (RHD):*** 65 07	.....	1	317 8492	
(Upper) 65 17 (OHV-232-LAW)(LHD-V8-LAW): 65 80 (LAW-Note 10.700-2)	.....	1	317 8795	
(Upper) 65 80 (LAW-Note 10.700-1)...(Incl. Coupling)	.....	1	317 4636	
(Lower) ***64 01 (RHD)***...(Incl. Coupling And Flange)	.....	1	317 2394	
(Lower) ***64 01 (RHD)***	.....	1	320 4881	
(Lower) ***65 01 (RHD):*** 65 07 (LHD-LPS)	.....	1	317 8491	
(Lower) 65 07 (LHD-WPS)	.....	1	317 8736	
(Lower) 65 17 (OHV-232-LAW)(LHD-V8-LAW)	.....	1	317 8738	
(Lower) 65 80 (LAW-Note 10.700-1)	.....	1	317 4623	
(Intermediate) 65 17 (LHD-WAW)...(Incl. Flange)	.....	1	317 8927	
(Lower) 65 80 (LAW-Note 10.700-2)	.....	1	317 8925	
(Intermediate) 65 80 (WAW)...(Incl. Flange)	.....	1	317 8851	

NOTE 10.700-1: On 65 80 (LAW) used beginning with Car Sequence No. W-015864 and prior to W-016839.
NOTE 10.700-2: On 65 80 (LAW) used prior to Car Sequence No. W-015864 and beginning with W-016839.

Copyright 1963 American Motors Corp.

GROUP NO. — DESCRIPTION — YEAR and MODEL	PRIMARY GROUP NO.	PER CAR	PART NO.	CODE
10.705 CLAMP, Steering Gear Upper Shaft To Lower Shaft				
64 01 (RHD)	.....	1	317 1981	
ATTACHING PARTS				
Clamp To Shafts				
BOLT, Hexagon..... ***64 01 (RHD)***	17.038	1	G181672	NA
WASHER, Plain..... ***64 01 (RHD)*** ***(Replaces 800 0179)***	17.814	1	400 1116	
NUT, Lock..... ***64 01 (RHD)***	17.416	1	G9413955	NA
10.708 COUPLING, Steering Gear Upper Shaft To Intermediate Shaft				
65 80 (LAW–Note 10.700–1)	.....	1	317 4621	
ATTACHING PARTS				
Coupling To Upper Shaft				
BOLT, Twelve Point... 65 80 (LAW–Note 10.700–1)	10.505	1	317 1980	
Coupling To Intermediate Shaft				
BOLT, Twelve Point... 65 80 (LAW–Note 10.700–1)	10.505	1	317 1980	
10.710 FLANGE, Steering Gear To Shaft				
64 01 (WPS): 64 10–80 (WPS–LAW)	.....	1	320 4847	
64-65 01 (RHD): 65 07 (LHD–LPS) ***(Ref. Pr. List)***	.....	1	320 4880	
65 10 (LPS–WAW): 65 17 (LPS): 65 80 (LPS)	.....	1	320 5699	
65 01–10–80 (WPS): ***165 10 (Can)***	.....	1	320 5845	#
ATTACHING PARTS				
Flange To Upper Flange (On Shaft)				
BOLT KIT, (Incl. Reinf. Washers And Nuts).. 64 01 (WPS): 64 10–80 (WPS–LAW): ***64-65 01 (RHD):*** 65 07 (LHD–LPS)	.....	1	320 4849	
BOLT, Hexagon ..... 65 01–10 (WPS): 65 10 (LPS–WAW): 65 17 (LPS): 65 80	.....	2	320 5848	
WASHER, Internal Lock. 65 01–10 (WPS): 65 10 (LPS–WAW): 65 17 (LPS): 65 80	.....	2	320 5849	
WASHER, Spring Lock.. 65 01–10 (WPS): 65 10 (LPS–WAW): 65 17 (LPS): 65 80	17.820	2	G120214	NA
NUT, Hexagon..... 65 01–10 (WPS): 65 10 (LPS–WAW): 65 17 (LPS): 65 80	17.406	2	G120368	
Lower Flange Clamp To Stub Shaft				
BOLT, Twelve Point... 64 01 (WPS): 64 10–80 (WPS–LAW): 65 01–10 (WPS): ***65 01 (RHD):*** 65 07 (LHD–LPS): 65 10 (LPS–WAW): 65 17 (LPS): 65 80	10.505	1	317 1980	

Copyright 1963 American Motors Corp.

GROUP NO. — DESCRIPTION — YEAR and MODEL	PRIMARY GROUP NO.	PER CAR	PART NO.	CODE
10.711 FLANGE, Steering Gear Lower Shaft To Flange On Steering Gear				
65 10 (LCV-WAW)	10.713	1	320 5812	
ATTACHING PARTS				
Flange To Lower Shaft				
BOLT, Twelve Point... 65 10 (LCV-WAW)	10.505	1	317 1980	
10.712 FLANGE, Steering Gear Upper Shaft To Lower Shaft				
65 01 (RHD): 65 07 (LHD-LPS): 65 17 (OHV-232-LAW)(LHD-V8-LAW): 65 80 (LAW-Note 10.700-2)	10.710	1	320 4880	#
65 80 (LAW-Note 10.700-1)	.....	1	317 4621	
ATTACHING PARTS				
Flange To Upper Shaft				
BOLT, Kit ..... ***65 01 (RHD):*** 65 07 (LHD-LPS): 65 17 (OHV-232-LAW)(LHD-V8-LAW): 65 80 (LAW-Note 10.700-2)	10.710	1	320 4849	#
BOLT, Twelve Point... 65 80 (LAW-Note 10.700-1)	10.505	1	317 1980	
Flange To Lower Shaft				
BOLT, Twelve Point ... ***65 01 (RHD):*** 65 07 (LHD-LPS): 65 17 (OHV-232-LAW)(LHD-V8-LAW): 65 80 (LAW)	10.505	1	317 1980	#
10.713 FLANGE, Steering Gear Intermediate Shaft To Flange On Lower Shaft				
65 17-80 (WAW)	.....	1	320 5812	
ATTACHING PARTS				
Flange To Lower Shaft Flange				
BOLT, Hexagon ..... 65 17-80 (WAW)	10.710	2	320 5848	
WASHER, Internal Lock. 65 17-80 (WAW)	10.710	2	320 5849	
WASHER, Spring Lock.. 65 17-80 (WAW)	17.820	2	G120214	NA
NUT, Hexagon..... 65 17-80 (WAW)	17.406	2	G120368	
Flange To Intermediate Shaft				
BOLT, Twelve Point... 65 17-80 (WAW)	10.505	1	317 1980	
10.714 FLANGE, Steering Gear Lower Shaft Flange To Flange On Intermediate Shaft				
65 17-80 (WAW)	.....	1	320 5978	
ATTACHING PARTS				
Flange To Lower Shaft				
BOLT, Twelve Point... 65 17-80 (WAW)	10.505	1	317 1980	
Flange To Intermediate Shaft Flange				
BOLT, Hexagon ..... 65 17-80 (WAW)	10.710	1	320 5848	
WASHER, Internal Lock. 65 17-80 (WAW)	10.710	1	320 5849	
WASHER, Spring Lock.. 65 17-80 (WAW)	17.820	1	G120214	NA
NUT, Hexagon..... 65 17-80 (WAW)	17.406	1	G120368	

Copyright 1963 American Motors Corp.

GROUP NO. — DESCRIPTION — YEAR and MODEL	PRIMARY GROUP NO.	PER CAR	PART NO.	CODE
10.715 REINFORCEMENT, Steering Gear Shaft Flange				
64-65 01: 64 10-80 (WPS-LAW): 65 10-80	.....	2	320 4882	
10.720 COUPLING, Steering Gear Upper Shaft				
64 01 (RHD)	.....	1	320 4873	
10.722 BEARING, Steering Gear Upper Shaft Coupling				
64 01 (RHD)	.....	1	320 4875	
10.725 SEAL KIT, Steering Gear Upper Shaft Coupling (Incl. Washer And Spring)				
64 01 (RHD)	.....	1	320 4877	
10.727 SPRING, Steering Gear Upper Shaft Coupling				
64 01 (RHD)	.....	1	320 4878	
10.730 WASHER, Steering Gear Upper Shaft Coupling Bearing Retainer				
64 01 (RHD)	.....	1	320 4879	
10.733 RING, Steering Gear Upper Shaft Coupling Seal Retainer				
64 01 (RHD)	.....	1	320 4876	
10.765 BEARING, Steering Gear Shaft Lower (Ball)				
64 01-10-80 (WPS-LAW): 65 01 (WPS)***(RHD):*** 65 10 (LCV-WPS): 65 17 (WPS-LAW): 65 80 (LAW): ***165 10 (Can)***	.....	1	317 2588	#
10.768 ADAPTER, Steering Gear Shaft Lower Bearing (Plastic)				
64 01-10-80 (WPS-LAW)	.....	1	317 2522	
10.770 SPRING, Steering Gear Shaft Stabilizer				
64 01-10-80 (WPS): ***64 01 (RHD)***	.....	1	317 0967	
10.773 WASHER, Steering Gear Shaft Stabilizer				
64-65 01 (RHD): 65 01 (WST-WCGS-WPS)(WOD-WCGS-WPS) (LHD-WAT-WFGS-WOD-WPS): 65 07-17 (LPS): 65 10 (WPS): 65 80	.....	2	317 0968	
(Upper) 64 01-10-80 (WPS)	11.033	1	317 1689	
(Lower) 64 01-10-80 (WPS)	.....	1	317 0968	
10.775 STOP, Steering Gear Shaft Stabilizer Spring (Clamp)				
64-65 01 (WPS)***(RHD):*** 65 10 (LCV-WPS): 65 17 (WPS-LAW): 64 80 (WPS): 65 80 (LAW)	.....	1	317 0966	
ATTACHING PARTS				
Stop To Steering Gear Shaft				
BOLT, Hexagon ..... 64-65 01 (WPS)***(RHD):*** 65 10 (LCV-WPS): 65 17 (WPS-LAW): 64 80 (WPS): 65 80 (LAW)	17.038	1	G181610	
WASHER, Lock ..... 64-65 01 (WPS)***(RHD):*** 65 10 (LCV-WPS): 65 17 (WPS-LAW): 64 80 (WPS): 65 80 (LAW)	17.820	1	G120214	NA
NUT, Hexagon ..... 64-65 01 (WPS)***(RHD):*** 65 10 (LCV-WPS): 65 17 (WPS-LAW): 64 80 (WPS): 65 80 (LAW)	17.406	1	G120368	

Copyright 1963 American Motors Corp.

GROUP NO. — DESCRIPTION — YEAR and MODEL	PRIMARY GROUP NO.	PER CAR	PART NO.	CODE
10.780 SPACER, Steering Gear Shaft Stabilizer Spring Stop				
64 01 (WPS): 65 01 (WST-WPS-WCGS)(WOD-WPS-WCGS)	.....	1	317 1681	
64 01 (RHD-WST-WCGS)(RHD-WOD-WCGS)	.....	1	317 4630	
10.801 LEVER, Steering Wheel Release				
64-65 10-80 (WAW)	.....	1	317 2933	
10.805 COVER, Steering Wheel Actuator And Directional Signal Switch				
64-65 10-80 (WAW)	.....	1	320 5041	
10.810 RING, Steering Gear Shaft Bearing Preload Capsule Retaining				
64 10-80 (WAW)	.....	1	320 5034	
10.812 WASHER, Steering Gear Shaft Bearing Preload Capsule (Upper)(Steel)				
64 10-80 (WAW)	.....	1	320 5038	
10.815 CAPSULE KIT, Steering Gear Shaft Bearing Preload				
64 10-80 (WAW)...(Incl. Retaining Ring)	.....	1	320 5049	
10.817 WASHER, Steering Gear Shaft Bearing Preload Capsule (Rubber)				
64 10-80 (WAW)	.....	1	320 5037	
10.820 RETAINER, Steering Gear Shaft Bearing Preload Capsule Rubber Washer				
64 10-80 (WAW)	.....	1	320 5036	
10.823 SEAT, Steering Gear Shaft Bearing Preload Capsule				
64 10-80 (WAW)	.....	1	320 5035	
10.825 RACE, Steering Gear Shaft Upper Bearing				
64 10-80 (WAW)	.....	1	320 5033	
65 10-80 (WAW)	.....	1	320 5777	
10.826 SEAT, Steering Gear Shaft Upper Bearing Inner Race				
65 10-80 (WAW)	.....	1	320 5779	
10.827 BEARING, Steering Gear Shaft (Roller)				
64-65 10-80 (WAW)	.....	2	320 5028	
10.828 NUT, Steering Gear Shaft Roller Bearing				
65 10-80 (WAW)	.....	1	320 5778	
10.829 WASHER, Steering Gear Shaft Upper Bearing Lock Tab				
65 10-80 (WAW)	.....	1	320 5780	

Copyright 1963 American Motors Corp.

GROUP NO. — DESCRIPTION — YEAR and MODEL	PRIMARY GROUP NO.	PER CAR	PART NO.	CODE
10.830 ACTUATOR, Steering Wheel				
64-65 10-80 (WAW)	.....	1	320 5048	
10.832 PIN, Steering Wheel Actuator Pivot				
64-65 10-80 (WAW)	.....	2	320 5044	
10.835 SHAFT, Steering Gear				
(Upper) 64 10-80 (WAW)	.....	1	320 5051	
(Upper) 65 10-80 (WAW)	.....	1	320 5776	
(Lower) 64 10-80 (WAW): 65 10 (LCV-WAW)	.....	1	320 5029	
(Lower) 65 80 (WAW): 65 17 (WAW)	.....	1	320 5775	
10.837 SPRING, Steering Gear Upper Shaft To Lower Shaft Preload				
64-65 10-80 (WAW)	.....	1	320 5031	
10.840 SPHERE KIT, Steering Gear Shaft Centering				
64 10-80 (WAW)...(Incl. 2-Spheres, 1-Capsule, 1-Capsule Retaining Ring)	.....	1	320 5170	
SPHERE, Steering Gear Shaft Centering				
65 10-80 (WAW)	.....	2	320 5030	
10.843 SHOE, Steering Wheel Actuator Lock				
(Upper) 64-65 10-80 (WAW)...(Incl. Rubber Stop)	.....	1	320 5025	
(Lower) 64-65 10-80 (WAW)	.....	1	320 5052	
10.845 PIN, Steering Wheel Actuator Lock Shoe Retaining				
64-65 10-80 (WAW)	.....	2	320 5026	
10.847 SPRING, Steering Wheel Actuator Lock Shoe				
64-65 10-80 (WAW)	.....	2	320 5027	
10.850 SUPPORT, Steering Wheel And Directional Signal Actuator				
64-65 10-80 (WAW)	.....	1	320 5040	
ATTACHING PARTS				
Support To Gear Shift Tube Lock Plate				
SCREW, Machine..... 64-65 10-80 (WAW-7/8" Long)	.....	2	320 5057	
SCREW, Machine..... 64-65 10-80 (WAW-1-1/4" Long)	.....	2	320 5058	
10.852 PLATE, Steering Wheel And Directional Signal Actuator Support Lock				
64-65 10-80 (WAW-WFGS)	.....	1	320 5404	
64-65 10 (WAW-WCGS)	.....	1	320 5043	#
10.855 SPRING, Steering Wheel Tilt Return				
64-65 10-80 (WAW)	.....	1	320 5047	

Copyright 1963 American Motors Corp.

GROUP NO. — DESCRIPTION — YEAR and MODEL	PRIMARY GROUP NO.	PER CAR	PART NO.	CODE
10.860 SEAL, Steering Gear Shaft (Foam)				
64 10-80 (WCGS-WAW): 65 10 (WCGS-WAW)	.....	1	320 5046	
10.865 COUPLING ASSEMBLY, Steering Gear Shaft To Stub Shaft				
64 10-80 WAW)...(Incl. Flange)	.....	1	317 2957	
ATTACHING PARTS				
Coupling To Lower Shaft				
BOLT, Twelve Point ... 64 10-80 (WAW)	10.505	1	317 1980	
Coupling To Stub Shaft				
BOLT, Twelve Point ... 64 10-80 (WAW)	10.505	1	317 1980	
10.867 FLANGE KIT, Steering Gear Shaft Coupling				
64 10-80 (WAW)...(Incl. Bolts, Washer And Nuts)	.....	1	320 5068	
10.870 BOLT KIT, Steering Gear Shaft Flange				
64 10-80 (WAW)...(Incl. Washers And Nuts) ***(Replaces 320 5069)***	.....	1	320 4849	
10.873 FLANGE, Steering Gear Lower Shaft				
64 10 (WAW)	.....	1	320 5812	
ATTACHING PARTS				
Flange To Lower Shaft				
BOLT, Twelve Point ... 64 10 (WAW)	10.505	1	317 1980	
10.880 BEARING, Steering Gear Shaft Lower Ball				
65 17 (WAW): 65 80 (WAW)	.....	1	320 5781	#
10.883 SPRING, Steering Gear Shaft Lower Bearing				
65 80 (WAW)	.....	1	320 5784	

Copyright 1963 American Motors Corp.

GROUP NO. — DESCRIPTION — YEAR and MODEL	PRIMARY GROUP NO.	PER CAR	PART NO.	CODE

Copyright 1963 American Motors Corp.

REAR LEAF SPRING AND SHOCK 60 thru 62 01

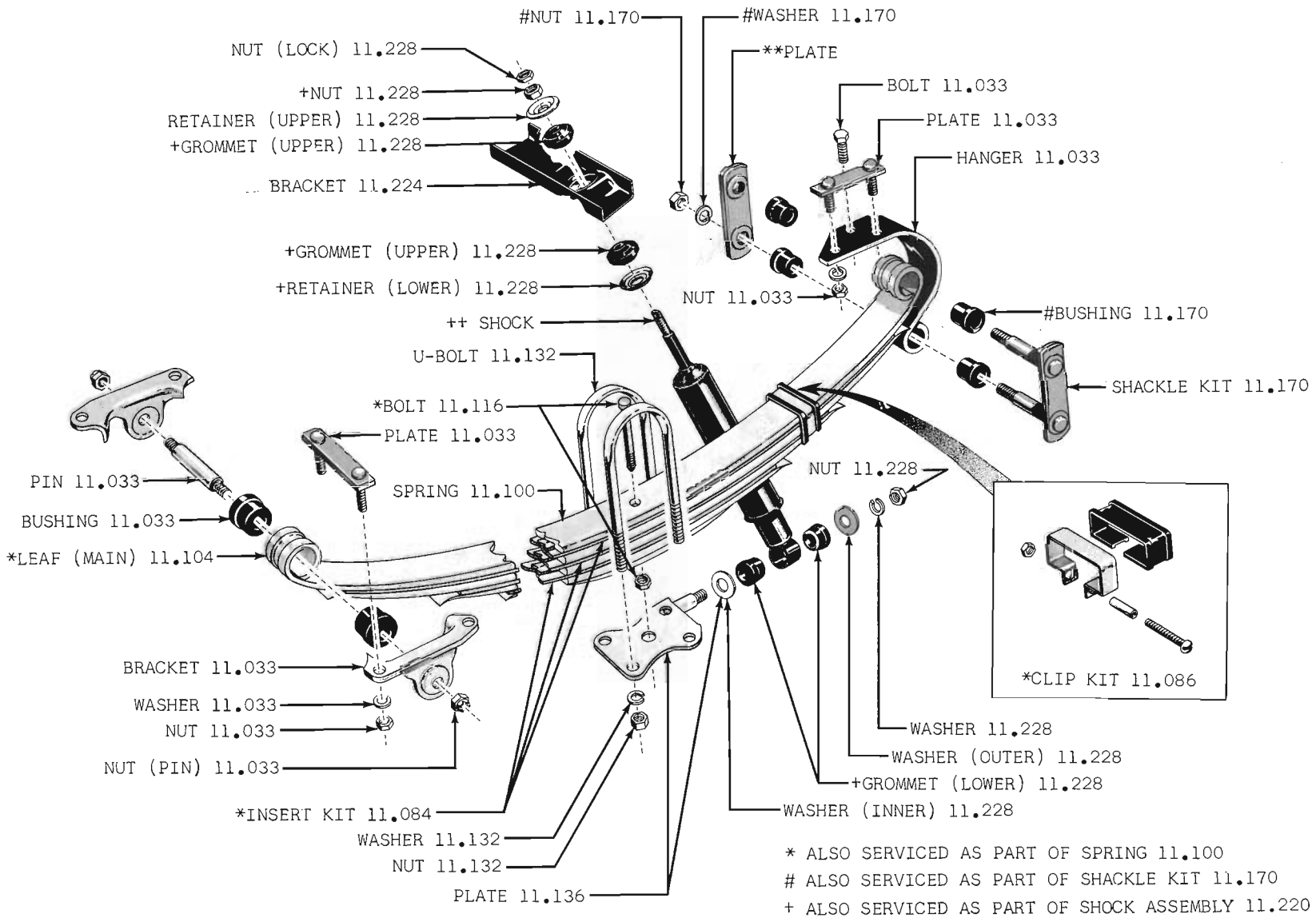

* ALSO SERVICED AS PART OF SPRING 11.100
\# ALSO SERVICED AS PART OF SHACKLE KIT 11.170
\+ ALSO SERVICED AS PART OF SHOCK ASSEMBLY 11.220
++ SERVICED ONLY AS PART OF SHOCK ASSEMBLY 11.220
** SERVICED ONLY AS PART OF SHACKLE KIT 11.170

Copyright 1963 American Motors Corp.

Printed in U.S.A.

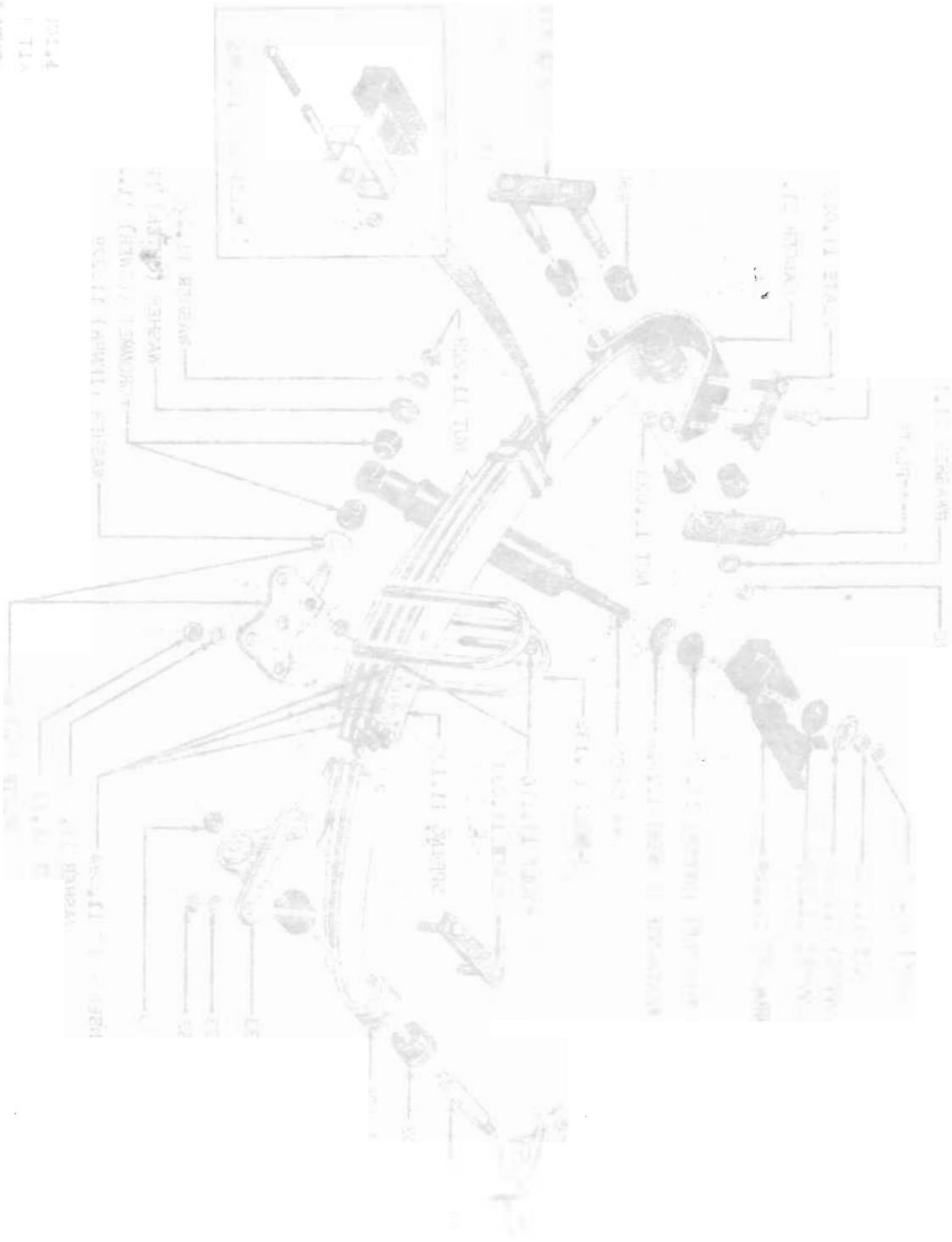

Copyright 1963 American Motors Corp.

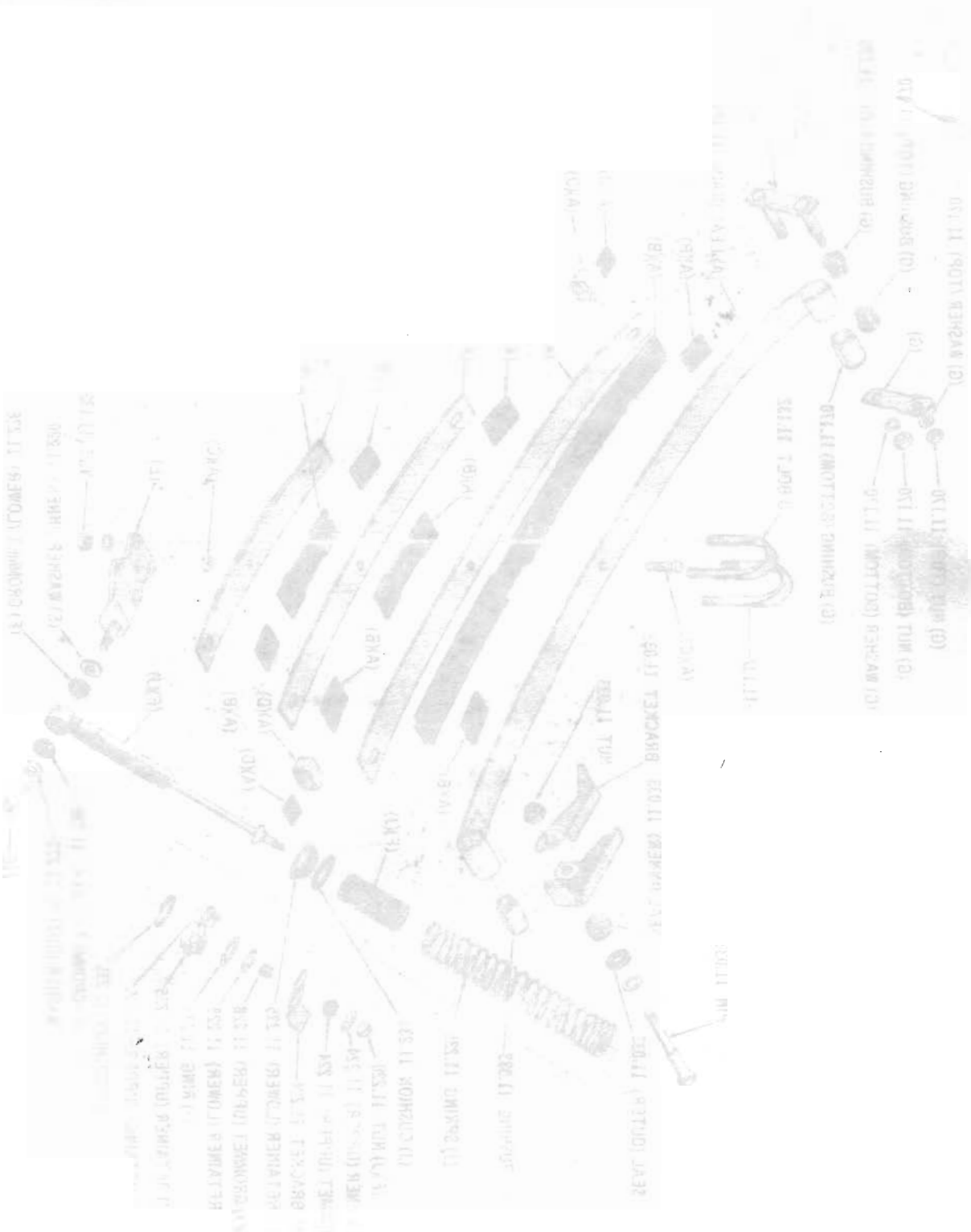

Copyright 1963 American Motors Corp.

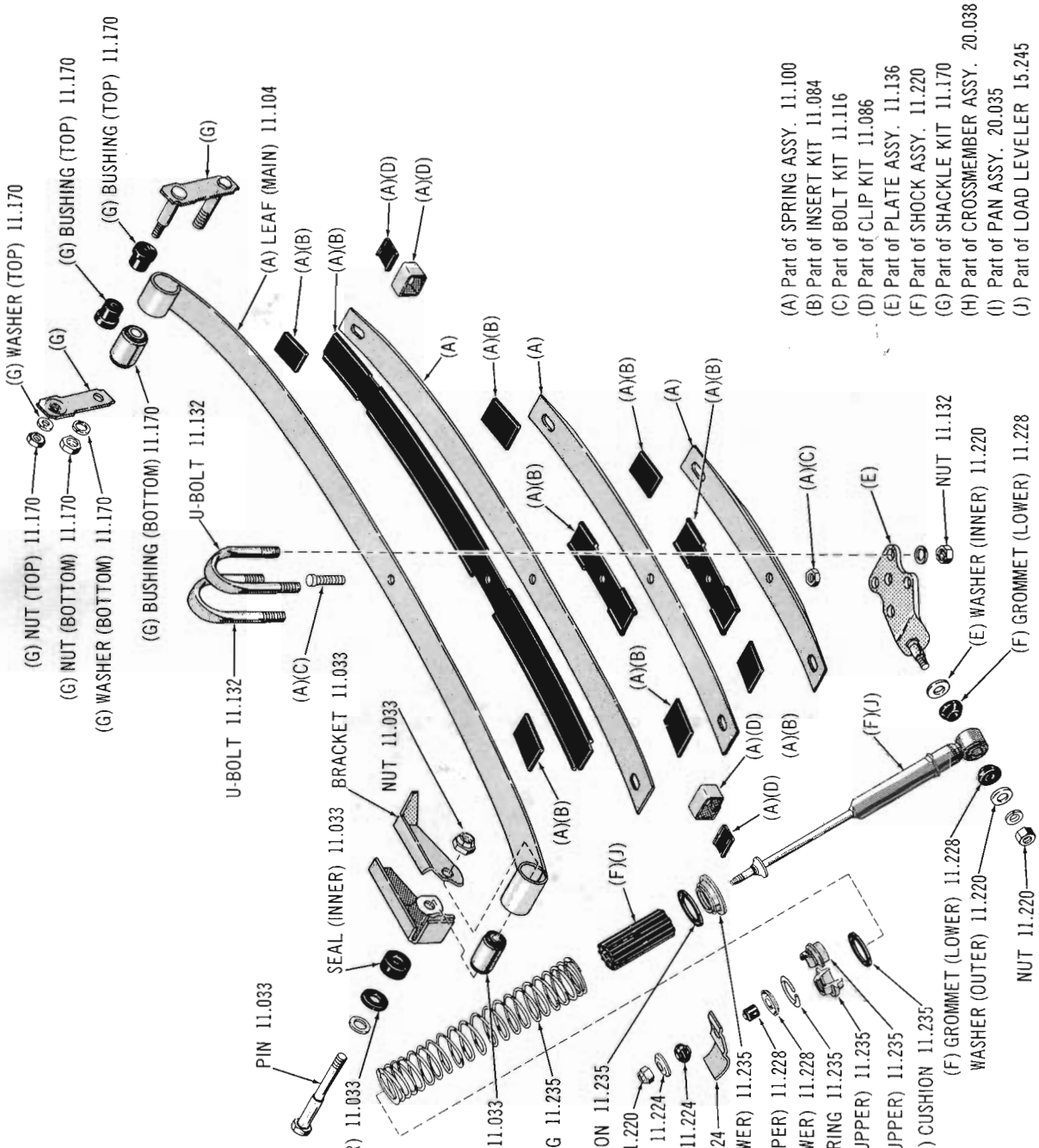

REAR LEAF SPRING AND SHOCK 64-65 01 (WLL)

Copyright 1963 American Motors Corp.

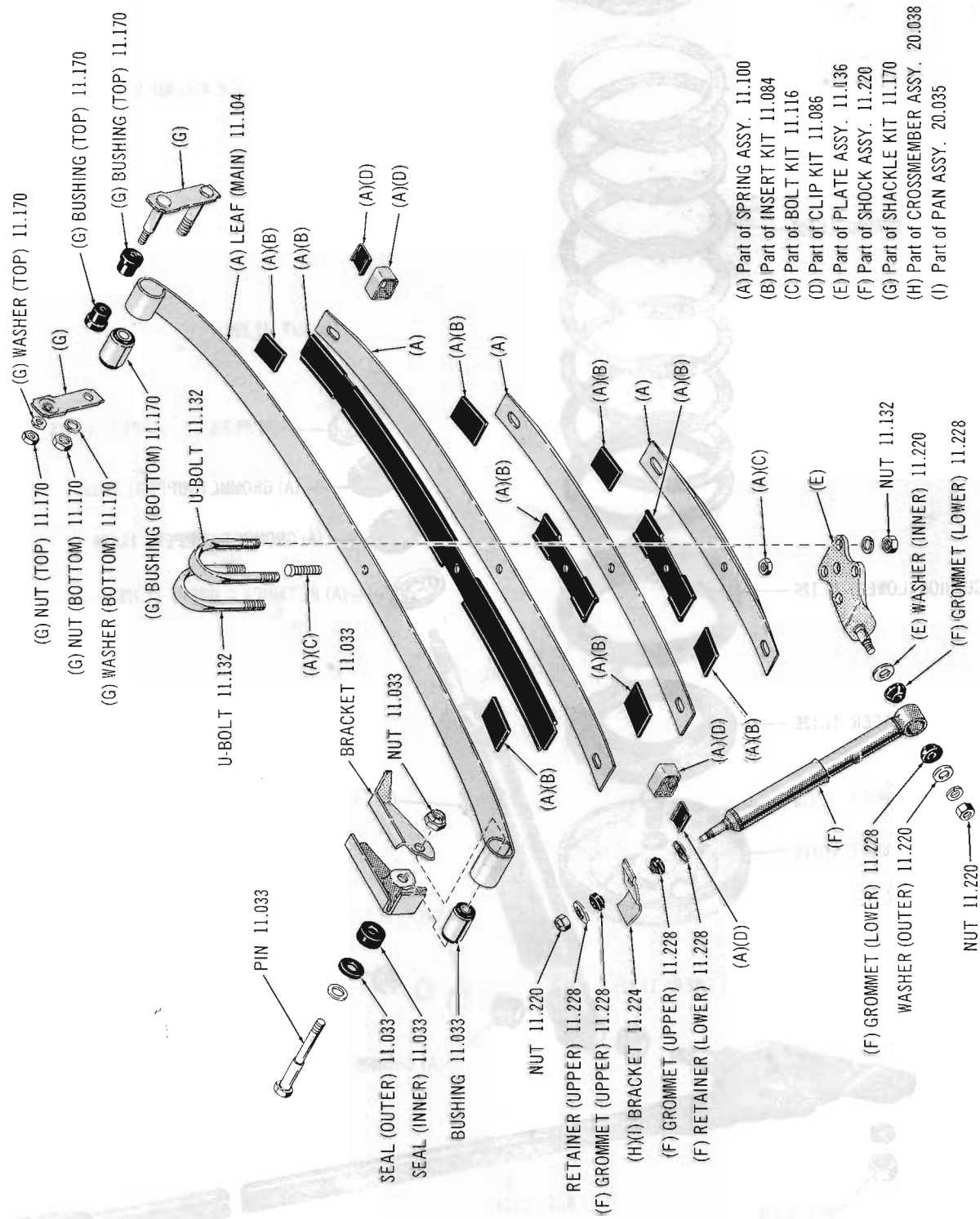

REAR LEAF SPRING AND SHOCK 64-65 01 (LLL)

Copyright 1963 American Motors Corp.

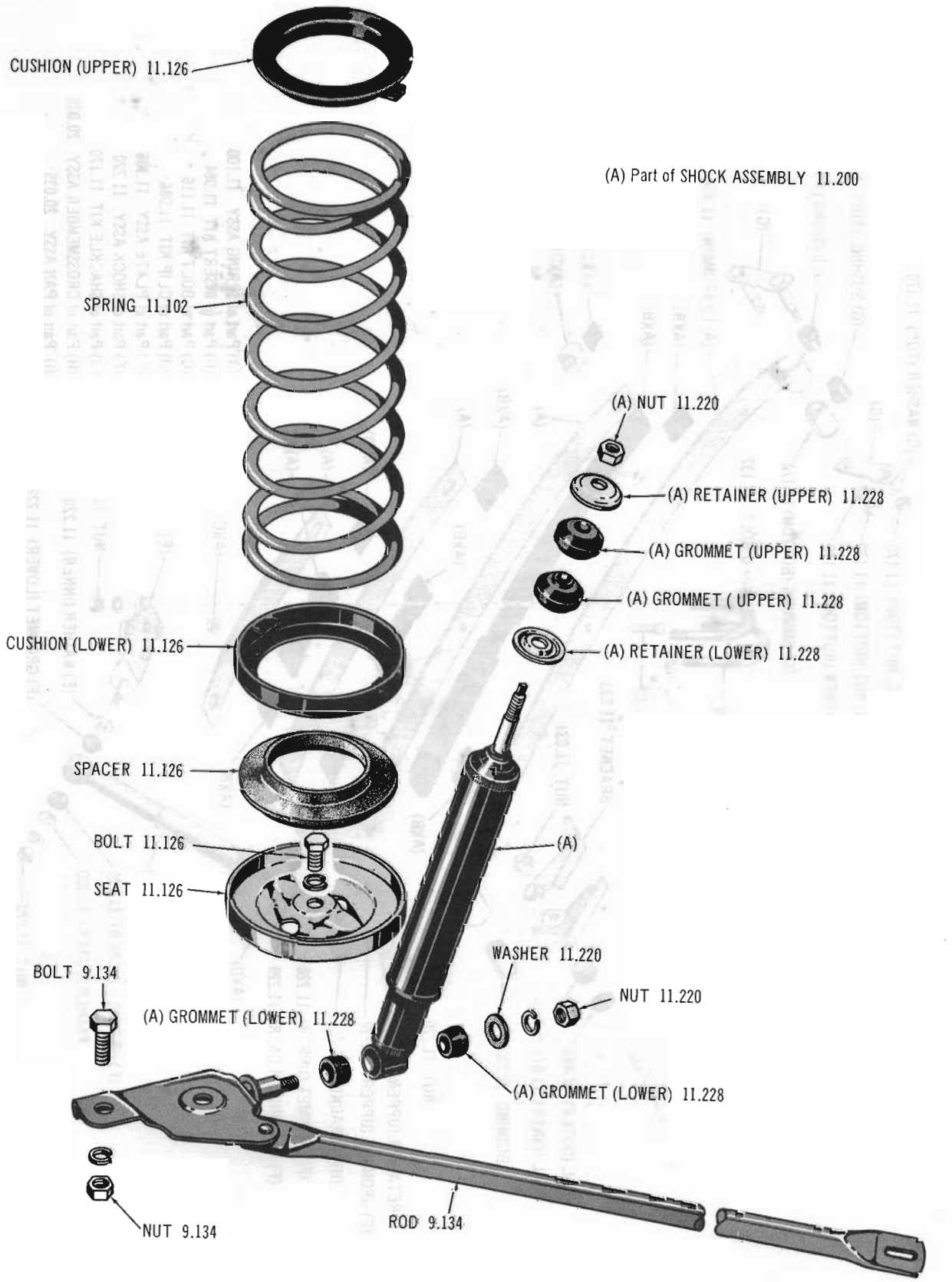

REAR COIL SPRING AND SHOCK 62 thru Current 10-20-80 (LLL)

Copyright 1963 American Motors Corp.

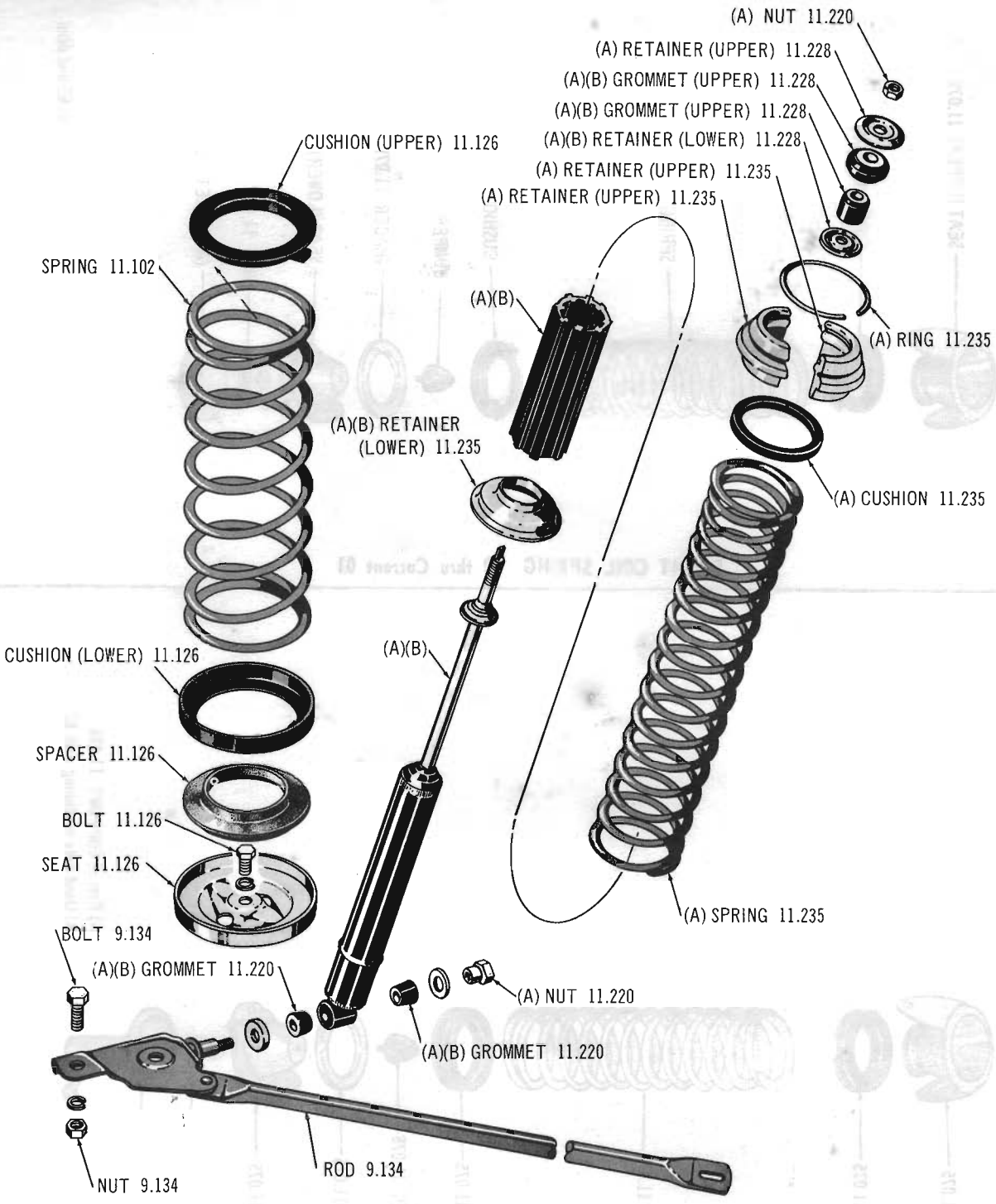

(A) Part of LOAD LEVELER 15.245
(B) Part of SHOCK ASSY. 11.220

REAR COIL SPRING AND SHOCK 62 thru Current 10-20-80 (WLL)

Copyright 1963 American Motors Corp.

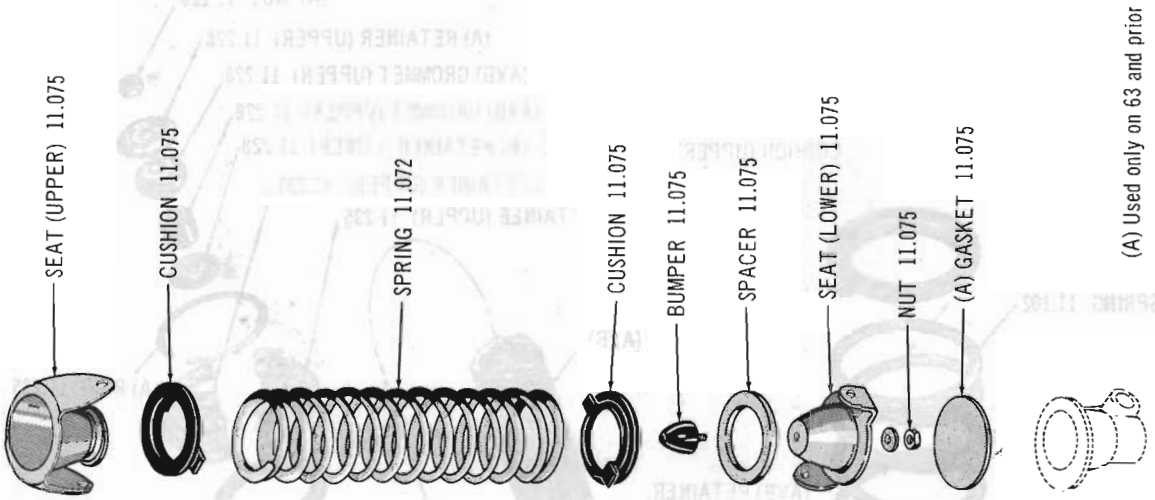

FRONT COIL SPRING 60 thru Current 01

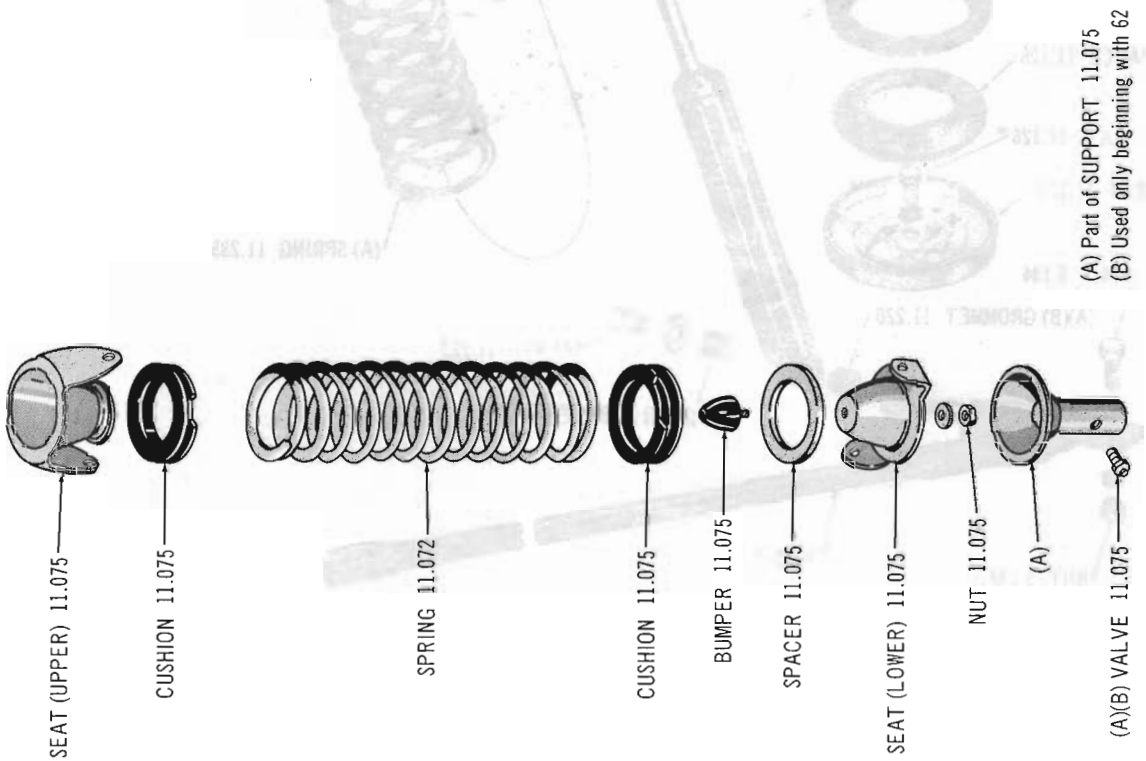

FRONT COIL SPRING 60 thru Current 10-80

Copyright 1963 American Motors Corp.

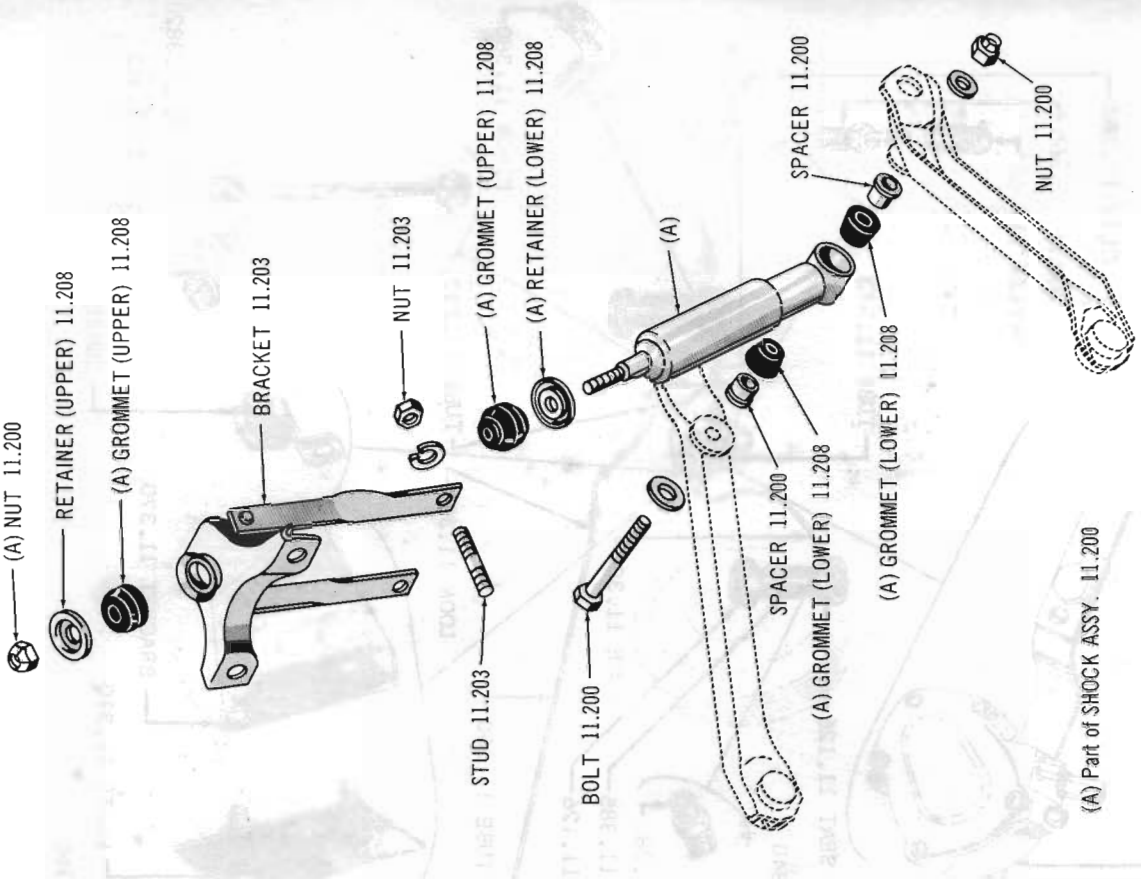

FRONT SHOCK 60 thru 63 01

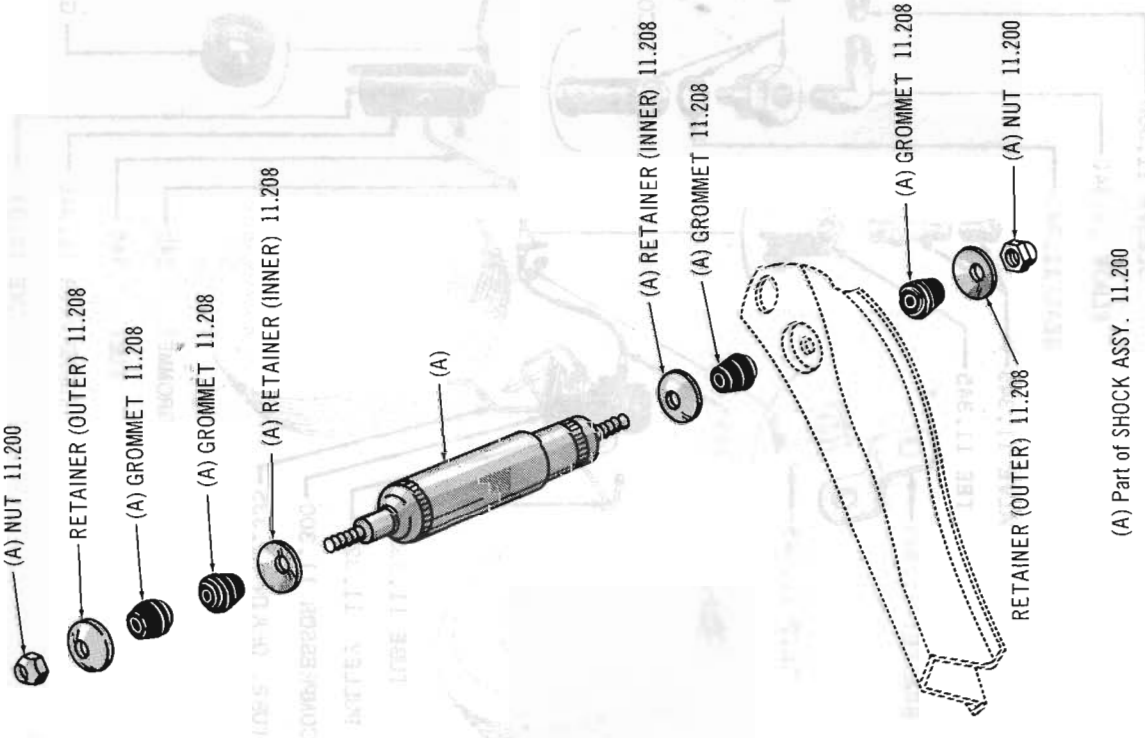

FRONT SHOCK 64 01: 62 thru Current 10-80

Copyright 1963 American Motors Corp.

Copyright 1963 American Motors Corp.

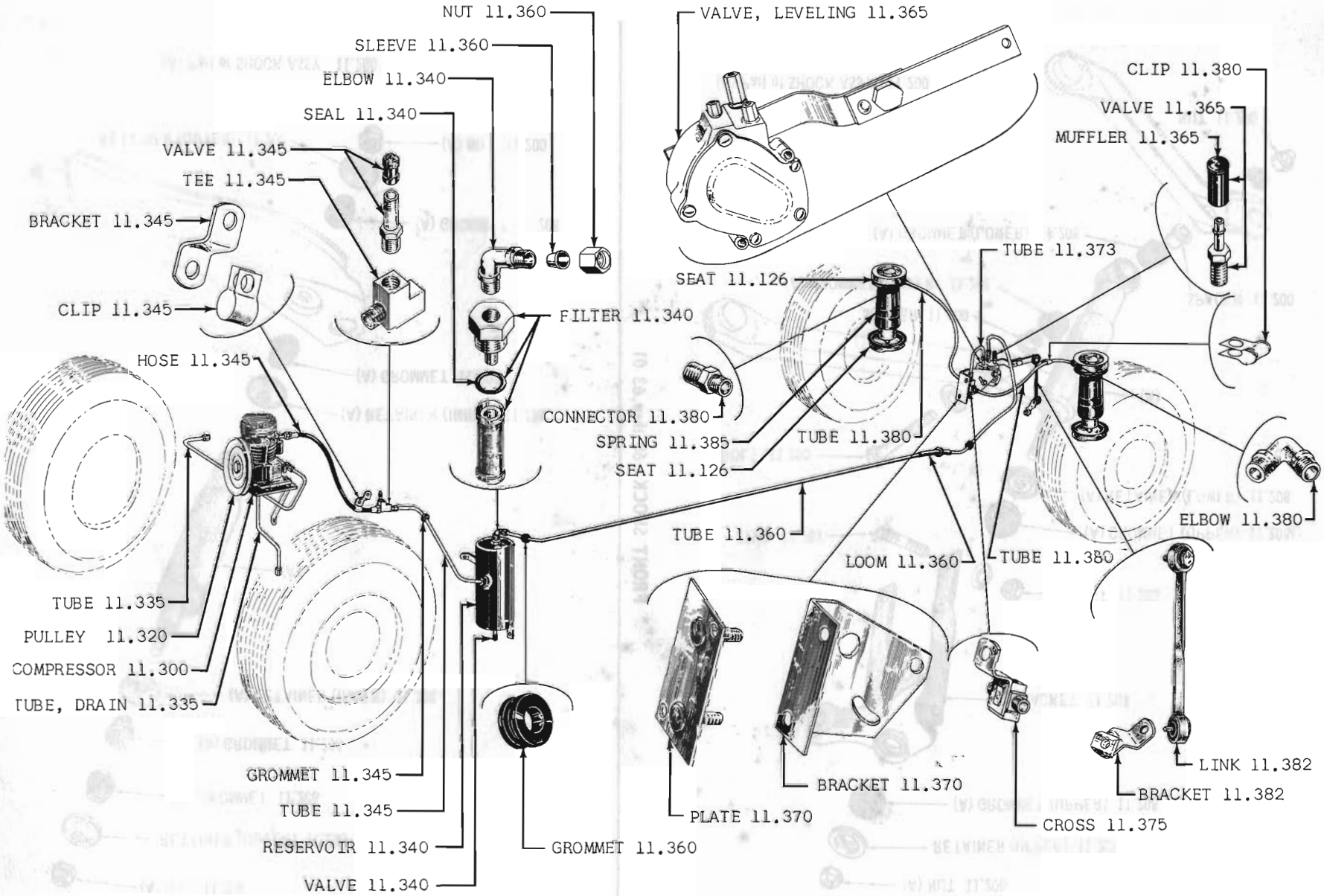

Printed in U.S.A.

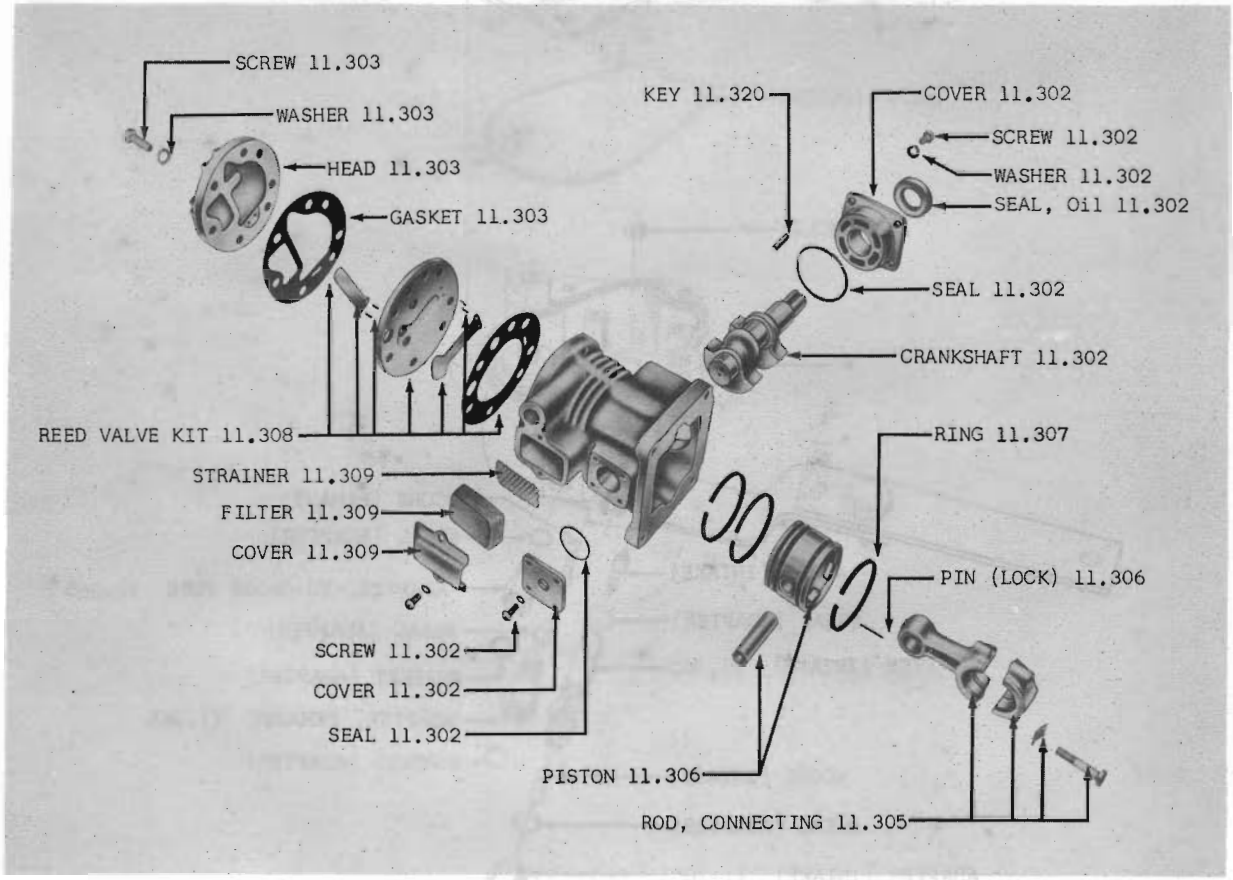

Copyright 1963 American Motors Corp.

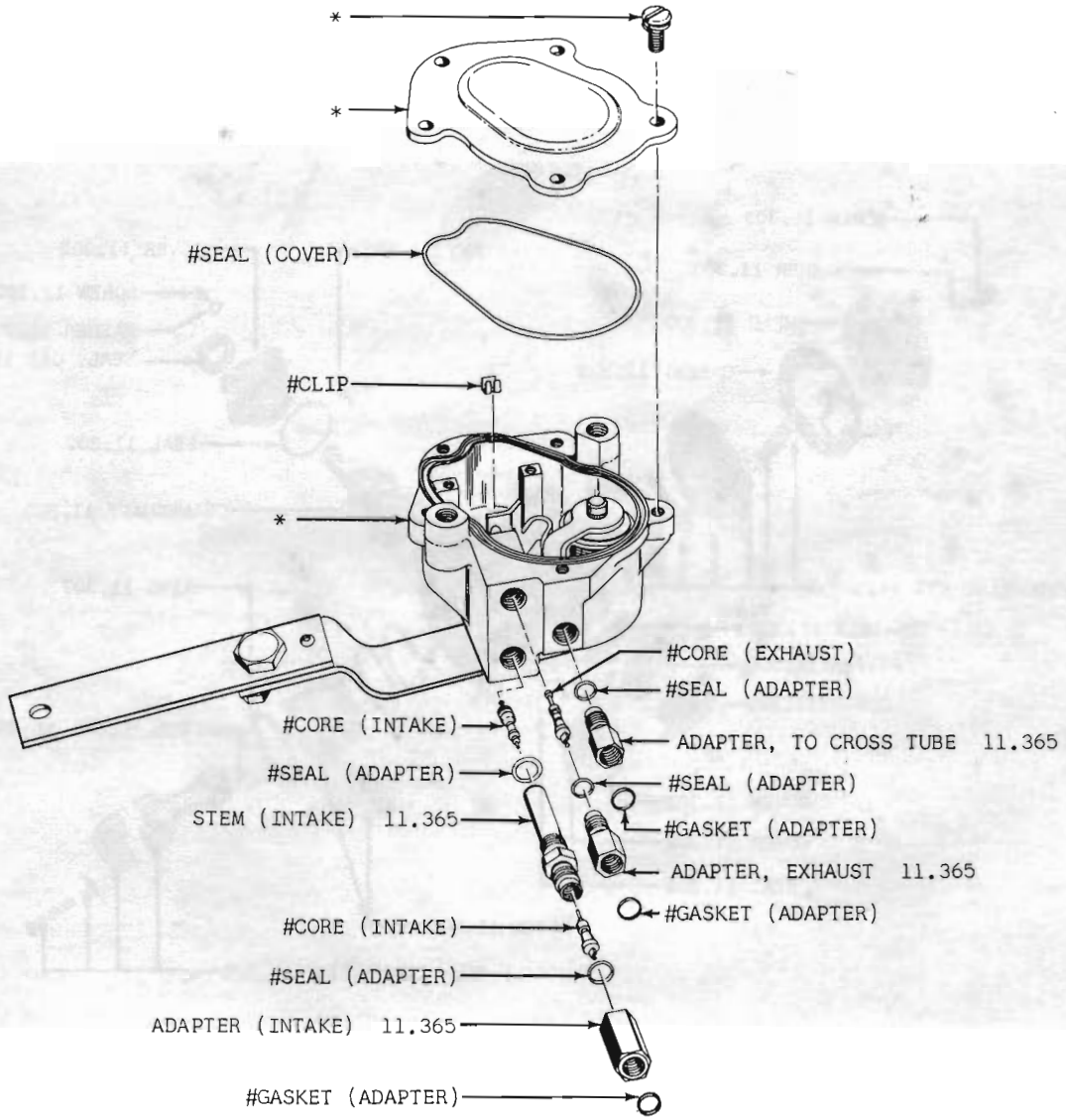

#SERVICED ONLY IN KIT 11.365

*SERVICED ONLY IN ASSEMBLY 11.365

REAR AIR SUSPENSION LEVELING VALVE 60 10-20-80

Copyright 1963 American Motors Corp.

GROUP NO. — DESCRIPTION — YEAR and MODEL	PRIMARY GROUP NO.	PER CAR	PART NO.	CODE
11.033 BRACKET, Rear Leaf Spring (To Floor Pan)				
(Front-Left) 60 Thru 63 01	.....	2	313 0333	
(Front-Right) 60 Thru 63 01	.....	2	313 0334	
ATTACHING PARTS Bracket To Mounting Plate				
WASHER, Lock ..... 60 Thru 63 01	17.820	8	G120382	NA
NUT, Hexagon ..... 60 Thru 63 01	17.406	8	G120369	NA
BRACKET, Rear Leaf Spring Front Mounting (Welded To UnderBody)				
(Left) 64-65 01 (LCV)	20.043	1	350 0087	
(Left) 64-65 07	20.043	1	350 0057	
(Right) 64-65 01 (LCV)	20.043	1	350 0086	
(Right) 64-65 07	20.043	1	350 0056	
HANGER, Rear Leaf Spring To Sill				
(Rear-Left) 60 Thru 63 01	.....	1	314 0808	
(Rear-Right) 60 Thru 63 01	.....	1	314 0809	
ATTACHING PARTS Hanger To Sill				
BOLT, Hexagon ..... 60 Thru 63 01	17.038	2	G181637	NA
WASHER, Lock ..... 60 Thru 63 01	17.820	6	G120382	NA
NUT, Hexagon ..... 60 Thru 63 01	17.406	6	G120369	NA
PLATE, Rear Leaf Spring Front Bracket To Floor Pan Mounting (Incl. Studs)				
60 Thru 63 01	20.070	4	340 0369	
PLATE, Rear Leaf Spring Rear Hanger Mounting				
60 Thru 63 01	20.070	2	340 0369	
BUSHING, Rear Leaf Spring Front Eye				
60 Thru 63 01	.....	4	314 2071	
64-65 01	.....	2	317 1345	
PIN, Rear Leaf Spring Front Eye Bushing				
60 01	.....	2	313 0355	
61 Thru 63 01	.....	2	316 0807	
64-65 01	.....	2	317 1344	
ATTACHING PARTS Pin To Bracket				
WASHER, Plain 64 01	.....	2	317 1689	
WASHER, Lock 62-63 01	17.820	4	G131100	NA
NUT, Lock ..... 60 Thru 62 01	17.416	4	G272712	NA
NUT, Lock 64-65 01	17.416	2	G442834	
NUT, Hexagon 62-63 01	17.406	4	G120370	NA
SEAL, Rear Leaf Spring Front Eye Bushing Pin To Side Sill				
(Inner) 64 01 (7/8" Thick)	.....	2	317 1687	
(Outer) 64 01 (3/16" Thick)	.....	2	317 1688	
11.035 SUPPORT, Rear Leaf Spring Front Mounting Bracket				
(Left) 64-65 02-05-06-08-09	20.043	1	350 0059	
(Left) 64-65 07	20.043	1	350 0617	
(Right) 64-65 02-05-06-08-09	20.043	1	350 0058	
(Right) 64-65 07	20.043	1	350 0616	

Copyright 1963 American Motors Corp.

GROUP NO. — DESCRIPTION — YEAR and MODEL	PRIMARY GROUP NO.	PER CAR	PART NO.	CODE
11.072 SPRING, Front Coil				
60 01 (WST-Note 11.072-1)(WOD-Note 11.072-1)	.....	2	312 9503	
60 01 (WST-Note 11,072-2)(WOD-Note 11.072-2): 61 01 (WST-LCV) (WOD-LCV): 62 Thru 64 01 (LHE-WAC)	.....	2	315 9326	
60 01 (WAT-Note 11.072-3)	.....	2	312 9502	
60 01 (WAT-Note 11.072-4): 61 01 (WAT-LCV): 62 Thru 64 01 (OHV-LCV-WAC)	.....	2	315 9327	
61 Thru 63 07 (WAC)	.....	2	316 5819	
64 01 (OHV-WAC): 65 01 (OHV-196-WAC)(OHV-199-WAC)	.....	2	317 2894	
60-61 10 (OHVC-WAC)	.....	2	314 7585	
64-65 01 (Heavy): ***165 01 (Heavy-Can)***	.....	2	316 9814	
60-61 28 (LAC)	.....	2	315 0588	
60-61 20 (WAC): 60-61 25-29 (LAC)	.....	2	315 0589	
60-61 80 (LAC)	.....	2	315 4378	
62 80 (LAC)	.....	2	316 3615	
63 Thru 64 10-80 (V8-LAC): 65 17-87 (V8-LAC-Note 11.072-8)	.....	2	316 7240	
63-64 10 (V8-WAC): 65 10 (V8-WAC-Note 11.072-6): 63-64 80 (WAC)	.....	2	316 7682	
65 10-80 (V8-WAC-Note 11.072-7)	.....	2	317 7446	
65 10-80 (V8-WAC-Note 11.072-15) ***(Use 318 1995)***	.....	2	317 9147	
65 10-80 (V8-LCV-LAC-Note 11.072-10)	.....	2	317 7687	
65 17-87 (V8-Note 11.072-9)	.....	2	317 9148	
65 10-80 (V8-LCV-LAC-Note 11.072-11): ***165 15-18-19-85-88-89 (Can)*** ***(Use 318 1994)***	.....	2	317 9145	
60-61 10 (Heavy)	.....	2	315 0588	
60-61 20 (Heavy)	.....	2	315 0589	
60 Thru 62 80 (Heavy)	.....	2	315 4379	
63 Thru 65 10 (V8-Heavy-Note 11.072-13): 65 80 (V8-Heavy-Note 11.072-13)	.....	2	316 7238	
65 10-80 (V8-Heavy-Note 11.072-14): ***165 15-18-19-85-88-89 (Can)***	.....	2	317 9146	
65 10-80 (V8-WAC-Note 11.072-12) ***(Use 318 1995)***	.....	2	317 9147	
(Left) 61 Thru 63 07 (LAC)	.....	1	316 5819	

NOTE 11.072-1: Used prior to Car Code No. 20601.
NOTE 11.072-2: Used beg. with Car Code No. 20601.
NOTE 11.072-3: Used prior to Car Code No. 20512.
NOTE 11.072-4: Used beg. with Car Code No. 20512.
NOTE 11.072-5: Used on Cars built with Delco Remy 60 Amp. Alternator.
NOTE 11.072-6: On 65 10 (V8-WAC) used prior to Car Sequence No. W-019159.
NOTE 11.072-7: On 65 10 (V8-WAC) used beginning with Car Sequence No. W-019159 and prior to Car Sequence No. E-105782: on 65 80 (V8-WAC) used prior to Car Sequence No. W-100442.
NOTE 11.072-8: On 65 17 (V8-LAC) and 65 87 (V8-LAC) used prior to Car Sequence No. W-097867. (V8-Can) used prior to Car Sequence No. ZT-
NOTE 11.072-9: On 65 17 (V8-LAC) and 65 87 (V8-LAC) used beginning with Car Sequence No. W-09 7867. on 165 10 (V8-Can) used beginning with Car Serial No. ZT-
NOTE 11.072-10: On 65 10 (V8-LCV-LAC) used prior to Car Sequence No. E-094060 and beginning with E-096180 and prior to E-100115; on 65 80 (V8-LCV-LAC) used prior to Car Sequence No. W-090710 and beginning with W-090817.
Car Serial No. ZT-501194: on 165 80 (V8-287-LCV-Can) used prior to ET-500692; on 165 80 (V8-327-LCV-LAC-Can) used prior to HT-500730.
NOTE 11.072-11: On 65 10 (V8-LCV-LAC) used beginning with Car Sequence No. E-904060 and prior to E-096180 and beginning with E-100115; on 65 80 (V8-LCV-LAC) used beginning with Car Sequence No. W-090710 and prior to W-090817.
used beginning with Car Serial No. ZT-501194; on 165 80 (V8-287-LCV-LAC-Can) used beginning with ET-500692; on 165 80 (V8-327-LCV-LAC-Can) used beginning with HT-500730.
NOTE 11.072-12: On 65 10 (V8-WAC) used beginning with Car Sequence No. E-105782; on 65 80 (V8-WAC) used beginning with W-100442.
NOTE 11.072-13: On 65 10 (V8-Heavy) used prior to Car Sequence No. W-105873 ; on 65 80 (V8-Heavy) used prior to Car Sequence No. W-105873.
No. ZT-501194; on 65 80 (V8-287-Can-Heavy) used prior to No. ET-500692; on 165 80 (V8-327-Can-Heavy) used prior to HT-500730.
NOTE 11.072-14: On 65 10 (V8-Heavy) used beginning with Car Sequence No. W-105873; on 65 80 (V8-Heavy) used beginning with Car Sequence No. W-105873.
Car Serial No. ZT-501194: on 165 80 (V8-287-Can-Heavy) used beginning with ET-500692; on 165 80 (V8-327-Can-Heavy) used beginning with HT-500730.
NOTE 11.072-15: On 65 10 (V8-WAC) Used beginning with Car Sequence No. E-105782; On 65 80 (V8-WAC) Used beginning with W-100442.

Copyright 1963 American Motors Corp.

GROUP NO. — DESCRIPTION — YEAR and MODEL	PRIMARY GROUP NO.	PER CAR	PART NO.	CODE
(Left) 62 01 (LHE): 63 01 (LHE-LAC)	.....	1	315 9326	
(Left) 62-63 01 (OHV-LCV-LAC)	.....	1	315 9327	
(Left) 64 01 (LCV-OHV-196-LAC): 65 01 (LCV-OHV-196-LAC) (LCV-OHV-199-LAC)(LCV-OHV-232-LAC): ***165 01 (Can)***	.....	1	316 9815	
(Left) 64 07 (OHV-LAC): 65 07 (OHV-196-LAC)(OHV-199-LAC)(OHV-232-LAC)	.....	1	317 2894	
(Left) 64 01 (LHE-LAC) : 65 01 (LHE)	.....	1	317 2895	
(Left) 60-61 10 (LHD-OHVC-LAC)	.....	1	314 7585	
(Left) ***60-61 10 (RHD-OHVC-LAC)***	.....	1	314 4874	
(Left) 61 10 (LHD-OHVA-LAC): 62 10 (WAC)	.....	1	316 0793	
(Left) 61 10 (OHVA-WAC)	.....	1	316 0795	
(Left) ***61 10 (RHD-OHVA-LAC)***	.....	1	316 0794	
(Left) 62 10 (LHD-LAC)	.....	1	314 4874	
(Left) ***62 10 (RHD-LAC)***	.....	1	316 3614	
(Left) 63 10 (Six-LAC): 64 10 (OHVC-LAC)(OHVA-WAC): 65 10 (LHD-OHV-199-LAC): 65 10-80 (LHD-OHV-232-LAC): ***165 15-18-19-85-86-89 (Can)***	.....	1	316 7679	#
(Left) 63-64 10 (OHVC-WAC)	.....	1	316 7754	
(Left) ***63 10 (Six-RHD): 64 10 (RHD-OHVC-196): 65 10 (RHD-OHV-232)***	.....	1	316 7755	
(Left) 62 10 (Heavy)	.....	1	316 0793	
(Left) 63 10 (Six-Heavy): 64 10 (OHVC-Heavy): 65 10 (OHV-199-Heavy): 65 10-80 (OHV-232-Heavy): ***165 15-18-19-85-88-89 (Six-Heavy-Can)***	.....	1	316 7239	#
(Left) 64 10 (OHVA-LAC)	.....	1	316 7232	
(Left) 64 10 (OHVA-Heavy)	.....	1	317 4204	
(Left) 65 10-80 (OHV-232-WAC): 65 10 (OHV-199-WAC)	.....	1	317 7447	
(Right) 61-62 07 (LAC)	.....	1	315 9327	
(Right) 62 01 (LHE): 63 01 (LHE-LAC)	.....	1	316 3616	
(Right) 62 01 (OHV-LCV-LAC): 63 01 (OHV-LAC)	.....	1	315 9326	
(Right) 64-65 07 (LAC)	.....	1	316 9815	
(Right) 64 01 (OHV-196-LCV-LAC): 65 01 (LCV-OHV-196-LAC) (LCV-OHV-199-LAC)(LCV-OHV-232-LAC): ***165 01 (Can)***	.....	1	317 2895	#
(Right) 64 01 (LHE-LAC): 65 01 (LHE)	.....	1	317 2896	
(Right) 60-61 10 (LHD-OHVC-LAC): 61 10 (OHVC-LAC): 62 10 (WAC)	.....	1	314 4874	
(Right) ***60 10 (RHD-LAC):*** 60 10 (WAE-Note 11.072-5)	.....	1	314 7585	
(Right) 61 10 (LHD-OHVA-LAC): 62 10 (LHD-LAC)	.....	1	316 0794	
(Right) 61 10 (OHVA-WAC): ***61 10 (RHD-OHVA-LAC)***	.....	1	316 0793	
(Right) ***62 10 (RHD-LAC)***	.....	1	316 3614	
(Right) 63 10 (OHVC-LAC)(OHVA-WAC): 64 10 (LHD-OHVC-196-LAC) (OHVA-WAC)(OHV-232-LAC): 65 10 (LHD-OHV-199-LAC): 65 10-80 (OHV-232-LAC): ***165 15-18-19-85-88-89 (Six-Can)***	.....	1	316 7755	#
(Right) 63 10 (Six-WAC): 64 10 (OHVC-WAC): 65 10-80 (OHV-232-WAC): 65 10 (OHV-199-WAC)	.....	1	316 7232	
(Right) ***63-64 10 (Six-RHD): 65 10 (RHD-OHV-232)***	.....	1	316 7679	
(Right) 64 10 (OHVA-LAC)	.....	1	317 4203	
(Right) 62 10 (Heavy)	.....	1	314 4874	
(Right) 63-64 10 (OHVC-Heavy): 65 10 (OHV-199-Heavy): 65 10-80 (OHV-232-Heavy): ***165 15-18-19-85-86-89 (Six-Heavy-Can)***	.....	1	316 7756	#
(Right) 64 10 (OHVA-Heavy)	.....	1	317 4205	

11.075 SUPPORT, Front Coil Spring

60-61 10-20-80	.....	2	314 4922	
62 Thru 65 10-80...(Incl. Valve) ***(Replaces 320 5963)***	.....	2	320 3613	
65 10-80...(Incl. Valve) ***(Use 320 3613)***	.....	2	320 5963	

SEAT, Front Coil Spring

(Upper) 60 Thru 63 01	.....	2	315 5664	
(Upper) 64-65 01	.....	2	316 9712	
(Upper) 60-61 10-20-80	.....	2	315 2268	
(Upper) 62 Thru 65 10-80	.....	2	316 3005	
(Lower) 60 Thru 63 01	.....	2	315 5668	
(Lower) 64-65 01	.....	2	316 9724	
(Lower) 60-61 10-20-80	.....	2	315 2269	
(Lower) 62 Thru 65 10-80	.....	2	316 3060	

Copyright 1963 American Motors Corp.

GROUP NO. — DESCRIPTION — YEAR and MODEL	PRIMARY GROUP NO.	PER CAR	PART NO.	CODE
SPACER, Front Coil Spring				
60 Thru 63 01	.....	AR	320 4474	
64-65 01	.....	AR	320 5381	
60 Thru 65 10-20-80	.....	AR	320 2359	
GASKET, Front Coil Spring (Lower Seat To Trunnion)				
60 Thru 63 01	.....	2	314 2508	
BUMPER, Front Coil Spring Seat				
60 Thru 63 01; 60 Thru 65 10-20-80	.....	2	312 9527	
64-65 01	.....	2	316 9720	
ATTACHING PARTS Bumper To Seat				
WASHER, Lock ..... 60 Thru 65 01-10-20-80	17.820	2	G120382	NA
NUT, Hexagon ..... 60 Thru 65 01-10-20-80	17.406	2	G120369	NA
CUSHION, Front Coil Spring				
64-65 01	.....	4	317 1893	
60 Thru 63 01	.....	4	312 9528	
60 Thru 65 10-20-80	.....	4	314 4895	
VALVE, Front Coil Spring Support Air Vent				
62 Thru 65 10-80	.....	2	316 5765	
11.080 LUBRIPLATE, Rear Leaf Spring (Lubricant)				
60 Thru 64 01 (2 Oz. Tube)	15.260	AR	899 0685	
60 Thru 64 01 (1 Lb. Can-No. 110)	15.260	AR	899 1231	
11.084 INSERT KIT, Rear Leaf Spring				
64-65 08 ..... *(Replaces 320 4784)*	.....	2	320 5251	
63 01	.....	2	320 4360	
(Light) 60 01 (Note 11.084-1 Type 1); 61 01	.....	2	311 8516	
(Light) 60 01 (Note 11.084-1 Type 2)	.....	2	320 2404	
(Light) 62 01	.....	2	320 3474	
(Heavy) 60 Thru 62 01	.....	2	311 8514	
(Light) 64 05-06-07-09 ..... *(Use 320 5247)*	.....	2	320 4719	
(Light) 65 05-06-07-09	.....	2	320 5247	
(Heavy) 64-65 05-06-07-09 ..... *(Replaces 320 4784)*	.....	2	320 5251	
11.086 CLIP KIT, Rear Leaf Spring				
60 01 (Note 11.084-1 Type 1); 61 01	.....	2	311 8535	
60 01 (Note 11.084-1 Type 2 And 3)	.....	2	320 2395	
(Light) 62-63 01	.....	2	311 4511	
(Light) 64-65 05-06-07-09	.....	2	320 4735	
(Light) 64 08	.....	2	320 5129	
(Light) 65 08	.....	2	320 5252	
(Heavy) 62 01	.....	2	311 8535	
(Heavy) 64-65 05-06-07-09 ..... *(Replaces 320 5129)*	.....	2	320 5252	
(Heavy) 64 08 ..... *(Use 320 5254)*	.....	2	320 4913	
(Heavy) 65 08	.....	2	320 5254	

NOTE 11.084-1: Three Types of Light Rear Leaf Springs were installed on 60 01 Series. They can be identified as follows:
Type 1: Has Five Leaves and has Insert Grooves.
Type 2: Has Five Leaves and has no Insert Grooves.
Type 3: Has Six Leaves and has no Insert Grooves.

Copyright 1963 American Motors Corp.

GROUP NO. — DESCRIPTION — YEAR and MODEL	PRIMARY GROUP NO.	PER CAR	PART NO.	CODE
11.100 SPRING ASSEMBLY, Rear Leaf				
(Light) 60-61 01	.....	2	314 1138	
(Light) 62-63 01 *(Replaces 316 3617)*	.....	2	316 9145	
(Light) 64-65 05-06-07-09: *165 05-06-07-09 (Can)*	.....	2	317 2580	#
(Light) 64-65 08: *164-165 08 (Can)*	.....	2	317 2967	#
(Heavy) 60 Thru 62 01	.....	2	316 5762	
(Heavy) 63 01	.....	2	316 9324	
(Heavy) 64-65 05-06-07-09	.....	2	317 2967	
(Heavy) 64-65 08: *165 08 (Can)*	.....	2	317 2978	#
(Heavy) *165 05-06-07-09 (CAN)*	.....	1	317 8379	
11.102 SPRING, Rear Coil				
60 15-19-25-29-85-89 (WAS)	.....	2	315 5786	
60 18-28-83-88 (WAS)	.....	2	315 5393	

NOTE 11.102-1: On 65 15-16-19 used prior to Car Sequence No. W-000251 and E-000445 and beginning with Car Sequence No. W-00897 and E-010121.

NOTE 11.102-2: On 65 15-16-19 used beginning with Car Sequence No. W-000251 and E-000445 and prior to Car Sequence No. W-008975 and E-010121.

NOTE 11.102-3: On 65 15-16-17-19-59 (V8) used prior to Car Sequence No. E-100111 and beginning with W-127998; on 65 85-86-87-98 (V8) used prior to W-094928.

NOTE 11.102-4: On 65 15-16-17-19-59 (V8) used beginning with Car Sequence No. E-100111 and prior to W-127998; on 65 85-86-87-89 (V8) used beginning with W-094928.

NOTE 11.102-5: On 65 18 (V8-L3S) used prior to Car Sequence No. E-100115 and beginning with W-127998; on 65 88 (V8-L3S) used prior to W-094929.

NOTE 11.102-6: On 65 18 (V8-L3S) used beginning with E-100115 and prior to W.127998; on 65 88 (V8-L3S).

NOTE 11.102-7: On 65 18 (V8-W3S) used prior to Car Sequence No. E-100286 and W-095126 and beginning with W-127998; on 65 88 (V8-W3S) used prior to W-095126.

NOTE 11.102-8: On 65 18 (V8-W3S) used beginning with Car Sequence No. E-100286 and W-095126 and prior to W-127998; on 65 88 (V8-W3S) used beginning with W-095126.

NOTE 11.102-9: On 65 15-16-17-19-59 (V8-Heavy) used prior to Car Sequence No. W-100574; and beginning with W-127998; on 65 85-86-87-89 (V8-Heavy) used prior to W-100574.

NOTE 11.102-10: On 65 15-16-17-19-59 (V8-Heavy) used beginning with Car Sequence No. W-100574 and prior to Car W-127998; on 65 85-86-87-89 (V8-Heavy) used beginning with W-100574.

NOTE 11.102-11: On 65 18 (V8-L3S-Heavy) used prior to Car Sequence No. W-094929; on 65 88 (V8-L3S-Heavy) used prior to W-094929.

NOTE 11.102-12: On 65 18 (V8-L3S-Heavy) used beginning with Car Sequence No. W-094929 and prior to W-127998; on 65 88 (V8-L3S-Heavy) used beginning with W-094929.

NOTE 11.102-13: On 65 18 (V8-W3S-Heavy) used prior to Car Sequence No. W-095126 and beginning with W-127998; on 65 88 (V8-W3S-Heavy) used prior to W-095126.

NOTE 11.102-14: On 65 18 (V8-W3S-Heavy) used beginning with Car Sequence No. W-095126 and prior to W-127998; on 65 88 (V8-W3S-Heavy) used beginning with W-095126.

NOTE 11.102-15: On 65 15-16-17-19-59 (V8-Extra Heavy) used prior to Car Sequence No. W-100574 and beginning with W-127998; on 65 85-86-87-89 (V8-Extra Heavy) used prior to W-100574.

NOTE 11.102-16: On 65 15-16-17-19-59 (V8-Extra Heavy) used beginning with Car Sequence No. W-100574 and prior to W-127998; on 65 85-86-87-89 (V8-Extra Heavy) used beginning with W-100574.

Copyright 1963 American Motors Corp.

GROUP NO. — DESCRIPTION — YEAR and MODEL	PRIMARY GROUP NO.	PER CAR	PART NO.	CODE
(Light) 60 18-28-83-88 (LAS): 61-62 18-28-88: 63 18-88 (L3S): 64 18 (L3S): 65 15-16-19-85-86-89: ***165 15-19-85-89 (Six-Heavy-Can)***	.....	2	314 7610	#
(Light) 60 15-19-25-29 (LAS): 61 Thru 63 15-16: 61-62 25: 63 85-86: 64 15-16-19-85-89: 65 15-16-19 (Note 11.102-2) ***(Replaces 316 7233)***	.....	2	314 4929	
(Light) 60 85-89 (LAS): 61-62 85	.....	2	315 4380	
(Light) 65 15-16-17-19-59 (Note 11.102-1)(Note 11.102-3): 65 85-86-87-89 (Note 11.102-3): ***165 15-19-85-89 (Six-Can)***	.....	2	317 7686	#
(Light-Left) 63 18-88 (W3S): 64 18 (W3S)	.....	1	314 7610	
(Light) 65 18-88 (L3S-Note 11.102-5)	.....	2	317 7238	
(Light) 65 15-16-17-19-59-85-86-87-89 (V8-Note 11.102-4): ***165 15-19-85-89 (V8-Can)***	.....	2	317 9250	#
(Light) 65 18-88 (V8-L3S-Note 11.102-6): ***165 18-88 (V8-Can)***	.....	2	317 9251	#
(Light-Left) 65 18-88 (W3S-Note 11.102-7): ***165 18-88 (Six-Can)***	.....	1	317 7238	#
(Light-Left) 65 18-88 (V8-W3S-Note 11.102-8)	.....	1	317 9251	
(Light-Right) 63 18-88 (W3S): 64 18 (W3S)	.....	1	314 9125	
(Light-Right) 65 18-88 (W3S-Note 11.102-7)	.....	1	317 7239	
(Light-Right) 65 18-88 (V8-W3S-Note 11.102-8)	.....	1	317 9252	
(Heavy) 60 15-19-25-29-85-89 (LAS): 61 Thru 63 15-16-25-85-86: 64 15-16-19-85-89: 65 15-16-17-19-59-85-86-87-89 (Note 11.102-9)	.....	2	314 7610	
(Heavy) 60 18-28-83-88 (LAS): 61 Thru 63 18-28-88: 64 18: 65 18 (L3S-Note 11.102-11): 65 88 (L3S-Note 11.102-11): ***165 18-88 (Six-Heavy-Can)***	.....	2	314 9125	#
(Heavy) 65 15-16-17-19-59-85-86-87-89 (V8-Note 11.102-10): ***165 15-19-85-89 (V8-Heavy-Can)***	.....	2	317 9253	#
(Heavy) 65 18-88 (V8-L3S-Note 11.102-12): ***165 18-88 (V8-Heavy-Can)***	.....	2	317 9254	#
(Heavy-Left) 65 18-88 (W3S-Note 11.102-13)	.....	1	314 7610	
(Heavy-Right) 65 18-88 (W3S-Note 11.102-13)	.....	1	314 9125	
(Extra Heavy) 60 15-19-25-29-85-89 (LAS): 61 Thru 63 15-16-85-86: 64 15-16-19-85-89: 65 15-16-17-19-59-85-86-87-89 (Note 11.102-15)	.....	2	314 9125	
(Extra Heavy) 65 15-16-17-19-59-85-86-87-89 (V8-Note 11.102-16)	.....	2	317 9254	
(Heavy-Left) 65 18-88 (V8-Note 11.102-14)	.....	1	317 9253	
(Heavy-Right) 65 18-88 (V8-W3S-Note 11.102-14)	.....	1	317 9254	
(Extra Heavy-Right) 65 10 (W3S-Note 11.102-3): 65 88 (W3S-Note 11.072-10)	.....	1	314 9125	

11.104 LEAF, Rear Leaf Spring Main

60-61 01: 65 05 ***(Replaces 320 2403)***	.....	2	311 8512	
(Light) 62-63 01	.....	2	320 3475	
(Light) 64-65 05-06-07-09	.....	2	320 4720	
(Light) 64-65 08	.....	2	320 4750	
(Heavy) 63 01	.....	2	311 8512	
(Heavy) 64-65 08	.....	2	320 4917	
(Heavy) 64-65 05-06-07-09	.....	2	320 4750	

11.116 BOLT, Rear Leaf Spring Center (Incl. Nut)

60 Thru 65 01	.....	2	311 8517	

11.126 SEAT, Rear Coil Spring

(Lower) 60 Thru 65 10-20-80	.....	2	315 5359	
(Upper) 60 18-28-83-88 (WAS)...(Less Connector, Sleeve And Nut)	.....	2	315 5410	
(Upper) 60 15-19-25-29-85-89 (WAS)...(Less Elbow, Sleeve And Nut)	.....	2	315 5411	

ATTACHING PARTS

Lower Seat To Axle Tube

BOLT, Hexagon	60 10-20-80 (LAS): 61 Thru 65 10-20-80	17.038	2	G181627	NA
WASHER, Lock	60 10-20-80 (LAS): 61 Thru 65 10-20-80	17.820	2	G120382	NA

CUSHION, Rear Coil Spring

(Lower) 60 Thru 65 10-20-80	.....	2	314 5218	
(Upper) 60 Thru 65 10-20-80	.....	2	314 5103	
(Upper-For Air Spring) 60 10-20-80 (WAS)	.....	2	315 5400	

SPACER, Rear Coil Spring

60 Thru 65 10-20-80	.....	AR	314 0392	

Copyright 1963 American Motors Corp.

GROUP NO. — DESCRIPTION — YEAR and MODEL	PRIMARY GROUP NO.	PER CAR	PART NO.	CODE
11.132 U-BOLT, Rear Leaf Spring To Axle				
60 01 (With 5 Leaf Light Spring): 61 Thru 65 01	.....	4	313 9294	
60 01 (With 6 Leaf Heavy Spring)	.....	4	313 1033	
ATTACHING PARTS U-Bolt To Plate				
WASHER, Lock ..... 60 Thru 65 01	17.820	8	G103323	NA
NUT, Hexagon ..... 60 Thru 65 01	17.406	8	400 1245	
11.136 PLATE ASSEMBLY, Rear Leaf Spring To Axle U-Bolt Tie (Rear Shock Absorber Lower Mounting) (Incl. Washer)				
(Left) 60 Thru 63 01	.....	1	315 9394	
(Left) 64-65 01	.....	1	316 9746	
(Right) 60 Thru 63 01	.....	1	315 9395	
(Right) 64-65 01	.....	1	316 9747	
11.170 SHACKLE KIT, Rear Leaf Spring (Incl. Shackle And Bolt, Plate, Bushing, Washers And Nuts)				
60 Thru 63 01	.....	2	311 7391	
64-65 01 ..... *(Replaces 320 4666)*	.....	2	320 5181	
ATTACHING PARTS Plate To Shackle				
WASHER, Lock ..... 60 Thru 63 01 (4 Req.): 64-65 01 (2 Req.-3/8" I.D.)	17.820	4	G103321	NA
WASHER, Lock ..... 64 01 (9/16" I.D.)	17.820	2	G120898	NA
WASHER, Lock ..... 64-65 01 (7/16" I.D.)	17.820	2	G131100	NA
NUT, Hexagon ..... 60 thru 63 01 (4 Req.): 64-65 01 (2 Req.-3/8-24)	17.406	4	G103026	NA
NUT, Hexagon 64 01 (9/16-18)	17.406	2	G124634	NA
NUT, Hexagon 64-65 01 (7/16-20)	17.406	2	G120370	NA
BUSHING, Rear Leaf Spring Shackle				
60 Thru 63 01	8.360	8	312 9665	
(Upper) 64-65 01	.....	4	316 9741	
(Lower) 64-65 01	.....	2	317 1346	
11.200 SHOCK ASSEMBLY, Front (Incl. Grommet)				
60 Thru 63 01 (Regular And Heavy)	.....	2	320 2200	
64-65 01 (Regular)	.....	2	320 4931	
64-65 01 (Heavy)	.....	2	320 5017	
60 10-20-80 (LAS-Note 10.045-1 Type 1 Regular And Heavy): 61 10-20-80 (Note 10.045-1 Type 1 Regular And Heavy)	.....	2	320 2845	
60 10-20-80 (LAS-Note 10.045-1 Type 2-Regular And Heavy)	.....	2	320 0857	
60 10-20-80 (WAS-Regular And Heavy)	.....	2	320 0980	
61 10-20-80 (Note 10.045-1 Type 2-Regular And Heavy)	.....	2	320 0857	
62 10-80 (Regular) ..... *(Use 320 4342)*	.....	2	320 3014	#
62 10-80 (Heavy)	.....	2	320 3998	
63 Thru 65 10-80 (Regular): *164 10 (Six-Can): 165 10-80 (Can-Note 11.200-1)*	.....	2	320 4342	
165 10-80 (Can-Note 11.200-2)	.....	2	320 9205	
63-64 10-80 (Heavy): *164 10-80 (V8-CAN)*	.....	2	320 4225	

NOTE 11.200-1: On 165 10 (OHV-199-Can) used prior to Car Serial No. JT-502439; on 165 10 (OHV-232-Can) used prior to Car Serial No. LT-508854; on 165 10 (V8-287-Can) used prior to Car Serial No. LT-503385; on 165 80 (OHV-199-Can) used prior to Car Serial No. ST-501091; on 165 80 (V8-287-Can) used prior to Car Serial No. ET-502368; on 165 80 (V8-327-Can) used prior to Car Serial No. HT-502568.

NOTE 11.200-2: On 165 10 (OHV-199-Can) used beginning with Car Serial No. JT-502439; on 165 10 (OHV-232-Can) used beginning with Car Serial No. LT-508854; on 165 10 (V8-287-Can) used beginning with Car Serial No. ZT-503385; on 165 80 (OHV-199-Can) used beginning with Car Serial No. ST-501091; on 165 80 (V8-287-Can) used beginning with Car Serial No. ET-502368; on 165 80 (V8-327-Can) used beginning with Car Serial No. HT-502568.

Copyright 1963 American Motors Corp.

GROUP NO. — DESCRIPTION — YEAR and MODEL		PRIMARY GROUP NO.	PER CAR	PART NO.	CODE
65 10-80 (Heavy)		.....	2	320 5753	
ATTACHING PARTS					
Shock To Control Arm					
BOLT, Hexagon	60 Thru 63 01: 60-61 10-20 (Note 10.045-1 Type 1) .	10.045	2	315 0285	
BOLT, Hexagon	60-61 80 (Note 10.045-1 Type 1)	10.045	2	315 3049	
BOLT, Hexagon	60-61 10-20-80 (Note 10.045-1 Type 2).....	17.038	2	G181670	NA
WASHER, Plain.....	60 Thru 63 01: 60-61 10-20-80 (Note 10.045-1 Type 1)	17.814	4	400 1165	
WASHER, Lock.....	60 10-20-80 (Note 10.045-1 Type 2).....	17.820	2	G103328	NA
NUT, Hexagon.....	60-61 80 (Note 10.045-1 Type 1).....	17.406	2	G103029	NA
NUT, Lock.....	60 Thru 63 01: 60-61 10-20 (Note 10.045-1 Type 1).	17.416	2	G442834	
NUT, Lock.....	64-65 01: 62 Thru 65 10-80	17.416	2	G442828	NA
NUT, Lock.....	60-61 10-20-80 (Notes 10.045-1 Type 2).....	17.416	2	G272712	NA
Shock To Wheelhouse Panel					
NUT, Hexagon.....	60-61 10-20-80.....	17.406	2	G103026	NA
NUT, Jam.....	60-61 10-20-80.....	17.410	2	G114494	NA
NUT, Lock.....	64-65 01: 62 Thru 65 10-80	17.416	2	G442828	NA
Shock To Upper Mounting Bracket					
NUT, Hexagon.....	60-61 01.....	17.406	2	G103026	NA
NUT, Jam.....	60-61 01.....	17.410	2	G114494	NA
NUT, Lock.....	62-63 01.....	17.416	2	G442828	NA
11.203 BRACKET, Front Shock Upper Mounting					
60 Thru 63 01.....		.....	2	313 5344	
STUD, Front Shock Upper Mounting Bracket Brace To Sill					
60 Thru 63 01.....		.....	4	313 6091	
ATTACHING PARTS					
Bracket Brace Stud To Sill					
WASHER, Lock.....	60 Thru 63 01.....	17.820	4	G120214	NA
NUT, Hexagon.....60 Thru 63 01.....		17.406	4	G120368	NA
11.208 GROMMET, Front Shock					
62-63 10-80 (Note 11.208-1 Type 1).....		.....	8	316 3485	
64-65 01: 62 Thru 65 10-80 (Note 11.208-1 Type 2)		.....	8	316 9112	
(Upper) 60 Thru 63 01: 60-61 10-20-80.....		1.017	4	315 6228	
(Lower) 60 Thru 63 01: 60-61 10-20-80 (Note 10.045-1 Type 1).....		.....	4	313 3578	
(Lower) 60-61 10-20-80 (Note 10.045-1 Type 2)		.....	4	95 205	
SPACER, Front Shock Lower Grommet					
60 Thru 63 01: 60-61 10-20-80 (Note 10.045-1 Type 1).....		10.045	4	315 0290	
RETAINER, Front Shock Upper Grommet					
(Upper) 60-61 01-10-10-80.....		.....	2	313 6432	
(Upper) 62-63 01		.....	2	316 1146	
(Lower) 60 Thru 63 01: 60-61 10-20-80.....		11.228	2	314 6809	
(Inner) 62 10-80 (Note 11.208)		1.017	4	316 3498	
(Inner) 62-63 10-80 (Note 11.208-1 Type 1)		10.260	4	315 2906	
(Inner) 64-65 01: 62 Thru 65 10-80 (Note 11.208-1 Type 2).....		.....	4	316 9111	
(Outer) 64-65 01: 62 Thru 65 10-80.....		.....	4	316 5076	

NOTE 11.208: On 62 10 used prior to Car Sequence No. W-000933 and E-0001772. On 62 80 used prior to Car Sequence No. W-001177.

NOTE 11.208-1: Two Types of Shocks were installed on 62-63 10-80 Series. They can be identified as follows:
Type 1: The Grommets are round shape.
Type 2: The Grommets are cone shape.

Copyright 1963 American Motors Corp.

GROUP NO. — DESCRIPTION — YEAR and MODEL	PRIMARY GROUP NO.	PER CAR	PART NO.	CODE
11.220 SHOCK ASSEMBLY, Rear				
60-61 01 (Regular And Heavy): 62-63 01 (LLL-Regular And Heavy): 64-65 01 (LLL-Regular)...(Incl. Grommets)	.....	2	320 2201	
64-65 01 (LLL-Heavy)	.....	2	320 5018	
60 10-20-80 (LAS-Regular And Heavy)...(Incl. Grommets)	.....	2	311 9822	
60 15-19-25-29-85-89 (WAS-Regular And Heavy)...(Incl. Grommets)	.....	2	320 0981	
60 18-28-83-88 (WAS-Regular And Heavy)...(Incl. Grommets)	.....	2	320 0982	
61 10-20-80 (Regular And Heavy): 62 10-80 (LLL-Regular): 63-64 18-88 (LLL-Regular)...(Incl. Grommets)	.....	2	320 2348	
62 10-80 (LLL-Heavy)...(Incl. Grommets)	.....	2	320 3999	
62 Thru 65 01 (WLL)...(Incl. Grommets, Sleeve And Lower Spring Retainer)...***(Replaces 320 4716)***	.....	2	320 3631	
62 10-80 (WLL)...(Incl. Grommets, Sleeve And Lower Spring Retainer)	.....	2	320 3632	
61 10-20-80: 63 15-16-85-86 (LLL-Regular): 64 15-16-19-85-89 (LLL-Regular): 65 10-80 (LLL-Regular): ***165 10-80 (Can-LLL-Regular-Note 11. 200-1)***	.....	2	320 4171	#
165 10-80 (Can-LLL-Regular-Note 11. 200-2)	.....	2	320 9206	
65 10-80 (LLL-Heavy)...(Incl. Grommets)	.....	2	320 5754	
63 15-16-18 (LLL-Heavy): 63 80 (LLL-Heavy):64 10-80 (LLL-Heavy)...(Incl. Grommets)...***(Replaces 320 4227)***	.....	2	320 4226	#
63 15-16-85-86 (WLL): 64 15-16-19-85-89 (WLL)...(Incl. Grommets, Sleeve And Lower Spring Retainer)	.....	2	320 4022	
63 18-88 (WLL): 64 18 (WLL): 65 10-80 (WLL)***(WLL-Wis. Police)***...(Incl. Grommets, Sleeve And Lower Spring Retainer)	.....	2	320 4023	
ATTACHING PARTS				
Shock To Leaf Spring To Axle "U" Bolt Tie Plate				
WASHER, Plain..... 60 Thru 65 01 (Outer)	.....	2	313 5017	
WASHER, Plain..... 60 Thru 65 01 (Inner)	.....	2	313 5016	
WASHER, Lock..... 60 Thru 65 01	17.820	2	G131100	NA
NUT, Hexagon..... 60 Thru 65 01	17.406	2	G120370	NA
Shock To Rear Axle Truss Rod				
WASHER, Plain..... 60-61 10-20-80: 62 10-80 (LLL)	.....	2	313 5017	
WASHER, Plain..... 63 Thru 65 10-80	11.228	2	316 7602	
SPACER..... 62 10-80 (WLL)	11.228	2	316 4080	
SPACER..... 61 10-20-80 (WLL)	15.245	2	320 1646	#
WASHER, Lock..... 60-61 10-20-80	17.820	2	G120383	NA
WASHER, Lock..... 62 10-80 (LLL)	17.820	2	G131100	NA
WASHER, Lock..... 63 Thru 65 10-80	17.820	2	G120384	NA
NUT, Lock..... 62 10-80 (WLL)	11.228	2	316 4081	
NUT, Hexagon..... 60-61 10-20-80 (LLL)	17.406	2	G103027	NA#
NUT, Hexagon..... 61 10-20-80 (WLL)	15.245	2	320 1647	#
NUT, Hexagon..... 62 10-80 (LLL)	17.406	2	G120370	NA
NUT, Hexagon..... 63 Thru 65 10-80	17.406	2	G120371	NA
Shock To Mounting Bracket Crossmember				
NUT, Hexagon..... 60-61 10-20-80	17.406	2	G120369	NA
NUT, Jam..... 60-61 10-20-80	17.410	2	G124925	NA
NUT, Lock..... 62 Thru 65 01-10-80	17.416	2	G442828	NA
BUSHING KIT, Rear Shock				
61 10-20-80	15.245	2	320 1312	#
11.224 BRACKET, Rear Shock Upper Mounting				
64-65 01	.....	2	350 0064	
(Left) 60 Thru 63 01	.....	1	437 0145	
(Right) 60 Thru 63 01	.....	1	437 0146	
11.228 GROMMET, Rear Shock				
(Upper) 60-61 01-10-20-80 (4 Req.): 62 Thru 65 01-10-80 (LLL-Oval-4 Req.): 63-64 01-10-80 (WLL-Oval-2 Req.)	.....	AR	315 6228	

Copyright 1963 American Motors Corp.

GROUP NO. — DESCRIPTION — YEAR and MODEL	PRIMARY GROUP NO.	PER CAR	PART NO.	CODE
(Upper) 62 01-10-80 (WLL-Rectangular-4 Req.): 63 Thru 65 01-10-80 (WLL-Rectangular-2 Req.): ***64 18 (WLL-Wis. Police-2 Req.)***	11.208	AR	316 3485	
(Lower) 60 Thru 65 01-10-20-80: ***64 18 (WLL-Wis. Police)***	11.208	4	95 205	
RETAINER, Rear Shock Upper Grommet				
(Upper) 60 01-10-20-80	.....	2	313 6432	
(Upper) 61 01-10-20-80: 63 01 (LLL): 62 10-80 (LLL): 64-65 01: 63 Thru 65 10-80	.....	2	316 1146	
(Upper) 62-63 01 (WLL): 62 10-80 (WLL): 65 01-10-80 (WLL)	.....	2	320 3626	
(Lower) 60-61 01-10-20-80: 62 Thru 65 01-10-80 (LLL)	.....	2	314 6809	
(Lower) 62 Thru 65 01-10-80 (WLL): ***64 18 (WLL-Wis. Police)***	10.260	2	315 2906	
11.235 SPRING, Load Leveler				
61 10-20-80 (WLL)	15.245	2	320 1310	#
62 Thru 65 01-10-80 (WLL): ***64 18 (WLL-Wis. Police)***	.....	2	320 3630	
CUSHION, Load Leveler Spring				
62 Thru 65 01 (WLL-4 Req.): 62 Thru 65 10-80 (WLL-2 Req.): ***64 18 (WLL-Wis. Police-2 Req.)***	.....	AR	320 3629	
SLEEVE, Load Leveler Silencing				
61 10-20-80	15.245	2	320 1309	#
RETAINER, Load Leveler Spring				
(Upper) 61 10-20-80 (WLL)	15.245	4	320 1311	#
(Upper) 62 Thru 65 01-10-80 (WLL): ***64 18 (WLL-Wis. Police)***	.....	4	320 3628	
(Lower) 62 Thru 65 01-10-50-80 (WLL): 61 10-20-80 (WLL): ***64 18 (WLL-Wis. Police)***	15.245	2	320 1308	#
RING, Load Leveler Spring Retainer Snap				
62 Thru 65 01-10-80 (WLL): ***64 18 (WLL-Wis. Police)***	.....	2	320 3627	
11.300 COMPRESSOR, Rear Air Suspension				
60 10-20-80	.....	1	315 6563	
ATTACHING PARTS Compressor To Mounting Bracket				
WASHER, Plain 60 10	17.814	4	G120393	NA
WASHER, Lock 60 10-20-80	17.820	4	G120214	NA
NUT, Hexagon 60 10-20-80	17.406	4	G120368	
VALVE, Rear Air Suspension Air Check				
60 10-20-80	.....	1	315 5622	
PLATE, Rear Air Suspension Compressor Base				
60 10-20-80	.....	1	315 5391	
ATTACHING PARTS Plate To Compressor				
STUD 60 10-20-80	.....	4	315 5368	
WASHER, Lock 60 10-20-80	17.820	4	G120214	NA
GASKET, Rear Air Suspension Compressor Base Plate				
60 10-20-80	.....	1	315 5372	

Copyright 1963 American Motors Corp.

GROUP NO. — DESCRIPTION — YEAR and MODEL	PRIMARY GROUP NO.	PER CAR	PART NO.	CODE
11.302 COVER, Rear Air Suspension Compressor Crankshaft				
(Front) 60 10-20-80...(Incl. Bearing)	.....	1	320 1089	
(Rear) 60 10-20-80	.....	1	320 1094	
ATTACHING PARTS				
Front Cover To Compressor				
BOLT, Hexagon 60 10-20-80	17.038	4	G106319	NA
WASHER, Lock 60 10-20-80	17.820	4	G121637	NA
Rear Cover To Compressor				
SCREW, Machine..... 60 10-20-80	17.626	6	G179056	NA
SEAL, Rear Air Suspension Compressor Crankshaft				
60 10-20-80	.....	1	320 1090	
SEAL, Rear Air Suspension Compressor Crankshaft Cover ("O" Ring)				
(Front) 60 10-20-80	.....	1	320 1087	
(Rear) 60 10-20-80	.....	1	320 1091	
11.303 HEAD, Rear Air Suspension Compressor Cylinder				
60 10-20-80	.....	1	320 1114	
ATTACHING PARTS				
Head To Compressor				
BOLT, Hexagon 60 10-20-80	17.038	7	G179820	NA
WASHER, Lock 60 10-20-80	17.820	7	G103320	NA
GASKET, Rear Air Suspension Compressor Cylinder Head				
60 10-20-80	.....	1	320 1113	
11.305 ROD, Rear Air Suspension Compressor Connecting				
60 10-20-80...(Incl. Bushing, Bearing Cap And Bolts)	.....	1	320 1095	
11.306 PIN, Rear Air Suspension Compressor Piston (Lock)				
60 10-20-80	.....	1	320 1106	
11.307 RING, Rear Air Suspension Compressor Piston				
60 10-20-80	.....	3	320 1197	
11.308 REED VALVE KIT, Rear Air Suspension Compressor				
60 10-20-80...(Incl. Pin, Reeds, Plate And Cylinder Head Gasket)	.....	1	320 1115	
GASKET, Rear Air Suspension Compressor Valve Plate				
60 10-20-80	.....	1	320 1109	
11.309 STRAINER, Rear Air Suspension Compressor Air Inlet				
60 10-20-80 ..... *(Discontinued)*	.....	1	320 1116	
FILTER, Rear Air Suspension Compressor Air Inlet				
(Inner) 60 10-20-80	.....	1	320 1117	
(Outer) 60 10-20-80	.....	1	320 1118	
11.310 BRACKET, Rear Air Suspension Compressor Mounting				
60 20-80	10.450	1	315 5445	

Copyright 1963 American Motors Corp.

GROUP NO. — DESCRIPTION — YEAR and MODEL	PRIMARY GROUP NO.	PER CAR	PART NO.	CODE
ATTACHING PARTS				
Bracket And Thermostat Housing To Cylinder Head				
STUD..... 60 10	11.300	1	315 5368	
WASHER, Lock..... 60 10	17.820	2	G120214	NA
NUT, Hexagon..... 60 10	17.406	1	G120368	
Bracket And Battery Ground Strap To Cylinder Head				
STUD..... 60 10	1.063	1	315 5365	
Bracket To Cylinder Head				
BOLT, Hexagon 60 10	1.063	1	315 5367	
BOLT, Hexagon 60 20-80	17.038	3	G180121	NA
WASHER, Lock..... 60 20-80	17.822	3	G114606	NA
Bracket To Water Manifold				
BOLT, Hexagon 60 20-80	17.038	1	G180125	NA
11.320 PULLEY, Rear Air Suspension Compressor				
60 10-20-80	.....	1	315 5407	
ATTACHING PARTS				
Pulley To Compressor				
BOLT, Hexagon 60 10-20-80	17.038	1	800 0311	
WASHER, Plain..... 60 10-20-80	10.455	1	314 1080	
WASHER, Lock..... 60 10-20-80	17.820	1	G120214	NA
SPACER, Rear Air Suspension Compressor Pulley				
60 20-80	.....	1	315 5538	
11.325 PULLEY, Rear Air Suspension Compressor Drive				
60 10	.....	1	315 5389	
60 20-80	.....	1	315 5387	
ATTACHING PARTS				
Pulley To Hub				
BOLT, Hexagon ..... 60 20-80 (WPS)	17.038	3	G181593	NA
WASHER, Lock..... 60 20-80 (WPS)	17.822	3	G138485	NA
11.330 BELT, Rear Air Suspension Compressor Drive				
60 10	2.016	1	314 4018	
60 20-80	2.016	1	316 0720	
11.335 TUBE, Rear Air Suspension Compressor Oil				
60 10 (Crankcase To Compressor Oil Feed-Pressure)	.....	1	315 5403	
60 20-80 (Crankcase To Compressor Oil Feed-Pressure)	.....	1	315 5406	
60 10 (Compressor To Block Drain)	.....	1	315 5404	
60 20-80 (Compressor To Block Drain)	.....	1	315 5537	
CONNECTOR, Rear Air Suspension Compressor Oil Drain Tube				
60 10 (In Compressor And Cylinder Block)	17.160	2	G137406	
60 20-80 (In Compressor)	17.160	1	G137406	
ELBOW, Rear Air Suspension Compressor Oil Feed Tube				
60 10 (In Manifold)	17.218	1	G137421	
60 20-80 (In Cylinder Block)	17.218	1	G137421	
60 10-20-80 (In Compressor)	4.020	1	315 3879	

Copyright 1963 American Motors Corp.

GROUP NO. — DESCRIPTION — YEAR and MODEL	PRIMARY GROUP NO.	PER CAR	PART NO.	CODE
ELBOW, Rear Air Suspension Compressor Oil Drain Tube				
60 10 (In Cylinder Block)	17.218	1	G137422	
60 20-80 (In Timing Case Cover)	17.218	1	G137422	
11.340 RESERVOIR, Rear Air Suspension Air				
60 10-20-80	.....	1	315 5413	
ATTACHING PARTS Reservoir To Wheelhouse Panel				
SCREW, Tapping..... 60 10-20-80 (7/8" Long)	17.670	1	G443923	NA
SCREW, Tapping..... 60 10-20-80 (3/4" Long)	17.671	1	G9411563	
WASHER, Plain..... 60 10-20-80	17.814	2	400 1083	
VALVE, Rear Air Suspension Air Reservoir Emergency				
60 10-20-80	10.350	1	315 5673	
FILTER, Rear Air Suspension Air Reservoir				
60 10-20-80...(Incl. Adapter)	.....	1	315 5378	
SEAL, Rear Air Suspension Air Reservoir Filter ("O" Ring)				
60 10-20-80	10.460	1	313 7267	
11.345 HOSE, Rear Air Suspension Compressor To Reservoir				
60 10-20-80 (To Tee-Flexible-18-1/2" Long)	.....	1	315 5907	
TUBE, Rear Air Suspension Compressor To Reservoir				
60 10-20 (Metal)	.....	1	315 5688	
60 80 (Metal)	.....	1	315 5689	
VALVE, Rear Air Suspension Compressor To Reservoir Emergency Air				
60 10-20-80 (Between Hose And Tube)	10.350	1	315 5673	
TEE, Rear Air Suspension Compressor To Reservoir Hose To Tube				
60 10-20-80 (For Air Valve)	.....	1	315 5921	
CLIP, Rear Air Suspension Compressor To Reservoir Hose And Tube				
60 10-20-80 (At Bracket)	4.174	1	314 6527	
60 10-20-80 (At Wheelhouse)	6.353	1	96 823	
ATTACHING PARTS Hose Clip To Bracket				
SCREW, Tapping..... 60 10-20-80	17.670	1	G178434	NA
60 10-20-80 (At Wheelhouse) *(Discontinued)*	.....	1	315 5665	
11.360 TUBE, Rear Air Suspension Air Reservoir To Rear Leveling Valve				
60 10-20-80	.....	1	315 5425	
CONNECTOR, Rear Air Suspension Air Reservoir To Rear Leveling Valve Tube				
60 10-20-80 (To Intake Valve)	.....	1	315 5491	
SLEEVE, Rear Air Suspension Air Reservoir To Rear Leveling Valve Tube				
60 10-20-80	.....	2	315 5356	

Copyright 1963 American Motors Corp.

GROUP NO. — DESCRIPTION — YEAR and MODEL	PRIMARY GROUP NO.	PER CAR	PART NO.	CODE
NUT, Rear Air Suspension Air Reservoir To Rear Leveling Valve Tube				
60 10-20-80	.....	2	315 5357	
GROMMET, Rear Air Suspension Air Reservoir To Rear Leveling Valve Tube				
60 10-20-80 (On Left Cowl Panel And Left Rear Floor Pan)	12.060	2	310 5702	
CLAMP, Rear Air Suspension Air Reservoir To Rear Leveling Valve Tube				
60 10-20-80 (On Leveling Valve Bracket)	3.192	1	47 740	
11.365 VALVE, Rear Air Suspension Rear Leveling				
60 10-20-80...(Less Relief Valve And Connector)	.....	1	315 5492	
60 10-20-80 (Air Pressure Relief-In Valve)...(Incl. Muffler)	.....	1	315 5776	
ATTACHING PARTS				
Valve To Bracket				
BOLT, Hexagon 60 10-20-80	17.038	2	G181595	NA
WASHER, Plain..... 60 10-20-80	17.814	1	G120393	NA
WASHER, Lock..... 60 10-20-80	17.820	2	G120214	NA
MUFFLER, Rear Air Suspension Rear Leveling Valve				
60 10-20-80 (Air Pressure Relief Valve)	.....	1	315 5774	
ADAPTER, Rear Air Suspension Rear Leveling Valve				
60 10-20-80 (Exhaust Valve)	.....	1	320 1140	
60 10-20-80 (To Cross Tube)	.....	1	320 1139	
60 10-20-80 (Air Intake Valve)	.....	1	320 1138	
STEM, Rear Air Suspension Rear Leveling Valve Air Intake Valve				
60 10-20-80	.....	1	320 1137	
CORE, Rear Air Suspension Rear Leveling Valve				
60 10-20-80	.....	1	320 1247	
11.370 BRACKET, Rear Air Suspension Rear Leveling Valve Mounting				
60 10-20-80	.....	1	315 5488	
ATTACHING PARTS				
Bracket To Floor Pan				
SCREW, Machine..... 60 10-20-80	17.610	2	G445615	NA
WASHER, Plain..... 60 10-20-80	17.814	2	G120393	NA
WASHER, Lock..... 60 10-20-80	17.820	2	G120214	NA
NUT, Hexagon..... 60 10-20-80	17.406	2	G120368	
11.375 CROSS, Rear Air Suspension Rear Leveling Valve				
60 10-20-80	.....	1	315 5487	
VALVE, Rear Air Suspension Rear Leveling Valve Cross Air Gauge Check (In Cross)				
60 10-20-80	.....	1	315 5383	

Copyright 1963 American Motors Corp.

GROUP NO. — DESCRIPTION — YEAR and MODEL	PRIMARY GROUP NO.	PER CAR	PART NO.	CODE
11.380 TUBE, Rear Air Suspension Rear Leveling Valve Cross To Air Spring				
(Left) 60 10-20-80	.....	1	315 5426	
(Right) 60 10-20-80	.....	1	315 5427	
ELBOW, Rear Air Suspension Rear Leveling Valve Cross To Air Spring Tube				
60 10-20-80 (Left-In Upper Spring Seat)	.....	1	315 5358	
CONNECTOR, Rear Air Suspension Rear Leveling Valve Cross To Air Spring Tube				
60 10-20-80 (Right-In Upper Spring Seat)	.....	1	315 5355	
SLEEVE, Rear Air Suspension Rear Leveling Valve Cross To Air Spring Tube				
60 10-20-80	.....	4	315 5356	
NUT, Rear Air Suspension Rear Leveling Valve Cross To Air Spring Tube				
60 10-20-80	.....	4	315 5357	
CLIP, Rear Air Suspension Rear Leveling Valve Cross To Air Spring Tube				
60 10-20-80	3.165	1	15 898	
ATTACHING PARTS Clip To Tube				
SCREW, Tapping..... 60 10-20-80	17.671	1	400 1031	
11.382 LINK, Rear Air Suspension Rear Leveling Valve To Rear Axle				
60 10-20-80	.....	1	315 5489	
ATTACHING PARTS Link To Leveling Valve Arm And Rear Axle Housing Cover				
WASHER, Plain..... 60 10-20-80	17.814	2	G120392	NA
NUT, Hexagon..... 60 10-20-80	17.406	2	G120367	
11.385 SPRING, Rear Air Suspension Air (Rubber)				
60 10-20-80	.....	2	315 5409	
11.387 PISTON, Rear Air Suspension Air Spring				
60 10-20-80...(Incl. Stud)	.....	2	315 5523	
STUD, Rear Air Suspension Air Spring Piston				
60 10-20-80 (To Axle Tube)	.....	2	315 5360	
11.390 ABSORBER KIT, Dynamic				
64 07 (Incl. Absorber, Supports, Brackets, Washers And Nuts)	.....	1	320 5980	
ABSORBER, Dynamic				
64-65 07	.....	2	317 8978	

Copyright 1963 American Motors Corp.

GROUP NO. — DESCRIPTION — YEAR and MODEL	PRIMARY GROUP NO.	PER CAR	PART NO.	CODE
ATTACHING PARTS				
Absorber To Mounting Bracket				
WASHER, Lock 64-65 07	17.820	2	G131100	NA
NUT, Hexagon 64-65 07	17.408	2	400 1241	
11.393 SUPPORT, Dynamic Absorber Mounting (Round Shape)				
64-65 07	.....	2	317 8977	
11.395 BRACKET, Dynamic Absorber Mounting ("L" Shape)				
64-65 07	.....	2	317 8990	

Copyright 1963 American Motors Corp.

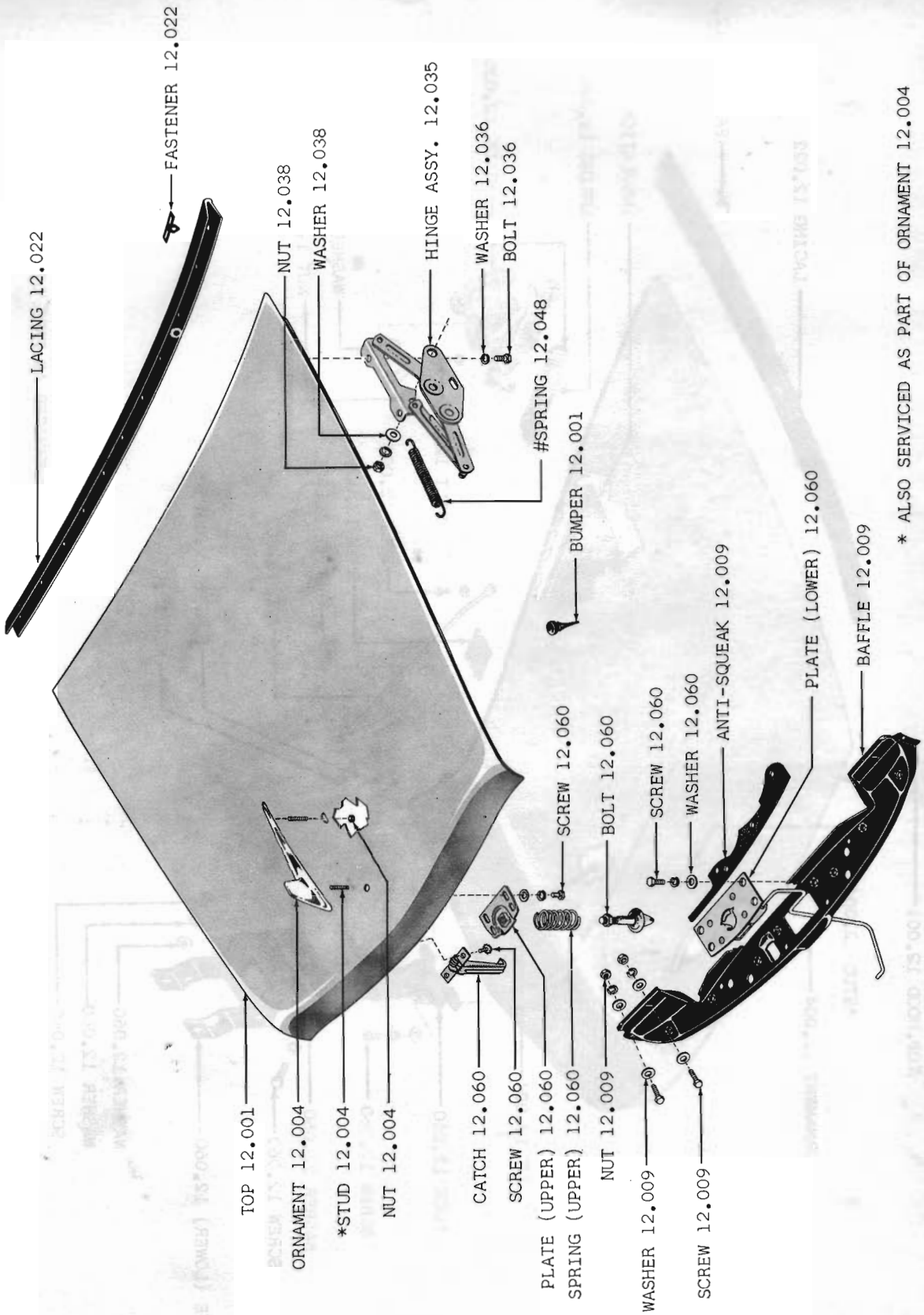

HOOD TOP, HINGE AND LOCK 60 01

Copyright 1963 American Motors Corp.

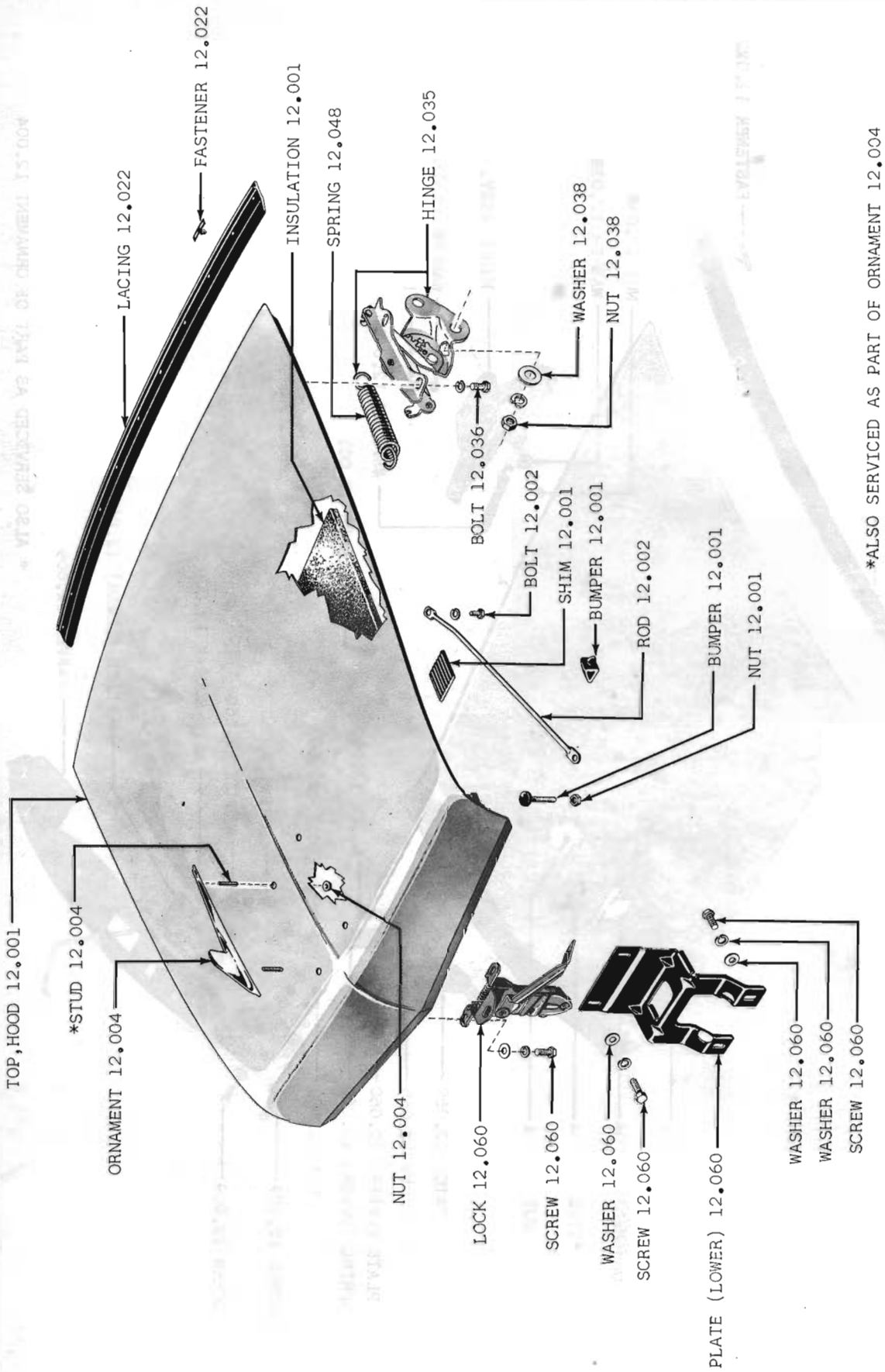

HOOD TOP, HINGE AND LOCK 60 10-20-80

Copyright 1963 American Motors Corp.

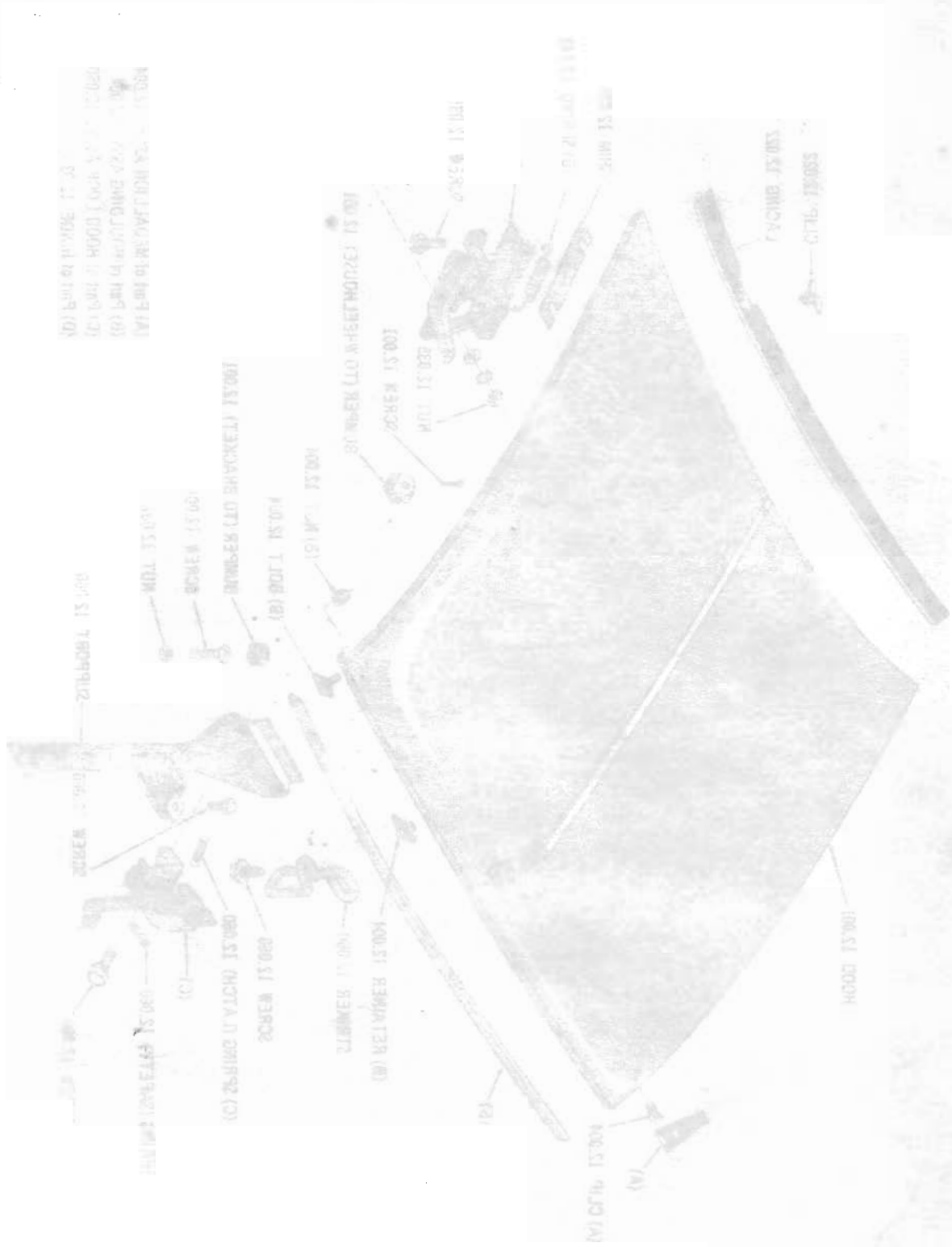

Copyright 1963 American Motors Corp.

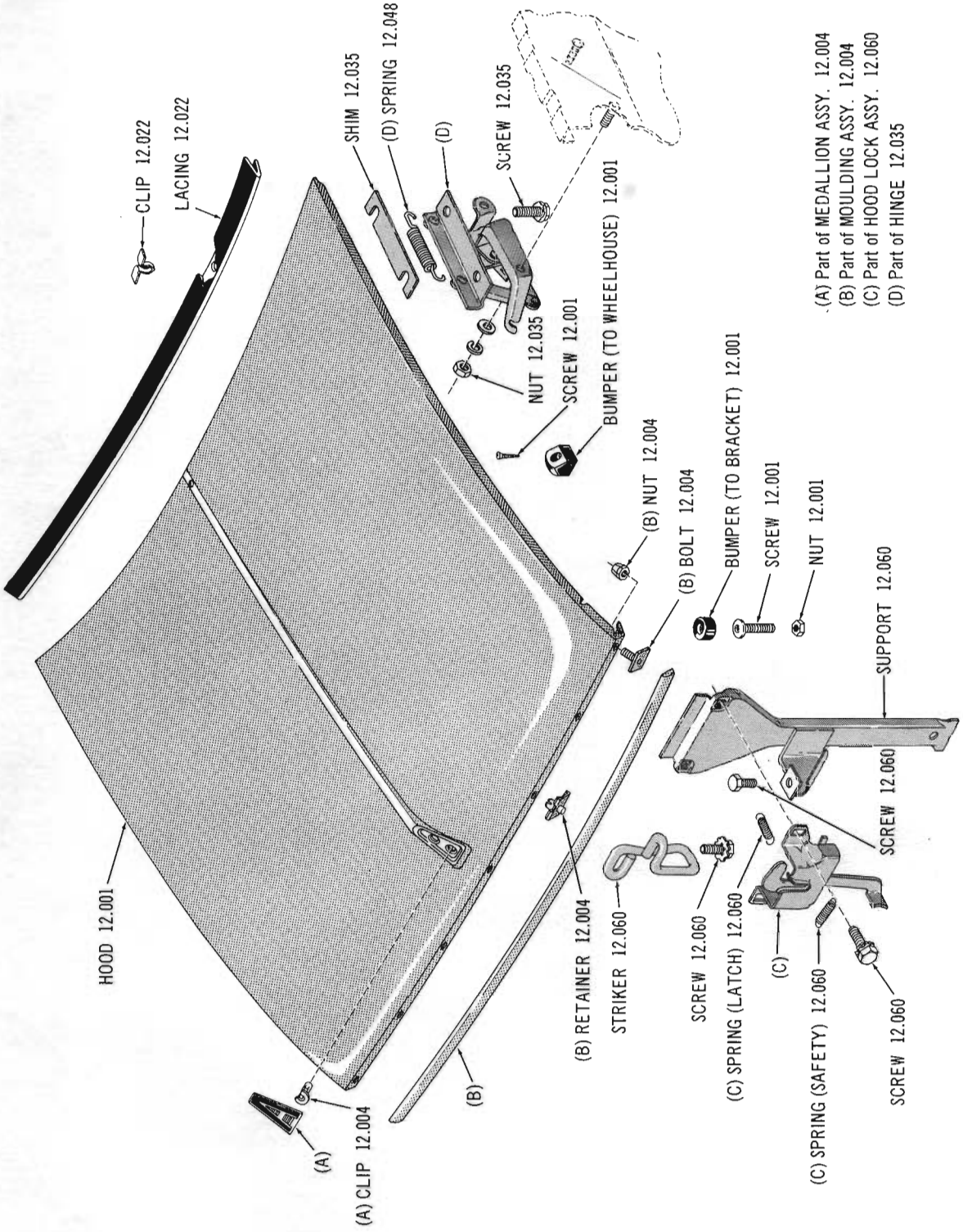

HOOD TOP, HINGE AND LOCK 64 01

Copyright 1963 American Motors Corp.

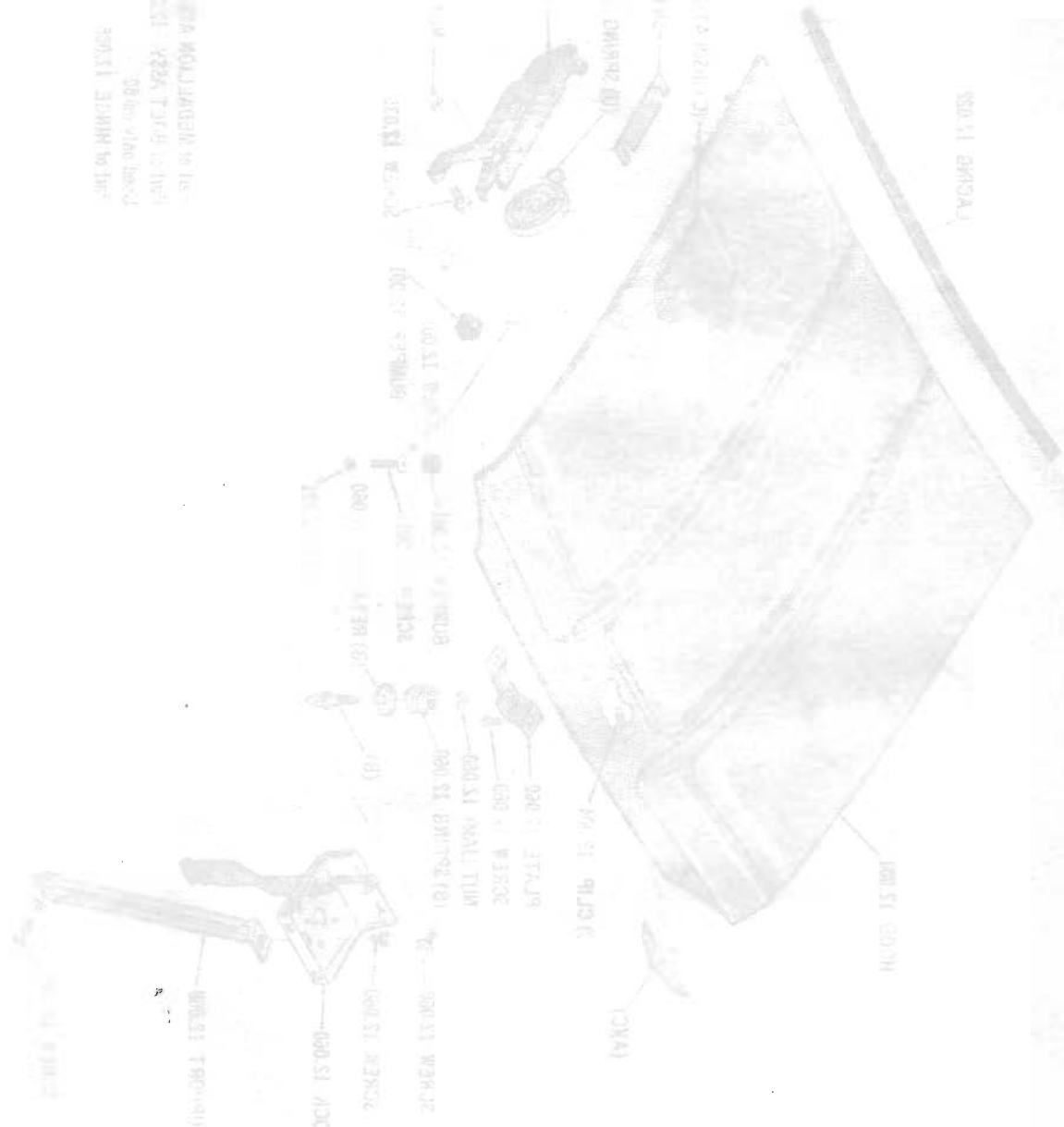

Copyright 1963 American Motors Corp.

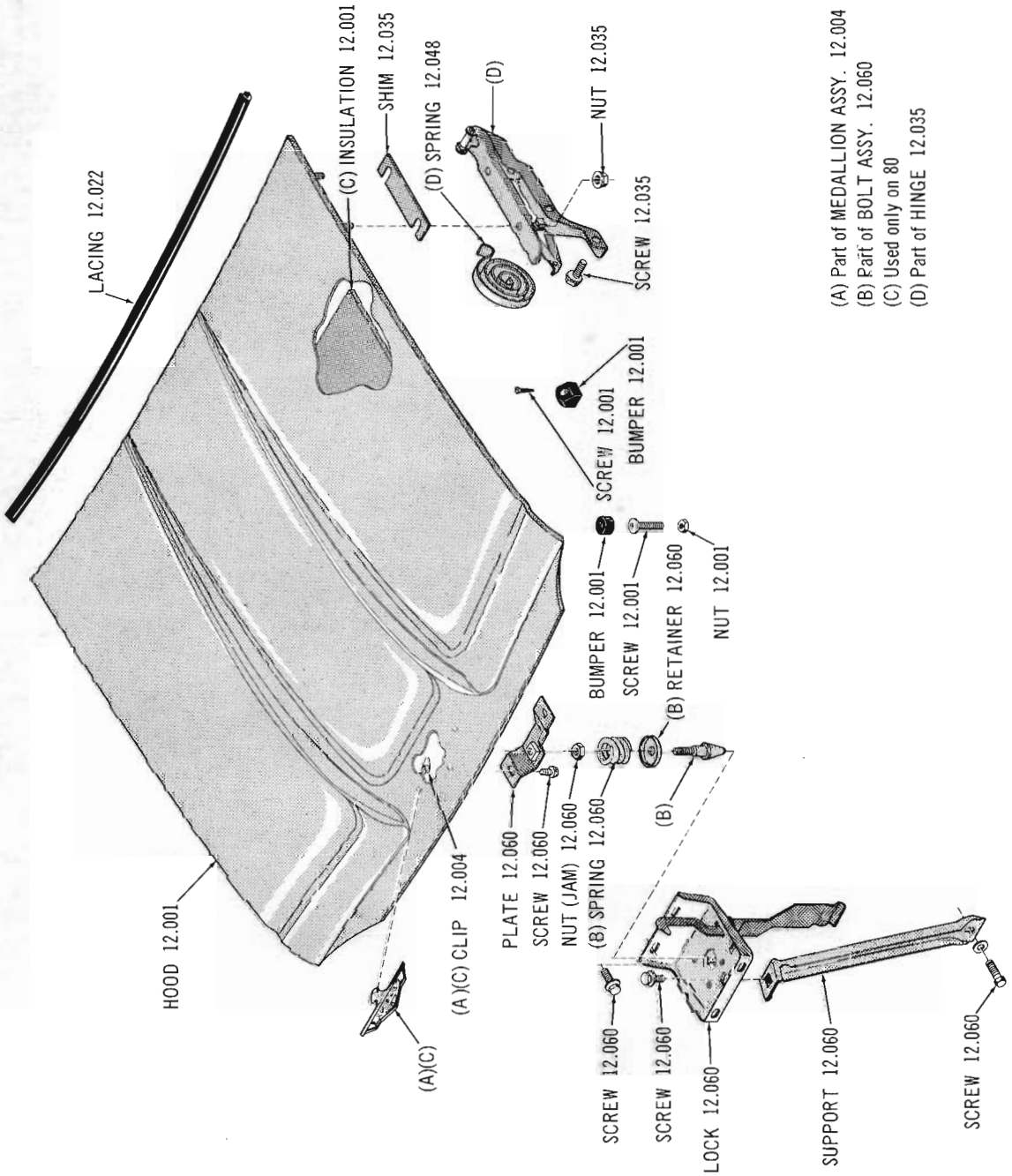

HOOD TOP, HINGE AND LOCK 64 10-80

Copyright 1963 American Motors Corp.

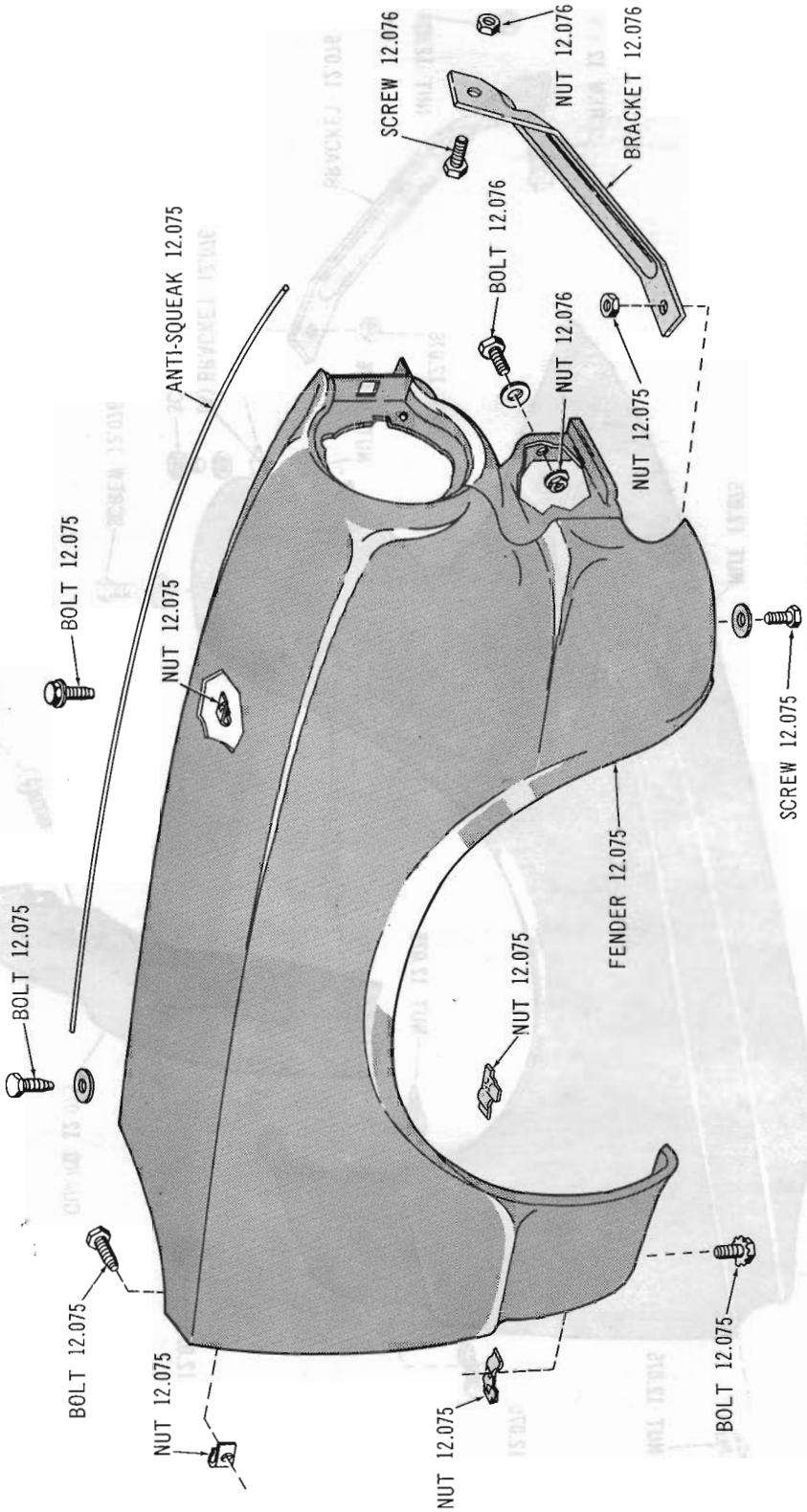

FRONT FENDER 64 01

Copyright 1963 American Motors Corp.

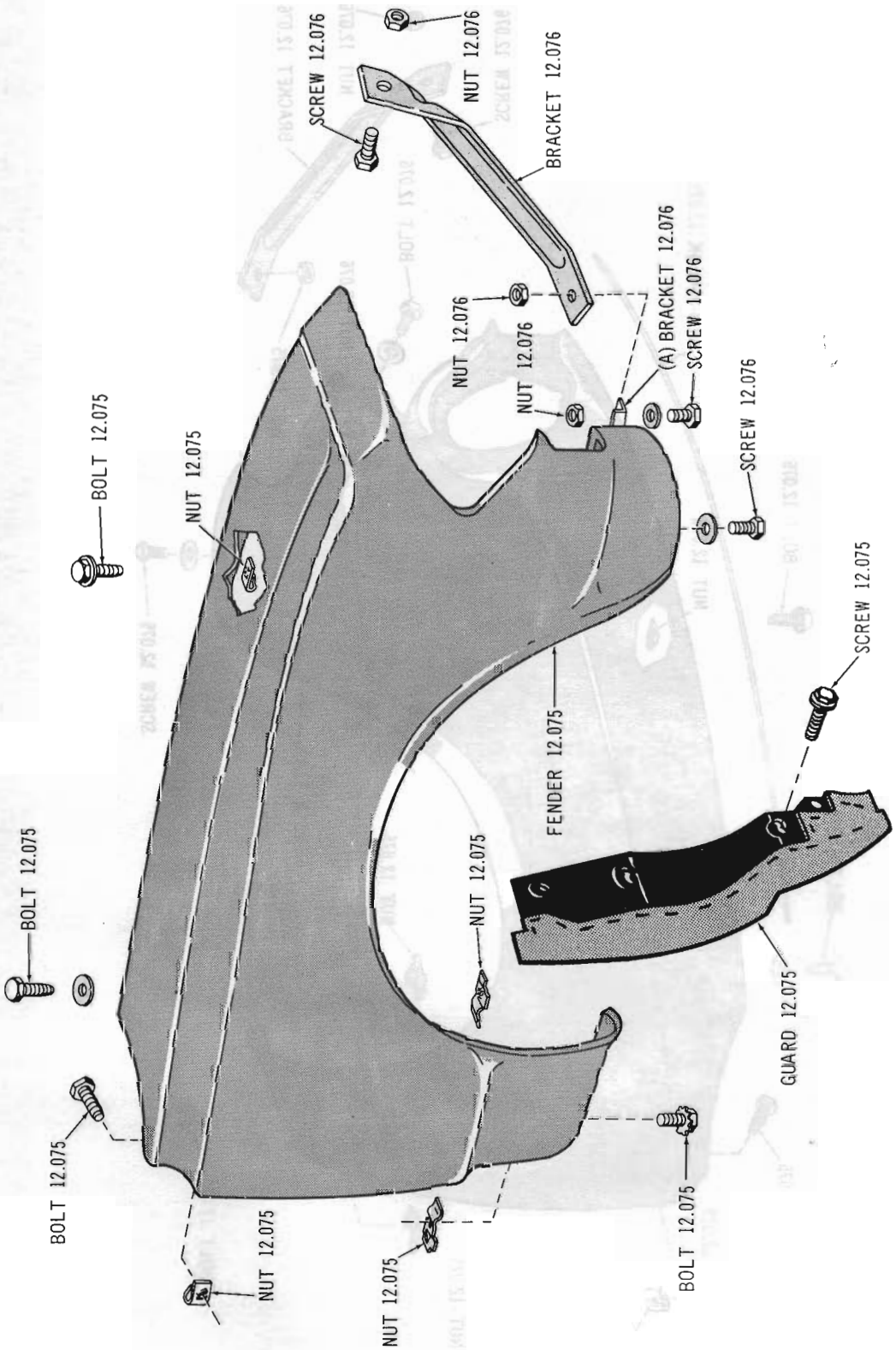

(A) Part of FENDER 12.075

FRONT FENDER 63-64 10-80

Copyright 1963 American Motors Corp.

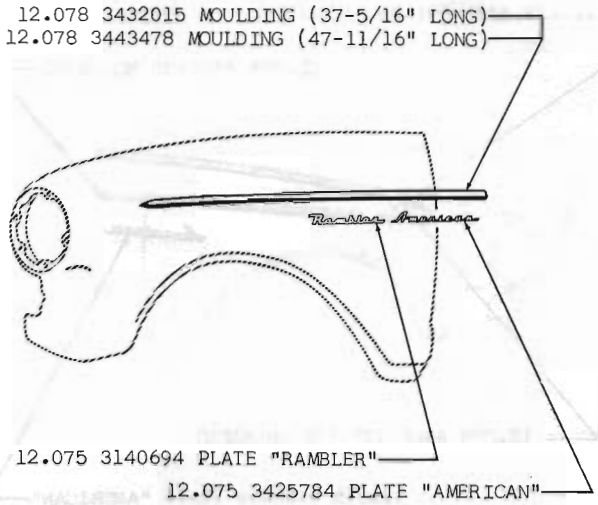

ATTACHING PARTS, WHEN REQUIRED, INCLUDED WITH ALL PARTS SHOWN

FRONT FENDER MOULDINGS 60 01

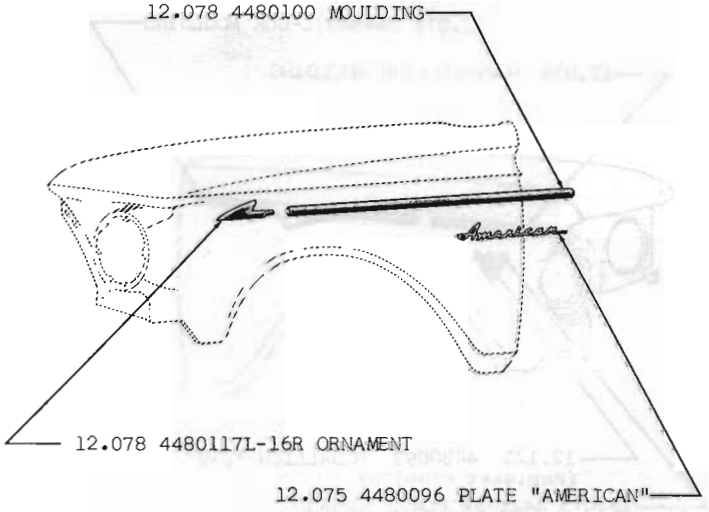

ATTACHING PARTS, WHEN REQUIRED, INCLUDED WITH ALL PARTS SHOWN

FRONT FENDER MOULDINGS 61-62 01: 63 04 (330): 63 05-06-08 (330)(440)

Copyright 1963 American Motors Corp.

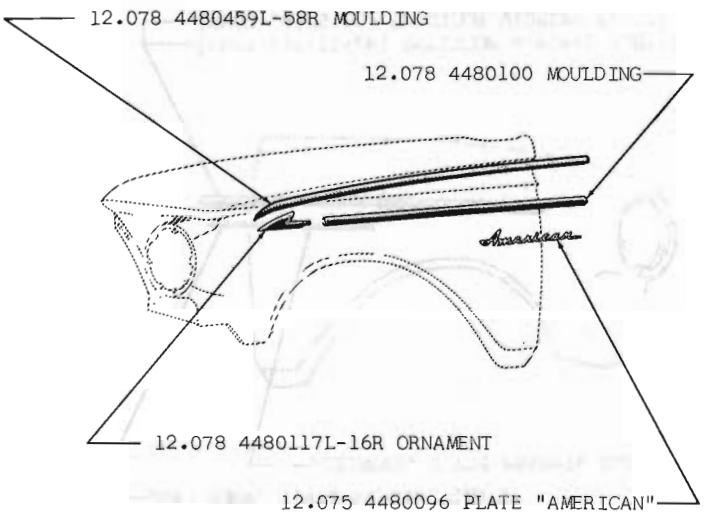

ATTACHING PARTS, WHEN REQUIRED, INCLUDED WITH ALL PARTS SHOWN

FRONT FENDER MOULDINGS 63 07-09 (440)

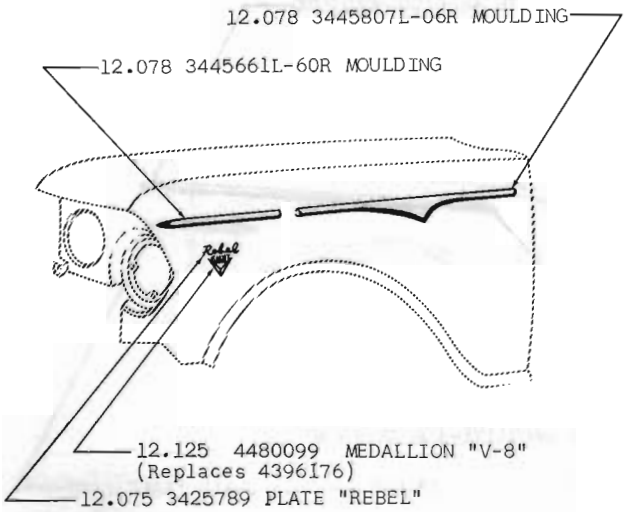

ATTACHING PARTS, WHEN REQUIRED, INCLUDED WITH ALL PARTS SHOWN

FRONT FENDER MOULDINGS 60 10-20 (Super)

Copyright 1963 American Motors Corp.

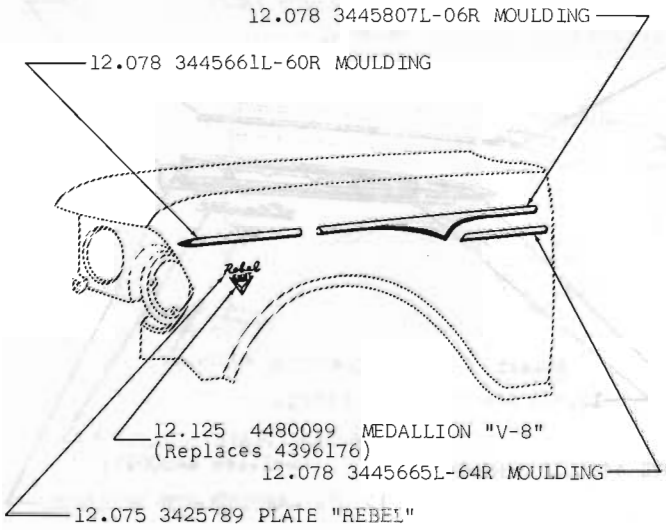

ATTACHING PARTS, WHEN REQUIRED, INCLUDED WITH ALL PARTS SHOWN

FRONT FENDER MOULDINGS 60 10-20 (Custom)

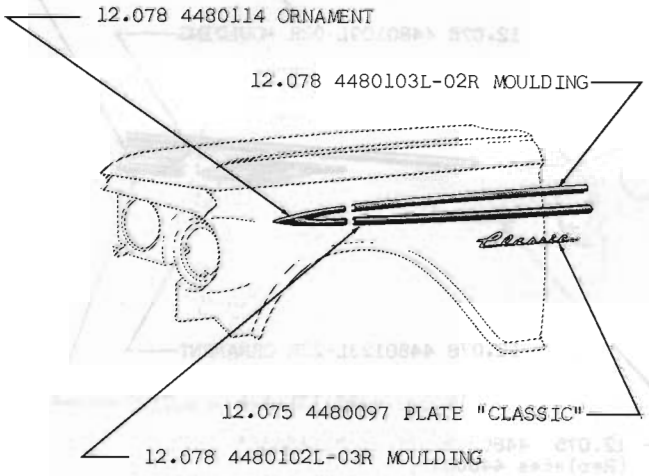

ATTACHING PARTS, WHEN REQUIRED, INCLUDED WITH ALL PARTS SHOWN

FRONT FENDER MOULDINGS 61 10-20 (Super)

Copyright 1963 American Motors Corp.

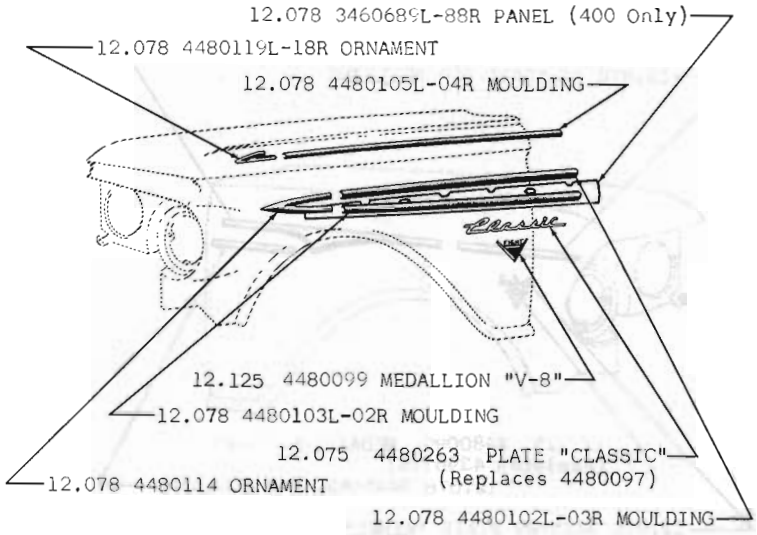

ATTACHING PARTS, WHEN REQUIRED, INCLUDED WITH ALL PARTS SHOWN

FRONT FENDER MOULDINGS 61 10-20 (Custom)(400)

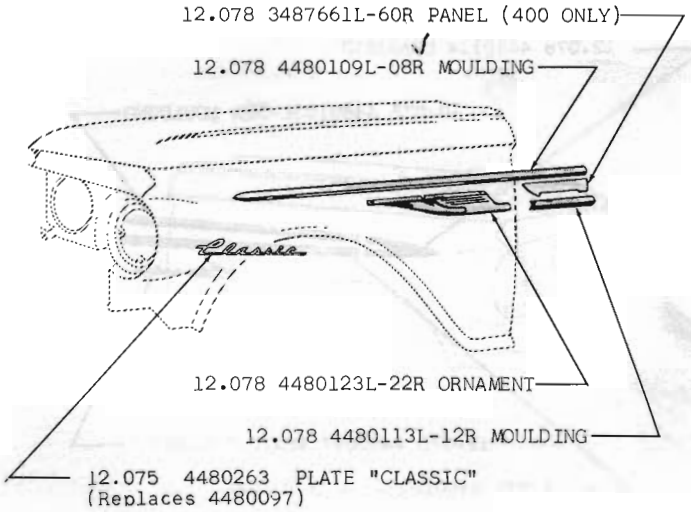

ATTACHING PARTS, WHEN REQUIRED, INCLUDED WITH ALL PARTS SHOWN

FRONT FENDER MOULDINGS 62 10 (Custom)(400)

Copyright 1963 American Motors Corp.

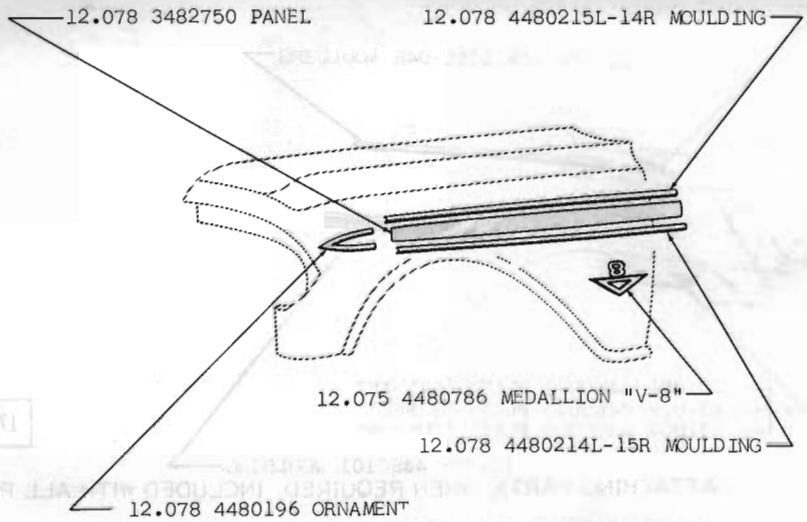

ATTACHING PARTS, WHEN REQUIRED, INCLUDED WITH ALL PARTS SHOWN

FRONT FENDER MOULDINGS 63 10 (660)(770)

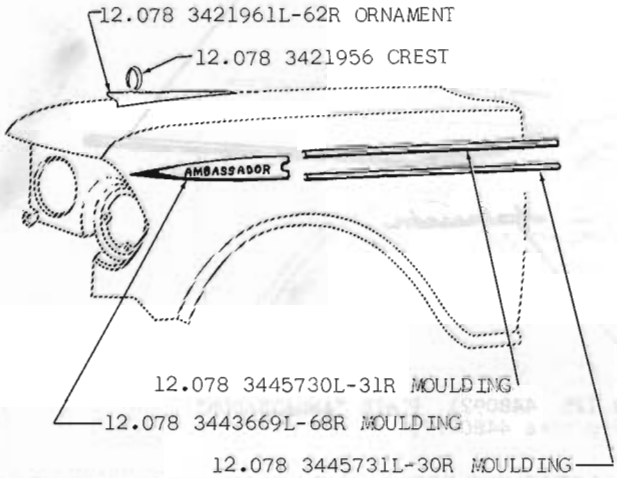

ATTACHING PARTS, WHEN REQUIRED, INCLUDED WITH ALL PARTS SHOWN

FRONT FENDER MOULDINGS 60 80 (Super)

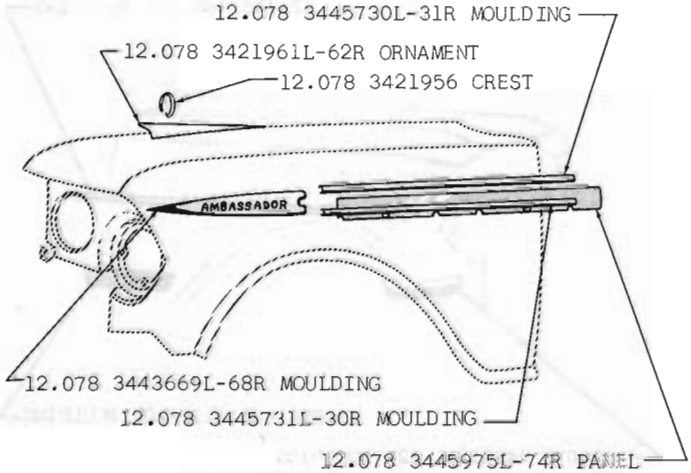

ATTACHING PARTS, WHEN REQUIRED, INCLUDED WITH ALL PARTS SHOWN

FRONT FENDER MOULDINGS 60 80 (Custom)

Copyright 1963 American Motors Corp.

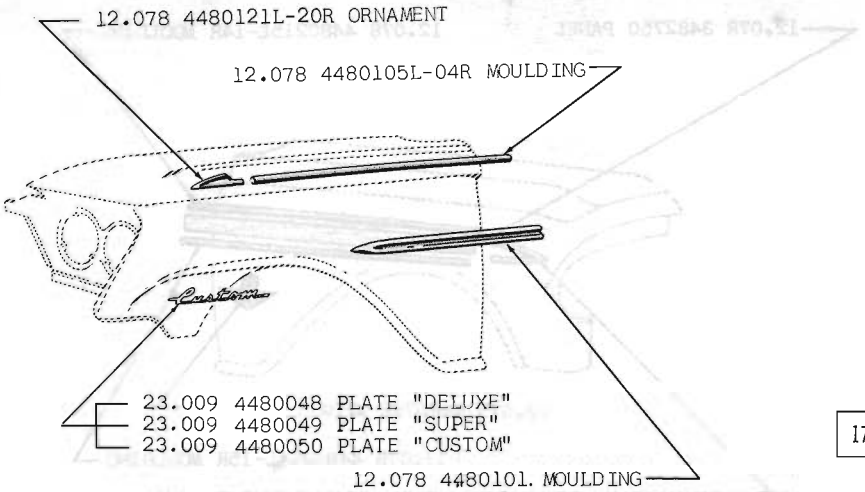

1711

ATTACHING PARTS, WHEN REQUIRED, INCLUDED WITH ALL PARTS SHOWN

FRONT FENDER MOULDINGS 61 80 (Super)(Custom)

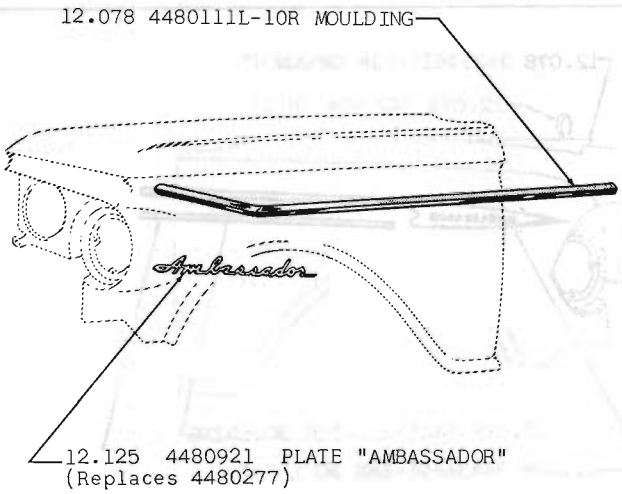

1712

ATTACHING PARTS, WHEN REQUIRED, INCLUDED WITH ALL PARTS SHOWN

FRONT FENDER MOULDINGS 62 80 (Custom)(400)

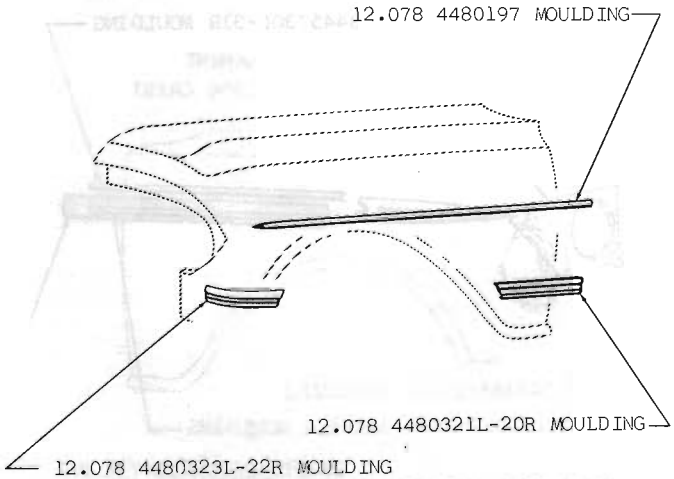

ATTACHING PARTS, WHEN REQUIRED, INCLUDED WITH ALL PARTS SHOWN

FRONT FENDER MOULDINGS 63 80 (880)

Copyright 1963 American Motors Corp.

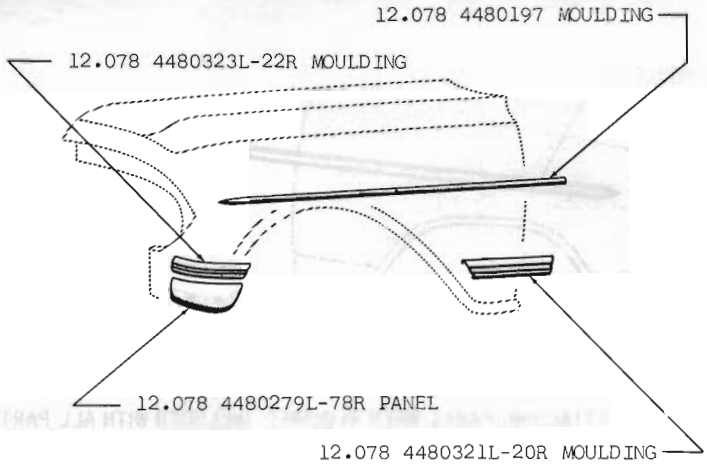

ATTACHING PARTS, WHEN REQUIRED, INCLUDED WITH ALL PARTS SHOWN

FRONT FENDER MOULDINGS 63 80 (990)

Copyright 1963 American Motors Corp.

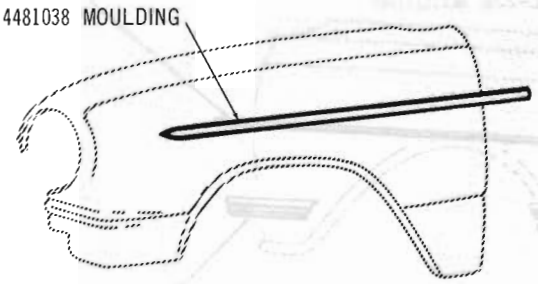

ATTACHING PARTS, WHEN REQUIRED, INCLUDED WITH ALL PARTS SHOWN

FRONT FENDER MOULDINGS 64 05-06-08 (330): 64 05-07-09 (440): 64 09 (440-H)

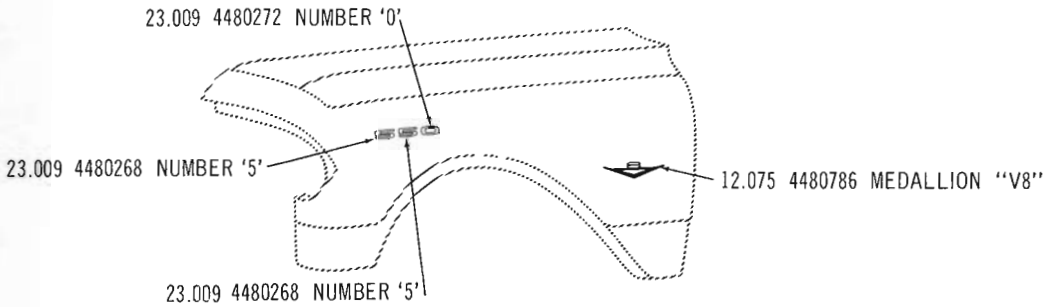

ATTACHING PARTS, WHEN REQUIRED, INCLUDED WITH ALL PARTS SHOWN

FRONT FENDER MOULDINGS 64 15-16-18 (550)

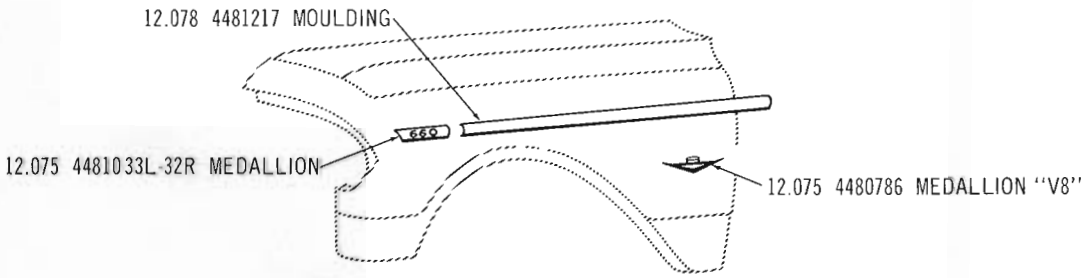

ATTACHING PARTS, WHEN REQUIRED, INCLUDED WITH ALL PARTS SHOWN

FRONT FENDER MOULDINGS 64 15-16-18 (660)

Copyright 1963 American Motors Corp.

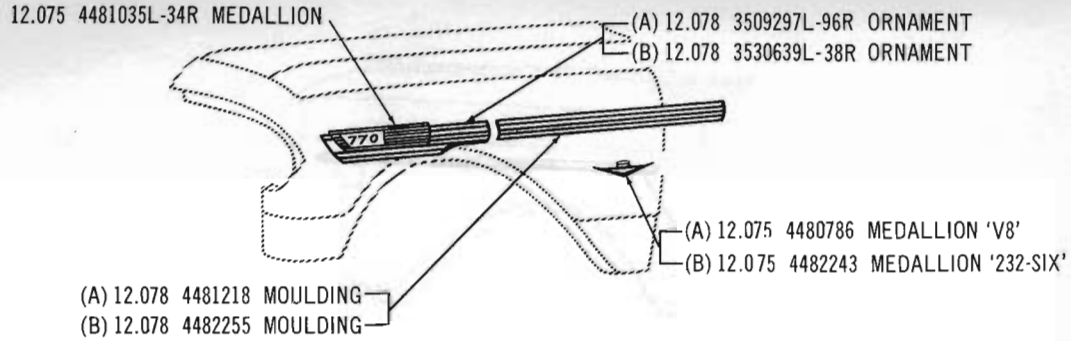

(A) Used on 15-5, 16-5, 18-5, 19-5
(B) Used on 19-7

ATTACHING PARTS, WHEN REQUIRED, INCLUDED WITH ALL PARTS SHOWN

FRONT FENDER MOULDINGS 64 15-16-18-19 (770)

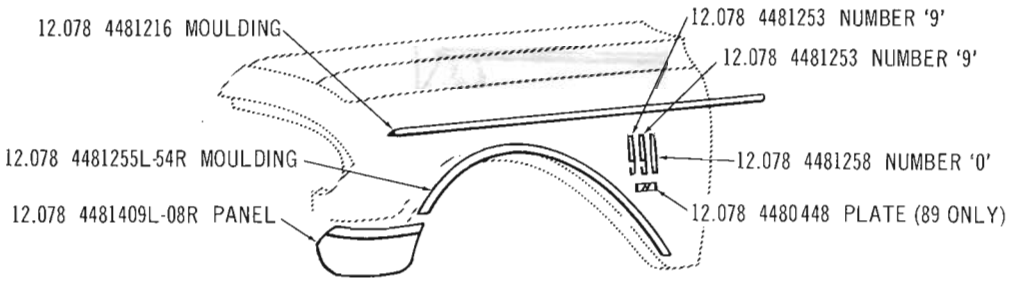

ATTACHING PARTS, WHEN REQUIRED, INCLUDED WITH ALL PARTS SHOWN

FRONT FENDER MOULDINGS 64 85-88-89 (990)

Copyright 1963 American Motors Corp.

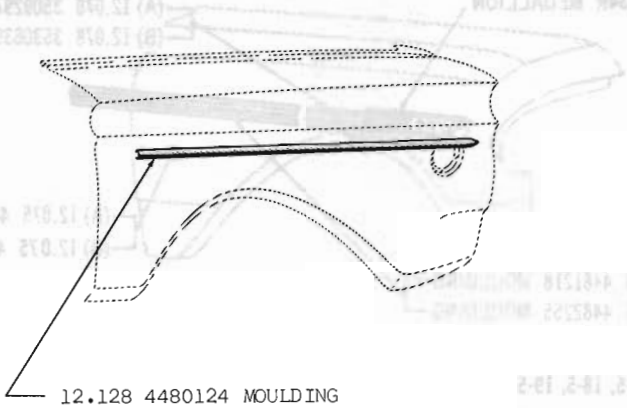

12.128 4480124 MOULDING

ATTACHING PARTS, WHEN REQUIRED, INCLUDED WITH ALL PARTS SHOWN

REAR FENDER MOULDINGS 61 01 (Super) 2 Dr.

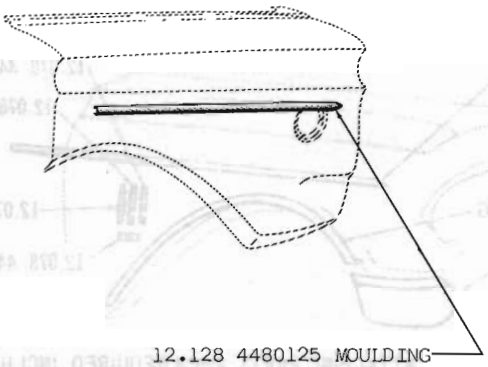

12.128 4480125 MOULDING

ATTACHING PARTS, WHEN REQUIRED, INCLUDED WITH ALL PARTS SHOWN

REAR FENDER MOULDINGS 61 01 (Super) 4 Dr.

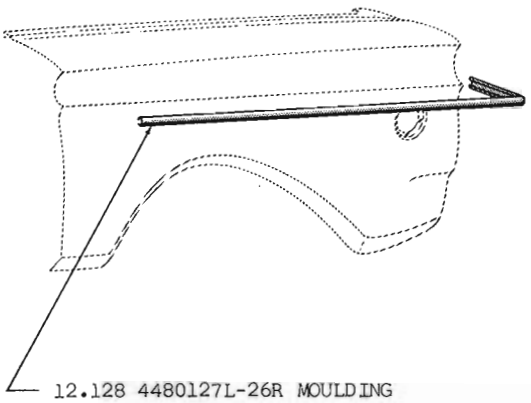

12.128 4480127L-26R MOULDING

ATTACHING PARTS, WHEN REQUIRED, INCLUDED WITH ALL PARTS SHOWN

REAR FENDER MOULDINGS 61-62 01 (Custom)(400) 2 Dr.: 63 06 (330)(440)

Copyright 1963 American Motors Corp.

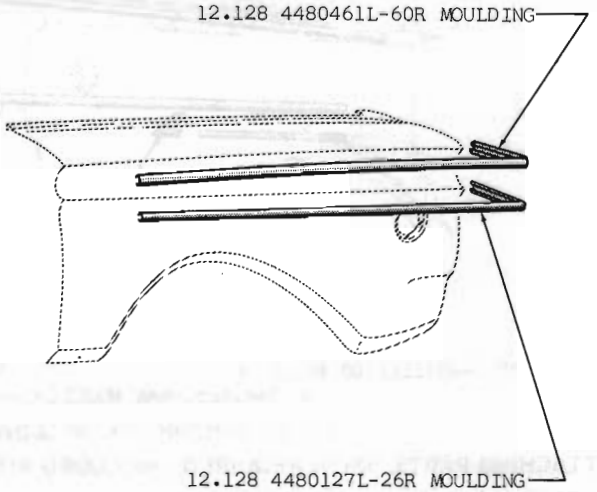

ATTACHING PARTS, WHEN REQUIRED, INCLUDED WITH ALL PARTS SHOWN

REAR FENDER MOULDINGS 63 07-09 (440)

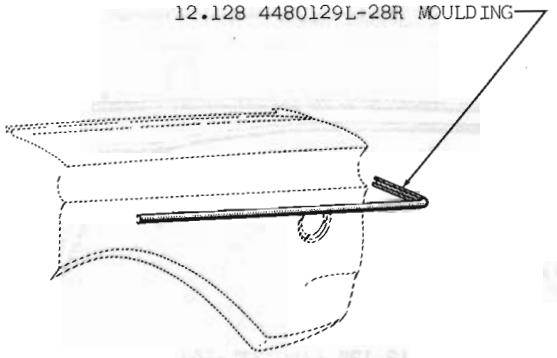

ATTACHING PARTS, WHEN REQUIRED, INCLUDED WITH ALL PARTS SHOWN

REAR FENDER MOULDINGS 61-62 01 (Custom)(400) 4 Dr.: 63 01 (330)(440) 4 Dr.

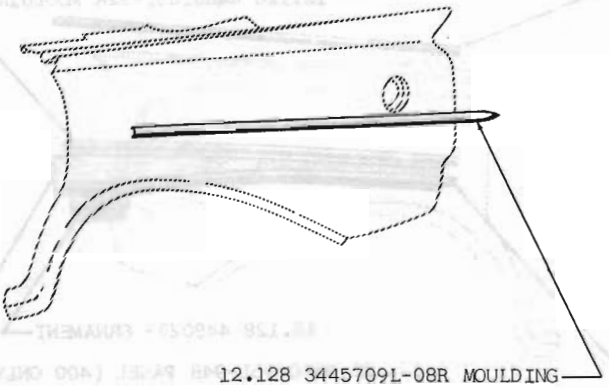

ATTACHING PARTS, WHEN REQUIRED, INCLUDED WITH ALL PARTS SHOWN

REAR FENDER MOULDINGS 60 10-20 (Super)

Copyright 1963 American Motors Corp.

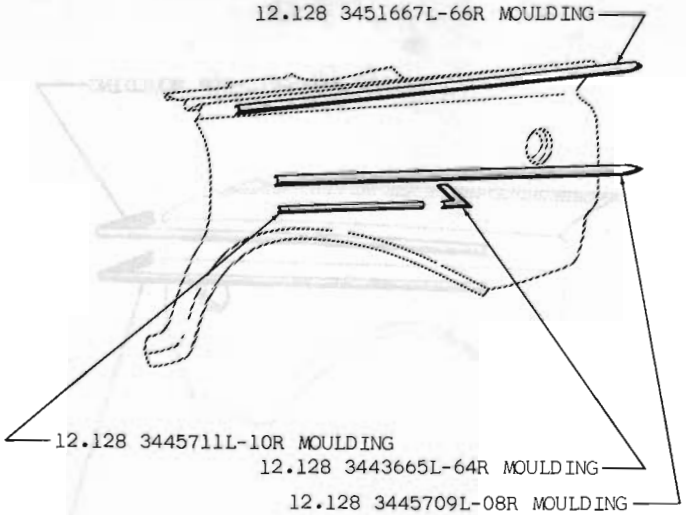

ATTACHING PARTS, WHEN REQUIRED, INCLUDED WITH ALL PARTS SHOWN

REAR FENDER MOULDINGS 60 10-20 (Custom)

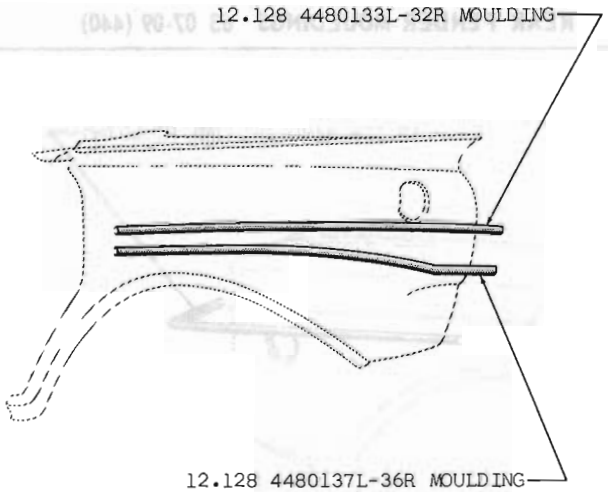

ATTACHING PARTS, WHEN REQUIRED, INCLUDED WITH ALL PARTS SHOWN

REAR FENDER MOULDINGS 61 10-20 (Super)

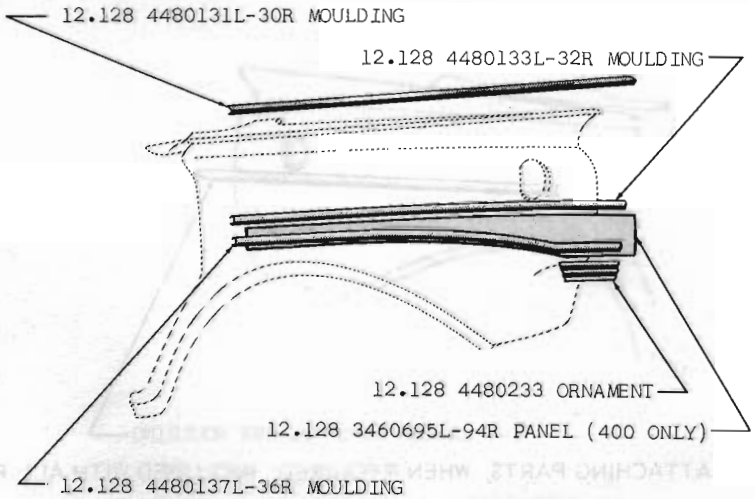

ATTACHING PARTS, WHEN REQUIRED, INCLUDED WITH ALL PARTS SHOWN

REAR FENDER MOULDINGS 61 10-20 (Custom)(400)

Copyright 1963 American Motors Corp.

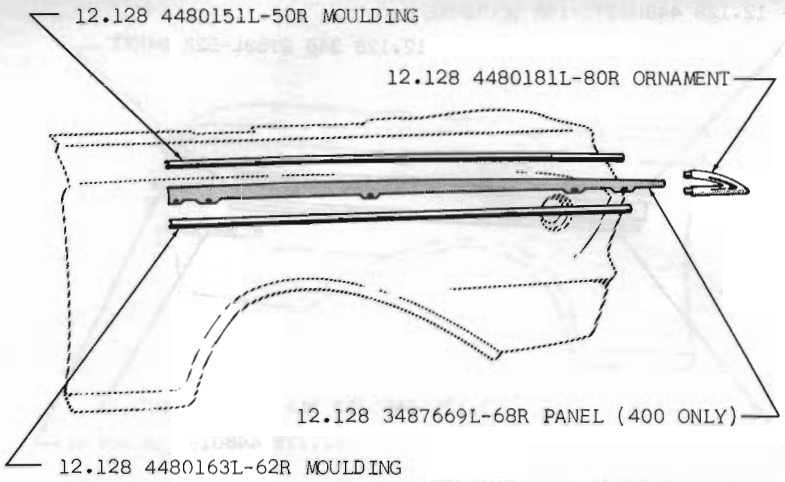

ATTACHING PARTS, WHEN REQUIRED, INCLUDED WITH ALL PARTS SHOWN

REAR FENDER MOULDINGS 62 10 (Custom)(400) 2 Dr.

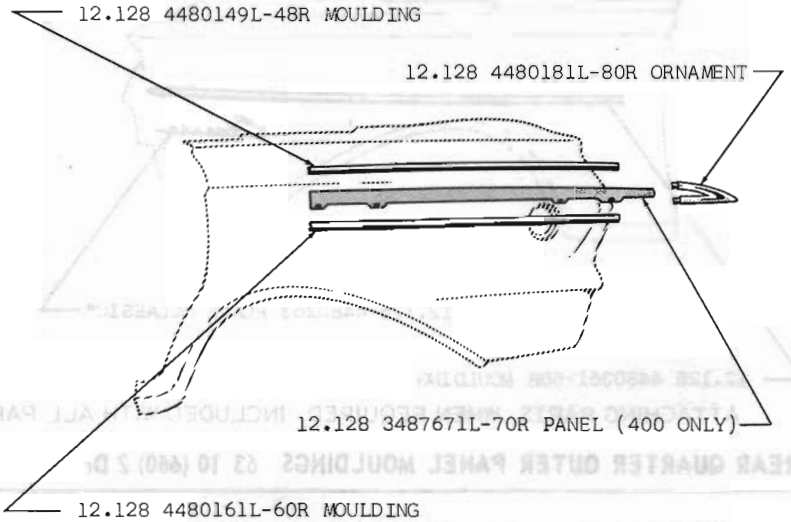

ATTACHING PARTS, WHEN REQUIRED, INCLUDED WITH ALL PARTS SHOWN

REAR FENDER MOULDINGS 62 10 (Custom)(400) 4 Dr.

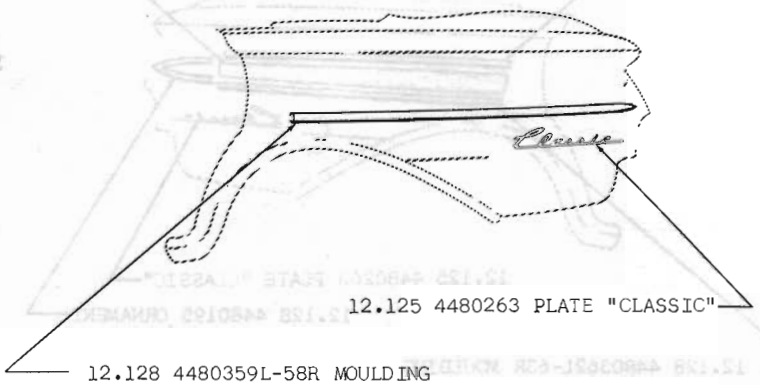

ATTACHING PARTS, WHEN REQUIRED, INCLUDED WITH ALL PARTS SHOWN

REAR QUARTER OUTER PANEL MOULDINGS 63 10 (660) 4 Dr.

Copyright 1963 American Motors Corp.

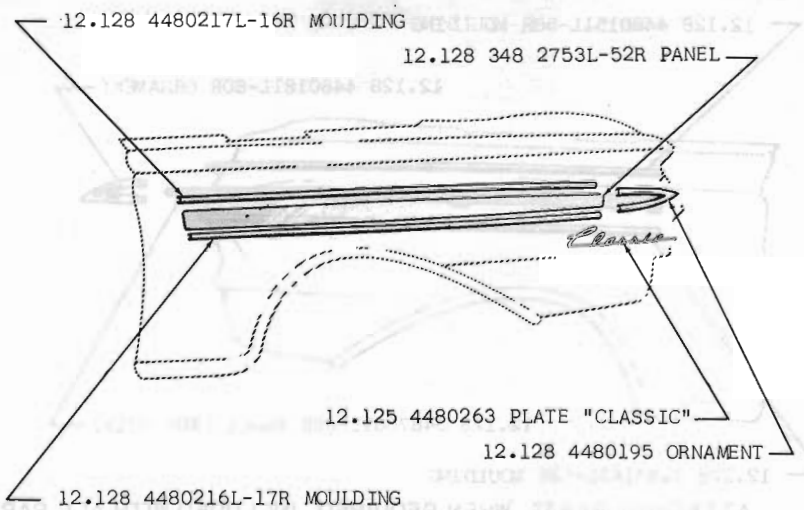

ATTACHING PARTS, WHEN REQUIRED, INCLUDED WITH ALL PARTS SHOWN

REAR QUARTER OUTER PANEL MOULDINGS 63 10 (770) 2 Dr.

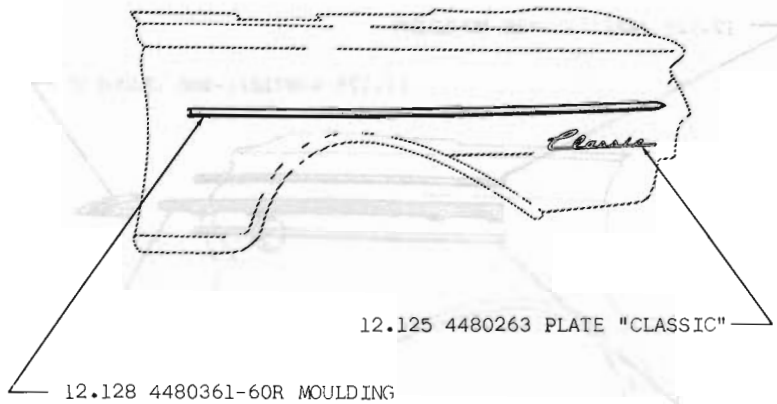

ATTACHING PARTS, WHEN REQUIRED, INCLUDED WITH ALL PARTS SHOWN

REAR QUARTER OUTER PANEL MOULDINGS 63 10 (660) 2 Dr.

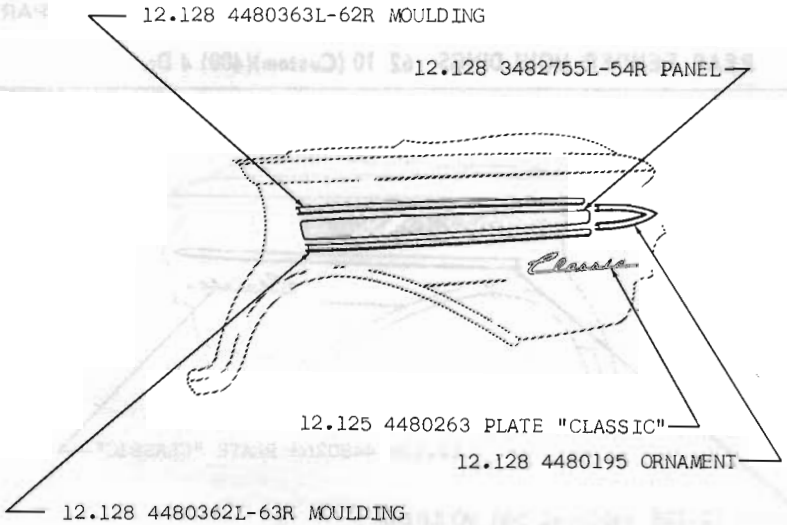

ATTACHING PARTS, WHEN REQUIRED, INCLUDED WITH ALL PARTS SHOWN

REAR QUARTER OUTER PANEL MOULDINGS 63 10 (770) 4 Dr.

Copyright 1963 American Motors Corp.

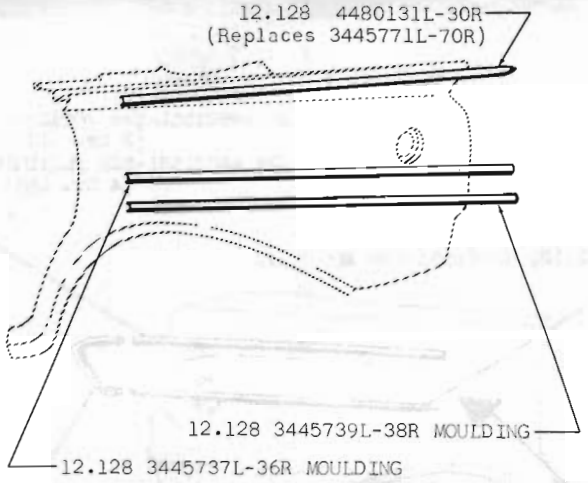

ATTACHING PARTS, WHEN REQUIRED, INCLUDED WITH ALL PARTS SHOWN

REAR FENDER MOULDINGS 60 80 (Super)

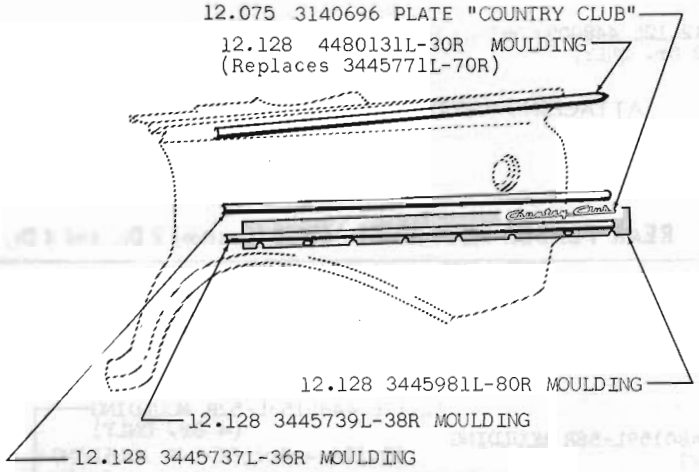

ATTACHING PARTS, WHEN REQUIRED, INCLUDED WITH ALL PARTS SHOWN

REAR FENDER MOULDINGS 60 80 (Custom)

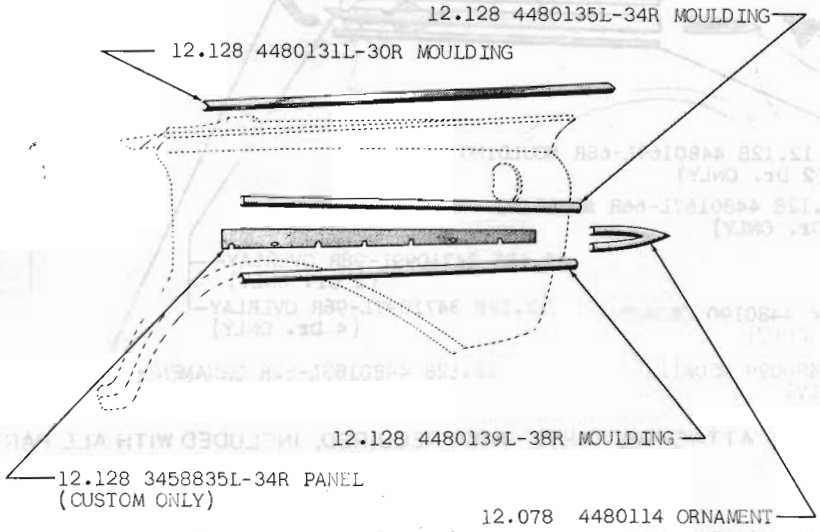

ATTACHING PARTS, WHEN REQUIRED, INCLUDED WITH ALL PARTS SHOWN

REAR FENDER MOULDINGS 61 80 (Super)(Custom)

Copyright 1963 American Motors Corp.

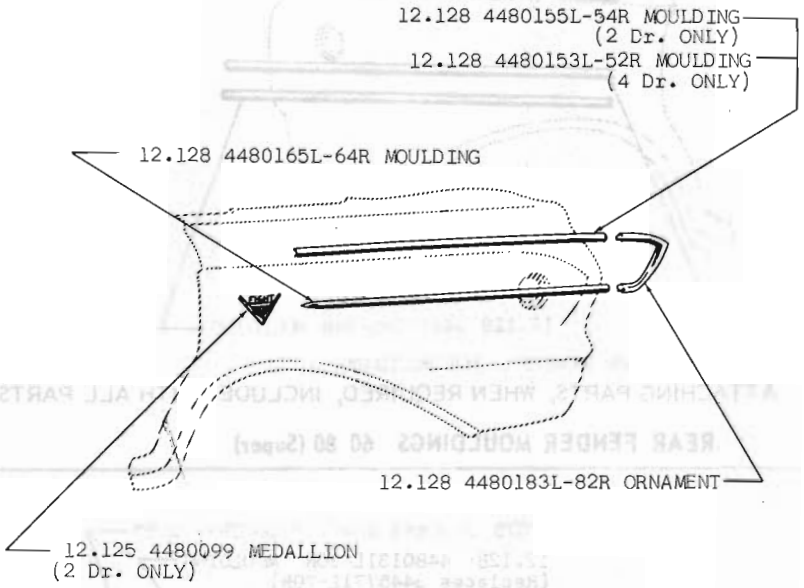

ATTACHING PARTS, WHEN REQUIRED, INCLUDED WITH ALL PARTS SHOWN

REAR FENDER MOULDINGS 62 80 (Custom) 2 Dr. and 4 Dr.

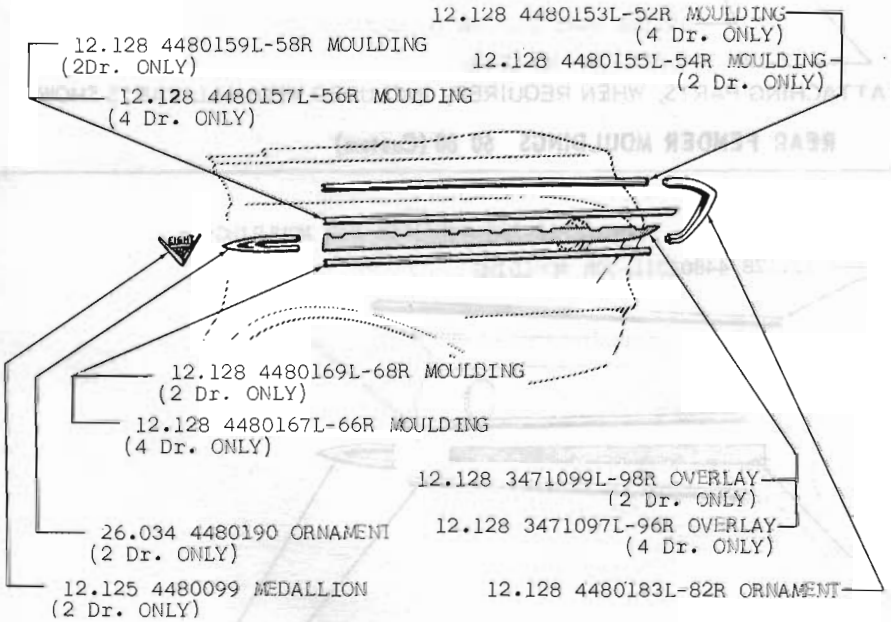

1734

ATTACHING PARTS, WHEN REQUIRED, INCLUDED WITH ALL PARTS SHOWN

REAR FENDER MOULDINGS 62 80 (400) 2 Dr. and 4 Dr.

Copyright 1963 American Motors Corp.

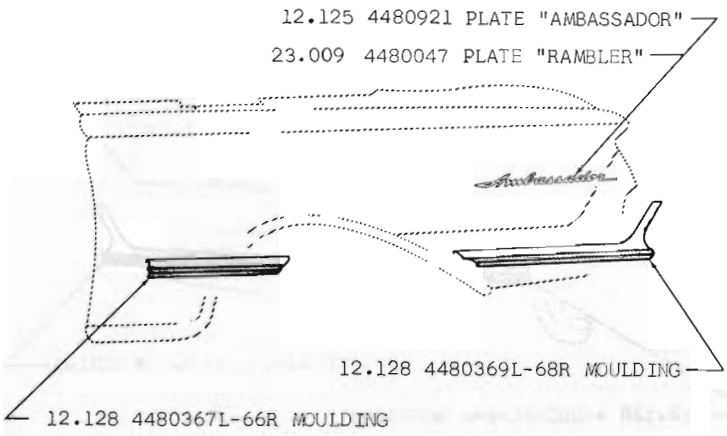

ATTACHING PARTS, WHEN REQUIRED, INCLUDED WITH ALL PARTS SHOWN

REAR QUARTER OUTER PANEL MOULDINGS 63 80 (880) 2 Dr.

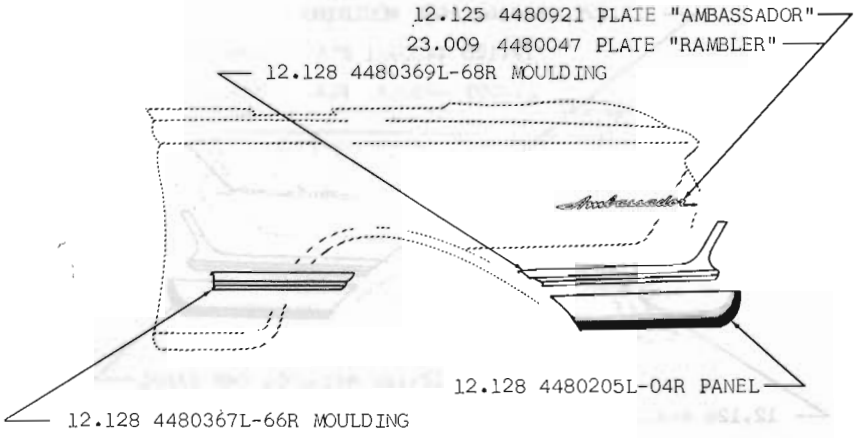

• ATTACHING PARTS, WHEN REQUIRED, INCLUDED WITH ALL PARTS SHOWN

REAR QUARTER OUTER PANEL MOULDINGS 63 80 (990) 2 Dr.

Copyright 1963 American Motors Corp.

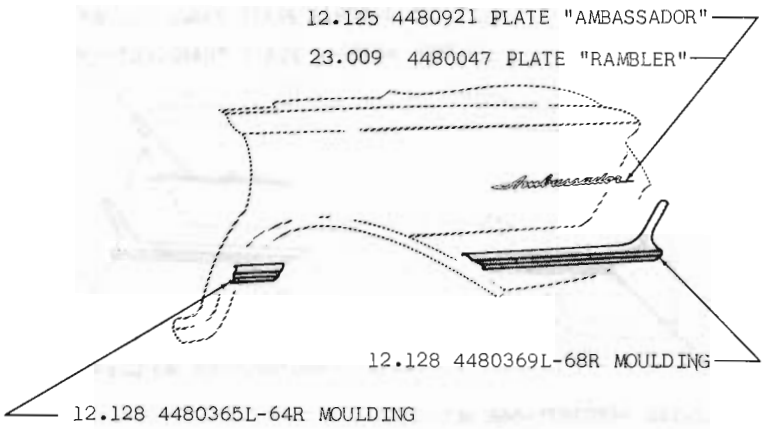

ATTACHING PARTS, WHEN REQUIRED, INCLUDED WITH ALL PARTS SHOWN

REAR QUARTER OUTER PANEL MOULDINGS 63 80 (880) 4 Dr.

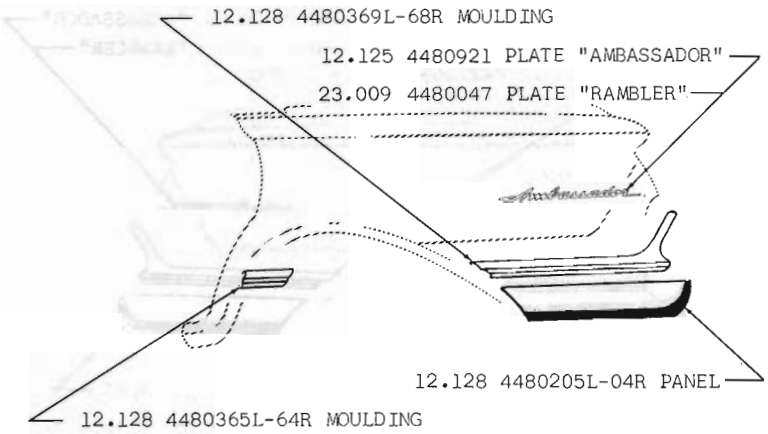

ATTACHING PARTS, WHEN REQUIRED, INCLUDED WITH ALL PARTS SHOWN

REAR QUARTER OUTER PANEL MOULDINGS 63 80 (990) 4 Dr.

Copyright 1963 American Motors Corp.

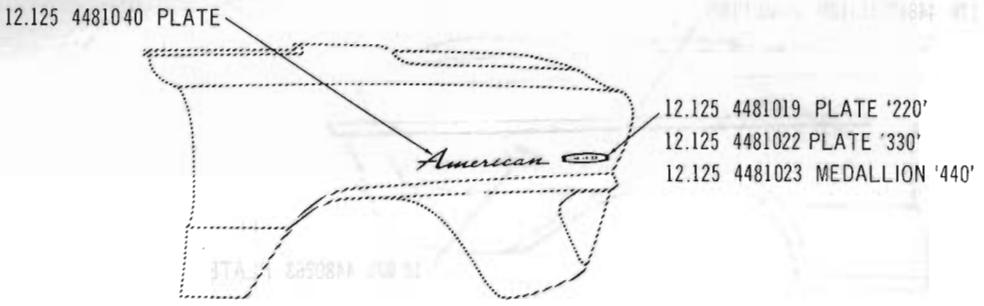

ATTACHING PARTS, WHEN REQUIRED, INCLUDED WITH ALL PARTS SHOWN

REAR QUARTER OUTER PANEL MOULDINGS 64 05-06-08 (220)(330): 64 05-07-09 (440)

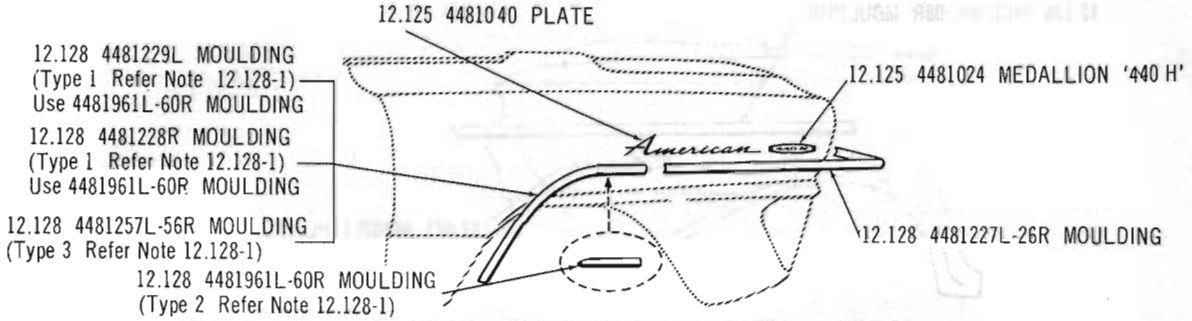

ATTACHING PARTS, WHEN REQUIRED, INCLUDED WITH ALL PARTS SHOWN

REAR QUARTER OUTER PANEL MOULDINGS 64 09 (440-H)

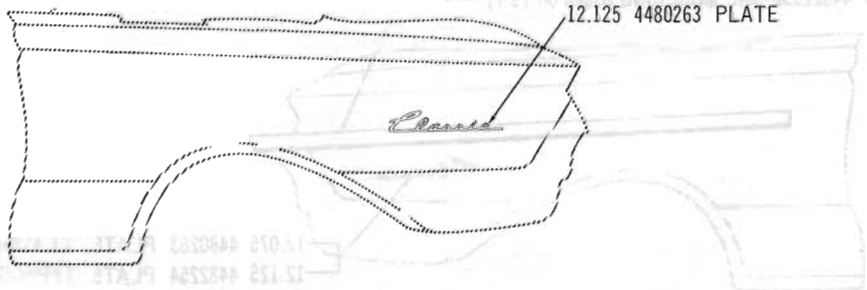

ATTACHING PARTS, WHEN REQUIRED, INCLUDED WITH ALL PARTS SHOWN

REAR QUARTER OUTER PANEL MOULDINGS 64 15-16-18 (550)

Copyright 1963 American Motors Corp.

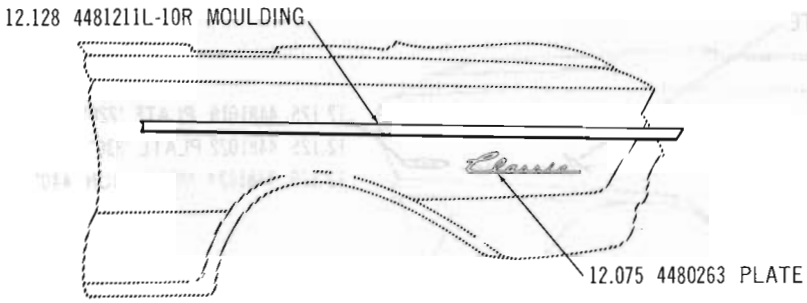

ATTACHING PARTS, WHEN REQUIRED, INCLUDED WITH ALL PARTS SHOWN

REAR QUARTER OUTER PANEL MOULDINGS 64 16 (660)

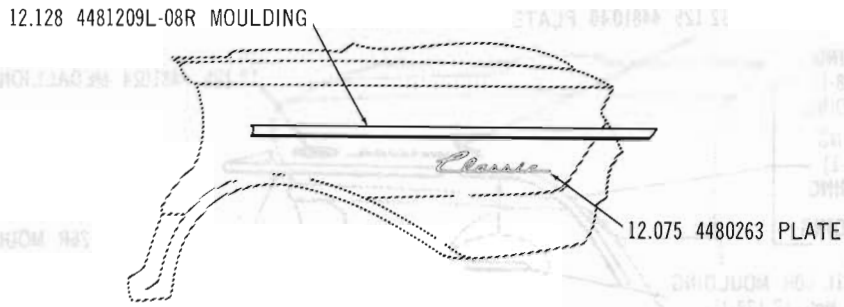

ATTACHING PARTS, WHEN REQUIRED, INCLUDED WITH ALL PARTS SHOWN

REAR QUARTER OUTER PANEL MOULDINGS 64 15-18 (660)

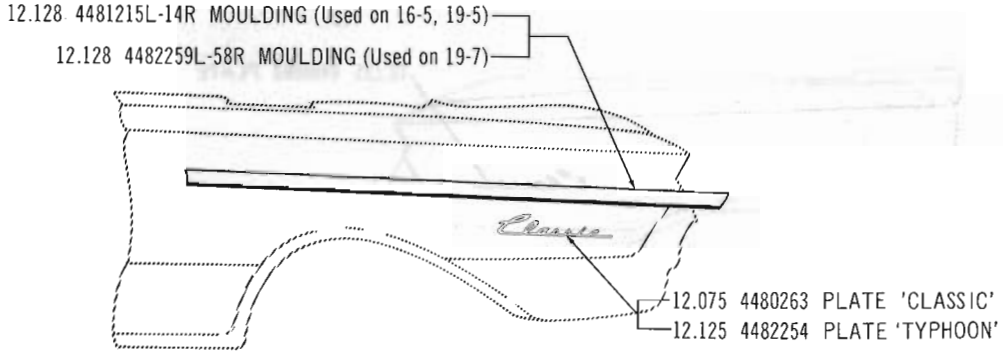

ATTACHING PARTS, WHEN REQUIRED, INCLUDED WITH ALL PARTS SHOWN

REAR QUARTER OUTER PANEL MOULDINGS 64 16-19 (770)

Copyright 1963 American Motors Corp.

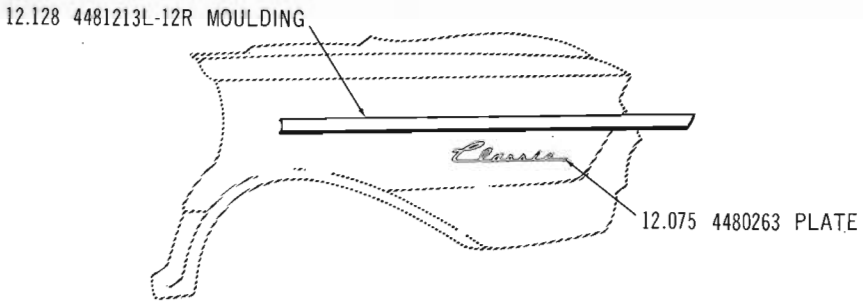

ATTACHING PARTS, WHEN REQUIRED, INCLUDED WITH ALL PARTS SHOWN

REAR QUARTER OUTER PANEL MOULDINGS 64 15-18 (770)

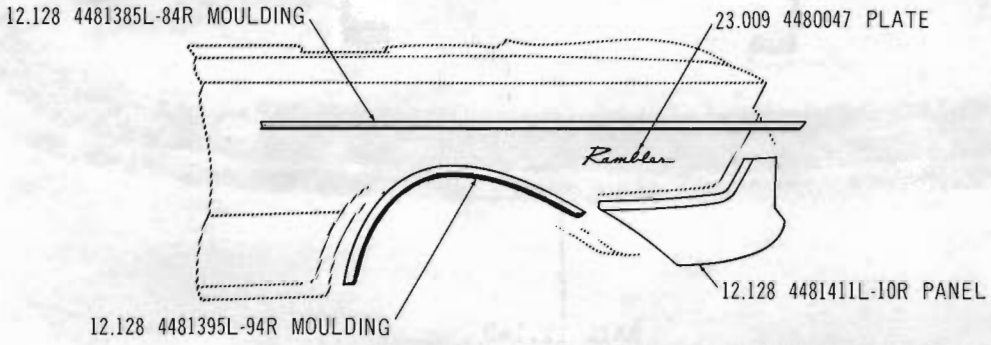

ATTACHING PARTS, WHEN REQUIRED, INCLUDED WITH ALL PARTS SHOWN

REAR QUARTER OUTER PANEL MOULDINGS 64 89 (990)

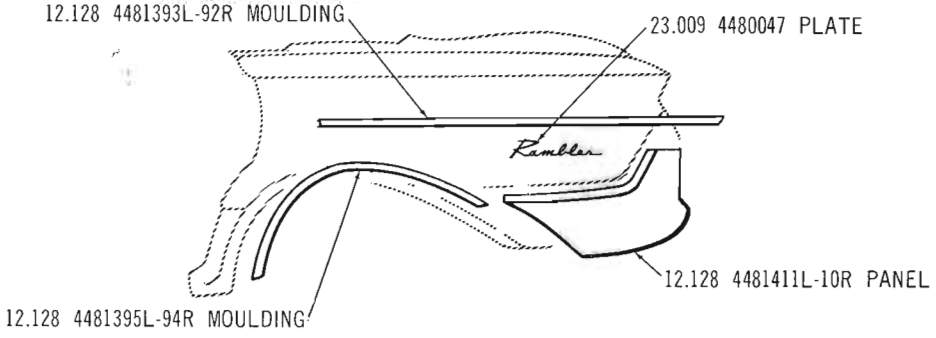

ATTACHING PARTS, WHEN REQUIRED, INCLUDED WITH ALL PARTS SHOWN

REAR QUARTER OUTER PANEL MOULDINGS 64 85-88 (990)

Copyright 1963 American Motors Corp.

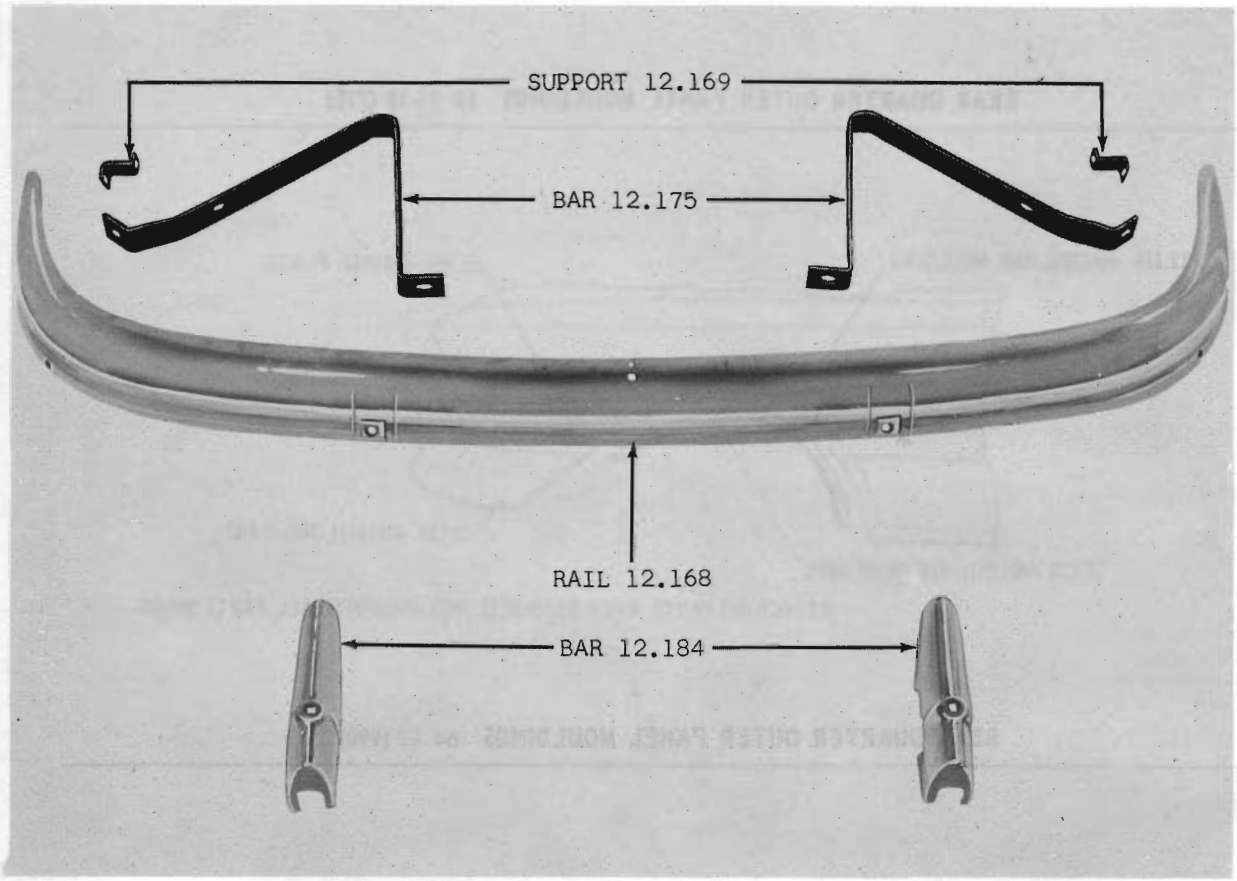

FRONT BUMPER 60 01

Copyright 1963 American Motors Corp.

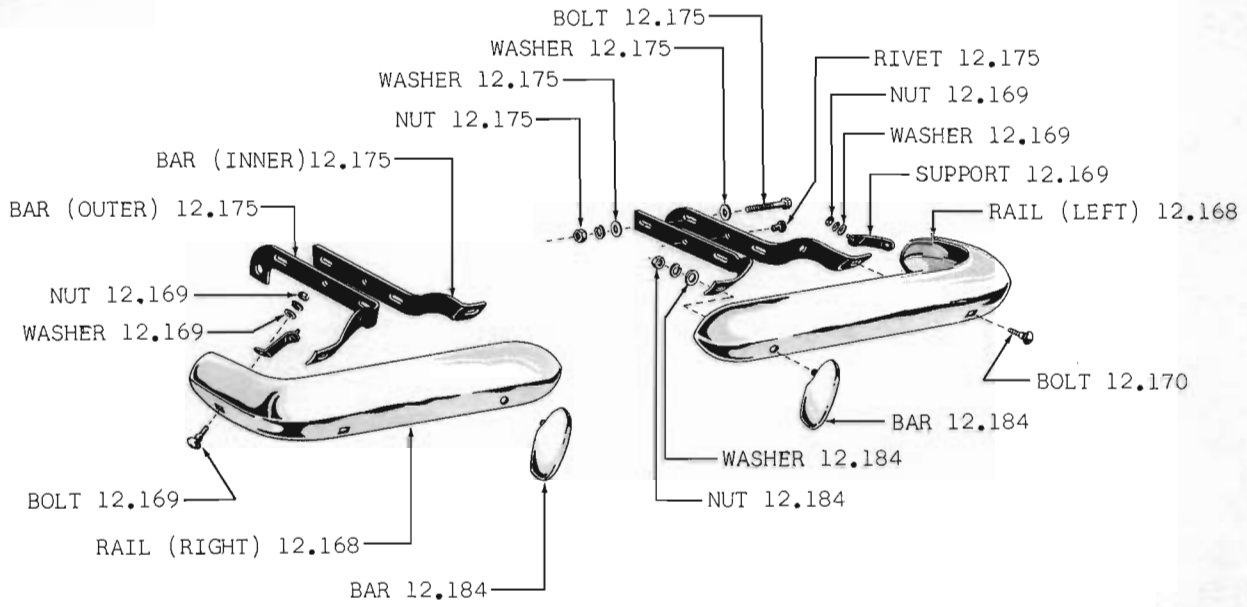

FRONT BUMPER 60 10-20-80

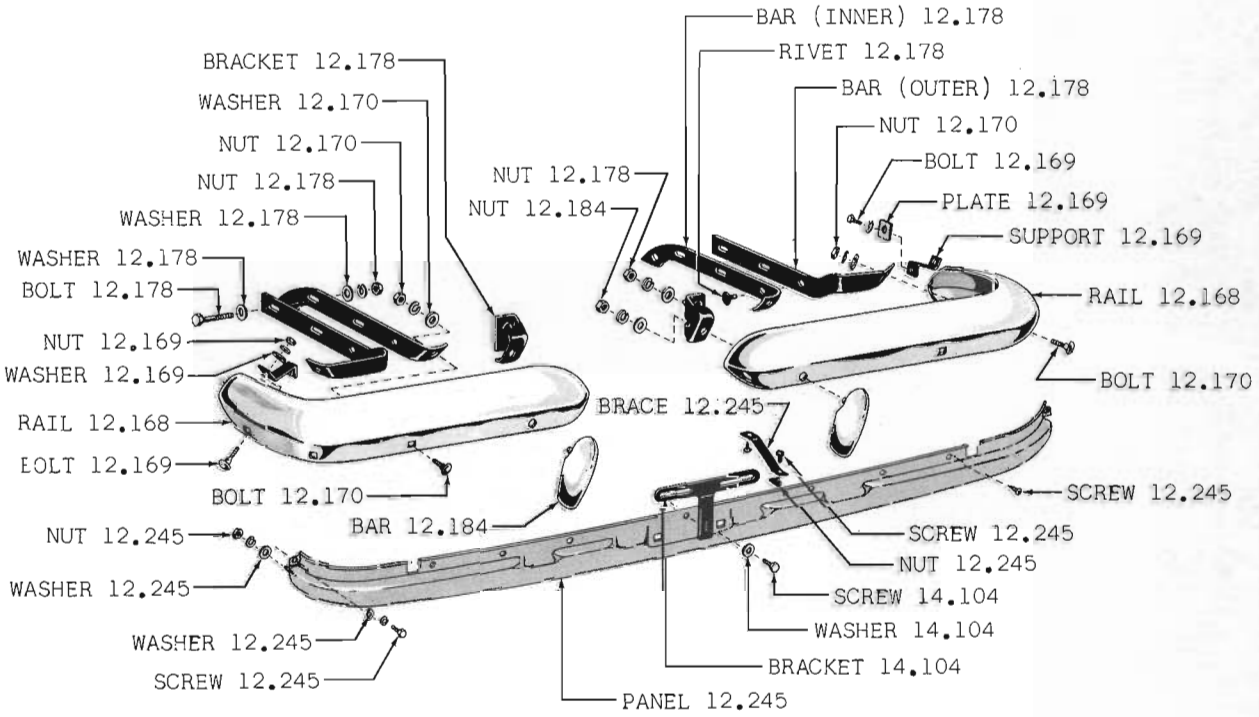

REAR BUMPER 60 10-20-80

Copyright 1963 American Motors Corp.

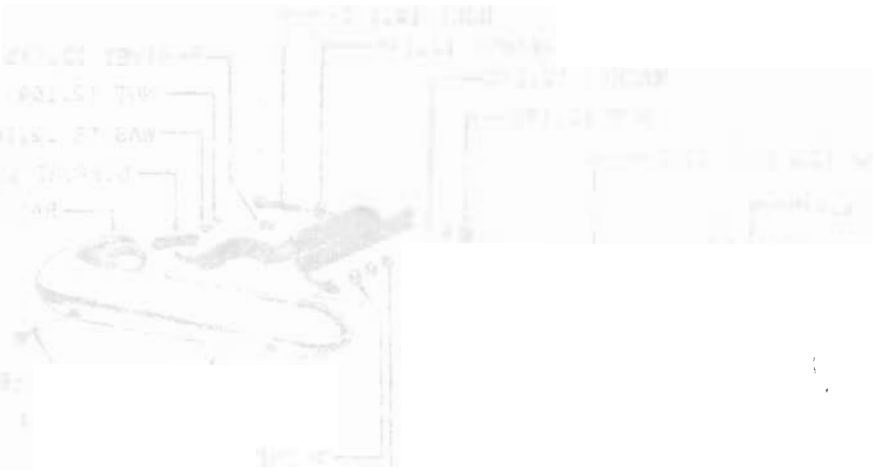

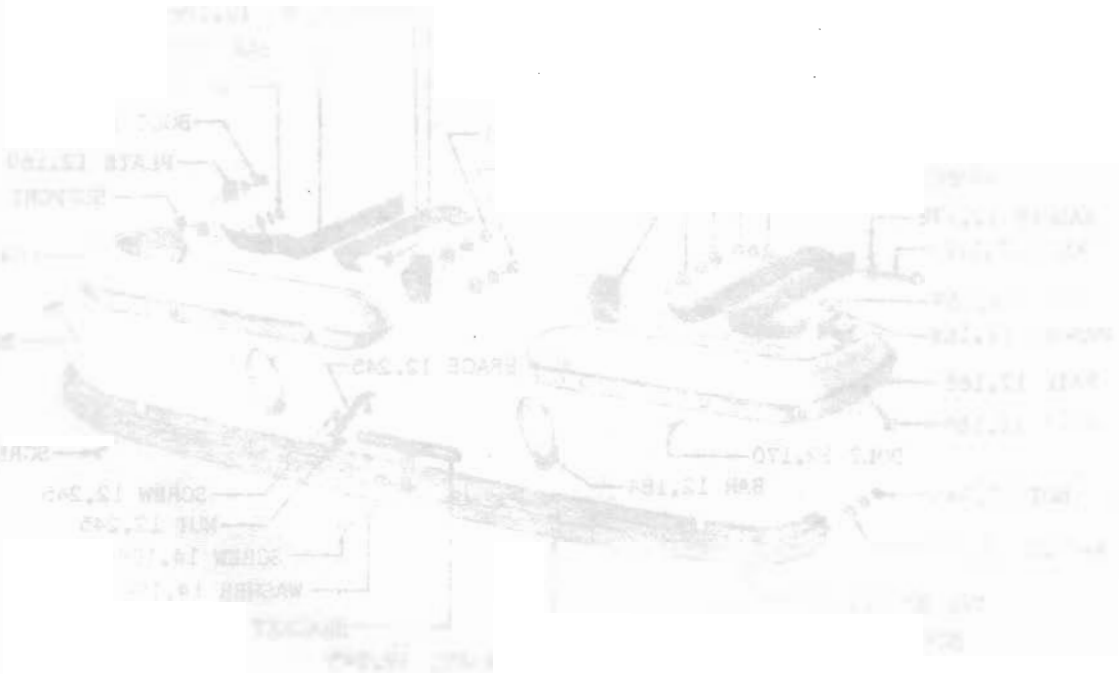

Copyright 1963 American Motors Corp.

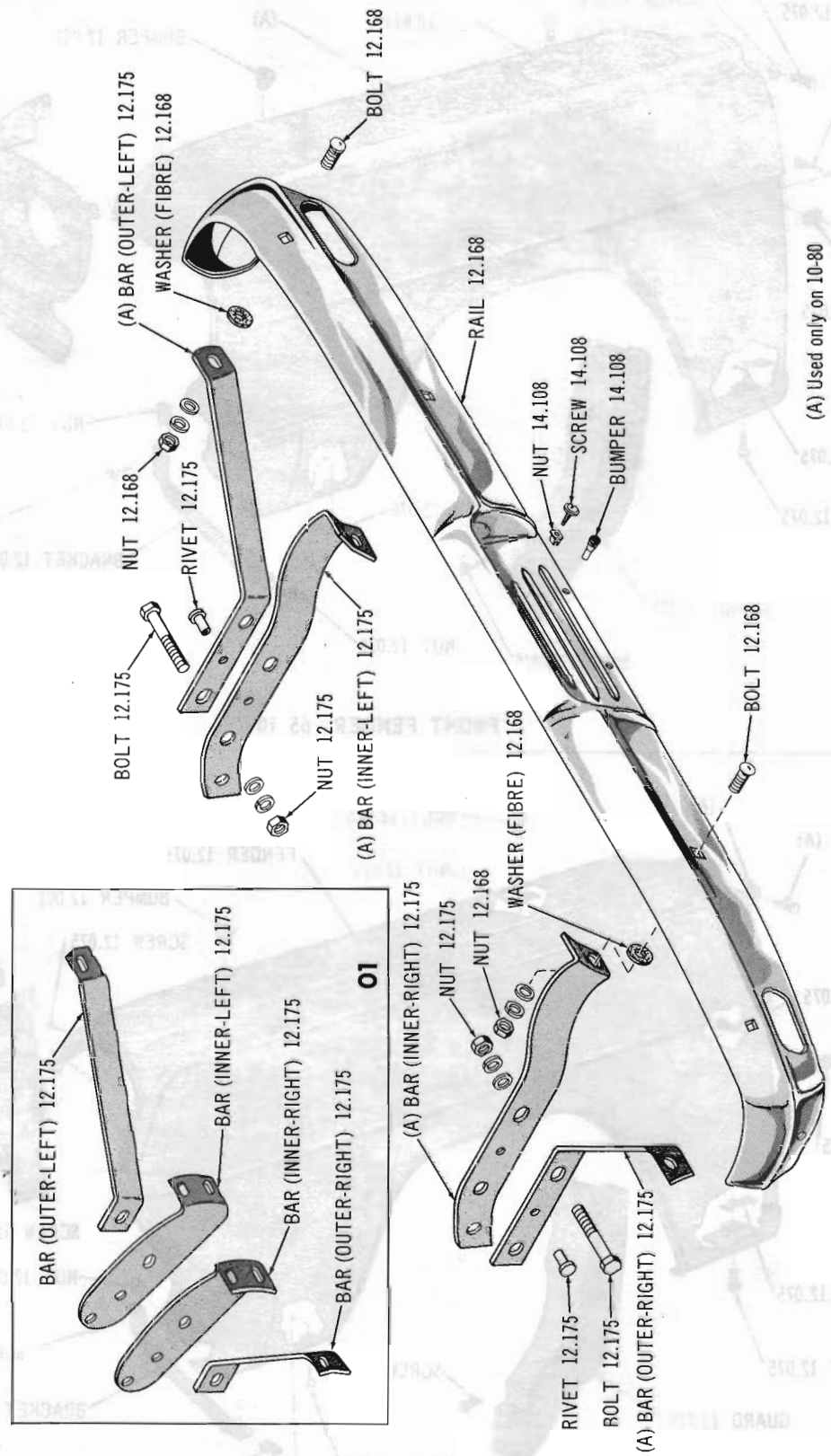

FRONT BUMPER 63-64 10-80: 64-65 01

Copyright 1963 American Motors Corp.

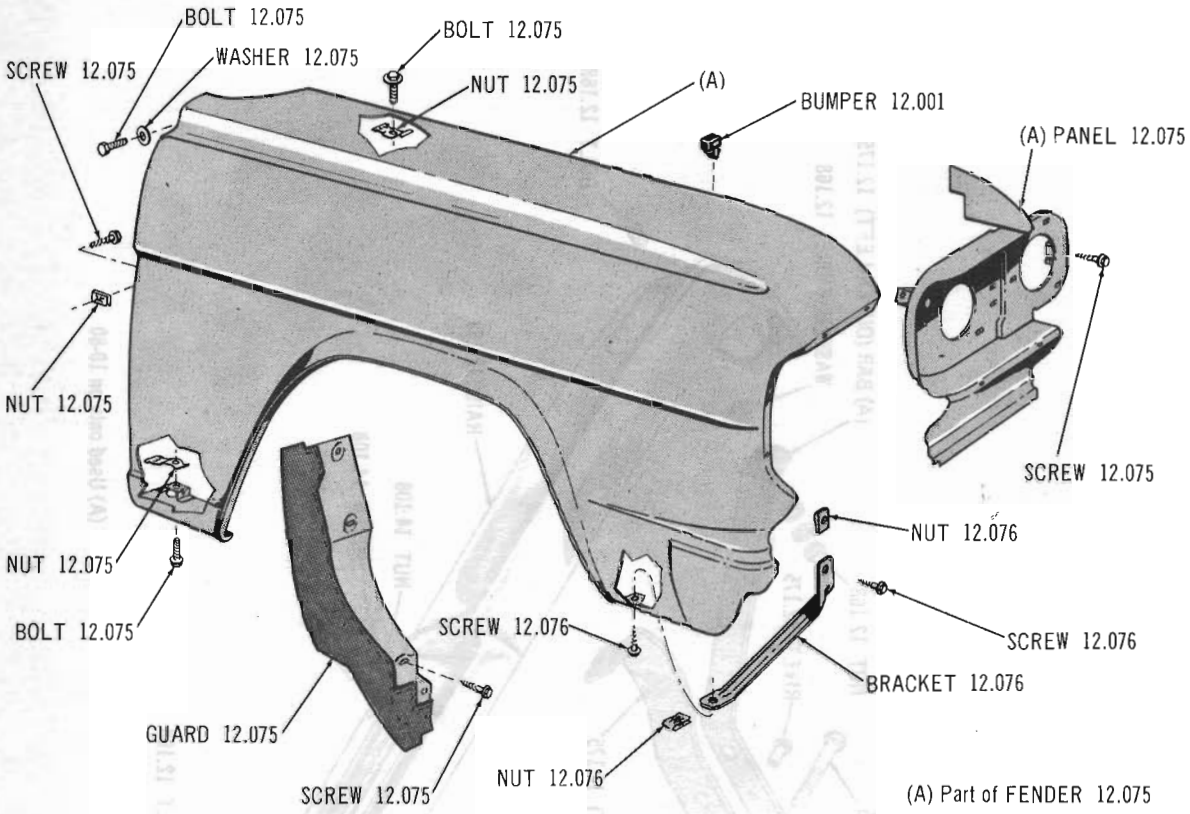

FRONT FENDER 65 10

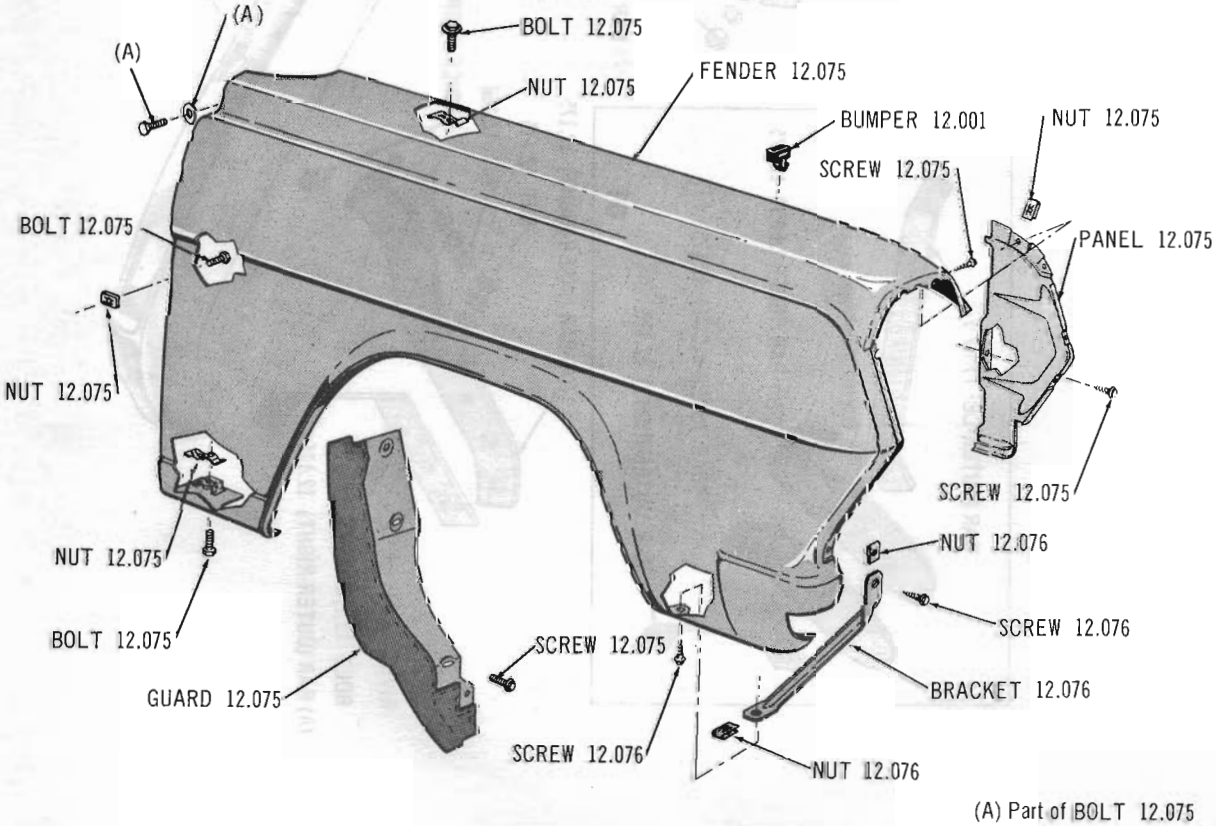

FRONT FENDER 65 80

Copyright 1963 American Motors Corp.

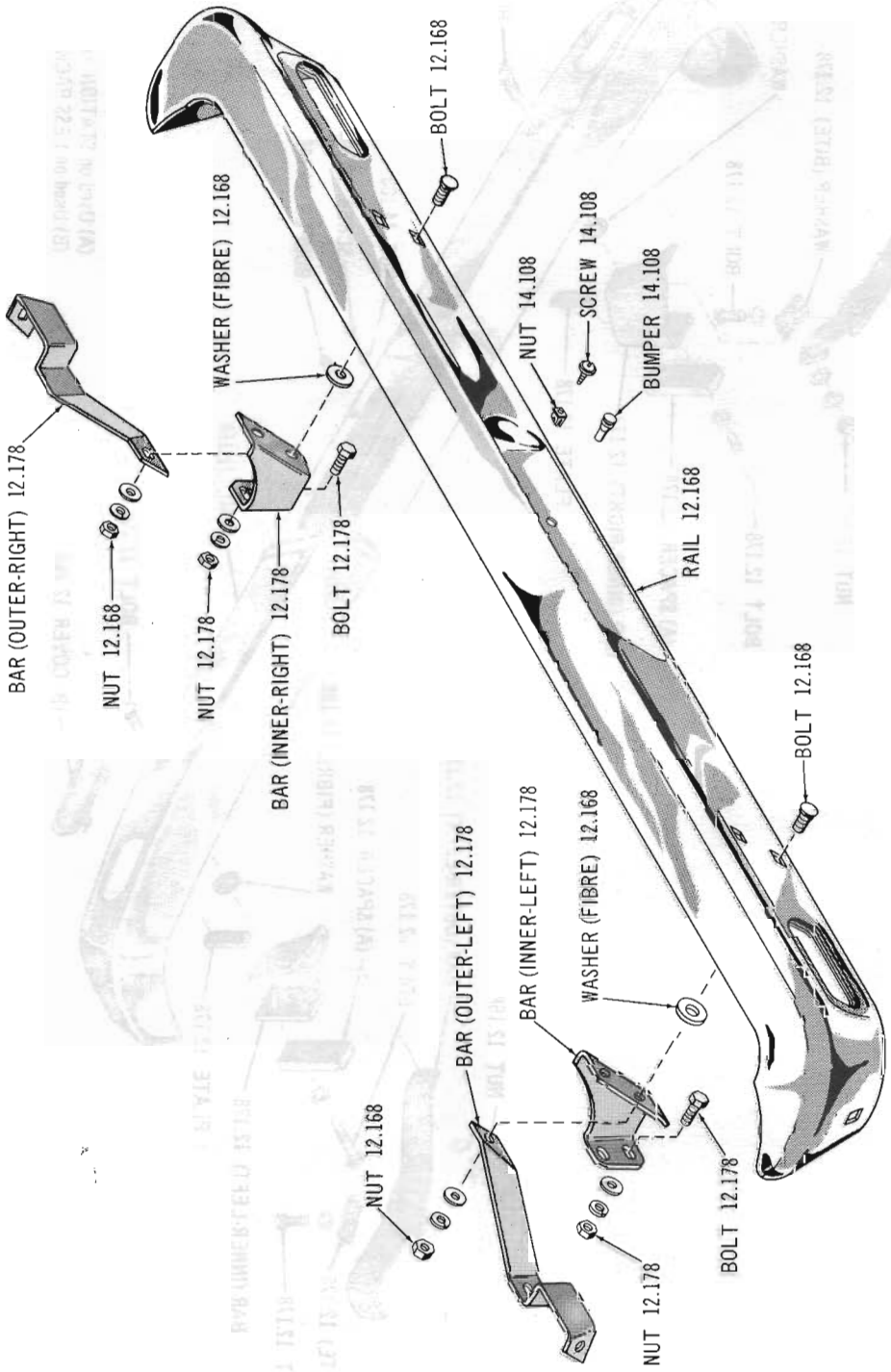

REAR BUMPER 64-65 01

Copyright 1963 American Motors Corp.

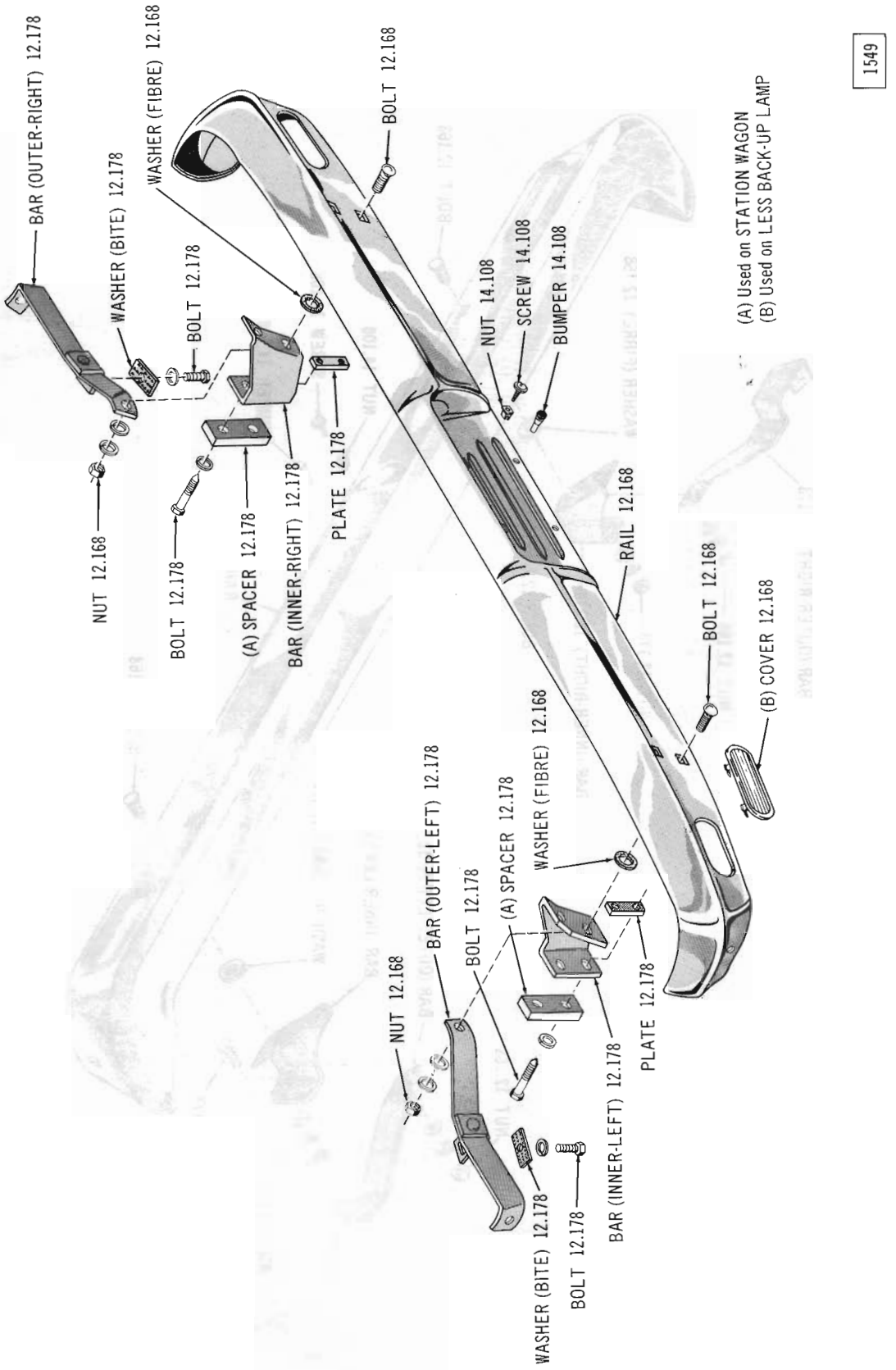

REAR BUMPER 63-64 10-80

Copyright 1963 American Motors Corp.

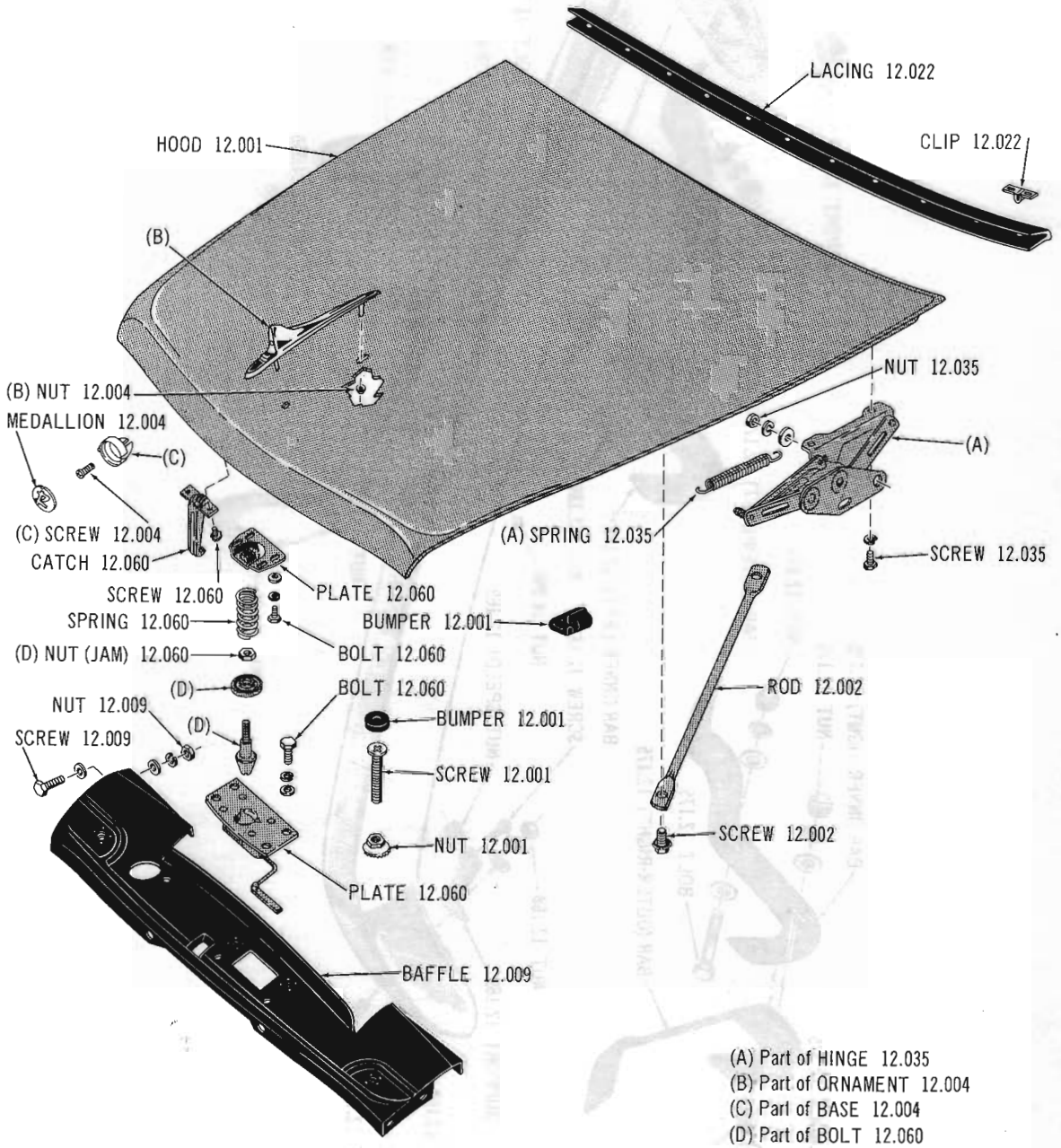

(A) Part of HINGE 12.035
(B) Part of ORNAMENT 12.004
(C) Part of BASE 12.004
(D) Part of BOLT 12.060

HOOD TOP, HINGE AND LOCK 61 thru 63 01

Copyright 1963 American Motors Corp.

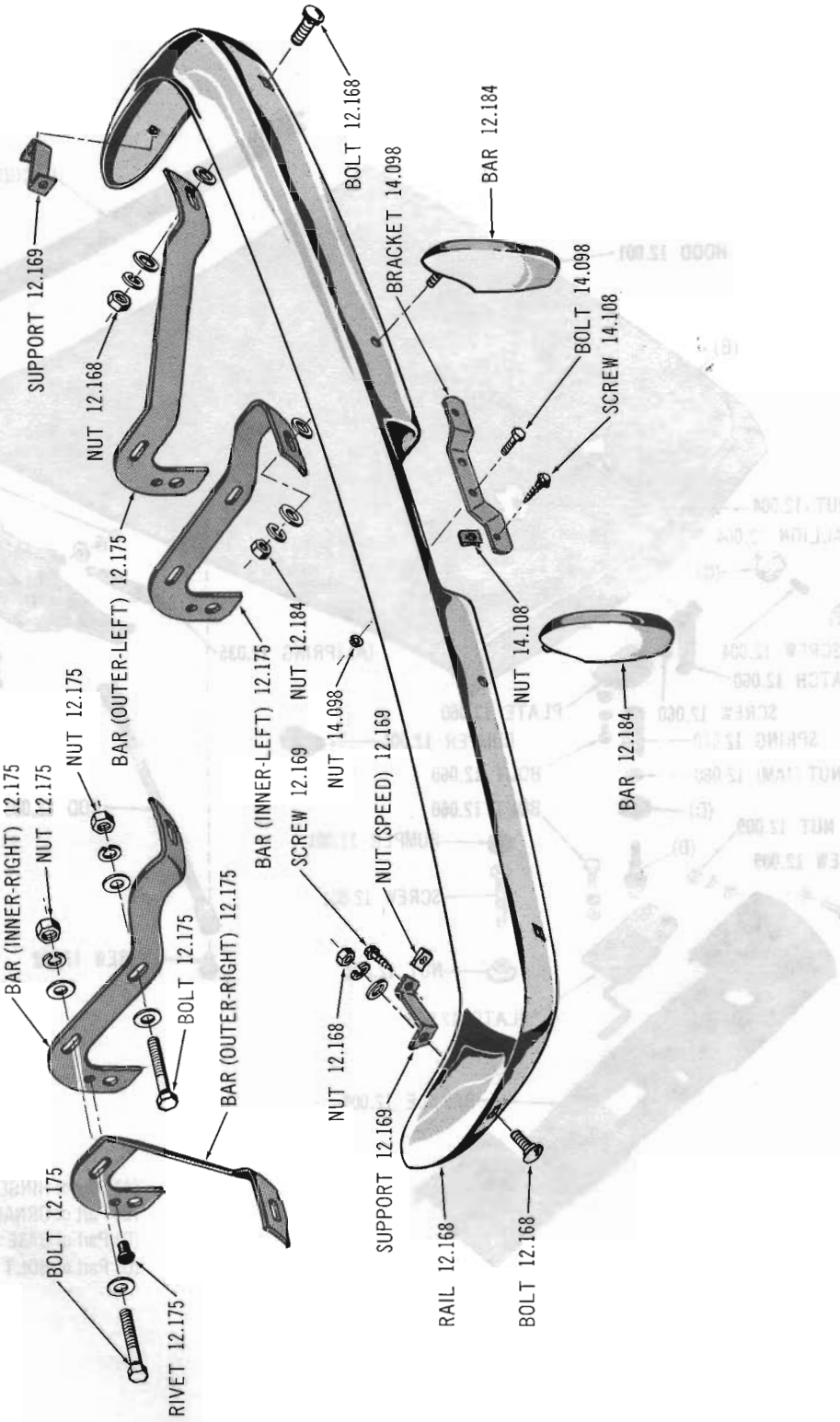

FRONT BUMPER 63 01

Copyright 1963 American Motors Corp.

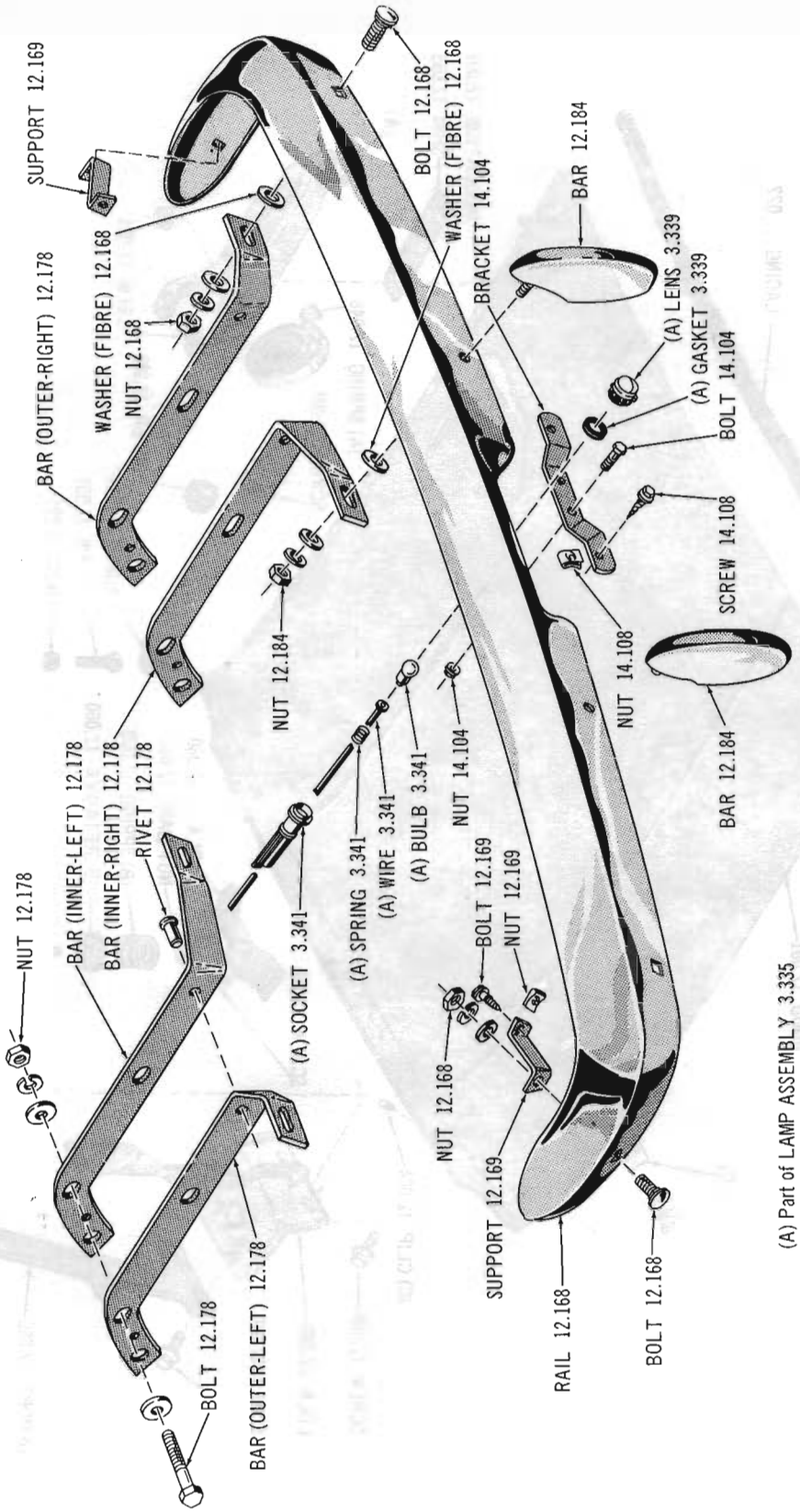

REAR BUMPER 63 01

Copyright 1963 American Motors Corp.

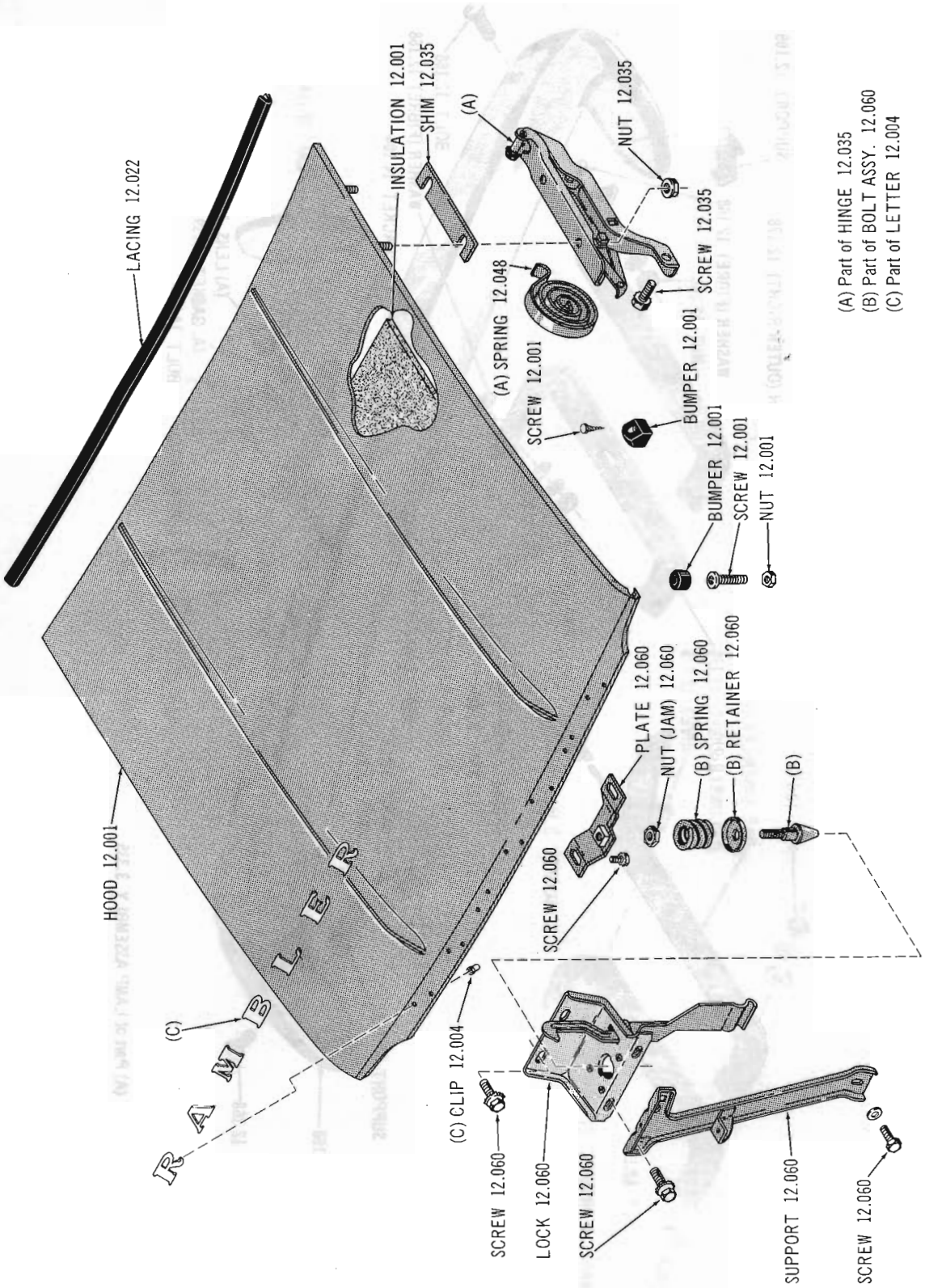

HOOD TOP, HINGE AND LOCK 65 10

Copyright 1963 American Motors Corp.

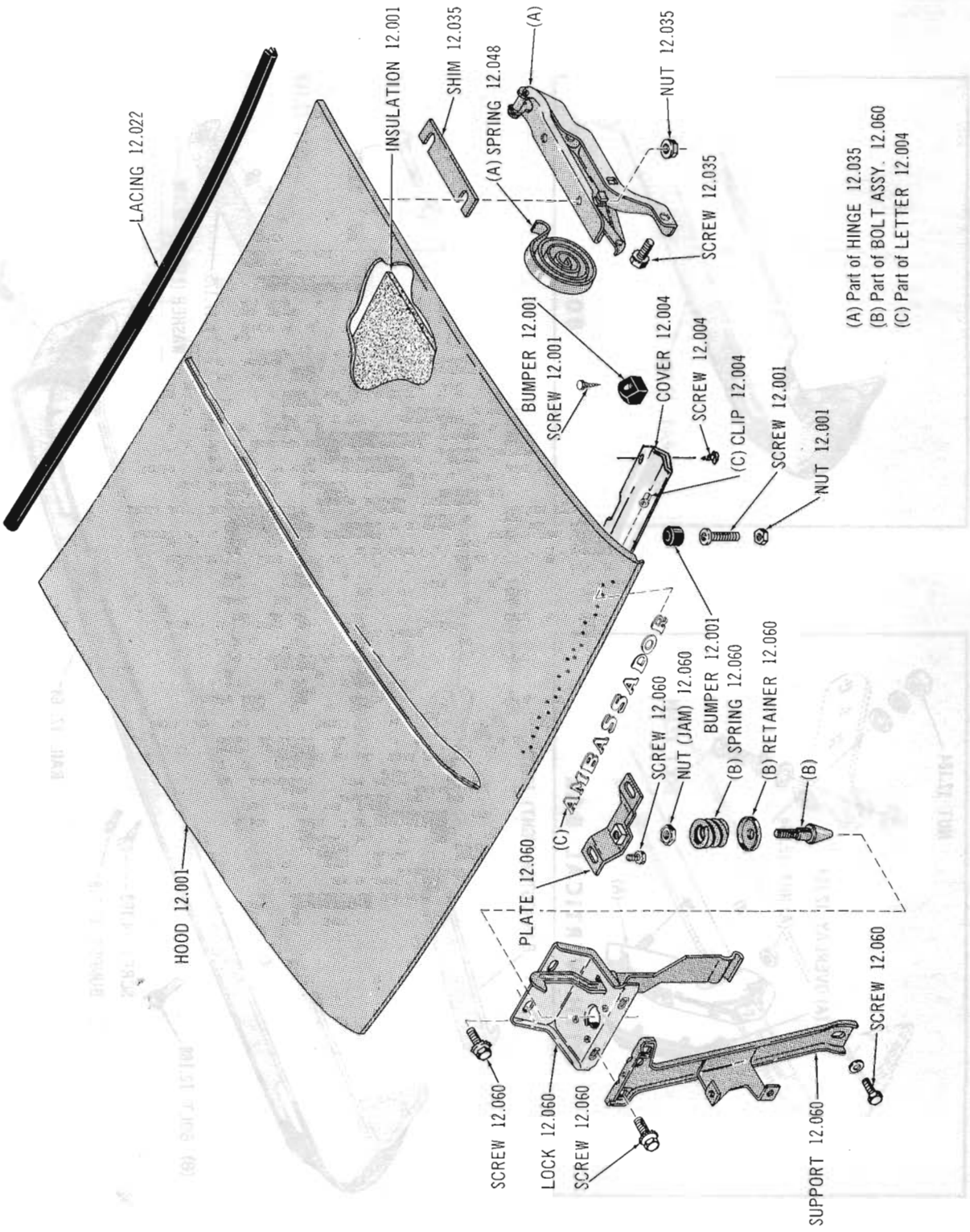

HOOD TOP, HINGE AND LOCK 65 80

Copyright 1963 American Motors Corp.

Copyright 1963 American Motors Corp.

Printed in U.S.A.

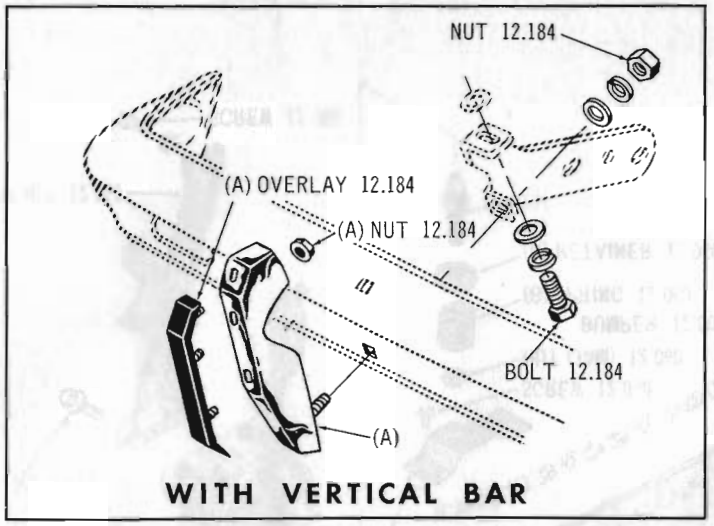

WITH VERTICAL BAR

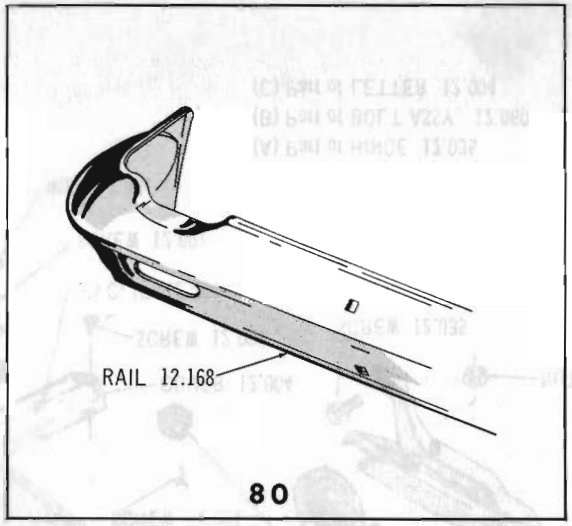

80

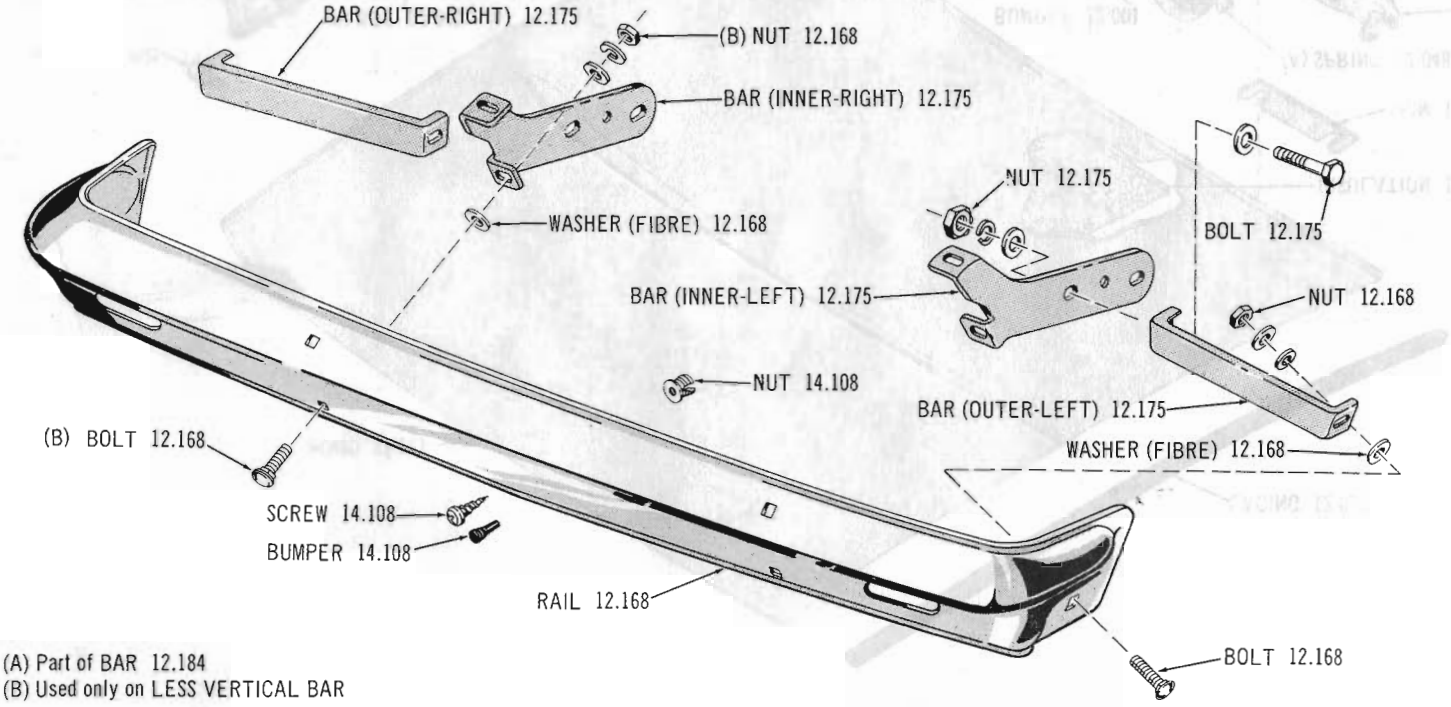

(A) Part of BAR 12.184
(B) Used only on LESS VERTICAL BAR

1907

Copyright 1963 American Motors Corp.

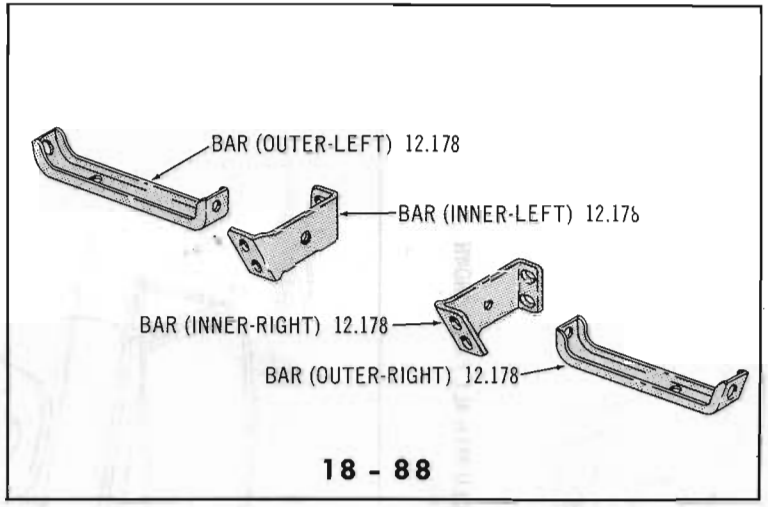

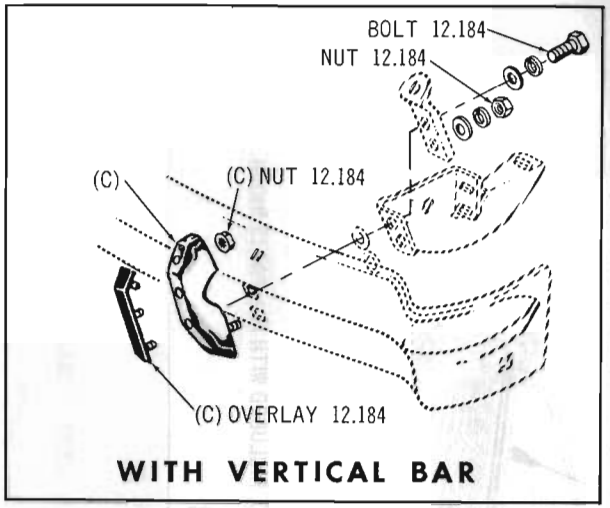

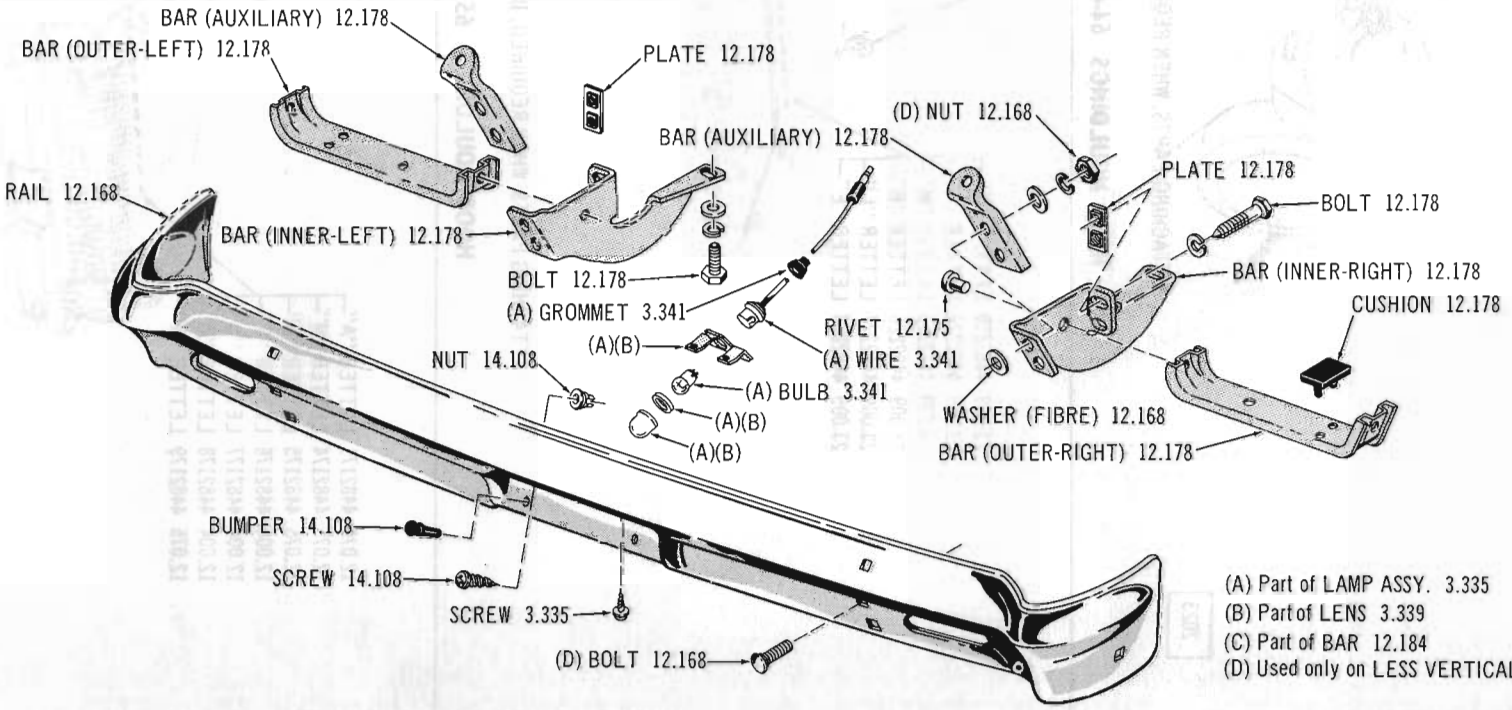

(A) Part of LAMP ASSY. 3.335
(B) Part of LENS 3.339
(C) Part of BAR 12.184
(D) Used only on LESS VERTICAL BAR

Printed in U.S.A.

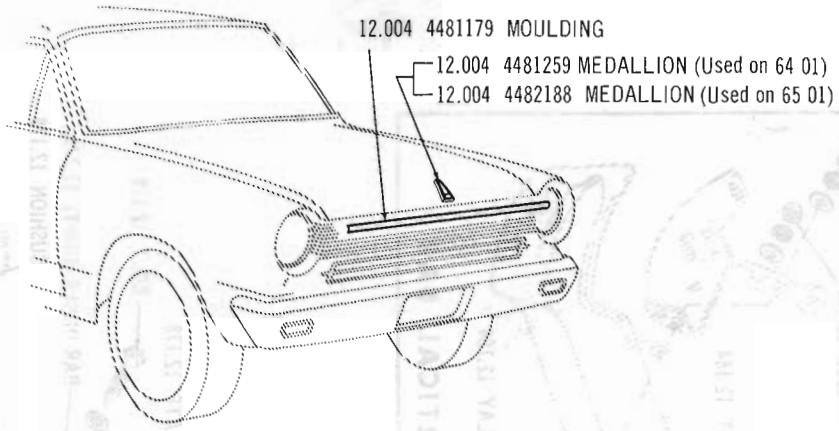

2023

ATTACHING PARTS, WHEN REQUIRED, INCLUDED WITH ALL PARTS SHOWN

HOOD MOULDINGS 64-65 01

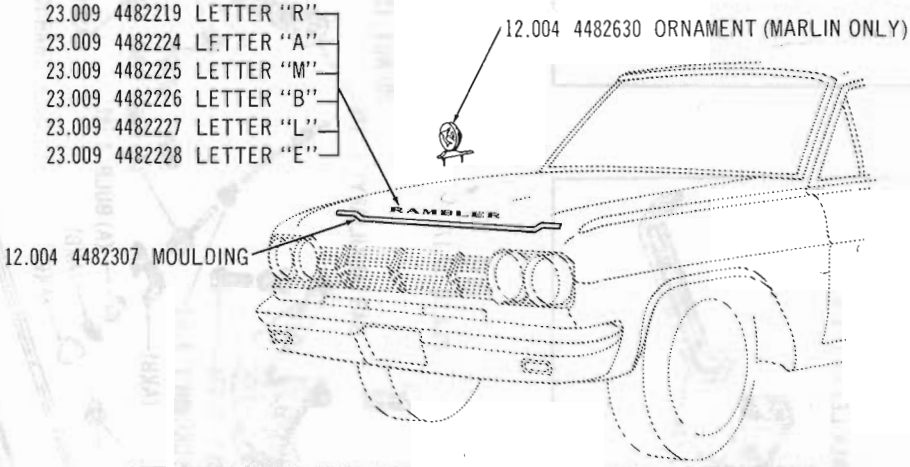

ATTACHING PARTS, WHEN REQUIRED, INCLUDED WITH ALL PARTS SHOWN

HOOD MOULDINGS 65 10

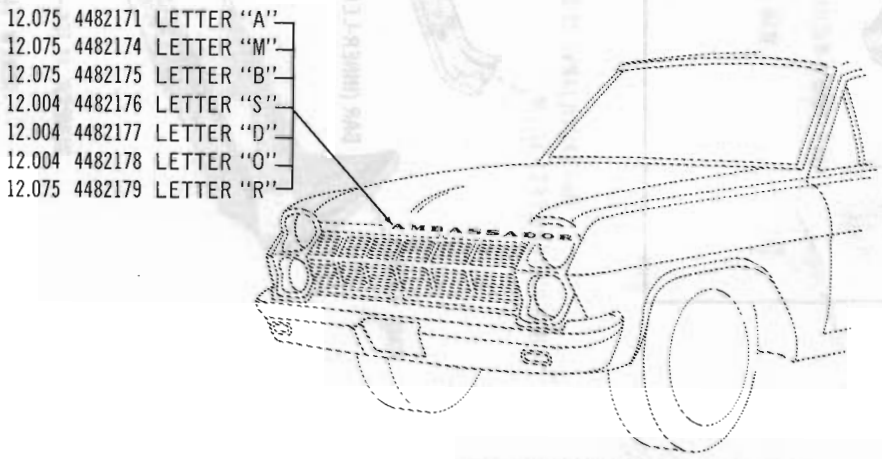

ATTACHING PARTS, WHEN REQUIRED, INCLUDED WITH ALL PARTS SHOWN

HOOD MOULDINGS 65 80

Copyright 1963 American Motors Corp.

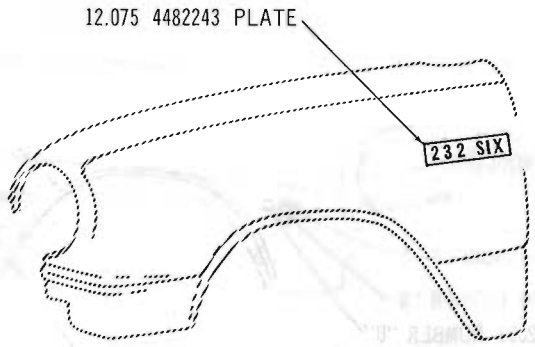

ATTACHING PARTS, WHEN REQUIRED, INCLUDED WITH ALL PARTS SHOWN

FRONT FENDER MOULDINGS 65 05-06-08 (220)

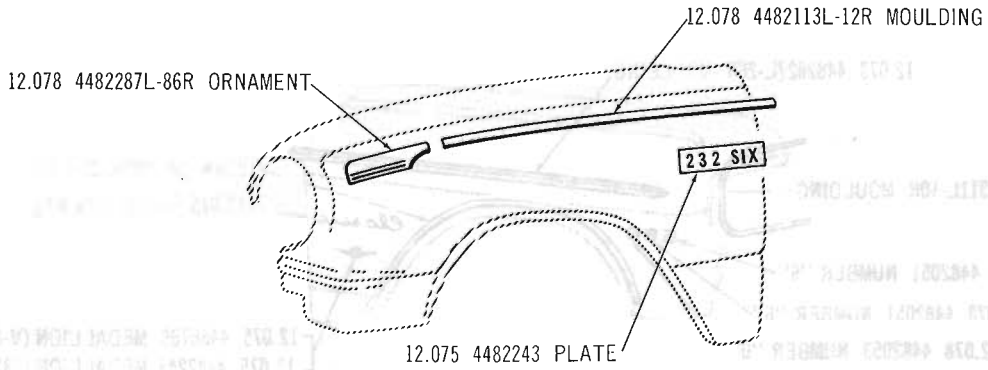

ATTACHING PARTS, WHEN REQUIRED, INCLUDED WITH ALL PARTS SHOWN

FRONT FENDER MOULDINGS 65 05-06-08 (330)

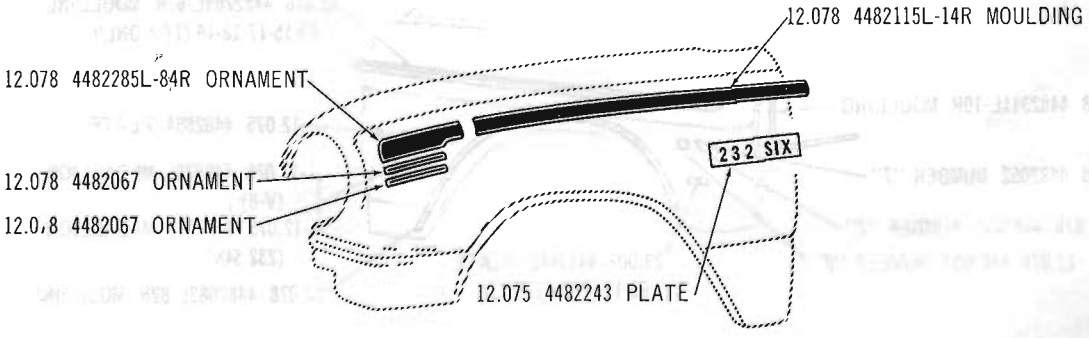

ATTACHING PARTS, WHEN REQUIRED, INCLUDED WITH ALL PARTS SHOWN

FRONT FENDER MOULDINGS 65 05-07-09 (440): 65 09 (440-H)

Copyright 1963 American Motors Corp.

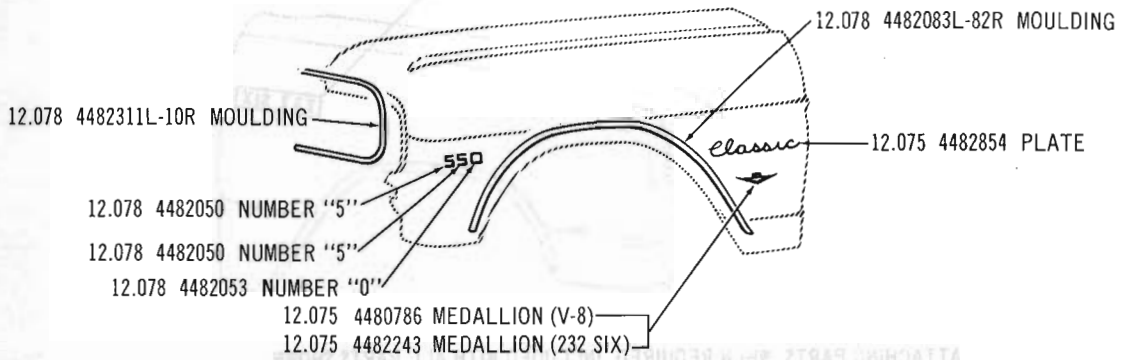

ATTACHING PARTS, WHEN REQUIRED, INCLUDED WITH ALL PARTS SHOWN

FRONT FENDER MOULDINGS 65 15-16-18 (550)

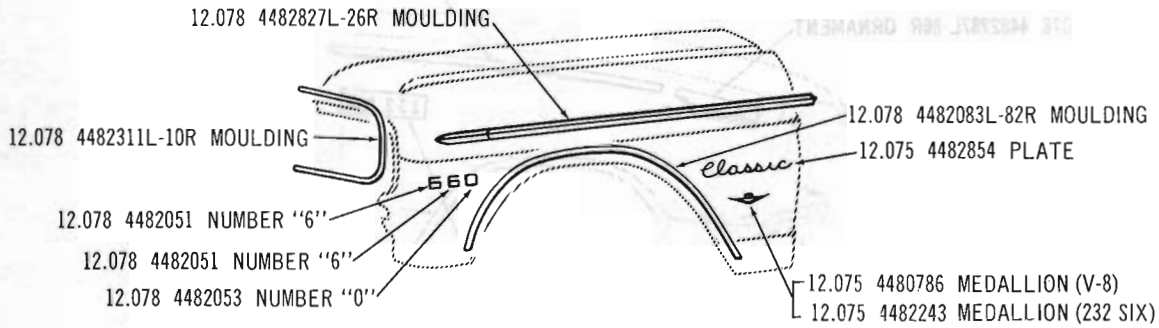

ATTACHING PARTS, WHEN REQUIRED, INCLUDED WITH ALL PARTS SHOWN

FRONT FENDER MOULDINGS 65 15-16-18 (660)

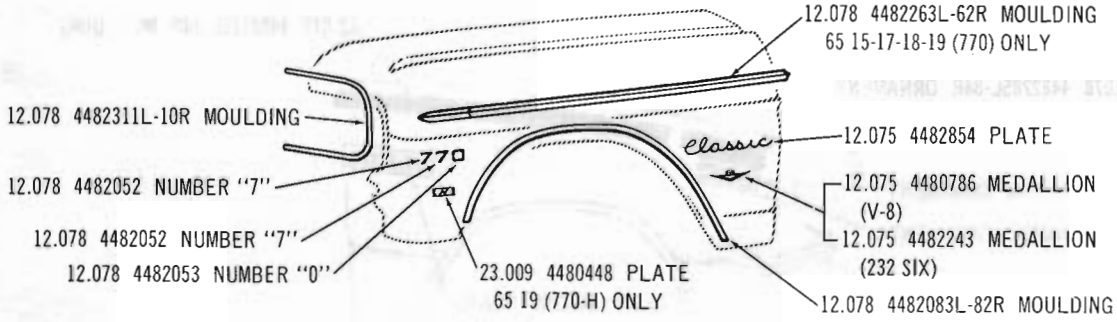

ATTACHING PARTS, WHEN REQUIRED, INCLUDED WITH ALL PARTS SHOWN

FRONT FENDER MOULDINGS 65 15-17-18-19 (770): 65 19 (770-H)(Except Marlin)

Copyright 1963 American Motors Corp.

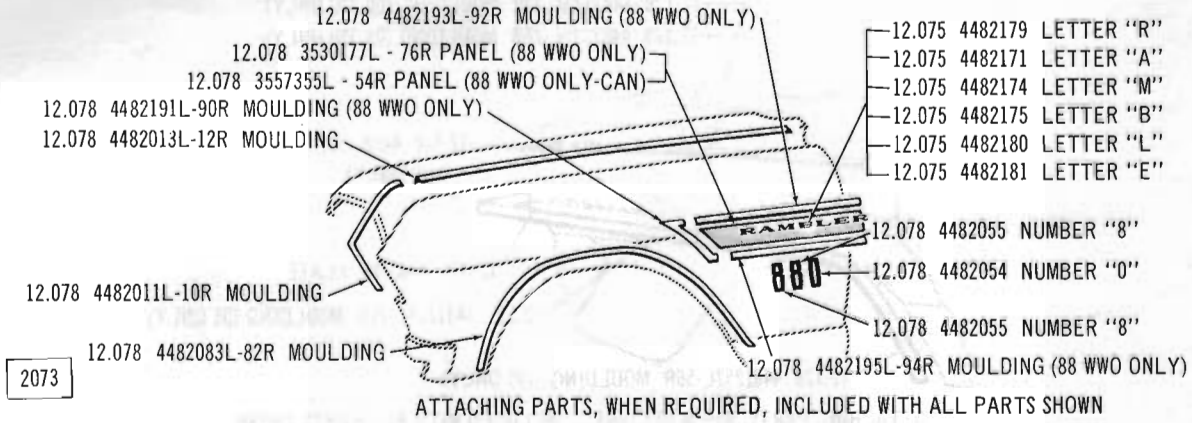

FRONT FENDER MOULDINGS 65 85-86-88 (880)

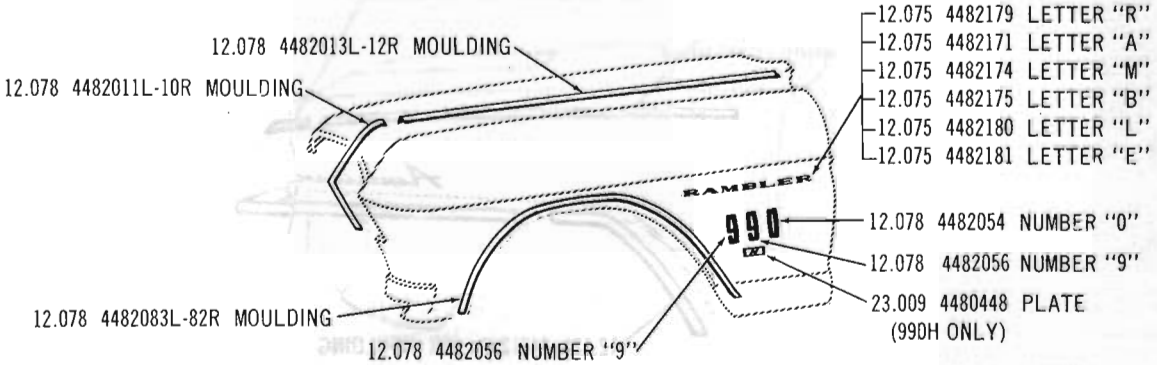

FRONT FENDER MOULDINGS 65 85-87-88-89 (990-LWO): 65 89 (990-H)

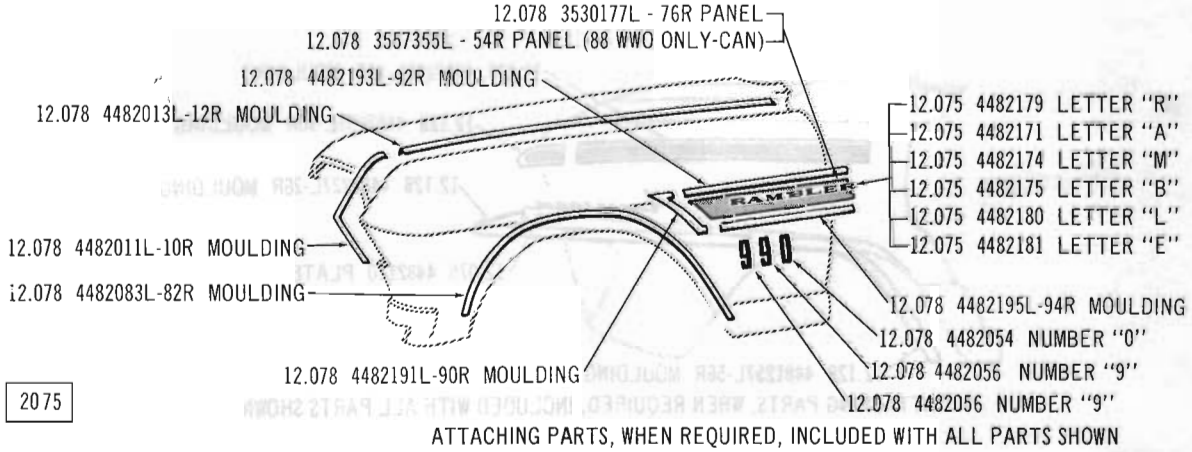

FRONT FENDER MOULDINGS 65 88 (990-WWO)

Copyright 1963 American Motors Corp.

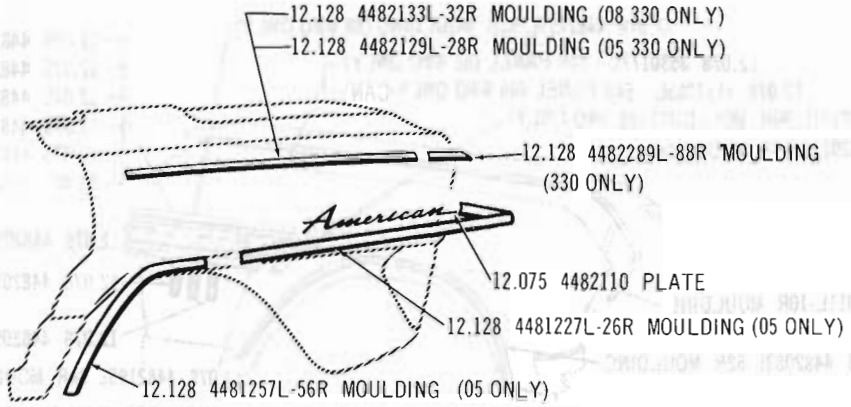

ATTACHING PARTS, WHEN REQUIRED, INCLUDED WITH ALL PARTS SHOWN

REAR QUARTER OUTER PANEL MOULDINGS 65 05-08 (330)

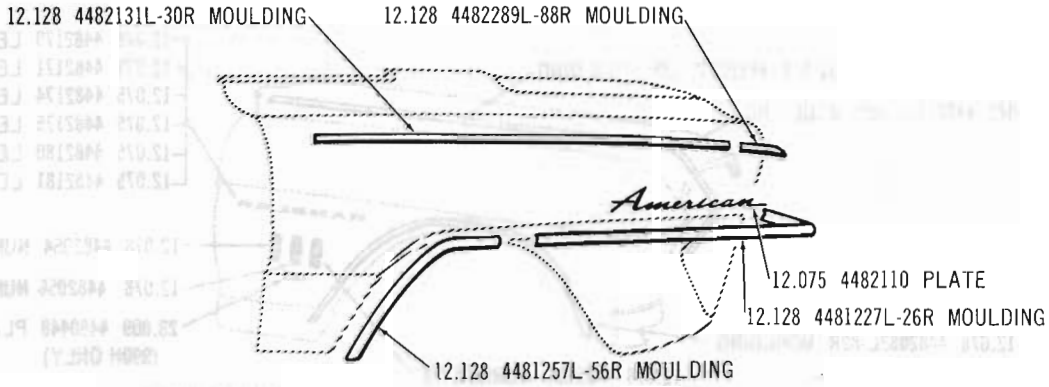

ATTACHING PARTS, WHEN REQUIRED, INCLUDED WITH ALL PARTS SHOWN

REAR QUARTER OUTER PANEL MOULDINGS 65 06 (330)

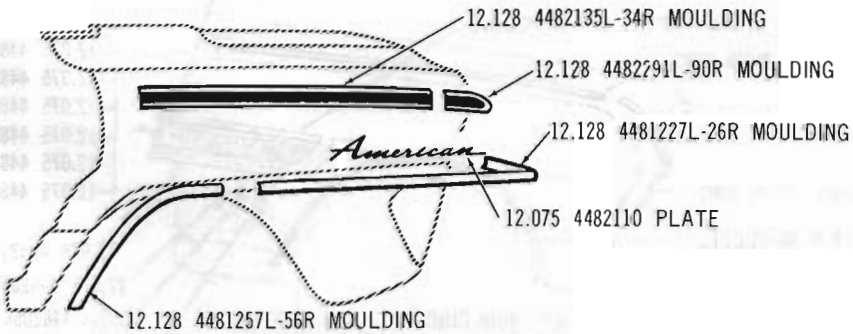

ATTACHING PARTS, WHEN REQUIRED, INCLUDED WITH ALL PARTS SHOWN

REAR QUARTER OUTER PANEL MOULDINGS 65 05 (440)

Copyright 1963 American Motors Corp.

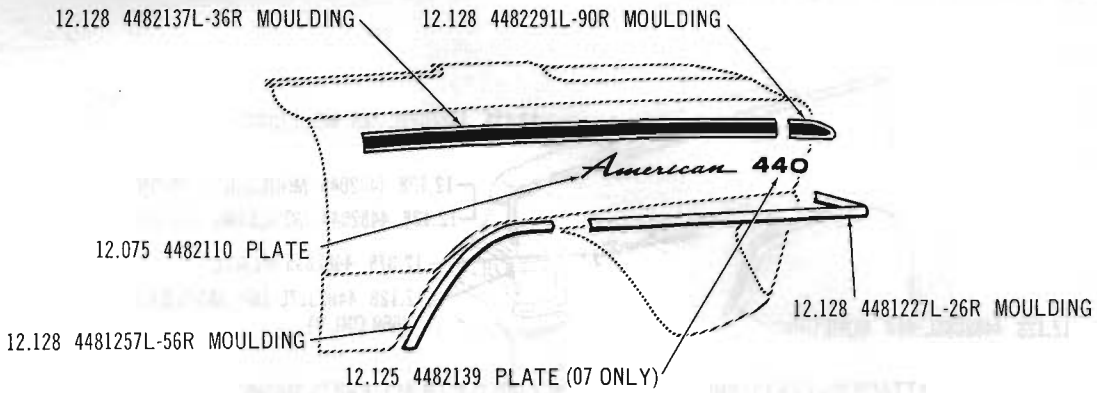

ATTACHING PARTS, WHEN REQUIRED, INCLUDED WITH ALL PARTS SHOWN

REAR QUARTER OUTER PANEL MOULDINGS 65 07-09 (440): 65 09 (440-H)

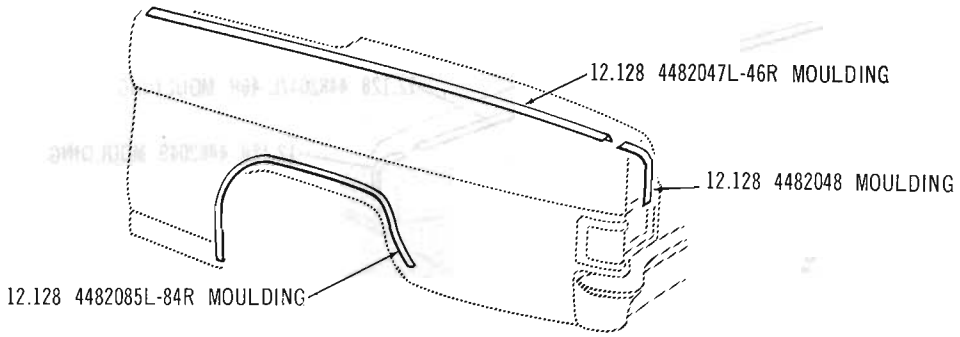

ATTACHING PARTS, WHEN REQUIRED, INCLUDED WITH ALL PARTS SHOWN

REAR QUARTER OUTER PANEL MOULDINGS 65 16 (550)

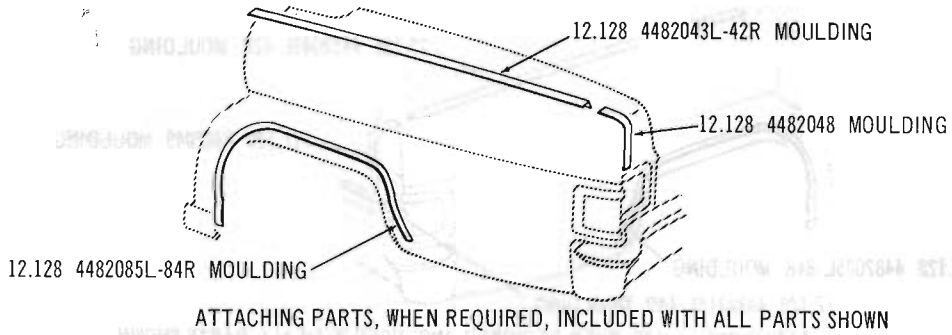

ATTACHING PARTS, WHEN REQUIRED, INCLUDED WITH ALL PARTS SHOWN

REAR QUARTER OUTER PANEL MOULDINGS 65 15 (550)

Copyright 1963 American Motors Corp.

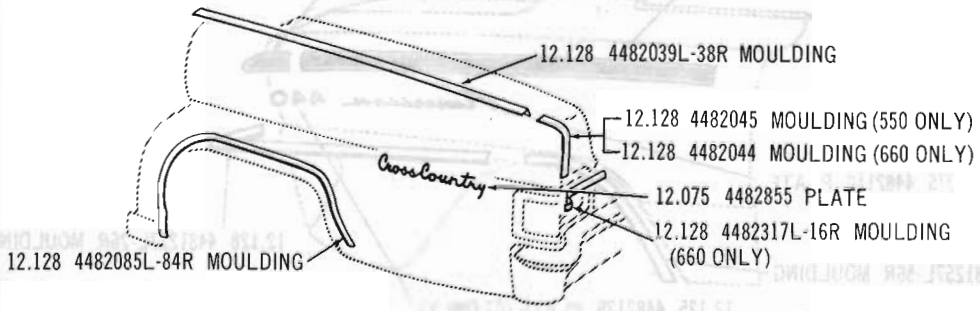

ATTACHING PARTS, WHEN REQUIRED, INCLUDED WITH ALL PARTS SHOWN

REAR QUARTER OUTER PANEL MOULDINGS 65 18 (550)(660)

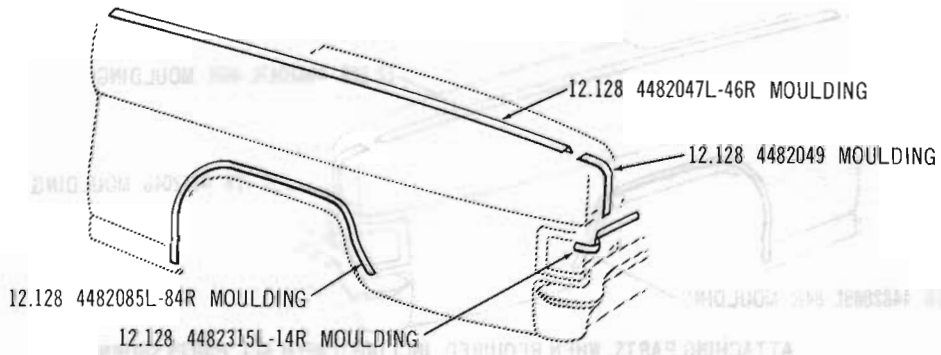

ATTACHING PARTS, WHEN REQUIRED, INCLUDED WITH ALL PARTS SHOWN

REAR QUARTER OUTER PANEL MOULDINGS 65 16 (660)

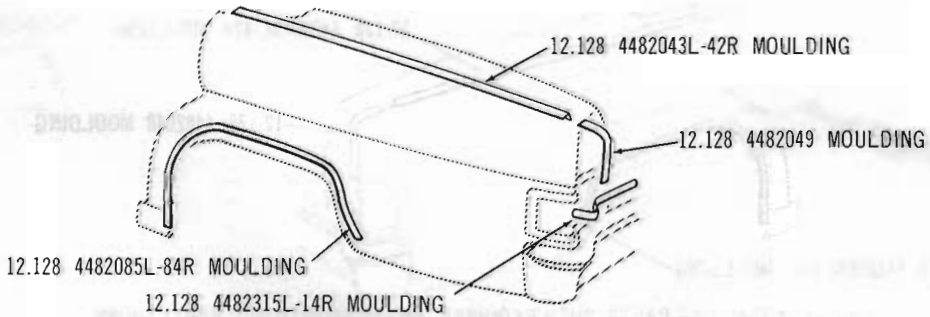

ATTACHING PARTS, WHEN REQUIRED, INCLUDED WITH ALL PARTS SHOWN

REAR QUARTER OUTER PANEL MOULDINGS 65 15 (660)

Copyright 1963 American Motors Corp.

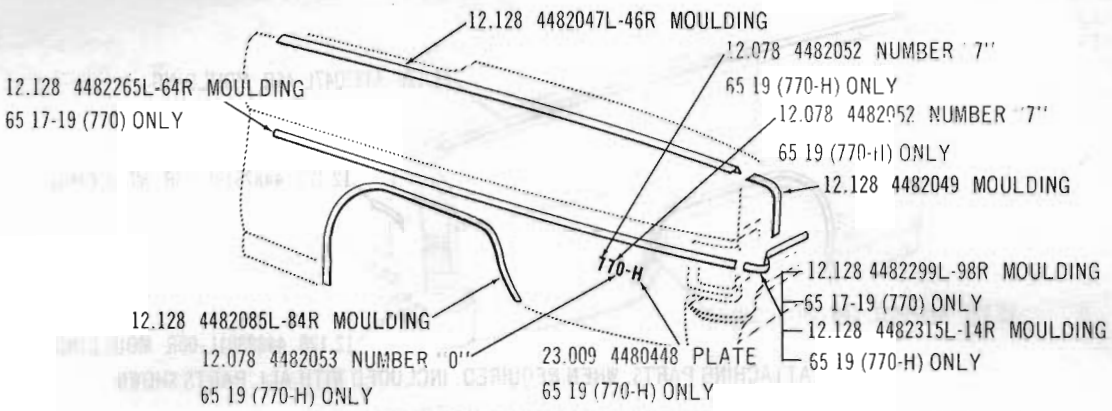

ATTACHING PARTS, WHEN REQUIRED, INCLUDED WITH ALL PARTS SHOWN

REAR QUARTER OUTER PANEL MOULDINGS 65 17-19 (770): 65 19 (770-H)(Except Marlin)

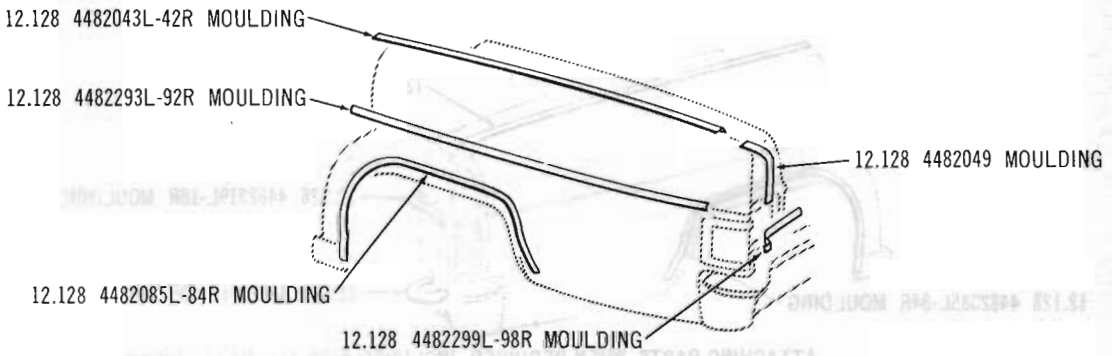

ATTACHING PARTS, WHEN REQUIRED, INCLUDED WITH ALL PARTS SHOWN

REAR QUARTER OUTER PANEL MOULDINGS 65 15 (770)

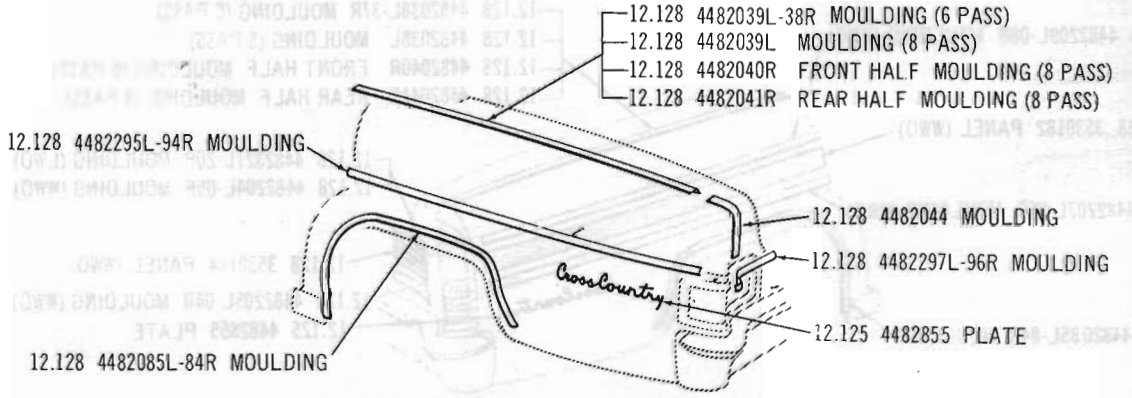

ATTACHING PARTS, WHEN REQUIRED, INCLUDED WITH ALL PARTS SHOWN

REAR QUARTER OUTER PANEL MOULDINGS 65 18 (770)

Copyright 1963 American Motors Corp.

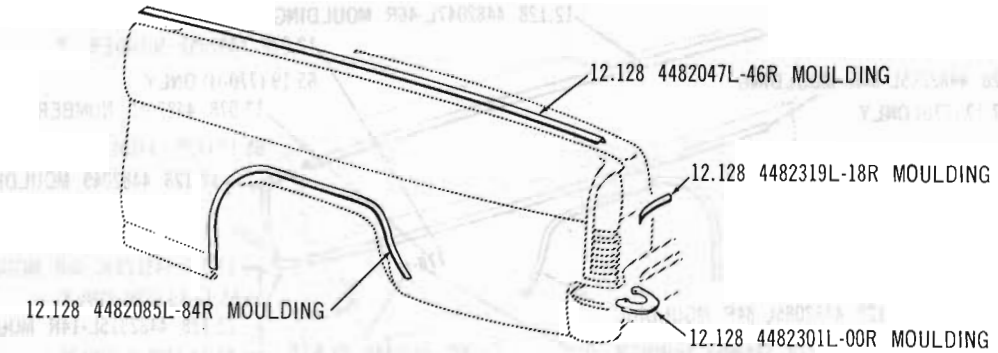

ATTACHING PARTS, WHEN REQUIRED, INCLUDED WITH ALL PARTS SHOWN

REAR QUARTER OUTER PANEL MOULDINGS 65 86 (880)

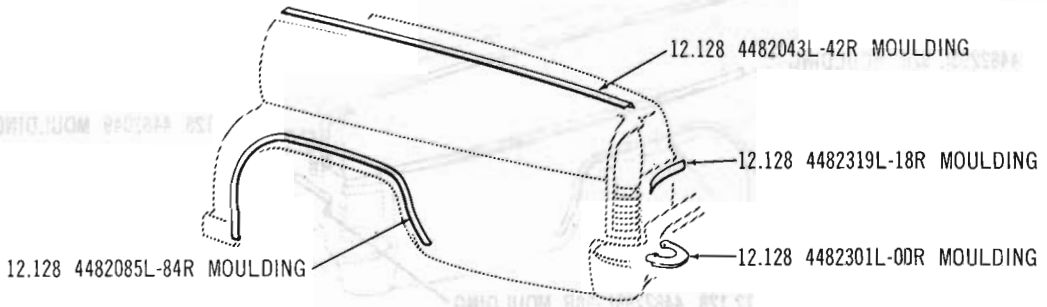

ATTACHING PARTS, WHEN REQUIRED, INCLUDED WITH ALL PARTS SHOWN

REAR QUARTER OUTER PANEL MOULDINGS 65 85 (880)

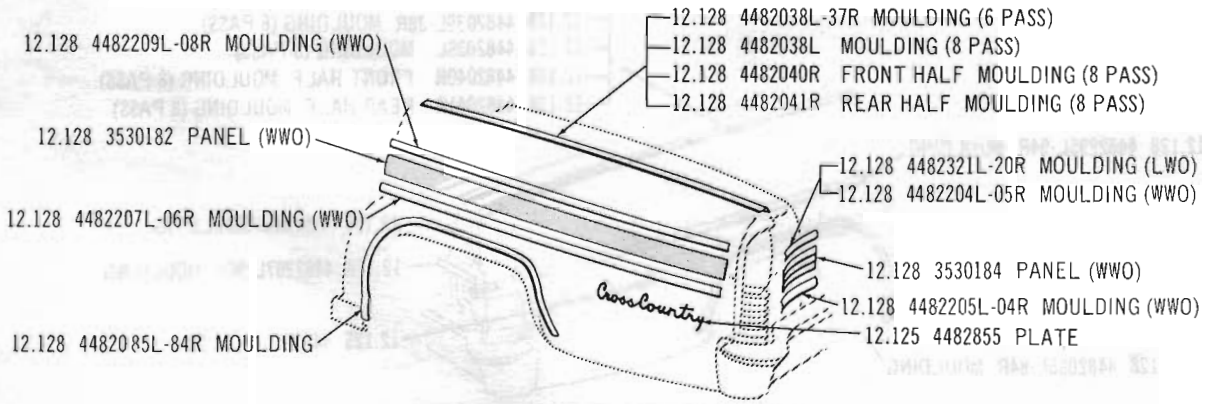

ATTACHING PARTS, WHEN REQUIRED, INCLUDED WITH ALL PARTS SHOWN

REAR QUARTER OUTER PANEL MOULDINGS 65 88 (880)

Copyright 1963 American Motors Corp.

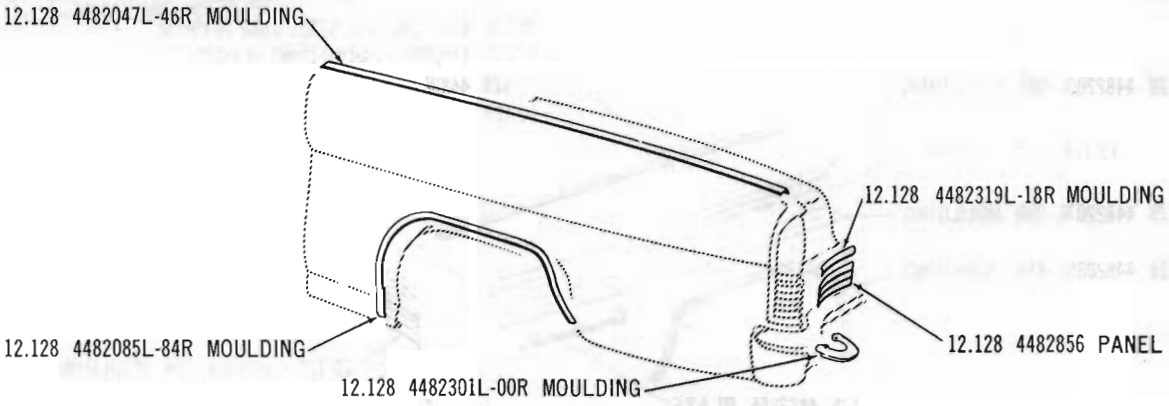

ATTACHING PARTS, WHEN REQUIRED, INCLUDED WITH ALL PARTS SHOWN

REAR QUARTER OUTER PANEL MOULDINGS 65 87-89 (990): 65 89 (990-H)

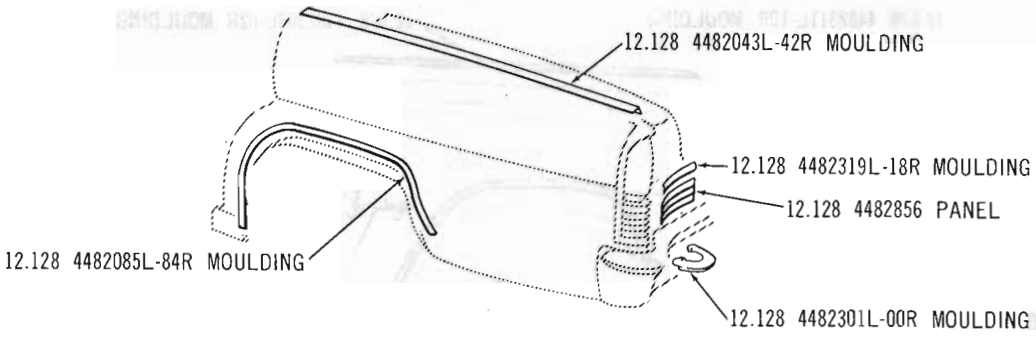

ATTACHING PARTS, WHEN REQUIRED, INCLUDED WITH ALL PARTS SHOWN

REAR QUARTER OUTER PANEL MOULDINGS 65 85 (990)

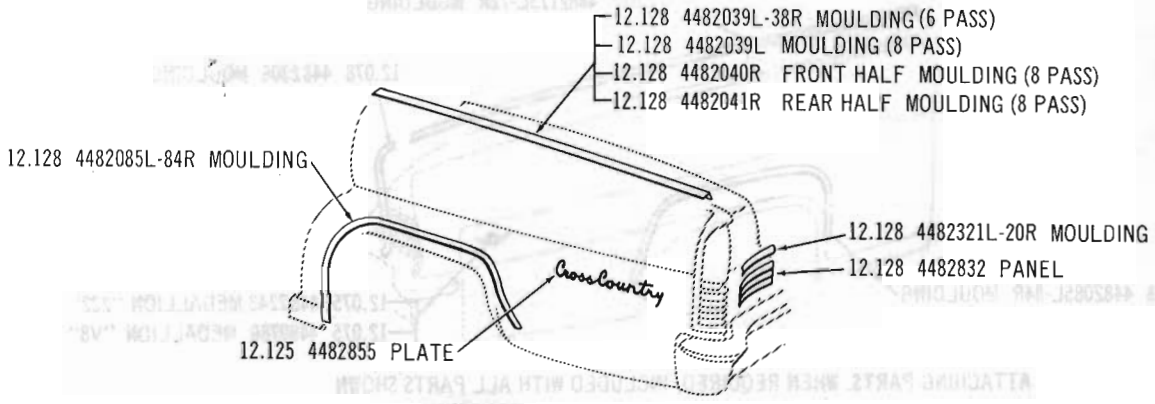

ATTACHING PARTS, WHEN REQUIRED, INCLUDED WITH ALL PARTS SHOWN

REAR QUARTER OUTER PANEL MOULDINGS 65 88 (990-LWO)

Copyright 1963 American Motors Corp.

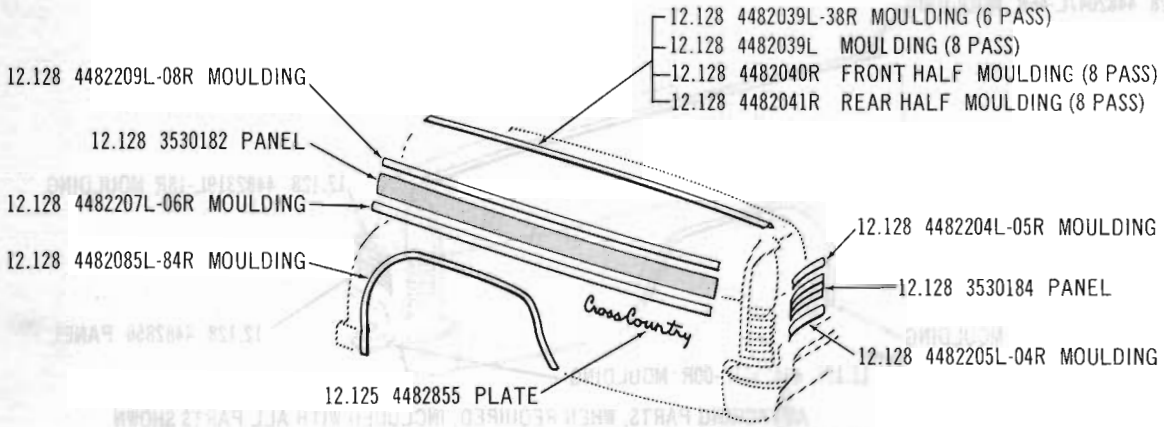

ATTACHING PARTS, WHEN REQUIRED, INCLUDED WITH ALL PARTS SHOWN

REAR QUARTER OUTER PANEL MOULDINGS 65 88 (990-WWO)

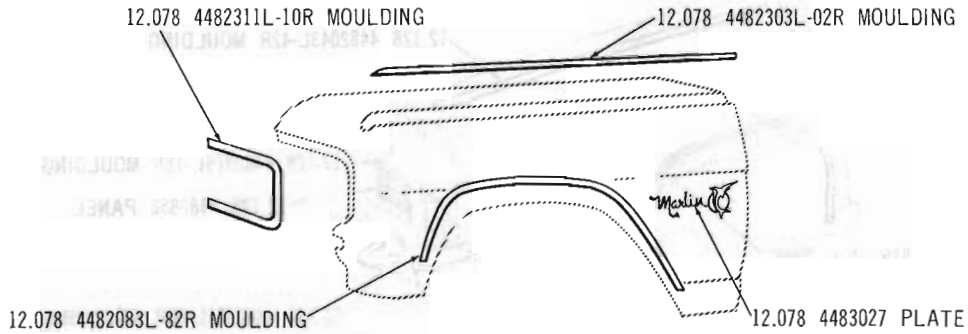

ATTACHING PARTS, WHEN REQUIRED, INCLUDED WITH ALL PARTS SHOWN

FRONT FENDER MOULDINGS 65 59-7 (Marlin)

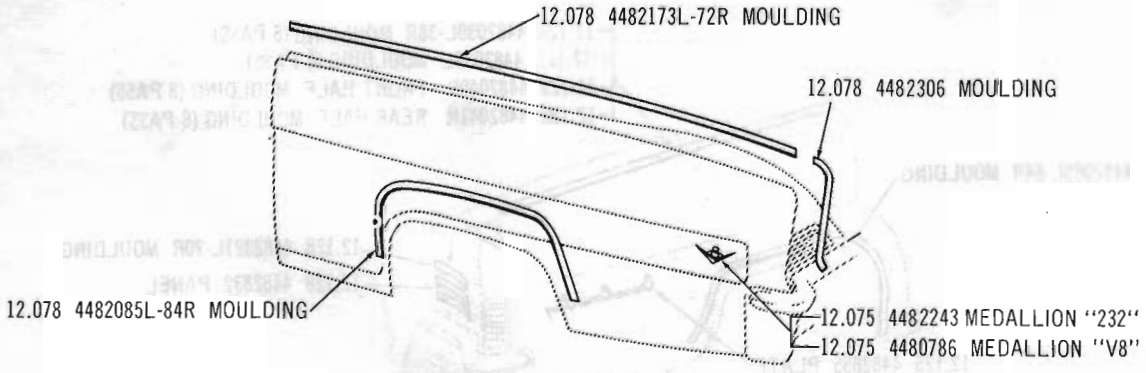

ATTACHING PARTS, WHEN REQUIRED, INCLUDED WITH ALL PARTS SHOWN

REAR QUARTER OUTER PANEL MOULDINGS 65 59-7 (Marlin)

Copyright 1963 American Motors Corp.

GROUP NO. — DESCRIPTION — YEAR and MODEL	PRIMARY GROUP NO.	PER CAR	PART NO.	CODE
12.001 HOOD				
60 01	.....	1	315 4222	
61 Thru 63 01 *(Replaces 344 6641)*	.....	1	348 1596	
64-65 01	.....	1	350 5522	
60 10-20	.....	1	344 0961	
61-62 10-20: 62 80 *(Replaces 316 0833)*	.....	1	346 6726	
63 10-80	.....	1	349 2639	
60 80	.....	1	344 0971	
61 80	.....	1	316 0834	
64 10-80	.....	1	351 0638	
65 10	.....	1	353 6313	
65 80	.....	1	353 6007	
INSULATION, Hood				
60 80	.....	2	315 3976	
63 80	.....	1	349 2687	
64 10-80 (V8)	.....	1	351 1692	
65 10-80	.....	1	354 2071	
(Front) 61 80	.....	1	316 1432	
(Front) 62 80	.....	1	348 6916	
(Rear) 61 80	.....	1	316 1431	
(Rear) 62 80	.....	1	348 6917	
(Left) 61 80	.....	1	316 1433	
(Left) 62 80	.....	1	348 6915	
(Right) 61 80	.....	1	316 1434	
(Right) 62 80	.....	1	348 6914	
SHIM, Hood Reinforcement				
60-61 01: 60 80	23.310	AR	343 0171	
61 10-20-80	23.009	1	345 0014	
BUMPER, Hood (Stationary)				
60 01 (On Fender)	20.450	12	400 0313	
61 Thru 63 01 (On Fender)	.....	4	342 1542	
64 01 (On Wheelhouse)(Note 12.001-1 Type 1): 63-64 10-80 (On Wheelhouse)	.....	2	347 2049	
64 01 (On Wheelhouse)(Note 12.001-1 Type 2): 65 01 (On Wheelhouse)	.....	2	400 0781	
60 10-20-80 (On Wheelhouse)	.....	4	342 1542	
61-62 10-20-80 (On Wheelhouse)	.....	4	344 7763	
65 10 (On Wheelhouse)	.....	2	351 5198	
65 80 (On Wheelhouse)	.....	2	351 5199	
ATTACHING PARTS Bumper To Wheelhouse				
SCREW, Tapping..... 61 Thru 65 10-20-80	.....	6	400 0071	
SCREW, Tapping..... 65 01	.....	4	G161903	NA
BUMPER, Hood (Adjustable)				
61 Thru 65 01-10-20-80. *(Replaces 400 0202)*	.....	2	400 0256	
60 10-20-80	.....	2	343 0618	
ATTACHING PARTS Bumper To Fender				
SCREW, Machine..... 63 Thru 65 01-10-80	.....	2	400 0257	
NUT, Hexagon..... 61 01: 60-61 10-20-80	17.410	2	G120613	NA
NUT, Hexagon..... 63 Thru 65 01: 62 Thru 64 10-80	.....	2	400 0566	

NOTE 12.001-1: Two Types of Hood Bumpers were used on the 64 01. They can be identified as follows:
Type 1: Requires a Screw.
Type 2: Does not require a Screw.

Copyright 1963 American Motors Corp.

GROUP NO. — DESCRIPTION — YEAR and MODEL	PRIMARY GROUP NO.	PER CAR	PART NO.	CODE
BRACKET, Hood Bumper				
64-65 01	.....	2	350 1173	
12.002 ROD, Hood Brace				
61 Thru 63 01	.....	2	342 1560	
(Left) 60 10-20	.....	1	315 5761	
(Right) 60 10-20	.....	1	342 1560	
(Front) 60 80 (LAS)	.....	2	315 4593	
(Front) 60 80 (WAS-1" Flat Ends)	.....	1	315 4593	
(Front) 60 80 (WAS-2" Flat Ends)	.....	1	315 5587	
(Rear) 60 80	.....	2	342 1560	
ATTACHING PARTS Rod To Hood				
BOLT, Slotted 61 01: 60 10-20-80	17.040	4	G175181	NA
SCREW, Machine 62 01	17.629	4	G9413571	NA
SCREW, Machine 63 01	17.629	4	G9412076	NA
WASHER, Lock 61 01: 60 10-20-80	17.820	8	G103320	NA
12.004 ORNAMENT, Hood				
60 01...(Incl. Studs)	.....	1	342 1954	
61 Thru 63 01...(Incl. Nuts)	.....	1	448 0438	
ATTACHING PARTS Ornament To Hood				
STUD 60 01	.....	2	342 2139	
NUT, Stamped ..... 60 Thru 63 01	17.428	2	G274796	
LETTERS, Hood (Refer Group 12 Illustration)				
ATTACHING PARTS Letters To Hood Top				
CLIP 65 10	17.428	7	320 9552	
COVER, Hood Letter Stud Protecting				
65 80	.....	1	351 5389	
ATTACHING PARTS Cover To Hood Top				
SCREW, Tapping 65 80	17.660	3	G161860	NA
MEDALLION, Hood				
61 Thru 63 01	.....	1	344 7481	
64 01...(Incl. Clips)	.....	1	448 1259	
65 01...(Incl. Clips)	.....	1	448 2188	
63 80...(Incl. Clips)	.....	1	448 0194	
64 80...(Incl. Clips)	.....	1	448 1187	
ATTACHING PARTS Medallion To Hood				
CLIP 64-65 01	12.125	2	437 7405	
CLIP ..... 63 80 (2 Req.): 65 59 (Marlin-1 Req.)	23.009	AR	400 0506	
CLIP 64 80	23.009	3	400 0266	
NUT ..... 65 59 (Marlin)	23.078	1	400 0391	
BASE, Hood Medallion				
61 Thru 63 01...(Incl. Screw)	.....	1	448 0439	

Copyright 1963 American Motors Corp.

GROUP NO. — DESCRIPTION — YEAR and MODEL	PRIMARY GROUP NO.	PER CAR	PART NO.	CODE
ATTACHING PARTS				
Base To Hood				
SCREW, Tapping..... 61 Thru 63 01	17.648	1	G166297	NA
EMBLEM, Hood				
61 80...(Incl. Nut)	.....	1	448 0093	
62 80	.....	1	346 2706	
ATTACHING PARTS				
Emblem To Hood				
NUT, Stamped 61 80	17.428	2	G274992	NA
MOULDING, Hood (For 6500 Series Parts Please Refer To Group 12 Illustrations)				
60 80	.....	1	343 2102	
61 80...(Incl. Attaching Parts)	.....	1	448 0094	
62 80...(Incl. Nut)	.....	1	448 0095	
ATTACHING PARTS				
Moulding To Hood				
SCREW, Tee 64-65 01	.....	2	400 0811	
SCREW, Tapping..... 61 80	26.059	2	400 0388	
BOLT, Tee 65 10	.....	2	400 1532	
BOLT 60 80	.....	5	343 5028	
CLIP 65 10	26.032	6	400 0131	
FASTENER 61 80	.....	6	346 0314	
NUT, Stamped 65 10	17.428	2	G144567	NA
NUT, Stamped 60 80	17.428	5	G273329	
NUT, Stamped 61 80	17.428	6	G274999	
NUT, Stamped 62 80	12.128	6	400 0392	
NUT, Lock..... 64-65 01	.....	2	400 0812	
RETAINER..... 64-65 01	26.032	5	400 0131	
12.009 BAFFLE, Front Fender Cross Tie				
60 01	.....	1	314 3365	
61-63 01 ..... *(Replaces 344 6751)*	.....	1	348 1989	
ATTACHING PARTS				
Baffle To Front Fender				
SCREW, Machine..... 60-61 01 ..... *(Replaces 800 0317)*	17.626	6	400 0991	
SCREW, Machine..... 62-63 01	17.629	6	G274825	NA
SCREW, Tapping..... 63 01	17.671	2	G455702	
WASHER, Plain..... 60 01	17.814	6	G103339	NA
WASHER, Lock 60 01	17.820	6	G103319	NA
NUT, Hexagon..... 60 01	17.406	6	G120375	
NUT, Lock..... 61 Thru 63 01	17.417	6	G273801	NA
Baffle To Grille Panel				
SCREW, Machine..... 60 01 ..... *(Replaces 800 0061)*	17.626	6	400 0980	
WASHER, Plain..... 60 01	17.814	6	G120392	NA
PLUG, Air Conditioning Inspection Hole				
62 01	.....	1	316 5546	
ANTI-SQUEAK, Front Fender Cross Tie Baffle To Grille Panel				
60 01	.....	2	343 1654	

Copyright 1963 American Motors Corp.

GROUP NO. — DESCRIPTION — YEAR and MODEL	PRIMARY GROUP NO.	PER CAR	PART NO.	CODE
12.022 LACING, Cowl				
60-61 01	.....	1	313 6608	
62 01: 61-62 10-20-80	.....	1	344 7649	
63 01	.....	1	350 5210	
64-65 01	.....	1	352 1054	
60 10-20-80	.....	1	342 1786	
63 Thru 65 10-80	.....	1	348 2178	
ATTACHING PARTS				
Lacing To Cowl				
FASTENER..... 60 01-10-20-80 (Fits 1/8" Dia. Hole)	.....	11	312 5769	
FASTENER ..... 60 01-10-20-80 (Fits 11/64" Dia. Hole)	.....	9	315 9907	
FASTENER ..... 60 01-10-20-80 (End Only)	.....	2	400 0316	
CLIP ..... 61 Thru 63 01 (11 Req.): 61-62 10-20-80 (11Req.): 64-65 01 (6 Req.)	.....	AR	400 0085	
12.035 HINGE, Hood (Incl. Spring)				
(Left) 60 Thru 63 01	.....	1	313 6535	
(Left) 64-65 01	.....	1	350 9421	
(Left) 60 Thru 62 10-20-80	.....	1	343 0173	
(Left) 63 10-80 (Note 12.035-1 Type 1) ***(Use 347 2587)***	.....	1	448 0863	
(Left) 63 Thru 6510-80 (Note 12.035-1 Type 2)	.....	1	347 2587	
(Right) 60 Thru 63 01	.....	1	313 6536	
(Right) 64-65 01	.....	1	350 9420	
(Right) 60 Thru 62 10-20-80	.....	1	343 0174	
(Right) 63 10-80 (Note 12.035-1 Type 1) ***(Use 347 2586)***	.....	1	448 0862	#
(Right) 63 Thru 65 10-80 (Note 12.035-1 Type 2)	.....	1	347 2586	
ATTACHING PARTS				
Hinge To Hood				
BOLT, Hexagon 60-61 01-10-20-80	17.038	4	G181595	
SCREW, Machine..... 62 Thru 65 01: 62 10-80	17.629	4	G9412076	NA
WASHER, Lock 60 01-10-20-80	17.820	4	G103320	NA
WASHER, Plain..... 61 10-20-80 ***(Replaces 800 0155)***	17.814	2	400 1095	
NUT, Hexagon..... 63 Thru 65 10-80	.....	4	400 0596	
Hinge To Body				
BOLT, Hexagon 63 10-80	.....	4	400 0546	
SCREW, Hexagon ..... 63 Thru 65 10-80	23.020	6	400 0608	
WASHER, Lock..... 60 Thru 65 01: 60 Thru 62 10-20-80	17.820	4	G120382	NA
WASHER, Plain..... 60 Thru 65 01: 60 Thru 62 10-20-80 ***(Replaces 800 0169)***	17.814	4	400 1107	
NUT, Hexagon..... 60 Thru 65 01: 60 Thru 62 10-20-80	17.406	4	G120369	NA
NUT, Hexagon..... 65 10-80	17.440	4	G127613	NA
SHIM, Hood Hinge To Hood				
64-65 01	.....	AR	350 0184	
63 Thru 65 10-80	.....	AR	347 2245	

NOTE 12.035-1: Two Types of Hood Hinges were used on the 63 10-80. They can be identified as Follows:
Type 1: Hinge Opening Angle Is 53°.
Type 2: Hinge Opening Angle Is 46°.

Copyright 1963 American Motors Corp.

GROUP NO. — DESCRIPTION — YEAR and MODEL	PRIMARY GROUP NO.	PER CAR	PART NO.	CODE
12.048 SPRING, Hood Hinge				
64-65 01	.....	2	352 0740	
60 Thru 63 01	.....	2	312 8870	
60 Thru 62 10-20-80	.....	2	342 9694	
63 Thru 65 10-80	.....	2	351 9939	
12.060 LOCK, Hood				
64 01	.....	1	350 0202	
65 01	.....	1	353 0590	
60 10-20-80	.....	1	342 1722	
61-62 10-20: 62 80	.....	1	344 7674	
63 10-80	.....	1	347 2600	
64 10-80	.....	1	350 9266	
65 10	.....	1	351 5860	
61 80	.....	1	344 7680	
65 80	.....	1	351 5870	
ATTACHING PARTS				
Lock To Mounting Bracket				
BOLT, Hexagon 61-62 10-20-80	17.038	2	G180020	NA
WASHER, Plain 61-62 10-20-80	17.814	2	G446188	NA
WASHER, Lock 61-62 10-20-80	17.820	2	G120380	NA
Lock To Support				
SCREW, Hexagon 64 01	.....	2	400 0754	
SCREW, Hexagon ..... 63-64 10-80 ***(Replaces 400 0732)***	.....	1	400 0609	
SCREW, Tapping..... 64 10-80	2.050	1	400 0738	
Lock To Crossmember				
SCREW, Hexagon 63 10-80	23.020	2	400 0609	
Lock To Baffle				
SCREW, Hexagon 64 10-80	.....	2	400 0732	
Lock To Grille				
SCREW, Tapping..... 64 10-80	2.050	2	400 0738	
SCREW, Tapping..... 65 01	.....	1	400 0734	
PLATE, Hood Lock (Upper)				
60 Thru 63 01	.....	1	313 8396	
61-62 10-20: 62 80	.....	1	348 4700	
63 Thru 65 10-80	.....	1	447 9990	
ATTACHING PARTS				
Plate To Hood				
BOLT, Hexagon 61 01	17.038	4	G180018	NA
SCREW, Machine..... 60 01: 62-63 01	17.629	4	G274473	NA
SCREW, Machine..... 60 10-20-80	17.629	3	G274825	NA
SCREW, Machine..... 63 10-80	23.020	4	400 0608	
SCREW, Machine..... 64 10-80	.....	2	400 0663	
WASHER, Plain..... 60-61 01	17.814	4	G120392	NA
WASHER, Plain..... 60 10-20-80	17.814	3	G103339	NA
WASHER, Lock 60-61 01: 60 10-20-80	17.820	4	G120380	NA

Copyright 1963 American Motors Corp.

GROUP NO. — DESCRIPTION — YEAR and MODEL	PRIMARY GROUP NO.	PER CAR	PART NO.	CODE
PLATE, Hood Lock (Lower)				
60 01 (LAC)	.....	1	343 0426	
60 01 (OAC)	.....	1	315 7195	
61 01	.....	1	344 6786	
62-63 01	.....	1	348 9502	
60 10-20-80	.....	1	344 0975	
61 80	.....	1	344 7668	
ATTACHING PARTS				
Plate To Tie Plate				
SCREW, Hexagon 60 01-10-20-80	17.629	4	G274825	NA
WASHER, Plain..... 60 01-10-20-80	17.814	4	G120392	NA
WASHER, Lock..... 60 01-10-20-80	17.820	4	G120380	NA
Plate To Baffle				
BOLT, Hexagon ..... 61 01 (4 Req.): 61 80 (3 Req.)	17.038	AR	G180020	NA
SCREW, Machine..... 62-63 01	17.629	4	G274473	NA
WASHER, Plain..... 61 01 (4 Req.): 61 80 (3 Req.)	17.814	AR	G120392	NA
WASHER, Lock..... 61 01 (4 Req.): 61 80 (3 Req.)	17.820	AR	G120380	NA
SPRING, Hood Lock Lower Safety				
64-65 01	.....	1	350 9555	#
SPRING, Hood Lock Lower Latch				
64-65 01	.....	1	350 9556	#
SUPPORT, Hood Lock				
64 01	.....	1	350 5808	
65 01	.....	1	353 0588	
63 10-80	.....	1	347 2619	
64 10-80	.....	1	351 3304	
65 10	.....	1	351 5881	
65 80	.....	1	351 5883	
ATTACHING PARTS				
Support To Lower Crossmember				
SCREW, Tapping..... 63 10-80	22.056	1	400 0032	
WASHER, Plain..... 63 10-80	17.814	1	G120393	NA
Support To Lower Baffle				
SCREW, Hexagon 64 10-80	.....	1	400 0732	
CATCH, Hood Lock Safety				
60 Thru 63 01	.....	1	313 6204	
ATTACHING PARTS				
Catch To Hood				
SCREW, Machine..... 60-61 01	17.598	2	G454542	NA
SCREW, Machine..... 62-63 01	17.629	2	G274473	NA
BRACKET, Hood Lock Mounting				
61-62 10-20: 62 80	.....	1	344 7677	
ATTACHING PARTS				
Bracket To Crossmember				
BOLT, Hexagon 61 10-20	17.038	2	G180018	NA
BOLT, Hexagon 62 10-80	17.038	2	G180020	NA
WASHER, Plain..... 61-62 10-20: 62 80	17.814	2	G446188	NA
WASHER, Lock..... 61-62 10-20: 62 80	17.820	2	G120380	NA

Copyright 1963 American Motors Corp.

GROUP NO. — DESCRIPTION — YEAR and MODEL	PRIMARY GROUP NO.	PER CAR	PART NO.	CODE
Bracket To Grille Panel				
BOLT, Hexagon 61-62 10-20: 62 80	17.038	2	G180020	NA
WASHER, Plain..... 61-62 10-20: 62 80	17.814	2	G120392	NA
WASHER, Lock..... 61-62 10-20: 62 80	17.820	2	G120380	NA
NUT, Hexagon..... 61-62 10-20: 62 80	17.406	2	G120375	
BOLT, Hood Lock				
60 Thru 63 01	.....	1	314 3026	
63 10-80	.....	1	448 1025	
64-65 10-80	.....	1	448 1478	
ATTACHING PARTS				
Bolt To Upper Plate				
NUT, Jam..... 60 Thru 63 01: 63-64 10-80	17.410	1	G124934	NA
STRIKER, Hood Lock				
64-65 01	.....	1	350 0200	
ATTACHING PARTS				
Striker To Hood				
SCREW, Hexagon 64-65 01	.....	2	400 0754	
SPRING, Hood Lock				
60 Thru 63 01: 63 10-80	.....	1	314 1482	
64-65 10-80	.....	1	352 0697	
RETAINER, Hood Lock Spring				
63 Thru 65 10-80	.....	1	348 2791	
12.075 FENDER, Front				
(Left) 60 01	.....	1	343 1720	
(Left) 61 Thru 63 01 ..... *(Replaces 344 6533)*	.....	1	447 9751	
(Left) 64-65 01	.....	1	350 5659	
(Left) 60 10-20	.....	1	344 4047	
(Left) 61-62 10: 62 80 ..... *(Replaces 344 7513)*	.....	1	447 9474	
(Left) 63 10-80	.....	1	349 2149	
(Left) 64 10-80	.....	1	351 1535	
(Left) 65 10	.....	1	353 9181	
(Left) 60 80	.....	1	344 4055	
(Left) 61 80	.....	1	344 7517	
(Left) 65 80	.....	1	353 9179	
(Right) 60 01	.....	1	343 1721	
(Right) 61 Thru 63 01 ..... *(Replaces 344 6532)*	.....	1	447 9750	
(Right) 64-65 01	.....	1	350 5658	
(Right) 60 10-20	.....	1	344 4046	
(Right) 61-62 10: 62 80 ..... *(Replaces 344 7512)*	.....	1	447 9473	
(Right) 63 10-80	.....	1	349 2148	

NOTE 12.075-1: Two Types of Splash Guards were used on the 63 10-80 Models. They can be identified as follows:
Type 1: The distance between holes on the flat surface of the Guard is 9-1/3".
Type 2: The distance between holes on the flat surface of the Guard is 7-1/2".
NOTE 12.075-2: Used Prior To Body No.
NOTE 12.075-3: Used beginning with Body No.

Copyright 1963 American Motors Corp.

GROUP NO. — DESCRIPTION — YEAR and MODEL	PRIMARY GROUP NO.	PER CAR	PART NO.	CODE
(Right) 64 10-80	.....	1	351 1534	
(Right) 65 10	.....	1	353 9180	
(Right) 60 80	.....	1	344 4054	
(Right) 61 80	.....	1	344 7516	
(Right) 65 80	.....	1	353 9178	
ATTACHING PARTS				
Fender To Wheelhouse				
BOLT, Hexagon ..... 60 Thru 63 01 (10 Req.): 64-65 01 (6 Req.-1" Long): 60 Thru 64 10-20-80 (8 Req.-1" Long)	.....	AR	400 0066	
BOLT, Hexagon ..... 64 01 (5/8" Long)	12.125	6	400 0132	
BOLT, Hexagon ..... 60 10-20-80 (3/4" Long	22.056	2	400 0032	
BOLT, Hexagon ..... 60-61 80 (5/8" Long)	.....	2	342 8507	
WASHER, Plain ..... 60 10-20-80 ***(Replaces 800 0157)***	17.814	2	400 0480	
NUT, Lug ..... 60 Thru 63 01 (10 Req.): 64-65 01 (6 Req.): 60 Thru 64 10-20 (8 Req.): 60-61 80 (10 Req.): 62-63 80 (8 Req.)	.....	AR	400 0049	
NUT, Hexagon 60 10-20-80	17.406	2	G103025	NA
Fender To Wheelhouse Extension				
SCREW, Machine ..... 61 Thru 63 01	17.629	4	G274825	NA
SCREW, Tapping ..... 61 Thru 63 01	17.671	2	G455702	NA
SCREW, Tapping 61 80	22.056	2	345 1488	
STUD 61 10-20	25.052	2	437 3776	
STUD 61 80	5.178	2	312 2698	
NUT, Lock 62-63 01	17.417	4	G273801	NA
NUT, Lock 61 10-20	.....	2	346 6152	
NUT, Lock 61 80	12.125	4	400 0340	
Fender To Front Body Pillar				
BOLT, Hexagon ..... 60-61 01 (6 Req.): 62-63 01 (4 Req.-Semi-Circular Washer)	.....	AR	345 2705	
BOLT, Hexagon ..... 62-63 01 (Circular Washer)	.....	2	400 0254	
BOLT, Hexagon ..... 60-61 10-20-80 (6 Req.-1" Dia. Washer): 62 10-80 (2 Req.-1" Dia. Washer)	.....	AR	400 0066	
BOLT, Hexagon ..... 62 10-80 (7/8" Dia. Washer)	23.071	4	400 0493	
WASHER, Sealing ..... 60 Thru 63 01 (6 Req.): 60 Thru 62 10-20-80 (2 Req.)	.....	AR	400 0082	
NUT, Lug ..... 60 Thru 63 01: 60 Thru 62 10-20-80	.....	6	400 0049	
Fender To Uniside				
BOLT, Hexagon 64 01	12.125	4	400 0132	
BOLT, Hexagon ..... 65 01 (2 Req.): 65 10-80 (8 Req.): 63 10-80 (6 Req.)	.....	AR	400 0066	
NUT, Speed 64 07	.....	2	400 0199	
NUT, Speed ..... 63 10-80 (5/8" Wide): 65 01-10-80	20.085	4	400 0300	
NUT, Speed ..... 63-64 10-80 (3/4" Wide): 65 01	.....	2	400 0568	
Fender To Side Sill Panel				
SCREW, Hexagon ..... 60 Thru 63 01 ***(Replaces 435 6753)***	22.056	2	400 0032	
SCREW, Hexagon ..... 60 Thru 62 10-20-80	.....	2	400 0341	
WASHER, Plain ..... 60-62 10-20-80 ***(Replaces 800 0169)***	17.814	2	400 1107	
WASHER, Bite ..... 60 Thru 63 01	1.004	2	313 3673	
NUT, Speed ..... 60 Thru 62 10-20-80	.....	2	400 0025	
NUT, Lug 62 10-80	.....	2	400 0049	

Copyright 1963 American Motors Corp.

GROUP NO. — DESCRIPTION — YEAR and MODEL	PRIMARY GROUP NO.	PER CAR	PART NO.	CODE
Fender To Radiator Side Baffle				
SCREW, Hexagon 63-64 10-80	.....	6	400 0424	
NUT, Speed ..... 65 10-80 (Note 12.075-2)	.....	4	400 1345	
NUT, Speed ..... 65 10-80 (Note 12.075-3)	.....	4	400 1459	
Fender To Cowl Panel				
BOLT, Hexagon 64-65 01	12.125	2	400 0132	
NUT, Speed 65 01: 64 02-05-06-08-09	.....	2	400 0568	
NUT, Speed 64-65 07	.....	2	400 0199	
PANEL, Front Fender Front Extension (Inner)				
(Left) 65 80	.....	1	351 5619	
(Right) 65 80	.....	1	351 5618	
PANEL, Headlamp Mounting				
(Left) 65 10	3.245	1	351 5719	
(Right) 65 10	3.245	1	351 5718	
ATTACHING PARTS				
Panel To Radiator Side Baffle				
SCREW, Tapping..... 65 10	.....	4	400 0424	
PLATE, Front Fender Sealer				
(Left)..... 60 10-20-80	.....	1	342 4235	
(Left)..... 61-62 10-20-80	.....	1	346 5422	
(Right)..... 60 10-20-80	.....	1	342 4236	
(Right)..... 61-62 10-20-80	.....	1	346 5423	
SEAL, Front Fender To Cowl Panel				
60 01	.....	2	343 1651	
(Left) 64 01...(Incl. Retainer)	.....	1	350 6949	
(Right) 64 01...(Incl. Retainer)	.....	1	350 6948	
SEAL, Front Fender To Grille Panel				
60 01	.....	2	343 1649	
SEAL, Front Fender To Body Pillar				
61 Thru 63 01	.....	2	344 6628	
SEAL, Front Fender To Body Pillar At Side Sill				
(Left) 60 01	.....	1	343 1800	
(Left) 61 Thru 63 01	.....	1	344 6623	
(Right) 60 01	.....	1	343 1801	
(Right) 61 Thru 63 01	.....	1	344 6622	
ATTACHING PARTS				
Pillar Seal To Fender				
SCREW, Tapping..... 61 01	17.660	4	G162013	NA
SCREW, Tapping..... 62-63 01	17.660	4	G162006	NA
ANTI-SQUEAK, Front Fender To Grille Panel				
(Upper) 60 01 ..... *(Discontinued)*	.....	2	343 1647	#
(Lower) 60 01	.....	2	343 1646	
(Side) 60 01 ..... *(Discontinued)*	.....	2	343 1648	#

Copyright 1963 American Motors Corp.

GROUP NO. — DESCRIPTION — YEAR and MODEL		PRIMARY GROUP NO.	PER CAR	PART NO.	CODE
ANTI-SQUEAK, Front Fender To Body Pillar					
(Upper) 60 01		.....	2	343 1653	
(Lower) 60 01	*(Discontinued)*	.....	2	343 1650	#
ANTI-SQUEAK, Front Fender To Body Pillar At Side Sill					
60-61 10-20-80		.....	2	314 7283	
ANTI-SQUEAK, Front Fender To Side Sill					
60 Thru 62 10-20-80		.....	2	314 7284	
NAMEPLATE, Front Fender (Refer Group 12 Illustrations)					
ATTACHING PARTS					
Name Plate To Fender					
CLIP	60 Thru 63 01 (10 Req.): 61-62 10-80 (8 Req.): 60-61 20 (8 Req.): 65 10 (8 Req.)	12.125	AR	437 7405	
CLIP	65 01	23.009	10	400 0266	
CLIP	65 59 (Marlin)	26.077	7	400 0160	
CLIP, Sealed	65 10	23.006	6	400 1335	
MEDALLION, Front Fender (Refer Group 12 Illustrations)					
ATTACHING PARTS					
Medallion To Fender					
CLIP	63 Thru 65 10 (V8)	23.009	4	400 0506	
CLIP	60 20 (4 Req.): 61 20 (6 Req.)	12.125	AR	437 7405	
NUT	64 15-16-18 (660-8 Req.): 64 15-16-18-19 (770-12 Req.)	23.078	AR	400 0391	
NUMBERS, Front Fender (Front)(Refer Group 12 Illustrations)					
ATTACHING PARTS					
Numbers To Fender					
CLIP	64 15-16-18	23.009	4	400 0266	
GUARD ASSEMBLY, Front Fender Lower Splash					
(Left) 64-65 01: 63-64 10-80 (Note 12.075-1 Type 2)		.....	1	350 9105	
(Left) 63 10-80 (Note 12.075-1 Type 1)		.....	1	347 2567	
(Left) 65 10-80		.....	1	351 6001	
(Right) 64-65 01: 63-64 10-80 (Note 12.075-1 Type 2)		.....	1	350 9104	
(Right) 63 10-80 (Note 12.075-1 Type 1)		.....	1	347 2566	
(Right) 65 10-80		.....	1	351 6000	
ATTACHING PARTS					
Splash Guard To Fender					
SCREW, Hexagon	64-65 01: 63 Thru 65 10-80	22.056	8	400 0058	
12.076 BRACKET, Front Fender To Baffle					
(Left) 64-65 01		.....	1	350 0259	#
(Left) 63-64 10-80		.....	1	349 2671	
(Left) 65 10-80		.....	1	354 2033	
(Right) 64-65 01		.....	1	350 0258	#
(Right) 63-64 10-80		.....	1	349 2670	
(Right) 65 10-80		.....	1	354 2032	
ATTACHING PARTS					
Fender To Side Baffle Bracket					
SCREW, Hexagon	64-65 01	2.051	4	400 0724	
SCREW, Machine	63-64 10-80 (1/4" Dia.)	17.598	2	800 0110	
SCREW, Hexagon	63-64 10-80 (5/16" Dia.)	23.020	2	400 0609	
NUT, Hexagon	64-65 01: 63 10-80 (5/16" Thick) *(Replaces 400 0508)*	17.412	4	G271172	
	Thick) *(Replaces 400 0508)*	17.412	4	G271172	

Copyright 1963 American Motors Corp.

GROUP NO. — DESCRIPTION — YEAR and MODEL		PRIMARY GROUP NO.	PER CAR	PART NO.	CODE
BRACKET, Front Fender To Radiator Grille Panel					
64 10-80		.....	2	350 9428	
ATTACHING PARTS					
Fender To Radiator Grill Panel					
SCREW, Tapping	63 10-80	12.075	2	400 0424	
SCREW, Tapping	64 10-80	3.165	2	400 0478	
NUT, Speed	63 10-80	17.426	2	G447026	
NUT, Speed	64 10-80	23.110	2	400 0196	
12.078 MOULDING, Front Fender (Refer Group 12 Illustrations)					
ATTACHING PARTS					
Front Moulding To Fender					
CLIP	60 10-20	.....	10	344 0529	
FASTENER	61 80	.....	6	346 0315	
Top Moulding To Fender					
CLIP, Plastic	65 59 (Marlin): 65 80	.....	12	400 1339	
CLIP	65 80	.....	2	400 1364	
BOLT, Tee (Left)	65 59 (Marlin) ***(Discontinued)***	.....	1	400 1683	
BOLT, Tee (Right)	65 59 (Marlin) ***(Discontinued)***	.....	1	400 1684	#
BOLT, Tee	65 59 (Marlin): 65 80	.....	2	400 0374	
NUT	65 59 (Marlin): 65 80	.....	2	439 0742	
Center Moulding To Fender					
NUT, Tee	60 10-20	26.077	4	341 1607	
Side Moulding To Fender					
BOLT, Tee	61 01	26.034	2	342 8516	
BOLT, Tee	62-63 01	26.032	2	400 0200	
BOLT, Tee	61 Thru 63 10-20	.....	4	400 0638	
BOLT, Tee	62 10-80	27.200	2	400 0374	
BOLT, Tee	65 10 (660)(770)	.....	2	400 1365	
BOLT, Tee	61 80	27.200	2	346 4586	
SCREW, Tee	60 01	26.032	2	343 2019	
WASHER, Plain	60 10-20-80 ***(Replaces 800 0169)***	17.814	2	400 1107	
NUT, Hexagon	60 01 (2 Req.): 61-62 10-20-80 (4 Req.)	25.052	AR	439 0742	
NUT, Machine	62-63 01	17.412	2	G271166	NA
NUT, Sealed	64 01 (330)(440): 63 10: 65 10 (660)(770)	.....	4	400 0523	
NUT, Sealed	64 10 (770)	26.039	2	400 0060	
NUT, Tee	61 01	26.077	2	341 1607	
CLIP	64 01 (330)(440)	.....	10	400 0877	
CLIP	64 10 (660)	26.032	8	400 0871	
CLIP	64 10 (770)	26.032	2	400 0872	
CLIP, Plastic	62 01	26.032	10	400 0131	
CLIP, Plastic	65 05-06-08 (330)	26.032	12	400 0761	
CLIP, Plastic	65 01 (440)(440-H)	26.032	12	400 0759	
CLIP, Plastic	62 10 (10 Req.): 62 80 (14 Req.)	.....	AR	400 0435	
CLIP, Plastic	63 10	.....	24	400 0428	
CLIP, Plastic	65 10 (660)(770)	26.032	12	400 1507	
CLIP, Plastic	65 88 (990-WWO)	26.034	8	400 1371	
CLIP, Wire	60 01	.....	10	439 5824	
CLIP, WIRE	61 01	.....	10	346 4507	
CLIP, Wire	61 10-20 ***(Replaces 400 0380)***	12.098	24	400 0428	
CLIP, Wire	62 10 (10 Req.): 62 80 (14 Req.)	.....	AR	400 0381	
CLIP, Wire	61 80	26.037	6	343 0825	
CLIP, Anti-Slide	65 01	26.032	2	400 0760	
FASTENER	64 01 (330)(440)	.....	2	400 0855	
FASTENER	64 01 (330)(440)	.....	4	400 0857	
FASTENER	64 10 (770)	.....	2	400 1409	
FASTENER	65 10 (660)(770)	.....	2	400 1455	
FASTENER	65 50	.....	10	400 1505	
RETAINER	62-63 01	26.032	10	400 0131	

Copyright 1963 American Motors Corp.

GROUP NO. — DESCRIPTION — YEAR and MODEL	PRIMARY GROUP NO.	PER CAR	PART NO.	CODE
Upper Side Moulding To Fender				
SCREW, Tee 63 07-09	26.032	2	400 0200	
NUT, Hexagon..... 63 07-09	17.412	2	G271166	NA
NUT, Hexagon..... 63 80	23.078	10	400 0391	
NUT..... 64 80 (990)	.....	6	400 0523	
CLIP..... 61 10-20-80	12.128	12	344 6003	
CLIP..... 63 80	23.009	4	400 0506	
CLIP..... 64 89	26.032	22	400 0868	
CLIP..... 60 80	.....	10	344 5889	
CLIP..... 64 80 (990)	.....	4	400 0870	
RETAINER..... 63 07-09	26.032	12	400 0131	
Lower Side Rear Moulding To Fender				
FASTENER 63 80	.....	4	400 0624	
SCREW, Tapping..... 64 80	12.128	14	400 0892	
Lower Side Front Moulding To Fender				
BOLT, Tee 60 10-20	26.034	2	342 8516	
NUT, Hexagon..... 63 80	22.052	4	439 0742	
NUT, Tee..... 60 10-20	26.077	2	341 1607	
CLIP, Wire..... 62 10 ..... ***(Replaces 400 0380)***	12.078	6	400 0428	
CLIP, Wire..... 60 10-20	.....	2	346 4507	
CLIP, Wire..... 62 10	12.128	6	400 0380	
CLIP, Wire..... 60 80	.....	10	344 5889	
FASTENER 63 80	.....	4	400 0547	
Wheel Opening To Fender				
SCREW, Tapping..... 64 80 (7-Req.): 65 10-80 (8-Req.)	12.128	AR	400 0892	
ORNAMENT, Front Fender (Refer Group 12 Illustrations)				
(Left) 60 80	.....	1	342 1961	
(Right) 60 80	.....	1	342 1962	
ATTACHING PARTS				
Side Ornament To Fender				
BOLT, Tee 61 10-20-80	.....	2	346 6081	
SCREW, Tapping..... 62 10	.....	4	400 0398	
SCREW, Tee 63 10	.....	4	400 0638	
NUT, Hexagon..... 61 10-20-80	22.052	2	439 0742	
NUT, Hexagon..... 63 10	.....	4	400 0523	
NUT, Hexagon..... 65 88 (880-WWO)	12.128	4	400 0392	
CLIP..... 61 Thru 63 01	2.050	4	316 1331	
CLIP..... 63 10	.....	2	400 0563	
CLIP..... 60 80	26.034	2	343 5006	
CLIP..... 65 01 (440)	23.009	12	400 0506	
Top Ornament To Fender				
SEALER 60 80	26.095	6	438 6329	
NUT, Stamped..... 61 10-20-80	23.078	4	400 0391	
NUT, Pal..... 60 80 (Less Sealer)	.....	2	315 5530	
NUT, Pal..... 60 80 (With Sealer)	.....	4	342 1988	
Side Upper Ornament To Fender				
RETAINER (Left)..... 65 01 (330)	.....	1	400 0771	
RETAINER (Left)..... 65 01 (440-440H)	.....	1	400 0773	
RETAINER (Right)..... 65 01 (330)	.....	1	400 0770	
RETAINER (Right)..... 65 01 (440-440H)	.....	1	400 0772	
Crest To Top Ornament				
SCREW, Machine..... 60 80	17.616	2	G443370	NA
CLIP, Front Fender Ornament (Refer Group 12 Illustrations)				
PANEL, Front Fender Finish (Refer Group 12 Illustrations)				

Copyright 1963 American Motors Corp.

GROUP NO. — DESCRIPTION — YEAR and MODEL	PRIMARY GROUP NO.	PER CAR	PART NO.	CODE
ATTACHING PARTS Finish Panel To Lower Front Fender				
BOLT, Tee 64 80	.....	4	400 0866	
SCREW, Tapping..... 64 80	.....	6	400 0892	
SCREW, Tapping..... 63 80	.....	4	400 0398	
NUT, Sealed 64 80	.....	4	400 0060	
CREST, Front Fender				
60 80	.....	2	342 1956	
NUMBERS, Front Fender (Rear)(Refer Group 12 Illustrations)				
ATTACHING PARTS Number To Fender				
CLIP 64 80	23.009	12	400 0266	
LETTER, Front Fender (Refer Group 12 Illustrations)				
ATTACHING PARTS Letter To Fender				
CLIP ..... 64-65 89 ("H")	23.009	4	400 0266	#
12.125 FENDER, Rear				
(Left) 60 02-06	.....	1	447 8508	
(Left) 60 04	.....	1	343 6211	
(Left) 60 05	.....	1	447 8510	
(Left) 61-62 04	.....	1	447 8799	
(Left) 61-62 07 ..... *(Use 348 9289)*	.....	1	345 3447	
(Left) 61 Thru 63 02-06 ..... *(Replaces 344 6543)*	.....	1	348 9291	
(Left) 63 04	.....	1	447 9983	
(Left) 61 Thru 63 05 ..... *(Replaces 348 6553)*	.....	1	348 9307	
(Left) 63 07	.....	1	348 9289	
(Left) 61 Thru 63 08 ..... *(Replaces 447 8801)*	.....	1	447 9985	
(Left) 63 09	.....	1	349 8585	
(Left) 60 15-25-29-85-89...(Incl. Extension) ..... *(Use 447 8757)*	.....	1	344 0089	
(Left) 60 18-28-83-88 (L3S)...(Incl. Extension) ..... *(Use 447 8761)*	.....	1	344 0097	
(Left) 60-61 18-28-88 (WVT)...(Incl. Extension)	.....	1	447 8755	

NOTE 12.125-1: Two Types of Rear Quarter Outer Panels were used on the 64 01 Model. They can be identified as follows:
Type 1: Has Rolled Lip at Front End of Wheel Opening. Refer Illustration.
Type 2: Has Abbreviated Lip at Front End of Wheel Opening. Refer Illustration.

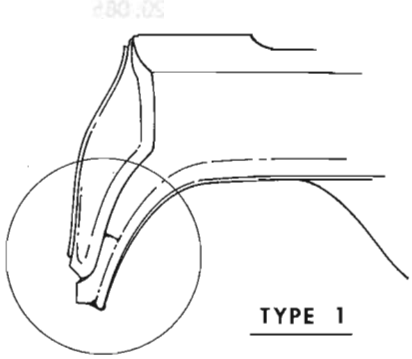
TYPE 1

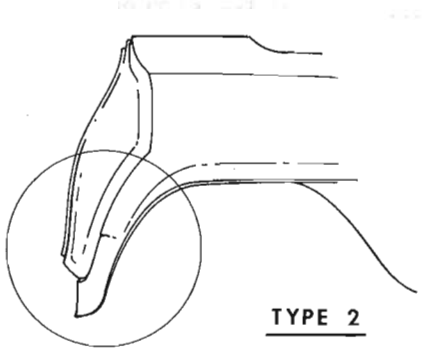
TYPE 2

Copyright 1963 American Motors Corp.

GROUP NO. — DESCRIPTION — YEAR and MODEL	PRIMARY GROUP NO.	PER CAR	PART NO.	CODE
(Left) 61 15-25-85...(Incl. Extension)	.....	1	447 8757	
(Left) 61 18-28-88 (LVT)...(Incl. Extension)	.....	1	447 8761	
(Left) 62 15...(Incl. Extension)	.....	1	346 1163	
(Left) 62 16...(Incl. Extension)	.....	1	346 1159	
(Left) 62 18 (LVT)...(Incl. Extension)	.....	1	346 1171	
(Left) 62 18 (WVT)...(Incl. Extension)	.....	1	346 1985	
(Left) 62 85...(Incl. Extension)	.....	1	346 9635	
(Left) 62 86...(Incl. Extension)	.....	1	346 9667	
(Left) 62 88 (LVT)...(Incl. Extension)	.....	1	346 9687	
(Left) 62 88 (WVT)...(Incl. Extension)	.....	1	349 7069	
(Right) 60 02-06	.....	1	447 8507	
(Right) 60 04	.....	1	343 5296	
(Right) 60 05	.....	1	447 8509	
(Right) 61-62 02-06 ***(Use 348 9290)***	.....	1	344 6542	
(Right) 61-62 04 ***(Use 447 9928)***	.....	1	447 8798	
(Right) 61 Thru 63 05 ***(Replaces 344 6552)***	.....	1	348 9306	#
(Right) 61 Thru 63 07 ***(Replaces 345 3446)***	.....	1	348 9288	#
(Right) 61-62 08 ***(Use 447 9984)***	.....	1	447 8800	
(Right) 63 02-06	.....	1	348 9290	
(Right) 63 04	.....	1	447 9982	
(Right) 63 08 ***(Replaces 447 9984)***	.....	1	344 6880	
(Right) 63 09	.....	1	349 8584	
(Right) 60 18-28-83-88...(Incl. Extension) ***(Use 447 8760)***	.....	1	344 0096	
(Right) 60 15-19-25-29-85-89: 61 15-25-85...(Incl. Extension) ***(Replaces 344 0088)***	.....	1	447 8756	
(Right) 61 18-28-88...(Incl. Extension)	.....	1	447 8760	
(Right) 62 15...(Incl. Extension)	.....	1	346 1162	
(Right) 62 16...(Incl. Extension)	.....	1	346 1158	
(Right) 62 18...(Incl. Extension)	.....	1	346 1170	
(Right) 62 85...(Incl. Extension)	.....	1	346 9634	
(Right) 62 86...(Incl. Extension)	.....	1	346 9666	
(Right) 62 88...(Incl. Extension)	.....	1	346 9686	

ATTACHING PARTS

Fender To Side Sill Panel

SCREW, Machine	60 01: 61 Thru 63 02-04-06-07 ***(Replaces 435 6753)***	22.056	2	400 0032	
WASHER, Plain	60 01: 61 Thru 63 02-04-06-07	17.814	2	G120394	NA

Fender To Rear Quarter Panel

BOLT, Hexagon	60 02-04-06 (20 Req.): 60 05 (16 Req. - 1-1/4" Dia. Washer): 60 10-20-80 (4 Req. - 1-1/4" Dia. Washer)	12.075	AR	343 7562	
BOLT, Hexagon	61 Thru 63 02-05-06: 60 05-10-20-80 (7/8" Dia. Washer)	12.075	4	435 5574	
WASHER, Sealing	60 01 (20 Req. -1-1/4" x 1/16"): 60 10-20-80 (4 Req. -1-1/4" x 1/16"): 61 Thru 63 02-05-06 (4 Req.)	.....	AR	400 0360	
WASHER, Sealing	60 01 (1 x 1/16)	12.075	4	400 0082	
WASHER, Sealing	60 10-20-80 (1 x 1/8)	.....	2	400 0361	
NUT, Lug	60 01	12.075	20	318 573	
NUT, Lug	60 10-20-80	12.075	4	400 0049	
NUT, Speed	61 Thru 63 02-05-06	20.085	4	400 0300	

Copyright 1963 American Motors Corp.

GROUP NO. — DESCRIPTION — YEAR and MODEL		PRIMARY GROUP NO.	PER CAR	PART NO.	CODE
Fender To Body Pillar					
BOLT, Hexagon	62 10-80	12.075	6	400 0066	
WASHER, Sealing	62 10-80 (1-1/4" Dia.)	.....	4	400 0360	
WASHER, Sealing	62 10-80 (1" Dia.)	.....	2	400 0361	
NUT, Lug	62 10-80	12.075	6	400 0049	
Fender To Rear Deck Lower Panel					
BOLT, Hexagon	61 01	12.075	4	435 5574	
WASHER, Plain	61 Thru 63 01 ***(Replaces 800 0153)***	17.814	4	400 1093	
WASHER, Plain	60 10-20-80: 62 10-80	17.814	4	G120393	NA
WASHER, Sealing	61 Thru 63 01	12.075	4	400 0082	
WASHER, Lock	62-63 01	17.820	4	G120214	NA
NUT, Hexagon	61 Thru 63 01 (5/16-24): 60 10-20-80 (5/16-24): 62 10-20-80 (5/16-24)	17.406	4	G120368	
NUT, Hexagon	61 Thru 63 01 (5/16-18): 60 10-20-80 (5/16-18): 62 10-80 (5/16-18)	17.406	4	G120376	NA
NUT, Speed	61 01	20.085	4	400 0300	
SEAL, Fender To Floor Pan					
64 01: 63-64 10-80		.....	2	349 2543	
PANEL, Rear Quarter Outer (Incl. Extensions)					
(Left) 64 02-06 (Note 12.125-1 Type 1)		.....	1	448 1487	
(Left) 64 02-06 (Note 12.125-1 Type 2)		.....	1	350 0305	
(Left) 64 05 (Note 12.125-1 Type 1)		.....	1	448 1489	
(Left) 64 05 (Note 12.125-1 Type 2)		.....	1	350 0307	
(Left) 64 07 (Note 12.125-1 Type 1)		.....	1	448 1493	
(Left) 64 07 (Note 12.125-1 Type 2)		.....	1	448 1367	
(Left) 64 08 (Note 12.125-1 Type 1)		.....	1	448 1491	
(Left) 64 08 (Note 12.125-1 Type 2)		.....	1	350 0323	
(Left) 64 09 (Note 12.125-1 Type 1)		.....	1	448 1495	
(Left) 64 09 (Note 12.125-1 Type 2)	***(Use 448 2233)***	.....	1	448 1369	#
(Left) 65 05		.....	1	448 2239	
(Left) 65 06		.....	1	448 2237	
(Left) 65 07		.....	1	448 2235	
(Left) 65 08		.....	1	448 2241	
(Left) 65 09		.....	1	448 2233	
(Left) 63 15-85		.....	1	448 0285	
(Left) 63-64 16-86		.....	1	448 0287	
(Left) 63 18-88 (L3S)	***(Use 448 1245)***	.....	1	448 0289	
(Left) 63 18-88 (W3S)	***(Use 448 1249)***	.....	1	448 0291	
(Left) 64 15-85		.....	1	448 1243	
(Left) 64 18-88 (W3S)		.....	1	448 1249	
(Left) 64 18-88 (L3S)		.....	1	448 1245	
(Left) 64 19-89		.....	1	448 1371	
(Left) 65 15		.....	1	448 2383	
(Left) 65 16		.....	1	448 2385	
(Left) 65 17-19 (Except Marlin)		.....	1	448 2377	
(Left) 65 18 (L3S)		.....	1	353 9097	
(Left) 65 18 (W3S)		.....	1	353 9105	
(Left) 65 59 (Marlin)		.....	1	448 3233	
(Left) 65 85		.....	1	448 2387	
(Left) 65 86		.....	1	448 2389	
(Left) 65 87-89		.....	1	448 2379	
(Left) 65 88 (L3S)		.....	1	448 2391	
(Left) 65 88 (W3S)		.....	1	448 2393	

Copyright 1963 American Motors Corp.

GROUP NO. — DESCRIPTION — YEAR and MODEL	PRIMARY GROUP NO.	PER CAR	PART NO.	CODE
(Right) 64 02-06 (Note 12. 125-1 Type 1)	.....	1	448 1486	
(Right) 64 02-06 (Note 12. 125-1 Type 2)	.....	1	350 0304	
(Right) 64 05 (Note 12. 125-1 Type 1)	.....	1	448 1488	
(Right) 64 05 (Note 12. 125-1 Type 2)	.....	1	350 0306	
(Right) 64 07 (Note 12. 125-1 Type 1)	.....	1	448 1492	
(Right) 64 07 (Note 12. 125-1 Type 2)	.....	1	448 1366	
(Right) 64 08 (Note 12. 125-1 Type 1)	.....	1	448 1490	
(Right) 64 08 (Note 12. 125-1 Type 2)	.....	1	350 0322	
(Right) 64 09 (Note 12. 125-1 Type 1)	.....	1	448 1494	
(Right) 64 09 (Note 12. 125-1 Type 2) ***(Use 448 2232)***	.....	1	448 1368	#
(Right) 65 05	.....	1	448 2238	
(Right) 65 06	.....	1	448 2236	
(Right) 65 07	.....	1	448 2234	
(Right) 65 08	.....	1	448 2240	
(Right) 65 09	.....	1	448 2232	
(Right) 63 15-85	.....	1	448 0284	
(Right) 63-64 16-86	.....	1	448 0286	
(Right) 63 18-88 (L3S) ***(Use 448 1244)***	.....	1	448 0288	
(Right) 63 18-88 (W3S) ***(Use 448 1248)***	.....	1	448 0290	
(Right) 64 15-85	.....	1	448 1242	
(Right) 64 18-88 (W3S)	.....	1	448 1248	
(Right) 64 18-88 (L3S)	.....	1	448 1244	
(Right) 64 19-89	.....	1	448 1370	
(Right) 65 15	.....	1	448 2382	
(Right) 65 16	.....	1	448 2384	
(Right) 65 17-19 (Except Marlin)	.....	1	448 2376	
(Right) 65 18 (L3S)	.....	1	353 9096	
(Right) 65 18 (W3S)	.....	1	353 9104	
(Right) 65 59 (Marlin)	.....	1	448 3232	
(Right) 65 85	.....	1	448 2386	
(Right) 65 86	.....	1	448 2388	
(Right) 65 87-89	.....	1	448 2378	
(Right) 65 88 (L3S)	.....	1	448 2390	
(Right) 65 88 (W3S)	.....	1	448 2392	
ATTACHING PARTS				
Panel To Body Pillar				
SCREW, Machine..... 63 10-80	23. 020	4	400 0609	
Panel To Side Roof Extension				
SCREW, Machine..... 63 10-80 (1/2" Long)	17. 626	2	G190634	NA
SCREW, Machine..... 63-64 10-80 (3/4" Long)	.....	4	400 0132	
NUT, Speed..... 63 Thru 65 10-80	20. 085	6	400 0300	
Panel To Tailgate Pillar				
SCREW, Hexagon 63 18-88: 65 08	23. 020	4	400 0608	
WASHER, Plain..... 63 18-88	17. 814	4	G120394	NA
Panel To Corner Roof Extension				
SCREW, Hexagon 63 18-88	22. 056	2	400 0058	
WASHER, Plain..... 63 18-88	17. 814	2	G120393	NA
REINFORCEMENT, Rear Quarter Outer Panel To Unside				
(Left) 64 09-19-89	.....	1	350 9381	
(Left) 64-65 07	.....	1	350 1005	
(Left) 65 17-87	.....	1	353 9141	
(Left) 65 19-89	.....	1	351 5639	#
(Right) 64 09-19-89	.....	1	350 9380	
(Right) 64-65 07	.....	1	350 1004	
(Right) 65 17-87	.....	1	353 9140	
(Right) 65 19-89	.....	1	351 5638	#

Copyright 1963 American Motors Corp.

GROUP NO. — DESCRIPTION — YEAR and MODEL	PRIMARY GROUP NO.	PER CAR	PART NO.	CODE
EXTENSION, Rear Fender Rear				
(Left) 60-61 15-19-25-29-85-89	.....	1	345 1951	
(Left) 60-61 18-28-83-88 (LVT)	.....	1	345 1955	
(Left) 60-61 18-28-88 (WVT)	.....	1	345 5281	
(Left-Upper) 62 15-16	.....	1	447 9883	
(Left-Upper) 62 85-86	.....	1	447 9885	
(Left-Lower) 62 15-16-85-86	.....	1	346 1175	
(Left-Lower) 62 18-88	.....	1	346 1983	
(Right) 60-61 15-19-25-29-85-89	.....	1	345 1950	
(Right) 60-61 18-28-83-88	.....	1	345 1954	
(Right-Upper) 62 15-16	.....	1	447 9882	
(Right-Upper) 62 85-86	.....	1	447 9884	
(Right-Lower) 62 15-16-85-86	.....	1	346 1174	
(Right-Lower) 62 18-88	.....	1	346 1982	
EXTENSION, Rear Quarter Panel (Front)				
(Left) 63-64 15-18-85-88	.....	1	347 2531	
(Left) 63 16-86: 64 16	.....	1	347 2533	
(Left) 65 15-18-85-88	.....	1	351 6049	
(Left) 65 16-86	.....	1	351 5643	
(Left) 65 17-19-87-89	.....	1	351 5649	
(Right) 63-64 15-18-85-88	.....	1	347 2530	
(Right) 63 16-86: 64 16	.....	1	347 2532	
(Right) 65 16-86	.....	1	351 5642	
(Right) 65 17-19-87-89	.....	1	351 5648	
(Right) 65 15-18-85-88	.....	1	351 6048	
EXTENSION, Rear Quarter Panel Top (Front)				
(Left) 65 16-86	.....	1	351 6991	
(Left) 65 17-87	.....	1	351 5559	
(Left) 65 19-89	.....	1	351 5557	
(Right) 65 16-86	.....	1	351 6990	
(Right) 65 17-87	.....	1	351 5558	
(Right) 65 19-89	.....	1	351 5556	
EXTENSION, Rear Quarter Panel (Rear)				
(Left) 63 15-16-85-86: 64 15-16-19-85-89	.....	1	347 2489	
(Right) 63 15-16-85-86: 64 15-16-19-85-89	.....	1	347 2488	
GUARD, Rear Fender Splash (Front)				
(Left) 61 Thru 63 02-04-06	.....	1	344 7439	
(Left) 61 Thru 63 07-09	.....	1	345 8709	
(Right) 60 02-04-06	.....	1	343 6419	
(Right) 61 Thru 63 02-04-06	.....	1	344 7438	
(Right) 61 Thru 63 07-09	.....	1	345 8708	
ATTACHING PARTS				
Guard To Rear Quarter Panel				
NUT, Hexagon 60 02-04-06	17.406	6	G120375	
NUT, Hexagon ..... 61 Thru 63 02-04-06-07-09	17.428	6	G440491	NA
WASHER, Lock 60 02-04-06	17.820	6	G120380	NA

Copyright 1963 American Motors Corp.

GROUP NO. — DESCRIPTION — YEAR and MODEL	PRIMARY GROUP NO.	PER CAR	PART NO.	CODE
GUARD, Rear Fender Splash (Rear)				
(Left) 61 Thru 63 01	.....	1	346 4521	
(Left) 60-61 15-19-25-29-85-89	.....	1	344 0637	
(Left) 60-61 18-28-83-88	.....	1	344 0639	
(Left) 62 15-16-85	.....	1	346 1513	
(Left) 62 18-88	.....	1	346 1521	
(Right) 61 Thru 63 01	.....	1	346 4520	
(Right) 60-61 15-19-25-29-85-89	.....	1	344 0636	
(Right) 60-61 18-28-83-88	.....	1	344 0638	
(Right) 62 15-16-85	.....	1	346 1512	
(Right) 62 18-88	.....	1	346 1520	
ATTACHING PARTS				
Guard To Rear Quarter Panel				
NUT, Hexagon ..... 61 Thru 63 01	17.428	6	G440491	NA
Guard To Wheelhouse				
SCREW, Machine ..... 60 Thru 62 10-20-80	.....	4	400 0006	
SCREW, Tapping ..... 60 Thru 62 10-20-80	17.671	2	G445702	NA
NUT, Hexagon ..... 60 Thru 62 10-20-80 ..... *(Replaces 400 0508)*	.....	4	G271172	
NUT, Speed ..... 60 Thru 62 10-20-80	.....	2	400 0340	
BRACKET, Rear Fender Flange (Incl. Bolt)				
61 Thru 63 01	.....	2	346 4463	
BRACKET, Rear Fender Rear Splash Guard				
61 Thru 63 01	.....	2	346 4822	
REINFORCEMENT, Rear Fender Lower Corner				
(Left) 60 01	.....	1	437 6767	
(Right) 60 01	.....	1	437 6768	
ATTACHING PARTS				
Reinforcement To Fender				
NUT, Hexagon 60 01	17.406	4	G120368	
WASHER, Plain 60 01	17.814	4	G120393	NA
WASHER, Lock 60 01	17.820	4	G120214	NA
PLATE, Rear Fender Lower Corner Reinforcement				
60 01	.....	2	437 7450	
NAMEPLATE, Rear Fender (Refer Group 12 Illustrations)				
ATTACHING PARTS				
Nameplate To Fender				
CLIP 64 08	26.077	2	400 0160	
CLIP 63-64 10	23.009	8	400 0266	
CLIP 60 80: 64 80	.....	8	437 7405	
CLIP 63 80	12.075	8	400 0573	
CLIP, Sealed ..... 65 18-88 ..... *(Replaces 400 1353)*	.....	10	400 0266	#
NUT, Sealed ..... 64 01 (10 Req.): 65 07 (4 Req.): 63-64 10 (8 Req.): 63 80 (5 Req.)	.....	AR	400 0674	

Copyright 1963 American Motors Corp.

GROUP NO. — DESCRIPTION — YEAR and MODEL		PRIMARY GROUP NO.	PER CAR	PART NO.	CODE
	MEDALLION, Rear Fender (Refer Group 12 Illustrations)				
	ATTACHING PARTS				
	Medallion To Fender				
CLIP	62 86	.....	6	437 7405	
	PLUG, Rear Fender Drain				
62 16-86		.....	4	400 0107	
	PLUG, Rear Fender Courtesy Light Hole				
63 10-80		17.494	2	G142079	
	BRACE, Rear Quarter Outer Panel (Center)				
64 07-09-19-89		.....	2	350 0324	
	EXTENSION, Rear Quarter Center Brace Lower				
65 59 (Marlin)		.....	2	354 2796	#
12.128	**MOULDING, Rear Fender (Refer Group 12 Illustrations)**				
	ATTACHING PARTS				
	Top Moulding To Rear Quarter Panel				
CLIP, Plastic	65 15-18-85-88 (14 Req.): 65 16-17-19-86-87-89 (20 Req.)	.....	AR	400 1339	#
CLIP, Anti-Slide	65 18 (W3S-3 Req.): 65 18 (L3S-2 Req.)	.....	AR	400 1549	
BOLT, Tee	65 15-16-17-19-85-86-87-89	27.200	2	400 0374	
NUT, Hexagon	65 15-16-17-19-85-86-87-89	25.052	2	439 0742	
	Side Moulding To Rear Outer Panel				
BOLT, Tee	61 01 (Super-2 Req.)(Custom-4 Req.)	26.034	AR	342 8516	
BOLT, Tee	62 05-08 (Custom)(400): 63 04-06	26.032	4	400 0200	
BOLT, Tee	60 10-20 (Super)	.....	6	439 6733	
BOLT, Tee	64 15-16-18 (660)	.....	2	400 0394	
BOLT, Tee	64 15-16-18-19 (770)	.....	2	400 1409	
BOLT, Tee	64 65-88-89	26.032	2	400 0665	
BOLT, Tee	65 10 (770)	.....	2	400 1365	
BOLT, Tee	65 88 (990-WWO)	.....	4	400 1532	
NUT, Hexagon	62 05-08 (Custom)(400): 63 04-06	17.412	4	G271166	NA
NUT, Hexagon	64 85-88-89	.....	2	439 0742	
NUT, Sealed	61 01 (Super-2 Req.)(Custom-4 Req.) ***(Replaces 345 5631)***	26.039	AR	400 0060	
NUT, Sealed	64-65 15-16-18-19	12.078	2	400 0523	
NUT, Tee	60 10-20 (Super)	26.077	6	341 1607	
CLIP	61 02-04-06-07 (Super-18 Req.)(Custom-22 Req.): 61 05-08 (Super-12 Req.)(Custom-16 Req.) ***(Replaces 343 0792)***	12.078	AR	346 4507	
CLIP	60 10-20 (Super)	12.078	6	344 0529	
CLIP	64 15-18 (660-12 Req.): 64 16 (660-20 Req.)	26.032	AR	400 0871	
CLIP	64 15-18 (770-12 Req.): 64 16-19 (770-20 Req.)	26.032	AR	400 0872	
CLIP	64 85 (14 Req.): 64 89 (22 Req.)	26.032	AR	400 0868	
CLIP	65 88 (LWO)	.....	4	400 1569	
CLIP, Plastic	65 17-19 (18 Req.): 65 15-18 (770-12 Req.)	26.032	AR	400 1507	
CLIP, Plastic	65 06 (330-18 Req.): 65 05-08 (330-12 Req.)	.....	AR	400 0761	
CLIP, Plastic	65 05 (440-12 Req.): 65 07-09 (440-440-H-18 Req.)	26.032	AR	400 0759	
CLIP, Plastic	65 88 (990-WWO)	26.034	28	400 1371	

NOTE 12.128-1: Three Types of Rear Quarter Outer Panel Lower Front Side Mouldings were used on the 64 09(H). They are identified as follows:

Type 1: Is used with the first type Rear Quarter Outer Panel. Refer Note 12.125-1 Type 1.

Type 2: Is approximately 6" long and is used with the second type Rear Quarter Outer Panel. Refer Note 12.125-1 Type 2.

Type 3: Is approximately 26" long and is used with the second type Rear Quarter Outer Panel. Refer Note 12.125-1 Type 2.

Copyright 1963 American Motors Corp.

GROUP NO. — DESCRIPTION — YEAR and MODEL		PRIMARY GROUP NO.	PER CAR	PART NO.	CODE
	Top Rear Moulding To Rear Quarter Outer Panel				
SCREW, Tapping	65 10-80	17.660	2	G161860	
NUT, Sealed	65 15-16-17-19-85-86-87-89	23.087	2	400 0391	
CLIP	65 18-88	23.009	2	400 0506	
CLIP, Anti-Slide	64 10 (770)	26.032	4	400 0577	
CLIP, Anti-Slide	65 01	26.032	2	400 0760	
CLIP, Anti-Slide	65 88 (WWO)	.....	4	400 1546	
RETAINER	62 02-04-06-07 (Custom-22 Req.)(400-22 Req.): 62 05-08 (Custom-16 Req.)(400-16 Req.): 63 01 (22 Req.): 63 05-08 (16 Req.)	26.032	AR	400 0131	
RETAINER	63 15-18 (14 Req.): 63 16 (22 Req.)	23.078	AR	400 0428	
FASTENER, Bolt	65 85-86-87-89	.....	4	400 1567	
	Upper Side Moulding To Rear Outer Panel				
BOLT, Tee	63 07-09	26.032	4	400 0200	
BOLT, Tee	60 10-20 (Custom): 62 10 (Custom)(400)	27.200	2	400 0374	
BOLT, Tee	63 15-18	.....	4	400 0385	
BOLT, Tee	63 16	12.078	4	400 0638	
SCREW, Tapping	60 80	17.648	2	G161400	NA
NUT, Hexagon	63 07-09	17.412	4	G271166	NA
NUT, Hexagon	62 10 (Custom)(400)	25.052	2	439 0742	
NUT, Sealed	63 15-18	12.078	4	400 0523	
NUT, Sealed	63 16	.....	4	400 0639	
NUT, Tee	60 10-20 (Custom)	26.077	2	341 1607	
CLIP, Nylon	63 07-09	26.032	22	400 0131	
CLIP, Wire	62 15-18 (Custom-12 Req.)(400-12 Req.): 62 16 (Custom-18 Req.)(400-18 Req.): 62 80 (Custom-14 Req.)(400-14 Req.)	12.078	AR	400 0381	
CLIP, Plastic	62 15-18 (Custom-17 Req.)(400-17 Req.): 62 16 (Custom-18 Req.)(400-18 Req.): 62 80 (Custom-14 Req.)(400-14 Req.)	12.078	AR	400 0435	
CLIP, Plastic	63 15-18 (20 Req.): 63 16 (36 Req.)	12.078	AR	400 0428	
FASTENER	60-61 10-20 (Custom): 60-61 80	.....	16	344 6003	
	Center Moulding To Rear Outer Panel				
BOLT, Tee	60 10-20 (Custom)	.....	6	439 6733	
BOLT, Tee	61 10-20-80: 62 80 (400)	.....	4	400 0385	
BOLT, Tee	60 80	27.200	4	400 0374	
NUT, Tee	60 10-20 (Custom-6 Req.): 60 80 (4 Req.)	26.077	AR	341 1607	
NUT, Hexagon	61 10-20-80: 62 80 (400)	25.052	4	439 0742	
CLIP, Wire	60 10-20 (Custom)	12.078	6	344 0529	
CLIP, Plastic	61 10-20 (14 Req.): 61 80 (12 Req.): 62 80 (400-12 Req.) ***(Replaces 400 0380)***	23.078	AR	400 0428	
CLIP, Wire	60 80	12.078	12	344 5889	
	Rear Lower Moulding To Rear Quarter Outer Panel				
SPACER	65 15-16 (660)	.....	2	353 0680	
WASHER, Prestite	65 15-16 (660)	.....	4	400 1448	
NUT, Sealed	65 15-16 (660)	23.078	4	400 0391	
SCREW, Tapping	65 18 (660)	.....	4	400 1451	
	Lower Side Moulding To Rear Outer Panel				
BOLT, Tee	60 10-20 (Custom)	26.034	2	342 8516	
BOLT, Tee	61 10-20-80: 62 80 (Custom)(400)	.....	4	400 0385	
SCREW, Tapping	64 09 (H-Note 12.128-1 Type 1)	.....	10	400 0398	
SCREW, Tapping	64 09 (H-Note 12.128-1 Type 3): 65 01	.....	8	400 0892	
SCREW, Tapping	60 80	17.648	2	G161400	NA
SCREW, Tapping	63 80	12.078	4	400 0398	
NUT, Tee	60 10-80 (Custom)	26.077	2	341 1607	
NUT, Hexagon	64 09	.....	4	400 0614	
NUT, Hexagon	61 10-20-80 (2 Req.): 62 80 (Custom-4 Req.)				
NUT, Hexagon	64 09 (H-Note 12.128-1 Type 2)	26.039	2	400 0517	
	(400-4 Req.)	25.052	AR	439 0742	
CLIP, Wire	60 10-20 (Custom) ***(Replaces 343 0792)***	12.078	4	346 4507	
CLIP, Plastic	61 10-20 (14 Req.): 61 80 (12 Req.): 62 15-18-80 (Custom-12 Req.)(400-12 Req.): 62 16 (Custom-18 Req.)(400-18 Req.) ***(Replaces 400 0380)***	23.078	AR	400 0428	

Copyright 1963 American Motors Corp.

GROUP NO. — DESCRIPTION — YEAR and MODEL		PRIMARY GROUP NO.	PER CAR	PART NO.	CODE
CLIP, Steel	63 85-88 (2 Req.): 63 86 (5 Req.)	12.078	AR	400 0595	
FASTENER, Bolt	64 09	.....	6	400 0851	
FASTENER, Snap In	64 09 (4 Req.): 65 01 (10 Req.)	.....	AR	400 0850	
FASTENER	64 09 (H-Note 12.128-1 Type 2)	12.078	2	400 0857	
FASTENER	60 80	.....	16	344 6003	
SEALER	64 09 (H-Note 12.128-1 Type 2)	.....	2	400 0753	
WASHER, Plain	65 10	.....	2	400 1448	
	Wheel Opening Moulding To Rear Quarter Outer Panel				
SCREW, Tapping	64 80: 65 10-80	.....	8	400 0892	#
EXTENSION, Rear Fender Moulding (Refer Group 12 Illustrations)					
ATTACHING PARTS					
	Extension Moulding To Fender				
SCREW, Tapping	60 80 (5/8" Long)	26.060	4	439 2504	
SCREW, Tapping	60 80 (1/2" Long)	17.648	2	G161400	NA
CLIP, Wire	62 18 (Custom)(400)	.....	4	400 0119	
CLIP, Wire	62 85 (Deluxe)	26.039	4	400 0117	
CLIP, Wire	62 88 (Custom)(400)	12.125	4	437 7405	
CLIP, Plastic	62 18 (Custom)(400)	26.039	4	400 0436	
CLIP, Plastic	62 85 (Deluxe)	26.039	4	400 0434	
CLIP, Tubular	65 01 (330-440)	.....	2	400 0506	
	Extension Upper Moulding To Fender				
SCREW, Tapping	61 10-20 (Custom): 61 80	17.648	2	G161400	NA
WASHER, Angle	61 15-25 (Custom-4 Req.): 61 18-28 (Custom-2 Req.): 61 85 (4 Req.): 61 88 (2 Req.)	.....	AR	400 0422	
NUT, Hexagon	61 15-25 (Custom-4 Req.): 61 18-28 (Custom-2 Req.): 61 85 (4 Req.): 61 88 (2 Req.)	25.052	AR	439 0742	
CLIP, Wire	62 15-16 (Custom)(400)	.....	6	400 0119	
CLIP, Wire	62 85 (Custom)(400)	26.039	4	400 0117	
CLIP, Plastic	62 15-16 (Custom)(400)	26.039	6	400 0436	
	Extension Lower Moulding To Fender				
BOLT, Tee	61 85 (Custom)	.....	2	346 0271	
BOLT, Tee	61 88 (Custom)	.....	2	346 0268	
NUT, Hexagon	61 80 (Custom)	25.052	2	439 0742	
CLIP, Plastic	62 15-16-85 (Custom-4 Req.)(400-4 Req.): 61 80 (Custom-2 Req.) ***(Replaces 400 0380)***	.....	AR	400 0428	
RETAINER, Rear Fender Side Moulding End					
(Left) 65 01 (330)		.....	1	400 0769	
(Left) 65 01 (440)		.....	1	400 0767	
(Right) 65 01 (440)		.....	1	400 0766	
(Right) 65 01 (330)		.....	1	400 0768	
ORNAMENT, Rear Fender (Refer Group 12 Illustrations)					
ATTACHING PARTS					
	Front Ornament To Fender				
FASTENER	62 86 (400)	26.034	2	400 0414	
CLIP	62 86 (400)	26.034	4	400 0452	
	Side Ornament To Fender				
BOLT, Tee	63 10	.....	2	400 0394	
BOLT, Tee	61 80	12.078	2	346 6081	
NUT, Pal	61 10-20 (Custom)	12.078	6	344 1668	
NUT, Sealed	63 10	.....	2	400 0639	

Copyright 1963 American Motors Corp.

GROUP NO. — DESCRIPTION — YEAR and MODEL		PRIMARY GROUP NO.	PER CAR	PART NO.	CODE
	Rear Ornament To Fender				
STUD	62 10 (Custom)(400)	.....	2	400 0423	
SCREW, Tapping	62 10 (Custom)(400)	17.648	2	G161400	NA
WASHER, Angle	62 10 (Custom)(400)	.....	2	400 0422	
NUT, Hexagon	62 10 (Custom)(400)	25.052	2	439 0742	
NUT, Lock	62 80 (Custom)(400)	.....	2	400 0392	
PANEL, Rear Fender (Refer Group 12 Illustrations)					
ATTACHING PARTS					
	Side Finish Panel To Fender				
SCREW, Tapping	62 80 (400): 63 80	12.078	4	400 0398	
SCREW, Tapping	64 80	.....	10	400 0892	
FASTENER	63 80	.....	4	400 0623	
FASTENER	64 80	.....	6	400 0676	
	Extension Finish Panel To Fender				
SCREW, Tapping	62 85 (400)	12.078	4	400 0398	
SCRRW, Tapping	65 88 (990)	.....	4	400 1382	
CAP, Rear Fender Lower Moulding (Refer Group 12 Illustrations)					
ATTACHING PARTS					
	Cap To Fender				
NUT, Lock	60 10-20 (Custom)	12.078	4	344 1668	
12.136 OVERLAY KIT, Rear Quarter Panel (Incl. Left & Right)					
63 10-80		.....	1	320 4841	
12.168 RAIL, Bumper (Front)					
60 01		.....	1	315 5078	
61 Thru 63 01		.....	1	344 8494	
64-65 01		.....	1	350 0900	
61-62 10-20: 62 80		.....	1	344 7930	
63 10-80 (Note 12.168-1 Type 1)	*(Ref. Pr. List)*	.....	1	316 6502	
63-64 10-80 (Note 12.168-1 Type 2)		.....	1	316 9393	
65 10		.....	1	351 6010	
61 80		.....	1	344 7934	
65 80		.....	1	351 6011	
(Left) 60 10-20-80		.....	1	344 3501	
(Right) 60 10-20-80		.....	1	344 3500	
ATTACHING PARTS					
	Rail To Fender Reinforcement				
BOLT, Hexagon	60 01	17.038	2	G181638	NA
WASHER, Plain	60 01 *(Replaces 800 0169)*	17.814	4	400 1107	
WASHER, Lock	60 01	17.820	2	G120382	NA
NUT, Hexagon	60 01	17.406	2	G120369	NA

NOTE 12.168-1: Two Types of Front Bumper Rails were used on the 63 10-80 Series. They can be identified as follows:
Type 1: Inner Back Bar Bolt Hole is located on the Crease Line.
Type 2: Inner Back Bar Bolt Hole is located 1-1/2" below the Crease Line.

Copyright 1963 American Motors Corp.

GROUP NO. — DESCRIPTION — YEAR and MODEL		PRIMARY GROUP NO.	PER CAR	PART NO.	CODE
	Rail To Support				
BOLT, Carriage	60 Thru 63 01: 60 Thru 62 10-20-80	12.170	2	315 3636	
WASHER, Plain	60 Thru 63 01: 60 Thru 62 10-20-80 ***(Replaces 800 0179)***	17.814	2	400 1106	
WASHER, Lock	60 Thru 63 01: 60 Thru 62 10-20-80	17.820	2	G131100	NA
NUT, Hexagon	60 Thru 63 01: 60 Thru 62 10-20-80	17.406	2	G124573	NA
	Rail To Back Bar				
BOLT, Carriage	60 01	12.170	2	315 5590	
BOLT, Carriage	61 Thru 63 01 (2 Req.): 64 01 (6 Req.): 60 Thru 63 10-20 (2 Req.): 64 10-80 (5 Req.): 60 80 (2 Req.): 61 80 (4 Req.): 62-63 80 (2 Req.)	12.170	AR	315 3636	
BOLT, Carriage	65 01-10-80	.....	6	317 6488	
SPACER	60 01	12.170	2	313 6505	
WASHER, Plain	60 01 ***(Replaces 800 0185)***	17.814	2	400 1122	
WASHER, Plain	61 Thru 63 01 (2 Req.): 65 01 (6 Req.): 60 Thru 63 10-20 (2 Req.): 64 10-80 (4 Req.): 65 10-80 (6 Req.): 60 80 (2 Req.): 61 80 (4 Req.): 62-63 80 (2 Req.) ***(Replaces 800 0179)***	17.814	AR	400 1116	
WASHER, Lock	60 01-10-20-80	17.820	2	G120383	NA
WASHER, Lock	62-63 01-10-80 (2 Req.): 64-65 01 (6 Req.): 64 10-80 (4 Req.): 65 10-80 (6 Req.)	17.820	AR	G131100	NA
WASHER, Fibre	64 01 (6 Req.): 63-64 10-80 (4 Req.)	25.030	4	400 0326	
WASHER, Plain	64 01	17.814	6	400 1116	
NUT, Hexagon	60 01	17.406	2	G120370	NA
NUT, Hexagon	61 Thru 63 01 (2 Req.): 64 01 (6 Req.): 65 01 (6 Req.): 60 Thru 63 10-20 (2 Req.): 64 10-80 (4 Req.): 65 10-80 (6 Req.): 60 80 (2 Req.): 61 80 (4 Req.): 62-63 80 (2 Req.)	17.406	AR	G124573	NA

RAIL, Bumper (Rear)

60 02-05-06 (LWC)	.....	1	315 4559
60 02-05-06 (WWC)	.....	1	315 5578
60 04	.....	1	315 6313
61 Thru 63 01	.....	1	344 8495
64-65 01 (With Back Up Light Holes)	.....	1	350 0901
64 01 (Less Back Up Light Holes)	.....	1	317 0739
61 10-20	.....	1	344 7932
62 15-16-20-85-86	.....	1	346 2500
62 18-88	.....	1	346 2502
63-64 10-80	.....	1	316 6503
65 10-80	.....	1	351 6012
(Left) 60 10-20-80	.....	1	344 3503
(Left) 61 80	.....	1	344 7937
(Right) 60 10-20-80	.....	1	344 3502
(Right) 61 80	.....	1	344 7936

ATTACHING PARTS

	Rail To Fender Reinforcement				
BOLT, Hexagon	60 01	17.038	2	G181638	NA
WASHER, Plain	60 01 ***(Replaces 800 0169)***	17.814	4	400 1107	
WASHER, Lock	60 01	17.820	2	G120382	NA
NUT, Hexagon	60 01	17.406	2	G120369	NA
	Rail To Support				
BOLT, Carriage	60 Thru 63 01: 60 Thru 62 10-20-80	12.170	2	315 3636	
WASHER, Plain	60 Thru 63 01: 60 Thru 62 10-20-80 ***(Replaces 800 0179)***	17.814	2	400 1116	
WASHER, Lock	60 Thru 63 01: 60 Thru 62 10-20-80	17.820	2	G131100	NA
NUT, Hexagon	60 Thru 63 01: 60 Thru 62 10-20-80	17.406	2	G124573	NA

Copyright 1963 American Motors Corp.

GROUP NO. — DESCRIPTION — YEAR and MODEL		PRIMARY GROUP NO.	PER CAR	PART NO.	CODE
	Rail To Back Bar				
BOLT, Carriage	60 01	12.170	2	315 5590	
BOLT, Carriage	61-62 01-10-20-80 (2 Req.): 63 01 (4 Req.): 64 01 (6 Req.): 65 01 (2 Req.): 60 10-20-80 (4 Req.): 63-64 10-80 (6 Req.): 65 10-80 (4 Req.)	12.170	AR	315 3636	
	(6 Req.)	12.170	AR	315 3636	
BOLT, Carriage	65 01-10-80	.....	4	317 6488	
SPACER	60 01	12.170	2	313 6505	
WASHER, Plain	60 01 ***(Replaces 800 0185)***	17.814	2	400 1122	
WASHER, Plain	61-62 01-10-20-80 (2 Req.): 63 01 (4 Req.): 65 01 (6 Req.) 60 10-20-80 (4 Req.): 63-64 10-80 (6 Req.) ***(Replaces 800 0179)***	17.814	AR	400 1116	
WASHER, Lock	60 01 (2 Req.): 60 10-20-80 (4 Req.)	17.820	AR	G120383	NA
WASHER, Lock	62 01-10-80 (2 Req.): 63 01 (4 Req.): 64-65 01 (6 Req.): 63-64 10-80 (6 Req.): 65 10-80 (8 Req.)	17.820	AR	G131100	NA
WASHER, Fibre	64-65 01 (6 Req.): 63-64 10-80 (6 Req.): 65 10-80 (8 Req.)	25.030	AR	400 0326	
NUT, Hexagon	60 01	17.406	2	G120370	NA
NUT, Hexagon	61-62 10-20-80 (2 Req.): 63 01 (4 Req.): 64 01 (6 Req.): 60 10-20-80 (4 Req.): 63-64 10-80 (6 Req.)	17.406	AR	G124573	NA
	Right Rail To Left Rail				
BOLT, Hexagon	61 80	17.038	2	G181637	NA
	COVER, Bumper Rail Back Up Lamp Hole				
164 01 (Can): 63-64 10-80 (Less Back-Up Lights)		.....	2	348 2648	
65 01-10-80 (Less Back-Up Lights)		.....	2	353 0904	

12.169 SUPPORT, Bumper Rail End (Front)

61-63 01: 62 10-80 ***(Replaces 316 0157, 316 0158)***	.....	2	316 3409	
(Left) 60 01	.....	1	313 6760	
(Left) 60 10-20-80	.....	1	315 7874	
(Left) 61 10-20	.....	1	316 0313	
(Left) 61 80	.....	1	316 1490	
(Right) 60 01	.....	1	313 6761	
(Right) 60 10-20-80	.....	1	315 7875	
(Right) 61 10-20	.....	1	316 0314	
(Right) 61 80	.....	1	316 1491	

ATTACHING PARTS

	Support To Front Fender				
BOLT, Hexagon	60 01	17.038	2	G181595	NA
BOLT, Hexagon	61 01-10-20-80 (1-1/4" Dia.)	12.075	2	343 7562	
BOLT, Hexagon	61 Thru 63 01 (7/8" Dia.): 61-62 10-20-80 (7/8" Dia.)	12.075	2	435 5574	
WASHER, Lock	60 01	17.820	2	G120214	NA
WASHER, Plain	61 80 ***(Replaces 800 0157)***	17.814	2	400 0480	
NUT, Hexagon	60 01	17.406	2	G120368	
NUT, Speed	61 Thru 63 01: 61-62 10-20-80	.....	2	315 9512	
	Support To Intake Panel				
WASHER, Lock	60 10-20-80 ***(Replaces 800 0153)***	17.814	2	400 1093	
WASHER, Lock	60 10-20-80	17.820	2	G120214	NA
NUT, Hexagon	60 10-20-80	17.406	2	G120368	

Copyright 1963 American Motors Corp.

GROUP NO. — DESCRIPTION — YEAR and MODEL	PRIMARY GROUP NO.	PER CAR	PART NO.	CODE
SUPPORT, Bumper Rail End (Rear)				
60 10-20-80	.....	2	315 8580	
61-62 10-20: 62 80	.....	2	316 1462	
(Left) 60 01 (LWC)	.....	1	313 6760	
(Left) 60 01 (WWC)	.....	1	313 6758	
(Left) 61 Thru 63 01	.....	1	316 0248	
(Right) 60 01 (LWC)	.....	1	313 6761	
(Right) 60 01 (WWC)	.....	1	313 6759	
(Right) 60 Thru 63 01	.....	1	316 0249	
ATTACHING PARTS				
Support To Rear Fender				
BOLT, Hexagon 60 01-10-20-80	17.038	2	G181595	NA
BOLT, Hexagon ..... 61 01-10-20-80 (1-1/4" Dia.)	12.075	2	343 7562	
BOLT, Hexagon ..... 61 Thru 63 01 (7/8" Dia.): 61-62 10-20-80 (7/8" Dia.)	12.075	2	435 5574	
WASHER, Lock 60 01-10-20-80	17.820	2	G120214	NA
WASHER, Plain 60 01-10-20-80	17.814	2	G120393	NA
NUT, Hexagon 60 01	17.406	2	G120368	
NUT, Speed ..... 60 Thru 63 01: 60 Thru 62 10-20-80	.....	2	315 9512	
PLATE 60 10-20-80	.....	2	315 8579	
12.175 BAR, Front Bumper Back				
(Left) 60 01	.....	1	313 6514	
(Right) 60 01	.....	1	313 6515	
(Inner-Left) 61 Thru 63 01	.....	1	316 0148	
(Inner-Left) 64-65 01	.....	1	317 0974	
(Inner-Left) 60 10-20-80	.....	1	315 8239	
(Inner-Left) 61 10-20	.....	1	316 0272	
(Inner-Left) 62 10-80	.....	1	316 3361	
(Inner-Left) 63 10-80 (Note 12.168-1 Type 1)	.....	1	316 6923	
(Inner-Left) 63 10-80 (Note 12.168-1 Type 2)	.....	1	316 9394	
(Inner-Left) 64 10-80	.....	1	317 1573	
(Inner-Left) 65 10-80	.....	1	317 5308	
(Inner-Left) 61 80	.....	1	316 0707	
(Inner-Right) 61 Thru 63 01	.....	1	316 0149	
(Inner-Right) 64-65 01	.....	1	317 0975	
(Inner-Right) 60 10-20-80	.....	1	315 8238	
(Inner-Right) 61 10-20	.....	1	316 0273	
(Inner-Right) 62 10-80	.....	1	316 3362	
(Inner-Right) 63 10-80 (Note 12.168-1 Type 1)	.....	1	316 6924	
(Inner-Right) 63 10-80 (Note 12.168-1 Type 2)	.....	1	316 9395	
(Inner-Right) 64 10-80	.....	1	317 1574	
(Inner-Right) 65 10-80	.....	1	317 5309	
(Inner-Right) 61 80	.....	1	316 0708	
(Outer-Left) 61 Thru 63 01	.....	1	316 0150	
(Outer-Left) 64-65 01	.....	1	317 0972	
(Outer-Left) 60 10-20-80	.....	1	315 7811	
(Outer-Left) 61 10-20	.....	1	316 0274	
(Outer-Left) 62 10-80	.....	1	316 3359	
(Outer-Left) 63 10-80	.....	1	316 6921	
(Outer-Left) 64 10-80	.....	1	317 1571	
(Outer-Left) 65 10-80	.....	1	317 5310	
(Outer-Left) 61 80	.....	1	316 0709	
(Outer-Right) 61 Thru 63 01	.....	1	316 0151	
(Outer-Right) 64-65 01	.....	1	317 0973	
(Outer-Right) 60 10-20-80	.....	1	315 7812	
(Outer-Right) 61 10-20	.....	1	316 0275	
(Outer-Right) 62 10-80	.....	1	316 3360	
(Outer-Right) 63 10-80	.....	1	316 6922	
(Outer-Right) 64 10-80	.....	1	317 1572	
(Outer-Right) 65 10-80	.....	1	317 5311	

Copyright 1963 American Motors Corp.

GROUP NO. — DESCRIPTION — YEAR and MODEL	PRIMARY GROUP NO.	PER CAR	PART NO.	CODE
ATTACHING PARTS				
Back Bar To Side Sill				
BOLT, Hexagon 60 01	17.038	4	G181650	NA
BOLT, Hexagon ..... 61 01 (2-3/4" Long)	17.038	2	G181677	NA
BOLT, Hexagon ..... 61 01 (3" Long-2 Req.): 62-63 01 (4 Req.)	17.038	AR	G181678	NA
BOLT, Hexagon 64-65 01: 63-64 10-80	.....	4	316 8028	
BOLT, Hexagon ..... 60 Thru 62 10-20-80: 65 10-80	10.427	4	313 1165	
WASHER, Plain ..... 60 01 ..... ***(Replaces 800 0169)***	17.814	8	400 1107	
WASHER, Plain ..... 61 Thru 63 01: 60 Thru 64 10-20-80 (1/8" Thick) ...	17.814	8	800 0185	
WASHER, Plain ..... 61 Thru 63 01: 60 Thru 64 10-20-80 (1/8" Thick): 65 01-10-80 ..... ***(Replaces 800 0185)***	17.814	8	400 1122	
WASHER, Plain ..... 60 10-20-80 (13/64" Thick)	10.050	2	315 4534	
WASHER, Lock 60 01	17.820	4	G120382	NA
WASHER, Lock ..... 61 Thru 64 01: 60 Thru 65 10-20-80	17.820	4	G131100	NA
WASHER, Fibre 63 01	25.030	2	400 0326	
NUT, Hexagon 60 01	17.406	4	G120369	NA
NUT, Hexagon ..... 61 Thru 63 01: 60 Thru 64 10-20-80	17.406	4	800 0247	
NUT, Hexagon 64-65 01: 65 10-80	17.406	4	400 1241	
Inner Bar To Outer Bar				
RIVET, Solid 61 01: 60-61 10-20-80: 63 01	17.540	2	G118067	NA
RIVET, Solid ..... 62 01: 62 Thru 65 10-80	17.540	2	G104267	NA#

12. 178 BAR, Rear Bumper Back

(Left) 61-62 10-20: 62 80	.....	1	316 0311	
(Right) 61-62 10-20: 62 80	.....	1	316 0312	
(Inner-Left) 60 01 (LWC)	.....	1	313 6579	
(Inner-Left) 60 01 (WWC)	.....	1	313 6752	
(Inner-Left) 61 Thru 63 01	.....	1	316 0246	
(Inner-Left) 64-65 01	.....	1	317 0264	
(Inner-Left) 60 10-20-80	.....	1	315 8230	
(Inner-Left) 63-64 10-80	.....	1	316 7031	
(Inner-Left) 65 15-16-17-19	.....	1	317 5814	
(Inner-Left) 65 18-88	.....	1	317 6012	
(Inner-Left) 61 80	.....	1	316 0722	
(Inner-Left) 65 85-86-87-89	.....	1	317 5784	
(Inner-Right) 60 01 (LWC)	.....	1	313 6580	
(Inner-Right) 60 01 (WWC)	.....	1	313 6753	
(Inner-Right) 61 Thru 63 01	.....	1	316 0247	
(Inner-Right) 64-65 01	.....	1	317 0265	
(Inner-Right) 60 10-20-80	.....	1	315 8231	
(Inner-Right) 63-64 10-80	.....	1	316 7032	
(Inner-Right) 65 15-16-17-19	.....	1	317 5815	
(Inner-Right) 65 18-88	.....	1	317 6013	
(Inner-Right) 61 80	.....	1	316 0723	
(Inner-Right) 65 85-86-87-89	.....	1	317 5785	
(Outer-Left) 60 01 (LWC)	.....	1	313 6577	
(Outer-Left) 60 01 (WWC)	.....	1	313 6754	
(Outer-Left) 61 Thru 63 01	.....	1	316 0243	
(Outer-Left) 64-65 01	.....	1	317 0266	
(Outer-Left) 60 10-20-80	.....	1	315 8232	
(Outer-Left) 63 15-16-85-86: 64 15-16-19-85-89	.....	1	316 7091	
(Outer-Left) 63-64 18-88	.....	1	316 7093	
(Outer-Left) 65 15-16-17-19-85-86-87-89	.....	1	317 5826	
(Outer-Left) 65 18-88	.....	1	317 5961	
(Outer-Left) 61 80	.....	1	316 0661	
(Outer-Right) 60 01 (LWC)	.....	1	313 6578	

Copyright 1963 American Motors Corp.

GROUP NO. — DESCRIPTION — YEAR and MODEL		PRIMARY GROUP NO.	PER CAR	PART NO.	CODE
(Outer-Right) 60 01 (WWC)		.....	1	313 6755	
(Outer-Right) 61 Thru 63 01		.....	1	316 0244	
(Outer-Right) 64-65 01		.....	1	317 0267	
(Outer-Right) 60 10-20-80		.....	1	315 8233	
(Outer-Right) 63 15-16-85-86: 64 15-16-19-85-89		.....	1	316 7092	
(Outer-Right) 63-64 18-88		.....	1	316 7094	
(Outer-Right) 65 15-16-17-19-85-86-87-89		.....	1	317 5827	
(Outer-Right) 65 18-88		.....	1	317 5962	
(Outer-Right) 61 80		.....	1	316 0662	
(Auxiliary) 65 10-80		.....	2	317 7370	
ATTACHING PARTS					
Bar To Side Sill					
BOLT, Hexagon	60 01: 60 01 (WWC)	17.038	2	G181650	NA
BOLT, Hexagon	60 01 (LWC)	17.038	2	G189329	NA
BOLT, Hexagon	61 01-10-20-80 (3-1/4" Long): 62 10-80	17.038	4	G181679	NA
BOLT, Hexagon	61 Thru 63 01 (3-5/8" Long): 60 10-20-80	10.427	4	313 1165	
BOLT, Hexagon	64-65 01	17.038	6	G181668	
SPACER	64 18-88	.....	2	316 7029	
WASHER, Plain	60 01 ***(Replaces 800 0165)***	17.814	8	400 1107	
WASHER, Plain	64-65 01	17.814	6	400 1116	
WASHER, Plain	60 10-20-80 (13/16" Thick)	10.050	2	315 4534	
WASHER, Lock	60 01	17.820	4	G120382	NA
WASHER, Lock	61 Thru 63 01 (4 Req.): 64-65 01 (6 Req.): 62 10-80 (4 Req.)	17.820	4	G131100	NA
WASHER, Lock	60 10-20-80	17.820	4	G120383	NA
WASHER, Fibre	63 01	25.030	2	400 0326	
NUT, Hexagon	60 01 ***(Replaces 800 0245)***	17.406	4	400 1233	
NUT, Hexagon	61 Thru 63 01 (4 Req.): 64-65 01 (6 Req.): 60 Thru 62 10-20-80 (4 Req.) ***(Replaces 800 0247)***	17.406	AR	400 1241	
Bar To Bolt					
WASHER, Bolt	63-64 10-80	.....	2	316 7157	
Outer Bar To Rear Cross Sill					
BOLT, Hexagon	63 15-16-85-86: 64 15-16-19-85-89: 65 10-80	17.038	4	316 9831	
BOLT, Hexagon	63-64 18-88	17.038	4	316 9832	
WASHER, Lock	63 Thru 65 10-80	17.820	4	G131100	NA
SPACER	63-64 18-88	.....	2	316 7029	
PLATE, Tapping	63-64 10-80	.....	2	316 7030	
PLATE, Tapping	62 Thru 65 10-80 ***(Replaces 317 7270)***	.....	2	316 7030	
Inner Bar To Outer Bar					
RIVET, Solid	61 Thru 63 01	17.540	2	G118067	NA
RIVET, Solid	60 10-20-80	17.540	2	G118062	NA
RIVET, Solid	65 10-80	17.540	2	G104280	NA
BOLT, Hexagon	61 80	17.038	4	G181670	NA
WASHER, Plain	61 80 ***(Replaces 800 0179)***	17.814	8	400 1116	
NUT, Hexagon	61 80	17.406	4	G120370	NA
Inner Bar To Rear Cross Sill					
BOLT, Hexagon	63 Thru 65 10-80	17.038	2	G181668	NA
WASHER, Lock	63 Thru 65 10-80	17.820	2	G131100	NA
WASHER, Fibre	63-64 10-80	.....	2	316 7157	
BRACKET, Rear Bumper Inner Mounting					
(Left) 60 10-20-80		.....	1	343 2095	
(Left) 61-62 10-20: 62 80		.....	1	316 0712	
(Left) 61 80		.....	1	316 0743	
(Right) 60 10-20-80		.....	1	343 2094	
(Right) 61-62 10-20: 62 80		.....	1	316 0713	
(Right) 61 80		.....	1	316 0744	
ATTACHING PARTS					
Inner Mounting Bracket To Body					
WASHER, Plain	60 Thru 62 10-20-80 ***(Replaces 800 0179)***	17.814	2	400 1116	

Copyright 1963 American Motors Corp.

GROUP NO. — DESCRIPTION — YEAR and MODEL		PRIMARY GROUP NO.	PER CAR	PART NO.	CODE
WASHER, Lock	60 10-20-80	17.820	2	G120383	NA
WASHER, Lock	61-62 10-20-80	17.820	2	G131100	NA
NUT, Hexagon	60 Thru 62 10-20-80	17.406	2	G120370	NA
CUSHION, Rear Bumper Outer Back Bar					
65 15-16-17-19-85-86-87-89		.....	2	317 5823	
12. 184 BAR, Vertical (Front)					
61 Thru 63 01: 60 10-20-80		.....	2	344 3505	
64-65 01		.....	2	354 9053	
61-62 10-20: 62 80		.....	2	344 7939	
63-64 10-80		.....	2	354 9055	
65 10-80		.....	2	354 9051	
61 80		.....	2	344 7941	
(Left) 60 01		.....	1	313 6501	
(Right) 60 01		.....	1	313 6502	
ATTACHING PARTS					
Bar To Bumper Rail					
BOLT, Carriage	60 01	.....	2	315 4530	
BOLT, Hexagon	64-65 01: 65 10-80	17.038	2	G180149	NA
CLAMP	63-64 10-80	.....	2	354 9069	
WASHER, Plain	60 01	17.814	2	800 0185	
WASHER, Plain	61 Thru 63 01: 60 Thru 62 10-20-80	17.814	2	800 0179	
WASHER, Lock	60 01-10-20-80	17.820	2	G120382	NA
WASHER, Lock	61 Thru 63 01: 61 Thru 65 10-20-80	17.820	2	G131100	NA
NUT, Hexagon	60 01	17.406	2	800 0247	
NUT, Hexagon	61 Thru 63 01: 60 Thru 65 10-20-80	17.406	2	G124573	NA
NUT, Retainer	65 01-10-50-80	.....	2	318 1975	#
BAR, Vertical (Rear)					
61 Thru 63 01: 60 10-20-80		.....	2	344 3505	
64-65 05-06-07-09		.....	2	354 9052	
61-62 10-20: 62 80		.....	2	344 7939	
63-64 15-16-19-85-86-89		.....	2	354 9054	
65 15-16-17-19-85-86-87-89		.....	2	354 9050	
61 80		.....	2	344 7941	
(Left) 60 02-05-06 (LWC)		.....	1	315 4555	
(Left) 60 02-05-06 (WWC)		.....	1	313 6502	
(Left) 60 04		.....	1	313 6570	
(Right) 60 02-05-06 (LWC)		.....	1	315 4556	
(Right) 60 02-05-06 (WWC)		.....	1	313 6501	
(Right) 60 04		.....	1	313 6571	
ATTACHING PARTS					
Bar To Bumper Rail					
STUD	65 15-16-17-19-85-86-87-89	1.013	2	316 9998	#
BOLT, Carriage	60 01	.....	2	315 4530	
BOLT, Hexagon	64-65 05-06-07-09: 65 15-16-17-19-85-86-87-89	17.038	2	G180149	NA
BOLT, Hexagon	63-64 15-16-19-85-86-89	17.038	2	G180148	NA
SPACER	60 01	12.170	2	313 6505	
WASHER, Plain	60 01 ***(Replaces 800 0185)***	17.814	2	400 1122	
WASHER, Plain	61 Thru 63 01: 60 Thru 62 10-20-80 (1/16" Thick) ***(Replaces 800 0179)***	17.814	2	400 1116	
WASHER, Plain	60 10-20-80 (13/64" Thick)	10.050	2	315 4534	
WASHER, Lock	60 01-10-20-80	17.820	2	G120382	NA
WASHER, Lock	61 Thru 63 01: 61-62 10-20-80	17.820	2	G131100	NA
NUT, Hexagon	60 01 ***(Replaces 800 0247)***	17.406	2	400 1241	
NUT, Hexagon	61 Thru 63 01: 60 Thru 62 10-20-80	17.406	2	G124573	NA
NUT, Retainer	65 05-06-07-09: 65 15-16-17-19-85-86-87-89	.....	2	318 1975	#

Copyright 1963 American Motors Corp.

GROUP NO. — DESCRIPTION — YEAR and MODEL	PRIMARY GROUP NO.	PER CAR	PART NO.	CODE
OVERLAY, Front And Rear Vertical Bar				
64-65 01: 63 Thru 65 10-80	.....	4	354 9066	
ATTACHING PARTS				
Overlay To Vertical Bar				
NUT, Hexagon..... 64-65 01: 63 Thru 65 10-80	17.412	12	G271172	
12.245 DEFLECTOR, Rear Bumper Stone				
(Left) 60 01 (WWC)	.....	1	313 6875	
(Right) 60 01 (WWC)	.....	1	313 6876	
(Center) 60 01 (WWC)	.....	1	313 6840	
ATTACHING PARTS				
End Deflector To Body				
SCREW, Tapping..... 60 01 (WWC) ..... *(Replaces 800 0103)*	17.671	4	G9411563	
WASHER, Plain..... 60 01 (WWC)	17.814	4	G103339	NA
End Deflector To Bumper Rail				
BOLT, Hexagon ..... 60 01 (WWC)	17.038	4	G100109	NA
STRAP ..... 60 01 (WWC)	.....	4	313 6844	
WASHER, Plain..... 60 01 (WWC)	17.814	4	G103339	NA
WASHER, Lock ..... 60 01 (WWC)	17.820	4	G103319	NA
NUT, Hexagon..... 60 01 (WWC)	17.406	4	G120375	
Center Deflector To End Deflector				
SCREW, Machine..... 60 01 (WWC)	17.610	4	G157728	NA
WASHER, Plain..... 60 01 (WWC)	17.814	4	G103339	NA
(Outer-Right) 60 10-20-80	.....	1	315 7812	
(Outer-Right) 61 10-20	.....	1	316 0275	
(Outer-Right) 62 10-80	.....	1	316 3360	
(Outer-Right) 63 10-80	.....	1	316 6922	
(Outer-Right) 64 10-80	.....	1	317 1572	
(Outer-Right) 65 10-80	.....	1	317 5311	
(Outer-Right) 61 80	.....	1	316 0710	
WASHER, Lock ..... 60 01 (WWC)	17.820	4	G103319	NA
NUT, Hexagon..... 60 01 (WWC)	17.406	4	G120375	
Center Deflector To Body				
SCREW, Tapping..... 60 01 (WWC)	17.670	3	G445656	NA
PANEL, Rear Bumper Splash				
61 Thru 63 01..... *(Replaces 344 6775)(Use 344 6774)*	.....	1	346 7296	
60-61 10-20-80 ..... *(Replaces 344 2499)*	.....	1	316 1199	
62 10-80	.....	1	346 1381	
ATTACHING PARTS				
Panel To Fender				
BOLT, Hexagon 62-63 01	12.075	4	435 5574	
SCREW, Tapping..... 62 10-80 (1/4" Dia.)	17.670	2	G172429	NA
SCREW, Tapping..... 62 10-80 (#14 Dia.)	17.671	2	G455702	NA
WASHER, Plain..... 62 10-80	17.814	2	G120392	NA
WASHER, Lock 62 10-80	17.820	2	G120380	NA
NUT, Speed 62 02-05-06-07	20.085	4	400 0300	
NUT, Speed ..... 62 02-04-05-06-07-08 ..... *(Replaces 343 0264)*	20.085	4	400 0300	
NUT, Spring..... 62 10-80	17.426	2	G447029	
Panel To Fender (Upper)				
BOLT, Hexagon 61 01	12.075	4	435 5574	
SCREW, Tapping..... 60 10-20-80	17.670	2	G172429	NA
WASHER, Plain..... 60 10-20-80	17.814	2	G103339	NA
WASHER, Lock 60 10-20-80	17.820	2	G103319	NA
NUT, Speed 61 01	20.085	2	400 0300	

Copyright 1963 American Motors Corp.

GROUP NO. — DESCRIPTION — YEAR and MODEL	PRIMARY GROUP NO.	PER CAR	PART NO.	CODE
Panel To Fender (Lower)				
BOLT, Hexagon 61 01	17.038	4	G180018	NA
BOLT, Retainer 60-61 10-20-80	.....	2	345 2316	
WASHER, Plain..... 61 01 .....*(Replaces 800 0149)*	17.814	8	400 1089	
WASHER, Plain..... 60-61 10-20-80	17.814	2	G103340	NA
WASHER, Lock 61 01	17.820	4	G120380	NA
WASHER, Lock 60-61 10-20-80	17.820	2	G103320	NA
NUT, Hexagon..... 61 01 (4 Req.): 61 10-20-80 (1/4" Dia.-2 Req.)....	17.406	AR	G120375	
NUT, Hexagon..... 60-61 10-20-80 (5/16" Dia.)	17.406	2	G103025	NA
Panel To Rear Deck Lower Panel				
SCREW, Tapping..... 60 10-20-80	17.666	7	G161711	NA
Panel To Body				
SCREW, Tapping..... 61 01	17.671	5	800 0093	NA
SCREW, Tapping..... 62-63 01 (5 Req.): 63 18-88 (8 Req.).....	17.671	AR	G274773	NA
SCREW, Tapping..... 61-62 10-20-80 .....*(Replaces 800 0103)*	17.671	6	G9411563	
NUT, Spring..... 61 Thru 63 01.....	17.426	5	G447022	
SEAL, Rear Bumper Splash				
63-64 18-88 (LVT)	.....	1	349 0345	
63-64 18-88 (WVT)	.....	1	349 0340	
ATTACHING PARTS				
Seal To Body				
SCREW, Tapping..... 60 01 (LWC) .....*(Replaces 800 0103)*	17.671	6	G9411563	
PLATE..... 60 01 (LWC)	4.219	6	312 6172	
Seal To Bumper				
RETAINER (Center).... 63-64 18-88 (WVT)	.....	1	349 0344	
RETAINER (Left)..... 63-64 18-88 (WVT)	.....	1	349 0343	
RETAINER (Right)..... 63-64 18-88 (WVT)	.....	1	349 0342	
SCREW, Tapping..... 63-64 18-88 (WVT)	17.671	9	G274773	
BRACE, Rear Bumper Splash Panel				
60 Thru 62 10-20-80.....	.....	1	345 2317	
ATTACHING PARTS				
Brace To Cross Sill				
SCREW, Tapping..... 60 Thru 62 10-20-80.....	17.660	1	G161895	NA
SCREW, Tapping..... 60 Thru 62 10-20-80.....*(Replaces 800 0103)*	17.671	1	G9411563	
NUT, Spring..... 60 Thru 62 10-20-80.....	17.426	1	G445446	

Copyright 1963 American Motors Corp.

Copyright 1963 American Motors Corp.

Printed in U.S.A.

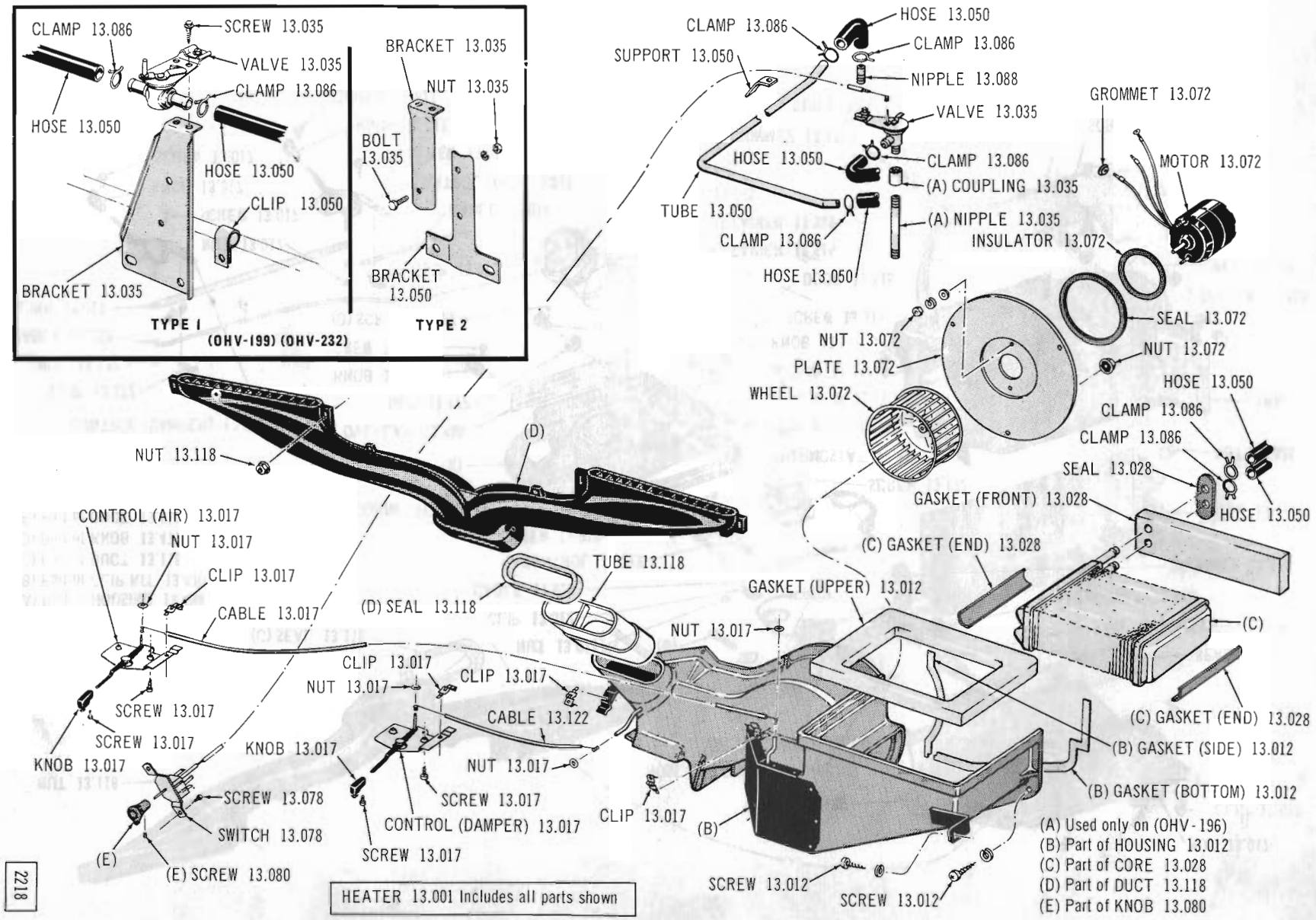

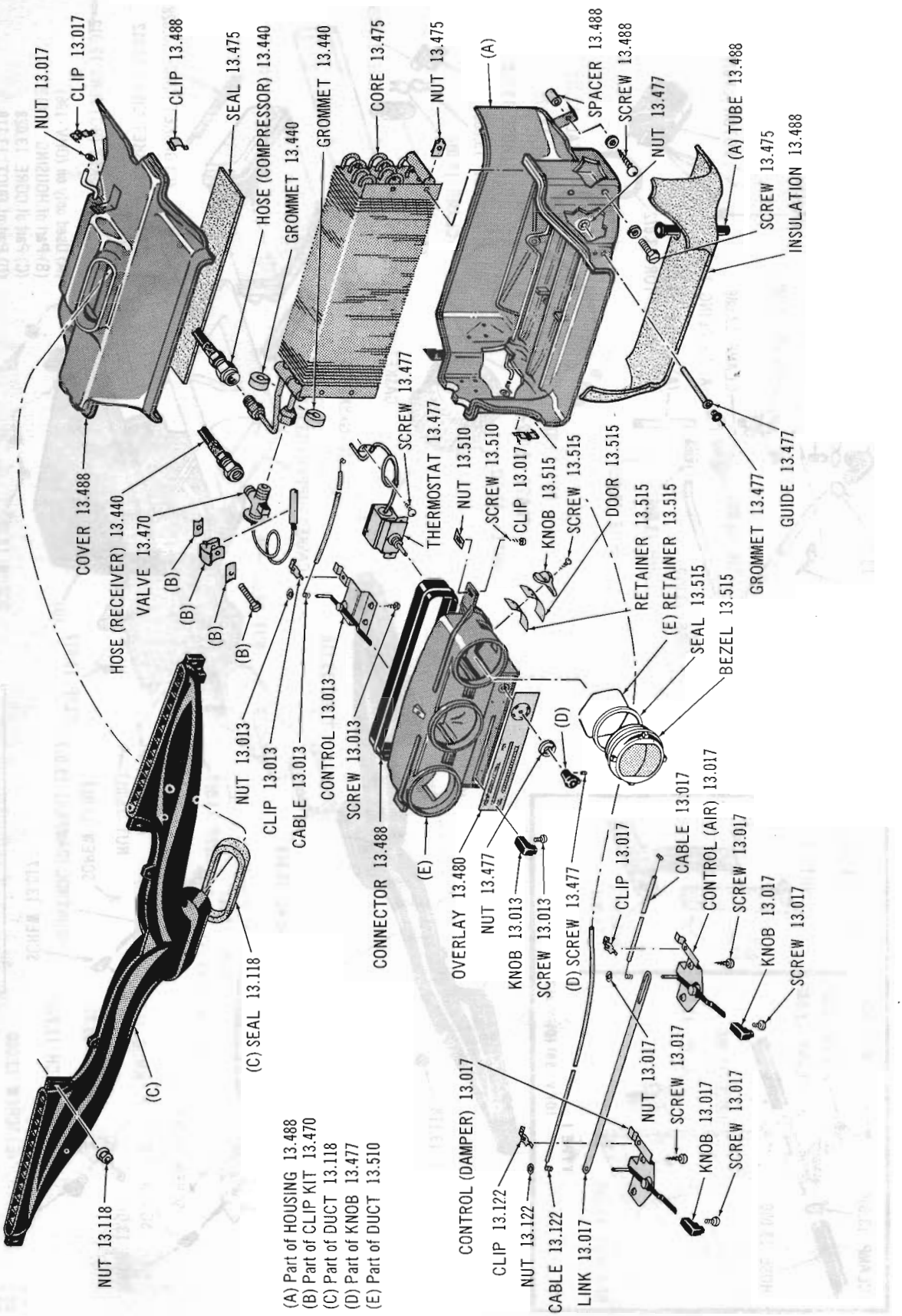

AIR CONDITIONING EVAPORATOR HOUSING AND DUCTS 64-65 01 (WAC)

Copyright 1963 American Motors Corp.

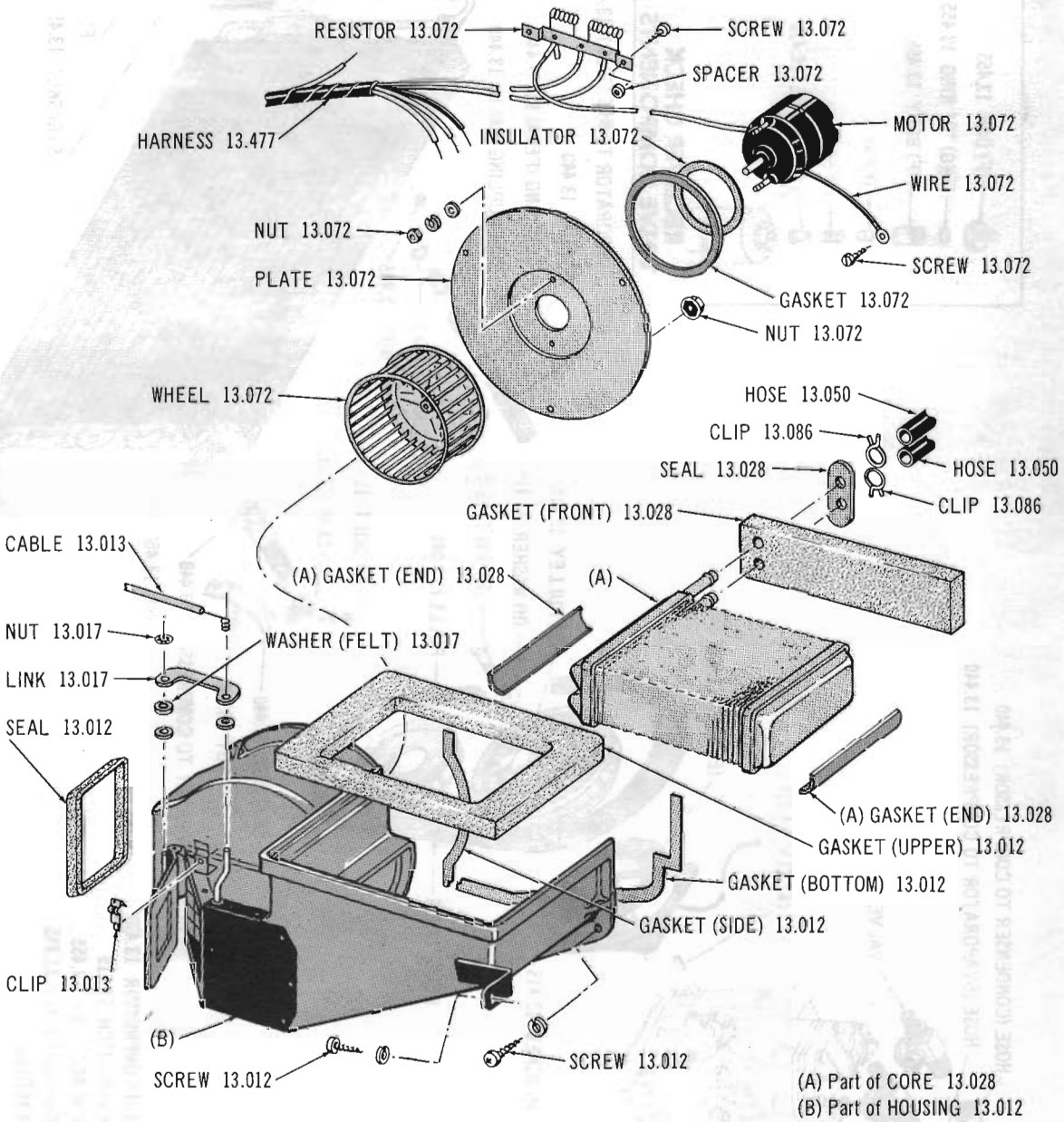

(A) Part of CORE 13.028
(B) Part of HOUSING 13.012

AIR CONDITIONING BLOWER AND HEATER CORE HOUSING 64-65 01 (WAC)

Copyright 1963 American Motors Corp.

AIR CONDITIONING CONDENSER AND RECEIVER 64-65 ALL MODELS (WAC)

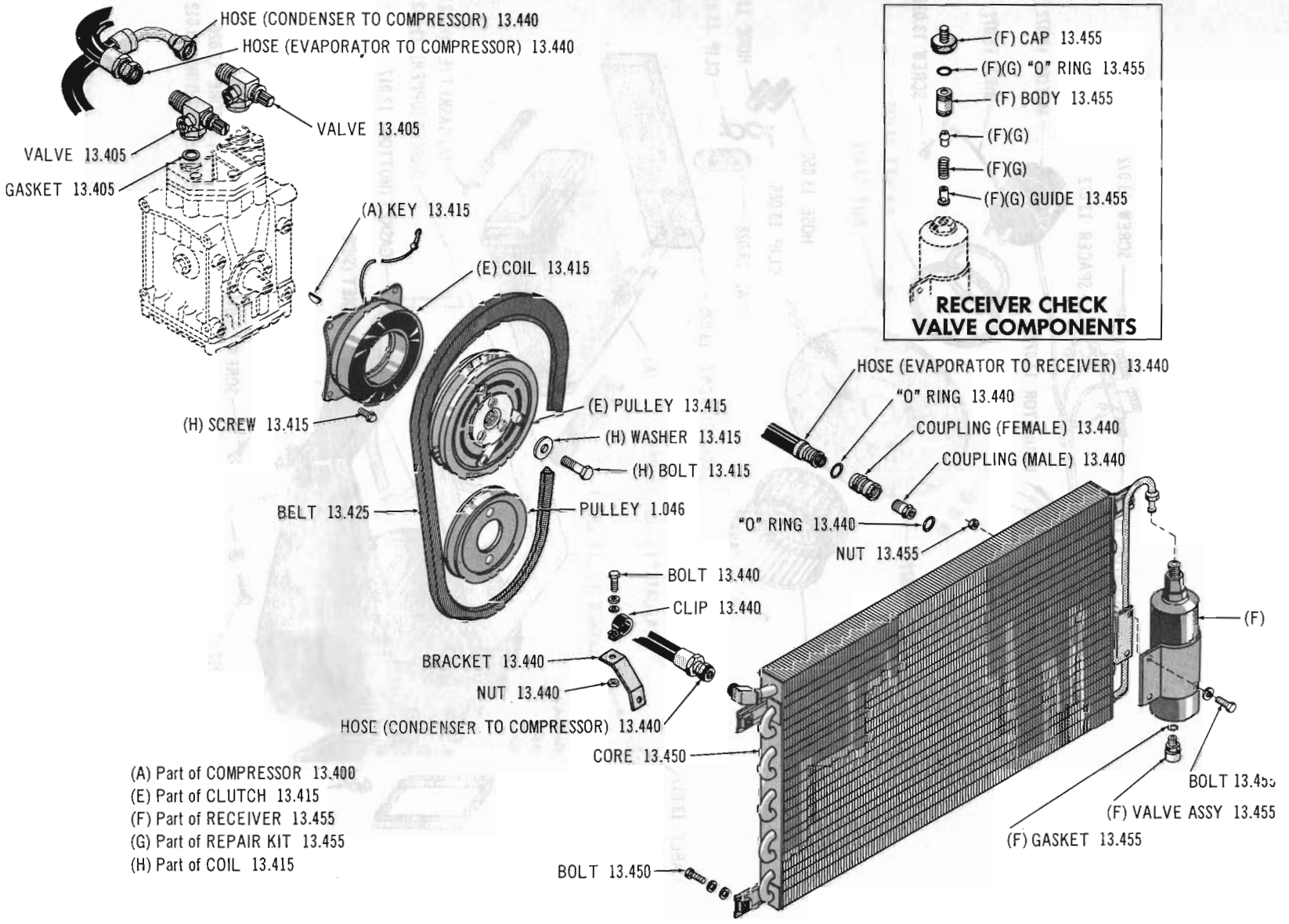

(A) Part of COMPRESSOR 13.400
(E) Part of CLUTCH 13.415
(F) Part of RECEIVER 13.455
(G) Part of REPAIR KIT 13.455
(H) Part of COIL 13.415

Copyright 1963 American Motors Corp.

Printed in U.S.A.

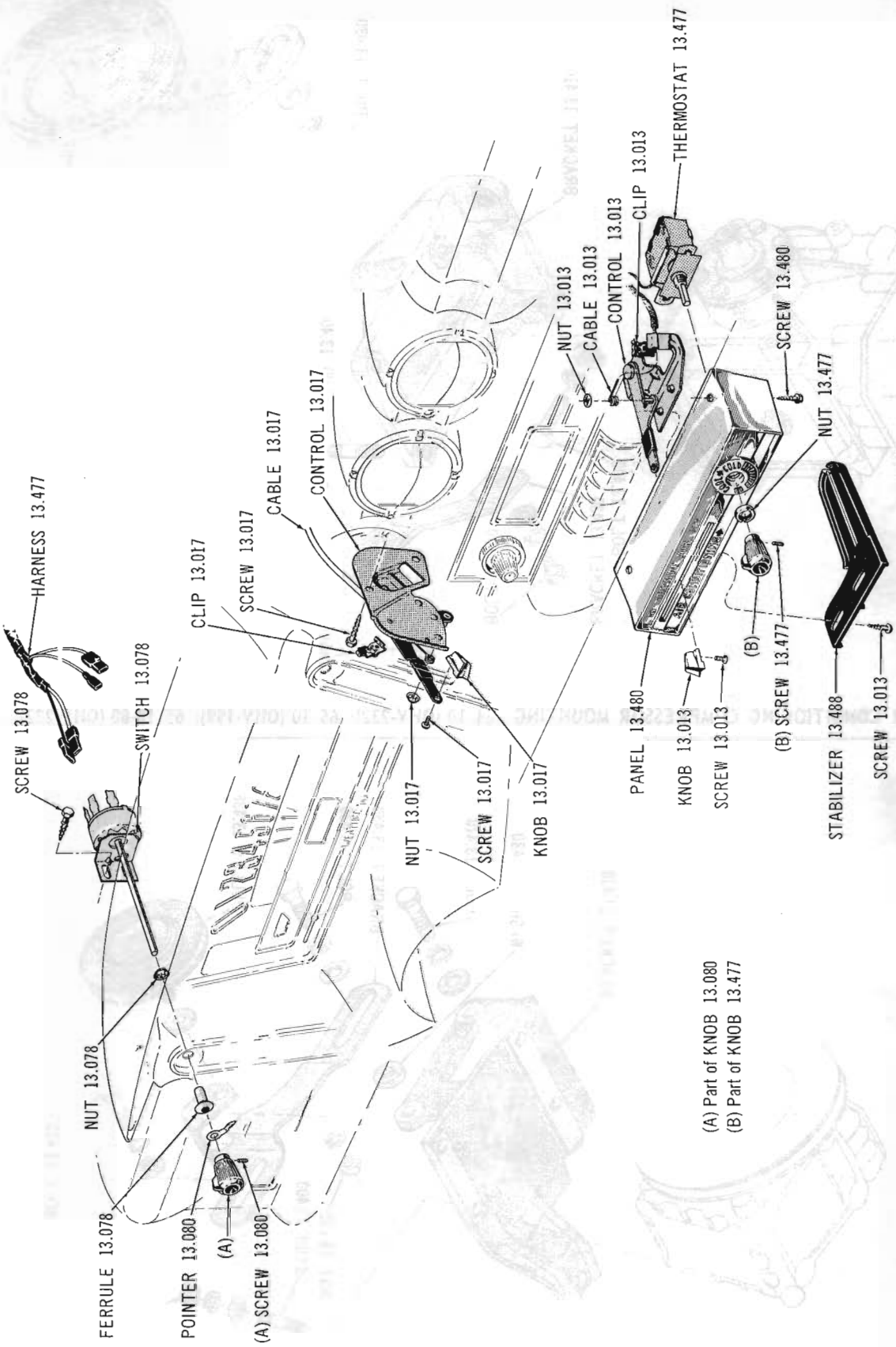

AIR CONDITIONING CONTROLS 64 10-80 (WAC)

Copyright 1963 American Motors Corp.

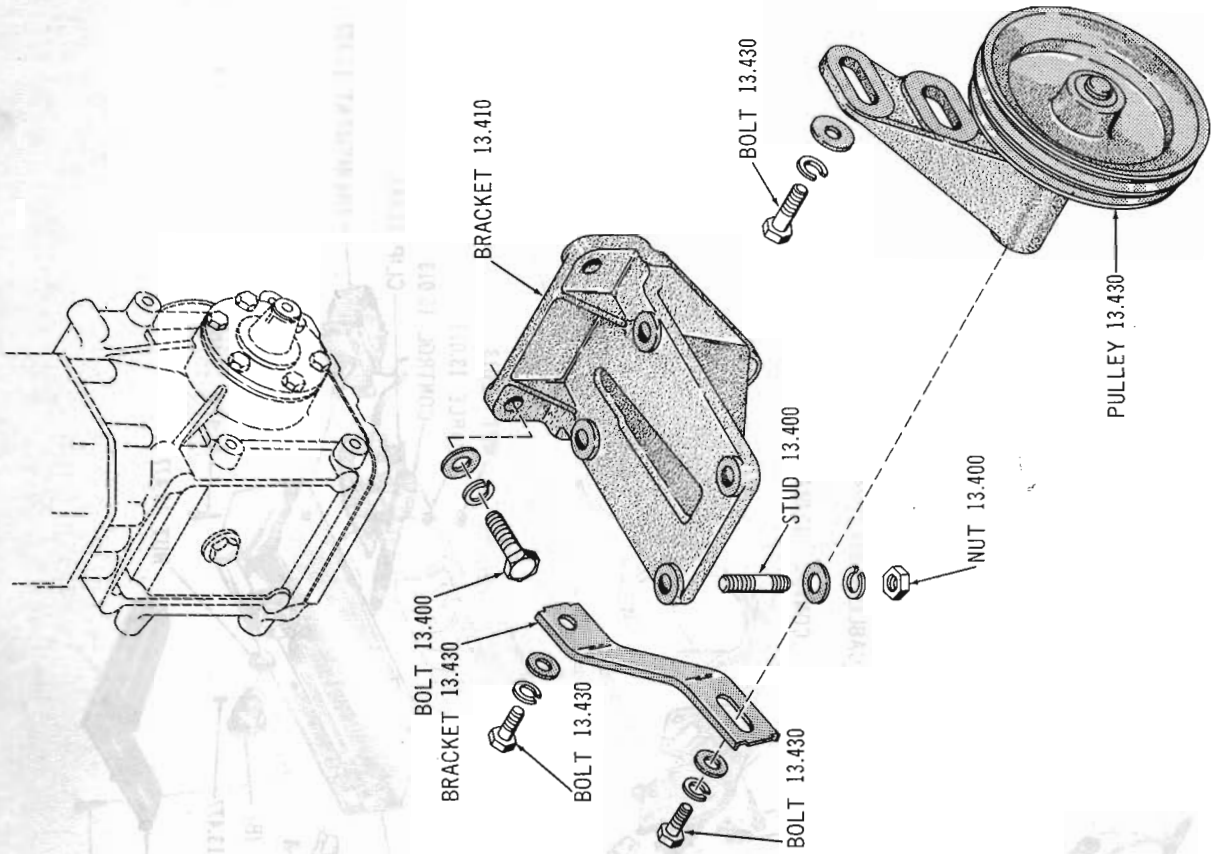

AIR CONDITIONING COMPRESSOR MOUNTING 64 10 (OHV-232): 65 10 (OHV-199): 65 10-80 (OHV-232)

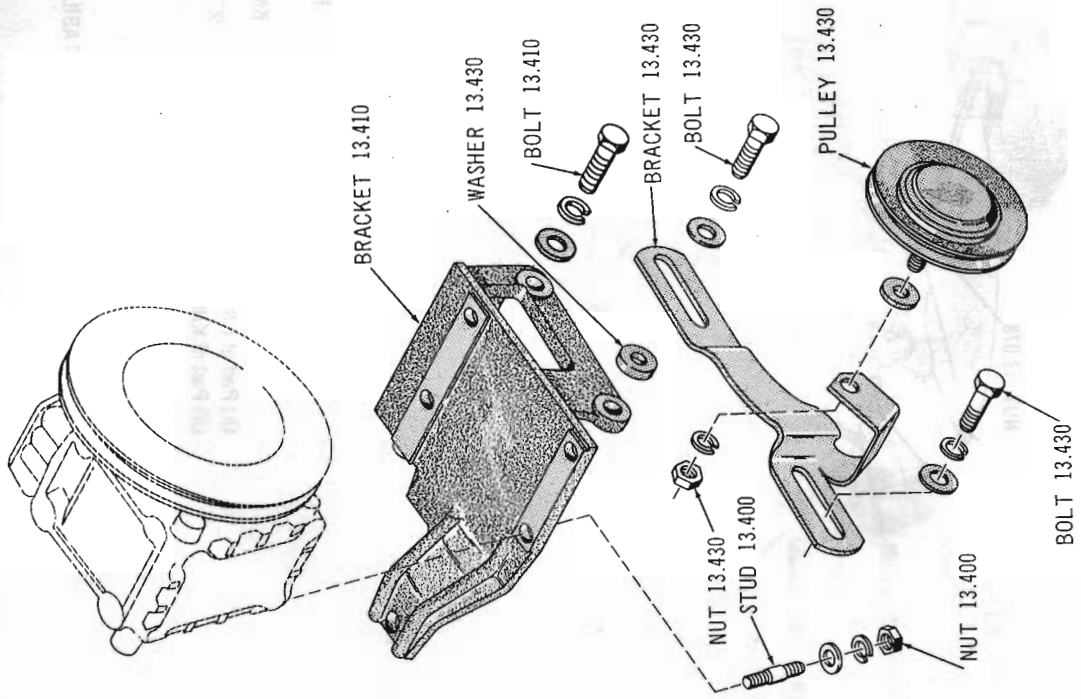

AIR CONDITIONING COMPRESSOR MOUNTING 64-65 10-80 (V8-LPS)

Copyright 1963 American Motors Corp.

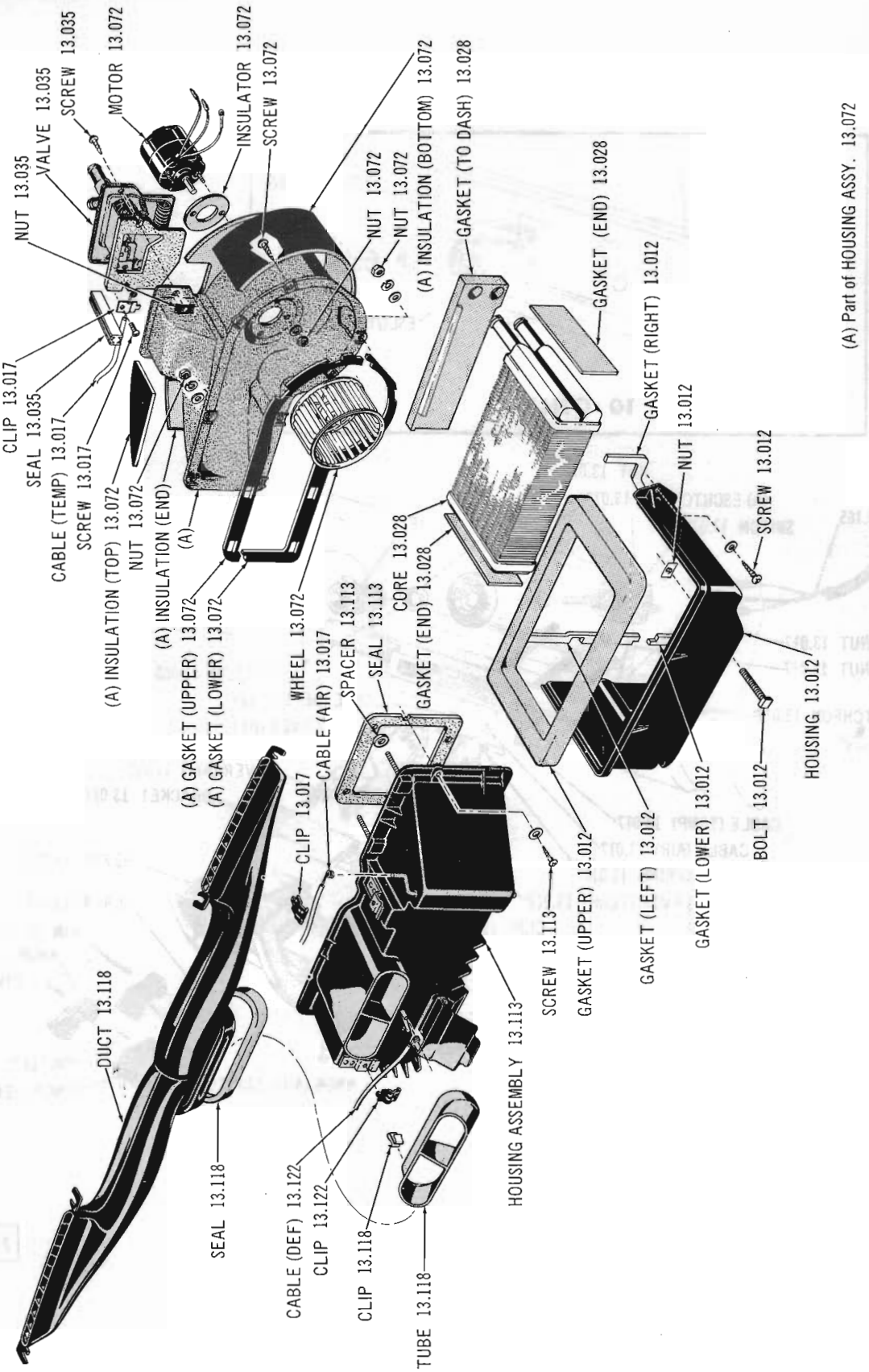

HEATER AND BLOWER HOUSINGS 65 10-80

Copyright 1963 American Motors Corp.

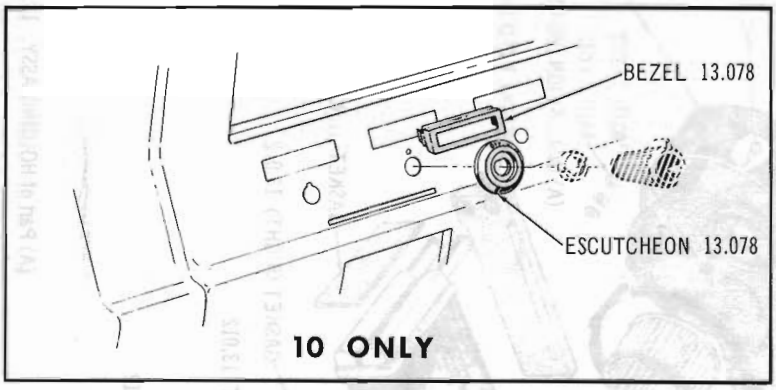

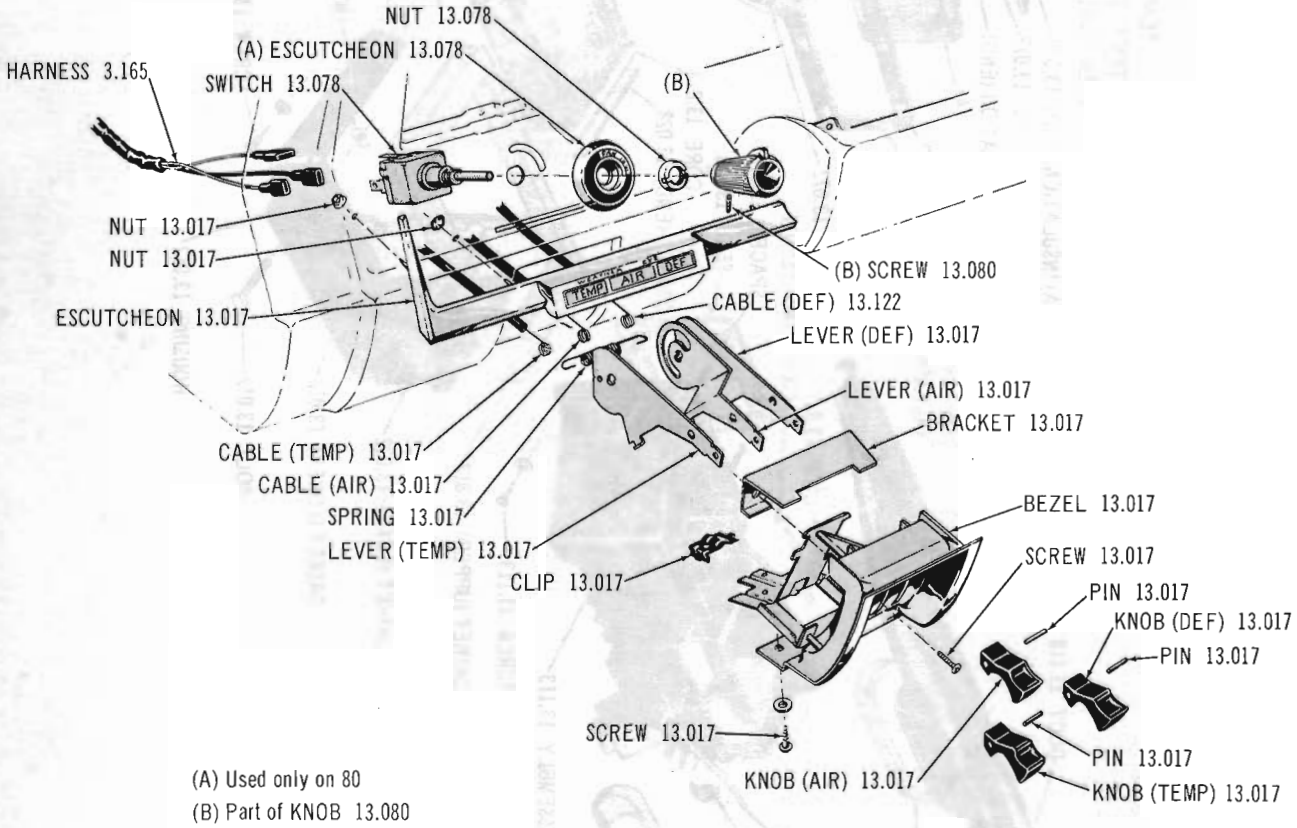

(A) Used only on 80
(B) Part of KNOB 13.080

2105

HEATER CONTROLS 65 10-80 (LAC)

Copyright 1963 American Motors Corp.

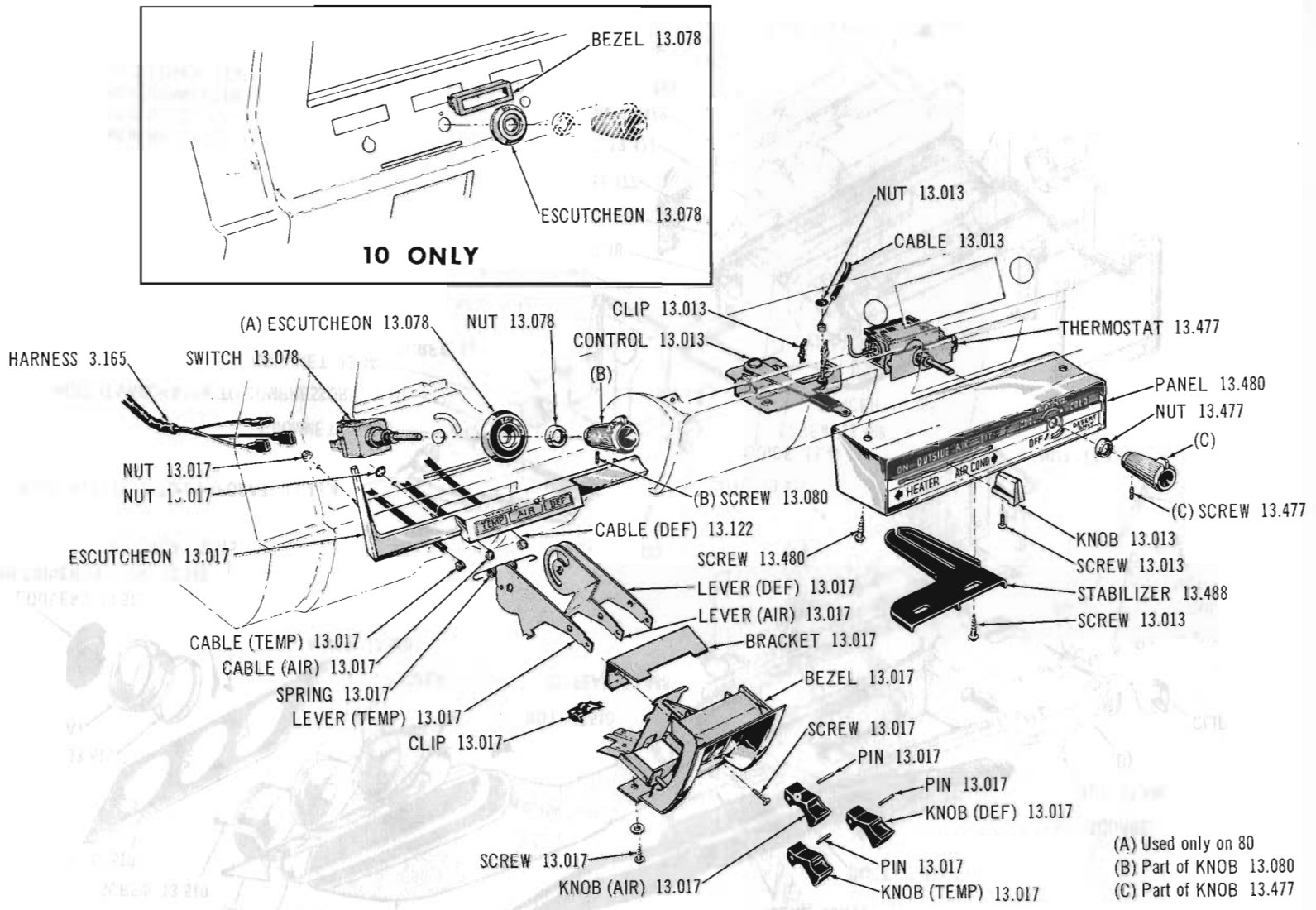

2106

F-14063 Rev. 6 - 24 - 65

Copyright 1963 American Motors Corp.

Printed in U.S.A.

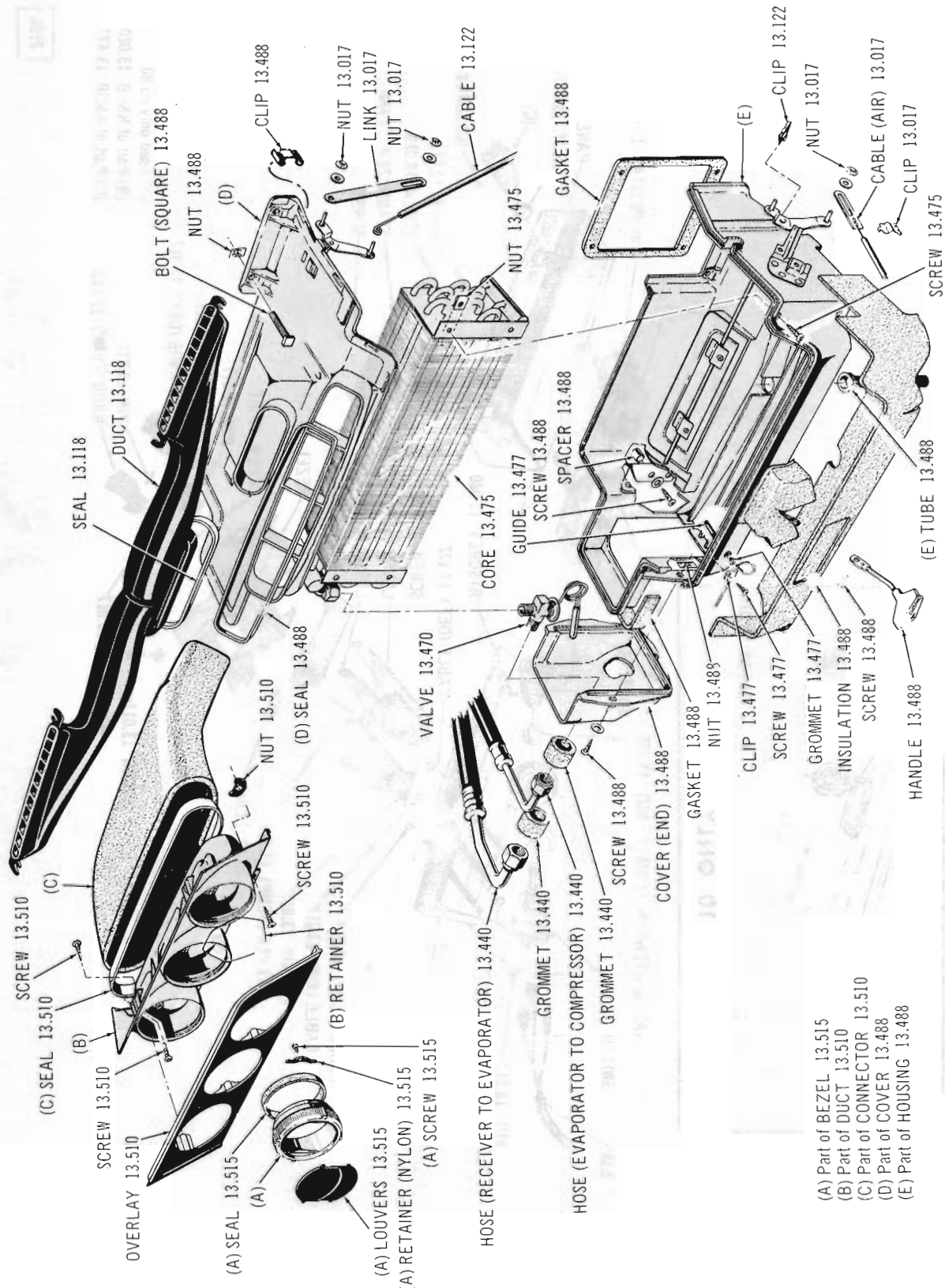

AIR CONDITIONING EVAPORATOR HOUSING AND DUCTS 65 10-80 (WAC)

Copyright 1963 American Motors Corp.

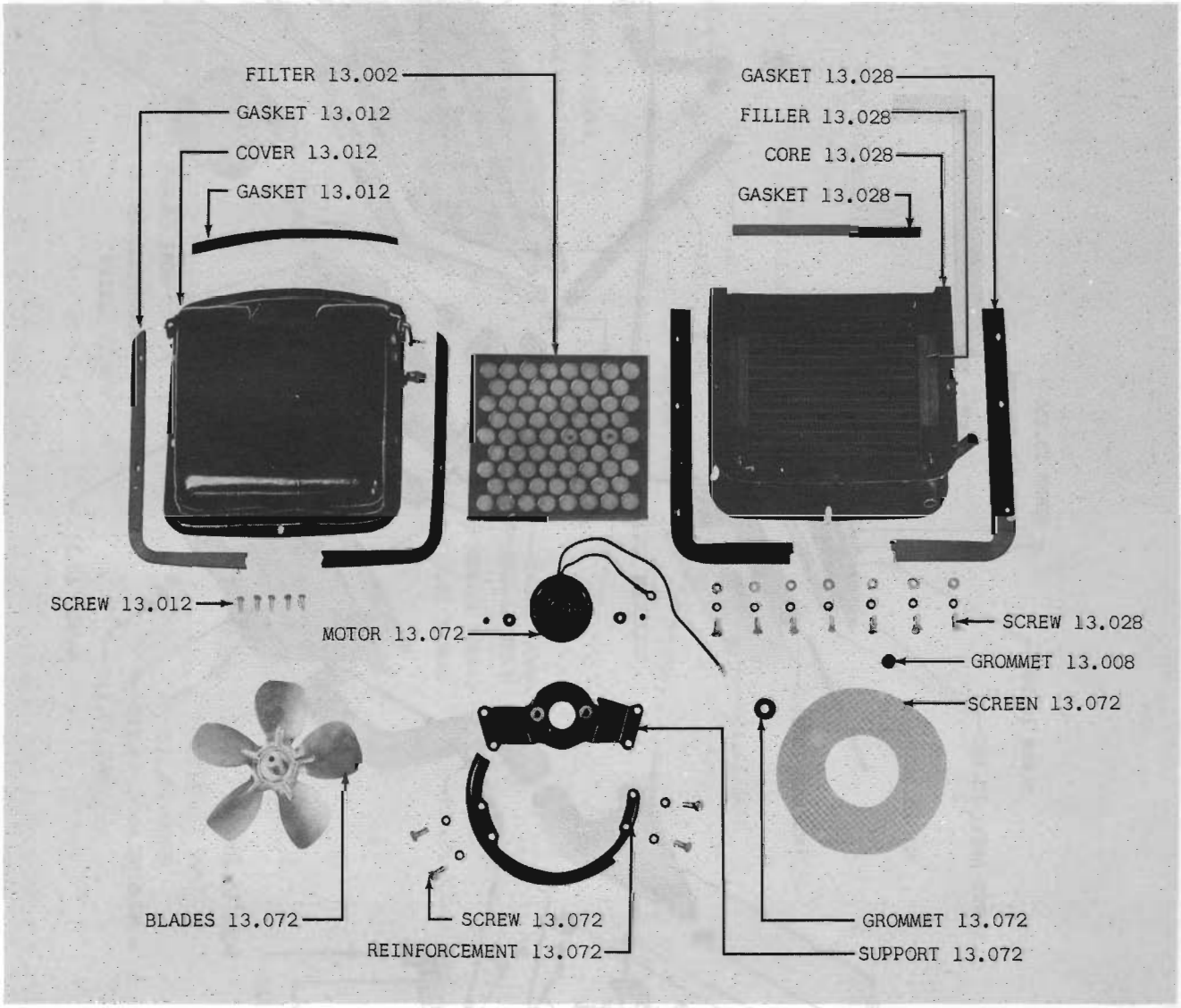

FIG. 13.001-1 HEATER 60 01 (LHE)(FIRST TYPE)

Printed in U.S.A.

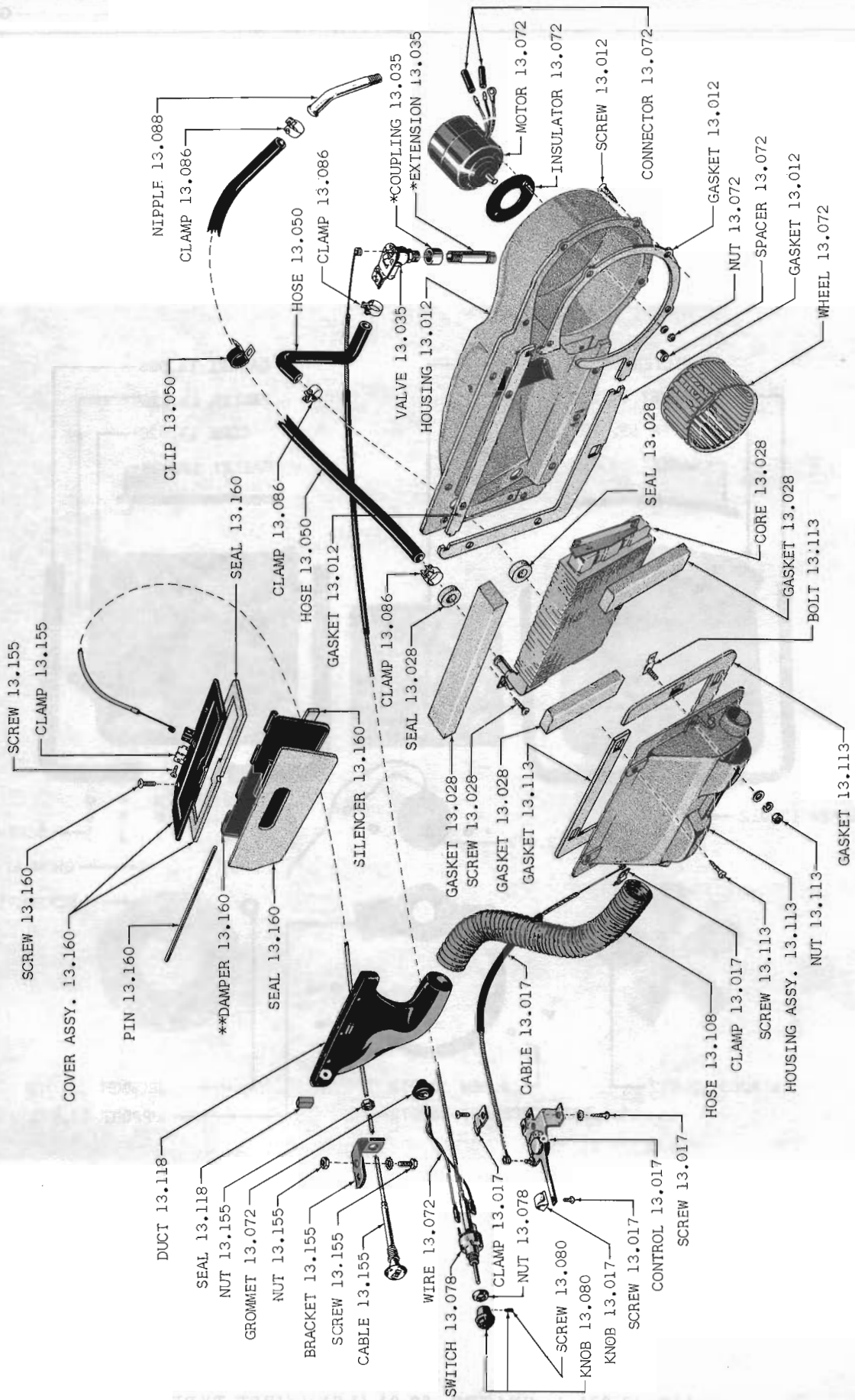

* USED ONLY ON (OHV)
** INCLUDES SEAL AND SILENCER

FIG. 13.001-2 HEATER AND FRESH AIR INTAKE 61 THRU 63 01

Printed in U.S.A.

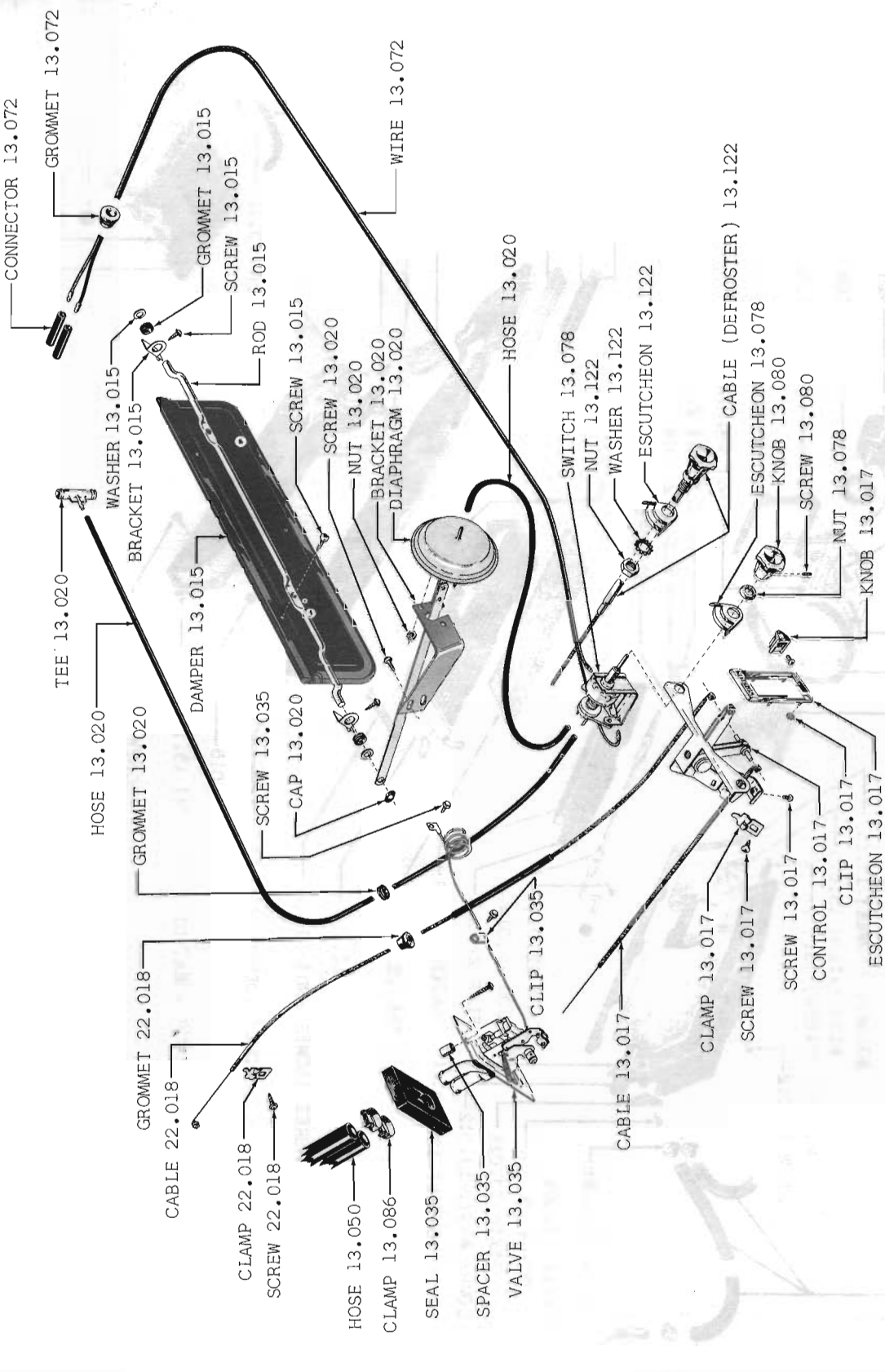

FIG. 13.001-3 HEATER CONTROLS 60 10-20-80

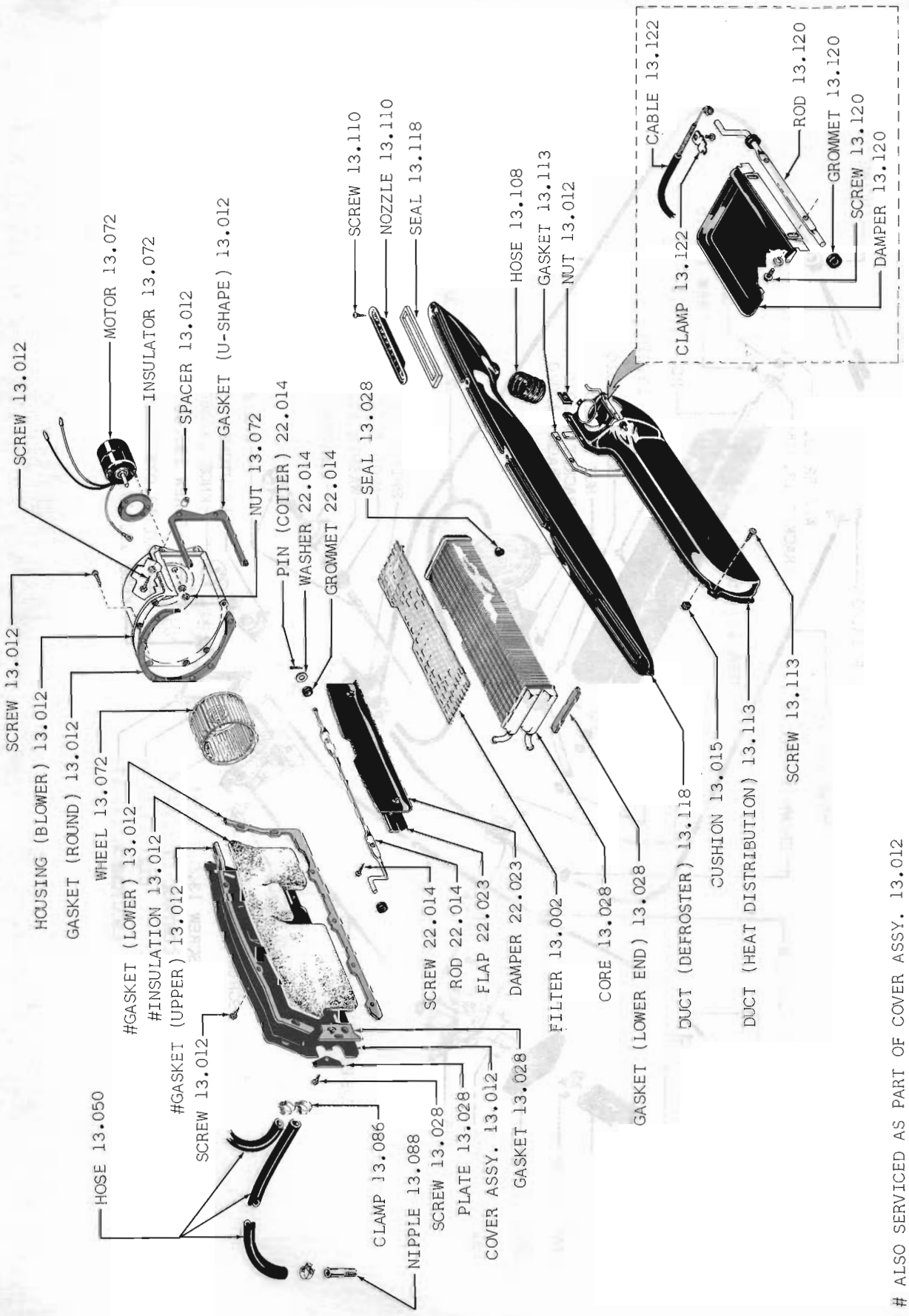

FIG. 13.001-4 HEATER DUCTS, CORE AND COVER 60 10-20-80

Printed In U.S.A.

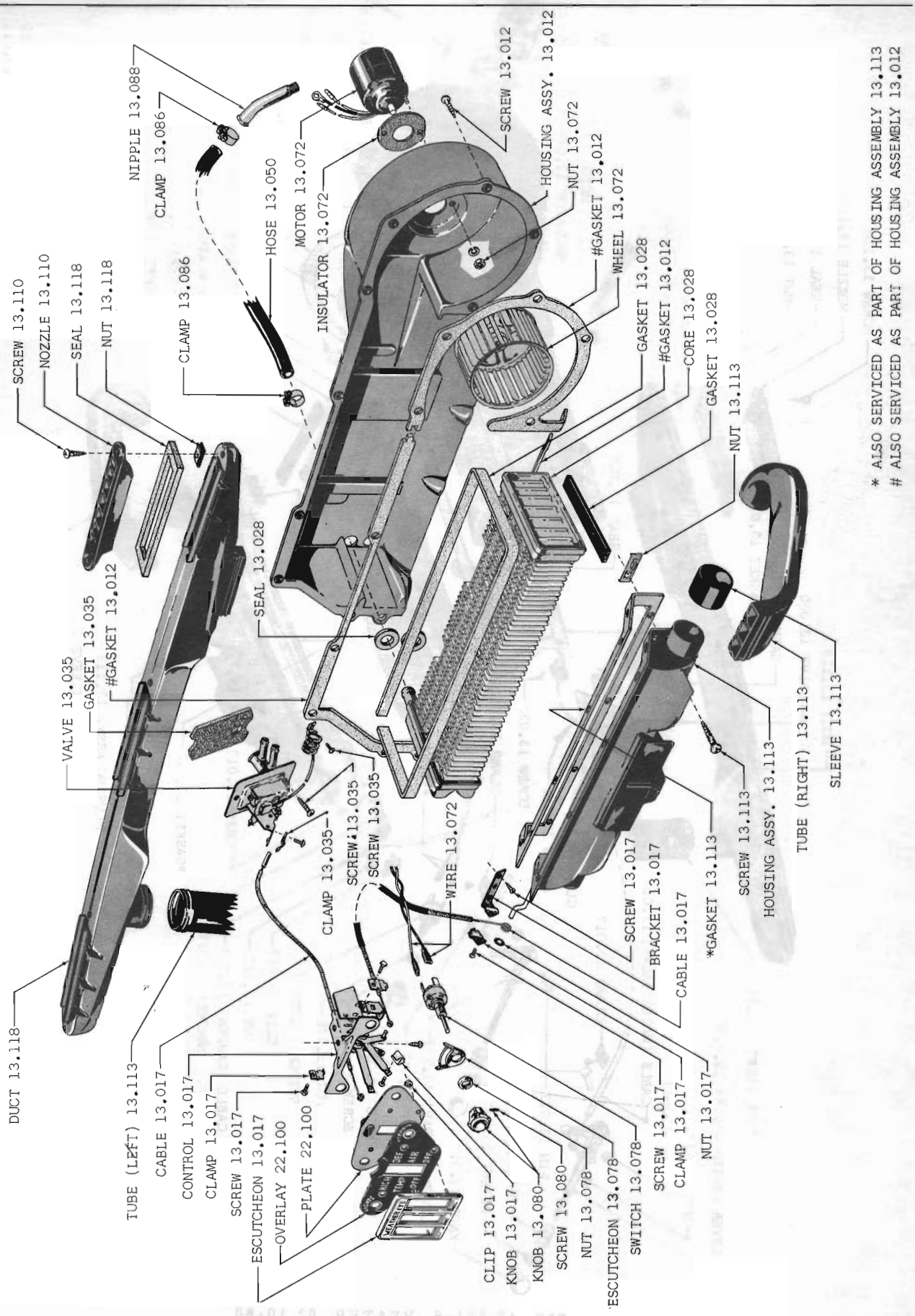

FIG. 13.001-5 HEATER 61 10-20-80

Printed in U.S.A.

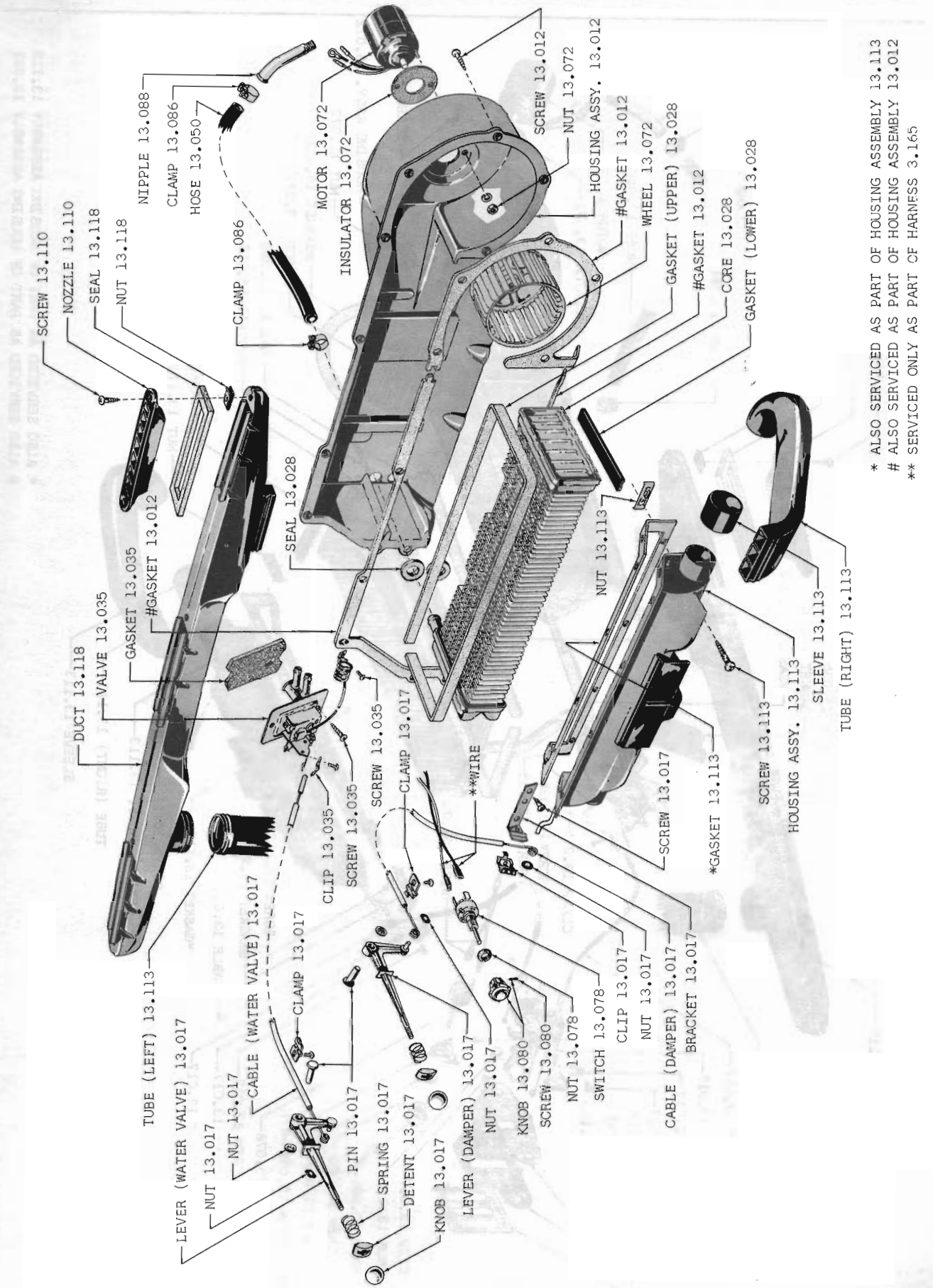

* ALSO SERVICED AS PART OF HOUSING ASSEMBLY 13.113
\# ALSO SERVICED AS PART OF HOUSING ASSEMBLY 13.012
** SERVICED ONLY AS PART OF HARNESS 3.165

FIG. 13.001-6 HEATER 62 10-80

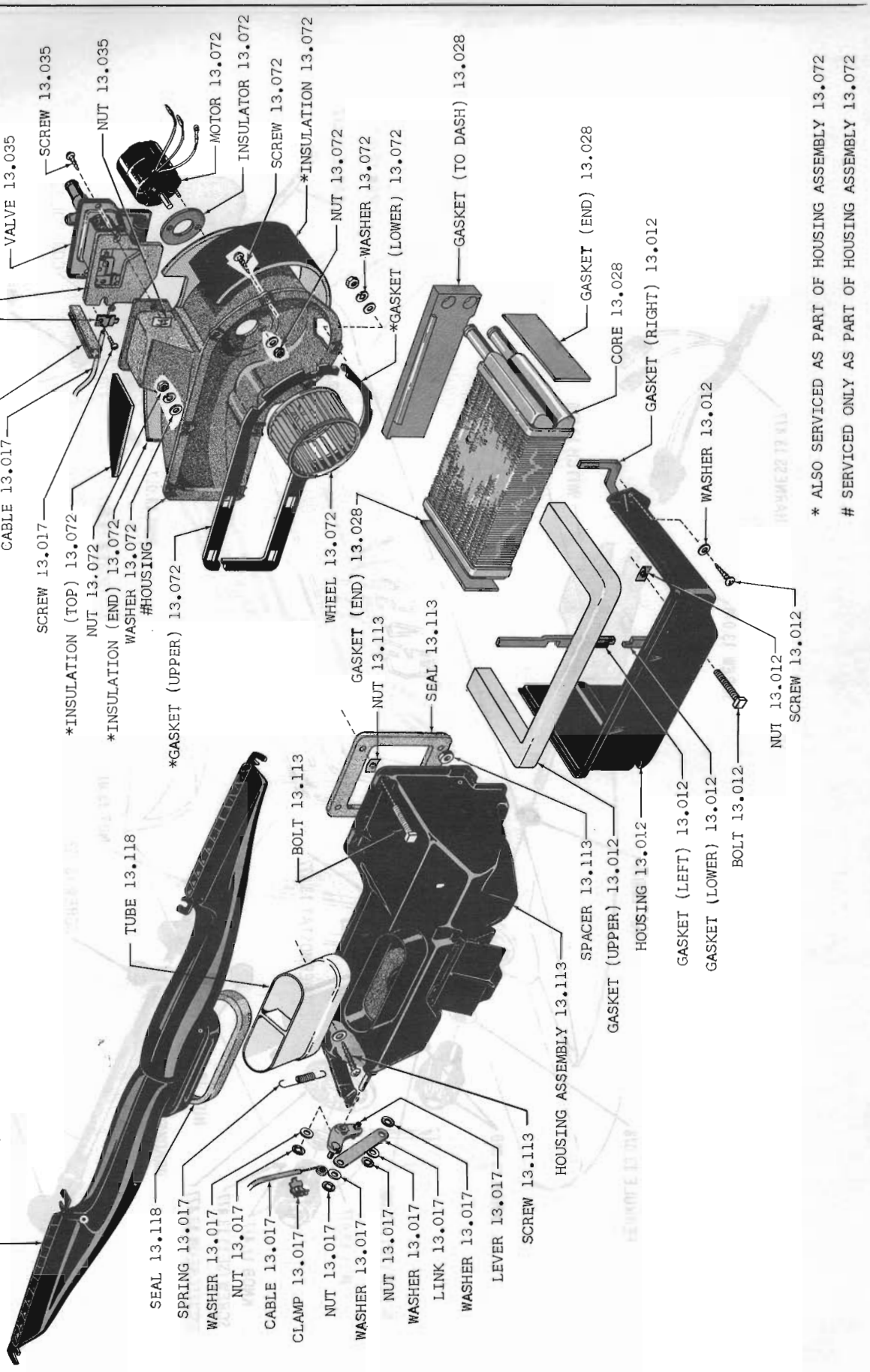

FIG. 13.001-7 HEATER AND BLOWER HOUSING 63-64 10-80

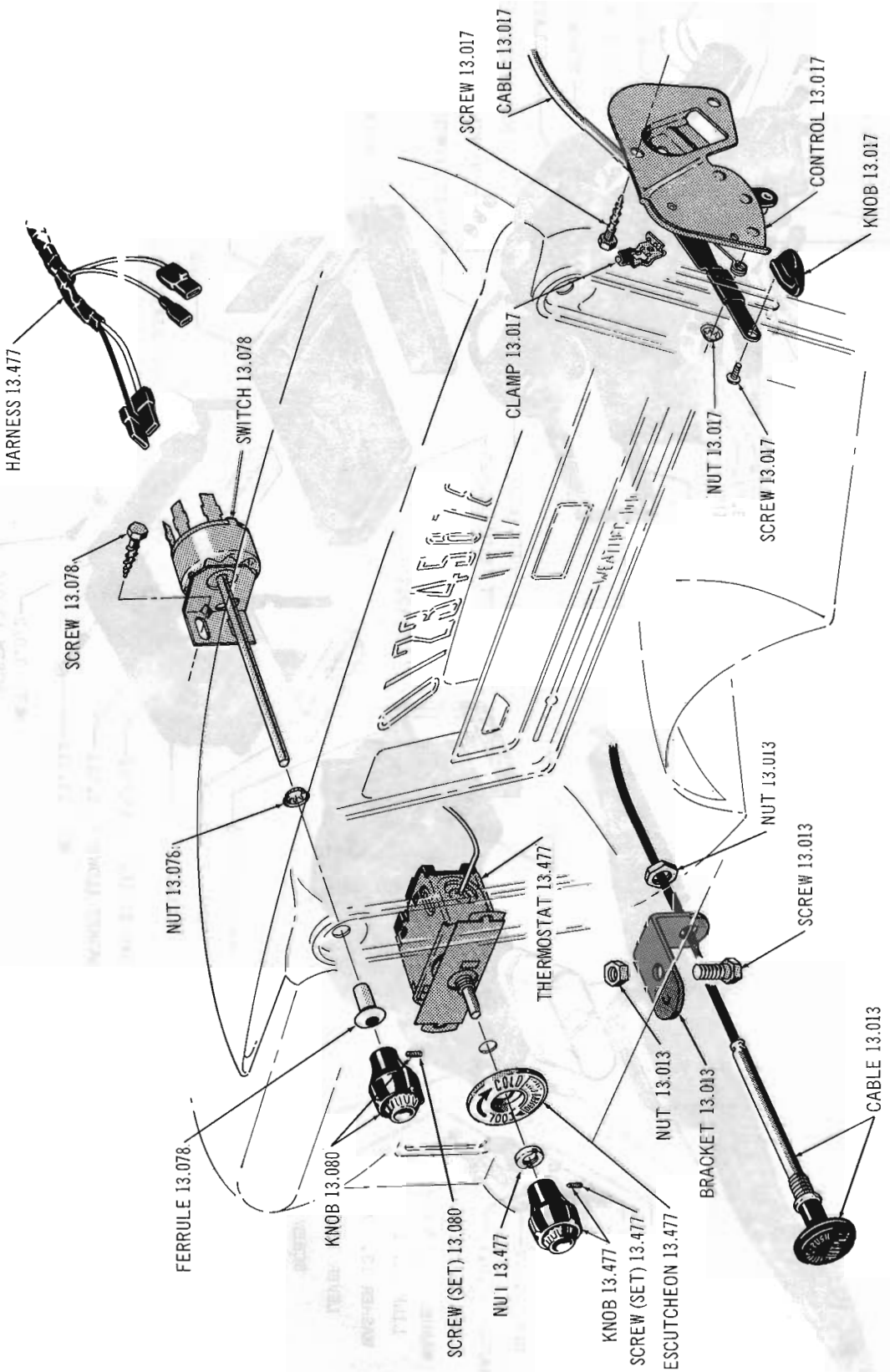

FIG. 13.013-3 AIR CONDITIONING CONTROLS 63 10-80

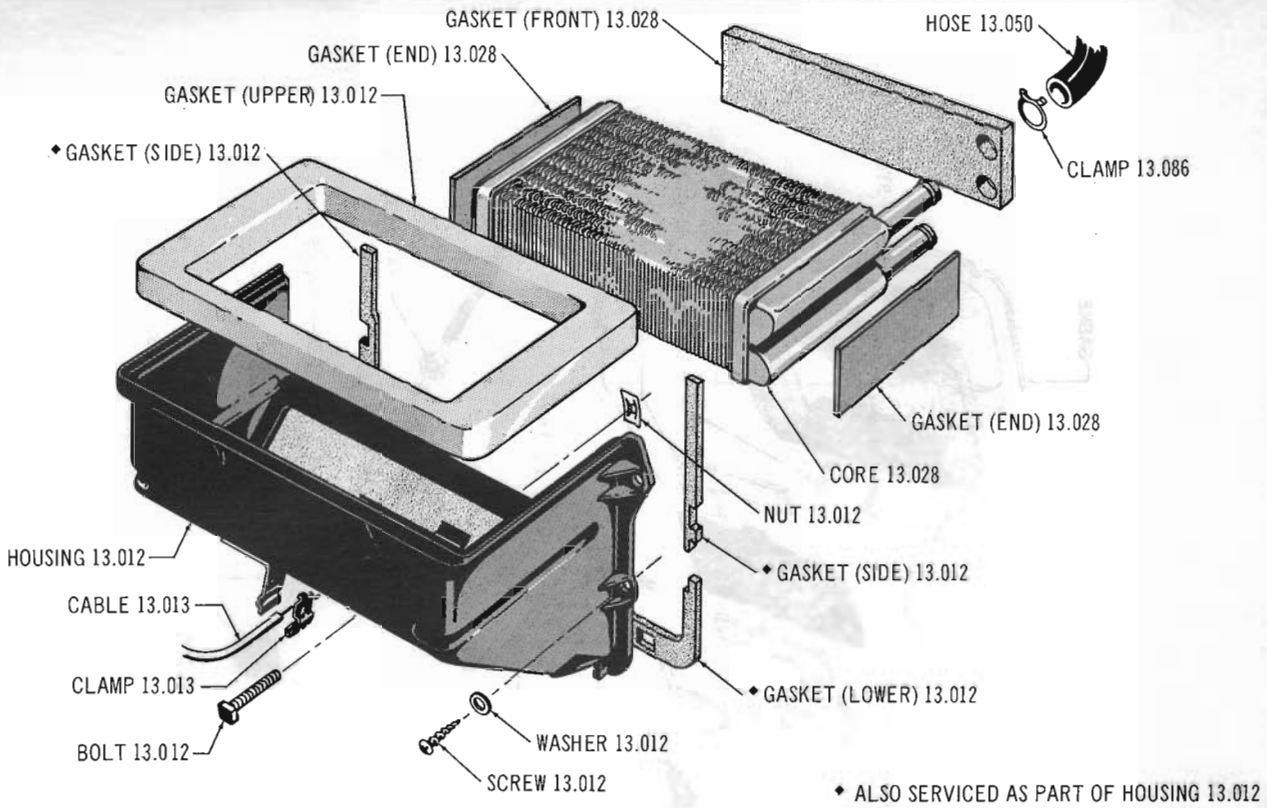

FIG. 13.028-3 HEATER CORE HOUSING 63 THRU CURRENT 10-80 (WAC)

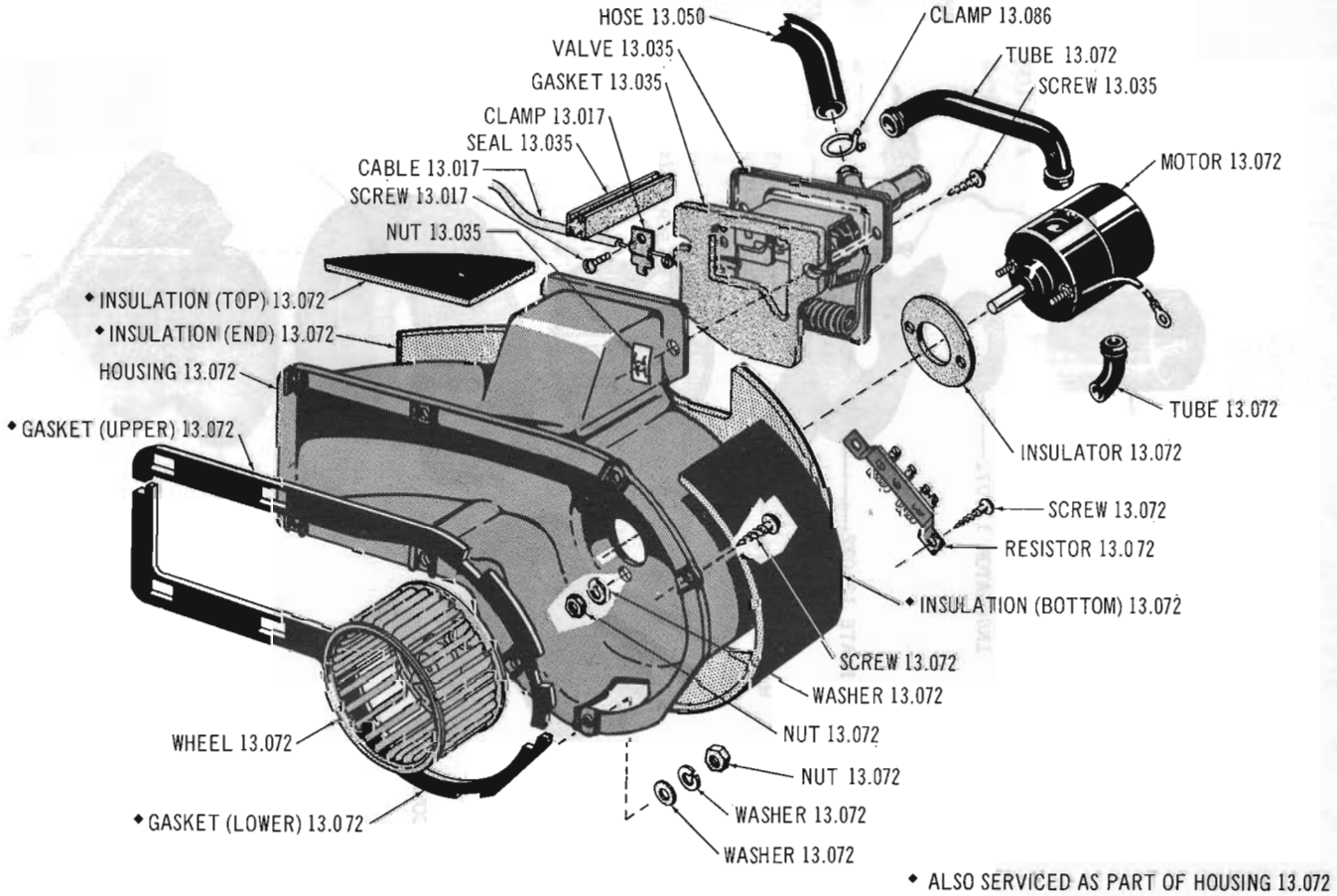

FIG. 13.072-1 HEATER AND AIR CONDITIONING BLOWER HOUSING 63 THRU CURRENT 10-80 (WAC)

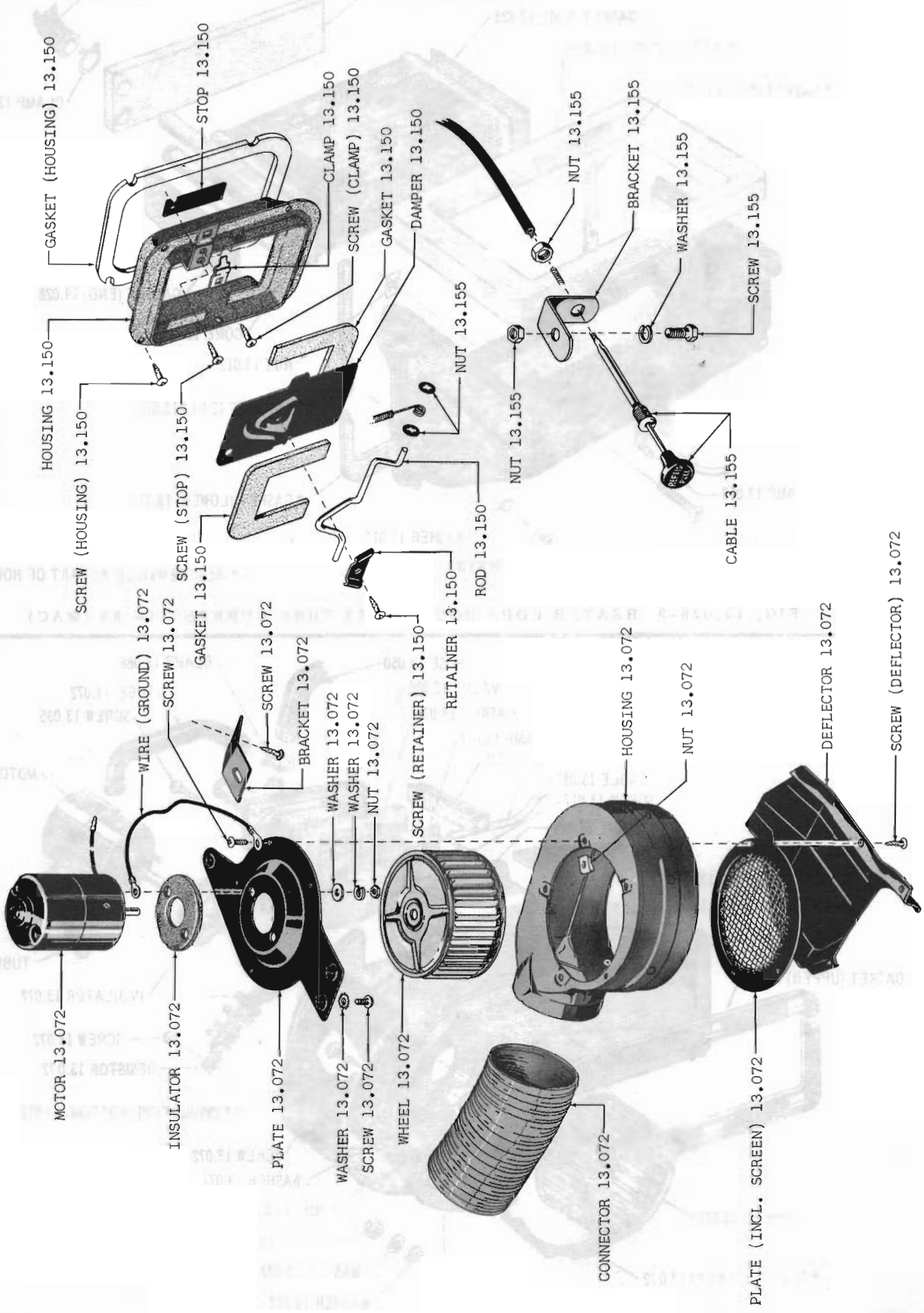

FIG. 13.072-3 AIR CONDITIONING BLOWER AND FRESH AIR INTAKE 61-62 10-80

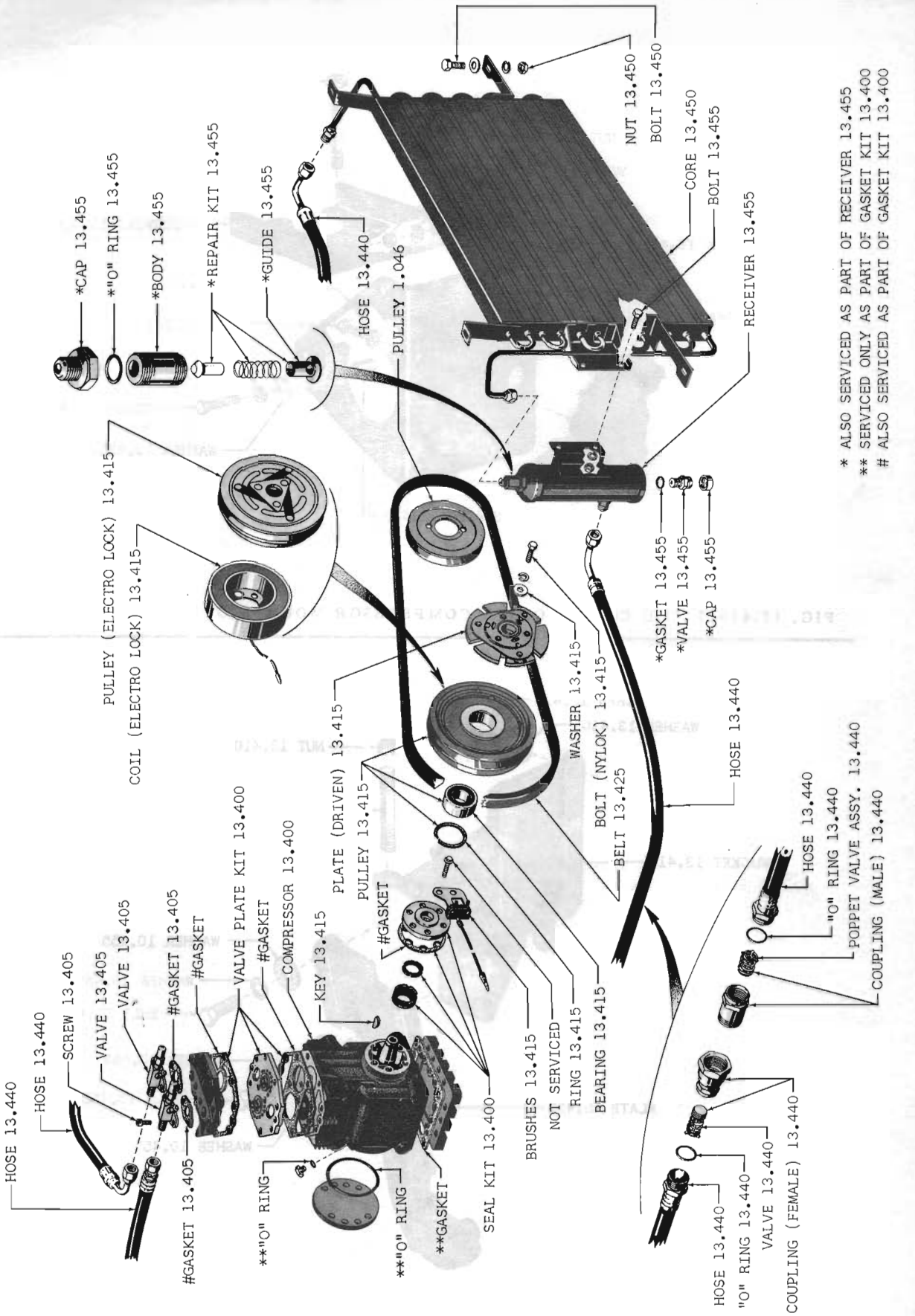

FIG. 13.400-1 AIR CONDITIONING COMPRESSOR AND CONDENSOR CORE 61 THRU 63 01-10-20-80

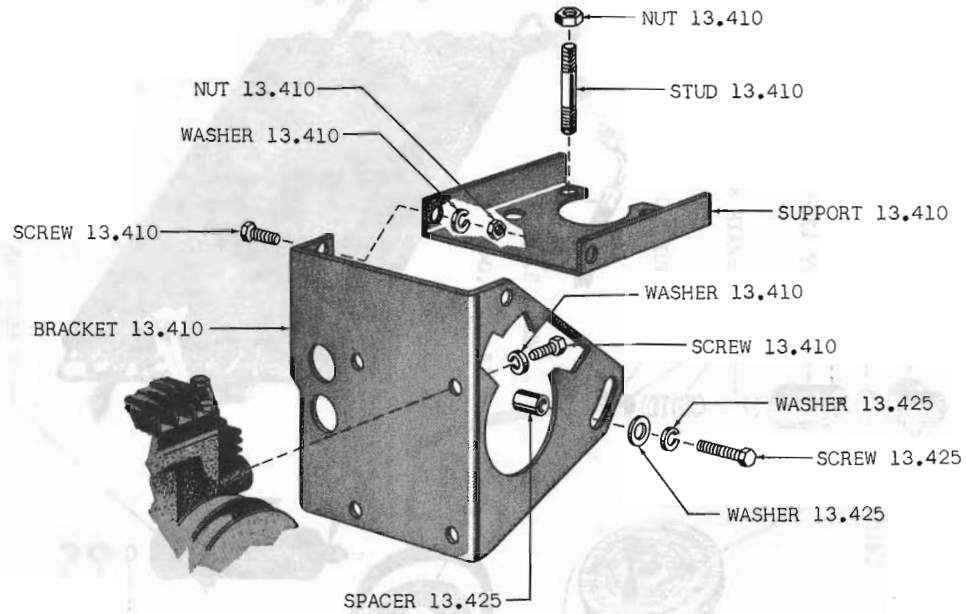

FIG. 13.410-1 AIR CONDITIONING COMPRESSOR MOUNTING 61 01 (LHE-LPS)

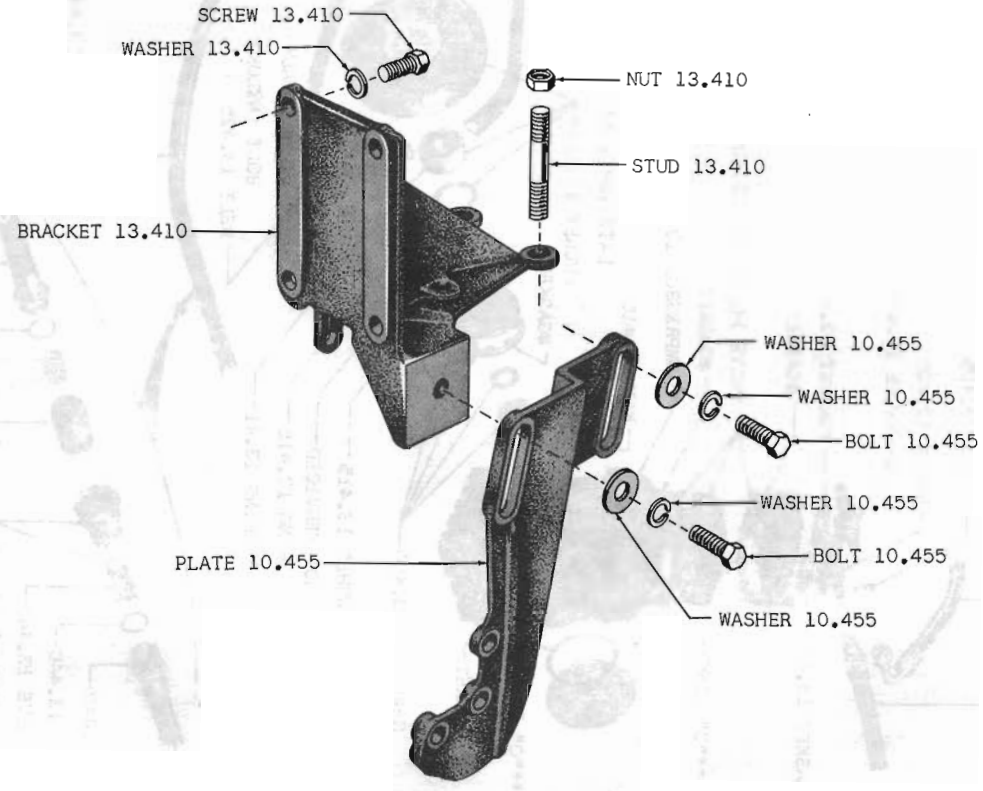

FIG. 13.410-2 AIR CONDITIONING COMPRESSOR MOUNTING 61 01 (LHE-WPS)

Printed In U.S.A.

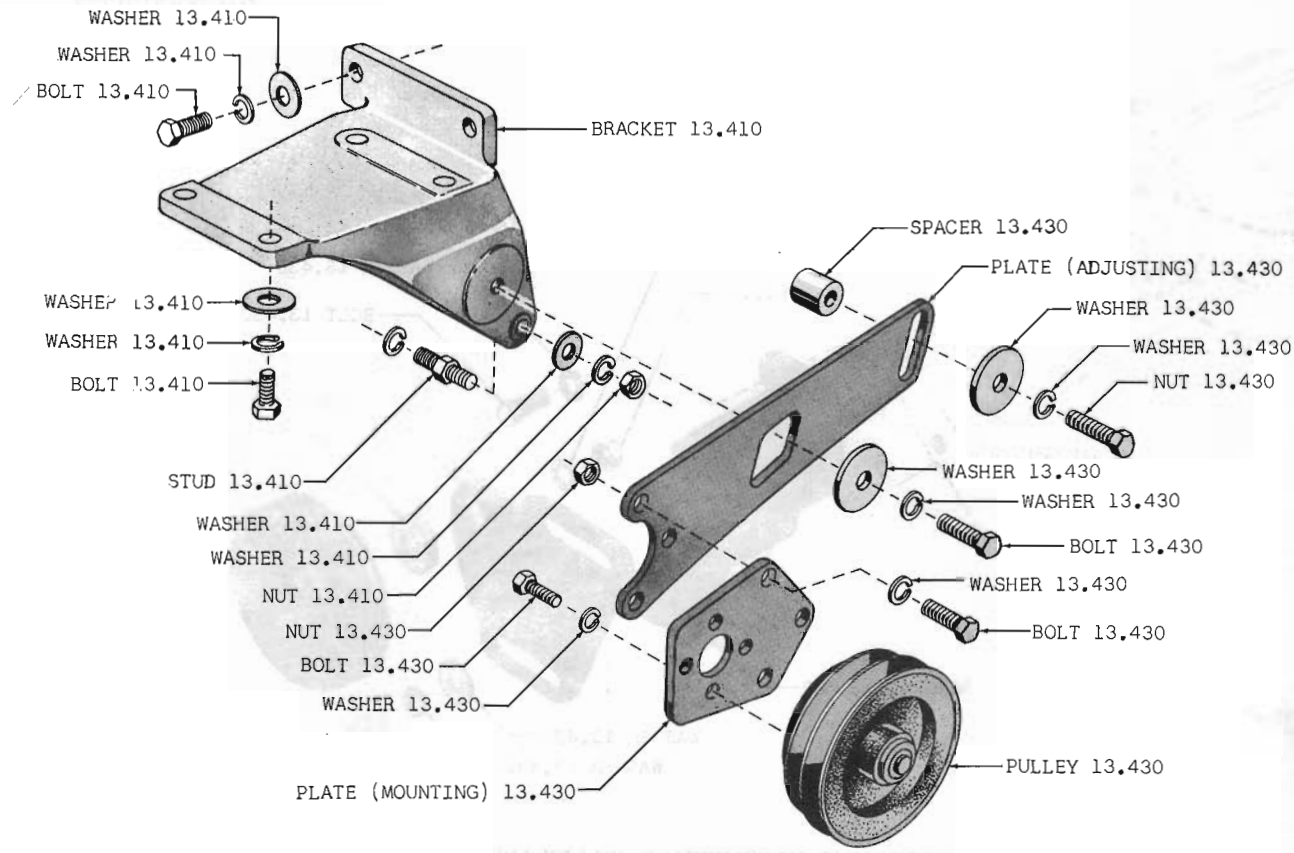

FIG. 13.410-3 AIR CONDITIONING COMPRESSOR MOUNTING 61 01 (OHV): 61 10 (OHVC)

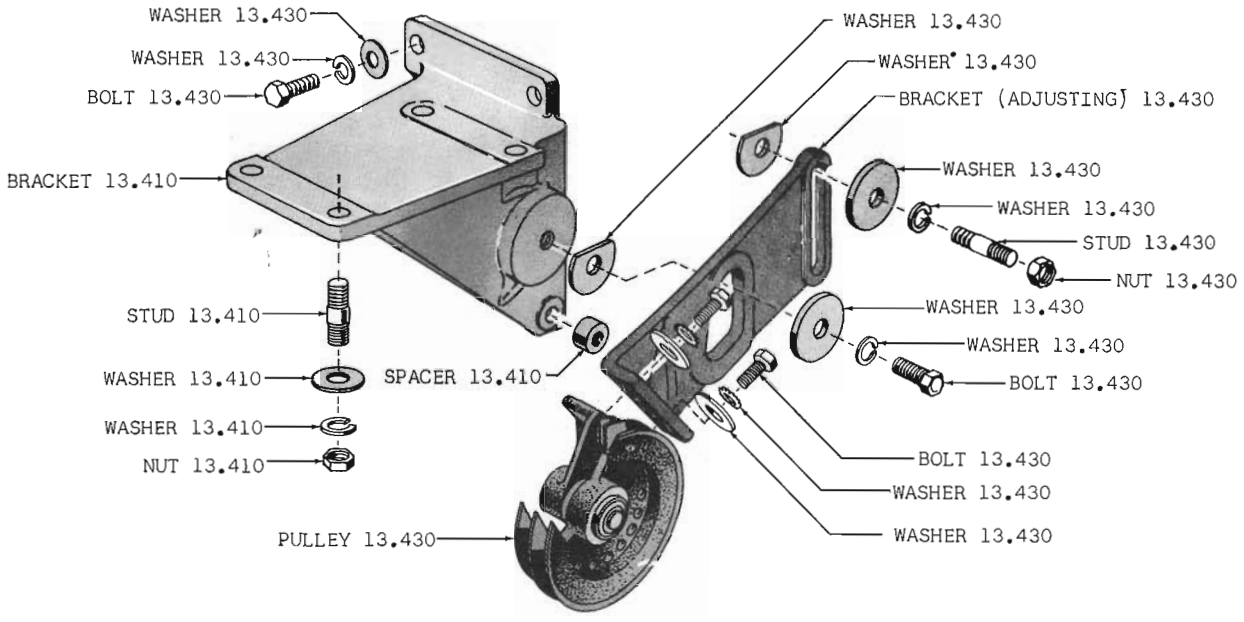

FIG. 13.410-4 AIR CONDITIONING COMPRESSOR MOUNTING 61 10 (OHVA)

Printed In U.S.A.

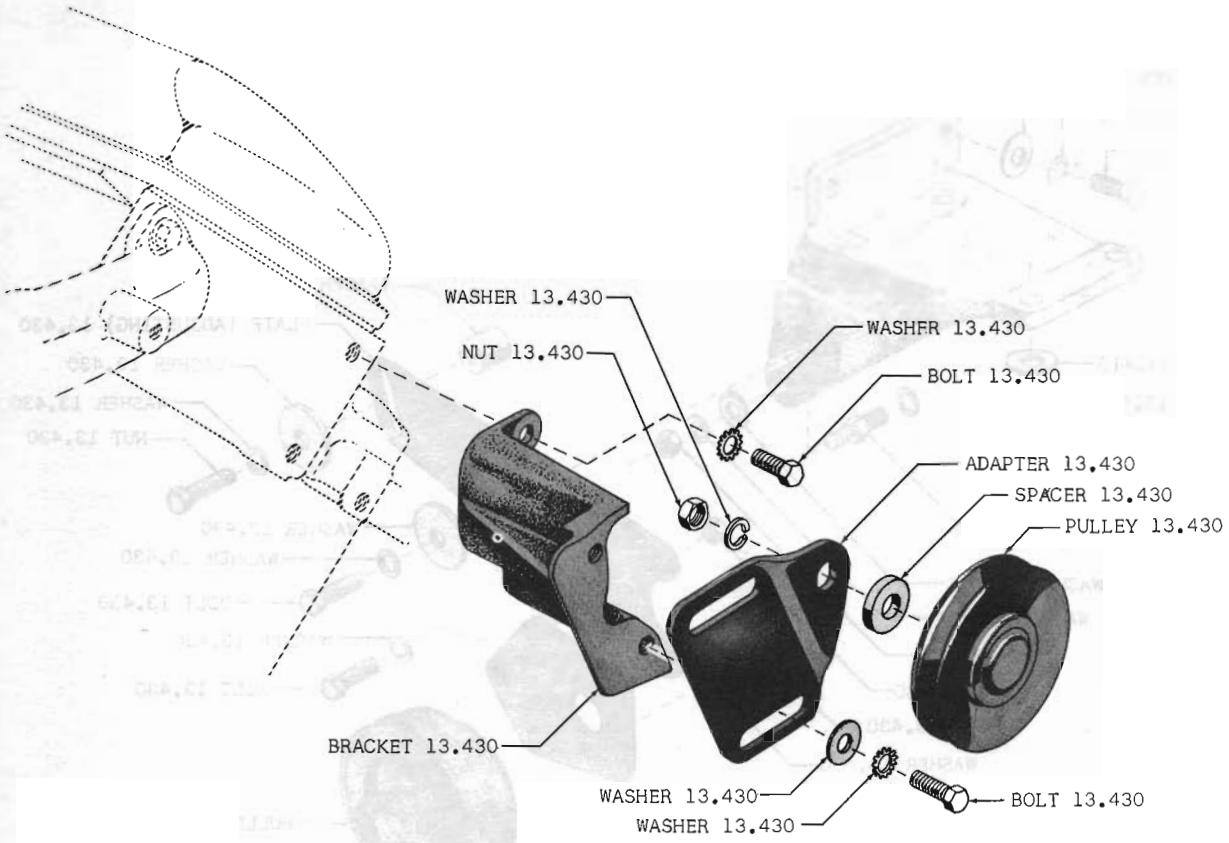

FIG. 13.430-5 AIR CONDITIONING INTERMEDIATE PULLEY AND BRACKETS 61 20-80 (LPS)

Printed In U.S.A.

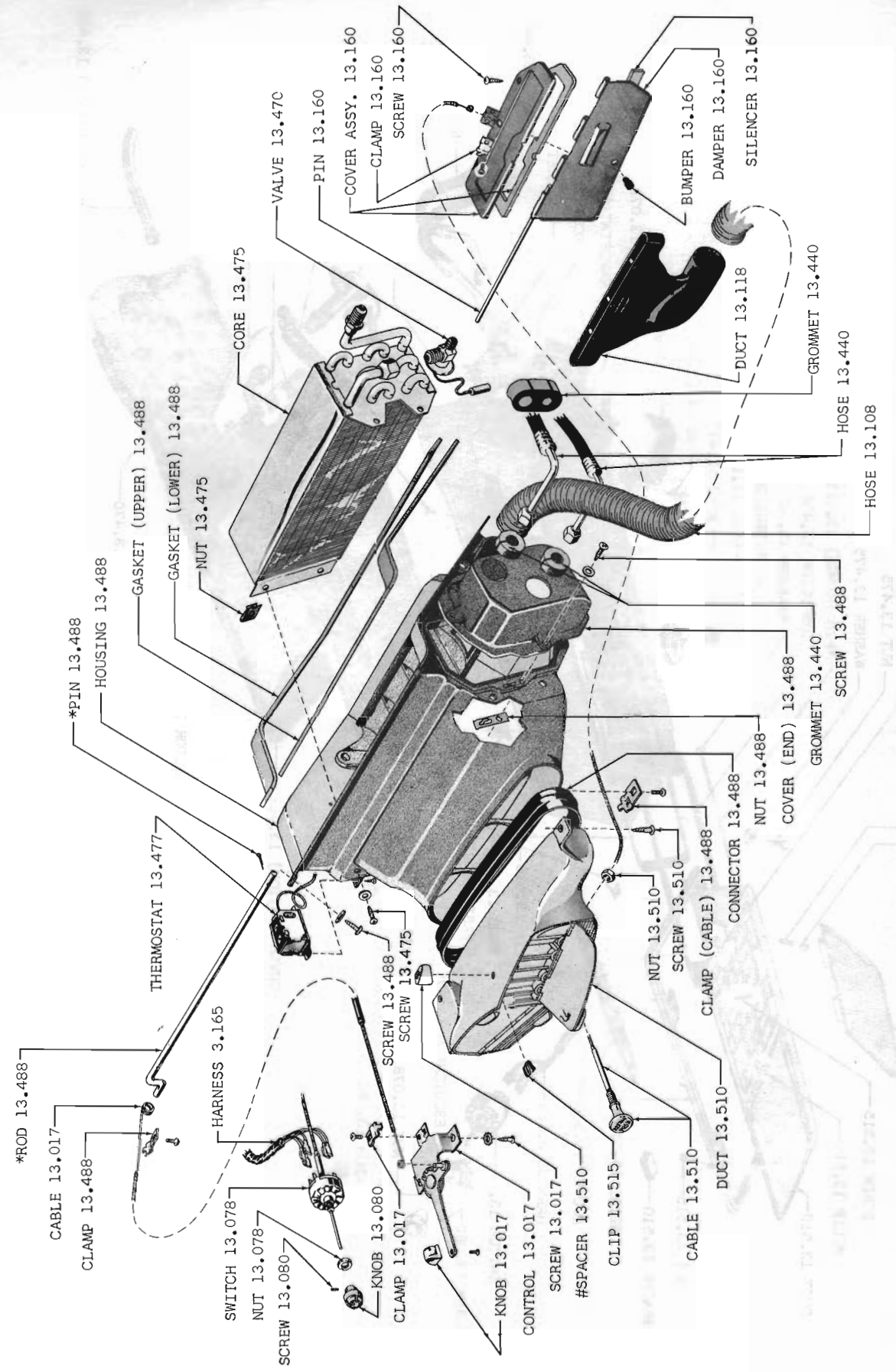

FIG. 13.488-1 AIR CONDITIONING EVAPORATOR HOUSING AND CONTROLS 61 THRU 63 01

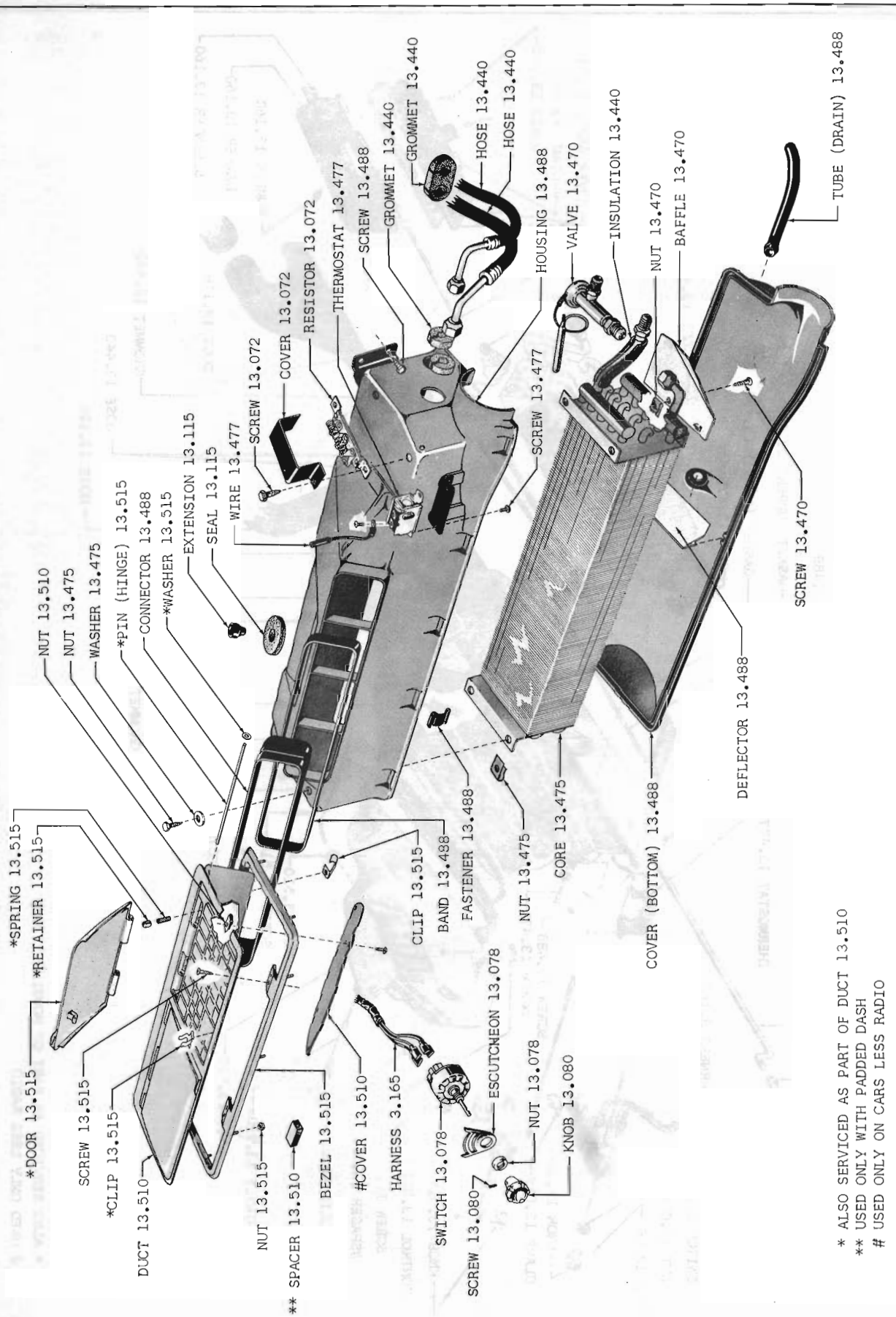

* ALSO SERVICED AS PART OF DUCT 13.510
** USED ONLY WITH PADDED DASH
\# USED ONLY ON CARS LESS RADIO

FIG. 13.488-3 AIR CONDITIONING EVAPORATOR HOUSING 61-62 10-20-80

Printed In U.S.A.

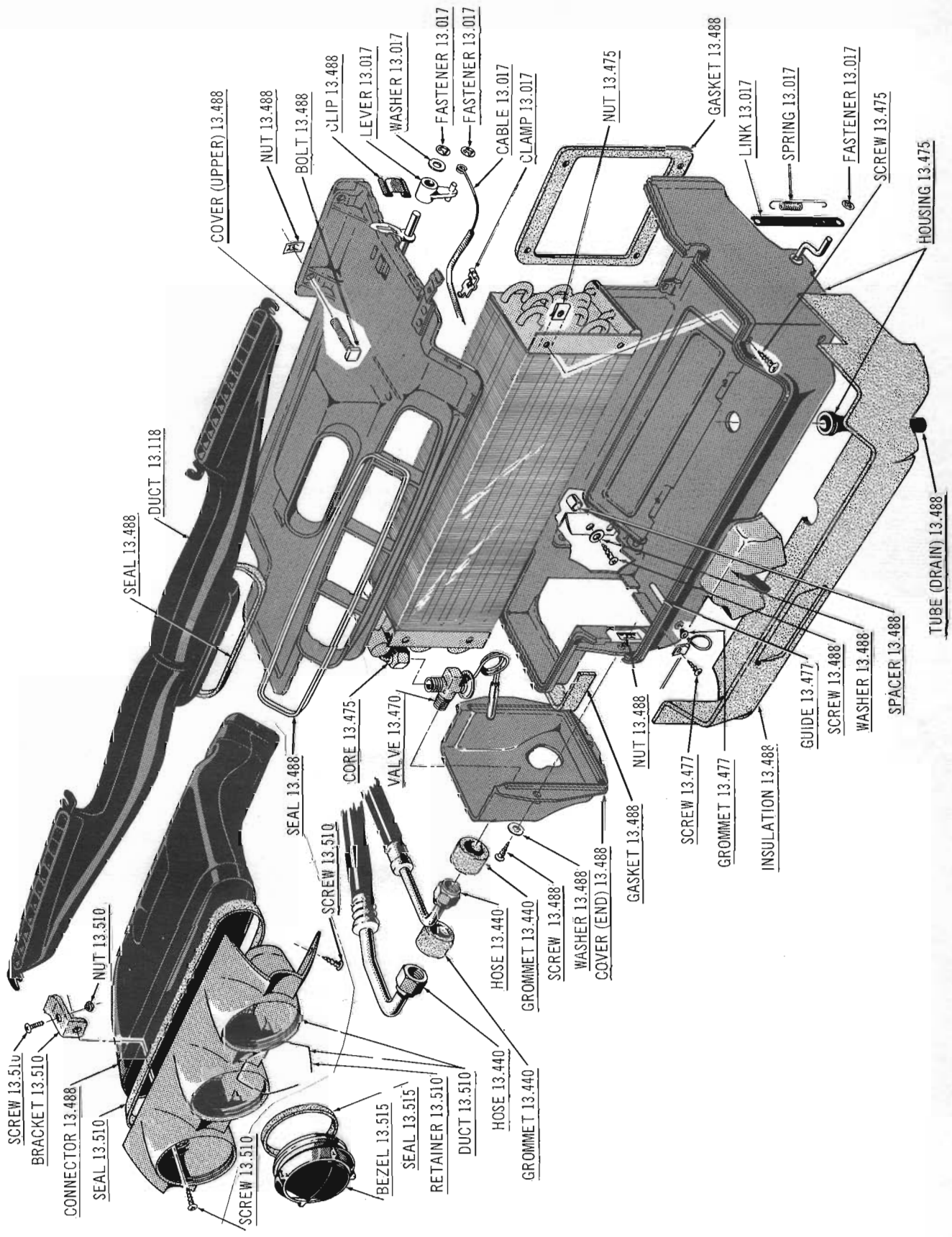

FIG. 13.488-5 AIR CONDITIONING EVAPORATOR CORE HOUSING AND DUCTS 63 10-80



GROUP NO. — DESCRIPTION — YEAR and MODEL	PRIMARY GROUP NO.	PER CAR	PART NO.	CODE
13.001 HEATER (Weathereye)(For Air Conditioning Kit Refer Group 15.015)				
60 01 (LHE-LAC-Note 13.012-1 Type 1)	.....	1	320 1461	
60 01 (LHE-LAC-Note 13.012-1 Type 2)	.....	1	320 2428	
61 Thru 63 01 (RHD-LAC)	.....	1	320 2725	
61 Thru 63 01 (LHD-LAC) ***(Replaces 320 2724)***	.....	1	320 3218	
64-65 01 (LHD-LAC)	.....	1	320 4793	#
64-65 01 (RHD-LAC)	.....	1	320 5440	#
60 10-20-80 (LHD-LAC)	.....	1	320 2030	
60 10-20-80 (RHD-LAC)	.....	1	320 2031	
61 10-20-80 (LHD-LAC)	.....	1	320 2726	
61 10-20-80 (RHD-LAC)	.....	1	320 2727	
62 10-80 (LHD-LAC)	.....	1	320 3582	
62 10-80 (RHD-LAC)	.....	1	320 3583	
63-64 10-80 (LHD-LAC)	.....	1	320 4196	
63 Thru 65 10-80 (RHD-LAC)	.....	1	320 4203	#
65 10-80 (LHD-LAC)	.....	1	320 5856	#
13.002 FILTER, Heater Air				
60 01 (LHE-Note 13.012-1 Type 1)	.....	1	313 0088	
60 10-20-80	.....	1	315 0191	
ATTACHING PARTS Filter To Core				
SCREW, Tapping..... 60 01 (LHE-Note 13.012-1 Type 1)	20.280	3	400 0013	
SPRING..... 60 10-20-80	.....	2	341 6979	
13.008 DEFLECTOR, Heater Heat				
60 01 (Note 13.008-1 Type 1)	.....	1	313 8224	
60 01 (Note 13.008-1 Type 2)	.....	1	315 9449	
ATTACHING PARTS Deflector To Dash Panel				
SCREW, Tapping..... 60 01 (1/2" Long-Note 13.008-1 Type 1)	17.660	2	G161895	NA
SCREW, Tapping..... 60 01 (3/4" Long-Note 13.008-1 Type 1)	17.666	1	G161651	NA
SCREW, Tapping..... 60 01 (Note 13.008-1 Type 2)	17.671	2	800 0093	NA
WASHER, Plain..... 60 01 (Note 13.008-1 Type 2)...***(Replaces 800 0139)***	23.039	2	400 0481	
13.012 COVER, Heater Core				
60 01 (LHE-Note 13.012-1 Type 1)	.....	1	314 3407	
60 01 (LHE-Note 13.012-1 Type 2): 60 01 (OHV)	.....	1	315 9637	
60 10-20-80...(Incl. Gaskets)	.....	1	315 1246	
ATTACHING PARTS Cover To Dash Panel				
SCREW, Machine..... 60 01 (LHE-Note 13.012-1 Type 1) ***(Replaces 800 0049)***	17.622	4	400 1073	
SCREW, Tapping..... 60 01 (LHE-1/2" Long-Note 13.012-1 Type 1)	17.660	1	G161895	NA
SCREW, Tapping..... 60 01 (LHE-3/4" Long-Note 13.012-1 Type 1)	17.670	2	G172431	NA

NOTE 13.008-1: Two Types of Heat Deflectors were used on the 60 01 Series. They can be identified as follows:
Type 1: Heat Deflector is made of Metal and has Three Screw Holes.
Type 2: Heat Deflector is made of Plastic and has Two Screw Holes.

NOTE 13.012-1: Two Types of Heater Core Covers were used on 60 01 (LHE). They can be identified as follows:
Type 1: Cover is made of Metal with an Air Filter used in the system.
Type 2: Cover is made of Plastic. No Air Filter is used.

Copyright 1963 American Motors Corp.

GROUP NO. — DESCRIPTION — YEAR and MODEL		PRIMARY GROUP NO.	PER CAR	PART NO.	CODE
SCREW, Tapping.....	60 01 (LHE-3" Long-Note 13.012-1 Type 2): 60 01 (OHV-3" Long).....	.....	4	345 2737	
SCREW, Tapping.....	60 01 (LHE-1" Long-Note 13.012-1 Type 2): 60 01 (OHV-1" Long).....	17.660	3	G161909	NA
WASHER, Plain.....	60 01 (5 Req. -LHE-Note 13.012-1 Type 1): 60 01 (3 Req. -LHE-Note 13.012-1 Type 2): 60 01 (3 Req. -OHV).....	17.814	AR	G120392	NA
WASHER, Spring Lock..	60 01 (LHE-Note 13.012-1 Type 1).....	17.820	2	G120380	NA
WASHER, Ext. Tooth...	60 01.....	17.822	4	G121753	NA
NUT, Speed.....	60 01 (LHE-Note 13.012-1 Type 1).....	2.045	1	310 3117	
Cover To Hopper Box					
SCREW, Tapping.....	60 10 (10 Req.): 60 20-80 (9 Req.).....	17.671	AR	800 0093	NA
HOUSING, Heater Core					
63 Thru 65 10-80 (LHD-LAC).....		.....	1	316 6393	#
63 Thru 65 10-80 (WAC)...(Incl. Damper, Gaskets And Spring).....		.....	1	316 6976	#
ATTACHING PARTS					
Housing To Dash Panel					
SCREW, Tapping.....	63 Thru 65 10-80.....	17.660	3	G161909	NA#
WASHER, Plain.....	63 Thru 65 10-80.....	17.814	3	G120391	NA#
Housing To Blower Housing					
BOLT, Square.....	63 Thru 65 10-80.....	17.044	2	G426920	NA#
NUT, Speed.....	63 Thru 65 10-80.....	.....	2	400 0268	#
SPRING, Recirculating Air Damper					
63 Thru 65 10-80 (WAC).....		.....	1	316 6987	#
HOUSING, Heater Core And Blower					
61 Thru 63 01.....		.....	1	316 0266	
64-65 01 (LHD-WAC)...(Incl. Gaskets).....		.....	1	317 0678	#
61-62 10-20-80...(Incl. Gaskets).....	*(Replaces 345 5538)*	.....	1	316 4941	
64-65 01 (RHD): 63 Thru 65 10-80 (RHD)...(Incl. Gaskets).....		.....	1	316 9293	#
ATTACHING PARTS					
Housing To Dash Panel					
SCREW, Tapping.....	61 Thru 63 01 (1" Long-9 Req.): 64-65 01 (LHD-WAC-3 Req.): 61-62 10-20-80 (14 Req.): ***63 Thru 65 10-80 (RHD-3 Req.)***.....	17.660	AR	G161909	NA#
SCREW, Tapping.....	61 Thru 63 01 (3/4" Long).....	17.660	1	G161903	NA
SCREW, Tapping.....	64-65 01.....	17.660	1	400 0216	#
SCREW, Tapping.....	***63 Thru 65 10-80 (RHD)***.....	17.660	1	G161930	NA#
WASHER, Plain.....	64-65 01 (LHD-WAC-3 Req.): ***63 Thru 65 10-80 (RHD-4 Req.)***.....	17.814	AR	G120391	NA#
WASHER, Plain.....	64-65 01.....	25.029	1	400 0690	#
HOUSING, Heater Core, Defroster And Blower					
64-65 01 (LHD-LAC)...(Incl. Dampers And Gaskets).....		.....	1	316 9927	#
ATTACHING PARTS					
Housing To Dash Panel					
SCREW, Tapping.....	64 01 (LHD-LAC).....	17.660	1	G161930	NA
SCREW, Tapping.....	64 01 (LHD-LAC-3 Req.): 65 01 (1 Req.).....	17.660	AR	400 0216	#
WASHER, Plain.....	64 01 (LHD-LAC).....	17.814	4	G120391	NA
SCREW, Tapping.....	65 01 (LHD-LAC).....	17.660	4	G161909	#

Copyright 1963 American Motors Corp.

GROUP NO. — DESCRIPTION — YEAR and MODEL	PRIMARY GROUP NO.	PER CAR	PART NO.	CODE
SEAL, Heater Core Blower Housing To Evaporator Housing				
64-65 01 (LHD-WAC)	.....	1	316 8866	
GASKET, Heater Core Cover				
60 01 (LHE-Note 13.012-1 Type 1)	.....	1	313 6619	
(Upper) 60 10-20-80	.....	1	315 0181	
(Lower) 60 10-20-80	.....	1	315 0180	
GASKET, Heater Core Housing				
(Upper) 63 10-80 (LHD) ***(Replaces 316 6394)***	.....	1	316 9428	
(Upper) 64-65 10-80 (LHD)	.....	1	348 8914	#
(Lower) 63 Thru 65 10-80 (LHD-LAC)	.....	1	316 6395	
(Lower) 63 Thru 65 10-80 (LHD-WAC)	.....	1	316 6988	
(Side-Left) 63 Thru 65 10-80 (LHD)	.....	1	316 6396	
(Side-Right) 63 Thru 65 10-80 (LHD-LAC)	.....	1	316 6397	
(Side-Right) 63 Thru 65 10-80 (LHD-WAC)	.....	1	316 6989	
GASKET, Heater Core And Blower Housing				
(Upper) 61 Thru 63 01	.....	1	316 0257	
(Upper) 64-65 01 (LHD)	.....	1	317 1443	
(Upper) 61-62 10-20-80	.....	1	345 5542	
(Upper) 61-62 10-20-80	.....	1	348 8914	
(Lower) 61 Thru 63 01	.....	1	316 0264	
(Lower) 61-62 10-20-80	.....	1	345 5541	
(Side) 64-65 01 (LHD): ***63 Thru 65 10-80 (RHD)***	.....	1	316 9218	
(Bottom) 64-65 01 (LHD): ***63 Thru 65 10-80 (RHD)***	.....	1	316 9219	
(Blower) 61 Thru 63 01	.....	1	316 0260	
(Blower) 61-62 10-20-80	.....	1	345 5543	
INSULATION, Heater Core Cover				
60 10-20-80	.....	1	315 0507	
INSULATION, Heater Core And Blower Housing To Dash				
64-65 01 (LHD)	.....	1	352 3356	
64 01 (RHD)	.....	1	352 3357	
PLUG, Heater And Blower Housing Capillary Tube				
64-65 01 (RHD): 63 Thru 65 10-80 (RHD)	.....	1	316 9296	
13.013 CABLE, Air Conditioning Recirculating Air Damper				
64-65 01 (LHD-WAC)	.....	1	352 0896	
63 10-80 (Note 13.400-8 Type 1)...(Incl. Knob)	.....	1	349 0247	
64-65 10-80 (LHD-WAC)	.....	1	352 5287	
ATTACHING PARTS				
Cable To Bracket				
CLIP 63 10-80	.....	1	400 0628	
Cable To Instrument Panel				
NUT, Hexagon ..... 63 10-80 (Note 13.400-8 Type 1)	17.406	1	G120369	NA
WASHER, Lock ..... 63 10-80 (Note 13.400-8 Type 1)	17.820	1	G120392	NA

Copyright 1963 American Motors Corp.

GROUP NO. — DESCRIPTION — YEAR and MODEL	PRIMARY GROUP NO.	PER CAR	PART NO.	CODE
Cable To Heater Housing				
CLIP ..... 64-65 01: 63 Thru 65 10-80	13.017	1	400 0417	
SCREW, Tapping..... 63 10-80 (Note 13.400-8 Type 1).....	17.660	1	G161790	NA
Cable To Control				
NUT, Speed ..... 64-65 01 (LHD-WAC) .....*(Replaces 400 0369)*	.....	1	317 0407	
CONTROL, Air Conditioning Recirculated Air				
64-65 01 (LHD-WAC)	.....	1	352 0750	
63 10-80 (OAC-Note 13.400-8 Type 2): 64-65 10-80 (LHD-WAC)	13.017	1	352 0760	
ATTACHING PARTS				
Control To Duct				
SCREW, Tapping..... 64-65 01 (LHD-WAC)	17.660	2	G161895	NA
Control To Mounting Panel				
SCREW, Tapping..... 64-65 10-80 (LHD-WAC)	17.660	2	G161903	NA
KNOB, Air Conditioning Recirculated Air Control				
64-65 01 (LHD-WAC)	.....	1	350 9450	
64-65 10-80 (LHD-WAC)	.....	1	350 9546	
ATTACHING PARTS				
Knob To Control				
SCREW, Machine..... 64-65 01 (LHD-WAC)	17.598	1	G159028	
SCREW, Tapping..... 64-65 10-80 (LHD-WAC)	17.654	1	G443824	NA
BRACKET, Air Conditioning Recirculating Air Damper Cable				
63 10-80	13.155	1	344 7982	
ATTACHING PARTS				
Bracket To Instrument Panel				
SCREW, Machine..... 63 10-80	17.626	1	G423554	NA
NUT, Hexagon..... 63 10-80 .....*(Replaces 400 0000)*	17.412	1	G271172	
13.015 DAMPER, Heater Air Inlet (Less Rod)				
60 10-20-80 (LAC)	.....	1	314 6673	
60 10-20-80 (WAC)	.....	1	314 6784	
ROD, Heater Air Inlet Damper				
60 10-20-80 (LHD)	.....	1	344 5691	
60 10-80 (RHD)	.....	1	343 5642	
ATTACHING PARTS				
Rod To Damper				
SCREW, Tapping..... 60 10-20-80	17.660	2	G161895	NA
BRACKET, Heater Air Inlet Damper Rod Pivot				
60 10-20-80	.....	2	314 6238	
ATTACHING PARTS				
Bracket To Dash				
SCREW, Tapping..... 60 10-20-80	17.671	2	800 0093	NA
WASHER, Lock 60 10-20-80	17.820	2	G131096	NA

Copyright 1963 American Motors Corp.

GROUP NO. — DESCRIPTION — YEAR and MODEL	PRIMARY GROUP NO.	PER CAR	PART NO.	CODE
GROMMET, Heater Air Inlet Damper Rod End				
60 10-20-80	13.502	2	438 6559	
WASHER, Heater Air Inlet Damper Rod End Grommet				
60 10-20-80 ***(Replaces 800 0145)***	17.814	2	400 1085	
CUSHION, Heater Air Inlet Damper				
60 10-20-80	.....	2	341 6791	
13.017 CONTROL, Heater Air Damper (Less Cable)				
61 Thru 63 01	.....	1	320 2687	
64-65 01	.....	1	350 0706	
63 10-80	.....	1	349 0151	
64 10-80: ***65 10 (RHD)***	.....	1	350 0675	
ATTACHING PARTS Control To Instrument Panel				
SCREW, Tapping..... 61 Thru 63 01 (LHD-1 Req.): 64-65 01 (LHD-2 Req.): ***61 Thru 63 01 (RHD-2 Req.)***	17.660	AR	G161895	NA
SCREW, Tapping..... 63 10-80	17.660	2	G161869	NA
SCREW, Tapping..... 64 10-80	.....	2	400 0616	
WASHER, Lock..... 61 Thru 63 01 (LHD-1 Req.): ***61 Thru 63 01 (RHD-2 Req.)***	17.826	AR	G178378	NA
LINK, Air Damper Control To Defroster Control				
64-65 01 (LHD-WAC)	.....	1	350 0707	
CONTROL, Heater Water Valve				
60 01...(Incl. Switch And Cable)	13.078	1	343 1772	
61 Thru 63 01 (LHD-LAC)...(Incl. Switch And Cable)	13.078	1	344 8499	
61 Thru 63 01 (RHD-LAC)...(Incl. Switch And Cable)	13.078	1	346 3670	
61 Thru 63 01 (LHD-WAC)...(Incl. Switch And Cable)	13.078	1	344 8498	
64-65 01 (LAC)...(Incl. Switch And Cable)	13.078	1	352 0848	
64-65 01 (LHD-WAC)...(Incl. Switch And Cable)	13.078	1	352 0849	
63-64 10-80: ***65 10 (RHD)*** ***(Replaces 349 0153)***	.....	1	350 0677	#
ATTACHING PARTS Control To Instrument Panel				
NUT, Round..... 60 Thru 63 01	3.145	1	400 0056	
SCREW, Tapping..... 63 10-80	17.660	2	G161869	NA
SCREW, Tapping..... 64 10-80	.....	2	400 0616	
CONTROL, Heater Air Outlet (Air)				
64-65 01 (LHD-LAC)	.....	1	350 0706	
ATTACHING PARTS Control To Instrument Panel				
SCREW, Tapping..... 64-65 01	17.660	1	G161895	NA
KNOB, Heater Air Outlet Control				
64-65 01 (LHD-LAC)	.....	1	350 9450	

Copyright 1963 American Motors Corp.

GROUP NO. — DESCRIPTION — YEAR and MODEL	PRIMARY GROUP NO.	PER CAR	PART NO.	CODE
ATTACHING PARTS Knob To Control				
SCREW, Machine..... 64-65 01	17.598	1	G159028	
LEVER, Heater Defroster Control				
65 10-80	.....	1	351 6785	
KNOB, Heater And Defroster Control				
65 10-80	.....	1	351 6787	
ATTACHING PARTS Knob To Lever				
PIN, Spring 65 10-80	17.472	1	G455735	NA
LEVER, Heater Air Control				
65 10-80	.....	1	351 6784	
KNOB, Heater Air Control				
65 10-80	.....	1	351 6786	
ATTACHING PARTS Knob To Lever				
PIN, Spring 65 10-80	17.472	1	G455735	NA
LEVER, Heater Water Valve Control				
65 10-80	.....	1	351 6783	
KNOB, Heater Water Valve Control				
65 10-80	.....	1	351 6801	
ATTACHING PARTS Knob To Lever				
PIN, Spring 65 10-80	17.472	1	G455735	NA
SPRING, Heater And Defroster Control				
65 10-80	.....	1	351 6781	
BEZEL, Heater And Defroster Control				
65 10-80	.....	1	448 2356	
ATTACHING PARTS Bezel To Instrument Panel				
SCREW, Tapping..... 65 10-80	17.660	2	G161895	NA
SCREW 65 10-80	.....	2	G168999	NA
WASHER, Plain..... 65 10-80	17.814	2	G120391	NA
BRACKET, Heater And Defroster Controls To Instrument Panel				
65 10-80	.....	1	351 6790	
CONTROL, Heater Water Valve And Cowl Ventilator (Less Cables)				
60 10-20-80	.....	1	320 1894	
ATTACHING PARTS Control To Instrument Panel				
SCREW, Tapping..... 60 10-20-80	17.671	2	800 0093	NA

Copyright 1963 American Motors Corp.

GROUP NO. — DESCRIPTION — YEAR and MODEL	PRIMARY GROUP NO.	PER CAR	PART NO.	CODE
CONTROL, Heater Air Damper And Water Valve (Less Cables)				
61 10-20-80	.....	1	320 2691	
ATTACHING PARTS Control To Instrument Panel				
SCREW, Tapping..... 61 10-20-80	17.671	2	800 0093	NA
LEVER, Heater Air Damper And Water Valve Control				
(Damper) 62 10-80	.....	1	346 2062	
(Valve) 62 10-80	.....	1	346 2063	
ATTACHING PARTS Lever To Instrument Cluster Bezel				
PIN, Clevis..... 62 10-80	.....	2	400 0105	
NUT, Spring..... 62 10-80	.....	2	400 0130	
DETENT, Heater Damper And Water Valve Lever Positioning				
62 10-80	.....	2	346 2040	
SPRING, Heater Damper And Water Valve Lever Detent				
62 10-80	.....	2	346 1013	
ESCUTCHEON, Heater Control				
60 10-20-80	.....	1	344 0804	
61 10-20-80	.....	1	344 7883	
65 10 (LHD-550)	.....	1	351 7101	
65 10 (LHD-660)(LHD-770)(Except Marlin)...(Incl. Mouldings)	22.100	1	351 6518	#
66 50 (Marlin): 65 80...(Incl. Moulding)	22.100	1	351 6519	#
ATTACHING PARTS Escutcheon To Instrument Panel				
CLIP..... 60-61 10-20-80 ..... *(Replaces 345 5050)*	7.230	4	400 0401	
SCREW, Tapping..... 65 10 (LHD-550)	17.660	2	G163095	NA
KNOB, Heater Water Valve Control				
60 01	13.052	1	343 2309	
61 01 (Gray)	13.080	1	346 0256	
61 Thru 63 01 (Black)	13.080	1	346 4513	
60-61 10-20-80	.....	1	344 0556	
62 10-80	.....	1	346 2037	
63 10-80	.....	1	349 0159	
64 10-80	.....	1	350 9546	
ATTACHING PARTS Knob To Control				
SCREW, Set..... 60 Thru 63 01	13.052	1	341 6806	
SCREW, Machine..... 60 Thru 62 10-20-80	17.586	1	G155845	NA
SCREW, Tapping..... 63 10-80 (#6-20 × 3/8)	.....	1	400 0621	
SCREW, Tapping..... 63 10-80 (#6-18 × 1/2): 64 10-80 ..... *(Replaces 400 0582)*	17.654	1	G443824	NA#
KNOB, Heater Air Damper Control				
61 Thru 63 01: 60-61 10-20-80	.....	1	344 0556	
64-65 01	.....	1	350 9450	
62 10-80	.....	1	346 2037	

Copyright 1963 American Motors Corp.

GROUP NO. — DESCRIPTION — YEAR and MODEL		PRIMARY GROUP NO.	PER CAR	PART NO.	CODE
63 10-80		.....	1	349 0159	
64 10-80		.....	1	350 9546	
ATTACHING PARTS					
Knob To Control					
SCREW, Machine.....	61 Thru 63 01: 60 Thru 62 10-20-80	17.586	1	G155845	NA
SCREW, Machine.....	64-65 01	17.598	1	G159028	
SCREW, Tapping.....	63 10-80 ***(Replaces 400 0582)***	17.654	1	G443824	
SCREW, Tapping.....	63 10-80 (#6-20 × 3/8)	.....	1	400 0621	
CABLE, Heater Air Damper Control					
61 Thru 63 01 (LHD)		.....	1	320 2688	
61 Thru 63 01 (RHD)		.....	1	320 2959	
64-65 01 (LAC)	***(Replaces 350 5671)***	.....	1	350 0716	#
64-65 01 (LHD-WAC)		.....	1	350 0715	
61 10-20-80 (LHD)	***(Replaces 320 2689)***	.....	1	347 6700	
61 10-80 (RHD)	***(Replaces 320 2949)***	.....	1	347 8034	
62 10-80 (LHD)		.....	1	347 8001	
62 10-80 (RHD)		.....	1	347 8077	
63-64 10-80 (LHD-LAC)		.....	1	349 0155	
63-64 10-80 (LHD-WAC)		.....	1	349 2346	
63 Thru 65 10-80 (RHD)		.....	1	349 0156	
65 10-80 (LHD-LAC)		.....	1	351 6809	
65 10-80 (LHD-WAC)		.....	1	351 6792	
ATTACHING PARTS					
Cable To Control					
CLAMP.....	61 Thru 63 01: 60 Thru 62 10-20-80	.....	1	320 2139	
CLIP.....	64-65 01: 63 Thru 65 10-80	.....	1	400 0417	
SCREW, Tapping.....	61 Thru 63 01: 60 Thru 63 10-20-80	17.660	1	G167156	NA
NUT, Speed.....	64-65 01: 63 Thru 65 10-80: ***65 10 (RHD)*** ***(Replaces 400 0369)***	13.155	2	317 0407	
Cable To Damper					
CLAMP.....	61 Thru 63 01: 61-62 10-20-80	22.018	1	313 0267	
CLIP.....	64-65 01: 63-64 10-80	.....	1	400 0417	
SCREW, Tapping.....	61 Thru 63 01	17.660	1	G161790	NA
SCREW, Tapping.....	61-62 10-20-80	17.654	1	G443824	
SCREW, Tapping.....	63 10-80	17.660	1	G161857	NA
NUT, Speed.....	61-62 10-20-80	.....	1	400 0065	
CABLE, Heater Water Valve Control					
60 10-20-80 (LHD)		.....	1	320 1408	
60 10-80 (RHD)		.....	1	320 1409	
61 10-20-80 (LHD)	***(Replaces 320 2690)***	.....	1	347 8462	
61 10-80 (RHD)		.....	1	320 2950	
62 10-80 (LHD)		.....	1	347 8467	
62 10-80 (RHD)		.....	1	347 8468	
63-64 10-80 (LHD)		.....	1	349 0157	
63 Thru 65 10-80 (RHD)		.....	1	349 0158	
65 10-80 (LHD)		.....	1	351 6791	

Copyright 1963 American Motors Corp.

GROUP NO. — DESCRIPTION — YEAR and MODEL	PRIMARY GROUP NO.	PER CAR	PART NO.	CODE
ATTACHING PARTS				
Cable To Control				
CLAMP ..... 60 Thru 62 10-20-80	.....	1	320 2139	
CLIP 63-64 10-80	.....	1	400 0417	
SCREW, Tapping..... 60 Thru 63 10-20-80	17.660	1	G167156	NA
NUT, Speed ..... 64-65 01: 63 Thru 65 10-80 ....*(Replaces 400 0369)*	13.155	2	317 0407	
Cable To Valve				
CLAMP ..... 60 Thru 62 10-20-80	22.018	1	313 0267	
CLIP 63-64 10-80	.....	1	400 0417	
LEVER, Heater Air Damper Idler				
63-64 10-80 (LAC)	.....	1	316 6573	
63-64 10-80 (WAC)	.....	1	316 6973	
ATTACHING PARTS				
Lever To Damper				
WASHER, Felt..... 64-65 01: 63-64 10-80.....	.....	2	317 0406	
WASHER, Plain..... 64-65 01	17.814	1	G120391	NA
WASHER, Plain..... 63 10-80	17.814	1	G120392	NA
FASTENER 64-65 01	.....	1	317 0407	
FASTENER 63-64 10-80	.....	1	400 0271	
LINK, Heater Air Damper Idler Lever				
64-65 01 (WAC)	.....	1	317 0415	
63-64 10-80 (LAC)	.....	1	316 6574	
63-64 10-80 (WAC)	.....	1	316 7881	
65 10-80 (LHD-WAC)	.....	1	317 5495	
ATTACHING PARTS				
Link To Idler Lever				
WASHER, Plain..... 63-64 10-80	17.814	2	G120392	NA
FASTENER ..... 63 Thru 65 10-80.....	.....	2	400 0271	
Link To Damper				
NUT, Speed ..... 64-65 10-80 .....*(Replaces 400 0369)*	13.155	2	317 0407	
WASHER, Plain..... 64-65 10-80.....	17.814	2	G446152	NA
SPRING, Heater Air Damper Idler Lever Return				
63 10-80	.....	1	316 7768	
65 10-80 (LHD-WAC) .....*(Replaces 317 5381)*	.....	1	317 8974	#
13.020 DIAPHRAGM, Heater Air Damper Control (Incl. Link)				
60 10-20-80 (LHD)	.....	1	344 5692	
60 10-80 (RHD)	.....	1	343 8756	
ATTACHING PARTS				
Link To Damper				
CAP..... 60 10-20-80 .....*(Replaces 310 9459)*	13.017	1	400 0065	
Diaphragm To Bracket				
NUT, Hexagon..... 60 10-20-80	17.412	2	G271169	

Copyright 1963 American Motors Corp.

GROUP NO. — DESCRIPTION — YEAR and MODEL	PRIMARY GROUP NO.	PER CAR	PART NO.	CODE
BRACKET, Heater Air Damper Control Diaphragm				
60 10-20-80 (LHD)	.....	1	344 5694	
60 10-80 (RHD)	.....	1	343 5643	
ATTACHING PARTS Bracket To Dash Panel				
SCREW, Tapping..... 60 10-20-80	17.671	2	G445702	NA
HOSE, Heater Air Damper Vacuum (Bulk-Order In Feet)(50 Feet Per Roll)				
60 10-20-80	.....	AR	320 2247	
HOSE, Heater Air Damper Vacuum (Cut Length)				
60 10-80 (RHD)(Switch To Tee)	.....	1	343 7623	
60 10-80 (RHD)(Switch To Diaphragm)	.....	1	343 7603	
GROMMET, Heater Air Damper Vacuum Hose (In Dash Panel)				
60 10-20-80	.....	1	345 1877	
TEE, Heater Air Damper Vacuum Hose				
60 10-20-80	.....	1	343 8786	
13.028 CORE, Heater				
60 01 (LHE-Note 13.012-1 Type 1)	.....	1	313 0093	
60 01 (LHE-Note 13.012-1 Type 2): 60 01 (OHV)	.....	1	315 9642	
61 Thru 63 01	.....	1	316 0270	
64 01 ***(Use 317 7648)***	.....	1	316 9918	#
65 01 (LHD) ***(Replaces 317 7405)***	.....	1	317 7648	
60 10-20-80 ***(Replaces 315 0205)***	.....	1	345 1802	
61-62 10-20-80 ***(Replaces 345 5532, 316 4429)***	.....	1	316 4779	
63-64 10-80 (LHD): 65 10-80 (V8-LHD)	.....	1	316 7985	
64 01 (RHD): 63 Thru 65 10-80 (RHD)	.....	1	316 9225	
65 10-80 (LHD-Six) ***(Replaces 317 7407)***	.....	1	317 7661	#
ATTACHING PARTS Core To Dash Panel				
SCREW, Tapping..... 61 Thru 63 01	17.648	4	G162688	NA
Core To Heater Cover				
CLIP..... 60 01 (LHE-Note 13.012-1 Type 2): 60 01 (OHV) ...	.....	4	315 9644	
SUPPORT, Heater Core (Right Side)				
60 10-20-80	.....	1	341 0147	
ATTACHING PARTS Support To Dash Panel				
SCREW, Tapping..... 60 10-20-80 ***(Replaces 800 0091)***	17.671	2	400 1031	

Copyright 1963 American Motors Corp.

GROUP NO. — DESCRIPTION — YEAR and MODEL	PRIMARY GROUP NO.	PER CAR	PART NO.	CODE
GASKET, Heater Core				
(Top) 60 01 (LHE-Note 13.012-1 Type 1)	.....	1	313 0079	
(Top) 61 Thru 63 01	.....	1	316 0310	
(Upper) 61-62 10-20-80	.....	1	345 5528	
(Upper) 63 10-80 (LHD) ***(Replaces 316 6394)***	13.012	1	316 9428	
(Upper) 64-65 10-80	13.012	1	348 8914	
(Upper) ***63 10-80 (RHD)***	.....	1	316 9228	
(Upper) ***64-65 10-80 (RHD)***	.....	1	317 1446	
(Side) 60 01 (LHE-Note 13.012-1 Type 1)	.....	2	313 0076	
(Side) 61 Thru 63 01	.....	2	316 0255	
(Bottom) 60 10-20-80	.....	2	314 6619	
(Lower) 61-62 10-20-80	.....	2	345 5529	
(End) 64-65 01: 63 Thru 65 10-80	.....	2	316 6450	
(Front) 64-65 01: ***64-65 10 (RHD)***	.....	1	317 1442	
(Front) 63 10-80 (LHD) ***(Ref. Pr. List)***	13.012	1	316 6451	
(Front) 64-65 10-80	13.012	1	348 8915	
(Front) ***63 10-80 (RHD)***	.....	1	316 9213	
(Rear) 63 Thru 65 10-80	.....	1	317 0580	
SEAL, Heater Core Support				
60 10-20-80	13.028	1	314 6319	
SEAL, Heater Core Tube				
60 Thru 63 01: 61-62 10-80 ***(Replaces 315 9643, 316 9200)***	.....	2	316 0925	
64-65 01: ***63 10-80 (RHD):*** 63 10-80 (WAC-3-3/8" Long)	.....	1	316 9200	
63 Thru 65 10-80 (4" Long)	.....	1	348 8916	
PLATE, Heater Tube Opening				
60 10-20-80	.....	1	315 0204	
ATTACHING PARTS Plate To Dash Panel				
SCREW, Tapping..... 60 10-20-80	17.671	1	800 0093	NA
13.035 VALVE, Heater Water				
60 Thru 63 01: 64-65 01 (OHV-196-LDT): ***65 10 (RHD-V8)***	.....	1	315 5866	
64-65 01 (LHD-LHE)(LHD-OHV-196-WDT)	.....	1	317 0525	
164 01 (Can): 165 01 (Can-LHE)	.....	1	318 1813	
65 01 (Six-199)(Six-232): ***65 10 (RHD-Six-232)***	.....	1	320 5709	
165 01 (Can-Six-199)(Can-Six-232): 165 10 (Can-RHD-Six-232)	.....	1	318 1834	
60 10-20-80	.....	1	343 7604	
61-62 10-20-80	.....	1	345 5545	
63-64 10-80 (LHD)	.....	1	316 6387	
63-64 10-80 (RHD)	.....	1	316 9231	
65 10-80 (LHD)	.....	1	317 6023	
165 10-80 (Can)	.....	1	317 8698	
ATTACHING PARTS Valve To Dash Panel				
SCREW, Tapping..... 60 10-20-80 ***(Replaces 800 0099)***	17.671	2	400 0479	
SCREW, Tapping..... 61-62 10-20-80: 63 10-80 (LHD) ***(Replaces 800 0095)***	17.671	2	G456766	
SCREW, Tapping..... ***63-64 10-80 (RHD)***	17.660	2	G161909	NA
SCREW, Tapping..... 65 10-80 (LHD)	.....	2	G443946	
SPACER ..... 60 10-20-80: ***63 Thru 65 10-80 (RHD)***	.....	2	342 9658	
CLIP, Sealing ..... 63-64 10-80 (LHD)	26.077	2	400 0379	
NUT, Speed ..... 63 Thru 65 10-80 (LHD)	.....	2	400 0278	

NOTE 13.035-1: Two Types of Brackets, Heater Water Valve Mounting were used on the 65 01 (Six-199) (Six-232) and 65 10 (RHD-Six-232). They can be identified as follows:

Type 1: The Bracket is tri-angular in shape and mounts behind Ignition Coil Bracket.

Type 2: The Bracket is rectangular in shape and attaches to the top of the Heater Core to Water Pump Tube Support Bracket.

Copyright 1963 American Motors Corp.

GROUP NO. — DESCRIPTION — YEAR and MODEL	PRIMARY GROUP NO.	PER CAR	PART NO.	CODE
Capillary Tube To Dash Panel				
CLIP..... 60 Thru 62 10-80.....	.....	1	312 6393	
SCREW, Tapping..... 60 Thru 62 10-80.....***(Replaces 800 0095)***	17.671	1	G456766	
Valve To Blower Housing				
SCREW, Tapping..... 63-64 10-80.....	3.165	1	400 0478	
Valve To Cylinder Head				
NIPPLE, Pipe..... 60 Thru 65 01 (OHV-196): ***65 10 (RHD-V8)***.....	17.392	1	G192073	
COUPLING, Pipe..... 60 Thru 65 01 (OHV-196).....	17.174	1	G192088	
BRACKET, Heater Water Valve Mounting				
65 01 (Six-199-Note 13.035-1 Type 1)(Six-232-Note 13.035-1 Type 1): ***65 10 (RHD-Six-232-Note 13.035-1 Type 1)***.....	.....	1	320 5710	
65 01 (Six-199-Note 13.035-1 Type 2)(Six-232-Note 13.035-1 Type 2): ***65 10 (RHD-Six-232-Note 13.035-1 Type 2)***.....	.....	1	320 6151	
ATTACHING PARTS				
Valve To Bracket				
SCREW, Tapping..... 65 01 (Six-199)(Six-232): ***65 10 (RHD-Six-232)***.....	.....	2	320 5657	
SEAL, Heater Water Valve To Dash Panel				
60 10-20-80: ***63 Thru 65 10-80 (RHD)***.....	.....	1	342 5598	
SEAL, Heater Water Valve Cable Slot				
63 Thru 65 10-80.....	.....	1	316 6578	#
GASKET, Heater Water Valve To Dash Panel				
61-62 10-20-80.....	.....	1	346 5920	
63 Thru 65 10-80 (LHD)(On Valve).....	.....	1	320 4365	
13.050 HOSE, Heater Water (Bulk)				
60 Thru 65 01-10-20-80 (25 Ft. Roll).....***(Replaces 375 0497)***	.....	1	320 3739	
HOSE, Water Pump To Tube (Molded)				
64 01: 65 01 (Six-196): 63-64 10 (OHV-196).....	.....	1	316 7899	
65 01 (Six-199)(Six-232): 65 10-80 (Six).....	.....	1	317 6458	
HOSE, Cylinder Head To Control Valve (Molded)				
64-65 01 (OHV-LDT).....	.....	1	316 7898	
HOSE, Heater Water Valve To Core (Molded)				
60 01 (LHE-Note 13.012-1 Type 2): 61 Thru 63 01 (LHE).....	.....	1	315 9650	
64-65 01 (LHE)(OHV-WDT).....	.....	1	317 1499	
63-64 10-80 (V8): 65 10-80.....	.....	1	316 7898	
HOSE, Heater Core To Tube (Molded)				
63 Thru 65 10 (OHV-196): 65 80 (Six).....	.....	1	316 7898	
CLIP, Heater Hose To Ignition Coil Bracket				
60 01 (LHE-Note 13.012-1 Type 2): 61 Thru 63 01 (LHE).....	13.440	1	400 0443	

NOTE 13.050-1: Two Types of Heater Core to Water Pump Tube Support Brackets were used on the 65 01 (OHV-232) and 65 10-80 (Six). They can be identified as follows:
Type 1: Bracket has two holes in Vertical Section for Tube Clips.
Type 2: Bracket has one hole in Vertical Section for Tube Clips.

Copyright 1963 American Motors Corp.

GROUP NO. — DESCRIPTION — YEAR and MODEL	PRIMARY GROUP NO.	PER CAR	PART NO.	CODE
ATTACHING PARTS Clip To Coil Bracket				
SCREW, Tapping..... 60 01 (LHE)	17.670	1	G172427	NA
CLIP, Heater Hose To Valve Cover				
61 Thru 63 01 (OHV): 60 10 (WAE-LAC)	13.086	1	314 7731	
CLIP, Heater Hose To Heater Cover				
60 10 (WAE-LAC)	13.086	1	314 7731	
ATTACHING PARTS Clip To Heater Cover				
SPACER..... 60 10 (WAE-LAC)	8.126	1	313 0118	
SCREW, Tapping..... 60 10 (WAE-LAC) ..... **(Replaces 800 0099)**	17.671	1	400 0479	
WASHER, Plain..... 60 10 (WAE-LAC) ..... ***(Replaces 800 0139)***	23.038	1	400 0481	
CLIP, Heater Valve To Heater Core Hose At Manifold				
64 10-80 (RHD)	13.082	1	314 4728	
65 10 (RHD)	13.440	1	317 7015	
ATTACHING PARTS Clip To Manifold				
SPACER..... **64-65 10 (V8-RHD)**	10.069	1	315 7984	
BOLT, Hexagon ..... **64-65 10 (V8-RHD)**	17.038	1	G180125	NA
WASHER, Lock ..... **64-65 10 (V8-RHD)**	17.820	1	G120382	NA
WASHER, Plain..... **64-65 10 (V8-RHD)**	17.814	1	400 1102	
TUBE, Heater Core To Water Pump				
63 01 (OHV-WDT)	.....	1	316 9549	
64 01 (LHE)	.....	1	317 2431	
64 01 (OHV): 63-64 10 (LHD-OHV-196)	.....	1	316 7924	
65 01 (LHD-LHE)	.....	1	317 6455	
65 01 (LHD-OHV-196)	.....	1	317 7260	
64 10 (OHV-232)	.....	1	317 4402	
65 01 (OHV-232): 65 10-80 (Six)	.....	1	317 7666	
63 80 (Note 13.088-1 Type 1) ..... ***(Ref. Pr. List)***	.....	1	316 7944	
63 80 (Note 13.088-1 Type 2)	.....	1	316 9323	
TUBE, Thermostat Housing To Heater Water Valve				
64 10 (OHV-232)	.....	1	317 4397	
65 10-80 (Six)	.....	1	317 7667	
ATTACHING PARTS Tube To Bracket				
CLIP..... 65 10-80 (Six)	3.163	1	310 7341	
SCREW, Tapping..... 65 10-80 (Six)	17.671	1	G9414012	NA
SUPPORT, Heater Core To Water Pump Tube To Clutch Housing				
63 01 (OHV-1 Req.): 64-65 01 (OHV-1 Req.)(LHE-3 Req.): 63-64 10 (Six-LHD-1 Req.)	.....	AR	316 8171	
CLAMP, Heater Core To Water Pump Tube To Manifold				
63-64 01 (OHV): 63-64 10 (Six-OHVC)	.....	1	316 8172	
63-64 10 (Six-OHVA): 65 01 (OHV-196)	.....	1	317 0454	

Copyright 1963 American Motors Corp.

GROUP NO. — DESCRIPTION — YEAR and MODEL	PRIMARY GROUP NO.	PER CAR	PART NO.	CODE
BRACKET, Heater Core To Water Pump Tube Support				
63 80 (Note 13.088-1 Type 2)	.....	1	316 9413	
65 01 (OHV-232-Note 13.050-1 Type 1): 65 10-80 (Six-Note 13.050-1 Type 1)	.....	1	317 7668	
65 01 (OHV-232-Note 13.050-1 Type 2): 65 10-80 (Six-Note 13.050-1 Type 2)	.....	1	317 9134	
CLIP, Heater Core To Water Pump Tube To Bracket				
63 80 (Note 13.088-1 Type 2)	17.134	1	G105251	
65 10-80 (Six)	1.116	1	317 8717	#
ATTACHING PARTS				
Clip To Support Bracket				
SCREW, Tapping — 65 10-80 (Six)	17.671	1	G9414012	NA
BOLT, Hexagon — 63 80 (Note 13.088-1 Type 2)	17.038	1	G180016	NA
WASHER, Lock — 63 80 (Note 13.088-1 Type 2)	17.820	1	G120380	NA
NUT, Hexagon — 63 80 (Note 13.088-1 Type 2)	17.406	1	G120375	
13.072 MOTOR, Heater And Defroster				
60 01 (Note 13.072-1 Type 1)...(Incl. Support) *(Ref. Pr. List)*	.....	1	315 4772	
60 01 (Note 13.072-1 Type 2)	.....	1	320 2374	
61 Thru 65 01 (LAC): 61-62 10-80: 63 Thru 65 10-80 (LHD-LAC) *(Replaces 316 0265)*	.....	1	316 4111	
60 10-20-80 (LAC)	.....	1	315 6027	
64-65 01 (RHD): 63 Thru 65 10-80 (RHD)	.....	1	316 9233	
ATTACHING PARTS				
Motor To Dash Panel				
BOLT, Hexagon — 60 01 (1/4-20 x 3/4-Note 13.072-1 Type 1)	17.038	1	G180020	NA
BOLT, Hexagon — 60 01 (1/4-20 x 5/8-Note 13.072-1 Type 1)	17.038	2	G180018	NA
WASHER, Lock — 60 01 (Note 13.072-1 Type 1)	17.820	2	G120380	NA
Motor To Support				
NUT, Hexagon — 60 01 (Note 13.072-1 Type 2)	17.412	2	G120622	NA
Motor To Blower Housing				
WASHER, Plain — 61 Thru 64 01 (LAC-2 Req.): 60 10-20-80 (LAC-2 Req.): 61-62 10-20-80 (2 Req.): 65 10-80 (LAC-4 Req.)	17.814	AR	G120391	NA
WASHER, Lock — 61 Thru 64 01 (LAC): 60 10-20-80 (LAC): 61-62 10-20-80: 63-64 10-80 (LHD-LAC)	17.822	2	G138479	NA
NUT, Hexagon — 61 Thru 65 01 (LAC): 60 10-20-80 (LAC): 61-62 10-20-80: 63-64 10-80 (LHD-LAC)	17.412	2	G120614	NA
NUT, Hexagon — 65 10-80 (LAC)	17.412	2	G271169	
Motor To Mounting Plate				
WASHER, Plain — ***63 Thru 65 10-80 (RHD)***	17.814	4	G120391	NA
WASHER, Lock — ***63 Thru 65 10-80 (RHD)***	17.822	2	G138479	NA
NUT, Hexagon — ***63 Thru 65 10-80 (RHD)***	17.412	2	G271169	

NOTE 13.072-1: Two Types of Heater Motors were used on the 60 01 Series. They can be identified as follows:
Type 1: Motor Shaft has 1/4" O. D.
Type 2: Motor Shaft has 5/16" O. D.

NOTE 13.072-2: Two Types of Heater-Air Conditioners were used on the 63 10-80 (WAC) Series. They can be identified as follows:
Type 1: Motor Lead has a Bullet Terminal.
Type 2: Motor Lead has a Eyelet Terminal and has Two Openings for Heat Exhaust Tubes.

NOTE 13.072-3: Two Types of Blower Motor Resistors were used on the 65 10-80 (WAC). They can be identified as follows:
Type 1: The Resistor is mounted with its Coils outside of Blower Housing.
Type 2: The Resistor is mounted with its Coils inside of Blower Housing in a rectangular hole in Blower Housing.

Copyright 1963 American Motors Corp.

GROUP NO. — DESCRIPTION — YEAR and MODEL	PRIMARY GROUP NO.	PER CAR	PART NO.	CODE
MOTOR, Air Conditioner Blower				
60 01 (OAC)	.....	1	320 1601	
61-62 10-20-80 (WAC)	.....	1	316 1446	
ATTACHING PARTS				
Motor To Blower Housing				
WASHER, Plain..... 61-62 10-20-80 (WAC)	17.814	4	G120391	NA
WASHER, Lock..... 61-62 10-20-80 (WAC)	17.822	2	G138479	NA
NUT, Hexagon..... 61-62 10-20-80 (WAC)	17.412	2	G120614	NA
MOTOR, Heater Defroster And Air Conditioner Blower				
61 Thru 63 01 (WAC): 63 10-80 (WAC-Note 13.072-2 Type 1)	.....	1	316 0619	
64-65 01 (WAC)	.....	1	317 1911	
60 10-20-80 (WAC) ***(Replaces 314 5960)***	.....	1	316 1446	#
63 10-80 (WAC-Note 13.072-2 Type 2): 64-65 10-80 (WAC)	.....	1	316 9614	
ATTACHING PARTS				
Motor To Blower Housing				
WASHER, Plain..... 61 Thru 65 01 (WAC): 60 10-20-80 (WAC): 63 10-80 (WAC)	17.814	4	G120391	NA
WASHER, Plain..... 64-65 10-80 (WAC)	17.814	4	G131015	NA
WASHER, Lock..... 61 Thru 65 01 (WAC): 60 10-20-80 (WAC): 63 10-80 (WAC)	17.822	2	G138479	NA
NUT, Hexagon..... 61 Thru 65 01 (WAC): 60 10-20-80 (WAC): 63 10-80 (WAC)	17.412	2	G120614	NA
NUT, Hexagon..... 64-65 10-80 (WAC)	17.412	2	G271163	NA
HOUSING, Air Conditioner Blower				
61-62 10-20-80 (WAC)	.....	1	345 5563	
ATTACHING PARTS				
Housing To Mounting Plate				
SCREW, Tapping..... 61-62 10-20-80 (WAC)	17.660	5	G161860	NA
NUT, Speed..... 61-62 10-20-80 (WAC)	.....	4	400 0383	
HOUSING, Heater-Defroster And Air Conditioner Blower				
60 10-20-80	.....	1	344 5688	
63 10-80 (LAC): 63 10-80 (WAC-Note 13.072-2 Type 1): 64-65 10-80 (LAC)...(Incl. Gaskets And Insulation)	.....	1	316 6388	
63 10-80 (WAC-Note 13.072-2 Type 2): 64 10-80 (WAC): 65 10-80 (WAC-Note 13.072-3 Type 1)...(Incl. Gaskets And Insulation)	.....	1	316 9615	
65 10-80 (WAC-Note 13.072-3 Type 2)	.....	1	317 8772	
ATTACHING PARTS				
Housing To Hopper Box				
SCREW, Tapping..... 60 10-20-80	22.027	5	400 0071	
Housing To Heater And Defroster Housing				
BOLT, Square..... 63 Thru 65 10-80	17.044	4	G426920	NA
WASHER, Plain..... 63-64 10-80	17.814	4	G120392	NA
WASHER, Plain..... 65 10-80 (WAC)	17.814	4	G120391	NA
WASHER, Plain..... 63 Thru 65 10-80	17.814	4	G120392	NA
WASHER, Lock..... 63 Thru 65 10-80	17.820	4	G120380	NA
WASHER, Lock..... 64-65 01	17.826	2	G178388	
NUT, Speed..... 63 Thru 65 10-80	13.012	4	400 0268	
NUT, Hexagon..... 63-64 10-80	17.406	4	G120375	

Copyright 1963 American Motors Corp.

GROUP NO. — DESCRIPTION — YEAR and MODEL		PRIMARY GROUP NO.	PER CAR	PART NO.	CODE	
	Housing To Dash Panel					
SCREW, Tapping.....	60 10-20-80 .....*(Replaces 800 0099)*	17.671	2	G9411563		
SCREW, Tapping.....	63 10-80	17.660	2	G161219	NA	
SCREW, Tapping.....	64-65 10-80 (LAC-2 Req.): 64-65 10-80 (WAC-1 Req.)	17.660	AR	G161909		
SCREW, Tapping.....	65 10-80 (WAC)	17.660	1	G443946	NA	
SPACER.....	60 10-20-80.....	13.035	2	342 9658		
SPACER.....	63 Thru 65 10-80.....	13.113	2	316 6571		
WASHER, Plain.....	63-64 10-80.....	17.814	2	G120392	NA	
WASHER, Lock.....	63-64 10-80.....	17.820	2	G120380	NA	
NUT, Stamped.....	60 10-20-80.....	17.428	2	G274999	NA	
NUT, Hexagon.....	63-64 10-80.....	17.406	2	G120375		
NUT, Hexagon.....	65 10-80 (LAC).....	17.412	6	G271172		
GASKET, Heater-Defroster And Air Conditioner Blower Housing						
(Side) 60 10-20-80		13.012	1	342 6379		
(Rear) 60 10-20-80		13.012	1	342 6380		
(Upper) 63 Thru 65 10-80.....		.....	1	316 6390		
(Lower) 63 Thru 65 10-80		.....	1	316 6391		
INSULATION, Heater-Defroster And Air Conditioner Blower Housing						
(End) 63-64 10-80: 65 10-80 (Note 13.072-3 Type 1)		.....	1	316 7166		#
(End) 65 10-80 (Note 13.072-3 Type 2)		.....	1	317 8662		#
(Top) 63 Thru 65 10-80		.....	1	316 7167		
(Bottom) 63 Thru 65 10-80.....		.....	1	316 7168		
PLATE, Air Conditioner Blower Housing Mounting						
61-62 10-20-80 (WAC).....		.....	2	345 6058		
ATTACHING PARTS						
	Plate To Instrument Panel					
SCREW, Machine.....	61-62 10-20-80 (WAC).....	17.598	2	800 0110		
	Plate To Dash Panel Bracket					
SCREW, Machine.....	61-62 10-20-80 (WAC).....	17.598	1	800 0110		
BRACKET, Air Conditioner Blower Housing Mounting Plate To Dash						
61-62 10-20-80 (WAC).....		.....	1	345 5571		
ATTACHING PARTS						
	Bracket To Dash Panel					
SCREW, Tapping.....	61-62 10-20-80 (WAC).....	17.660	2	G162009	NA	
DEFLECTOR, Air Conditioner Blower Housing Air Intake						
61-62 10-20-80 (WAC).....		.....	1	345 5632		
ATTACHING PARTS						
	Deflector To Housing					
SCREW, Tapping.....	61-62 10-20-80 (WAC).....	17.660	1	G161860	NA	
CONNECTOR, Air Conditioner Blower Housing To Evaporator (Hose)						
61-62 10-20-80 (WAC).....		13.488	1	345 5572		

Copyright 1963 American Motors Corp.

GROUP NO. — DESCRIPTION — YEAR and MODEL	PRIMARY GROUP NO.	PER CAR	PART NO.	CODE
PLATE, Heater And Defroster Motor Mounting				
64-65 01: ***63 Thru 65 10-80 (RHD)***	.....	1	316 9220	
ATTACHING PARTS				
Plate To Heater Housing				
NUT, Hexagon ..... 64-65 01: ***63 Thru 65 10-80 (RHD)***	17.412	3	G120361	NA
WASHER, Lock 64-65 01	17.824	3	G121801	NA
WASHER, Lock ..... 64-65 01: ***63 Thru 65 10-80 (RHD)***	17.822	3	G138479	NA
WASHER, Plain 64-65 01	17.814	3	G120391	NA
Plate To Dash Panel				
NUT, Stamped ..... 64-65 01: ***63 Thru 65 10-80 (RHD)***	.....	3	400 0703	
GASKET, Heater And Defroster Motor Mounting Panel To Dash				
64-65 01: ***63 Thru 65 10-80 (RHD)***	.....	1	316 9203	
SUPPORT, Heater And Defroster Motor Mounting				
60 01 (Note 13.008-1 Type 1)	.....	1	313 8367	
60 01 (Note 13.008-1 Type 2)	.....	1	315 9549	
ATTACHING PARTS				
Support To Dash Panel				
BOLT, Hexagon ..... 60 01 (1/4-20 x 3/4)	17.038	1	G180020	NA
BOLT, Hexagon ..... 60 01 (1/4-20 x 5/8)	17.038	2	G180018	NA
WASHER, Lock 60 01	17.820	3	G120380	NA
BUMPER, Heater And Defroster Motor Support				
60 01	.....	2	320 2524	
INSULATOR, Heater-Defroster And Air Conditioner Motor				
60 01	.....	2	320 2525	
61 Thru 65 01 (1 Req.): 60 10-20-80 (1 Req.): 61-62 10-20-80 (LAC-1 Req.): 61-62 10-20-80 (WAC-2 Req.): 63 Thru 65 10-80	.....	AR	314 7288	
BLADE, Heater And Defroster Blower Motor				
60 01 (Note 13.072-1 Type 1)	.....	1	313 0136	
60 01 (Note 13.072-1 Type 2)	.....	1	315 9332	
ATTACHING PARTS				
Blade To Motor Shaft				
SCREW, Set 60 01	17.640	1	G222421	NA
BLADE, Air Conditioner Blower Motor				
60 01 (OAC)	.....	1	320 1602	
WHEEL, Heater And Defroster Blower Motor				
61 Thru 63 01: 61-62 10-20-80	.....	1	316 0256	
64-65 01 (LHD)	.....	1	317 0899	
60 10-20-80	.....	1	315 2607	
63 Thru 65 10-80 (LHD)	.....	1	316 6576	
64-65 01-10-80 (RHD): 63 10-80 (RHD)	.....	1	316 9214	

Copyright 1963 American Motors Corp.

GROUP NO. — DESCRIPTION — YEAR and MODEL	PRIMARY GROUP NO.	PER CAR	PART NO.	CODE
ATTACHING PARTS Wheel To Motor Shaft				
SCREW, Set ..... 61 Thru 64 01: 60 Thru 64 10-20-80	17.640	1	G222421	NA
WHEEL, Air Conditioner Blower Motor				
61-62 10-20-80 (WAC)	.....	1	345 5565	
ATTACHING PARTS Wheel To Motor Shaft				
SCREW, Set ..... 61 Thru 65 01: 60 Thru 65 10-20-80	17.640	1	G222421	
SPACER, Heater And Defroster Blower Wheel				
61 Thru 63 01: 63 10-80 (WAC)	.....	1	316 2284	
GUARD, Heater And Defroster Blower Fan				
60 01	.....	1	313 0084	
GUARD, Air Conditioner Blower Fan				
61-62 10-20-80 (WAC)	.....	1	345 5567	
REINFORCEMENT, Heater And Defroster Blower Guard				
60 01	.....	1	313 0082	
GROMMET, Heater And Defroster Blower Guard				
60 01	.....	1	313 0270	
RESISTOR, Air Conditioner Blower Motor				
61 Thru 62 01 (WAC): 60 Thru 62 10-20-80 (WAC)	.....	1	344 5690	
63 Thru 65 01 (WAC): 63 10-80 (WAC-Note 13.072-2 Type 1)	.....	1	316 6528	
63 10-80 (WAC-Note 13.072-2 Type 2): 64 10-80: 65 10-80 (WAC-Note 13.072-3 Type 1) ..... ***(Replaces 316 9613)***	.....	1	317 5886	
65 10-80 (WAC-Note 13.072-3 Type 2)	.....	1	317 8645	
ATTACHING PARTS Resistor To Housing				
SCREW, Tapping ..... 61 Thru 63 01 (WAC): 60 Thru 62 10-20-80 (WAC): 65 10-80 (WAC)	17.671	2	G455380	NA
SCREW, Tapping ..... 63-64 10-80 (WAC)	17.671	2	G274773	NA
SCREW, Tapping ..... 64 01 (LHD-WAC)	3.165	2	400 0478	
SPACER ..... 64-65 01 (LHD-WAC)	13.113	4	316 6571	#
CLIP, Air Conditioner Blower Motor To Resistor Wire				
65 10-80 (WAC)	.....	1	400 0442	
COVER, Air Conditioner Blower Motor Resistor				
61-62 10-20-80 (WAC)	.....	1	345 5573	
WIRE, Blower Motor Ground				
61 Thru 65 01 (WAC): 61 10-80 (WAC): 63 10-80 (WAC-Note 13.072-2 Type 1) ..	.....	1	316 0624	
63 10-80 (WAC-Note 13.072-2 Type 2): 64-65 10-80	.....	1	316 9639	

Copyright 1963 American Motors Corp.

GROUP NO. — DESCRIPTION — YEAR and MODEL	PRIMARY GROUP NO.	PER CAR	PART NO.	CODE
ATTACHING PARTS				
Wire To Wheelhouse				
SCREW, Tapping..... 64-65 01	17.670	1	G172327	NA
WASHER, Lock..... 64-65 01	17.820	1	G131096	NA
WASHER, Plain..... 64-65 01	17.814	2	400 1081	
WIRE, Control Switch To Blower Motor				
61 01 (LHD)	.....	1	316 1337	
61 01 (RHD)	.....	1	316 2075	
61 10-20-80 (LHD)	.....	1	316 1338	
GROMMET, Blower Motor Wire				
60 01 (Note 13.008-1 Type 1)	3.163	1	436 5163	
61 01 (LAC): 60-61 10-20-80 (LAC)	22.018	1	438 8864	
61 01 (WAC): 60 10-20-80 (WAC)	.....	1	343 8784	
64-65 01: 62 10-80 (WAC): ***63 Thru 65 10-80 (RHD)***	.....	1	400 0350	
TUBE, Blower Housing To Blower Motor				
63 10-80 (WAC-Note 13.072-1 Type 2)	.....	1	316 9611	
64-65 10-80	.....	1	317 3206	
TUBE, Blower Motor Exhaust				
63 10-80 (WAC-Note 13.072-1 Type 2): 64-65 10-80	.....	1	316 9612	
13.078 SWITCH, Heater-Defroster And Air Conditioner Blower Control				
60 01	.....	1	343 1772	
61 Thru 63 01 (LHD-LAC)	.....	1	344 8499	
61 Thru 63 01 (LHD-WAC)	.....	1	344 8498	
61 Thru 63 01 (RHD-LAC)	.....	1	346 3670	
64-65 01 (LAC)	.....	1	352 0848	
64-65 01 (LHD-WAC)	.....	1	352 0849	
60 10-20-80 (LAC)	.....	1	344 0782	
60 10-20-80 (WAC)	.....	1	344 0783	
61 10-20-80 (LAC)	.....	1	344 7949	
61 10-20-80 (WAC)	.....	1	344 7948	
62 10-80 (LAC)	.....	1	346 2066	
62 10-80 (WAC)	.....	1	346 2067	
63 10-80 (LAC)	.....	1	348 2520	
63 10-80 (WAC)	.....	1	348 2522	
64 10-80 (LAC): ***65 10 (RHD)***	.....	1	350 9707	
64 10-80 (WAC)	.....	1	350 9708	
65 10-80 (LHD-LAC)	.....	1	351 6764	
65 10-80 (LHD-WAC)	.....	1	351 6765	
ATTACHING PARTS				
Switch To Instrument Panel				
NUT, Round..... 60 Thru 63 01: 60 Thru 62 10-20-80: 65 10-80	3.145	1	400 0056	
NUT, Spring..... 63-64 10-80	13.017	1	400 0130	
FERRULE ..... 63-64 10-80: ***65 10 (RHD)***	3.150	1	400 0145	
SCREW, Tapping..... 64 01	17.660	1	G161860	NA
SCREW, Tapping..... 63 10-80	17.660	2	G161869	NA
SWITCH, Air Conditioning Temperature Control				
60 01 (OAC)	.....	1	320 1606	

Copyright 1963 American Motors Corp.

GROUP NO. — DESCRIPTION — YEAR and MODEL	PRIMARY GROUP NO.	PER CAR	PART NO.	CODE
SWITCH, Air Conditioning Blower Control				
60 01 (OAC)	.....	1	320 1605	
ESCUTCHEON, Heater-Defroster And Air Conditioning Blower Control				
60 10-20-80	.....	1	344 0788	
65 10	22.038	1	351 6766	
65 80	.....	1	351 6769	
BEZEL, Heater-Defroster And Air Conditioning Blower Control				
65 80	22.100	1	351 6641	
13.080 KNOB, Heater-Defroster And Air Conditioning Switch				
60 01	13.052	1	343 2309	
61 01 (Gray)	.....	1	346 0256	
61 Thru 63 01 (Black)	.....	1	346 4513	
64-65 01	.....	1	350 9462	
60 10-20-80	.....	1	344 0597	
61-62 10-20-80	.....	1	345 7798	
63 10-80	.....	1	349 0019	
64-65 10-80	22.039	1	350 9540	
ATTACHING PARTS Knob To Switch				
SCREW, Set ..... 60 Thru 63 01	13.052	1	341 6806	
SCREW, Set 64-65 01	17.640	1	G435145	
SCREW, Set ..... 60 Thru 63 10-20-80	17.638	1	G9400811	NA
SCREW, Set 64-65 10-80	17.640	1	G147450	NA#
KNOB, Air Conditioning Temperature And Blower Switch				
60 01 (OAC)	.....	2	320 1607	
POINTER, Heater-Defroster And Air Conditioning Blower Switch				
64 10-80: ***65 10 (RHD)***	.....	1	351 9959	
13.086 CLAMP, Heater Hose				
60 Thru 65 01-10-20-80 (Adjustable)	17.108	AR	G111606	
60 Thru 65 01-10-20-80 (Corbin Twist)	.....	AR	315 5795	
13.088 NIPPLE, Heater Hose To Water Pump				
60-61 01 (LHE-Note 13.088-1: 60 Thru 62 20-80 (LAC) ..... ***(Use 316 0900)***	.....	1	315 1365	#
60 Thru 62 01 (LHE-Note 13.088-2): 63 01 (OHV-WDT): 64 01 (OHV): ***65 01 (RHD-OHV-196)***: 61 10 (Note 13.088-2): 61 10 (Note 13.088-2): 63-64 10 (OHVC): 63 10-80 (V8-Note 13.088-4 Type 1): 64-65 10-80 (V8) ..... ***(Replaces 314 2364, 314 2367)***	.....	1	316 0900	
60 Thru 62 01 (OHV): 63 01 (LHE): 63 01 (OHV-LDT): 64 01 (LHD-OHV): 60 Thru 62 10 (OHVC)	.....	1	314 2368	
62 10 (WAE-Note 13.088-3)	.....	1	316 4062	
65 01 (LHE)(OHV-196)	2.080	1	317 6328	
60 Thru 62 20-80 (WAC)	17.392	1	G192071	
63 80 (Note 13.088-4 Type 2)	13.050	1	316 9196	

NOTE 13.088-1: Use on Models less 40 AMP. low cut in Generator.
NOTE 13.088-2: Use on Models with 40 AMP. low cut in Generator.
NOTE 13.088-3: Use on Models with 40 AMP. Auto Lite Alternator.
NOTE 13.088-4: Two Types of Heater Tubes were used on the 63 80 Series. They can be identified by the Type of Nipple used on the Water Pump.
Type 1: The Nipple is curved with an over all length of 4-3/32 inches.
Type 2: The Nipple is straight with an over all length of 3 inches.

Copyright 1963 American Motors Corp.

GROUP NO. — DESCRIPTION — YEAR and MODEL		PRIMARY GROUP NO.	PER CAR	PART NO.	CODE
NIPPLE, Heater Hose To Cylinder Head					
60 Thru 64 10 (Six-OHV-196): 60-61 20: 63 Thru 65 10-80 (V8)	***(Replaces 314 2367)***	.....	1	316 0900	
60 Thru 62 80		.....	1	315 1365	
ELBOW, Heater Hose Nipple					
60 Thru 62 20-80 (WAC)		17.224	1	G144136	
13.108 HOSE, Defroster					
60 01		.....	2	437 3242	
61 Thru 63 01 (LAC)		.....	2	344 6986	
61 10-20-80	***(Replaces 344 0601)***	.....	1	345 1801	
61-62 10-20-80 (WAC)		.....	1	344 6986	
(Left) 61 Thru 63 01 (WAC)		.....	1	344 6987	
(Right) 61 Thru 63 01 (WAC)		.....	1	344 6986	
13.110 NOZZLE, Defroster					
60 01		.....	2	437 3244	
60 Thru 62 10-20-80		.....	3	341 7558	
ATTACHING PARTS Nozzle To Instrument Panel					
SCREW, Tapping.....	60 Thru 62 10-20-80	17.654	6	G148543	NA
CLIP	60 Thru 62 10-20-80 (Less Heater)	.....	6	341 6518	
13.113 DUCT, Heat Distribution					
60 10-20-80 (LHD-LAC)		.....	1	344 5696	
60 10-80 (RHD-LAC)		.....	1	344 4738	
ATTACHING PARTS Duct To Dash Panel					
SCREW, Tapping.....	60 10-20-80 (LAC)	17.660	3	G162009	NA
GASKET, Heat Distribution Duct					
(Upper) 60 10-20-80 (LAC)		13.488	1	342 5585	
(Lower) 60 10-20-80 (LAC)		13.488	1	342 5586	
HOUSING ASSEMBLY, Heater And Defroster Damper					
61 Thru 63 01 (LAC)...(Incl. Damper)		.....	1	316 0267	
61-62 10-20-80...(Incl. Damper And Gasket)		.....	1	345 5537	
63-64 10-80 (LAC)...(Incl. Damper And Cover)		.....	1	316 6552	
65 10-80 (LAC)...(Incl. Damper And Cover)		.....	1	317 5489	
ATTACHING PARTS Housing To Dash Panel					
BOLT	61 Thru 63 01 (LAC)	.....	1	316 0254	
BOLT, Square	63-64 10-80 (LAC)	17.044	2	G426920	NA
SCREW, Tapping.....	61 Thru 63 01 (LAC-10 Req.): 64-65 10-80 (LAC-1 Req.)	17.660	AR	G161909	NA
SCREW, Tapping.....	61-62 10-80	17.660	5	G161903	NA
SCREW, Tapping.....	63 Thru 65 10-80 (LAC)	17.660	1	G161942	NA
WASHER, Plain.....	61 Thru 63 01 (LAC)	17.814	1	G120392	NA
WASHER, Plain.....	63 Thru 65 10-80 (LAC)	17.814	2	G230391	NA
WASHER, Felt.....	63-64 10-80 (LHD)	.....	4	317 0406	
WASHER, Lock	61 Thru 63 01 (LAC)	17.820	1	G120380	NA
NUT, Hexagon.....	61 Thru 63 01 (LAC)	17.406	1	G120375	NA
NUT, Speed	63-64 10-80 (LAC)	13.012	6	400 0268	

Copyright 1963 American Motors Corp.

GROUP NO. — DESCRIPTION — YEAR and MODEL	PRIMARY GROUP NO.	PER CAR	PART NO.	CODE
GASKET, Housing To Dash Panel				
61-62 10-80	.....	1	345 5544	
(Left) 61 Thru 63 01 (LAC)	.....	1	316 0263	
(Right) 61 Thru 63 01 (LAC)	.....	1	316 0262	
SEAL, Housing To Blower Housing				
63 Thru 65 10-80 (LAC)	.....	1	316 6572	
SPACER, Housing To Dash Panel				
63 Thru 65 10-80 (LAC)	.....	2	316 6571	
SEAL, Heater And Defroster Damper				
61-62 10-20-80	.....	1	345 5530	
CLIP, Damper To Housing Pivot (On Rod)				
61 Thru 63 01 (LAC): 61-62 10-20-80	.....	2	316 2759	
WASHER, Damper To Housing Pivot				
61-62 10-20-80	.....	2	345 5527	
TUBE, Housing To Defroster Duct				
(Left) 61-62 10-20-80	.....	1	344 7986	
(Right) 61-62 10-20-80 (LAC)	.....	1	344 7985	
SLEEVE, Tube To Housing				
61-62 10-20-80	.....	2	345 7685	
ATTACHING PARTS Sleeve To Housing				
CLIP 61-62 10-20-80	.....	2	400 0125	
DEFLECTOR, Heater And Defroster Damper Air				
65 10-80 (WFC)	.....	1	317 5554	#
13.115 HOSE, Cowl Ventilator Drain (Bulk-Order In Feet)				
60 01 (Note 13.115-1 Type 1): 61 Thru 63 01: 60 Thru 62 10-20-80	.....	AR	320 2248	
HOSE, Cowl Ventilator Drain (Formed)				
60 01 (Note 13.115-1 Type 2): 60 Thru 63 01 (11-1/32" Long): 61-62 10-20-80 (11-1/32" Long)	.....	2	343 6204	
61 Thru 63 01 (14-13/16" Long) ..... *(Replaces 346 3050)*	.....	2	348 9348	
61-62 10-20-80 (11-1/2" Long)	.....	2	344 7992	
62 10-80 (9-1/2" Long)	.....	2	316 5653	
EXTENSION, Cowl Ventilator Drain Hose				
60 Thru 62 10-20-80 (WAC)	13.488	1	344 5727	

NOTE 13.115-1: Two Types of Drain Hoses were used on the 60 01 Series. They can be identified as follows:
Type 1: Hose fits over a Brass Drain Tube in Air Chamber.
Type 2: Hose fits thru Drain Hole in Air Chamber.

Copyright 1963 American Motors Corp.

GROUP NO. — DESCRIPTION — YEAR and MODEL	PRIMARY GROUP NO.	PER CAR	PART NO.	CODE
13. 118 DUCT, Heater And Defroster Air				
61 Thru 63 01 (WAC)	.....	2	344 6831	
64-65 01 ...(Incl. Gasket) ***(Use 320 6692)***	.....	1	350 0661	
60 10-20-80	.....	1	344 0591	
61-62 10-20-80 (LAC)	.....	1	344 7983	
61-62 10-20-80 (WAC)	.....	1	344 8003	
63-64 10-80: **65 10 (RHD)**	.....	1	347 2693	
65 10-80 (LHD)	.....	1	351 6650	
(Right) 61 Thru 63 01 (LAC)	.....	1	344 6830	
(Left) 61 Thru 63 01 (LAC)	.....	1	344 6831	
ATTACHING PARTS				
Duct To Instrument Panel				
NUT, Speed ..... 60 Thru 62 10-20-80	.....	6	341 1872	
NUT, Stamped 64 01: 63-64 10-80	17. 428	4	G440491	NA
NUT, Stamped 64 01	17. 428	4	320 9549	
Duct To Bracket (Inner)				
NUT, Hexagon ..... 63 Thru 65 10-80	17. 412	2	G271172	
WASHER, Plain ..... 63 Thru 65 10-80	17. 814	2	400 0486	
Duct To Bracket (Outer)				
NUT, Hexagon ..... 63 Thru 65 10-80	17. 428	2	320 9549	
BRACKET, Duct Mounting (Welds To Instrument Panel)				
(Inner) 63 Thru 65 10-80	.....	1	347 2911	
(Outer) 63 Thru 65 10-80 ***(Use 347 2911)***	.....	1	348 8220	#
SEAL, Heater And Defroster Air Duct To Damper Housing				
64-65 01: 63 Thru 65 10-80	.....	1	347 2560	
SEAL, Heater And Defroster Air Duct To Defroster Nozzle				
60 Thru 62 10-20-80	.....	3	341 1873	
TUBE, Heater And Defroster Air Duct To Damper Housing				
64-65 01 (LHD-LAC): 63-64 10-80 (LHD-LAC)	.....	1	347 2561	
64-65 01 (RHD)	.....	1	350 0666	
63 Thru 65 10-80 (RHD-LAC)	.....	1	347 2697	
65 10-80	.....	1	351 6644	
ATTACHING PARTS				
Tube To Housing				
CLIP 64-65 10-80	.....	2	400 0473	
13. 120 DAMPER, Defroster Air Duct				
60 10-20-80 (LAC)	.....	1	314 6674	
60 10-20-80 (WAC)	.....	1	344 5674	
ATTACHING PARTS				
Damper To Rod				
SCREW, Machine ..... 60 10-20-80 ***(Replaces 800 0015)***	17. 626	2	400 0914	
WASHER, Lock 60 10-20-80	17. 820	2	G131096	NA
ROD, Defroster Air Duct Damper				
60 10-20-80 (LAC)	.....	1	342 5820	
60 10-20-80 (WAC)	13. 500	1	344 5676	

Copyright 1963 American Motors Corp.

GROUP NO. — DESCRIPTION — YEAR and MODEL	PRIMARY GROUP NO.	PER CAR	PART NO.	CODE
GROMMET, Defroster Air Duct Damper Rod End				
60 10-20-80 (LAC)	13.502	2	438 6559	
60 10-20-80 (WAC)	13.500	2	344 5677	
13.122 CABLE, Defroster Damper Control (Incl. Knob)				
64-65 01 (LHD-LAC)(Less Knob)	.....	1	350 0713	
64-65 01 (LHD-WAC)(Less Knob)	.....	1	350 5670	
64-65 01 (RHD)...(Less Knob)	.....	1	350 0714	
60 10-20-80 (LHD)	.....	1	344 0596	
60 10-80 (RHD)	.....	1	344 0679	
63 Thru 65 10-80 (RHD)	13.017	1	348 2958	
65 10-80 (LHD-LAC)(Less Knob)	.....	1	351 6793	
65 10-80 (LHD-WAC)(Less Knob)	.....	1	354 2776	
ATTACHING PARTS				
Cable To Duct				
CLAMP 60 10-20-80	22.018	2	313 0267	
CLIP ..... 64-65 01: 65 10-80 (LHD): ***63 Thru 65 10-80 (RHD)***	13.017	1	400 0417	
SCREW, Tapping..... 60 10-20-80: ***63 10-80 (RHD)***	17.660	2	G161790	NA
Cable To Instrument Panel				
WASHER, Lock 60 10-20-80	17.822	2	G138493	NA
NUT, Jam..... 60 10-20-80	17.410	1	G124929	NA
Cable To Air Conditioning Evaporator Housing				
CLIP ..... 65 10-80 (WAC)	.....	1	400 1554	
ESCUTCHEON, Defroster Damper Control				
60 10-20-80	22.100	1	344 0788	
63 10-80 (RHD): 64 10 (RHD)	.....	1	347 2747	
13.150 HOUSING ASSEMBLY, Fresh Air Intake (In Dash Panel)				
61-62 10-20-80	.....	2	320 2609	
(Right) 61 Thru 63 01	.....	1	320 2609	
ATTACHING PARTS				
Housing To Dash Panel				
SCREW, Tapping..... 61 Thru 63 01	17.660	4	G161798	NA
SCREW, Tapping..... 61-62 10-20-80	17.660	8	G161801	NA
DAMPER, Fresh Air Intake				
61 Thru 63 01 (1 Req.): 61-62 10-20-80 (2 Req.)	.....	AR	344 7975	
ATTACHING PARTS				
Damper To Rod				
SCREW, Tapping..... 61 Thru 63 01 (1 Req.): 61-62 10-20-80 (2 Req.) ...	17.660	AR	G161790	NA
RETAINER..... 61 Thru 63 01 (1 Req.): 61-62 10-20-80 (2 Req.) ...	.....	AR	344 7978	
ROD, Fresh Air Intake Damper				
61 Thru 63 01 (1 Req.): 61-62 10-20-80 (2 Req.)	.....	AR	344 7979	
STOP, Fresh Air Intake Damper (On Right Housing)				
61-62 10-20-80 (WAC)	.....	1	344 7433	

Copyright 1963 American Motors Corp.

GROUP NO. — DESCRIPTION — YEAR and MODEL	PRIMARY GROUP NO.	PER CAR	PART NO.	CODE
ATTACHING PARTS				
Stop To Housing				
SCREW, Tapping..... 61-62 10-20-80 (WAC)	17.654	1	G443824	NA
GASKET, Fresh Air Intake Housing To Dash Panel				
61 Thru 63 01 (1 Req.): 61-62 10-20-80 (2 Req.)	.....	AR	316 2108	
GASKET, Fresh Air Intake Damper				
61 Thru 63 01 (1 Req.): 61-62 10-20-80 (2 Req.)	.....	AR	344 7977	
13. 155 CABLE, Fresh Air Intake Control				
61-62 10-20-80 (LAC-2 Req.): 62 10-20-80 (WAC-1 Req.-Vent).....	.....	AR	347 5189	
61-62 10-20-80 (WAC-Refrig. Pull).....	.....	1	347 5190	
(Left) 61 Thru 63 01	.....	1	346 4728	
(Right) 61 Thru 63 01	.....	1	346 4727	
ATTACHING PARTS				
Cable To Instrument Panel				
NUT, Hexagon..... 61 Thru 63 01.....	17.406	2	G120375	NA
Cable To Bracket				
NUT, Hexagon..... 61-62 10-20-80.....	17.406	2	G120369	NA
Cable To Housing				
CLAMP..... 61-62 10-20-80.....	22.018	2	313 0267	
SCREW, Tapping..... 61-62 10-20-80.....	17.654	2	G443824	
Cable To Damper Rod				
NUT, Speed ..... 61 Thru 63 01: 61-62 10-20-80 ***(Replaces 400 0369)***	.....	2	317 0407	
BRACKET, Fresh Air Intake Cable Mounting				
61-62 10-20-80.....	.....	2	344 7982	
ATTACHING PARTS				
Bracket To Instrument Panel				
SCREW, Machine..... 61-62 10-20-80..... ***(Replaces G423554)***	17.626	2	400 0980	
NUT, Hexagon..... 61-62 10-20-80.....	17.406	2	G120375	
13.160 COVER ASSEMBLY, Air Intake Damper Access (In Cowl Panel)(Incl. Seal)				
(Left) 61 Thru 63 01	.....	1	345 8161	
(Right) 61 Thru 63 01 (WAC).....	.....	1	345 8160	
ATTACHING PARTS				
Cover To Panel				
SCREW, Tapping..... 61 Thru 63 01 (LAC-2 Req.): 61 Thru 63 01 (WAC-4 Req.)	17.666	AR	G161645	NA
DAMPER ASSEMBLY, Air Intake Access Cover (Incl. Seal And Silencer)				
(Left) 61 Thru 63 01	.....	1	345 8167	
(Right) 61 Thru 63 01 (WAC).....	.....	1	345 8166	
ATTACHING PARTS				
Damper To Cover				
PIN, Hinge..... 61 Thru 63 01 (LAC-1 Req.): 61 Thru 63 01 (WAC-2 Req.)	.....	AR	345 8173	

Copyright 1963 American Motors Corp.

GROUP NO. — DESCRIPTION — YEAR and MODEL	PRIMARY GROUP NO.	PER CAR	PART NO.	CODE
SILENCER, Air Intake Access Cover Damper				
61 Thru 63 01 (1/4"-LAC-1 Req.): 61 Thru 63 01 (1/4" x 6"-WAC-2 Req.)	.....	AR	345 8067	
61 Thru 63 01 (1/2" x 1-1/2"-LAC-2 Req.): 61 Thru 63 01 (1/2" x 1-1/2"-WAC-4 Req.)	.....	AR	348 9141	
BUMPER, Air Intake Access Cover Damper (Right)				
61 Thru 63 01 (WAC)	.....	1	344 7251	
SEAL, Air Intake Access Cover Damper (Left)				
61 Thru 63 01	.....	1	345 8171	
SEAL, Air Intake Access Cover To Cowl Panel				
61 Thru 63 01 (LAC-1 Req.): 61 Thru 63 01 (WAC-2 Req.)	.....	AR	345 8165	
13.400 COMPRESSOR, Air Conditioning				
60-61 01: 62 01 (Vertical Mount): 60-61 10-20-80 ***(Replaces 315 7173, 315 9559)***	.....	1	315 9566	
62 01-10-80 (Horizontal Mount): 63 10-80 (Note 13.400-8 Type 1): 64 10 (OHV-196-OAC-Note 13.400-8 Type 1)	.....	1	316 4504	
64-65 01: 63-64 10 (OHV-196-Note 13.400-8 Type 2): 63 10-80 (OAC-Note 13.400-8 Type 2): 64 10 (OHV-232): 64 10-80 (V8): 65 10-80	.....	1	317 1662	

NOTE 13.400-1: Compressor can be identified by the Instruction Plate having Red Letters.

NOTE 13.400-2: Compressor can be identified by the Instruction Plate having Blue Letters.

NOTE 13.400-3: Kit is used with a Tecumseh Compressor.

NOTE 13.400-4: Two Types of York Compressors were used on the 61 01-10-20-80 Series. They can be identified as follows:
- Type 1: Compressor has Cooling Fins spaced 1/4" apart on Valve Plate and Cylinder Walls.
- Type 2: No Cooling Fins are used on Compressor.

NOTE 13.400-5: Kit is used with a Tecumseh Compressor.

NOTE 13.400-6: Two Types of Vertical Mount Compressors were used on the 62 01 Series. They can be identified as follows:
- Type 1: Compressor is of York Manufacture.
- Type 2: Compressor is of Tecumseh Manufacture.

NOTE 13.400-7: Two Types of Horizontal Mount Compressors were used on the 62 thru 65 01-10-80 Series. They can be identified as follows:
- Type 1: Compressor is of York Manufacture.
- Type 2: Compressor is of Tecumseh Manufacture.

NOTE 13.400-8: Two Types of Field Installed Air Conditioning Kits were used on the 63-64 10 (OHV-196) and 63 10-80 (V8-OAC). They can be identified as follows:
- Type 1: Suction and Discharge Valves have Mounting Flange and attaches to Compressor Head with two Screws.
- Type 2: Suction and Discharge Valves do not have Mounting Flange and Mounts directly onto Compressor Head.

Copyright 1963 American Motors Corp.

GROUP NO. — DESCRIPTION — YEAR and MODEL	PRIMARY GROUP NO.	PER CAR	PART NO.	CODE
ATTACHING PARTS				
Compressor To Bracket				
(LHE-LPS-3/4" Long)	17.038	4	G180120	NA
BOLT, Hexagon ..... 60 01 (3/4" Long): 61 01 (LPS-3/4" Long): 62 01				
BOLT, Hexagon ..... 60 01 (OHV-LPS-1-5/8" Long): 61 01 (OHV-1-5/8" Long): 60 10: 60-61 20-80	17.038	4	G179844	NA
BOLT, Hexagon ..... 61 01 (WPS-7/8" Long): 62 01 (LHE-WPS-7/8" Long): 63-64 01 (LHE)	17.038	4	G180121	NA
STUD..... 61 10 (OHVA): 62 Thru 65 01 (OHV): 64-65 10 (Six): 65 80 (Six)	17.718	4	G107290	
STUD..... 62 Thru 65 10-80 (V8)	17.718	4	G103195	
WASHER, Plain..... 60 01 (OHV-LPS): 61 01 (OHV): 62 Thru 65 01: 60 Thru 65 10-20-80	17.814	4	400 1102	
WASHER, Lock ..... 60 01 (OHV-LPS): 61-62 01 (OHV): 63 Thru 65 01: 60 Thru 65 10 (Six): 60 20-80: 65 80 (Six)	17.820	4	G120382	NA
WASHER, Lock ..... 62 Thru 65 10-80 (V8)	17.822	4	G114606	NA
NUT, Hexagon..... 61 Thru 65 01-10 (OHV-196): 64-65 10 (OHV-232): 65 80 (Six)	17.406	4	G120369	NA
NUT, Jam..... 62 80	17.410	4	G124829	NA
NUT, Jam..... 63 Thru 65 10-80 (V8)	17.410	4	G124925	NA
Compressor To Support Bracket				
BOLT, Hexagon 60 01	17.038	2	G181361	NA
WASHER, Lock..... 60 01	17.820	2	G103321	NA
NUT, Hexagon..... 60 01	17.406	2	G103026	NA
SEAL KIT, Air Conditioning Compressor				
60 01-10-20-80 (Note 13.400-1)	.....	1	320 1706	
60 01-10-20-80 (Note 13.400-2) ***(Replaces 320 2301)***	.....	1	320 5646	#
60 10-20-80 (Note 13.400-3)	.....	1	320 2320	
61 01-10-20-80 (Note 13.400-4 Type 1 And 2): 62 01 (Note 13.400-6 Type 1) ***(Replaces 320 2301)***	.....	1	320 5646	#
61 01-10-20-80 (Note 13.400-5): 62 01 (Note 13.400-6 Type 2)	.....	1	320 2320	
62-63 01-10-80 (Note 13.400-7 Type 1): 64 10 (OHV-196-OAC-Note 13.400-8 Type 1) ***(Replaces 320 2301)***	.....	1	320 5646	#
62-63 01-10-80 (Note 13.400-7 Type 2)	.....	1	320 2320	
64 01 (Note 13.400-7 Type 1): 64 10 (OHV-196-Notes 13.400-7 Type 1 And 13.400-8 Type 2): 64 10 (OHV-232-Note 13.400-7 Type 1): 64 10-80 (V8-Note 13.400-7 Type 1): 65 01-10-80 (Note 13.400-7 Type 1) ***(Replaces 320 5059)***	.....	1	320 5646	
64-65 01-10-80 (Note 13.400-7 Type 2)	.....	1	320 5070	
VALVE PLATE KIT, Air Conditioning Compressor				
60 01-10-20-80 (Note 13.400-1 And 2)	.....	1	320 1705	
60 10-20-80 (Note 13.400-3)	.....	1	320 2322	
61 01-10-20-80 (Note 13.400-4 Type 1): 62 01 (Note 13.400-6 Type 1)	.....	1	320 1705	
61 01-10-20-80 (Note 13.400-4 Type 2)	.....	1	320 2971	
61 01-10-20-80 (Note 13.400-5): 62 01 (Note 13.400-6 Type 2)	.....	1	320 2322	
62 Thru 65 01-10-80 (Note 13.400-7 Type 1)	.....	1	320 3490	
62-63 01-10-80 (Note 13.400-7 Type 2)	.....	1	320 2322	
64-65 01-10-80 (Note 13.400-7 Type 2)	.....	1	320 5072	
GASKET KIT, Air Conditioning Compressor				
60 01-10-20-80 (Note 13.400-1 And 2)	.....	1	320 1707	
60 10-20-80 (Note 13.400-3)	.....	1	320 2321	
61 01-10-20-80 (Note 13.400-4 Type 1): 62 01 (Note 13.400-6 Type 1)	.....	1	320 1707	
61 01-10-20-80 (Note 13.400-4 Type 2)	.....	1	320 2970	
61 01-10-20-80 (Note 13.400-5): 62 01 (Note 13.400-6 Type 2)	.....	1	320 2321	

Copyright 1963 American Motors Corp.

GROUP NO. — DESCRIPTION — YEAR and MODEL	PRIMARY GROUP NO.	PER CAR	PART NO.	CODE
62-63 01-10-80 (Note 13.400-7 Type 1): 64 10 (OHV-196-OAC-Note 13.400-8 Type 1)	.....	1	320 2970	
62-63 01-10-80 (Note 13.400-7 Type 2)	.....	1	320 2321	#
64-65 01 (Note 13.400-7 Type 1): 64 10 (OHV-196-Notes 8.400-7 Type 1 And 13.400-8 Type 2): 64 10-80 (V8-Note 13.400-7 Type 1): 65 10-80 (Note 13.400-7 Type 1)	.....	1	320 5060	
64-65 01-10-80 (Note 13.400-7 Type 2)	.....	1	320 5073	
13.405 VALVE, Air Conditioning Compressor Suction And Discharge				
(Suction) 60 Thru 63 01: 60 Thru 62 10-20-80: 63 10-80 (Note 13.400-8 Type 1): 64 10 (OHV-196-OAC-Note 13.400-8 Type 1) ***(Replaces 315 8726)***	.....	1	315 7176	
(Suction) 64-65 01: 64 10 (OHV-196-Note 13.400-8 Type 2): 63 10-80 (OAC-Note 13.400-8 Type 2): 64 10 (OHV-232): 64 10-80 (V8): 65 10-80	.....	1	317 2734	
(Discharge) 60 Thru 62 01-10-20-80: 63 01: 63 10-80 (Note 13.400-8 Type 1): 64 10 (OHV-196-OAC-Note 13.400-8 Type 1)	.....	1	315 7176	
(Discharge) 64-65 01: 64 10 (OHV-196-Note 13.400-8 Type 2): 63 10-80 (OAC-Note 13.400-8 Type 2): 64 10 (OHV-232): 64 10-80 (V8): 65 10-80	.....	1	317 2734	
ATTACHING PARTS Valve To Compressor				
SCREW, Socket ..... 60 Thru 63 01-10-20-80	.....	2	314 9418	
FITTING, Air Conditioning Compressor Suction Freon Charging				
60 10-20-80 (WAC-Note 13.405-1 Type 1) ***(Ref. Pr. List)***	.....	1	315 8570	
60 10-20-80 (WAC-Note 13.405-1 Type 2) ***(Ref. Pr. List)***	.....	1	315 8726	
CAP, Air Conditioning Compressor Suction Freon Charging Valve				
60 10-20-80 (WAC-Note 13.405-1 Type 2)	.....	1	315 3725	
VALVE, Air Conditioning Compressor Suction Freon Charging				
60 10-20-80 (WAC-Note 13.405-1 Type 1)	.....	1	315 3310	
ATTACHING PARTS Valve To Compressor				
SCREW, Socket ..... 60 Thru 63 01-10-20-80	.....	2	314 9418	
GASKET, Air Conditioning Compressor Freon Charging Valve				
60 10-20-80 (WAC-Note 13.405-1 Type 1)	.....	1	315 6005	
GASKET, Air Conditioning Compressor Suction And Discharge Valve				
60 Thru 63 01-10-20-80: 64 10 (OHV-196-OAC-Note 13.400-8 Type 1)	.....	2	315 7174	
64-65 01: 64 10 (OHV-196-Note 13.400-8 Type 2): 64 10 (OHV-232): 64 10-80 (V8): 65 10-80 ...(Incl. 2)	.....	1	320 5084	

NOTE 13.405-1: Two Types of Freon Charging Fittings were used on the Production Installed Air Conditioning Units. They can be identified as follows:
Type 1: A Removable Freon Charging Valve is used with Fitting.
Type 2: The Freon Charging Valve is an Intergral Part of Fitting.

Copyright 1963 American Motors Corp.

GROUP NO. — DESCRIPTION — YEAR and MODEL	PRIMARY GROUP NO.	PER CAR	PART NO.	CODE
13.410 BRACKET, Air Conditioning Compressor Mounting				
60 01: 61 01 (LHE-LPS): 62 01 (LHE-LPS)	.....	1	315 7178	
61-62 01 (LHE-WPS): 63 01 (LHE)	.....	1	315 9538	
64-65 01 (LHE-OAC)	.....	1	317 0307	
61 01-10 (OHVC-196): 62 01 (OHV-Note 13.400-6 Types 1 And 2)	.....	1	316 0890	
62 01 (OHV-Note 13.400-7 Types 1 And 2): 63 Thru 65 01 (OHV): 62 Thru 64 10 (OHVC-196)	.....	1	316 3990	
60 10	.....	1	315 8578	
61-62 10 (OHVA-196)	.....	1	316 0870	
63-64 10 (OHVA-196)	.....	1	316 9558	
64-65 10 (OHV-232-LPS): 65 80 (Six-LPS). ***(Replaces 317 2689)(Use 317 8401)***	.....	1	317 7681	#
64-65 10 (OHV-232-WPS): 65 80 (Six-WPS)	.....	1	317 8401	
60-61 20-80	.....	1	315 8532	
62 80: 63 Thru 65 10-80 (V8)	.....	1	316 3531	
ATTACHING PARTS				
Bracket To Cylinder Head				
BOLT, Hexagon ..... 60 01 (OHV-LPS): 61 Thru 63 01 (OHV): 60 Thru 63 10 (OHV)	17.038	2	G179840	NA
BOLT, Hexagon ..... 60 Thru 63 20-80	17.038	1	G179839	NA
BOLT, Hexagon ..... 64-65 01-10 (OHV-196-2 Req.): 64-65 10 (OHV-232-3 Req.): 65 80 (Six)	17.038	AR	G180123	NA
BOLT, Hexagon 64-65 10-80 (V8)	17.038	1	G180122	NA
WASHER, Lock ..... 60 01 (OHV-LPS-2 Req.): 61 Thru 65 01 (OHV-2 Req.): 60 Thru 65 10 (OHV-196-2 Req.): 64-65 10 (OHV-232-3 Req.): 60 Thru 63 20-80 (1 Req.)	17.820	AR	G120382	NA
WASHER, Plain..... 60 01 (OHV-LPS-2 Req.): 61 Thru 65 01 (OHV-2 Req.): 60 Thru 65 10 (OHV-196-2 Req.): 64-65 10 (OHV-232-3 Req.): 60 Thru 63 20-80 (1 Req.)	17.814	AR	400 1102	
Bracket To Cylinder Block				
STUD..... 61-62 01-10 (OHVC): 63 01-10 (OHV): 64-65 01 (OHV): 64 10 (OHV-196)	11.300	1	315 5368	
BOLT, Hexagon ..... 61-62 10 (OHVA)	17.038	1	G181618	
WASHER, Plain..... 61 Thru 65 01-10 (Six-OHV)	17.814	1	G120393	NA
WASHER, Lock ..... 61 Thru 65 01-10 (Six-OHV)	17.820	1	G120214	NA
NUT, Hexagon..... 61 Thru 65 01-10 (Six-OHV)	17.406	1	G120368	NA
Bracket To Spacer Plate				
BOLT, Hexagon ..... 60 01 (OHV-LPS): 60 10	17.038	2	G181614	NA
WASHER, Plain..... 60 01 (OHV-LPS): 60 10	17.814	2	G120393	NA
Bracket To Water Manifold				
BOLT, Hexagon ..... 60 20-80 (2 Req.): 61 Thru 63 20-80 (1-1/8" Long-1 Req.)	17.038	AR	G179840	NA
BOLT, Hexagon ..... 61-62 20-80 (1-5/8" Long)	17.038	1	G179844	NA
BOLT, Hexagon ..... 63 Thru 65 10-80 (V8-1-3/8" Long)	17.038	1	G180125	NA
BOLT, Hexagon ..... 63 Thru 65 10-80 (V8-1-5/8" Long)	17.038	1	G180127	NA
WASHER, Plain..... 60 20-80 (2 Req.): 61 Thru 63 20-80 (1 Req.): 64-65 10-80 (V8-1 Req.)....***(Replaces 800 0163)***	17.814	AR	400 1102	
WASHER, Lock ..... 60 20-80 (2 Req.): 61 Thru 63 20-80 (1 Req.): 64-65 10-80 (V8-1 Req.)	.....	AR	G120382	NA
Bracket To Intake Manifold				
BOLT, Hexagon ..... 60 Thru 62 20-80: 63 Thru 65 10-80 (V8)	17.038	1	G180123	NA
WASHER, Plain..... 60 Thru 62 20-80: 63 Thru 65 10-80 (V8)	17.814	1	400 1102	
WASHER, Lock ..... 60 Thru 62 20-80: 63 Thru 65 10-80 (V8)	17.820	1	G120382	NA

Copyright 1963 American Motors Corp.

GROUP NO. — DESCRIPTION — YEAR and MODEL		PRIMARY GROUP NO.	PER CAR	PART NO.	CODE
	Bracket To Support Bracket				
BOLT, Hexagon	61 01 (LHE-LPS)	17.038	1	G180120	NA
BOLT, Hexagon	62 01 (LHE-LPS)	17.038	2	G181636	NA
WASHER, Lock	61 01 (LHE-LPS-1 Req.): 62 01 (LHE-LPS-2 Req.)	17.820	AR	G120382	NA
NUT, Hexagon	61 01 (LHE-LPS-1 Req.): 62 01 (LHE-LPS-2 Req.)	17.406	AR	G120369	NA
BRACKET, Air Conditioning Compressor Mounting Bracket Support					
60 01: 61-62 01 (LHE-LPS)		.....	1	315 7177	
ATTACHING PARTS					
	Support To Cylinder Head				
STUD	61-62 01 (LHE-LPS)	1.063	4	313 4405	
NUT, Hexagon	61 01 (LHE-LPS) .....*(Replaces 800 0292)*	17.406	4	400 1247	
SPACER, Air Conditioning Compressor Mounting Bracket					
61-62 10 (OHVA)		.....	1	316 0867	
13.415 CLUTCH, Air Conditioning Compressor Drive					
63 01-10-80 (Note 13.400-8 Type 1): 64 01-10-80 (Note 13.415-3 Type 1) ...(Incl. Plate And Pulley)		.....	1	316 3774	
63 10-80 (OAC-Note 13.400-8 Type 2): 64 01-10-80 (Note 13.415-3 Type 2)...(Incl. Plate And Pulley)		.....	1	317 1799	
65 01-10-80 (WAC)		.....	1	317 6724	
ATTACHING PARTS					
	Clutch To Compressor				
KEY	63 Thru 65 01-10-80	13.400	1	314 9417	
BOLT, Nylok	63 Thru 65 01-10-80	.....	1	314 9426	
WASHER, Plain	63 Thru 65 01-10-80	.....	1	400 0208	
WASHER, Lock	63 Thru 65 01-10-80	17.820	1	G120214	NA
PLATE, Air Conditioning Compressor Drive Clutch (Driven)					
60 01-10-20-80: 61 01-10-20-80 (Note 13.415-1 Type 1): 62 01 (Note 13.415-2 Type 1)		.....	1	320 2098	
62 01-10-80 (Note 13.415-2 Type 3): 63 01: 63 10-80 (Note 13.400-8 Type 1): 64 01-10-80 (Note 13.415-3 Type 1)		.....	1	320 3401	
ATTACHING PARTS					
	Plate To Compressor				
KEY	60 Thru 65 01-10-20-80	13.400	1	314 9417	
BOLT, Nylok	60 01-10-20-80: 61 01-10-20 (Note 13.415-1 Type 2): 62 01-10-80 (Note 13.415-2 Types 1 And 3): 63-64 01-10-80	.....	1	314 9426	

NOTE 13.415-1: Two Types of Clutches were used on the 61 00 Series. They can be identified as follows:
Type 1: The Clutch is of Eaton Manufacture with Brushes as part of Unit.
Type 2: The Clutch is of Electro Lock Manufacture with no Brushes used.

NOTE 13.415-2: Three Types of Clutches were used on the 62 00 Series. They can be identified as follows:
Type 1: The Clutch is of Eaton Manufacture with Split Shoe and Brushes as part of Unit and used with a Vertical Mount Compressor.
Type 2: The Clutch is of Electro Lock Manufacture with no Brushes used.
Type 3: The Clutch is of Eaton Manufacture with Solid Shoe and Brushes as part of Unit and used with a Horizontal Compressor.

NOTE 13.415-3: Two Types of Clutches were used on the 64 01-10-80. They can be identified as follows:
Type 1: Clutch is of Eaton Manufacture and uses brushes.
Type 2: Clutch is of Electro-Lock Manufacture with no brushes used.

NOTE 13.415-4: Two Types of Air Conditioning Clutches were used on the 65 01-10-80. They can be identified as follows:
Type 1: Clutch is of Electro-Lock Manufacture with unpainted metal finish.
Type 2: Clutch is of Warner Electric manufacture with painted black finish.

Copyright 1963 American Motors Corp.

GROUP NO. — DESCRIPTION — YEAR and MODEL	PRIMARY GROUP NO.	PER CAR	PART NO.	CODE
BOLT, Nylok..... 61 01-10-80 (Note 13.415-1 Type 2-1 Req.): 62 01-10-80 (Note 13.415-2 Type 2-1 Req.): 64-65 01-10-80 (4 Req.).....	.....	AR	400 0207	
WASHER, Plain..... 60 Thru 62 01-10-20-80: 64 01-10-80.....*(Replaces 314 1414)*	.....	1	400 0208	
WASHER, Plain..... 63 Thru 65 01-10-80.....	.....	1	400 0208	
WASHER, Lock..... 60 Thru 65 01-10-20-80.....	17.820	1	G120214	NA
COIL, Air Conditioning Compressor Drive Pulley (Driven)				
61 01-10-20-80 (Note 13.415-1 Type 2): 62 01-10-80 (Note 13.415-2 Type 2)..	.....	1	320 2961	
63 10-80 (OAC-Note 13.400-8 Type 2): 64 01-10-80 (Note 13.415-3 Type 2): 65 01-10-80 (Electro-Lock-Note 13.415-4 Type 1).....	.....	1	320 4937	
65 01-10-80 (Warner-Note 13.415-4 Type 2).....	.....	1	320 5702	
ATTACHING PARTS Coil To Compressor				
SCREW, Tapping..... 61 01-10-20-80 (Note 13.415-1 Type 2): 62 01-10-80 (Note 13.415-2 Type 2).....	.....	3	400 0209	
SCREW, Machine..... 64-65 01-10-80.....*(Replaces G9414204)*	25.020	4	400 0741	
PULLEY, Air Conditioning Compressor Drive				
60 01-10-20-80: 61 01-10-20-80 (Note 13.415-1 Type 1): 62 01 (Note 13.415-2 Type 1)...(Incl. Bearing And Snap Ring).....	.....	1	320 2099	
61 01-10-20-80 (Note 13.415-1 Type 2): 62 01-10-80 (Note 13.415-2 Type 2): 64 01-10-80 (Note 13.415-3 Type 2): 65 01-10-80 (Electro-Lock-Note 13.415-4 Type 1)...(Incl. Bearing And Snap Ring).....	.....	1	320 2960	#
62 01-10-80 (Note 13.415-2 Type 3): 63 01-10-80: 64 01-10-80 (Note 13.415-3 Type 1)...(Incl. Bearing And Snap Ring).....	.....	1	320 3400	#
65 01-10-80 (Warner-Note 13.415-4 Type 2)...(Incl. Bearing & Snap Ring).....	.....	1	320 5703	
BEARING, Air Conditioning Compressor Drive Pulley				
60 01-10-20-80: 61 01-10-20-80 (Note 13.415-1 Type 1): 62 01-10-80 (Note 13.415-2 Types 1 And 3): 63 01-10-80: 64 01-10-80 (Note 13.415-3 Type 1)	.....	1	320 2096	
RING, Air Conditioning Compressor Drive Pulley Bushing Snap				
60 01-10-20-80: 61 01-10-20-80 (Internal-Note 13.415-1 Type 2): 62 01-10-80 (Internal-Note 13.415-2 Types 1 And 3): 63 01-10-80 (Internal): 64 01-10-80 (Internal-Note 13.415-3 Type 1).....	13.515	1	320 2097	
61 01-10-20-80 (External-Note 13.415-1 Type 1): 62 01-10-80 (External-Note 13.415-2 Types 1 And 3): 63 01-10-80 (External): 64 01-10-80 (External-Note 13.415-3 Type 1).....	.....	1	320 3402	
BRUSHES, Air Conditioning Compressor Drive Clutch				
60 01-10-20-80: 61 01-10-20-80 (Note 13.415-1 Type 1): 62 01-10-80 (Note 13.415-2 Types 1 And 3): 63 01-10-80 (Note 13.400-8 Type 1) ...(Incl. Holder).....	.....	1	315 8739	
64 01-10-80 (Note 13.415-3 Type 1)...(Incl. Holder).....	.....	1	317 5943	

Copyright 1963 American Motors Corp.

GROUP NO. — DESCRIPTION — YEAR and MODEL	PRIMARY GROUP NO.	PER CAR	PART NO.	CODE
HARNESS, Air Conditioning Compressor Drive Clutch Wiring				
61 01	.....	1	316 2028	
62 01 (Note 13.477-1 Type 1)	13.477	1	316 3604	
62 01 (Note 13.477-1 Type 2)	13.477	1	316 5638	
63 01	13.477	1	316 7877	
64-65 01	13.477	1	317 1120	
60 10-20-80	.....	1	344 5679	
61 10-20-80	.....	1	316 1369	
62 10-80 (Note 13.477-1 Type 1)	3.165	1	316 5517	
62 10-80 (Note 13.477-1 Type 2)	13.477	1	316 5654	
63 10-80 (Note 13.400-8 Type 1)	13.477	1	316 8143	
63 10-80 (OAC-Note 13.400-8 Type 2): 64 10-80: 65 10-80 (Note 13.072-3 Type 1)	13.477	1	317 2475	
65 10-80 (Note 13.072-3 Type 2)	.....	1	317 8687	
WIRE, Air Conditioning Harness Extension				
65 10-80	13.477	1	358 5072	
WIRE, Air Conditioning Compressor Drive Clutch Brushes Extension				
60 80	3.165	1	315 1758	
61 80	.....	1	316 1346	
62 10-80	13.415	1	316 5520	
63-64 10-80 (V8)	.....	1	316 8140	
CLIP, Air Conditioning Compressor Drive Clutch Brushes Extension Wire				
60 80	13.170	1	312 7171	
61 01-10-80 (2 Req.): 62-63 01-80 (2 Req.): 65 01 (1 Req.): 64-65 10 (V8-1 Req.): 64-65 80 (1 Req.)	3.312	AR	79 394	
62 10: 64 10-80	6.367	1	315 1713	
65 10-80 (Six-1 Req.)	.....	1	317 7208	
WIRE, Air Conditioning Compressor Drive Clutch Extension				
63 10-80 (V8-Note 13.400-8 Type 2): 64 10-80 (V8): 65 10 (V8): 65 80	.....	1	317 2476	
13.425 BELT, Air Conditioning Compressor (Crankshaft To Compressor Pulley)				
60 01 (LPS): 61-62 01 (LHE-LPS)	.....	1	315 7290	
BELT, Air Conditioning Compressor (Crankshaft To Intermediate Pulley)				
60 01 (OHV-LPS)	.....	1	320 2605	
60 10 (LPS)	.....	1	315 8585	
61 01-10 (OHVC-LPS) ***(Use 317 2681)***	10.455	1	314 5967	

NOTE 13.425-1: Three Types of Power Steering Pumps were used on the 60 10 Series which require different Belts. They can be identified as follows:
Type 1: The Reservoir Oil Filler Tube is 1-7/8" O. D.
Type 2: The Reservoir Oil Filler Tube is 2-1/8" O. D. and Pump Pulley is 5-7/16" O. D.
Type 3: The Reservoir Oil Filler Tube is 2-1/8" O. D. and Pump Pulley is 6-3/8" O. D.

NOTE 13.425-2: Two Types of Power Steering Pumps were used on the 61 01-10 (OHVC). They can be identified as follows:
Type 1: The Power Steering Pump Pulley is 5-7/16" O. D.
Type 2: The Power Steering Pump Pulley is 6-3/8" O. D.

NOTE 13.425-3: Two Types of Power Steering Pumps were used on the 64 10-80 (V8). They can be identified as follows:
Type 1: Power Steering Pump Pulley is 4-7/16" O. D.
Type 2: Power Steering Pump Pulley is 4-3/4" O. D.

Copyright 1963 American Motors Corp.

GROUP NO. — DESCRIPTION — YEAR and MODEL	PRIMARY GROUP NO.	PER CAR	PART NO.	CODE
61 10 (OHVA)	.....	1	316 0871	
62 01-10 (WPS-35-1/2 x 1/2)	.....	1	316 0893	
64-65 01 (LHE-LPS-OAC)	.....	1	317 0298	
62 Thru 64 01-10 (OHVC-196-LPS-43 x 1/2): 63 01 (LHE-LPS-43 x 1/2): 65 01 (OHV-196-LPS)	.....	1	316 9176	
62 Thru 64 10 (OHVA-196-LPS-44-21/32 x 1/2)	10.455	1	316 9177	
64 10 (OHV-232-LPS): 65 10-80 (Six-LPS)	.....	1	317 2681	

BELT, Air Conditioning Compressor (Intermediate Pulley To Compressor Pulley)

60 01 (OHV-LPS)	.....	1	320 2606	
61 01-10 (OHVC-LPS)	.....	1	316 0893	
63 01 (LPS): 63 10 (Six-OHVC-LPS)	.....	1	316 0872	
64-65 01 (OHV-LPS): 64 10 (OHVC-196-LPS)	.....	1	317 0929	
64-65 01 (LHE-LPS-OAC)	.....	1	317 0297	
60 10 (LPS)	.....	1	315 8584	
61 10 (OHVA): 62 01 (OHV-LPS): 62 10 (LPS)	.....	1	316 0872	
63 10 (OHVA-196-LPS)	.....	1	316 9608	
64 10 (OHVA-196-LPS)	.....	1	317 0297	#
64 10 (OHV-232-LPS): 65 10-80 (Six-LPS)	.....	1	317 2665	

BELT, Air Conditioning Compressor (Crankshaft To Power Steering Pump Pulley)

61 01-10 (WPS-OHVC-Note 13.425-2 Type 1) ***(Use 317 2681)***	10.455	1	314 5967	
61 01-10 (WPS-OHVC-Note 13.425-2 Type 2)	10.455	1	316 2995	
62 01 (OHV) ***(Use 317 2681)***	10.455	1	320 4317	
60 10 (WPS-Note 13.425-1 Type 1)	.....	1	315 8585	
60 10 (WPS-Note 13.415-1 Type 2)	10.455	1	315 3773	
60 10 (WPS-Note 13.425-1 Type 3)	10.455	1	316 2997	
61 10 (OHVA)	.....	1	316 0871	

BELT, Air Conditioning Compressor (Compressor To Power Steering Pump Pulley)

61 01-10 (OHVC-WPS-Note 13.425-2 Type 1): 62 Thru 64 01-10 (OHV-196-WPS-35-1/2 x 1/2): 65 01 (OHV-196-WPS)	.....	1	316 0893	
61 01-10 (OHVC-WPS-Note 13.425-2 Type 2): 62 01 (OHV-WPS-36-1/2 x 1/2)	.....	1	316 2994	
61-62 01 (LHE-WPS)	.....	1	315 9668	
60 10 (WPS-Note 13.425-1 Type 2)	.....	1	315 8584	
60 10 (WPS-Note 13.425-1 Type 3)	.....	1	316 2996	
61 10 (OHVA)	.....	1	316 0872	
64 10 (OHV-232-WPS): 65 10 (Six-WPS)	.....	1	317 2665	
65 80 (Six-WPS)	.....	1	317 7236	

BELT, Air Conditioning Compressor (Crankshaft To Intermediate Pulley To Compressor)

60-61 20-80 (OAC-LPS)	.....	1	315 8531	
62 80 (OAC-LPS): 63 10-80 (V8-LPS-Note 13.400-8 Type 1)	10.455	1	315 8530	
63 10-80 (Note 13.400-8 Type 2): 64-65 10-80 (V8-LPS)	.....	1	317 3120	

BELT, Air Conditioning Compressor (Crankshaft To Power Steering Pump To Compressor)

60-61 20-80	10.455	1	315 8530	
62 80: 63 10-80 (V8-61-1/2" Long): 64 10-80 (V8-61-1/2" Long-Note 13.425-3 Type 1) ***(Replaces 315 3772)***	.....	1	316 4113	
63 80 (60-1/2" Long)	.....	1	316 6915	
64 10-80 (V8-WPS-Note 13.425-3 Type 2): 65 10-80 (V8-WPS)	.....	1	317 5222	

SPACER, Air Conditioning Compressor Belt Adjusting

60-61 01: 62 01 (LHE-LPS) ***(Replaces 315 7179)***	.....	1	316 0895	

Copyright 1963 American Motors Corp.

GROUP NO. — DESCRIPTION — YEAR and MODEL	PRIMARY GROUP NO.	PER CAR	PART NO.	CODE
13.430 PULLEY, Air Conditioning Intermediate				
60 10 (LPS): 61 01-10 (OHVC-LPS): 62 01 (OHV-LPS-Note 13.430-1 Type 1)...(Incl. Bearing And Hub)	.....	1	315 8598	
61-62 01 (LHE-LPS): 60-61 20-80 (LPS): 63 Thru 65 10 (V8): 62 Thru 65 80 (V8)...(Incl. Bearing And Shaft)	.....	1	314 3732	
61 10 (OHVA-LPS) ***(Replaces 316 0875)***	.....	1	320 3277	
62 01 (OHV-LPS-Note 13.430-1 Type 2): 63 01 (LPS): 64-65 01 (LHE-OAC-LPS): 64 01-10 (OHV-196-LPS): 65 01 (OHV-196-LPS): 62 10: 63 10 (Six-LPS)...(Incl. Bearing And Bracket) ***(Replaces 316 3896)***	.....	1	316 9602	
64-65 10 (OHV-232-LPS): 65 80 (Six-LPS)...(Incl. Bearing And Bracket)	.....	1	317 2687	
ATTACHING PARTS				
Pulley To Adapter				
WASHER, Lock ..... 60 20-80 (LPS)	17.820	1	G103322	NA
WASHER, Lock ..... 61 Thru 63 20-80 (LPS)	17.820	1	G131100	NA
NUT, Hexagon ..... 60 20-80 (LPS)	17.406	1	G120369	NA
NUT, Hexagon ..... 61 Thru 63 20-80 (LPS)	17.406	1	G120370	NA
SPACER ..... 61 Thru 63 20-80 (LPS)	1.063	1	313 8793	
Pulley To Mounting Bracket				
WASHER, Plain ..... 61-62 01 (LHE-LPS): 62 80: 63 Thru 65 10-80 (V8)	17.814	1	400 1120	
WASHER, Lock ..... 61-62 01 (LHE-LPS): 62 80: 63 Thru 65 10-80 (V8)	17.820	1	G131100	NA
NUT, Hexagon ..... 61-62 01 (LHE-LPS): 62 80: 63 Thru 65 10-80 (V8)	17.406	1	G120370	NA
Pulley Hub To Mounting Plate				
BOLT, Hexagon ..... 60 10 (LPS): 61 01 (OHVC-LPS): 62 01 (OHV-LPS-Note 13.430-1 Type 1)	17.038	4	G181593	NA
WASHER, Lock ..... 60 10 (LPS): 61 01 (OHVC-LPS): 62 01 (OHV-LPS-Note 13.430-1 Type 1)	17.820	4	G120214	NA
REINFORCEMENT, Air Conditioning Intermediate Pulley Bracket				
64-65 10 (OHV-232): 65 80 (Six)	.....	1	317 7670	
ADAPTER, Air Conditioning Intermediate Pulley				
60 Thru 63 20-80 (LPS)	.....	1	315 3533	
ATTACHING PARTS				
Adapter To Bracket				
BOLT, Hexagon ..... 60 Thru 63 20-80 (LPS)	17.038	2	G180124	NA
WASHER, Lock ..... 60 Thru 63 20-80 (LPS)	17.822	2	G114606	NA
WASHER, Plain ..... 60 Thru 63 20-80 (LPS) ***(Replaces 800 0446)***	17.814	2	400 1166	
PLATE, Air Conditioning Intermediate Pulley Mounting				
60 01 (OHV-LPS)	.....	1	320 2603	
61 01 (LHE-LPS)	.....	1	316 5658	
61 01-10 (OHVC-LPS): 60 10 (LPS): 62 01 (OHV-LPS-Note 13.430-1 Type 1)	.....	1	315 8275	

NOTE 13.430-1: Two Types of Intermediate Pulleys were used on the 62 01 (OHV) Series. They can be identified as follows:

Type 1: The Pulley has a Hub with 4 Holes to which the Mounting and Adjusting Plates are attached.

Type 2: The Pulley has a Bracket that takes the place of a Hub and to which the Adjusting Bracket is attached.

Copyright 1963 American Motors Corp.

GROUP NO. — DESCRIPTION — YEAR and MODEL	PRIMARY GROUP NO.	PER CAR	PART NO.	CODE
ATTACHING PARTS				
Mounting Plate To Adjusting Plate				
BOLT, Hexagon ..... 60-61 01-10 (OHVC-LPS): 62 01 (OHV-LPS-Note 13.430-1 Type 1)	17.038	3	G181637	NA
WASHER, Lock ..... 60-61 01-10 (OHVC-LPS): 62 01 (OHV-LPS-Note 13.430-1 Type 1)	17.820	3	G120382	NA
NUT, Hexagon ..... 60-61 01-10 (OHVC-LPS): 62 01 (OHV-LPS-Note 13.430-1 Type 1)	17.406	3	G120369	NA
PLATE, Air Conditioning Intermediate Pulley Adjusting				
60 01 (OHV-LPS)	.....	1	320 2604	
60 10 (LPS)	.....	1	315 8576	
61-62 01 (OHV-LPS-Note 13.430-1 Type 1): 61 10 (OHVC)	10.455	1	316 0894	
ATTACHING PARTS				
Adjusting Plate To Compressor Bracket				
BOLT, Hexagon ..... 61-62 01 (OHV-LPS-Note 13.430-1 Type 1): 61 10 (OHVC)	17.038	1	G180124	NA
WASHER, Lock ..... 61-62 01 (OHV-LPS-Note 13.430-1 Type 1): 61 10 (OHVC)	17.820	1	G120382	NA
WASHER, Plain ..... 61-62 01 (OHV-LPS-Note 13.430-1 Type 1): 61 10 (OHVC)	10.455	1	316 0876	
WASHER, Plain ..... 60 01 (OHV-LPS-13/32 × 7/8 × 1/8): 60 10 (LPS-13/32 × 7/8 × 1/8) ....*(Replaces 800 0165)*	17.814	1	400 1104	
WASHER, Plain ..... 60 01 (OHV-LPS-13/32 × 1-7/8 × 3/16): 60 10 (LPS-13/32 × 7/8 × 3/16)	.....	2	314 6964	
WASHER, Lock ..... 60 01 (OHV-LPS): 60 10 (LPS)	17.820	3	G120382	NA
NUT, Hexagon ..... 60 01 (OHV-LPS): 60 10 (LPS)	17.406	3	G103026	NA
Adjusting Plate To Cylinder Block				
BOLT, Hexagon ..... 61-62 01 (OHV-LPS-Note 13.430-1 Type 1)	17.038	1	G180129	
WASHER, Lock ..... 61-62 01 (OHV-LPS-Note 13.430-1 Type 1)	17.820	1	G120382	NA
WASHER, Plain ..... 61-62 01 (OHV-LPS-Note 13.430-1 Type 1) ..... *(Replaces 800 0169)*	17.814	1	400 1107	
SPACER ..... 61-62 01 (OHV-LPS-Note 13.430-1 Type 1)	.....	1	316 0895	
BRACKET, Air Conditioning Intermediate Pulley Adapter To Cylinder Head				
60 Thru 63 20-80 (LPS)	.....	1	315 3535	
ATTACHING PARTS				
Bracket To Cylinder Head				
BOLT, Hexagon ..... 60 Thru 63 20-80 (LPS-3/4" Long)	17.038	1	G180120	NA
BOLT, Hexagon ..... 60 Thru 63 20-80 (LPS-7/8" Long)	17.038	2	G180121	NA
WASHER, Lock ..... 60 Thru 63 20-80 (LPS)	17.822	3	G114606	NA
BRACKET, Air Conditioning Intermediate Pulley Adjusting				
62-63 01 (OHV-LPS-Note 13.430-1 Type 2): 64-65 01 (OHV-LPS): 62 10 (OHVC): 63-64 10 (OHVC-196-LPS)	.....	1	316 4154	
63 01 (LHE-LPS)	.....	1	316 9189	
64-65 01 (LHE-OAC-LPS)	.....	1	317 0305	#
61 10 (OHVA-LPS) ..... *(Replaces 316 0874)*	.....	1	316 4146	
62 10 (OHVA)	.....	1	316 4153	
63-64 10 (OHVA-196-LPS)	.....	1	316 9601	
64-65 10 (OHV-232-LPS): 65 10-80 (Six-LPS)	.....	1	317 2682	#

Copyright 1963 American Motors Corp.

GROUP NO. — DESCRIPTION — YEAR and MODEL	PRIMARY GROUP NO.	PER CAR	PART NO.	CODE
ATTACHING PARTS				
Adjusting Bracket To Pulley Bracket				
BOLT, Hexagon..... 61 10 (OHVA-LPS-5/16-18 x 1).....	17.038	2	G179818	NA
BOLT, Hexagon ..... 61 10 (OHVA-LPS-3/8-16 x 1).....	17.038	2	G179839	NA
WASHER, Lock..... 61 10 (OHVA-LPS-5/16" I. D.).....	17.820	2	G120214	NA
WASHER, Lock..... 61 10 (OHVA-LPS-3/8" I. D.).....	17.820	2	G120382	NA
WASHER, Plain..... 61 10 (OHVA-LPS-11/32" I. D.).....	17.814	2	G120393	NA
WASHER, Plain..... 61 10 (OHVA-LPS-13/32" I. D.) ***(Replaces 800 0163)***	17.814	2	400 1102	
Adjusting Bracket To Pulley				
BOLT, Hexagon ..... 62 Thru 65 01 (OHV-LPS-Note 13.430-1 Type 2): 62 10: 63-64 10 (Six-LPS)	17.038	2	G180121	NA
WASHER, Lock..... 62 Thru 65 01 (OHV-LPS-Note 13.430-1 Type 2): 62 10: 63-64 10 (Six-LPS)	17.820	2	G120382	NA
Adjusting Bracket To Compressor Bracket				
BOLT, Hexagon ..... 61 10 (OHVA-LPS): 62 10 (OHVA): 63-64 10 (OHVA-196-LPS).....	17.038	1	G180126	NA
BOLT, Hexagon ..... 61 10 (OHVC-LPS).....	17.038	1	G180124	NA
BOLT, Hexagon ..... 62 01 (OHV-Note 13.430-1 Type 2): 62 10 (OHVC): 63-64 01-10 (OHVC-196-LPS): 65 01 (OHV).....	17.038	1	G180129	NA
BOLT, Hexagon..... 63-64 01 (LHE-LPS)	17.038	1	G180123	NA
BOLT, Hexagon ..... 64 10 (OHV-232-LPS): 65 10 (Six)	17.038	2	G180077	NA#
WASHER..... 64 01 (LHE-OAC)	10.455	1	315 5490	
WASHER, Lock..... 61 10 (OHV-LPS): 62 01 (OHV-Note 13.430-1 Type 1): 62 10: 63-64 01-10 (196-LPS): 65 01 (OHV)	17.820	1	G120382	NA
WASHER, Lock ..... 64 10 (OHV-232-LPS): 65 10 (Six)	17.820	2	G120214	NA#
WASHER, Plain..... 61 10 (LPS-13/32" x 2"): 62 01 (OHV-13/32" x 2"-Note 13.430-1 Type 2): 62 10 (13/32" x 2"): 63-64 01-10 (LPS-196-13/32" x 2"): 65 01 (OHV)	10.455	1	316 0876	
WASHER, Plain..... 61 10 (OHVA-LPS-13/32" x 1-1/2")	12.038	1	313 8231	
WASHER, Plain..... 64 10 (OHV-232-LPS): 65 10 (Six)	17.814	1	G120393	NA#
SPACER..... 62 01 (OHV-Note 13.430-1 Type 2): 62 10 (OHV): 63 01-10 (Six-OHVC-LPS): 64 01-10 (OHVC-196-LPS): 65 01 (OHV).....	.....	1	316 3987	
Adjusting Bracket To Block				
STUD..... 61 10 (OHVA-LPS).....	.....	1	316 2393	
STUD..... 62 10 (OHVA).....	17.718	1	G192426	
STUD..... 63-64 10 (OHVA-196-LPS)	17.718	1	G447176	NA
BOLT, Hexagon ..... 61 10 (OHVC-LPS).....	17.038	1	G180129	NA
BOLT, Hexagon ..... 62 01 (OHV-Note 13.430-1 Type 2): 62 10 (OHVC)..	17.038	1	G180132	NA
BOLT, Hexagon ..... 63-64 01 (OHV-LPS): 63-64 10 (OHVC-196-LPS): 65 01 (OHV)	17.038	1	G189301	NA
BOLT, Hexagon ..... 64 10 (OHV-232-LPS-2 Req.): 65 10-80 (Six-1 Req.).....	17.038	AR	G180124	NA
BOLT, Hexagon ..... 63-64 01 (LHE-LPS)	17.038	1	G180122	NA
BOLT, Hexagon ..... 65 10-80 (Six)	17.038	1	G180125	NA
WASHER, Lock..... 62 01 (OHV-Note 13.430-1 Type 2): 63 10 (OHVC): 61 10 (LPS): 64-65 01 (OHV-LPS)	17.822	1	G114606	NA
WASHER, Lock..... 62 10 (OHVA-1 Req.: 63-64 01-10 (OHV-196-LPS-1 Req.): 64 10 (OHV-232-LPS-2 Req.): 65 01-10 (Six)	17.820	AR	G120382	NA

Copyright 1963 American Motors Corp.

GROUP NO. — DESCRIPTION — YEAR and MODEL		PRIMARY GROUP NO.	PER CAR	PART NO.	CODE
WASHER, Plain	62 01 (OHV-Note 13.430-1 Type 2): 62 10 (OHVC): 63 01-10 (OHV-LPS) ***(Replaces 800 0446)***	17.814	1	400 1166	
WASHER, Plain	64 10 (Six-232-LPS)	17.814	2	400 1111	
WASHER, Plain	65 10-80 (Six)	17.814	2	400 1102	
NUT, Hexagon	61 10 (LPS): 62 10 (OHVA): 63-64 10 ($ix-OHVA-LPS)	17.406	1	G120369	NA
SPACER	62 01 (OHV-Note 13.430-1 Type 2): 62 10 (OHVC): 63 01-10 (OHVC-LPS): 64 01-10 (OHVC-WAC): 65 01 (OHV)	.....	1	316 3986	
SPACER	62 10 (OHVA)	12.038	1	313 8231	
SPACER	63-64 10 (196-OHVA-LPS)	.....	1	316 9562	

BRACKET, Air Conditioning Intermediate Pulley Mounting

61-62 01 (LHE-LPS)	.....	1	316 5658	
62 80	.....	1	316 9278	

ATTACHING PARTS

Mounting Bracket To Compressor Bracket

BOLT, Hexagon	61-62 01 (LHE-LPS)	17.038	2	G181608	NA
BOLT, Hexagon	62 80	17.038	2	G180125	NA
WASHER, Plain	61-62 01 (LHE-LPS) ***(Replaces 800 0153)***	17.814	2	400 1093	
WASHER, Lock	61-62 01 (LHE-LPS)	17.820	2	G120214	NA
WASHER, Lock	62 80	17.820	2	G120382	NA
NUT, Hexagon	61-62 01 (LHE-LPS)	17.406	2	G120368	NA
SPACER	61-62 01 (LHE-LPS)	.....	1	316 0895	

BRACKET, Air Conditioning Intermediate Pulley To Compressor Bracket

63 10-80 (V8-WPS-Note 13.400-8 Type 1)	.....	1	316 9278	
63 10-80 (V8-LPS-Note 13.400-8 Type 2): 64-65 10-80 (V8)	.....	1	317 3119	

ATTACHING PARTS

Bracket To Compressor Bracket

BOLT, Hexagon	63 10-80 (V8)	17.038	2	G180125	NA
BOLT, Hexagon	64 10-80 (V8-LPS): 65 10-80 (V8)	17.038	1	G180127	NA
BOLT, Hexagon	64-65 10-80	17.038	1	G180079	
WASHER, Lock	63 10-80 (V8-WPS)	17.820	2	G120382	NA
WASHER, Plain	64 10-80 (V8-LPS): 65 10-80 (V8)	17.814	1	400 1102	
WASHER, Plain	64 10-80 (V8-LPS): 65 10-80 (V8)	17.814	1	G120394	NA
WASHER, Plain	64 10-80 (V8-LPS): 65 10-80 (V8)	17.814	1	400 1107	
WASHER, Plain	64-65 10-80	17.814	1	400 1095	

Bracket To Water Manifold

BOLT, Hexagon	64 10-80	17.038	1	G180079	
WASHER, Plain	64 10-80	17.814	1	400 1095	
WASHER, Plain	61 10 (OHVA-LPS-13/32" x 1-1/2")	12.038	1	313 8231	
WASHER, Plain	61 10 (OHVA-LPS-13/32 x 1-1/8): 62 10 (OHVA): 63 01 (LHE-LPS): 64 01-10 (196-LPS): 65 01 (OHV)	17.814	1	400 1107	

Copyright 1963 American Motors Corp.

GROUP NO. — DESCRIPTION — YEAR and MODEL	PRIMARY GROUP NO.	PER CAR	PART NO.	CODE
13.440 HOSE, Air Conditioning (Compressor To Condensor)				
60 01 (OAC): 61 01 (LHE-LPS)(OHV): 62 01 (OHV-Note 13.450-1 Type 1) (LHE-LPS-Note 13.450-1 Type 1)	.....	1	315 7180	
61 01 (LHE-WPS): 62 01 (LHE-WPS-Note 13.450-1 Type 1)	.....	1	316 2295	
62 01 (Note 13.450-1 Type 2): 63 01	.....	1	316 5545	
64-65 01	.....	1	316 8036	
60-61 10: 62 10 (Note 13.450-1 Type 1): 60 20-80 ***(Replaces 315 3330)***	.....	1	315 3331	
62 10 (Note 13.450-1 Type 2)	.....	1	316 5531	
63-64 10 (Six-196-Note 13.450-2 Types 1, 2, And 5)	.....	1	316 8192	
63-64 10 (196-Note 13.450-2 Type 3): 65 10 (Six-Note 13.450-4 Type 1)	.....	1	316 8036	
64 10 (Six-232-Note 13.450-2 Type 5)	.....	1	317 3661	
64 10 (Six-232-Note 13.450-2 Type 4): 65 80 (Six-Note 13.450-4 Type 1)	.....	1	317 2684	
65 10 (Six-Note 13.450-4 Type 2)	.....	1	317 5807	
65 10 (V8-Note 13.450-4 Type 1) ***(Use 317 5809)***	.....	1	317 5759	
65 10 (V8-Note 13.450-4 Type 2 And Note 13.440-3 Type 1)	.....	1	317 5809	
65 10 (V8-Note 13.450-4 Type 2 And Note 13.440-3 Type 2)	.....	1	318 0586	
61 20-80: 62 80 (Note 13.450-1 Type 1)	.....	1	316 0544	
62 80 (Note 13.450-1 Type 2)	.....	1	316 5535	
63-64 10-80 (V8-Note 13.450-2 Types 1 And 2)	.....	1	316 7611	#
63-64 10-80 (V8-13.450-2 Type 3): 65 80 (V8-Note 13.450-4 Type 1)	.....	1	316 8037	
65 80 (Six-Note 13.450-4 Type 2) ***(Use 317 2684)***	.....	1	317 5808	
65 80 (V8-Note 13.450-4 Type 2) ***(Use 316 8037)***	.....	1	317 5810	
HOSE, Air Conditioning (Evaporator To Compressor)				
60 01 (Not Equipped For Quick Disconnect Coupling): 60-61 10-20-80 (Not Equipped For Quick Disconnect Coupling): 62 10 (Not Equipped For Quick Disconnect Coupling) ***(Replaces 315 3961)***	.....	1	344 4552	
61-62 01 (LHE-WPS)(OHV): 63 01	.....	1	345 5575	
64-65 01	.....	1	317 0893	
60 10-20-80 (OAC-Equipped For Quick Disconnect Coupling)	.....	1	315 8756	
63-64 10 (OHV-196)	.....	1	316 9319	
64 10 (Six-232): 65 10-80 (Six)	.....	1	317 5765	
62 80	.....	1	316 5564	
63 Thru 65 10-80 (V8)	.....	1	316 8035	

NOTE 13.440-1: An Air Conditioning installation similar to the type used in a Field Installed optional Air Conditioning Kit was used in a Factory Installation on the 63 01-10-80 Series. It can be identified by the following Notes and Illustration.

Type 1: The Evaporator to Receiver Hose uses a Quick Disconnect Coupling.

Type 2: The Evaporator to Receiver Hose does not use a Quick Disconnect Coupling.

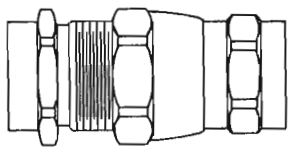

NOTE 13.440-2: Two Types of Quick Disconnect Couplings were used in a Field Installed Air Conditioning Kit as well as in Factory Installed Air Conditioning on the 63 01-10-80 Series. They can be identified as follows:

Type 1: The Male Half of the Quick Disconnect Coupling has 7/8-20 Internal Threads at one end and 1-20 External Threads at opposite end. The overall length is 1-15/32.

Type 2: The Male Half of the Quick Disconnect Coupling has 1/2-20 Internal Threads at one end and 5/8-18 Threads at opposite end. The overall length is 1-3/16.

NOTE 13.440-3: Two Types of Air Conditioning Hose, Compressor To Condensor, were used on the 65 10 (V8). They can be identified as follows:

Type 1: The Rubber Section length of the Hose is 43" Long.

Type 2: The Rubber Section length of the Hose is 32-1/4" Long.

Copyright 1963 American Motors Corp.

GROUP NO. — DESCRIPTION — YEAR and MODEL	PRIMARY GROUP NO.	PER CAR	PART NO.	CODE
HOSE, Air Conditioning (Receiver To Evaporator)				
60 01 (OAC)	.....	2	315 7182	
61-62 01: 63 01 (WAC-Note 13.440-1 Type 2)	.....	1	316 1439	
64-65 01	.....	1	317 0906	
60 10-20 (WAC)	.....	1	315 7836	
60 80 (WAC)	.....	1	315 7837	
60 10-20-80 (OAC)	.....	1	315 7838	
61-62 10-20-80 (WAC)	.....	1	316 0575	
63 10-80 (OAC-Note 13.440-1 Type 1): 63 10-80 (WAC-Note 13.440-1 Type 1)	.....	1	316 8892	
63 10-80 (WAC-Note 13.440-1 Type 2)	.....	1	316 8034	
63-64 10-80 (Notes 13.440-1 Type 1 And 13.440-2 Type 2)	.....	1	317 1827	
65 10-80	.....	1	317 6723	
HOSE, Air Conditioning (Receiver To Disconnect Coupling)				
61-62 01 (OAC): 63 01 (OAC-Note 13.440-1 Type 1): 63 01 (WAC-Notes 13.440-1 Type 1 And 13.440-2 Type 1)	.....	1	315 7182	
61-62 10-20-80 (OAC)	.....	1	316 2238	
63 01 (Notes 13.440-1 Type 1 And 13.440-2 Type 1)	.....	1	317 1819	
HOSE, Air Conditioning (Evaporator To Disconnect Coupling)				
61-62 01 (OHV): 63 01 (OAC-Notes 13.440-1 Type 1 And 13.440-2 Type 1): 63 01 (WAC-Notes 13.440-1 Type 1 And 13.440-2 Type 1)	.....	1	316 0612	
63 01 (Note 13.440-2 Type 2)	.....	1	317 1826	
TUBE, Air Conditioning Jumper (Condensor To Receiver)				
65 01 (Modine-Note 13.450-3 Type 2)	.....	1	317 5845	
62 10-80 (Note 13.450-1 Type 2)	.....	1	316 5533	
63 10 (Six-Note 13.450-2 Type 1)	.....	1	316 7863	
63 10 (Six-Note 13.450-2 Type 3)	.....	1	316 6616	
63 10 (Six-Note 13.450-2 Type 3)	.....	1	316 6615	
63-64 10 (Six-Note 13.450-2 Type 2)	.....	1	317 1018	
64 10 (OHV-196-Note 13.450-2 Type 5)	.....	1	317 6008	
64 10 (OHV-232-Note 13.450-2 Type 5): 64 10-80 (V8-Note 13.450-2 Type 5)	.....	1	317 6007	
64 10 (OHV-232-12-5/16" Long-Note 13.450-2 Type 2): 63-64 10-80 (V8-12-5/16" Long-Note 13.450-2 Types 1 And 2)	.....	1	316 7612	
63 10-80 (V8-10-13/16" Long-Note 13.450-2 Types 1 And 2)	.....	1	317 1019	
COUPLING, Air Conditioning Hose Disconnect				
(Female Half) 60 Thru 62 01-10-20-80 (OAC): 63 01-10-80 (OAC-Notes 13.440-1 Type 1 And 13.440-2 Type 1): 63 01-10-80 (WAC-Notes 13.440-1 Type 1 And 13.440-2 Type 1)	.....	1	315 3311	
(Female Half) 63 01-10-80 (Note 13.440-2 Type 2): 64-65 01-10-80	.....	1	317 1795	
(Male Half) 60 Thru 62 01-10-20-80 (OAC): 63 01-10-80 (OAC-Notes 13.440-1 Type 1 And 13.44-2 Type 1): 63 01-10-80 (WAC-Notes 13.440-1 Type 1 And 13.440-2 Type 1)	.....	1	315 3312	
(Male Half) 63 01-10-80 (Note 13.440-2): 64-65 01-10-80	.....	1	317 1794	#
RING, Air Conditioning Hose Disconnect Coupling (Rubber)				
60 01-10-20-80 (OAC-4 Req.): 61-62 01-10-20-80 (OAC-2 Req.): 63 01-10-80 (OAC-Notes 13.440-1 Type 1 And 13.440-2 Type 1-2 Req.): 63 01-10-80 (WAC-Notes 13.440-1 Type 1 And 13.440-2 Type 1-2 Req.)	.....	AR	315 3314	
63 01-10-80 (Note 13.440-2 Type 2): 64-65 01-10-80	.....	1	317 1788	

Copyright 1963 American Motors Corp.

GROUP NO. — DESCRIPTION — YEAR and MODEL	PRIMARY GROUP NO.	PER CAR	PART NO.	CODE
VALVE AND SEAL ASSEMBLY, Air Conditioning Hose Disconnect Coupling (Female Half)				
60 Thru 62 01-10-20-80 (OAC): 63 01-10-80 (OAC-Note 13.440-1 Type 1): 63 01-10-80 (WAC-Note 13.440-1 Type 1)	.....	2	320 0833	
POPPET VALVE ASSEMBLY, Air Conditioning Hose Disconnect Coupling (Male Half)				
60 Thru 62 01-10-20-80 (OAC): 63 01-10-80 (OAC-Note 13.440-1 Type 1): 63 01-10-80 (WAC-Note 13.440-1 Type 1)	.....	2	320 0832	
GROMMET, Air Conditioning Hose (Evaporator To Compressor)				
60 01 (OAC-In Dash): 60-61 10-20-80 (In Dash): 62 Thru 65 10-80 (In Dash-One Hole) ***(Replaces 315 3439)***	.....	1	400 0349	
61 Thru 63 01 (In Dash-Two Holes)	.....	1	316 0635	
64-65 01-10-80	.....	1	317 3303	
GROMMET, Air Conditioning Hose (Receiver To Evaporator)				
61 Thru 63 01 (In Dash-Two Hole)	.....	1	316 0635	
60 10-20-80 (WAC-In Dash-Oblong-3-1/8" Length)	.....	1	342 9655	
60 10-20-80 (WAC-In Dash-Round-1-1/2" O. D. -2 Req.): 61 10-20-80 (In Toeboard-1 Req.): 62-63 10-80 (In Toeboard-1 Hole) ***(Replaces 315 3438)***	.....	AR	400 0348	
63 10-80 (In Toeboard-Two Holes)	.....	1	317 1307	
GROMMET, Air Conditioning Hose (In Evaporator Housing)				
61 Thru 63 01: 63 10-80	.....	2	316 0621	
64-65 01	.....	2	317 0409	
60 10-20-80 (WAC-5/8" I. D.): 61-62 10-20-80 (5/8" I. D.)	.....	1	400 0351	
62-63 10-20-80 (3/8" I. D.)	.....	1	400 0352	
INSULATION, Air Conditioning Hose				
60 01 (OAC-Suction Line): 60 10-20-80 (WAC): 61 10-20-80: 62 Thru 64 10-80 (At Evaporator Housing) ***(Replaces 315 5586)***	.....	1	315 8337	
SPRING, Air Conditioning Hose Retaining				
64-65 10-80 (V8-WPB)	4.080	1	316 9666	
ATTACHING PARTS Spring To Power Brake Master Cylinder Stud				
NUT, Push..... 64-65 10-80 (V8-WPB)	.....	2	400 0792	
CLIP, Air Conditioning Hose				
60 01 (OAC-Evaporator To Receiver Hose-At Front To Wheelhouse)	6.353	1	96 823	
60 10-20 (WAC-Evaporator To Receiver Hose) ***(Replaces 313 8580)***	.....	1	400 0443	
60 01 (OAC-Evaporator To Receiver Hose-At Rear Of Wheelhouse)	3.163	1	310 7341	
60 80 (WAC-Evaporator To Receiver Hose-To Brace Rod Clip) ***(Replaces 313 8580)***	.....	1	400 0443	
60 01 (OAC-Evaporator To Compressor Hose)	3.163	1	310 7341	
60 01 (OAC-Compressor To Condenser Hose) ***(Replaces 313 8580)***	.....	1	400 0443	
60 80 (WAC-On Cowl Brace Rod)	3.210	1	312 3849	
61 10-20 (2 Req. -Evaporator To Receiver Hose-On Wheelhouse): 61 01-80 (1 Req. -Evaporator To Receiver Hose-On Wheelhouse) ***(Replaces 313 8580)***	.....	AR	400 0443	
61 01 (LPS-Comprssor To Condenser Hose-At Front Crossmember) ***(Replaces 313 8580)***	.....	1	400 0443	
61 80 (WAC-Evaporator To Receiver Hose Clip To Bracket) ***(Replaces 313 8580)***	.....	1	400 0443	
62-63 01 (11/16" I. D. -For Single Hose): 64-65 01 (11/16" I. D. To Front Suspension Bracket-2 Req.)	3.163	AR	310 7341	
62 01-10-80 (13/16" I. D. -For Single Hose) ***(Replaces 313 8580)***	.....	AR	400 0443	
62 01 (3/8" I. D. -For Single Hose)	6.353	AR	96 823	

Copyright 1963 American Motors Corp.

GROUP NO. — DESCRIPTION — YEAR and MODEL		PRIMARY GROUP NO.	PER CAR	PART NO.	CODE
62 10-80 (15/16" I. D. -For Single Hose)		13.082	1	314 4728	
62 10-80 (Double Hose Clamp)		.....	1	316 5933	
63 01 (13/16" I. D. -For Single Hose): 63-64 10-80 (13/16" I. D. -For Single Hose)		.....	1	400 0443	
63 Thru 65 10-80 (WAC-Receiver To Evaporator Hose Clip to Front Suspension Bracket)		12.075	2	400 0493	
64-65 01 (WAC-Condenser Hose To Bracket)		.....	1	314 3709	
64 10 (Six-232-Evaporator To Compressor Hose At Carburetor): 65 10-80 (Six)	***(Discontinued)***	.....	1	317 7015	
65 01 (Evaporator To Compressor Hose At Front Suspension Bracket)		.....	1	400 0443	
65 10-80 (Condensor To Compressor Hose To Heater Hose)		3.165	1	343 9909	
ATTACHING PARTS					
Clip To Wheelhouse					
SCREW, Tapping.....	60 01 (OAC): 61 01: 60 10-20 (WAC): 62-63 01 (14-10 x 5/8): 62 10-80 (14-10 x 5/8) ***(Replaces 800 0103)***	17.671	AR	G9411563	
SCREW, Tapping.....	61 10-20 (2 Req.): 61 80 (1 Req.)	17.648	AR	G161503	NA
SCREW, Tapping.....	62 01-10-80 (14-14 x 5/8) ***(Replaces 800 0129)***	26.032	AR	400 1066	
SCREW, Tapping.....	62 10-80 (14-10 x 3/4)	17.671	AR	G455702	NA
SCREW, Tapping.....	62 10-80 (14-10 x 1)	17.671	AR	G9411541	NA
SCREW, Tapping.....	63 10-80 ***(Replaces 800 0095)***	17.671	2	G456766	
Clip To Bracket					
BOLT, Hexagon	60-61 80: 63-64 10 (Six): 65 10-80	17.038	1	G180018	NA
SCREW, Tapping.....	64-65 10 (Six-232)	17.671	1	G443794	NA#
WASHER, Plain.....	60-61 80: 65 10-80	17.814	1	G120392	NA
WASHER, Plain.....	65 10-80 (V8)	17.814	2	G120393	NA
WASHER, Lock	60-61 80: 63-64 10 (Six): 65 10-80	17.820	1	G120380	NA
NUT, Hexagon.....	60-61 80: 63 Thru 65 10 (Six)	17.406	1	G120375	
NUT, Speed	64-65 10 (Six-232)	4.050	1	316 3893	
Clip To Front Crossmember					
SCREW, Tapping.....	61-62 01 (LPS) ***(Replaces 800 0129)***	26.032	1	400 1066	
Clip To Front Suspension Bracket					
SCREW, Tapping.....	63 Thru 65 10-80 (WAC)	3.165	2	400 0478	
SCREW, Tapping.....	64-65 01	26.032	3	400 1066	
BRACKET, Air Conditioning Evaporator To Receiver Hose Clip					
60-61 80 (WAC): 64-65 10 (Six): 63 10-80: 65 80 (Six)		10.470	1	315 8227	
65 10-80 (V8)		.....	1	317 5813	
65 10-80 (Six)(At Cylinder Head)		.....	1	317 5766	
ATTACHING PARTS					
Clip Bracket To Valve Cover					
BOLT, Hexagon	60-61 80 (WAC): 63 80	17.038	1	G180018	NA
WASHER, Lock.....	60-61 80 (WAC): 63 80	17.820	1	G120380	NA
NUT, Hexagon.....	60-61 80 (WAC): 63 80	17.406	1	G120375	
Clip Bracket To Intake Manifold Baffle					
SCREW, Tapping.....	65 10-80 (Six)	17.671	1	G443794	NA
NUT, Speed.....	65 10-80 (Six)	4.050	1	316 3893	

Copyright 1963 American Motors Corp.

GROUP NO. — DESCRIPTION — YEAR and MODEL	PRIMARY GROUP NO.	PER CAR	PART NO.	CODE
13.450 CORE, Air Conditioning Condenser				
60 01	.....	1	315 7184	
61 01: 62 01 (Note 13.450-1 Type 1)	.....	1	316 0603	
62 01 (Note 13.450-1 Type 2): 63 01 ***(Use 317 1563)***	.....	1	316 5544	
64 01: 65 01 (McCord-Note 13.450-3 Type 1)	.....	1	317 3316	
65 01 (Modine-Note 13.450-3 Type 2) ***(Use 317 3316)***	.....	1	317 5847	
60-61 10-20: 62 10-80 (Note 13.450-1 Type 1)	.....	1	315 4274	
62 10-80 (Note 13.450-1 Type 2)	.....	1	316 5527	
63 10 (Six-McCord-Note 13.450-2 Type 3)	.....	1	316 6613	
63 10 (Six-Modine-Note 13.450-2 Type 1)	.....	1	316 7643	
63-64 10 (Six-Modine-Note 13.450-2 Type 2)	.....	1	317 1016	
64 10 (OHV-196-Modine-Note 13.450-2 Type 5)	.....	1	317 5650	
63-64 10 (Six-McCord-Note 13.450-2 Type 4)	.....	1	317 2913	
65 10 (McCord-Note 13.450-4 Type 1) ***(Use 317 5850)***	.....	1	317 5260	
65 10 (Modine-Note 13.450-4 Type 2)	.....	1	317 5850	
63-64 10-80 (V8-McCord-Note 13.450-2 Type 3) ***(Replaces 316 6614)(Use 317 2914)***	.....	1	317 1661	
64 10 (Six-232-Note 13.450-2 Type 2): 63-64 10-80 (V8-Modine-Note 13.450-2 Type 2) ***(Use 320 6986)***	.....	1	317 1017	#
63-64 10-80 (V8-Modine-Note 13.450-2 Type 1)	.....	1	316 7645	
64 10 (Six-232-Note 13.450-2 Type 4): 63-64 10-80 (V8-McCord-Note 13.450-2 Type 4) ***(Ref. Pr. List)***	.....	1	317 2914	
64 10 (Six-232-Modine-Note 13.450-2 Type 5): 64 10-80 (V8-Modine-Note 13.450-2 Type 5) ***(Use 320 6986)***	.....	1	317 5580	#
60 80	.....	1	315 3639	
61 80	.....	1	316 0037	
65 80 (McCord-Note 13.450-4 Type 1)	.....	1	317 5232	
65 80 (Modine-Note 13.450-4 Type 2) ***(Use 317 5232)***	.....	1	317 5851	

ATTACHING PARTS

Core To Spacer

BOLT, Hexagon	60-61 10-20: 62 10-80 (Note 13.450-1 Type 1)	17.038	4	G181595	NA
WASHER, Lock	60-61 10-20: 62 10-80 (Note 13.450-1 Type 1)	17.820	4	G120214	NA

NOTE 13.450-1: Two Types of Condenser Cores were used on the 62 00 Series. They can be identified as follows:

Type 1: The Inlet and Outlet Connections are on opposite sides.

Type 2: The Inlet and Outlet Connections are on the same side.

NOTE 13.450-2: Four Types of Condenser Cores were used on the 63 10-80, and Three Types were used on the 64 10-80. They can be identified as follows:

Type 1: Condenser Core is a Modine Unit, 15-3/16 inches in height at center of Core. The Compressor To Condenser Hose has Metal Tubes at both ends bent at 45 deg. Angles.

Type 2: Condenser Core is a Modine Unit, 13-13/16 inches in height at center of Core. The Compressor to Condenser Hose has Metal Tubes at both ends at 45 deg. Angles.

Type 3: Condenser Core is a McCord Unit, 16-1/4 inches in height at center of Core. The Compressor to Condenser Hose has a Metal Tube bent at a 45 deg. Angle at one end and a straight fitting at the opposite end. The Jumper Tube from Condenser to Receiver is a separate unit.

Type 4: Condenser Core is a McCord Unit 16-1/4 inches in height at center of Core. The Condenser to Receiver Jumper Tube is part of the Condenser Core.

Type 5: Condenser Core is a Modine Unit 13 inches in height at center of Core. The Compressor to Condenser Outlet is a straight fitting. The Condenser to Receiver Outlet is a 90 deg. angle and the Condenser to Receiver Jumper Tube has one bend.

Note 13.450-3: Two Types of Condenser Cores were used in the 65 01. They can be identified as follows:

Type 1: Condenser Core is a McCord Unit. The Condenser Core to Receiver Tube is part of the Condenser Core.

Type 2: Condenser Core is a Modine Unit. The Condenser Core to Receiver Tube is a separate Unit.

NOTE 13.450-4: Two Types of Condenser Cores were used on the 65 10-80. They can be identified as follows:

Type 1: Condenser Core is a McCord Unit. The Compressor to Condenser Outlet is a 90 deg. angle fitting and the Receiver Check Valve does not have a Swivel Nut.

Type 2: Condenser Core is a Modine Unit. The Compressor to Condenser Outlet is a straight fitting and the Receiver Check Valve has a swivel nut.

Copyright 1963 American Motors Corp.

GROUP NO. — DESCRIPTION — YEAR and MODEL	PRIMARY GROUP NO.	PER CAR	PART NO.	CODE
Core To Tie Bar				
BOLT, Hexagon 60 01	17.038	2	G181333	NA
WASHER, Lock 60 01	17.820	2	G103320	NA
NUT, Hexagon 60 01	17.406	2	G120375	
Core To Lower Baffle				
BOLT, Hexagon 60 01	17.038	2	G181333	NA
WASHER, Lock 60 01	17.820	2	G103319	NA
NUT, Hexagon 60 01	17.406	2	G120375	
Core To Baffle (Bottom)				
BOLT, Hexagon ..... 61 01 (4 Req.): 62-63 01 (2 Req.)	17.038	AR	G181593	NA
WASHER, Lock ..... 61 01 (4 Req.): 62-63 01 (2 Req.)	17.820	AR	G120214	NA
WASHER, Plain ..... 61 01 (4 Req.): 62-63 01 (2 Req.)	17.814	AR	G120393	NA
NUT, Hexagon ..... 61 01 (4 Req.): 62-63 01 (2 Req.)	17.406	AR	G120368	NA
Core To Baffle (Top)				
BOLT, Hexagon ..... 61 Thru 63 01	12.075	2	435 5574	
NUT, Speed ..... 61 Thru 63 01	12.169	2	315 9512	
Core To Side Baffle				
BOLT, Hexagon ..... 64-65 01 (5 Req.): 62 10-80 (Note 13.450-1 Type 2-4 Req.)	22.056	AR	400 0032	
BOLT, Hexagon 63-64 10-80	17.038	3	G180020	NA
SCREW, Machine ..... 65 10-80 (Six-6 Req.)(V8-5 Req.)	17.629	AR	G274683	
WASHER, Lock ..... 64-65 01 (5 Req.): 62 10-80 (Note 13.450-1 Type 2-4 Req.)	17.820	AR	G120214	NA
WASHER, Lock 63-64 10-80	17.820	3	G120380	NA
WASHER, Plain ..... 62 10-80 (Note 13.450-1 Type 2): 60 80 ..... ***(Replaces 800 0153)***	17.814	4	400 1093	
WASHER, Plain 63-64 10-80	17.814	3	G120392	NA
WASHER, Plain 65 01 (OHV-196)	17.814	2	G120393	NA
NUT, Hexagon 63-64 10-80	17.406	3	G120375	
BRACKET, Condenser Hose				
64-65 01	13.440	1	317 2794	
ATTACHING PARTS				
Clip To Bracket				
BOLT, Hexagon 64-65 01	17.038	1	G180020	NA
WASHER, Plain 64-65 01	17.814	2	G120392	NA
WASHER, Lock 64-65 01	17.820	1	G120380	NA
NUT, Hexagon 64-65 01	17.406	1	G120375	
BRACKET, Air Conditioning Condenser Core Tube Support				
60 10-20 (5-3/32" Length-3 Holes-1 Slot): 61 20-80: 62 10-80 (Note 13.450-1 Type 1)	.....	1	315 9663	
60 10-20-80 (5-5/16" Length-L Shape-2 Holes)	.....	1	315 3673	
60 80 (5-5/16" Length): 61 80	.....	1	315 6098	
62 10-80 (On Shroud-Note 13.450-1 Type 2-Inlet) ..... ***(Ref. Pr. List)***	.....	1	316 5532	
62 10-80 (On Baffle-Note 13.450-1 Type 2-Inlet)	4.174	1	314 6577	
62 10-80 (Note 13.450-1 Type 1-Outlet)	13.455	1	315 6654	
62 10-80 (Note 13.450-1 Type 2-Outlet)	13.455	1	316 5534	
ATTACHING PARTS				
Tube To Bracket				
BOLT, Hexagon 60-61 10-20-80	17.038	1	G180018	NA
WASHER, Plain ..... 60 10-20-80 (17/64 × 1/2 × 3/64): 61 20-80 (17/64 × 1/2 × 3/64) ..... ***(Replaces 800 0145)***	17.814	1	400 1085	
WASHER, Plain ..... 60 10-20-80 (17/64 × 5/8 × 3/64): 61 10-20-80 (17/64 × 5/8 × 3/64)	17.814	1	G446188	NA
WASHER, Lock 60-61 10-20-80	17.820	1	G120380	NA
NUT, Hexagon 60-61 10-20-80	17.406	1	G120375	

Copyright 1963 American Motors Corp.

GROUP NO. — DESCRIPTION — YEAR and MODEL	PRIMARY GROUP NO.	PER CAR	PART NO.	CODE
Inlet Tube To Bracket				
BOLT, Hexagon ..... 62 10-80 (5/8" Long-Note 13.450-1 Type 1)	17.038	1	G180018	NA
BOLT, Hexagon ..... 62 10-80 (1" Long-Note 13.450-1 Type 2)	17.038	1	G180022	NA
WASHER, Plain 62 10-80	17.814	2	G446188	NA
WASHER, Lock 62 10-80	17.820	1	G120368	NA
NUT, Hexagon 62 10-80	17.406	1	G120375	
Outlet Tube Bracket To Clip (On Receiver)				
BOLT, Hexagon ..... 62 10-80 (1-1/8" Long-Note 13.450-1 Type 1)	17.038	1	G179819	NA
BOLT, Hexagon ..... 62 10-80 (5/8" Long-Note 13.450-1 Type 2)	17.038	1	G180018	NA
WASHER, Plain ..... 62 10-80 (11/32 I. D. -Note 13.450-1 Type 1) ..... ***(Replaces 800 0153)***	17.814	1	400 1093	
WASHER, Plain ..... 62 10-80 (17/64 I. D. -Note 13.450-1 Type 2)	17.814	1	G446188	NA
WASHER, Lock ..... 62 10-80 (5/16" I. D. -Note 13.450-1 Type 1)	17.820	1	G120214	NA
WASHER, Lock ..... 62 10-80 (1/4" I. D. -Note 13.450-1 Type 2)	17.820	1	G120380	NA
NUT, Hexagon ..... 62 10-80 (5/16-18 x 17/64-Note 13.450-1 Type 1) ..	17.406	1	G120376	NA
NUT, Hexagon ..... 62 10-80 (1/4-20 x 7/32-Note 13.450-1 Type 2)	17.406	1	G120375	
Inlet Tube Clip Bracket To Shroud				
SCREW, Tapping ..... 60-61 10-20 (2 Req.): 62 10-80 (2 Req.): 60 80 (1 Req.) ..... ***(Replaces 800 0127)***	17.671	AR	400 1064	
SCREW, Tapping 60 10-20	17.671	1	800 0093	NA
Outlet Tube Bracket To Baffle				
BOLT, Hexagon 62 10-80	17.038	1	G180018	NA
WASHER, Lock 62 10-80	17.820	1	G120380	NA
NUT, Hexagon 62 10-80	17.406	1	G120375	
GROMMET, Air Conditioning Condenser Core Mounting				
64 01-10-80	.....	4	317 7316	
SPACER, Air Conditioning Condenser Core				
60-61 10-20: 62 10-80 (Note 13.450-1 Type 1)	.....	4	315 3674	
ATTACHING PARTS				
Spacer To Side Baffle				
BOLT, Hexagon ..... 60-61 10-20: 62 10-80 (Note 13.450-1 Type 1)	17.038	4	G181595	NA
WASHER, Plain ..... 60-61 10-20: 62 10-80 (Note 13.450-1 Type 1) ..... ***(Replaces 800 0153)***	17.814	8	400 1093	
WASHER, Lock ..... 60-61 10-20: 62 10-80 (Note 13.450-1 Type 1)	17.820	4	G120214	NA
NUT, Hexagon ..... 60-61 10-20: 62 10-80 (Note 13.450-1 Type 1)	17.406	4	G120368	NA
CLIP, Air Conditioning Condenser Core Tube				
60-61 10-20-80: 62 10-80 (9/16" I. D. -Note 13.450-1 Type 1)	3.210	1	312 3849	
62 10-80 (15/16" I. D. -1 Req. -Note 13.450-1 Type 1)(15/16" I. D. -2 Req. -Note 13.450-1 Type 2)	13.082	AR	314 4728	
62 10-80 (13/16" I. D.) ..... ***(Replaces 313 8580)***	13.440	1	400 0443	

13.455 RECEIVER, Air Conditioning

60 01 (OAC): 61-62 01: 63 01 (Notes 13.440-1 Type 1 And 13.440-2 Type 1)...	.....	1	315 7185	
63 01 (Notes 13.440-1 Type 1 And 13.440-2 Type 2)	.....	1	317 1719	
64 01: 65 01 (McCord-Note 13.450-3 Type 1)	.....	1	317 1718	
65 01 (Modine-Note 13.450-3 Type 2) ..... ***(Use 317 1718)***	.....	1	317 5846	
60-61 10-20 (WAC): 62 10-80 (WAC)	.....	1	315 6198	
60-61 10-20 (OAC): 62 10-80 (OAC)	.....	1	315 8766	

Copyright 1963 American Motors Corp.

GROUP NO. — DESCRIPTION — YEAR and MODEL		PRIMARY GROUP NO.	PER CAR	PART NO.	CODE
63 10-80 (WAC-Note 13.440-1 Type 2)		.....	1	316 6612	
63 10-80 (WAC-Notes 13.440-1 Type 1 And 13.440-2 Type 1)		.....	1	316 8887	
63 10-80 (Note 13.440-2 Type 2): 64 10-80		.....	1	317 1733	
65 10-80 (Modine-Note 13.450-4 Type 2)		.....	1	317 5849	
65 10-80 (McCord-Note 13.450-4 Type 1)		.....	1	317 5233	
60 80 (OAC)		.....	1	315 6200	
60 80 (WAC)		.....	1	315 6199	
61 80 (WAC)		.....	1	316 0029	
61 80 (OAC)	*(Discontinued)*	.....	1	316 2242	
ATTACHING PARTS					
Receiver To Condenser Core					
GROMMET	64-65 01: 65 10-80	.....	1	317 7316	
BOLT, Hexagon	60 Thru 63 01	17.038	2	G180016	NA
BOLT, Hexagon	64 01: 65 01 (Note 13.450-3 Type 2)	17.038	2	G181593	NA
BOLT, Hexagon	61 80	17.038	1	G181595	NA
BOLT, Hexagon	63-64 10-80	17.038	3	G180020	NA
SCREW, Tapping.....	60 Thru 62 10-20-80 (2 Req.): 63-64 10-80 (1 Req.) *(Replaces 800 0103)*	17.671	AR	G9411563	
SCREW, Machine.....	65 01 (Modine-Note 13.450-3 Type 2): 65 10-80	17.629	2	G274683	
WASHER, Plain.....	63 10-80	17.814	3	G120392	NA
WASHER, Lock.....	60 Thru 63 01: 63-64 10-80: 61 80	17.820	2	G120380	NA
WASHER, Lock	64 01: 65 01 (McCord-Note 13.450-3 Type 1)	17.820	2	G120214	
NUT, Hexagon.....	60 Thru 63 01: 63-64 10-80	17.406	2	G120375	
NUT, Hexagon.....	64 01: 65 01 (McCord-Note 13.450-3 Type 1)	17.406	2	G120368	
REPAIR KIT, Air Conditioning Receiver Check Valve					
60 Thru 65 01-10-20-80	*(Replaces 320 1293)*	.....	1	320 3095	
VALVE, Air Conditioning Receiver Pressure Relief					
60 Thru 65 01-10-20-80		.....	1	320 1430	
BODY, Air Conditioning Receiver Pressure Relief Valve					
60 Thru 62 01-10-20-80		.....	1	320 1296	
BODY, Air Conditioning Receiver Check Valve					
60 Thru 62 01-10-20-80 (For 3 Piece Unit): 63-64 01-10-80: 65 01: 65 10-80 (McCord-Note 13.450-4 Type 1)		15.370	1	320 1289	
65 10-80 (Modine-Note 13.450-4 Type 2)...(Incl. Swivel Nut)		.....	1	320 5810	
CAP, Air Conditioning Receiver Pressure Relief Valve					
60 Thru 62 01-10-20-80	*(Ref. Pr. List)*	.....	1	320 1297	
CAP, Air Conditioning Receiver Check Valve					
60 Thru 62 01-10-20-80 (For 3 Piece Unit): 63 01-10-80		.....	1	320 1292	
GUIDE, Air Conditioning Receiver Check Valve					
60 Thru 65 01-10-20-80		.....	1	320 1291	

Copyright 1963 American Motors Corp.

GROUP NO. — DESCRIPTION — YEAR and MODEL	PRIMARY GROUP NO.	PER CAR	PART NO.	CODE
63 10-80 (WAC-Note 13.440-1 Type 2)	.....	1	316 6612	
63 10-80 (WAC-Notes 13.440-1 Type 1 And 13.440-2 Type 1)	.....	1	316 8887	
63 10-80 (Note 13.440-2 Type 2): 64 10-80	.....	1	317 1733	
65 10-80 (Modine-Note 13.450-4 Type 2)	.....	1	317 5849	
65 10-80 (McCord-Note 13.450-4 Type 1)	.....	1	317 5233	
60 80 (OAC)	.....	1	315 6200	
60 80 (WAC)	.....	1	315 6199	
61 80 (WAC)	.....	1	316 0029	
61 80 (OAC) *(Discontinued)*	.....	1	316 2242	
ATTACHING PARTS Receiver To Condenser Core				
GROMMET 64-65 01: 65 10-80	.....	1	317 7316	
BOLT, Hexagon ..... 60 Thru 63 01	17.038	2	G180016	NA
BOLT, Hexagon ..... 64 01: 65 01 (Note 13.450-3 Type 2)	17.038	2	G181593	NA
BOLT, Hexagon 61 80	17.038	1	G181595	NA
BOLT, Hexagon 63-64 10-80	17.038	3	G180020	NA
SCREW, Tapping ..... 60 Thru 62 10-20-80 (2 Req.): 63-64 10-80 (1 Req.) *(Replaces 800 0103)*	17.671	AR	G9411563	
SCREW, Machine ..... 65 01 (Modine-Note 13.450-3 Type 2): 65 10-80	17.629	2	G274683	
WASHER, Plain 63 10-80	17.814	3	G120392	NA
WASHER, Lock ..... 60 Thru 63 01: 63-64 10-80: 61 80	17.820	2	G120380	NA
WASHER, Lock ..... 64 01: 65 01 (McCord-Note 13.450-3 Type 1)	17.820	2	G120214	
NUT, Hexagon ..... 60 Thru 63 01: 63-64 10-80	17.406	2	G120375	
NUT, Hexagon ..... 64 01: 65 01 (McCord-Note 13.450-3 Type 1)	17.406	2	G120368	
REPAIR KIT, Air Conditioning Receiver Check Valve				
60 Thru 65 01-10-20-80 *(Replaces 320 1293)*	.....	1	320 3095	
VALVE, Air Conditioning Receiver Pressure Relief				
60 Thru 65 01-10-20-80	.....	1	320 1430	
BODY, Air Conditioning Receiver Pressure Relief Valve				
60 Thru 62 01-10-20-80	.....	1	320 1296	
BODY, Air Conditioning Receiver Check Valve				
60 Thru 62 01-10-20-80 (For 3 Piece Unit): 63-64 01-10-80: 65 01: 65 10-80 (McCord-Note 13.450-4 Type 1)	15.370	1	320 1289	
65 10-80 (Modine-Note 13.450-4 Type 2)...(Incl. Swivel Nut)	.....	1	320 5810	
CAP, Air Conditioning Receiver Pressure Relief Valve				
60 Thru 62 01-10-20-80 *(Ref. Pr. List)*	.....	1	320 1297	
CAP, Air Conditioning Receiver Check Valve				
60 Thru 62 01-10-20-80 (For 3 Piece Unit): 63 01-10-80	.....	1	320 1292	
GUIDE, Air Conditioning Receiver Check Valve				
60 Thru 65 01-10-20-80	.....	1	320 1291	

Copyright 1963 American Motors Corp.

GROUP NO. — DESCRIPTION — YEAR and MODEL	PRIMARY GROUP NO.	PER CAR	PART NO.	CODE
GASKET, Air Conditioning Receiver Pressure Relief Valve				
60 Thru 64 01-10-20-80	.....	1	320 1300	
RING, Air Conditioning Receiver Check Valve To Body "O"				
60 Thru 62 01-10-20-80 (For 3 Piece Unit): 63-64 01-10-80	.....	1	320 1294	
CLIP, Air Conditioning Receiver				
60 Thru 62 10-20-80	13.082	1	314 4728	
ATTACHING PARTS				
Clip To Bracket				
BOLT, Hexagon ..... 60-61 10-20-80: 62 10-80 (1-1/8" Long-Note 13.450-1 Type 1)	17.038	1	G179819	NA
BOLT, Hexagon ..... 62 10-80 (5/8" Long-Note 13.450-1 Type 2)	17.038	1	G180018	NA
WASHER, Plain..... 60-61 10-20-80: 62 10-80 (11/32" I.D.-Note 13.450-1 Type 1) ..... ***(Replaces 800 0153)***	17.814	1	400 1093	
WASHER, Plain..... 62 10-80 (17/64" I.D.-Note 13.450-1 Type 2)	17.814	1	G446188	NA
WASHER, Lock..... 60-61 10-20-80: 62 10-80 (5/16" I.D.-Note 13.450-1 Type 1)	17.820	1	G120214	NA
WASHER, Lock..... 62 10-80 (1/4" I.D.-Note 13.450-1 Type 2)	17.820	1	G120380	NA
NUT, Hexagon..... 60-61 10-20-80: 62 10-80 (5/16-18-Note 13.450-1 Type 1)	17.406	1	G120376	NA
NUT, Hexagon..... 62 10-80 (1/4-20-Note 13.450-1 Type 2)	17.406	1	G120375	
BRACKET, Air Conditioning Receiver Clip				
60 10-20 (WAC): 61 10-20-80: 62 10-80 (Note 13.450-1 Type 1)	.....	1	315 6654	
60 10-20 (OAC): 60 80 (WAC)	16.240	1	315 0579	
62 10-80 (Note 13.450-1 Type 2)	13.455	1	316 5534	
13.470 VALVE, Air Conditioning Expansion				
60 01	.....	1	320 1603	
61 Thru 63 01: 62 10-80: 63 10-80 (Note 13.400-8 Type 1): 64 10 (OHV-196-OAC-Note 13.400-8 Type 1) ..... ***(Use 320 4477)***	.....	1	320 2683	#
64-65 01	.....	1	320 5085	
60-61 10-20-80	13.470	1	320 1982	
63 10-80 (Note 13.400-8 Type 2): 64 10 (OHV-196-Note 13.400-8 Type 2): 64 10-80 (V8): 65 10-80	.....	1	320 5087	
CLIP KIT, Air Conditioning Expansion Valve Capillary Tube (Incl. 3 Clips And Screws)				
60 Thru 63 01-10-20-80 (With 1" Clamp)	.....	1	320 1983	
64-65 01-10-80	.....	1	320 5086	
CLAMP, Air Conditioning Expansion Valve Capillary Tube				
61 01-10-20-80 (2-3/4")	.....	1	320 3255	
BAFFLE, Air Conditioning Expansion Valve				
61-62 10-20-80	15.470	1	345 5550	

Copyright 1963 American Motors Corp.

GROUP NO. — DESCRIPTION — YEAR and MODEL	PRIMARY GROUP NO.	PER CAR	PART NO.	CODE
ATTACHING PARTS Baffle To Core				
SCREW, Machine..... 61-62 10-20-80	17.610	2	G451271	NA
NUT, Speed..... 61-62 10-20-80	13.475	2	400 0425	
13.475 CORE, Air Conditioning Evaporator				
61 Thru 63 01	.....	1	316 0604	
64-65 01	.....	1	317 0514	
60 10-20-80	.....	1	344 5666	
61-62 10-20-80	.....	1	345 5549	
63 Thru 65 10-80	.....	1	316 6967	
ATTACHING PARTS Core To Housing				
SCREW, Machine..... 61-62 01	17.616	4	G443642	NA
SCREW, Machine..... 63 Thru 65 01: 60 Thru 63 10-20-80	17.626	4	G431942	NA
SCREW, Tapping..... 64-65 10-80	17.660	4	G162009	NA
WASHER, Plain..... 64-65 01	17.814	4	G120391	NA
NUT, Speed..... 64-65 01: 60 Thru 65 10-20-80	13.475	4	400 0425	
SEAL, Evaporator Core To Cover				
64-65 01: 63 Thru 65 10-80	.....	1	316 6966	
13.477 THERMOSTAT, Air Conditioning Temperature Control				
61 01: 62 01 (Note 13.477-1 Type 1)	.....	1	316 0618	
63 01 (Note 13.477-2 Type 1): 62 01 (Note 13.477-1 Type 2)	.....	1	346 1498	
63 01 (Note 13.477-2 Type 2)	.....	1	348 2967	

NOTE 13.477-1: Two Types of Thermostats were used on the 62 01-10-80 Series. They can be identified as follows:
Type 1: Thermostat is attached to Bracket mounted on Evaporator Housing.
Type 2: Thermostat is mounted on Instrument Panel.

NOTE 13.477-2: Two Types of Thermostats were used on the 63 01 Series. They can be identified as follows:
Type 1: The word "Cooler" appears on Thermostat Dial Face.
Type 2: The words "Cool" and "Cold" appear on Thermostat Dial Face.

NOTE 13.477-3: Two Types of Shafts were used on the 63 10-80 Model Air Conditioning Thermostat which require different Knobs. The Knob to be used can be identified by the following Notes and Illustrations covering the Thermostat Shafts.
Type 1: The Shaft has a "V" Groove to take a Cone Point Screw.
Type 2: The Shaft does not have a "V" Shaped Groove, and takes a Cup Point Screw.

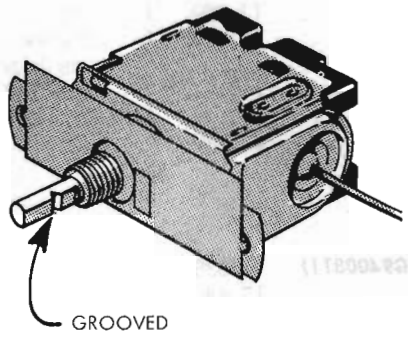

TYPE 1

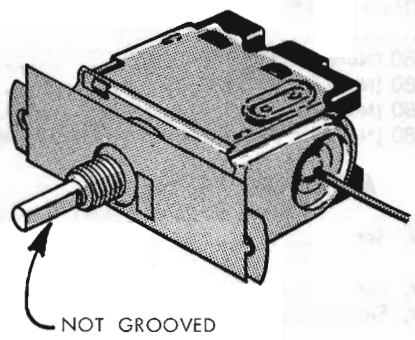

TYPE 2

Copyright 1963 American Motors Corp.

GROUP NO. — DESCRIPTION — YEAR and MODEL	PRIMARY GROUP NO.	PER CAR	PART NO.	CODE
64-65 01	.....	1	352 0829	
60-61 10-20-80: 62 10-80 (Note 13.477-1 Type 1)	.....	1	344 5678	
62 10-80 (Note 13.477-1 Type 2)	.....	1	346 1499	
63 10-80 (Note 13.400-8 Type 1)	.....	1	348 2992	
63 10-80 (Note 13.400-8 Type 2): 64-65 10-80	.....	1	352 0830	
ATTACHING PARTS				
Thermostat To Housing				
SCREW, Tapping..... 60 10-20-80 (3/8" Long)	17.648	2	G163718	NA
SCREW, Tapping..... 60 10-20-80 (5/16" Long)	17.664	2	G179259	NA
SCREW, Tapping..... 61 01	17.648	4	G166359	NA
SCREW, Tapping..... 61 10-20-80 (1/4" Long)	17.660	2	G167024	NA
SCREW, Tapping..... 61 10-20-80 (7/16" Long)	17.660	2	G9405916	NA
WASHER, Plain..... 61 01	17.814	4	G9414321	NA
WASHER, Lock..... 61 10-20-80	17.820	4	G120214	NA
WASHER, Lock..... 60 10-20-80	17.820	2	G131095	NA
Thermostat To Instrument Panel				
NUT, Lock..... 62 01-10-80 (Note 13.477-2): 63 Thru 65 01-10-80..	3.145	1	400 0056	
Thermostat Capillary Tube To Evaporator Housing				
SCREW, Tapping..... 63-64 10-80	3.346	1	400 0472	
SCREW, Tapping..... 64-65 01: 65 10-80	17.660	1	G161860	NA
CLIP..... 62 01 (Note 13.477-1 Type 2): 63 01	3.312	1	79 394	
CLIP..... 64-65 01-10-80	.....	1	317 7100	
WIRE, Air Conditioning Thermostat Temperature Control				
60-61 10-20-80	3.352	2	342 9670	
HARNESS, Air Conditioning Thermostat To Switch And Clutch Wire				
60 10-20-80	13.415	1	344 5679	
61 01	13.415	1	316 2028	
61 10-20-80	13.415	1	316 1369	
62 01 (Note 13.477-1 Type 1)	.....	1	316 3604	
62 01 (Note 13.477-1 Type 2)	.....	1	316 5638	
63 01	.....	1	316 7877	
64-65 01	.....	1	317 1120	
62 10-80 (Note 13.477-1 Type 1)	.....	1	316 5517	
62 10-80 (Note 13.477-1 Type 2)	3.165	1	316 5654	
63 10-80 (Note 13.400-8 Type 1)	.....	1	316 8143	
63 10-80 (Note 13.400-8 Type 2): 64 10-80: 65 10-80 (Note 13.072-3 Type 1)..	.....	1	317 2475	
65 10-80 (Note 13.072-3 Type 2)	.....	1	317 8687	
WIRE, Air Conditioning Harness Extension				
65 10-80	.....	1	358 5072	#
KNOB, Air Conditioning Thermostat Control				
62 01 (Note 13.477-1 Type 2): 63 01	13.080	1	346 4513	
64 01	13.080	1	350 9462	
62 10-80 (Note 13.477-1 Type 2)	.....	1	346 2649	
63 10-80 (Note 13.477-3 Type 2)	.....	1	320 4577	
63 10-80 (Note 13.477-3 Type 1 And Note 13.400-8 Type 1)	.....	1	349 0023	
63 10-80 (Note 13.400-8 Type 2): 64-65 10-80	22.039	1	350 9540	
ATTACHING PARTS				
Knob To Thermostat				
SCREW, Set..... 63 01-10-80 (Note 13.400-8 Type 1)..... *(Replaces G9400811)*	17.638	1	G435146	
SCREW, Set..... 64 01	17.640	1	G435145	NA
SCREW, Set..... 63 10-80 (Note 13.400-8 Type 2): 64-65 10-80	17.640	1	G147450	NA

Copyright 1963 American Motors Corp.

GROUP NO. — DESCRIPTION — YEAR and MODEL	PRIMARY GROUP NO.	PER CAR	PART NO.	CODE
GUIDE, Air Conditioning Thermostat Capillary Tube				
64-65 01: 63 Thru 65 10-80	.....	1	316 6971	
ATTACHING PARTS Tube To Housing				
FASTENER 64-65 01: 63-64 10-80	13.017	1	400 0271	
GROMMET, Air Conditioning Thermostat Control Capillary Tube				
64-65 01: 63 Thru 65 10-80	.....	1	316 6972	
INSULATION, Air Conditioning Thermostat Control Capillary Tube				
60 10-20-80 ..... *(Replaces 315 8337)*	13.440	1	315 8337	
13.480 DIAL, Air Conditioning Thermostat (On Instrument Panel)				
62 01-10-80: 63 01 (Note 13.477-2 Type 1)	.....	1	346 2673	
63 01 (Note 13.477-2 Type 2)	.....	1	348 2968	
ESCUTCHEON, Air Conditioning Thermostat Dial				
62 01-10-80: 63 01	.....	1	346 2674	
63 10-80 (Note 13.400-8 Type 1)	.....	1	348 2993	
OVERLAY, Air Conditioning Control				
64 01	.....	1	350 9468	
65 01	.....	1	353 0657	
PANEL, Air Conditioning Controls Mounting				
63 10-80 (Note 13.400-8 Type 2): 64 10-80	.....	1	352 0768	
65 10-80	.....	1	353 0656	
ATTACHING PARTS Panel To Instrument Panel				
SCREW, Tapping..... 63 10-80 (Note 13.400-8 Type 2): 64-65 10-80	13.017	2	400 0616	
13.488 HOUSING, Air Conditioning Evaporator				
60 01	.....	1	320 1990	
61 01: 62 01 (Note 13.477-1 Type 1)	.....	1	316 0607	
62 01 (Note 13.477-1 Type 2): 63 01	.....	1	316 5637	
64-65 01	.....	1	317 0540	
60 10-20-80	.....	1	344 5768	
61 10-20-80: 62 10-80 (Note 13.477-1)	.....	1	447 8765	
62 10-80 (Note 13.477-2)	.....	1	316 4275	
63 10-80 (Note 13.400-8 Type 1): 64 10 (OHV-196-OAC-Note 13.400-8 Type 1)	.....	1	316 6950	
63 10-80 (Note 13.400-8 Type 2): 64 10 (OHV-196-Note 13.400-8 Type 2): 64 10-80 (V8)	.....	1	317 2294	
65 10-80	.....	1	317 5588	
ATTACHING PARTS Housing To Dash Panel				
SCREW, Tapping..... 61 Thru 63 01	17.660	8	G162013	NA
SCREW, Tapping..... 64-65 01	17.660	4	G161933	NA
SCREW, Tapping..... 60 10-20-80 ..... *(Replaces 800 0091)*	17.671	2	400 1031	
SCREW, Tapping..... 61-62 10-20-80	17.660	4	G162009	NA

NOTE 13.488-1: Two Types of Louvers were used on the 60 01 (WAC) Series. They can be identified as follows:
Type 1: Louver Shaft is retangular in shape.
Type 2: Louver Shaft is half round in shape.

Copyright 1963 American Motors Corp.

GROUP NO. — DESCRIPTION — YEAR and MODEL		PRIMARY GROUP NO.	PER CAR	PART NO.	CODE
SCREW, Tapping	63 Thru 65 10-80	17.660	2	G161933	NA
SCREW, Tapping	65 10-80	17.660	1	G161909	
BOLT, Square	63 Thru 65 10-80	17.044	4	G426920	NA
WASHER, Plain	61 Thru 63 01	17.814	8	G120392	NA
WASHER, Plain	64-65 01 (4 Req.): 63 Thru 65 10-80 (3 Req.)	17.814	AR	G120391	NA
NUT, Speed	63 Thru 65 10-80	13.012	4	400 0268	
SPACER	64 01: 63 Thru 65 10-80	.....	2	316 6958	
SPACER	64 01: 63-64 10-80	.....	2	316 6958	

COVER, Air Conditioning Evaporator Housing End

61 Thru 63 01		.....	1	316 0611	
63 Thru 65 10-80		.....	1	316 6969	

ATTACHING PARTS
Cover To Housing

SCREW, Tapping	61 Thru 63 01 (4 Req.): 63-64 10-80 (3 Req.)	17.670	AR	400 0472	
SCREW, Tapping	65 10-80	17.670	3	G274725	NA
WASHER, Plain	61 Thru 63 01 (4 Req.): 63 Thru 65 10-80 (3 Req.)	17.814	AR	G131015	NA
NUT, Speed	61 Thru 63 01 (4 Req.): 63 Thru 65 10-80 (3 Req.)	.....	AR	316 0620	

COVER, Air Conditioning Evaporator Housing Upper (Incl. Defroster Damper)

64-65 01		.....	1	317 0494	
63-64 10-80		.....	1	316 6960	
65 10-80		.....	1	317 5571	

ATTACHING PARTS
Cover To Housing

CLIP	64-65 01 (6 Req.): 63 10-80 (9 Req.): 64-65 10-80 (11 Req.)	.....	AR	400 0438	

COVER, Air Conditioning Evaporator Housing Lower

60 10-20-80		.....	1	344 5681	
61-62 10-20-80		.....	1	345 5557	

ATTACHING PARTS
Cover To Housing

FASTENER	60 10-20-80 (14 Req.): 61-62 10-20-80 (12 Req.)	.....	AR	400 0438	

HANDLE, Air Conditioning Floor Cooling Door

63 10-80 (Note 13.400-8 Type 2): 64-65 10-80		.....	1	317 2725	

ATTACHING PARTS
Handle To Door

SCREW, Machine	64-65 10-80	.....	1	G159572	NA
WASHER, Lock	64-65 10-80	17.822	1	G121752	NA

STABILIZER, Air Conditioning Floor Cooling Handle

63 10-80 (Note 13.400-8 Type 2): 64-65 10-80 (LHD-WAC)		.....	1	317 4279	

GASKET, Air Conditioning Evaporator Housing To Dash Panel

63 Thru 65 10-80		13.113	1	316 6572	#
(Upper) 61 Thru 63 01		.....	1	316 0615	
(Lower) 61 Thru 63 01		.....	1	316 0613	

Copyright 1963 American Motors Corp.

GROUP NO. — DESCRIPTION — YEAR and MODEL	PRIMARY GROUP NO.	PER CAR	PART NO.	CODE
GASKET, Air Conditioning Evaporator End Cover To Housing				
63 Thru 65 10-80	.....	1	316 6970	
SEAL, Air Conditioning Evaporator Upper Cover To Connector				
64-65 01: 63 Thru 65 10-80	.....	1	316 8866	
INSULATION, Air Conditioning Evaporator Housing				
64-65 01	.....	1	317 0495	
61-62 10-20-80	.....	1	316 5582	
63 Thru 65 10-80	.....	1	316 6959	
CONNECTOR, Air Conditioning Evaporator Housing To Duct				
61 Thru 63 01	13.510	1	316 0617	
64-65 01	.....	1	350 0784	
61-62 10-20-80	13.510	1	345 5554	
63-64 10-80	.....	1	349 0208	
65 10-80	13.510	1	351 6654	
BAND, Air Conditioning Evaporator Housing To Duct Connector				
61-62 10-20-80	.....	1	345 5593	
ROD, Air Conditioning Evaporator Housing Damper				
61 Thru 63 01	.....	1	316 0616	
BAFFLE, Air Conditioning Evaporator Housing Lower				
60 10-20-80	.....	1	344 5683	
61-62 10-20-80	.....	1	345 5574	
PAN, Air Conditioning Evaporator Drip				
60 01 (Plastic)	.....	1	315 7251	
60 01 (Metal)	.....	1	320 1658	
ATTACHING PARTS Pan To Housing				
SCREW, Tapping..... 60 01 ..... *(Replaces 800 0107)*	17.671	6	400 1044	
TUBE, Air Conditioning Evaporator Drain				
60 01	.....	1	315 7252	
61 Thru 63 01	.....	1	316 0623	
60 Thru 62 10-20-80	.....	1	344 5682	
64-65 01: 63 Thru 65 10-80	.....	1	316 6957	
GROMMET, Air Conditioning Evaporator Drain Tube				
60 10-20-80	13.115	1	342 1164	
SPRING, Air Conditioning Evaporator Drain Tube				
61 Thru 63 01: 61-62 10-20-80	.....	1	316 2343	

Copyright 1963 American Motors Corp.

GROUP NO. — DESCRIPTION — YEAR and MODEL	PRIMARY GROUP NO.	PER CAR	PART NO.	CODE
GASKET, Air Conditioning Evaporator End Cover To Housing				
63 Thru 65 10-80	.....	1	316 6970	
SEAL, Air Conditioning Evaporator Upper Cover To Connector				
64-65 01: 63 Thru 65 10-80	.....	1	316 8866	
INSULATION, Air Conditioning Evaporator Housing				
64-65 01	.....	1	317 0495	
61-62 10-20-80	.....	1	316 5582	
63 Thru 65 10-80	.....	1	316 6959	
CONNECTOR, Air Conditioning Evaporator Housing To Duct				
61 Thru 63 01	13.510	1	316 0617	
64-65 01	.....	1	350 0784	
61-62 10-20-80	13.510	1	345 5554	
63-64 10-80	.....	1	349 0208	
65 10-80	13.510	1	351 6654	
BAND, Air Conditioning Evaporator Housing To Duct Connector				
61-62 10-20-80	.....	1	345 5593	
ROD, Air Conditioning Evaporator Housing Damper				
61 Thru 63 01	.....	1	316 0616	
BAFFLE, Air Conditioning Evaporator Housing Lower				
60 10-20-80	.....	1	344 5683	
61-62 10-20-80	.....	1	345 5574	
PAN, Air Conditioning Evaporator Drip				
60 01 (Plastic)	.....	1	315 7251	
60 01 (Metal)	.....	1	320 1658	
ATTACHING PARTS Pan To Housing				
SCREW, Tapping..... 60 01 ..... *(Replaces 800 0107)*	17.671	6	400 1044	
TUBE, Air Conditioning Evaporator Drain				
60 01	.....	1	315 7252	
61 Thru 63 01	.....	1	316 0623	
60 Thru 62 10-20-80	.....	1	344 5682	
64-65 01: 63 Thru 65 10-80	.....	1	316 6957	
GROMMET, Air Conditioning Evaporator Drain Tube				
60 10-20-80	13.115	1	342 1164	
SPRING, Air Conditioning Evaporator Drain Tube				
61 Thru 63 01: 61-62 10-20-80	.....	1	316 2343	

Copyright 1963 American Motors Corp.

GROUP NO. — DESCRIPTION — YEAR and MODEL	PRIMARY GROUP NO.	PER CAR	PART NO.	CODE
PLATE, Air Conditioning Control Identification				
60 01	.....	1	320 1991	
PLATE, Air Conditioning Control Trim				
60 01	.....	1	320 1657	
PANEL, Air Conditioning Evaporator Housing Face (Plastic)				
60 01	.....	1	320 1986	
ATTACHING PARTS Panel To Housing				
SCREW, Tapping..... 60 01	.....	4	320 1992	
GRILLE, Air Conditioning Evaporator Housing Louvers (Chrome)				
60 01	.....	1	320 1654	
LOUVER, Air Conditioning Air Deflector				
60 01 (Note 13.488-1 Type 1)	13.515	3	320 1655	
KNOB, Air Conditioning Air Deflector Louvers				
60 01 (Note 13.488-1 Type 1)	.....	3	320 1608	
60 01 (Note 13.488-1 Type 2)	.....	3	320 3084	
13.500 DAMPER, Air Conditioning Evaporator Defroster				
60 10-20-80...(Incl. Rod)	13.120	1	344 5674	
ATTACHING PARTS Damper To Rod				
SCREW, Machine..... 60 10-20-80	17.616	2	G155103	NA
WASHER, Lock..... 60 10-20-80	17.820	2	G131096	NA
13.510 DUCT, Air Conditioning Evaporator Air Discharge				
(Prime) 61 Thru 63 01...(Incl. Grille And Door)	.....	1	346 7284	
(Prime) 64 01...(Incl. Screen And Retainer) ***(Use 448 2533)***	.....	1	350 1470	#
(Prime) 65 01...(Incl. Screen And Retainer)	.....	1	448 2533	
(Prime) 61 10-20-80...(Incl. Grille And Door) ***(Replaces 345 5188, 345 5191, 345 5198)***	.....	1	345 5181	
(Prime) 62 10-80...(Incl. Grille And Door)	13.515	1	347 0871	
(Prime) 63 10-80...(Incl. Screen And Retainer)	.....	1	349 0241	
(Prime) 64 10-80...(Incl. Screen And Retainer)	.....	1	352 0597	
(Black) 65 10 (Except Marlin)...(Incl. Screen And Retainer)	.....	1	351 6680	
(Black) 65 80: 65 50 (Marlin)...(Incl. Screen And Retainer)	.....	1	351 6690	
(T-027) 60 10-20...(Incl. Grille And Door)	.....	1	344 3592	
(T-028) 60 10-20...(Incl. Grille And Door)	.....	1	344 3592	
(T-029) 60 10-20...(Incl. Grille And Door)	.....	1	344 3592	
(T-041) 60 10-20...(Incl. Grille And Door) ***(Replaces 344 3595)***	.....	1	347 0871	

NOTE 13.510-1: Two Types of Connectors were used on the 60 10-20-80 (WAC) Series. They can be identified as follows:
Type 1: Connector is attached to Housing with a Two Piece Metal Clamp.
Type 2: Connector is attached to Housing with a 1" Rubber Band.

Copyright 1963 American Motors Corp.

GROUP NO. — DESCRIPTION — YEAR and MODEL	PRIMARY GROUP NO.	PER CAR	PART NO.	CODE
(T-042) 60 10-20...(Incl. Grille And Door)	.....	1	344 3592	
(T-043) 60 10-20...(Incl. Grille And Door)	.....	1	344 3593	
(T-044) 60 10-20...(Incl. Grille And Door)	.....	1	344 3594	
(T-045) 60 10-20...(Incl. Grille And Door)	.....	1	344 3592	
(T-046) 60 10-20...(Incl. Grille And Door)	.....	1	344 3592	
(T-047) 60 10-20...(Incl. Grille And Door)	.....	1	344 3592	
(T-048) 60 10-20...(Incl. Grille And Door)	.....	1	344 3592	
(T-049) 60 10-20...(Incl. Grille And Door)	.....	1	344 3592	
(T-067) 60 80...(Incl. Grille And Door)	.....	1	344 3592	
(T-068) 60 80...(Incl. Grille And Door)	.....	1	344 3592	
(T-069) 60 80...(Incl. Grille And Door)	.....	1	344 3592	
(T-081) 60 80...(Incl. Grille And Door) ***(Replaces 344 3595)***	.....	1	347 0871	
(T-082) 60 80...(Incl. Grille And Door)	.....	1	344 3592	
(T-083) 60 80...(Incl. Grille And Door)	.....	1	344 3593	
(T-084) 60 80...(Incl. Grille And Door)	.....	1	344 3594	
(T-085) 60 80...(Incl. Grille And Door)	.....	1	344 3592	
(T-086) 60 80...(Incl. Grille And Door)	.....	1	344 3592	
(T-087) 60 80...(Incl. Grille And Door)	.....	1	344 3592	
(T-088) 60 80...(Incl. Grille And Door)	.....	1	344 3592	
(T-089) 60 80...(Incl. Grille And Door)	.....	1	344 3592	
ATTACHING PARTS				
Duct To Instrument Panel				
SCREW, Tapping..... 61 Thru 63 01	17.666	2	G161645	NA
SCREW, Tapping..... 64-65 01	17.671	3	400 1037	
SCREW, Tapping..... 61-62 10-20-80 (#6-18 x 1)	17.654	2	G162312	NA
SCREW, Tapping..... 61-62 10-20-80 (#8-15 x 1)	17.654	2	G162413	NA
SCREW, Tapping..... 63 10-80 (#8-15 x 1/2)	17.654	2	G148545	NA
SCREW, Tapping..... 63 10-80 (#10-12 x 3/4)	17.660	2	G443946	NA
SCREW, Machine..... 65 10-80	23.098	3	400 0572	
NUT, Speed 64-65 01	.....	1	400 0512	
NUT, Speed 61-62 10-20-80	3.303	2	400 0402	
NUT..... 65 10-80	.....	3	400 1340	
Duct To Instrument Cluster Reinforcement				
SCREW, Machine..... 65 10-80	23.098	2	400 0572	
OVERLAY, Air Conditioning Air Discharge Duct				
65 80: 65 50 (Marlin)	.....	1	351 6700	
ATTACHING PARTS				
Overlay To Duct				
SCREW 65 80	17.660	4	G449627	NA#
CONNECTOR, Duct To Evaporator Housing				
60 10-20-80 (9-1/8" I. D. -Note 13.510-1 Type 2): 61-62 10-20-80	.....	1	345 5554	
63-64 10-80	13.488	1	349 0208	
65 10-80	.....	1	351 6654	
ATTACHING PARTS				
Connector To Duct				
CLAMP, Upper..... 60 10-20-80 (Note 13.510-1 Type 1)	.....	1	344 5685	
CLAMP, Lower..... 60 10-20-80 (Note 13.510-1 Type 1)	.....	1	344 5686	
WASHER, Lock..... 60 10-20-80 (Note 13.510-1 Type 1)	17.820	2	G450585	NA
NUT, Hexagon..... 60 10-20-80 (Note 13.510-1 Type 1)	17.406	2	G120367	
BAND, Rubber..... 60 10-20-80 (Note 13.510-1 Type 2): 61-62 10-20-80	.....	1	345 5593	

Copyright 1963 American Motors Corp.

GROUP NO. — DESCRIPTION — YEAR and MODEL	PRIMARY GROUP NO.	PER CAR	PART NO.	CODE
DEFLECTOR, Air Conditioning Air Outlet (In Duct)				
60 Thru 62 10-20-80	.....	1	346 2647	
ATTACHING PARTS Deflector To Duct				
SCREW, Tapping..... 60 Thru 62 10-20-80	17.660	1	G161869	NA
TUBE, Air Conditioning Air Outlet (In Duct)				
60 Thru 62 10-20-80	.....	1	346 2648	
COVER, Radio Speaker Opening				
60 Thru 62 10-20-80 (Less Radio)	.....	1	344 0621	
ATTACHING PARTS Cover To Duct				
SCREW, Tapping..... 60 Thru 62 10-20-80 (Less Radio)	17.660	4	G161869	NA
NUT, Spring..... 60 Thru 62 10-20-80 (Less Radio)	17.424	4	G445349	
RETAINER, Air Conditioning Air Discharge Grille				
64-65 01: 63-64 10-80	13.515	3	349 0226	
65 10-80	13.515	3	351 6653	
SCREEN, Air Conditioning Air Discharge Grille (Attaches With Screws)				
63 10-80	.....	1	347 2737	
SEAL, Air Conditioning Air Discharge Duct				
63 Thru 65 10-80	13.488	1	316 8866	
SPACER, Air Conditioning Air Discharge Duct To Instrument Panel				
61 Thru 63 01 (Less Radio)	.....	1	344 6905	
60 Thru 62 10-20-80 (W/Crash Pad)	.....	2	345 1527	
ATTACHING PARTS Spacer To Duct				
SCREW, Tapping..... 61 Thru 63 01 (Less Radio)	17.660	1	G163228	NA
CABLE, Air Conditioning Damper Control				
61 01 (With Gray Knob)	.....	1	344 8436	
61 Thru 63 01 (With Black Knob)	.....	1	346 4516	
ATTACHING PARTS Cable To Bracket				
NUT, Hexagon..... 61 Thru 63 01	17.412	1	G271193	NA
BRACKET, Air Conditioning Air Discharge Duct Mounting				
63-64 10-80	.....	2	349 0253	

Copyright 1963 American Motors Corp.

GROUP NO. — DESCRIPTION — YEAR and MODEL	PRIMARY GROUP NO.	PER CAR	PART NO.	CODE
ATTACHING PARTS				
Bracket To Instrument Panel				
SCREW, Machine..... 63-64 10-80	17.607	2	G446607	NA
NUT, Hexagon..... 63-64 10-80	17.412	2	G271169	
13.515 DOOR, Air Conditioning Air Discharge Grille				
(Left-Prime) 62 10-80	.....	1	347 0875	
(Right-Prime) 62 10-80	.....	1	347 0874	
(T-027) 60 10-20 (Left)	.....	1	344 3641	
(T-027) 60 10-20 (Right)	.....	1	344 3640	
(T-028) 60 10-20 (Left)	.....	1	344 3641	
(T-028) 60 10-20 (Right)	.....	1	344 3640	
(T-029) 60 10-20 (Left)	.....	1	344 3641	
(T-029) 60 10-20 (Right)	.....	1	344 3640	
(T-041) 60 10-20 (Left)	.....	1	344 3647	
(T-041) 60 10-20 (Right)	.....	1	344 3646	
(T-042) 60 10-20 (Left)	.....	1	344 3641	
(T-042) 60 10-20 (Right)	.....	1	344 3640	
(T-043) 60 10-20 (Left)	.....	1	344 3643	
(T-043) 60 10-20 (Right)	.....	1	344 3642	
(T-044) 60 10-20 (Left)	.....	1	344 3645	
(T-044) 60 10-20 (Right)	.....	1	344 3644	
(T-045) 60 10-20 (Left)	.....	1	344 3641	
(T-045) 60 10-20 (Right)	.....	1	344 3640	
(T-046) 60 10-20 (Left)	.....	1	344 3641	
(T-046) 60 10-20 (Right)	.....	1	344 3640	
(T-047) 60 10-20 (Left)	.....	1	344 3641	
(T-047) 60 10-20 (Right)	.....	1	344 3640	
(T-048) 60 10-20 (Left)	.....	1	344 3641	
(T-048) 60 10-20 (Right)	.....	1	344 3640	
(T-049) 60 10-20 (Left)	.....	1	344 3641	
(T-049) 60 10-20 (Right)	.....	1	344 3640	
(T-067) 60 80 (Left)	.....	1	344 3641	
(T-067) 60 80 (Right)	.....	1	344 3640	
(T-068) 60 80 (Left)	.....	1	344 3641	
(T-068) 60 80 (Right)	.....	1	344 3640	
(T-069) 60 80 (Left)	.....	1	344 3641	
(T-069) 60 80 (Right)	.....	1	344 3640	
(T-081) 60 80 (Left)	.....	1	344 3647	
(T-081) 60 80 (Right)	.....	1	344 3646	
(T-082) 60 80 (Left)	.....	1	344 3641	
(T-082) 60 80 (Right)	.....	1	344 3640	
(T-083) 60 80 (Left)	.....	1	344 3643	
(T-083) 60 80 (Right)	.....	1	344 3642	
(T-084) 60 80 (Left)	.....	1	344 3645	
(T-084) 60 80 (Right)	.....	1	344 3644	
(T-085) 60 80 (Left)	.....	1	344 3641	
(T-085) 60 80 (Right)	.....	1	344 3640	
(T-086) 60 80 (Left)	.....	1	344 3641	
(T-086) 60 80 (Right)	.....	1	344 3640	
(T-087) 60 80 (Left)	.....	1	344 3641	
(T-087) 60 80 (Right)	.....	1	344 3640	
(T-088) 60 80 (Left)	.....	1	344 3641	
(T-088) 60 80 (Right)	.....	1	344 3640	
(T-089) 60 80 (Left)	.....	1	344 3641	
(T-089) 60 80 (Right)	.....	1	344 3640	

NOTE 13.515-1: Three Types of Air Conditioning Air Discharge Grille Bezels were used on the 65 01-10-80. They can be identified as follows:

Type 1: The Bezel is painted plastic.
Type 2: The Bezel is chrome plated die casting.
Type 3: The Bezel is a chrome finished plastic.

Copyright 1963 American Motors Corp.

GROUP NO. — DESCRIPTION — YEAR and MODEL	PRIMARY GROUP NO.	PER CAR	PART NO.	CODE
(T-121) 61 10-20-80 (Left)	.....	1	345 5185	
(T-121) 61 10-20-80 (Right)	.....	1	345 5184	
(T-1212) 61 10-20-80 (Left)	.....	1	345 5185	
(T-1212) 61 10-20-80 (Right)	.....	1	345 5184	
(T-122) 61 10-20 (Left)	.....	1	345 5185	
(T-122) 61 10-20 (Right)	.....	1	345 5184	
(T-1222) 61 10-20 (Left)	.....	1	345 5185	
(T-1222) 61 10-20 (Right)	.....	1	345 5184	
(T-123) 61 10-20 (Left)	.....	1	345 5187	
(T-123) 61 10-20 (Right)	.....	1	345 5186	
(T-124) 61 10-20 (Left)	.....	1	345 5195	
(T-124) 61 10-20 (Right)	.....	1	345 5194	
(T-125) 61 10-20 (Left)	.....	1	345 5185	
(T-125) 61 10-20 (Right)	.....	1	345 5184	
(T-1252) 61 10-80 (Left)	.....	1	345 5185	
(T-1252) 61 10-20 (Right)	.....	1	345 5184	
(T-126) 61 10-20 (Left)	.....	1	345 5185	
(T-126) 61 10-20 (Right)	.....	1	345 5196	
(T-128) 61 10-20 (Left)	.....	1	345 5185	
(T-128) 61 10-20 (Right)	.....	1	345 5184	
(T-1282) 61 10-20 (Left)	.....	1	345 5185	
(T-1282) 61 10-20 (Right)	.....	1	345 5184	
(T-129) 61 10-20 (Left)	.....	1	345 5185	
(T-129) 61 10-20 (Right)	.....	1	345 5184	
(T-1292) 61 10-20 (Left)	.....	1	345 5185	
(T-1292) 61 10-20 (Right)	.....	1	345 5184	
(T-130) 61 10-20-80 (Left)	.....	1	345 5185	
(T-130) 61 10-20-80 (Right)	.....	1	345 5184	
(T-131) 61 10-20-80 (Left)	.....	1	345 5185	
(T-131) 61 10-20-80 (Right)	.....	1	345 5184	
(T-132) 61 10-20 (Left)	.....	1	345 5185	
(T-132) 61 10-20 (Right)	.....	1	345 5184	
(T-133) 61 10-20 (Left)	.....	1	345 5185	
(T-133) 61 10-20 (Right)	.....	1	345 5184	
(T-134) 61 10-20 (Left)	.....	1	345 5195	
(T-134) 61 10-20 (Right)	.....	1	345 5194	
(T-135) 61 10-20 (Left)	.....	1	345 5185	
(T-135) 61 10-20 (Right)	.....	1	345 5184	
(T-136) 61 10-20 (Left)	.....	1	345 5185	
(T-136) 61 10-20 (Right)	.....	1	345 5196	
(T-138) 61 10-20 (Left)	.....	1	345 5185	
(T-138) 61 10-20 (Right)	.....	1	345 5184	
(T-1382) 61 10-20 (Left)	.....	1	345 5185	
(T-1382) 61 10-20 (Right)	.....	1	345 5184	
(T-139) 61 10-20 (Left)	.....	1	345 5185	
(T-139) 61 10-20 (Right)	.....	1	345 5184	
(T-1392) 61 10-20 (Left)	.....	1	345 5185	
(T-1392) 61 10-20 (Right)	.....	1	345 5184	
(T-141) 61 10-20 (Left)	.....	1	345 5185	
(T-141) 61 10-20 (Right)	.....	1	345 5196	
(T-142) 61 10-20 (Left)	.....	1	345 5185	
(T-142) 61 10-20 (Right)	.....	1	345 5184	
(T-1422) 61 10-20 (Left)	.....	1	345 5185	
(T-1422) 61 10-20 (Right)	.....	1	345 5184	
(T-143) 61 10-20 (Left)	.....	1	345 5187	
(T-143) 61 10-20 (Right)	.....	1	345 5186	
(T-144) 61 10-20 (Left)	.....	1	345 5195	
(T-144) 61 10-20 (Right)	.....	1	345 5194	
(T-145) 61 10-20 (Left)	.....	1	345 5185	
(T-145) 61 10-20 (Right)	.....	1	345 5184	
(T-1452) 61 10-20 (Left)	.....	1	345 5185	
(T-1452) 61 10-20 (Right)	.....	1	345 5184	

Copyright 1963 American Motors Corp.

GROUP NO. — DESCRIPTION — YEAR and MODEL	PRIMARY GROUP NO.	PER CAR	PART NO.	CODE
(T-146) 61 10-20 (Left)	.....	1	345 5185	
(T-146) 61 10-20 (Right)	.....	1	345 5184	
(T-1462) 61 10-20 (Left)	.....	1	345 5185	
(T-1462) 61 10-20 (Right)	.....	1	345 5184	
(T-149) 61 10-20 (Left)	.....	1	345 5185	
(T-149) 61 10-20 (Right)	.....	1	345 5184	
(T-1492) 61 10-20 (Left)	.....	1	345 5185	
(T-1492) 61 10-20 (Right)	.....	1	345 5184	
(T-151) 61 10-20 (Left)	.....	1	345 5185	
(T-151) 61 10-20 (Right)	.....	1	345 5196	
(T-152) 61 20-80 (Left)	.....	1	345 5185	
(T-152) 61 20-80 (Right)	.....	1	345 5184	
(T-1522) 61 20-80 (Left)	.....	1	345 5185	#
(T-1522) 61 20-80 (Right)	.....	1	345 5184	
(T-153) 61 20-80 (Left)	.....	1	345 5187	
(T-153) 61 20-80 (Right)	.....	1	345 5186	
(T-154) 61 20-80 (Left)	.....	1	345 5195	
(T-154) 61 20-80 (Right)	.....	1	345 5194	
(T-155) 61 20-80 (Left)	.....	1	345 5185	
(T-155) 61 20-80 (Right)	.....	1	345 5184	
(T-1552) 61 20-80 (Left)	.....	1	345 5185	
(T-1552) 61 20-80 (Right)	.....	1	345 5184	
(T-156) 61 20-80 (Left)	.....	1	345 5185	
(T-156) 61 20-80 (Right)	.....	1	345 5184	
(T-1562) 61 20-80 (Left)	.....	1	345 5185	
(T-1562) 61 20-80 (Right)	.....	1	345 5184	
(T-159) 61 20-80 (Left)	.....	1	345 5185	
(T-159) 61 20-80 (Right)	.....	1	345 5184	
(T-1592) 61 20-80 (Left)	.....	1	345 5185	
(T-1592) 61 20-80 (Right)	.....	1	345 5184	
(T-162) 61 80 (Left)	.....	1	345 5185	
(T-162) 61 80 (Right)	.....	1	345 5184	
(T-1622) 61 80 (Left)	.....	1	345 5185	
(T-1622) 61 80 (Right)	.....	1	345 5184	
(T-163) 61 80 (Left)	.....	1	345 5185	
(T-163) 61 80 (Right)	.....	1	345 5184	
(T-164) 61 80 (Left)	.....	1	345 5195	
(T-164) 61 80 (Right)	.....	1	345 5194	
(T-165) 61 80 (Left)	.....	1	345 5185	
(T-165) 61 80 (Right)	.....	1	345 5184	
(T-1652) 61 80 (Left)	.....	1	345 5185	
(T-1652) 61 80 (Right)	.....	1	345 5184	
(T-166) 61 80 (Left)	.....	1	345 5185	
(T-166) 61 80 (Right)	.....	1	345 5196	
(T-168) 61 80 (Left)	.....	1	345 5185	
(T-168) 61 80 (Right)	.....	1	345 5184	
(T-1682) 61 80 (Left)	.....	1	345 5185	
(T-1682) 61 80 (Right)	.....	1	345 5184	
(T-1683) 61 80 (Left)	.....	1	345 5185	
(T-1683) 61 80 (Right)	.....	1	345 5184	
(T-169) 61 80 (Left)	.....	1	345 5185	
(T-169) 61 80 (Right)	.....	1	345 5184	
(T-1692) 61 80 (Left)	.....	1	345 5185	
(T-1692) 61 80 (Right)	.....	1	345 5184	
(T-1693) 61 80 (Left)	.....	1	345 5185	
(T-1693) 61 80 (Right)	.....	1	345 5184	
(T-172) 61 80 (Left)	.....	1	345 5185	
(T-172) 61 80 (Right)	.....	1	345 5184	
(T-173) 61 80 (Left)	.....	1	345 5187	
(T-173) 61 80 (Right)	.....	1	345 5186	

Copyright 1963 American Motors Corp.

GROUP NO. — DESCRIPTION — YEAR and MODEL	PRIMARY GROUP NO.	PER CAR	PART NO.	CODE
(T-174) 61 80 (Left)	.....	1	345 5195	
(T-174) 61 80 (Right)	.....	1	345 5194	
(T-175) 61 80 (Left)	.....	1	345 5185	
(T-175) 61 80 (Right)	.....	1	345 5184	
(T-176) 61 80 (Left)	.....	1	345 5185	
(T-176) 61 80 (Right)	.....	1	345 5196	
(T-178) 61 80 (Left)	.....	1	345 5185	
(T-178) 61 80 (Right)	.....	1	345 5184	
(T-1783) 61 80 (Left)	.....	1	345 5185	
(T-1783) 61 80 (Right)	.....	1	345 5184	
(T-179) 61 80 (Left)	.....	1	345 5185	
(T-179) 61 80 (Right)	.....	1	345 5184	
(T-1793) 61 80 (Left)	.....	1	345 5185	
(T-1793) 61 80 (Right)	.....	1	345 5184	
(T-181) 61 80 (Left)	.....	1	345 5185	
(T-181) 61 80 (Right)	.....	1	345 5197	
(T-182) 61 80 (Left)	.....	1	345 5185	
(T-182) 61 80 (Right)	.....	1	345 5184	
(T-1822) 61 80 (Left)	.....	1	345 5185	
(T-1822) 61 80 (Right)	.....	1	345 5184	
(T-1823) 61 80 (Left)	.....	1	345 5185	
(T-1823) 61 80 (Right)	.....	1	345 5184	
(T-183) 61 80 (Left)	.....	1	345 5187	
(T-183) 61 80 (Right)	.....	1	345 5186	
(T-184) 61 80 (Left)	.....	1	345 5195	
(T-184) 61 80 (Right)	.....	1	345 5194	
(T-185) 61 80 (Left)	.....	1	345 5185	
(T-185) 61 80 (Right)	.....	1	345 5184	
(T-1852) 61 80 (Left)	.....	1	345 5185	
(T-1852) 61 80 (Right)	.....	1	345 5184	
(T-1853) 61 80 (Left)	.....	1	345 5185	
(T-1853) 61 80 (Right)	.....	1	345 5184	
(T-186) 61 80 (Left)	.....	1	345 5185	
(T-186) 61 80 (Right)	.....	1	345 5184	
(T-1862) 61 80 (Left)	.....	1	345 5185	
(T-1862) 61 80 (Right)	.....	1	345 5184	
(T-1863) 61 80 (Left)	.....	1	345 5185	
(T-1863) 61 80 (Right)	.....	1	345 5184	
(T-189) 61 80 (Left)	.....	1	345 5185	
(T-189) 61 80 (Right)	.....	1	345 5184	
(T-1892) 61 80 (Left)	.....	1	345 5185	
(T-1892) 61 80 (Right)	.....	1	345 5184	
(T-1893) 61 80 (Left)	.....	1	345 5185	
(T-1893) 61 80 (Right)	.....	1	345 5184	
(T-190) 61 10-20-80 (Left)	.....	1	345 5185	
(T-190) 61 10-20-80 (Right)	.....	1	345 5196	
(T-191) 61 80 (Left)	.....	1	345 5185	
(T-191) 61 80 (Right)	.....	1	345 5196	
(T-192) 61 80 (Left)	.....	1	345 5185	
(T-192) 61 80 (Right)	.....	1	345 5184	
(T-1923) 61 80 (Left)	.....	1	345 5185	
(T-1923) 61 80 (Right)	.....	1	345 5184	
(T-193) 61 80 (Left)	.....	1	345 5187	
(T-193) 61 80 (Right)	.....	1	345 5186	
(T-194) 61 80 (Left)	.....	1	345 5195	
(T-194) 61 80 (Right)	.....	1	345 5194	
(T-195) 61 80 (Left)	.....	1	345 5185	
(T-195) 61 80 (Right)	.....	1	345 5184	
(T-1953) 61 80 (Left)	.....	1	345 5185	
(T-1953) 61 80 (Right)	.....	1	345 5184	

Copyright 1963 American Motors Corp.

GROUP NO. — DESCRIPTION — YEAR and MODEL	PRIMARY GROUP NO.	PER CAR	PART NO.	CODE
(T-196) 61 80 (Left)	.....	1	345 5185	
(T-196) 61 80 (Right)	.....	1	345 5184	
(T-1963) 61 80 (Left)	.....	1	345 5185	
(T-1963) 61 80 (Right)	.....	1	345 5184	
(T-197) 61 10-20-80 (Left)	.....	1	345 5185	
(T-197) 61 10-20-80 (Right)	.....	1	345 5184	
(T-198) 61 10-20-80 (Left)	.....	1	345 5185	
(T-198) 61 10-20-80 (Right)	.....	1	345 5184	
(T-199) 61 80 (Left)	.....	1	345 5185	
(T-199) 61 80 (Right)	.....	1	345 5184	
(T-1993) 61 80 (Left)	.....	1	345 5185	
(T-1993) 61 80 (Right)	.....	1	345 5184	
BEZEL, Air Conditioning Air Discharge Grille				
64 01: 65 01 (Note 13.515-1 Type 1)...(Incl. Louvers)....***(Replaces 351 9975)***	.....	3	351 9801	
65 01 (Note 13.515-1 Type 3)...(Incl. Louvers)	.....	3	353 0860	
60 Thru 62 10-20-80 (OAC)	.....	1	344 6113	
63 10-80...(Incl. Louvers)	.....	3	348 2961	
64 10-80...(Incl. Louvers)	.....	3	351 2150	
65 10-80 (Note 13.515-1 Type 2)...(Incl. Louvers)	.....	3	351 6670	
65 10-80 (Note 13.515-1 Type 3)...(Incl. Louvers)	.....	3	353 0840	
ATTACHING PARTS				
Bezel To Instrument Panel				
NUT, Stamped..... 60 Thru 62 10-20-80 (OAC)	17.428	10	G441239	NA
Bezel To Duct				
RETAINER (Wire)..... 64-65 01: 63-64 10-80	.....	3	349 0226	
RETAINER, Wire..... 65 10-80	.....	3	351 6653	
Door To Bezel				
RETAINER (Nylon)..... 64-65 01-10-80	.....	6	320 5451	
SCREW, Machine..... 64-65 01-10-80	.....	6	400 1316	
LOUVERS, Air Conditioning Air Discharge Bezel				
64-65 01: 64 10-80	.....	3	320 5880	
65 10-80	.....	3	320 5971	
SEAL, Air Conditioning Air Discharge Grille Bezel To Duct				
64-65 01: 63 Thru 65 10-80	.....	3	349 0228	
PIN, Air Conditioning Air Discharge Grille Door Hinge				
61 Thru 63 01	.....	2	346 0300	
60 Thru 62 10-20-80	.....	2	344 0946	
WASHER, Air Conditioning Air Discharge Grille Door Hinge Pin				
60 Thru 62 10-20-80	.....	1	400 0384	
SPRING, Air Conditioning Air Discharge Grille Door Hinge				
61 Thru 63 01 (8 Req.): 60 Thru 62 10-20-80 (4 Req.)	.....	AR	314 0290	
RETAINER, Air Conditioning Air Discharge Grille Door Hinge Spring				
61 Thru 63 01 (8 Req.): 60 Thru 62 10-20-80 (4 Req.)	.....	AR	314 0289	

Copyright 1963 American Motors Corp.

GROUP NO. — DESCRIPTION — YEAR and MODEL	PRIMARY GROUP NO.	PER CAR	PART NO.	CODE
CLIP, Air Conditioning Air Discharge Grille Door Retaining				
61 Thru 63 01	.....	4	346 0007	
60 Thru 62 10-20-80	.....	2	400 0410	
DOOR, Air Conditioning Air Discharge Lower				
64-65 01	.....	2	350 0754	
KNOB, Air Conditioning Air Discharge Lower				
64-65 01	.....	2	350 0764	
ATTACHING PARTS				
Knob To Door				
SCREW, Tapping 64-65 01	17.666	2	G161599	
RETAINER, Air Conditioning Air Discharge Lower Door				
64-65 01	.....	2	350 0755	

Copyright 1963 American Motors Corp.

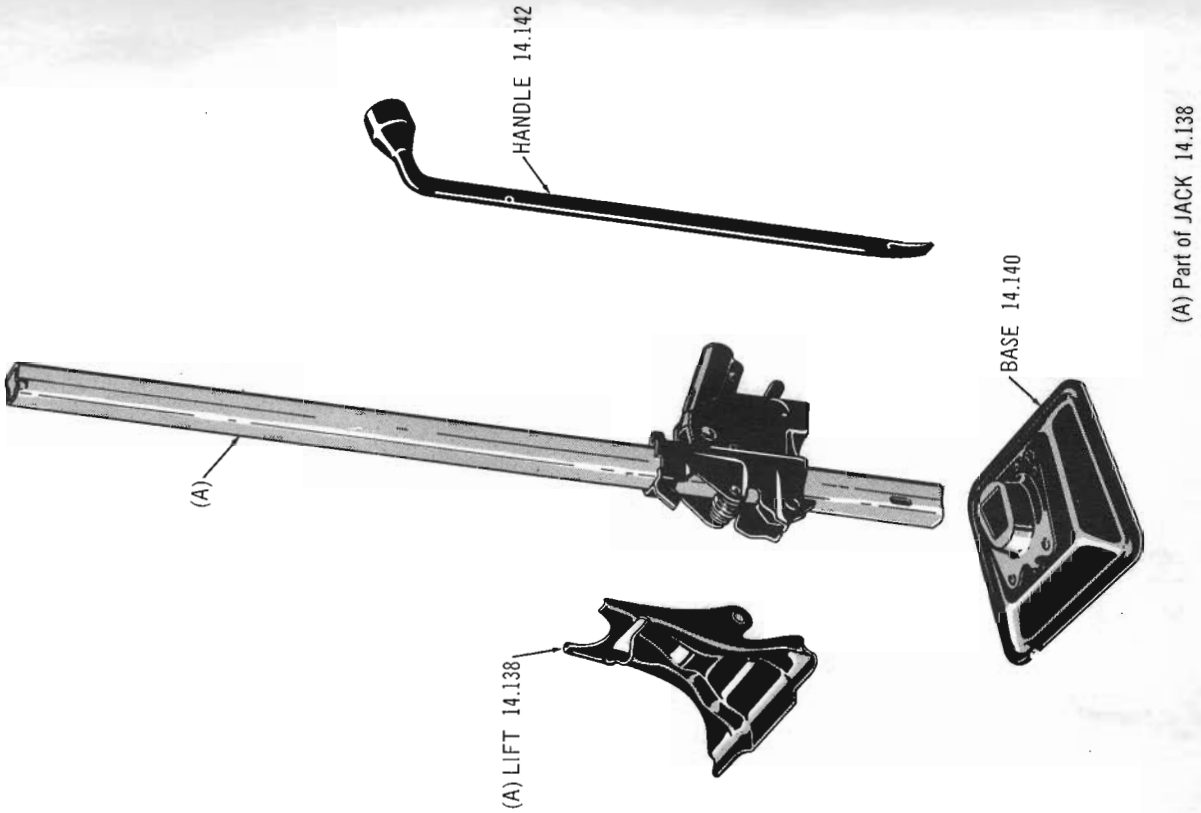

BUMPER JACK 63 ALL MODELS: 64-65 ALL MODELS (1st. type)

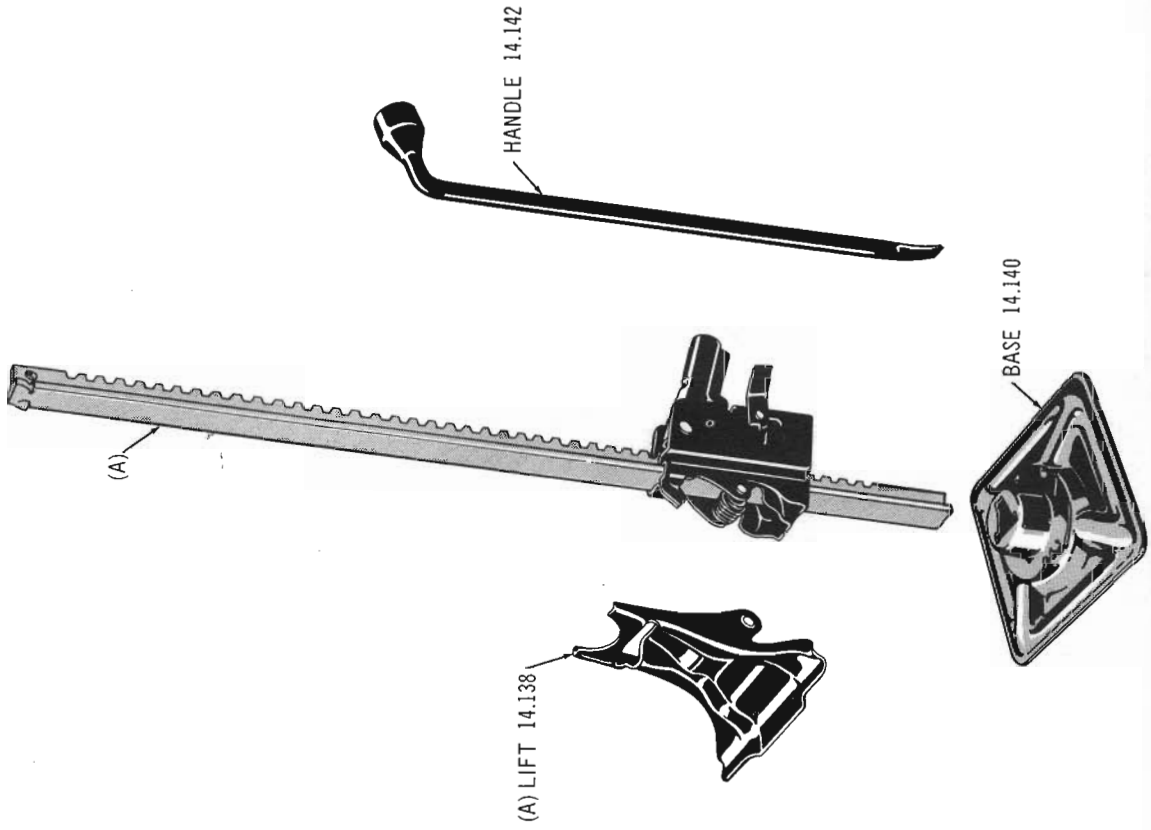

BUMPER JACK 64-65 ALL MODELS (2nd. type)

Copyright 1963 American Motors Corp.

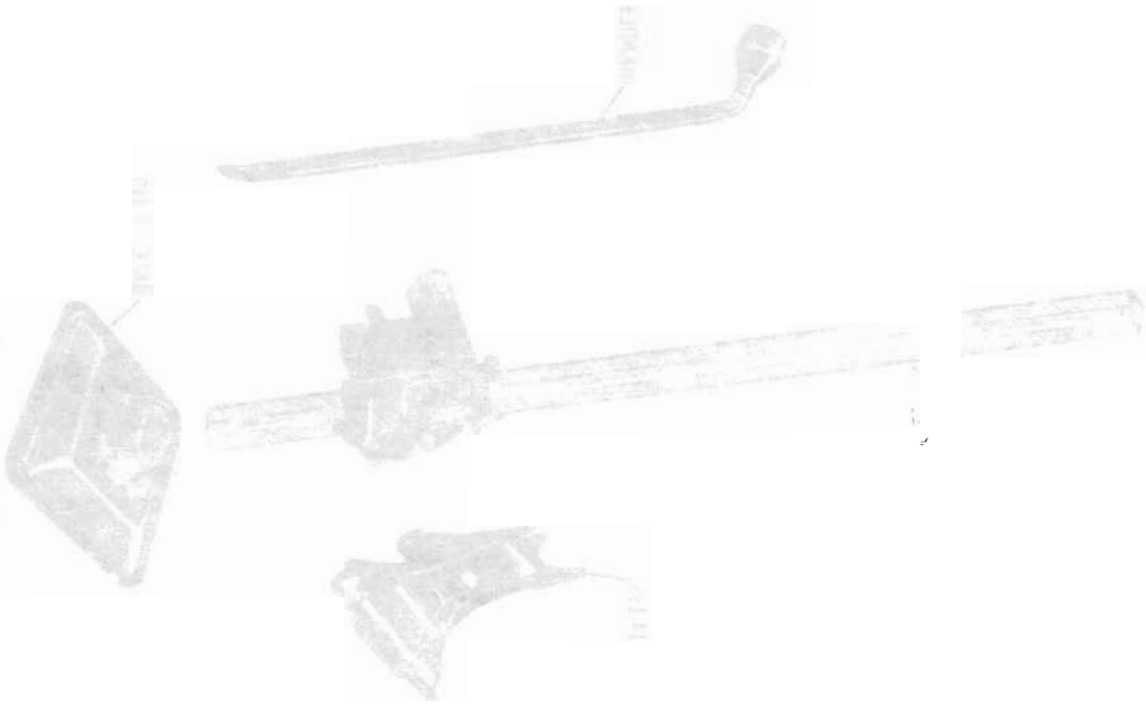

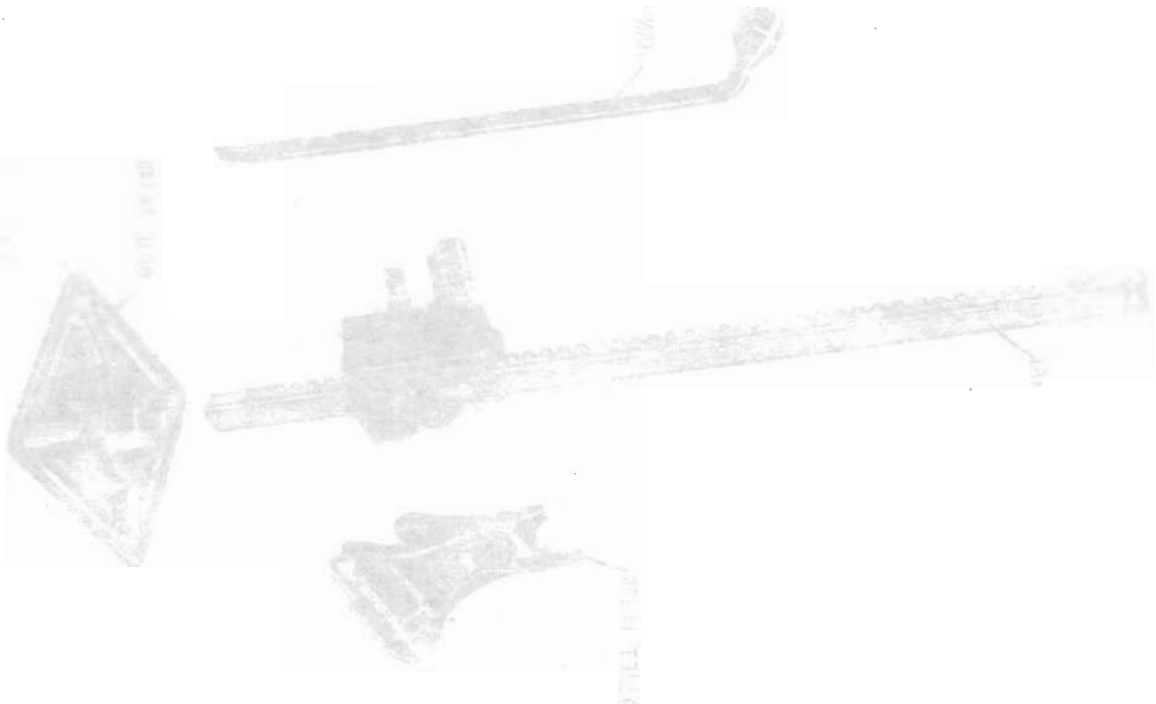

Copyright 1963 American Motors Corp.

GROUP NO. — DESCRIPTION — YEAR and MODEL		PRIMARY GROUP NO.	PER CAR	PART NO.	CODE
14.098 BRACKET, Front License Plate					
61 Thru 63 01		.....	1	345 8056	
61 80		.....	1	345 8219	
ATTACHING PARTS					
Bracket To Body					
BOLT, Hexagon.....	61 Thru 63 01	17.038	2	G180020	NA
BOLT, Hexagon	61 80	17.038	2	G180018	NA
WASHER, Lock	61 80	17.820	2	G120380	NA
NUT, Stamped	61 Thru 63 01	17.428	2	G440491	NA
NUT, Stamped	61 80	17.406	2	G120375	NA
14.104 BRACKET, Rear License Plate					
60 02-05-06 (WWC)		.....	1	314 8710	
60 04		.....	1	341 1755	
60 10-20-80		.....	1	315 8751	
61 Thru 63 01		.....	1	344 7043	
61 10-20-80		.....	1	316 1184	
ATTACHING PARTS					
Bracket To Bumper					
BOLT, Hexagon.....	61 Thru 63 01	17.038	2	G180018	NA
SCREW, Tapping.....	62-63 01: 61 10-20-80	17.820	2	G120380	NA
Bracket To Cross Bar					
SCREW	60 04 ***(Replaces 800 0129)***	17.671	2	400 1066	
Bracket To Splash Panel					
SCREW, Tapping.....	60 10-20-80	17.670	1	G172431	NA
WASHER, Plain.....	60 10-20-80	17.814	1	G120392	NA
WASHER, Plain.....	60 10-20-80 ***(Replaces 800 0183)***	17.814	1	400 1122	
BAR, Bracket To Bumper Rail Cross					
60 04		.....	1	313 6572	
ATTACHING PARTS					
Cross Bar To Vertical Bar					
BOLT, Hexagon.....	60 04	17.038	4	G180016	NA
WASHER, Lock	60 04	17.820	4	G120380	NA
NUT, Hexagon.....	60 04	17.406	4	G120375	
BUMPER, Bracket To Bumper Rail					
60 02-05-06 (WWC)		23.019	2	434 9311	
61 10-20-80		23.019	2	434 8105	
HINGE, Bracket To Bumper Rail (Incl. Spring And Pin)					
60 02-05-06		.....	1	315 5599	
ATTACHING PARTS					
Hinge To Bracket					
BOLT, Round Head.....	60 02-05-06 (WWC)	17.046	1	G126203	NA
WASHER, Plain	60 02-05-06 (WWC)	17.814	1	G120392	NA
WASHER, Lock	60 02-05-06 (WWC)	17.820	1	G120380	NA
NUT, Hexagon.....	60 02-05-06 (WWC)	17.406	1	G120375	

Copyright 1963 American Motors Corp.

GROUP NO. — DESCRIPTION — YEAR and MODEL	PRIMARY GROUP NO.	PER CAR	PART NO.	CODE
Hinge To Bumper Rail				
WASHER, Lock ..... 60 02-05-06 (WWC)	17.820	2	G120380	NA
NUT, Hexagon ..... 60 02-05-06 (WWC)	17.406	2	G120380	NA
SPRING, Bracket To Bumper Rail Hinge				
60 02-05-06	.....	1	314 8709	
PIN, Bracket To Bumper Rail Hinge				
60 02-05-06	.....	1	314 0729	
14.108 ATTACHING PARTS, License Plate				
Front License				
BOLT, Machine 60-61 01: 61 80	17.608	2	G144531	NA
SCREW, Tapping 62-63 01	17.664	2	G144728	NA
SCREW, Tapping ..... 64-65 01: 63 Thru 65 10-80	.....	2	400 0272	#
SCREW, Tapping 62 10-80	.....	2	400 0259	
SCREW, Tapping ..... 60 Thru 62 10-20-80	17.664	2	G144759	NA
NUT, Stamped 60 01	17.428	2	G440491	NA
NUT, Stamped 60 10-20-80	.....	2	344 6206	
NUT, Spring ..... 64-65 01: 63 Thru 65 10-80	.....	2	400 0141	
NUT, Hexagon 60 10-20-80	17.410	2	G120613	NA
SPRING ..... 61 Thru 63 01	17.424	2	G445407	NA
SPRING 61-62 10-20: 62 80	.....	2	343 5141	
SPRING 62 10-80	.....	2	316 6237	
SPRING 61 80	.....	2	435 8986	
BUMPER, Front License Plate				
60 10-20-80	.....	2	343 0618	
ATTACHING PARTS				
Rear License To Bracket				
BOLT, Machine ..... 60 02-05-06 (WWC): 60 04	17.608	2	G144531	NA
SCREW, Tapping ..... 60 02-05-06 (LWC)	17.664	2	G144759	NA
SCREW, Tapping ..... 60 Thru 63 01: 61 10-20-80	17.664	2	G144728	NA
SCREW, Tapping 64-65 01: 63-65 10-80	.....	2	400 0272	#
SCREW, Tapping ..... 60 10-20-80 (1/2" Long)	17.664	2	G144728	NA
SCREW, Tapping ..... 60 10-20-80 (1" Long)	17.664	2	G144759	NA
SCREW, Tapping ..... 62 10-80 (5/8" Long) ..... *(Replaces 400 0231)*	.....	2	400 0272	
SCREW, Tapping ..... 62 10-80 (1" Long)	.....	2	400 0259	
NUT, Spring ..... 60 02-05-06 (LWC)	.....	2	343 5142	
NUT, Spring ..... 60 02-05-06 (LWC): 60 04	17.428	2	G440491	NA
NUT, Spring ..... 60 Thru 63 01	17.424	2	G445407	NA
NUT, Spring 64-65 01: 63-65 10-80	.....	2	400 0141	#
NUT, Spring 60 10-20-80 (1/4-28)	17.410	2	G120613	NA
NUT, Spring ..... 60 10-20-80 (3/8 I.D.)	.....	2	344 6206	
NUT, Spring 61 10-20-80	.....	2	435 8986	
NUT, Spring 62 10-80	.....	2	400 0353	
BUMPER, Rear License				
60 02-05-06 (LWC)	23.019	2	434 8105	
64-65 01-10-80 (4 Req.): 63 10-80 (2 Req.)	14.104	AR	313 2458	
62 15-16-18-85-86-88	.....	2	400 0101	

Copyright 1963 American Motors Corp.

GROUP NO. — DESCRIPTION — YEAR and MODEL	PRIMARY GROUP NO.	PER CAR	PART NO.	CODE
14.112 FRAME, License Plate				
60 Thru 62 01-10-20-80	15.240	2	899 0747	
SPRING KIT (Incl. 2 Rivets And 2 Springs)				
60 Thru 62 01-10-20-80	15.240	2	320 2430	
14.138 JACK				
60 01 (Note 14.140-1)	.....	1	315 9596	
61 01: 60-61 10-20-80 ***(Ref. Pr. List)***	.....	1	315 8397	
62 01-10-80	.....	1	316 1116	
63 01-10-80	.....	1	316 7919	
64-65 01 (Note 14.138-1 Type 1): 64 10-80 (Note 14.138-1 Type 1)	.....	1	317 1815	
64-65 01 (Note 14.138-1 Type 2): 64 10-80 (Note 14.138-1 Type 2)	.....	1	317 5192	
65 10-80 (Note 14.138-1 Type 1)	.....	1	317 6892	
65 10-80 (Note 14.138-1 Type 2)	.....	1	317 6893	
SPRING, Jack Hold Down				
60-61 18-28-88 (W3S)	4.080	2	313 9296	
63 80	.....	1	314 6472	
BRACKET, Jack Locating				
60-61 18-28-88 (W3S)	.....	1	315 8722	
ATTACHING PARTS Bracket To Floor				
SCREW 60-61 18-28-88 (W3S)	17.671	2	G456766	
CLAMP, Jack Hold Down				
64 08: 64 18-88 (L3S): 65 08 (Note 14.138-2)	.....	1	316 7942	
65 08 (Note 14.138-3): 65 18-88 (L3S-Note 14.138-3)	.....	1	317 9099	
65 15-16-17-19-85-86-87-89	.....	1	317 8624	
ATTACHING PARTS Clamp To Jack				
NUT, Wing ..... 64-65 08 (L3S): 63-65 18-88 (L3S)	17.432	1	G148312	
NUT, Wing 65 15-16-17-19-85-86-87-89	.....	1	400 0789	
LIFT, Jack				
63 01-10-80	.....	1	320 4423	
64 01-10-80: 65 01	.....	1	320 5258	
65 10-80 (Note 14.138-1 Type 1)	.....	1	320 6698	
65 10-80 (Note 14.138-1 Type 2)	.....	1	320 6697	
164 01-10-80 (Can): 165 01 (Can)	.....	1	317 8681	

NOTE 14.138-1: Two Types of Jacks were used on the 64-65 01-10-80 Models. They can be identified as follows:
Type 1: Jack has a Tubular Post (Refer Illustration 14-1).
Type 2: Jack has a T Shaped Post (Refer Illustration 14-1).

NOTE 14.138-2: Used prior to Car Sequence No.

NOTE 14.138-3: Used beginning with Car Sequence No.

NOTE 14.138-4: Two Jack Storage Locations were used on the 65 10-80 models. They can be identified as follows:
Type 1: The Jack is mounted under the Cargo Mat at the rear of the trunk, and is used on 65 15-16 prior to Car Sequence No. E129982. On 165 10-80 used prior to Serial No. ST500989 and LT507995.
Type 2: The Jack is mounted under the spare tire and is used on 65 15-16 beginning with Car Sequence No. E129982. On 165 10-80 used beginning with Serial No. ST500989 and LT507995.

NOTE 14.140-1: Used on Cars equipped with Universal Jack.

NOTE 14.140-2: Used on Cars equipped with Walker Jack.

Copyright 1963 American Motors Corp.

GROUP NO. — DESCRIPTION — YEAR and MODEL	PRIMARY GROUP NO.	PER CAR	PART NO.	CODE
HOOK, Jack Hold Down				
65 15-16-19-85-86-89 (Note 14.138-4 Type-1)	.....	1	317 8924	
65 15-16-19-85-86-89 (Note 14.138-4 Type-2)	.....	1	318 0940	
STUD, Jack Hold Down				
65 15-16-17-19-59-85-86-87-89	.....	1	317 7209	
14.140 BASE, Jack				
60 01 (Note 14.140-2)	.....	1	315 6460	
60 Thru 62 01-10-20-80 (Note 14.140-1)	.....	1	315 8433	
63 01-10-80 (Note 14.140-1)	.....	1	316 7949	
64-65 01-10-80 (Note 14.138-1 Type 1)	.....	1	317 1803	
64-65 01-10-80 (Note 14.138-1 Type 2)	.....	1	317 5193	
ATTACHING PARTS Base Hold Down				
SCREW, Tapping ..... 61 18-28-88 (W3S) ..... ***(Replaces 800 0095)***	17.671	1	G456766	
WASHER, Plain ..... 60 01 ..... ***(Replaces 800 0159)***	17.814	1	400 1098	
WASHER, Plain ..... 61 18-28-88 (W3S) ..... ***(Replaces 800 0141)***	17.814	1	400 1081	
NUT, Wing 60 01	17.432	1	G148313	
SPRING, Base Hold Down				
60-61 18-28-88 (W3S)	4.080	2	313 9296	
HOOK, Base Hold Down				
60 01 (Note 14.140-1)	.....	1	315 9607	
60 01 (Note 14.140-2)	8.330	1	313 9897	
14.142 HANDLE, Jack				
60 Thru 65 01-10-20-80	.....	1	314 0947	
SPRING, Handle Hold Down				
60-61 18-28-88 (W3S)	4.080	2	313 9296	
14.145 STICKER, Information				
(Engine Coolant) 63 Thru 65 01-10-80	.....	1	317 2170	
(Locking Differential) 60 Thru 65 01-10-20-80 (WLD)	9.001	1	315 7268	
(Tailgate Lock Instruction) 64-65 18-88 (WVT)	.....	1	352 0743	
(Battery Warning) 64-65 01-10-80 (WAE)	.....	1	317 3693	
(Fasten Seat Belts) 65 01-10-80	.....	1	351 6971	
STICKER, Valve Cover				
64 10 (OHVA)	.....	1	317 3110	
65 01 (OHV-196)	.....	1	317 3101	
65 01-10 (OHV-199)	.....	1	317 6604	
65 01-10-80 (OHV-232)	.....	1	317 6334	
65 10-80 (V8-287)	.....	2	317 9388	
65 10-80 (V8-327)	.....	2	317 9389	

NOTE 14.145-1: Used on Cars Equipped with United Air Cleaner.
NOTE 14.145-2: Used on Cars Equipped with Fram Air Cleaner.

Copyright 1963 American Motors Corp.

GROUP NO. — DESCRIPTION — YEAR and MODEL	PRIMARY GROUP NO.	PER CAR	PART NO.	CODE
STICKER, Air Cleaner				
65 01 (OHV-196-Note 14.145-2)	.....	1	317 4425	
65 01 (OHV-196-Note 14.145-1)	.....	1	317 3109	
65 01-10-80 (OHV-199)(OHV-232)	.....	1	317 6332	
65 10-80 (V8-287-Note 14.145-1)	.....	1	317 3108	
65 10-80 (V8-287-Note 14.145-2)	.....	1	317 4424	
65 10-80 (V8-327-Note 14.145-1)	.....	1	317 3107	
65 10-80 (V8-327-Note 14.145-2)	.....	1	317 4423	

Copyright 1963 American Motors Corp.

GROUP NO. — DESCRIPTION — YEAR and MODEL	PRIMARY GROUP NO.	PER CAR	PART NO.	CODE

Copyright 1963 American Motors Corp.

FILTER ASSEMBLY 15.190 Includes all parts shown

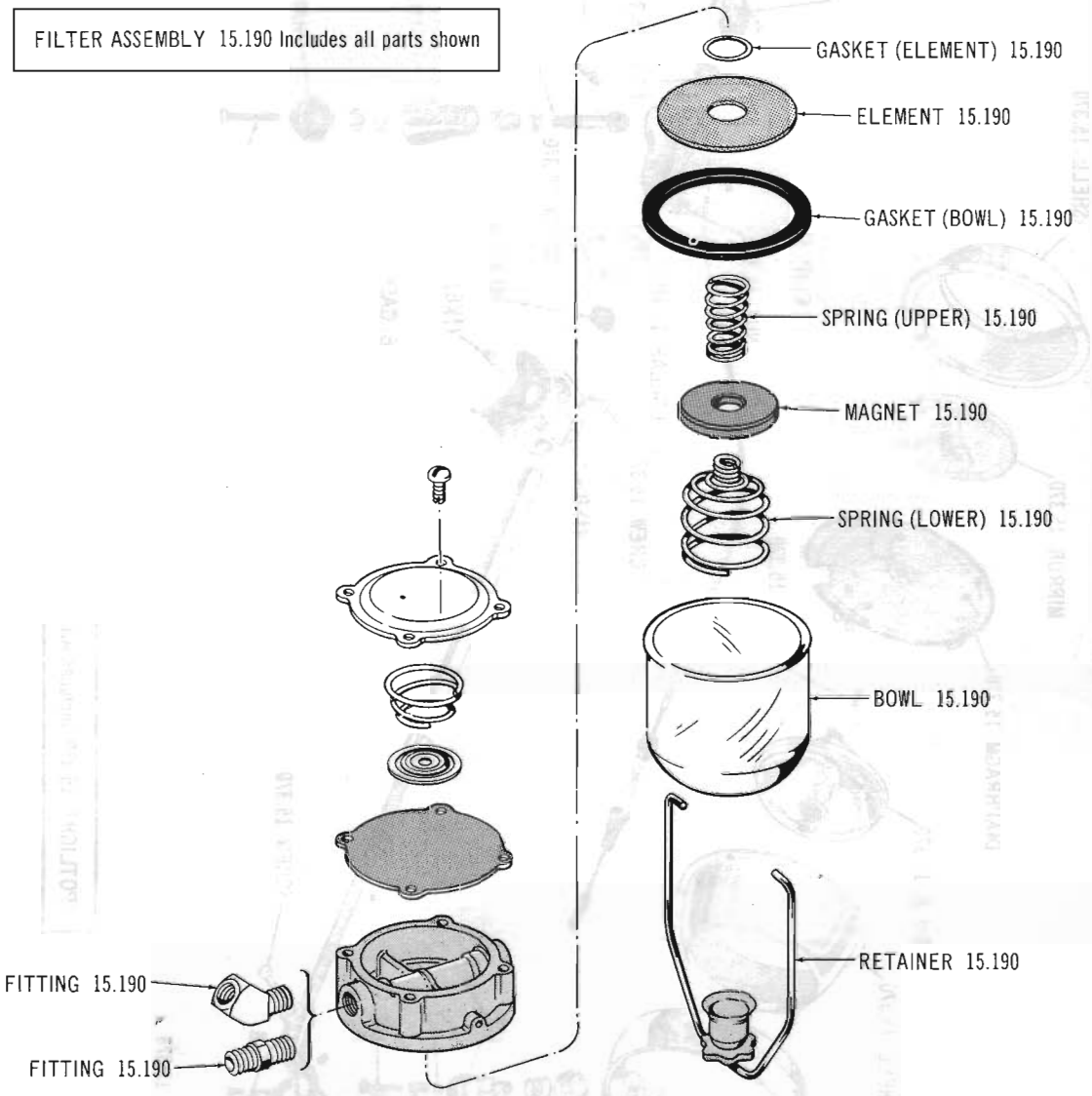

GASOLINE FILTER 60 thru Current ALL MODELS

Copyright 1963 American Motors Corp.

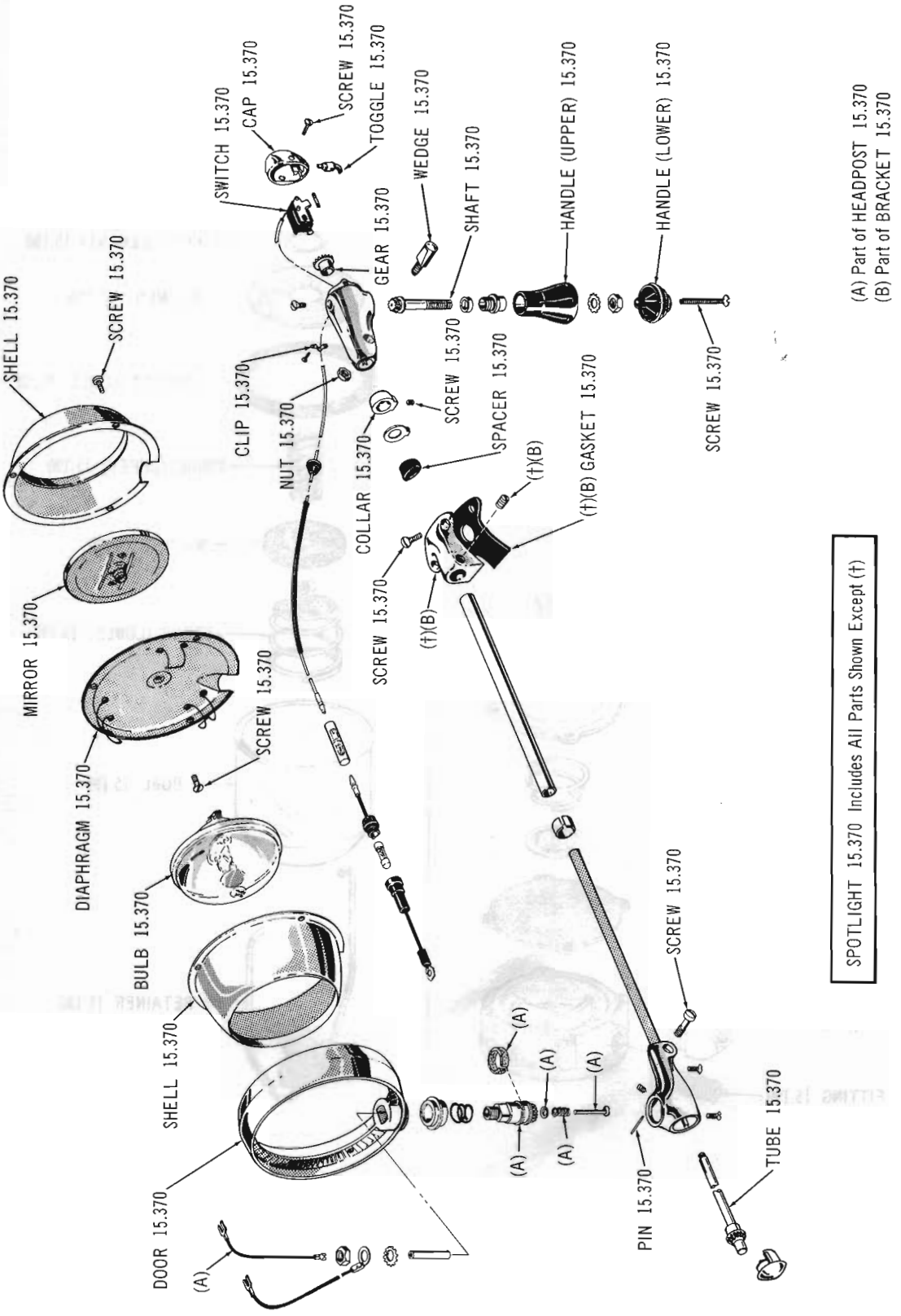

SPOTLIGHT 63 10-80: 64 01-10-80

Copyright 1963 American Motors Corp.

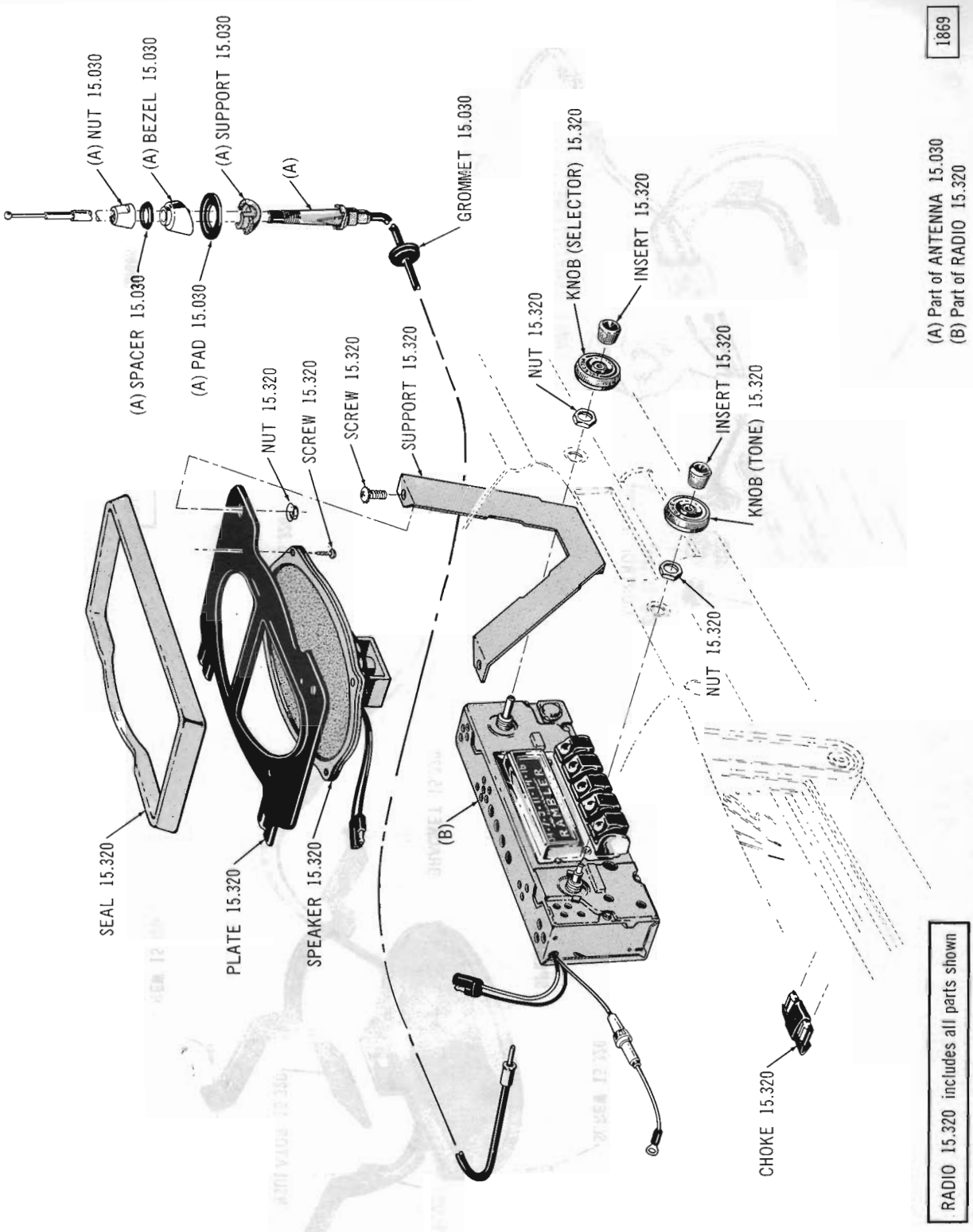

A.M. RADIO 64 10-80

Copyright 1963 American Motors Corp.

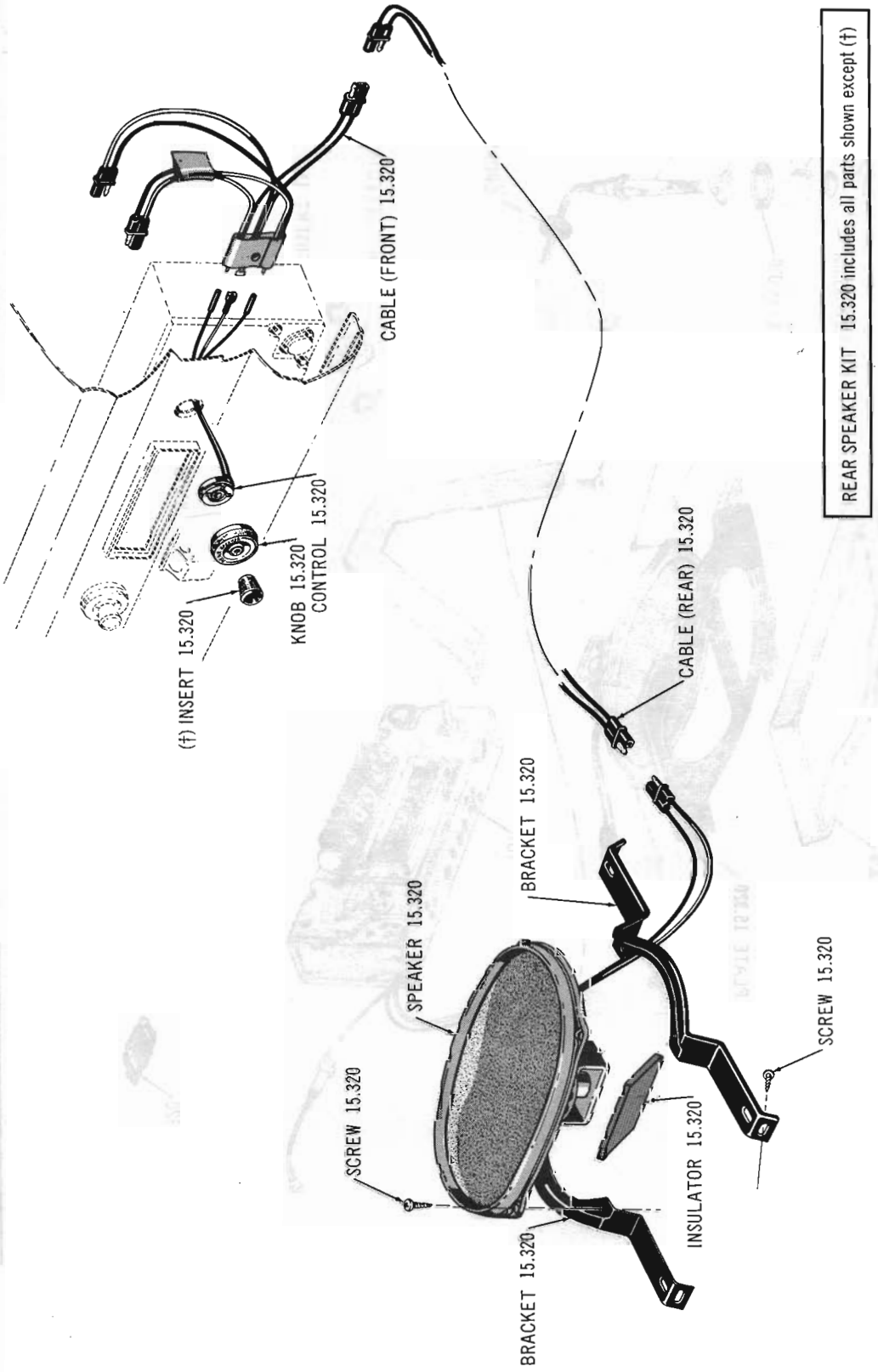

DUO-COUSTIC REAR SHELF SPEAKER 64-65 15-16-19-85-89 (Except Marlin)

Copyright 1963 American Motors Corp.

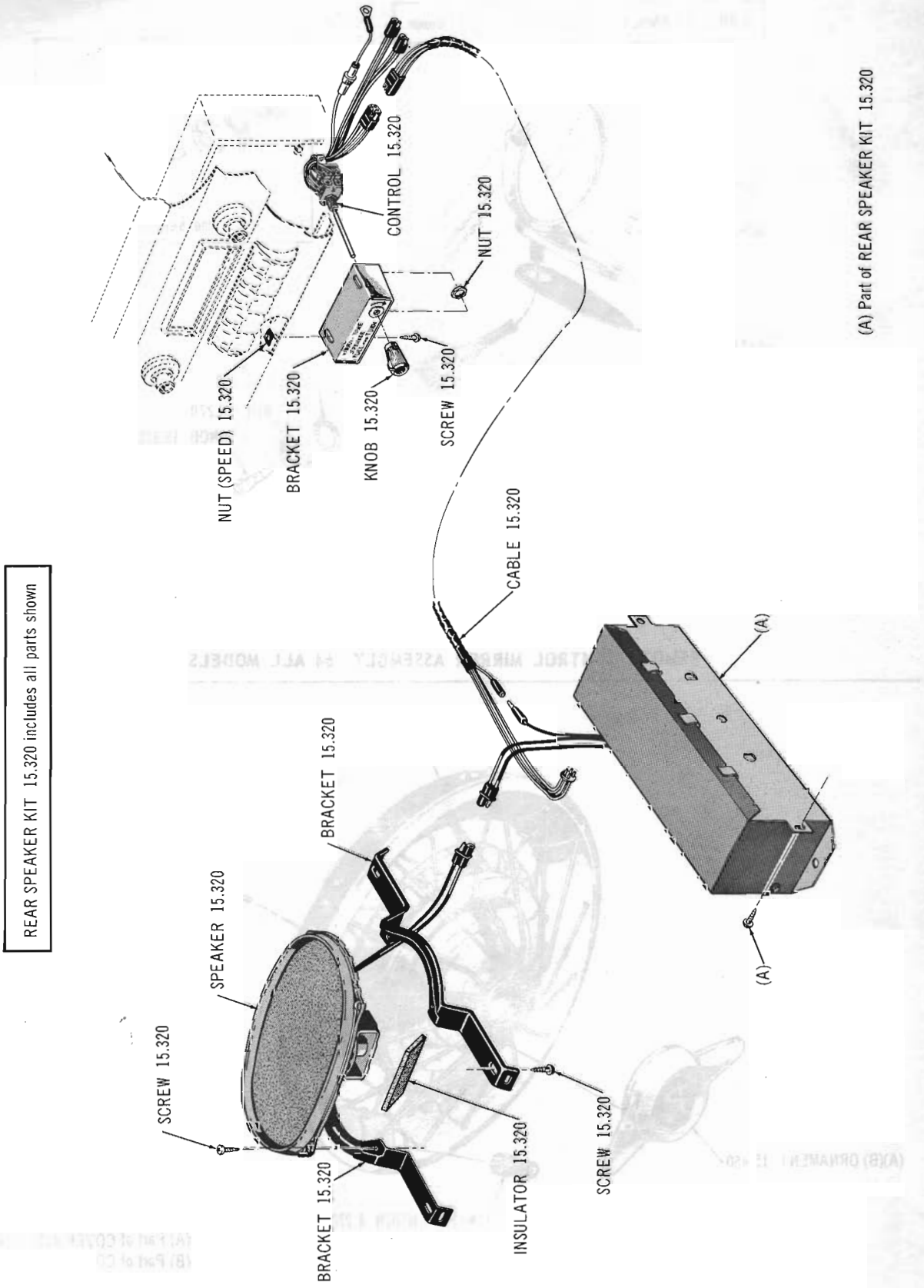

VIBRA-TONE REAR SHELF SPEAKER 64-65 15-16-19-85-89 (Except Marlin)

Copyright 1963 American Motors Corp.

MIRROR ASSEMBLY 15.270 Includes all parts shown

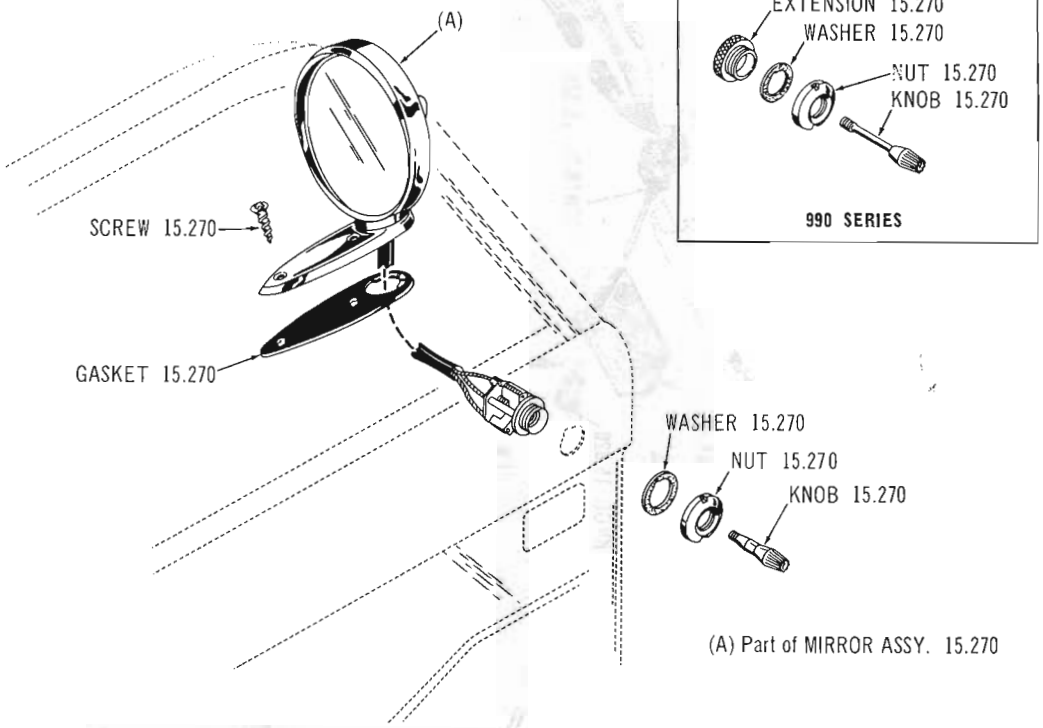

(A) Part of MIRROR ASSY. 15.270

REMOTE CONTROL MIRROR ASSEMBLY 64 ALL MODELS

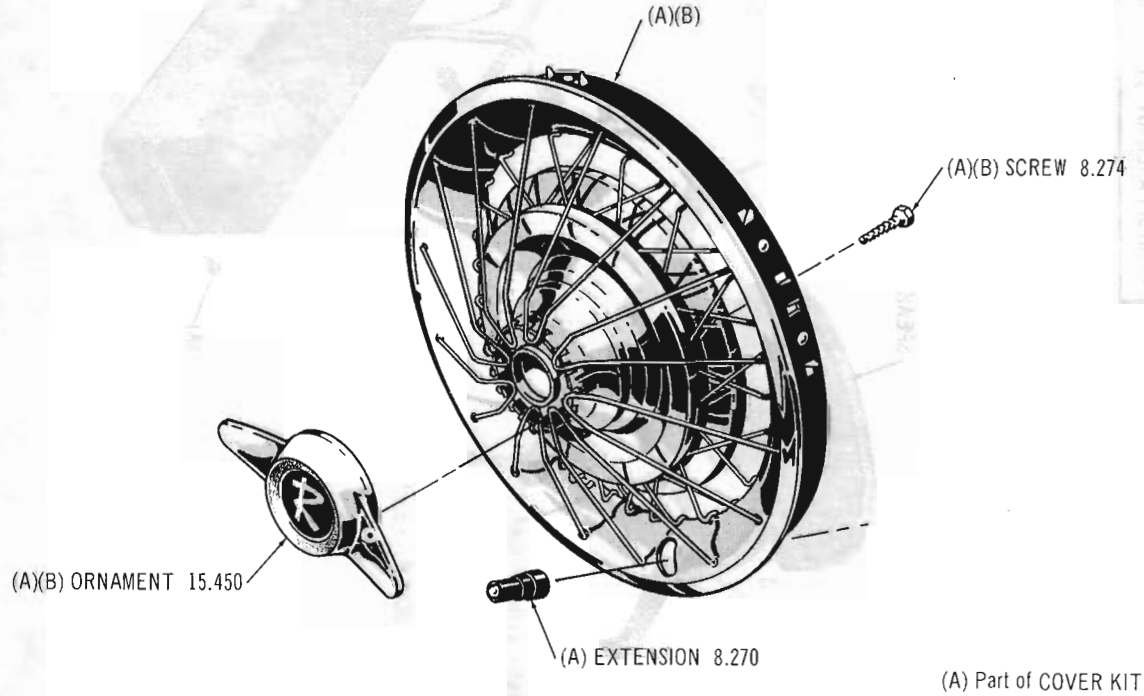

(A) Part of COVER KIT 15.450
(B) Part of COVER 15.450

1884

WIRE WHEEL COVER KIT 64-65 ALL MODELS

Copyright 1963 American Motors Corp.

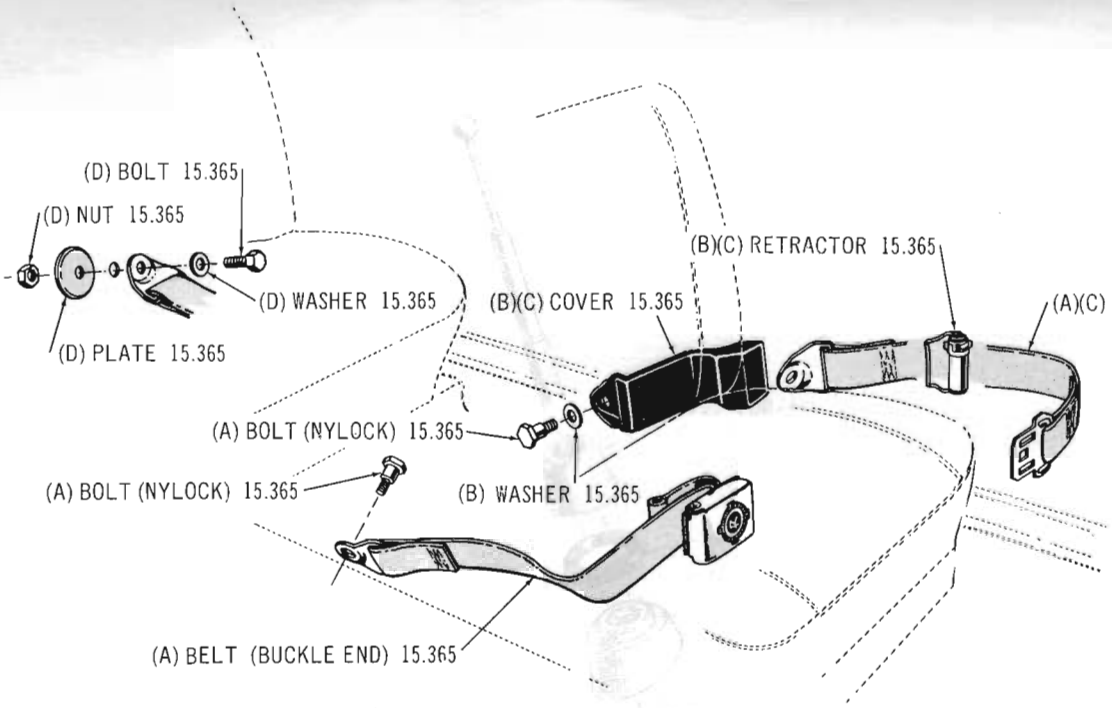

(A) Part of SEAT BELT 15.365
(B) Part of RETRACTOR KIT 15.365
(C) Part of BELT (TIP END) 15.365
(D) Part of HARDWARE KIT 15.365

SEAT BELT 64-65 ALL MODELS

Copyright 1963 American Motors Corp.

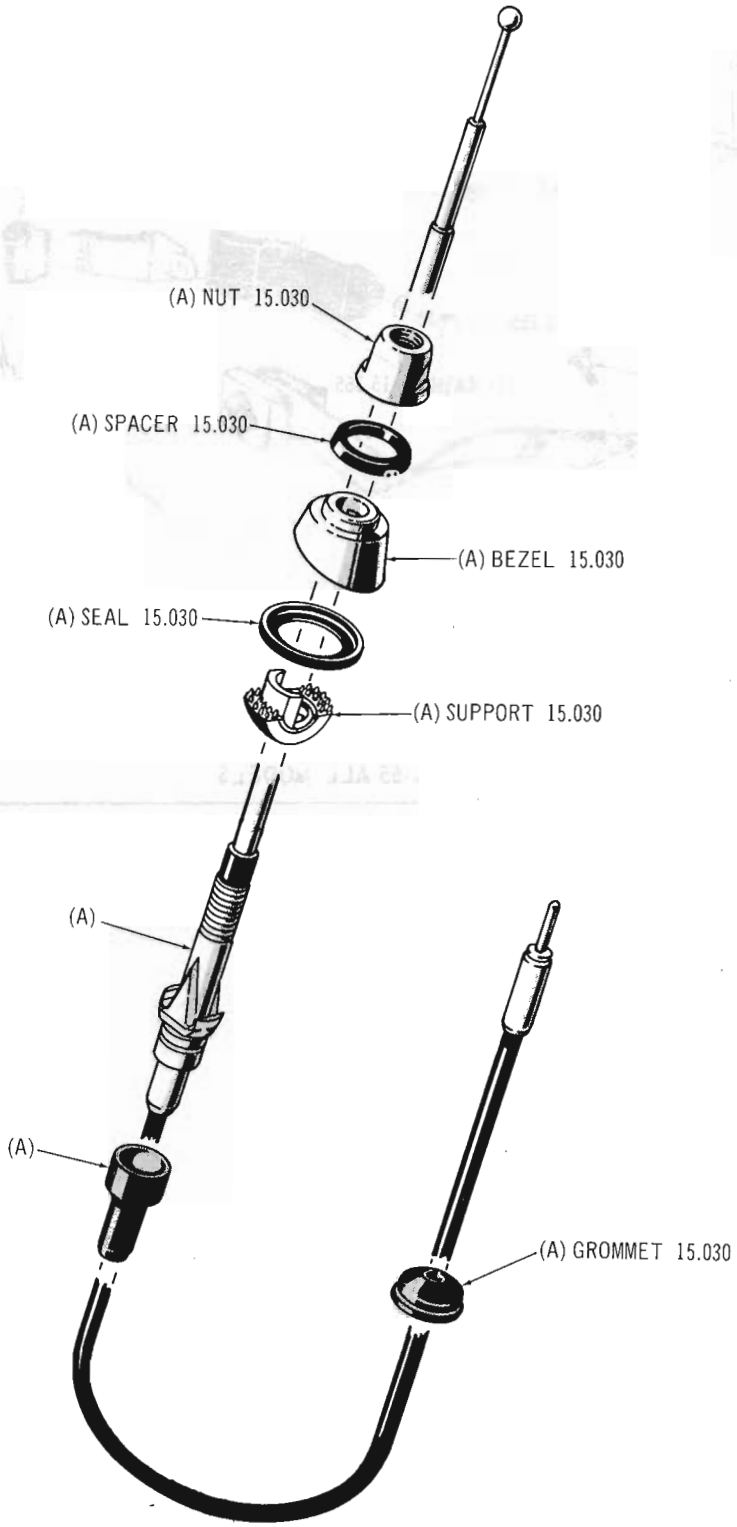

(A) Part of ANTENNA 15.030

MANUAL ANTENNA 64-65 01: 63 thru 65 10-80

Copyright 1963 American Motors Corp.

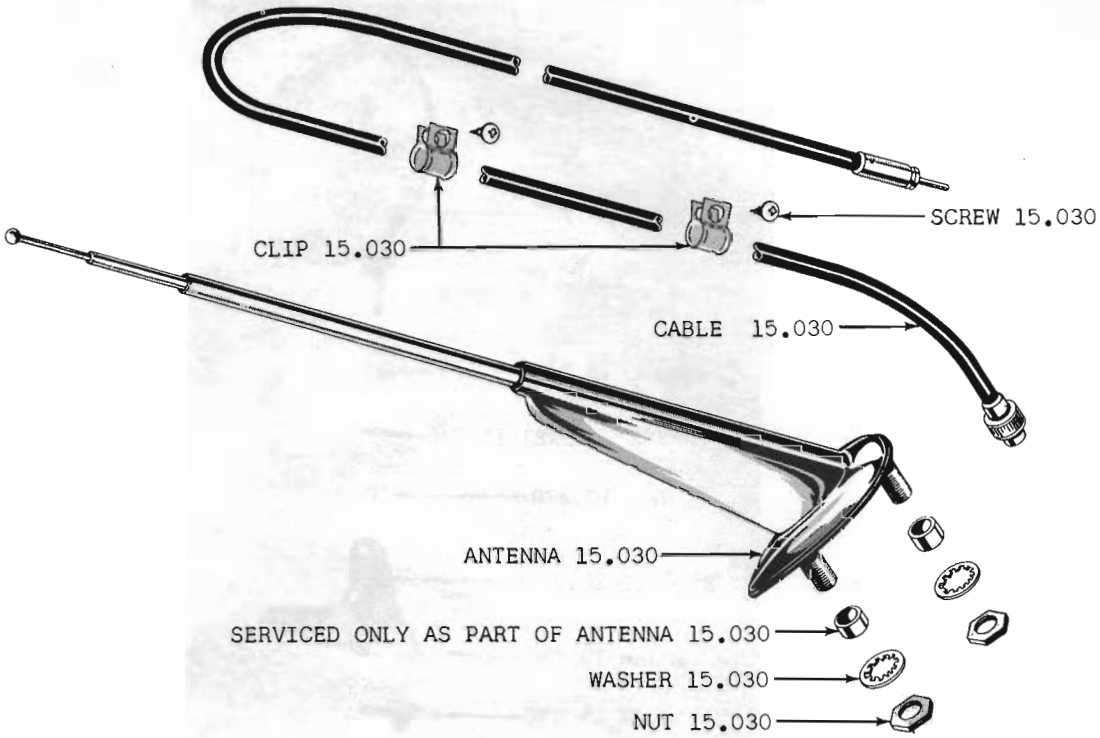

FIG. 15.030-3 REAR DECK ANTENNA 60-61 10-20-80

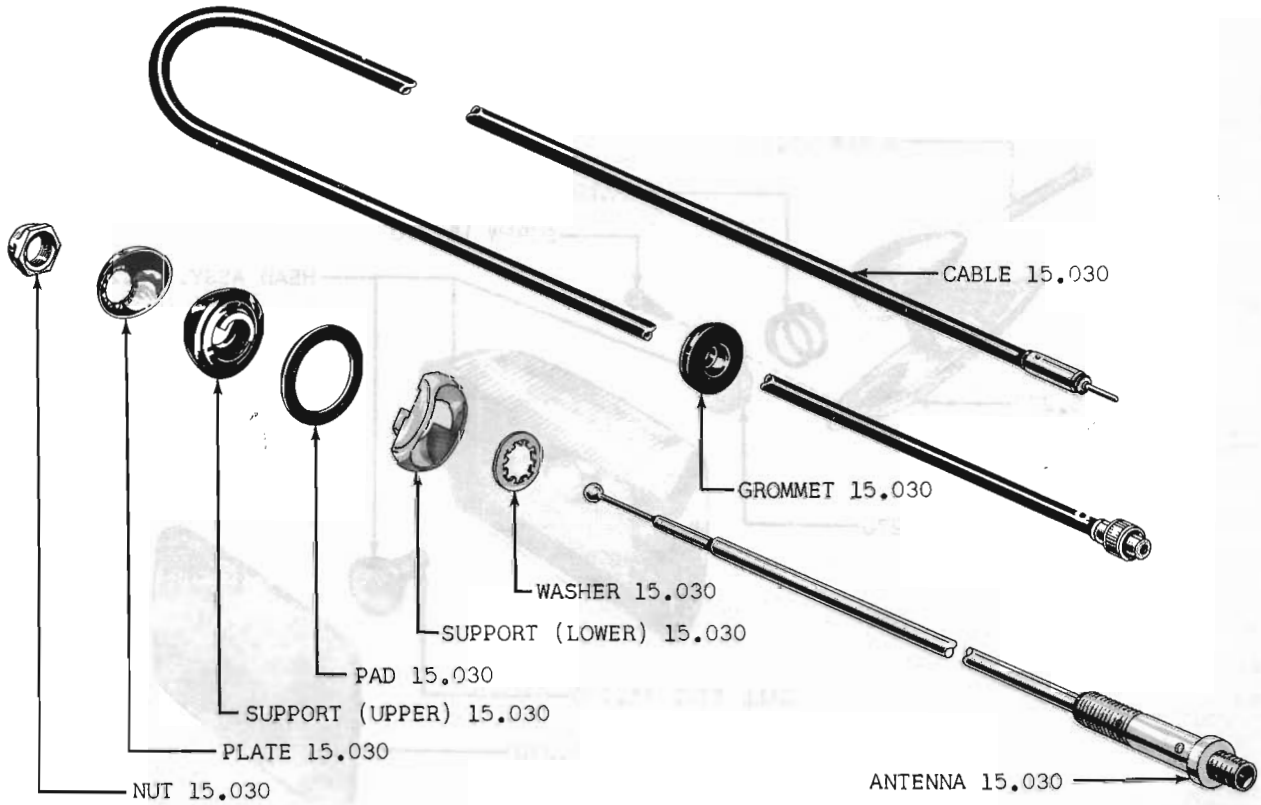

FIG. 15.030-4 MANUAL ANTENNA 60-61 01-10-20-80

Printed in U.S.A.

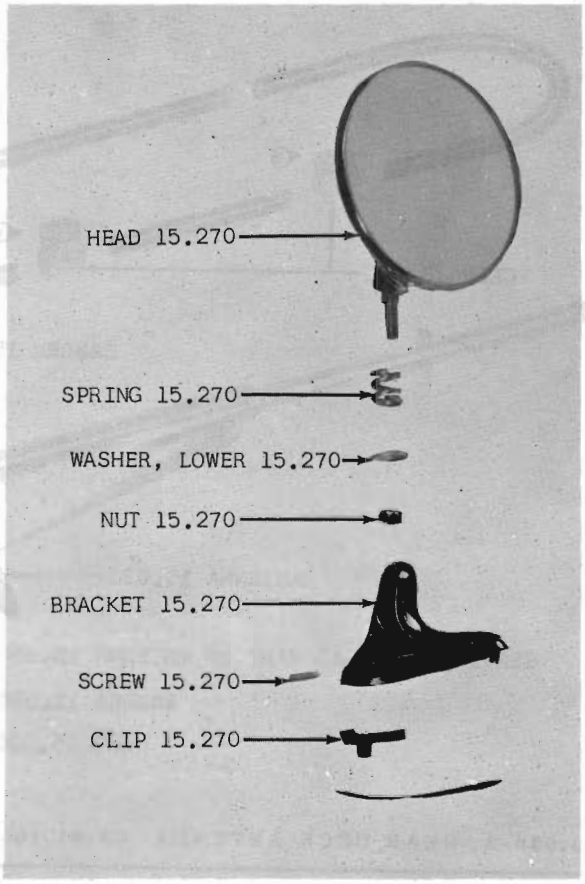

FIG. 15.270-1 OUTSIDE REAR VIEW MIRROR 60 01

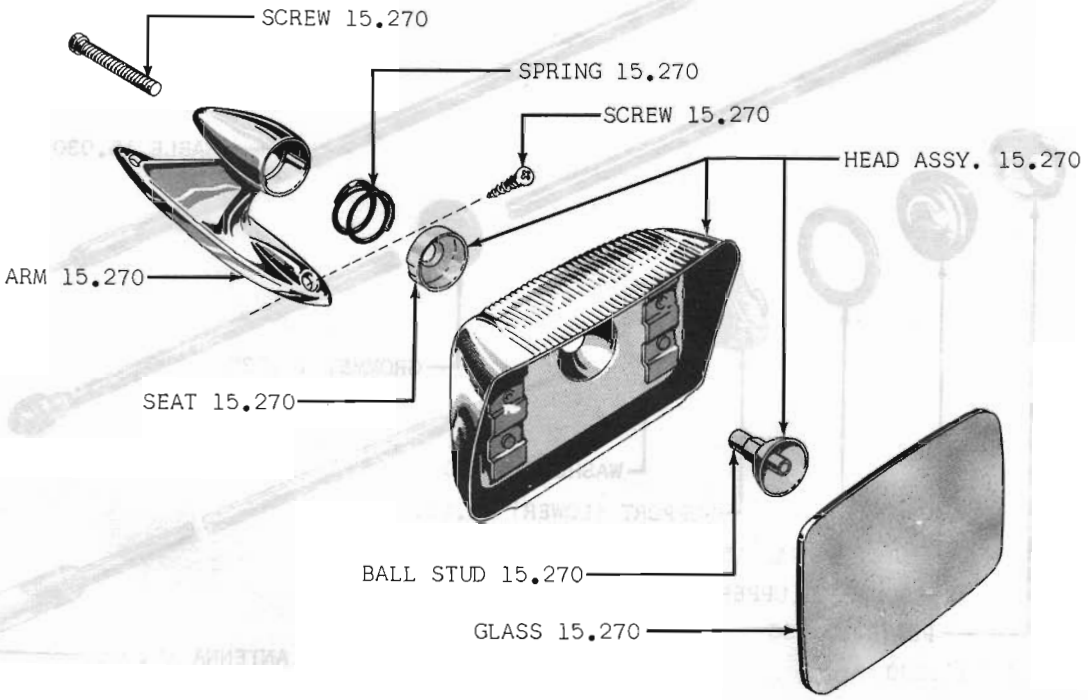

FIG. 15.270-3 OUTSIDE REAR VIEW MIRROR 60 10-20-80

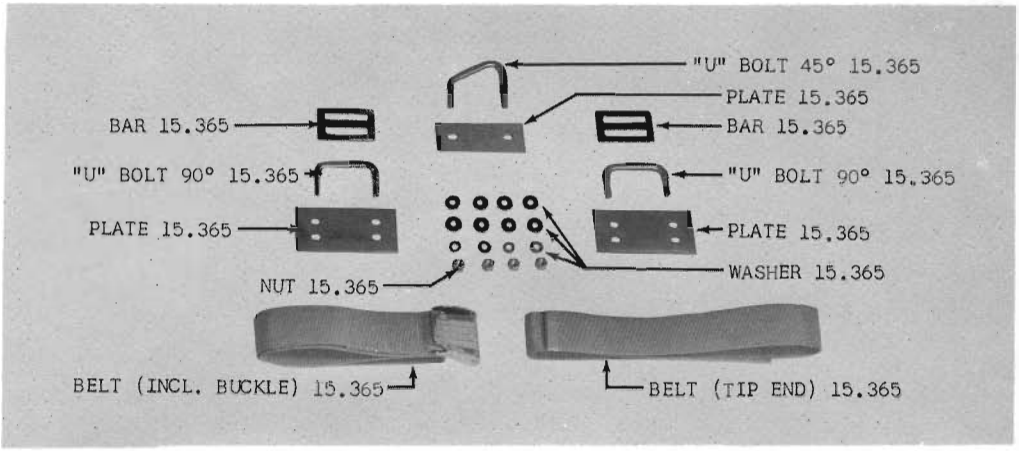

FIG. 15.365-3 SEAT BELT PACKAGE 60-61 10-20-80

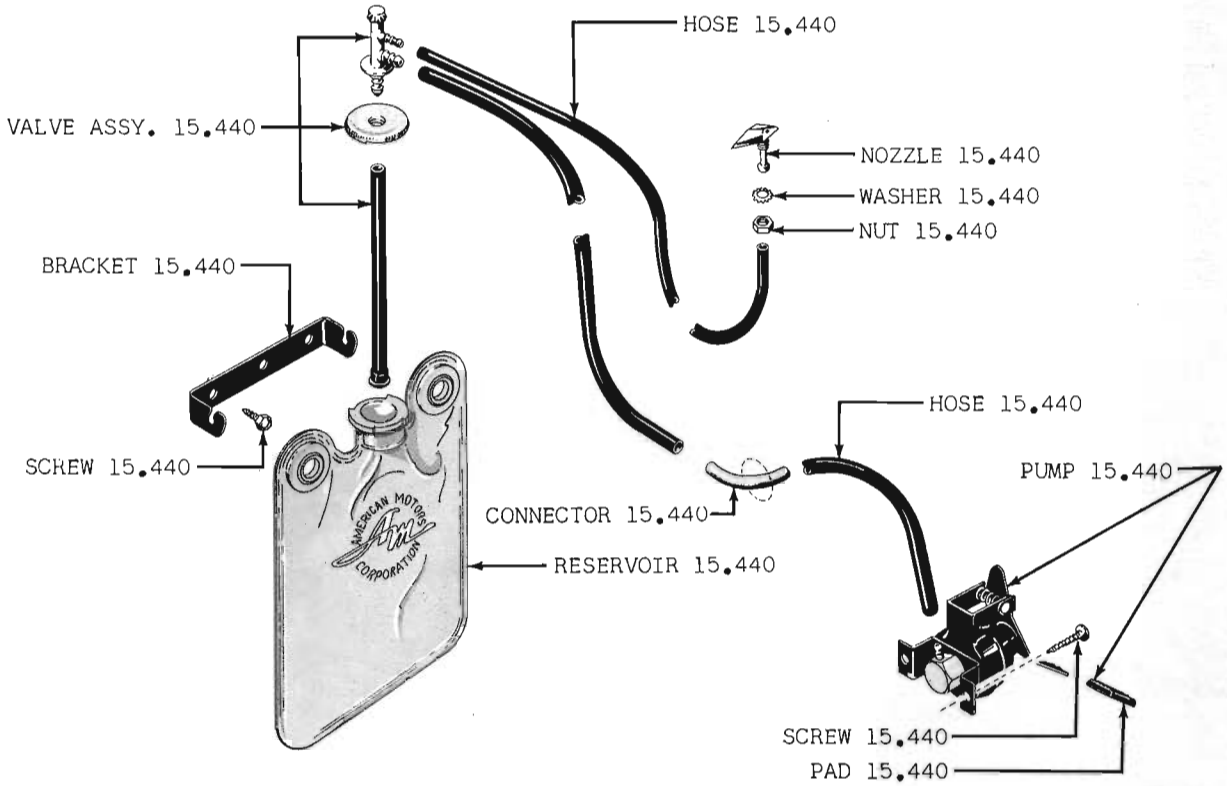

FIG. 15.440-1 WINDSHIELD WASHER 60 THRU 63 01: 60 10-20-80: 62 80

Printed in U.S.A.





GROUP NO. — DESCRIPTION — YEAR and MODEL	PRIMARY GROUP NO.	PER CAR	PART NO.	CODE
CANADIAN DEALERS PLEASE NOTE:				
Accessories which are not listed in the Canadian Accessories Price List are not available in Canada.				
15.015 AIR CONDITIONING KIT (Refer To Group 13.400 To 13.515)				
60-61 01 (LHD-LHE-WPS) ..... *(Ref. Pr. List)*	.....	1	899 0821	
63 01 (Note 15.015-3)	.....	1	899 1150	
64 01 (Note 15.015-6)	.....	1	899 1377	
65 01 (OHV-196-Note 15.015-8)	.....	1	899 1648	
63 10 (Six-Note 15.015-5) ..... *(Ref. Pr. List)*	.....	1	899 1151	#
64 10 (Six-196-Note 15.015-7)	.....	1	899 1378	
64 10 (Six-232)	.....	1	899 1481	
65 10 (Six)(Note 15.015-9)(Note 15.015-11)	.....	1	899 1649	
63 10-80 (V8-Note 15.015-4)(Note 15.015-5)	.....	1	899 1152	
64 10-80 (V8)	.....	1	899 1379	
65 10 (V8)(Note 15.015-11)	.....	1	899 1650	
65 80 (Six)(Note 15.015-10) ..... *(Ref. Pr. List)*	.....	1	899 1652	#
65 80 (V8)	.....	1	899 1651	
ADAPTER KIT, Air Conditioning				
62-63 01 (WAC-WPS)	.....	1	899 1093	
64 01 (WPS)	.....	1	899 1443	
65 01 (WPS)	.....	1	899 1654	
62-63 10 (Six-WAC-WPS)	.....	1	899 1094	
64 10 (Six-196-WPS)	.....	1	899 1444	
64 10 (Six-232-WPS)	.....	1	899 1542	
65 10 (Six-WPS)	.....	1	899 1655	
61 20 (LPS): 61 Thru 63 80 (LPS)	.....	1	899 0959	
65 50 (WAC-Marlin)	.....	1	899 1681	
65 80 (Six-WPS)	.....	1	899 1656	
15.020 MAT, Air				
60 Thru 65 01-10-20-80	.....	1	899 0441	
PAD, Rear Compartment Floor				
62 Thru 65 08-18-88 (Note 15.020-1) ..... *(Replaces 899 1107)*	.....	1	899 1359	
15.030 ANTENNA, Front Fender (Incl. Cable)				
60 Thru 63 01: 60 Thru 62 10-20-80 ..... (Replaces 899 0577, 899 0894)	.....	1	346 1529	
64-65 01	.....	1	352 0866	
63 Thru 65 10-80	.....	1	316 9113	
NUT, Front Fender Antenna Dress				
60 01-10-20-80: 61-62 01-10-20-80 (Note 15.030-1 Type 1)	.....	1	320 1364	
61-62 01-10-20-80 (Note 15.030-1 Type 2)	.....	1	320 2270	
63 Thru 65 01-10-80	.....	1	320 3528	

NOTE 15.015-3: When installed on Cars with Power Steering, order 1-899 1093 Adapter Kit.
NOTE 15.015-4: When installed on Cars less Power Steering, order 1-899 0959 Adapter Kit.
NOTE 15.015-5: When installed on Cars with Instrument Panel Pads also order one of the following Pads used with Air Conditioning. Black 349 0200, Blue 349 0201, Red 349 0204, Maroon 349 0205, Aqua 349 0202, Gold 349 0203.
NOTE 15.015-6: When installed on Cars with Power Steering, order 1-899 1443 Adapter Kit.
NOTE 15.015-7: When installed on Cars with Power Steering, order 1-899 1444 Adapter Kit.
NOTE 15.015-8: When installed on Cars with Power Steering, order 1-899 1654 Adapter Kit.
NOTE 15.015-9: When installed on Cars with Power Steering, order 1-899 1655 Adapter Kit.
NOTE 15.015-10: When installed on Cars with Power Steering, order 1-899 1656 Adapter Kit.
NOTE 15.015-11: When installed on 65 50 (Marlin) also order one 899 1681.
NOTE 15.020-1: Specify color desired: Blue, Gray, Green, Red, Tan or Yellow.
NOTE 15.030-1: Two Types of Antennas were installed in production. They can be identified as follows:
Type 1: Has collapsed length of 21-5/8" with a replaceable lead in cable.
Type 2: Has collapsed length of 18-5/8" with a replaceable lead in Cable.

Copyright 1963 American Motors Corp.

GROUP NO. — DESCRIPTION — YEAR and MODEL	PRIMARY GROUP NO.	PER CAR	PART NO.	CODE
INSULATOR, Front Fender Antenna Sleeve				
60 01-10-20-80: 61-62 01-10-20-80 (Note 15.030-1 Type 1)	.....	1	320 0576	
63 Thru 65 01-10-80	.....	1	320 4571	
PLATE, Front Fender Antenna Cover				
60 01-10-20-80: 61-62 01-10-20-80 (Note 15.030-1 Type 1)	.....	1	320 1365	
CAP, Front Fender Antenna Dress				
61-62 01-10-20-80 (Note 15.030 Type 2)	.....	1	320 0575	
SPACER, Front Fender Antenna Dress Nut				
63 Thru 65 01-10-80	.....	1	320 3529	
BEZEL, Front Fender Antenna				
61-62 01-10-20-80 (Note 15.030-1 Type 2): 63 01	.....	1	320 3530	
63 Thru 65 10-80	.....	1	320 4276	
64-65 01	.....	1	352 0873	
SUPPORT, Front Fender Antenna				
61-62 01-10-20-80 (Note 15.030-1 Type 2): 63 Thru 65 01-10-80	.....	1	320 2271	
(Upper) 60 01-10-20-80: 61-62 01-10-20-80 (Note 15.030-1 Type 1)	.....	1	320 1366	
(Lower) 60 01-10-20-80: 61-62 01-10-20-80 (Note 15.030-1 Type 1)	.....	1	320 1368	
PAD, Front Fender Antenna To Fender				
60 01-10-20-80: 61-62 01-10-20-80 (Note 15.030-1 Type 1)	.....	1	320 0577	
61-62 01-10-20-80 (Note 15.030-1 Type 2)	.....	1	320 1367	
63 Thru 65 01-10-80	.....	1	320 3531	
SEAL, Front Fender Antenna (Between Fender And Cowl Top)				
64 01: 63 Thru 65 10-80	.....	1	347 2329	
CABLE, Front Fender Antenna Lead				
60 01-10-20-80: 61-62 01-10-20-80 (Note 15.030-1 Type 1)	.....	1	320 3292	
61-62 01-10-20-80 (Note 15.030-1 Type 2)	.....	1	320 3291	
WASHER, Front Fender Antenna Lead To Antenna (Rubber)				
60 01-10-20-80: 61-62 01-10-20-80 (Note 15.030-1 Type 1)	.....	1	320 1770	
GROMMET, Front Fender Antenna Lead Cable				
60 Thru 65 01-10-20-80	.....	1	313 5435	
ANTENNA, Rear Deck (Less Cable)				
60-61 10-20-80	.....	1	342 5566	
CABLE, Rear Deck Antenna Lead				
60-61 10-20-80	.....	1	342 4144	
ATTACHING PARTS				
Cable To Deck Door And Shelf Panel				
SCREW, Tapping..... 60-61 10-20-80	17.669	2	800 0272	NA

Copyright 1963 American Motors Corp.

GROUP NO. — DESCRIPTION — YEAR and MODEL	PRIMARY GROUP NO.	PER CAR	PART NO.	CODE
15.040 ANTI-FREEZE (All Winter)				
(Qt.) 60 Thru 65 01-10-20-80 ***(Replaces 899 1080)(Use 899 1670)***	.....	AR	899 0353	#
(Gal.) 60 Thru 65 01-10-20-80 ***(Replaces 899 1081)(Use 899 1671)***	.....	AR	899 0354	#
COOLANT, ALL SEASON				
(Qt.) 65 01-10-80	.....	AR	899 1670	#
(Gal.) 65 01-10-80	.....	AR	899 1671	#
ANTI-FREEZE, Fuel System				
64-65 01-10-80	.....	AR	899 1319	
DE-ICER, Windshield				
64-65 01-10-80	.....	AR	899 1318	
15.050 APPEARANCE SUPPLIES				
LUSTER SEAL				
(#2)(Pt.) 60 Thru 63 01-10-20-80	.....	AR	899 0045	
HAZE CREAM				
(16 Oz.) 61 Thru 65 01-10-20-80 ***(Replaces 899 0046)***	.....	AR	899 0876	
POLISH AND CLEANER				
(Pt.) 60 Thru 65 01-10-20-80	.....	AR	899 0400	
CLEANER, Fabric				
(Pt.) 60 Thru 65 01-10-20-80	.....	AR	899 0968	
CLEANER, Plastic And Leather				
(Pt.) 60 Thru 65 01-10-20-80	.....	AR	899 0483	
CLEANER, Chrome				
(8 Oz.) 60 Thru 65 01-10-20-80	.....	AR	899 0443	
OIL REMOVER, Tar And Road				
62 Thru 65 01-10-80	.....	AR	899 1108	
15.070 LIGHT, Back-Up (Refer To Group 3.316 Thru 3.319)				
61-62 01 (WST)(WOD) ***(Order Comp.)***	.....	1	899 0828	
61 Thru 63 01 (WAT)(WFGS) ***(Replaces 899 0827)***	.....	1	899 1180	
63 01 (WST-WCGS)(WOD-WCGS)	.....	1	899 1153	
64 01 (WAT)(WFGS)	.....	1	899 1250	

Copyright 1963 American Motors Corp.

GROUP NO. — DESCRIPTION — YEAR and MODEL	PRIMARY GROUP NO.	PER CAR	PART NO.	CODE
64 01 (WST-WCGS)(WOD-WCGS)	.....	1	899 1251	
65 01 (WAT)(WFGS)	.....	1	899 1592	
65 01 (WST-WCGS)(WOD-WCGS)	.....	1	899 1591	
60 10-20-80 (WST)(WOD)	.....	1	899 0738	
60-61 10-20 (WAT): 60 80 (WAT) ***(Order Comp.)***	.....	1	899 0739	
61 10-20 (WST)(WOD) ***(Order Comp.)***	.....	1	899 0897	
62 10 (WAT): 61-62 80 (WAT) ***(Replaces 899 0964, 899 1056)***	.....	1	899 1100	
62 10-80 (WST)(WOD): 61 80 (WST)(WOD) ***(Replaces 899 0965)***	.....	1	899 1057	
63 10-80 (WAT)(WFGS)	.....	1	899 1182	
63 10-80 (WST-WCGS)(WOD-WCGS)	.....	1	899 1181	
64 10-80 (WAT)(WFGS)	.....	1	899 1392	
64 10-80 (WST-WCGS)(WOD-WCGS)	.....	1	899 1391	
65 10-80 (WAT)(WFGS)	.....	1	899 1551	
65 10-80 (WST-WCGS)(WOD-WCGS)	.....	1	899 1550	
15.072 BATTERY, Rambler Brand (12-Volt)				
(40 A.H.) 60 Thru 62 01 (LHE-LAC) ***(Ref. Pr. List)***	.....	1	899 1074	
(45 A.H.) 60 Thru 62 01 (OHV-LAC): 60-61 10 (LAC)	.....	1	899 1075	
(50 A.H.) 62 Thru 65 01-10 (Six-LAC): 65 80 (Six-LAC) ***(Use 899 1355)***	.....	1	899 1114	
(60 A.H.) 60 Thru 65 01-10 (Six-WAC): 65 80 (Six-WAC): 60 Thru 65 10-80 (V8): 60-61 20 ***(Replaces 899 1076)***	.....	1	899 1356	
(70 A.H.) 60 Thru 65 01-10-20-80 ***(Replaces 899 1106)***	.....	1	899 1146	
(Select) Other Make Cars	.....	1	899 1138	
ELECTROLYTE, Dry Charge Battery				
(9-45 Oz. Bottles) 60 Thru 65 01-10-80 ***(Replaces 899 0524)***	.....	AR	899 1079	
(5-Gal. Bottle) 62 Thru 65 01-10-80	.....	AR	899 1077	
(3-154 Oz. Hose Pack) 65 01-10-50-80	.....	AR	899 1680	
DISPENSER, Dry Charge Battery Electrolyte (For 5 Gal. Bottle)				
62 Thru 65 01-10-80	.....	AR	899 1078	
CAP, Rambler Brand Battery Vent Filler				
62 Thru 65 01-10-80	.....	6	320 3701	
15.095 COMPASS				
60 Thru 63 01: 60 Thru 62 10-20-80 ***(Replaces 899 0745)***	.....	1	899 0818	
64 01: 63-64 10-80	.....	1	899 1224	
65 01-10-80	.....	1	899 1646	
15.100 SEALER, Cooling System				
60 Thru 65 01-10-20-80	.....	AR	899 0040	
CLEANER, Cooling System				
60 Thru 65 01-10-20-80	.....	AR	899 0397	
INHIBITOR, Cooling System				
61 Thru 65 01-10-20-80	.....	AR	899 0974	

Copyright 1963 American Motors Corp.

GROUP NO. — DESCRIPTION — YEAR and MODEL	PRIMARY GROUP NO.	PER CAR	PART NO.	CODE
15.105 COURTESY LIGHT KIT (Refer To Group 3.145 And 3.349)(Pair)				
62-63 01	.....	1	899 1070	
64-65 01	.....	1	899 1382	
63-64 10-80	.....	1	899 1217	
65 10	.....	1	899 1647	
65 80	.....	1	899 1672	
15.107 COVER, Spare Tire				
63 Thru 65 01-10-80	.....	1	899 1239	
15.120 GUARDS, Door Edge (2 Piece Set)				
61 Thru 63 02-04-06-07: 63 09	.....	1	899 0885	
64-65 02-06-07-09: 63-64 16-19-86-89	.....	1	899 1192	
65 16-17-19-86-87-89	.....	1	899 1596	
GUARDS, Door Edge (4 Piece Set)				
61 Thru 63 05-08	.....	1	899 0886	
64-65 05-08: 63-64 15-18-85-88	.....	1	899 1191	
65 15-18-85-88	.....	1	899 1595	
15.125 TISSUE DISPENSER (To Instrument Panel)				
60 Thru 65 01-10-20-80 ***(Replaces 899 0622)***	.....	1	899 1145	#
TISSUE DISPENSER (To Floor Pan)				
62-63 01-10-80	.....	1	899 1055	
ATTACHING PARTS				
Dispenser To Instrument Panel And Floor Pan				
NUT, Hexagon ..... 60 Thru 63 01-10-20-80	17.406	2	G120375	
WASHER, Lock ..... 60 Thru 63 01-10-20-80	17.822	2	G121753	NA
BOLT, Hexagon ..... 60 Thru 63 01-10-20-80	17.598	2	G160548	NA
SCREW, Tapping..... 60 Thru 63 01-10-20-80 (3/4" Long)	17.660	1	G163228	
SCREW, Tapping..... 63 01-10-80 (3/8" Long)	17.673	1	G273624	NA
LITTER CONTAINER				
64-65 01-10-80 (Six Pack-Assorted Colors)	.....	AR	899 1384	
64-65 01-10-80 (Six Pack-Black)	.....	AR	899 1528	
64-65 01-10-80 (Six Pack-Blue)	.....	AR	899 1529	
64-65 01-10-80 (Six Pack-Beige)	.....	AR	899 1530	
64-65 01-10-80 (Six Pack-Red)	.....	AR	899 1531	
15.135 ELEMENT, Carburetor Air Cleaner				
60 01 (LHE): 60 10: 61 01-10 (LDT)	.....	1	899 0575	
62-63 01-10 (LDT): 64-65 01 (LHE)	.....	1	899 1012	
61 Thru 63 10 (WDT): 65 10-80 (V8-WDT)	.....	1	899 0838	
(8" I. D. -Less LIP) 64-65 01-10-80 (OHV-Six)	.....	1	899 1386	
(9" Dia.) 60 Thru 65 10-20-80 (V8) ***(Replaces 899 0457)***	.....	1	899 1013	
(10" Dia.) 64-65 10-80 (V8)	.....	1	899 1451	
(7-1/4" I. D. -With LIP) 64-65 01-10-80 (OHV-Six)	.....	1	899 1677	

Copyright 1963 American Motors Corp.

GROUP NO. — DESCRIPTION — YEAR and MODEL	PRIMARY GROUP NO.	PER CAR	PART NO.	CODE
15.145 HEATER, Engine				
64-65 01 (Six-196): 64 10 (OHVC-196): 64-65 10-80 (V8)	.....	1	899 1361	
64 10 (OHVA)	.....	1	899 1089	
65 01 (Six-232): 64-65 10 (Six): 65 80 (Six-232)	.....	1	899 1475	#
15.170 MAT, Twin Floor (Front-Pair)(Rubber)				
(Black) 61 Thru 63 01	.....	1	899 0860	
(Black) 64-65 01	.....	1	899 1304	
(Black) 63-64 10-80	.....	1	899 1157	
(White) 61 Thru 63 01	.....	1	899 0861	
(White) 64-65 01	.....	1	899 1305	
(White) 63-64 10-80	.....	1	899 1158	
(Blue) 64 01 *(Use 899 1532)*	.....	1	899 1306	
(Blue) 65 01 *(Use 899 1306)*	.....	1	899 1532	
(Blue) 63-64 10-80 *(Replaces 899 1328)*	.....	1	899 1159	
(Green) 64-65 01 *(Replaces 899 1307)(Use 899 1307)*	.....	1	899 1533	#
(Green) 64 10-80	.....	1	899 1329	
(Aqua) 65 01 *(Use 899 1308)*	.....	1	899 1534	
(Aqua) 63-64 10-80	.....	1	899 1160	
(Red) 64 01 *(Use 899 1536)*	.....	1	899 1310	
(Red) 65 01	.....	1	899 1536	
(Red) 63-64 10-80	.....	1	899 1162	
(Gold) 64 01	.....	1	899 1309	
(Gold) 63-64 10-80	.....	1	899 1161	
(Turquoise) 64 01	.....	1	899 1308	
(Cordovan) 65 01	.....	1	899 1535	
MAT, Twin Floor (Front-Pair)(Vinyl)				
(Black) 65 10-80	.....	1	899 1567	
(Blue) 65 10-80	.....	1	899 1568	
(Green) 65 10-80	.....	1	899 1569	
(Aqua) 65 10-80	.....	1	899 1570	
(Red) 65 10-80	.....	1	899 1572	
(Cordovan) 65 10-80	.....	1	899 1571	
(Clear) 65 10-80	.....	1	899 1566	
MAT, Twin Floor (Rear-Pair)(Rubber)				
(Black) 63 Thru 65 01-10-80	.....	1	899 1163	
(White) 63 Thru 65 01-10-80	.....	1	899 1164	
(Blue) 65 01-10-80 *(Use 899 1337)*	.....	1	899 1537	
(Green) 64 01-10-80	.....	1	899 1338	
(Green) 65 01-10-80 *(Use 899 1338)*	.....	1	899 1538	

Copyright 1963 American Motors Corp.

GROUP NO. — DESCRIPTION — YEAR and MODEL	PRIMARY GROUP NO.	PER CAR	PART NO.	CODE
(Aqua) 65 01-10-80 ***(Use 899 1339)***	.....	1	899 1539	
(Aqua) 63-64 10-80: 64 01 ***(Replaces 899 1539)(Discontinued)***	.....	1	899 1166	
(Red) 61-62 01: 60 Thru 62 10-20-80 ***(Discontinued)***	.....	1	899 0734	
(Red) 65 01-10-80 ***(Use 899 1340)***	.....	1	899 1541	
(Red) 64 01: 63-64 10-80 ***(Ref. Pr. List)***	.....	1	899 1168	
(Brown) 61-62 01: 60 Thru 62 10-20-80 ***(Discontinued)***	.....	1	899 0859	
(Gold) 63-64 10-80	.....	1	899 1167	
(Cordovan) 65 01-10-80	.....	1	899 1540	
MAT, Full Floor (Front)(Rubber)				
(Black) 61 Thru 63 01 ***(Discontinued)***	.....	1	899 0970	
(Black) 64 01	.....	1	899 1311	
(Black) 63-64 10-80	.....	1	899 1169	
(White) 61 Thru 63 01	.....	1	899 0971	
(White) 64 01	.....	1	899 1312	
(White) 61-62 10-20-80 ***(Discontinued)***	.....	1	899 0863	
(White) 63-64 10-80	.....	1	899 1170	
(Blue) 64 01	.....	1	899 1313	
(Blue) 63-64 10-80 ***(Ref. Pr. List)***	.....	1	899 1171	
(Green) 64 01 ***(Discontinued)***	.....	1	899 1314	
(Green) 64 01 ***(Discontinued)***	.....	1	899 0865	
(Green) 64 10-80	.....	1	899 1333	
(Aqua) 63-64 10-80	.....	1	899 1172	
(Red) 64 01 ***(Discontinued)***	.....	1	899 1317	
(Red) 63-64 10-80	.....	1	899 1174	
(Brown) 61-62 10-20-80 ***(Discontinued)***	.....	1	899 0867	
(Gold) 64 01	.....	1	899 1316	
(Gold) 63-64 10-80	.....	1	899 1173	
(Turquoise) 64 01	.....	1	899 1315	
MAT, Full Floor (Front)(Vinyl)				
(Black) 65 10-80	.....	1	899 1554	
(Blue) 65 10-80	.....	1	899 1555	
(Green) 65 10-80	.....	1	899 1556	
(Aqua) 65 10-80	.....	1	899 1557	
(Red) 65 10-80	.....	1	899 1559	
(Cordovan) 65 10-80	.....	1	899 1558	
(Clear) 64 10-80	.....	1	899 1446	
(Clear) 65 10-80 ***(Use 899 1446)***	.....	1	899 1553	
MAT, Full Floor (Rear)(Rubber)				
(White) 64-65 01: 63 Thru 65 10-80	.....	1	899 1256	
(Black) 64-65 01: 63 Thru 65 10-80	.....	1	899 1255	
(Blue) 65 01-10-80	.....	1	899 1641	#
(Green) 64 01-10-80 ***(Use 899 1642)***	.....	1	899 1342	
(Green) 65 01-10-80 ***(Use 899 1342)***	.....	1	899 1642	
(Red) 65 01-10-80	.....	1	899 1645	#
(Red) 64 01: 63-64 10-80 ***(Discontinued)***	.....	1	899 1260	

Copyright 1963 American Motors Corp.

GROUP NO. — DESCRIPTION — YEAR and MODEL	PRIMARY GROUP NO.	PER CAR	PART NO.	CODE
(Aqua) 65 01-10-80 ..... *(Use 899 1343)*	.....	1	899 1643	
(Aqua) 64 01: 63-64 10-80	.....	1	899 1258	
(Cordovan) 65 01-10-80	.....	1	899 1644	
MAT, Full Floor (Rear)(Vinyl)				
(Black) 65 10-80	.....	1	899 1574	
(Blue) 65 10-80	.....	1	899 1575	
(Green) 65 10-80	.....	1	899 1576	
(Aqua) 65 10-80	.....	1	899 1577	
(Red) 65 10-80	.....	1	899 1579	
(Cordovan) 65 10-80	.....	1	899 1578	
(Clear) 64 10-80	.....	1	899 1447	
(Clear) 65 10-80 ..... *(Use 899 1447)*	.....	1	899 1573	
15.180 CAP, Locking Gas				
60 Thru 63 01: 60 Thru 62 10-20-80	.....	1	899 0727	
64-65 01	.....	1	899 1368	
63 10-80 (L3S)	.....	1	899 1193	
64-65 10-80 (L3S)	.....	1	899 1590	
SEAL, Locking Gas Cap				
60 Thru 65 01: 60 Thru 65 10-20-80	.....	1	320 2431	
SPRING, Locking Gas Cap Lock Bolt Cone				
60 Thru 65 01: 60 Thru 65 10-20-80	.....	1	320 2432	
KEY, Locking Gas Cap (Blank)				
60 Thru 65 01-10-20-80	.....	1	320 3097	
15.190 FILTER ASSEMBLY, Gasoline (Mileage Minder)				
60 Thru 65 01-10-20-80	.....	1	899 0701	
BOWL, Gasoline Filter Glass				
60 Thru 65 01-10-20-80	.....	1	320 2817	
GASKET, Gasoline Filter Glass Bowl				
60 Thru 65 01-10-20-80	.....	1	320 2818	
GASKET, Gasoline Filter Element				
60 Thru 65 01-10-20-80	.....	1	320 2821	
ELEMENT, Gasoline Filter Bronze				
60 Thru 65 01-10-20-80	.....	1	320 2820	

Copyright 1963 American Motors Corp.

GROUP NO. — DESCRIPTION — YEAR and MODEL	PRIMARY GROUP NO.	PER CAR	PART NO.	CODE
MAGNET, Gasoline Filter				
60 Thru 65 01-10-20-80	.....	1	320 2822	
RETAINER, Gasoline Filter Bowl Wire				
60 Thru 65 01-10-20-80	.....	1	320 2819	
SPRING, Gasoline Filter Magnet (Lower)				
60 Thru 65 01-10-20-80	.....	1	320 2824	
SPRING, Gasoline Filter Magnet And Filter (Upper)				
60 Thru 65 01-10-20-80	.....	1	320 2823	
FITTING, Gasoline Filter (Straight)				
60 Thru 65 01-10-20-80	17.394	1	G443976	
FITTING, Gasoline Filter (Angle)				
60 Thru 65 01-10-20-80	17.230	1	G9409927	
ELEMENT, Gasoline Filter (Fuel Pump Filter)				
61 01-10	.....	1	899 0952	
60 Thru 64 01-10: 61 10: 61 Thru 64 80 (Use With Glass Bowl)	.....	1	899 0953	
63 Thru 65 01-10-80 (Use With Metal Bowl)	.....	1	899 1450	
15.194 GUARD KIT, Front Bumper Vertical (Refer To Group 12.184)				
64-65 01	.....	1	899 1665	
63-64 10-80	.....	1	899 1667	
65 10-80	.....	1	899 1663	
GUARD KIT, Rear Bumper Vertical (Refer To Group 12.184)				
64-65 02-05-06-07-09	.....	1	899 1666	
63-64 15-16-19-85-86-89	.....	1	899 1668	
65 15-16-17-19-85-86-87-89	.....	1	899 1664	
15.195 LIGHT, Parking Brake Warning (Refer To Group 3.650)				
61 Thru 63 01	.....	1	899 0966	
64-65 01	.....	1	899 1360	
63-64 10-80	.....	1	899 1187	
65 10 (Except Marlin)	.....	1	899 1593	
65 50-80	.....	1	899 1594	
15.197 HEADREST ASSEMBLY, Front Seat Back (Less Upholstery)(For Components Refer to Groups 27.030, 27.034, And 29.176)				
63-64 01-10: 63 80 (800)(880)(990-WBS)	.....	AR	899 1232	
65 01-10-80	.....	1	899 1519	
UPHOLSTERY, Front Seat Back Headrest (Incl. Zipper)				
(Sceptre Silver) 63 01-10: 63 80 (800)(880)(990-WBS)	.....	AR	899 1233	
(Aegeon Aqua) 63 01-10: 63 80 (800)(880)(990-WBS) ***(Use 350 3889)***	.....	AR	899 1235	
(Briarcliff Red) 63 01-10: 63 80 (800)(880)(990-WBS)	.....	AR	899 1236	
(Calais Coral) 63 01-10: 63 80 (800)(880)(990-WBS) ***(Use 350 3892)***	.....	AR	899 1238	

Copyright 1963 American Motors Corp.

GROUP NO. — DESCRIPTION — YEAR and MODEL	PRIMARY GROUP NO.	PER CAR	PART NO.	CODE
(Black) 64 01-10	.....	1	899 1346	
(Sentry Blue) 64 01-10	.....	1	899 1347	
(Woodside Green) 64 01-10	.....	1	899 1348	
(Rampart Red) 64 01-10	.....	1	899 1349	
(Emperor Gold) 64 01-10	.....	1	899 1350	
(Vintage Maroon) 64 01-10	.....	1	899 1351	
(Lancelot Turquoise) 64 01-10	.....	1	899 1352	
(Red) 65 01-10-80	.....	1	899 1520	
(Black) 65 01-10-80	.....	1	899 1521	
(Blue) 65 01-10-80	.....	1	899 1522	
(Green) 65 01-10-80	.....	1	899 1523	
(Taupe) 65 01-10-80	.....	1	899 1524	
(Aqua) 65 01-10-80	.....	1	899 1525	
(White) 65 01-10-80	.....	1	899 1526	
15.210 OIL, Automatic Transmission And Power Steering				
(Qt.) 60 Thru 65 01-10-20-80	.....	AR	899 0597	
(Gal.) 60 Thru 65 01-10-20-80	.....	AR	899 0623	
(55 Gal. Drum) 60 Thru 65 01-10-20-80	.....	AR	899 0635	
15.240 FRAME, License				
60 Thru 63 01: 60 Thru 62 10-20-80	.....	1	899 0747	
64-65 01: 60 Thru 65 10-80	.....	1	899 1194	
SPRING KIT, License Frame (Incl. 2 Springs And Rivets)				
60 Thru 63 01: 60 Thru 62 10-20-80	.....	1	320 2430	
PLATE, License Frame Front Ornamental				
60 Thru 63 01-10-20-80	.....	1	899 0809	
15.245 LOAD LEVELER, Helper Spring And Shock Absorber (For Components Refer To Group 11.220, 11.228 And 11.235)				
62 Thru 65 01	.....	2	899 1020	
62 10-80: 63-64 18-88: 65 10-80	.....	2	899 1021	
63-64 15-16-85-86	.....	2	899 1188	
WASHER SET, Load Leveler				
63-64 15-16-85-86	.....	2	320 4373	
15.250 CARRIER, Luggage (Canvas)				
61 Thru 63 04-08	.....	1	899 0955	
64-65 08	.....	1	899 1369	
60 Thru 62 18: 60-61 28: 60 Thru 62 88 ***(Ref. Pr. List)***	.....	1	899 0548	
63 Thru 65 18-28	.....	1	899 1154	
CARRIER, Luggage (Vinyl Coated)				
61 Thru 63 04-08	.....	1	899 0956	
64-65 08	.....	1	899 1370	
60 Thru 62 18: 60-61 28: 60 83: 60 Thru 62 88 ***(Ref. Pr. List)***	.....	1	899 0549	
63 Thru 65 18-88	.....	1	899 1155	
STRAP, Luggage (Pair)				
60 Thru 63 04: 62-63 08: 60 Thru 63 18: 60-61 28: 60 83: 60 Thru 63 88 ***(Ref. Pr. List)***	.....	1	899 0426	#
64-65 08-18-88	.....	1	899 1393	

Copyright 1963 American Motors Corp.

GROUP NO. — DESCRIPTION — YEAR and MODEL	PRIMARY GROUP NO.	PER CAR	PART NO.	CODE
RACK KIT, Luggage (For Kit And Components Refer To Group 27.190)				
15.260 SUPPLIES, Maintenance And Shop				
BRAKE FLUID				
(12 Oz. Can) 60 Thru 65 01-10-20-80	.....	AR	899 0722	
(5-Gal.) 60 Thru 65 01-10-20-80	.....	AR	899 0527	
LUBRIPLATE				
(2 Oz. Tube) 60 Thru 65 01-10-20-80	.....	AR	899 0685	
(1 Lb. Can) 60 Thru 65 01-10-20-80 ***(Replaces 899 0686)(Ref. Pr. List)***	.....	AR	899 1231	
WAX REMOVER				
(5 Gal.) 63-64 01-10-80 ***(Discontinued)***	.....	AR	899 1363	#
GASKET PASTE				
61 Thru 65 01-10-20-80	.....	AR	899 0973	
LUBRICANT, Axle				
(Qt.) 62 Thru 65 01-10-80	.....	AR	899 1018	
LUBRICANT, Upper Trunnion				
62 Thru 65 10-80	.....	AR	899 1229	
LUBRICANT, All Purpose Chassis				
63 Thru 65 01-10-80	.....	AR	899 1416	
LUBRICANT, Special Chassis				
64-65 01: 62 Thru 65 10-80 ***(Replaces 899 1230)***	.....	AR	899 1230	#
LUBRICANT, Silicone (6 Oz. Spray)				
62 Thru 65 01-10-80	.....	AR	899 1141	
15.270 MIRROR, Outside Rear View				
64 01: 63-64 10-80	.....	1	899 1147	
64 01: 63-64 10-80 (Custom Design) ***(Discontinued)***	.....	1	899 1228	
65 01-10-80	.....	AR	899 1563	
HEAD, Outside Rear View Mirror (Incl. Glass, Seat And Ball Stud)				
60 10-20-80: 64 01: 63-64 10-80 ***(Replaces 320 3494)***	.....	1	320 5377	#

NOTE 15. 270-1: Two types of Gaskets were used on 65 01 - Outside Mirror. They can be identified as follows:
Type 1: The Gasket is 5 3/4" long.
Type 2: The Gasket is 4 1/4" long.

Copyright 1963 American Motors Corp.

GROUP NO. — DESCRIPTION — YEAR and MODEL	PRIMARY GROUP NO.	PER CAR	PART NO.	CODE
60 10-20-80 ..... *(Use 320 5377)*	.....	1	320 3494	
61-62 10-20-80 ..... *(Replaces 320 2827)*	.....	1	320 3338	
GLASS, Outside Rear View Mirror				
60 10-20-80	.....	1	320 0711	
62 Thru 65 01: 63 Thru 65 10-80	.....	1	320 3525	
61-62 10-20-80	.....	1	320 2828	
BRACKET, Outside Rear View Mirror Mounting				
60 01	.....	1	311 7101	
61 01	.....	1	346 0453	
GASKET, Outside Rear View Mirror Mounting				
61 01	.....	1	346 0454	
62-63 01	.....	1	346 1744	
64-65 01: 63-64 10-80	.....	1	349 0248	
61-62 10-20-80	.....	1	346 0475	
(Left) 65 10-80	.....	1	353 0548	
(Right) 65 10-80	.....	1	353 0549	
ATTACHING PARTS				
Mirror To Body				
CLIP 60 01	.....	1	311 7102	
SCREW, Set 60 01	.....	1	311 7103	
SCREW, Set 61 01	17.640	1	G140896	NA
SCREW, Tapping ..... 62 Thru 65 01-10-80	.....	2	400 0232	
SCREW, Tapping 60 10-20-80	17.654	2	G186775	NA
SCREW, Tapping ..... 61 01 (1/2" Long)	17.660	2	G161860	NA
SCREW, Tapping ..... 61 01-10-20-80 (1" Long)	17.654	2	G446595	NA
SCREW, Machine 61 10-20-80	17.592	1	G147840	NA
Mirror Head To Mirror Body				
SCREW, Phillips 60 10-20-80	.....	1	320 0709	
RETAINER, Outside Rear View Mirror Glass				
62 Thru 65 01: 63 Thru 65 10-80	.....	1	320 3526	
STUD, Outside Rear View Mirror Ball				
60 10-20-80	.....	1	320 0708	
61-62 10-20-80	.....	1	320 2830	
ARM, Outside Rear View Mirror Head Mounting				
64 01: 63-64 10-80	.....	1	320 5378	
60 10-20-80	.....	1	320 0706	
61-62 10-20-80	.....	1	320 2829	
RETAINER, Outside Rear View Mirror Stud				
61-62 10-20-80	.....	1	320 2831	
SPACER, Outside Rear View Mirror Nylon				
61-62 10-20-80 ..... *(Replaces 320 2832)*	.....	1	320 3339	

Copyright 1963 American Motors Corp.

GROUP NO. — DESCRIPTION — YEAR and MODEL	PRIMARY GROUP NO.	PER CAR	PART NO.	CODE
MIRROR, Outside Rear View Remote Control				
(Left) 64 01: 63-64 10: 63 80 ..... *(Discontinued)*	.....	1	899 1189	#
(Left) 65 01-10: 65 80 (880)(Except Marlin)	.....	1	899 1564	
(Left) 64 80	.....	1	352 0992	
(Right) 64 01: 63-64 10-80 (Not Remote Control)	.....	1	899 1228	
(Right) 65 01-10-80 (Not Remote Control)	.....	1	899 1600	
(Left) 65 59 (Marlin): 65 80 (990)	.....	1	353 0667	
ATTACHING PARTS				
Mirror To Door (Rear)				
SCREW, Tapping..... 64-65 01: 63 Thru 65 10-80	.....	1	400 0232	
Mirror To Door (Front)				
SCREW, Tapping..... 65 01	17.660	1	G167163	
SCREW, Tapping..... 65 10-80	.....	1	G167170	
SCREW, Tapping..... 64 01: 63-64 10-80	.....	1	400 0232	
GASKET, Outside Rear View Remote Control Mirror Mounting				
64 01: 63-64 10-80: 65 01 (Note 15.270-1 Type 1)	.....	1	349 0356	
65 01 (Note 15.270-1 Type 2)	.....	1	353 0668	
65 10-80 (Right) ..... *(Discontinued)*	.....	1	353 0906	
65 10-80 (Left)	.....	1	353 0907	
CONTROL, Outside Rear View Remote Control Mirror				
63 10-80	.....	1	320 4382	
EXTENSION, Outside Rear View Remote Control Mirror Control				
64 80	.....	1	320 5633	
NUT, Outside Rear View Remote Control Trim				
64 01: 63-64 10-80: 65 80 (990)	.....	1	320 4380	
65 01-10: 65 80 (880)	.....	1	320 6751	
GASKET, Outside Rear View Remote Control Mirror Trim Nut				
64 01: 63-64 10-80	.....	1	320 4384	
KNOB, Outside Rear View Remote Control Mirror Control				
64 01: 63-64 10: 63 80	.....	1	320 4640	
64 80	.....	1	320 5632	
65 01-10-80...(Incl. Set Screw)	.....	1	320 6255	
MIRROR, Visor				
60 Thru 63 01-10-20-80	.....	1	899 0633	
65 01-10-80	.....	1	899 1560	
ATTACHING PARTS				
Mirror To Visor				
SCREW, Tapping..... 64 01-10-80	17.654	2	G162298	
SCREW, Machine..... 64-65 01-10-80	17.592	2	G156642	
NUT, Tee..... 64-65 01-10-80	.....	2	400 0890	
MIRROR, Inside Rear View (Non Glare)(Refer To Group 27.084)				
60-61 01-10-20-80 (Note 15.270-1) ..... *(Ref. Pr. List)*	.....	1	899 0486	
62-63 01	.....	1	899 1015	
64-65 01-10-80	.....	1	899 1358	
62-63 10-80	.....	1	899 1014	

Copyright 1963 American Motors Corp.

GROUP NO. — DESCRIPTION — YEAR and MODEL	PRIMARY GROUP NO.	PER CAR	PART NO.	CODE
15.278 OIL, Motor				
(Case Of 24 One Qt. Cans)(5W-20) 64-65 01-10-80	.....	AR	899 1412	
(Case Of 6 Five Qt. Cans)(5W-20) 64-65 01-10-80	.....	AR	899 1413	
(Case Of 24 One Qt. Cans)(10W-30) 62 Thru 65 01-10-80	.....	AR	899 1139	
(Case Of 6 Five Qt. Cans)(10W-30) 62 Thru 65 01-10-80	.....	AR	899 1140	
(55 Gal. Drum)(10W-30) 62 Thru 65 01-10-80	.....	AR	899 1149	
15.280 FILTER KIT, Oil (Partial Flow)(Refer To Group 1.198 Thru 1.212)				
60 01 (LHE): 61 01 (LHE-Note 15.280-1)	.....	1	899 0540	
60-61 01 (OHVC): 60 10: 61 10 (OHVC)	.....	1	899 0492	
ELEMENT, Oil Filter (Partial Flow)				
60 Thru 64 01: 60 10: 61 Thru 64 10 (OHVC)	.....	1	899 0508	
ELEMENT, Oil Filter (Full Flow)				
65 01-10-80: 61 Thru 64 10 (OHVA): 62 Thru 64 10-80 (V8): 60-61 20-80: 64 10 (Six-232) *(Replaces 899 0873)*	.....	1	899 1072	
15.310 BRAKE KIT, Power (Refer To Group 8.400 Thru 8.520 And 8.650 Thru 8.740)				
62 01-10-80 (Note 15.310-1) *(Order Comp.)*	.....	1	899 1065	
63 01	.....	1	899 1218	
64 01	.....	1	899 1371	
65 01	.....	1	899 1657	
63 10 (Six) *(Order Comp.)*	.....	1	899 1219	
64 10 (Six-Note 15.310-2)	.....	1	899 1372	
65 10 (Six)	.....	1	899 1658	
63 10-80 (V8) *(Ref. Pr. List)*	.....	1	899 1220	#
64 10-80 (V8) *(Order Comp.)*	.....	1	899 1373	#
65 10-80 (V8): 65 80 (Six)	.....	1	899 1659	
ADAPTER KIT, Power Brake				
63 01 (OHV-LDT)	.....	1	899 1221	
63 01 (OHV-WDT)	.....	1	899 1222	
63 10 (OHVC)	.....	1	899 1223	
64 10 (OHVC)	.....	1	899 1387	

NOTE 15.280-1: When installed on Cars with Power Steering and or Air Conditioning also order 1-315 7198 Tube and 1-315 7199 Tube.

NOTE 15.310-1: When used on 62 01-10 (OHVC) you must also order 1-899 1091 or 1-899 1092 Adapter Kit.

NOTE 15.310-2: When used on 64 10 (Six-232) with Floor Shift also order 1-3175744 Nipple (On Intake Manifold).

Copyright 1963 American Motors Corp.

GROUP NO. — DESCRIPTION — YEAR and MODEL	PRIMARY GROUP NO.	PER CAR	PART NO.	CODE
15.320 RADIO (Manual)				
64 01	.....	1	899 1320	
65 01	.....	1	899 1561	
RADIO (Push Button)				
61 Thru 63 01 ***(Replaces 899 0984)***	.....	1	899 1144	#
64 01 ***(Use 899 1562)***	.....	1	899 1321	
65 01	.....	1	899 1562	
63 10-80 (Note 15.320-5)	.....	1	899 1142	
64 10-80 (Note 15.320-9)	.....	1	899 1345	
65 10-80	.....	1	899 1582	
RADIO (AM - FM)				
64 10-80	.....	1	899 1390	
65 10-80	.....	1	899 1583	
KNOB, Radio Tone				
60 01	.....	1	342 5918	
61 Thru 63 01: 60 Thru 63 10-20-80	.....	1	344 0827	
64-65 01 ***(Replaces 347 6454)***	.....	1	350 0747	
64 10-80 (W/AM Radio): 65 10-80	.....	1	352 0853	
KNOB, Radio Volume				
60 01	.....	1	343 0448	
64 10-80 (W/AM-FM Radio)	.....	1	351 9930	#
KNOB, Radio Station Selector				
60 01	.....	1	343 0449	
61 Thru 63 01: 60 Thru 63 10-20-80	.....	1	344 0827	
64-65 01 ***(Replaces 347 6454)***	.....	1	350 0747	
64 10-80 (W/AM Radio): 65 10-80	.....	1	352 0855	
64 10-80 (W/AM-FM Radio)	.....	1	351 9930	
INSERT, Radio Knob (Black)				
61 Thru 63 01: 60 Thru 63 10-20-80	.....	2	346 6092	
64-65 01	.....	2	350 9465	
64 10-80 (W/AM Radio): ***65 10-80 (RHD)***	.....	2	352 0851	
65 10-80 (LHD)	.....	2	351 9930	

NOTE 15.320-1: On 61 10-20-80 used prior to Body No. 109252.
NOTE 15.320-2: On 61 10-20-80 used beg. with Body No. 109252.
NOTE 15.320-4: On 60 01 with Push Button Radio also order 899 0815 Finish Panel on Cars with a Clock or 899 0814 Finish Panel on Car less Clock.
NOTE 15.320-5: When used on Cars equipped with Air Conditioning also order 1-346 1287.
NOTE 15.320-6: On 62 10-80 used on Wisconsin State Police Cars.
NOTE 15.320-7: Radio has a 3 Wire Speaker Lead Plug (2 Male, 1 Female) and Motorola No. 14 MR on Warranty Tag.
NOTE 15.320-8: Used when back of Radio is stamped 2 T-MR and Radio has a 2 Wire Speaker Lead Plug (1 Male, 1 Female)
NOTE 15.320-9: When used on Cars equipped with Air Conditioning also order 1-352 0887.

Copyright 1963 American Motors Corp.

GROUP NO. — DESCRIPTION — YEAR and MODEL	PRIMARY GROUP NO.	PER CAR	PART NO.	CODE
DIAL, Radio				
60 01	.....	1	342 5920	
POINTER, Radio				
60 01	.....	1	342 5919	
SPEAKER, Radio (Front)				
60 Thru 62 10-20-80	.....	1	344 6174	
63 10-80	.....	1	346 1287	
64 10-80	.....	1	352 0887	
65 10-80	.....	1	354 2676	
164-165 10-80 (Can)	.....	1	352 0888	
ATTACHING PARTS				
Speaker To Mounting Plate				
SCREW, Tapping — 60 10-20-80 (LAC)	17.671	4	800 0093	NA
SCREW, Tapping — 60 10-20-80 (WAC)	17.671	2	800 0093	NA
SCREW, Tapping — 61 Thru 63 01: 61 Thru 64 10-20-80 (WAC-5/8" Long)	17.660	4	G161869	NA
SCREW, Tapping — 62 10-80 (WAC-1/2" Long)	17.671	2	G274773	NA
SCREW, Machine — 61-62 10-20-80 (LAC)	17.586	4	G156019	NA
SCREW, Tapping — 65 10-80	17.660	4	G161903	NA
NUT, Stamped — 62 10-80 (LAC)	17.428	4	G446060	NA
NUT, Speed — 62 10-80 (WAC)	17.424	2	G445349	
NUT, Speed — 65 10-80	13.035	4	400 0278	
BRACKET, Radio To Instrument Panel Mounting				
60 Thru 62 10-20-80	.....	1	344 0855	
SUPPORT, Radio Speaker Mounting Plate				
64-65 01	.....	1	350 0652	
64 10-80: *65 10 (RHD)* ..... *(Replaces 351 0237)*	.....	1	351 0236	
164 10-80 (Can)	.....	1	351 1757	
ATTACHING PARTS				
Support And Bracket To Instrument Panel				
SCREW, Machine — 60 Thru 62 01-10-20-80	17.598	1	G454542	NA
SCREW, Tapping — 64 01	17.660	1	G161895	NA
SCREW, Tapping — 65 10-80	17.660	1	G161895	NA
NUT — 65 10-80	14.108	1	400 0141	
Radio To Support And Bracket				
SCREW, Machine — 60 10-20-80	17.598	1	400 1008	
SCREW, Machine — 61-62 10-20-80	17.598	1	G454542	NA
Radio To Instrument Panel				
NUT, Hexagon — 61 01-10-20-80	22.103	2	400 0091	
NUT, Hexagon — 62 Thru 65 01: 62 10-80: 65 10-80	.....	2	400 0099	
NUT, Hexagon — 63-64 10-80	17.428	2	G440491	NA
SCREW, Tapping — 61 Thru 63 01 (1/2" Long)	17.660	2	G161895	NA
SCREW, Tapping — 62-63 01 (5/8" Long)	17.660	2	G162006	NA
SCREW, Machine — 61 Thru 63 01	17.598	1	G160510	NA
BRACKET, Radio Speaker Support To Instrument Panel				
64-65 01	.....	1	350 0654	

Copyright 1963 American Motors Corp.

GROUP NO. — DESCRIPTION — YEAR and MODEL	PRIMARY GROUP NO.	PER CAR	PART NO.	CODE
ATTACHING PARTS Bracket To Support				
SCREW, Tapping..... 64-65 01	17.660	1	G161909	
BEZEL, Radio				
61 Thru 63 01	.....	1	344 8400	
ATTACHING PARTS Bezel To Radio				
SCREW, Tapping..... 61 Thru 63 01	17.654	2	G163467	NA
SCREW, Tapping..... 61-62 10-20-80	23.006	2	400 0055	
ESCUTCHEON, Radio				
64 01 (W/Manual Radio)	.....	1	350 0760	#
64 01 (W/Push Button Radio)	.....	1	350 0765	#
65 01 (With Manual Radio)	22.100	1	353 0210	
65 01 (With Push Button Radio)	22.100	1	353 0211	
COVER, Radio Push Button Opening				
61 Thru 63 01	.....	1	344 8421	
PLATE, Radio Speaker Mounting Plate				
61 Thru 63 01	.....	1	344 8413	
60 Thru 62 10-20-80	.....	1	344 3584	
63-64 10-80: ***65 10 (RHD)***	.....	1	348 2408	
65 10-80	.....	1	351 6618	
165 10-80 (Can)	.....	1	354 3132	
ATTACHING PARTS Plate To Speaker				
BOLT, Tee ..... 60-61 10-20-80 (LAC)	22.100	2	437 8664	
BOLT, Tee ..... 62 10-80 (LAC)	.....	2	400 0096	
SCREW, Tapping..... 61 Thru 63 01 (4 Req.): 61-62 10-20-80 (LAC-2 Req.)	17.660	AR	G161895	NA
SCREW, Tapping..... 65 10-80	17.660	2	G173177	NA
SCREW, Tapping..... 63 Thru 65 10-80	17.669	4	G455524	NA
NUT, Hexagon..... 63 Thru 65 10-80	17.412	2	G120614	NA
NUT, Stamped ..... 60 10-20-80 (LAC)	17.428	2	G446061	NA
NUT, Stamped ..... 62 10-80 (LAC)	17.428	2	G446060	NA
NUT, Speed ..... 63 Thru 65 10-80	22.092	2	400 0895	
BUMPER, Radio Speaker Mounting Plate				
63 Thru 65 10-80	.....	2	400 0154	
SEAL, Radio Plate To Instrument Panel				
61 Thru 63 01	.....	1	344 8415	
60 Thru 62 10-20-80	.....	1	344 3583	
63-64 10-80: ***65 10 (Can)***	.....	1	348 2405	
65 10-80 (LHD)	.....	1	351 6622	
CLIP, Radio Front Speaker Mounting				
60-61 10-20-80 (WAC)	.....	2	400 0086	
62 10-80 (WAC)	.....	2	400 0086	
BEZEL, Radio And Clock Opening				
60 10-20-80	.....	1	344 0615	
61 10-20-80 (Note 15.320-1): 62 10-80 (Note 15.320-6)	.....	1	344 7647	
61 10-20-80 (Note 15.320-2): 62 10-80	.....	1	346 6097	

Copyright 1963 American Motors Corp.

GROUP NO. — DESCRIPTION — YEAR and MODEL	PRIMARY GROUP NO.	PER CAR	PART NO.	CODE
CONDENSOR, Radio				
60 Thru 62 01-10-20-80 (Stamped 344 1379)	.....	1	344 1379	
61 Thru 63 01: 61-62 10-20-80 (Stamped 1B40511A)	.....	1	346 6154	
65 18-80	.....	1	318 1009	
CHOKE, Radio				
64 01: 63-64 10-80	.....	1	348 2433	
65 01-10-80	.....	1	353 0506	
ATTACHING PARTS Terminal To Condensor				
NUT, Hexagon..... 61 01	17.406	1	G120375	
BUTTON, Radio Control Knob Opening (W/O Radio)				
60 01	.....	2	343 2308	
SHAFT, Radio Control Knob Opening Button (W/O Radio)				
60 01	.....	2	313 2695	
ATTACHING PARTS Shaft To Instrument Panel				
NUT, Hexagon..... 60 01	17.412	2	G142212	NA
WASHER, Plain..... 60 01	17.814	2	400 1081	
WASHER, Lock..... 60 01	17.822	2	G138479	
SPEAKER KIT, Radio Rear Shelf				
62 15-16-85-86 (Note 15.320-8) ..... *(Discontinued)*	.....	1	899 0982	
63 15-16-85-86 ..... *(Ref. Pr. List)*	.....	1	899 1148	
64 15-16-19-85-89 (Duo-Coustic)	.....	1	899 1389	
64 15-16-19-85-89 (Vibra-Tone)	.....	1	899 1388	
65 15-16-19-85-86-89 (Duo-Coustic)(Except Marlin)	.....	1	899 1598	
65 50 (Marlin)	.....	1	899 1678	
65 15-16-19-85-86-89 (Vibra-Tone)(Except Marlin)	.....	1	899 1599	
65 50 (Vibra-Tone)(Marlin)	.....	1	899 1679	
COVER, Radio Rear Shelf Speaker (Vibra-Tone)				
65 10-80	.....	1	354 8744	
ATTACHING PARTS Cover To Amplifier				
SCREW, Tapping..... 65 10-80	17.671	3	G456766	
SPEAKER, Radio Rear Shelf				
60 10-20-80: 61 15-25-85: 62 15-16-85-86 (Note 15.320-7)	.....	1	344 0603	
62 15-16-85-86 (Note 15.320-8)	.....	1	346 1287	
63 Thru 65 15-16-19-85-86-89 (Except Marlin)	.....	1	352 0889	
65 50 (Marlin)	.....	1	353 0700	
CLIP, Radio Rear Shelf Speaker				
65 50 (Marlin)	.....	4	400 1548	
ATTACHING PARTS Speaker & Grille To Rear Shelf Panel				
NUT, Hexagon..... 60-61 10-20-80	17.412	4	G120361	NA
NUT, Hexagon..... 62 15-16-85-86	.....	4	439 0742	
BRACKET, Radio Rear Speaker				
63-64 15-16-85-86	.....	2	349 0128	
64-65 19-89	.....	1	350 9258	
65 15-16-85-86	.....	1	351 6626	

Copyright 1963 American Motors Corp.

GROUP NO. — DESCRIPTION — YEAR and MODEL	PRIMARY GROUP NO.	PER CAR	PART NO.	CODE
ATTACHING PARTS				
Bracket To Speaker				
SCREW, Tapping..... 63 Thru 65 15-16-19-85-86-89.....	17.660	4	G161860	NA
Bracket To Rear Shelf				
SCREW, Tapping..... 63 Thru 65 15-16-19-85-86-89.....	17.660	4	G161860	NA
BEZEL, Radio Rear Speaker				
60 10-20-80: 61 15-25-85: 62 15-16-85-86.....	.....	1	344 4745	
GRILLE, Radio Rear Speaker				
60 10-20-80: 61 15-25-85: 62 15-16-85-86 (Except Marlin).....	.....	1	344 6027	
65 50 (Marlin).....	.....	2	353 1617	#
CLIP, Radio Rear Shelf Speaker Grille				
65 50 (Marlin).....	.....	8	400 1551	
GASKET, Radio Rear Speaker Grille				
60 10-20-80: 61 15-25-85: 62 15-16-85-86	.....	1	344 6028	
CONTROL ASSEMBLY, Radio Rear Speaker (Incl. Knob)				
60 10-20-80.....	.....	1	344 3656	
61-15-25-85: 62 15-16-85-86 (Note 15.320-7)..... *(Replaces 345 5208)*	.....	1	346 6093	
62 15-16-85-86 (Note 15.320-8).....	.....	1	346 1312	
63 15-16-85-86.....	.....	1	348 2972	
CONTROL, Radio Rear Speaker (Less Knob)				
64-65 15-16-19-85-86-89 (W/Duo-Coustic Speaker).....	.....	1	352 0886	
64-65 15-16-19-85-86-89 (W/Vibra-Tone Speaker).....	.....	1	351 9911	
ATTACHING PARTS				
Control To Instrument Panel				
NUT, Hexagon..... 60 10-20-80: 61 15-25-85.....	.....	1	400 0099	
NUT, Hexagon..... 62 15-16-85-86.....	.....	1	400 0099	
SCREW, Tapping..... 63 15-16-85-86.....	13.017	2	400 0616	
WASHER, Felt..... 60 10-20-80: 61-62 15-16-25-85-86.....	.....	1	400 0415	
WASHER, Cup 60 10-20-80: 61 15-25-85: 62 15-16-85-86	.....	1	344 3659	
BRACKET, Radio Rear Speaker Control				
64-65 15-16-19-85-86-89 (W/Vibra-Tone Speaker).....	.....	1	351 9912	
ATTACHING PARTS				
Bracket To Instrument Panel				
SCREW, Tapping..... 64-65 15-16-19-85-86-89 (W/Vibra-Tone Speaker) ..	17.660	2	G161895	
NUT, Speed ..... 64-65 15-16-85-86-89 (W/Vibra-Tone Speaker)	22.092	2	400 0512	
Control To Bracket				
NUT, Hexagon..... 64-65 15-16-19-85-86-89 (W/Vibra-Tone Speaker) ..	.....	1	400 1301	
KNOB, Radio Rear Speaker Control				
60 10-20-80.....	.....	1	344 3657	
61 15-25-85: 62 15-16-85-86.....	.....	1	345 5207	
63 15-16-85-86.....	.....	1	348 2973	
64-65 15-16-19-85-86-89 (W/Duo-Coustic Speaker).....	.....	1	352 0857	
64-65 15-16-19-85-86-89 (W/Vibra-Tone Speaker).....	22.039	1	350 9540	
CABLE, Radio Rear Speaker				
60 10-20-80: 61 15-25-85: 62 15-16-85-86 (Note 15.320-7).....	.....	1	345 1501	
62 15-16-85-86 (Note 15.320-8)..... *(Use 348 2970)*	.....	1	346 1289	
63 15-16-85-86.....	.....	1	348 2970	

Copyright 1963 American Motors Corp.

GROUP NO. — DESCRIPTION — YEAR and MODEL	PRIMARY GROUP NO.	PER CAR	PART NO.	CODE
64-65 15-16-19-85-89 (W/Vibra-Tone Speaker)		1	351 9914	
(Front) 64-65 15-16-19-85-86-89 (W/Duo-Coustic Speaker)		1	352 0869	
(Rear) 64 15-16-19-85-89 (W/Duo-Coustic Speaker)		1	317 2474	
(Rear) 65 15-16-19-85-86-89 (W/Duo-Coustic Speaker)		1	317 6566	
CLIP, Radio Rear Speaker Cable				
62 15-16-85-86: 63 10-80		3	400 0461	
64-65 10-80	3.163	2	400 1598	
INSULATOR, Radio Rear Speaker To Hinge Rod				
64 15-16-19-85-89 *(Replaces 351 9958)*		1	352 9169	
CHOKE, Radio Interference Suppression (At Instrument Cluster)				
(Motorola 1B40511A) 64 01-10-80		1	346 6154	
CAPACITOR, Radio Interference Suppression (At Alternator)				
(Motorola 8A500109) 64 01-10-80		1	436 9747	
CONDENSER, Radio Interference Suppression (At Ignition Switch)				
64 01: 64 10-80		1	344 1379	
65 10-80		1	318 1009	
CAPACITOR, Radio (Police Cars)				
(Motorola 8C2571B02) 60 10-20-80: 64 10-80		1	315 9968	
(Motorola 8C2571B01) 60 10-20-80: 64 10-80		1	315 9969	
(Philips 51802100) *165 01-10-80 (Can)*		1	318 1800	
CAPACITOR ASSEMBLY, Radio (Police Cars)				
60 10-20-80		1	315 9971	
WIRE, Radio Capacitor (Police Cars)				
60 10-20-80: 64 10-80 (Two Eyelet Terminals)		1	315 9973	
WIRE, Radio Capacitor Jumper (Police Cars)				
60 10-20-80: 64 10-80 (Two Eyelet Terminals)		1	315 9974	
WIRE, Radio Capacitor Jumper (Police Cars)				
60 10-20-80 (Orange)		1	315 9975	
60 10-20-80 (Red)		1	315 9976	
15.345 LOCK, Rear Door Safety (Pair)				
62-63 01: 60 Thru 63 10-20-80		1	899 0391	
64-65 05-08-15-18-85-88		1	899 1385	
15.350 COVERS, Seat And Cushion (Clear Plastic)				

NOTE 15.350-1: Two Types of Rear Seats were used on the 62 04-06. They can be identified as follows:
Type 1: Rear Seat Cushion front corners are square with approximately 1" Radius.
Type 2: Rear Seat Cushion front corners are rounded with approximately 6" Radius.

Copyright 1963 American Motors Corp.

GROUP NO. — DESCRIPTION — YEAR and MODEL	PRIMARY GROUP NO.	PER CAR	PART NO.	CODE
COVERS, Seat And Cushion (Clear Plastic)(Rear Seat)				
(Rear Seat) 62 04 (Note 15.350-1 Type 2): 62 80 ..... ***(Discontinued)***	.....	1	899 1039	
TOPPERS, Cushion (Front Seat)				
(Black) 62-63 01 (WIRS): 62 10-80 (WIRS)	.....	1	899 1047	
(Black) 64 01 (WFS)(WNRS)(WRS) ..... ***(Discontinued)***	.....	1	899 1394	
(Black) 64 01 (WIRS)	.....	1	899 1400	
(Black) 63-64 10-80 (WFS)(WNRS)(WRS)	.....	1	899 1197	
(Black) 63-64 10-80 (WIRS)	.....	1	899 1202	
(Blue) 62-63 01 (WFS)(WNRS)(WRS): 62 10-80 (WFS)(WNRS)(WRS) ***(Discontinued)***	.....	1	899 1044	
(Blue) 62-63 01 (WIRS): 62 10-80 (WIRS)	.....	1	899 1048	
(Blue) 64 01 (WFS)(WNRS)(WRS)	.....	1	899 1395	
(Blue) 64 01 (WIRS)	.....	1	899 1401	
(Blue) 63 10-80 (WFS)(WNRS)(WRS)	.....	1	899 1198	
(Blue) 63 10-80 (WIRS)	.....	1	899 1203	
(Blue) 64 10-80 (WFS)(WNRS)(WRS)	.....	1	899 1425	
(Blue) 64 10-80 (WIRS)	.....	1	899 1429	
(Green) 62-63 01 (WFS)(WNRS)(WRS): 62 10-80 (WFS)(WNRS)(WRS) ..... ***(Discontinued)***	.....	1	899 1045	
(Green) 62-63 01 (WIRS): 62 10-80 (WIRS)	.....	1	899 1049	
(Green) 64 01 (WFS)(WNRS)(WRS)	.....	1	899 1396	
(Green) 64 01 (WIRS)	.....	1	899 1402	
(Green) 64 10-80 (WRS) ..... ***(Discontinued)***	.....	1	889 1430	
(Aqua) 63 01-10-80 (WFS)(WNRS)(WRS)	.....	1	899 1199	
(Aqua) 63 10-80 (WIRS)	.....	1	899 1204	
(Brown) 62-63 01 (WFS)(WNRS)(WRS): 62 10-80 (WFS)(WNRS)(WRS)	.....	1	899 1046	
(Brown) 62-63 01 (WIRS): 62 10-80 (WIRS) ..... ***(Discontinued)***	.....	1	899 1050	
(Red) 64 01 (WFS)(WNRS)(WRS)	.....	1	899 1399	
(Red) 64 01 (WIRS)	.....	1	899 1405	
(Red) 63 10-80 (WFS)(WNRS)(WRS)	.....	1	899 1200	
(Red) 63 10-80 (WIRS)	.....	1	899 1205	
(Red) 64 10-80 (WFS)(WNRS)(WRS)	.....	1	899 1428	
(Red) 64 10-80 (WIRS)	.....	1	899 1432	
(Gold) 64 01 (WFS)(WNRS)(WRS)	.....	1	899 1398	
(Gold) 64 01 (WIRS)	.....	1	899 1404	
(Gold) 63-64 10-80 (WFS)(WNRS)(WRS)	.....	1	899 1201	
(Gold) 63-64 10-80 (WIRS)	.....	1	899 1206	
(Turquoise) 64 01 (WFS)(WNRS)(WRS)	.....	1	899 1397	
(Turquoise) 64 01 (WIRS)	.....	1	899 1403	
(Turquoise) 64 10-80 (WFS)(WNRS)(WRS)	.....	1	899 1427	
(Turquoise) 64 10-80 (WIRS) ..... ***(Discontinued)***	.....	1	899 1431	#
TOPPERS, Cushion (Rear Seat)				
(Black) 62 04 (Note 15.350-1 Type 2): 62 05-08: 62 06 (Note 15.350-1 Type 2): 63 04-05-06-08-09	.....	1	899 0940	
(Black) 62-63 07	.....	1	899 0944	
(Black) 64 05-06-08	.....	1	899 1406	
(Black) 63-64 10-80	.....	1	899 1207	
(Blue) 62 04 (Note 15.350-1 Type 2): 62 05-08: 62 06 (Note 15.350-1 Type 2): 63 04-05-06-08-09	.....	1	899 0941	
(Blue) 62-63 07	.....	1	899 0945	
(Blue) 64 05-06-08 ..... ***(Discontinued)***	.....	1	899 1407	

Copyright 1963 American Motors Corp.

GROUP NO. — DESCRIPTION — YEAR and MODEL	PRIMARY GROUP NO.	PER CAR	PART NO.	CODE
(Blue) 63 10-80 ...(Ref. Pr. List)	.....	1	899 1208	
(Blue) 64 15-16-18-85-88 ...(Discontinued)	.....	1	899 1433	
(Green) 62 04 (Note 15.350-1 Type 2): 62 05-08: 62 06 (Note 13.350-1 Type 2): 63 04-05-06-08-09	.....	1	899 0942	
(Green) 62-63 07	.....	1	899 0946	
(Green) 64 05-06-08	.....	1	899 1408	
(Aqua) 63 10-80	.....	1	899 1209	
(Brown) 62 04 (Note 15.350-1 Type 1): 62 05-08: 62 06 (Note 15.350-1 Type 2): 63 04-05-06-08-09	.....	1	899 0943	
(Brown) 62-63 07	.....	1	899 0947	
(Red) 64 05-06-08	.....	1	899 1411	
(Red) 63 10-80	.....	1	899 1210	
(Red) 64 15-16-18-85-88 ...(Discontinued)	.....	1	899 1436	
(Gold) 64 05-06-08	.....	1	899 1410	
(Gold) 63-64 10-80	.....	1	899 1211	
(Turquoise) 64 05-06-08	.....	1	899 1409	
(Turquoise) 64 15-16-18-85-88 ...(Discontinued)	.....	1	899 1435	

15.360 SCREENS, Window (Pair)(Front)

61 Thru 63 05-08: 63 09: 60-61 10-20-80: 62 15-18-85-86-89 ...(Discontinued)(Replaces 899 0752)	.....	1	899 0816	#
61 Thru 63 02-04-06	.....	1	899 0969	
64-65 05-08: 63 Thru 65 15-18-85-88	.....	1	899 1212	
64-65 02-06: 63 Thru 65 16-86	.....	1	899 1214	
62 16-86 ...(Discontinued)	.....	1	899 1063	

SCREENS, Window (Pair)(Rear)

64-65 05-08: 63 Thru 65 15-18-85-88	.....	1	899 1213	
62 15-18-85-88 ...(Discontinued)	.....	1	899 1064	

SCREEN, Window (Tailgate)

64-65 08: 63 Thru 65 18-88 (LVT)	.....	1	899 1216	
63 Thru 65 18-88 (WVT)	.....	1	899 1215	

15.365 SAFETY GROUP, Seat Belt (Chrome)

(Black) 61 01-10-20-80 (Note 15.365-2 Type 2): 62-63 01-10-80	.....	AR	899 1101	
(Black) 64 01-10-80	.....	AR	899 1322	
(Cape Cod Blue) 62-63 01-10-80 ...(Replaces 899 1102)(Ref. Pr. List)	.....	AR	899 1177	#
(Forum Blue) 64 01-10-80	.....	AR	899 1323	
(Westminster Green) 64 01-10-80	.....	AR	899 1324	
(Aegean Aqua) 62-63 01-10-80 ...(Replaces 899 1103)	.....	AR	899 1178	#
(Brown) 62 01-10-80 ...(Discontinued)(Replaces 899 1030)	.....	AR	899 1104	
(Maroon) 62 01-10-80 ...(Replaces 899 1031)(Ref. Pr. List)	.....	AR	899 1105	#
(Maroon) 64 01-10-80	.....	AR	899 1327	
(Corsican Gold) 63 01-10-80 ...(Ref. Pr. List)	.....	AR	899 1179	
(Corsican Gold) 64 01-10-80	.....	AR	899 1326	
(Red) 63 01-10-80	.....	AR	899 1105	
(Lancelot Turquoise) 64 01-10-80	.....	AR	899 1325	

NOTE 15.365-1: Two Types of Seat Belts were used on 62 01-10-80. They can be identified as follows:
Type 1: The Buckle End "Belt Length Only" is 42" and the Tip End "Belt Length Only" is 17".
Type 2: The Buckle End "Belt Length Only" is 39" and the Tip End "Belt Length Only" is 20".

NOTE 15.365-2: Two Types of Seat Belts were used in 61 Series Cars. They can be identified as follows:
Type 1: The Seat Belt is attached to the floor with U-Bolts.
Type 2: The Seat Belt is attached to the floor with Eye-Bolts.

Copyright 1963 American Motors Corp.

GROUP NO. — DESCRIPTION — YEAR and MODEL	PRIMARY GROUP NO.	PER CAR	PART NO.	CODE
SAFETY GROUP, Rear Seat Belt				
(Black) 65 01-10-80	.....	AR	899 1584	
(Blue) 65 01-10-80	.....	AR	899 1585	
(Green) 65 01-10-80	.....	AR	899 1586	
(Red) 65 01-10-80	.....	AR	899 1587	
(Taupe) 65 01-10-80	.....	AR	899 1588	
(Aqua) 65 01-10-80	.....	AR	899 1589	
HARDWARE KIT, Rear Seat Belt Attaching				
64 01-10-80	.....	AR	899 1357	
BELT, Rear Seat (Chrome Buckle)				
(Black) 64-65 01-10-80	.....	2	320 7304	#
(Forum Blue) 64 01-10-80	.....	2	320 7305	#
(Westminster Green) 64 01-10-80	.....	2	320 7306	#
(Lancelot Turquoise) 64-65 01-10-80	.....	2	320 7307	#
(Corsican Gold) 64 01-10-80	.....	2	320 7308	#
(Maroon) 64 01-10-80	.....	2	320 7309	#
(Med. Blue) 65 01-10-80	.....	2	317 6280	#
(Med. Green) 65 01-10-80	.....	2	317 6281	#
(Red) 65 01-10-80	.....	2	317 6282	#
(Med. Taupe) 65 01-10-80	.....	2	317 6283	#
(Med. Aqua) 65 01-10-80	.....	2	317 6284	#
BELT, Rear Seat (Tip End For Chrome Type)				
(Black) 64-65 01-10-80	.....	2	320 7310	#
(Forum Blue) 64 01-10-80	.....	2	320 7311	#
(Westminster Green) 64 01-10-80	.....	2	320 7312	#
(Lancelot Turquoise) 64-65 01-10-80	.....	2	320 7313	#
(Corsican Gold) 64 01-10-80	.....	2	320 7314	#
(Maroon) 64 01-10-80	.....	2	320 7315	#
(Med. Blue) 65 01-10-80	.....	2	317 6285	#
(Med. Green) 65 01-10-80	.....	2	317 6286	#
(Red) 65 01-10-80	.....	2	317 6287	#
(Med. Taupe) 65 01-10-80	.....	2	317 6288	#
(Med. Aqua) 65 01-10-80	.....	2	317 6289	#
BELT, Front Seat (Incl. Painted Buckle)				
(Blue) 64 01-10-80	.....	2	320 6258	
(Green) 64 01-10-80	.....	2	320 6259	
(Maroon) 64 01-10-80	.....	2	320 6260	
(Turquoise) 64 01-10-80	.....	2	320 6261	
(Gold) 64 01-10-80	.....	2	320 6262	
(Black) 65 01-10-80	.....	2	320 6222	
(Med. Blue) 65 01-10-80	.....	2	320 6224	
(Med. Green) 65 01-10-80	.....	2	320 6226	
(Red) 65 01-10-80	.....	2	320 6228	
(Med. Aqua) 65 01-10-80	.....	2	320 6230	
(Med. Taupe) 65 01-10-80	.....	2	320 6232	
BELT, Front Seat (Tip End-For Painted Type)				
(Blue) 64 01-10-80	.....	2	320 6263	
(Green) 64 01-10-80	.....	2	320 6264	
(Maroon) 64 01-10-80	.....	2	320 6265	
(Turquoise) 64 01-10-80	.....	2	320 6266	
(Gold) 64 01-10-80	.....	2	320 6267	
(Black) 65 01-10-80	.....	2	320 6223	
(Med. Blue) 65 01-10-80	.....	2	320 6225	
(Med. Green) 65 01-10-80	.....	2	320 6227	
(Red) 65 01-10-80	.....	2	320 6229	
(Med. Aqua) 65 01-10-80	.....	2	320 6231	
(Med. Taupe) 65 01-10-80	.....	2	320 6233	

Copyright 1963 American Motors Corp.

GROUP NO. — DESCRIPTION — YEAR and MODEL	PRIMARY GROUP NO.	PER CAR	PART NO.	CODE
BELT AND BUCKLE, Seat Belt (Chrome)				
(Gray) 60 01-10-20-80: 61 01-10-20-80 (Note 15.365-2 Type 1)	.....	1	311 9836	
(Black) 62 01-10-80 (Note 15.365-1 Type 2): 63 01-10-80	.....	1	320 3757	
(Navy Blue) 62 01-10-80 (Note 15.365-1 Type 1)	.....	1	320 3509	
(Navy Blue) 62 01-10-80 (Note 15.365-1 Type 2)	.....	1	320 3759	
(Cape Cod Blue) 63 01-10-80 ***(Discontinued)***	.....	1	320 4281	
(Green) 62 01-10-80 (Note 15.365-1 Type 1)	.....	1	320 3511	
(Green) 62 01-10-80 (Note 15.365-1 Type 2)	.....	1	320 3761	
(Aegean Aqua) 63 01-10-80	.....	1	320 4283	
(Brown) 62 01-10-80 (Note 15.365-1 Type 1)	.....	1	320 3513	
(Brown) 62 01-10-80 (Note 15.365-1 Type 2)	.....	1	320 3763	
(Maroon) 62 01-10-80 (Note 15.365-1 Type 1)	.....	1	320 3515	
(Maroon) 62 01-10-80 (Note 15.365-1 Type 2): 63 01-10-80	.....	1	320 3765	
(Corsican Gold) 63 01-10-80 ***(Ref. Pr. List)***	.....	1	320 4285	
BELT, Seat Belt (Tip End-For Chrome Type)				
(Gray) 60 01-10-20-80: 61 01-10-20-80 (Note 15.365-2 Type 1)	.....	1	311 9837	
(Black) 61 01-10-20-80 (Note 15.365-2 Type 2): 62 01-10-80 (Note 15.365-1 Type 1)	.....	1	320 2837	
(Black) 62 01-10-80 (Note 15.365-1 Type 2): 63 01-10-80	.....	1	320 3758	
(Navy Blue) 62 01-10-80 (Note 15.365-1 Type 1)	.....	1	320 3510	
(Navy Blue) 62 01-10-80 (Note 15.365-1 Type 2)	.....	1	320 3760	
(Cape Cod Blue) 63 01-10-80	.....	1	320 4282	
(Green) 62 01-10-80 (Note 15.365-1 Type 1)	.....	1	320 3512	
(Green) 62 01-10-80 (Note 15.365-1 Type 2)	.....	1	320 3762	
(Aegean Aqua) 63 01-10-80	.....	1	320 4284	
(Brown) 62 01-10-80 (Note 15.365-1 Type 1)	.....	1	320 3514	
(Brown) 62 01-10-80 (Note 15.365-1 Type 2)	.....	1	320 3764	
(Maroon) 62 01-10-80 (Note 15.365-1 Type 1)	.....	1	320 3516	
(Maroon) 62 01-10-80 (Note 15.365-1 Type 2): 63 01-10-80	.....	1	320 3766	
(Corsican Gold) 63 01-10-80	.....	1	320 4286	
BELT AND BUCKLE, Front Seat Belt (Chrome-Buckle)				
(Black) 64-65 01-10-80	.....	2	317 5145	
(Black) ***164 01-10-80 (Can)***	.....	2	320 9116	
(Black) ***165 01-10-80 (Can)***	.....	2	320 9130	
(Forum Blue) 64 01-10-80	.....	2	317 5146	
(Westminster Green) 64-65 01-10-80	.....	2	317 5147	
(Green) ***164 01-10-80 (Can)***	.....	2	320 9117	
(Lancelot Turquoise) 64-65 01-10-80	.....	2	317 5148	
(Blue) ***164 01-10-80 (Can)***	.....	2	320 9118	
(Blue) ***165 01-10-80 (Can)***	.....	2	320 9131	
(Corsican Gold) 64 01-10-80	.....	2	317 5149	
(Gold) ***164 01-10-80 (Can)***	.....	2	320 9119	
(Vintage Maroon) 64-65 01-10-80	.....	2	317 5150	
(Red) ***164 01-10-80 (Can)***	.....	2	320 9120	
(Medium Blue) 65 01-10-80	.....	2	317 6265	
(Medium Green) 65 01-10-80	.....	2	317 6266	
(Medium Aqua) 65 01-10-80	.....	2	317 6269	
(Aqua) ***165 01-10-80 (Can)***	.....	2	320 9134	
(Medium Taupe) 65 01-10-80	.....	2	317 6268	
(Taupe) ***165 01-10-80 (Can)***	.....	2	320 9133	
(Red) 65 01-10-80	.....	2	317 6267	
(Red) ***165 01-10-80 (Can)***	.....	2	320 9132	
BELT, Front Seat Belt (Tip End)(Incl. Retractor And Cover-For Chrome Type)				
(Black) 64-65 01-10-80	.....	2	317 5151	
(Black) ***164 01-10-80 (Can)***	.....	2	320 9121	
(Forum Blue) 64 01-10-80	.....	2	317 5152	
(Westminster Green) 64-65 01-10-80	.....	2	317 5153	
(Green) ***164 01-10-80 (Can)***	.....	2	320 9122	
(Lancelot Turquoise) 64-65 01-10-80	.....	2	317 5154	
(Blue) ***164 01-10-80 (Can)***	.....	2	320 9123	

Copyright 1963 American Motors Corp.

GROUP NO. — DESCRIPTION — YEAR and MODEL	PRIMARY GROUP NO.	PER CAR	PART NO.	CODE
(Corsican Gold) 64 01-10-80	.....	2	317 5155	
(Gold) ***164 01-10-80 (Can)***	.....	2	320 9124	
(Vintage Maroon) 64-65 01-10-80	.....	2	317 5156	
(Red) ***164 01-10-80 (Can)***	.....	2	320 9125	
(Black) 65 01-10-80	.....	2	353 0847	
(Black) ***165 01-10-80 (Can)***	.....	2	320 9135	
(Medium Blue) 65 01-10-80	.....	2	317 6270	
(Blue) ***165 01-10-80 (Can)***	.....	2	320 9136	
(Medium Green) 65 01-10-80	.....	2	317 6271	
(Medium Aqua) 65 01-10-80	.....	2	317 6274	
(Aqua) ***165 01-10-80 (Can)***	.....	2	320 9139	
(Medium Taupe) 65 01-10-80	.....	2	317 6273	
(Taupe) ***165 01-10-80 (Can)***	.....	2	320 9138	
(Red) 65 01-10-80	.....	2	317 6272	
(Red) ***165 01-10-80 (Can)***	.....	2	320 9137	
RETRACTOR KIT, Front Seat Belt (Incl. Cover)				
64-65 01-10-80	.....	2	899 1415	
RETRACTOR, Seat Belt				
64-65 01-10-80	.....	AR	320 5508	
COVER, Seat Belt And Retractor				
(Black) 64-65 01-10-80	.....	2	320 5509	
(Red) ***164 01-10-80 (Can)***	.....	2	320 9129	
(Gold) ***164 01-10-80 (Can)***	.....	2	320 9128	
(Blue) ***164 01-10-80 (Can)***	.....	2	320 9127	
(Green) ***164 01-10-80 (Can)***	.....	2	320 9126	
EYEBOLT KIT, Seat Belt				
63 10-80 (W3S)	.....	AR	899 1190	
BAR, Seat Belt Slide				
60 01-10-20-80: 61 01-10-20-80 (Note 15.365-2 Type 1)	.....	2	311 9838	
PLATE, Seat Belt Anchor Belt Backing (4 Holes)				
60 01-10-20-80: 61 01-10-20-80 (Note 15.365-2 Type 1)	.....	2	311 9839	
PLATE, Seat Belt Eyebolt Reinforcing				
61 01-10-20-80	.....	2	320 2839	
62 Thru 65 01-10-80	.....	2	320 3518	
ATTACHING PARTS				
Belt To Floor				
U-BOLT (45° Angle)	60 01-10-20-80: 61 01-10-20-80 (Note 15.365-2 Type 1)	1	311 9842	
EYEBOLT	61 01-10-20-80 (Note 15.365-2 Type 2-3/8" Dia.)	2	320 2838	
EYEBOLT	62-63 01-10-80 (7/16" Dia.)	2	320 3517	
EYEBOLT	63 10-80 (W3S)	AR	320 4361	
NUT, Hexagon	60-61 01-10-20-80 (I.D. 5/16") 17.406	4	G120368	
NUT, Hexagon	61 01-10-20-80 (I.D. 3/8") 17.406	2	G120369	NA
NUT, Hexagon	62-63 01-10-80 (I.D. 7/16") 17.406	2	G451405	NA
NUT, Hexagon	62-63 01-10-80 (I.D. 6/32") 17.412	2	G134530	
SCREW, Machine	62-63 01-10-80 ..... 17.616	2	G154976	NA
WASHER, Plain	60-61 01-10-20-80 ..... 17.814	8	G120386	NA
WASHER, Lock	60 01-10-20-80: 61 01-10-20-80 (Note 15.365-2 Type 1) 17.820	4	G120214	NA
WASHER, Lock	61 01-10-20-80 (Note 15.365-2 Type 2) 17.820	2	G131099	NA
WASHER, Lock	62-63 01-10-80 ..... 17.820	2	G131100	NA

Copyright 1963 American Motors Corp.

GROUP NO. — DESCRIPTION — YEAR and MODEL	PRIMARY GROUP NO.	PER CAR	PART NO.	CODE
Front Belt To Side Sill				
BOLT, Nylock..... 64-65 01-10-80	.....	2	317 3132	
WASHER, Plain 64 01-10-80	.....	2	400 0483	
Front Belt To Floor Pan				
BOLT, Nylock..... 64-65 01-10-80	.....	2	317 3132	
Rear Belt To Floor Pan				
BOLT, Hexagon 64-65 01-10-80	17.038	4	G181665	NA
WASHER, Plain..... 64-65 01-10-80	17.814	4	G120395	NA
NUT, Lock..... 64-65 01-10-80	17.416	4	G274636	
RECEPTACLE, Seat Belt Buckle				
(Black) 65 01-10-80 (WFC)	.....	2	353 0831	
(Medium Blue) 65 01-10-80 (WFC)	.....	2	353 0832	
(Medium Green) 65 01-10-80 (WFC)	.....	2	353 0833	
(Medium Aqua) 65 01-10-80 (WFC)	.....	2	353 0836	
(Medium Taupe) 65 01-10-80 (WFC)	.....	2	353 0835	
(Red) 65 01-10-80 (WFC)	.....	2	353 0834	
ATTACHING PARTS				
Receptacle To Console				
SCREW, Tapping..... 65 01-10-80 (WFC)	27.276	4	400 1588	
15.370 SPOTLIGHT (Incl. Mirror)(Less Bracket)				
61 01 ..... *(Ref. Pr. List)*	.....	1	899 0892	
62-63 01: 62 10-80	.....	1	899 1058	
60-61 10-20-80 ..... *(Ref. Pr. List)*	.....	1	899 0741	
64 01: 63-64 10: 63 80	.....	1	899 1225	
SPOTLIGHT (Incl. L.H. Bracket)				
65 01-10-80	.....	1	899 1660	
BRACKET, Spotlight Inside Mounting				
60 Thru 63 01	.....	1	320 2258	
BRACKET, Spotlight Outside Mounting (Left)				
60 01	.....	1	315 8648	
61 01	.....	1	316 2077	
62-63 01	.....	1	899 1060	
60-61 10-20-80	.....	1	315 9380	
62 10-80 ..... *(Discontinued)*	.....	1	899 1059	
64 01: 63-64 10: 63 80 (Note 15.370-1)	.....	1	899 1226	
64-65 01: 63 Thru 65 10-80 (Note 15.370-2)	.....	1	316 8849	
65 07-17-87	.....	1	899 1673	
BRACKET, Spotlight Outside Mounting (Right)				
61 01	.....	1	899 0893	
62-63 01	.....	1	899 1062	
60 Thru 62 10-20-80 ..... *(Discontinued)*	.....	1	899 1061	
64 01: 63-64 10: 63 80 (Note 15.370-1)	.....	1	899 1227	
64-65 01: 63 Thru 65 10-80 (Note 15.370-2)	.....	1	316 9829	
65 01-10-80 (LCV)	.....	1	899 1662	
65 07-17-87	.....	1	899 1674	
ATTACHING PARTS				
Bracket To Body				
SCREW, Tapping..... 60 Thru 64 01-10-20-80	17.652	2	G273528	NA

NOTE 15.370-1: Used only on Cars equipped with Spotlight including Mirror.
NOTE 15.370-2: Used only on Cars equipped with Spotlight that does not include Mirror.

Copyright 1963 American Motors Corp.

GROUP NO. — DESCRIPTION — YEAR and MODEL	PRIMARY GROUP NO.	PER CAR	PART NO.	CODE
GASKET, Spotlight Outside Mounting Bracket				
62-63 01	.....	1	320 3216	
64 01: 63-64 10: 63 80	.....	1	320 4502	
COLLAR, Spotlight Inside				
61 Thru 64 01: 60 Thru 64 10-20: 60 Thru 63 80	.....	1	320 2259	
ATTACHING PARTS Collar To Shaft				
SCREW, Set..... 61 Thru 64 01: 60 Thru 64 10-20: 60 Thru 63 80	.....	1	320 2746	
HEADPOST, Spotlight				
60 Thru 64 01-10-20: 60 Thru 63 80	.....	1	311 3265	
ATTACHING PARTS Housing To Shaft				
SCREW, Machine..... 60 Thru 64 01-10-20: 60 Thru 63 80	.....	1	311 3264	
MIRROR ASSEMBLY, Spotlight				
61 01: 60-61 10-20-80 (Note 15.370-1)	.....	1	320 1507	
ATTACHING PARTS Mirror To Housing				
SCREW, Machine..... 61 01: 60-61 10-20-80 (Note 15.370-1)	.....	2	320 1502	
SCREW, Machine..... 62 Thru 64 01-10-80 (Note 15.370-1)	17.584	1	G103863	NA
DOOR, Spotlight				
60 01	.....	1	320 2242	
62 Thru 64 01-10-80 (Note 15.370-1)	.....	1	320 3226	
61 Thru 64 01-10-80 (Note 15.370-2)	.....	1	320 2855	
ATTACHING PARTS Door To Housing				
SCREW, Machine..... 61 Thru 64 01: 60 Thru 64 10-20-80 (Note 15.370-1)	17.592	2	G156730	NA
TUBE, Spotlight Inside (Incl. Gear)				
61 Thru 63 01: 60 Thru 62 10-20-80	.....	1	320 1508	
64 01: 63-64 10: 63 80	.....	1	320 4503	
GEAR, Spotlight Tube (Inside Tube)				
60 Thru 64 01-10-20: 60 Thru 63 80	.....	1	311 5964	
HANDLE, Spotlight				
(Upper) 60 01	.....	1	320 2246	
(Upper) 61 01: 60-61 10-20-80	.....	1	311 5961	
(Upper) 62 Thru 64 01-10: 62-63 80	.....	1	320 3159	
(Lower) 60 Thru 64 01-10-20: 60 Thru 63 80	.....	1	311 3270	
SHAFT, Spotlight Handle (Incl. Gear)				
60 01	.....	1	320 2245	
ATTACHING PARTS Lower Handle To Shaft				
SCREW, Machine..... 60 01	.....	1	311 6672	
SCREW, Machine..... 61 01 Thru 64 01: 60 Thru 64 10-20-80	.....	1	311 3272	

Copyright 1963 American Motors Corp.

GROUP NO. — DESCRIPTION — YEAR and MODEL	PRIMARY GROUP NO.	PER CAR	PART NO.	CODE
BULB, Spotlight				
60 Thru 64 01-10-20: 60 Thru 63 80	3.215	1	311 9856	
SPRING, Spotlight Bulb Retaining				
60 01		1	320 2243	
61 01: 60-61 10-20-80		2	320 1287	
WEDGE, Spotlight Handle Housing				
60 Thru 64 01-10-20: 60 Thru 63 80		1	311 5965	
ATTACHING PARTS Wedge To Housing				
NUT, Hexagon..... 60 Thru 64 01-10-20: 60 Thru 63 80		1	311 3268	
TOGGLE, Spotlight Switch				
60 Thru 64 01-10-20: 60 Thru 63 80		1	311 3273	
ATTACHING PARTS Toggle To Switch				
SCREW, Machine..... 60 Thru 64 01-10-20: 60 Thru 63 80		1	311 6671	
SWITCH, Spotlight				
60 Thru 64 01: 61 Thru 64 10-20: 61 Thru 63 80		1	320 2257	
60 10-20-80		1	311 5963	
CAP, Spotlight Switch				
60 Thru 64 01-10-20: 60 Thru 63 80 *(Discontinued)*		1	311 3274	
ATTACHING PARTS Cap To Switch				
SCREW, Machine..... 60 Thru 64 01-10-20: 60 Thru 63 80		1	311 6670	
SLEEVE, Spotlight (Sponge Rubber)				
60 Thru 62 10-20-80		1	320 2260	
SPACER, Spotlight (Black Rubber)				
61 Thru 64 01-10-20: 61 Thru 63 80		1	320 2744	
CLIP, Spotlight Wire				
61 Thru 64 01-10-20: 61 Thru 63 80		1	320 2745	
SHELL, Spotlight Mirror And Bulb Outer				
62 Thru 64 01-10-80 (Note 15.370-1)		2	320 3254	
DIAPHRAGM, Spotlight Mirror And Bulb Retaining				
62 Thru 64 01-10-80 (Note 15.370-1)		1	320 3256	
RING, Spotlight Adapter (Inner)				
61 Thru 64 01-10-20-80 (Note 15.370-2)		1	320 2857	
ORNAMENT, Spotlight Door To Shell				
61 Thru 64 01-10-20-80 (Note 15.370-2)		1	320 2859	

Copyright 1963 American Motors Corp.

GROUP NO. — DESCRIPTION — YEAR and MODEL	PRIMARY GROUP NO.	PER CAR	PART NO.	CODE
15.385 PAINT, Touch-Up				
Refer To Paints Charts Which Are Located In The General Information Section Of This Catalog				
15.400 LIGHT KIT, Trunk (Refer To Group 3.660)				
63 01-10-80	.....	1	899 1183	
64-65 01-10-80 ***(Replaces 899 1486)***	.....	1	899 1362	
15.410 OIL, Tune Up (Sta-Tune)(Fuel Additive)				
(8 Oz.) 60 Thru 64 01-10-20-80	.....	AR	899 0374	
(12 Oz.) 60 Thru 65 01-10-20-80	.....	AR	899 1483	
OIL, Tune Up (Kleen-N-Tune)(Carb. Cleaner)				
60 Thru 65 01-10-20-80	.....	AR	899 0375	
OIL, Tune Up (Velv-Oil)(Crankcase Additive)				
60 Thru 65 01-10-20-80	.....	AR	899 0376	
15.420 VENTSHADES				
64-65 02-06	.....	1	899 1381	
64-65 05-08	.....	1	899 1380	
63 16-86 (Note 15.420-1 Type 1)	.....	1	899 1196	
63 15-18-85-88 (Note 15.420-1 Type 1)	.....	1	899 1195	
63 15-18-85-88 (Note 15.420-1 Type 2): 64-65 15-18-85-88	.....	1	899 1252	
63 16-86 (Note 15.420-1 Type 2): 64-65 16-86	.....	1	899 1253	
ATTACHING PARTS Ventshade To Window Frame				
SCREW, Tapping..... 62 10-80 (6 Req. -2 Door)(10 Req. -4 Door)	.....	AR	320 3173	
CLIP, Ventshade				
62-63 01 (8 Req. -2 Door)(14 Req. -4 Door)	.....	AR	320 3172	
64-65 01: 63 Thru 65 10-80	.....	12	320 5893	
15.440 WASHER KIT, Windshield				
61 Thru 63 01 (LHD)	.....	1	899 0896	
60 01: 64-65 01 (LHD): 60 Thru 65 10-20-80 (LHD) ***(Replaces 899 0834)***	.....	1	899 1175	
RESERVOIR, Windshield Washer				
60 Thru 65 01-10-20-80 ***(Replaces 439 2683)***	.....	1	316 8179	
BRACKET, Windshield Washer Reservoir Mounting				
60 Thru 62 01-10-20-80: 63 01	.....	1	343 5570	
64-65 01: 63 Thru 65 10-80	.....	1	316 8178	
ATTACHING PARTS Bracket To Wheelhouse Panel				
SCREW, Tapping..... 60 Thru 65 01-10-20-80	17.671	2	G456766	

NOTE 15.420-1: Two Types of Ventshades are supplied for the 63 10-80 Series. They are to be used as follows:
Type 1: Use with Slide Channel having a steel bead.
Type 2: Use with Flocked Rubber Channel.
NOTE 15.440-1: On 1960 Models used prior to Car Code No. 11204.
NOTE 15.440-2: On 1960 Models used beginning with Car Code No. 11204.

Copyright 1963 American Motors Corp.

GROUP NO. — DESCRIPTION — YEAR and MODEL	PRIMARY GROUP NO.	PER CAR	PART NO.	CODE
VALVE ASSEMBLY, Windshield Washer Check				
60 Thru 63 01: 60 10-20-80: ***61 10-80 (RHD):*** 62 80...(Incl. Hose, Cap And Strainer)	.....	1	343 5822	
61 01 (RHD): 64-65 01: 61 10-20-80: 63 Thru 65 10-80	.....	1	316 0571	
ATTACHING PARTS				
Valve To Dash Panel				
CLIP — 64 01: 61 10-20-80 (LHD): 62 Thru 65 10-80	.....	1	316 0573	
SCREW, Tapping — 61 10-20-80 (LHD): 62 10-80	17.671	1	800 0093	NA
SCREW, Tapping — 64-65 01: 63 Thru 65 10-80	17.671	1	G274773	NA
Valve To Wheelhouse Panel				
CLIP — ***61 01 (RHD)***	.....	1	316 0573	
SCREW, Tapping — ***61 01 (RHD)***	.....	1	800 0093	NA
CAP ASSEMBLY, Windshield Washer Check Valve (Incl. Hose And Filter)				
64-65 01: 61 10-20-80 (LHD): 62 Thru 65 10-80	.....	1	439 2678	
HOSE, Windshield Washer				
60 Thru 65 01-10-20-80 (1/4" I. D. -Bulk-Order In Feet)	.....	AR	320 2251	
60 Thru 65 01-10-20-80 (5/32" I. D. -Bulk-Order In Feet)	.....	AR	320 2252	
ATTACHING PARTS				
Hose To Brake Tube				
CLIP, Wire — 60 01 (1 Req.): 60 10-20-80 (LHD-2 Req.)	.....	AR	79 394	
CLIP, Nylon — 62 10	.....	1	400 0305	
Hose To Heater Cover				
CLIP, Wire — 60 01 (OHV)	.....	2	313 5224	
CLIP, Tube — ***60 10-80 (RHD-1/4" I. D.)***	.....	2	99 477	
CLIP, Tube — ***60 10-80 (RHD-3/8" I. D.)***	.....	2	99 478	
Hose To Floor Mat				
FASTENER — ***60 10-80 (RHD)***	.....	2	314 7299	
PUMP, Windshield Washer Foot				
60 01: ***62-63 01 (RHD):*** 64-65 01: 60 Thru 65 10-20-80 ***....(Replaces 315 8680)***	.....	1	316 7632	
61 01: 62-63 01 (LHD)	.....	1	316 2140	
ATTACHING PARTS				
Pump To Dash Panel				
SCREW, Tapping — 60 Thru 65 01-10-20-80	17.671	3	400 0479	
PAD, Windshield Washer Foot Pump Lever				
60 Thru 63 01: 60 Thru 62 10-20-80	.....	1	320 1105	
NOZZLE, Windshield Washer				
60 01-10-20-80	.....	1	315 7512	
61 Thru 65 01-10-20-80 ***....(Replaces 316 0572)***	.....	1	347 2211	
ATTACHING PARTS				
Nozzle To Hood				
WASHER, Lock — 60 01-10-20-80 (Note 15.440-1)	17.822	1	G138485	NA
NUT, Hexagon — 60 Thru 65 01-10-20-80 (Note 15.440-2) ***....(Replaces 344 6373)***	.....	1	400 0444	
NUT, Hexagon — 60 01-10-20-80 (Note 15.440-1)	17.406	1	G120376	NA
CONNECTOR, Windshield Washer Reservoir To Foot Pump Hose				
60 01	.....	1	316 0487	
61 Thru 65 01: 60 Thru 65 10-20-80 ***....(Replaces 439 2681)***	.....	1	316 5760	

Copyright 1963 American Motors Corp.

GROUP NO. — DESCRIPTION — YEAR and MODEL	PRIMARY GROUP NO.	PER CAR	PART NO.	CODE
SOLVENT, Windshield Washer				
60 Thru 62 01-10-20-80 ..... *(Use 899 1176)*	.....	AR	899 0438	
63 Thru 65 01-10-80	.....	AR	899 1176	
15.450 COVER KIT, Wheel				
61-62 01-10 ..... *(Order Comp.)*	.....	1	899 0835	
63 01 ..... *(Ref. Pr. List)*	.....	1	899 1111	
64 01	.....	1	899 1374	
65 01	.....	1	899 1546	
63 10	.....	1	899 1112	
64 10	.....	1	899 1375	
65 10	.....	1	899 1547	
60 80	.....	1	899 0504	
61-62 80 ..... *(Order Comp.)*	.....	1	899 0837	
63 80 ..... *(Order Comp.)*	.....	1	899 1113	
65 80	.....	1	899 1548	
COVER KIT, Wire Wheel				
64 01-10-80	.....	1	899 1482	
65 01-10-80	.....	1	899 1552	
ORNAMENT KIT, Wheel Cover (Refer To Group 8.274)				
65 01	.....	1	899 1543	
65 10-80 (Except Marlin)	.....	1	899 1544	
65 50 (Marlin)	.....	1	899 1545	

Copyright 1963 American Motors Corp.

GROUP NO. — DESCRIPTION — YEAR and MODEL	PRIMARY GROUP NO.	PER CAR	PART NO.	CODE

Copyright 1963 . American Motors Corp.

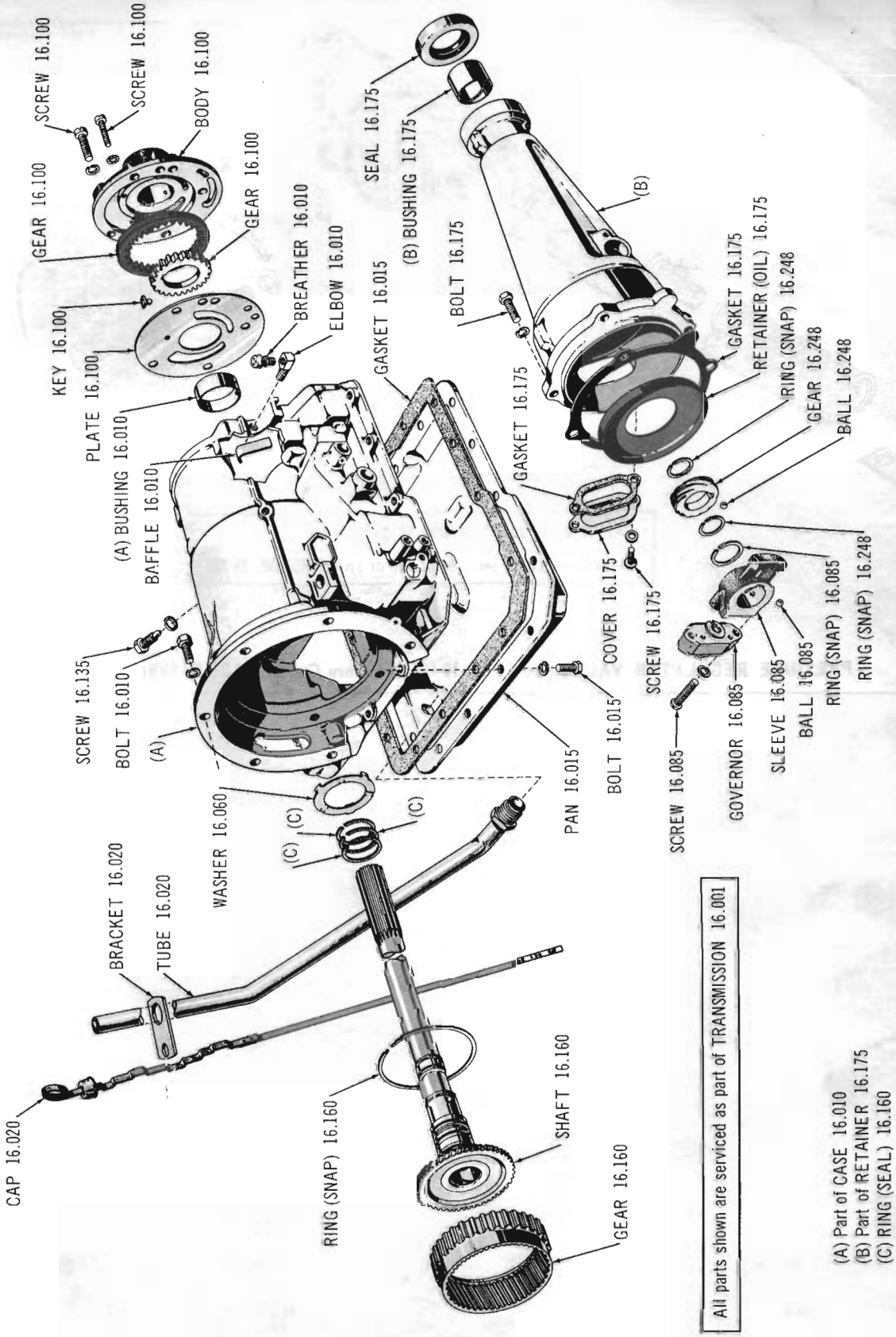

TRANSMISSION CASE, REAR PUMP AND RETAINER 60 thru Current ALL MODELS

Copyright 1963 American Motors Corp.

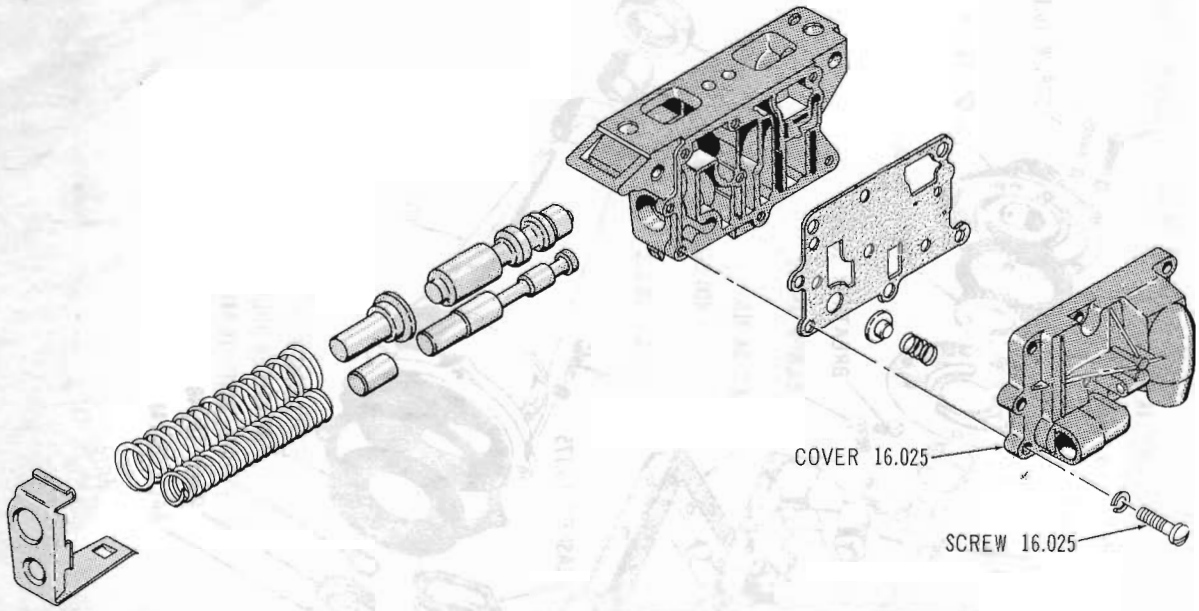

VALVE ASSY. 16.025 includes all parts shown
All parts shown are serviced as part of TRANSMISSION 16.001

PRESSURE REGULATOR VALVE 60-61 01-10 (Six): 60 thru Current 10-20-80 (V8)

Copyright 1963 American Motors Corp.

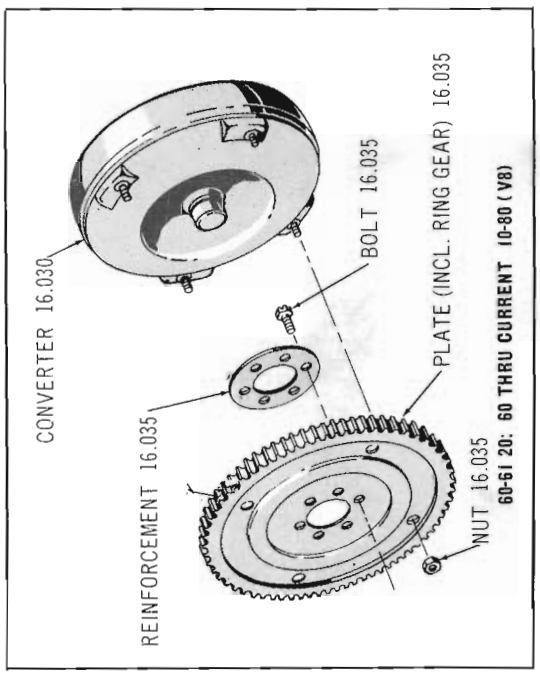

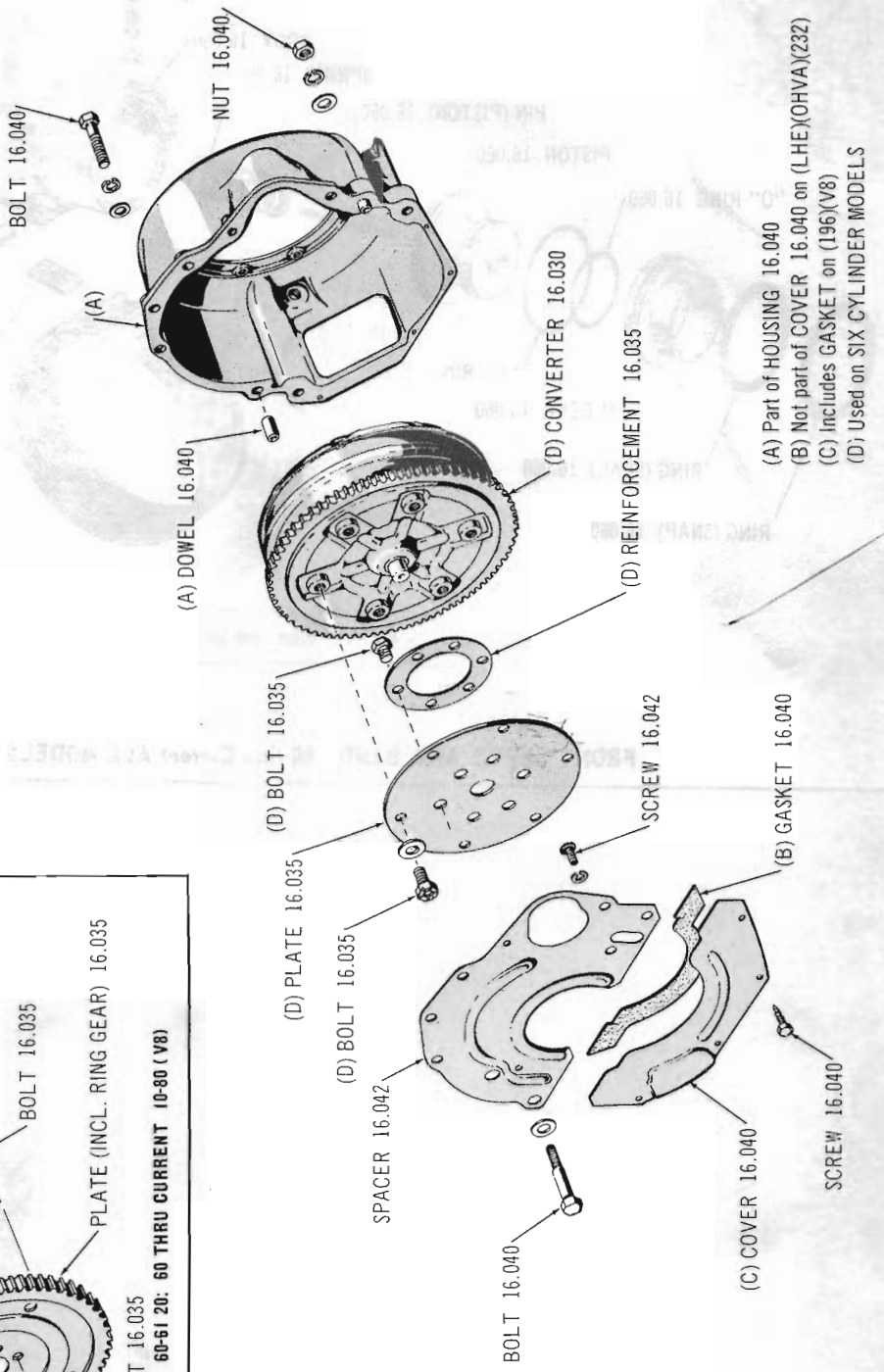

CONVERTER AND HOUSING 60 thru Current ALL MODELS

Copyright 1963 American Motors Corp.

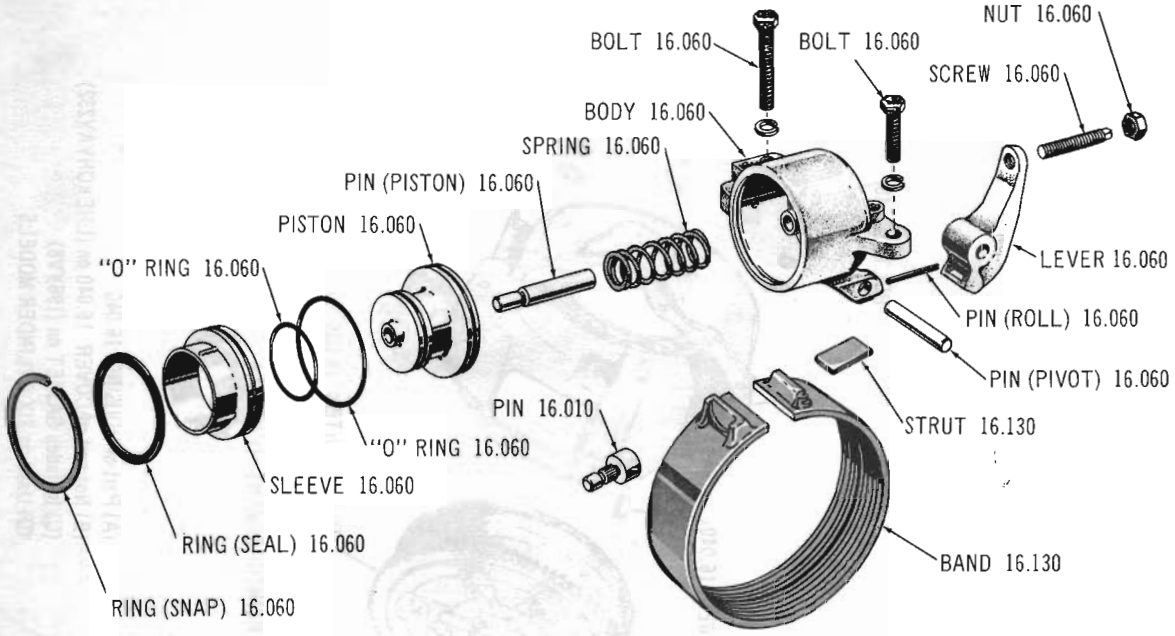

All parts shown are serviced as part of TRANSMISSION 16.001

FRONT SERVO AND BAND 60 thru Current ALL MODELS

Copyright 1963 American Motors Corp.

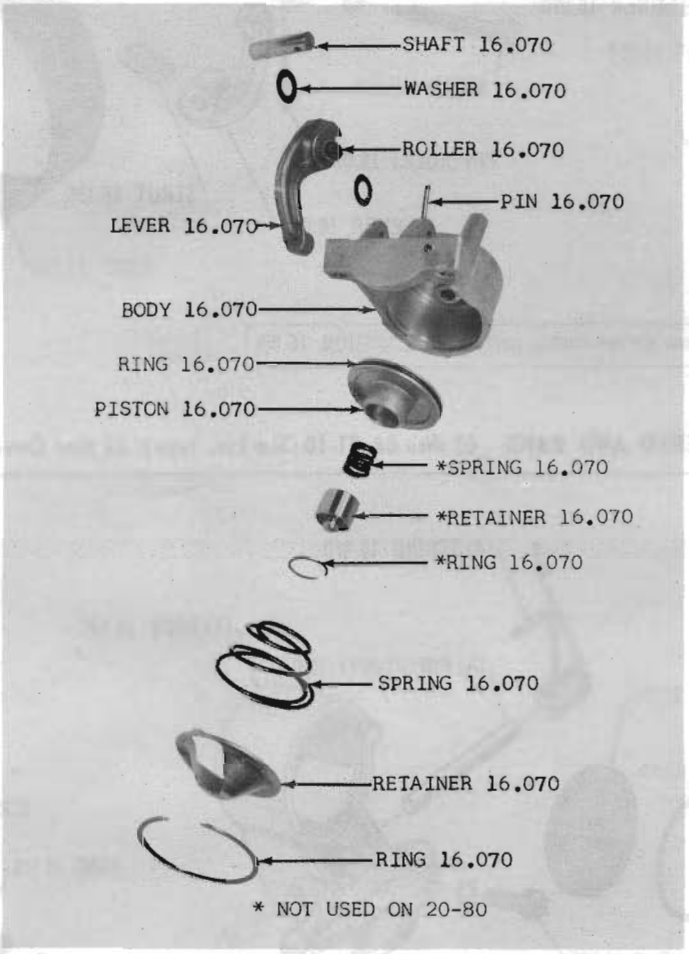

REAR SERVO 60-61 ALL MODELS

Copyright 1963 American Motors Corp.

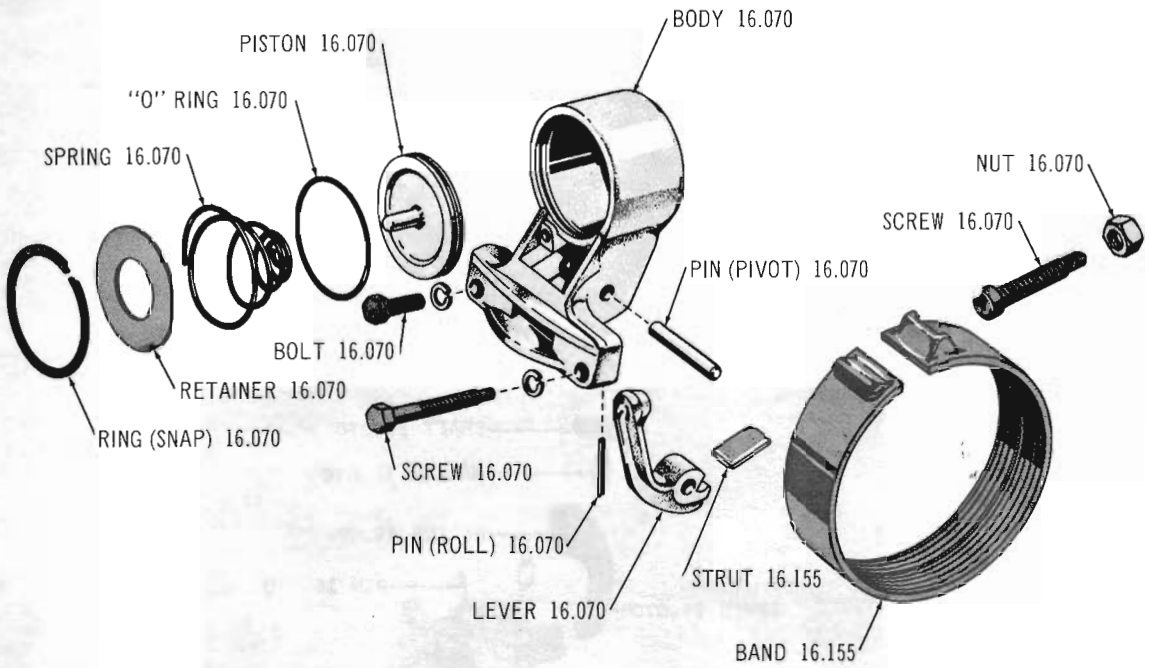

All parts shown are serviced as part of TRANSMISSION 16.001

REAR SERVO AND BAND 62 thru 64 01-10 (Six-1st. type): 62 thru Current 10-80 (V8)

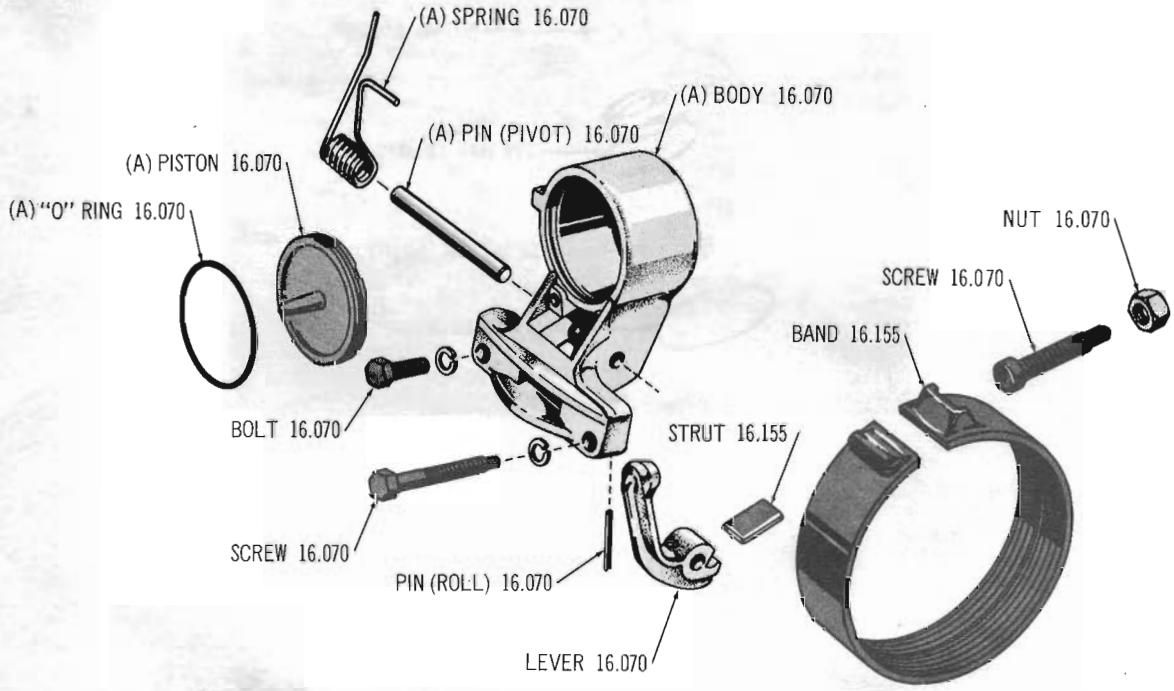

All parts shown are serviced as part of TRANSMISSION 16.001

(A) Part of SERVO ASSY. 16.075

REAR SERVO AND BAND 62 thru 64 01-10 (SIX-2nd Type): 65 01-10-80 (SIX)

Copyright 1963 American Motors Corp.

FRONT PUMP, CLUTCHES AND CARRIER 62 thru Current ALL MODELS

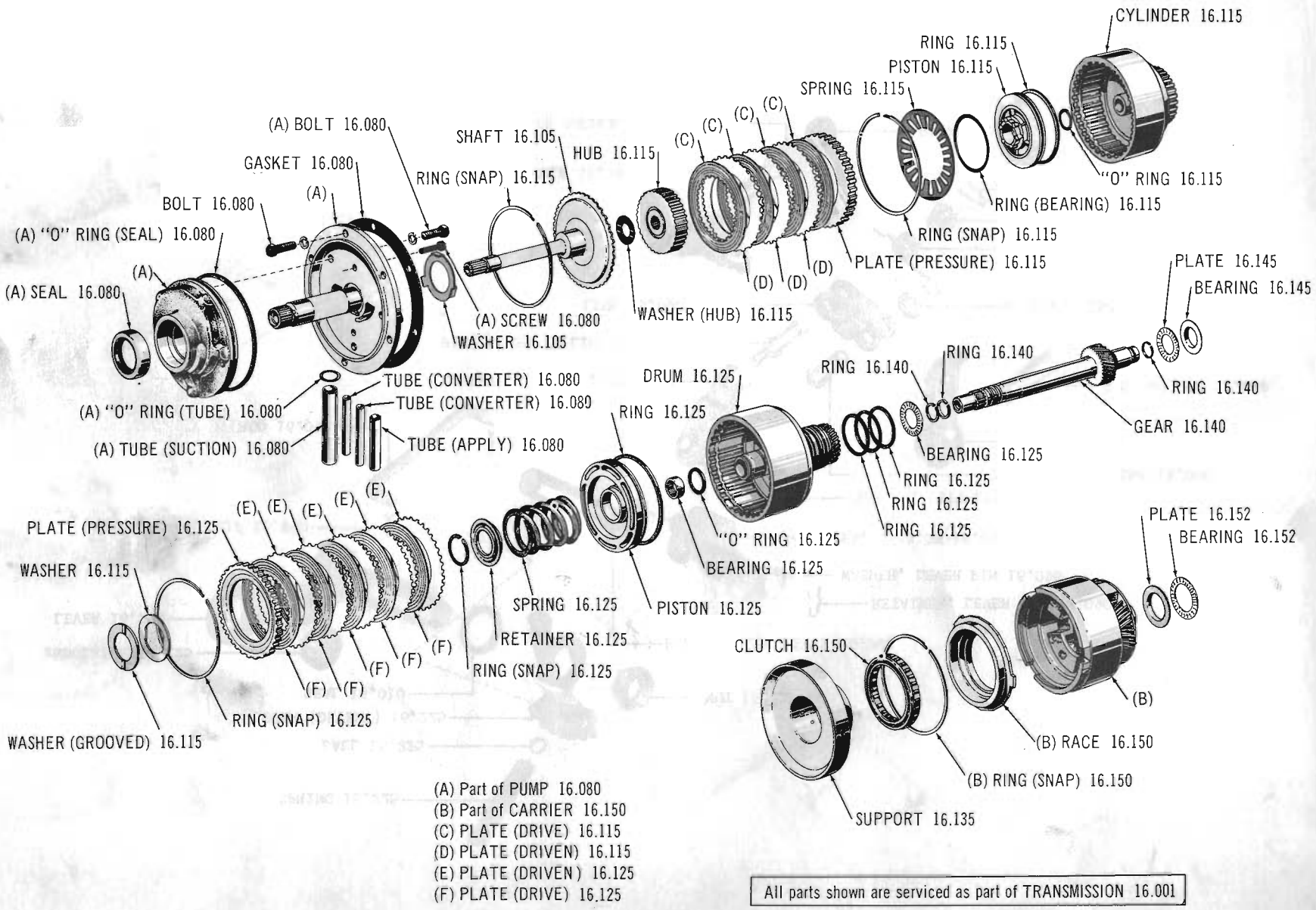

(A) Part of PUMP 16.080
(B) Part of CARRIER 16.150
(C) PLATE (DRIVE) 16.115
(D) PLATE (DRIVEN) 16.115
(E) PLATE (DRIVEN) 16.125
(F) PLATE (DRIVE) 16.125

All parts shown are serviced as part of TRANSMISSION 16.001

Copyright 1963 American Motors Corp.

Printed in U.S.A.

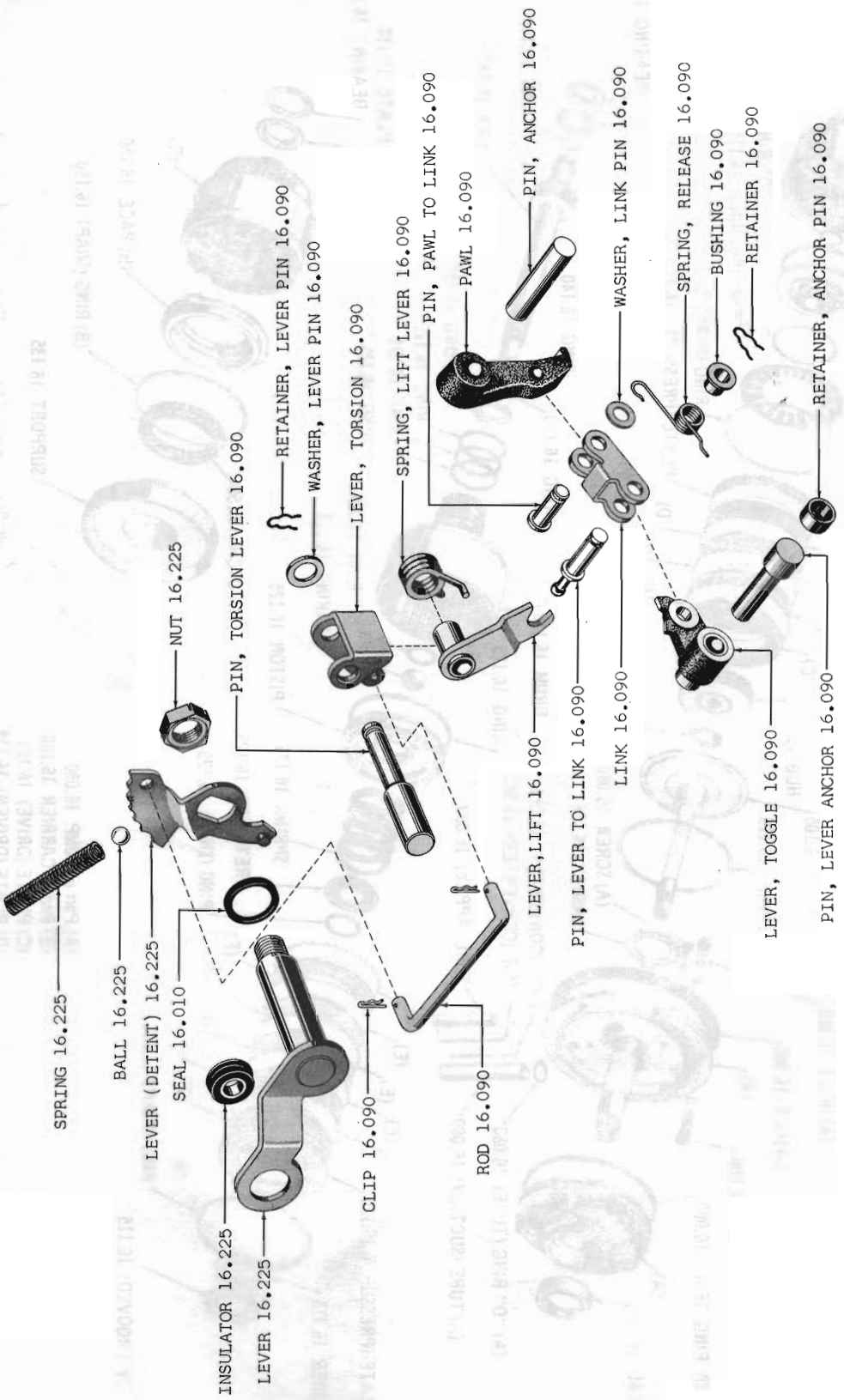

PARKING LOCK AND MANUAL CONTROL 60-61 01

Copyright 1963 American Motors Corp.



PARKING LOCK AND MANUAL CONTROL 60-61 10-20-80

Copyright 1963 American Motors Corp.

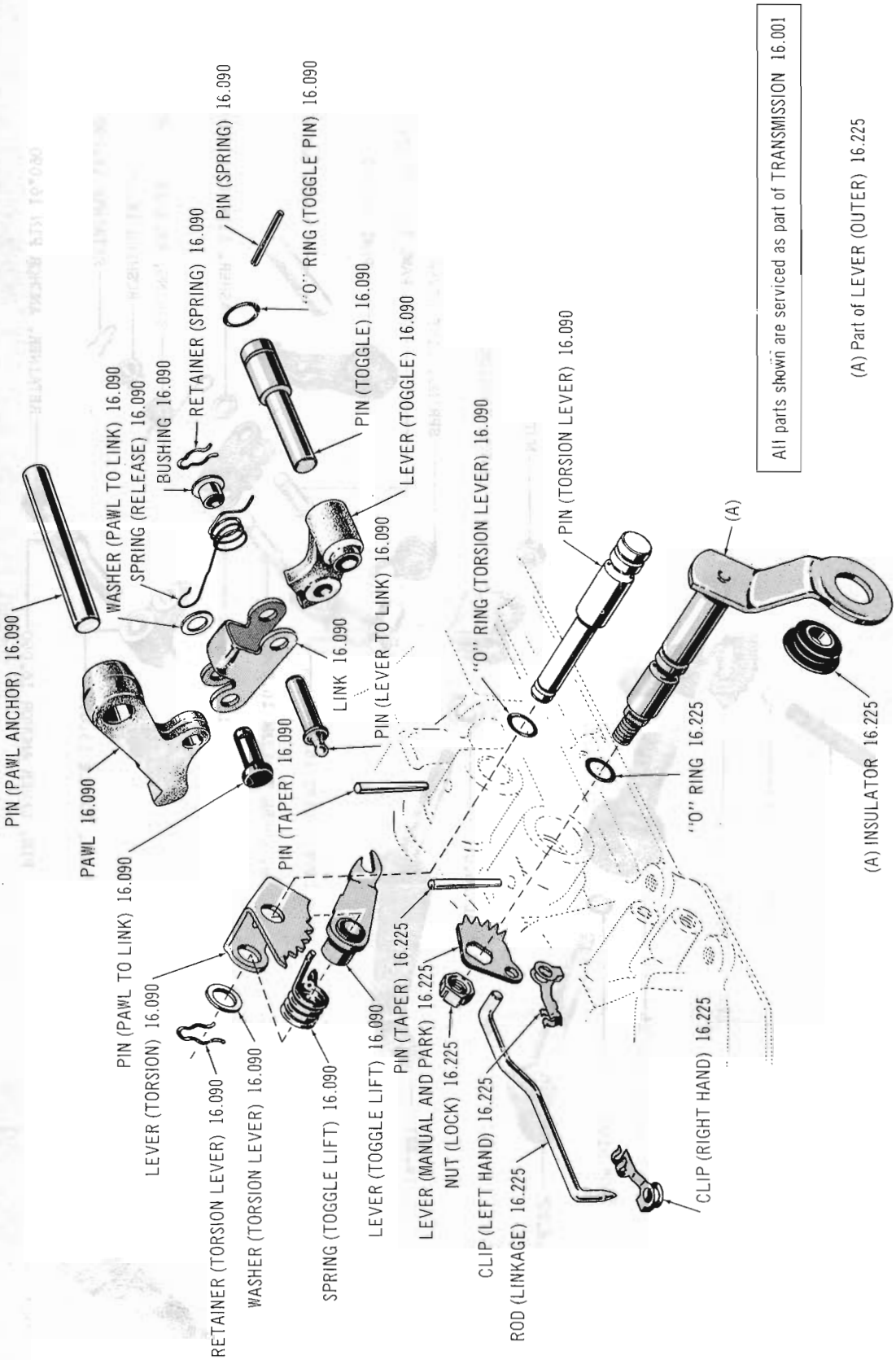

PARKING LOCK AND MANUAL CONTROL 62 thru Current ALL MODELS

Copyright 1963 American Motors Corp.

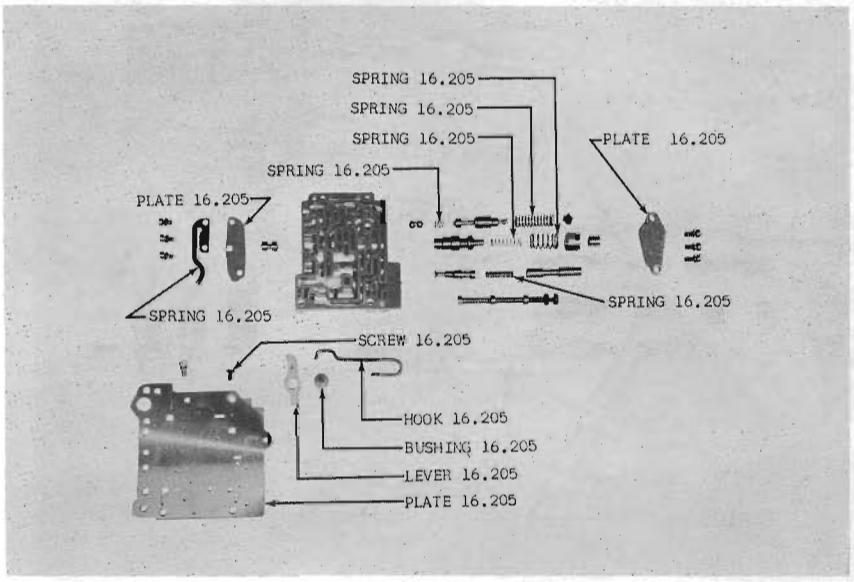

UPPER VALVE BODY 60-61 01-10

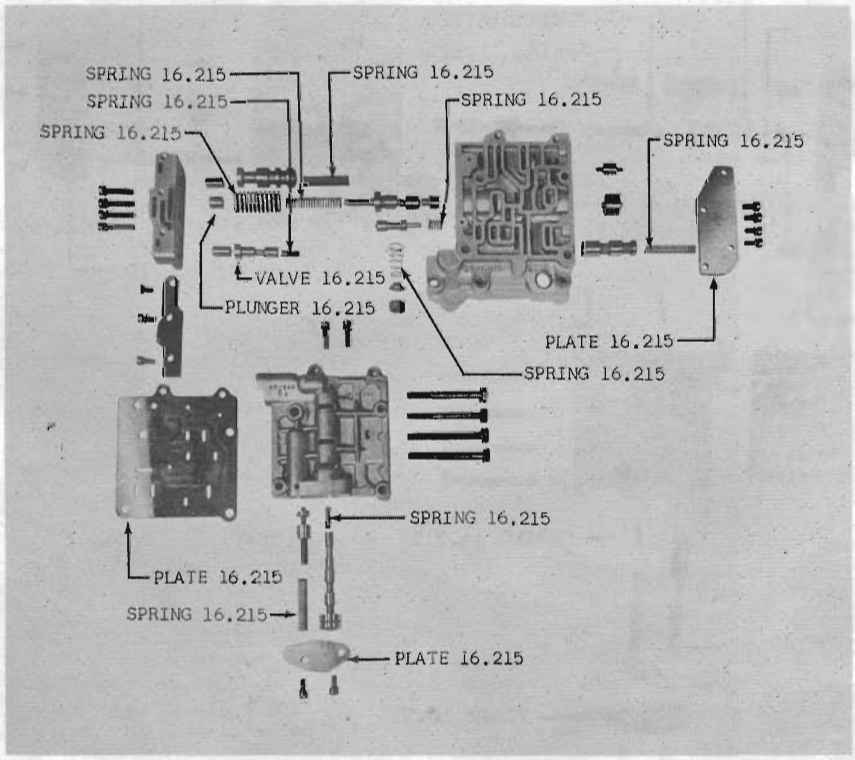

LOWER VALVE BODY 60-61 01-10

Copyright 1963 American Motors Corp.

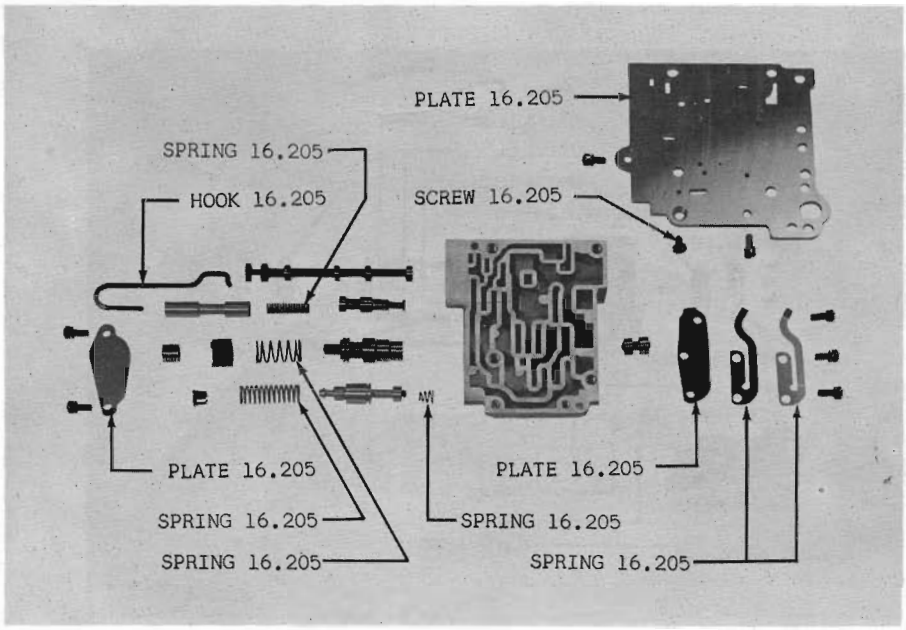

UPPER VALVE BODY 60-61 20-80

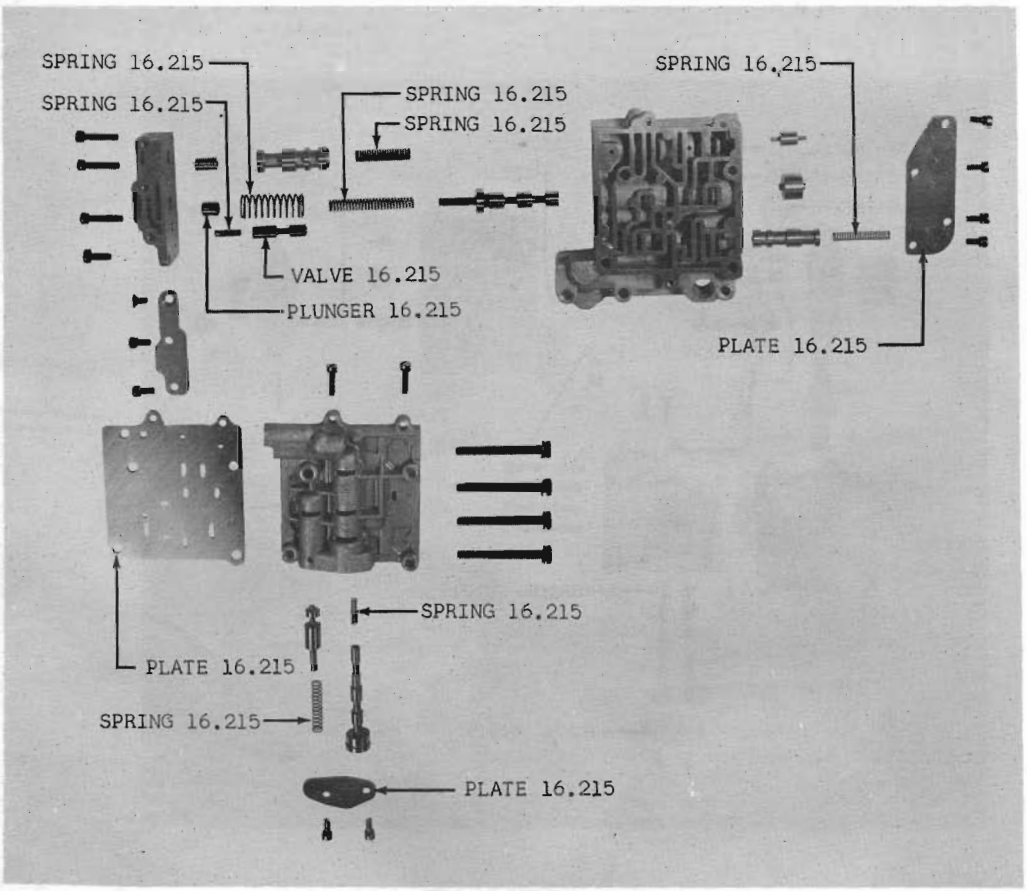

LOWER VALVE BODY 60-61 20-80

Copyright 1963 American Motors Corp.

VALVE ASSEMBLY 62-63 01-10 (Six)

Copyright 1963 American Motors Corp.

Printed in U.S.A.

VALVE ASSY. 16.195 includes all parts shown except (†).
All parts shown are serviced as part of TRANSMISSION 16.001.

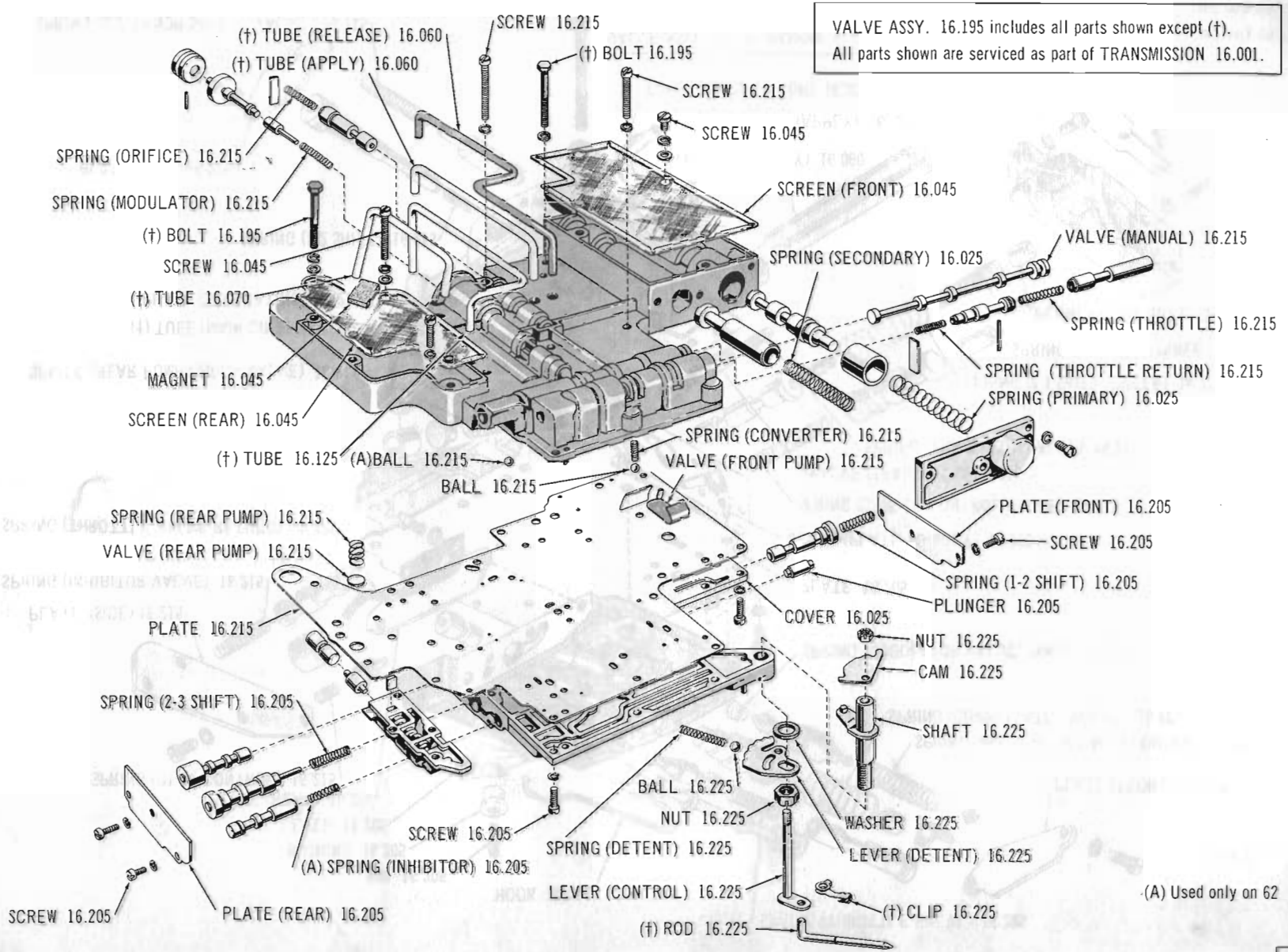

(A) Used only on 62

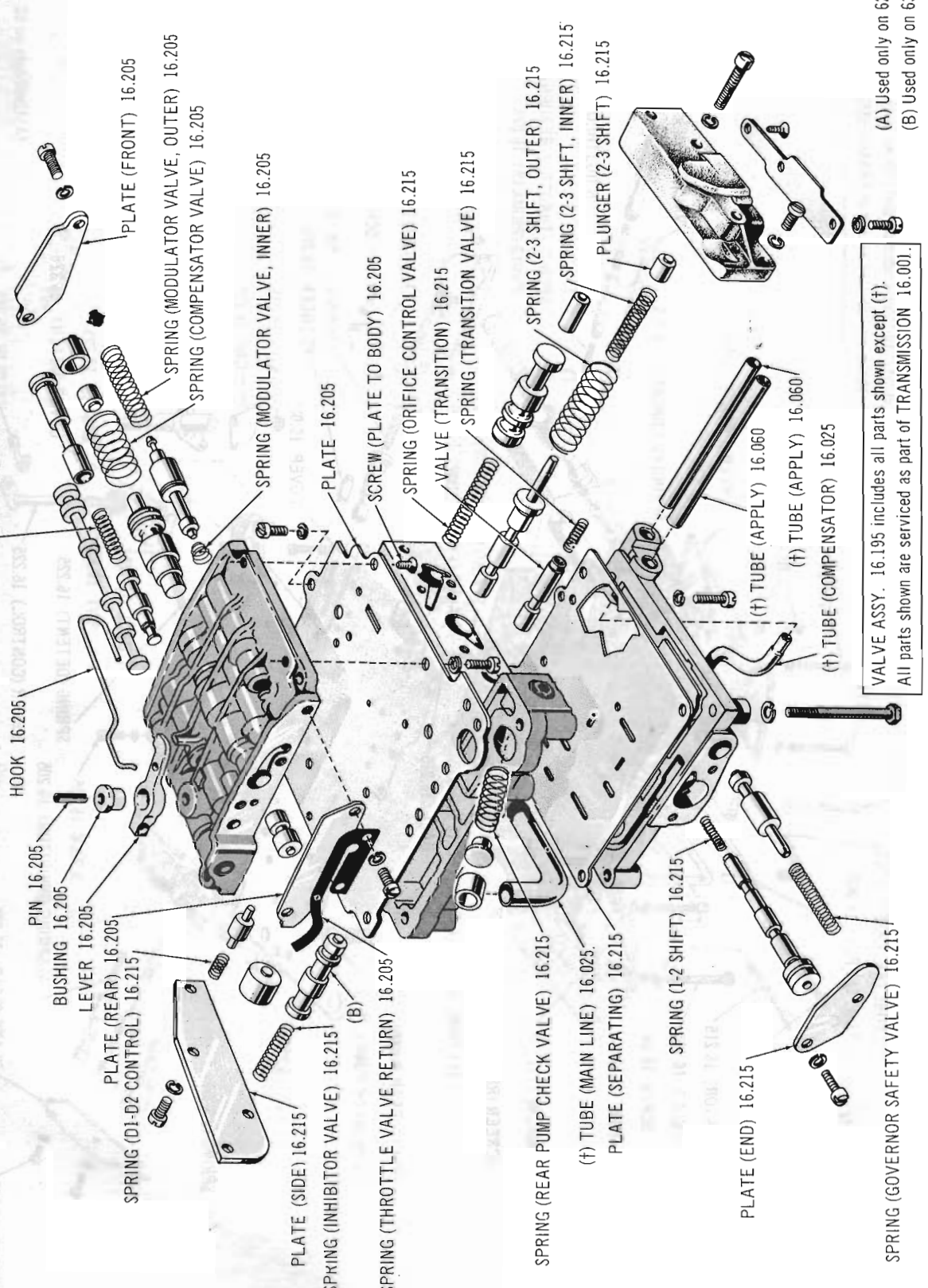

VALVE ASSEMBLY 62 thru 64 10-80 (V8-WCGS)

Copyright 1963 American Motors Corp.

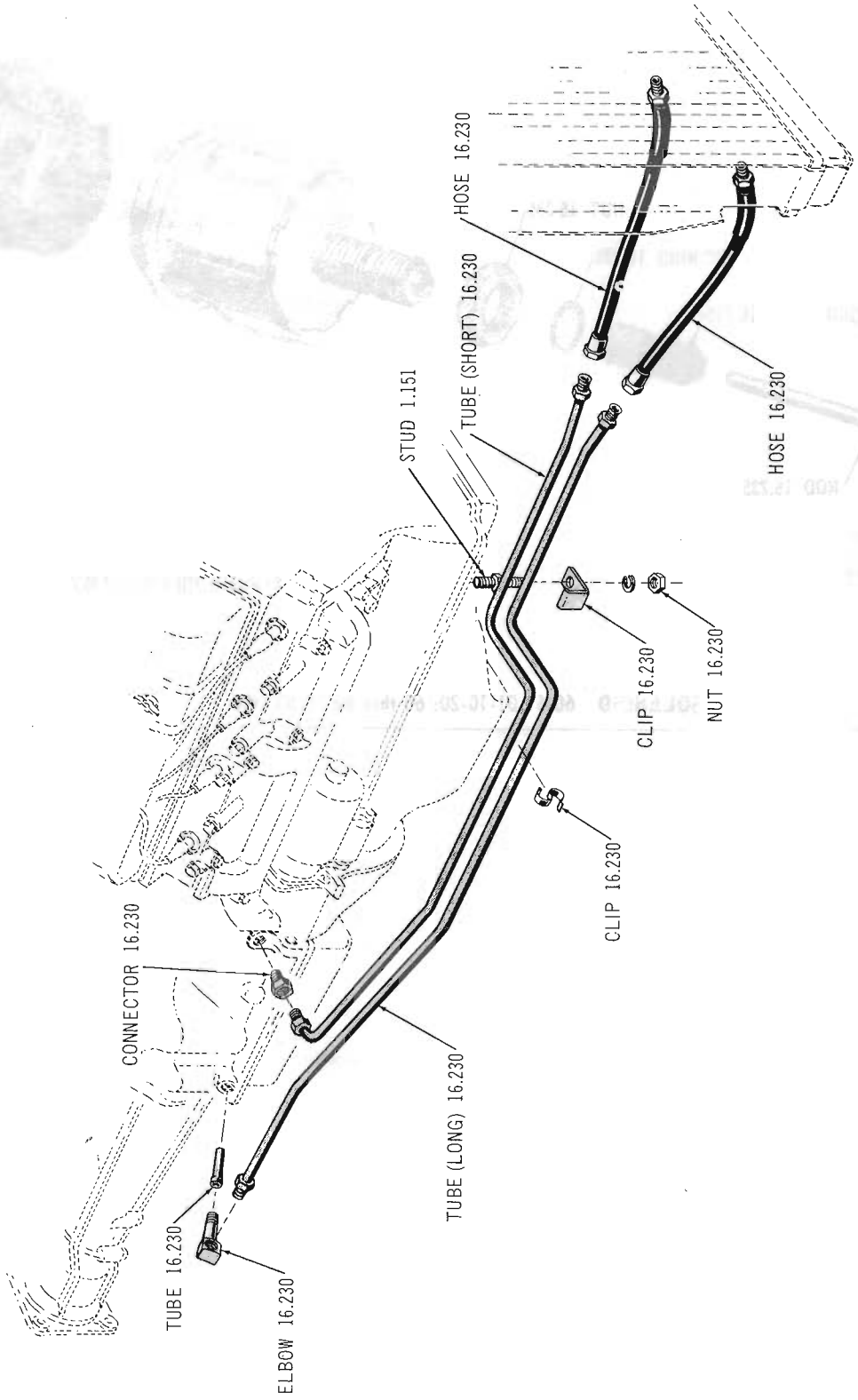

OIL COOLER TUBES 60 thru Current 10-80 (V8)

Copyright 1963 American Motors Corp.

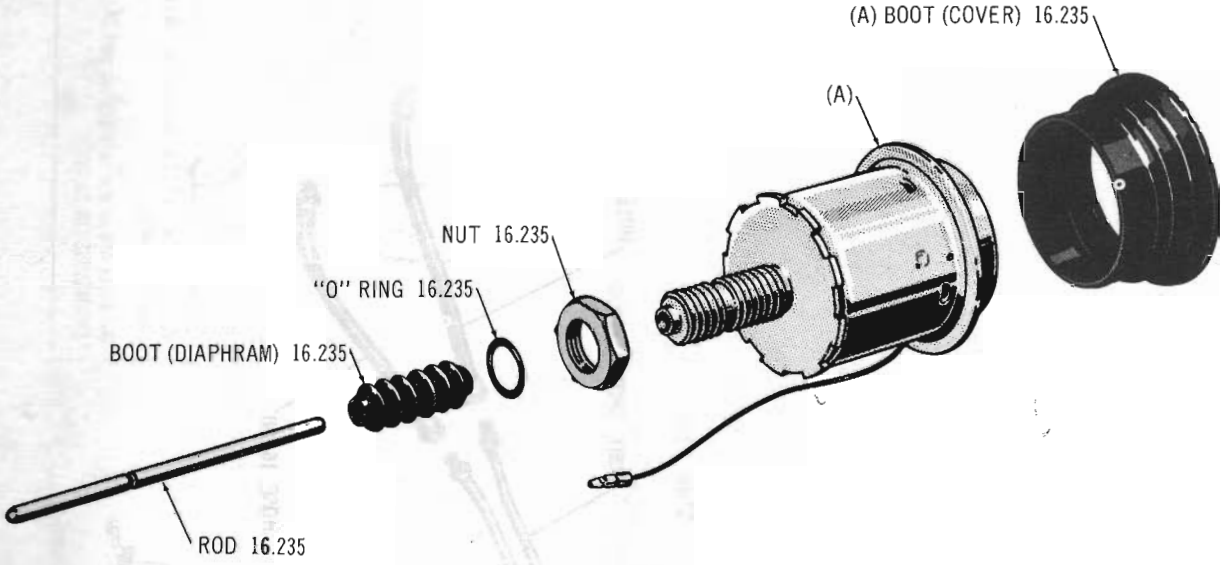

(A) Part of SOLENOID ASSY. 16.235

SOLENOID 60-61 01-10-20; 60 thru 64 10-80 (V8)

Copyright 1963 American Motors Corp.

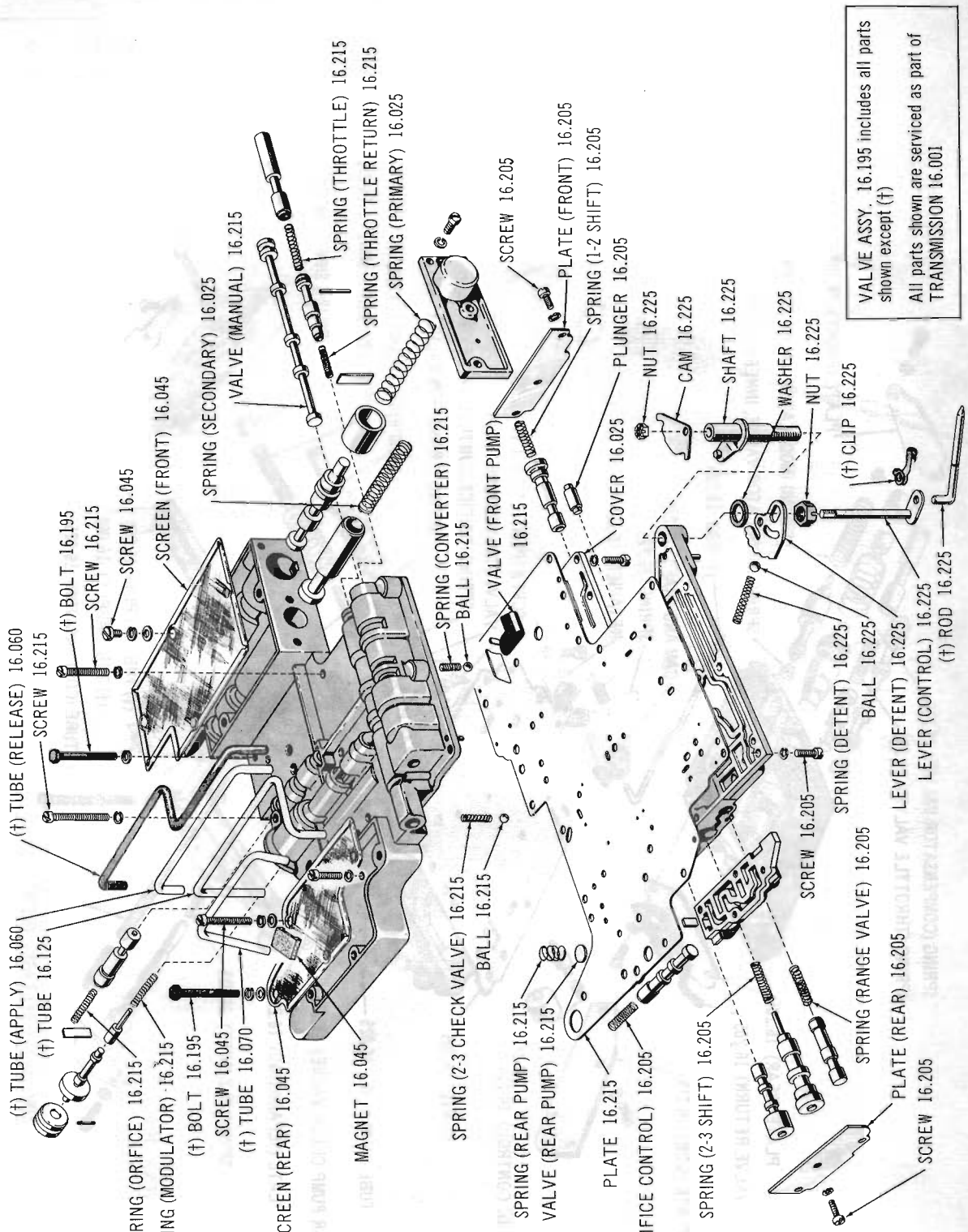

VALVE ASSEMBLY 64 01-10 (SIX): 65 ALL MODELS (SIX)

Copyright 1963 American Motors Corp.

VALVE ASSEMBLY 64-65 10-80 (V8-WCGS)

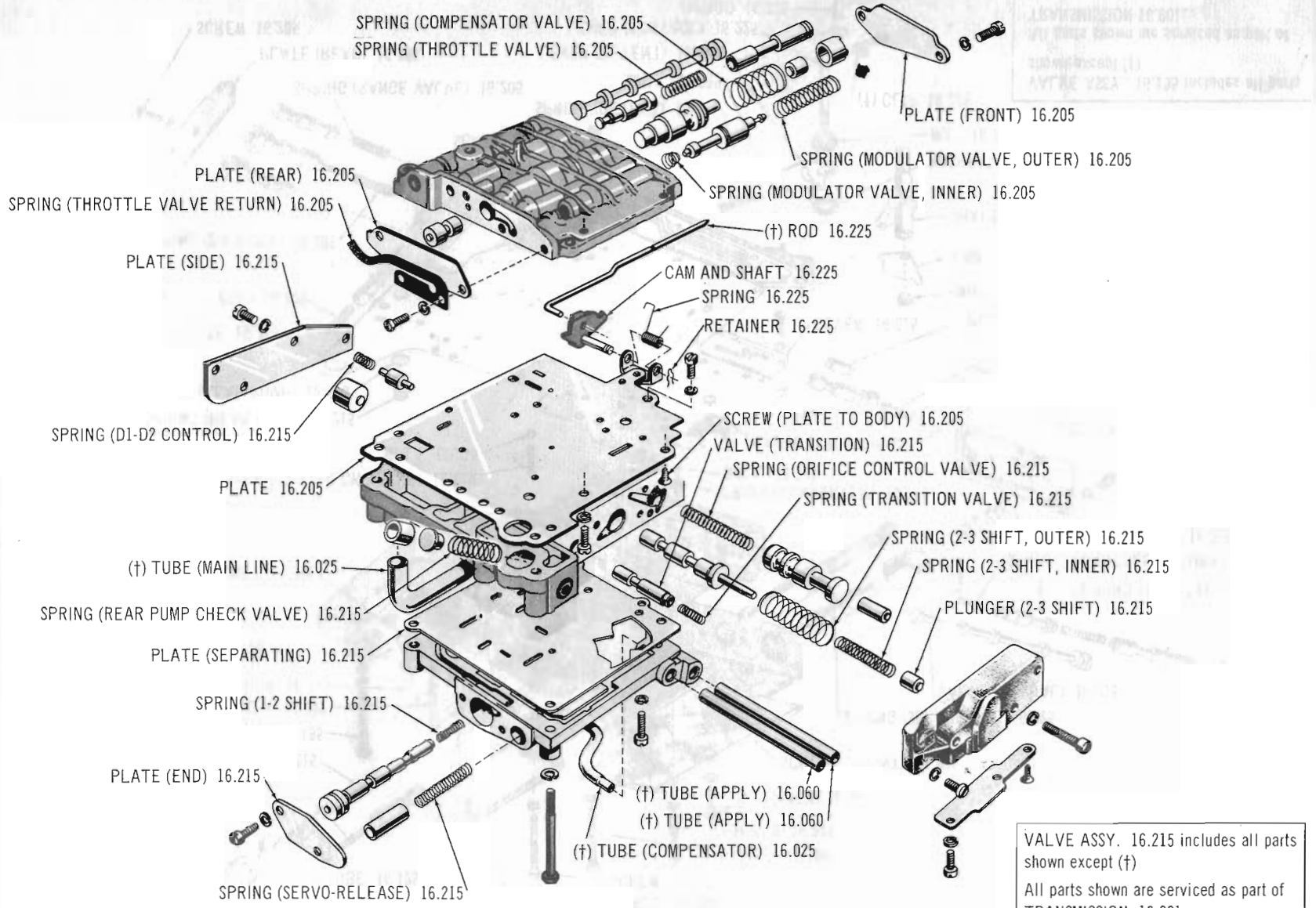

VALVE ASSY. 16.215 includes all parts shown except (†)

All parts shown are serviced as part of TRANSMISSION 16.001

Copyright 1963 American Motors Corp.

Printed in U.S.A.

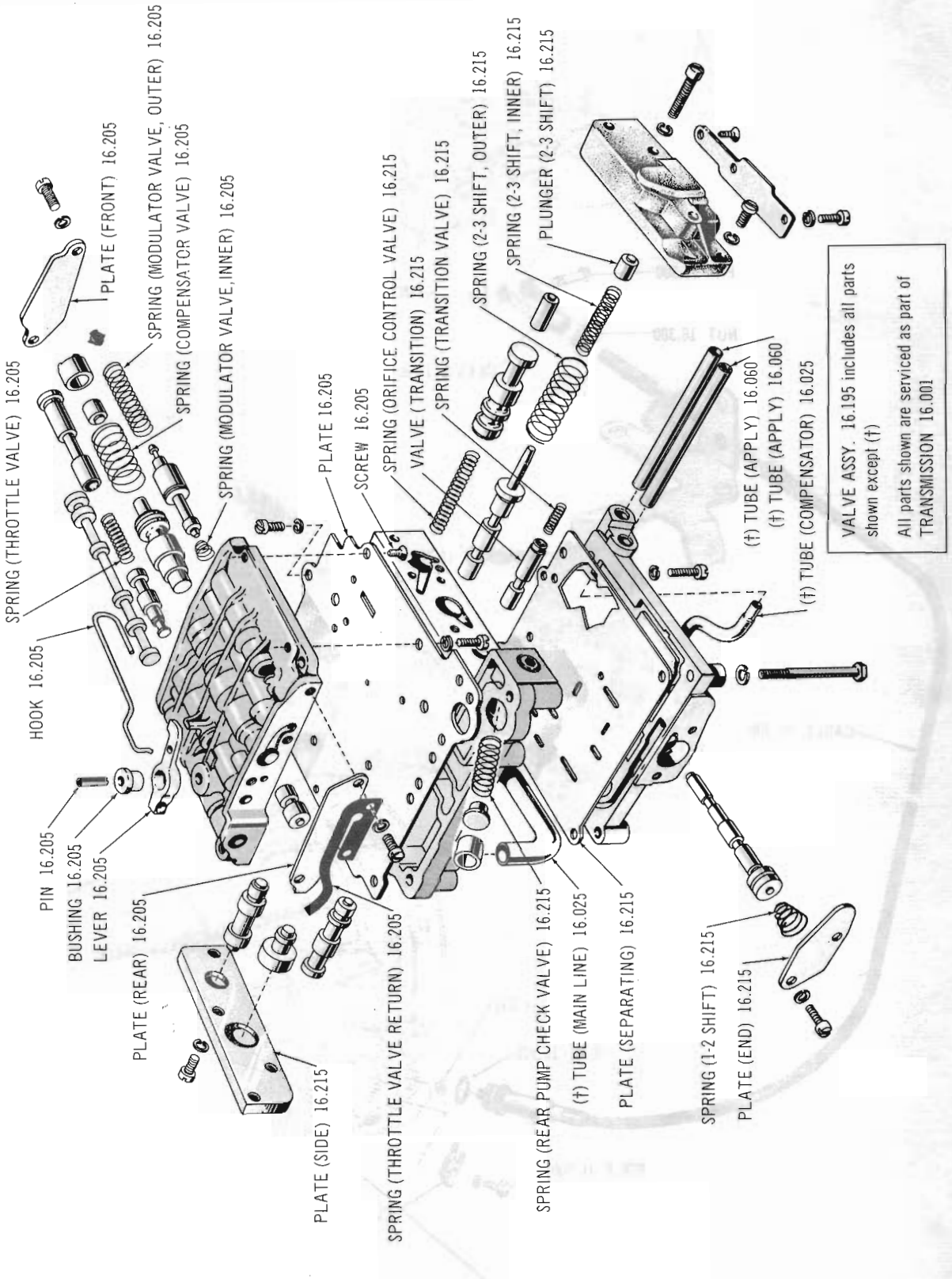

VALVE ASSEMBLY 64-65 10-80 (V8-WFGS)

Copyright 1963 American Motors Corp.

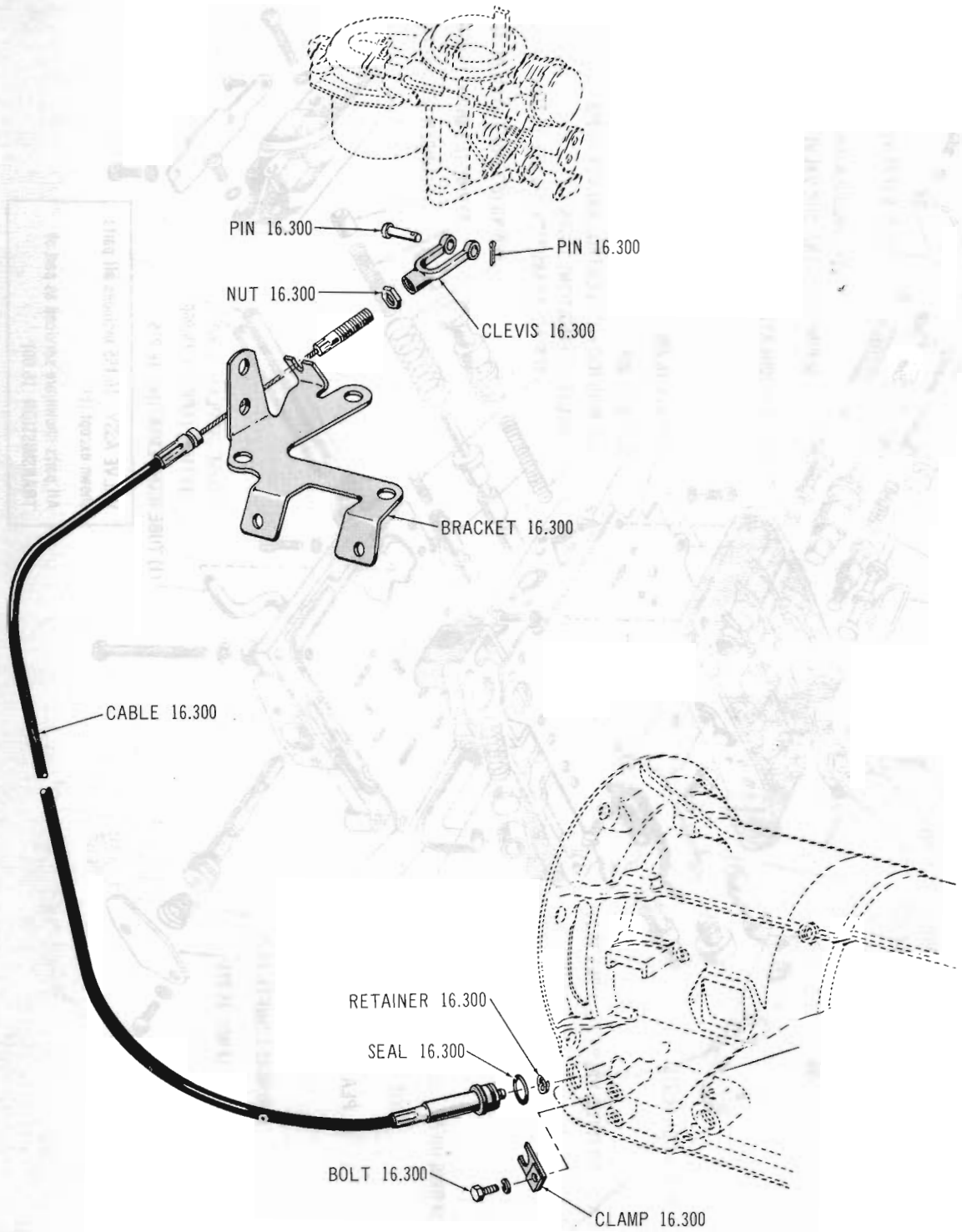

THROTTLE CONTROL CABLE 64-65 01 (LHE)

Copyright 1963 American Motors Corp.

2175

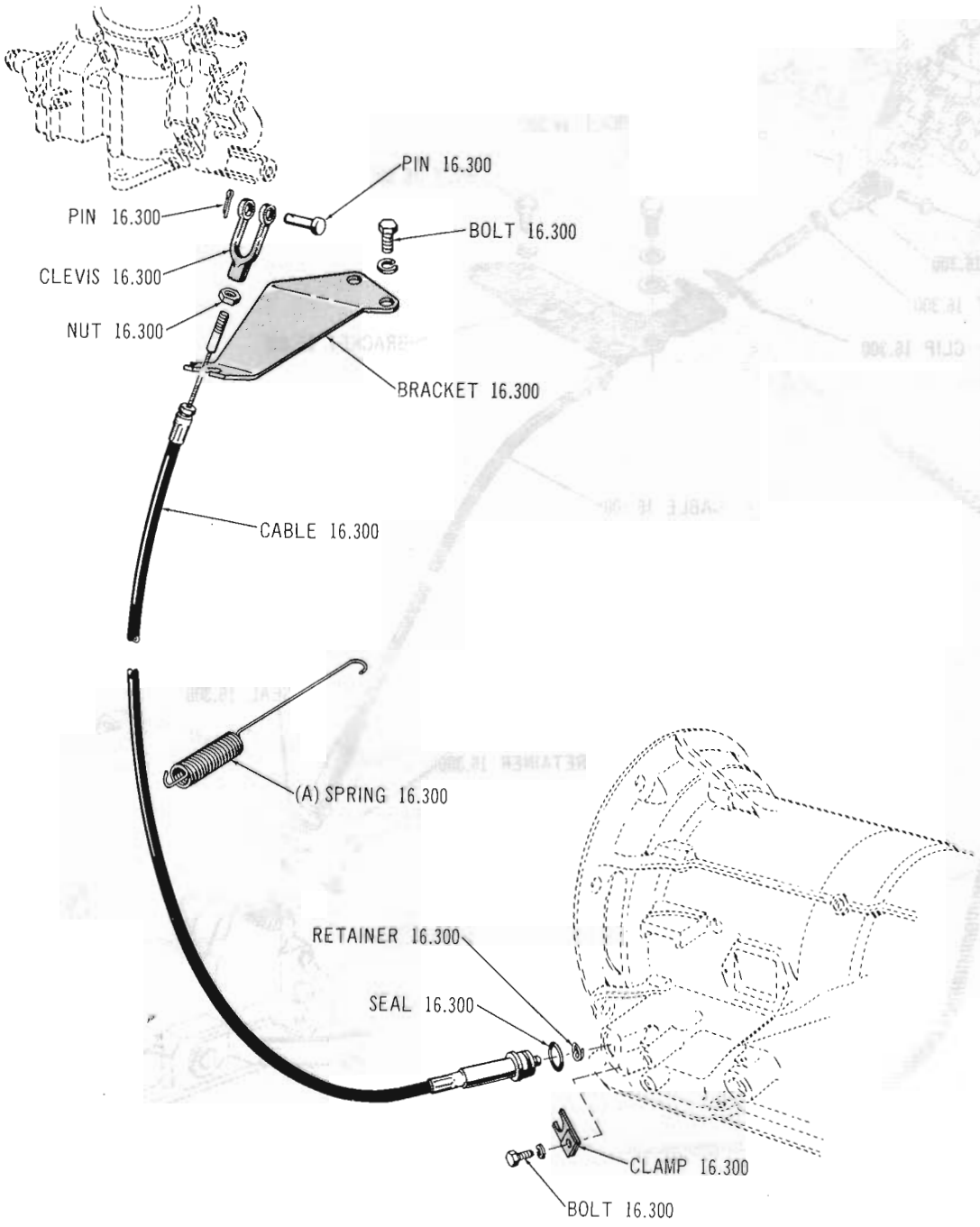

(A) Used only on 80 (OHV-232)

THROTTLE CONTROL CABLE 64-65 ALL MODELS (OHV-SIX)

Copyright 1963 American Motors Corp.

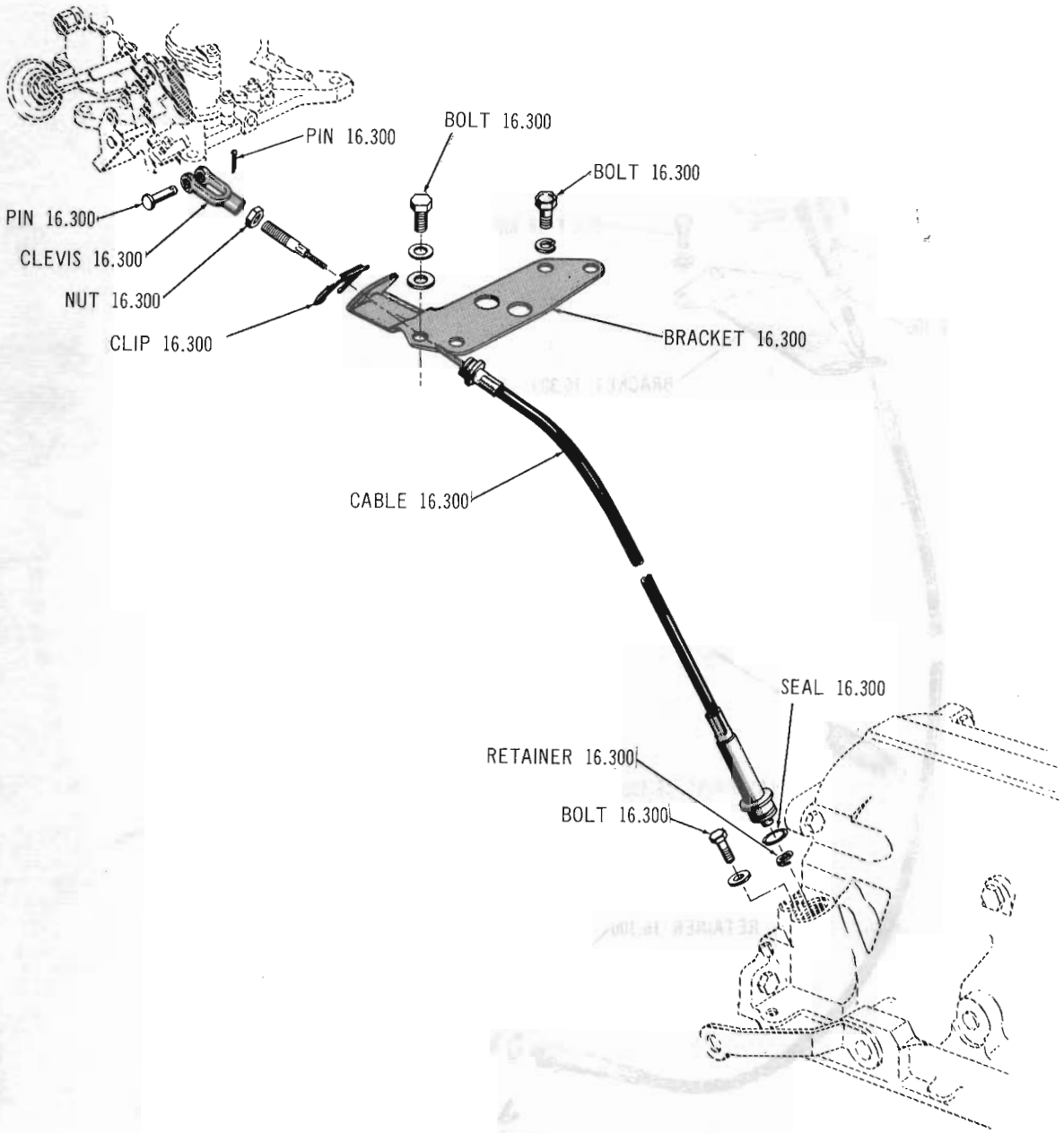

2173

THROTTLE CONTROL CABLE 65 10-80 (V8)

Copyright 1963 American Motors Corp.

GROUP NO. — DESCRIPTION — YEAR and MODEL	PRIMARY GROUP NO.	PER CAR	PART NO.	CODE
16.001 TRANSMISSION, Automatic				
60 01 (LHE) ..... *(Order Comp.)*	.....	1	315 6000	
60 01 (OHV) ..... *(Order Comp.)*	.....	1	315 9892	
61 01 ..... *(Order Comp.)*	.....	1	316 0492	
62-63 01 (13/43 Ratio) ..... *(Replaces 316 3969)*	.....	1	316 9817	
62-63 01 (15/43 Ratio)	.....	1	316 3309	
64-65 01 (LHD-9/34 Ratio) ..... *(Replaces 317 5278)*	.....	1	317 5731	
64 01 (LHD-15/41 Ratio)	.....	1	317 0272	
64 01 (LHD-13/43 Ratio)	.....	1	317 1577	
64 01 (RHD-15/41 Ratio-Note 16.225-1 Type 1)	.....	1	317 1071	
64 01 (RHD-15/41 Ratio-Note 16.225-1 Type 2)	.....	1	317 4274	
64 01 (RHD-13/43 Ratio-Note 16.225-1 Type 1)	.....	1	317 1578	
64 01 (RHD-Note 16.225-1 Type 2)	.....	1	317 4315	
65 01 (RHD-OHV-196-13/40 or 13/43 Ratio)	.....	1	317 6823	
65 01 (RHD-OHV-196-15/41 Ratio)	.....	1	317 5669	
65 01 (LHD-OHV-196-15/41 Ratio-WCGS)(LHD-OHV-199-15/41 Ratio-WCGS): ***165 01 (Can-15/41 Ratio)***	.....	1	317 5667	
65 01 (LHE-WCGS)(OHV-WCGS-13/40 Or 13/43 Ratio): ***165 01 (Can-13/43 Ratio)***	.....	1	317 6822	
65 01 (OHV-232-WCGS-13/43)	.....	1	317 7484	
65 01 (OHV-232-WFGS)	.....	1	317 5923	
60-61 10 ..... *(Order Comp.)*	.....	1	315 8247	
62 10 ..... *(Order Comp.)*	.....	1	316 3310	
63-64 10 (LHD-V8-WCGS): 65 10-80 (OHV-287-WCGS-Note 16.001-2)	.....	1	317 0901	
63 10 (LHD-13/43 Ratio): 64 10 (LHD-Six-13/43 Ratio-Note 16.001-1 Type 1) (LHD-9/34-Six-Ratio-15" Wheel-Note 16.001-1 Type 1)	.....	1	316 9818	
64 10 (LHD-Six-13/43 Ratio-Note 16.001-1 Type 2)(LHD-Six-9/34 Ratio-15" Wheel-Note 16.001-1 Type 2) ..... *(Use 317 5671)*	.....	1	317 3009	
63 10 (LHD-Six-9/34 Ratio): 64 10 (LHD-Six-9/34 Ratio-14" Wheel-Note 16.001-1 Type 1) ..... *(Replaces 316 7923)*	.....	1	316 9819	
64 10 (LHD-Six-9/34 Ratio-14" Wheel-Note 16.001-1 Type 2)	.....	1	317 3333	
65 10 (LHD-OHV-199-13/43 Ratio)	.....	1	317 5671	
65 10 (LHD-OHV-199-9/34 Ratio)	.....	1	317 5672	
64-65 10 (OHV-232-13/41 Ratio): 65 80 (OHV-232-13/41 Ratio) ..... *(Replaces 317 3339)*	.....	1	320 6567	#
64 10 (OHV-232-11/39 Ratio)	.....	1	317 2882	
65 10-80 (OHV-232-WFGS-13/41 Ratio) ..... *(Replaces 317 5606)*	.....	1	320 6569	#
64 10 (V8-WFGS): 65 10-80 (V8-287-WFGS-Note 16.001-4)	.....	1	317 2591	
65 10 (LHD-V8-WCGS-15/43 Ratio-Note 16.001-3): 65 80 (OHV-287-WCGS				
65 10 (LHD-V8-287-WCGS-15/43 Ratio-Note 16.001-3): 65 80 (OHV-287-WCGS-Note 16.001-3)	.....	1	317 5421	#
65 10 (V8-287-WFGS-15/43 Or 13/41 Ratio): 65 80 (OHV-287-WFGS)	.....	1	317 5799	#
63 10 (RHD-Six-13/43 Ratio) ..... *(Use 316 9820)*	.....	1	316 8908	
63 10 (RHD-V8): 64 10 (RHD-V8-Note 16.225-1 Type 1)	.....	1	317 0902	
64 10 (RHD-V8-Note 16.225-1 Type 2): 65 10 (RHD-V8-Note 16.001-4)	.....	1	317 4399	
64 10 (RHD-13/43 Ratio-Six-Note 16.225-1 Type 1)(RHD-Six-9/34 Ratio 15" Wheels-Note 16.225-1 Type 1)	.....	1	316 9820	
64 10 (RHD-Six-13/43 and 9/34 Ratio-Note 16.225-1 Type 2)	.....	1	317 4273	
64 10 (RHD-Six-9/34 Ratio 14" Wheels-Note 16.225-1 Type 1)	.....	1	316 9821	
64 10 (RHD-Six-9/34 Ratio 14" Wheels-Note 16.225-1 Type 2)	.....	1	317 4314	
65 10 (RHD-OHV-232) ..... *(Replaces 317 5922)*	.....	1	320 6568	#

NOTE 16.001-1: Two types of Shifting linkages were used on 64 10 (Six-LHD) cars. They can be identified as
Type 1: The Shift Rod linkage is routed from the shift tube to the Bellcrank and from the Bellcrank to transmission.
Type 2: A single Shift Rod is routed from the shift tube directly to the transmission.

NOTE 16.001-2: (With Vacuum Control) used beginning with Sequence No. W-000336 thru W-001675. Used beginning with Sequence No. W-002315 thru W-002820. Used beginning with Sequence No. W-003162 thru W-006085.

NOTE 16.001-3: (With Cable Control) used beginning with Sequence No. W-000001 thru W-000336. Used beginning with Sequence No. W-001675 thru W-002314. Used beginning with Sequence No.W-002821 thru thru W-003161. Used beginning with Sequence No. W-006086 thru balance of production.

NOTE 16.001-4: (With Vacuum Control) used prior to Sequence No. W-000336.

NOTE 16.001-5: (With Vacuum Control) used beginning with Sequence No. W-000336 thru W-002398. Used beginning with Sequence No. W-002519 thru W-003161. Used beginning with Sequence No. W-003304 thru W-007486.

NOTE 16.001-6: (With Cable Control) used beginning with Sequence No. W-000001 thru W-000335. Used beginning with Sequence No. W-002399 thru W-002518. Used beginning with Sequence No. W-003162 thru W-003303. Used beginning with Sequence No. W-007487 thru balance of production.

Copyright 1963 American Motors Corp.

GROUP NO. — DESCRIPTION — YEAR and MODEL	PRIMARY GROUP NO.	PER CAR	PART NO.	CODE
65 10 (Heavy Duty-RHD-OHV-232-13/41 Ratio-14 x 6.95 and 15 x 7.75 Wheels)	.....	1	318 2435	
65 10 (Heavy Duty-RHD-OHV-232-13/41 Ratio 14 and 15.x 7.35 Wheels)	.....	1	318 2436	
65 10 (RHD-V8-287-Note 16.001-3)	.....	1	317 5798	
63 10 (Six-13/43 Ratio-Heavy Duty): 64 10 (Six-13/43 Ratio-Heavy Duty-Note 16.001-1)(Six-9/34 Ratio 15" Wheels-Heavy Duty-Note 16.001-1 Type 1)...(Replaces 316 9287)	.....	1	316 9822	
64 10 (Six-13/43 Ratio-Heavy Duty-Note 16.001-1 Type 2)(Six-9/34 Ratio 15" Wheel-Heavy Duty-Note 16.001-1 Type 2)	.....	1	317 3334	
63 10 (Six-9/34 Ratio-Heavy Duty): 64 10 (Six-9/34 Ratio-14" Wheels-Heavy Duty-Note 16.001-1 Type 1)...(Replaces 316 9297)	.....	1	316 9823	
64 10 (Six-9/34 Ratio-14" Wheels-Heavy Duty-Note 16.001-1 Type 2)	.....	1	317 3335	
65 10 (LHD-OHV-199-9/34 Ratio-Heavy Duty)	.....	1	317 5676	
65 10 (LHD-OHV-199-13/43 Ratio-14" Wheels-Heavy Duty)	.....	1	317 5675	
60-61 20...*(Order Comp.)*	.....	1	315 6002	
65 10-80 (OHV-232-13/43 Ratio-Heavy Duty)...(Replaces 317 4453)	.....	1	320 6570	#
60 80 (Note 16.001-1)...*(Ref. Pr. List)*	.....	1	315 6003	
60 80 (Note 16.001-2): 61-62 80	.....	1	316 0016	
63 80 (RHD)	.....	1	316 8910	
63 80 (LHD): 64 80 (WCGS): 65 10-80 (OHV-327-WCGS-Note 16.001-5)...*(Replaces 316 6497)*	.....	1	317 0214	
65 10-80 (OHV-327-WCGS-13/41 or 15/43-Note 16.001-6)	.....	1	317 5420	#
64 80 (WFGS): 65 10-80 (V8-327-WFGS-Note 16.001-4)	.....	1	317 2590	
65 10-80 (OHV-327-WFGS-Note 16.001-3)	.....	1	317 5800	#

16.005 GASKET AND SEAL SET, Transmission Overhaul

60-61 01-10 (Six): 60 Thru 65 10-20-80 (V8)	.....	1	320 0703	
62 Thru 65 01-10 (Six): 65 80 (OHV-232)...*(Replaces 320 3662)*	.....	1	320 4563	#

16.007 SNAP RING SET, Automatic Transmission Overhaul

60-61 01-10-20: 63 Thru 65 10 (V8): 60 Thru 65 80 (V8)	.....	1	320 5587	
62 Thru 65 01-10 (Six): 65 80 (OHV-232)	.....	1	320 5588	

16.010 CASE, Transmission

60-61 01...(Incl. Plugs And Bushing)	.....	1	320 0892	
62 01: 63 01-10 (Six-Note 16.010-1 Type 1)...(Incl. Bushing)	.....	1	320 3350	
63 01-10 (Six-Note 16.010-1 Type 2): 64 01-10 (Six)...(Incl. Bushing)	.....	1	320 4561	
60-61 10...(Incl. Plugs And Bushing)	.....	1	320 0893	
62 10...(Incl. Bushing)	.....	1	320 3349	
65 01-10-80 (Six)...(Incl. Bushing)	.....	1	320 5977	
63 10 (Six-Heavy Duty-Note 16.010-1 Type 1)...(Incl. Bushing)	.....	1	320 4560	
63 10 (Six-Heavy Duty-Note 16.010-1 Type 2): 64 10 (Six-Heavy Duty)...(Incl. Bushing)	.....	1	320 4562	
60 Thru 62 20-80...(Incl. Plugs And Bushing)	.....	1	320 0894	
63-64 10-80 (V8)...(Incl. Bushing)	.....	1	320 3972	
65 10-80 (V8)...(Incl. Bushing)	.....	1	317 6619	

ATTACHING PARTS

Case To Converter

BOLT, Hexagon	60-61 01-10 (Six): 60 Thru 65 10-20-80 (V8)	17.038	4	G180149	NA
BOLT, Hexagon	62 Thru 65 01-10 (Six-7/8" Long): 65 80 (Six-7/8" Long)	17.038	1	G179817	NA
BOLT, Hexagon	62 Thru 65 01-10 (Six-1" Long): 65 80 (Six-1" Long)	17.038	5	G180079	NA
WASHER, Plain	62 Thru 65 01-10 (Six): 65 80 (Six)	17.814	6	G120393	NA
WASHER, Lock	60-61 01-10 (Six): 60 Thru 65 10-20-80 (V8)	17.822	4	G114607	NA
WASHER, Lock	62 Thru 65 01-10 (Six): 65 80 (Six)	17.820	5	G120214	NA

SEAL, Transmission Case Oil

60-61 01: 63 Thru 65 10-80 (V8)	.....	1	315 0858
60-61 10-20-80	.....	1	315 4112

NOTE 16.010-1: Two Types of Case Assemblies were used on 63 01-10 Models. They can be identified as follows:
Type 1: Uses a 5/16" Bolt to attach the Extension Housing to the Transmission Case.
Type 2: Uses a 7/16" Bolt to attach the Extension Housing to the Transmission Case.

Copyright 1963 American Motors Corp.

GROUP NO. — DESCRIPTION — YEAR and MODEL	PRIMARY GROUP NO.	PER CAR	PART NO.	CODE
BUSHING, Transmission Case				
60-61 01-10 (Six): 60 Thru 65 10-20-80 (V8)	.....	1	320 2299	
62 Thru 65 01-10 (Six): 65 80 (OHV-232)	.....	1	320 3639	
PLUG, Transmission Case				
60-61 01-10 (Six): 60 Thru 65 10-20-80 (V8)	.....	2	315 0857	
PLUG, Transmission Case Pipe (1/8")				
60 Thru 65 01-10 (Six): 65 80 (OHV-232-1 Req.): 60 Thru 65 10-80 (V8-3 Req.)	.....	AR	315 0854	
BREATHER, Transmission Case (Screw Type)				
60 Thru 62 01-10-20: 60 Thru 65 10-80 (V8)	.....	1	315 0850	
BREATHER, Transmission Case (Drive Type)				
62 Thru 65 01-10 (Six): 65 80 (OHV-232)	.....	1	316 7560	
ELBOW, Transmission Case Breather				
62-63 01-10	.....	1	316 5779	
BAFFLE, Transmission Case Breather				
62 01-10	.....	1	320 3706	
PIN, Transmission Case Front Brake Band Anchor				
62 Thru 65 01-10-80	.....	1	315 0859	
16.015 PAN, Transmission Oil				
60-61 01-10 (Six): 60 Thru 65 10-20-80 (V8)	.....	1	315 0868	
62 Thru 65 01: 63 Thru 65 10 (Six): 65 80 (OHV-232) ***(Replaces 320 3576)***	.....	1	320 5761	
62 10	.....	1	320 3575	
ATTACHING PARTS				
Pan To Transmission Case				
BOLT, Hexagon ..... 60-61 10-10-20: 60 Thru 63 80	17.038	14	G179814	NA
BOLT, Hexagon 62-63 01-10	17.038	15	G179814	NA
BOLT, Hexagon ..... 64-65 01-10-80 ***(Replaces 317 2050)***	9.007	15	400 0722	#
WASHER, Lock ..... 60-61 01-10-20: 60 Thru 63 80	17.820	14	G103320	NA
WASHER, Lock 62-63 01-10	17.820	15	G103320	NA
GASKET, Transmission Oil Pan				
60-61 01-10 (Six): 60 Thru 65 10-20-80 (V8)	.....	1	315 1074	
62 Thru 65 01-10 (Six): 65 80 (OHV-232)	.....	1	316 4825	
PLUG, Transmission Oil Pan Pipe				
62 10	17.518	1	G444691	NA
16.020 TUBE, Transmission Oil Filler				
60-61 01 (LHE)	.....	1	315 4736	
60 01 (OHV)	.....	1	315 9888	
61 01 (OHV)	.....	1	316 0656	
62-63 02-04-05-06-08	.....	1	316 3511	
62-63 07-09	.....	1	316 4502	
64-65 01 (LHE)	.....	1	317 1290	

Copyright 1963 American Motors Corp.

GROUP NO. — DESCRIPTION — YEAR and MODEL	PRIMARY GROUP NO.	PER CAR	PART NO.	CODE
60-61 10-20-80	.....	1	315 2962	
62 10...(Incl. Bracket) ..... ***(Replaces 316 3508)***	.....	1	316 6224	
63 10 (Six)	.....	1	316 7008	
64-65 01 (OHV-196): 65 01 (OHV-199): 64 10 (Six): 65 10 (OHV-199): 65 10-80 (OHV-232) ..... ***(Replaces 317 2862, 317 4640)***	.....	1	317 2861	
64-65 10 (RHD-V8)	.....	1	317 4416	
62 80	.....	1	316 3583	
63 10 (V8): 64 10 (LHD-V8): 65 10 (LHD-V8): 63 Thru 65 80 (V8): ***65 10 (OHV-327-Heavy Duty)*** ..... ***(Replaces 316 7221, 317 2864)***	.....	1	317 2863	

CAP, Transmission Oil Filler (Incl. Gauge)

60-61 01 (LHE): 60-61 10-20-80: 62 80 (18-3/4" Long)	.....	1	315 1602	
64-65 01: 63 Thru 65 10 (Six): 65 80 (Six) (20-1/4" Long) ..... ***(Replaces 316 7018, 317 2859, 317 2860)***	.....	1	317 2858	
60-61 01 (OHV)(22-3/4" Long)	.....	1	315 9889	
62 01-10: 63 01 (22-1/16" Long)	.....	1	316 3512	
63 Thru 65 10-80 (V8)(16-37/64" Long) ..... ***(Replaces 316 7229, 317 2866)***	.....	1	317 2865	

BRACKET, Transmission Oil Filler Tube

60-61 01 (LHE)	.....	1	315 4703	
60 01 (OHV)	.....	1	315 9890	
61 01 (OHV)	.....	1	316 0657	
62 01 (LHE): 63 02-04-05-06-08 (LHE)	.....	1	316 3513	
62 01 (OHV-LCV): 63 02-04-05-06-08 (OHV-LCV)	.....	1	315 9890	
62-63 07-09	.....	1	316 4481	
64-65 01 (LHE)	.....	1	317 4634	
65 01-10 (OHV-199): 64-65 10 (OHV-232): 65 80 (OHV-232)	.....	1	317 4341	
60-61 10	6.510	1	314 6433	
63-64 10 (LHD-OHVA): ***65 10 (RHD-OHV-196)***	.....	1	316 7009	
64 01 (OHV): 65 01 (LHD-OHV): 63-64 10 (OHVC)	.....	1	316 7010	
63-64 10 (RHD-Six)	.....	1	316 7980	
64-65 10 (RHD-V8)	.....	1	317 4398	
60-61 20-80	.....	1	315 2964	
62 80	.....	1	316 3580	
63 10-80 (V8): 64-65 10-80 (LHD-V8)	.....	1	316 8854	

ATTACHING PARTS

Bracket To Block

BOLT, Hexagon	60 Thru 62 20-80	17.038	1	G179834	NA
BOLT, Hexagon	63 80	17.038	1	G180118	NA
NUT, Hexagon.....	***65 10 (RHD-V8)***	17.406	1	G120369	NA
WASHER, Lock	60 Thru 63 20-80: ***65 10 (RHD-V8)***	17.820	1	G120382	NA

Tube To Side Plate

NUT, Hexagon.....	64-65 10-80 (V8)	17.406	1	G120368	
WASHER, Lock	64-65 10-80 (V8)	17.820	1	G120214	NA

SEAL, Transmission Oil Filler Tube

62 10	.....	1	316 3509	

GASKET, Transmission Oil Filler Tube

63 Thru 65 01-10-80	.....	1	317 1177	

16.025 VALVE, Transmission Pressure Regulator

60 01-10: 61 10	.....	1	315 1131	
61 01	.....	1	316 1220	
63 10 (V8): 60 Thru 65 80	.....	1	315 7022	
64-65 10 (V8)	.....	1	317 3340	
60-61 20	.....	1	315 3498	

ATTACHING PARTS

Regulator Valve To Case

SCREW, Machine.....	60-61 01-10-20-80: 62 Thru 65 10-80 (V8)	.....	2	315 1141	
WASHER, Lock	60-61 01-10-20-80: 62 Thru 65 10-80 (V8)	17.820	2	G103320	NA

Copyright 1963 American Motors Corp.

GROUP NO. — DESCRIPTION — YEAR and MODEL	PRIMARY GROUP NO.	PER CAR	PART NO.	CODE
COVER, Transmission Pressure Regulator Valve				
60-61 01-10 (Six)	.....	1	315 1128	
62 Thru 65 01-10 (Six): 65 80 (OHV-232)	.....	1	316 4818	
60 Thru 65 10-80 (V8)	.....	1	315 3499	
ATTACHING PARTS Cover To Valve				
SCREW, Machine..... 60-61 01-10-20-80: 62 Thru 65 10-80 (V8)	17.602	8	G189385	NA
TUBE, Transmission Pressure Regulator Valve Lubrication Line				
60-61 01-10-20-80: 62 Thru 65 10-80 (V8)	.....	1	315 1152	
TUBE, Transmission Pressure Regulator Valve Compensator				
60-61 01-10-20-80: 62 Thru 65 10-80 (V8)	.....	1	315 1153	
TUBE, Transmission Pressure Regulator Valve Main Line				
60-61 01-10-20-80: 62 Thru 65 10-80 (V8)	.....	1	315 1154	
SPRING, Transmission Pressure Regulator Secondary Valve				
62 Thru 65 01-10 (Six): 65 80 (OHV-232)	.....	1	316 4954	
SPRING, Transmission Pressure Regulator Primary Valve				
62 Thru 65 01-10 (Six): 65 80 (OHV-232)	.....	1	316 4953	
16.030 CONVERTER, Transmission				
60-61 01-10...(Incl. Ring Gear)	.....	1	315 0314	
62 Thru 64 01: 65 01 (OHV-196)(LHE): 62 Thru 64 10 (Six-196)... (Incl. Ring Gear)	.....	1	316 3519	#
65 01 (OHV-232)...(Incl. Ring Gear)	.....	1	317 7280	
65 01-10 (OHV-199)...(Incl. Ring Gear)	.....	1	317 8756	
60-61 20...(Less Ring Gear)	.....	1	315 2980	
60 Thru 63 10 (V8): 64 10 (V8-Note 16.030-1): 60 Thru 65 80 (OHV-327)... (Less Ring Gear)	.....	1	315 3650	#
60 Thru 63 10 (V8): 64 10 (V8-Note 16.030-1): 60 Thru 65 80 (OHV-327)	.....	1	315 3650	
64 10 (V8-Note 16.030-2): 65 10 (V8): 65 80 (OHV-287)...(Incl. Ring Gear)	.....	1	317 6915	
64-65 10 (OHV-232): 65 80 (OHV-232)...(Incl. Ring Gear). ***(Replaces 317 3397)***	.....	1	320 6113	#
16.035 PLATE, Transmission Converter Drive				
60 Thru 65 01: 60 Thru 64 10 (Six)...(Less Ring Gear) ..... ***(Use 317 5600)***	.....	1	315 0315	
61-61 20...(Incl. Ring Gear)	.....	1	315 2987	
60 Thru 64 10 (V8): 65 10 (OHV-327): 60 Thru 65 80 (OHV-327)...(Incl. Ring Gear)	.....	1	315 3651	
64 10 (232)...(Less Ring Gear)	.....	1	317 3522	
65 10 (OHV-287): 65 80 (OHV-287)...(Less Ring Gear)	.....	1	317 6916	
65 01 (OHV-199): 65 10 (Six): 65 80 (OHV-232)...(Less Ring Gear)	.....	1	317 5600	#
ATTACHING PARTS Plate To Converter				
BOLT, Hexagon ..... 60 Thru 63 01-10-20 (6 Req. -3/4" Long x 3/8" Dia): 64-65 01-10 (OHV-199-5 Req. -3/4" Long x 3/8" Dia.): 65 10-80 (V8-287-6 Req. -3/4" Long x 3/8" Dia.) ..... ***(Use 317 3520)***	.....	AR	315 1482	
BOLT, Hexagon ..... 64 10 (OHV-232-11/16" x 7/16" Dia.): 65 01 (OHV-199-11/16" x 7/16" Dia.): 65 10-80 (Six-11/16" Long x 7/16" Dia.)	.....	1	317 3521	
BOLT, Hexagon ..... 64 10 (OHV-232-11/16" Long x 3/8" Dia.)	.....	5	317 3520	

NOTE 16.030-1: Used prior to Car Sequence No. W-166449 and Engine Serial No. 605F26.
NOTE 16.030-2: Used beginning with Car Sequence No. W-166449 and Engine Serial No. 605F26.

Copyright 1963 American Motors Corp.

GROUP NO. — DESCRIPTION — YEAR and MODEL		PRIMARY GROUP NO.	PER CAR	PART NO.	CODE
WASHER, Plain	60 Thru 63 01-10-20	17.814	6	400 1166	
WASHER, Plain	64 10 (V8): 65 01-10: 65 80 (Six)	.....	6	400 1303	
WASHER, Plain	65 10-80 (Six)	.....	1	400 1305	
NUT, Lock	60 Thru 65 80 (V8)	17.416	4	G451010	NA
	Plate To Crankshaft				
BOLT, Hexagon	60 Thru 65 01-10-20-80	.....	6	315 1407	
PLATE, Transmission Converter Drive Reinforcement					
60 Thru 65 01-10-20-80		.....	1	315 2968	
16.040 HOUSING, Transmission Converter (Incl. Dowels)					
60-61 01-10		.....	1	315 0806	
62-63 01-10 (Six)	***(Replaces 316 3312)***	.....	1	316 6506	
64 01 (LHE): 64-65 01 (OHV-196): 64 10 (OHV-196)		.....	1	317 1964	#
65 01 (OHV-199): 64-65 10 (OHV-232): 65 10 (OHV-199): 65 80 (OHV-232)...(Less Dowels)		.....	1	317 2626	
60-61 20-80: 62 Thru 65 10-80 (V8)	***(Replaces 315 7919)***	.....	1	320 2547	
ATTACHING PARTS					
	Housing To Cylinder Block				
BOLT, Hexagon	60-61 01-10 (OHVC-1 Req. -1-1/4" Long): 65 01 (1-1/4" Long-3 Req.): 64 10 (OHVC-3 Req.): 65 10-80 (Six)	17.038	AR	G179841	NA
BOLT, Hexagon	60-61 01-10 (OHVC-2-1/2" Long)	17.038	2	G179849	NA
BOLT, Hexagon	60-61 01-10 (3-1/2" Long)	17.038	2	G187044	NA
BOLT, Hexagon	61 10 (OHVA-1-3/8" Long-1 Req.): 62 Thru 64 01-10 (1-3/8" Long-3 Req.)	17.038	AR	G180125	NA
BOLT, Hexagon	61 10 (OHVA-2-5/8" Long)	17.038	2	G186278	NA
BOLT, Hexagon	62-63 01-10 (OHVC-2-5/8" Long)	17.038	2	G451971	NA
BOLT, Hexagon	62 10 (OHVA-2-1/8" Long-2 Req.): 63 10 (OHVC-2-1/8" Long-1 Req.)	17.038	AR	G186307	NA
BOLT, Hexagon	62 10 (OHVA-2-3/8" Long)	17.038	2	G186308	NA
BOLT, Hexagon	63 10 (OHVA-2-3/4" Long-4 Req.): 63 10 (OHVC-2-3/4" Long-2 Req.): 65 01 (2 Req.)	17.038	AR	G181384	NA
BOLT, Hexagon	60 Thru 65 10-20-80 (LHD-2-3/4" Long-6 Req.): ***63 80 (RHD-2-3/4" Long-4 Req.)***	17.038	AR	G179869	NA
BOLT, Hexagon	63-64 10 (V8): ***63 80 (RHD-3" Long)***	17.038	2	G179870	NA
BOLT, Hexagon	65 10 (OHV-199): 64-65 10 (OHV-232): 65 80 (Six)	17.038	2	G179868	NA
WASHER, Plain	60 01-10 (7/8" O. D. -3 Req.): 62-63 01 (7/8" O. D. -4 Req.): 65 01: 62 10 (OHVC-7/8" O. D. -4 Req.): 63 10 (OHVA-7/8" O. D. -6 Req.): 63 10 (OHVC-7/8" O. D. -1 Req.) ***(Replaces 800 0165)***	17.814	AR	400 1104	
WASHER, Plain	60 Thru 63 01-10 (11/16" O. D. -3 Req.): 65 01: 62 10 (OHVA-11/16" O. D. -8 Req.): 65 10-80 (Six) ***(Replaces 800 0162)***	17.814	AR	400 1101	
WASHER, Plain	60-61 20-80 ***(Replaces 800 0178)***	17.814	6	400 1115	
WASHER, Plain	62 Thru 65 10-80 (V8)	17.814	6	400 1156	
WASHER, Lock	60 Thru 63 01 (5 Req.): 60 10 (5 Req.): 61 10 (OHVC-3 Req.): 65 01: 61 10 (OHVA-5 Req.): 62 10 (OHVA-7 Req.): 62 10 (OHVC-5 Req.): 63 10 (OHVA-7 Req.): 63 10 (OHVC-6 Req): 65 10-80 (Six)	17.820	AR	G103321	NA
WASHER, Lock	60 Thru 65 10-20-80	17.820	6	G103328	NA
NUT, Hexagon	60 01-10 (2 Req.): 62-63 01 (2 Req.): 62 10 (OHVC-2 Req.): 62-63 10 (OHVA-4 Req.): 63 10 (OHVC-3 Req.): 65 01 (3 Req.)	17.406	AR	G103026	NA
DOWEL, Transmission Converter Housing					
60 Thru 65 01: 60 Thru 64 10 (OHV-196)		6.520	2	314 1483	
60 Thru 65 10-20-80 (V8): 64 10 (OHV-232)		5.054	2	314 5091	

Copyright 1963 American Motors Corp.

GROUP NO. — DESCRIPTION — YEAR and MODEL	PRIMARY GROUP NO.	PER CAR	PART NO.	CODE
PAD, Converter Housing Cover				
64 10 (OHV-232): 65 01 (OHV): 65 10-80 (Six)	.....	1	317 8897	
COVER, Transmission Converter Housing Front				
60-61 01-10 (OHVC)	1.058	1	315 0159	
61 10 (OHVA)	1.058	1	315 9823	
64 10 (OHV-232): 65 01 (OHV-199)(OHV-232): 65 10-80 (Six)	.....	1	317 8898	#
62 Thru 64 10 (OHVC): 62 Thru 65 01...(Incl. Gasket) ***(Replaces 316 3230, 316 9621)***	.....	1	317 4231	
62 10 (OHVA): 63 10 (LHD-OHVA)	.....	2	316 3169	
64 10 (LHD-OHVA)	.....	1	317 4229	
65 01 (OHV): 65 10 (OHV-199): 64-65 10 (OHV-232): 65 80 (OHV-232)	.....	1	317 3317	
63 10 (RHD-OHVA)	.....	1	316 8969	
60 Thru 65 10-20-80 (V8)...(Incl. Seal)	.....	1	320 1667	
ATTACHING PARTS Cover To Housing				
SCREW, Tapping..... 60 Thru 62 01-10-20-80 (4 Req.): 63-64 01-10 (Six-3 Req.): 63 Thru 65 10-80 (V8-4 Req.)	17.670	AR	G448423	NA
GASKET, Transmission Converter Housing Front Cover				
62 Thru 64 01-10 (OHVC-Six): 65 01	1.058	1	313 6797	
60 Thru 65 10-20-80 (V8)	.....	1	315 7940	
PLUG, Transmission Converter Housing				
60 Thru 62 20-80: ***63-64 10 (V8-RHD): 63 80 (RHD)***	.....	1	315 7983	
SEAL, Transmission Converter Housing Front Cover				
60 Thru 65 10-20-80 (V8)	1.058	1	315 7937	
16.042 SPACER, Transmission Converter Housing To Engine				
60-61 01-10 (OHVC)	6.521	1	314 5426	
61 10 (OHVA)	.....	1	315 9824	
62 Thru 64 01-10 (OHVC): 65 01 (LHE)(OHV-196)	.....	1	316 3233	#
65 01-10 (OHV-199): 64-65 10 (OHVC-232): 65 80 (OHV-232)	5.065	1	317 2627	#
62 Thru 64 01-10 (OHVA)	.....	1	316 3170	
60 Thru 65 10-20-80 (V8)	5.065	1	314 5085	
ATTACHING PARTS Spacer To Engine				
SCREW, Machine..... 60 01-10	6.521	2	313 0284	
SCREW, Machine..... 61 Thru 65 01-10 (Six)	5.065	2	316 0330	
SCREW, Machine..... 60 Thru 62 20-80: 63 Thru 65 10-80 (LHD-V8) ***(Replaces 800 0068)***	17.626	2	400 0987	
BOLT, Hexagon ..... ***63 80 (RHD)***	17.038	2	G179870	NA
WASHER, Lock ..... 60 Thru 65 01-10	17.824	2	G138538	NA
16.045 SCREEN, Transmission Oil				
60-61 01-10 (Six): 60 Thru 65 10-20-80 (V8) ***(Replaces 315 4582)***	.....	1	316 9500	
(Front) 62 Thru 64 01-10 (Six): 65 01-10-80 (Six-Note 16.045-1 Type 1)	.....	1	317 0356	
65 01-10-80 (Six-Note 16.045-1 Type 2)	.....	1	317 9973	
(Rear) 62 Thru 65 01-10 (Six): 65 80 (OHV-232)	.....	1	317 0355	
ATTACHING PARTS Screen To Valve Body				
CLIP, Retaining..... 60-61 01-10 (Six): 60 Thru 65 10-20-80 (V8)	.....	1	315 1159	

NOTE 16.045-1: Two Types of Front Oil Screens were used on 65 01-10-80 (Six) Series Cars. They can be identified as follows:
Type 1: The Screen does not have a Shroud.
Type 2: The Screen has a Shroud and will fit the contour of a Pan having the recessed front.

Copyright 1963 American Motors Corp.

GROUP NO. — DESCRIPTION — YEAR and MODEL	PRIMARY GROUP NO.	PER CAR	PART NO.	CODE
Front Screen To Valve Body				
SCREW, Machine..... 62 Thru 64 01-10.....	17.602	4	G453907	NA
WASHER, Plain..... 62 Thru 64 01-10.....	17.814	4	G9414401	NA
Rear Screen To Valve Body				
SCREW, Machine..... 62 Thru 65 01-10 (Six): 65 80 (OHV-232).....	17.602	2	G273181	NA
WASHER, Plain..... 62 Thru 64 01-10.....	17.814	2	G9414401	NA
MAGNET, Transmission Oil Screen				
60 Thru 65 01-10-20-80.....	.....	1	315 8610	
16.050 TUBE, Transmission Rear Oil Pump Inlet				
60-61 01-10 (Six): 63 Thru 65 10 (V8): 60 Thru 65 20-80 (V8).....	.....	1	315 1156	
RING, Transmission Rear Oil Pump Inlet Oil Seal				
60-61 01-10 (Six): 63 Thru 65 10 (V8): 60 Thru 65 20-80 (V8).....	16.235	1	315 1108	
16.055 TUBE, Transmission Rear Oil Pump Discharge				
60-61 01-10 (Six): 63 Thru 65 10 (V8): 60 Thru 65 20-80 (V8).....	.....	1	315 1161	
RING, Transmission Rear Oil Pump Discharge Oil Seal				
60-61 01-10 (Six): 63 Thru 65 10 (V8): 60 Thru 65 20-80 (V8).....	.....	1	315 1160	
16.060 BODY, Transmission Front Servo				
60-61 01: 63 Thru 65 10 (V8): 60 Thru 65 80 (V8).....	.....	1	315 2181	
62 Thru 64 01-10 (Six).....	.....	1	316 4810	#
60-61 10-20.....	.....	1	315 1043	
65 01-10 (Six): 65 80 (OHV-232)..... ***(Use 316 4810)***	.....	1	317 5950	
ATTACHING PARTS				
Servo Body To Case				
BOLT, Hexagon..... 60-61 01-10 (Six): 60 Thru 65 10-20-80 (V8).....	17.038	1	G179841	NA
BOLT, Hexagon..... 62 Thru 65 01-10 (Six): 65 80 (OHV-232-1" Long)..	17.038	1	G179818	NA
BOLT, Hexagon..... 62 Thru 65 01-10 (Six): 65 80 (OHV-232-1-3/8" Long).....	17.038	1	G179821	NA
WASHER, Lock..... 60-61 01-10 (Six): 60 Thru 65 10-20-80 (V8).....	17.820	1	G103321	NA
WASHER, Lock..... 62 Thru 65 01-10 (Six): 65 80 (OHV-232).....	17.820	2	G103320	NA
PISTON, Transmission Front Servo				
60 01.....	.....	1	315 2183	
61 01.....	.....	1	316 1209	
62 Thru 65 01-10 (Six): 65 80 (OHV-232).....	.....	1	316 4842	
60-61 10.....	.....	1	315 8263	
60-61 20.....	.....	1	315 3484	
63 Thru 65 10 (V8): 60 Thru 65 80 (V8).....	.....	1	315 4106	
SPRING, Transmission Front Servo				
60 01: 62 Thru 65 01 (Six): 62 Thru 64 10 (Six): 65 10 (OHV-199).....	.....	1	315 2176	
60-61 10.....	.....	1	315 8264	
60-61 20.....	.....	1	315 3487	
63 Thru 65 10 (V8): 60 Thru 65 80 (V8).....	.....	1	315 4115	
65 10-80 (OHV-232)..... ***(Replaces 317 8691)***	.....	1	316 1206	#
SLEEVE, Transmission Front Servo				
60 01.....	.....	1	315 2180	
61 01.....	.....	1	316 1221	

Copyright 1963 American Motors Corp.

GROUP NO. — DESCRIPTION — YEAR and MODEL	PRIMARY GROUP NO.	PER CAR	PART NO.	CODE
62 Thru 65 01-10 (Six): 65 80 (OHV-232)		1	316 4822	
60-61 10		1	315 8261	
60-61 20		1	315 3488	
63 Thru 65 10 (V8): 60 Thru 65 80 (V8)		1	315 4135	
TUBE, Transmission Front Servo Apply				
60-61 01-10-20: 63 Thru 65 10 (V8): 60 Thru 65 80 (V8)		2	315 1155	
62 Thru 65 01-10 (Six): 65 80 (OHV-232)		1	316 4977	
TUBE, Transmission Front Servo Release				
62 Thru 65 01-10 (Six): 65 80 (OHV-232)		1	316 4852	
LEVER, Transmission Front Servo				
60-61 01-10 (Six): 63 Thru 65 10 (V8): 60 Thru 65 20-80		1	315 1051	
62 Thru 65 01-10 (Six): 65 80 (OHV-232) ***(Replaces 316 4824)***		1	316 5754	
PIN, Transmission Front Servo Roll				
60 Thru 65 01-10-20-80		1	315 1018	
PIN, Transmission Front Servo Lever Pivot				
60-61 01-10 (Six): 63 Thru 65 10 (V8): 60 Thru 65 20-80 (V8)		1	315 1045	
62 Thru 64 01-10 (Six)		1	316 4981	
65 01-10 (Six): 65 80 (OHV-232)		1	317 5951	
PIN, Transmission Front Servo Dowel (Servo To Case)				
60-61 01-10 (Six): 63 Thru 65 10 (V8): 60 Thru 65 20-80 (V8)		1	315 0856	
RING, Transmission Front Servo Sleeve Snap				
60-61 01-80: 63 Thru 65 10-80 (V8)		1	315 2178	
62 Thru 65 01: 60 Thru 62 10-20: 63 Thru 65 10 (Six): 62 80: 65 80 (OHV-232)		1	315 1048	
RING, Transmission Front Servo Sleeve Oil Seal "O"				
60-61 01: 63 Thru 65 10 (V8): 60 Thru 65 80 (2" I. D.)		1	315 2179	#
60 01: 60-61 10 (1-1/3" I. D.)		1	315 1052	#
61 01 (1-1/8" I. D.)		1	316 1207	
62 Thru 65 01-10 (Six): 65 80 (OHV-232-1-7/8" I. D.)		1	316 5001	
60-61 10-20 (2-7/64" I. D.)		1	315 1047	
62 Thru 65 01-10 (Six): 65 80 (OHV-232-2-11/64" I. D.)		1	316 5002	
RING, Transmission Front Servo Piston Oil Seal				
60-61 01: 63 Thru 65 10 (V8): 60 Thru 65 80 (1/25/32" I. D.)		1	315 2177	#
60 01: 63 Thru 65 10 (V8): 60 Thru 65 80 (15/16" I. D.)		1	315 2175	#
60-61 10-20 (1-7/8" I. D.)		1	315 1049	
60-61 20 (1-11/64" I. D.)		1	315 3486	
62 Thru 65 01-10 (Six): 65 80 (OHV-232-1-7/16" I. D.)		1	316 5003	
PIN, Transmission Front Servo Piston				
62 Thru 65 01-10-80		1	315 1039	
SCREW, Transmission Front Servo Adjusting				
60-61 01-10 (Six): 63 Thru 65 10 (V8): 60 Thru 65 20-80 (V8)		1	315 1044	
62 Thru 65 01-10 (Six): 65 80 (OHV-232)		1	316 5020	

Copyright 1963 American Motors Corp.

GROUP NO. — DESCRIPTION — YEAR and MODEL	PRIMARY GROUP NO.	PER CAR	PART NO.	CODE
NUT, Transmission Front Servo Adjusting Screw				
60 Thru 64 01-10-20-80	17.410	1	G114503	NA
16.070 BODY, Transmission Rear Servo				
60-61 01-10 (Six): 63 Thru 65 10 (V8): 60 Thru 65 20-80 (V8)...(Incl. Plug)....	.....	1	315 1013	#
62-63 01-10 (Six): 64 01-10 (Six-Note 16.070-3 Type 1)	.....	1	316 4819	
64 01-10 (Six-Note 16.070-3 Type 2): 65 01-10 (Six): 65 80 (OHV-232)	.....	1	317 3552	
ATTACHING PARTS Servo Body To Case				
SCREW, Machine..... 60-61 01-10 (Six): 63 Thru 65 10 (V8): 60 Thru 65 20-80 (V8)	.....	1	315 1028	
SCREW, Machine..... 62 Thru 65 01-10 (Six): 65 80 (OHV-232)	.....	1	316 4336	
BOLT, Hexagon ..... 60-61 01-10 (Six): 63 Thru 65 10 (V8): 60 Thru 65 20-80 (V8)	.....	1	315 1029	
BOLT, Hexagon ..... 62 Thru 65 01-10 (Six): 65 80 (OHV-232)	17.038	1	G179841	NA
WASHER, Lock ..... 60-61 01-10 (Six): 63 Thru 65 10 (V8): 60 Thru 65 20-80 (V8)	17.820	2	G103322	NA
WASHER, Lock ..... 62 Thru 65 01-10 (Six): 65 80 (OHV-232)	17.820	2	G103321	NA
LEVER, Transmission Rear Servo				
60-61 01-10 (Six): 63 Thru 65 10 (V8): 60 Thru 65 20-80 (V8)	.....	1	315 1017	
62 01-10 (Note 16.070-1) ***(Ref. Pr. List)***	.....	1	320 4392	
62 01-10 (Note 16.070-2): 63 Thru 65 01-10 (Six): 65 80 (OHV-232)	.....	1	316 4828	
SHAFT, Transmission Rear Servo Lever				
60-61 01-10 (Six): 63 Thru 65 10 (V8): 60 Thru 65 20-80 (V8)	.....	1	315 3855	
PISTON, Transmission Rear Servo				
60 01	.....	1	315 1019	
61 01: 60-61 10 (Six): 63 Thru 65 10 (V8): 60 Thru 65 20-80 (V8)	.....	1	315 8717	
62 Thru 64 01-10 (Six-Note 16.070-3 Type 1)	.....	1	316 4827	
62 Thru 64 01-10 (Six-Note 16.070-3 Type 2): 65 01-10 (Six): 65 80 (OHV-232)	.....	1	317 3555	
SPRING, Transmission Rear Servo Accumulator				
60 01	.....	1	315 1023	
SPRING, Transmission Rear Servo Piston				
60 01	.....	1	315 2528	
61 01: 60-61 10 (Six): 63 Thru 65 10 (V8): 60 Thru 65 20-80 (V8)	.....	1	315 8718	
62 Thru 64 01-10 (Six-Note 16.070-3 Type 1)	.....	1	316 4885	
SPRING, Transmission Rear Servo Torsion				
62 Thru 64 01-10 (Six-Note 16.070-3 Type 2): 65 01-10 (Six): 65 80 (OHV-232)	.....	1	317 3554	
RETAINER, Transmission Rear Servo Accumulator Spring				
60 01	.....	1	315 1022	

NOTE 16.070-1: On 62 01 (13/43 Ratio) used prior to Trans. Serial No. AS6-35-1039.
On 62 01 (15/43 Ratio) used prior to Trans. Serial No. AS2-35-670.
On 62 10 used prior to Trans. Serial No. AS4-35-2158.

NOTE 16.070-2: On 62 01 (13/43 Ratio) used Beg. with Trans. Serial No. AS6-35-1039.
On 62 01 (15/43 Ratio) used Beg. with Trans. Serial No. AS2-35-670.
On 62 10 used Beg. with Trans. Serial No. AS4-35-2158.

NOTE 16.070-3: Two types of rear Servos were used on 64 01-10 (Six) cars. They can be identified as follows:
Type 1: The servo body does not have a torsion spring on the outside of the body.
Type 2: The servo body has a lug to retain a torsion spring on the outside of the body.

Copyright 1963 American Motors Corp.

GROUP NO. — DESCRIPTION — YEAR and MODEL	PRIMARY GROUP NO.	PER CAR	PART NO.	CODE
RETAINER, Transmission Rear Servo Piston Spring				
60-61 01-10 (Six): 63 Thru 65 10 (V8): 60 Thru 65 20-80 (V8)	.....	1	315 1020	
62 Thru 64 01-10 (Six)	.....	1	316 4972	
ROLLER, Transmission Rear Servo Bearing				
60-61 01-10 (Six): 63-64 10 (V8): 60 Thru 65 20-80 (V8)	.....	29	315 1026	
RING, Transmission Rear Servo Piston Retainer Snap				
60-61 01-10 (Six): 63 Thru 65 10 (V8): 60 Thru 65 20-80 (V8)	.....	1	315 1024	
62 Thru 64 01-10 (Six)	.....	1	316 5015	
RING, Transmission Rear Servo Piston Internal Snap				
60 01	.....	1	315 1025	
RING, Transmission Rear Servo Piston Oil Seal				
60-61 01-10 (Six): 63 Thru 65 10 (V8): 60 Thru 65 20-80 (V8)	.....	1	315 1015	
62 Thru 65 01-10 (Six): 65 80 (OHV-232)	.....	1	316 5014	
PIN, Transmission Rear Servo Lever Roll				
60 Thru 65 01-10-20-80	16.060	1	315 1018	
PIN, Transmission Rear Servo Pivot				
62 01-10 (Note 16.070-1) ...*(Ref. Pr. List)*	.....	1	320 4393	
62-63 01-10 (Six): 64 01-10 (Six-Note 16.070-3 Type 1) ...*(Replaces 316 5041)*	16.060	1	316 4981	
62 Thru 64 01-10 (Six-Note 16.070-3 Type 2): 65 01-10 (Six): 65 80 (OHV-232)	.....	1	317 3550	
TUBE, Transmission Rear Servo				
62 Thru 65 01-10 (Six): 65 80 (OHV-232)	.....	1	316 4865	
CLIP, Transmission Oil Tube				
62 Thru 65 01-10 (Six): 65 80 (OHV-232)	.....	1	317 4753	
WASHER, Transmission Rear Servo Lever Roller Bearing Retainer				
60-61 01-10 (Six): 60 Thru 64 10-20-80 (V8)	.....	2	315 1027	
SCREW, Transmission Rear Servo Adjusting				
60-61 01-10 (Six): 60 Thru 65 10-20-80 (V8)	.....	1	315 0853	
62 Thru 64 01-10 (Six-7/16" Dia.) ...*(Replaces 320 3351)*	.....	1	316 5747	
64-65 10 (Six): 65 80 (OHV-232-9/16" Dia.)	.....	1	317 5708	
NUT, Transmission Rear Servo Adjusting Screw				
60-61 01-10 (Six): 60 Thru 65 10-20-80 (V8)	.....	1	315 0852	
62 Thru 64 01-10 (Six-9/16" Dia.)	.....	1	320 3574	
64-65 10 (Six): 65 80 (OHV-232-9/16" Dia.)	.....	1	317 5709	
16.075 SERVO ASSEMBLY, Automatic Transmission Rear				
62 Thru 65 01-10 (Six): 65 80 (OHV-232) ...*(Replaces 317 3686)*	.....	1	317 3553	
16.080 PUMP, Transmission Front Oil				
60-61 01-10 (Six): 60 Thru 65 10-20-80 (V8) ...*(Replaces 315 5692)*	.....	1	316 0495	
62 Thru 65 01-10 (Six): 65 80 (OHV-232)...(Incl. Suction Tube And "O" Ring) ...*(Replaces 316 4840)*	.....	1	320 4251	

NOTE 16.080-1: On 62 01 (13/43 Ratio) used prior to Trans. Serial No. AS6-35-2431.
On 62 01 (15/43 Ratio) used prior to Trans. Serial No. AS2-35-7637.
On 62 10 used prior to Trans. Serial No. AS4-35-91251.

NOTE 16.080-2: On 62 01 (13/43 Ratio) used Beg. with Trans. Serial No. AS6-35-24531.
On 62 01 (15/43 Ratio) used Beg. with Trans. Serial No. AS2-35-7637.
On 62 10 used Beg. with Trans. Serial No. AS4-35-91251.

Copyright 1963 American Motors Corp.

GROUP NO. — DESCRIPTION — YEAR and MODEL	PRIMARY GROUP NO.	PER CAR	PART NO.	CODE
ATTACHING PARTS				
Pump To Transmission Case				
BOLT, Hexagon ..... 60-61 01-10 (Six): 60 Thru 65 10-20-80 (V8)	17.038	4	G179826	NA
BOLT, Hexagon ..... 62 Thru 65 01-10 (Six): 65 80 (OHV-232).....	17.038	6	G179817	NA
WASHER, Lock ..... 62 Thru 65 01-10 (Six): 65 80 (OHV-232).....	17.820	6	G103320	NA
Converter To Pump Body				
BOLT, Hexagon ..... 62 Thru 65 01-10 (Six): 65 80 (OHV-232).....	17.038	5	G179817	NA
SCREW, Machine..... 62 Thru 65 01-10 (Six): 65 80 (OHV-232).....	17.602	1	G189385	NA
SCREW, Machine..... 62 Thru 65 10-80 (V8)	17.584	2	G110533	NA
WASHER, Lock ..... 62 Thru 65 01-10 (Six): 65 80 (OHV-232).....	17.820	5	G103320	NA
GASKET, Transmission Front Oil Pump				
60-61 01-10 (Six): 60 Thru 65 10-20-80 (V8)	.....	1	315 1009	
62 Thru 65 01-10 (Six): 65 80 (OHV-232).....	.....	1	316 4869	
BUSHING, Automatic Transmission Front Oil Pump				
(Front) 62 Thru 65 01-10 (Six): 65 80 (OHV-232)	.....	1	320 5306	
(Front) 60-61 01-10 (Six): 60 Thru 65 10-20-80 (V8).....	.....	1	320 6256	
(Rear) 62 Thru 65 01-10 (Six): 65 80 (OHV-232).....	.....	1	320 5307	
SEAL, Transmission Front Oil Pump				
60-61 01-10 (Six): 60 Thru 65 10-20-80 (V8)	.....	1	315 1007	
62 Thru 65 01-10 (Six): 65 80 (OHV-232).....	.....	1	316 4335	
TUBE, Transmission Front Oil Pump Apply				
62 Thru 65 01-10 (Six): 65 80 (OHV-232).....	.....	1	316 5059	
TUBE, Transmission Front Oil Pump Converter In And Out				
62 Thru 65 01-10 (Six): 65 80 (OHV-232).....	.....	2	316 5058	
TUBE, Transmission Front Oil Pump Suction				
62 01-10 (Note 16.080-1)	.....	1	316 5057	
62 01-10 (Note 16.080-2): 63 Thru 65 01-10 (Six): 65 80 (OHV-232).....	.....	1	316 7570	
RING, Transmission Front Oil Pump Seal "O"				
62 Thru 65 01-10 (Six): 65 80 (OHV-232).....	.....	1	316 5004	
RING, Transmission Front Oil Pump Tube "O"				
62 Thru 65 01-10 (Six): 65 80 (OHV-232).....	.....	1	316 5005	
16.085 GOVERNOR, Transmission (Less Sleeve)				
60-61 01-10: 60 Thru 64 80 (V8)	.....	1	320 1795	#
62 Thru 65 01-10 (Six): 65 80 (OHV-232).....	.....	1	320 3579	
60-61 20.....	.....	1	320 1810	
63 Thru 65 10 (V8): 65 80 (V8)	.....	1	320 4636	#
ATTACHING PARTS				
Governor To Sleeve				
SCREW, Machine..... 60-61 01-10 (Six): 60 Thru 65 10-20-80 (V8)	.....	2	320 2913	
SCREW, Machine..... 62 Thru 65 01-10 (Six): 65 80 (OHV-232).....	17.614	2	G113962	NA
WASHER, Lock ..... 62 01-10.....	17.820	2	G103319	NA
WASHER, Lock ..... 63 Thru 65 01-10 (Six): 65 80 (OHV-232).....	17.820	2	G113114	NA
RETAINER, Transmission Governor Spring				
60 Thru 65 01-10-20-80.....	.....	1	315 0971	

Copyright 1963 American Motors Corp.

GROUP NO. — DESCRIPTION — YEAR and MODEL	PRIMARY GROUP NO.	PER CAR	PART NO.	CODE
SLEEVE, Transmission Governor				
60-61 01-10 (Six): 60 Thru 65 10-20-80 (V8)	.....	1	320 2912	#
62 Thru 65 01-10 (Six): 65 80 (OHV-232)	.....	1	316 4898	
RING, Transmission Governor Snap				
60-61 01-10 (Six): 60 Thru 65 10-20-80 (V8)	.....	1	315 0979	#
62 Thru 65 01-10 (Six): 65 80 (OHV-232)	16.125	1	316 5018	
BALL, Transmission Governor Steel				
60 Thru 65 01-10-20-80	17.018	1	G147485	
16.090 LEVER, Transmission Parking Brake Torsion				
60-61 01: 63 Thru 65 10-80 (V8)	.....	1	315 1162	
62 Thru 65 01: 63 Thru 65 10 (Six): 65 80 (OHV-232)	.....	1	316 4802	
60 Thru 62 10-20-80	.....	1	315 4119	
LEVER, Transmission Parking Brake Toggle				
60 Thru 65 01-10-20-80	.....	1	315 1175	
LEVER, Transmission Parking Brake Toggle Lift				
60 Thru 65 01-10-20-80	.....	1	315 1165	
SPRING, Transmission Parking Brake Toggle Lift Lever				
60 Thru 65 01-10-20-80	.....	1	315 1166	
SPRING, Transmission Parking Brake Toggle Release				
60 Thru 64 01-10-20-80: 65 01-10-80 (Note 16.090-1)	.....	1	315 1174	
65 01-10-80 (Note 16.090-2)	.....	1	318 0043	
BUSHING, Transmission Parking Brake Toggle Release Spring				
60 Thru 65 01-10-20-80	.....	1	315 1173	
ROD, Transmission Parking Brake Linkage				
60-61 01: 63 Thru 65 10-80 (V8)	.....	1	315 1167	
ATTACHING PARTS				
Rod To Lever				
CLIP ..... 60-61 01: 63 Thru 65 10-80 (V8)	.....	2	315 1169	
LINK, Transmission Parking Brake Toggle Lever				
60 Thru 65 01-10-20-80	.....	1	315 1176	
PAWL, Transmission Parking Brake				
60-61 01-10 (Six): 60 Thru 65 10-20-80 (V8)	.....	1	315 1171	#
62 Thru 65 01-10 (Six): 65 80 (OHV-232)	.....	1	316 4844	
RETAINER, Transmission Parking Brake Toggle Link Spring				
60 Thru 65 01-10-20-80	.....	1	315 1170	
RETAINER, Transmission Parking Brake Toggle Lever Anchor Pin				
60-61 01-10 (Six): 60 Thru 65 10-20-80 (V8)	.....	1	315 1182	#

NOTE 16.090-1: Used prior to Car Serial No.
NOTE 16.090-2: Used beginning with Car Serial No.

Copyright 1963 American Motors Corp.

GROUP NO. — DESCRIPTION — YEAR and MODEL	PRIMARY GROUP NO.	PER CAR	PART NO.	CODE
RETAINER, Transmission Parking Brake Torsion Lever Pin Spring				
60 Thru 65 01: 63 Thru 65 10-80	.....	1	315 1181	
PIN, Transmission Parking Brake Torsion Lever				
60-61 01: 62 Thru 65 10-80 (V8)	.....	1	315 0855	
62 Thru 65 01: 63 Thru 65 10 (Six): 65 80 (OHV-232)	.....	1	316 4868	
PIN, Transmission Parking Brake Pawl Anchor Dowel				
60-61 01-10 (Six): 60 Thru 65 10-20-80 (V8)	.....	1	315 1172	#
62 Thru 65 01-10 (Six): 65 80 (OHV-232)	.....	1	316 5030	
PIN, Transmission Parking Brake Toggle Lever Anchor				
60-61 01-10 (Six): 60 Thru 65 10-20-80 (V8)	.....	1	315 1179	#
62 Thru 65 01-10 (Six): 65 80 (OHV-232)	.....	1	316 5029	
PIN, Transmission Parking Brake Toggle Lever To Link (With Ball End)				
60 Thru 64 01-10-20-80: 65 01-10-80 (Note 16.090-1)	.....	1	315 1177	
65 01-10-80 (Note 16.090-2)	.....	1	318 0039	
PIN, Transmission Parking Brake Pawl To Toggle Lever Link				
60 Thru 65 01-10-20-80	.....	1	315 1178	
WASHER, Transmission Parking Brake Pawl To Toggle Lever Link Pin				
60 Thru 63 01-10-20-80	.....	1	315 1168	
WASHER, Transmission Parking Brake Torsion Lever Pin				
60 Thru 65 01: 63 Thru 65 10-80	.....	1	315 1180	
RING, Transmission Parking Brake Toggle Lever Anchor Pin Oil Seal "O"				
62 Thru 65 01-10 (Six): 65 80 (OHV-232)	16.090	1	316 5006	
RING, Transmission Parking Brake Torsion Lever Pin Oil Seal "O"				
62-63 01: 63 10	16.090	1	316 5006	
PIN, Transmission Parking Brake Torsion Lever Taper				
62 01-10	17.470	1	G110769	NA
63-64 01-10 (SIX)	17.470	1	G103565	
PIN, Transmission Parking Brake Toggle Lever Anchor Pin To Transmission Case Spring				
62 Thru 65 01-10 (Six): 65 80 (OHV-232)	17.472	1	G271448	NA
16.100 PUMP, Transmission Rear Oil (Complete)				
60-61 01-10 (Six): 60 Thru 65 10-20-80 (V8)	.....	1	315 4214	#
GASKET, Transmission Rear Oil Pump				
60-61 01-10 (Six): 60 Thru 65 10-20-80 (V8)	.....	1	315 0968	#

Copyright 1963 American Motors Corp.

GROUP NO. — DESCRIPTION — YEAR and MODEL	PRIMARY GROUP NO.	PER CAR	PART NO.	CODE
KEY, Transmission Rear Oil Pump				
60-61 01-10 (Six): 60 Thru 65 10-20-80 (V8)	17.344	1	G103905	#
62 Thru 65 01-10 (Six): 65 80 (OHV-232)	.....	1	316 4997	
BODY, Transmission Rear Oil Pump				
62 Thru 65 01-10 (Six): 65 80 (OHV-232)	.....	1	316 4820	
ATTACHING PARTS				
Body To Transmission Case				
SCREW, Machine..... 62 Thru 65 01-10 (Six): 65 80 (OHV-232-1/4-20 x 1-1/8)	17.602	5	G114358	NA#
SCREW, Machine..... 62-63 01-10 (10-24 x 1-1/8)	17.602	1	G110492	NA
WASHER, Lock..... 62 Thru 65 01-10 (Six): 65 80 (OHV-232-1/4" I.D.)	17.820	5	G113114	NA#
WASHER, Lock..... 62-63 01-10 (13/64" I.D.)	17.824	1	G115545	NA
GEAR, Transmission Rear Oil Pump Driven (Internal Teeth)				
62 Thru 65 01-10 (Six): 65 80 (OHV-232)	.....	1	316 4855	
GEAR, Transmission Rear Oil Pump Drive (External Teeth)				
62 Thru 65 01-10 (Six): 65 80 (OHV-232)	.....	1	316 4878	
PLATE, Transmission Rear Oil Pump Body Separator				
62 Thru 64 01-10 (Six)	.....	1	316 4805	#
BAFFLE, Transmission Breather				
63 Thru 65 01-10 (Six): 65 80 (OHV-232)	.....	1	317 0944	#
16.105 SHAFT, Transmission Input (Incl. Bushing)				
60-61 01-10 (Six): 60 Thru 65 10-20-80 (V8)	.....	1	315 0907	#
62 Thru 65 01-10 (Six): 65 80 (OHV-232)	.....	1	320 3550	
WASHER, Transmission Input Shaft Thrust				
60-61 01-10 (Six): 60 Thru 65 10-20-80 (V8)	.....	AR	315 0917	#
62 Thru 65 01-10 (Six): 65 80 (OHV-232)(-.062)	.....	AR	316 5036	
62 Thru 65 01-10 (Six): 65 80 (OHV-232)(-.079)	.....	AR	316 5056	
16.115 CYLINDER, Transmission Front Clutch				
60-61 01-10 (Six): 60 Thru 65 10-20-80 (V8)	.....	1	315 6559	#
62 Thru 65 01-10 (Six): 65 80 (OHV-232)	.....	1	316 4833	
PISTON, Transmission Front Clutch Cylinder				
60-61 01-10 (Six): 60 Thru 65 10-20-80 (V8)	.....	1	315 0902	#
60 Thru 65 01-10 (Six): 65 80 (OHV-232)	.....	1	316 4832	
HUB, Transmission Front Clutch Cylinder				
60-61 01-10 (Six): 60 Thru 65 10-20-80 (V8)	.....	1	315 0909	#
62 Thru 65 01-10 (Six): 65 80 (OHV-232)	.....	1	316 4887	

NOTE 16.115-1: Use prior to Trans. Serial No. 12606 on 6001 and 127233 on 6010.
NOTE 16.115-2: On 60 01-10 used Beg. with Trans. Serial No. 12606 on 6001 and 127233 on 6010.

Copyright 1963 American Motors Corp.

GROUP NO. — DESCRIPTION — YEAR and MODEL	PRIMARY GROUP NO.	PER CAR	PART NO.	CODE
SPRING, Transmission Front Clutch Cylinder				
60-61 01-10 (Six): 60 Thru 65 10-20-80 (V8)	.....	1	315 0899	#
62 Thru 65 01-10 (Six): 65 80 (OHV-232)	.....	1	316 4875	
PLATE KIT, Transmission Front Clutch Cylinder (Incl. Pressure, Drive And Driven)				
60 01-10 (Note 16.115-2)	.....	1	320 2486	
PLATE, Transmission Front Clutch Cylinder Pressure				
60 01-10 (Note 16.115-1)	.....	1	315 6561	
60 01-10 (Note 16.115-2): 61 01-10	.....	1	316 0887	
62 Thru 65 01-10 (Six): 65 80 (OHV-232)	.....	1	316 4631	
60 Thru 65 10-20-80 (V8)	.....	1	314 9977	
PLATE, Transmission Front Clutch Cylinder Driven (External Teeth)				
60 01-10 (Six)(2 Req. -Note 16.115-1): 60 Thru 65 10-20-80 (V8-3 Req.)	.....	AR	315 0912	#
60 01-10 (Note 16.115-2): 61 01-10 (Six)	16.125	2	315 0892	#
62 Thru 65 01-10 (Six): 65 80 (OHV-232)	.....	3	316 4873	#
PLATE, Transmission Front Clutch Cylinder Drive (Internal Teeth)				
60 01-10 (Six)(3 Req. -Note 16.115-1): 60 Thru 65 10-20-80 (V8-4 Req.)	.....	AR	315 0918	#
60 01-10 (Note 16.115-2): 61 01-10	.....	3	316 0888	
62 Thru 65 01-10 (Six): 65 80 (OHV-232)	.....	4	316 4874	
WASHER, Transmission Front Clutch Cylinder Thrust (Plain)				
60-61 01-10 (Six): 60 Thru 65 10-20-80 (V8)	.....	1	315 0916	#
62 Thru 65 01-10 (Six): 65 80 (OHV-232)	.....	1	316 4986	
WASHER, Transmission Front Clutch Cylinder Thrust (With Oil Grooves)				
60-61 01-10 (Six): 60 Thru 65 10-20-80 (V8)	.....	1	315 0915	#
62 Thru 65 01-10 (Six): 65 80 (OHV-232)	.....	1	316 4987	
WASHER, Transmission Front Clutch Cylinder Hub Thrust				
60-61 01-10 (Six): 60 Thru 65 10-20-80 (V8)	.....	1	315 0910	#
62 Thru 65 01-10 (Six): 65 80 (OHV-232)	.....	1	316 5043	
RING, Transmission Front Clutch Cylinder Spring Bearing				
60-61 01-10 (Six): 60 Thru 65 10-20-80 (V8)	.....	1	315 0901	#
62 Thru 65 01-10 (Six): 65 80 (OHV-232)	.....	1	316 4988	
RING, Transmission Front Clutch Cylinder Square Section				
60-61 01-10 (Six)(4-1/32" I.D.): 60 Thru 65 10-20-80 (V8)(4-1/32" I.D.)	.....	1	315 0898	#
62 Thru 65 10 (Six): 65 80 (OHV-232)(3-21/64" I.D.)	.....	1	316 5012	
RING, Transmission Front Clutch Cylinder Spring Retaining Snap				
60-61 01-10 (Six): 62 Thru 65 10-20-80 (V8)	.....	1	315 0897	#
62 Thru 65 01-10 (Six): 65 80 (OHV-232)	.....	1	316 5016	
RING, Transmission Front Clutch Cylinder Plates Retaining Snap				
60-61 01-10 (Six): 60 Thru 65 10-20-80 (V8)	.....	1	315 0895	#
62 Thru 65 01-10 (Six): 65 80 (OHV-232)	.....	1	316 5016	

Copyright 1963 American Motors Corp.

GROUP NO. — DESCRIPTION — YEAR and MODEL	PRIMARY GROUP NO.	PER CAR	PART NO.	CODE
RING, Transmission Front Clutch Cylinder Oil Seal "O"				
60-61 01-10 (Six): 60 Thru 65 10-80 (V8)	.....	1	315 0900	#
62 Thru 65 01-10 (Six): 65 80 (OHV-232)	.....	1	316 5013	
16.125 DRUM, Transmission Rear Clutch				
61 01: 60-61 10...(Incl. Bushing & Bearing)	.....	1	315 8784	
62 Thru 65 01-10 (Six): 65 80 (OHV-232)...(Incl. Bushing)	.....	1	316 4834	
60 Thru 65 10-20-80 (V8)...(Incl. Bushing & Bearing).....***(Replaces 315 0885)***	.....	1	315 3610	
BEARING, Transmission Rear Clutch Drum Needle				
60-61 01-10 (Six): 60 Thru 65 10-20-80 (V8)	.....	1	315 0882	#
62 Thru 65 01-10 (Six): 65 80 (OHV-232)	.....	1	316 4999	
PISTON, Transmission Rear Clutch Drum				
60-61 01-10 (Six): 60 Thru 65 10-20-80 (V8)	.....	1	315 3644	#
62 Thru 65 01-10 (Six): 65 80 (OHV-232)	.....	1	316 4985	
PLATE, Transmission Rear Clutch Drum Driven (External Teeth)				
60-61 01-10 (Six-3 Req.): 60 Thru 65 10-20-80 (V8-4 Req.)	.....	AR	315 0892	#
62 Thru 65 01-10 (Six): 65 80 (OHV-232)	.....	5	316 4863	
PLATE, Transmission Rear Clutch Drum Drive (Internal Teeth)				
60-61 01-10	.....	3	315 2739	
62 Thru 65 01-10 (Six): 65 80 (OHV-232)	.....	5	316 4870	
60 Thru 65 10-20-80 (V8)	.....	4	315 0893	
PLATE, Transmission Rear Clutch Drum Pressure				
60-61 01-10 (Six): 64-65 10 (V8): 60 Thru 65 20-80 (V8)	.....	1	315 0894	#
62 Thru 65 01-10 (Six): 65 80 (OHV-232)	.....	1	316 4803	
SPRING, Transmission Rear Clutch Drum				
60-61 01-10 (Six): 60 Thru 65 10-20-80 (V8)	.....	1	315 0890	#
62 Thru 65 01-10 (Six): 65 80 (OHV-232)	.....	1	316 5047	
RETAINER, Transmission Rear Clutch Drum Spring				
60-61 01-10 (Six): 60 Thru 65 10-20-80 (V8)	.....	1	315 0891	#
62 Thru 65 01-10 (Six): 65 80 (OHV-232)	.....	1	316 4884	
RING, Transmission Rear Clutch Drum Square Section				
60-61 01-10 (Six)(4-3/4" I. D.): 60 Thru 65 10-20-80 (V8-4-3/4" I. D.)	.....	1	315 0889	#
62 Thru 65 01-10 (Six): 65 80 (OHV-232)(3-3/4" I. D.)	.....	1	316 5009	
RING, Transmission Rear Clutch Drum Oil Seal "O"				
60-61 01-10 (Six): 60 Thru 65 10-20-80 (V8)	.....	1	315 0887	#
62 Thru 65 01-10 (Six): 65 80 (OHV-232)	.....	1	316 5010	
RING, Transmission Rear Clutch Drum Spring Retaining Snap				
60-61 01-10 (Six): 60 Thru 65 10-20-80 (V8)	.....	1	315 0896	#
62 Thru 65 01-10 (Six): 65 80 (OHV-232)	.....	1	316 5018	
RING, Transmission Rear Clutch Drum Plates Retaining Snap				
60-61 01-10 (Six): 60 Thru 65 10-20-80 (V8)	16.115	1	315 0895	#
62 Thru 65 01-10 (Six): 65 80 (OHV-232)	16.115	1	316 5016	

Copyright 1963 American Motors Corp.

GROUP NO. — DESCRIPTION — YEAR and MODEL	PRIMARY GROUP NO.	PER CAR	PART NO.	CODE
TUBE, Transmission Rear Clutch Drum				
62 Thru 65 01-10 (Six): 65 80 (OHV-232)	.....	1	316 4841	
RING, Transmission Rear Clutch Drum Oil Sealing (On Drum)				
62 Thru 65 01-10 (Six): 65 80 (OHV-232)	16.115	3	316 4858	
16.130 BAND, Transmission Front Brake				
60-61 01-10 ***(Replaces 315 1063)***	.....	1	316 0501	
62 Thru 65 01-10 (Six): 65 80 (OHV-232)	.....	1	316 4838	
60 Thru 65 10-80 (V8)	.....	1	315 3489	
STRUT, Transmission Front Brake Band				
60-61 01-10 (Six): 60 Thru 65 10-20-80 (V8)	.....	1	315 1053	#
62 Thru 65 01-10 (Six): 65 80 (OHV-232)	.....	1	320 3566	
16.135 SUPPORT, Transmission Center				
60-61 01	.....	1	315 0923	
62 Thru 65 01-10 (Six): 65 80 (OHV-232)	.....	1	320 3551	
60-61 10 (Six): 60 Thru 65 10-20-80 (V8)	.....	1	315 3462	#
ATTACHING PARTS Support To Case				
SCREW, Machine ..... 60-61 01-10 (Six): 60 Thru 65 10-20-80 (V8)	.....	2	315 0920	#
SCREW, Machine ..... 62 Thru 65 01-10 (Six): 65 80 (OHV-232)	.....	2	316 5021	
WASHER, Lock ..... 60 Thru 65 01-10-20-80	.....	2	315 0919	
16.140 GEAR, Transmission Sun				
62 Thru 64 01-10 (Six) ***(Use 317 3516)***	.....	1	316 4978	
60-61 01 (Six): 60 Thru 65 10-20-80 (V8) ***(Replaces 315 3645)***	.....	1	316 7512	#
65 01-10-80 (Six)	.....	1	317 3516	
RING, Transmission Sun Gear Oil Sealing				
(Front) 60-61 01-10 (Six): 60 Thru 65 10-20-80 (V8)	.....	2	315 0878	#
(Front) 62 Thru 65 01-10 (Six): 65 80 (OHV-232)	.....	2	316 5007	
(Middle) 60-61 01-10 (Six): 60 Thru 65 10-20-80 (V8)	.....	2	315 0875	#
(Rear) 60-61 01-10 (Six): 60 Thru 65 10-20-80 (V8)	.....	2	315 0877	#
(Rear) 62 Thru 64 01-10 (Six)(Steel)	.....	1	316 5008	
(Rear) 64-65 01-10 (Six): 65 80 (OHV-232)(Six)(Plastic)	.....	1	317 6130	
WASHER, Transmission Sun Gear Reverse Thrust (Rear)				
60-61 01-10 (Six): 63 Thru 65 10 (V8): 60 Thru 65 20-80 (V8)	.....	1	315 0876	#
BALL, Transmission Sun Gear Steel				
60 Thru 65 01-10-20-80	17.018	1	G147485	
16.145 BEARING, Transmission Sun Gear Needle				
62 Thru 65 01-10 (Six): 65 80 (OHV-232)	.....	2	316 4857	
RACE, Transmission Sun Gear Needle Bearing Thrust				
62 Thru 64 01-10 (Six)(I. D. 31/32")	.....	1	316 4983	
64-65 01-10 (Six): 65 80 (OHV-232)(I. D. 1-1/32")	.....	1	317 4775	

Copyright 1963 American Motors Corp.

GROUP NO. — DESCRIPTION — YEAR and MODEL	PRIMARY GROUP NO.	PER CAR	PART NO.	CODE
16.150 CARRIER, Transmission Planetary				
60-61 01	.....	1	315 0937	
62 Thru 64 01-10 (Six) *(Ref. Pr. List)*	.....	1	316 4826	
60-61 10 (Six): 63 Thru 65 10 (V8): 60 Thru 65 20-80 (V8)	.....	1	315 3465	#
65 01-10 (Six): 65 80 (OHV-232)	.....	1	317 4762	
CLUTCH, Transmission Planetary Carrier One Way (Sprag)				
62 Thru 65 01-10 (Six): 65 80 (OHV-232)	.....	1	316 4843	
60-61 10: 63 Thru 65 10 (V8): 60 Thru 65 80 (V8) *(Replaces 315 8721, 315 3472)*	.....	1	316 0346	
RACE, Transmission Planetary Carrier One Way Clutch				
62 Thru 65 01-10 (Six): 65 80 (OHV-232)...(Incl. Bushing)	.....	1	320 3552	#
60-61 10 (Six): 63 Thru 65 10 (V8): 60 Thru 65 20-80 (V8)	.....	1	315 3470	#
RING, Transmission Planetary Carrier One Way Clutch Snap				
62 Thru 65 01-10 (Six): 65 80 (OHV-232)	16.115	1	316 5016	
60-61 10 (Six): 63 Thru 65 10 (V8): 60 Thru 65 20-80 (V8)	.....	1	315 3471	#
WASHER, Transmission Planetary Carrier Thrust				
(Front) 60-61 10 (Six): 60 Thru 65 10-20-80 (V8)	.....	1	315 3457	#
(Rear) 60-61 01-10 (Six)(.061-.063): 63 Thru 65 10 (V8-.061-.063): 60 Thru 65 20-80 (V8)(.061-.063)	.....	AR	315 0925	#
(Rear) 60-61 01-10 (Six)(.067-.069): 63 Thru 65 10 (V8-.067-.069): 60 Thru 65 20-80 (V8)(.067-.069)	.....	AR	315 0926	#
(Rear) 60-61 01-10 (Six)(.074-.076): 63 Thru 65 10 (V8-.074-.076): 60 Thru 65 20-80 (V8)(.074-.076)	.....	AR	315 0927	#
(Rear) 60-61 01-10 (Six)(.081-.083): 63 Thru 65 10 (V8-.081-.083): 60 Thru 65 20-80 (.081-.083)	.....	AR	315 0928	#
16.152 BEARING, Transmission Planetary To Output Shaft Needle				
62 Thru 65 01-10 (Six): 65 80 (OHV-232)	.....	1	316 4856	
PLATE, Transmission Planetary To Output Shaft Needle Bearing Thrust				
62 Thru 65 01-10 (Six): 65 80 (OHV-232)	.....	1	316 5044	
16.155 BAND, Transmission Rear Brake				
60-61 01-10 (Six): 60 Thru 65 10-20-80 (V8)	.....	1	315 1036	#
62 Thru 64 01-10 (Six)	16.130	1	316 4838	
65 01-10 (Six): 65 80 (OHV-232)	.....	1	317 7485	
STRUT, Transmission Rear Brake Band				
62 Thru 65 01-10 (Six): 65 80 (OHV-232)	16.130	1	320 3566	
(Apply) 60-61 01-10 (Six): 60 Thru 65 10-20-80 (V8)	.....	1	315 1037	#
(Anchor) 60-61 01-10 (Six): 60 Thru 65 10-20-80 (V8)	.....	1	315 1038	#
16.160 SHAFT, Transmission Output				
60-61 01...(Incl. Oil Collector Sleeve)	.....	1	315 5175	
62-63 01...(Incl. Plug And Bushing)	.....	1	320 3556	
64-65 01...(Incl. Plug And Bushing)	.....	1	317 5194	
60-61 10...(Incl. Oil Collector Sleeve)	.....	1	315 8268	
62 10...(Incl. Plug And Bushing)	.....	1	320 3555	
63 Thru 65 10 (Six): 65 80 (OHV-232)...(Incl. Plug and Bushing)	.....	1	320 3943	
60 Thru 62 20-80...(Incl. Oil Collector Sleeve)	.....	1	315 3474	
63 Thru 65 10-80 (V8)...(Incl. Oil Collector Sleeve)	.....	1	316 7656	

Copyright 1963 American Motors Corp.

GROUP NO. — DESCRIPTION — YEAR and MODEL	PRIMARY GROUP NO.	PER CAR	PART NO.	CODE
GEAR, Transmission Output Shaft Ring				
60-61 01-10 (Six): 60 Thru 65 10-20-80 (V8)	.....	1	315 0950	#
62 Thru 65 01-10 (Six): 65 80 (OHV-232)	.....	1	316 4830	
BUSHING, Automatic Transmission Output Shaft				
62 Thru 65 01-10 (Six): 65 80 (OHV-232)	.....	1	320 5305	
WASHER, Transmission Output Shaft Thrust				
60-61 01-10 (Six): 60 Thru 65 10-20-80 (V8)	.....	1	315 3476	#
62 Thru 65 01-10 (Six): 65 80 (OHV-232)	.....	1	316 4976	
RING, Transmission Output Shaft Oil Sealing				
62 Thru 65 01-10 (Six): 65 80 (OHV-232)	.....	3	316 5806	
RING, Transmission Output Shaft Ring Gear Snap				
(.055) 60-61 01-10 (Six): 60 Thru 65 10-20-80 (V8)	.....	1	315 0951	#
(.055) 62 Thru 65 01-10 (Six): 65 80 (OHV-232)	.....	1	316 5017	
(.057) 60-61 01-10 (Six): 60 Thru 65 10-20-80 (V8)	.....	1	315 0952	#
(.057) 62 Thru 65 01-10 (Six): 65 80 (OHV-232)	.....	1	320 3584	
(.059) 60-61 01-10 (Six): 60 Thru 65 10-20-80 (V8)	.....	1	315 0953	#
(.059) 62 Thru 65 01-10 (Six): 65 80 (OHV-232)	.....	1	320 3585	
16. 170 SLEEVE, Transmission Oil Collector				
60-61 01-10 (Six): 60 Thru 65 10-20-80 (V8)	.....	1	315 4123	#
TUBE, Transmission Oil Collector Sleeve				
(Front) 60-61 01-10 (Six): 60 Thru 65 10-20-80 (V8)	.....	1	315 4128	#
(Intermediate) 60-61 01-10-20: 60 Thru 65 10-80 (V8)	.....	1	315 4122	
(Rear) 60-61 01-10 (Six): 60 Thru 65 10-20-80 (V8)	.....	1	315 4127	#
RING, Transmission Oil Collector Sleeve Oil Seal				
60-61 01-10 (Six): 60 Thru 65 10-80 (V8) ***(Replaces 315 0986)***	16. 160	4	316 5806	
16. 175 RETAINER, Transmission Rear Bearing (Incl. Bushing)				
60-61 01 ***(Replaces 315 5165)***	.....	1	316 0320	#
62 01 : 63 01 (Note 16.010-1 Type 1)	.....	1	320 3562	
63 01 (Note 16.010-1 Type 2)	.....	1	320 4535	
64-65 01	.....	1	317 3523	
60-61 10-20: 60 Thru 62 80	.....	1	315 3480	
62 10	.....	1	320 3563	
63 10 (Note 16.010-1 Type 1)	.....	1	316 6491	
63 10 (Note 16.010-1 Type 2-Six): 64 10 (OHV-196): 65 10 (OHV-199)	.....	1	320 4567	
64-65 10 (OHV-232): 65 80 (OHV-232)	.....	1	317 2884	
63-64 10-80 (V8)	.....	1	316 6493	
63 Thru 65 10-80 (V8) ***(Replaces 317 2393)***	.....	1	320 5876	#
ATTACHING PARTS				
Retainer To Case				
BOLT, Hexagon ..... 60-61 (4-3/16" Long)	.....	1	315 5169	

Copyright 1963 American Motors Corp.

GROUP NO. — DESCRIPTION — YEAR and MODEL		PRIMARY GROUP NO.	PER CAR	PART NO.	CODE
BOLT, Hexagon	60-61 01-10 (Six-4-3/16" Long): 60 Thru 65 10-20-80 (V8-4-3/16" Long)	17.038	4	G179841	NA
BOLT, Hexagon	60-61 10 (Six-3-5/8" Long): 60 Thru 65 10-20-80 (V8-3-5/8" Long)	17.038	1	G446641	NA
BOLT, Hexagon	62 01-10: 63 01 (Note 16.010-1 Type 1)	17.038	4	G179818	NA
STUD	63 10 (Note 16.010-1 Type 1)	.....	4	316 9694	
SCREW, Cap	63 01-10 (Note 16.010-1 Type 2): 64-65 01-10 (Six): 65 80 (OHV-232)	.....	4	317 0363	
WASHER, Lock	60-61 01-10 (Six): 60 Thru 65 10-20-80 (V8)	16.135	5	315 0919	
WASHER, Lock	62 01-10: 63 01 (Note 16.010-1 Type 1)	17.820	4	G103320	NA
WASHER, Lock	63 01-10 (Note 16.010-1 Type 2): 64-65 01-10 (Six): 65 80 (OHV-232)	.....	4	317 0364	
WASHER, Plain	63 10 (Note 16.010-1 Type 1)	17.814	4	G120393	NA
NUT, Hexagon	63 10 (Note 16.010-1 Type 1)	17.419	4	G190139	

RETAINER, Transmission Rear Bearing Retainer Oil (Slinger)

60-61 10 (Six): 60 Thru 65 10-20-80 (V8)	.....	1	315 3524	
62-63 01	.....	1	316 4980	
64-65 01: 62 Thru 65 10 (Six): 65 80 (OHV-232)	.....	1	316 5042	

COVER, Transmission Rear Bearing Retainer Inspection

60 Thru 65 01-10-20-80	.....	1	315 0989	

ATTACHING PARTS
Cover To Retainer

SCREW, Machine	60 Thru 65 01-10-20-80	17.602	2	G114353	NA
WASHER, Plain	60 Thru 65 01-10-20-80	.....	2	315 0987	

GASKET, Transmission Rear Bearing Retainer

60-61 01-10 (Six): 60 Thru 65 10-20-80 (V8)	.....	1	315 0992	
62 01-10: 63 01-10 (Note 16.010-1 Type 1)	.....	1	316 4899	
63 01-10 (Note 16.010-1 Type 2): 64-65 01-10 (Six): 65 80 (OHV-232)	.....	1	317 0362	

GASKET, Transmission Rear Bearing Retainer Inspection Cover

60 Thru 65 01-10-20-80	.....	1	315 0988	

SEAL, Transmission Rear Bearing Retainer Oil

60 Thru 62 01	.....	1	315 5168	
63 Thru 65 01	6.032	1	315 8703	
60 Thru 65 10-20-80	.....	1	315 3482	

BUSHING, Transmission Rear Bearing Retainer

61 Thru 63 01	.....	1	320 3640	
65 01: 60 Thru 64 10 (Six): 60 Thru 65 10-20-80 (V8) *(Replaces 320 3641)*	.....	1	320 2124	
64 01: 65 10-80 (Six)	.....	1	320 4721	

16.177 INSULATOR, Transmission Rear Bearing Retainer To Engine Rear Crossmember

63 10-80 (Note 16.177-1 Type 1)	1.013	1	316 6937	
63 10-80 (Note 16.177-1 Type 2): 64 10 (OHV-196)(V8): 64 80	1.013	1	317 1099	
64 10 (OHV-232): 65 10-80	1.013	1	317 3691	

NOTE 16.177-1: Two Types of Insulators And Three Types of Transmission Brackets were installed on 63 10-80 cars. They can be identified as follows:

- Type 1: The Bracket is mounted to the Transmission with a 3/8" Diameter Stud and the Cushion on the Insulator is 2-7/8" Long.
- Type 2: The Bracket is mounted to the Transmission with a 7/16" Diameter Stud and the Cushion on the Insulator is 2-7/8" Long.
- Type 3: The Bracket is mounted to the Transmission with a 7/16" Stud and the Cushion on the Insulator is 3-1/8" Long.

Copyright 1963 American Motors Corp.

GROUP NO. — DESCRIPTION — YEAR and MODEL	PRIMARY GROUP NO.	PER CAR	PART NO.	CODE
ATTACHING PARTS				
Insulator To Bracket				
BOLT, Hexagon ..... 63 10-80 (4-1/8" Long-Note 16.177-1 Type 1 And 2)	17.038	1	G180843	NA
BOLT, Hexagon ..... 63 10-80 (4-1/4" Long-Note 16.177-1 Type 3): 64-65 10-80	17.038	1	G189346	NA
WASHER, Lock ..... 63 Thru 65 10-80	17.820	1	G120384	NA
NUT, Hexagon ..... 63 Thru 65 10-80	17.406	1	G120371	NA
BRACKET, Transmission Rear Bearing Retaining To Engine Rear Crossmember Insulator				
63 10 (Six-Note 16.177-1 Type 2) ..... ***(Ref. Pr. List)***	1.013	1	317 0238	
63 10 (Six-Note 16.177-1 Type 1) ..... ***(Ref. Pr. List)***	1.013	1	316 6517	
63 10 (Note 16.177-1 Type 3-Six): 64 10 (Six): 65 10-80 (OHV-232): 65 10 (OHV-199)	1.013	1	317 1184	
63 80 (Note 16.177-1 Type 1)	1.013	1	316 6500	
63 10-80 (Note 16.177-1 Type 2-V8)	1.013	1	317 0239	
63 80 (Note 16.177-1 Type 3): 64-65 10-80 (V8)	1.013	1	317 1185	
ATTACHING PARTS				
Insulator Bracket To Bearing Retainer				
STUD, Hexagon ..... 63 10 (3 Req.-Six): 63 80 (4 Req.)	1.013	AR	316 9430	
STUD, Hexagon ..... 63 Thru 65 10 (Six-3 Req.-7/16" Dia.): 63 Thru 65 10-80 (V8-4 Req.-7/16" Dia.)	.....	AR	316 9998	
WASHER, Lock ..... 63 10 (3 Req.-Six): 63 80 (4 Req.)	17.820	AR	G120382	NA
WASHER, Lock ..... 63 Thru 65 10 (Six-3 Req.-7/16" I.D.): 63 Thru 65 10-80 (V8-4 Req.-7/16" I.D.)	17.820	AR	G120328	NA
NUT, Hexagon ..... 63 10 (3 Req.-Six): 63 80 (4 Req.)	17.406	AR	G120369	NA
NUT, Hexagon ..... 63 Thru 65 10 (Six-3 Req.-7/16" I.D.): 63 Thru 65 10-80 (V8-4 Req.-7/16" I.D.)	17.406	AR	G120370	NA
Insulator Bracket To Engine Rear Crossmember				
BOLT, Hexagon ..... 63 Thru 65 10-80	17.038	2	G181666	NA
WASHER, Lock ..... 63 Thru 65 10-80	17.820	2	G131100	NA
NUT, Hexagon ..... 63 Thru 65 10-80	17.406	2	G120370	NA
16.195 VALVE ASSEMBLY, Transmission Control				
60 01 (LHE-Note 16.001-3)	.....	1	315 6615	
60 01 (OHV-Note 16.001-4)	.....	1	316 0166	
61 01	.....	1	316 1226	
62 Thru 65 01: 63-64 10 (OHV-196): 65 10 (OHV-199) ..... ***(Replaces 316 9320, 317 4781)***	.....	1	317 6598	
62 10 ..... ***(Replaces 316 4813)***	.....	1	316 5837	
65 01 (RHD-OHV-196)	.....	1	317 6599	
64 10 (232): 65 01-10 (LHD-OHV-232-WCGS): 65 80 (OHV-232-WCGS)	.....	1	317 5639	
65 01-10-80 (OHV-232-WFGS)	.....	1	317 5640	
60-61 10	.....	1	315 8260	
63 10 (V8): 64 10 (V8-WCGS): 65 10 (V8-WCGS-Note 16.195-1) ..... ***(Replaces 317 3341)***	.....	1	317 5703	
64 10 (V8-WFGS): 65 10 (V8-WFGS-Note 16.195-1)	.....	1	317 3255	
65 10 (RHD-OHV-232)	.....	1	317 7394	
60-61 20	.....	1	315 6617	
60 Thru 62 80 ..... ***(Use 316 7516)***	.....	1	315 6618	
65 10 (V8-WCGS)(Note 16.195-2)	.....	1	317 6801	
65 10 (V8-WFGS)(Note 16.195-2)	.....	1	317 6802	
63-64 80 (WCGS): 65 80 (WCGS Note 16.195-1)	.....	1	316 9503	
64 80 (WFGS): 65 80 (WFGS-Note 16.195-1)	.....	1	317 3254	
65 80 (V8-WCGS)(Note 16.195-2)	.....	1	317 6800	
65 80 (V8-WFGS)(Note 16.195-2)	.....	1	317 6633	
ATTACHING PARTS				
Valve Body To Transmission Case				
BOLT, Hexagon ..... 60-61 01-10-20-80: 62 Thru 65 10-80 (V8)	17.038	3	G179802	NA
BOLT, Hexagon ..... 62 Thru 65 01-10 (Six-1-1/4" Long): 65 80 (OHV-232-1-1/4" Long)	17.038	1	G179799	NA

NOTE 16.195-1: Used prior to Car Sequence No. (With Vacuum Control).
NOTE 16.195-2: Used beginning with Car Sequence No. (With Cable Control).

Copyright 1963 American Motors Corp.

GROUP NO. — DESCRIPTION — YEAR and MODEL		PRIMARY GROUP NO.	PER CAR	PART NO.	CODE
BOLT, Hexagon	62 Thru 65 01-10 (Six-1-1/2" Long): 65 80 (OHV-232-1-1/2" Long)	17.038	2	G179801	NA
WASHER, Lock	60-61 01-10-20-80: 65 01: 62 Thru 65 10-80	17.820	3	G103319	NA
WASHER, Plain	62-63 01-10	17.814	2	G446178	NA

16.205 PLATE, Transmission Upper Control Valve

60 01		1	315 1082	
61 01		1	316 1225	
60-61 10-20		1	315 4357	
60 Thru 64 10-80 (V8-WCGS)		1	315 4145	
65 10-80 (V8-WCGS)...(Incl. Cam Bracket)		1	317 6630	
65 10-80 (V8-WFGS)...(Incl. Cam Bracket)		1	317 6632	
64 10-80 (V8-WFGS)		1	317 3251	
60 01: 60-61 10-20: 60 Thru 62 80: 65 10-80 (V8-Front)		1	315 1083	#
61 01 (Front)		1	316 1213	
61 01: 60-61 10-20: 60 Thru 65 10-80 (V8-Rear)		1	315 1084	#
63-64 10-80 (V8-Front)		1	317 0278	
62 Thru 65 01-10 (Six-End-Rear): 65 80 (OHV-232-End-Rear)		1	316 4881	
62 Thru 65 01-10 (Six-End-Front): 65 80 (OHV-232-End-Front)		1	316 4872	

ATTACHING PARTS

Plate To Valve Body

SCREW, Machine	60-61 01-10-20 (Fill. HD): 60 Thru 63 80 (Fill. HD)	17.602	3	G189384	NA
SCREW, Machine	60-61 01-10-20 (Flat. HD): 60 Thru 65 10-80 (V8-Flat. HD)		1	315 0969	

Front Plate To Valve Body

SCREW, Machine	62 Thru 65 01-10 (Six): 65 80 (OHV-232)	17.602	3	G189384	NA

Rear Plate To Valve Body

SCREW, Machine	62 Thru 65 01-10 (Six): 65 80 (OHV-232)	17.602	3	G189384	NA

Front End Plate To Valve Body

SCREW, Machine	62 Thru 64 01-10 (Six)	17.602	3	G189384	NA

Rear End Plate To Valve Body

SCREW, Machine	62 Thru 64 01-10 (Six)	17.602	3	G189384	NA

Upper Valve Body To Lower Valve Body

SCREW, Machine	62 Thru 65 01-10 (Six-1" Long): 65 80 (OHV-232-1" Long)	17.602	4	G190601	NA
SCREW, Machine	62 Thru 65 01-10 (Six-1-3/8" Long): 65 80 (OHV-232-1-3/8" Long)	17.602	1	G273181	NA

LEVER, Transmission Upper Control Valve Vacuum Control

60-61 01-10 (Six): 60 Thru 64 10-20-80 (V8)		1	315 1102	

BUSHING, Transmission Upper Control Valve Vacuum Control Lever Pivot

60-61 01-10 (Six): 60 Thru 64 10-20-80 (V8)		1	315 1103	

PIN, Transmission Upper Control Valve Vacuum Control Lever

60-61 01-10 (Six): 60 Thru 64 10-20-80 (V8)		1	315 1104	

HOOK, Transmission Upper Control Valve Vacuum Control

60-61 01-10 (Six): 60 Thru 64 10-20-80 (V8)		1	315 1105	

Copyright 1963 American Motors Corp.

GROUP NO. — DESCRIPTION — YEAR and MODEL	PRIMARY GROUP NO.	PER CAR	PART NO.	CODE
SPRING, Transmission Upper Control Valve Throttle Valve				
60 01: 60-61 10 (Six): 60 Thru 65 10-20-80 (V8)	.....	1	315 1124	
61 01	.....	1	316 1203	
SPRING, Transmission Upper Control Valve Throttle Valve Return				
60-61 01 (1 Req.): 60-61 10-20-80 (2 Req.): 65 10-80 (V8-1 Req.)	.....	AR	315 1117	
62 Thru 64 10-80 (V8)	.....	2	316 4238	
SPRING, Transmission Upper Control Valve Throttle Modulator Valve				
61 01	.....	1	316 1208	
(Inner) 60 01: 60-61 10 (Six): 60 Thru 65 10-20-80 (V8)	.....	1	315 1113	
(Outer) 60 01 (Note 16.001-4): 60 Thru 64 80	.....	1	315 3617	
(Outer) 60 01 (Note 16.001-3): 60-61 10-20	.....	1	315 1114	
(Outer) 63 Thru 64 10 (V8)	.....	1	320 4637	
(Outer) 65 10-80 (V8) ***(Use 318 0038)***	.....	1	318 0612	
SPRING, Transmission Upper Control Valve Compensator Valve				
(Inner) 60 01	.....	1	315 1121	
(Inner) 60-61 10	.....	1	315 8266	
(Outer) 60 01	.....	1	315 2527	
(Outer) 61 01	.....	1	316 1205	
60-61 10 (Six)	.....	1	315 8265	
60-61 20	.....	1	315 3509	
60 Thru 65 10-80 (V8)	.....	1	315 4114	
SPRING, Transmission Upper Control Valve Reverse Inhibitor				
62 01-10	.....	1	316 5032	
SPRING, Transmission Upper Control Valve 2nd And 3rd Valve (Inner)				
62 Thru 65 01-10 (Six): 65 80 (OHV-232) ***(Replaces 316 4959)***	.....	1	316 5829	
SPRING, Transmission Upper Control Valve 1st And 2nd Valve				
62 Thru 65 01-10 (Six): 65 80 (OHV-232)	.....	1	316 5032	
PLUNGER, Transmission Upper Control Valve 2nd And 3rd Shift				
62 Thru 65 01-10 (Six): 65 80 (OHV-232) ***(Replaces 316 4960)***	.....	1	316 5832	
SPRING, Automatic Transmission Range Control Valve				
65 01-10 (Six): 65 80 (OHV-232)	.....	1	317 8726	
16.215 PLATE, Transmission Lower Control Valve				
(End) 60-61 01-10 (Six): 60 Thru 65 10-20-80 (V8)	.....	1	315 1080	
(Separating) 60-61 01	.....	1	315 1081	
(Separating) 62 Thru 64 01-10 (Six)	.....	1	316 4801	
65 01: 65 10 (OHV-199)(OHV-232-WCGS): 65 80 (OHV-232-WCGS)	.....	1	317 6641	
65 10-80 (OHV-232-WFGS)	.....	1	317 8705	
(Separating) 60-61 10 (Six): 60 Thru 64 10-20-80 (V8-WCGS)	.....	1	315 3506	
65 10-80 (V8-WCGS)	.....	1	317 5705	
(Separating) 64-65 10-80 (V8-WFGS)	.....	1	317 3344	
(Side) 60-61 01-10 (Six): 60 Thru 65 10-20-80 (V8-WCGS)	.....	1	315 1085	
(Side) 64-65 10-80 (V8-WFGS)	.....	1	317 3265	

Copyright 1963 American Motors Corp.

GROUP NO. — DESCRIPTION — YEAR and MODEL	PRIMARY GROUP NO.	PER CAR	PART NO.	CODE
ATTACHING PARTS				
Lower Valve Body To Upper Valve Body				
SCREW, Machine..... 62 Thru 65 01-10 (Six): 65 80 (OHV-232).....	17.602	5	G189386	NA
VALVE, Transmission Lower Control Valve Transition				
60-61 10 (Six): 60 Thru 65 10-20-80 (V8).....	.....	1	315 3507	#
VALVE, Transmission Lower Control Valve Front Pump Check				
62 Thru 65 01-10 (Six): 65 80 (OHV-232).....	.....	1	316 4971	
VALVE, Transmission Lower Control Valve Rear Pump Check				
62 Thru 65 01-10 (Six): 65 80 (OHV-232).....	.....	1	316 4957	
VALVE, Transmission Lower Control Valve Manual				
62 Thru 65 01-10 (Six): 65 80 (OHV-232).....	.....	1	316 4967	
PLUNGER, Transmission Lower Control Valve 2nd And 3rd Shift				
60-61 01-10 (Six): 60 Thru 65 10-20-80 (V8).....	.....	1	315 1126	#
SPRING, Transmission Lower Control Valve Servo Check Valve				
60 01: 60-61 10 (Six): 60 Thru 64 10-20-80 (V8-WCGS).....	.....	1	315 2526	#
61 01.....	.....	1	316 1202	
SPRING, Transmission Lower Control Valve Servo Orifice Control Valve				
60-61 01-10 (Six): 60 Thru 65 10-20-80 (V8).....	.....	1	315 1091	#
62 Thru 64 01-10 (Six).....*(Replaces 316 5023)*	.....	1	317 4767	
SPRING, Automatic Transmission Front Clutch Oriface Control Valve				
65 01-10 (Six): 65 80 (OHV-232).....	.....	1	317 7391	
SPRING, Transmission Lower Control Valve Inhibitor Valve				
60-61 01-10 (Six): 60 Thru 62 20-80.....	.....	1	315 1099	#
SPRING, Transmission Lower Control Valve Rear Pump Check Valve				
60-61 01-10 (Six): 60 Thru 65 10-20-80 (V8).....	.....	1	315 1087	#
62 Thru 65 01-10 (Six): 65 80 (OHV-232).....	.....	1	320 3577	
SPRING, Transmission Lower Control Valve 2nd And 3rd Shift Valve				
(Inner) 60 01: 60-61 10 (Six): 60 Thru 65 10-20-80 (V8).....	.....	1	315 1094	#
65 10-80 (V8-WCGS).....	.....	1	317 5707	
(Inner) 61 01.....	.....	1	316 1204	
(Outer) 60-61 01-10 (Six): 60 Thru 65 10-20-80 (V8).....	.....	1	315 1095	#
SPRING, Transmission Lower Control Valve Transition Valve				
60 01: 60-61 10 (Six): 60 Thru 62 20-80.....	.....	1	315 1100	#
61 01.....	.....	1	315 1127	
63 80.....	.....	1	316 9076	
64-65 10-80 (V8).....	.....	1	317 3467	

Copyright 1963 American Motors Corp.

GROUP NO. — DESCRIPTION — YEAR and MODEL	PRIMARY GROUP NO.	PER CAR	PART NO.	CODE
SPRING, Transmission Lower Control Valve Governor Valve				
60-61 01: 60 10	.....	1	315 3066	
SPRING, Transmission Lower Control Valve 1st And 2nd Shift Valve				
60-61 02-10 (Six): 60 Thru 64 10-20-80 (V8): 65 10-80 (V8-WCGS)	.....	1	315 1100	#
SPRING, Automatic Transmission Second Speed				
64-65 10-80 (V8-WFGS)	.....	1	317 3257	
SPRING, Transmission Lower Control Valve Throttle Valve				
62 Thru 65 01-10 (Six): 65 80 (OHV-232)	16.205	1	316 4965	
SPRING, Transmission Lower Control Valve Throttle Valve Return				
62 Thru 65 01-10 (Six): 65 80 (OHV-232)	16.205	1	316 4956	
SPRING, Transmission Lower Control Valve Modulator Valve				
65 01: 65 10 (OHV-199): 64-65 10 (OHV-232): 65 80 (OHV-232)	.....	1	317 4766	
62 Thru 64 01-10 (Six)	16.205	1	316 4964	
BAFFLE, Automatic Transmission Control Valve Deflector				
62 Thru 64 01-10 (Six)	.....	1	320 5857	
SPRING, Transmission Lower Control Valve Converter Out Check				
62 Thru 65 01-10 (Six): 65 80 (OHV-232)	.....	1	315 0870	
SPRING, Transmission Lower Control Valve D1 And D2 Control Valve				
62 Thru 65 10-80 (V8)	.....	1	315 0870	
BALL, Transmission Lower Control Valve Steel (Converter And Front Clutch)				
62 Thru 64 01-10 (Six): 65 01: 65 10 (OHV-199)(OHV-232-WCGS): 65 80 (OHV-232-WCGS)	17.018	2	G147485	
65 10-80 (OHV-232-WFGS)	17.018	1	G147483	
16.225 LEVER, Transmission Manual Control (Outer)				
60 01	.....	1	315 1149	
61 01	.....	1	316 1200	
62-63 01	.....	1	316 4974	
64-65 01 (LHD)	.....	1	317 2101	
64 01 (RHD)	.....	1	317 2110	
60-61 10-20: 60 Thru 62 80	.....	1	315 4134	
62 10	.....	1	316 4339	
63 10 (LHD): 64 10 (LHD-Six-Note 16.225-3 Type 1)	.....	1	316 7660	
63-64 10 (RHD-Six-Note 16.225-1 Type1)	.....	1	316 9508	

NOTE 16.225-1: Two Types of Transmission Manual Control Levers were used in 64 01-10 (RHD-SIX) and 64 10 (RHD-V8) Cars. They can be identified as follows:
Type 1: The diameter of the hole in the Lever is 3/8".
Type 2: The diameter of the hole in the Lever is 1/4".

NOTE 16.225-2: Two Types of Manual Valve Control Shafts were used on 64 01-10 (Six) cars. They can be identified as follows:
Type 1: The bearing surface is 25/32" long.
Type 2: The bearing surface is 1-3/16" Long.

NOTE 16.225-3: Two Types of Control Levers were used on 64 10 (Six-LHD) Cars. They can be identified as follows:
Type 1: The Lever End has no Insulator and used a Bellcrank.
Type 2: The Lever End has an Insulator and does not use a Bellcrank.

Copyright 1963 American Motors Corp.

GROUP NO. — DESCRIPTION — YEAR and MODEL	PRIMARY GROUP NO.	PER CAR	PART NO.	CODE
64 10 (RHD-Six-Note 16.225-1 Type 2): 65 01 (RHD): 65 10 (OHV-232-RHD)	.....	1	317 4732	
63 80 (LHD): 64-65 10-80 (V8-WCGS)	.....	1	316 7652	
64 10 (LHD-Six-Note 16.225-3 Type 2): 65 10 (OHV-196)(OHV-232-WCGS):				
65 80 (OHV-232-WCGS)	.....	1	317 3606	
64 10 (V8-RHD)	.....	1	316 9505	
65 10 (V8-RHD)	.....	1	317 4785	
64-65 10-80 (V8-WFGS)	.....	1	317 3261	
65 10-80 (OHV-232-WFGS)	.....	1	317 7392	
LEVER, Transmission Manual Control Valve (Inside Detent)				
60-61 01: 63-64 10-80 (V8)	.....	1	315 1144	
60-61 10-20: 60 Thru 62 80	.....	1	315 4113	
62 Thru 65 01: 63 Thru 65 10 (Six): 65 80 (OHV-232)	.....	1	316 4846	
62 10	.....	1	316 4845	
65 10-80 (V8)	.....	1	318 2544	#
ATTACHING PARTS Detent Lever To Outer Lever				
NUT, Lock..... 60-61 01: 63 Thru 65 10-80 (V8)	16.205	1	315 1150	
NUT, Lock..... 64 01: 60 Thru 62 10-20-80: 64 10 (Six)	16.205	1	315 4107	
LEVER, Transmission Manual Control (Manual And Park)				
62 Thru 65 01: 63 Thru 65 10 (Six): 65 80 (OHV-232)	.....	1	316 4867	
ATTACHING PARTS Lever To Outer Lever				
NUT, Lock..... 62 Thru 65 01: 63 Thru 65 10 (Six): 65 80 (OHV-232)	16.205	1	315 4107	
LEVER, Transmission Manual Control (Inner)				
62 10	.....	1	320 3549	
ATTACHING PARTS Lever To Outer Lever				
NUT, Lock..... 62 10	16.205	1	315 4107	
INSULATOR, Transmission Manual Control Lever				
60 Thru 65 01: ***63 10 (RHD):*** 64-65 10-80 (WCGS)	.....	1	315 1145	
RING, Transmission Manual Control Lever Oil Seal "O"				
60-61 10-20: 60 Thru 62 80	.....	1	315 4109	
62 Thru 65 01: 62 10	16.090	1	316 5006	
SPRING, Transmission Manual Valve Detent Lever				
60-61 01: 63 Thru 65 10 (V8): 63 Thru 65 80 (V8)	.....	1	315 1151	
62 Thru 65 01: 63-64 10 (Six): 65 10 (OHV-199-WCGS)(LHD-OHV-232-WCGS):				
65 80 (OHV-232-WCGS)	.....	1	316 4979	
65 01-10-80 (OHV-232-WFGS)	.....	1	317 8887	
65 10 (RHD-OHV-232)	.....	1	317 7396	
60-61 10-20: 60 Thru 62 80	.....	1	315 4110	
62 10	.....	1	316 5045	
BALL, Transmission Manual Valve Detent Lever Spring Steel				
60-61 01-10 (Six): 63 Thru 65 10 (V8): 60 Thru 65 20-80 (V8)	17.018	1	G147500	
62 Thru 65 01-10 (Six): 65 80 (OHV-232)	17.018	1	G169110	
SLEEVE, Transmission Manual Outer Control Lever				
60-61 10-20: 60 Thru 62 80	.....	1	315 4126	

Copyright 1963 American Motors Corp.

GROUP NO. — DESCRIPTION — YEAR and MODEL	PRIMARY GROUP NO.	PER CAR	PART NO.	CODE
ROD, Transmission Manual Control Linkage				
60 Thru 65 01-10 (Six): 65 80 (OHV-232)	.....	1	316 5031	
ATTACHING PARTS				
Rod To Manual And Park Lever (Left)				
CLIP ..... 62 Thru 65 01-10 (Six): 65 80 (OHV-232)	.....	1	316 5000	
Rod To Manual Valve Detent Lever (Right)				
CLIP ..... 62 Thru 65 01-10 (Six): 65 80 (OHV-232)	.....	1	320 3581	
WASHER, Transmission Manual Valve Detent Lever				
62 Thru 64 01-10 (Six)	.....	1	316 4982	
SHAFT, Transmission Manual Valve Control (Hollow Center)				
62 Thru 63 01-10 (Six): 64 01-10 (Six-Note 16.225-2 Type 1)	.....	1	316 4862	
64 01-10 (Six-Note 16.225-2 Type 2): 65 01-10 (Six): 65 80 (OHV-232)	.....	1	317 4773	
LEVER, Transmission Throttle Control				
62 Thru 65 01-10 (Six): 65 80 (OHV-232)	.....	1	316 4861	
ATTACHING PARTS				
Lever To Control Shaft				
NUT, Hexagon 62-63 01-10	17.412	1	G131244	NA
CAM, Transmission Throttle Control Down Shift Valve				
62 Thru 64 01-10 (Six): 65 01 (WCGS): 65 10 (OHV-199)	.....	1	316 9156	
65 01: 64 10 (232): 65 10-80 (OHV-232-WFGS) ***(Replaces 317 4774, 317 7171)***	.....	1	317 8886	
65 10-80 (V8)...(Incl. Shaft) ***(Use 318 0042)***	.....	1	317 6625	#
ATTACHING PARTS				
Cam To Shaft				
NUT, Hexagon ..... 62 Thru 64 01-10 (Six)	17.410	1	G272121	NA
Shaft To Bracket				
CLIP 65 10-80 (V8)	17.710	1	G148147	
SPRING, Automatic Transmission Throttle Cam Return				
65 10-80 (V8)	.....	1	317 6626	
65 01-10-80 (Six)	.....	1	318 0887	
ROD, Transmission Throttle Control Cable To Control Lever				
62 Thru 65 01-10 (Six): 65 80 (OHV-232)	.....	1	316 4340	
65 10-80 (V8)	.....	1	317 6628	
ATTACHING PARTS				
Rod To Lever				
CLIP ..... 62 Thru 65 01-10 (Six): 65 80 (OHV-232)	.....	1	316 5000	
PIN, Transmission Manual Control Outer Lever Taper				
62-63 01-10	17.470	1	G110769	NA
16.227 LEVER ASSEMBLY, Transmission Parking Lock (Outer)				
60-61 10-20: 60 Thru 62 80	.....	1	315 4133	
62 10	.....	1	316 4337	

Copyright 1963 American Motors Corp.

GROUP NO. — DESCRIPTION — YEAR and MODEL	PRIMARY GROUP NO.	PER CAR	PART NO.	CODE
ATTACHING PARTS				
Lever To Torsion Lever				
NUT, Hexagon..... 60 Thru 62 10–20–80.....	16.205	1	315 4107	
SEAL, Transmission Parking Lock Oil				
62 80.....	16.010	1	315 4112	
RING, Transmission Parking Lock Oil Seal "O"				
62 Thru 65 10 (Six): 65 80 (OHV–232).....	16.090	1	316 5006	
16.230 TUBE, Transmission Oil Cooler				
(Long) 60–61 20.....	.....	1	315 3933	
(Long) 60 80.....	.....	1	315 3828	
(Long) 61 80.....	.....	1	316 0776	
(Long) 62 80.....	.....	1	316 5538	
(Long) ***63-64 10 (LHD-Six-Heavy Duty)***.....	.....	1	316 9330	
(Long) ***64 10 (OHV-232-Heavy Duty): 65 10-50-80 (Six-Heavy Duty)***.....	.....	1	317 4506	#
(Long) 64–65 10 (V8): 63–64 80 .....***(Replaces 316 9011)***	.....	1	317 0254	
(Long) 65 80 (V8).....	.....	1	317 5594	
(Short) 60–61 20.....	.....	1	315 3932	
(Short) 64–65 10 (V8): 63–64 80 (V8).....***(Replaces 316 9010)***	.....	1	317 0253	
(Short) 60 80.....	.....	1	315 3827	
(Short) 61 80.....	.....	1	316 0775	
(Short) 62 80.....	.....	1	316 5539	
(Short) ***63 10 (LHD-Heavy Duty): 64 10 (LHD-Six-Heavy Duty)***.....	.....	1	316 9329	
(Short) ***64 10 (OHV-232-Heavy Duty): 65 10-50-80 (Six-Heavy Duty)***.....	.....	1	317 4505	#
(Short) 65 80 (V8).....	.....	1	317 5595	
TUBE, Transmission Oil Cooler Discharge To Sump				
60 Thru 65 10–20–80 (V8).....	.....	1	315 3454	
HOSE, Transmission Oil Cooler Tube (Flex)				
60–61 20–80.....	.....	2	315 6471	
62 80.....	.....	2	316 5542	
63 Thru 65 10-50 (Six-Heavy Duty): 63 Thru 65 10–80 (V8).....	.....	2	316 7685	#
65 80 (LHD-OHV-232-Heavy Duty).....	.....	2	318 2439	
ELBOW, Transmission Oil Cooler Tube (In Cooler)				
60 Thru 62 20–80.....	17.218	2	G137423	
63-64 10 (LHD-Heavy Duty): 65 10 (Six-Heavy Duty).....	17.218	1	G143343	
63 Thru 65 10–80 (V8).....	.....	1	316 9331	
CONNECTOR, Transmission Oil Cooler Tube (In Transmission)				
60 Thru 62 20–80.....	.....	2	315 3664	
63-64 10 (LHD-Heavy Duty).....	17.160	1	G187343	
63 Thru 65 10–80 (V8).....	17.160	1	G137406	
CLIP, Transmission Oil Cooler Tube				
60–61 20–80 (On Oil Pan Stud).....	6.631	1	314 9613	
63 Thru 65 10 (V8): 62 Thru 65 80 (V8)(On Oil Pan Stud).....	.....	1	316 5536	
63-64 10 (LHD-Six-Heavy Duty).....	3.210	1	312 3849	
64 10 (OHV-232-Heavy Duty): 65 10-50-80 (Six-Heavy Duty).....	10.470	1	315 8792	#
TUBE, Automatic Transmission Oil Cooler Inlet (In Transmission)				
63 Thru 65 10 (OHV-199-Heavy Duty): 64-65 10 (OHV-232-Heavy Duty).....	.....	1	317 9169	

Copyright 1963 American Motors Corp.

GROUP NO. — DESCRIPTION — YEAR and MODEL	PRIMARY GROUP NO.	PER CAR	PART NO.	CODE
ATTACHING PARTS				
Clip To Oil Pan Stud				
NUT, Hexagon ..... 60 Thru 65 10-20-80 (V8)	17.406	1	G120368	NA
WASHER, Lock ..... 60 Thru 65 10-20-80 (V8)	17.820	1	G120214	NA
STUD 63 80	5.178	1	312 2698	
Clip To Bracket				
BOLT, Hexagon ..... *63-64 10 (LHD-Six-Heavy Duty)*	17.038	1	G180018	NA
WASHER, Lock ..... *63-64 10 (LHD-Six-Heavy Duty)*	17.820	1	G120380	NA
NUT, Hexagon ..... *63-64 10 (LHD-Six-Heavy Duty)*	17.406	1	G120375	
CLIP, Transmission Oil Cooler Tube (Anti-Rattle)				
60 Thru 62 20-80	.....	1	315 5174	
64 10-80 (V8) ..... *(Replaces 315 6574)*	23.028	1	400 0021	
63 Thru 65 10 (LHD-Six-Heavy Duty): 63 80	23.028	1	400 0021	
BRACKET, Transmission Oil Cooler Tube Clip				
63-64 10 (LHD-Six-Heavy Duty)	.....	1	316 9405	
ATTACHING PARTS				
Bracket To Oil Pan				
STUD ..... *63 Thru 65 10 (LHD-Six-Heavy Duty)*	5.178	1	312 2698	
WASHER, Spring Lock .. *63 Thru 65 10 (LHD-Six-Heavy Duty)*	17.820	1	G120214	NA
WASHER, Internal ..... *63 Thru 65 10 (LHD-Six-Heavy Duty)*	17.824	1	G138538	NA
NUT, Hexagon ..... *63 Thru 65 10 (LHD-Six-Heavy Duty)*	17.406	1	G120368	NA
16.235 SOLENOID, Transmission (Incl. Boot)				
60-61 01-10 ..... *(Replaces 320 3748)*	.....	1	320 4964	
60-61 20	.....	1	320 3749	
63-64 10 (V8): 60 Thru 64 80: 65 10-80 (V8-Notes 16.001-2, 16.001-4, And 16.001-5) ..... *(Replaces 320 3750)*	.....	1	320 4966	
ROD, Transmission Solenoid Push				
60-61 01-10 (Six): 63-64 10 (V8): 60 Thru 64 20-80	.....	1	315 1106	
BOOT, Transmission Solenoid (On Diaphragm)				
60-61 01-10 (Six): 63-64 10 (V8): 60 Thru 64 20-80	.....	1	315 1107	
RING, Transmission Solenoid Oil Seal "O"				
60-61 01-10 (Six): 63-64 10 (V8): 60 Thru 64 20-80	.....	1	315 1108	
NUT, Transmission Solenoid Jam				
60-61 01-10 (Six): 63-64 10 (V8): 60 Thru 64 20-80	.....	1	315 1109	
BOOT, Transmission Solenoid Cover				
60-61 01-10 (Six): 63-64 10 (V8): 60 Thru 64 20-80	.....	1	316 5782	
16.240 TUBE, Transmission Vacuum				
60-61 01 (LHE)	.....	1	315 6041	
60-61 01-10 (OHV)	.....	1	315 6154	
60-61 20-80 ..... *(Discontinued)*	.....	1	315 6120	
62 80	.....	1	316 4078	
63-64 10-80 (V8): 65 10-80 (V8-LHD-Note 16.240-1)	.....	1	316 8272	

NOTE 16.240-1: Used prior to Car Sequence No.

Copyright 1963 American Motors Corp.

GROUP NO. — DESCRIPTION — YEAR and MODEL	PRIMARY GROUP NO.	PER CAR	PART NO.	CODE
ATTACHING PARTS				
Tube To Cylinder Head				
CLIP ..... 60-61 01 (LHE)	3.022	1	313 0379	
Tube To Manifold Cover				
CLIP ..... 60-61 01-10 (OHV)	3.165	1	15 898	
ELBOW ..... 60-61 10: 63-64 10-80 (V8): 65 10-80 (V8-Note 16.240-1)	17.218	1	G137420	
TEE ..... 60 Thru 62 20-80	.....	1	315 6194	
Tube To Transmission				
CLIP ..... 62 Thru 64 10-80 (V8): 65 10-80 (V8-Note 16.240-1)	3.022	1	313 0379	
CONNECTOR 60-61 01	17.160	1	G137405	
CONNECTOR ..... 60-61 10-20: 60 Thru 64 10-80 (V8): 65 10-80 (V8-Note 16.240-1)	17.160	1	G137404	
VALVE, Transmission Vacuum Bleedoff				
60-61 10-20: 63-64 10 (V8): 60 Thru 64 80	.....	1	320 2930	
BRACKET, Transmission Vacuum Tube (At Manifold)				
60-61 01-10 (OHV)	.....	1	315 0579	
ATTACHING PARTS				
Bracket To Manifold				
SCREW, Tapping ..... 60-61 01-10 (OHV) .....*(Replaces 800 0095)*	17.671	1	G456766	
NUT, Speed ..... 60-61 01-10 (OHV)	2.045	1	310 3117	
16.245 SWITCH, Transmission Solenoid Kickdown				
60 01 (LHE): 61 01 (LHD-LHE)	.....	1	315 4788	
60-61 01 (OHV): 60 10 (LHD): 61 10-20: 61-62 80	.....	1	315 5793	
60 10 (RHD)	.....	1	315 0575	
63-64 10-80 (V8): 65 10-80 (V8-Note 16.240-1)	6.367	1	316 6620	
ATTACHING PARTS				
Switch To Bracket				
SCREW, Tapping ..... 60 01: 61 01 (LHE)	17.670	2	G445656	NA
WASHER, Lock ..... ***60 10 (RHD)***	17.824	1	G115550	NA
WASHER, Lock ..... 60-61 01 (OHV): 60 10 (LHD): 61 10: 60 Thru 62 20-80	3.022	1	314 2746	
WASHER, Lock ..... 63-64 10-80 (V8): 65 10-80 (V8-Note 16.240-1)	17.824	2	G115550	NA
WASHER, Plain ..... ***60 10 (RHD)*** .....*(Replaces 800 0179)*	17.814	3	400 1116	
NUT, Speed ..... 60 01: 61 01 (LHE)	15.022	2	312 6533	
NUT, Jam ..... ***60 10 (RHD)***	17.410	1	G272123	NA
NUT, Lock ..... 63-64 10-80 (V8): 65 10-80 (V8-Note 16.240-1)	6.367	2	316 6650	
NUT, Lock 65 10-80 (V8-Note 16.240-1)	17.410	2	G120613	NA
NUT, Lock 65 10-80 (V8-Note 16.240-1)	.....	2	400 0710	
Switch Terminal				
SCREW, Machine ..... ***61 01 (RHD): 60 10 (RHD)***	17.614	2	G447119	NA
WASHER, Lock ..... ***61 01 (RHD): 60 10 (RHD)***	17.820	2	G131095	NA
HARNESS, Transmission Solenoid Kickdown Switch Wire				
60 10 (LHD)	.....	1	315 6042	
60 10 (RHD)	.....	1	315 5059	
61 10	.....	1	316 1074	
BRACKET, Transmission Solenoid Kickdown Switch				
60 01: 61 01 (LHD-LHE)	.....	1	313 6723	
61 01 (OHV) .....*(Replaces 315 6274)*	6.370	1	316 2245	

Copyright 1963 American Motors Corp.

GROUP NO. — DESCRIPTION — YEAR and MODEL	PRIMARY GROUP NO.	PER CAR	PART NO.	CODE
60 10 (LHD-WDT): 61 10 ..... *(Replaces 315 4256)*	6.370	1	316 2387	
60 Thru 62 20-80 (WDT)	6.370	1	315 8343	
60 Thru 62 20-80 (W4B)	6.370	1	315 4269	
63-64 10-80 (V8): 65 10-80 (V8-Note 16.240-1)	6.370	1	316 7858	
ATTACHING PARTS Bracket To Dash Panel				
SCREW, Tapping..... 63-64 10-80 (V8): 65 10-80 (V8-Note 16.240-1)	17.621	2	G443794	NA
WIRE, Transmission Kickdown Switch To Solenoid				
60-61 01 (LHE)	.....	1	315 5031	
60-61 01 (OHV)	.....	1	315 9880	
60 Thru 62 20-80 ..... *(Ref. Pr. List)*	.....	1	315 5791	
63-64 10-80 (V8): 65 10-80 (V8-Note 16.240-1)	.....	1	316 8176	
WIRE, Transmission Solenoid Kickdown Switch To Junction Block				
60 01 (LHE)	.....	1	315 5032	
60 20-80	.....	1	315 5789	
WIRE, Transmission Solenoid Kickdown Switch To Chassis Wiring Harness				
61 01 (LHE)	.....	1	316 1341	
WIRE, Transmission Solenoid Connector To Kickdown Switch				
62 80	.....	1	316 3879	
WIRE, Transmission Solenoid Kickdown Switch Jumper				
63 80 (RHD)	.....	1	317 0479	
65 10-80 (V8-Note 16.240-1)	.....	1	317 8889	
CONNECTOR, Transmission Solenoid To Kickdown Switch				
60-61 01-10-20: 60 Thru 62 80	13.170	1	312 7171	
BUSHING, Transmission Solenoid Kickdown Switch				
60-61 01 (OHV): 60 10 (LHD): 61 10: 60 Thru 62 80.....	3.022	1	312 9158	
CLIP, Transmission Solenoid Wire To Tube				
61 01 (OHV)	3.210	3	63 045	
63-64 10-80 (V8).....	17.134	2	G105245	
SPRING, Transmission Solenoid Kickdown Switch				
61 01 (LHE)	6.367	1	315 4601	
RETAINER. Transmission Solenoid Kickdown Switch Spring				
61 01 (LHE)	6.367	1	315 4600	
PELLET, Transmission Solenoid Kickdown Switch				
61 01 (LHE)	6.367	1	312 5873	
ATTACHING PARTS Pellet To Cable				
SCREW, Machine..... 61 01 (LHE)	12.061	1	310 8350	

Copyright 1963 American Motors Corp.

GROUP NO. — DESCRIPTION — YEAR and MODEL	PRIMARY GROUP NO.	PER CAR	PART NO.	CODE
16.248 GEAR, Speedometer Drive (Refer To Speedometer Drive Gear Chart In Group 6 Page No. Ch 6-1, Ch-2)				
RING, Transmission Speedometer Drive Gear Snap				
60-61 01-10 (Six): 60 Thru 65 10-20-80 (V8)	6.044	1	310 4169	
62-63 01: 62 10	6.330	2	315 0700	
64 01: 63-64 10 (Six)	6.069	2	310 8405	
BALL, Transmission Speedometer Drive Gear Steel (1/4")				
60 Thru 65 01-10-20-80	17.018	1	G147485	
16.300 CABLE, Transmission Throttle Control				
62-63 01-10 (OHV-Six) ***(Use 317 5597)***	.....	1	316 3763	
64-65 01 (LHE)	.....	1	317 2238	
64 01-10 (OHV-Six): 65 01 (OHV-199)(OHV-196): 65 10-80 (Six)	.....	1	317 5597	#
65 01 (OHV-232)	.....	1	318 0111	
65 10-80 (V8-287): 65 10-80 (V8-327-WDT)	.....	1	317 5872	
65 10-80 (V8-327-W4B)	.....	1	317 5493	
ATTACHING PARTS Cable To Transmission				
BOLT, Hexagon 65 10-80 (V8)	17.038	1	G180016	NA
WASHER, Plain..... 65 10-80 (V8)	17.814	1	G120392	NA
SPRING, Automatic Transmission Throttle Control Retaining				
65 80 (OHV-232)	.....	1	317 4455	
CLEVIS, Transmission Throttle Control Cable				
62-64 01-10 (OHV)	.....	1	316 4186	
62 Thru 64 01 (LHE): 65 01-20-80	17.120	2	G186956	
ATTACHING PARTS Clevis To Control Shaft Link				
PIN, Clevis ..... 62 Thru 63 01-10 (OHV): 65 01 (OHV-196): ***65 10 (RHD-OHV-232)(RHD-OHV-287)***	.....	1	316 4193	
PIN, Clevis 64 01: 65 01-10-80	6.350	2	316 7260	
PIN, Cotter ..... 62 Thru 64 01-10 (OHV): 65 01-10-80	17.460	1	400 0793	
NUT, Hexagon..... 63 Thru 65 01-10: 65 80	17.412	1	G120614	NA
WASHER, Plain..... 65 01-10-80	17.814	1	G446152	
CLIP 65 10-80 (V8)	8.192	1	312 8734	
BRACKET, Transmission Cable				
65 01 (OHV-199-LDT): 65 10 (OHV-199): 64-65 10 (OHV-232-LDT)	.....	1	317 5436	
65 01-10-80 (OHV-232-WDT)	.....	1	317 5776	#
65 10-80 (V8)	.....	1	317 6742	
ATTACHING PARTS Clevis To Bellcrank Bracket				
BOLT, Shoulder ..... 62 01 (LHE): 63 01 (LHE-Note 16.300-1)	.....	1	316 3602	
BOLT, Shoulder ..... 63 01 (LHE-Note 16.300-2)	.....	1	317 0323	
SCREW, Machine..... 65 10-80 (Six)	.....	2	400 0987	
WASHER, Spring..... 62-63 01 (LHE)	4.266	1	312 8655	
WASHER, Plain..... 62 Thru 64 01 (LHE)	17.814	1	G446152	NA
WASHER, Lock ..... 65 10-80 (Six)	17.820	2	G120214	
RING, Automatic Transmission Throttle Control Pin Snap				
63 01 (LHE-Note 16.300-2)	.....	1	317 0324	

NOTE 16.300-1: The Transmission Control Cable is threaded into the Bellcrank.
NOTE 16.300-2: The Transmission Control Cable is retained in the Bellcrank by a Snap Ring.

Copyright 1963 American Motors Corp.

GROUP NO. — DESCRIPTION — YEAR and MODEL	PRIMARY GROUP NO.	PER CAR	PART NO.	CODE
RETAINER, Transmission Throttle Control Cable (In Transmission)				
62 Thru 65 01-10: 65 80 ..... *(Replaces 317 6849)*	.....	1	316 3633	
SEAL, Transmission Throttle Control Cable (In Transmission)				
62 Thru 65 01-10 (Six): 65 80 (OHV-232): 65 10-80 (V8)	.....	1	316 3632	
CLAMP, Transmission Throttle Control Cable (Incl. Spacer)				
62 Thru 65 01-10 (Six): 65 80 (OHV-232)	.....	1	316 3636	
ATTACHING PARTS				
Clamp To Transmission Case				
BOLT, Hexagon ..... 62 Thru 65 01-10 (Six): 65 80 (OHV-232)	17.038	1	G180018	NA
WASHER, Lock ..... 62 Thru 65 01-10 (Six): 65 80 (OHV-232)	17.820	1	G120380	NA
16.305 SUPPORT, Transmission Throttle Control Cable (Under Starter Motor Bolt)				
62 01-10	.....	1	316 4760	
CLIP, Transmission Throttle Control Cable Closed				
62 01-10	17.134	1	G105245	
ATTACHING PARTS				
Clip To Support				
BOLT, Hexagon 62 01-10	17.038	1	G180018	NA
WASHER, Lock 62 01-10	17.820	1	G120380	NA
NUT, Hexagon 62 01-10	17.406	1	G120375	NA

Copyright 1963 American Motors Corp.

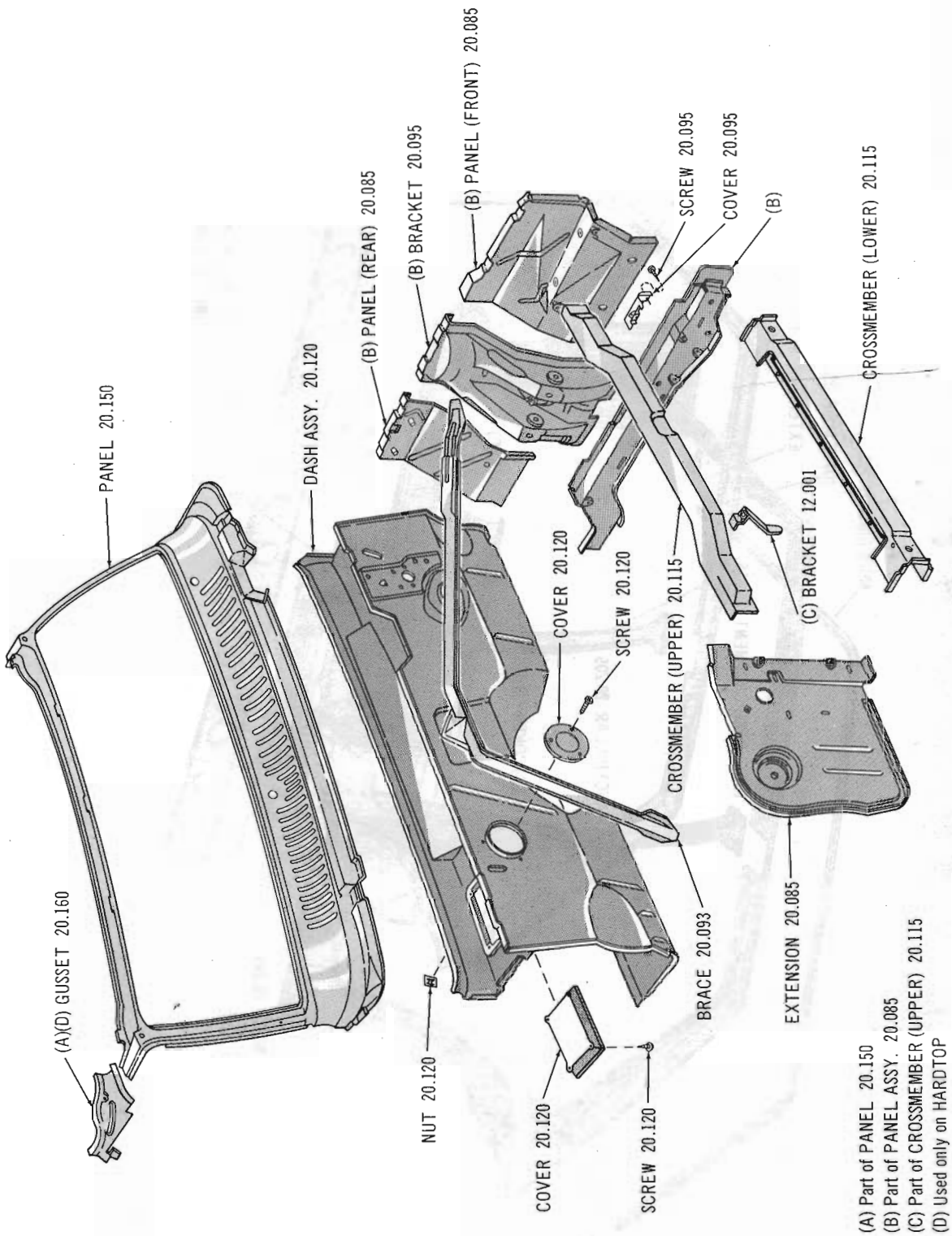

DASH AND FRONT WHEELHOUSE PANEL 64-65 01

Copyright 1963 American Motors Corp.

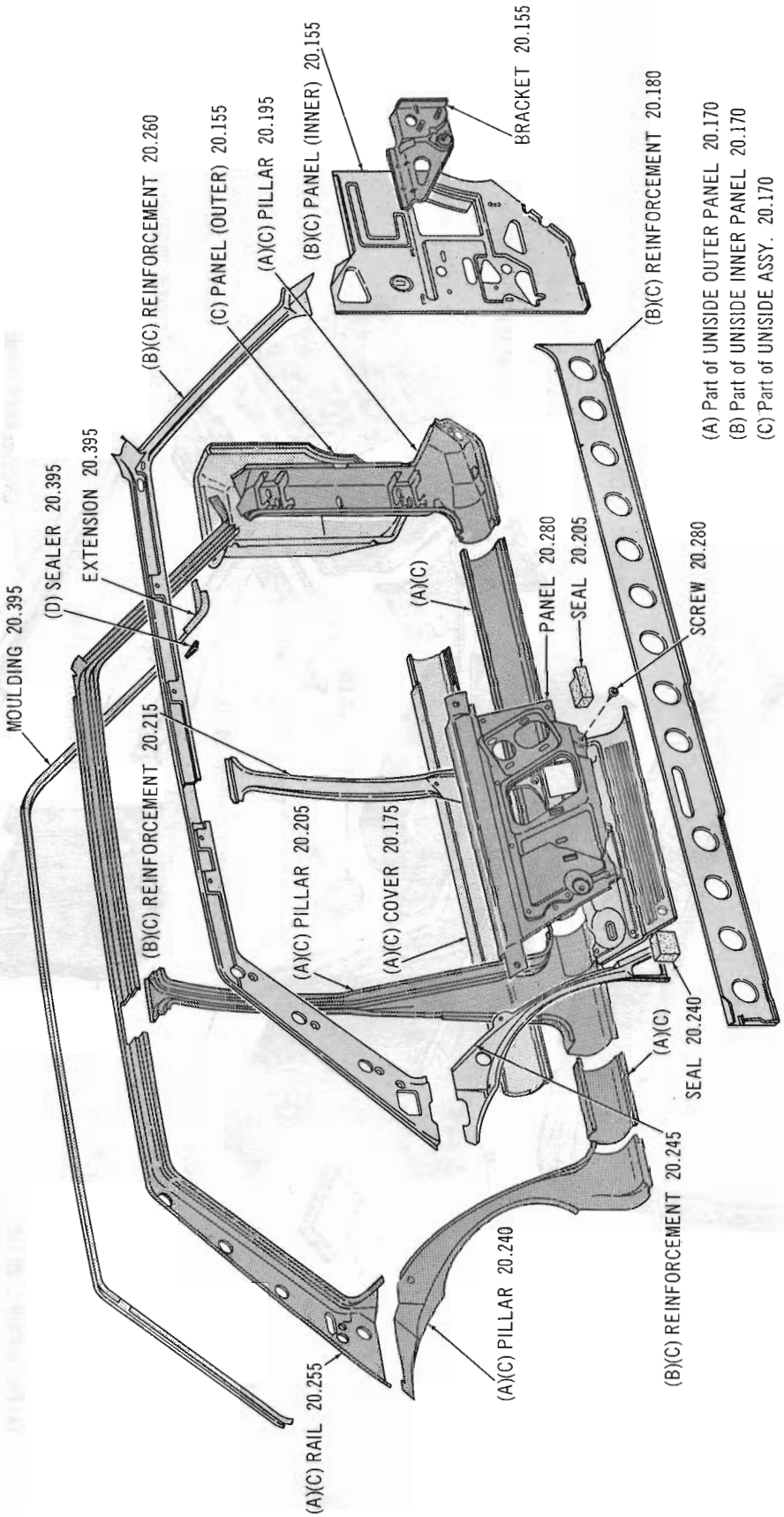

UNISIDE 63 thru Current 16-86: 64-65 02-06

Copyright 1963 American Motors Corp.

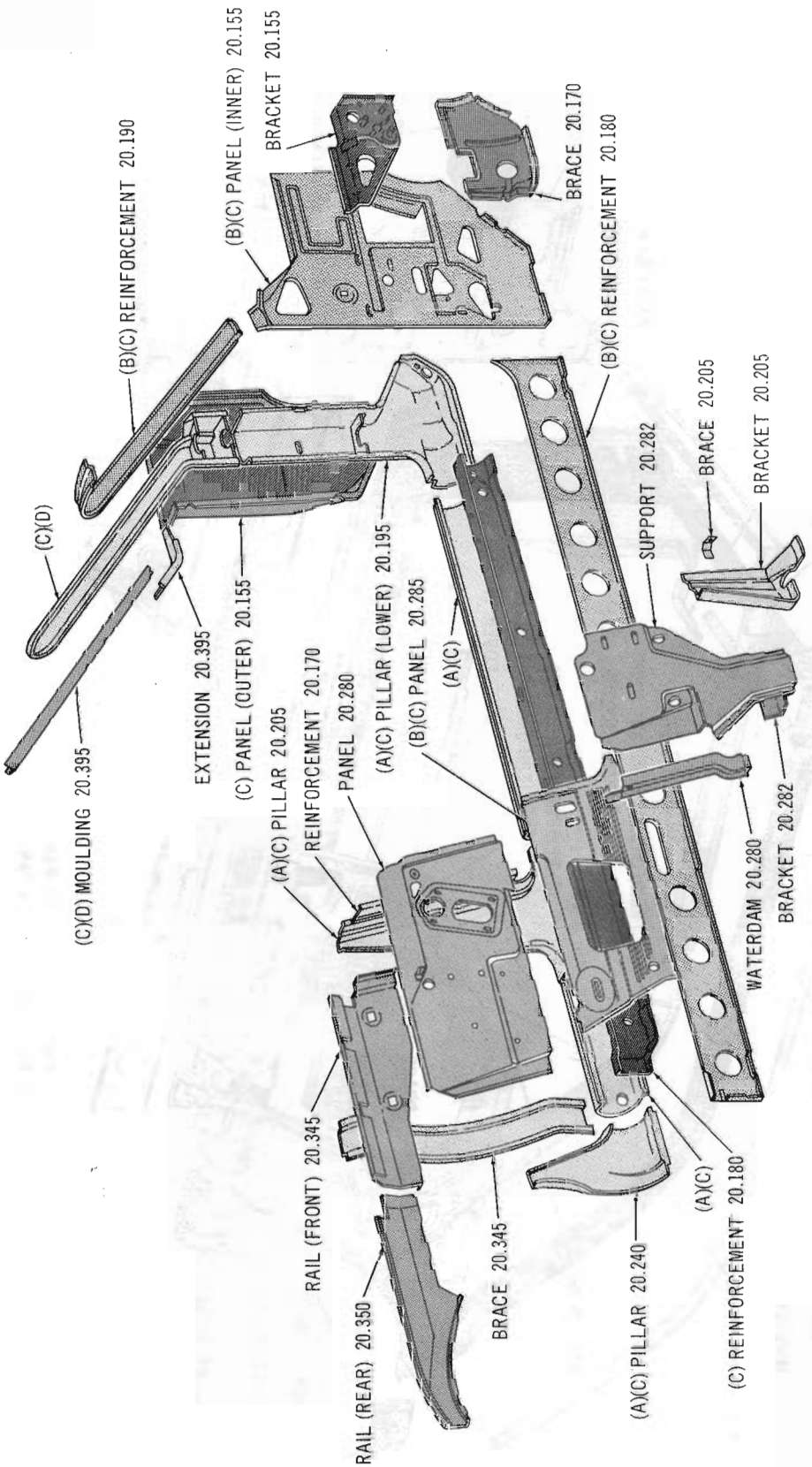

UNISIDE 64-65 07: 65 17-87

Copyright 1963 American Motors Corp.

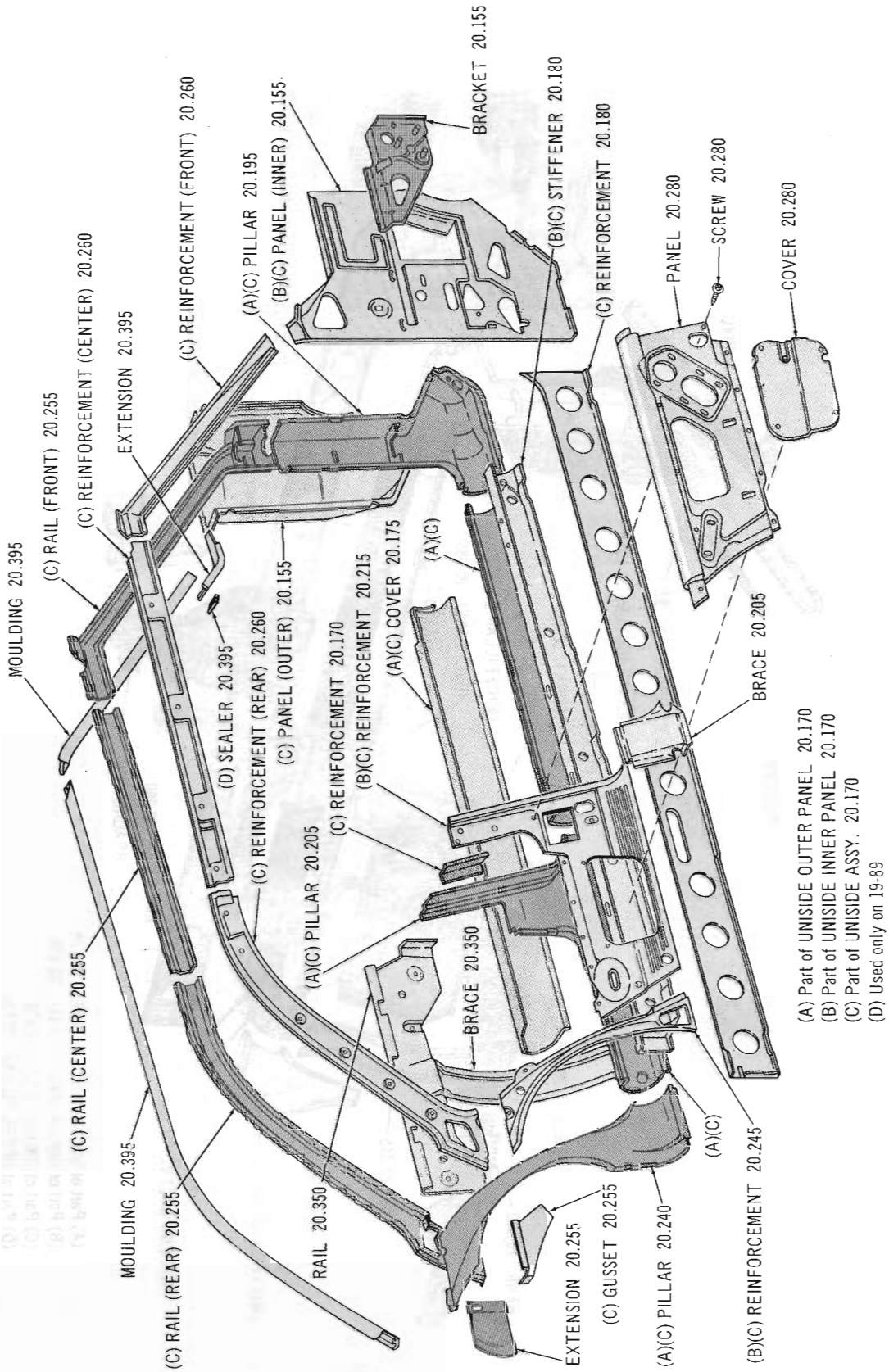

UNISIDE 64-65 09-19-89 (Except Marlin)

Copyright 1963 American Motors Corp.

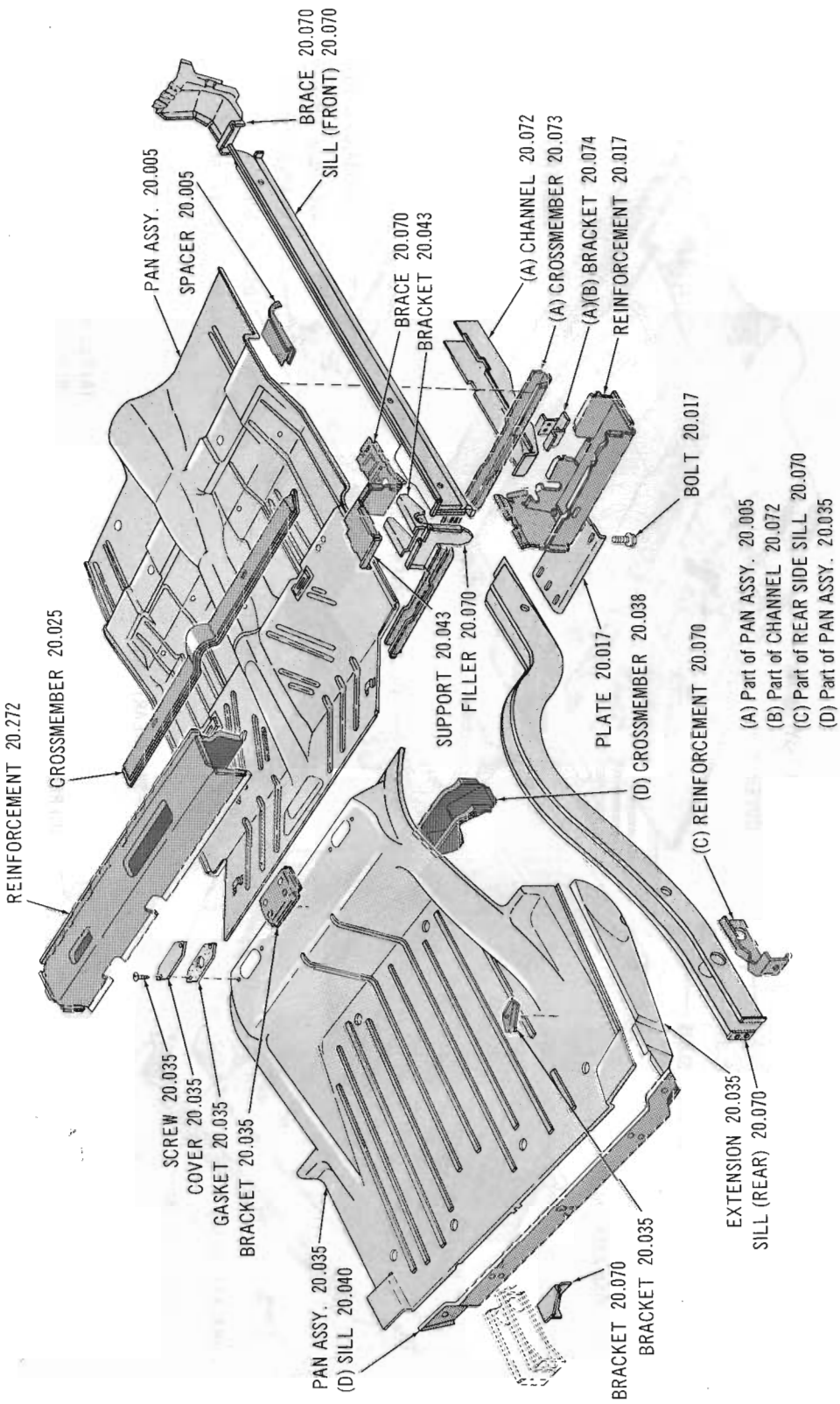

UNDERBODY PANELS 64-65 07

Copyright 1963 American Motors Corp.

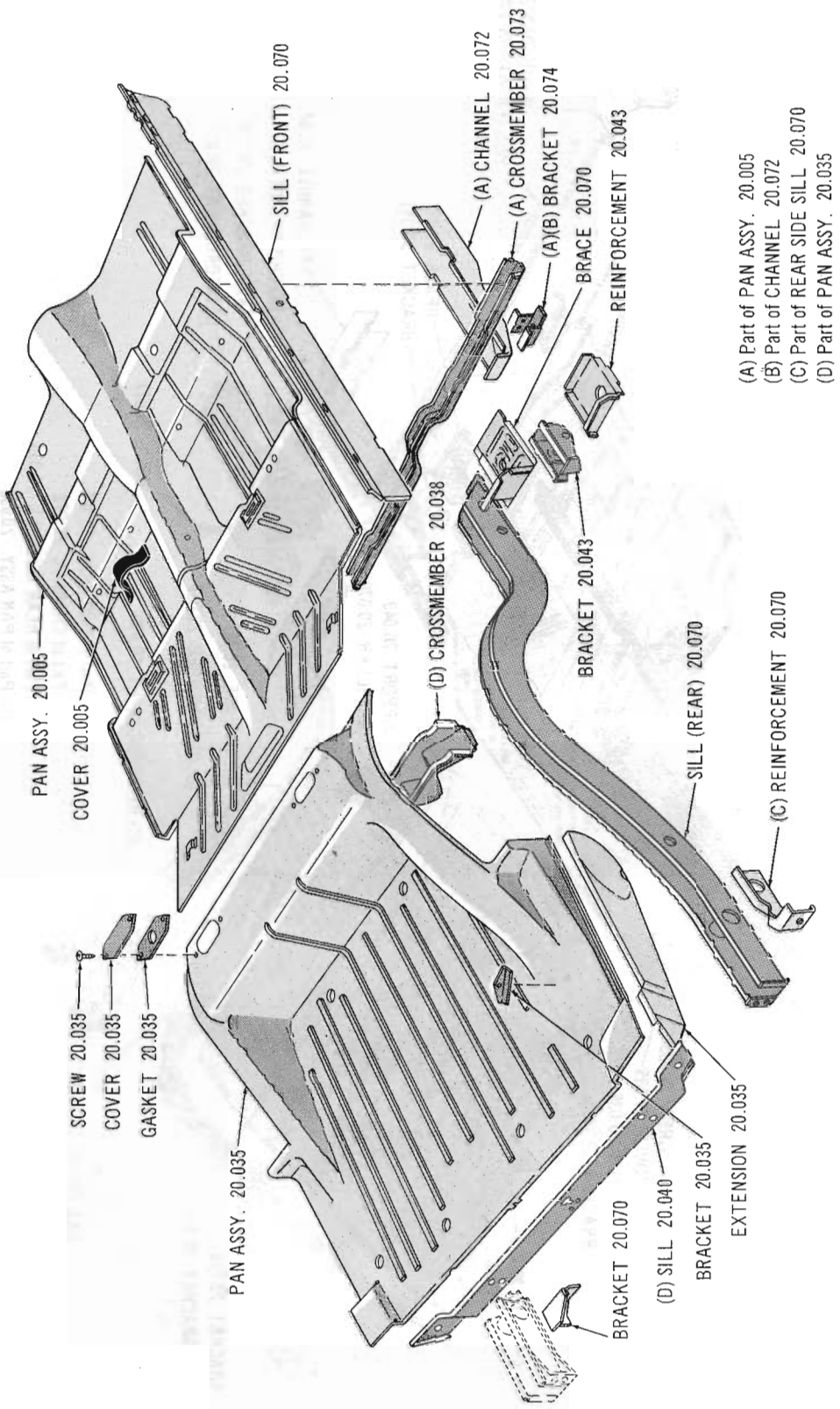

UNDERBODY PANELS 64-65 02-05-06-08-09

Copyright 1963 American Motors Corp.

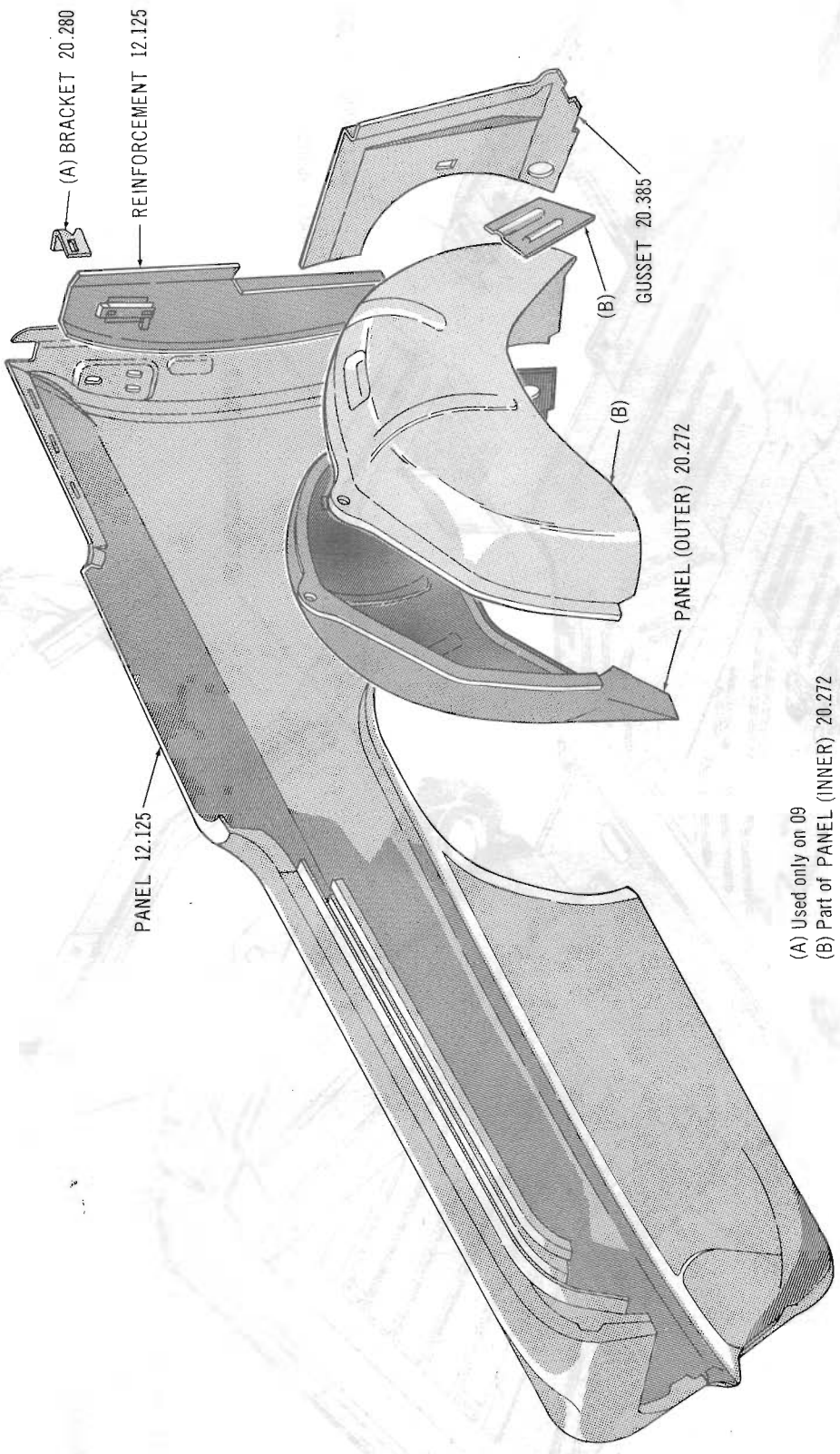

REAR QUARTER PANELS 64-65 07-09

Copyright 1963 American Motors Corp.

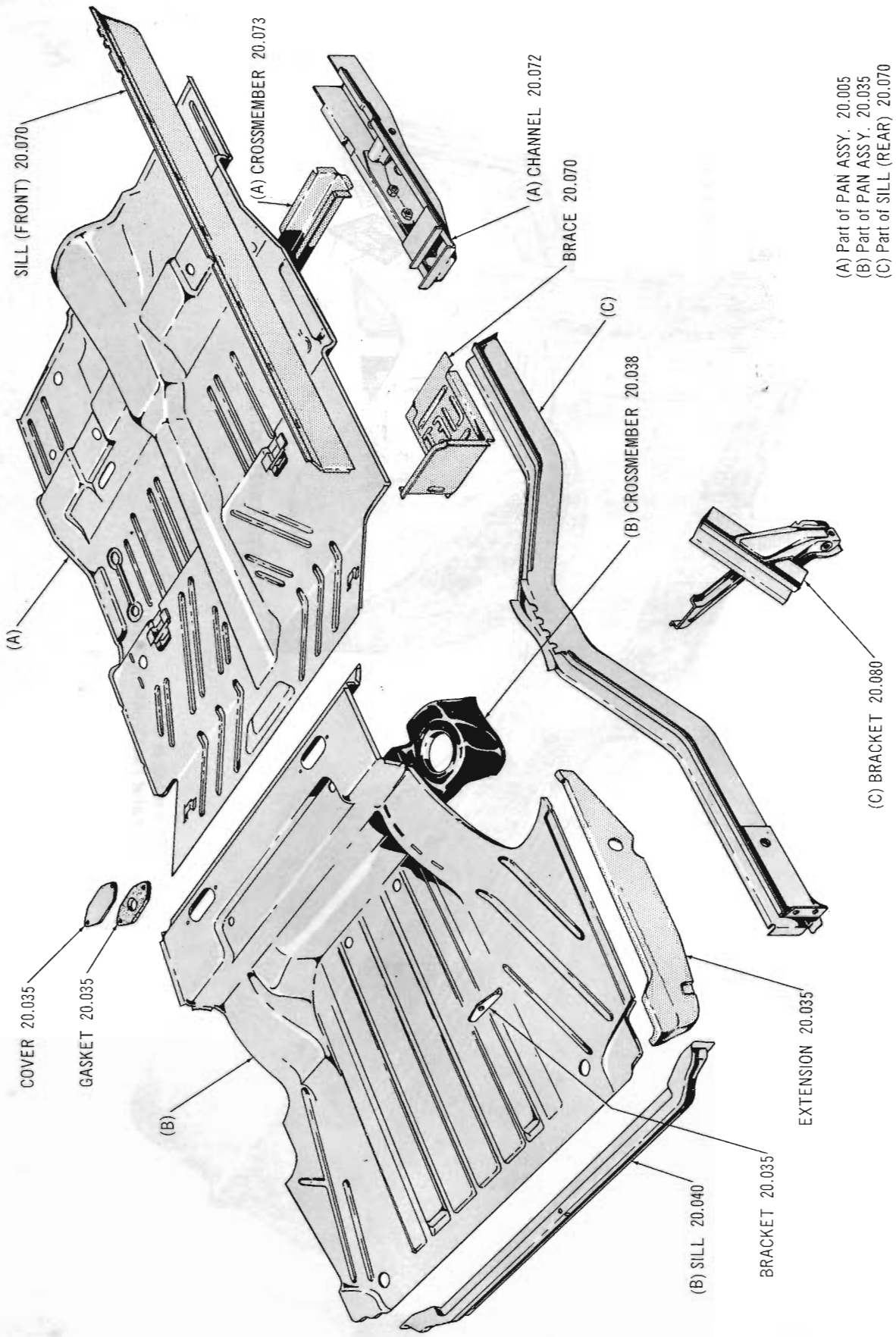

UNDERBODY PANELS 63 thru 65 10-80

Copyright 1963 American Motors Corp.

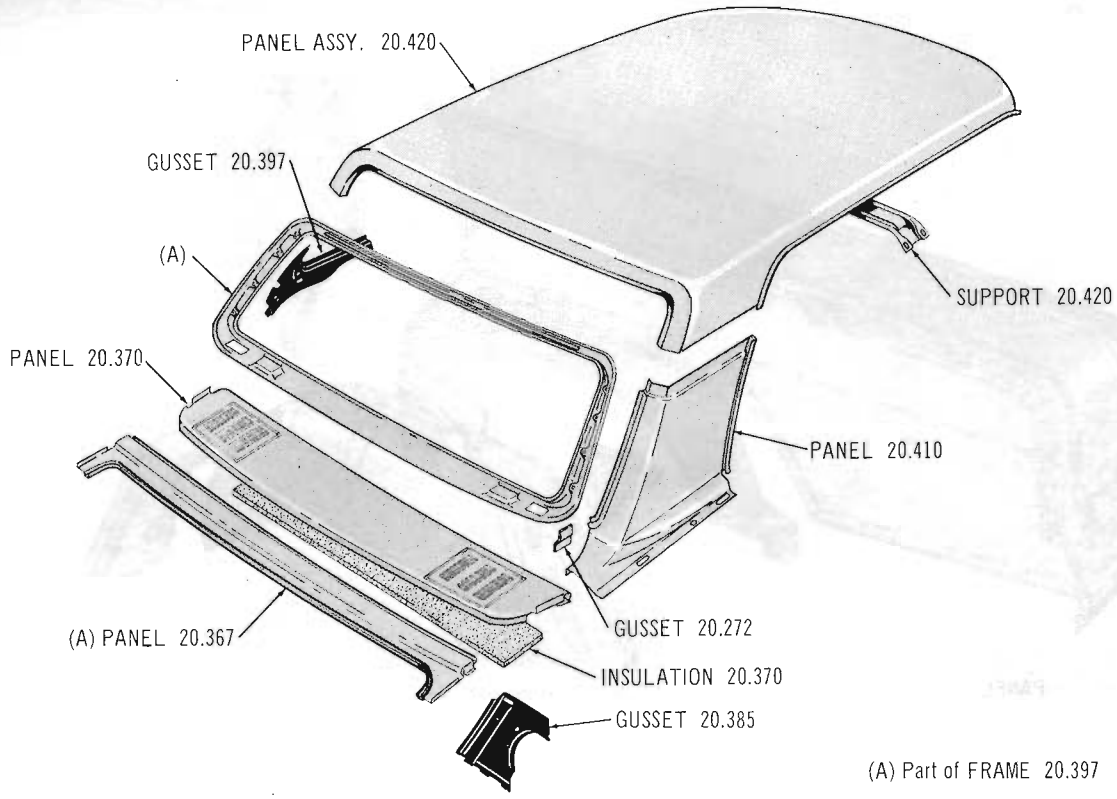

ROOF PANEL, SUPPORTS AND REAR SHELF PANEL 65 15-16-85-86

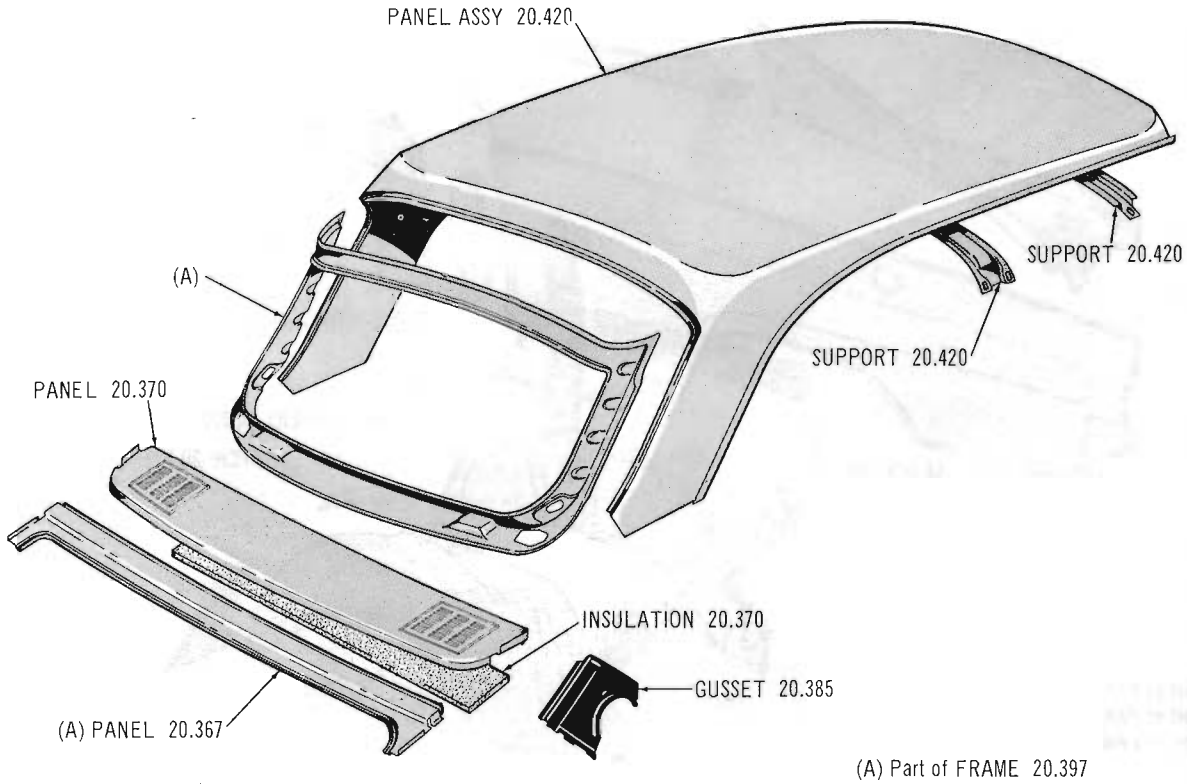

ROOF PANEL, SUPPORTS AND REAR SHELF PANEL 65 19-89 (Except Marlin)

Copyright 1963 American Motors Corp.

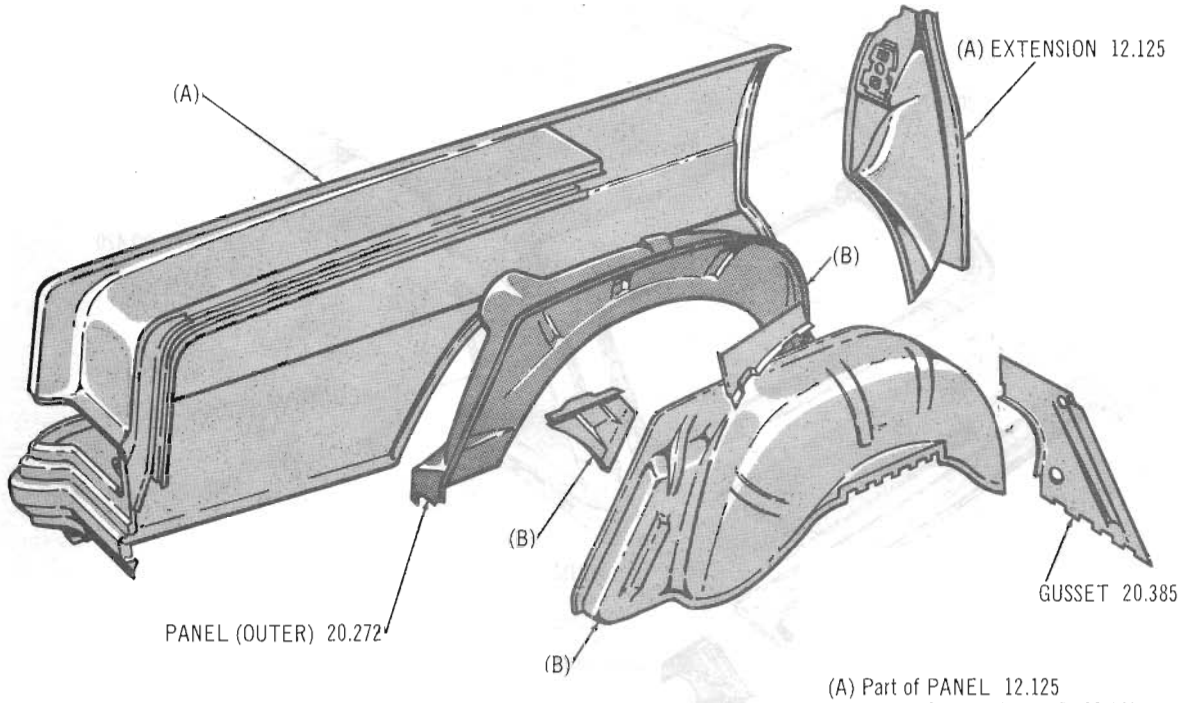

(A) Part of PANEL 12.125
(B) Part of PANEL (INNER) 20.272

REAR QUARTER PANELS 65 15-16-17-19 (Except Marlin)

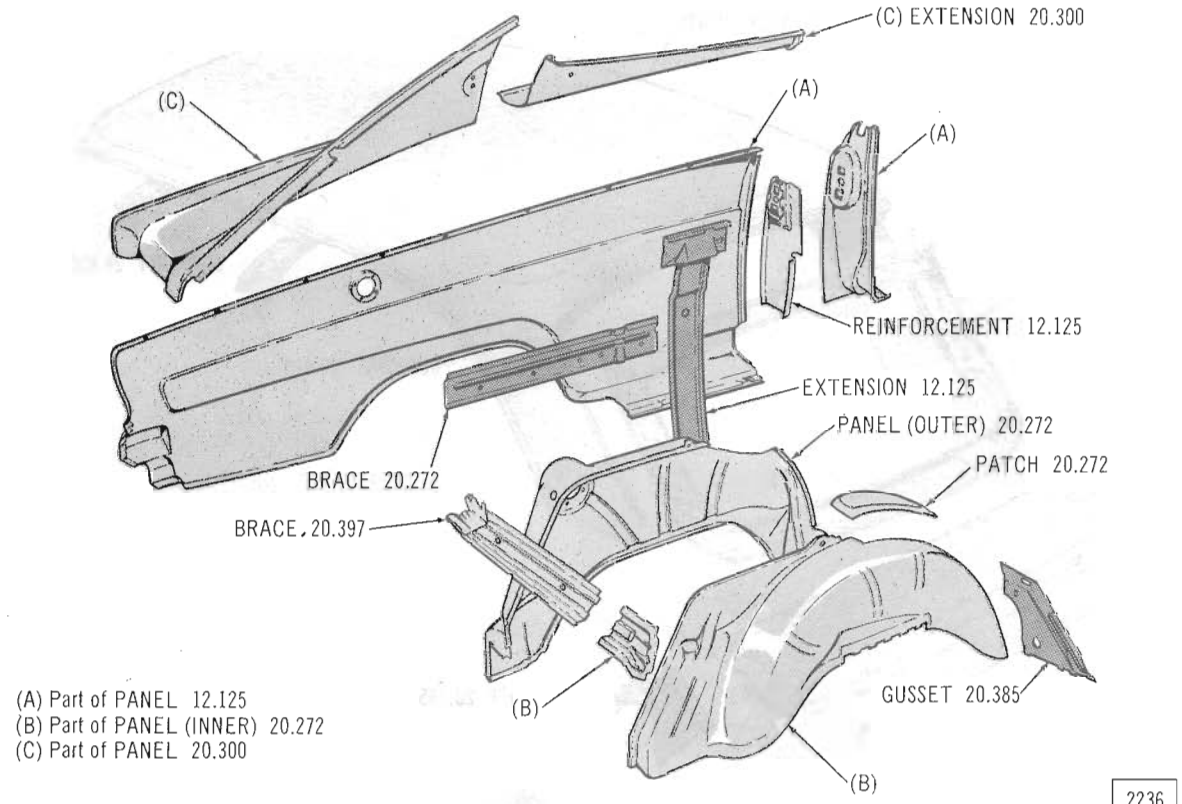

(A) Part of PANEL 12.125
(B) Part of PANEL (INNER) 20.272
(C) Part of PANEL 20.300

2236

REAR QUARTER PANELS 65 59-7 (Marlin)

Copyright 1963 American Motors Corp.

Copyright 1963 American Motors Corp.

Printed in U.S.A.

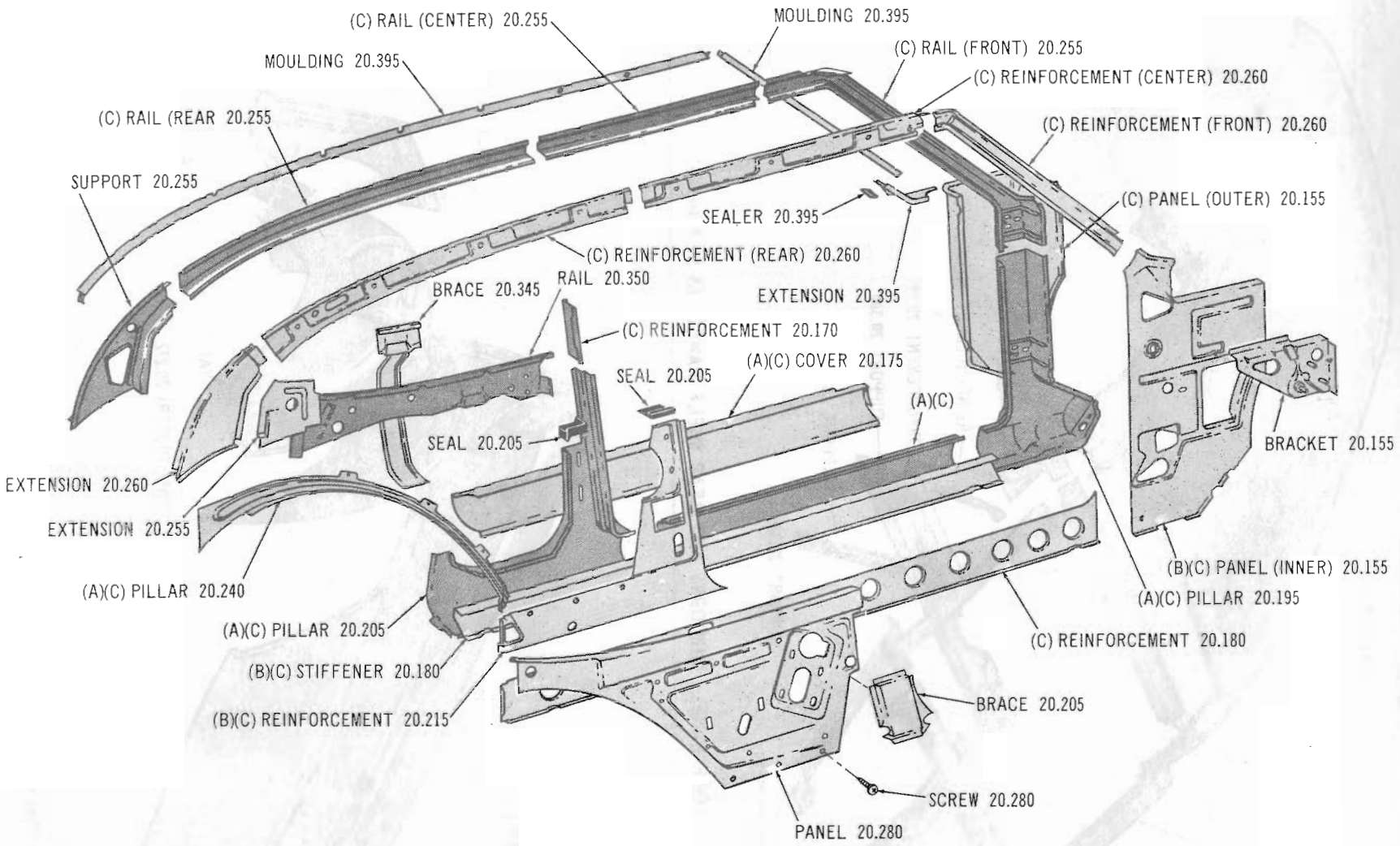

(A) Part of UNISIDE OUTER PANEL 20.170
(B) Part of UNISIDE INNER PANEL 20.170
(C) Part of UNISIDE ASSY. 20.170

2237

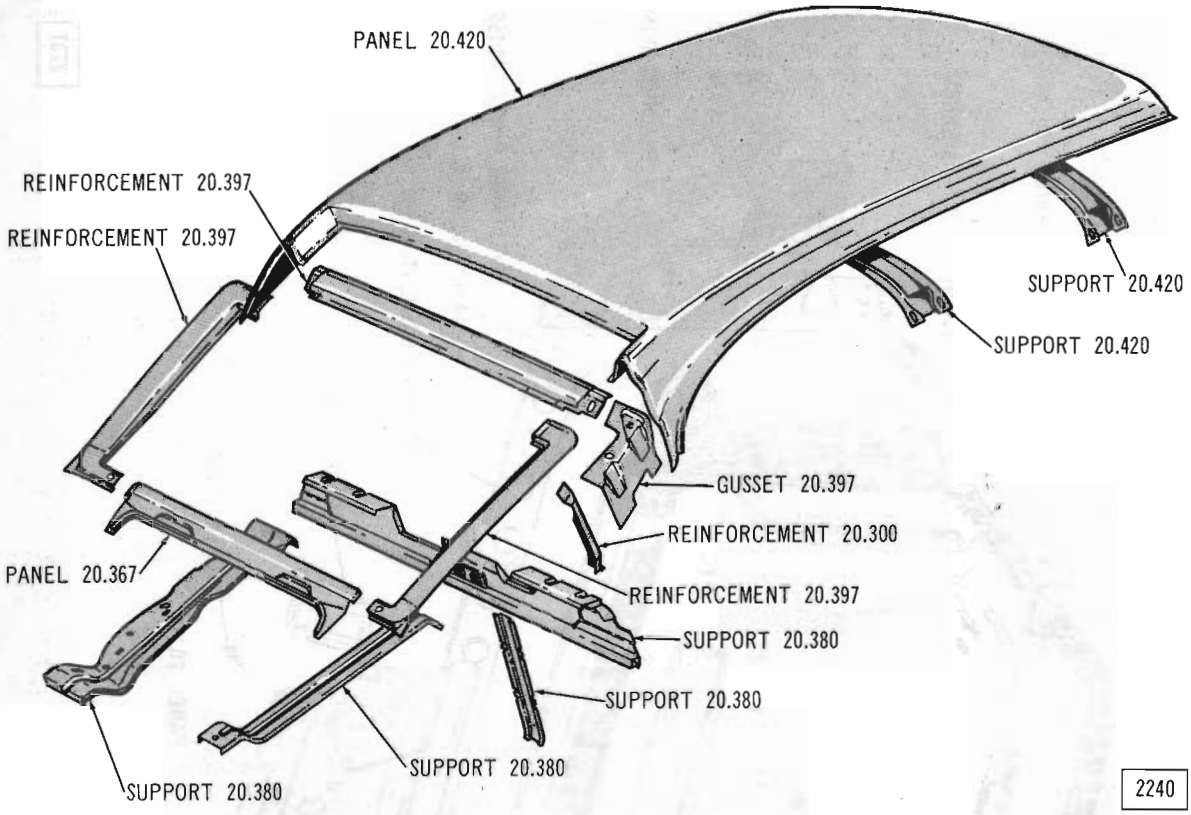

ROOF PANEL, SUPPORTS AND REAR SHELF PANEL 65 59-7 (Marlin)

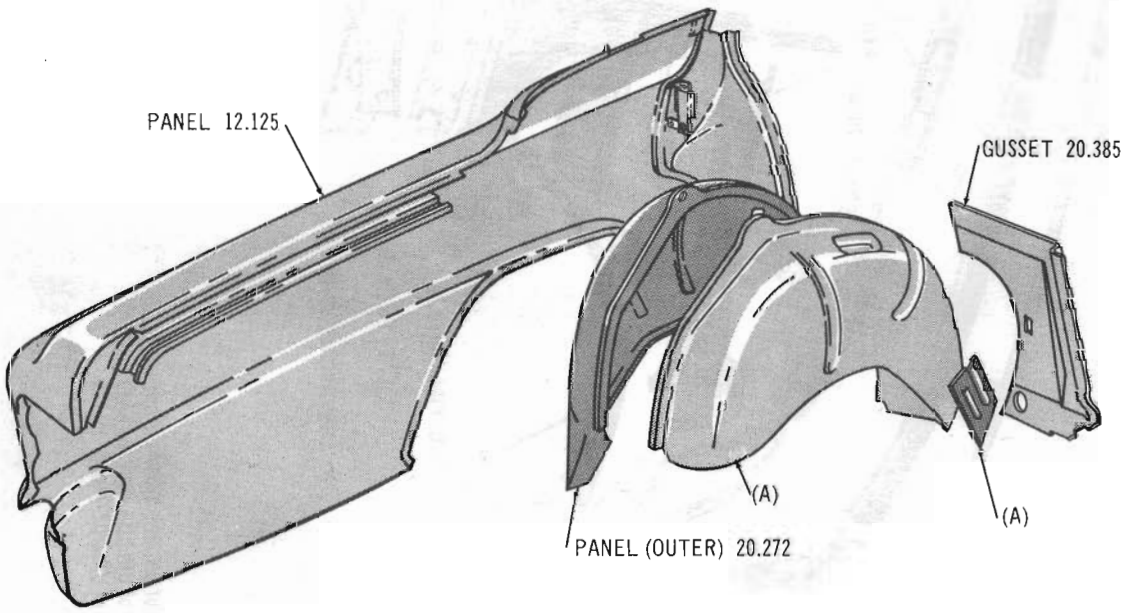

(A) Part of PANEL (INNER) 20.272

REAR QUARTER PANELS 64-65 05-08

Copyright 1963 American Motors Corp.

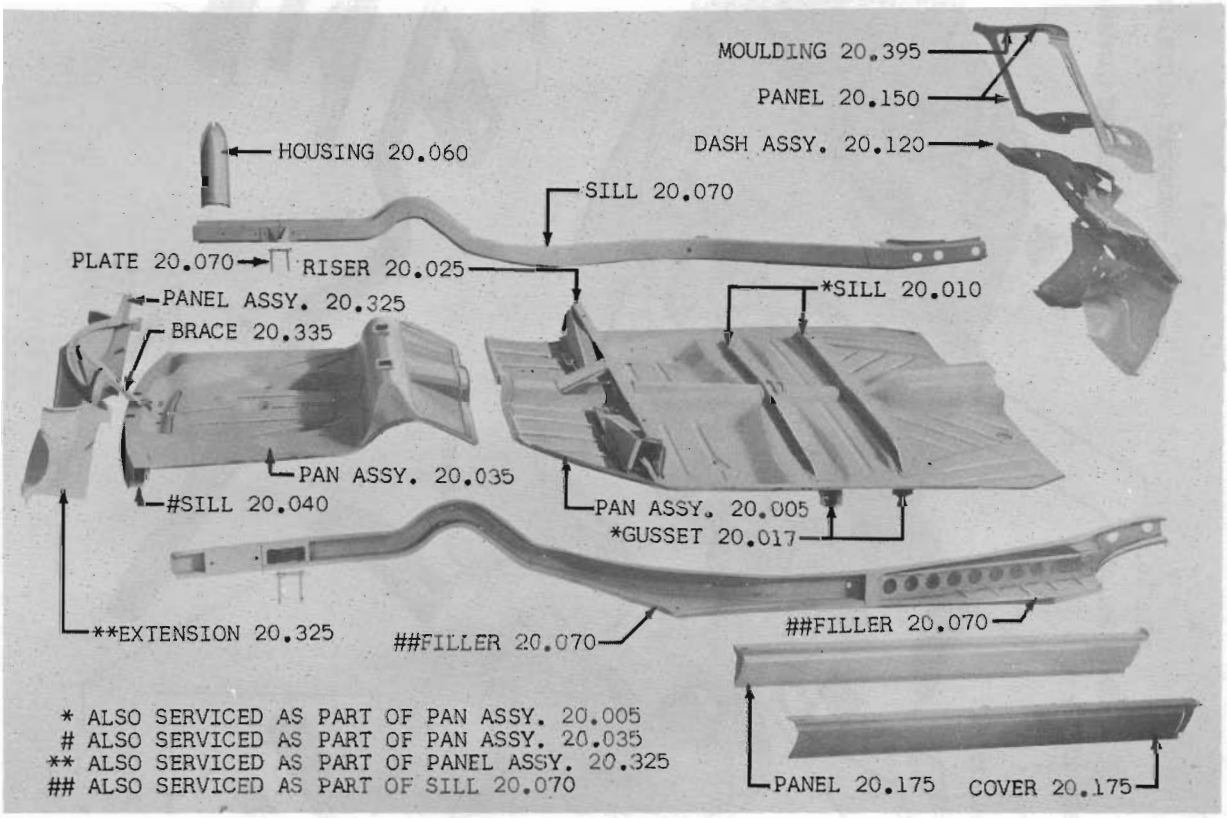

FIG. 20.005-1 UNDERBODY PANELS 60 01

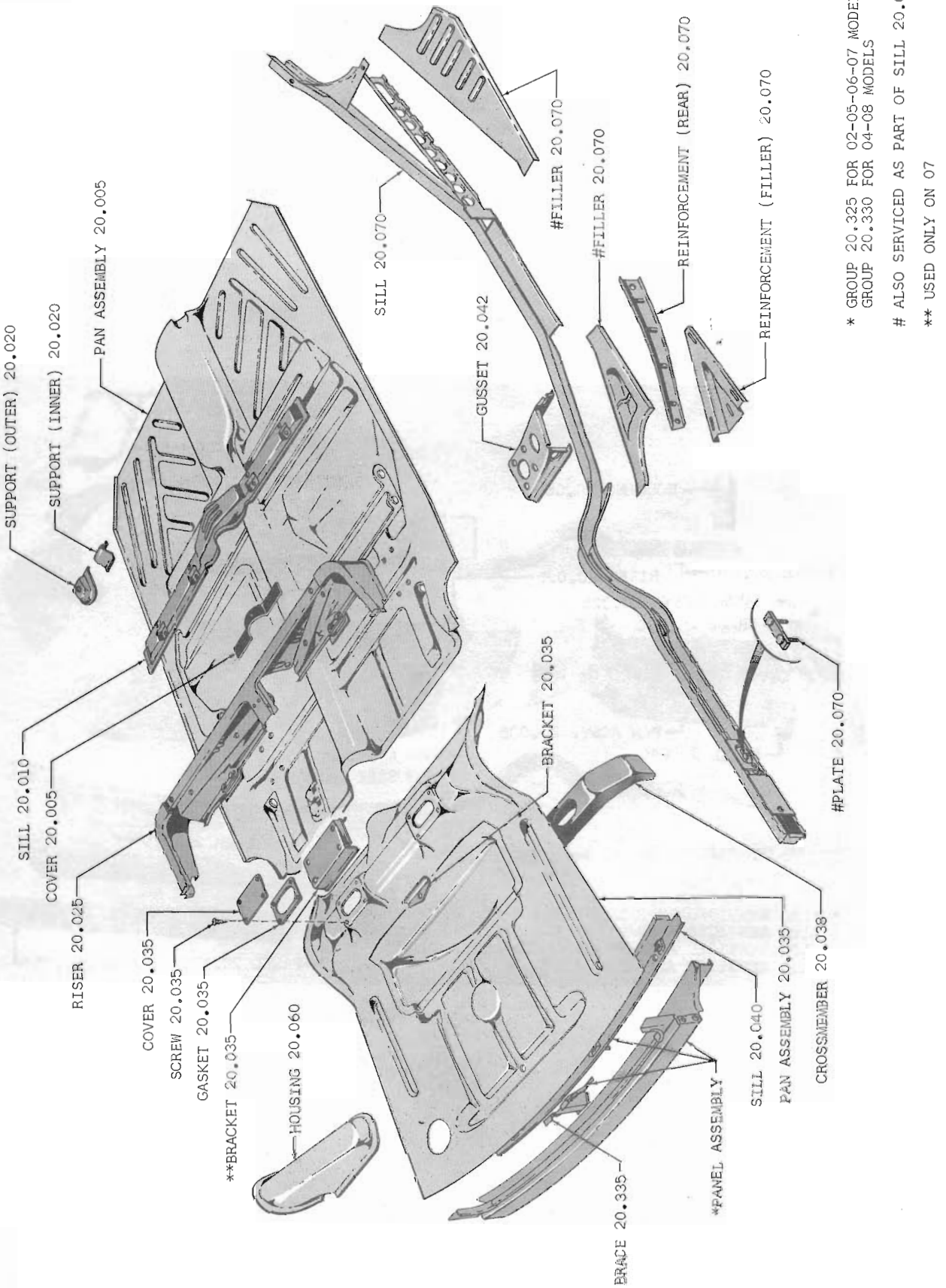

FIG. 20.005-2 UNDERBODY PANELS 61 THRU 63 01

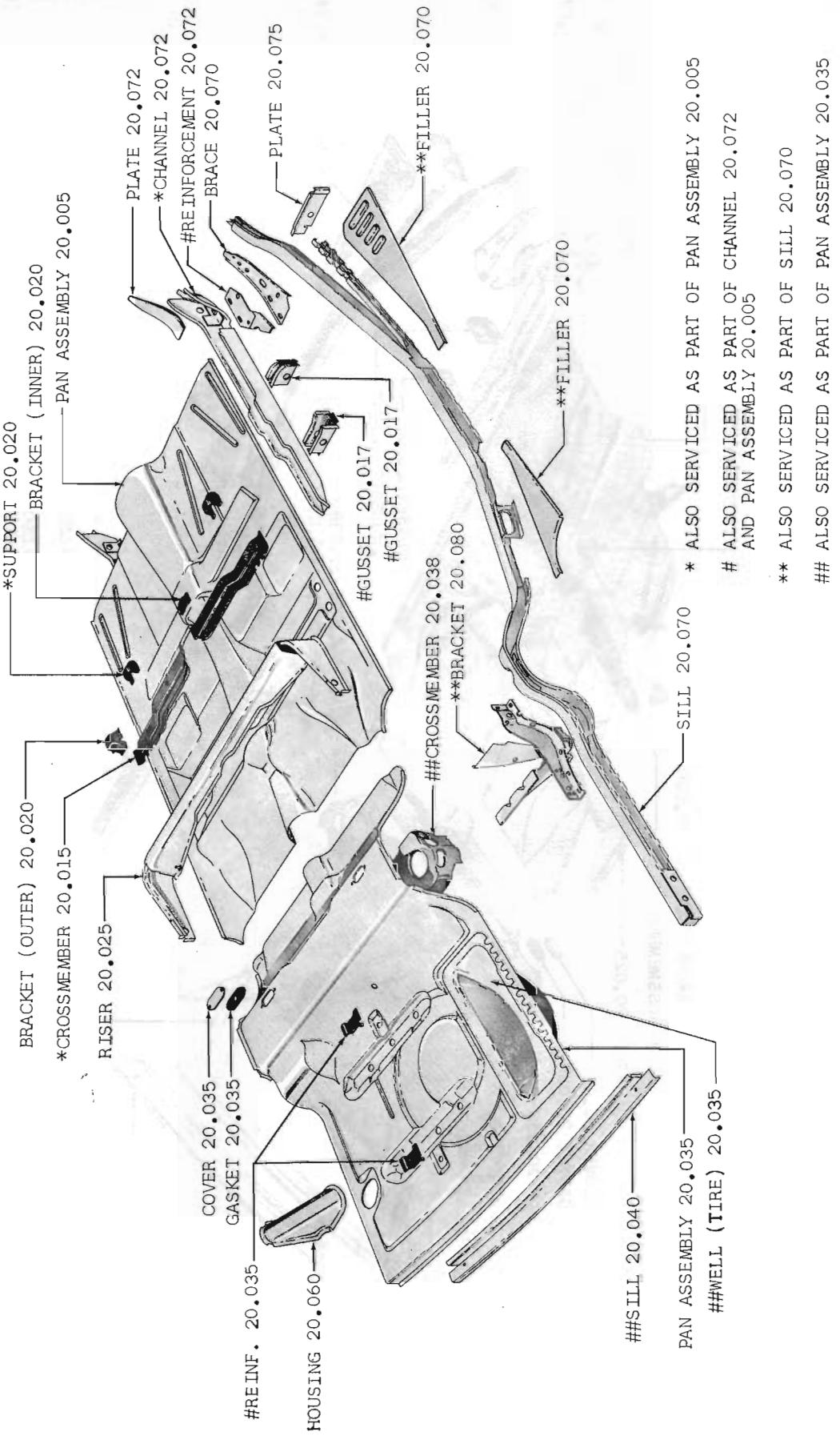

FIG. 20.005-3 UNDERBODY PANELS 60 THRU 62 10-20-80 (L3S)

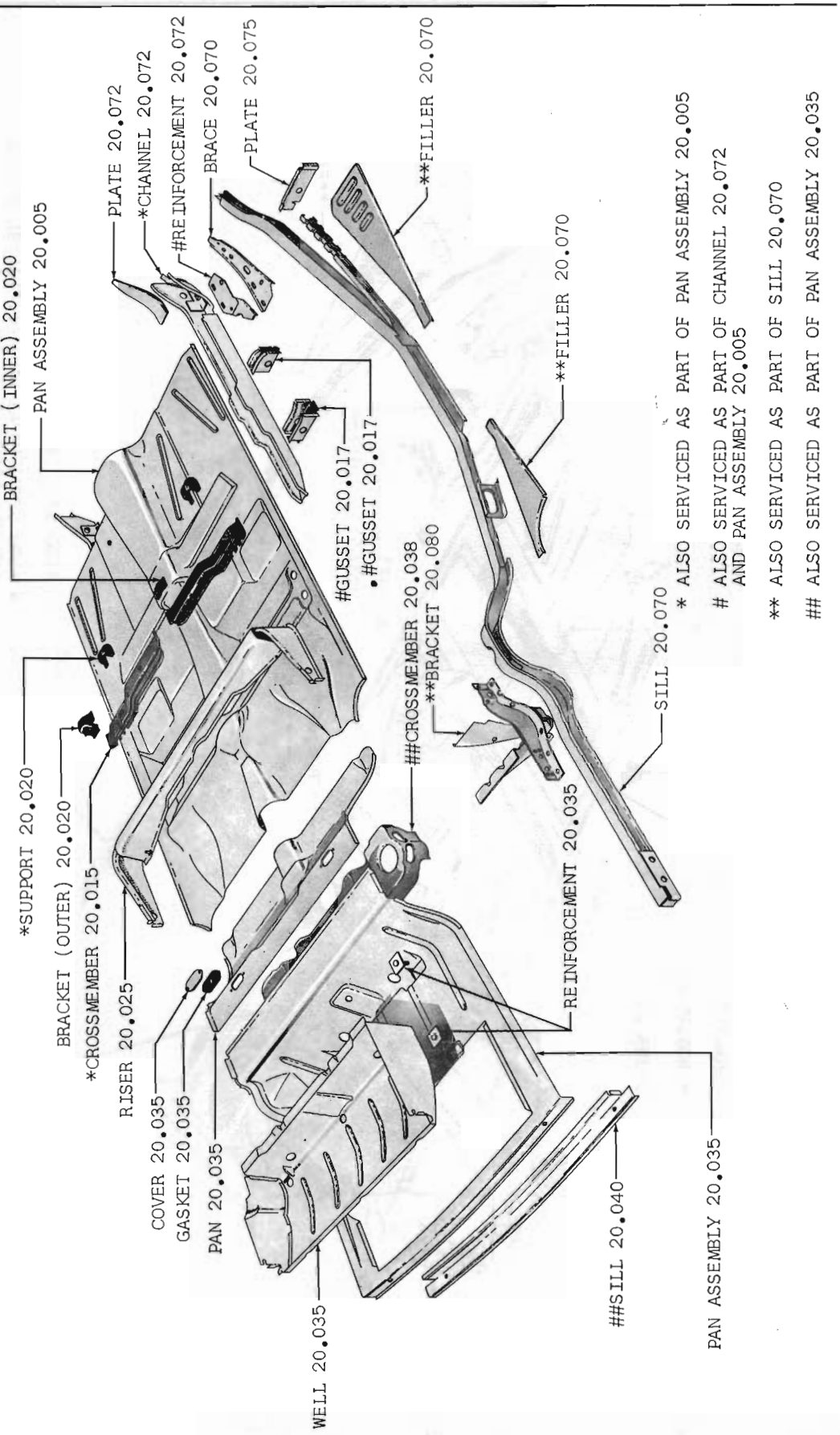

FIG. 20.005-4 UNDERBODY PANELS 60 THRU 62 10-20-80 (W3S)



FIG. 20.005-5 UNDERBODY PANELS 63 10-80 (REFER IL 20-8)

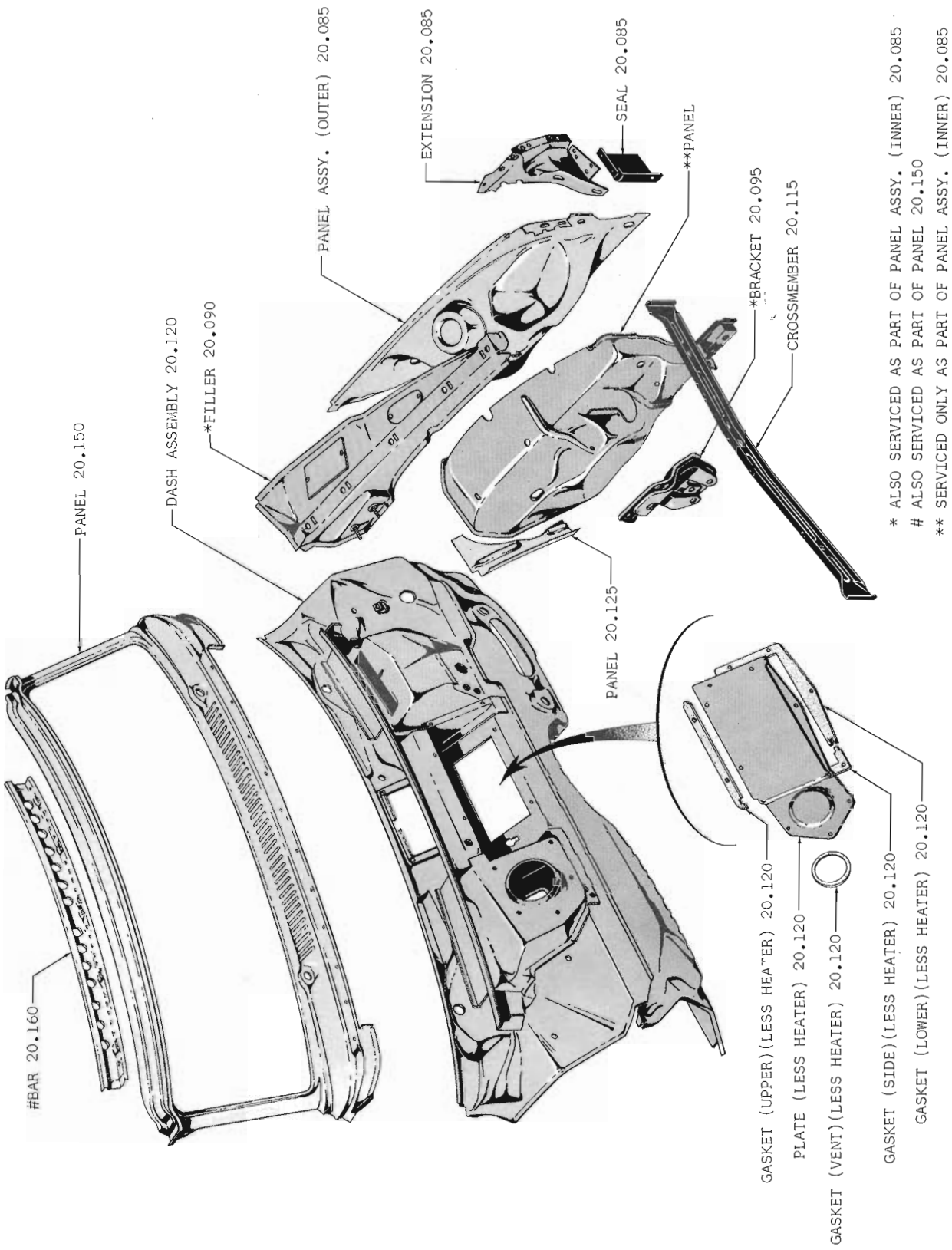

FIG. 20.120-1 DASH ASSEMBLY AND WHEELHOUSE PANEL 61 THRU 63 01

Printed in U.S.A.

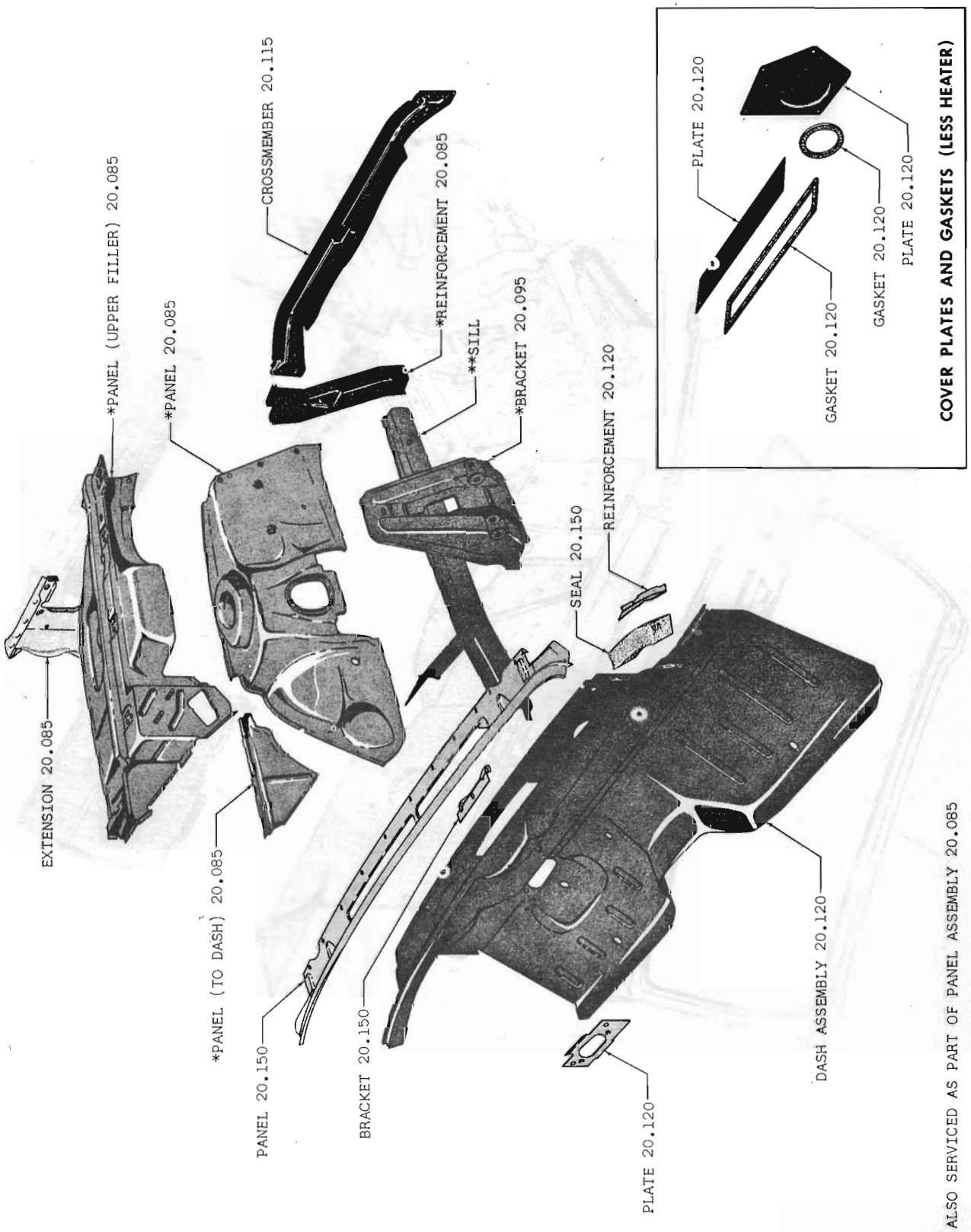

* ALSO SERVICED AS PART OF PANEL ASSEMBLY 20.085

** SERVICED ONLY AS PART OF PANEL ASSEMBLY 20.085

FIG. 20.120-3 DASH ASSEMBLY AND WHEELHOUSE PANEL 60 THRU 62 10-20-80

Printed in U.S.A.

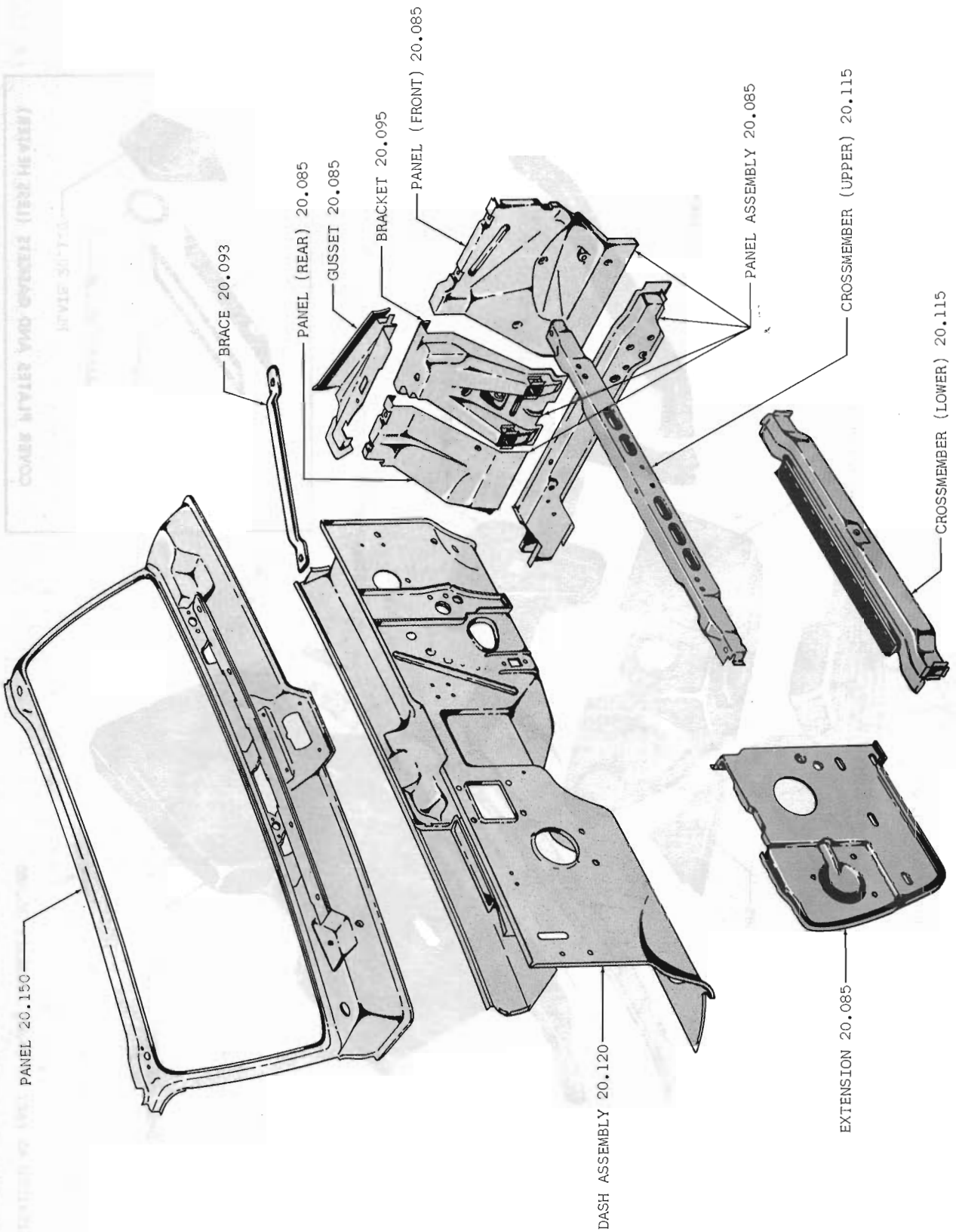

FIG. 20.120-4 DASH ASSEMBLY AND WHEELHOUSE PANEL 63 THRU 65 10-80

Printed in U.S.A.

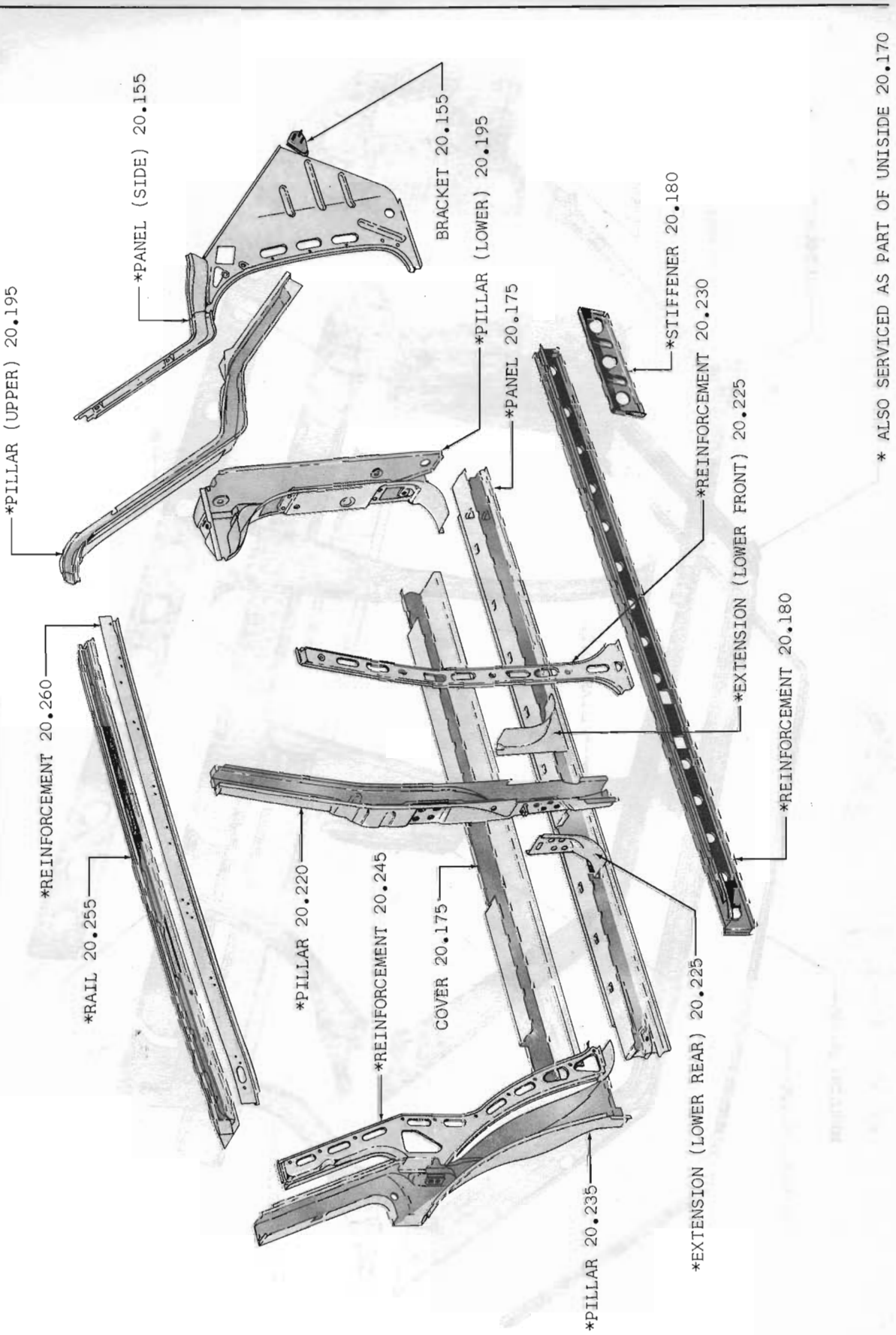

FIG. 20.170-3 UNISIDE ASSEMBLY 60 THRU 62 15-18-25-28-85-88

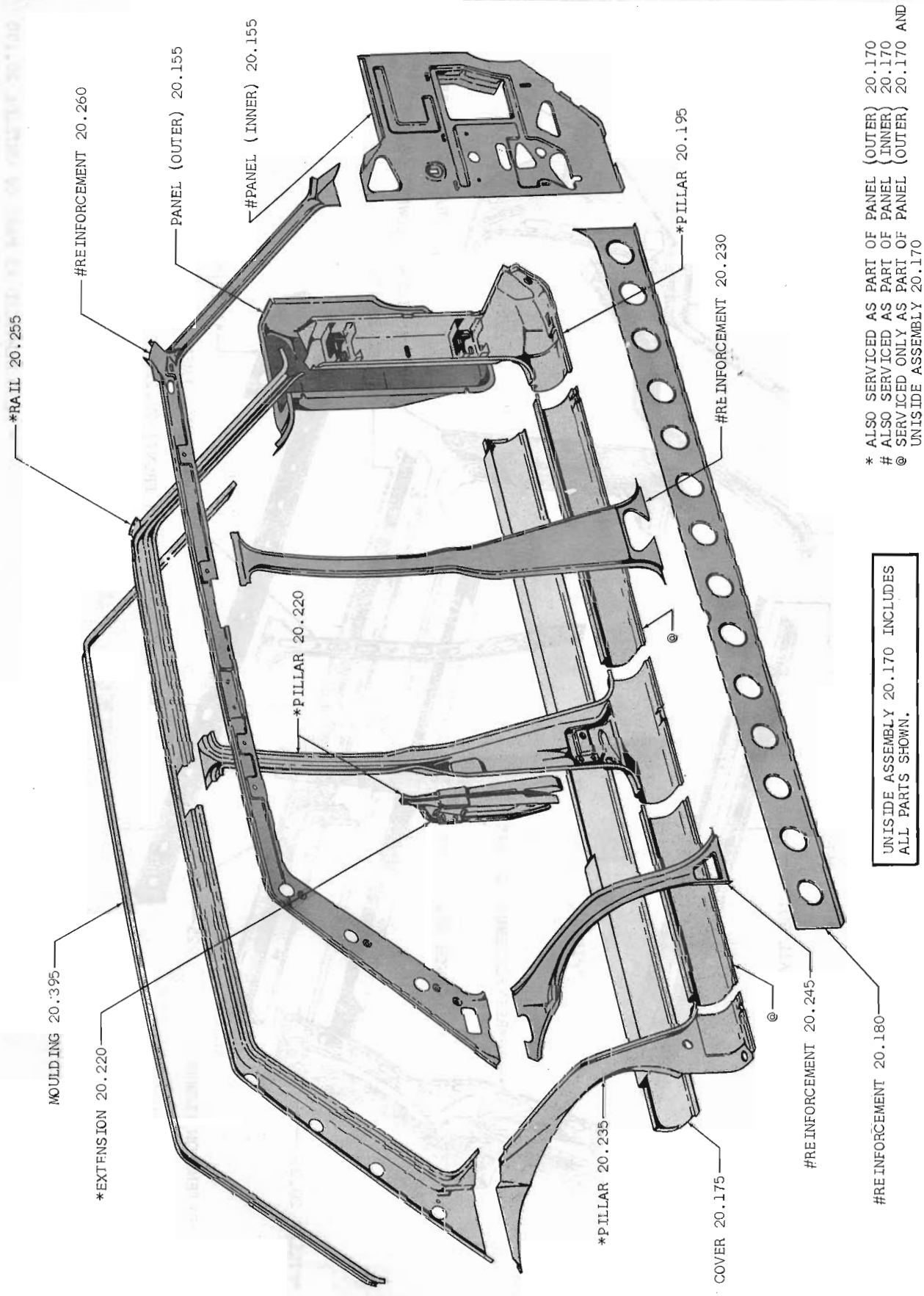

FIG. 20.170-4 UNISIDE ASSEMBLY 63 THRU 65 15-18-85-88: 64-65 05-08

Printed in U.S.A.

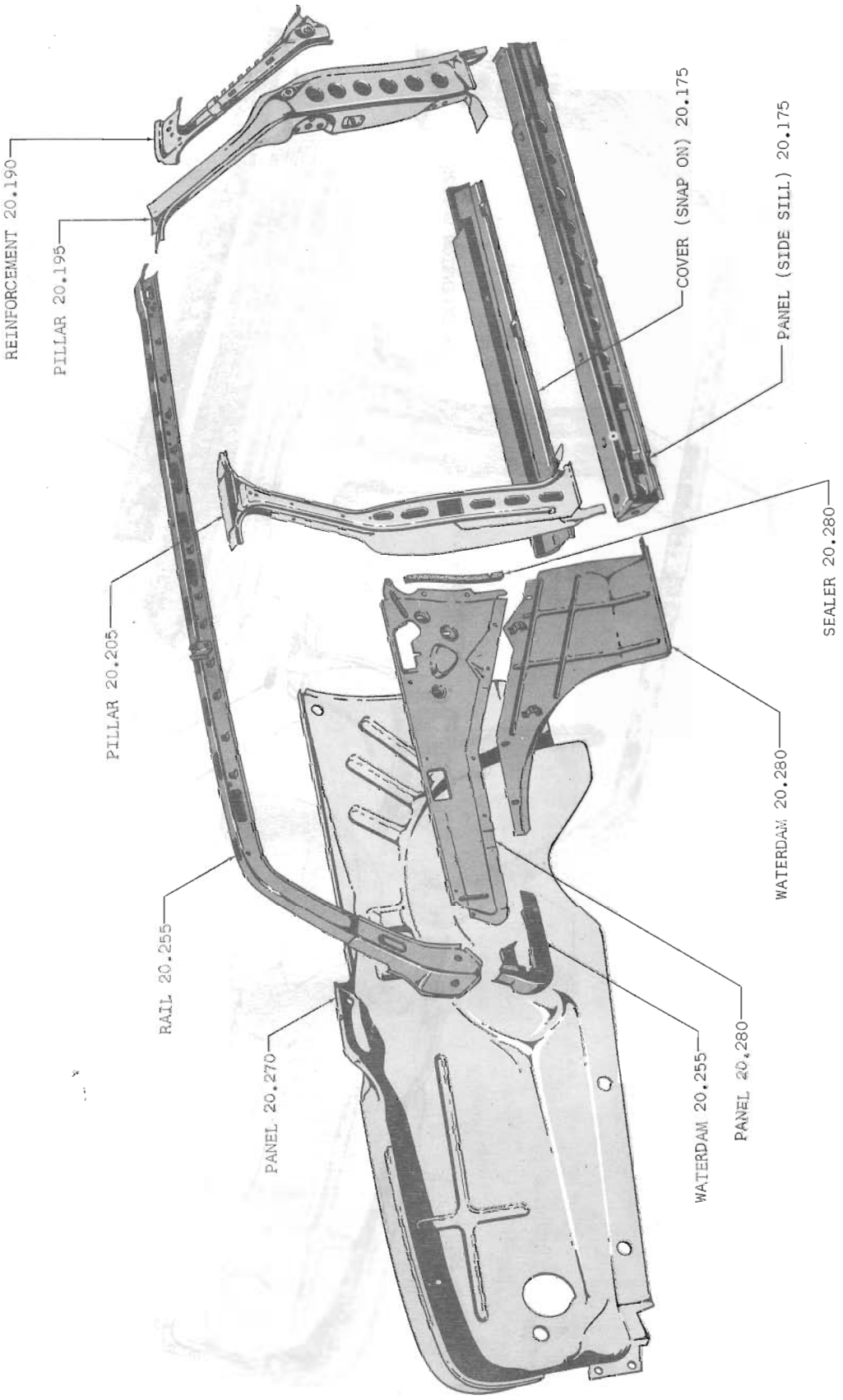

FIG. 20.175-1 BODY SIDE SHEET METAL 61 THRU 63 02-06

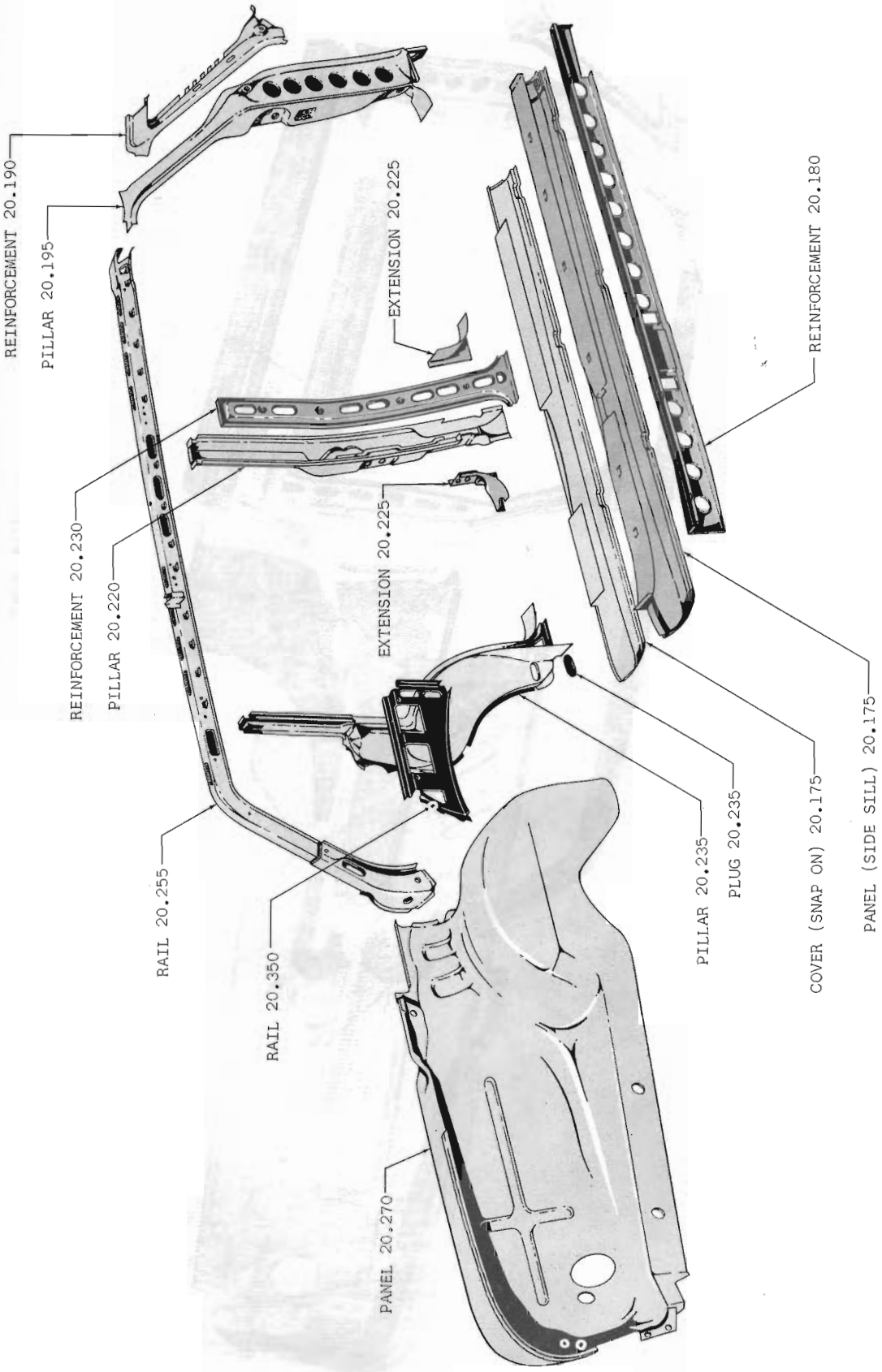

FIG. 20.175-1a BODY SIDE SHEET METAL 61 THRU 63 05

Printed In U.S.A.

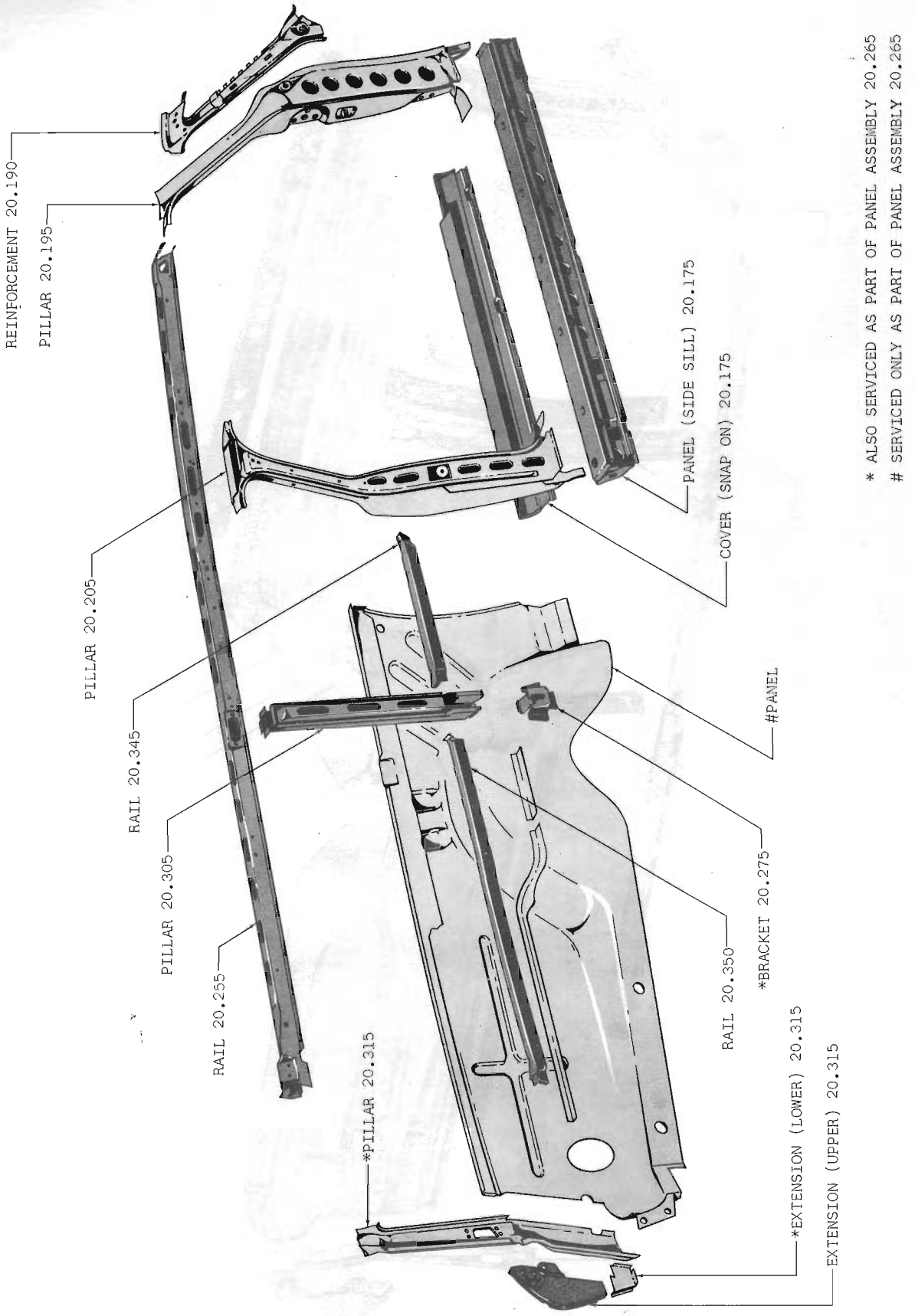

FIG. 20.175-1b BODY SIDE SHEET METAL 61 THRU 63 04

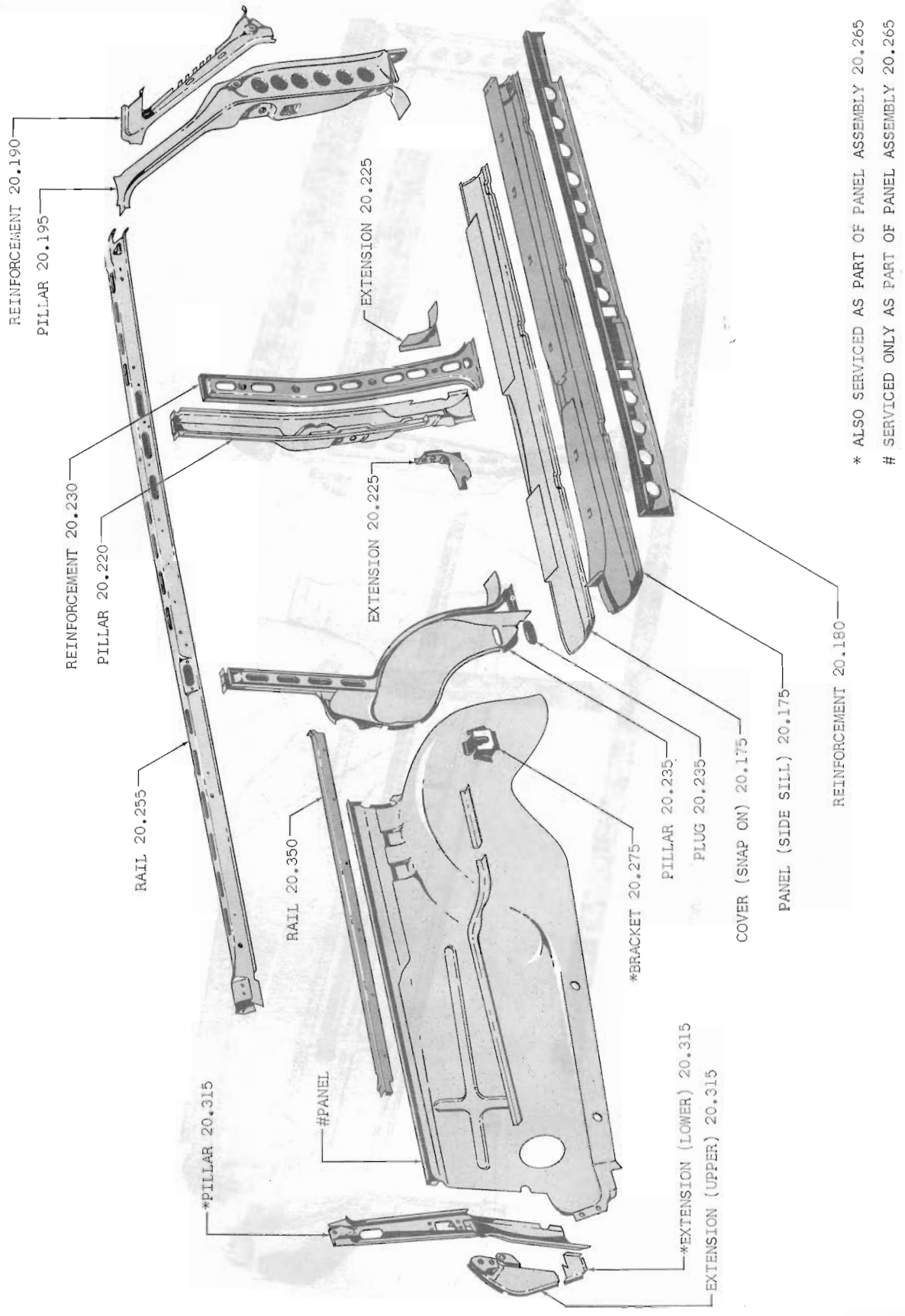

FIG. 20.175-1c BODY SIDE SHEET METAL 61 THRU 63 08

Printed In U.S.A.

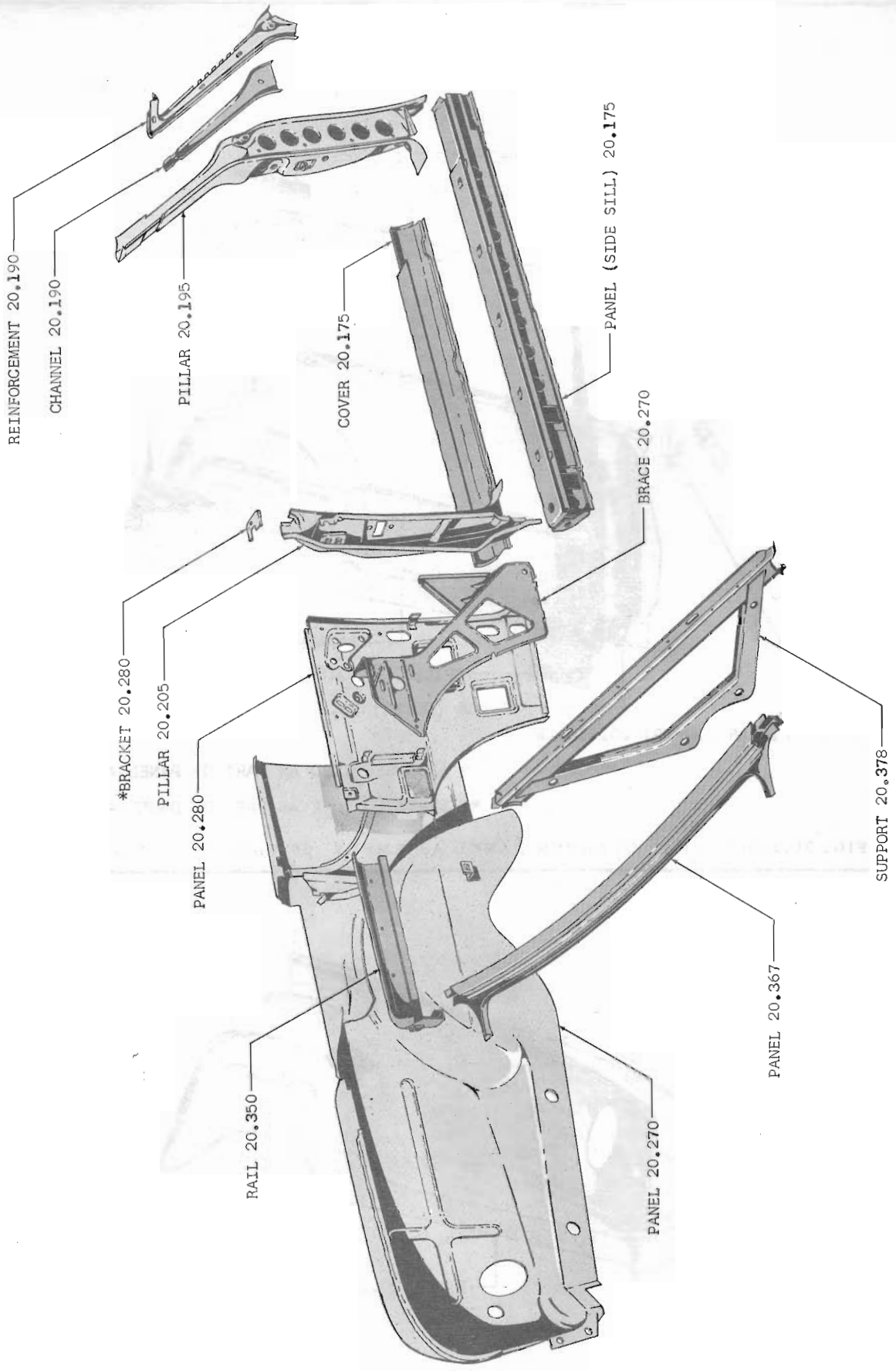

FIG. 20.175-1d BODY SIDE SHEET METAL 61 THRU 63 07

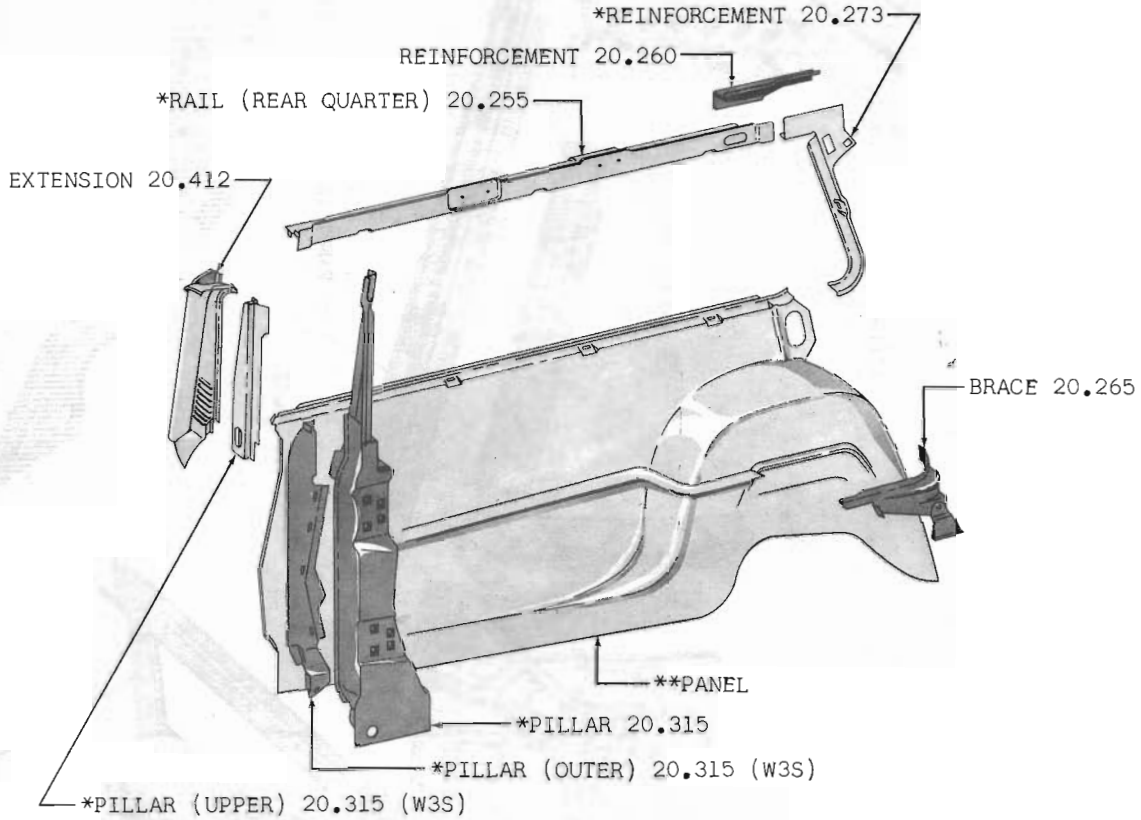

* ALSO SERVICED AS PART OF PANEL ASSEMBLY 20.265

** SERVICED ONLY AS PART OF PANEL ASSEMBLY 20.265

FIG. 20.265-3 REAR QUARTER PANEL ASSEMBLY 60 THRU 62 10-20-80 WAGON

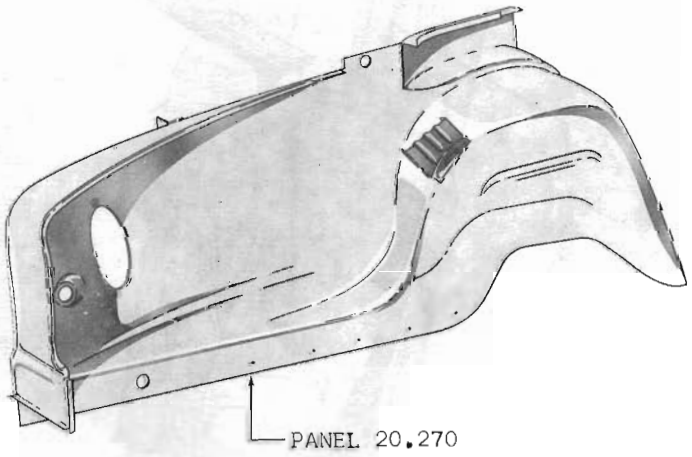

FIG. 20.270-3 REAR QUARTER PANEL 60 THRU 62 10-20-80 SEDAN

Printed In U.S.A.

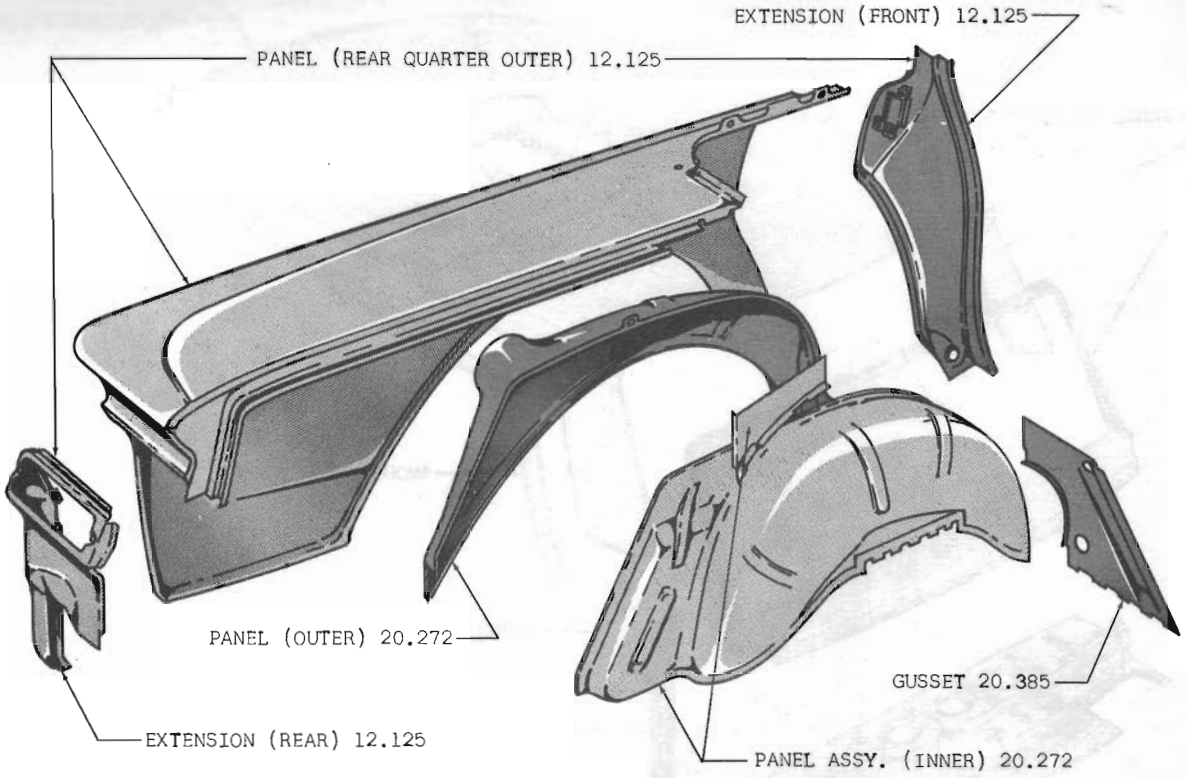

FIG. 20.272-3 REAR QUARTER PANELS 63-64 10-80 SEDAN

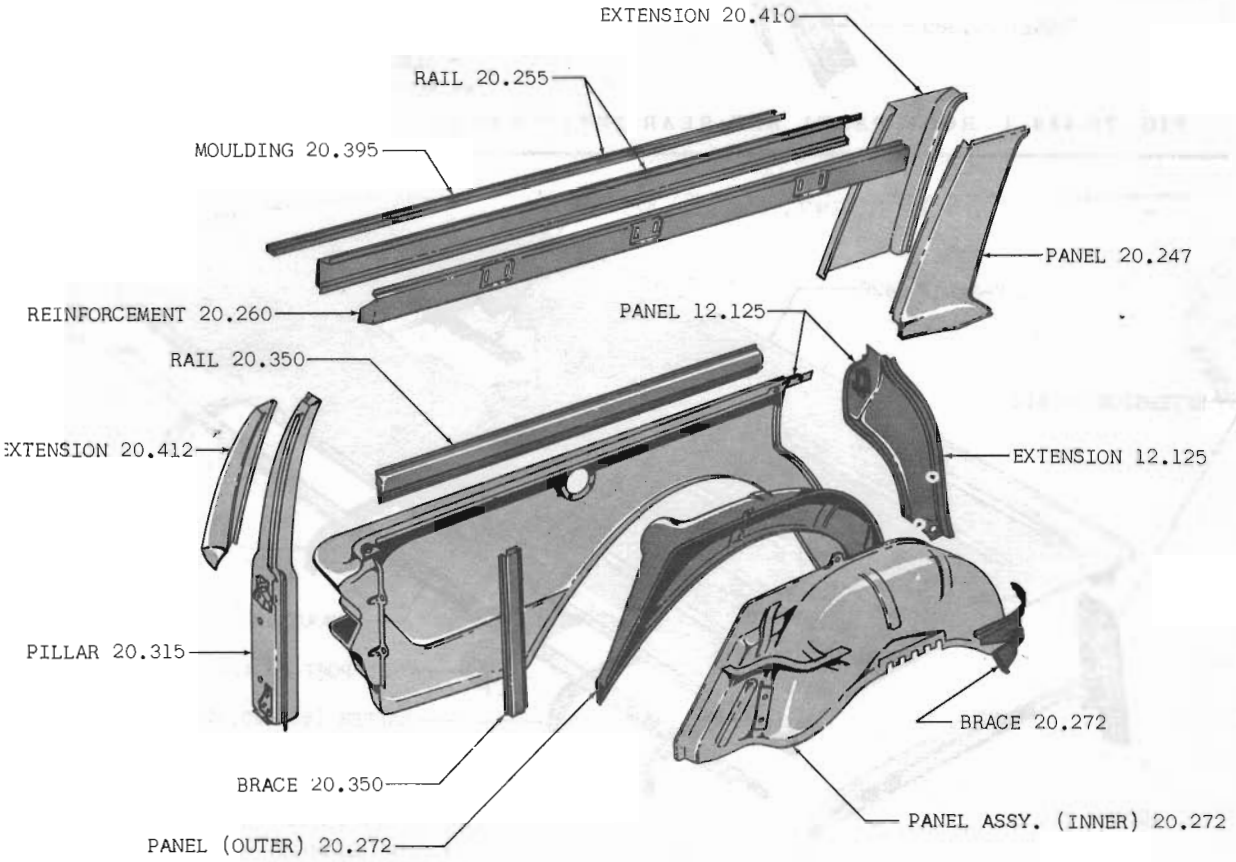

FIG. 20.272-4 REAR QUARTER PANELS 63-64 10-80 WAGON

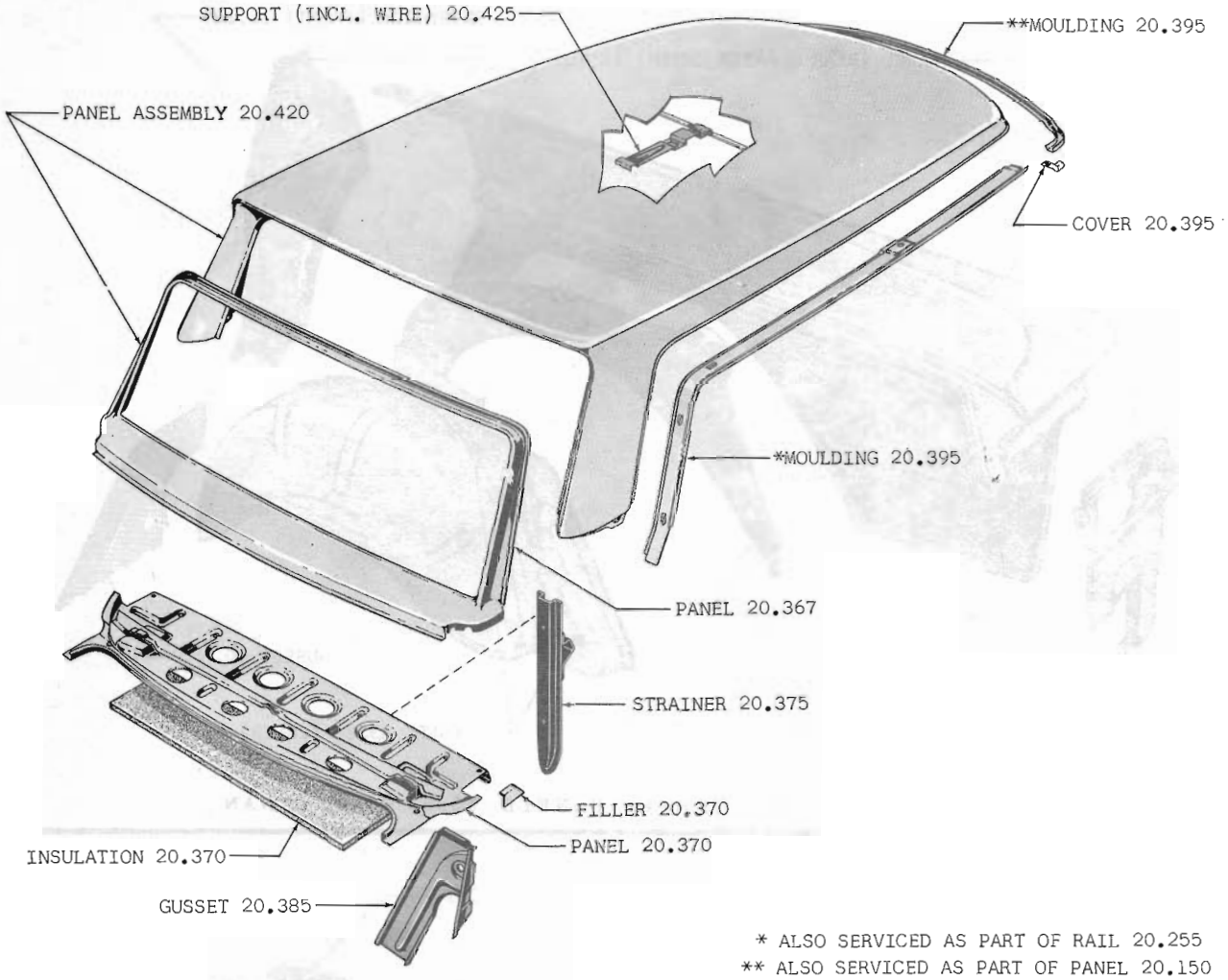

* ALSO SERVICED AS PART OF RAIL 20.255
** ALSO SERVICED AS PART OF PANEL 20.150

FIG. 20.420-1 ROOF PANEL AND REAR SHELF PANEL 61 THRU 63 02-05-06-09

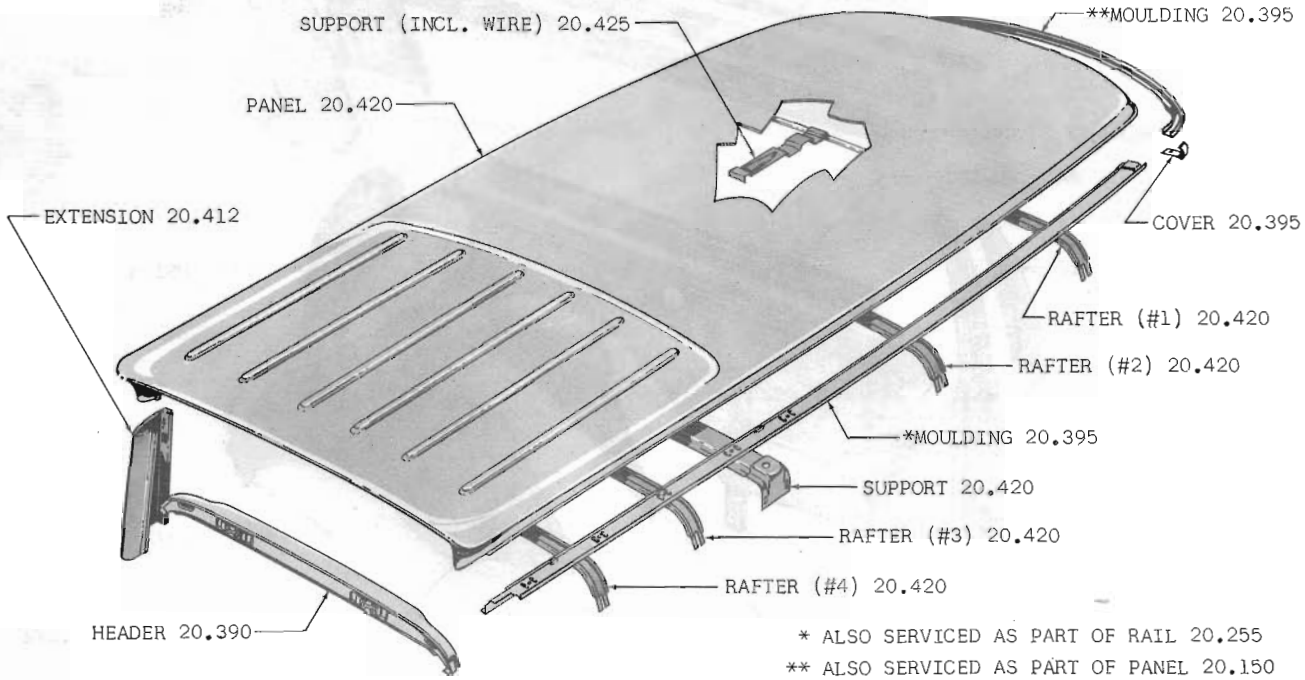

* ALSO SERVICED AS PART OF RAIL 20.255
** ALSO SERVICED AS PART OF PANEL 20.150

FIG. 20.420-2 ROOF PANEL AND SUPPORTS 61 THRU 63 04-08

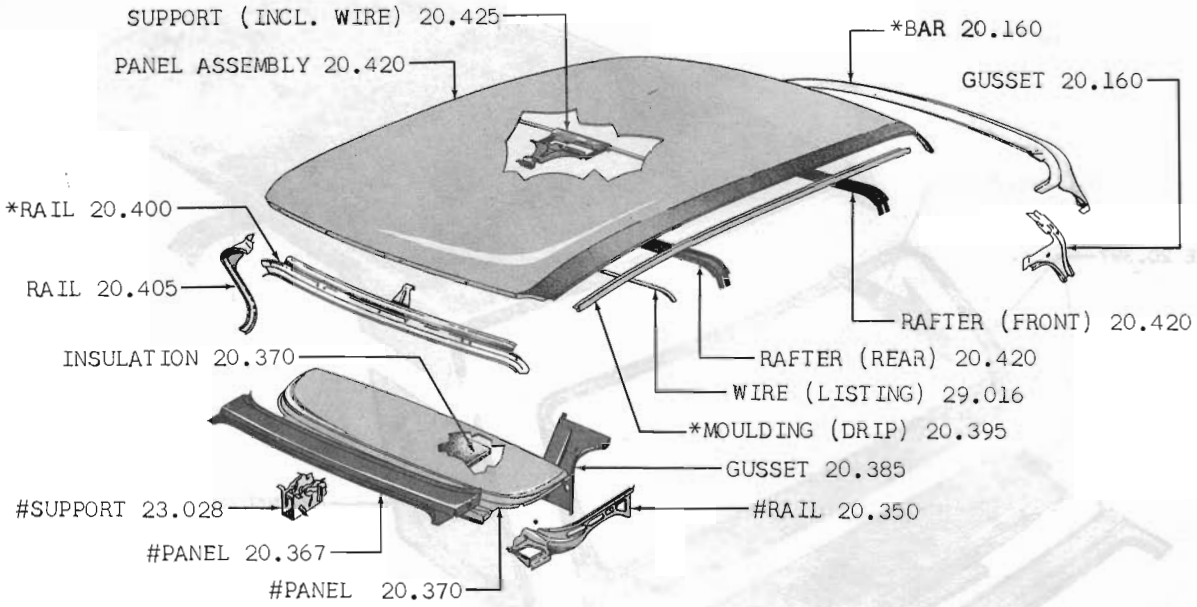

* ALSO SERVICED AS PART OF PANEL ASSEMBLY 20.420
\# ALSO SERVICED AS PART OF PANEL ASSEMBLY 20.365

FIG. 20.420-3 ROOF PANEL, SUPPORTS AND SHELF PANEL 60 THRU 62 10-20-80 SEDAN

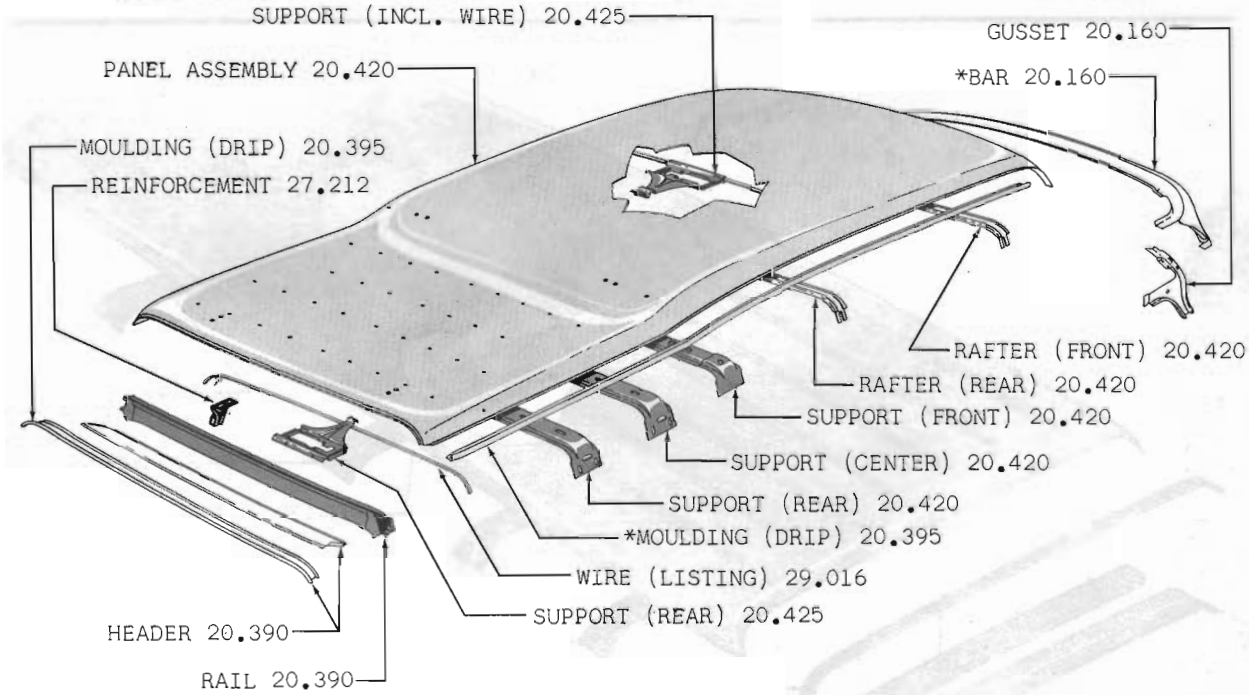

* ALSO SERVICED AS PART OF PANEL ASSEMBLY 20.420

FIG. 20.420-4 ROOF PANEL AND SUPPORTS 60 THRU 62 10-20-80 WAGON

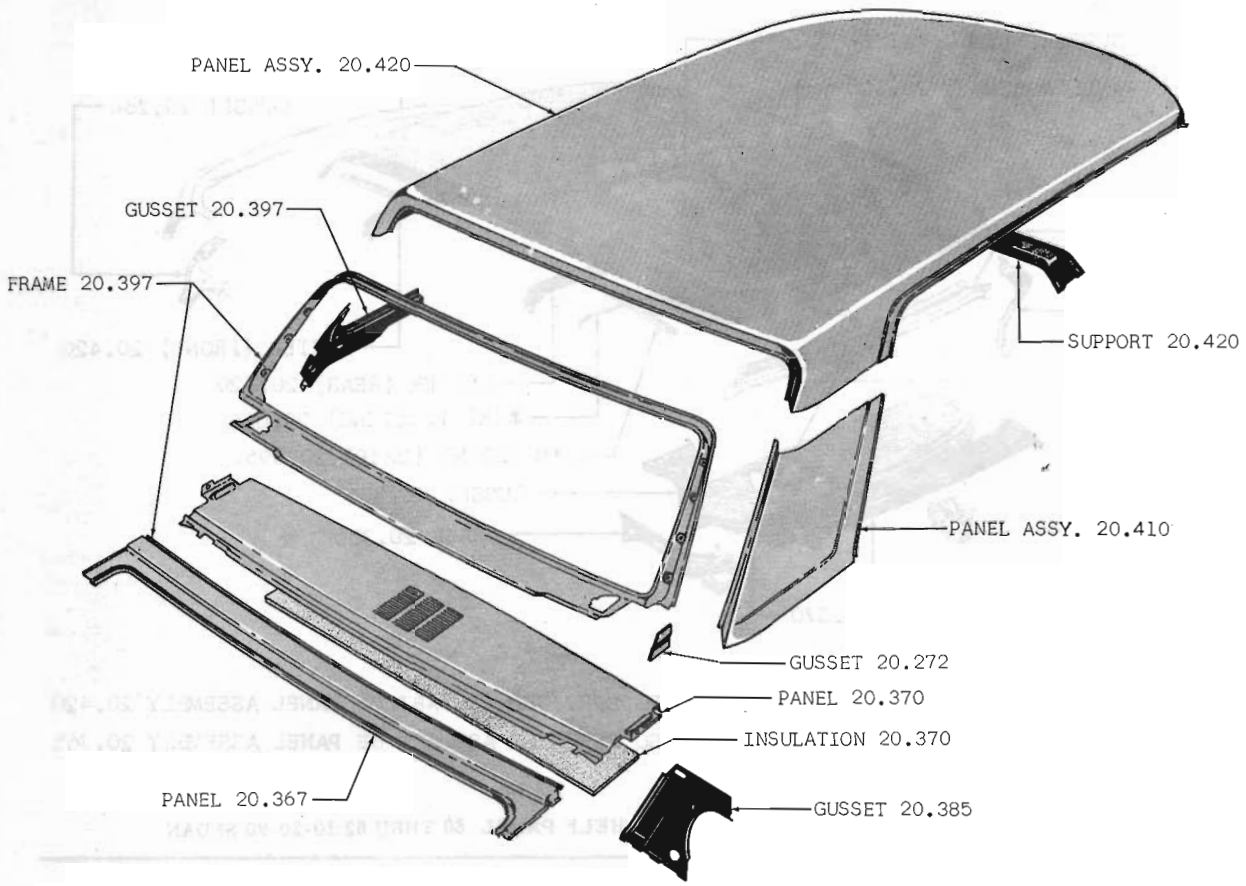

FIG. 20.420-5 ROOF PANEL AND REAR SHELF PANEL 63-64 10-80 SEDAN

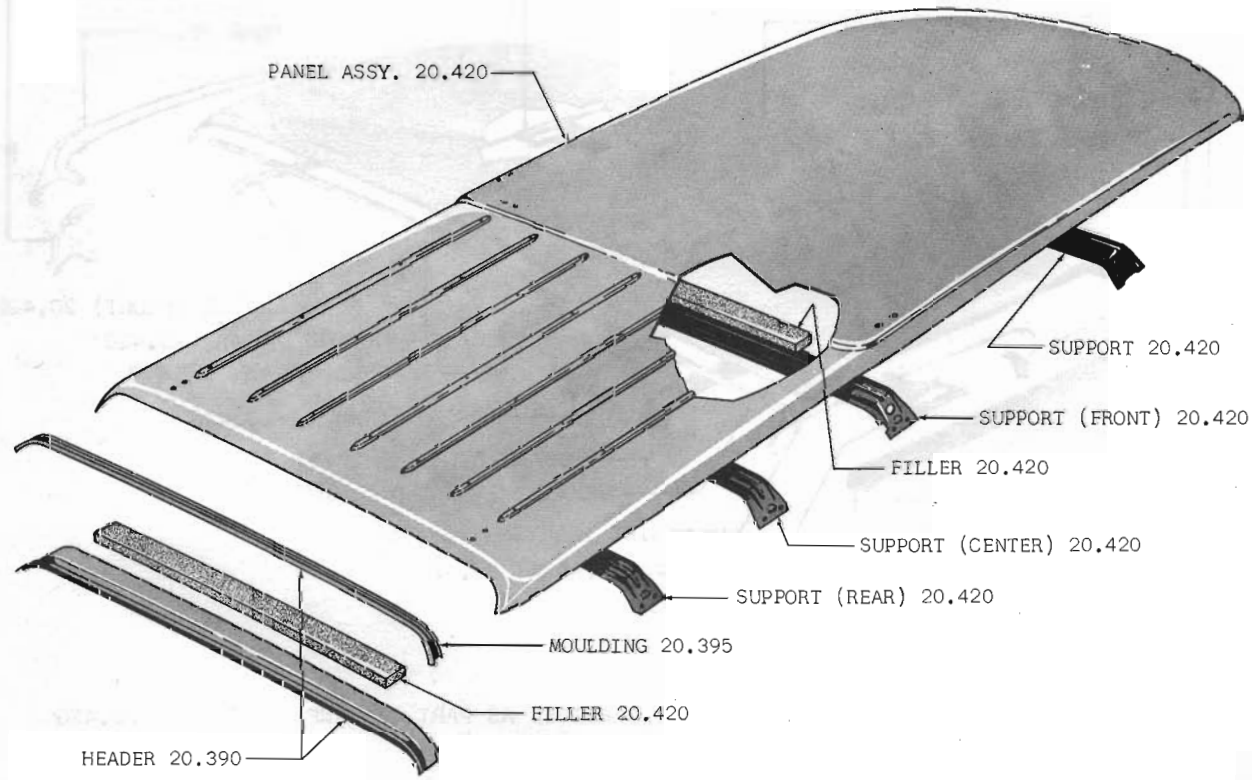

FIG. 20.420-6 ROOF PANEL AND SUPPORTS 63 THRU 65 10-80 WAGON

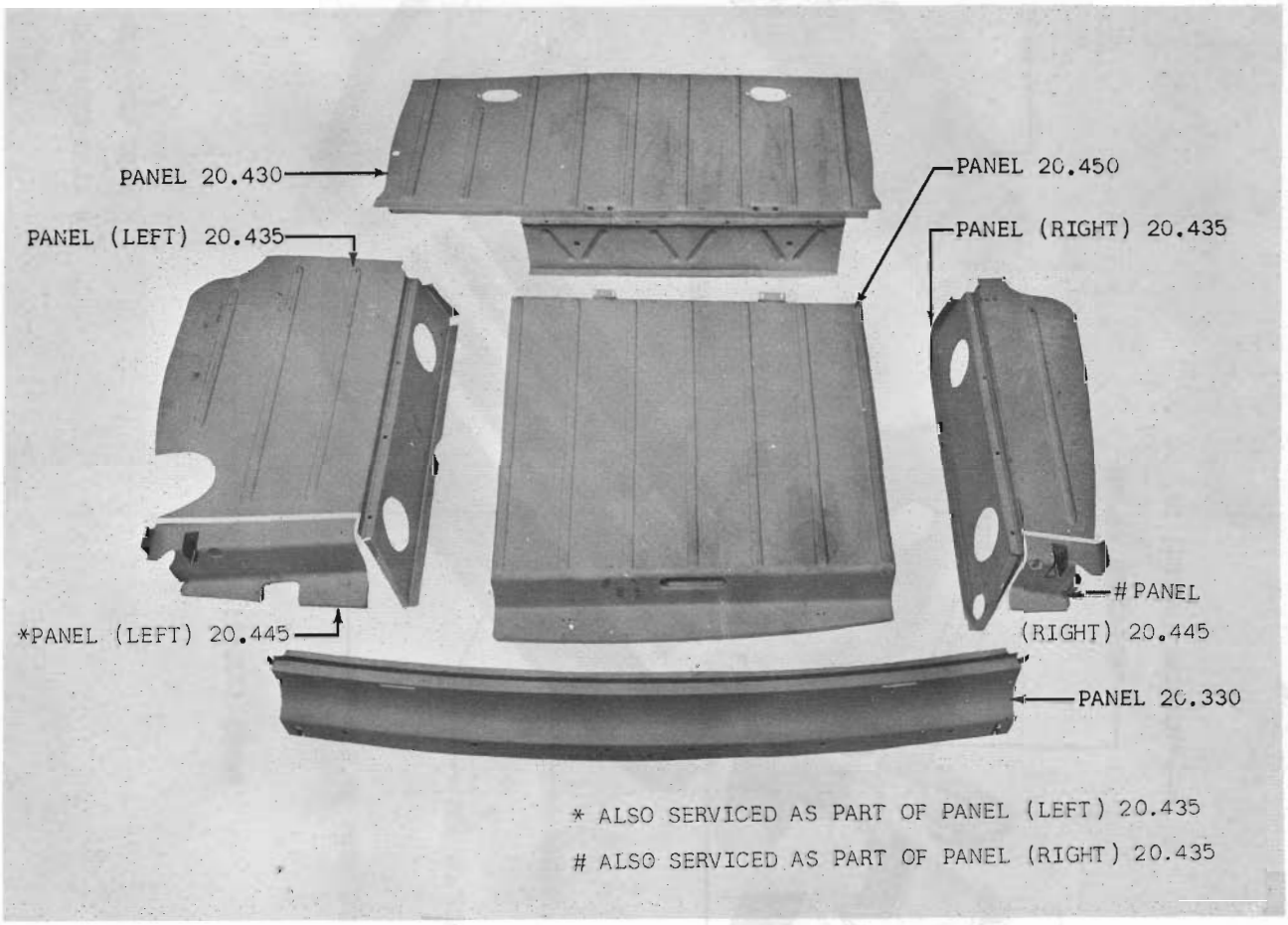

FIG. 20.430-3 AUXILIARY FLOOR PANELS 60 THRU 62 10-20-80 WAGON (L3S)

Printed In U.S.A.

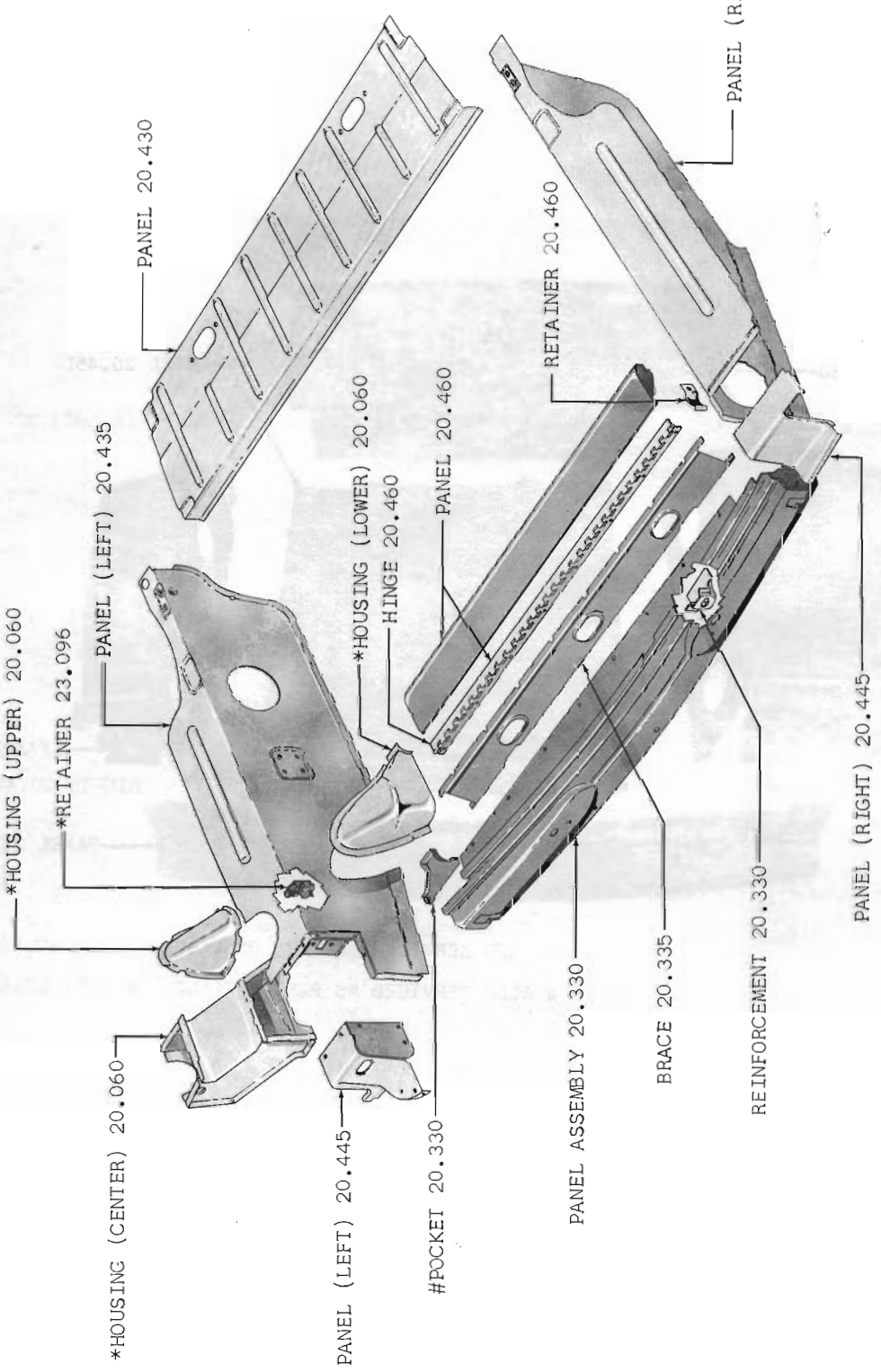

* ALSO SERVICED AS PART OF PANEL (LEFT) 20.435

\# ALSO SERVICED AS PART OF PANEL ASSEMBLY 20.330

FIG. 20.430-4 AUXILIARY FLOOR PANELS 60 THRU 62 10-20-80 WAGON (W3S)

Printed In U.S.A.

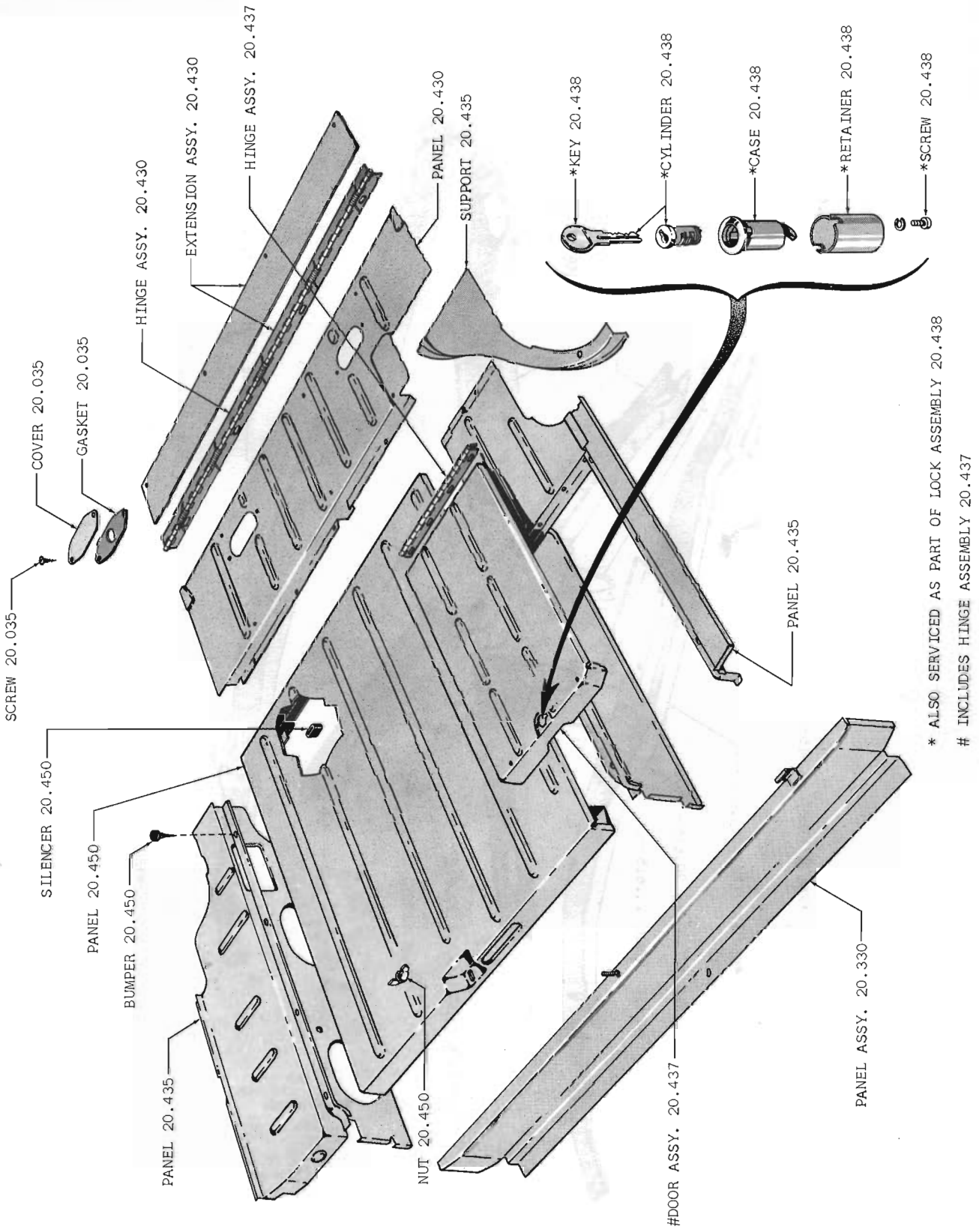

FIG. 20.430-5 AUXILIARY FLOOR PANELS 63 THRU 65 18-88 (L3S)

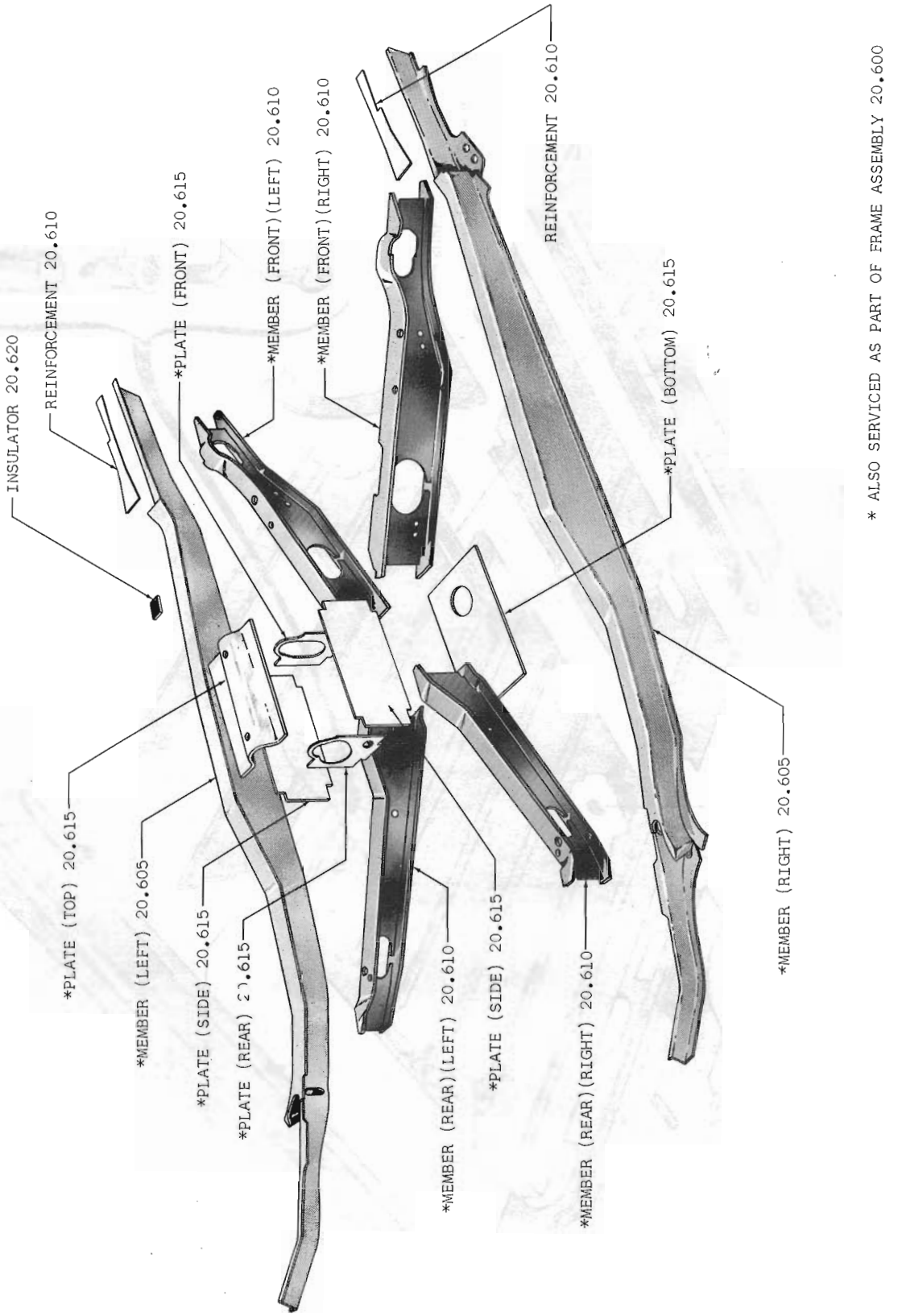

FIG. 20.600-1 FRAME ASSEMBLY 61 THRU 63 07

Printed in U.S.A.

GROUP NO. — DESCRIPTION — YEAR and MODEL	PRIMARY GROUP NO.	PER CAR	PART NO.	CODE
20.005 PAN ASSEMBLY, Front Floor				
60 01 (Note 20.005-1)	.....	1	447 8670	
62-63 01	.....	1	447 9455	
64-65 02-05-06-08-09	.....	1	448 1282	
64-65 07	.....	1	448 1283	
62 15-16	.....	1	447 9425	
62 18-85-86-88	.....	1	447 9426	
63 10-80	.....	1	448 0314	
64 10-80	.....	1	448 1311	
65 15-16-18-19-85-86-88-89	.....	1	448 2724	
65 17-87	.....	1	448 2725	
BRACKET, Front Seat Adjuster Spring				
61-62 01	.....	2	345 8028	
SPACER, Pan To Side Sill				
(Left) 64-65 07	.....	1	350 0923	
(Right) 64-65 07	.....	1	350 0922	
REINFORCEMENT, Rear Seat Belt Mounting				
65 01 (Heavy Duty)	.....	2	353 5892	
(Left) ***65 10-80 (Heavy Duty)***	.....	1	354 8431	
(Right) ***65 10-80 (Heavy Duty)***	.....	1	354 8430	
COVER, Front Floor Pan Louvre				
60 Thru 63 01	.....	1	436 2713	
64 01	.....	1	352 1007	
COVER, Brake Master Cylinder Access Hole				
60 Thru 62 10-20-80 (RHD)	.....	1	342 5546	
ATTACHING PARTS Brake Master Cylinder Access Hole Cover				
SCREW, Tapping..... 60 01: ***60 Thru 62 10-20-80 (RHD)***	17.660	3	G161860	NA
GASKET, Brake Master Cylinder Access Hole Cover				
60 01	.....	1	436 7065	
COVER, Front Floor Pan Transmission Opening				
65 10 (RHD-Six-232-WOD-WCGS)(RHD-Six-232-WST-WCGS)	.....	1	354 2766	
ATTACHING PARTS Cover To Floor Pan				
SCREW, Tapping..... ***65 10 (RHD-Six-232-WOD-WCGS) (RHD-Six-232-WST-WCGS)***	17.669	10	G457002	NA#
RETAINER, Rear Seat Cushion				
63 10-80: 64-65 01-10-80	.....	2	347 2243	
20.010 SILL, Front Seat Cross				
61 Thru 63 01	.....	1	345 8051	
(Front) 60 01 (Note 20.005-1)	.....	1	435 0019	

NOTE 20.005-1: On 60 01 Use Prior to Body No. 18823.
NOTE 20.005-2: On 60 01 Use Beginning with Body No. 18823.

Copyright 1963 American Motors Corp.

GROUP NO. — DESCRIPTION — YEAR and MODEL	PRIMARY GROUP NO.	PER CAR	PART NO.	CODE
20.015 CROSSMEMBER, Front Seat Rear				
(Left) 60 10-20-80	.....	1	342 1579	
(Left) 61-62 10-20-80	.....	1	346 0293	
(Right) 60-62 10-20-80 ***(Replaces 342 1580)***	.....	1	346 0292	
20.017 GUSSET, Floor To Side Sill				
(Left-Front) 60-61 10-20-80: 62 18-85-86-88	.....	1	341 0002	
(Left-Rear) 60-61 10-20-80: 62 18-85-86-88	.....	1	341 0004	
(Right-Front) 60-61 10-20-80: 62 18-85-86-88: ***62 15-16 (RHD)***	.....	1	341 0003	
(Right-Rear) 60-61 10-20-80: 62 18-85-86-88: ***62 15-16 (RHD)***	.....	1	341 0005	
REINFORCEMENT, Floor To Front Side Sill				
(Left) 64-65 07	.....	1	350 5763	
(Right) 64-65 07	.....	1	350 5762	
PLATE, Floor To Front Side Sill Reinforcement Cross Tie				
64-65 07	.....	1	350 5690	
ATTACHING PARTS Plate To Reinforcement				
BOLT, Hexagon 64-65 07	.....	6	400 0708	
20.020 SUPPORT, Front Seat Adjuster				
60 10-20-80 (WFS)(WNRS)(WRS)	.....	2	342 1566	
60 10-20-80 (WIRS)	.....	4	342 1566	
61 01 (WFS)(WNRS)(WRS)	.....	2	345 8027	
61 01 (WIRS)	.....	4	345 8027	
(Outer) 61 01 (WBS)	.....	2	348 1607	
(Outer) 62-63 01	.....	2	346 2585	
(Outer) 61-62 10-20-80	.....	2	342 1566	
(Inner) 61 01 (WBS)	.....	2	346 2585	
(Inner) 62-63 01 (WIRS)(WBS)	.....	2	348 1607	
(Inner) 61-62 10-20-80 (WIRS)(WBS)	.....	2	346 0289	
BRACKET, Front Seat Adjuster Rear Mounting				
(Outer) 60 10-20-80 (WIRS)	.....	2	343 5298	
(Inner) 60 10-20-80 (WIRS)	.....	2	343 5246	
20.025 RISER, Rear Seat				
60-61 02-04-06	.....	1	343 2142	
61 Thru 63 07	.....	1	345 9859	
62 02-04-06 (Note 20.025-1 Type 1)	.....	1	346 8791	
62 02-04-06 (Note 20.025-1 Type 2): 62-63 05-08: 63 02-04-06	.....	1	346 8792	
63 09	.....	1	349 8249	
60 10-20-80	.....	1	343 8782	
61-62 10-20-80	.....	1	346 5516	
CROSSMEMBER, Rear Seat				
64-65 07: 65 17-87	.....	1	350 0028	

NOTE 20.025-1: Two Types of Risers were used on the 62 02-04-06. They are identified as follows:
Type 1: Seat Cushion Front Corners are Square with approximately 1" Radius.
Type 2: Seat Cushion Front Corners are Round with approximately 6" Radius.

Copyright 1963 American Motors Corp.

GROUP NO. — DESCRIPTION — YEAR and MODEL	PRIMARY GROUP NO.	PER CAR	PART NO.	CODE
20.035 PAN ASSEMBLY, Rear Floor				
61 Thru 63 02-05-06-09	.....	1	447 8780	
61 Thru 63 04-07-08	.....	1	447 8781	
64-65 01	.....	1	448 1286	
60 15-19-25-29-85-89 (Note 20.035-1) *(Ref. Pr. List)*	.....	1	344 4443	
60 15-19-25-29-85-89 (Note 20.035-2): 61-62 15-16-25-85-86 (W/Spare Tire)	.....	1	344 4784	
60 18-25-28-83-88 (L3S-Note 20.035-1)	.....	1	344 4444	
60 18-28-83-88 (L3S-Note 20.035-2): 61-62 18-88: 61-62 15-16-25-85-86 (L/Spare Tire)	.....	1	344 4785	
63-64 10-80 (L3S)	.....	1	448 0315	
63-64 18-88 (W3S)	.....	1	448 0316	
65 10-80 (L3S)	.....	1	448 2726	
65 18-88 (W3S)	.....	1	448 2727	
(Rear) 60 Thru 62 18-28-88 (W3S)	.....	1	447 8627	
EXTENSION, Rear Floor Pan				
(Lower-Left) 64-65 01	.....	1	350 0027	
(Lower-Left) 63-64 10-80 (L3S)	.....	1	347 2037	
(Lower-Left) 65 15-16-17-19-85-86-87-89	.....	1	351 5713	
(Lower-Left) 65 18-88	.....	1	353 8983	
(Lower-Right) 64-65 01	.....	1	350 0026	
(Lower-Right) 63-64 10-80 (L3S)	.....	1	347 2036	
(Outer-Right) 63-64 18-88 (W3S)	.....	1	347 2848	
(Lower-Right) 65 15-16-17-19-85-86-87-89	.....	1	351 5712	
(Lower-Right) 65 18-88 (L3S)	.....	1	353 8982	
(Lower-Right) 65 18-88 (W3S)	.....	1	353 8984	
WELL, Rear Floor Pan Seat				
60 Thru 62 18-28-88 (W3S)	.....	1	345 7804	
WELL, Spare Tire				
60 Thru 62 15-16-19-25-29-85-86-89 (W/All Except 7.60 x 15 Tire)	.....	1	344 4763	
WELL, Fuel Tank				
63 Thru 65 18-88 (W3S)	.....	1	347 2856	
DRAIN, Spare Tire Well				
62-63 02-05-06-08	.....	1	348 0099	
BRACKET, Spare Tire				
60 01	.....	1	343 2994	
61 Thru 63 02-05-06-09: 64-65 01: 63-64 15-16-19-85-86-89: 65 17-87	.....	1	346 3526	
61 Thru 63 04-07-08	.....	1	345 9991	
60 Thru 62 18-28-83-88 (L3S)	.....	1	345 0897	
65 15-16-19-85-86-89	.....	1	317 6921	
REINFORCEMENT, Fuel Tank Mounting				
60 01: 61 Thru 63 04-07-08	.....	1	344 5937	
(Front) 60 Thru 62 10-20-80	.....	1	344 5937	
(Rear) 60 Thru 62 10-20-80	.....	1	343 9282	

NOTE 20.035-1: Use with Stabilizer Bar Bracket having 4" Brace (Measure from center of Stabilizer Bolt Hole to Floor Pan).

NOTE 20.035-2: Use with Stabilizer Bar Bracket having 5-1/2" Brace (Measure from center of Stabilizer Bolt Hole to Floor Pan).

Copyright 1963 American Motors Corp.

GROUP NO. — DESCRIPTION — YEAR and MODEL	PRIMARY GROUP NO.	PER CAR	PART NO.	CODE
BRACKET, Top Operating Motor Mounting				
61 Thru 63 07	.....	1	345 8410	
64 07	.....	1	350 0916	
65 07-17-87	.....	1	351 7416	
COVER, Shock Absorber Access Hole				
60 Thru 63 01	.....	2	313 5248	
64 01: 60 Thru 64 10-20-80	.....	2	314 7054	
65 01-10-80	.....	2	317 7315	
GASKET, Shock Absorber Access Hole Cover				
60 Thru 63 01	.....	1	437 2224	
64 01: 60 Thru 64 10-20-80	.....	2	314 9882	
ATTACHING PARTS Shock Absorber Access Hole Cover To Floor Pan				
SCREW, Tapping..... 60 Thru 64 01-10-20-80	17.660	4	G161895	NA
20.038 CROSSMEMBER ASSEMBLY, Rear Shock Absorber Mounting Bracket				
60 Thru 63 01 ..... *(Replaces 447 5690)*	.....	1	342 5963	
64-65 01	.....	1	350 0063	
60 Thru 62 10-20-80	.....	1	341 1591	
63 Thru 65 10-80	.....	1	347 2061	
REINFORCEMENT KIT, Rear Shock Absorber Mounting				
60 Thru 62 10-20-80	.....	1	320 4381	
REINFORCEMENT, Rear Shock Absorber Mounting				
60 Thru 62 10-20-80	.....	2	345 1730	
20.040 SILL, Rear Cross				
60 01	.....	1	343 6070	
61 Thru 63 01	.....	1	344 6753	
64-65 01	.....	1	350 5554	
60 Thru 62 10-20-80 (L3S)	.....	1	341 0034	
60 Thru 62 18-28-88 (W3S)	.....	1	344 5868	
63-64 10-80 (L3S)	.....	1	448 0317	
63-64 18-88 (W3S)	.....	1	448 0307	
65 10-80 (L3S)	.....	1	448 2728	
65 18-88 (W3S)	.....	1	448 2729	
20.042 GUSSET, Rear Spring Front Mounting				
(Left) 60 01: 61 Thru 63 02-04-05-06-08-09	.....	1	343 6431	
(Left) 61 Thru 63 07	.....	1	346 3659	
(Right) 60 01: 61 Thru 63 02-04-05-06-08-09	.....	1	343 6430	
(Right) 61 Thru 63 07	.....	1	346 3658	
20.043 BRACKET, Rear Leaf Spring Front Mounting				
(Left) 64-65 02-05-06-08-09	.....	1	350 0087	
(Left) 64-65 07	.....	1	350 0057	
(Right) 64-65 02-05-06-08-09	.....	1	350 0086	
(Right) 64-65 07	.....	1	350 0056	
SUPPORT, Rear Leaf Spring Front Mounting Bracket				
(Left) 64-65 02-05-06-08-09	.....	1	350 0059	
(Left) 64-65 07	.....	1	350 0617	
(Right) 64-65 02-05-06-08-09	.....	1	350 0058	
(Right) 64-65 07	.....	1	350 0616	

Copyright 1963 American Motors Corp.

GROUP NO. — DESCRIPTION — YEAR and MODEL	PRIMARY GROUP NO.	PER CAR	PART NO.	CODE
20.060 HOUSING, Fuel Tank Filler Neck				
60 01	.....	1	435 0079	
61 Thru 63 01	.....	1	344 6762	
60-61 10-20-80 (L3S-LVT)	.....	1	341 0119	
62 10-80 (L3S)	.....	1	346 2636	
62 18-88 (W3S)	.....	1	346 9097	
(Upper) 60-61 18-28-88 (W3S)	.....	1	344 1671	
(Center) 60-61 18-28-88 (W3S)	.....	1	344 4659	
(Lower) 60-61 18-28-88 (W3S)	.....	1	344 5764	
20.070 SILL, Side (Incl. Front And Rear Filler)				
(Left) 60 01	.....	1	447 8650	
(Left) 61 Thru 63 01	.....	1	447 8777	
(Left) 60-61 10-20-80	.....	1	447 7203	
(Left) 62 10-80	.....	1	447 9423	
(Right) 60 01	.....	1	447 8649	
(Right) 61 Thru 63 01	.....	1	447 8776	
(Right) 60 10-20-80 (L3S-Note 20.035-1): 60-61 18-28-88 (W3S)	.....	1	447 8625	
(Right) 60 10-20-80 (L3S-Note 20.035-2): 61 10-20-80 (L3S)	.....	1	447 7204	
(Right) 62 10-80 (L3S)	.....	1	447 9422	
(Right) 62 10-80 (W3S)	.....	1	447 9424	
SILL, Front Side				
(Left) 64-65 02-05-06-08-09: 64-65 15-16-18-19-85-86-88-89	.....	1	351 2869	#
(Left) 64-65 07: 65 17-87	.....	1	448 1285	#
(Left) 63 10-80	.....	1	347 2027	
(Right) 64-65 02-05-06-08-09: 64-65 15-16-18-19-85-86-88-89	.....	1	351 2868	#
(Right) 64-65 07: 65 17-87	.....	1	448 1284	#
(Right) 63 10-80	.....	1	347 2026	
SILL, Rear Side				
(Left) 64-65 01	.....	1	448 1289	#
(Left) 63-64 10-80	.....	1	448 0319	
(Left) 65 10-80 (L3S)	.....	1	448 2731	#
(Left) 65 18-88 (W3S)	.....	1	448 2733	#
(Right) 64-65 01	.....	1	448 1288	#
(Right) 63-64 10-80	.....	1	448 0318	
(Right) 65 10-80 (L3S)	.....	1	448 2730	#
(Right) 65 18-88 (W3S)	.....	1	448 2732	#
FILLER, Side Sill Front				
(Left) 60 Thru 63 01	.....	1	435 0035	
(Left) 60 Thru 62 10-20-80	.....	1	341 0035	
(Right) 60 Thru 63 01	.....	1	435 0036	
(Right) 60 Thru 62 10-20-80	.....	1	341 0036	
FILLER, Side Sill Rear				
(Left) 60 Thru 63 01	.....	1	344 3563	
(Left) 60 Thru 62 10-20-80	.....	1	341 0099	
(Right) 60 Thru 63 01	.....	1	344 3562	
(Right) 60 Thru 62 10-20-80	.....	1	341 0098	

NOTE 20.070-1: Two Types of Right Side Support Bracket were used on the 63 18-88. They can be identified as follows:
Type 1: Extends 7/8" downward.
Type 2: Extends 3" downward.

Copyright 1963 American Motors Corp.

GROUP NO. — DESCRIPTION — YEAR and MODEL	PRIMARY GROUP NO.	PER CAR	PART NO.	CODE
BRACE, Front Side Sill To Dash Panel				
(Left) 64-65 07		1	350 0025	#
(Left) 65 17-87		1	351 5089	#
(Right) 64-65 07		1	350 0024	#
(Right) 65 17-87		1	351 5088	#
REINFORCEMENT, Side Sill Rear				
(Left) 60 Thru 63 01		1	343 6447	
(Right) 60 Thru 63 01		1	343 6446	
REINFORCEMENT, Side Sill To Rear Wheelhouse Filler				
(Left) 60 Thru 62 01: 63 07		1	346 3567	
(Right) 60 Thru 62 01: 63 07		1	346 3566	
PLATE, Rear Leaf Spring Rear Hanger Mounting				
60 Thru 63 01		2	340 0369	
PLATE, Side Sill To Floor Pan				
(Left) 60 19-29-83-89		1	342 1133	
(Right) 60 19-29-83-89		1	342 1134	
BRACE, Side Sill To Floor Reinforcement Channel				
(Left) 60-61 80		1	342 4239	
(Right) 60-61 80		1	342 1624	
BRACE, Front Side Sill To Rear Side Sill (Lift Pad)				
(Left) 64-65 02-05-06-08-09		1	350 0035	#
(Left) 64-65 07		1	350 0037	#
(Left) 63 Thru 65 10-80		1	347 2051	#
(Right) 64-65 02-05-06-08-09		1	350 0034	#
(Right) 64-65 07		1	350 0036	#
(Right) 63 Thru 65 10-80		1	347 2050	#
REINFORCEMENT, Rear Sill To Cross Sill Bumper Mount				
(Left) 64-65 01		1	350 0053	#
(Right) 64-65 01		1	350 0052	#
FILLER, Front Side Sill To Rear Side Sill				
(Left) 64-65 07		1	350 1115	#
(Left) 65 17-87		1	351 5059	#
(Right) 64-65 07		1	350 1114	#
(Right) 65 17-87		1	351 5058	#
BRACKET, Rear Muffler Support Hanger				
64-65 01		1	350 5369	#
BRACKET, Tail Pipe Support				
(Left) 63 Thru 65 18-88 (W3S)		1	348 7972	#
(Right) 63 18-88 (W3S-Note 20.070-1 Type 1)		1	348 5442	
(Right) 63 18-88 (W3S-Note 20.070-1 Type 2): 64-65 18-88 (W3S)		1	351 0411	#

Copyright 1963 American Motors Corp.

GROUP NO. — DESCRIPTION — YEAR and MODEL	PRIMARY GROUP NO.	PER CAR	PART NO.	CODE
20.072 CHANNEL, Floor Reinforcement				
(Left) 64-65 01	.....	1	350 5569	
(Left) 60-61 10-20-80	.....	1	447 8173	
(Left) 62 18-85-86-88	.....	1	346 1021	
(Left) 63 Thru 65 10-80	.....	1	349 2081	
(Right) 64-65 01	.....	1	350 5568	
(Right) 60-61 10-20-80 ...(Replaces 447 8174)	.....	1	447 7207	
(Right) 62 18-85-86-88: 62 15-16 (RHD)	.....	1	346 1020	
(Right) 63 Thru 65 10-80	.....	1	349 2080	
EXTENSION, Floor Reinforcement Channel				
(Left) 65 17-80: 65 59 (Marlin)	.....	1	351 6359	
(Right) 65 17-80: 65 59 (Marlin)	.....	1	351 6358	
PLATE, Floor Channel Reinforcement Front Cover				
(Left) 60-61 10-20-80 ...(Replaces 341 0023)	.....	2	341 0022	
REINFORCEMENT, Motor Rear Support Hanger				
(Left) 60-61 10-20-80	.....	1	342 4529	
(Right) 60-61 10-20-80	.....	1	342 4530	
20.073 CROSSMEMBER, Side Sill To Side Sill				
64-65 02-05-06-08-09	.....	1	350 0022	
64-65 07	.....	1	350 0910	
63 10-80 ...(Replaces 347 2069)	.....	1	347 2056	
64-65 15-16-18-19-85-86-88-89	.....	1	350 9112	
65 17-87	.....	1	351 5082	
20.074 BRACKET, Rear Motor Support Crossmember Mounting				
64-65 01	.....	1	350 0289	
20.075 PLATE, Side Sill Lower Front Filler				
(Left) 60 Thru 62 10-20-80	.....	1	341 0015	
(Right) 60 Thru 62 10-20-80	.....	1	341 0016	
20.080 BRACKET, Stabilizer Bar (Incl. Side Sill Reinforcement)				
60 10-20-80 (L3S-Note 20.035-1): 60 Thru 62 18-28-88 (W3S)	.....	1	447 8626	
60 10-20-80 (L3S-Note 20.035-2): 61-62 10-20-80 (L3S)	.....	1	447 7205	
63 10-80: 64-65 10-80 (L3S)	.....	1	448 0303	
64-65 18-88 (W3S)	.....	1	448 1374	
20.085 PANEL ASSEMBLY, Front Wheelhouse				
(Left) 64 01 ...(Use 352 3409)	.....	1	350 5587	
(Left) 65 01 ...(Replaces 354 8368)	.....	1	352 3409	
(Left) 65 01 ...(Use 352 3409)	.....	1	354 8368	
(Left) 60 10-20	.....	1	447 8163	
(Left) 61 10-20	.....	1	447 8731	
(Left) 62 10-80	.....	1	447 9429	
(Left) 63 10-80	.....	1	448 0281	
(Left) 64 10-80	.....	1	448 1325	

Copyright 1963 American Motors Corp.

GROUP NO. — DESCRIPTION — YEAR and MODEL	PRIMARY GROUP NO.	PER CAR	PART NO.	CODE
(Left) 65 10		1	448 2735	
(Left) 60 80		1	447 8628	
(Left) 61 80		1	447 8733	
(Left) 65 80		1	448 2737	
(Left-Inner) 60 01		1	447 8239	
(Left-Inner) 61 01		1	447 8767	
(Left-Inner) 62-63 01		1	447 9461	
(Left-Outer) 60 01 ***(Use 447 9139)***		1	342 5811	
(Left-Outer) 61 Thru 63 01 ***(Replaces 345 2785)***		1	347 4755	
(Right) 64 01 ***(Use 352 3407)***		1	350 5586	
(Right) 65 01 ***(Replaces 354 8366)***		1	352 3407	
(Right) 60 10-20		1	447 8164	
(Right) 61 10-20		1	447 8730	
(Right) 62 10-80		1	447 9428	
(Right) 63 10-80		1	448 0280	
(Right) 64 10-80		1	448 1324	
(Right) 65 10 (LHD)		1	448 2734	
(Right) ***65 10 (RHD)***		1	448 3309	
(Right) 60 80		1	447 8166	
(Right) 61 80		1	447 8732	
(Right) 65 80		1	448 2736	
(Right-Inner) 60 Thru 63 01 ***(Replaces 447 8240, 447 8766)***		1	447 9460	
(Right-Outer) 60 01 (Replaces 342 5812)		1	447 9138	#
(Right-Outer) 61 Thru 63 01 ***(Replaces 345 2784)***		1	347 4754	

PANEL (Only), Front Wheelhouse (Incl. Spring Cup)

(Left) 60-61 10-20		1	447 9875	
(Left) 62 10-80		1	447 9881	
(Left) 60 80		1	447 9877	
(Left) 61 80		1	447 9879	
(Right) 60-61 10-20		1	447 9874	
(Right) 62 10-80		1	447 9880	
(Right) 60 80		1	447 9876	
(Right) 61 80		1	447 9878	

PANEL (Only), Front Wheelhouse Front

(Left) 64-65 01		1	350 5451	
(Left) 63 10-80 ***(Use 352 4783)***		1	347 2129	
(Left) 64 10-80		1	352 4783	
(Left) 65 10-80		1	351 5733	
(Right) 64-65 01		1	350 0110	
(Right) 63-64 10-80		1	347 2128	
(Right) 65 10-80		1	351 5732	

PANEL (Only), Front Wheelhouse Rear

(Left) 64-65 01		1	350 5777	
(Left) 63 Thru 65 10: 63-64 80		1	347 2135	
(Left) 65 80		1	351 5737	
(Right) 64-65 01		1	350 5776	
(Right) 63 Thru 65 10: 63-64 80		1	348 4682	
(Right) 65 80		1	351 5736	

PANEL, Front Wheelhouse Upper Filler

(Left) 60 10-20		1	342 4013	
(Left) 61-62 10-20: 62 80		1	345 1985	

Copyright 1963 American Motors Corp.

GROUP NO. — DESCRIPTION — YEAR and MODEL	PRIMARY GROUP NO.	PER CAR	PART NO.	CODE
(Left) 60 80	.....	1	342 4231	
(Left) 61 80	.....	1	345 1989	
(Right) 60 10-20	.....	1	342 4014	
(Right) 61-62 10-20: 62 80	.....	1	345 1984	
(Right) 60 80	.....	1	342 4232	
(Right) 61 80	.....	1	345 1988	
PANEL, Front Wheelhouse To Dash Panel (Upper)				
(Left) 60 Thru 62 10-20: 62 80	.....	1	341 0108	
(Left) 60-61 80	.....	1	342 1627	
(Right) 60 Thru 62 10-20: 62 80	.....	1	341 0109	
(Right) 60-61 80	.....	1	342 1628	
REINFORCEMENT, Front Wheelhouse Panel Front				
(Left) 60 10-20-80	.....	1	342 1575	
(Left) 61 10-20	.....	1	344 7617	
(Left) 62 10-80	.....	1	346 1583	
(Left) 61 80	.....	1	344 7619	
(Right) 60 10-20-80	.....	1	342 1576	
(Right) 61 10-20	.....	1	344 7616	
(Right) 62 10-80	.....	1	346 1582	
(Right) 61 80	.....	1	344 7618	
REINFORCEMENT, Front Wheelhouse Dynamic Absorber				
(Left) 65 17-87 *(Discontinued)*	.....	1	317 8457	#
(Right) 65 17-87 *(Discontinued)*	.....	1	317 8456	#
BRACKET, Wheelhouse To Wheelhouse Crossmember Mounting				
(Left) 60 01 (OHV)	.....	1	345 3609	
(Right) 60 01 (OHV)	.....	1	345 3610	
BRACKET, Shock Absorber Mounting				
63 Thru 65 10-80	.....	2	348 7431	
EXTENSION, Front Side Sill Rear				
62 15-16	.....	2	346 1700	
EXTENSION, Front Wheelhouse Panel Front				
(Left) 61 Thru 63 01	.....	1	344 6943	
(Left) 64-65 01	2.023	1	350 5521	
(Left) 60 10-20-80	.....	1	344 5719	
(Left) 61-62 10-20: 62 80	.....	1	345 1993	
(Left) 63 10-80	2.023	1	348 2413	
(Left) 64 10-80	2.023	1	350 1215	
(Left) 65 10	2.023	1	351 5893	
(Left) 61 80	.....	1	344 7625	
(Left) 65 80	2.023	1	351 5939	
(Right) 61 Thru 63 01	.....	1	344 6942	
(Right) 64-65 01	2.023	1	350 5520	
(Right) 60 10-20-80	.....	1	344 5718	
(Right) 61-62 10-20: 62 80	.....	1	345 1992	
(Right) 63 10-80	2.023	1	348 2412	
(Right) 64 10-80	2.023	1	350 1214	
(Right) 65 10	2.023	1	351 5892	
(Right) 61 80	.....	1	344 7624	
(Right) 65 80	2.023	1	351 5938	

Copyright 1963 American Motors Corp.

GROUP NO. — DESCRIPTION — YEAR and MODEL		PRIMARY GROUP NO.	PER CAR	PART NO.	CODE
ATTACHING PARTS					
Extension To Wheelhouse					
SCREW, Tapping	60 Thru 62 10-20-80 (5/16-24 x 3/4)	22.056	6	400 0032	
BOLT, Hexagon	60 Thru 62 10-20-80 (5/16-10 x 1)	12.075	6	435 5574	
STUD	61 80	5.178	2	312 2698	
WASHER, Plain	61 80	17.814	2	G120393	NA
WASHER, Plain	60 Thru 62 10-20-80	17.814	6	G120393	NA
NUT, speed	61-62 10-20-80	12.125	4	400 0340	
Extension To Front Fender					
SCREW, Machine	60 10-20-80	17.598	6	400 1008	
SCREW, Tapping	61 80	22.056	2	345 1488	
SEAL, Front Wheelhouse Extension					
61 Thru 63 01		.....	2	346 3296	
ATTACHING PARTS					
Seal To Extension					
CLIP	61 Thru 63 01	12.022	6	400 0085	
GUSSET, Front Wheelhouse To Cowl Top Panel					
(Left) 63-64 10-80		.....	1	349 0955	
(Left) 65 10		.....	1	354 2977	
(Left) 65 80		.....	1	353 6233	
(Right) 63-64 10-80		.....	1	349 0954	
(Right) 65 10		.....	1	354 2976	
(Right) 65 80		.....	1	353 6232	
20.090 FILLER, Front Wheelhouse Panel To Fender					
(Left) 60 Thru 63 01		.....	1	447 5699	
(Right) 60 Thru 63 01		.....	1	447 5700	
20.093 BRACE, Cowl Top To Wheelhouse Panel					
64-65 01		.....	1	350 5344	
(Left) 63 Thru 65 10: 63-64 80		.....	1	349 2697	
(Left) 65 80		.....	1	351 5773	
(Right) 63 Thru 65 10: 63-64 80		.....	1	349 2696	
(Right) 65 80		.....	1	351 5772	
ATTACHING PARTS					
Brace To Cowl Top					
BOLT, Hexagon	63 Thru 65 10-80	17.038	2	G120647	NA
WASHER, Plain	63 Thru 65 10-80 ***(Replaces 400 0484)***	17.814	2	400 1107	
WASHER, Lock	63 Thru 65 10-80	17.820	2	G120382	NA
NUT, Hexagon	63 Thru 65 10-80	17.406	2	G120369	NA
Brace To Wheelhouse					
SCREW, Hexagon	63 Thru 65 10-80	.....	2	400 0630	
WASHER, Bite	63 Thru 65 10-80	28.015	2	400 0219	
ROD, Cowl Top To Wheelhouse Panel					
60-61 80		.....	2	315 3306	
BRACKET, Brace To Wheelhouse Panel					
65 80		.....	2	351 6355	

Copyright 1963 American Motors Corp.

GROUP NO. — DESCRIPTION — YEAR and MODEL	PRIMARY GROUP NO.	PER CAR	PART NO.	CODE
ATTACHING PARTS				
Rod To Cowl Top				
BOLT, Hexagon 60-61 80	17.038	2	G181639	NA
WASHER, Plain..... 60-61 80 (13/32 x 1 x 5/64)	17.814	2	400 1107	
WASHER, Plain..... 60-61 80 (13/32 x 7/8 x 3/16)	17.814	2	400 1161	
WASHER, Lock..... 60-61 80 (3/8" I.D. x 1-1/16" O.D.)	17.826	2	G178556	NA
WASHER, Lock..... 60-61 80 (3/8" I.D. x 11/16" O.D.)	17.820	2	G120382	NA
NUT, Hexagon..... 60-61 80	17.406	2	G120369	NA
Rod To Wheelhouse				
BOLT, Hexagon 60-61 80	17.038	2	G181637	NA
WASHER, Lock..... 60-61 80 (3/8 x 11/16)	17.820	2	G120382	NA
WASHER, Lock..... 60-61 80 (3/8 x 1-1/16)	17.826	2	G178556	NA
20.095 BRACKET, Front Suspension Mounting				
60-61 10-20-80 ..... *(Replaces 342 1483)*	.....	2	346 5491	
61 10-20-80	.....	2	346 5491	
62 10-80	.....	2	346 1067	
63 10-80	.....	2	347 2121	
64 10-80	.....	2	350 9245	
65 10-80	.....	2	351 6245	
(Left) 60 01	.....	1	342 5854	
(Left) 61 Thru 63 01	.....	1	345 2049	
(Left) 64-65 01	.....	1	350 5577	
(Right) 60 01: 61 Thru 63 01 (LHD)	.....	1	342 5959	
(Right) 64-65 01	.....	1	350 5576	
(Right) ***61 Thru 63 01 (RHD)***	.....	1	346 3530	
COVER, Front Suspension Mounting Bracket To Side Sill Reinforcement				
64-65 01	.....	1	350 0088	
62 10-80	.....	2	346 1032	
63 Thru 65 10-80	.....	2	347 2088	
ATTACHING PARTS				
Cover To Side Sill Reinforcement				
SCREW, Tapping..... 62 10-80	17.669	6	G457002	NA
SCREW, Tapping..... 63 Thru 65 10-80	17.671	6	G941261	NA
20.115 CROSSMEMBER, Wheelhouse Panel To Wheelhouse Panel				
60 01 (LHE): 61 Thru 63 01 (LHE-LAC)(LHE-WAC-LPS)	.....	1	342 5808	
60 01 (OHV)	.....	1	340 0345	
61 Thru 63 01 (LHE-WAC-WPS)(OHV)	.....	1	345 3430	
60 Thru 62 10-20: 60 80 (LAC): 62 80	.....	1	344 7718	
60 80 (WAC)	.....	1	344 0977	
61 80	.....	1	346 4480	
(Upper) 64-65 01	2.062	1	350 5512	
(Upper) 63 10-80	2.062	1	349 2473	
(Upper) 64 10-80	2.062	1	349 2472	
(Upper) 65 10	2.062	1	353 6299	
(Upper) 65 80	2.062	1	353 6437	
(Lower) 64 01	2.062	1	350 5513	
(Lower) 65 01	2.062	1	353 0599	
(Lower) 63-64 10	2.062	1	349 2474	
(Lower) 65 10: 63-64 80	2.062	1	349 2475	
(Lower) 65 80	2.062	1	353 8981	

Copyright 1963 American Motors Corp.

GROUP NO. — DESCRIPTION — YEAR and MODEL	PRIMARY GROUP NO.	PER CAR	PART NO.	CODE
ATTACHING PARTS				
Crossmember To Wheelhouse				
BOLT, Hexagon 62 10-80	23.020	4	400 0016	
BOLT, Hexagon ..... 60 01 (OHV): 60-61 10-20-80	17.038	4	G181596	NA
WASHER, Plain..... 60 01 (OHV)	17.814	4	400 1093	
WASHER, Plain..... 60-61 10-20-80	17.814	4	G120393	NA
WASHER, Lock ..... 60 01 (OHV): 60 Thru 62 10-20-80	17.820	4	G120214	NA
NUT, Hexagon..... 60 01 (OHV): 60 Thru 62 10-20-80	17.406	4	G120368	
Crossmember To Baffle				
BOLT, Hexagon 60-61 10-20-80	17.038	4	G181595	NA
WASHER, Plain..... 60-61 10-20-80	17.814	4	G120393	NA
WASHER, Lock 60-61 10-20-80	17.820	4	G120214	NA
NUT, Hexagon..... 60-61 10-20-80	17.406	4	G120368	NA
20.120 DASH ASSEMBLY (Incl. Toeboard)				
60 01	.....	1	447 8668	
61-62 01 (LHD) ***(Replaces 447 8782)***	.....	1	447 9456	
61-62 01 (RHD) ***(Replaces 447 9140)***	.....	1	447 9457	
63 01 (LHD)	.....	1	448 0427	
63 01 (RHD)	.....	1	448 0449	
64 02-05-06-08-09 (LHD)	.....	1	350 5582	
64 07 (LHD)	.....	1	350 5583	
65 05-06-08-09 (LHD)	.....	1	354 7108	
65 07 (LHD)	.....	1	354 7109	
64-65 02-05-06-08-09 (RHD)	.....	1	350 5584	
60 10-20-80 ***(Replaces 447 8669)***	.....	1	447 8629	
61 10-20-80 (LHD)	.....	1	447 8807	
61 10-20-80 (RHD)	.....	1	447 8808	
62 10-80 (LHD)	.....	1	347 0040	
62 10-80 (RHD)	.....	1	347 0042	
63 10-80 (LHD)	.....	1	448 0282	
64 10-80 (LHD)	.....	1	448 1326	
64 10 (RHD)	.....	1	448 1327	
65 15-16-18-19-85-86-88-89 (LHD)	.....	1	448 2738	
65 17-87 (LHD)	.....	1	448 2739	
65 15-16-18-19 (RHD)	.....	1	448 2905	
65 17 (RHD)	.....	1	448 3030	
BRACKET, Battery Box Rear Support				
60 01 (OHV)	3.082	1	315 9874	
REINFORCEMENT, Dash Assembly To Cowl Top				
(Left) 60 Thru 62 10-20-80	.....	1	344 0381	
(Right) 60 Thru 62 10-20-80	.....	1	344 0380	
ATTACHING PARTS				
Plate To Dash Assembly				
SCREW, Tapping..... 60 10-20-80 (Less Heater)	17.671	1	800 0093	NA
SCREW, Tapping..... 63 10-80 (Less Heater)	17.660	6	G161895	NA
PLATE, Heater Valve Opening Cover				
60 10-20-80 (Less Heater)	13.035	1	313 1284	

Copyright 1963 American Motors Corp.

GROUP NO. — DESCRIPTION — YEAR and MODEL	PRIMARY GROUP NO.	PER CAR	PART NO.	CODE
ATTACHING PARTS Plate To Dash Assembly				
SCREW, Tapping..... 60 10-20-80 (Less Heater)	17.671	2	G456766	
GASKET, Heater Valve Opening Cover				
60 10-20-80 (Less Heater)	13.035	1	313 1285	
PLATE, Heater Core Tube Opening Cover				
60 10-20-80 (Less Heater)	.....	1	315 0402	
ATTACHING PARTS Plate To Dash Assembly				
SCREW, Tapping..... 60 10-20-80 (Less Heater)	17.671	1	800 0093	NA
GASKET, Heater Core Tube Opening Cover Plate				
60 10-20-80 (Less Heater)	.....	1	315 0576	
PLATE, Heater Mounting Panel Cover				
61 Thru 63 01 (Less Heater)	.....	1	345 8006	
ATTACHING PARTS Plate To Dash Assembly				
SCREW, Tapping..... 61 Thru 63 01 (Less Heater)	17.660	10	G161903	NA
SCREW, Tapping..... 61-62 10-20-80 (Less Heater)	17.660	7	G161895	NA
GASKET, Heater Mounting Panel Cover Plate				
(Upper) 61 Thru 63 01 (Less Heater)	13.012	1	316 0257	
(Lower) 61 Thru 63 01 (Less Heater)	13.012	1	316 0264	
(Side) 61 Thru 63 01 (Less Heater)	.....	2	345 8025	
PLATE, Cowl Vent Air Chamber Cover				
64-65 01 (Less Heater)	.....	1	350 5749	
61-62 10-80 (Less Heater)	.....	1	344 7996	
63 Thru 65 10-80 (Less Heater)	.....	1	347 2723	
ATTACHING PARTS Plate To Dash Assembly				
SCREW, Tapping..... 64 01 (Less Heater): 64-65 01 (Less Heater)	17.669	4	800 0274	NA
SCREW, Tapping..... 61-62 10-20-80 (Less Heater)	17.671	5	G456766	
SCREW, Tapping..... 63 Thru 65 10-80 (Less Heater)	17.660	4	G161895	NA
RETAINER..... 63 Thru 65 10-80 (Less Heater)	.....	2	347 2725	
GASKET, Cowl Vent Air Chamber Cover Plate				
61 Thru 63 01 (Less Heater): 61-62 10-20-80 (Less Heater)	.....	1	344 7997	
63 Thru 65 10-80 (Less Heater)	.....	1	347 2724	
PLATE, Heater Motor Opening Cover				
64-65 01 (Less Heater)	.....	1	350 0545	
60 10-20-80 (Less Heater)	.....	1	343 0295	
63 Thru 65 10-80 (Less Heater)	.....	1	347 2734	

Copyright 1963 American Motors Corp.

GROUP NO. — DESCRIPTION — YEAR and MODEL	PRIMARY GROUP NO.	PER CAR	PART NO.	CODE
ATTACHING PARTS				
Plate To Dash Assembly				
SCREW, Tapping..... 64-65 01 (Less Heater)	17.660	3	G161895	NA
SCREW, Tapping..... 63 Thru 65 10-80 (Less Heater)	17.670	6	G161895	NA
NUT, Speed..... 64-65 01 (Less Heater)	13.035	3	400 0278	
GASKET, Heater Motor Opening Cover Plate				
63 Thru 65 10-80 (Less Heater)	.....	1	347 2736	
20.125 PANEL, Dash To Sill Filler				
(Left) 60 Thru 63 01	.....	1	437 3033	
(Right) 60 Thru 63 01	.....	1	437 3034	
20.150 PANEL, Cowl Top				
60 01...(Incl. Drip Moulding)	.....	1	437 3123	
61 Thru 63 02-04-05-06-08...(Incl. Header Bar And Drip Moulding) ***(Replaces 343 6216)***	.....	1	348 1531	
61-63 07...(Incl. Header Bar) ***(Replaces 346 3326)***	.....	1	348 1532	
63 09...(Incl. Header Bar)	.....	1	349 8794	
64-65 02-05-06-08 (LHD)	.....	1	350 0331	
64-65 02-05-06-08 (RHD)	.....	1	352 2002	
64-65 07 (LHD)	.....	1	350 5802	
64-65 09 (LHD)...(Incl. Gussets)	.....	1	350 5803	
64-65 09 (RHD)...(Incl. Gussets)	.....	1	352 2001	
60 10-20-80	.....	1	344 0060	
61-62 10-20-80	.....	1	344 7520	
63 Thru 65 15-16-18-85-86-88	.....	1	448 0283	
64-65 19-89 (Except Marlin)...(Incl. Gussets)	.....	1	448 1339	#
65 59 (Marlin)	.....	1	448 3226	
65 17-87	.....	1	448 2740	
FILLER, Cowl Top Panel To Hood				
60 01	.....	1	342 5886	
BRACKET, Cowl Top To Wheelhouse Brace Mounting				
60 80	.....	1	342 4260	
61 80	.....	1	344 7641	
(Left) 63 Thru 65 10-80	.....	1	349 7889	
(Right) 63 Thru 65 10-80	.....	1	349 7888	
SEAL, Cowl Top To Dash Panel Corner				
60 Thru 62 10-20-80 ***(Replaces 343 0823)***	.....	2	346 5760	

Copyright 1963 American Motors Corp.

GROUP NO. — DESCRIPTION — YEAR and MODEL	PRIMARY GROUP NO.	PER CAR	PART NO.	CODE
20.155 PANEL, Cowl Side				
(Left) 60 Thru 62 10-20-80	.....	1	344 0069	
(Left-Outer) 64-65 01-10-80	.....	1	350 9109	
(Left-Outer) 63 10-80 (Note 20.155-1 Type 1) ***(Ref. Pr. List)***	.....	1	347 2449	
(Left-Outer) 63 10-80 (Note 20.155-1 Type 2)	.....	1	448 1193	
(Left-Inner) 64-65 02-05-06-08-15-16-18-85-86-88	.....	1	448 1357	
(Left-Inner) 64-65 07-09-17-19-87-89	.....	1	448 1359	
(Left-Inner) 63 10-80 (Note 20.155-2 Type 1)	.....	1	448 0801	
(Left-Inner) 63 10-80 (Note 20.155-2 Type 2)	.....	1	448 1201	
(Right) 60 Thru 62 10-20-80	.....	1	344 0068	
(Right-Outer) 64-65 01-10-80	.....	1	350 9108	
(Right-Outer) 63 10-80 (Note 20.155-1 Type 1) ***(Ref. Pr. List)***	.....	1	347 2448	
(Right-Outer) 63 10-80 (Note 20.155-1 Type 2)	.....	1	448 1192	
(Right-Inner) 64-65 02-05-06-08-15-16-18-85-86-88	.....	1	448 1356	
(Right-Inner) 64-65 07-09-17-19-87-89	.....	1	448 1358	
(Right-Inner) 63 10-80 (Note 20.155-2 Type 1)	.....	1	448 0800	
(Right-Inner) 63 10-80 (Note 20.155-2 Type 2)	.....	1	448 1200	
BRACKET, Parking Brake Mounting				
60 Thru 62 10-20-80 (LHD)	.....	1	342 4169	
60-61 10-20-80 (RHD)	.....	1	343 1156	
63-64 10-80 (LHD)	.....	1	347 2969	
20.160 BAR, Windshield Header				
60 01	.....	1	437 3168	
61 Thru 63 02-04-05-06-08	.....	1	344 6506	
60-61 10-20	.....	1	447 8640	
GUSSET, Windshield Header Bar To Side Roof Rail				
(Left) 64-65 09	.....	1	350 0769	
(Left) 60-61 10-20	.....	1	344 0045	
(Left) 62 10-80	.....	1	346 1185	
(Left) 60-61 80	.....	1	344 0049	
(Left) 64-65 19-89	.....	1	350 0859	
(Right) 64-65 09	.....	1	350 0768	
(Right) 60-61 10-20	.....	1	344 0044	
(Right) 62 10-80	.....	1	346 1184	
(Right) 60-61 80	.....	1	344 0048	
(Right) 64-65 19-89	.....	1	350 0858	

NOTE 20.155-1: Two Types of Outer Cowl Side Panels were used on 63 10-80 Models. They can be identified as follows:
Type 1: The upper two Clinch Nuts are spaced 9-5/16" apart.
Type 2: The upper two Clinch Nuts are spaced 7-17/32" apart.

NOTE 20.155-2: Two Types of Inner Cowl Side Panels were used on 63 10-80 Models. They can be identified as follows:
Type 1: Front edge of Air Intake Hole is located 1-13/16" from front edge of the Inner Panel.
Type 2: Front edge of Air Intake Hole is located 2-5/8" from front edge of the Inner Panel.

Copyright 1963 American Motors Corp.

GROUP NO. — DESCRIPTION — YEAR and MODEL	PRIMARY GROUP NO.	PER CAR	PART NO.	CODE
20.170 UNISIDE ASSEMBLY				
(Left) 64 02-06-16 ***(Replaces 448 1331)***	.....	1	448 2759	#
(Left) 64 07	.....	1	350 5635	
(Left) 64 09-19-89	.....	1	448 1333	
(Left) 64-65 05-08: 64 15-18-85-88	.....	1	448 1329	
(Left) 65 06	.....	1	448 2759	
(Left) 65 07	.....	1	352 3301	
(Left) 65 09	.....	1	448 2765	
(Left) 61 15-18-25-28-85-88	.....	1	345 1709	
(Left) 62 15-18-85-88	.....	1	346 6617	
(Left) 62 16-86	.....	1	346 6619	
(Left) 63 15-85 (Note 20.170-1 Type 1) ***(Ref. Pr. List)***	.....	1	349 2305	
(Left) 63 15-85 (Note 20.170-1 Type 2)	.....	1	351 1527	
(Left) 63 16-86 (Note 20.170-1 Type 1) ***(Ref. Pr. List)***	.....	1	349 2307	
(Left) 63 16-86 (Note 20.170-1 Type 2)	.....	1	351 1529	
(Left) 63 18-88 (Note 20.170-1 Type 1) ***(Ref. Pr. List)***	.....	1	349 2309	
(Left) 63 18-88 (Note 20.170-1 Type 2) ***(Ref. Pr. List)***	.....	1	351 1531	
(Left) 65 15-18-85-88	.....	1	448 2787	
(Left) 65 16-86	.....	1	448 2789	
(Left) 65 17-87	.....	1	352 9261	
(Left) 65 19-89 (Except Marlin)	.....	1	448 2791	
(Left) 65 59 (Marlin)	.....	1	448 3231	
(Right) 64 02-06-16	.....	1	448 1330	
(Right) 64 07	.....	1	350 5634	
(Right) 64 09-19-89	.....	1	448 1332	
(Right) 64-65 05-08: 64 15-18-85-88	.....	1	448 1328	
(Right) 65 06	.....	1	448 2758	
(Right) 65 07	.....	1	352 3300	
(Right) 65 09	.....	1	448 2764	
(Right) 61 15-18-25-28-85-88	.....	1	345 1708	
(Right) 62 15-18-85-88	.....	1	346 6616	
(Right) 63 15-85 (Note 20.170-1 Type 1) ***(Ref. Pr. List)***	.....	1	349 2304	
(Right) 63 15-85 (Note 20.170-1 Type 2)	.....	1	351 1526	
(Right) 63 16-86 (Note 20.170-1 Type 1)	.....	1	349 2306	
(Right) 63 16-86 (Note 20.170-1 Type 2)	.....	1	351 1528	
(Right) 63 18-88 (Note 20.170-1 Type 1) ***(Ref. Pr. List)***	.....	1	349 2308	
(Right) 63 18-88 (Note 20.170-1 Type 2) ***(Ref. Pr. List)***	.....	1	351 1530	
(Right) 65 15-18-85-88	.....	1	448 2786	
(Right) 65 16-86	.....	1	448 2788	
(Right) 65 17-87	.....	1	352 9260	
(Right) 65 19-89 (Except Marlin)	.....	1	448 2790	
(Right) 65 59 (Marlin)	.....	1	448 3230	
PANEL, Uniside Outer				
(Left) 64 07 ***(Replaces 448 1297)***	.....	1	448 2753	
(Left) 64 09-19-89	.....	1	448 1295	
(Left) 64-65 02-06: 64 16	.....	1	448 1293	
(Left) 64-65 05-08: 64 15-18-85-88	.....	1	448 1291	
(Left) 65 07	.....	1	448 2753	
(Left) 65 09	.....	1	448 2755	
(Left) 63 15-18-85-88	.....	1	448 0671	
(Left) 63 16-86	.....	1	448 0673	
(Left) 65 15-18-85-88	.....	1	448 2745	
(Left) 65 16-86	.....	1	448 2747	

NOTE 20.170-1: Two Types of Uniside Assemblies and Inner Unisides were used on 63 10-80 Models. They can be identified as follows:
Type 1: Front edge of Air Intake Hole is located 1-13/16" from front edge of Inner Panel.
Type 2: Front edge of Air Intake Hole is located 2-5/8" from front edge of the Inner Panel.

Copyright 1963 American Motors Corp.

GROUP NO. — DESCRIPTION — YEAR and MODEL	PRIMARY GROUP NO.	PER CAR	PART NO.	CODE
(Left) 65 17-87		1	448 2751	
(Left) 65 19-89 (Except Marlin)		1	448 2749	
(Left) 65 59 (Marlin)		1	448 3229	
(Right) 64 07		1	448 1296	
(Right) 64 09-19-89		1	448 1294	
(Right) 64-65 02-06: 64 16		1	448 1292	
(Right) 64-65 05-08: 64 15-18-85-88		1	448 1290	
(Right) 65 07		1	448 2752	
(Right) 65 09		1	448 2754	
(Right) 63 15-18-85-88		1	448 0670	
(Right) 63 16-86		1	448 0672	
(Right) 65 15-18-85-88		1	448 2744	
(Right) 65 16-86		1	448 2746	
(Right) 65 17-87		1	448 2750	
(Right) 65 19-89 (Except Marlin)		1	448 2748	
(Right) 65 59 (Marlin)		1	448 3228	
PANEL, Uniside Inner				
(Left) 64 02-06-16		1	350 9225	
(Left) 64 07		1	350 5627	
(Left) 64 09-19-89		1	351 1521	
(Left) 64-65 05-08-15-18-85-88		1	350 9229	
(Left) 65 06-16-86		1	351 7023	
(Left) 65 07-17-87		1	354 2785	
(Left) 65 09-19-89 (Except Marlin)		1	351 7027	
(Left) 65 59 (Marlin)		1	353 0233	
(Left) 63 15-18-85-88 (Note 20.170-1 Type 1)		1	347 2433	
(Left) 63 15-18-85-88 (Note 20.170-1 Type 2)		1	351 1523	
(Left) 63 16-86 (Note 20.170-1 Type 1)		1	347 2437	
(Left) 63 16-86 (Note 20.170-1 Type 2)		1	351 1525	
(Right) 64 02-06-16		1	350 9224	
(Right) 64 07		1	350 5626	
(Right) 64 09-19-89		1	351 1520	
(Right) 64-65 05-08-15-18-85-88		1	350 9228	
(Right) 65 06-16-86		1	351 7022	
(Right) 65 07-17-87		1	354 2784	
(Right) 65 09-19-89 (Except Marlin)		1	351 7026	
(Right) 65 59 (Marlin)		1	353 0232	
(Right) 63 15-18-85-88 (Note 20.170-1 Type 1)		1	347 2432	
(Right) 63 15-18-85-88 (Note 20.170-1 Type 2)		1	351 1522	
(Right) 63 16-86 (Note 20.170-1 Type 2)		1	347 2436	
(Right) 63 16-86 (Note 20.170-1 Type 2)		1	351 1524	
REINFORCEMENT, Inner To Outer Uniside Panels				
(Left) 64-65 07-17-87		1	350 1079	
(Left) 64-65 09-19-89		1	350 9243	
(Right) 64-65 07-17-87		1	350 1078	
(Right) 64-65 09-19-89		1	350 9242	
BRACE, Inner Uniside Panel To Dash And Side Sill				
(Left) 64-65 07-17-87		1	350 0039	
(Right) 64-65 07-17-87		1	350 0038	
BRACE, Inner Uniside Panel To Side Sill At Front Pillar				
(Left) 65 07-17-87		1	354 2847	
(Right) 65 07-17-87		1	354 2846	
20.175 PANEL, Body Side Sill				
(Left) 60 02-04-06		1	447 5235	
(Left) 60 05		1	343 2415	
(Left) 61 Thru 63 02-04-06-07-09		1	447 8697	
(Left) 61 Thru 63 05-08		1	344 6521	

Copyright 1963 American Motors Corp.

GROUP NO. — DESCRIPTION — YEAR and MODEL	PRIMARY GROUP NO.	PER CAR	PART NO.	CODE
(Left) 60-61 10-20-80	.....	1	341 0323	
(Left) 62 15-18-85-88	.....	1	346 1353	
(Left) 62 16-86	.....	1	346 1215	
(Right) 60 02-04-06	.....	1	447 5236	
(Right) 60 05	.....	1	343 2414	
(Right) 61 Thru 63 02-04-06-07-09	.....	1	447 8696	
(Right) 61 Thru 63 05-08	.....	1	344 6520	
(Right) 60-61 10-20-80	.....	1	341 0324	
(Right) 62 15-18-85-88	.....	1	346 1352	
(Right) 62 16-86	.....	1	346 1214	
COVER, Body Side Sill Panel Snap On				
(Left) 60 02-04-06	.....	1	447 8241	
(Left) 60 05	.....	1	447 8678	
(Left) 61 Thru 63 02-04-06-07-09	.....	1	447 8811	
(Left) 61 Thru 63 05-08	.....	1	447 8813	
(Left) 60-61 10-20-80: 62 15-18-85-88	.....	1	447 8294	
(Left) 62 16-86	.....	1	447 9435	
(Right) 60 02-04-06	.....	1	447 8242	
(Right) 60 05	.....	1	447 8677	
(Right) 61 Thru 63 02-04-06-07-09	.....	1	447 8810	
(Right) 61 Thru 63 05-08	.....	1	447 8812	
(Right) 60-61 10-20-80: 62 15-18-85-88	.....	1	447 8295	
(Right) 62 16-86	.....	1	447 9434	
COVER, Rocker Panel Snap On				
(Left) 64-65 05-08: 63-64 15-18-85-88	.....	1	448 0755	
(Left) 64-65 02-06-07-09: 63-64 16-19-86-89	.....	1	448 0757	
(Left) 65 15-18-85-88	.....	1	448 2845	
(Left) 65 16-17-19-86-87-89	.....	1	448 2847	
(Right) 64-65 05-08: 63-64 15-18-85-88	.....	1	448 0754	
(Right) 64-65 02-06-07-09: 63-64 16-19-86-89	.....	1	448 0756	
(Right) 65 15-18-85-88	.....	1	448 2844	
(Right) 65 16-17-19-86-87-89	.....	1	448 2846	
20.180 REINFORCEMENT, Body Side Sill Panel				
(Left) 60 Thru 63 05-08	.....	1	344 3321	
(Left) 60 Thru 62 10-20-80 ***(Replaces 341 0341)***	.....	1	346 1217	
(Right) 60 Thru 63 05-08	.....	1	344 3320	
(Right) 60 Thru 62 10-20-80 ***(Replaces 341 0342)***	.....	1	346 1216	
REINFORCEMENT, Rocker Panel				
(Left) 64-65 05-08: 63 Thru 65 15-18-85-88	.....	1	448 0759	
(Left) 64-65 02-06-07-09: 63 Thru 65 16-17-19-86-87-89	.....	1	448 0761	
(Right) 64-65 05-08: 63 Thru 65 15-18-85-88	.....	1	448 0758	
(Right) 64-65 02-06-07-09: 63 Thru 65 16-17-19-86-87-89	.....	1	448 0760	
STIFFENER, Body Side Sill Panel Reinforcement				
60 Thru 62 10-20-80 ***(Discontinued)***	.....	2	342 3681	#
PLATE, Body Side Sill Panel Reinforcement (On Sill At Center Pillar)				
60 19-29-83-89	.....	2	342 1132	

Copyright 1963 American Motors Corp.

GROUP NO. — DESCRIPTION — YEAR and MODEL	PRIMARY GROUP NO.	PER CAR	PART NO.	CODE
STIFFENER, Rocker Panel				
(Left) 64-65 07-09: 64 19-89	.....	1	350 0939	
(Left) 65 17-87	.....	1	354 2827	
(Left) 65 19-89	.....	1	351 5685	
(Right) 64-65 07-09: 64 19-89	.....	1	350 0938	
(Right) 65 17-87	.....	1	354 2826	
(Right) 65 19-89	.....	1	351 5684	
20.190 FILLER, Front Body Pillar Upper				
(Left) 60 01	.....	1	437 3163	
(Right) 60 01	.....	1	437 3164	
REINFORCEMENT, Front Body Pillar Upper				
(Left) 61 Thru 63 02-04-05-06-08	.....	1	344 6665	
(Left) 61 Thru 63 07-09	.....	1	345 8237	
(Left) 64-65 07	.....	1	350 0235	
(Right) 61 Thru 63 02-04-05-06-08	.....	1	344 6664	
(Right) 61 Thru 63 07-09	.....	1	345 8236	
(Right) 64-65 07	.....	1	350 0234	
CHANNEL, Front Body Pillar Upper				
(Left) 61 Thru 63 07	.....	1	345 8235	
(Right) 61 Thru 63 07	.....	1	345 8236	
20.195 PILLAR, Body Front				
(Left) 60 01 ***(Replaces 447 8616)***	.....	1	447 8614	
(Left) 61 Thru 63 02-04-05-06-08	.....	1	447 8785	
(Left) 61 Thru 63 07-09	.....	1	447 9143	
(Left) 60 Thru 62 10-20-80...(Incl. Upper And Lower Pillar And Cowl Side Panel)	.....	1	447 8631	
(Left) 64-65 02-05-06-08: 63-64 15-16-18-85-86-88	.....	1	448 0799	
(Left) 64 07-19-89: 64-65 09	.....	1	448 1347	
(Left) 65 07	.....	1	448 2841	
(Left) 65 15-16-18-85-86-88	.....	1	448 2757	
(Left) 65 17-87	.....	1	448 2793	
(Left) 65 19-89	.....	1	448 2771	
(Right) 60 01 ***(Replaces 447 8615)***	.....	1	447 8613	
(Right) 61 Thru 63 02-04-05-06-08	.....	1	447 8784	
(Right) 61 Thru 63 07-09	.....	1	447 9142	
(Right) 60 Thru 62 10-20-80...(Incl. Upper And Lower Pillar And Cowl Side Panel)	.....	1	447 8630	
(Right) 64-65 02-05-06-08: 63-64 15-16-18-85-86-88	.....	1	448 0798	
(Right) 64 07-19-89: 64-65 09	.....	1	448 1346	
(Right) 65 07	.....	1	448 2840	
(Right) 65 15-16-18-85-86-88	.....	1	448 2756	
(Right) 65 17-87	.....	1	448 2792	
(Right) 65 19-89	.....	1	448 2770	
PILLAR, Body Front Lower				
(Left) 60 Thru 62 10-20-80	.....	1	344 0039	
(Right) 60 Thru 62 10-20-80	.....	1	344 0038	

Copyright 1963 American Motors Corp.

GROUP NO. — DESCRIPTION — YEAR and MODEL	PRIMARY GROUP NO.	PER CAR	PART NO.	CODE
PILLAR, Body Front Upper				
(Left) 64 07	.....	1	350 7785	
(Left) 65 07-17-87	.....	1	448 2837	
(Left) 60 Thru 62 10-20-80	.....	1	344 1423	
(Right) 64 07	.....	1	350 7784	
(Right) 65 07-17-87	.....	1	448 2836	
(Right) 60 Thru 62 10-20-80	.....	1	344 1422	
20.205 PILLAR, Body Lock				
(Left) 60 02-06	.....	1	447 8620	
(Left) 60 04	.....	1	343 1627	
(Left) 61 Thru 63 02-06	.....	1	447 8787	
(Left) 61 Thru 63 04	.....	1	447 8789	
(Left) 61 Thru 63 07: 63 09 (Note 20.205-1 Type 1)	.....	1	346 3325	
(Left) 63 09 (Note 20.205-1 Type 2)	.....	1	350 5145	
(Left) 64-65 07	.....	1	448 1353	
(Left) 64-65 09: 64 19-89	.....	1	448 1349	
(Left) 64-65 02-06: 63-64 16-86	.....	1	448 0773	
(Left) 62 16-86	.....	1	447 9575	
(Left) 65 16-86	.....	1	448 2767	
(Left) 65 17-87	.....	1	448 2777	
(Left) 65 19-89	.....	1	448 2773	
(Right) 60 02-06	.....	1	447 8619	
(Right) 60 04	.....	1	343 1628	
(Right) 61 Thru 63 02-06	.....	1	447 8786	
(Right) 61 Thru 63 04	.....	1	447 8788	
(Right) 61 Thru 63 07: 63 09 (Note 20.205-1 Type 1)	.....	1	346 3324	
(Right) 63 09 (Note 20.205-1 Type 2)	.....	1	350 5144	
(Right) 64-65 07	.....	1	448 1352	
(Right) 64-65 09: 64 19-89	.....	1	448 1348	
(Right) 64-65 02-06: 63-64 16-86	.....	1	448 0772	
(Right) 62 16-86	.....	1	447 9574	
(Right) 65 16-86	.....	1	448 2766	
(Right) 65 17-87	.....	1	448 2776	
(Right) 65 19-89	.....	1	448 2772	
BRACE, Pillar To Side Sill				
(Left) 64-65 09-19-89	.....	1	350 0997	
(Right) 64-65 09-19-89	.....	1	350 0996	
BRACE, Pillar To Floor Pan				
(Left) 64-65 07: 65 17-87	.....	1	350 0959	
(Right) 64-65 07: 65 17-87	.....	1	350 0958	
BRACKET, Pillar Brace To Trim Panel Support				
64-65 07: 65 17-87	.....	2	350 0067	
SEAL, Pillar Cap				
(Left-Upper) 64-65 09-19-89	.....	1	352 8465	
(Left-Lower) 64-65 09-19-89	.....	1	352 8467	
(Right-Upper) 64-65 09-19-89	.....	1	352 8464	
(Right-Lower) 64-65 09-19-89	.....	1	352 8466	

NOTE 20.205-1: Two Types of Pillars were used on 63 09. They can be identified as follows:
Type 1: Has provisions for the Door Wedge.
Type 2: Has no provisions for the Door Wedge.

Copyright 1963 American Motors Corp.

GROUP NO. — DESCRIPTION — YEAR and MODEL	PRIMARY GROUP NO.	PER CAR	PART NO.	CODE
SEAL, Pillar Lower				
62 16-86	.....	2	348 4671	
64-65 02-06-07-09: 63 Thru 65 16-17-19-86-87-89	20.240	2	349 2699	
20.210 EXTENSION, Body Lock Pillar Lower				
(Left-Front) 62 16-86	.....	1	346 1507	
(Left-Rear) 62 16-86	.....	1	346 1961	
(Right-Front) 62 16-86	.....	1	346 1506	
(Right-Rear) 62 16-86	.....	1	346 1960	
20.215 REINFORCEMENT, Body Lock Pillar				
(Left) 62 16-86	.....	1	346 1139	
(Left) 64 02-06: 63-64 16-86	.....	1	448 0777	
(Left) 64 09-19-89	.....	1	448 1361	
(Left) 65 06-16-86	.....	1	448 2781	
(Left) 65 09-19-89 (Except Marlin)	.....	1	448 2783	#
(Left) 65 59 (Marlin)	.....	1	448 3251	#
(Left-Lower) 60 04	.....	1	344 3365	
(Right) 62 16-86	.....	1	346 1138	
(Right) 64 02-06: 63-64 16-86	.....	1	448 0776	
(Right) 64 09-19-89	.....	1	448 1360	
(Right) 65 06-16-86	.....	1	448 2780	
(Right) 65 09-19-89 (Except Marlin)	.....	1	448 2782	#
(Right) 65 59 (Marlin)	.....	1	448 3250	#
(Right-Upper) 60 04	.....	1	344 3362	
(Right-Lower) 60 04	.....	1	344 3364	
20.220 PILLAR, Body Center				
(Left) 60 05	.....	1	447 8618	
(Left) 61 Thru 63 05-08	.....	1	447 8695	
(Left) 60 15-18-25-28-85-88	.....	1	447 8633	
(Left) 60 19-29-83-89	.....	1	447 8635	
(Left) 61 15-18-25-28-85-88	.....	1	447 8719	
(Left) 62 15-18-85-88	.....	1	447 9483	
(Left) 64-65 05-08: 63-64 15-18-85-88	.....	1	448 0771	
(Left) 65 15-18-85-88	.....	1	448 2761	
(Right) 60 05	.....	1	447 8617	
(Right) 61 Thru 63 05-08	.....	1	447 8694	
(Right) 60 15-18-25-28-85-88	.....	1	447 8632	
(Right) 60 19-29-83-89	.....	1	447 8634	
(Right) 61 15-18-85-88	.....	1	447 8718	
(Right) 62 15-18-85-88	.....	1	447 9482	
(Right) 64-65 05-08: 63-64 15-18-85-88	.....	1	448 0770	
(Right) 65 15-18-85-88	.....	1	448 2760	
EXTENSION, Upper Hinge Mounting				
(Left) 64-65 05-08: 63-64 15-18-85-88	.....	1	347 2453	
(Left) 65 15-18-85-88	.....	1	351 6985	
(Right) 64-65 05-08: 63-64 15-18-85-88	.....	1	347 2452	
(Right) 65 15-18-85-88	.....	1	351 6984	
20.225 EXTENSION, Body Center Pillar Lower				
(Left-Front) 60 05	.....	1	344 3543	
(Left-Front) 61 Thru 63 05-08	.....	1	344 6679	
(Left-Front) 60 19-29-83-89	.....	1	341 1771	
(Left-Front) 60 Thru 62 15-18-25-28-85-88	.....	1	341 0345	

Copyright 1963 American Motors Corp.

GROUP NO. — DESCRIPTION — YEAR and MODEL	PRIMARY GROUP NO.	PER CAR	PART NO.	CODE
(Left-Rear) 60 05 ***(Replaces 344 3545)***	.....	1	437 3509	
(Left-Rear) 61 Thru 63 05-08	.....	1	344 6681	
(Left-Rear) 60 Thru 62 10-20-80	.....	1	341 0347	
(Right-Front) 60 05	.....	1	344 3542	
(Right-Front) 61 Thru 63 05-08	.....	1	344 6678	
(Right-Front) 60 19-29-83-89	.....	1	341 1772	
(Right-Front) 60 Thru 62 15-18-25-28-85-88	.....	1	341 0346	
(Right-Rear) 60 05 ***(Replaces 344 3544)***	.....	1	437 3510	
(Right-Rear) 61 Thru 63 05-08	.....	1	344 6680	
(Right-Rear) 60 Thru 62 10-20-80	.....	1	341 0348	

20.230 REINFORCEMENT, Body Center Pillar

60 Thru 63 05-08	.....	2	344 3346	
60-61 15-18-25-28-85-88	.....	2	341 0333	
(Left) 60 19-29-83-89	.....	1	341 1355	
(Left) 62 15-18-85-88	.....	1	346 1117	
(Left) 64-65 05-08: 63 Thru 65 15-18-85-88	.....	1	448 0775	
(Right) 60 19-29-83-89	.....	1	341 1356	
(Right) 62 15-18-85-88	.....	1	346 1116	
(Right) 64-65 05-08: 63 Thru 65 15-18-85-88	.....	1	448 0774	

20.235 PILLAR, Rear Quarter Body Lock

(Left) 60 05	.....	1	344 3353	
(Left) 61 Thru 63 05	.....	1	344 6691	
(Left) 61 Thru 63 08	.....	1	447 8791	
(Left) 64-65 05-08: 64 15-18-85-88	.....	1	448 1343	
(Left) 60-61 10-20-80	.....	1	344 0073	
(Left) 62 15-18-85-88	.....	1	346 1133	
(Left) 63 15-18-85-88	.....	1	448 0763	
(Left) 65 15-18-85-88	.....	1	448 2763	
(Right) 60 05	.....	1	344 3352	
(Right) 61 Thru 63 05	.....	1	344 6690	
(Right) 61 Thru 63 08	.....	1	447 8790	
(Right) 64-65 05-08: 64 15-18-85-88	.....	1	448 1342	
(Right) 60-61 10-20-80	.....	1	344 0072	
(Right) 62 15-18-85-88	.....	1	346 1132	
(Right) 63 15-18-85-88	.....	1	448 0762	
(Right) 65 15-18-85-88	.....	1	448 2762	

PLUG, Rear Quarter Body Lock Pillar Lower Access Hole

61 Thru 63 05-08 (Fits 1" x 2-3/8" Hole)	.....	2	345 9347	

20.240 PILLAR, Rear Body

(Left) 64-65 02-06: 64 16	.....	1	448 1345	
(Left) 64-65 07	.....	1	448 1355	
(Left) 64-65 09: 64 19-89	.....	1	448 1351	
(Left) 62 16-86	.....	1	346 1137	
(Left) 63 16-86	.....	1	448 0765	
(Left) 65 16-86	.....	1	448 2769	
(Left) 65 17-87	.....	1	448 2779	
(Left) 65 19-89	.....	1	448 2775	
(Right) 64-65 02-06: 64 16	.....	1	448 1344	
(Right) 64-65 07	.....	1	448 1354	
(Right) 64-65 09: 64 19-89	.....	1	448 1350	

Copyright 1963 American Motors Corp.

GROUP NO. — DESCRIPTION — YEAR and MODEL	PRIMARY GROUP NO.	PER CAR	PART NO.	CODE
(Right) 62 16-86	.....	1	346 1136	
(Right) 63 16-86	.....	1	448 0764	
(Right) 65 16-86	.....	1	448 2768	
(Right) 65 17-87	.....	1	448 2778	
(Right) 65 19-89	.....	1	448 2774	
SEAL, Rear Body Pillar Lower				
62 16-86	20.205	2	348 4671	
64-65 02-06-07-09: 63-64 16-19-86-89	.....	2	349 2698	#
SEAL, Rear Body Pillar To Fender				
62 16-86	.....	2	348 4665	
20.245 REINFORCEMENT, Rear Quarter Body Lock Pillar				
(Left) 60-61 10-20-80	.....	1	344 0075	
(Left) 62 15-18-85-88	.....	1	346 2745	
(Left) 64-65 05-08: 63 Thru 65 15-18-85-88	.....	1	448 0767	
(Right) 60-61 10-20-80	.....	1	344 0074	
(Right) 62 15-18-85-88	.....	1	346 2744	
(Right) 64-65 05-08: 63 Thru 65 15-18-85-88	.....	1	448 0766	
REINFORCEMENT, Rear Body Pillar				
(Left) 64-65 02-06: 63 Thru 65 16-86	.....	1	448 0769	
(Left) 64-65 09-19-89	.....	1	448 1363	
(Left) 62 16-86	.....	1	346 2745	
(Right) 64-65 02-06: 63 Thru 65 16-86	.....	1	448 0768	
(Right) 64-65 09-19-89	.....	1	448 1362	
(Right) 62 16-86	.....	1	346 2744	
20.247 PANEL, Rear Quarter Body Lock Pillar Finish				
(Left) 64-65 08	.....	1	350 0265	
(Left) 63 Thru 65 18: 63 88	.....	1	348 2441	
(Left) 64-65 88	.....	1	352 4979	
(Right) 64-65 08	.....	1	350 0264	
(Right) 63 Thru 65 18: 63 88	.....	1	348 2440	
(Right) 64-65 88	.....	1	352 4978	
20.255 RAIL, Side Roof				
(Left) 60 02-06 *(Replaces 343 2421)*	.....	1	435 0173	
(Left) 60 04	.....	1	343 2419	
(Left) 60 05	.....	1	344 3381	
(Left) 61 Thru 63 02-06 *(Replaces 344 6705)*	.....	1	447 9997	
(Left) 61 Thru 63 04	.....	1	344 6933	
(Left) 61 Thru 63 05 *(Replaces 344 6703)*	.....	1	447 9995	
(Left) 61 Thru 63 08	.....	1	344 7063	
(Left) 63 09	.....	1	349 9179	
(Left) 60-62 15-18-19-25-28-29-83-85-88-89 *(Replaces 344 0019)*	.....	1	344 0017	
(Left) 62 16-86	.....	1	346 6627	
(Left) 64-65 05-08: 63 Thru 65 15-18-85-88	.....	1	448 0779	
(Left) 64-65 02-06: 63 Thru 65 16-86	.....	1	448 0781	
(Left-Front) 64-65 09-19-89	.....	1	448 1299	
(Left-Center) 64-65 09-19-89	.....	1	350 9161	

Copyright 1963 American Motors Corp.

GROUP NO. — DESCRIPTION — YEAR and MODEL	PRIMARY GROUP NO.	PER CAR	PART NO.	CODE
(Left-Rear) 64-65 09-19-89 (Except Marlin)	.....	1	350 9165	#
(Left-Rear) 65 59 (Marlin)	.....	1	351 7267	#
(Right) 60 02-06	.....	1	343 2420	
(Right) 60 04	.....	1	343 2418	
(Right) 60 05	.....	1	344 3380	
(Right) 61 02-06	.....	1	344 6704	
(Right) 61 05	.....	1	344 6702	
(Right) 61 Thru 63 04	.....	1	344 6932	
(Right) 61 Thru 63 08	.....	1	344 7062	
(Right) 62-63 02-06	.....	1	348 1602	
(Right) 62-63 05	.....	1	348 1601	
(Right) 63 09	.....	1	349 9178	
(Right) 60 19-29-83-89 *(Use 344 0016)*	.....	1	344 0018	
(Right) 60 Thru 62 15-18-25-28-85-88	.....	1	344 0016	
(Right) 62 16-86	.....	1	346 6626	
(Right) 64-65 05-08: 63 Thru 65 15-18-85-88	.....	1	448 0778	
(Right) 64-65 02-06: 63 Thru 65 16-86	.....	1	448 0780	
(Right-Front) 64-65 09-19-89	.....	1	448 1298	
(Right-Center) 64-65 09-19-89	.....	1	350 9160	
(Right-Rear) 64-65 09-19-89 (Except Marlin)	.....	1	350 9164	#
(Right-Rear) 65 59 (Marlin)	.....	1	351 7266	#
RAIL, Rear Quarter Side Roof				
(Left) 64-65 08	.....	1	350 0249	
(Left) 60 Thru 62 18-28-83-88	.....	1	447 8639	
(Left) 63 Thru 65 18-88	.....	1	448 0309	
(Right) 64-65 08	.....	1	350 0248	
(Right) 60 Thru 62 18-28-83-88	.....	1	447 8638	
(Right) 63 Thru 65 18-88	.....	1	448 0308	
SUPPORT, Roof Side Rail				
(Left) 65 59 (Marlin)	.....	1	351 7277	#
(Right) 65 59 (Marlin)	.....	1	351 7276	#
WATERDAM, Roof Rail To Rear Quarter Panel				
(Left) 61 Thru 63 02-06	.....	1	344 7059	
(Right) 61 Thru 63 02-06	.....	1	344 7058	
EXTENSION, Side Roof Rail Rear				
(Left) 63 09	.....	1	349 0009	
(Left) 64-65 09-19-89 (Except Marlin)	.....	1	350 9157	#
(Left) 65 59 (Marlin)	.....	1	353 0323	#
(Right) 63 09	.....	1	349 0008	
(Right) 64-65 09-19-89 (Except Marlin)	.....	1	350 9156	#
(Right) 65 59 (Marlin)	.....	1	353 0322	#
BRACE, Side Roof Rail To Rear Window Opening Panel				
(Left) 63 09	.....	1	350 5149	
(Right) 63 09	.....	1	350 5148	
GUSSET, Roof Rail To Uniside				
(Left) 64-65 09-19-89	.....	1	350 9037	
(Right) 64-65 09-19-89	.....	1	350 9036	
20.260 REINFORCEMENT, Side Roof Rail				
(Left) 60 Thru 62 10-20-80 *(Replaces 344 0025)*	.....	1	346 5533	
(Left) 64-65 05-08: 63 Thru 65 15-18-85-88	.....	1	448 0789	
(Left) 64-65 02-06: 63 Thru 65 16-86	.....	1	448 0791	
(Left-Front) 64-65 09-19-89	.....	1	350 9167	
(Left-Center) 64-65 09-19-89 (Except Marlin)	.....	1	350 9169	#
(Left-Center) 65 59 (Marlin)	.....	1	351 7393	#

Copyright 1963 American Motors Corp.

GROUP NO. — DESCRIPTION — YEAR and MODEL	PRIMARY GROUP NO.	PER CAR	PART NO.	CODE
(Left-Rear) 64-65 09-19-89 (Except Marlin)	.....	1	350 9171	#
(Left-Rear) 65 59 (Marlin)	.....	1	351 7265	#
(Right) 60 Thru 62 10-20-80 ***(Replaces 344 0024)***	.....	1	346 5532	
(Right) 64-65 05-08: 63 Thru 65 15-18-85-88	.....	1	448 0788	
(Right) 64-65 02-06: 63 Thru 65 16-86	.....	1	448 0790	
(Right-Front) 64-65 09-19-89	.....	1	350 9166	
(Right-Center) 64-65 09-19-89 (Except Marlin)	.....	1	350 9168	#
(Right-Center) 65 59 (Marlin)	.....	1	351 7392	#
(Right-Rear) 64-65 09-19-89 (Except Marlin)	.....	1	350 9170	#
(Right-Rear) 65 59 (Marlin)	.....	1	351 7264	#
REINFORCEMENT, Side Roof Rail To Rear Quarter Side Roof Rail				
(Left) 64-65 08	.....	1	350 0251	
(Left) 60 Thru 62 18-28-83-88	.....	1	344 0509	
(Left) 63 Thru 65 18-88	.....	1	349 2651	
(Right) 64-65 08	.....	1	350 0250	
(Right) 60 Thru 62 18-28-83-88	.....	1	344 0508	
(Right) 63 Thru 65 18-88	.....	1	349 2650	
EXTENSION, Side Roof Rail Reinforcement				
(Left) 65 59 (Marlin)	.....	1	353 0319	#
(Right) 65 59 (Marlin)	.....	1	353 0318	#
SUPPORT, Side Roof Rail Reinforcement To Wheelhouse				
(Left) 65 59 (Marlin)	.....	1	351 7279	#
(Right) 65 59 (Marlin)	.....	1	351 7278	#
20.265 PANEL ASSEMBLY, Rear Quarter				
(Left) 60 02-06	.....	1	447 8622	
(Left) 60 04	.....	1	447 8624	
(Left) 60 05	.....	1	447 8676	
(Left) 61 Thru 63 04	.....	1	447 8795	
(Left) 61 Thru 63 08	.....	1	447 8797	
(Left) 60-61 18-28-83-88 (LVT) ***(Discontinued)***	.....	1	344 9505	
(Left) 60-61 18-28-88 (WVT)	.....	1	344 9509	
(Left) 62 18-88 (LVT)	.....	1	346 6636	
(Left) 62 18-88 (WVT)	.....	1	346 6629	
(Right) 60 02-06	.....	1	447 8621	
(Right) 60 04	.....	1	447 8623	
(Right) 60 05	.....	1	447 8675	
(Right) 61 04	.....	1	447 8794	
(Right) 61 08	.....	1	447 8796	
(Right) 60 Thru 62 18-28-83-88 (LVT)	.....	1	344 9504	
(Right) 60 Thru 62 18-28-88 (WVT)	.....	1	344 9508	
BRACE, Rear Wheelhouse To Floor Pan				
(Left) 60 Thru 62 18-28-83-88	.....	1	342 2341	
(Right) 60 Thru 62 18-28-83-88	.....	1	342 2342	
20.270 PANEL, Rear Quarter				
(Left) 61 Thru 63 02-06	.....	1	345 3833	
(Left) 61 Thru 63 05	.....	1	345 3835	
(Left) 61 Thru 63 07	.....	1	345 9997	
(Left) 63 09	.....	1	349 8503	
(Left) 60-61 15-19-25-29-85-89	.....	1	344 0189	
(Left) 62 15-16-85-86	.....	1	346 1925	
(Right) 61 Thru 63 02-06	.....	1	345 3832	
(Right) 61 Thru 63 05	.....	1	345 3834	
(Right) 61 Thru 63 07	.....	1	345 9996	
(Right) 63 09	.....	1	349 8502	
(Right) 60 Thru 62 15-16-19-25-29-85-86-89	.....	1	344 0188	

Copyright 1963 American Motors Corp.

GROUP NO. — DESCRIPTION — YEAR and MODEL	PRIMARY GROUP NO.	PER CAR	PART NO.	CODE
BRACE, Wheelhouse To Floor				
(Left) 61-62 07 *(Replaces 346 3763)*	.....	1	346 7933	
(Left) 63 07	.....	1	348 0543	
(Right) 61-62 07	.....	1	346 3762	
(Right) 63 07	.....	1	348 0542	
BRACKET, Spare Wheel Mounting				
60 Thru 62 15-16-19-25-29-85-86-89	.....	1	345 1609	
BRACKET, Spare Wheel Hold Down Rod				
60 15-19-25-29-85-89	.....	1	341 5312	
20.272 PANEL, Rear Wheelhouse				
(Left-Outer) 64-65 01	.....	1	350 0031	
(Left-Outer) 63 10-80 L3S)	.....	1	347 2303	
(Left-Outer) 63 18-88 (W3S)	.....	1	347 2305	
(Left-Outer) 64 10-80 (L3S)	.....	1	350 9231	
(Left-Outer) 64 18-88 (W3S)	.....	1	350 9233	
(Left-Outer) 65 10-80 (L3S)(Except Marlin)	.....	1	351 5701	#
(Left-Outer) 65 59 (Marlin)	.....	1	351 7481	#
(Left-Outer) 65 18-88 (W3S)	.....	1	351 5703	
(Left-Inner) 64-65 02-05-06-09	.....	1	448 1301	
(Left-Inner) 64 07 (Note 20.272-1 Type 1)	.....	1	350 5529	
(Left-Inner) 64 07 (Note 20.272-1 Type 2): 65 07	.....	1	352 0819	
(Left-Inner) 64-65 08	.....	1	350 5531	
(Left-Inner) 63 15-16-85-86	.....	1	448 0299	
(Left-Inner) 63 18-88	.....	1	448 0301	
(Left-Inner) 64 15-16-19-85-89	.....	1	448 1335	
(Left-Inner) 64-65 18-88	.....	1	448 1337	
(Left-Inner) 65 15-16-19-85-86-89 (Except Marlin)	.....	1	448 2795	#
(Left-Inner) 65 59 (Marlin)	.....	1	448 3225	#
(Left-Inner) 65 17-87	.....	1	448 2797	
(Right-Outer) 64-65 01	.....	1	350 0030	
(Right-Outer) 63 10-80	.....	1	347 2150	
(Right-Outer) 64 10-80	.....	1	350 9230	
(Right-Outer) 65 10-80 (Except Marlin)	.....	1	351 5700	#
(Right-Outer) 65 59 (Marlin)	.....	1	351 7480	#
(Right-Inner) 64-65 02-05-06-09	.....	1	448 1300	
(Right-Inner) 64 07 (Note 20.272-1 Type 1)	.....	1	350 5528	
(Right-Inner) 64 07 (Note 20.272-1 Type 2): 65 07	.....	1	352 0818	
(Right-Inner) 64-65 08	.....	1	350 5530	
(Right-Inner) 63 15-16-85-86	.....	1	448 0298	
(Right-Inner) 63 18-88 (L3S)	.....	1	448 0300	
(Right-Inner) 63 18-88 (W3S)	.....	1	448 0302	
(Right-Inner) 64 15-16-19-85-89	.....	1	448 1334	
(Right-Inner) 64-65 18-88 (L3S)	.....	1	448 1336	
(Right-Inner) 64-65 18-88 (W3S)	.....	1	448 1338	
(Right-Inner) 65 15-16-19-85-86-89 (Except Marlin)	.....	1	448 2794	#
(Right-Inner) 65 59 (Marlin)	.....	1	448 3224	#
(Right-Inner) 65 17-87	.....	1	448 2796	
BRACE, Rear Wheelhouse To Floor				
(Left) 63 Thru 65 18-88	.....	1	349 0163	
(Right) 63 Thru 65 18-88	.....	1	349 0162	

NOTE 20.272-1: Two Types of Panels were used on model 64 07. Their use is dependent on the type of Folding Top Assembly used, which can be identified as follows:

Type 1: Folding Top is power operated with the one piece balance link having provisions for adjustment at the Support Bracket.

Type 2: Folding Top is either power or manually operated with the two piece balance link having provisions for adjustment at the serrated joint of the two halves.

Copyright 1963 American Motors Corp.

GROUP NO. — DESCRIPTION — YEAR and MODEL	PRIMARY GROUP NO.	PER CAR	PART NO.	CODE
BRACE, Rear Wheelhouse To Rear Quarter Outer Panel				
(Left) 65 16-17-19-86-87-89	.....	1	354 8929	
(Right) 65 16-17-19-86-87-89	.....	1	354 8928	
GUSSET, Rear Wheelhouse To Rear Window Frame				
(Left) 63-64 15-16-85-86	.....	1	348 5855	
(Right) 63-64 15-16-85-86	.....	1	348 5852	
PATCH, Rear Wheelhouse				
(Left) 65 59 (Marlin)	.....	1	353 0225	
(Right) 65 59 (Marlin)	.....	1	353 0224	
REINFORCEMENT—Rear Wheelhouse To Floor Pan				
64-65 07	.....	1	350 6001	
20.273 REINFORCEMENT, Rear Quarter Window Front				
(Left) 60 Thru 62 18-28-83-88	.....	1	344 0175	
(Left) 63 Thru 65 18-88	.....	1	347 2963	
(Right) 60 Thru 62 18-28-83-88	.....	1	344 0174	
(Right) 63 Thru 65 18-88	.....	1	347 2962	
20.275 BRACKET, Rear Seat Back Hinge				
(Left) 60 Thru 63 04-08	.....	1	344 3777	
(Left) 64-65 08	.....	1	350 0327	
(Right) 60 Thru 63 04-08	.....	1	344 3776	
(Right) 64-65 08	.....	1	350 0326	
20.277 PANEL, Fuel Tank Cover				
(Front) 63 Thru 65 18-88 (W3S)	.....	1	348 2321	
(Rear) 63 Thru 65 18-88 (W3S)	.....	1	348 2323	
ATTACHING PARTS				
Rear Panel To Floor Pan				
SCREW, Tapping..... 63 Thru 65 18-88 (W3S)	17.660	4	G163214	NA
Rear Panel To Rear Lower Panel				
SCREW, Tapping..... 63 Thru 65 18-88 (W3S)	17.660	3	G163214	NA
Rear Panel To Tailgate Pillar				
SCREW, Tapping..... 63 Thru 65 18-88 (W3S)	17.660	2	G163214	NA
Rear Panel To Rear Quarter Belt Rail				
SCREW, Tapping..... 63 Thru 65 18-88 (W3S)	17.660	4	G163214	NA
Rear Panel To Front Cover				
SCREW, Tapping..... 63 Thru 65 18-88 (W3S)	17.660	3	G163214	NA
20.278 BAFFLE, Rear Fender Fuel Tank...(Incl. Seal)				
63-64 18-88 (W3S)	.....	1	347 2535	
65 18-88 (W3S)	.....	1	351 5665	
20.280 PANEL, Rear Quarter Window Regulator				
(Left) 60 02-06	.....	1	344 3825	
(Left) 61 Thru 63 02-06	.....	1	344 7005	
(Left) 61 Thru 63 07 ***(Replaces 345 8437)***	.....	1	447 9267	
(Left) 63 09	.....	1	447 9989	

Copyright 1963 American Motors Corp.

GROUP NO. — DESCRIPTION — YEAR and MODEL	PRIMARY GROUP NO.	PER CAR	PART NO.	CODE
(Left) 64-65 02-06	.....	1	350 9311	
(Left) 64 07 (Note 20.272-1 Type 1)	.....	1	350 0943	
(Left) 64 07 (Note 20.272-1 Type 2): 65 07	.....	1	352 3935	
(Left) 64-65 09	.....	1	350 0945	
(Left) 62 16-86	.....	1	346 1503	
(Left) 63-64 16-86	.....	1	348 2199	
(Left) 64 19-89	.....	1	350 0947	
(Left) 65 16-86	.....	1	351 6021	
(Left) 65 17-87 *(Replaces 351 5359)*	.....	1	354 3169	#
(Left) 65 19-89 (Except Marlin)	.....	1	351 6149	
(Left) 65 59 (Marlin)	.....	1	353 0887	
(Right) 60 02-06	.....	1	344 3824	
(Right) 61 Thru 63 02-06	.....	1	344 7004	
(Right) 61 Thru 63 07 *(Replaces 345 8436)*	.....	1	447 9266	
(Right) 63 09	.....	1	447 9988	
(Right) 64-65 02-06	.....	1	350 9310	
(Right) 64 07 (Note 20.272-1 Type 1)	.....	1	350 0942	
(Right) 64 07 (Note 20.272-1 Type 2): 65 07	.....	1	352 3934	
(Right) 64-65 09	.....	1	350 0944	
(Right) 62 16-86	.....	1	346 1502	
(Right) 63-64 16-86	.....	1	348 2198	
(Right) 64 19-89	.....	1	350 0946	
(Right) 65 16-86	.....	1	351 6020	
(Right) 65 17-87 *(Replaces 351 5358)*	.....	1	354 3168	#
(Right) 65 19-89 (Except Marlin)	.....	1	351 6148	
(Right) 65 59 (Marlin)	.....	1	353 0886	
ATTACHING PARTS				
Panel To Rear Quarter Panel				
SCREW, Tapping..... 60 02-06	17.669	6	800 0272	NA
SCREW, Tapping..... 61 Thru 63 02-06 (#8-18 x 3/8)	17.669	6	G457002	NA
SCREW, Tapping..... 61 Thru 63 02-06 (#8-18 x 5/8)	.....	14	400 0013	
SCREW, Tapping ..... 65 59 (Marlin)	17.660	20	G161860	NA
SCREW, Tapping..... 64-65 02-06-19: 63 Thru 65 16-19-86-89	.....	12	400 0013	
NUT, Speed..... 65 59 (Marlin)	3.154	6	400 1344	
WATERDAM, Regulator Panel To Rear Quarter Panel				
(Left) 61 02-06	.....	1	344 3455	
(Left) 64-65 07	.....	1	350 0949	
(Right) 61 02-06	.....	1	344 3454	
(Right) 64-65 07	.....	1	350 0948	
BRACKET, Regulator Panel To Lock Pillar Support				
65 19-89	.....	2	351 7414	
(Left) 61 07	.....	1	345 8249	
(Right) 61 07	.....	1	345 8248	
REINFORCEMENT, Regulator Panel To Uniside				
(Left) 64 09: 64-65 19-89	.....	1	351 9953	
(Right) 64 09: 64-65 19-89	.....	1	351 9952	
ATTACHING PARTS				
Reinforcement To Uniside				
SCREW, Machine..... 64 09: 64-65 19-89	.....	10	400 0052	
COVER, Regulator Panel Access Hole				
(Left) 64-65 07-09-17-19-89	.....	1	350 1085	
(Right) 64-65 07-09-17-19-87-89	.....	1	350 1084	
ATTACHING PARTS				
Cover To Regulator Panel				
SCREW, Tapping..... 64-65 07-09-17-19-87-89	17.660	8	G161895	NA

Copyright 1963 American Motors Corp.

GROUP NO. — DESCRIPTION — YEAR and MODEL	PRIMARY GROUP NO.	PER CAR	PART NO.	CODE
SEALER, Regulator Panel Front				
60 Thru 63 02-06	.....	2	435 7928	
PLUG, Regulator Panel Access Hole				
61 Thru 63 07	20.235	2	345 9347	
20.282 SUPPORT, Folding Top Pivot Bracket				
(Left) 64-65 07: 65 17-87	.....	1	350 0967	
(Right) 64-65 07: 65 17-87	.....	1	350 0966	
BRACKET, Support To Side Sill				
64-65 07	.....	2	350 0972	
20.285 PANEL, Rear Quarter Inside Lower				
(Left) 64 07	.....	1	448 1365	
(Left) 65 07-17-87	.....	1	448 2785	
(Right) 64 07	.....	1	448 1364	
(Right) 62 16-86	.....	1	346 1140	
(Right) 65 07-17-87	.....	1	448 2784	
20.300 PANEL, Rear Quarter Upper				
(Left) 65 59 (Marlin)	.....	1	448 3235	
(Right) 65 59 (Marlin)	.....	1	448 3234	
EXTENSION, Rear Quarter Upper (Front)				
(Left) 65 59 (Marlin)	.....	1	351 7489	
(Right) 65 59 (Marlin)	.....	1	351 7488	
REINFORCEMENT, Rear Quarter Panel To Roof Rail Support				
(Left) 65 59 (Marlin)	.....	1	358 2089	#
(Right) 65 59 (Marlin)	.....	1	358 2088	#
20.305 PILLAR, Rear Quarter Window Division				
(Left) 61 Thru 63 04	.....	1	447 8793	
(Right) 61 Thru 63 04	.....	1	447 8792	
20.310 PANEL, Rear Corner Inner				
(Left) 60 04	.....	1	435 7495	
20.315 PILLAR, Tailgate Opening				
(Left) 60 04	.....	1	435 7531	
(Left) 61 Thru 63 04-08	.....	1	344 6909	
(Left) 64-65 08	.....	1	448 1305	
(Left) 60 Thru 62 18-28-83-88 (LVT)	.....	1	447 8637	
(Left) 60-61 18-28-88 (WVT)	.....	1	344 5849	
(Left) 62 18-88 (WVT)	.....	1	346 6633	
(Left) 63-64 18-88 (LVT)	.....	1	448 0311	
(Left) 63-64 18-88 (WVT)	.....	1	448 0313	
(Left) 65 18-88 (LVT)	.....	1	448 2843	
(Left) 65 18-88 (WVT)	.....	1	448 2799	
(Left-Upper) 60 Thru 62 18-28-88 (WVT)	.....	1	344 3899	
(Left-Outer) 60-61 18-28-88 (WVT)	.....	1	344 3900	
(Left-Outer) 62 18-88 (WVT)	.....	1	346 1591	
(Right) 60 04	.....	1	435 7532	
(Right) 61 Thru 63 04-08	.....	1	344 6908	
(Right) 64-65 08	.....	1	448 1304	

Copyright 1963 American Motors Corp.

GROUP NO. — DESCRIPTION — YEAR and MODEL	PRIMARY GROUP NO.	PER CAR	PART NO.	CODE
(Right) 60 Thru 62 18-28-83-88 (LVT)	.....	1	447 8636	
(Right) 60 Thru 62 18-28-88 (WVT)	.....	1	344 3910	
(Right) 63-64 18-88 (LVT)	.....	1	448 0310	
(Right) 63-64 18-88 (WVT)	.....	1	448 0312	
(Right) 65 18-88 (LVT)	.....	1	448 2842	
(Right) 65 18-88 (WVT)	.....	1	448 2798	
REINFORCEMENT, Tailgate Opening Pillar				
(Right) 60 Thru 62 18-28-88 (WVT)	.....	1	344 3906	
EXTENSION, Tailgate Opening Pillar To Fender				
(Left-Upper) 61 04-08	.....	1	344 6877	
(Left-Upper) 62-63 04-08	.....	1	348 1691	
(Left-Lower) 61-62 04-08	.....	1	345 2911	
(Left-Lower) 63 04-08	.....	1	348 1687	
(Right-Upper) 61 04-08	.....	1	344 6876	
(Right-Upper) 62-63 04-08	.....	1	348 1690	
(Right-Lower) 61-62 04-08	.....	1	345 2910	
(Right-Lower) 63 04-08	.....	1	348 1686	
20.320 FILLER, Rear Wheelhouse Rear				
(Left) 60 04	.....	1	437 3365	
20.325 PANEL ASSEMBLY, Lower Deck Center				
60 02-05-06 (LWC) ***(Replaces 447 8309)***	.....	1	447 8371	
60 02-05-06 (WWC)	.....	1	342 5822	
61 Thru 63 02-05-06-07-09	.....	1	344 6591	
64 02-05-06-07-09	.....	1	350 5900	
65 05-06-07-09	.....	1	351 6979	
60 Thru 62 15-16-19-25-29-85-86-89 ***(Replaces 344 0171)***	.....	1	447 8738	
63-64 15-16-19-85-86-89	.....	1	347 2275	
65 15-16-17-19-85-86-87-89 (Except Marlin)	.....	1	353 6298	
65 59 (Marlin)	.....	1	354 2802	
EXTENSION, Lower Deck Center Panel End				
(Left) 60 02-05-06	.....	1	437 7454	
(Right) 60 02-05-06	.....	1	437 7455	
DRAIN, Lower Deck Center Panel				
62-63 02-05-06-07	.....	3	346 0725	
PLUG, License Light Hole				
61 85	20.330	1	400 0367	
REINFORCEMENT, Rear Bumper Mounting				
60 Thru 62 15-16-19-25-29-85-86-89	.....	2	344 4502	
20.330 PANEL ASSEMBLY, Lower Rear				
60 04	.....	1	447 8312	
61 Thru 63 04-08	.....	1	344 6803	
64-65 08	.....	1	350 0141	
60 Thru 62 18-28-83-88 (LVT)	.....	1	447 8740	
60 Thru 62 18-28-88 (W3S)	.....	1	447 8742	
61-62 18-28-88 (L3S-WVT)	.....	1	346 5511	
63 Thru 65 18-88 (LVT)	.....	1	347 2177	
(Inner) 63 Thru 65 18-88 (W3S)	.....	1	349 2613	

Copyright 1963 American Motors Corp.

GROUP NO. — DESCRIPTION — YEAR and MODEL	PRIMARY GROUP NO.	PER CAR	PART NO.	CODE
(Inner) 63 Thru 65 18-88 (L3S-WVT)	.....	1	347 2177	
(Outer) 63-64 18-88 (W3S)	.....	1	349 2601	
(Outer) 63-64 18-88 (L3S-WVT)	.....	1	347 2178	
(Outer) 65 18-88 (W3S)	.....	1	353 8980	
(Outer) 65 18-88 (L3S-WVT)	.....	1	353 6434	
EXTENSION, Lower Rear Outer Panel				
65 18-88 (WVT)	.....	1	351 5797	
DRAIN, Lower Rear Panel				
61 Thru 63 04-08	20.325	3	346 0725	
POCKET, Tailgate Lower Hinge				
60 Thru 62 18-28-88 (WVT)	.....	1	344 4809	
PLUG, License Light Hole				
61 88	.....	1	400 0367	
REINFORCEMENT, Rear Bumper Mounting				
60 Thru 62 18-28-83-88	20.325	2	344 4502	
20.335 BRACE, Lower Center Panel To Floor				
60 02-05-06 (LWC)	.....	1	437 3052	
60 02-05-06 (WWC)	.....	1	437 3415	
61 Thru 63 02-05-06-07-09	.....	1	344 6595	
64-65 02-05-06-07-09	.....	1	350 0125	
60 Thru 62 15-16-19-25-29-85-86-89	.....	1	344 0149	
63-64 15-16-19-85-86-89	.....	1	347 2169	
65 15-16-17-19-85-86-87-89	.....	1	351 5783	
BRACE, Rear Lower Panel To Floor				
60 04	.....	1	435 6764	
60 Thru 62 18-28-83-88 (L3S)	.....	1	341 1256	
60 Thru 62 18-28-88 (W3S)	.....	1	344 1653	
20.345 RAIL, Inner Belt Front				
(Left) 61 Thru 63 04	.....	1	344 6951	
(Left) 65 59 (Marlin)	.....	1	351 7339	
(Left) 64-65 07: 65 17-87	.....	1	350 0517	
(Right) 60 04	.....	1	435 7710	
(Right) 61 Thru 63 04	.....	1	344 6950	
(Right) 65 59 (Marlin)	.....	1	351 7338	
(Right) 64-65 07: 65 17-87	.....	1	350 0516	
BRACE, Belt Rail To Rear Quarter Outer				
64-65 07-09: 64 19-89	.....	2	350 0324	
65 17-19-87-89	.....	2	351 5658	
(Left) 65 16-86	.....	1	354 2845	
(Right) 65 16-86	.....	1	354 2844	
PLATE, Front Inner Belt Rail Waterdam				
62-63 04	.....	2	348 9190	

Copyright 1963 American Motors Corp.

GROUP NO. — DESCRIPTION — YEAR and MODEL	PRIMARY GROUP NO.	PER CAR	PART NO.	CODE
ATTACHING PARTS				
Plate To Inner Belt Rail				
SCREW, Tapping..... 62-63 04	17.669	4	G457002	
20.350 RAIL, Inner Belt Rear				
(Left) 61 Thru 63 04-08	.....	1	344 6953	
(Left) 61 Thru 63 05	.....	1	344 6847	
(Left) 62-63 07	.....	1	345 8047	
(Left) 64-65 07	.....	1	350 0449	
(Left) 64-65 08	.....	1	350 5673	
(Left) 64 09-19-89	.....	1	350 0503	
(Left) 65 17-87	.....	1	351 5029	#
(Left) 65 09-19-89	.....	1	351 5269	
(Left) 60 Thru 62 15-16-19-25-29-85-86-89	.....	1	344 0179	
(Left) 63 Thru 65 18-88	.....	1	448 0305	
(Right) 60 04	.....	1	435 7714	
(Right) 61 Thru 63 04-08	.....	1	344 6952	
(Right) 61 Thru 63 05	.....	1	344 6846	
(Right) 61 07	.....	1	345 8556	
(Right) 62-63 07	.....	1	345 8046	
(Right) 64-65 07	.....	1	350 0448	
(Right) 64-65 08	.....	1	350 5672	
(Right) 64 09-19-89	.....	1	350 0502	
(Right) 65 17-87	.....	1	351 5028	#
(Right) 65 09-19-89	.....	1	351 5268	
(Right) 60 Thru 62 15-16-19-25-29-85-86-89	.....	1	344 0178	
(Right) 63 Thru 65 18-88 (L3S)	.....	1	448 0304	
(Right) 63 Thru 65 18-88 (W3S)	.....	1	347 2990	
BRACE, Belt Rail To Floor				
(Left) 63 Thru 65 18-88	.....	1	348 8325	
(Right) 63 Thru 65 18-88 (L3S)	.....	1	348 2046	
SUPPORT, Belt Rail To Inner Wheelhouse				
(Left) 64-65 07	.....	1	350 0457	
(Left) 65 17-87	.....	1	351 5033	
(Right) 64-65 07	.....	1	350 0456	
(Right) 65 17-87	.....	1	351 5032	
RETAINER, Rear Compartment Trim Panel				
63 Thru 65 18-88 (W3S)	.....	1	349 0092	
20.365 PANEL ASSEMBLY, Shelf (Incl. Shelf Panel, Belt Rail, Upper Deck Panel And Hinge Support)				
60 Thru 62 15-16-19-25-29-85-86-89 (Used On Cars Less Rear Speaker)	.....	1	447 8647	
60 Thru 62 15-16-19-25-29-85-86-89 (Used On Cars With Rear Speaker)	.....	1	447 8648	
20.367 PANEL, Rear Deck Upper				
61 Thru 63 02-05-06	.....	1	344 6508	
63 09	.....	1	349 0002	
64-65 02-05-06-09	.....	1	350 0390	
64-65 07	.....	1	448 1310	
60 Thru 62 15-16-19-25-29-85-86-89	.....	1	344 0170	
63-64 15-16-85-86	.....	1	347 2070	
64 19-89	.....	1	350 1314	

Copyright 1963 American Motors Corp.

GROUP NO. — DESCRIPTION — YEAR and MODEL	PRIMARY GROUP NO.	PER CAR	PART NO.	CODE
65 15-16-85-86	.....	1	351 6280	
65 17-87	.....	1	353 9176	
65 19-89 (Except Marlin)	.....	1	448 2743	
65 59 (Marlin)	.....	1	448 3238	
PANEL, Rear Deck Upper (Incl. Center Belt Rail)				
61 Thru 63 07	.....	1	447 9141	
SUPPORT, Rear Deck Upper Panel To Wheelhouse				
65 17-87 ***(Replaces 351 5036)***	.....	2	353 0536	
(Left) 64-65 07	.....	1	350 9059	
(Left) 65 15-16-19-85-86-89	.....	1	353 0537	
(Right) 64-65 07	.....	1	350 9058	
(Right) 65 15-16-17-19-85-86-87-89	.....	1	353 0536	
20.370 PANEL, Shelf				
60 02-05-06	.....	1	344 3348	
61 Thru 63 02-05-06	.....	1	447 8783	
63 09	.....	1	447 9986	
64-65 02-05-06-09	.....	1	350 0410	
60 Thru 62 15-16-19-25-29-85-86-89 (Used On Cars Less Rear Speaker)	.....	1	344 0180	
60 Thru 62 15-16-19-25-29-85-86-89 (Used On Cars With Rear Speaker)	.....	1	344 0181	
63-64 15-16-85-86	.....	1	347 2251	
64 19-89	.....	1	350 1320	
65 15-16-85-86	.....	1	351 5270	
65 19-89	.....	1	351 5180	
REINFORCEMENT, Rear Shelf Panel				
64 02-05-06-09	.....	2	352 3516	
(Left) 65 15-16-85-86	.....	1	354 3065	
(Left) 65 19-89	.....	1	354 3067	
(Right) 65 15-16-85-86	.....	1	354 3064	
(Right) 65 19-89	.....	1	354 3066	
FILLER, Shelf Panel End				
(Left) 61 Thru 63 05: 63 02-06	.....	1	346 3257	
(Right) 61 Thru 63 05: 63 02-06	.....	1	346 3256	
INSULATION, Shelf Panel				
61 Thru 63 02-05-06-09	.....	1	344 8145	
60 Thru 62 15-16-19-25-29-85-86-89	.....	1	344 1344	
64-65 02-05-06-09: 63-64 15-16-19-85-86-89	.....	1	349 2087	
65 15-16-19-85-86-89	.....	1	351 6380	
20.375 STRAINER, Shelf Panel To Floor				
61 Thru 63 02-05-06-09	.....	1	344 6893	
20.378 SUPPORT, Rear Seat Back				
61 Thru 63 07	.....	1	346 3591	
65 59 (Marlin)	.....	1	351 7288	
65 17-87	.....	1	353 0607	
20.380 SUPPORT, Rear Shelf Panel				
(Front) 65 59 (Marlin)	.....	1	448 3239	
(Center) 65 59 (Marlin)	.....	1	351 7206	
(Outer-Left) 65 59 (Marlin)	.....	1	351 7209	
(Outer-Right) 65 59 (Marlin)	.....	1	351 7208	

Copyright 1963 American Motors Corp.

GROUP NO. — DESCRIPTION — YEAR and MODEL	PRIMARY GROUP NO.	PER CAR	PART NO.	CODE
20.385 GUSSET, Shelf Panel To Wheelhouse				
(Left) 61 Thru 63 02-05-06	.....	1	345 8055	
(Left) 63 09	.....	1	349 0071	
(Left) 64-65 02-05-06-09	.....	1	350 0409	
(Left) 60 Thru 62 15-16-19-25-29-85-86-89	.....	1	344 0183	
(Left) 63 Thru 65 15-16-85-86	.....	1	347 2811	
(Left) 64-65 19-89 (Except Marlin)	.....	1	350 1299	
(Left) 65 59 (Marlin)	.....	1	353 0317	
(Right) 61 Thru 63 02-05-06	.....	1	345 8054	
(Right) 63 09	.....	1	349 0070	
(Right) 64-65 02-05-06-09	.....	1	350 0408	
(Right) 60 Thru 62 15-16-19-25-29-85-86-89	.....	1	344 0182	
(Right) 63 Thru 65 15-16-85-86	.....	1	347 2810	
(Right) 64-65 19-89 (Except Marlin)	.....	1	350 1298	
(Right) 65 59 (Marlin)	.....	1	353 0316	
20.390 HEADER, Rear Opening				
62-63 04-08	.....	1	348 1544	
64-65 08	.....	1	448 1287	
60-61 18-28-83-88	.....	1	447 8646	
62 18-88	.....	1	447 9431	
63 Thru 65 18-88	.....	1	448 0294	
RAIL, Rear Opening Header				
60 Thru 62 18-28-83-88	.....	1	344 1848	
PANEL, Rear Opening Extension				
62-63 04-08	.....	1	348 1540	
20.395 MOULDING, Front Drip				
60 02-04-05-06	.....	1	435 0210	
61 Thru 63 02-04-05-06-08	.....	1	344 6505	
MOULDING, Side Drip				
(Left) 60 02-06	.....	1	435 0187	
(Left) 60 05	.....	1	344 3383	
(Left) 61 Thru 63 02-06	.....	1	344 6707	
(Left) 61 Thru 63 04	.....	1	344 6935	
(Left) 61 Thru 63 05	.....	1	344 6709	
(Left) 61 Thru 63 08	.....	1	344 7065	
(Left) 63 09	.....	1	349 0017	
(Left) 64-65 02-06	.....	1	350 0509	
(Left) 64-65 09	.....	1	350 0243	
(Left) 60 Thru 62 15-16-19-25-29-85-86-89	.....	1	344 0383	
(Left) 60-61 18-28-83-88	.....	1	344 0385	
(Left) 62 18-88	.....	1	346 1953	
(Left) 64-65 05-08: 63-64 15-16-85-88	.....	1	347 2473	
(Left) 63 Thru 65 18-88	.....	1	347 2475	
(Left) 64-65 19-89	.....	1	350 1393	
(Left-Front) 65 15-16-85-86	.....	1	351 7407	
(Left-Rear) 65 15-16-85-86	.....	1	351 7409	
(Left-Rear) 65 59 (Marlin)	.....	1	351 7263	
(Right) 60 02-06	.....	1	435 0188	
(Right) 60 05	.....	1	344 3382	
(Right) 61 Thru 63 02-06	.....	1	344 6706	
(Right) 61 Thru 63 04	.....	1	344 6934	

Copyright 1963 American Motors Corp.

GROUP NO. — DESCRIPTION — YEAR and MODEL	PRIMARY GROUP NO.	PER CAR	PART NO.	CODE
(Right) 61 Thru 63 05	.....	1	344 6708	
(Right) 61 Thru 63 08	.....	1	344 7064	
(Right) 63 09	.....	1	349 0016	
(Right) 64-65 02-06	.....	1	350 0508	
(Right) 64-65 09	.....	1	350 0242	
(Right) 60 Thru 62 15-16-19-25-29-85-86-89	.....	1	344 0382	
(Right) 60-61 18-28-83-88	.....	1	344 0384	
(Right) 62 18-88	.....	1	346 1952	
(Right) 64-65 05-08: 63-64 15-16-85-88	.....	1	347 2472	
(Right) 63 Thru 65 18-88	.....	1	347 2474	
(Right) 64-65 19-89	.....	1	350 1392	
(Right-Front) 65 15-16-85-86	.....	1	351 7406	
(Right-Rear) 65 15-16-85-86	.....	1	351 7408	
(Right-Rear) 65 59 (Marlin)	.....	1	351 7262	#
MOULDING, Rear Quarter Side Drip				
(Left) 63 Thru 65 18-88	.....	1	347 2727	
(Right) 63 Thru 65 18-88	.....	1	347 2726	
MOULDING, Rear Header Drip				
60 04	.....	1	435 7461	
60-61 18-28-83-88	.....	1	344 0398	
62 18-88	.....	1	346 1954	
63 Thru 65 18-88	.....	1	347 2242	
MOULDING, Front Body Pillar Drip				
(Left) 64-65 09-19-89 (Except Marlin)	.....	1	350 0369	#
(Left) 65 59 (Marlin)	.....	1	354 3431	#
(Left) 60 Thru 62 10-80	.....	1	344 0387	
(Right) 64-65 09-19-89 (Except Marlin)	.....	1	350 0368	#
(Right) 65 59 (Marlin)	.....	1	354 3430	#
(Right) 60 Thru 62 10-80	.....	1	344 0386	
EXTENSION, Side Drip Moulding To Cowl Side				
(Left) 64-65 02-05-06-08	.....	1	350 0239	
(Left) 64-65 07-09	.....	1	350 0161	
(Left) 63 10-80: 64 15-16-18-85-88	.....	1	348 2173	
(Left) 64 19-89	.....	1	350 9239	
(Left) 65 15-16-18-85-86-88	.....	1	351 5687	
(Left) 65 17-19	.....	1	351 5689	
(Right) 64-65 02-05-06-08	.....	1	350 0238	
(Right) 64-65 07-09	.....	1	350 0160	
(Right) 63 10-80: 64 15-16-18-85-88	.....	1	348 2172	
(Right) 64 19-89	.....	1	350 9238	
(Right) 65 15-16-18-85-86-88	.....	1	351 5686	
(Right) 65 17-19	.....	1	351 5688	
COVER, Drip Moulding Joint				
60 Thru 63 02-04-05-06-08 (Side To Front Moulding)	.....	2	435 9511	
60 Thru 62 10-20-80 (Side To Front Pillar Moulding)	26.075	2	344 0395	
63 Thru 65 18-88 (Side To Rear Quarter Moulding)	26.075	2	344 0395	
ATTACHING PARTS Cover To Side Roof Rail				
SCREW, Tapping..... 60 Thru 63 02-04-05-06-08	17.671	2	G457002	NA
SEAL, Front Pillar Drip Moulding Bottom				
(Left) 60 Thru 62 10-20-80	.....	1	344 5885	
(Right) 60 Thru 62 10-20-80	.....	1	344 5884	

Copyright 1963 American Motors Corp.

GROUP NO. — DESCRIPTION — YEAR and MODEL	PRIMARY GROUP NO.	PER CAR	PART NO.	CODE
SEAL, Side Drip Moulding Front Bottom				
(Left) 63-64 10-80	.....	1	348 8029	
(Right) 63-64 10-80	.....	1	348 8028	
20.397 FRAME, Rear Window				
60 02-05-06	.....	1	343 0447	
64-65 02-05-06	.....	1	448 1306	
64-65 09	.....	1	448 1307	
63-64 15-16-85-86	.....	1	448 0667	
65 15-16-85-86	.....	1	448 2741	
64 19-89	.....	1	448 1340	
65 19-89	.....	1	448 2742	
REINFORCEMENT, Rear Window Opening				
(Upper) 65 59 (Marlin)	.....	1	354 2806	#
(Side-Left) 65 59 (Marlin)	.....	1	448 3237	#
(Side-Right) 65 59 (Marlin)	.....	1	448 3236	#
GUSSET, Frame To Side Roof Rail				
(Left) 63-64 15-16-85-86	.....	1	347 2219	
(Left) 65 59 (Marlin)	.....	1	353 0359	#
(Left) 65 15-16-85-86	.....	1	351 6283	
(Right) 63-64 15-16-85-86	.....	1	347 2218	
(Right) 65 59 (Marlin)	.....	1	353 0358	#
(Right) 65 15-16-85-86	.....	1	351 6282	
BRACE, Rear Window Opening Reinforcement				
(Left) 65 59 (Marlin)	.....	1	351 7219	#
(Right) 65 59 (Marlin)	.....	1	351 7218	#
20.400 RAIL, Rear Window Upper				
60-61 15-19-25-29-85-89	.....	1	447 8642	
62 15-16-85-86	.....	1	344 0058	
BRACKET, Rear Listing Wire Support				
60 15-19-25-29-85-89	.....	1	344 0176	
20.405 RAIL, Rear Window End				
(Left) 60 Thru 62 15-16-19-25-29-85-86-89	.....	1	344 0079	
(Right) 60 Thru 62 15-16-19-25-29-85-86-89	.....	1	344 0078	
20.410 PANEL, Side Roof Extension				
(Left) 64-65 02-05-06	.....	1	350 0343	
(Left) 64-65 08	.....	1	350 0365	
(Left) 64-65 09	.....	1	350 0353	
(Left) 63 15-16-85-86	.....	1	349 2451	
(Left) 64 15-16-85	.....	1	352 4811	
(Left) 65 15	.....	1	353 8989	
(Left) 65 16	.....	1	448 2417	
(Left) 65 85	.....	1	448 2413	
(Left) 65 86	.....	1	448 2419	
(Left) 63 Thru 65 18-88	.....	1	448 0297	
(Right) 64-65 02-05-06	.....	1	350 0342	

Copyright 1963 American Motors Corp.

GROUP NO. — DESCRIPTION — YEAR and MODEL	PRIMARY GROUP NO.	PER CAR	PART NO.	CODE
(Right) 64-65 08	.....	1	350 0364	
(Right) 64-65 09	.....	1	350 0352	
(Right) 63 15-16-85-86	.....	1	349 2450	
(Right) 64 15-16-85	.....	1	352 4810	
(Right) 65 15	.....	1	353 8988	
(Right) 65 16	.....	1	448 2416	
(Right) 65 85	.....	1	448 2412	
(Right) 65 86	.....	1	448 2418	
(Right) 63 Thru 65 18-88	.....	1	448 0296	

20.412 EXTENSION, Rear Corner Roof

(Left) 61 Thru 63 04-08	.....	1	344 6967	
(Left) 64-65 08	.....	1	350 0377	
(Left) 60-61 18-28-83-88 (LVT) ***(Discontinued)***	.....	1	344 0479	
(Left) 60-61 18-28-88 (WVT)	.....	1	344 3883	
(Left) 62 18-88 (LVT)	.....	1	346 1225	
(Left) 62 18-88 (WVT)	.....	1	346 1229	
(Left) 63-64 18-88	.....	1	347 2223	
(Left) 65 18-88	.....	1	351 5227	
(Right) 61 Thru 63 04-08	.....	1	344 6966	
(Right) 64-65 08	.....	1	350 0376	
(Right) 60-61 18-28-83-88	.....	1	344 0478	
(Right) 62 18-88	.....	1	346 1224	
(Right) 63-64 18-88	.....	1	347 2222	
(Right) 65 18-88	.....	1	351 5226	

FILLER, Rear Corner Roof Extension Lower (Incl. Seal)

(Left) 63-64 18-88	.....	1	348 8020	
(Left) 65 18-88	.....	1	354 2595	
(Right) 63-64 18-88	.....	1	348 8021	
(Right) 65 18-88	.....	1	354 2594	

20.420 PANEL ASSEMBLY, Roof

60 02-05-06	.....	1	342 5875	
60 04 (Less Luggage Rack)	.....	1	343 5290	
60 04 (With Luggage Rack)	.....	1	343 2111	
61 04-08 (Less Luggage Rack)	.....	1	344 6800	
61 04-08 (With Luggage Rack)	.....	1	344 6801	
61 Thru 63 02-05-06	.....	1	345 2799	
62-63 04-08	.....	1	348 1522	
63 09	.....	1	448 0450	
64-65 02-05-06	.....	1	350 0350	
64-65 08	.....	1	350 0370	
64-65 09	.....	1	350 0360	
60-61 15-19-25-29	.....	1	344 1924	
60-61 18-28	.....	1	447 8643	
60-61 85-89	.....	1	344 1926	
60-61 83-88	.....	1	447 8645	
62 15-16-85-86	.....	1	347 6039	
62 18-88	.....	1	447 9454	
63-64 15-16-85-86	.....	1	347 2208	
65 15-16-85-86	.....	1	351 5200	
63 Thru 65 18-88	.....	1	347 2220	
64-65 19-89 (Except Marlin)	.....	1	350 1300	
65 59 (Marlin)	.....	1	351 7200	

Copyright 1963 American Motors Corp.

GROUP NO. — DESCRIPTION — YEAR and MODEL	PRIMARY GROUP NO.	PER CAR	PART NO.	CODE
RAFTER, Roof Panel				
(Front) 60 04	.....	1	343 7677	
(Front) 61 Thru 63 04-08	.....	1	344 7280	
(Front) 61 10-20-80	.....	1	344 7536	
(Front) 62 10-80	.....	1	346 1234	
(Center)(#2) 60 04	.....	1	343 7676	
(Center)(#2) 61 Thru 63 04-08	.....	1	344 7281	
(Center)(#3) 61 Thru 63 04-08	.....	1	344 7282	
(Rear) 61 Thru 63 04-08	.....	1	344 7283	
ATTACHING PARTS Rafter To Roof Rail				
SCREW, Tapping..... 60 Thru 63 04-08 (8 Req.): 60 10-20-80 (8 Req.): 61-62 10-20-80 (4 Req.)	17.660	AR	G161895	NA
SUPPORT, Roof Panel				
61 Thru 63 04-08	.....	1	344 7284	
63 09	.....	1	349 0066	
64-65 02-05-06	.....	1	350 0594	
64 85: 64-65 88 (990)	.....	1	350 1043	
(Front) 64-65 08	.....	1	350 0594	
(Front) 64-65 09	.....	1	352 3350	
(Front) 60 18-28-83-88	.....	1	344 0786	
(Front) 61-62 18-28-88	.....	1	345 5257	
(Front) 63 Thru 65 18-88	.....	1	347 2216	
(Front) 64-65 19-89 (Except Marlin)	.....	1	352 9168	
(Front) 65 59 (Marlin)	.....	1	351 7202	
(Front) 65 15-16-85-86	.....	1	351 5225	
(Center) 64-65 08	.....	1	350 0603	
(Center) 60 Thru 62 18-28-83-88	.....	1	344 0753	
(Center) 63 Thru 65 18-88	.....	1	347 2206	
(Rear) 64-65 08	.....	1	350 0599	
(Rear) 64-65 09	.....	1	350 1044	
(Rear) 60 Thru 62 18-28-83-88	.....	1	344 0753	
(Rear) 63 Thru 65 18-88	.....	1	347 2217	
(Rear) 64-65 19-89 (Except Marlin)	.....	1	350 1358	
(Rear) 65 59 (Marlin)	.....	1	351 7203	
(Rear) 65 15-16: 65 85-86 (880)	.....	1	351 5224	
(Rear) 65 85-86 (990)	.....	1	351 5225	
ATTACHING PARTS Support To Roof Rail				
SCREW, Tapping..... 60 Thru 63 04-08-09 (4 Req.): 60 Thru 62 18-28-83-88 (12 Req.)	17.660	AR	G161895	NA
SCREW, Tapping..... 63 Thru 64 18-88	.....	12	400 0642	
SUPPORT, Roof Panel And Domelight				
63 10-80: 64 15-16: 64-65 18-88 (880)	.....	1	347 2214	
ATTACHING PARTS Support To Roof Rail				
SCREW, Tapping..... 63 10-80: 64 15-16: 64-65 18	.....	4	400 0642	
FILLER, Roof Panel Support				
63 Thru 65 18-88	.....	2	348 8896	#
20.422 COVER, Roof Top Vinyl				
65 09	.....	1	358 2364	
65 19-89	.....	1	358 5177	
COVER, Lower Rear Window Opening Vinyl				
65 19-89	.....	1	358 5183	

Copyright 1963 American Motors Corp.

GROUP NO. — DESCRIPTION — YEAR and MODEL	PRIMARY GROUP NO.	PER CAR	PART NO.	CODE
ATTACHING PARTS				
Vinyl Roof Covering To Windshield Opening Reinforcement				
NAIL, Screw ..... 65 09-19-89 (WRC)	17.380	2	G455384	NA
Vinyl Roof Covering To Rear Window Opening Reinforcement				
NAIL, Screw ..... 65 09-19-89 (WRC)	17.380	2	G455384	NA
CEMENT, Vinyl Roof Cover To Roof				
65 09-19-89 (WRC)(1 Quart)	30.020	AR	448 3394	
SEALER, Vinyl Roof Cover To Drip Rail				
66 09-19-59-89 (WRC)(12 Oz. Cartridge)	30.026	AR	448 3395	#
20.425 SUPPORT, Domelight				
61 Thru 63 02-05-06	.....	1	345 3618	
61 Thru 63 04-08	.....	1	345 3619	
ATTACHING PARTS				
Support To Roof Rail				
EYELET..... 60 Thru 63 02-04-05-06-08	27.026	2	316 383	
SUPPORT, Rear Domelight				
60 18-28-83-88	.....	1	345 1309	
61-62 18-88	.....	1	345 1921	
20.430 PANEL, Rear Auxiliary Floor				
60 04	.....	1	437 2198	
61 Thru 63 04-08	.....	1	345 2769	
64-65 08	.....	1	350 0149	
60 Thru 62 18-28-83-88 (L3S)	.....	1	342 1295	
60 Thru 62 18-28-83-88 (W3S)	.....	1	344 1661	
63 Thru 65 18-88 (L3S)	.....	1	347 2826	
63 Thru 65 18-88 (W3S)	.....	1	347 2828	
EXTENSION, Rear Auxiliary Floor (Incl. Hinge)				
63 Thru 65 18-88	.....	1	349 2126	
(Left) 63 Thru 65 18-88 (Ambulance)	.....	1	349 2621	
(Right) 63 Thru 65 18-88 (Ambulance)	.....	1	349 2620	
HINGE, Rear Auxiliary Floor Extension				
63 Thru 65 18-88	.....	1	349 0565	
(Left) 63 Thru 65 18-88 (Ambulance)	.....	1	349 0287	
(Right) 63 Thru 65 18-88 (Ambulance)	.....	1	349 0286	
ATTACHING PARTS				
Hinge To Floor				
SCREW, Tapping..... 63 Thru 65 18-88	17.660	4	G162003	NA
NUT, Spring..... 63 Thru 65 18-88	17.426	4	G187999	NA
20.435 PANEL, Rear Auxiliary Floor Side				
(Left) 61 04-08	.....	1	344 6915	
(Left) 62-63 04-08	.....	1	346 8983	
(Left) 64-65 08	.....	1	350 5681	
(Left) 60-61 18-28-83-88 (LVT)	.....	1	344 0607	
(Left) 61 18-28-88 (L3S-WVT)	.....	1	346 5515	
(Left) 62 18-88 (LVT)	.....	1	346 6638	
(Left) 62 18-88 (W3S) ..... *(Replaces 346 6635)*	.....	1	346 6637	
(Left) 62 18-88 (L3S-WVT)	.....	1	346 6725	
(Left) 63 Thru 65 18-88 (L3S)	.....	1	349 2619	

Copyright 1963 American Motors Corp.

GROUP NO. — DESCRIPTION — YEAR and MODEL	PRIMARY GROUP NO.	PER CAR	PART NO.	CODE
(Left) 63 Thru 65 18-88 (W3S)	.....	1	347 2891	
(Right) 61 04-08	.....	1	344 6914	
(Right) 62-63 04-08	.....	1	346 8982	
(Right) 64-65 08	.....	1	350 5680	
(Right) 60-61 18-28-83-88 (LVT)	.....	1	344 0606	
(Right) 60 Thru 62 18-28-88 (W3S)	.....	1	344 1662	
(Right) 61 18-28-88 (L3S-WVT)	.....	1	346 5514	
(Right) 62 18-88 (LVT)	.....	1	346 6722	
(Right) 62 18-88 (L3S-WVT)	.....	1	346 6724	
(Right) 63 Thru 65 18-88 (L3S)	.....	1	349 2618	
SUPPORT, Rear Auxiliary Floor Side Panel To Floor				
(Right) 63 Thru 65 18-88 (L3S)	.....	1	347 2996	
DRAIN, Rear Auxiliary Floor Side Panel				
62-63 04-08	.....	2	346 0724	
PLUG, Cargo Light Switch Hole				
63 Thru 65 18-88	17.494	1	G142079	
20.437 DOOR, Rear Auxiliary Floor Side Compartment (Incl. Hinge)				
63 Thru 65 18-88 (L3S)	.....	1	348 2111	
63 Thru 65 18-88 (W3S)	.....	1	347 2843	
HINGE, Rear Auxiliary Floor Side Compartment Door				
63 Thru 65 18-88 (L3S)	.....	1	347 2845	
63 Thru 65 18-88 (W3S)	.....	1	347 2844	
ATTACHING PARTS				
Hinge To Auxiliary Floor Side Panel				
SCREW, Tapping ..... 63 Thru 65 18-88 (L3S-4 Req.): 63 Thru 65 18-88 (W3S-5 Req.)	17.660	AR	G162003	NA
20.438 LOCK ASSEMBLY, Rear Auxiliary Floor Side Compartment Door (Incl. Cylinder, Case, Retainer And Keys)				
63 Thru 65 18-88 (L3S-Regular)	22.073	1	447 7234	
63 Thru 65 18-88 (L3S-Special-Specify Key Number)	22.073	1	447 6046	
CYLINDER ASSEMBLY, Rear Auxiliary Floor Side Compartment Door Lock (Incl. Case, Cam And Keys)				
63 Thru 65 18-88 (W3S-Regular)	.....	1	448 0967	
63 Thru 65 18-88 (W3S-Special-Specify Key Number)	.....	1	448 0968	
CYLINDER, Rear Auxiliary Floor Side Compartment Door Lock (Incl. Keys)				
63 Thru 65 18-88 (L3S-Regular)	22.073	1	447 8586	
63 Thru 65 18-88 (L3S-Special-Specify Key Number)	22.073	1	447 8587	
CASE, Rear Auxiliary Floor Side Compartment Door Lock				
63 Thru 65 18-88 (L3S)	22.073	1	447 5616	
63 Thru 65 18-88 (W3S)	23.081	1	447 8415	
CAM, Rear Auxiliary Floor Side Compartment Door Lock				
63 Thru 65 18-88 (W3S)	23.081	1	447 9829	
RETAINER, Rear Auxiliary Floor Side Compartment Door Lock				
63 Thru 65 18-88 (L3S)	22.073	1	341 1053	
63 Thru 65 18-88 (W3S)	23.086	1	348 2879	

Copyright 1963 American Motors Corp.

GROUP NO. — DESCRIPTION — YEAR and MODEL	PRIMARY GROUP NO.	PER CAR	PART NO.	CODE
ATTACHING PARTS				
Retainer To Lock Case				
SCREW, Machine..... 63 Thru 65 18-88 (L3S)	17.616	1	G186522	NA
STRIKER, Rear Auxiliary Floor Side Compartment Door Lock (Welds To Rear Lower Panel)				
63 Thru 65 18-88 (L3S)	.....	1	348 2666	
KEY, Rear Auxiliary Floor Side Compartment Door Lock				
63 Thru 65 18-88 (Blank)	23.085	2	344 5762	
63 Thru 65 18-88 (Coded-Specify Key Number)	23.085	2	447 8593	
20.439 BOX, Rear Auxiliary Floor Side Compartment				
63 Thru 65 18-88 (W3S)	.....	1	349 0206	
ATTACHING PARTS				
Box To Auxiliary Floor Side Panel				
SCREW, Tapping..... 63 Thru 65 18-88 (W3S)	29.019	2	439 5412	
20.445 PANEL, Rear Auxiliary Floor Side Panel Extension				
(Left) 60 04	.....	1	436 2957	
(Left) 60-61 18-28-83-88 (LVT)	.....	1	342 1367	
(Left) 60-61 18-28-88 (W3S)	.....	1	344 4694	
(Left) 61 18-28-88 (L3S-WVT)	.....	1	345 1884	
(Left) 62 18-88 (LVT)	.....	1	346 2741	
(Left) 62 18-88 (W3S)	.....	1	346 6723	
(Left) 62 18-88 (L3S-WVT)	.....	1	346 6477	
(Right) 60 04	.....	1	436 2958	
(Right) 60-61 18-28-83-88 (LVT)	.....	1	342 1368	
(Right) 60 Thru 62 18-28-88 (W3S)	.....	1	344 1666	
(Right) 62 18-88 (LVT)	.....	1	346 2740	
(Right) 62 18-88 (L3S-WVT)	.....	1	346 2534	
20.450 PANEL, Spare Tire Cover				
60 04	.....	1	435 6661	
61 Thru 63 04-08	.....	1	344 6923	
64-65 08	.....	1	350 0151	
60 Thru 62 18-28-83-88 (L3S)	.....	1	342 4539	
63 Thru 65 18-88 (L3S)	.....	1	347 2819	
SILENCER, Spare Tire Cover Panel Front Bracket				
64-65 08: 60 Thru 65 18-28-83-88 (L3S)	.....	2	342 1290	
WING NUT, Spare Tire Cover Panel Hold Down				
61 04-08: 60-61 18-28-83-88 (L3S)	1.071	1	315 2715	
62-63 04-08: 62 18-28-88 (L3S)	17.432	1	G219217	
64-65 08: 63 Thru 65 18-88 (L3S)	17.432	1	G219218	
BUMPER, Spare Tire Cover Panel				
60 Thru 65 04-08: 60 Thru 65 18-28-83-88 (L3S)(On Auxiliary Panels)	.....	12	400 0313	
60 Thru 65 18-28-83-88 (L3S)(On Cover)	23.019	2	437 8370	
20.455 BRACKET, Tailgate Hinge Mounting				
60 18-28-83-88 (L3S-Note 20.035-2): 61-62 18-28-88 (LVT)	.....	2	341 1264	
(Left) 60 04	.....	1	435 9515	
(Left) 61 04-08	.....	1	344 7035	
(Left) 62-63 04-08	.....	1	348 9714	
(Left) 60 18-28-83-88 (L3S-Note 20.035-1)	.....	1	341 2235	

Copyright 1963 American Motors Corp.

GROUP NO. — DESCRIPTION — YEAR and MODEL	PRIMARY GROUP NO.	PER CAR	PART NO.	CODE
(Right) 60 04	.....	1	435 9516	
(Right) 61 04-08	.....	1	344 7034	
(Right) 62-63 04-08	.....	1	348 9715	
(Right) 60 18-28-83-88 (L3S-Note 20 035-1)	.....	1	341 2236	
20.458 COVER, Tailgate Hinge Access Hole				
60 Thru 62 18-28-83-88 (LVT)	.....	1	341 3039	
ATTACHING PARTS Cover To Rear Lower Panel				
SCREW, Tapping..... 60 Thru 62 18-28-83-88 (LVT)	17.669	2	G457002	NA
20.460 PANEL, Tailgate Opening (Incl. Hinge)				
60 Thru 62 18-28-88 (W3S)	.....	1	344 1656	
RETAINER, Tailgate Opening Panel				
60 Thru 62 18-28-88 (W3S)	.....	2	344 4820	
HINGE, Tailgate Opening Panel				
60 Thru 62 18-28-88 (W3S)	.....	1	344 1669	
ATTACHING PARTS Hinge To Rear Lower Panel				
SCREW, Machine..... 60 Thru 62 18-28-88 (W3S)	17.610	8	G451271	NA
NUT, Hexagon..... 60 Thru 62 18-28-88 (W3S)	17.412	8	G120614	NA
20.600 FRAME ASSEMBLY				
61 Thru 63 07	.....	1	345 3119	
20.605 MEMBER, Frame Side				
(Left) 61 Thru 63 07	.....	1	447 9209	
(Right) 61 Thru 63 07	.....	1	447 9208	
20.610 MEMBER, Frame Diagonal				
(Left-Front) 61 Thru 63 07	.....	1	345 3109	
(Left-Rear) 61 Thru 63 07	.....	1	345 3273	
(Right-Front) 61 Thru 63 07	.....	1	345 3108	
(Right-Rear) 61 Thru 63 07	.....	1	345 3272	
REINFORCEMENT, Front Member To Side Sill				
61 Thru 63 07	.....	2	345 9091	
20.615 PLATE, Frame Center Cover				
(Side) 61 Thru 63 07	.....	2	345 3103	
(Front) 61 Thru 63 07	.....	1	345 3100	
(Rear) 61 Thru 63 07	.....	1	345 3101	
(Top) 61 Thru 63 07	.....	1	345 3102	
(Bottom) 61 Thru 63 07	.....	1	345 3104	
20.620 INSULATOR, Frame To Body				
61 Thru 63 07	.....	18	346 3795	

Copyright 1963 American Motors Corp.

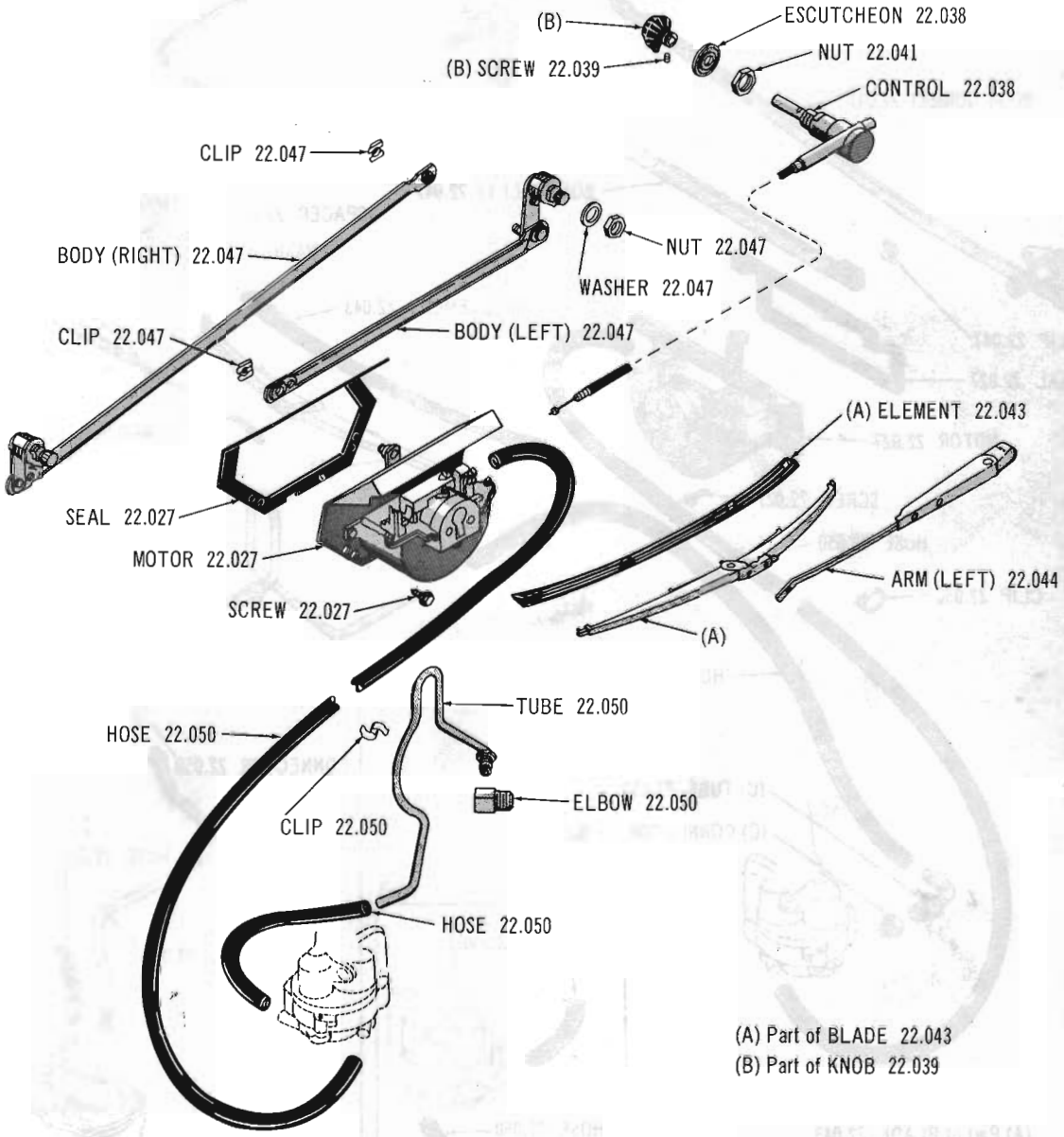

(A) Part of BLADE 22.043
(B) Part of KNOB 22.039

VACUUM WINDSHIELD WIPER 64-65 01

Copyright 1963 American Motors Corp.

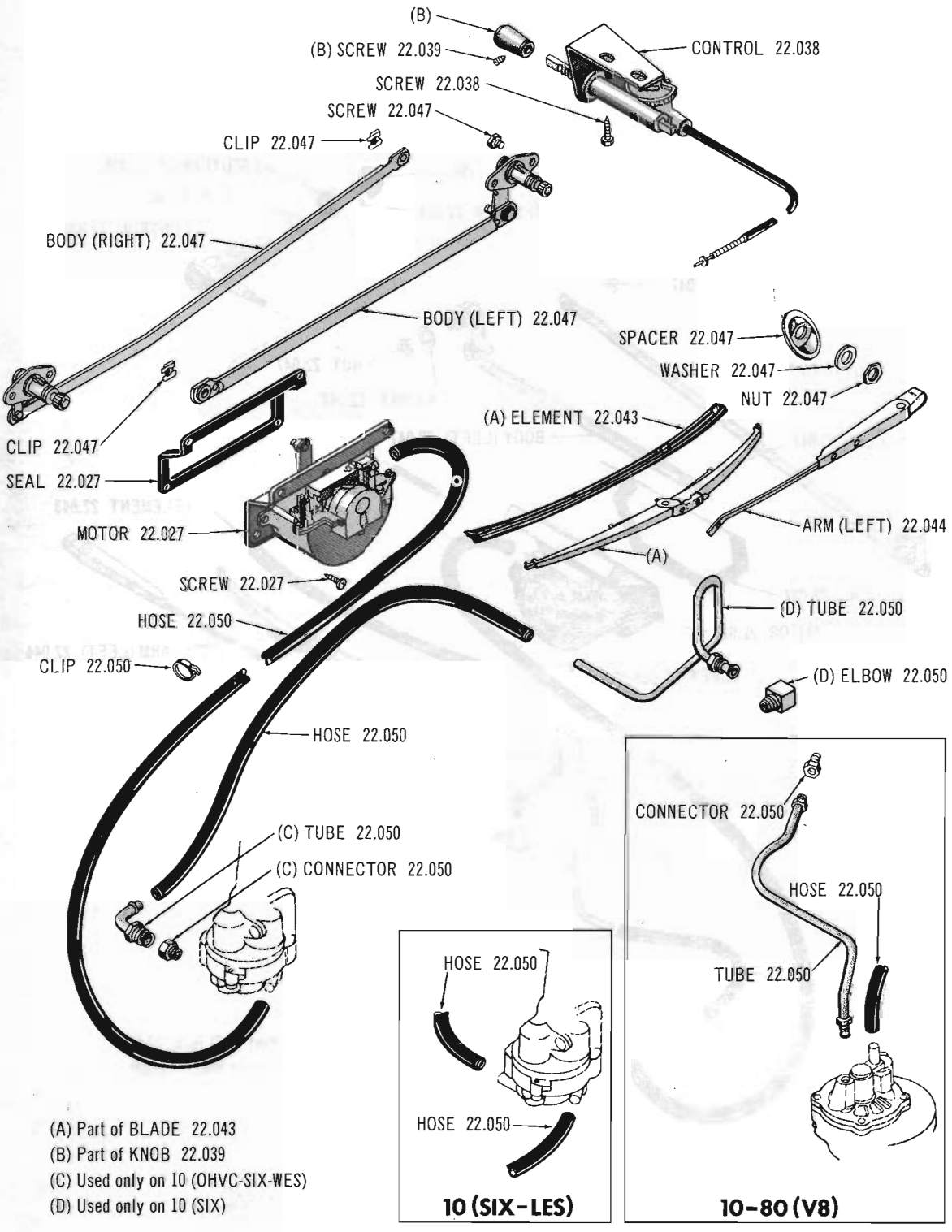

(A) Part of BLADE 22.043
(B) Part of KNOB 22.039
(C) Used only on 10 (OHVC-SIX-WES)
(D) Used only on 10 (SIX)

VACUUM WINDSHIELD WIPER 63 thru Current 10-80

Copyright 1963 American Motors Corp.

Copyright 1963 American Motors Corp.

Printed in U.S.A.

ELECTRIC WINDSHIELD WIPER 64-65 ALL MODELS

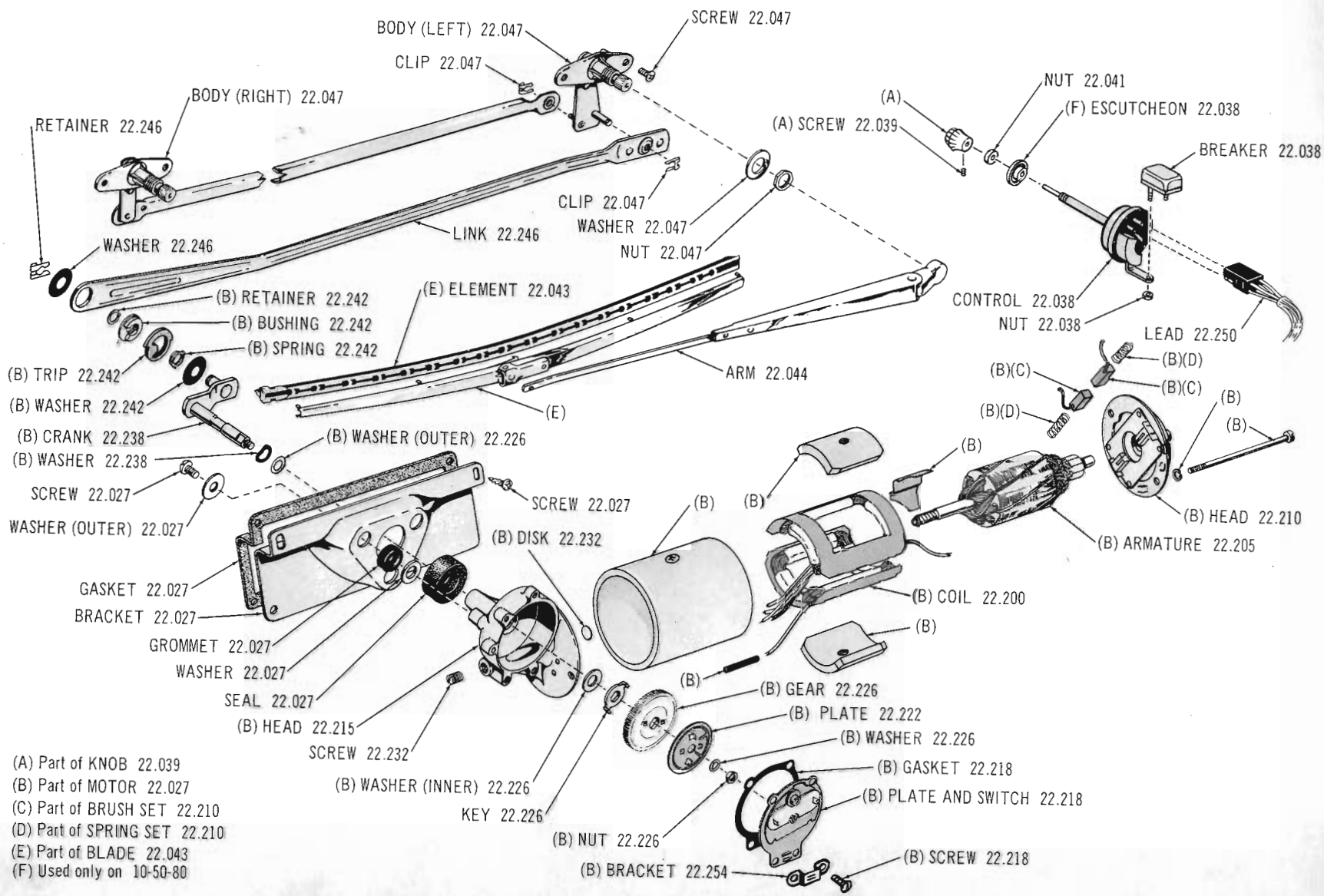

(A) Part of KNOB 22.039
(B) Part of MOTOR 22.027
(C) Part of BRUSH SET 22.210
(D) Part of SPRING SET 22.210
(E) Part of BLADE 22.043
(F) Used only on 10-50-80



Copyright 1963 American Motors Corp.

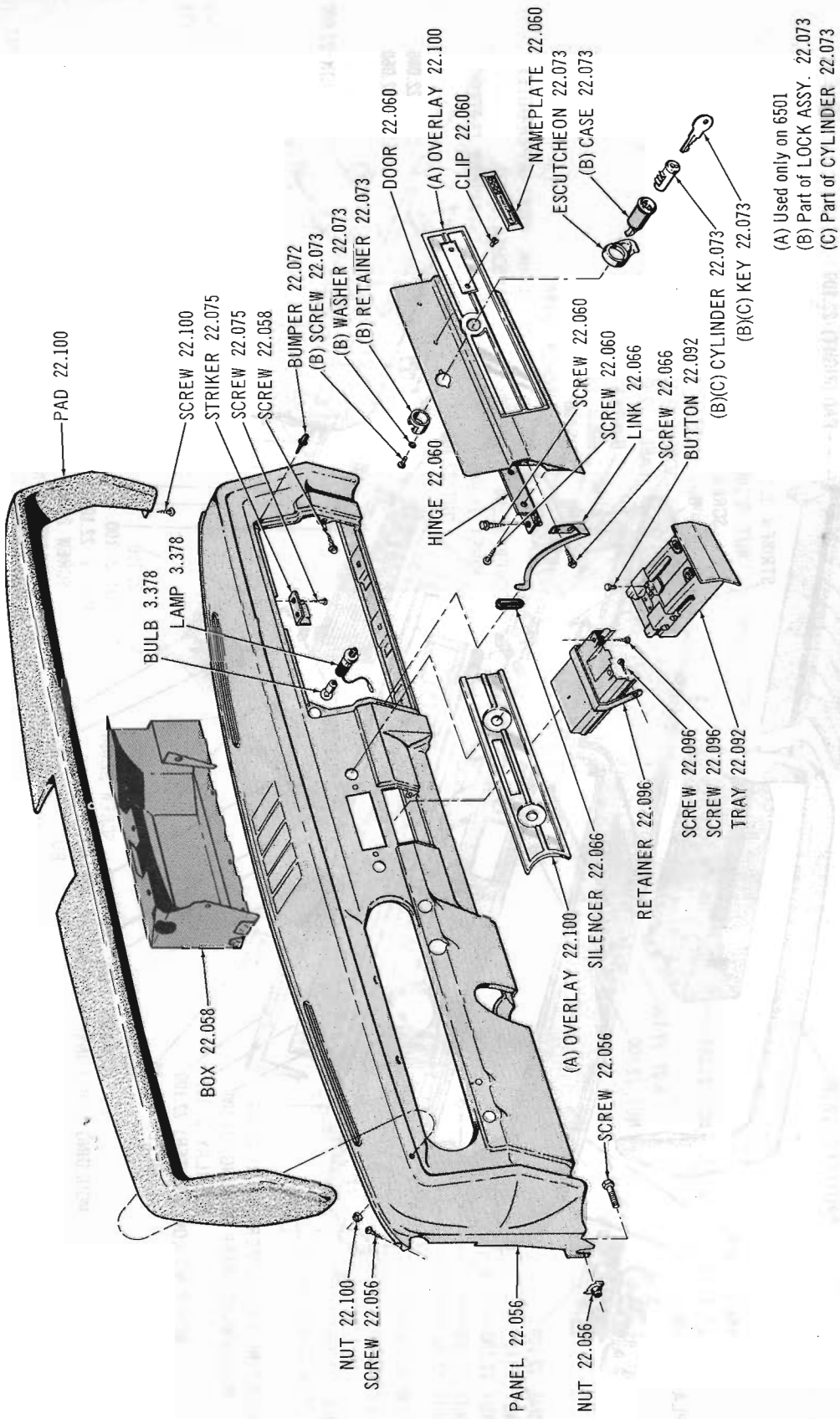

INSTRUMENT PANEL, GLOVE BOX AND LOCK ASSEMBLY 64-65 01

Copyright 1963 American Motors Corp.

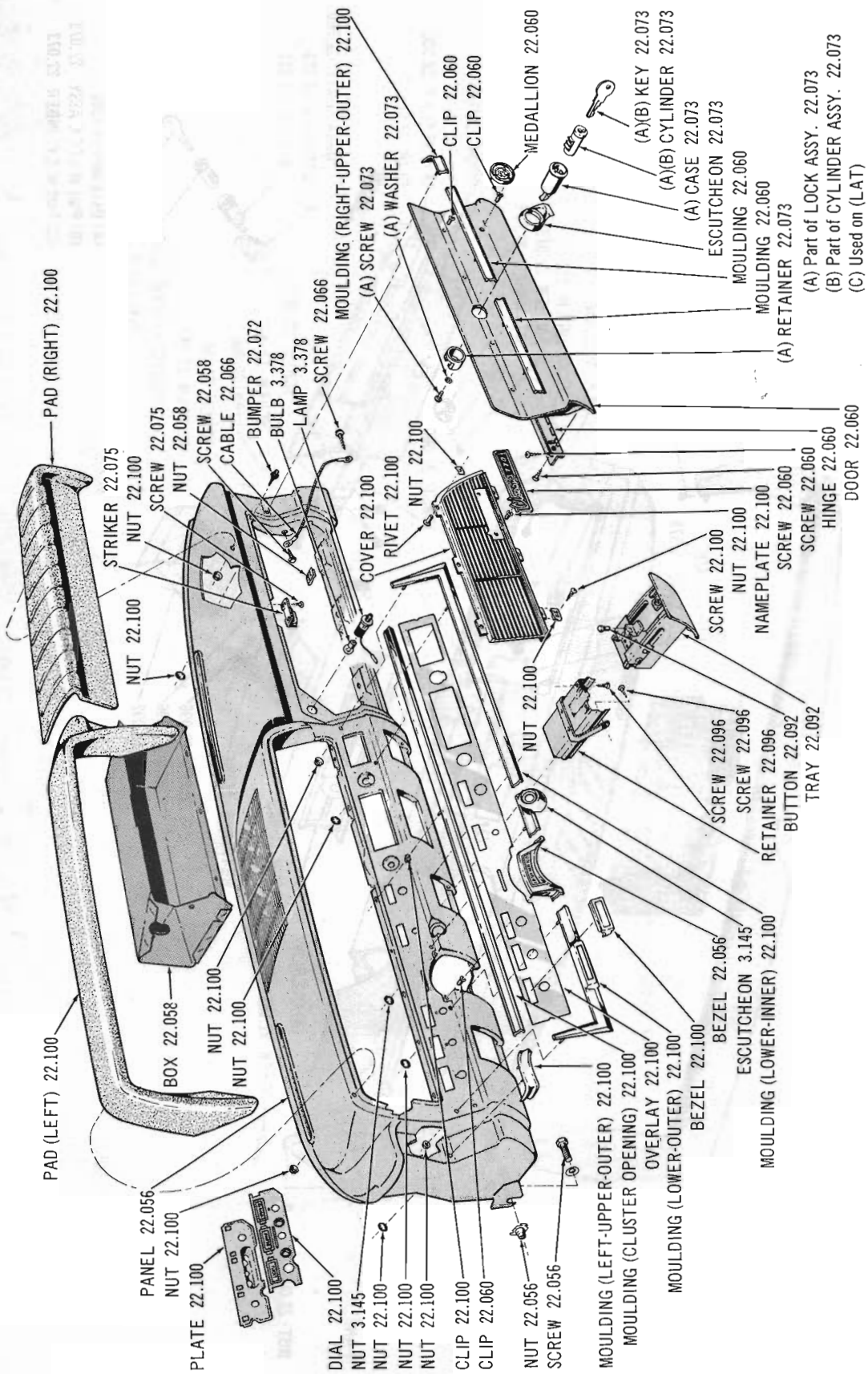

INSTRUMENT PANEL, GLOVE BOX AND LOCK ASSEMBLY 65 10 (Except Marlin)

Copyright 1963 American Motors Corp.

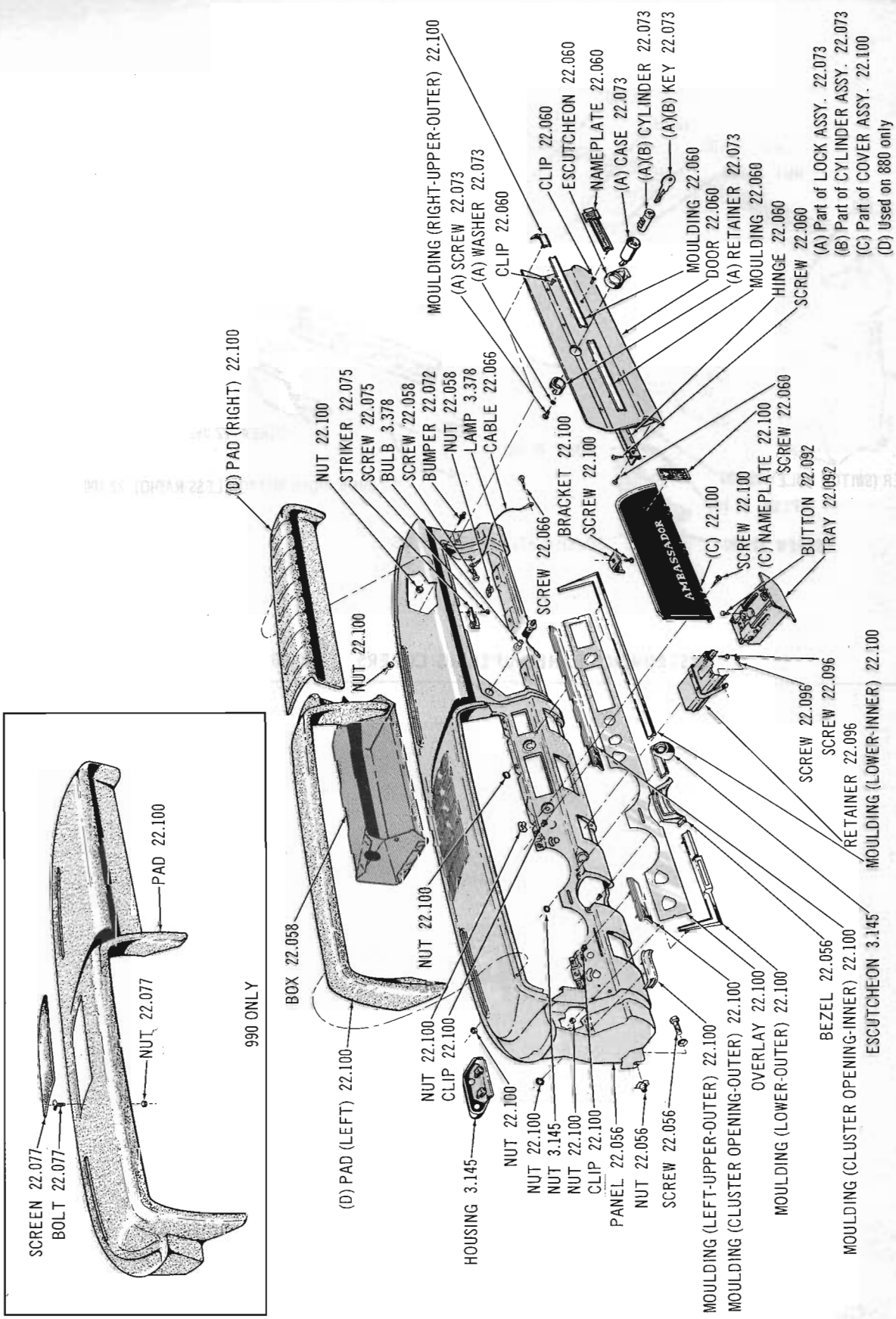

INSTRUMENT PANEL, GLOVE BOX AND LOCK ASSEMBLY 65 80

Copyright 1963 American Motors Corp.

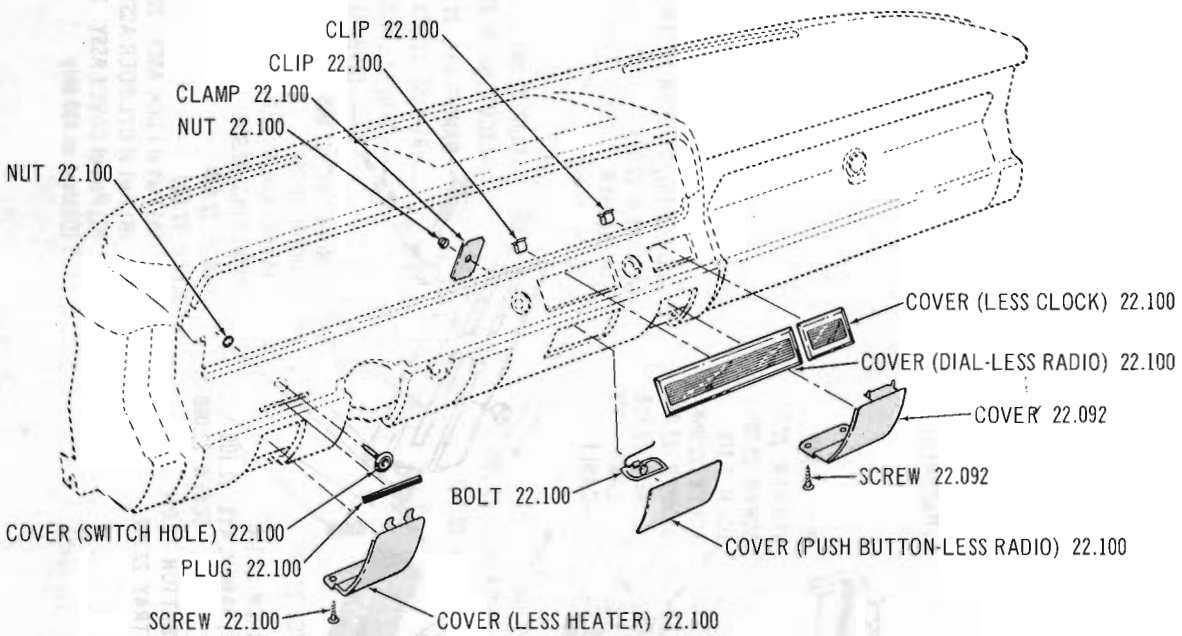

INSTRUMENT PANEL OPENING COVERS 65 10-80

Copyright 1963 American Motors Corp.

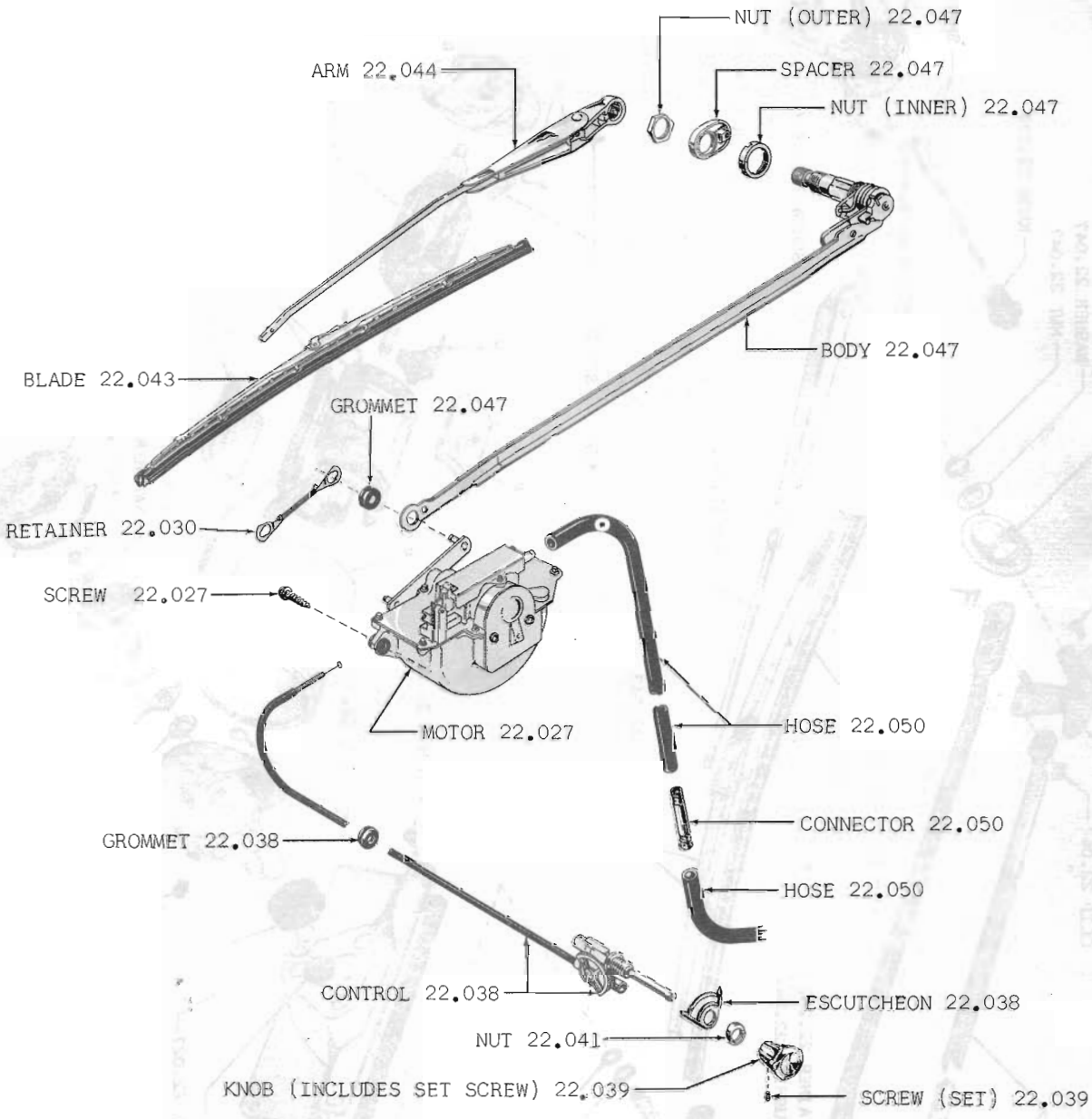

FIG. 22.027-1 WINDSHIELD WIPER 60 THRU 62 01-10-20-80; 63 01

Printed in U.S.A.

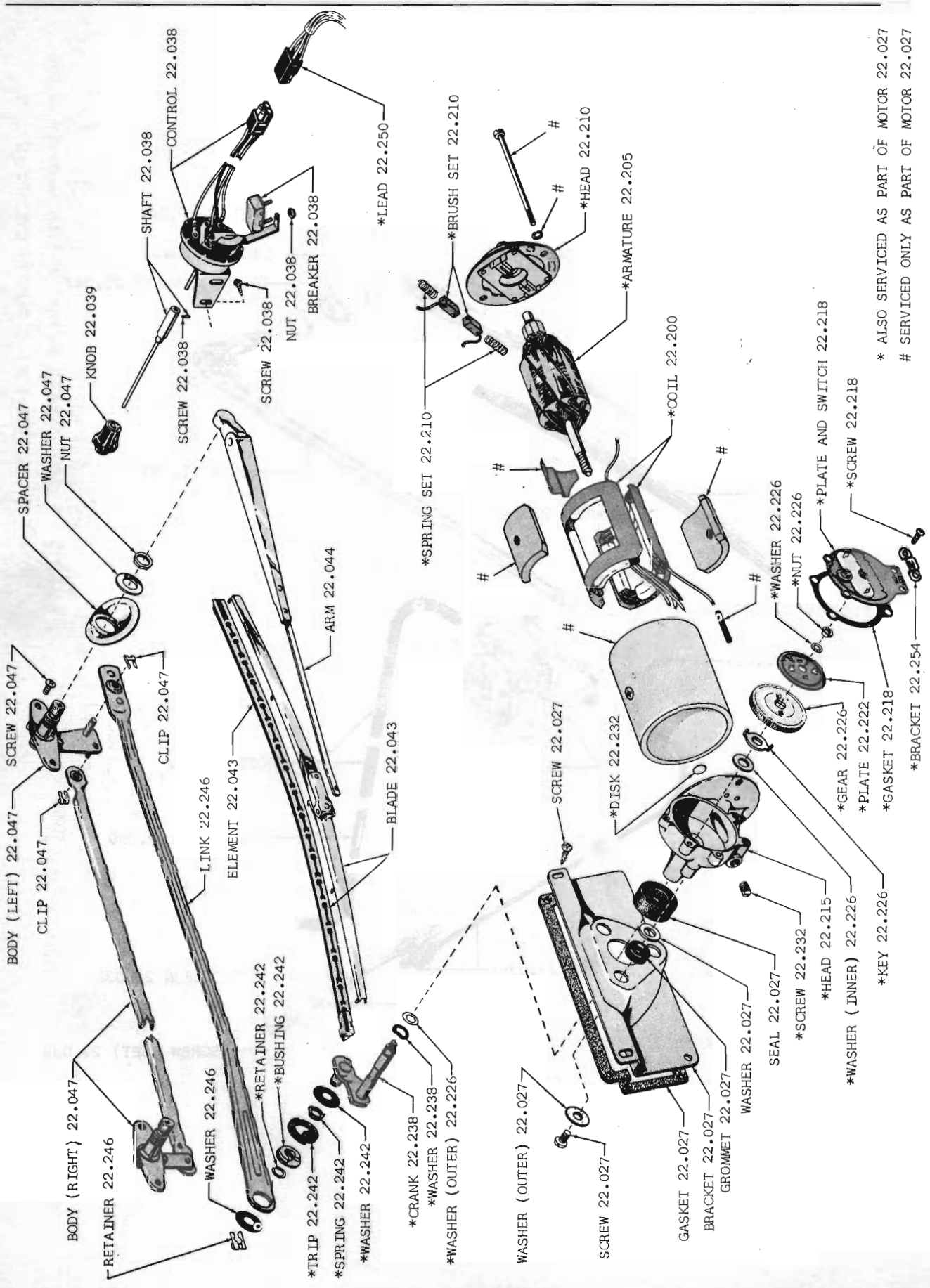

FIG. 22.027-3 ELECTRIC WINDSHIELD WIPER 63 10-80

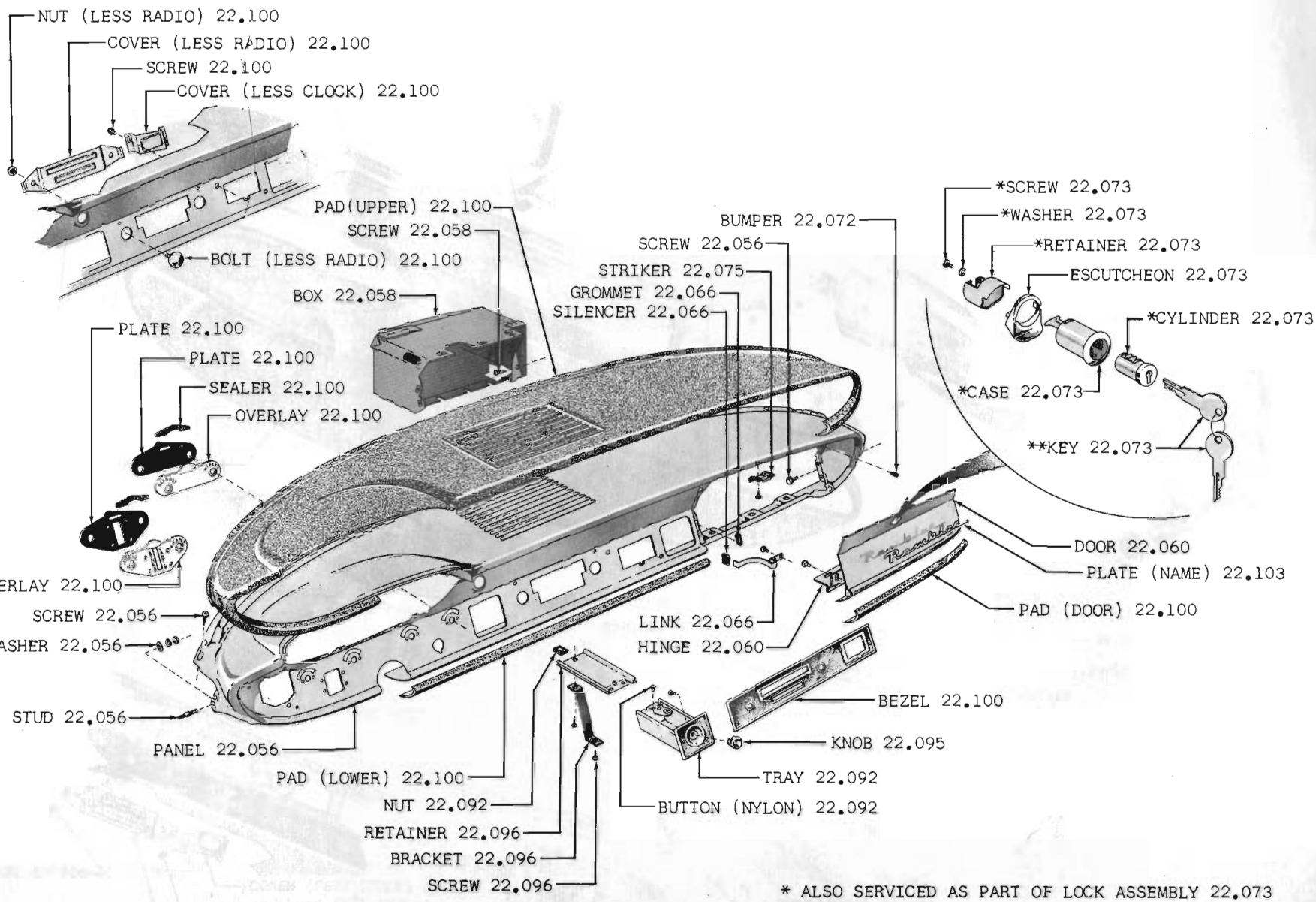

* ALSO SERVICED AS PART OF LOCK ASSEMBLY 22.073

** ALSO SERVICED AS PART OF CYLINDER 22.073

FIG. 22.056-3 INSTRUMENT PANEL, GLOVE BOX AND LOCK ASSEMBLY 60-61 10-20-80

F-14063

Printed In U.S.A.

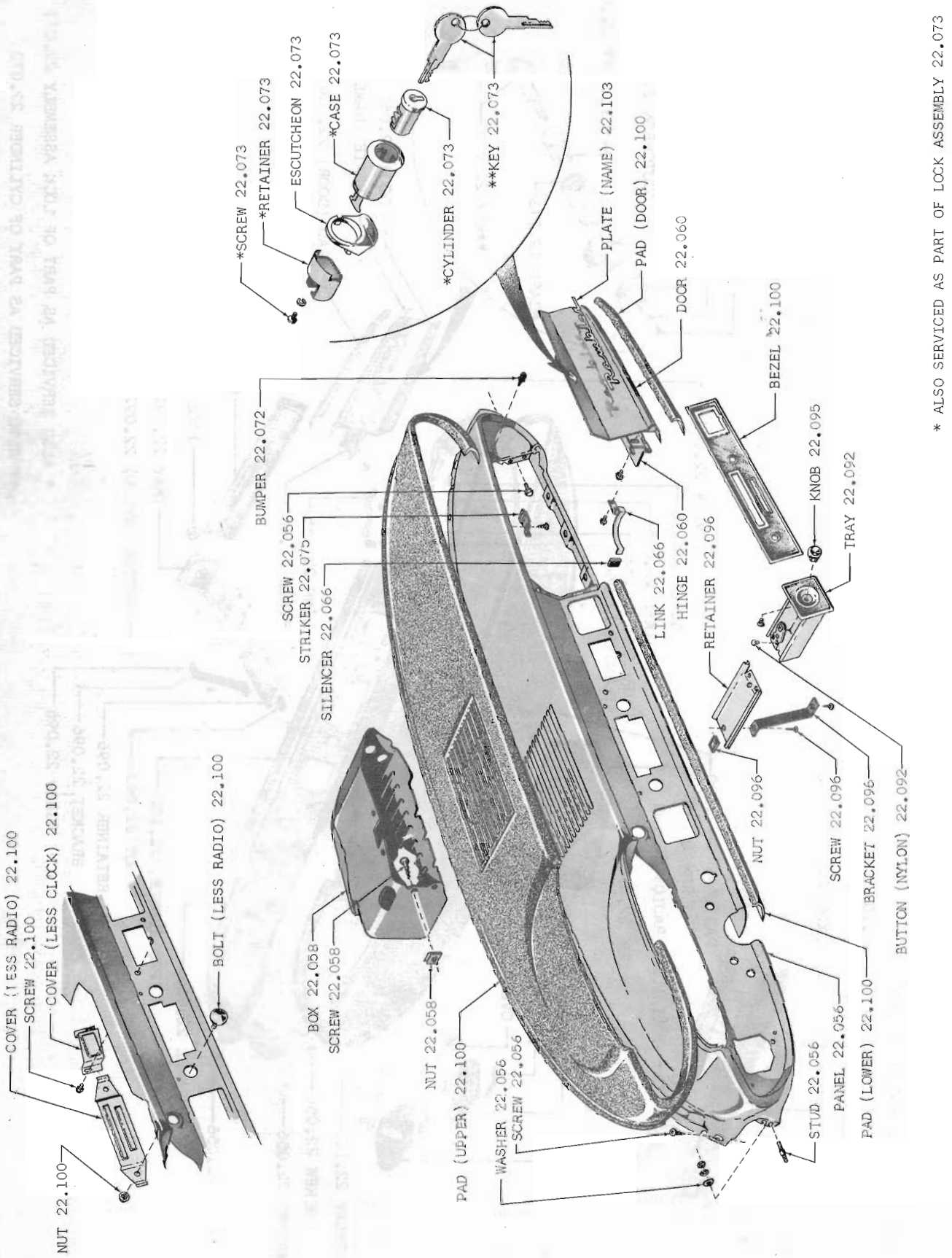

* ALSO SERVICED AS PART OF LOCK ASSEMBLY 22.073
** ALSO SERVICED AS PART OF CYLINDER 22.073

FIG. 22.056-4 INSTRUMENT PANEL, GLOVE BOX AND LOCK ASSEMBLY 62 10-80

Printed In U.S.A.

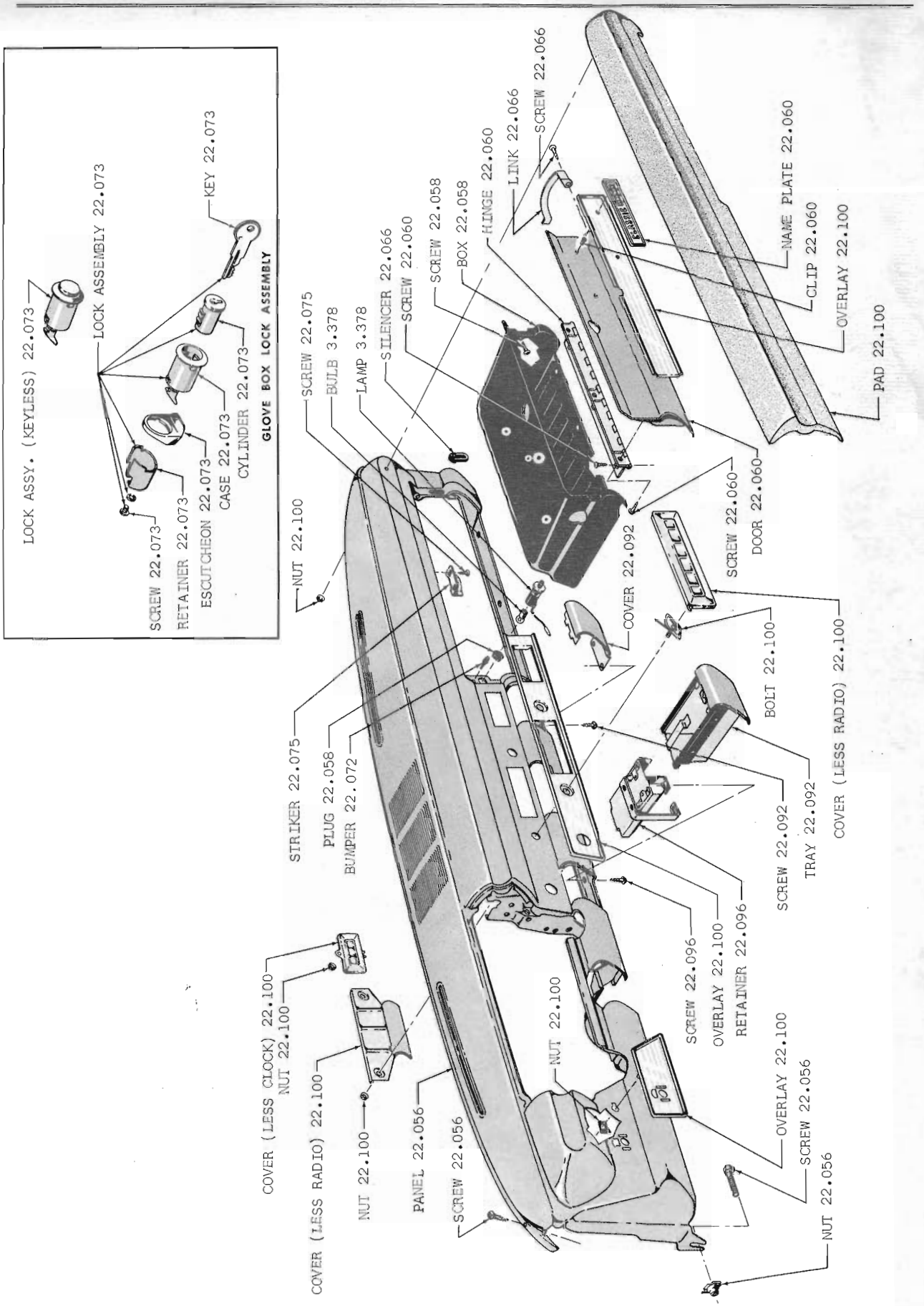

FIG. 22.056-5 INSTRUMENT PANEL, GLOVE BOX AND LOCK ASSEMBLY 63 10-80



GROUP NO. — DESCRIPTION — YEAR and MODEL	PRIMARY GROUP NO.	PER CAR	PART NO.	CODE
22.007 SCREEN, Cowl Ventilator				
60 01	.....	1	343 0429	
62 01 *(Discontinued)*	.....	1	348 1278	
61-62 10-20-80	.....	1	344 7638	
63 Thru 65 10-80	.....	1	347 2204	
(Left) 60 10-20-80	.....	1	342 9761	
(Right) 60 10-20-80	.....	1	342 9762	
ATTACHING PARTS Screen To Panel				
SCREW, Tapping..... 60 01	17.699	8	800 0272	NA
SCREW, Tapping..... 60 10-20-80	17.660	6	G161860	NA
22.014 ROD, Cowl Ventilator Damper				
60 01 (LHE-Note 22.014-1 Type 1)	.....	1	313 0263	
60 01 (OHV): 60 01 (LHE-Note 22.014-1 Type 2)	.....	1	315 9641	
60 10-20-80	.....	1	314 6516	
ATTACHING PARTS Rod To Damper				
SCREW, Slotted..... 60 01	17.614	2	G132830	NA
SCREW, Tapping..... 60 10-20-80	17.660	2	G161901	NA
WASHER, Plain..... 60 10-20-80	17.814	2	G103339	NA
WASHER, Lock ..... 60 01 (LHE-Note 22.014-1 Type 1)	17.820	2	G122158	NA
WASHER, Fibre..... 60 01 (LHE-Note 22.014-1 Type 2)	.....	2	313 0317	
PIN, Cotter 60 10-20-80	17.460	1	G103361	NA
PLATE, Cowl Ventilator Damper Rod Support				
(Left) 60 01 (LHE-Note 22.014-1 Type 1)	.....	1	433 2016	
(Right) 60 01 (LHE-Note 22.014-1 Type 1)	.....	1	433 2017	
ATTACHING PARTS Plate To Panel				
BOLT, Hexagon ..... 60 01 (LHE-Note 22.014-1 Type 1)	17.038	4	G120706	NA
WASHER, Lock ..... 60 01 (LHE-Note 22.014-1 Type 1)	17.824	4	G115547	NA
GASKET, Cowl Ventilator Rod Support Plate				
60 01 (LHE-Note 22.014-1 Type 1)	.....	2	433 2018	
GROMMET, Cowl Ventilator Damper Rod				
60 10-20-80	.....	2	314 3158	
BUSHING, Cowl Ventilator Damper Rod				
60 01 (LHE-Note 22.014-1 Type 1)	.....	2	313 0265	

NOTE 22.014-1: Two Types of Heater Core Covers were used on the 60 01 (LHE). They can be identified as follows:
Type 1: Cover is Metal with an Air Filter used in system.
Type 2: Cover is Plastic. No Air Filter is used.

Copyright 1963 American Motors Corp.

GROUP NO. — DESCRIPTION — YEAR and MODEL	PRIMARY GROUP NO.	PER CAR	PART NO.	CODE
22.016 PANEL, Cowl Ventilator Intake Cover				
60 01	.....	1	437 3230	
60 10-20-80 *(Discontinued)*	.....	1	344 0033	#
61-62 10-20-80	.....	1	344 7521	
63-64 10-80	.....	1	347 2202	
65 10-80	.....	1	353 0508	
ATTACHING PARTS				
Panel To Cowl Top				
SCREW, Tapping..... 60 01	17.654	2	G162246	NA
SCREW, Tapping..... 61 10-20-80	17.669	5	800 0272	NA
SCREW, Tapping..... 62 10-80	17.671	5	G9414261	NA
SCREW, Tapping..... 64 Thru 65 10-80	13.017	7	400 0616	
CLIP..... 61 10-20-80	.....	2	344 7524	
CLIP..... 63 10-80	.....	1	400 0520	
SEAL, Cowl Ventilator Air Intake Panel				
60 10-20-80	.....	1	345 1594	
63 Thru 65 10-80	.....	1	347 2895	
GROMMET, Cowl Ventilator Intake Cover Panel				
60 01	.....	1	436 7429	
22.018 CABLE, Cowl Ventilator				
60 01 (OHV): 60 01 (LHE-Note 22.014-1 Type 2)...(Incl. Knob)	.....	1	320 2467	
60 01 (LHE-Note 22.014-1 Type 1)...(Incl. Knob)	.....	1	320 2090	
60 10-20-80 (LHD)	.....	1	320 0919	
60 10-20-80 (RHD)	.....	1	320 0923	
ATTACHING PARTS				
Cable To Pivot				
SCREW, Tapping..... 60 01 *(Replaces 800 0086)*	17.614	1	400 1016	
Cable To Bracket				
WASHER, Lock..... 60 01	17.824	1	G115549	NA
NUT, Hexagon..... 60 01	17.410	1	G114494	NA
Cable To Control				
NUT, Speed..... 60 10-20-80	13.155	1	400 0369	
ARMOR, Cowl Ventilator Cable				
60 01 (LHE-Note 22.014-1 Type 1)	.....	1	311 4022	
CONTROL, Cowl Ventilator Cable (Less Cables)				
60 10-20-80	13.017	1	320 1894	
ATTACHING PARTS				
Control To Dash				
SCREW, Tapping..... 60 10-20-80	17.671	2	800 0093	NA
BRACKET, Cowl Ventilator Control Cable				
60 01 (WST)(WAT)	.....	1	313 6640	
60 01 (WOD)	6.357	1	313 0969	

Copyright 1963 American Motors Corp.

GROUP NO. — DESCRIPTION — YEAR and MODEL	PRIMARY GROUP NO.	PER CAR	PART NO.	CODE
ATTACHING PARTS Bracket To Dash				
SCREW, Machine..... 60 01	17.610	2	G445615	NA
WASHER, Lock..... 60 01	17.824	2	G115548	NA
NUT, Hexagon..... 60 01	17.406	2	G103025	NA
KNOB, Cowl Ventilator Control Lever				
60 10-20-80	13.017	1	344 0556	
ATTACHING PARTS Knob To Control Lever				
SCREW, Machine..... 60 10-20-80	17.590	1	G134168	NA
BRACKET, Heater Air Control Cable Clamp				
60 01 (OHV): 60 01 (LHE-Note 22.014-1 Type 2)	.....	1	315 9648	
CLAMP, Heater Control Cable				
60 01-10-20-80	.....	1	313 0267	
ATTACHING PARTS Clamp To Control				
SCREW, Tapping..... 60 10-20-80	17.654	1	G162246	NA
GROMMET, Cowl Ventilator Cable (In Dash Panel)				
60 10-20-80	.....	1	438 8864	
ESCUTCHEON, Heater And Cowl Ventilator Control				
60 10-20-80	13.017	1	344 0804	
ATTACHING PARTS Escutcheon To Dash Panel				
NUT, Self Threading ... 60 10-20-80 ***(Replaces 343 5050)***	7.230	4	400 0401	
CLAMP, Cable To Heater Box				
60 10-20-80	13.017	1	320 2139	
22.023 DAMPER, Cowl Ventilator				
60 01 (LHE-Note 22.014-1 Type 1)	.....	1	313 6531	
60 01 (OHV): 60 01 (LHE-Note 22.014-1 Type 2)	.....	1	315 9639	
60 10-20-80	.....	1	315 2158	
ATTACHING PARTS Rod To Damper				
SCREW, Slotted..... 60 01 (LHE-Note 22.014-1 Type 1)	17.616	2	G155103	NA
SCREW, Machine..... 60 01 (OHV): 60 01 (LHE-Note 22.014-1 Type 2) ...	17.598	2	G188749	NA
WASHER, Lock..... 60 01	17.820	2	G122158	NA
WASHER, Lock..... 60 10-20-80	17.826	2	G178388	NA
SEAL, Cowl Ventilator Damper				
60 01 (OHV): 60 01 (LHE-Note 22.014-1 Type 2)	.....	1	315 9640	

Copyright 1963 American Motors Corp.

GROUP NO. — DESCRIPTION — YEAR and MODEL		PRIMARY GROUP NO.	PER CAR	PART NO.	CODE
FLAP, Cowl Ventilator Damper Door					
60 10-20-80 (LAC)		.....	1	342 3513	
FILTER, Dash Panel Ventilator Opening (Less Heater)					
60 10-20-80		.....	2	342 3542	
CLIP, Dash Panel Ventilator Opening Filter (Less Heater)					
60 10-20-80		3.615	4	310 8634	
22.027 MOTOR, Windshield Wiper					
60 01		.....	1	343 1790	
61 Thru 63 01	***(Replaces 344 6717, 346 7299)***	.....	1	350 5354	
64-65 01 (WVW)		.....	1	350 0548	
64-65 01 (WEW)		.....	1	350 0549	
60-61 10-20-80		.....	1	344 0963	
62 10-80		.....	1	348 6846	
63 Thru 65 10-80 (WVW)		.....	1	349 2500	
63-64 10-80 (WEW-Note 22.027-2)		.....	1	349 0391	
65 10-80 (WEW-Note 22.072-2)		.....	1	354 2658	
ATTACHING PARTS					
Motor To Bracket					
SCREW, Machine.....	60 01	17.610	2	G451271	NA
SCREW, Machine.....	64 01 (WEW): 63-64 10-80 (WEW)	17.614	3	G131375	NA
WASHER, Plain.....	64-65 01 (WEW): 63 Thru 65 10-80 (WEW-Inner)	17.814	3	800 0175	NA
WASHER, Plain.....	64-65 01 (WEW): 63 Thru 65 10-80 (WEW-Outer) ***(Replaces 800 0143)***	17.814	3	400 1083	
SEAL, Rubber.....	64-65 01 (WEW): 63 Thru 65 10-80 (WEW)	.....	1	448 1005	
GROMMET, Rubber.....	64-65 01 (WEW): 63 Thru 65 10-80 (WEW)	.....	3	448 1006	
Motor To Dash Panel					
SCREW, Tapping.....	61 Thru 63 01 (LAC-6 Req.)(WAC-4 Req.)	17.660	AR	G161895	NA
SCREW, Tapping.....	64-65 01	3.165	4	400 0478	
SCREW, Spinlock	61-62 10-20-80 (2 Req.): 63 Thru 65 10-80 (4 Req.)	.....	AR	400 0071	
NUT, Nylon.....	61-62 01	.....	4	344 7017	
NUT, Nylon.....	63 01	14.108	4	400 0141	
BRACKET, Windshield Wiper Motor Mounting					
63 Thru 65 10-80 (WEW)		.....	1	448 0979	#
ATTACHING PARTS					
Bracket To Dash Panel					
SCREW, Spinlock	63 Thru 65 10-80 (WEW)	.....	3	400 0071	
SEAL, Windshield Wiper Motor To Panel					
64-65 01		.....	1	350 0556	

NOTE 22.027-1: Two Types of Motors were used on the 63 01 (LHE-LHD).
Type 1: Has a nipple which fits a 5/16" O.D. Tube.
Type 2: Has a nipple which fits a 1/4" O.D. Tube.

NOTE 22.027-2: For Components of Electric Wiper Motor Refer to Groups 22.200 Thru 22.254.

Copyright 1963 American Motors Corp.

GROUP NO. — DESCRIPTION — YEAR and MODEL	PRIMARY GROUP NO.	PER CAR	PART NO.	CODE
PLATE, Windshield Wiper Motor Mounting				
64-65 01 (WEW)	.....	1	350 0615	
ATTACHING PARTS Plate To Dash Panel				
SCREW, Tapping..... 64-65 01 (WEW) ***(Replaces 800 0195)***	17.671	4	G456766	
SEAL, Windshield Wiper Motor Mounting Bracket				
61 Thru 63 01	.....	1	344 6787	
63 Thru 65 10-80	.....	1	347 2876	
22.030 RETAINER, Windshield Wiper				
60 01: 60 Thru 62 10-20-80	.....	1	436 8314	
22.038 CONTROL, Windshield Wiper				
60 01	.....	1	343 1803	
61 Thru 63 01 (LHD)	.....	1	344 6682	
64-65 01 (LHD-WVW)	.....	1	350 0557	
64-65 01 (WEW)	.....	1	350 0559	
60 10-20-80 (LHD)	.....	1	344 6030	
61 10-20-80 (LHD)	.....	1	345 7791	
62 10-80 (LHD)	.....	1	346 2110	
63 10-80 (LHD-WVW)	.....	1	347 2888	
63-64 10-80 (WEW)	.....	1	448 0878	
64 10-80 (LHD-WVW)	.....	1	352 8140	
65 10-80 (LHD-WVW)	.....	1	351 6370	
65 10-80 (LHD-WEW)	.....	1	320 5763	
61 Thru 63 01 (RHD)	.....	1	344 6683	
64-65 01 (RHD-WVW)	.....	1	350 0558	
60 10-20-80 (RHD)	.....	1	345 0823	
61 10-20-80 (RHD)	.....	1	345 7793	
62 10-80 (RHD)	.....	1	346 2111	
63 10-80 (RHD-WVW)	.....	1	347 2889	
64-65 10-80 (RHD-WVW)	.....	1	352 8141	
65 10 (RHD-WEW)	.....	1	320 6704	
ATTACHING PARTS Control To Instrument Panel				
SCREW, Tapping..... 63 10-80 (WVW)	17.660	2	G161869	NA
SCREW, Tapping..... 63 Thru 65 10-80 (WEW)	13.017	2	400 0616	
WASHER, Plain..... 65 10-80 (WEW)	.....	1	400 1666	
NUT, Round..... 65 10-80	3.145	1	400 0056	
GROMMET, Windshield Wiper Control				
61 Thru 63 01 ***(Replaces 348 9923)***	.....	1	345 8043	
60 Thru 63 10-20-80 (WVW)	3.163	1	436 5163	
ESCUTCHEON, Windshield Wiper Control				
64-65 01	.....	1	350 9536	
60-61 10-20-80	22.100	1	344 0788	
65 10 (LHD-WEW)	.....	1	351 6766	
65 10 (LHD-WVW-Except Marlin)	.....	1	351 6372	
65 50 (Marlin-LHD-WVW): 65 80 (LHD-WVW)	.....	1	351 6375	
65 80 (LHD-WEW)	.....	1	351 6759	
FERRULE, Windshield Wiper Control Mounting				
63-64 10-80: ***65 10 (RHD)***	3.150	1	400 0145	

Copyright 1963 American Motors Corp.

GROUP NO. — DESCRIPTION — YEAR and MODEL	PRIMARY GROUP NO.	PER CAR	PART NO.	CODE
ATTACHING PARTS Ferrule To Bezel				
NUT, Spring..... 63-64 10-80: ***65 10 (RHD)***	13.017	1	400 0130	
SHAFT, Electric Windshield Wiper Control				
63 10-80	.....	1	448 0879	
64 10-80	.....	1	448 1944	
ATTACHING PARTS Shaft To Control				
SCREW, Set..... 63 Thru 65 10-80 (WEW)	17.638	1	G217507	NA
BREAKER, Electric Windshield Wiper Control Circuit				
(5 Amp) 65 01-10-80 (WEW)	.....	1	317 9910	
(6 Amp) 64-65 01: 63 Thru 65 10-80	.....	1	349 0387	
ATTACHING PARTS Breaker To Control				
NUT, Hexagon..... 64-65 01 (WEW): 63 Thru 65 10-80 (WEW)	17.412	2	G134530	NA
22.039 KNOB, Windshield Wiper Control				
60 01	.....	1	343 2305	
61 01 (Gray)	.....	1	346 0251	
61 Thru 63 01 (Black)	.....	1	341 6973	
64-65 01...(Incl. Set Screw)	.....	1	350 9461	
60 10-20-80...(Incl. Set Screw)	.....	1	344 0598	
61-62 10-20-80...(Incl. Set Screw)	.....	1	345 7797	
63 10-80 (WVW)...(Incl. Set Screw)	13.080	1	348 2942	
63 10-80 (WEW)	13.080	1	349 0019	
64-65 10-80 (WVW)...(Incl. Set Screw)	.....	1	350 9541	
64-65 10-80 (WEW)...(Incl. Set Screw)	.....	1	350 9540	
ATTACHING PARTS Knob To Control				
SCREW, Set..... 64-65 01: 60 Thru 63 10-20-80 ***(Replaces G9400811)***	17.638	1	G435146	
SCREW, Set..... 64-65 10-80	17.640	1	G147450	NA
22.041 NUT, Windshield Wiper Control Holding				
60 01	.....	1	343 9368	
61 Thru 65 01 ***(Replaces 312 8820)***	3.145	1	400 0056	
60-61 10-20-80 ***(Replaces 434 0946)(Use 400 0057)***	.....	1	436 4615	
62 10-80	.....	1	400 0057	
22.043 BLADE, Windshield Wiper (Incl. Element)				
60 01	.....	2	343 1797	
61 01 (Note 22.043-3 Type 1)	.....	2	344 8492	
61 01 (Note 22.043-3 Type 2): 62-63 01	.....	2	346 0606	#
64-65 01: 63 Thru 65 10-80	.....	2	349 0367	
60-61 10-20: 60 80 (Note 22.043-1) ***(Replaces 344 6033, 345 7775)***	.....	2	346 0555	#
62 10-80	.....	2	348 7519	
60 80 (Note 22.043-2): 61 80 ***(Replaces 345 1766, 345 7774, 346 0556)***	.....	1	348 7519	

NOTE 22.043-1: On Model 60 80 used prior to Body No. 36902.
NOTE 22.043-2: On Model 60 80 used beginning with Body No. 36902.
NOTE 22.043-3: Two Types of Blades were used on the 61 01 series. They can be identified as follows:
Type 1: Blade must be replaced as a complete unit.
Type 2: Blade has a replaceable Rubber Element.

Copyright 1963 American Motors Corp.

GROUP NO. — DESCRIPTION — YEAR and MODEL	PRIMARY GROUP NO.	PER CAR	PART NO.	CODE
ELEMENT, Windshield Wiper Blade				
61 Thru 63 01 (Note 22.043-3 Type 2)	.....	2	346 0607	
64-65 01: 62 Thru 65 10-80 ***(Replaces 348 7520)***	.....	2	349 0368	
61 10-20-80 ***(Use 349 0368)***	.....	2	346 0557	
22.044 ARM, Windshield Wiper				
(Left) 60 01	.....	1	343 1795	
(Left) 61 01 (Note 22.043-3 Type 1)	.....	1	344 6795	
(Left) 61 01 (Note 22.043-3 Type 2): 62 01 ***(Use 346 4451)***	.....	1	346 0605	#
(Left) 63 01	.....	1	346 4451	
(Left) 64-65 01	.....	1	350 0555	
(Left) 60-61 10-20	.....	1	344 6041	
(Left) 62 10-80: 60 80 (Note 22.043-2): 61 80 ***(Replaces 345 1765)***	.....	1	348 6883	#
(Left) 63 Thru 65 10-80	.....	1	347 2883	
(Left) 60 80 (Note 22.043-1)	.....	1	344 3751	
(Right) 60 01	.....	1	343 1796	
(Right) 61 01 (Note 22.043-3 Type 1)	.....	1	344 6794	
(Right) 61 01 (Note 22.043-3 Type 2): 62-63 01 ***(Replaces 346 0604)***	.....	1	346 4450	#
(Right) 64-65 01	.....	1	350 0554	
(Right) 60-61 10-20	.....	1	344 6040	
(Right) 62 10-80: 60 80 (Note 22.043-2): 61 80 ***(Replaces 345 1764)***	.....	1	348 6882	#
(Right) 63 Thru 65 10-80	.....	1	347 2882	
(Right) 60 80 (Note 22.043-1)	.....	1	344 3750	
22.047 BODY, Windshield Wiper Pivot Shaft				
(Left) 60 01	.....	1	343 1793	
(Left) 61 Thru 63 01 ***(Replaces 344 6713)***	.....	1	346 7297	
(Left) 64-65 01 (WVW)	.....	1	350 0551	
(Left) 64-65 01 (WEW)	.....	1	448 1281	
(Left) 60-61 10-20-80	.....	1	344 6035	
(Left) 62 10-80	.....	1	348 6847	
(Left) 63 Thru 65 10-80 (WVW)	.....	1	347 2879	
(Left) 63 Thru 65 10-80 (WEW)	.....	1	448 0889	
(Right) 60 01	.....	1	343 1794	
(Right) 61 Thru 63 01	.....	1	344 6712	
(Right) 64-65 01 (WVW)	.....	1	350 0550	
(Right) 64-65 01 (WEW)	.....	1	448 1280	
(Right) 60-61 10-20-80	.....	1	344 6034	
(Right) 62 10-80	.....	1	348 6848	
(Right) 63 Thru 65 10-80 (WVW)	.....	1	347 2878	
(Right) 63 Thru 65 10-80 (WEW)	.....	1	448 0888	
ATTACHING PARTS				
Body To Cowl Ventilator Panel				
SCREW, Hexagon ..... 63 Thru 65 10-80	23.098	4	400 0572	
WASHER, Chrome ..... 61 Thru 65 01: 63 Thru 65 10-80	.....	2	344 6603	
WASHER, Leather ..... 61 01 ***(Discontinued)***	.....	2	344 6599	
WASHER, Pivot 61-62 10-20-80	.....	2	400 0072	
NUT, Octagon 60-61 01-10-20-80	.....	2	343 8498	
NUT, Octagon ..... 62 Thru 65 01-10-80	.....	2	400 0069	
NUT, Round 60 01: 60-61 10-20-80	.....	2	341 0262	
NUT, Round 62 10-80	.....	2	400 0426	
Body To Motor				
CLIP ..... 61 Thru 65 01: 63 Thru 65 10-80 ***(Replaces 346 4500)***	.....	1	349 2542	
Body To Body				
CLIP ..... 64-65 01 (WVW): 63 Thru 65 10-80 (WVW)	.....	1	349 2542	

Copyright 1963 American Motors Corp.

GROUP NO. — DESCRIPTION — YEAR and MODEL	PRIMARY GROUP NO.	PER CAR	PART NO.	CODE
GASKET, Windshield Wiper Pivot Shaft				
61 Thru 63 01	.....	2	400 0214	
GROMMET, Windshield Wiper Pivot Shaft				
60 Thru 63 01: 60 Thru 62 10-20-80	.....	2	343 8524	
BUSHING, Windshield Wiper Pivot Shaft Grommet				
61 Thru 63 01: 60 Thru 62 10-20-80	.....	2	320 6765	
SPACER, Windshield Wiper Pivot Shaft				
60 01-10-20-80	.....	2	343 8514	
61-62 10-20-80	.....	2	344 7654	
63 Thru 65 10-80	.....	2	347 2701	
22.050 TUBE, Cylinder Head To Pump (Vacuum Windshield Wiper)				
60 01 (LHE)	.....	1	315 5497	
60 01 (OHV-At Head)	.....	1	315 6568	
61 01 (LHD-OHV-At Head)	.....	1	316 1143	
61-62 01 (LHD-OHV-At Pump): 61-62 10 (At Pump): ***64 10 (RHD-OHV-196)***	4.160	1	315 5856	
61-62 01 (RHD)	.....	1	316 1498	
62 01 (LHD-LHE)	.....	1	316 5595	#
62 01 (LHD-OHV-At Head): 62 10 (At Head)	.....	1	316 3365	
60 10 (At Pump)	.....	1	315 6569	
61 10	.....	1	316 2001	
TUBE, Cylinder Head To Hose (Vacuum Windshield Wiper)				
63 01 (LHD-LHE-5/16" O. D.)	.....	1	316 9436	#
63 01 (LHD-LHE-1/4" O. D.)	.....	1	316 7836	#
63 01 (LHE-RHD)	.....	1	316 1498	
63 01 (OHV): 63 10	.....	1	316 3365	
64-65 01 (LHE)	.....	1	317 1796	
64-65 01 (OHV): 64 10 (OHV-196)	.....	1	317 3249	
TUBE, Manifold To Pump (Vacuum Windshield Wiper)				
63 Thru 65 10-80 (V8)	.....	1	316 7978	
64 10 (OHVC-232): 65 10 (OHV-232-Note 22.050-2)	.....	1	317 4329	
61-62 20-80	.....	1	315 9929	
65 10 (OHV-199): 65 10 (OHV-232-Note 22.050-3): 65 80 (OHVC-232)	.....	1	317 7222	#
TUBE, Pump To Hose (Vacuum Windshield Wiper)				
60 01 (LHE)	.....	1	315 5516	
60 01 (OHV): 61 01-10 (OHVC): 62 01 (OHV) ***(Replaces 315 9862)***	.....	1	316 5596	
61-62 01 (LHE)	.....	1	316 0959	
65 01-80 (OHV-232): 65 10 (OHV-232-Note 22.050-3)	.....	1	317 7669	
65 10 (OHV-232-Note 22.050-2)	.....	1	317 4241	
HOSE, Pump To Wiper Motor (Vacuum Windshield Wiper)				
60 01 ***(Ref. Pr. List)***	.....	1	437 3381	
60 10 (Less Heater-1 Req.): 60 20-80 (2 Req.)	.....	AR	315 7935	
60 10 (With Heater) ***(Ref. Pr. List)***	.....	2	343 7624	

NOTE 22.050-1: Two Types of Clips were used on the 63 01 (LHE-LHD).
Type 1: Used for a Tube with a 5/16" O. D.
Type 2: Used for a Tube with a 1/4" O. D.
NOTE 22.050-2: Used prior to Engine Code No. 608L04.
NOTE 22.050-3: Used beginning with Engine Code No 608L04.

Copyright 1963 American Motors Corp.

GROUP NO. — DESCRIPTION — YEAR and MODEL	PRIMARY GROUP NO.	PER CAR	PART NO.	CODE
HOSE, Tube To Pump (Vacuum Windshield Wiper)				
60 Thru 62 01 (1/4" O. D. - Order In Feet): 63 01 (LHE-LHD-1/4" O. D. - Order In Feet)	.....	AR	320 2249	
60 Thru 65 01 (5/16" O. D. - Order In Feet): 63 01 (LHE-LHD-5/16" O. D. - Order In Feet): 60 Thru 65 10-20-80 (Order In Feet)	.....	AR	320 2250	
ELBOW, Tube To Head (Vacuum Windshield Wiper)				
60 01-10 (OHV): 63 01 (OHV-LHD): 65 01: 60 20-80: 63-64 10-80	17.218	1	G137422	
63 01 (LHE-RHD)	17.218	1	G137421	
ELBOW, Tube To Manifold (Vacuum Windshield Wiper)				
60 01 (LHE): 65 10-80 (V-8)	17.218	1	G137422	
65 01 (OHVC-232-LPB): 64-65 10 (OHVC-232-LPB): 65 80 (OHVC-232-LPB)	.....	1	317 5858	
ELBOW, Tube To Pump (Vacuum Windshield Wiper)				
61-62 01 (OHV-5/16-90 Deg.): 61-62 20-80: ***62 10 (RHD):*** 64 10	17.218	1	G137422	
62 01 (1/4-90°)	17.218	1	G137421	
ELBOW, Head To Pump (Vacuum Windshield Wiper)				
61 01 (LHE-WST)(LHE-WOD)	17.218	1	G137421	
PLUG, Tube To Head Elbow (In Pump)(Vacuum Windshield Wiper)				
64 10 (OHVC-232-WPB-WFGS-WEW)(V8-327-WEW): 65 10-80 (V8-WEW)	.....	1	400 0711	
CONNECTOR, Tube To Carburetor (Vacuum Windshield Wiper)				
60 Thru 62 01 (LHE)	17.160	1	G137404	
61 01 (LHD)	17.160	1	G137405	
CONNECTOR, Tube To Head (Vacuum Windshield Wiper)				
63 01 (LHE-LHD-5/16" O. D.)	17.160	1	G137404	
63 01 (LHE-LHD-1/4" O. D.)	17.160	1	G137405	
CONNECTOR, Tube To Pump (Vacuum Windshield Wiper)				
60 01 (LHE-2 Req.): 61 01 (LHD-2 Req.): 62 01 (LHD-1 Req.)	17.160	AR	G137405	
65 01 (OHVC-232): 61-62 10 (LHD): 61 Thru 64 20-80: 64 10	17.160	1	G137406	
61-62 10 (RHD)	17.216	1	G116341	
BRACKET, Windshield Wiper Vacuum Tube Support				
65 01-10-80 (OHV-199-WVW)(OHV-232-WVW)	13.050	1	317 9134	#
CONNECTOR, Hose To Hose (Vacuum Windshield Wiper				
60 10-20-80	.....	1	345 1732	
63 01 (LHE)	.....	1	317 0302	
TEE, Head To Pump (Vacuum Windshield Wiper)				
61 01 (LHE-WAT)	17.754	1	G143482	
CLIP, Vacuum Tubes To Fuel And Brake Tubes (Vacuum Windshield Wiper)				
60 20-80 (2 Req.): 61 80 (1 Req.): 63-64 10-80 (V8)	3.312	AR	79 394	
CLIP, Hose To Pump And Tube (Vacuum Windshield Wiper)				
61 01	3.048	1	313 7319	
63 01 (LHE-LHD): 64 01 (LHE): 63 10 ***(Replaces 316 8851)***	23.028	1	400 0021	

Copyright 1963 American Motors Corp.

GROUP NO. — DESCRIPTION — YEAR and MODEL	PRIMARY GROUP NO.	PER CAR	PART NO.	CODE
CLIP, Vacuum Tube To Front Suspension Bracket				
64 10 (OHVC-232: 65 10 (Six): 65 80 (OHVC-232)	.....	1	317 5641	
22.056 PANEL, Instrument				
60 01 (Less Louvers)	.....	1	342 5841	
61 Thru 63 01 (LHD)	.....	1	344 6816	
64 01 (LHD)	.....	1	350 0633	
65 01 (LHD)	.....	1	354 1544	
61 Thru 63 01 (RHD)	.....	1	344 6817	
64-65 01 (RHD)	.....	1	350 1448	
60 10-20-80 (LHD-WST-LAC)(LHD-WOD-LAC)	.....	1	344 0442	
60 10-20-80 (LHD-WAT-LAC)	.....	1	344 9848	
60 10-20-80 (LHD-WAT-WAC)	.....	1	447 8570	
60 10-20-80 (RHD-WST)(RHD-WOD)	.....	1	344 0443	
61 10-20-80 (LHD-WST-LAC)(LHD-WOD-LAC)	.....	1	344 7570	
61 10-20-80 (LHD-WAT-LAC)	.....	1	447 8680	
61 10-20-80 (LHD-WAT-WAC)	.....	1	447 8681	
61 10-20-80 (RHD-WST)(RHD-WOD)	.....	1	344 8015	
61 10-20-80 (RHD-WAT)	.....	1	447 8682	
62 10-80 (LHD-WST-LAC)(LHD-WOD-LAC)	.....	1	346 2052	
62 10-80 (LHD-WST-WAC)(LHD-WOD-WAC)	.....	1	346 2054	
62 10-80 (RHD-WST)(RHD-WOD)	.....	1	346 2056	
62 10-80 (LHD-WAT-LAC)	.....	1	447 9418	
62 10-80 (LHD-WAT-WAC)	.....	1	447 9419	
62 10-80 (RHD-WAT)	.....	1	447 9420	
63 10-80 (LHD-LAC)	.....	1	349 0164	
63 10-80 (LHD-WAC)	.....	1	349 0166	
63 10-80 (RHD)	.....	1	349 0192	
64 10 (LHD-LAC)	.....	1	352 4579	
64 10 (LHD-WAC)	.....	1	352 4581	
64-65 10-80 (RHD)	.....	1	352 4590	
65 10 (LHD)(Except Marlin)	.....	1	353 9469	#
65 50 (Marlin): 65 80 (LHD)	.....	1	353 9468	#
64 80 (LHD)	.....	1	351 3978	
ATTACHING PARTS				
Panel To Cowl Top				
SCREW, Tapping..... 65 01: 64 01-10-80	17.660	8	G161901	NA
SCREW, Tapping..... 60 Thru 63 10-20-80	17.660	8	G161869	NA
SCREW, Tapping..... 65 10-80	17.660	8	G161901	NA#
Panel To Brace (At Dash Panel)				
SCREW, Machine..... 62-63 01 (LHD)	17.610	1	G157728	NA
BOLT, Hexagon ..... ***62 01 (RHD)***	17.038	1	G181593	NA
BOLT, Hexagon ..... ***63 01 (RHD)***	17.038	1	G181595	NA
WASHER, Plain..... ***62-63 01 (RHD)***	17.814	1	G120393	NA
WASHER, Lock..... 62 01 (LHD)	17.820	1	G120214	NA
WASHER, Lock..... ***62-63 01 (RHD)***	17.820	1	G103320	NA
WASHER, Lock..... 63 01 (LHD)	17.820	1	G120380	NA
Panel To Brace (At Panel)				
SCREW, Machine..... 62-63 01 (LHD)	17.610	1	G157728	NA
SCREW, Machine..... ***62-63 01 (RHD)***	17.616	1	G155358	NA
WASHER, Plain..... 62-63 01 (LHD)	17.814	1	G120392	NA
WASHER, Plain..... ***62-63 01 (RHD)***	17.826	1	G454763	NA
NUT, Hexagon..... 62-63 01 (LHD)	17.412	1	G271172	NA
NUT, Hexagon..... ***62-63 01 (RHD)***	17.406	1	G120375	
Panel To Dash				
SCREW, Tapping..... 61 Thru 63 01	17.660	7	G161869	NA

Copyright 1963 American Motors Corp.

GROUP NO. — DESCRIPTION — YEAR and MODEL		PRIMARY GROUP NO.	PER CAR	PART NO.	CODE
	Panel To Pillar				
SCREW, Tapping	61 01	.....	4	400 0058	
SCREW, Machine	62-63 01	.....	4	400 0224	
	Panel To Pillar (Lower-Left)				
STUD	60 Thru 62 10-20-80	.....	2	400 0059	
SCREW, Tapping	60-61 10-20-80	17.660	2	G161869	NA
WASHER, Plain	60 Thru 62 10-20-80	17.814	2	800 0451	
WASHER, Lock	60 Thru 62 10-20-80	17.820	2	G120380	NA
NUT, Hexagon	60 Thru 62 10-20-80	17.406	2	G120375	
	Panel To Pillar (Lower-Right)				
SCREW, Hexagon	60 Thru 62 10-20-80 (3/4" Long)	.....	2	400 0058	
SCREW, Tapping	62 10-80 (5/8" Long)	17.660	2	G161869	NA
NUT, Hexagon	60 Thru 62 10-20-80	17.406	2	G120375	
	Panel To Uniside (Inner)				
SCREW, Machine	64-65 01-10-80	23.020	2	400 0608	
SCREW, Machine	63 10-80 ***(Replaces 800 0019)***	17.626	2	400 0918	
NUT, Speed	64-65 01: 63-64 10-80: 65 10-80	23.006	2	400 0567	
	BRACE, Instrument Panel To Dash Panel				
61 Thru 63 01 (LHD)		.....	1	345 8809	
64 01 (LHD-WAC)		.....	1	352 2114	
62-63 01 (RHD-Hand Brake Mounting-16 1/2" Long)		.....	1	316 5842	
62-63 01 (RHD-8" Long)		.....	1	316 5099	
62-63 01 (WES-WST-Tow Start Cable Bracket)(WES-WOD-Tow Start Cable Bracket)		.....	1	316 6520	
61-62 10-80 (RHD-At Hand Brake)		.....	1	316 2331	
	ATTACHING PARTS				
	Brace To Dash				
BOLT, Hexagon	60-61 01	17.038	1	G106319	NA
BOLT, Hexagon	***62 01 (RHD)***	17.038	1	G181595	NA
SCREW, Machine	60 01	17.610	1	G157728	NA
SCREW, Tapping	64-65 01 (WAC)	3.349	1	400 0720	
SCREW, Machine	61 10-20-80	17.626	1	G187745	NA
WASHER, Lock	60 01	17.820	1	G103319	NA
WASHER, Lock	62 01	17.820	1	G120214	NA
NUT, Hexagon	61 10-20-80	17.412	1	G271171	NA
	Brace To Instrument Panel				
SCREW, Machine	60 01	17.610	1	G157728	NA
SCREW, Tapping	64-65 01 (WAC)	17.671	1	G274773	NA
WASHER, Plain	60 01	17.814	1	G103339	NA
NUT, Hexagon	60 01	17.412	1	G271171	NA
	Cable Bracket Brace To Instrument Panel				
SCREW, Tapping	62-63 01 (WES-WST)(WES-WOD)	17.660	1	G161901	NA
BOLT, Hexagon	63 01 (WES-WST)(WES-WOD)	17.038	1	G181593	NA
WASHER, Lock	62-63 01 (WES-WST-#10 Dia.)(WES-WOD-#10 Dia.)	17.826	1	G178378	NA
WASHER, Lock	63 01 (WES-WST-5/16" Dia.)(WES-WOD-5/16" Dia.)	17.820	1	G120214	NA
	Cable Bracket To Bracket				
BOLT, Hexagon	62 01 (WES-WST)(WES-WOD)	17.038	1	G181593	NA
WASHER, Lock	62 01 (WES-WST)(WES-WOD)	17.820	1	G120214	NA
NUT, Hexagon	62 01 (WES-WST)(WES-WOD)	17.406	1	G120368	

Copyright 1963 American Motors Corp.

GROUP NO. — DESCRIPTION — YEAR and MODEL	PRIMARY GROUP NO.	PER CAR	PART NO.	CODE
Cable Bracket To Dash				
SCREW, Tapping..... 62 01 (WES-WST)(WES-WOD)....*(Replaces 800 0095)*	17.671	2	G456766	
BRACE, Pedal Bracket To Dash Panel				
60 Thru 63 10-80 (RHD)	.....	1	316 0341	
ATTACHING PARTS				
Brace To Dash				
BOLT, Hexagon ..... ***60 10-80 (RHD)***	17.038	1	G181339	NA
SCREW, Tapping..... ***61-62 10-80 (RHD)***.....	.....	1	400 0032	
WASHER, Lock ..... ***60 10-80 (RHD)***	17.820	1	G103320	NA
NUT, Hexagon..... ***60 10-80 (RHD)***	17.406	1	G103025	NA
ANTI-SQUEAK, Instrument Panel To Cowl Side				
61 Thru 63 01.....	.....	2	346 3578	
60 10-20-80: 61-62 10-20-80 (LHD-LAC).....	.....	2	345 0896	
BRACKET, Instrument Panel To Dash Brace				
62 01 (WST-WES)(WOD-WES).....	.....	1	316 6367	
BEZEL, Instrument Panel Steering Column Opening				
65 10 (550-LHD-WST)(550-LHD-WOD-LAW)(550-LHD-WOD-WFGS-LAW) (550-LHD-WAT-WFGS-LAW)	.....	1	353 0452	
65 10 (550-LHD-WAT-WCGS)(660-770-WST-LAW)(660-770-LHD-WOD-LAW) (660-770-WOD-WFGS-LAW): 65 50 (Marlin-LHD-WST-LAW) (Marlin-LHD-WOD-LAW)(Marlin-WOD-WFGS-LAW): 65 80 (LHD-WST-LAW)(LHD-WOD-LAW)(WAT-WOD-LAW)	.....	1	351 6796	
65 10-80 (LHD-WAW)	.....	1	353 0510	
ATTACHING PARTS				
Bezel To Instrument Panel				
SCREW, Tapping..... 65 10-80 (LHD)	17.655	2	G168590	NA
CLIP..... 65 10-80 (LHD-LAW)	7.537	2	400 1355	#
SEAL, Instrument Panel Steering Column Opening Bezel				
65 10-80 (LHD-WAT-LAW-Flat Type)	7.537	1	351 5419	
65 10-80 (LHD-WAT-LAW-Lip Type).....	7.537	1	351 6353	
FILLER, Instrument Panel To Uniside				
(T-342)(Left)	.....	1	348 7975	
(T-343)(Left)	.....	1	348 7977	
(T-344)(Left)	.....	1	348 7979	
(T-345)(Left)	.....	1	348 7983	
(T-346)(Left)	.....	1	348 7981	
(T-347)(Left)	.....	1	348 7985	
(T-351)(Left)	.....	1	348 7975	
(T-352)(Left)	.....	1	348 7975	
(T-362)(Left)	.....	1	348 7975	
(T-363)(Left)	.....	1	348 7977	
(T-364)(Left)	.....	1	348 7979	
(T-365)(Left)	.....	1	348 7983	
(T-366)(Left)	.....	1	348 7981	
(T-372)(Left)	.....	1	348 7975	

Copyright 1963 American Motors Corp.

GROUP NO. — DESCRIPTION — YEAR and MODEL	PRIMARY GROUP NO.	PER CAR	PART NO.	CODE
(T-373)(Left)	.....	1	348 7977	
(T-374)(Left)	.....	1	348 7979	
(T-375)(Left)	.....	1	348 7983	
(T-376)(Left)	.....	1	348 7981	
(T-377)(Left)	.....	1	348 7985	
(T-382)(Left)	.....	1	348 7975	
(T-383)(Left)	.....	1	348 7977	
(T-384)(Left)	.....	1	348 7979	
(T-385)(Left)	.....	1	348 7983	
(T-386)(Left)	.....	1	348 7981	
(T-392)(Left)	.....	1	348 7975	
(T-393)(Left)	.....	1	348 7977	
(T-394)(Left)	.....	1	348 7979	
(T-395)(Left)	.....	1	348 7983	
(T-396)(Left)	.....	1	348 7981	
(T-396)(Right)	.....	1	348 7980	
(T-397)(Left)	.....	1	348 7985	
(T-342)(Right)	.....	1	348 7974	
(T-343)(Right)	.....	1	348 7976	
(T-344)(Right)	.....	1	348 7978	
(T-345)(Right)	.....	1	348 7982	
(T-346)(Right)	.....	1	348 7980	
(T-347)(Right)	.....	1	348 7984	
(T-351)(Right)	.....	1	348 7974	
(T-352)(Right)	.....	1	348 7974	
(T-362)(Right)	.....	1	348 7974	
(T-363)(Right)	.....	1	348 7976	
(T-364)(Right)	.....	1	348 7978	
(T-365)(Right)	.....	1	348 7982	
(T-366)(Right)	.....	1	348 7980	
(T-372)(Right)	.....	1	348 7974	
(T-373)(Right)	.....	1	348 7976	
(T-374)(Right)	.....	1	348 7978	
(T-375)(Right)	.....	1	348 7982	
(T-376)(Right)	.....	1	348 7980	
(T-377)(Right)	.....	1	348 7984	
(T-382)(Right)	.....	1	348 7974	
(T-383)(Right)	.....	1	348 7976	
(T-384)(Right)	.....	1	348 7978	
(T-385)(Right)	.....	1	348 7982	
(T-386)(Right)	.....	1	348 7980	
(T-392)(Right)	.....	1	348 7974	
(T-393)(Right)	.....	1	348 7976	
(T-394)(Right)	.....	1	348 7978	
(T-395)(Right)	.....	1	348 7982	
(T-397)(Right)	.....	1	348 7984	
ATTACHING PARTS				
Filler To Uniside Inner				
SCREW, Tapping 63 10-80	17.660	1	G161790	NA
NUT, Hexagon ..... 63 01 (WES-WOD)(WES-WST)	17.406	1	G120368	NA
MASK, Instrument Panel Air Duct Opening (Less Heater)				
63 Thru 65 10-80	.....	2	351 0543	
ATTACHING PARTS				
Mask To Instrument Panel				
NUT, Stamped 63 10-80	17.428	4	G440491	NA

Copyright 1963 American Motors Corp.

GROUP NO. — DESCRIPTION — YEAR and MODEL	PRIMARY GROUP NO.	PER CAR	PART NO.	CODE
PLUG, Instrument Panel Thermostat Air Conditioning Hole				
63 10 (550): 63 80 (800)	17.494	1	G142019	
22.058 BOX, Glove				
60 01 (LAC)	.....	1	447 5663	
60 01 (WAC)	.....	1	343 2477	
61 Thru 63 01 (LHD-LAC)	.....	1	344 6584	
61 Thru 63 01 (LHD-WAC)	.....	1	344 6585	
61 Thru 63 01 (RHD)	.....	1	344 6546	
64 01 (LHD)...(Incl. Speed Nuts)	.....	1	350 9440	
64-65 01 (RHD)...(Incl. Speed Nuts)	.....	1	350 5911	
65 01 (LHD)...(Incl. Speed Nuts)	.....	1	352 3527	
60 10-20-80 (LHD): 61 10-20-80 (LHD-LAC): ***162 10 (CAN)***	.....	1	344 0520	
60 Thru 62 10-20-80 (RHD)	.....	1	344 0521	
62 10-80 (LHD-LAC)	.....	1	346 2635	
61-62 10-20-80 (LHD-WAC) ***(Replaces 344 7888)***	.....	1	346 9464	
63-64 10-80	.....	1	348 2239	
65 10-80 (LHD)	.....	1	354 2781	
65 10 (RHD)	.....	1	354 2780	#
163-164 10-80 (CAN)	.....	1	351 4908	
ATTACHING PARTS Box To Panel				
SCREW, Tapping..... 61-62 01 (LHD)	17.669	3	G445508	NA
SCREW, Tapping..... ***61 Thru 63 01 (RHD)***: 64-65 01: 60-61 10-20-80....	17.660	6	G161860	NA
SCREW, Tapping..... 63 01 (LHD): 63 10-80	17.669	3	G457002	NA
SCREW, Tapping..... 62 10-80	17.660	4	G161801	NA
SCREW, Tapping..... 64 10-80	13.017	4	400 0616	
NUT, Spring..... 61 01	17.426	1	G446955	NA
NUT, Speed..... 61-62 01 (LHD-3 Req.): 62 10-80 (LAC-4 Req.) (WAC-6 Req.)	.....	AR	400 0087	
NUT, Speed..... ***61 01 (RHD):*** 61 10-20-80 ***(Discontinued)***	.....	6	344 0547	
NUT, Speed..... ***62 01 (RHD): 62-63 01 (RHD-4 Req.):*** 64-65 01 (5 Req.): 65 10-80 (4 Req.)	.....	AR	400 0370	#
NUT, Speed..... 63 01 (LHD)	.....	3	400 0267	
PLUG, Glove Box Button				
62-63 01 (LHD)	27.038	1	400 0334	
LINING, Glove Box				
60 01	.....	1	343 9279	
PANEL, Glove Box Mounting				
60 01	.....	1	437 3235	
ATTACHING PARTS Panel To Instrument Panel				
SCREW, Tapping..... 60 01	17.660	8	G161894	NA
HANDLE, Glove Box				
60 01	.....	1	437 3000	
ATTACHING PARTS Handle To Box				
SCREW, Machine..... 60 01	17.598	2	800 0045	NA

Copyright 1963 American Motors Corp.

GROUP NO. — DESCRIPTION — YEAR and MODEL	PRIMARY GROUP NO.	PER CAR	PART NO.	CODE
22.060 DOOR, Glove Box				
61 Thru 63 01 (LHD)	.....	1	345 2914	
61 Thru 63 01 (RHD)	.....	1	345 2915	
64 01: 65 01 (LHD)	.....	1	350 1370	
65 01 (RHD)	.....	1	356 1665	
60 Thru 62 10-20-80 (LHD)	.....	1	447 8571	
60 Thru 62 10-20-80 (RHD)	.....	1	447 8572	
63-64 10-80: ***65 10 (RHD)***	.....	1	349 0130	
65 10-80 (LHD)	.....	1	351 6170	
HINGE, Glove Box				
61 Thru 63 01	.....	1	344 6574	
64-65 01	.....	1	350 0672	
60 Thru 62 10-20-80	.....	1	344 0548	
63-64 10-80: ***65 10 (RHD)***	.....	1	348 2224	
65 10-80 (LHD)	.....	1	351 6164	
ATTACHING PARTS				
Hinge To Door				
SCREW, Machine ..... 61 Thru 63 01	17.610	3	G455683	NA
SCREW, Machine 64-65 01	13.017	3	400 0616	
SCREW, Machine ..... 60 Thru 64 10-20-80: ***65 10 (RHD)***	17.610	3	G273434	NA
SCREW, Tapping ..... 65 10-80 (LHD)	17.671	3	G274773	NA
WASHER, Lock 64 01	17.822	3	G121752	NA
NUT, Clinch ..... ***65 10 (RHD)***	17.440	3	G127605	NA
Hinge To Support				
SCREW, Tapping ..... 61 Thru 63 01	17.660	3	G161895	NA
WASHER, Lock ..... 61 Thru 63 01	17.826	3	G178378	NA
Hinge To Instrument Panel				
SCREW, Tapping 60-61 10-20-80	17.671	3	800 0093	NA
SCREW, Tapping ..... 62 10-80: 65 10-80 (LHD)	17.671	3	G274773	NA
SCREW, Tapping ..... 64-65 01: 63-64 10-80 ..... ***(Replaces G273624)***	13.017	3	400 0616	
PROTECTOR, Glove Box (Rubber)				
61-62 01	22.058	1	346 3260	
NAMEPLATE, Glove Box Door				
("American") 61 Thru 63 01	.....	1	448 0662	
("American 330") 64-65 01	.....	1	448 1233	
("American 440") 64-65 01	.....	1	448 1232	
("American 440H") 64-65 01	.....	1	448 1234	
("Rambler") 61-62 10-20	22.103	1	345 8138	
("Classic 660") 63-64 10: ***65 10 (RHD)***	.....	1	448 0663	
("Classic 550") 65 10 (LHD-WAC)	.....	1	351 7130	
("Classic 660") 65 10 (LHD-WAC)	.....	1	351 7105	
("Classic 770") 63-64 10: ***65 10 (RHD)***	.....	1	448 0664	
("Classic 770") 65 10 (LHD-WAC)	.....	1	351 7106	
("Classic 770H") 65 10 (LHD-WAC)	.....	1	351 7469	
("Marlin") 65 50 (Marlin-WAC)	.....	1	353 0302	
("Ambassador") 61-62 80	22.103	1	345 8088	
("Ambassador 880") 63 80	.....	1	448 0665	
("Ambassador 880") 65 80 (LHD-WAC)	.....	1	351 7111	
("Ambassador 990") 63-64 80	.....	1	448 0666	
("Ambassador 990") 65 80 (LHD-WAC)	.....	1	351 7112	
("Ambassador 990H") 64 80	.....	1	448 1163	
("Ambassador 990H") 65 80 (LHD-WAC)	.....	1	351 7144	

Copyright 1963 American Motors Corp.

GROUP NO. — DESCRIPTION — YEAR and MODEL	PRIMARY GROUP NO.	PER CAR	PART NO.	CODE
ATTACHING PARTS Name Plate To Glove Box				
CLIP ..... 61 Thru 63 01 (3 Req.): 61-62 10-20-80 (4 Req.): 63 10-80 (2 Req.): 64 10 (550-2 Req.)(660-2 Req.): 64 80 (2 Req.)	22.103	AR	400 0091	
CLIP ..... 64 10 (770): 64 80 (990): ***65 10 (RHD-770)***	.....	2	400 0671	
CLIP 64-65 01	12.125	2	437 7405	
CLIP ..... 65 10-80 (LHD-WAC): ***65 10 (RHD-660)*** ..... ***(Use 400 0091)***	.....	2	400 1352	#
MEDALLION, Glove Box Door				
65 10 (LHD-660-LAC)(LHD-770-LAC)	.....	1	353 0675	
ATTACHING PARTS Medallion To Glove Box Door				
CLIP ..... 65 10 (LHD-660-LAC)(LHD-770-LAC)	.....	2	400 1352	
MOULDING, Glove Box Door				
65 10 (LHD-770): 65 80 (LHD)	.....	2	351 6385	
ATTACHING PARTS Moulding To Glove Box Door				
CLIP ..... 65 10 (LHD-770): 65 80 (LHD)	.....	4	400 1352	
22.066 LINK, Glove Box Door Check				
60 Thru 62 10-20-80 (LHD)	.....	1	344 0836	
60 Thru 62 10-20-80 (RHD)	.....	1	345 1611	
63-64 10-80: ***65 10 (RHD)***	.....	1	348 2230	
64-65 01	.....	1	350 9432	
(Left) 61 Thru 63 01	.....	1	344 6577	
(Right) 61 Thru 63 01	.....	1	344 6576	
ATTACHING PARTS Link To Door				
SCREW, Tapping..... 61-62 01 (4 Req.): 63 01 (1 Req.): 61-62 10-20-80 (2 Req.): 64 10-80 (1 Req.)	12.078	AR	400 0398	
SCREW, Machine..... 60 10-20-80 (2 Req.): 63 10-80 (1 Req.)	17.610	AR	G451603	NA
SCREW, Tapping..... 64-65 01	17.660	2	G161860	NA
SCREW, Tapping..... 65 10-80: ***65 10 (RHD)***	.....	2	400 1442	
CABLE, Glove Box Door Check				
65 10-80	.....	1	353 0821	
ATTACHING PARTS Cable To Glove Box				
SCREW, Tapping..... 65 10-80	.....	1	400 1442	
SILENCER, Glove Box Door Check				
61 Thru 63 01: 61-62 10-20-80	.....	1	345 8917	
60 10-20-80	.....	1	342 1742	
64-65 01: 63-64 10-80: ***65 10 (RHD)***	.....	1	348 2231	
GROMMET, Glove Box Door Check				
60 10-20-80	.....	2	344 0076	

Copyright 1963 American Motors Corp.

GROUP NO. — DESCRIPTION — YEAR and MODEL	PRIMARY GROUP NO.	PER CAR	PART NO.	CODE
22.072 BUMPER, Glove Box Door				
60 01 ***(Replaces 435 0919)***	23.036	1	400 0314	
61 Thru 63 01: 64-65 01 (2 Req.):				
60 Thru 65 10-20-80 (1 Req.) ***(Replaces 342 2140)***	.....	2	400 0093	
22.073 LOCK ASSEMBLY, Glove Box (Ref. Note 22.073-1)				
(Regular) 60 01...(Incl. Keys)	.....	1	447 8608	
(Regular) 61 Thru 63 01: 60 Thru 62 10-20-80...(Incl. Keys)	.....	1	447 8588	
(Regular) 64 01...(Incl. Keys): 65 01 (220)(330)...(Incl. Keys)	.....	1	448 1740	
(Regular) 65 01 (440)(440H)...(Incl. Keys)	.....	1	448 2396	
(Regular) 63-64 10-80...(Incl. Keys): ***65 10 (RHD)...(Incl. Keys)***	.....	1	448 0811	
(Regular) 65 10-80 (LHD)...(Incl. Keys)	.....	1	448 2394	
(Special) 60 01 (Specify Key No.)	.....	1	447 8609	
(Special) 61 Thru 63 01: 60 Thru 62 10-20-80...(Incl. Keys)	.....	1	447 8589	
(Special) 64 01...(Incl. Keys)	.....	1	448 1741	
(Special) 65 01 (440)(440H)...(Incl. Keys)	.....	1	448 2397	
(Special) 63-64 10-80...(Incl. Keys): ***65 10 (RHD)...(Incl. Keys)***	.....	1	448 0812	
(Special) 65 10-80 (LHD)...(Incl. Keys)	.....	1	448 2395	
(Keyless) 62 Thru 65 01: 63 Thru 65 10	.....	1	346 1434	
CYLINDER, Glove Box Lock				
(Regular) 60 Thru 65 01-10-20-80...(Incl. Keys)	.....	1	447 8586	
(Special) 60 Thru 65 01-10-80 (Specify Key No.)	.....	1	447 8587	
ATTACHING PARTS Cylinder To Retainer				
SCREW, Machine..... 62 Thru 64 10-80	17.616	1	G186522	NA
SCREW, Machine..... 64-65 10-80	.....	1	400 1411	
CASE, Glove Box Lock (Key Type)				
60 Thru 65 01-10-20-80	.....	1	447 5616	
RETAINER, Glove Box Lock				
60 01	.....	1	437 3298	
61 Thru 63 01: 60 Thru 62 10-20-80	.....	1	344 0551	
64 01: 65 01 (220)(330)	.....	1	350 0694	
65 01 (440)(440H)	.....	1	351 7249	
63-64 10-80: ***65 10 (RHD)***	.....	1	348 2057	
65 10-80 (LHD)	.....	1	351 6382	
ATTACHING PARTS Retainer To Lock				
SCREW, Machine..... 60 Thru 65 01-10-20-80	17.616	1	G271085	NA
WASHER, Lock ..... 60 Thru 65 01-10-20-80	17.820	1	G131181	NA
ESCUTCHEON, Glove Box Door Lock				
61 Thru 63 01: 60 Thru 62 10-20-80	.....	1	344 0856	
64-65 01	.....	1	350 9433	
63 10-80	.....	1	348 2225	
64 10-80: ***65 10 (RHD)***	.....	1	352 0718	
65 10-80 (LHD)	.....	1	351 6384	
SPACER, Glove Box Door Lock Escutcheon				
65 01 (RHD)	.....	1	353 0856	

NOTE 22.073-1: Regular indicates Cylinder is not set to any specified key no.
Special indicates Cylinder is set to a specified key no.

Copyright 1963 American Motors Corp.

GROUP NO. — DESCRIPTION — YEAR and MODEL	PRIMARY GROUP NO.	PER CAR	PART NO.	CODE
KEY, Glove Box Door Lock				
(Blank) 60 Thru 65 01-10-20-80 (For Key Type)	23.085	2	344 5762	
(Coded) 60 Thru 65 01-10-20-80 (Specify Key No.)	23.085	2	447 8593	
22.075 STRIKER, Glove Box Lock				
60 01	.....	1	435 4407	
61 Thru 63 01: 60 Thru 64 10-20-80: ***65 10 (RHD)***	.....	1	342 1820	
64 01: 65 01 (220)(330)	.....	1	350 0676	
65 01 (440)(440H)	.....	1	351 7248	
65 10-80 (LHD)	.....	1	351 6383	
ATTACHING PARTS Striker To Instrument Panel				
SCREW, Tapping..... 61 01: 60-61 10-20-80 ***(Replaces 800 0107)***	17.671	2	400 1042	
SCREW, Tapping..... 62-63 01: 62 10-80	17.671	2	G9414261	NA
SCREW, Tapping..... 64-65 01: 63-64 10-80	17.669	2	G457002	NA
SCREW, Tapping 65 10-80	13.017	2	400 0616	
22.077 GRILLE, Instrument Panel Radio Speaker				
64 10 (Typhoon): 64 80	.....	1	320 5982	
(T-591)	.....	1	353 0101	
(T-593)	.....	1	353 0102	
(T-594)	.....	1	353 0103	
(T-595)	.....	1	353 0105	
(T-596)	.....	1	353 0106	
(T-597)	.....	1	353 0104	
(T-598)	.....	1	353 0101	
ATTACHING PARTS Grille To Pad				
BOLT (Incl. Clip)..... 65 50 (Marlin): 65 80 (LHD-990)(LHD-990 H)	.....	10	400 1419	
NUT..... 65 50 (Marlin): 65 80 (LHD-990)(LHD-990 H)	17.428	10	320 9550	
SCREEN, Instrument Panel Radio Speaker				
65 10-80 (LHD)	.....	1	351 6624	
64-65 01	.....	1	350 1389	
MASK, Instrument Panel Radio Speaker Grille (Less Radio)				
63 Thru 65 10-80 (RHD)	.....	1	348 2409	
65 10-80 (LHD)	.....	1	351 6625	
22.092 TRAY ASSEMBLY, Instrument Panel Ash Receiver				
60 01	.....	1	311 4706	
61 Thru 63 01	.....	1	344 8457	
64-65 01 ***(Replaces 350 9008)***	.....	1	353 5965	#
60 10-20-80	.....	1	344 0796	
61 10-20-80 (LHD-2 Req. -Note 22.092-1)***(RHD-1 Req. -Note 22.092-1)***	.....	AR	344 7587	
61 10-20-80 (LHD-2 Req. -Note 22.092-2)***(RHD-1 Req. -Note 22.092-2):*** 62 10-80 (LHD-2 Req.)***(RHD-1 Req.)***	.....	AR	346 6153	
63-64 10 (550): 63 80 (800)	.....	1	448 0267	
63-64 10 (660)(770): 63 80 (880)(990): 64 80	.....	2	448 0267	
65 10 (LHD-550)	.....	1	351 6491	
65 10 (LHD-660)(LHD-770): 65 80 (LHD)	.....	2	351 6491	

NOTE 22.092-1: Used prior to Body Serial no. 109252.
NOTE 22.092-2: Used beginning with Body Serial no. 109252.

Copyright 1963 American Motors Corp.

GROUP NO. — DESCRIPTION — YEAR and MODEL	PRIMARY GROUP NO.	PER CAR	PART NO.	CODE
COVER, Instrument Panel Ash Receiver Opening				
63-64 10 (550): 63 80 (800) ***(Replaces 349 2532)***	.....	1	351 1722	
65 10 (LHD-550)	.....	1	351 6361	
65 10 (RHD-550)	.....	1	354 2558	
ATTACHING PARTS Cover To Panel				
SCREW, Tapping..... 63-64 10 (550): 63 80 (800)	17.660	2	G161895	NA#
SCREW, Tapping..... 65 10 (LHD-550)	17.660	2	G161860	NA#
SCREW, Tapping..... ***65 10 (RHD-550)***	17.671	2	G274773	NA
NUT, Speed ..... 63-64 10 (550): 65 10 (LHD-550): 63 80 (800)	.....	2	400 0512	
BUTTON, Instrument Panel Ash Receiver Tray				
61 Thru 65 01 (2 Req.): 60 Thru 62 10-20-80 (LHD-4 Req.) ***(RHD-2 Req.):*** 65 10-80 (LHD-2 Req.)	.....	AR	400 0081	
22.093 COVER, Instrument Panel Ash Receiver				
60 01	.....	1	312 8552	
61 Thru 63 01	.....	1	344 8450	
22.095 KNOB, Instrument Panel Ash Receiver Tray				
61 01 (Gray)	.....	1	346 0250	
61 Thru 63 01 (Black)	.....	1	346 4515	
64-65 01 (WAC)	.....	1	352 0749	
60 10-20-80 (2 Req.): 61-62 10-20-80 (LHD-2 Req.) ***(RHD-1 Req.)***	.....	AR	344 0797	
ATTACHING PARTS Knob To Tray				
SCREW, Machine..... 61 01	17.626	1	800 0015	NA
SCREW, Tapping..... 61 Thru 63 01	17.664	1	G143152	NA
SCREW, Tapping..... 64-65 01 (WAC)	17.660	2	G163095	NA
SCREW, Hexagon ..... 60 10-20-80 (2 Req.): 61 10-20-80 (LHD-4 Req.) ***(RHD-2 Req.):*** 62 10-80 (LHD-2 Req.) ***(RHD-1 Req.)***	17.626	AR	G179056	NA
22.096 RETAINER, Instrument Panel Ash Receiver				
61 Thru 63 01	.....	1	344 8382	
64-65 01	.....	1	350 1499	
60 10-20-80 (2 Req.): 61-62 10-20-80 (LHD-2 Req.) ***(RHD-1 Req.)***	.....	AR	344 0461	
63-64 10 (550): 63 80 (800)	.....	1	448 0266	
63-64 10 (660)(770): 63 80 (880)(990): 64 80	.....	2	448 0266	
65 10 (LHD-550)	.....	1	351 7117	
65 10 (LHD-660)(LHD-770): 65 80 (LHD)	.....	2	351 7117	
ATTACHING PARTS Retainer To Instrument Panel				
SCREW, Tapping..... 61 Thru 63 01	17.660	2	G161895	NA
SCREW, Tapping..... 64-65 01 (4 Req.)	17.669	AR	G9415551	NA
SCREW, Machine..... 64-65 01	17.598	1	G160510	NA
SCREW, Tapping..... 60 10-20-80 (4 Req.): 61 10-20-80 (LHD-2 Req.) ***(RHD-1 Req.):*** 62 10-80 (LHD-4 Req.) ***(RHD-2 Req.)***	17.671	AR	G9414261	NA
SCREW, Tapping..... 63 10-80 63-64 10 (550-4 Req.): 63-64 10 (660-770-8 Req.): 63 80 (800-4 Req.): 63 80 (880-990-8 Req.): 64 80 (8 Req.): 65 10-80 (8 Req.)	13.017	AR	400 0616	
NUT, Spring..... 60 10-20-80 (4 Req.): 61 10-20-80 (LHD-2 Req.) ***(RHD-1 Req.):*** 62 10-80 (LHD-4 Req.) ***(RHD-2 Req.)***	17.426	AR	G446955	NA

Copyright 1963 American Motors Corp.

GROUP NO. — DESCRIPTION — YEAR and MODEL	PRIMARY GROUP NO.	PER CAR	PART NO.	CODE
Retainer To Bracket				
SCREW, Tapping..... 60 10-20-80 (2 Req.): 61-62 10-20-80 (LHD-2 Req.)(*RHD-1 Req.*)	17.671	AR	G9414261	NA
NUT, Spring..... 60 10-20-80 (2 Req.): 61-62 10-20-80 (LHD-2 Req.)(*RHD-1 Req.*)	17.426	AR	G446955	NA
BRACKET, Instrument Panel Ash Receiver Support				
61 Thru 63 01.....	.....	1	344 8459	
60 10-20-80 (2 Req.): 61-62 10-20-80 (LHD-2 Req.)(*RHD-1 Req.*)	.....	AR	344 0463	
ATTACHING PARTS				
Bracket To Instrument Panel				
SCREW, Tapping..... 61 Thru 63 01.....	17.660	1	G161895	NA
SCREW, Tapping..... 60 10-20-80 (2 Req.): 61 10-20-80 (LHD-2 Req.) (*RHD-1 Req.*).....	17.671	AR	800 0093	NA
SCREW, Tapping..... 62 10-80 (LHD-2 Req.)(*RHD-1 Req.*)	17.671	AR	G274773	NA
22.098 PANEL, Ash Receiver And Instrument Switch Mounting				
60 01.....(*Replaces 342 5842*)	.....	1	343 2089	
ATTACHING PARTS				
Panel To Instrument Panel				
WASHER, Fibre..... 60 01.....	29.105	2	436 8016	
WASHER, Lock..... 60 01.....	17.820	2	G103319	NA
NUT, Hexagon..... 60 01.....	17.406	2	G120367	
22.100 PAD, Instrument Panel				
(T-021)(Upper-LAC).....	.....	1	344 4747	
(T-021)(Upper-WAC).....	.....	1	344 4775	
(T-021)(Lower)	.....	1	344 3959	
(T-022)(Upper-LAC).....	.....	1	344 4747	
(T-022)(Upper-WAC).....	.....	1	344 4775	
(T-022)(Lower)	.....	1	344 3959	
(T-023)(Upper-LAC).....	.....	1	344 4748	
(T-023)(Upper-WAC).....	.....	1	344 4776	
(T-023)(Lower)	.....	1	344 3961	
(T-024)(Upper-LAC).....	.....	1	344 4749	
(T-025)(Upper-LAC).....	.....	1	344 4747	
(T-025)(Upper-WAC).....	.....	1	344 4775	
(T-025)(Lower)	.....	1	344 3959	
(T-027)(Upper-LAC).....	.....	1	344 4747	
(T-027)(Upper-WAC).....	.....	1	344 4775	
(T-027)(Lower)	.....	1	344 3959	
(T-028)(Upper-LAC).....	.....	1	344 4747	
(T-028)(Upper-WAC).....	.....	1	344 4775	
(T-028)(Lower)	.....	1	344 3959	
(T-029)(Upper-LAC).....	.....	1	344 4747	
(T-029)(Upper-WAC).....	.....	1	344 4775	
(T-029)(Lower)	.....	1	344 3959	
(T-030)(Upper-LAC).....	.....	1	344 4747	

NOTE 22.100-1: Two Types of Instrument Panel Pads were used on the 63 10-80 (WAC) right side. They can be identified as follows:
Type 1: Used without a left side Instrument Panel Pad.
Type 2: Used with a left side Instrument Panel Pad.

Copyright 1963 American Motors Corp.

GROUP NO. — DESCRIPTION — YEAR and MODEL	PRIMARY GROUP NO.	PER CAR	PART NO.	CODE
(T-030)(Upper-WAC)	.....	1	344 4775	#
(T-030)(Lower)	.....	1	344 3959	#
(T-031)(Upper-LAC)	.....	1	344 4747	#
(T-031)(Upper-WAC)	.....	1	344 4775	#
(T-031)(Lower)	.....	1	344 3959	#
(T-032)(Upper-LAC)	.....	1	344 4747	#
(T-032)(Upper-WAC)	.....	1	344 4775	#
(T-032)(Lower)	.....	1	344 3959	#
(T-033)(Upper-LAC)	.....	1	344 4748	#
(T-033)(Upper-WAC)	.....	1	344 4776	#
(T-033)(Lower)	.....	1	344 3961	#
(T-034)(Upper-LAC)	.....	1	344 4749	#
(T-035)(Upper-LAC)	.....	1	344 4747	#
(T-035)(Upper-WAC)	.....	1	344 4775	#
(T-035)(Lower)	.....	1	344 3959	#
(T-037)(Upper-LAC)	.....	1	344 4747	#
(T-037)(Upper-WAC)	.....	1	344 4775	#
(T-037)(Lower)	.....	1	344 3959	#
(T-038)(Upper-LAC)	.....	1	344 4747	#
(T-038)(Upper-WAC)	.....	1	344 4775	#
(T-038)(Lower)	.....	1	344 3959	#
(T-039)(Upper-LAC)	.....	1	344 4747	#
(T-039)(Upper-WAC)	.....	1	344 4775	#
(T-039)(Lower)	.....	1	344 3959	#
(T-041)(Upper-LAC)	.....	1	344 4750	#
(T-041)(Upper-WAC)	.....	1	344 4778	#
(T-041)(Lower)	.....	1	344 3965	#
(T-042)(Upper-LAC)	.....	1	344 4747	#
(T-042)(Upper-WAC)	.....	1	344 4775	#
(T-042)(Lower)	.....	1	344 3959	#
(T-043)(Upper-LAC)	.....	1	344 4748	#
(T-043)(Upper-WAC)	.....	1	344 4776	#
(T-043)(Lower)	.....	1	344 3961	#
(T-044)(Upper-LAC)	.....	1	344 4749	#
(T-045)(Upper-LAC)	.....	1	344 4747	#
(T-045)(Upper-WAC)	.....	1	344 4775	#
(T-045)(Lower)	.....	1	344 3959	#
(T-046)(Upper-LAC)	.....	1	344 4747	#
(T-046)(Upper-WAC)	.....	1	344 4775	#
(T-046)(Lower)	.....	1	344 3959	#
(T-047)(Upper-LAC)	.....	1	344 4747	#
(T-047)(Upper-WAC)	.....	1	344 4775	#
(T-047)(Lower)	.....	1	344 3959	#
(T-048)(Upper-LAC)	.....	1	344 4747	#
(T-048)(Upper-WAC)	.....	1	344 4775	#
(T-048)(Lower)	.....	1	344 3959	#
(T-049)(Upper-LAC)	.....	1	344 4747	#
(T-049)(Upper-WAC)	.....	1	344 4775	#
(T-049)(Lower)	.....	1	344 3959	#
(T-051)(Upper-LAC)	.....	1	344 4750	#
(T-051)(Upper-WAC)	.....	1	344 4778	#
(T-051)(Lower)	.....	1	344 3965	#
(T-053)(Upper-LAC)	.....	1	344 4748	#
(T-053)(Upper-WAC)	.....	1	344 4776	#
(T-053)(Lower)	.....	1	344 3961	#
(T-054)(Upper-LAC)	.....	1	344 4749	#
(T-055)(Upper-LAC)	.....	1	344 4747	#
(T-055)(Upper-WAC)	.....	1	344 4775	#
(T-055)(Lower)	.....	1	344 3959	#

Copyright 1963 American Motors Corp.

GROUP NO. — DESCRIPTION — YEAR and MODEL	PRIMARY GROUP NO.	PER CAR	PART NO.	CODE
(T-056)(Upper-LAC)	.....	1	344 4747	#
(T-056)(Upper-WAC)	.....	1	344 4775	#
(T-056)(Lower)	.....	1	344 3959	#
(T-057)(Upper-LAC)	.....	1	344 4747	#
(T-057)(Upper-WAC)	.....	1	344 4775	#
(T-057)(Lower)	.....	1	344 3959	#
(T-058)(Upper-LAC)	.....	1	344 4747	#
(T-058)(Upper-WAC)	.....	1	344 4775	#
(T-058)(Lower)	.....	1	344 3959	#
(T-059)(Upper-LAC)	.....	1	344 4747	#
(T-059)(Upper-WAC)	.....	1	344 4775	#
(T-059)(Lower)	.....	1	344 3959	#
(T-062)(Upper-LAC)	.....	1	344 4747	#
(T-062)(Upper-WAC)	.....	1	344 4775	#
(T-062)(Lower)	.....	1	344 3959	#
(T-063)(Upper-LAC)	.....	1	344 4748	#
(T-063)(Upper-WAC)	.....	1	344 4776	#
(T-063)(Lower)	.....	1	344 3961	#
(T-064)(Upper-LAC)	.....	1	344 4749	#
(T-065)(Upper-LAC)	.....	1	344 4747	#
(T-065)(Upper-WAC)	.....	1	344 4775	#
(T-065)(Lower)	.....	1	344 3959	#
(T-067)(Upper-LAC)	.....	1	344 4747	#
(T-067)(Upper-WAC)	.....	1	344 4775	#
(T-067)(Lower)	.....	1	344 3959	#
(T-068)(Upper-LAC)	.....	1	344 4747	#
(T-068)(Upper-WAC)	.....	1	344 4775	#
(T-068)(Lower)	.....	1	344 3959	#
(T-069)(Upper-LAC)	.....	1	344 4747	#
(T-069)(Upper-WAC)	.....	1	344 4775	#
(T-069)(Lower)	.....	1	344 3959	#
(T-072)(Upper-LAC)	.....	1	344 4747	#
(T-072)(Upper-WAC)	.....	1	344 4775	#
(T-072)(Lower)	.....	1	344 3959	#
(T-073)(Upper-LAC)	.....	1	344 4748	#
(T-073)(Upper-WAC)	.....	1	344 4776	#
(T-073)(Lower)	.....	1	344 3961	#
(T-074)(Upper-LAC)	.....	1	344 4749	#
(T-075)(Upper-LAC)	.....	1	344 4747	#
(T-075)(Upper-WAC)	.....	1	344 4775	#
(T-075)(Lower)	.....	1	344 3959	#
(T-077)(Upper-LAC)	.....	1	344 4747	#
(T-077)(Upper-WAC)	.....	1	344 4775	#
(T-077)(Lower)	.....	1	344 3959	#
(T-078)(Upper-LAC)	.....	1	344 4747	#
(T-078)(Upper-WAC)	.....	1	344 4775	#
(T-078)(Lower)	.....	1	344 3959	#
(T-079)(Upper-LAC)	.....	1	344 4747	#
(T-079)(Upper-WAC)	.....	1	344 4775	#
(T-079)(Lower)	.....	1	344 3959	#
(T-081)(Upper-LAC)	.....	1	344 4750	#
(T-081)(Upper-WAC)	.....	1	344 4778	#
(T-081)(Lower)	.....	1	344 3965	#
(T-082)(Upper-LAC)	.....	1	344 4747	#
(T-082)(Upper-WAC)	.....	1	344 4775	#
(T-082)(Lower)	.....	1	344 3959	#
(T-083)(Upper-LAC)	.....	1	344 4748	#
(T-083)(Upper-WAC)	.....	1	344 4776	#
(T-083)(Lower)	.....	1	344 3961	#

Copyright 1963 American Motors Corp.

GROUP NO. — DESCRIPTION — YEAR and MODEL	PRIMARY GROUP NO.	PER CAR	PART NO.	CODE
(T-084)(Upper-LAC)	.....	1	344 4749	#
(T-085)(Upper-LAC)	.....	1	344 4747	#
(T-085)(Upper-WAC)	.....	1	344 4775	#
(T-085)(Lower)	.....	1	344 3959	#
(T-086)(Upper-LAC)	.....	1	344 4747	#
(T-086)(Upper-WAC)	.....	1	344 4775	#
(T-086)(Lower)	.....	1	344 3959	#
(T-087)(Upper-LAC)	.....	1	344 4747	#
(T-087)(Upper-WAC)	.....	1	344 4775	#
(T-087)(Lower)	.....	1	344 3959	#
(T-088)(Upper-LAC)	.....	1	344 4747	#
(T-088)(Upper-WAC)	.....	1	344 4775	#
(T-088)(Lower)	.....	1	344 3959	#
(T-089)(Upper-LAC)	.....	1	344 4747	#
(T-089)(Upper-WAC)	.....	1	344 4775	#
(T-089)(Lower)	.....	1	344 3959	#
(T-091)(Upper-LAC)	.....	1	344 4750	#
(T-091)(Upper-WAC)	.....	1	344 4778	#
(T-091)(Lower)	.....	1	344 3965	#
(T-092)(Upper-LAC)	.....	1	344 4747	#
(T-092)(Upper-WAC)	.....	1	344 4775	#
(T-092)(Lower)	.....	1	344 3959	#
(T-093)(Upper-LAC)	.....	1	344 4748	#
(T-093)(Upper-WAC)	.....	1	344 4776	#
(T-093)(Lower)	.....	1	344 3961	#
(T-094)(Upper-LAC)	.....	1	344 4749	#
(T-095)(Upper-LAC)	.....	1	344 4747	#
(T-095)(Upper-WAC)	.....	1	344 4775	#
(T-095)(Lower)	.....	1	344 3959	#
(T-096)(Upper-LAC)	.....	1	344 4747	#
(T-096)(Upper-WAC)	.....	1	344 4775	#
(T-096)(Lower)	.....	1	344 3959	#
(T-097)(Upper-LAC)	.....	1	344 4747	#
(T-097)(Upper-WAC)	.....	1	344 4775	#
(T-097)(Lower)	.....	1	344 3959	#
(T-098)(Upper-LAC)	.....	1	344 4747	#
(T-098)(Upper-WAC)	.....	1	344 4775	#
(T-098)(Lower)	.....	1	344 3959	#
(T-099)(Upper-LAC)	.....	1	344 4747	#
(T-099)(Upper-WAC)	.....	1	344 4775	#
(T-099)(Lower)	.....	1	344 3959	#
(T-101) 61 01	.....	1	346 0274	#
(T-102) 61 01	.....	1	346 0274	#
(T-1022) 61 01	.....	1	347 3429	#
(T-103) 61 01	.....	1	346 0275	#
(T-104) 61 01	.....	1	346 0276	#
(T-105) 61 01	.....	1	346 0274	#
(T-1052) 61 01	.....	1	347 3429	#
(T-106) 61 01	.....	1	346 0277	#
(T-112) 61 01	.....	1	346 0274	#
(T-1122) 61 01	.....	1	347 3429	#
(T-113) 61 01	.....	1	346 0275	#
(T-114) 61 01	.....	1	346 0276	#
(T-116) 61 01	.....	1	346 0277	#
(T-121)(Upper) 61 10-20-80 (LAC)	.....	1	345 5225	#
(T-121)(Upper) 61 10-20-80 (WAC)	.....	1	345 5226	#
(T-121)(Lower)	.....	1	345 5227	#
(T-1212)(Upper) 61 10-20-80 (LAC)	.....	1	347 0996	#
(T-1212)(Upper) 61 10-20-80 (WAC)	.....	1	347 0997	#

Copyright 1963 American Motors Corp.

GROUP NO. — DESCRIPTION — YEAR and MODEL	PRIMARY GROUP NO.	PER CAR	PART NO.	CODE
(T-1212)(Lower)	.....	1	347 0998	#
(T-122)(Upper) 61 10-20-80 (LAC)	.....	1	345 5225	#
(T-122)(Upper) 61 10-20-80 (WAC)	.....	1	345 5226	#
(T-122)(Lower)	.....	1	345 5227	#
(T-1222)(Upper) 61 10-20-80 (LAC)	.....	1	347 0996	#
(T-1222)(Upper) 61 10-20-80 (WAC)	.....	1	347 0997	#
(T-1222)(Lower)	.....	1	347 0998	#
(T-123)(Upper) 61 10-20-80 (LAC)	.....	1	345 5229	#
(T-123)(Upper) 61 10-20-80 (WAC)	.....	1	345 5230	#
(T-123)(Lower)	.....	1	345 5231	#
(T-124)(Upper) 61 10-20-80 (LAC)	.....	1	345 5233	#
(T-124)(Upper) 61 10-20-80 (WAC)	.....	1	345 5234	#
(T-124)(Lower)	.....	1	345 5235	#
(T-125)(Upper) 61 10-20-80 (LAC)	.....	1	345 5225	#
(T-125)(Upper) 61 10-20-80 (WAC)	.....	1	345 5226	#
(T-125)(Lower)	.....	1	345 5227	#
(T-1252)(Upper) 61 10-20-80 (LAC)	.....	1	347 0996	#
(T-1252)(Upper) 61 10-20-80 (WAC)	.....	1	347 0997	#
(T-1252)(Lower)	.....	1	347 0998	#
(T-126)(Upper) 61 10-20-80 (LAC)	.....	1	345 5237	#
(T-126)(Upper) 61 10-20-80 (WAC)	.....	1	345 5238	#
(T-126)(Lower)	.....	1	345 5239	#
(T-128) 61 01	.....	1	346 0274	#
(T-128)(Upper) 61 10-20-80 (LAC)	.....	1	345 5225	#
(T-128)(Upper) 61 10-20-80 (WAC)	.....	1	345 5226	#
(T-128)(Lower)	.....	1	345 5227	#
(T-1282) 61 01	.....	1	347 3429	#
(T-1282)(Upper) 61 10-20-80 (LAC)	.....	1	347 0996	#
(T-1282)(Upper) 61 10-20-80 (WAC)	.....	1	347 0997	#
(T-1282)(Lower)	.....	1	347 0998	#
(T-129) 61 01	.....	1	346 0274	#
(T-1292) 61 01	.....	1	347 3429	#
(T-129)(Upper) 61 10-20-80 (LAC)	.....	1	345 5225	#
(T-129)(Upper) 61 10-20-80 (WAC)	.....	1	345 5226	#
(T-129)(Lower)	.....	1	345 5227	#
(T-1292)(Upper) 61 10-20-80 (LAC)	.....	1	347 0996	#
(T-1292)(Upper) 61 10-20-80 (WAC)	.....	1	347 0997	#
(T-1292)(Lower)	.....	1	347 0998	#
(T-130)(Upper) 61 10-20-80 (LAC)	.....	1	345 5225	#
(T-130)(Upper) 61 10-20-80 (WAC)	.....	1	345 5226	#
(T-130)(Lower)	.....	1	345 5227	#
(T-131)(Upper) 61 10-20-80 (LAC)	.....	1	345 5225	#
(T-131)(Upper) 61 10-20-80 (WAC)	.....	1	345 5226	#
(T-131)(Lower)	.....	1	345 5227	#
(T-132)(Upper) 61 10-20-80 (LAC)	.....	1	345 5225	#
(T-132)(Upper) 61 10-20-80 (WAC)	.....	1	345 5226	#
(T-132)(Lower)	.....	1	345 5227	#
(T-133)(Upper) 61 10-20-80 (LAC)	.....	1	345 5229	#
(T-133)(Upper) 61 10-20-80 (WAC)	.....	1	345 5230	#
(T-133)(Lower)	.....	1	345 5231	#
(T-134)(Upper) 61 10-20-80 (LAC)	.....	1	345 5233	#
(T-135)(Upper) 61 10-20-80 (WAC)	.....	1	345 5226	#
(T-135)(Lower)	.....	1	345 5227	#
(T-136)(Upper) 61 10-20-80 (LAC)	.....	1	345 5237	#
(T-136)(Upper) 61 10-20-80 (WAC)	.....	1	345 5238	#
(T-136)(Lower)	.....	1	345 5239	#
(T-138) 61 01	.....	1	346 0274	#
(T-1382) 61 01	.....	1	347 3429	#
(T-138)(Upper) 61 10-20-80 (LAC)	.....	1	345 5225	#
(T-138)(Upper) 61 10-20-80 (WAC)	.....	1	345 5226	#

Copyright 1963 American Motors Corp.

GROUP NO. — DESCRIPTION — YEAR and MODEL	PRIMARY GROUP NO.	PER CAR	PART NO.	CODE
(T-135)(Upper) 61 10-20-80 (LAC)	.....	1	345 5225	#
(T-134)(Lower)	.....	1	345 5235	#
(T-134)(Upper) 61 10-20-80 (WAC)	.....	1	345 5234	#
(T-138)(Lower)	.....	1	345 5227	#
(T-1382)(Upper) 61 10-20-80 (LAC)	.....	1	347 0996	#
(T-1382)(Upper) 61 10-20-80 (WAC)	.....	1	347 0997	#
(T-1382)(Lower)	.....	1	347 0998	#
(T-139)(Upper) 61 10-20-80 (LAC)	.....	1	345 5225	#
(T-139)(Upper) 61 10-20-80 (WAC)	.....	1	345 5226	#
(T-139)(Lower)	.....	1	345 5227	#
(T-1392)(Upper) 61 10-20-80 (LAC)	.....	1	347 0996	#
(T-1392)(Upper) 61 10-20-80 (WAC)	.....	1	347 0997	#
(T-1392)(Lower)	.....	1	347 0998	#
(T-141) 61 01	.....	1	346 0277	#
(T-141)(Upper) 61 10-20-80 (LAC)	.....	1	345 5237	#
(T-141)(Upper) 61 10-20-80 (WAC)	.....	1	345 5238	#
(T-141)(Lower)	.....	1	345 5239	#
(T-142) 61 01	.....	1	346 0274	#
(T-1422) 61 01	.....	1	347 3429	#
(T-142)(Upper) 61 10-20-80 (LAC)	.....	1	345 5225	#
(T-142)(Upper) 61 10-20-80 (WAC)	.....	1	345 5226	#
(T-142)(Lower)	.....	1	345 5227	#
(T-1422)(Upper) 61 10-20-80 (LAC)	.....	1	347 0996	#
(T-1422)(Upper) 61 10-20-80 (WAC)	.....	1	347 0997	#
(T-1422)(Lower)	.....	1	347 0998	#
(T-143) 61 01	.....	1	346 0275	#
(T-143)(Upper) 61 10-20-80 (LAC)	.....	1	345 5229	#
(T-143)(Upper) 61 10-20-80 (WAC)	.....	1	345 5230	#
(T-143)(Lower)	.....	1	345 5231	#
(T-144) 61 01	.....	1	346 0276	#
(T-144)(Upper) 61 10-20-80 (LAC)	.....	1	345 5233	#
(T-144)(Upper) 61 10-20-80 (WAC)	.....	1	345 5234	#
(T-144)(Lower)	.....	1	345 5235	#
(T-145) 61 01	.....	1	346 0274	#
(T-1452) 61 01	.....	1	347 3429	#
(T-145)(Upper) 61 10-20-80 (LAC)	.....	1	345 5225	#
(T-145)(Upper) 61 10-20-80 (QAC)	.....	1	345 5226	#
(T-145)(Lower)	.....	1	345 5227	#
(T-1452)(Upper) 61 10-20-80 (LAC)	.....	1	347 0996	#
(T-1452)(Upper) 61 10-20-80 (WAC)	.....	1	347 0997	#
(T-1452)(Lower)	.....	1	347 0998	#
(T-146) 61 01	.....	1	346 0274	#
(T-1462) 61 01	.....	1	347 3429	#
(T-146)(Upper) 61 10-20-80 (LAC)	.....	1	345 5225	#
(T-146)(Upper) 61 10-20-80 (WAC)	.....	1	345 5226	#
(T-146)(Lower)	.....	1	345 5227	#
(T-1462)(Upper) 61 10-20-80 (LAC)	.....	1	347 0996	#
(T-1462)(Upper) 61 10-20-80 (WAC)	.....	1	347 0997	#
(T-1462)(Lower)	.....	1	347 0998	#
(T-149) 61 01	.....	1	346 0274	#
(T-1492) 61 01	.....	1	347 3429	#
(T-149)(Upper) 61 10-20-80 (LAC)	.....	1	345 5225	#
(T-149)(Upper) 61 10-20-80 (WAC)	.....	1	345 5226	#
(T-149)(Lower)	.....	1	345 5227	#
(T-1492)(Upper) 61 10-20-80 (LAC)	.....	1	347 0996	#
(T-1492)(Upper) 61 10-20-80 (WAC)	.....	1	347 0997	#
(T-1492)(Lower)	.....	1	347 0998	#
(T-151) 61 01	.....	1	346 0277	#
(T-151)(Upper) 61 10-20-80 (LAC)	.....	1	345 5237	#

Copyright 1963 American Motors Corp.

GROUP NO. — DESCRIPTION — YEAR and MODEL	PRIMARY GROUP NO.	PER CAR	PART NO.	CODE
(T-151)(Upper) 61 10-20-80 (WAC)	.....	1	345 5238	#
(T-151)(Lower)	.....	1	345 5239	#
(T-152) 61 01	.....	1	346 0274	#
(T-1522) 61 01	.....	1	347 3429	#
(T-152)(Upper) 61 10-20-80 (LAC)	.....	1	345 5225	#
(T-152)(Upper) 61 10-20-80 (WAC)	.....	1	345 5226	#
(T-152)(Lower)	.....	1	345 5227	#
(T-1522)(Upper) 61 10-20-80 (LAC)	.....	1	347 0996	#
(T-1522)(Upper) 61 10-20-80 (WAC)	.....	1	347 0997	#
(T-1522)(Lower)	.....	1	347 0998	#
(T-153) 61 01	.....	1	346 0275	#
(T-153)(Upper) 61 10-20-80 (LAC)	.....	1	345 5229	#
(T-153)(Upper) 61 10-20-80 (WAC)	.....	1	345 5230	#
(T-153)(Lower)	.....	1	345 5231	#
(T-154) 61 01	.....	1	346 0276	#
(T-154)(Upper) 61 10-20-80 (LAC)	.....	1	345 5233	#
(T-154)(Upper) 61 10-20-80 (WAC)	.....	1	345 5234	#
(T-154)(Lower)	.....	1	345 5235	#
(T-155) 61 01	.....	1	346 0274	#
(T-1552) 61 01	.....	1	347 3429	#
(T-155)(Upper) 61 10-20-80 (LAC)	.....	1	345 5225	#
(T-155)(Upper) 61 10-20-80 (WAC)	.....	1	345 5226	#
(T-155)(Lower)	.....	1	345 5227	#
(T-1552)(Upper) 61 10-20-80 (LAC)	.....	1	347 0996	#
(T-1552)(Upper) 61 10-20-80 (WAC)	.....	1	347 0997	#
(T-1552)(Lower)	.....	1	347 0998	#
(T-156) 61 01	.....	1	346 0274	#
(T-1562) 61 01	.....	1	347 3429	#
(T-156)(Upper) 61 10-20-80 (LAC)	.....	1	345 5225	#
(T-156)(Upper) 61 10-20-80 (WAC)	.....	1	345 5226	#
(T-156)(Lower)	.....	1	345 5227	#
(T-1562)(Upper) 61 10-20-80 (LAC)	.....	1	347 0996	#
(T-1562)(Upper) 61 10-20-80 (WAC)	.....	1	347 0997	#
(T-1562)(Lower)	.....	1	347 0998	#
(T-159) 61 01	.....	1	346 0274	#
(T-1592) 61 01	.....	1	347 3429	#
(T-159)(Upper) 61 10-20-80 (LAC)	.....	1	345 5225	#
(T-159)(Upper) 61 10-20-80 (WAC)	.....	1	345 5226	#
(T-159)(Lower)	.....	1	345 5227	#
(T-1592)(Upper) 61 10-20-80 (LAC)	.....	1	347 0996	#
(T-1592)(Upper) 61 10-20-80 (WAC)	.....	1	347 0997	#
(T-1592)(Lower)	.....	1	347 0998	#
(T-162)(Upper) 61 10-20-80 (LAC)	.....	1	345 5225	#
(T-162)(Upper) 61 10-20-80 (WAC)	.....	1	345 5226	#
(T-162)(Lower)	.....	1	345 5227	#
(T-1622)(Upper) 61 10-20-80 (LAC)	.....	1	345 5225	#
(T-1622)(Upper) 61 10-20-80 (WAC)	.....	1	345 5226	#
(T-1622)(Lower)	.....	1	345 5227	#
(T-163)(Upper) 61 10-20-80 (LAC)	.....	1	345 5229	#
(T-163)(Upper) 61 10-20-80 (WAC)	.....	1	345 5230	#
(T-163)(Lower)	.....	1	345 5231	#
(T-164)(Upper) 61 10-20-80 (LAC)	.....	1	345 5233	#
(T-164)(Upper) 61 10-20-80 (WAC)	.....	1	345 5234	#
(T-164)(Lower)	.....	1	345 5235	#
(T-165)(Upper) 61 10-20-80 (LAC)	.....	1	345 5225	#
(T-165)(Upper) 61 10-20-80 (WAC)	.....	1	345 5226	#
(T-165)(Lower)	.....	1	345 5227	#
(T-1652)(Upper) 61 10-20-80 (LAC)	.....	1	345 5225	#
(T-1652)(Upper) 61 10-20-80 (WAC)	.....	1	345 5226	#

Copyright 1963 American Motors Corp.

GROUP NO. — DESCRIPTION — YEAR and MODEL	PRIMARY GROUP NO.	PER CAR	PART NO.	CODE
(T-1652)(Lower)		1	345 5227	#
(T-166)(Upper) 61 10-20-80 (LAC)		1	345 5237	#
(T-166)(Upper) 61 10-20-80 (WAC)		1	345 5238	#
(T-166)(Lower)		1	345 5239	#
(T-168)(Upper) 61 10-20-80 (LAC)		1	345 5225	#
(T-168)(Upper) 61 10-20-80 (WAC)		1	345 5226	#
(T-168)(Lower)		1	345 5227	#
(T-1683)(Upper) 61 10-20-80 (LAC)		1	347 0996	#
(T-1683)(Upper) 61 10-20-80 (WAC)		1	347 0997	#
(T-1683)(Lower)		1	347 0998	#
(T-169)(Upper) 61 10-20-80 (LAC)		1	345 5225	#
(T-169)(Upper) 61 10-20-80 (WAC)		1	345 5226	#
(T-169)(Lower)		1	345 5227	#
(T-1692)(Upper) 61 10-20-80 (LAC)		1	345 5225	#
(T-1692)(Upper) 61 10-20-80 (WAC)		1	345 5226	#
(T-1692)(Lower)		1	345 5227	#
(T-1693)(Upper) 61 10-20-80 (LAC)		1	347 0996	#
(T-1693)(Upper) 61 10-20-80 (WAC)		1	347 0997	#
(T-1693)(Lower)		1	347 0998	#
(T-172)(Upper) 61 10-20-80 (LAC)		1	345 5225	#
(T-172)(Upper) 61 10-20-80 (WAC)		1	345 5226	#
(T-172)(Lower)		1	345 5227	#
(T-173)(Upper) 61 10-20-80 (LAC)		1	345 5229	#
(T-173)(Upper) 61 10-20-80 (WAC)		1	345 5230	#
(T-173)(Lower)		1	345 5231	#
(T-174)(Upper) 61 10-20-80 (LAC)		1	345 5233	#
(T-174)(Upper) 61 10-20-80 (WAC)		1	345 5234	#
(T-174)(Lower)		1	345 5235	#
(T-175)(Upper) 61 10-20-80 (LAC)		1	345 5225	#
(T-175)(Upper) 61 10-20-80 (WAC)		1	345 5226	#
(T-175)(Lower)		1	345 5227	#
(T-176)(Upper) 61 10-20-80 (LAC)		1	345 5237	#
(T-176)(Upper) 61 10-20-80 (WAC)		1	345 5238	#
(T-176)(Lower)		1	345 5239	#
(T-178)(Upper) 61 10-20-80 (LAC)		1	345 5225	#
(T-178)(Upper) 61 10-20-80 (WAC)		1	345 5226	#
(T-178)(Lower)		1	345 5227	#
(T-1783)(Upper) 61 10-20-80 (LAC)		1	347 0996	#
(T-1783)(Upper) 61 10-20-80 (WAC)		1	347 0997	#
(T-1783)(Lower)		1	347 0998	#
(T-179)(Upper) 61 10-20-80 (LAC)		1	345 5225	#
(T-179)(Upper) 61 10-20-80 (WAC)		1	345 5226	#
(T-179)(Lower)		1	345 5227	#
(T-1793)(Upper) 61 10-20-80 (LAC)		1	347 0996	#
(T-1793)(Upper) 61 10-20-80 (WAC)		1	347 0997	#
(T-1793)(Lower)		1	347 0998	#
(T-181)(Upper) 61 10-20-80 (LAC)		1	345 5237	#
(T-181)(Upper) 61 10-20-80 (WAC)		1	345 5238	#
(T-181)(Lower)		1	345 5239	#
(T-182)(Upper) 61 10-20-80 (LAC)		1	345 5225	#
(T-182)(Upper) 61 10-20-80 (WAC)		1	345 5226	#
(T-182)(Lower)		1	345 5227	#
(T-1822)(Upper) 61 10-20-80 (LAC)		1	345 5225	#
(T-1822)(Upper) 61 10-20-80 (WAC)		1	345 5226	#
(T-1822)(Lower)		1	345 5227	#
(T-1823)(Upper) 61 10-20-80 (LAC)		1	347 0996	#
(T-1823)(Upper) 61 10-20-80 (WAC)		1	347 0997	#
(T-1823)(Lower)		1	347 0998	#
(T-183)(Upper) 61 10-20-80 (LAC)		1	345 5229	#

Copyright 1963 American Motors Corp.

GROUP NO. — DESCRIPTION — YEAR and MODEL	PRIMARY GROUP NO.	PER CAR	PART NO.	CODE
(T-183)(Upper) 61 10-20-80 (WAC)	.....	1	345 5230	#
(T-184)(Upper) 61 10-20-80 (LAC)	.....	1	345 5233	#
(T-184)(Upper) 61 10-20-80 (WAC)	.....	1	345 5234	#
(T-184)(Lower)	.....	1	345 5235	#
(T-183)(Lower)	.....	1	345 5231	#
(T-185)(Upper) 61 10-20-80 (LAC)	.....	1	345 5225	#
(T-185)(Upper) 61 10-20-80 (WAC)	.....	1	345 5226	#
(T-185)(Lower)	.....	1	345 5227	#
(T-1852)(Upper) 61 10-20-80 (LAC)	.....	1	345 5225	#
(T-1852)(Upper) 61 10-20-80 (WAC)	.....	1	345 5226	#
(T-1852)(Lower)	.....	1	345 5227	#
(T-1853)(Upper) 61 10-20-80 (LAC)	.....	1	347 0996	#
(T-1853)(Upper) 61 10-20-80 (WAC)	.....	1	347 0997	#
(T-1853)(Lower)	.....	1	347 0998	#
(T-186)(Upper) 61 10-20-80 (LAC)	.....	1	345 5225	#
(T-186)(Upper) 61 10-20-80 (WAC)	.....	1	345 5226	#
(T-186)(Lower)	.....	1	345 5227	#
(T-1862)(Upper) 61 10-20-80 (LAC)	.....	1	345 5225	#
(T-1862)(Upper) 61 10-20-80 (WAC)	.....	1	345 5226	#
(T-1862)(Lower)	.....	1	345 5227	#
(T-1863)(Upper) 61 10-20-80 (LAC)	.....	1	347 0996	#
(T-1863)(Upper) 61 10-20-80 (WAC)	.....	1	347 0997	#
(T-1863)(Lower)	.....	1	347 0998	#
(T-189)(Upper) 61 10-20-80 (LAC)	.....	1	345 5225	#
(T-189)(Upper) 61 10-20-80 (WAC)	.....	1	345 5226	#
(T-189)(Lower)	.....	1	345 5227	#
(T-1892)(Upper) 61 10-20-80 (LAC)	.....	1	345 5225	#
(T-1892)(Upper) 61 10-20-80 (WAC)	.....	1	345 5226	#
(T-1892)(Lower)	.....	1	345 5227	#
(T-1893)(Upper) 61 10-20-80 (LAC)	.....	1	347 0996	#
(T-1893)(Upper) 61 10-20-80 (WAC)	.....	1	347 0997	#
(T-1893)(Lower)	.....	1	347 0998	#
(T-191)(Upper) 61 10-20-80 (LAC)	.....	1	345 5237	#
(T-191)(Upper) 61 10-20-80 (WAC)	.....	1	345 5238	#
(T-191)(Lower)	.....	1	345 5239	#
(T-192)(Upper) 61 10-20-80 (LAC)	.....	1	345 5225	#
(T-192)(Upper) 61 10-20-80 (WAC)	.....	1	345 5226	#
(T-192)(Lower)	.....	1	345 5227	#
(T-1923)(Upper) 61 10-20-80 (LAC)	.....	1	347 0996	#
(T-1923)(Upper) 61 10-20-80 (WAC)	.....	1	347 0997	#
(T-1923)(Lower)	.....	1	347 0998	#
(T-193)(Upper) 61 10-20-80 (LAC)	.....	1	345 5229	#
(T-193)(Upper) 61 10-20-80 (WAC)	.....	1	345 5230	#
(T-193)(Lower)	.....	1	345 5231	#
(T-194)(Upper) 61 10-20-80 (LAC)	.....	1	345 5233	#
(T-194)(Upper) 61 10-20-80 (WAC)	.....	1	345 5234	#
(T-194)(Lower)	.....	1	345 5235	#
(T-195)(Upper) 61 10-20-80 (LAC)	.....	1	345 5225	#
(T-195)(Upper) 61 10-20-80 (WAC)	.....	1	345 5226	#
(T-195)(Lower)	.....	1	345 5227	#
(T-1953)(Upper) 61 10-20-80 (LAC)	.....	1	347 0996	#
(T-1953)(Upper) 61 10-20-80 (WAC)	.....	1	347 0997	#
(T-1953)(Lower)	.....	1	347 0998	#
(T-196)(Upper) 61 10-20-80 (LAC)	.....	1	345 5225	#
(T-196)(Upper) 61 10-20-80 (WAC)	.....	1	345 5226	#
(T-196)(Lower)	.....	1	345 5227	#
(T-1963)(Upper) 61 10-20-80 (LAC)	.....	1	347 0996	#
(T-1963)(Upper) 61 10-20-80 (WAC)	.....	1	347 0997	#
(T-1963)(Lower)	.....	1	347 0998	#
(T-199)(Upper) 61 10-20-80 (LAC)	.....	1	345 5225	#
(T-199)(Upper) 61 10-20-80 (WAC)	.....	1	345 5226	#
(T-199)(Lower)	.....	1	345 5227	#
(T-1993)(Upper) 61 10-20-80 (LAC)	.....	1	347 0996	#

Copyright 1963 American Motors Corp.

GROUP NO. — DESCRIPTION — YEAR and MODEL	PRIMARY GROUP NO.	PER CAR	PART NO.	CODE
(T-1993)(Upper) 61 10-20-80 (WAC)	.....	1	347 0997	
(T-1993)(Lower)	.....	1	347 0998	
(T-201)	.....	1	347 3429	
(T-202)	.....	1	347 3429	
(T-212)	.....	1	347 3429	
(T-213)	.....	1	346 7609	
(T-214)	.....	1	346 7610	
(T-216)	.....	1	346 7611	
(T-222)	.....	1	347 3429	
(T-223)	.....	1	346 7609	
(T-224)	.....	1	346 7610	
(T-225)	.....	1	347 3429	
(T-226)	.....	1	346 7611	
(T-228)	.....	1	348 0364	
(T-229)	.....	1	348 0365	
(T-232)	.....	1	347 3429	
(T-233)	.....	1	346 7609	
(T-234)	.....	1	346 7610	
(T-235)	.....	1	347 3429	
(T-236)	.....	1	346 7611	
(T-238)	.....	1	348 0364	
(T-239)	.....	1	348 0365	
(T-245)	.....	1	347 3429	
(T-245)(Upper-LAC)	.....	1	347 0996	#
(T-245)(Upper-WAC)	.....	1	347 0997	#
(T-245)(Lower)	.....	1	347 0998	#
(T-246)	.....	1	346 7611	
(T-246)(Upper-LAC)	.....	1	346 9313	
(T-246)(Upper-WAC)	.....	1	346 9317	
(T-246)(Lower)	.....	1	346 9321	
(T-248)	.....	1	348 0364	
(T-248)(Upper-LAC)	.....	1	347 7174	
(T-248)(Upper-WAC)	.....	1	347 7172	
(T-248)(Lower)	.....	1	347 7176	
(T-249)	.....	1	348 0365	
(T-249)(Upper-LAC)	.....	1	347 7175	
(T-249)(Upper-WAC)	.....	1	347 7173	
(T-249)(Lower)	.....	1	347 7177	
(T-251)(Upper-LAC)	.....	1	347 0996	
(T-251)(Upper-WAC)	.....	1	347 0997	
(T-251)(Lower)	.....	1	347 0998	
(T-252)(Upper-LAC)	.....	1	347 0996	
(T-252)(Upper-WAC)	.....	1	347 0997	
(T-252)(Lower)	.....	1	347 0998	
(T-262)(Upper-LAC)	.....	1	347 0996	
(T-262)(Upper-WAC)	.....	1	347 0997	
(T-262)(Lower)	.....	1	347 0998	
(T-263)(Upper-LAC)	.....	1	346 9311	
(T-263)(Upper-WAC)	.....	1	346 9315	
(T-263)(Lower)	.....	1	346 9319	
(T-264)(Upper-LAC)	.....	1	346 9312	
(T-264)(Upper-WAC)	.....	1	346 9316	
(T-264)(Lower)	.....	1	346 9320	
(T-266)(Upper-LAC)	.....	1	346 9313	
(T-266)(Upper-WAC)	.....	1	346 9317	
(T-266)(Lower)	.....	1	346 9321	
(T-272)(Upper-LAC)	.....	1	347 0996	
(T-272)(Upper-WAC)	.....	1	347 0997	
(T-272)(Lower)	.....	1	347 0998	
(T-273)(Upper-LAC)	.....	1	346 9311	
(T-273)(Upper-WAC)	.....	1	346 9315	
(T-273)(Lower)	.....	1	346 9319	
(T-274)(Upper-LAC)	.....	1	346 9312	
(T-274)(Upper-WAC)	.....	1	346 9316	

Copyright 1963 American Motors Corp.

GROUP NO. — DESCRIPTION — YEAR and MODEL	PRIMARY GROUP NO.	PER CAR	PART NO.	CODE
(T-274)(Lower)	.....	1	346 9320	
(T-276)(Upper-LAC)	.....	1	346 9313	
(T-276)(Upper-WAC)	.....	1	346 9317	
(T-276)(Lower)	.....	1	346 9321	
(T-278)(Upper-LAC)	.....	1	347 7174	
(T-278)(Upper-WAC)	.....	1	347 7172	
(T-278)(Lower)	.....	1	347 7176	
(T-279)(Upper-LAC)	.....	1	347 7175	
(T-279)(Upper-WAC)	.....	1	347 7173	
(T-279)(Lower)	.....	1	347 7177	
(T-282)(Upper-LAC)	.....	1	347 0996	
(T-282)(Upper-WAC)	.....	1	347 0997	
(T-282)(Lower)	.....	1	347 0998	
(T-283)(Upper-LAC)	.....	1	346 9311	
(T-283)(Upper-WAC)	.....	1	346 9315	
(T-283)(Lower)	.....	1	346 9319	
(T-284)(Upper-LAC)	.....	1	346 9312	
(T-284)(Upper-WAC)	.....	1	346 9316	
(T-284)(Lower)	.....	1	346 9320	
(T-286)(Upper-LAC)	.....	1	346 9313	
(T-286)(Upper-WAC)	.....	1	346 9317	
(T-286)(Lower)	.....	1	346 9321	
(T-292)(Upper-LAC)	.....	1	347 0996	
(T-292)(Upper-WAC)	.....	1	347 0997	
(T-292)(Lower)	.....	1	347 0998	
(T-293)(Upper-LAC)	.....	1	346 9311	
(T-293)(Upper-WAC)	.....	1	346 9315	
(T-293)(Lower)	.....	1	346 9319	
(T-294)(Upper-LAC)	.....	1	346 9312	
(T-294)(Upper-WAC)	.....	1	346 9316	
(T-294)(Lower)	.....	1	346 9320	
(T-296)(Upper-LAC)	.....	1	346 9313	
(T-296)(Upper-WAC)	.....	1	346 9317	
(T-296)(Lower)	.....	1	346 9321	
(T-298)(Upper-LAC)	.....	1	347 7174	
(T-298)(Upper-WAC)	.....	1	347 7172	
(T-298)(Lower)	.....	1	347 7176	
(T-299)(Upper-LAC)	.....	1	347 7175	
(T-299)(Upper-WAC)	.....	1	347 7173	
(T-299)(Lower)	.....	1	347 7177	
(T-301) 63 01	.....	1	349 0980	
(T-302) 63 01	.....	1	349 0980	
(T-312) 63 01	.....	1	349 0980	
(T-313) 63 01	.....	1	349 0981	
(T-314) 63 01	.....	1	349 0982	
(T-315) 63 01	.....	1	349 0983	
(T-316) 63 01	.....	1	349 0984	
(T-322) 63 01	.....	1	349 0980	
(T-323) 63 01	.....	1	349 0981	
(T-324) 63 01	.....	1	349 0982	
(T-325) 63 01	.....	1	349 0983	
(T-326) 63 01	.....	1	349 0984	
(T-327) 63 01	.....	1	349 0985	
(T-332) 63 01	.....	1	349 0980	
(T-333) 63 01	.....	1	349 0981	
(T-334) 63 01	.....	1	349 0982	
(T-335) 63 01	.....	1	349 0983	
(T-336) 63 01	.....	1	349 0984	
(T-337) 63 01	.....	1	349 0985	

Copyright 1963 American Motors Corp.

GROUP NO. — DESCRIPTION — YEAR and MODEL	PRIMARY GROUP NO.	PER CAR	PART NO.	CODE
(T-342) 63 01	.....	1	349 0980	
(T-342) 63 10-80 (LHD-LAC)	.....	1	347 2681	
(T-342) 63 10-80 (Left-WAC)	.....	1	349 1481	
(T-342) 63 10-80 (Right-WAC-Note 22.100-1 Type 1)	.....	1	349 0200	
(T-342) 63 10-80 (Right-WAC-Note 22.100-1 Type 2)	.....	1	348 8923	
(T-342) ***63 10 (RHD)***	.....	1	351 1749	
(T-343) 63 01	.....	1	349 0981	
(T-343) 63 10-80 (LHD-LAC)	.....	1	347 2682	
(T-343) 63 10-80 (Left-WAC)	.....	1	349 1543	
(T-343) 63 10-80 (Right-WAC-Note 22.100-1 Type 1) ***(Replaces 349 0201)***	.....	1	448 1027	#
(T-343) 63 10-80 (Right-WAC-Note 22.100-1 Type 2)	.....	1	348 8924	
(T-343) ***63 10 (RHD)***	.....	1	351 1750	
(T-344) 63 01	.....	1	349 0982	
(T-344) 63 10-80 (LHD-LAC)	.....	1	347 2683	
(T-344) 63 10-80 (Left-WAC)	.....	1	349 1544	
(T-344) 63 10-80 (Right-WAC-Note 22.100-1 Type 1) ***(Replaces 349 0202)***	.....	1	448 1030	#
(T-344) 63 10-80 (Right-WAC-Note 22.100-1 Type 2)	.....	1	348 8925	
(T-344) ***63 10 (RHD)***	.....	1	351 1751	
(T-345) 63 01	.....	1	349 0983	
(T-345) 63 10-80 (LHD-LAC)	.....	1	347 2685	
(T-345) 63 10-80 (Left-WAC)	.....	1	349 1485	
(T-345) 63 10-80 (Right-WAC-Note 22.100-1 Type 1) ***(Replaces 349 0204)***	.....	1	448 1029	
(T-345) 63 10-80 (Right-WAC-Note 22.100-1 Type 2)	.....	1	348 8926	
(T-345) ***63 10 (RHD)***	.....	1	351 1752	
(T-346) 63 01	.....	1	349 0984	
(T-346) 63 10-80 (LHD-LAC)	.....	1	347 2684	
(T-346) 63 10-80 (Left-WAC)	.....	1	349 1545	
(T-346) 63 10-80 (Right-WAC-Note 22.100-1 Type 1) ***(Use 448 1031)***	.....	1	349 0203	
(T-346) 63 10-80 (Right-WAC-Note 22.100-1 Type 2)	.....	1	348 8927	
(T-346) ***63 10 (RHD)***	.....	1	351 1753	
(T-347) 63 01	.....	1	349 0985	
(T-347) 63 10-80 (LHD-LAC)	.....	1	347 2686	
(T-347) 63 10-80 (Left-WAC)	.....	1	349 1486	
(T-347) 63 10-80 (Right-WAC-Note 22.100-1 Type 1) ***(Replaces 349 0205)***	.....	1	448 1028	
(T-347) 63 10-80 (Right-WAC-Note 22.100-1 Type 2) ***(Replaces 349 0205)***	.....	1	348 8928	
(T-347) ***63 10 (RHD)***	.....	1	351 1754	
(T-351) 63 10-80 (LHD-LAC)	.....	1	347 2681	
(T-351) 63 10-80 (Left-WAC)	.....	1	349 1481	
(T-351) 63 10-80 (Right-WAC-Note 22.100-1 Type 1)	.....	1	349 0200	
(T-351) 63 10-80 (Right-WAC-Note 22.100-1 Type 2)	.....	1	348 8923	
(T-352) 63 10-80 (LHD-LAC)	.....	1	347 2681	
(T-352) 63 10-80 (Left-WAC)	.....	1	349 1481	
(T-352) 63 10-80 (Right-WAC-Note 22.100-1 Type 1)	.....	1	349 0200	
(T-352) 63 10-80 (Right-WAC-Note 22.100-1 Type 2)	.....	1	348 8923	
(T-362) 63 10-80 (LHD-LAC)	.....	1	347 2681	
(T-362) 63 10-80 (Left-WAC)	.....	1	349 1481	
(T-362) 63 10-80 (Right-WAC-Note 22.100-1 Type 1)	.....	1	349 0200	
(T-362) 63 10-80 (Right-WAC-Note 22.100-1 Type 2)	.....	1	348 8923	
(T-362) ***63 10 (RHD)***	.....	1	351 1749	
(T-363) 63 10-80 (LHD-LAC)	.....	1	347 2682	
(T-363) 63 10-80 (Left-WAC)	.....	1	349 1543	
(T-363) 63 10-80 (Right-WAC-Note 22.100-1 Type 1) ***(Replaces 349 0201)***	.....	1	448 1027	#
(T-363) 63 10-80 (Right-WAC-Note 22.100-1 Type 2)	.....	1	348 8924	
(T-363) ***63 10 (RHD)***	.....	1	351 1750	
(T-364) 63 10-80 (LHD-LAC)	.....	1	347 2683	
(T-364) 63 10-80 (Left-WAC)	.....	1	349 1544	
(T-364) 63 10-80 (Right-WAC-Note 22.100-1 Type 1) ***(Replaces 349 0202)***	.....	1	448 1030	#

Copyright 1963 American Motors Corp.

GROUP NO. — DESCRIPTION — YEAR and MODEL	PRIMARY GROUP NO.	PER CAR	PART NO.	CODE
(T-364) 63 10-80 (Right-WAC-Note 22.100-1 Type 2)	.....	1	348 8925	
(T-364) ***63 10 (RHD)***	.....	1	351 1751	
(T-365) 63 10-80 (LHD-LAC)	.....	1	347 2685	
(T-365) 63 10-80 (Left-WAC)	.....	1	349 1485	
(T-365) 63 10-80 (Right-WAC-Note 22.100-1 Type 1) ***(Replaces 349 0204)***	.....	1	448 1029	
(T-365) 63 10-80 (Right-WAC-Note 22.100-1 Type 2)	.....	1	348 8926	
(T-365) ***63 10 (RHD)***	.....	1	351 1752	
(T-366) 63 10-80 (LHD-LAC)	.....	1	347 2684	
(T-366) 63 10-80 (Left-WAC)	.....	1	349 1545	
(T-366) 63 10-80 (Right-WAC-Note 22.100-1 Type 1) ***(Use 448 1031)***	.....	1	349 0203	
(T-366) 63 10-80 (Right-WAC-Note 22.100-1 Type 2)	.....	1	348 8927	
(T-366) ***63 10 (RHD)***	.....	1	351 1753	
(T-372) 63 10-80 (LHD-LAC)	.....	1	347 2681	
(T-372) 63 10-80 (Left-WAC)	.....	1	349 1481	
(T-372) 63 10-80 (Right-WAC-Note 22.100-1 Type 1)	.....	1	349 0200	
(T-372) 63 10-80 (Right-WAC-Note 22.100-1 Type 2)	.....	1	348 8923	
(T-372) ***63 10 (RHD)***	.....	1	351 1749	
(T-373) 63 10-80 (LHD-LAC)	.....	1	347 2682	
(T-373) 63 10-80 (Left-WAC)	.....	1	349 1543	
(T-373) 63 10-80 (Right-WAC-Note 22.100-1 Type 1) ***(Replaces 349 0201)***	.....	1	448 1027	#
(T-373) 63 10-80 (Right-WAC-Note 22.100-1 Type 2)	.....	1	348 8924	
(T-373) ***63 10 (RHD)***	.....	1	351 1750	
(T-374) 63 10-80 (LHD-LAC)	.....	1	347 2683	
(T-374) 63 10-80 (Left-WAC)	.....	1	349 1544	
(T-374) 63 10-80 (Right-WAC-Note 22.100-1 Type 1) ***(Replaces 349 0202)***	.....	1	448 1030	#
(T-374) 63 10-80 (Right-WAC-Note 22.100-1 Type 2)	.....	1	348 8925	
(T-374) ***63 10 (RHD)***	.....	1	351 1751	
(T-375) 63 10-80 (LHD-LAC)	.....	1	347 2685	
(T-375) 63 10-80 (Left-WAC)	.....	1	349 1485	
(T-375) 63 10-80 (Right-WAC-Note 22.100-1 Type 1) ***(Replaces 349 0204)***	.....	1	448 1029	
(T-375) 63 10-80 (Right-WAC-Note 22.100-1 Type 2)	.....	1	348 8926	
(T-375) ***63 10 (RHD)***	.....	1	351 1752	
(T-376) 63 10-80 (LHD-LAC)	.....	1	347 2684	
(T-376) 63 10-80 (Left-WAC)	.....	1	349 1545	
(T-376) 63 10-80 (Right-WAC-Note 22.100-1 Type 1) ***(Use 448 1031)***	.....	1	349 0203	
(T-376) 63 10-80 (Right-WAC-Note 22.100-1 Type 2)	.....	1	348 8927	
(T-376) ***63 10 (RHD)***	.....	1	351 1753	
(T-377) 63 10-80 (LHD-LAC)	.....	1	347 2686	
(T-377) 63 10-80 (Left-WAC)	.....	1	349 1486	
(T-377) 63 10-80 (Right-WAC-Note 22.100-1 Type 1) ***(Replaces 349 0205)***	.....	1	448 1028	
(T-377) 63 10-80 (Right-WAC-Note 22.100-1 Type 2) ***(Replaces 349 0205)***	.....	1	348 8928	
(T-377) ***63 10 (RHD)***	.....	1	351 1754	
(T-382) 63 10-80 (LHD-LAC)	.....	1	347 2681	
(T-382) 63 10-80 (Left-WAC)	.....	1	349 1481	
(T-382) 63 10-80 (Right-WAC-Note 22.100-1 Type 1)	.....	1	349 0200	
(T-382) 63 10-80 (Right-WAC-Note 22.100-1 Type 2)	.....	1	348 8923	
(T-383) 63 10-80 (LHD-LAC)	.....	1	347 2682	
(T-383) 63 10-80 (Left-WAC)	.....	1	349 1543	
(T-383) 63 10-80 (Right-WAC-Note 22.100-1 Type 1) ***(Replaces 349 0201)***	.....	1	448 1027	
(T-383) 63 10-80 (Right-WAC-Note 22.100-1 Type 2)	.....	1	348 8924	
(T-384) 63 10-80 (LHD-LAC)	.....	1	347 2683	
(T-384) 63 10-80 (Left-WAC)	.....	1	349 1544	
(T-384) 63 10-80 (Right-WAV-Note 22.100-1 Type 1) ***(Replaces 349 0202)***	.....	1	448 1030	#
(T-384) 63 10-80 (Right-WAC-Note 22.100-1 Type 2)	.....	1	348 8925	
(T-385) 63 10-80 (LHD-LAC)	.....	1	347 2685	
(T-385) 63 10-80 (Left-WAC)	.....	1	349 1485	
(T-385) 63 10-80 (Right-WAC-Note 22.100-1 Type 1) ***(Replaces 349 0204)***	.....	1	448 1029	
(T-385) 63 10-80 (Right-WAC-Note 22.100-1 Type 2)	.....	1	348 8926	

Copyright 1963 American Motors Corp.

GROUP NO. — DESCRIPTION — YEAR and MODEL	PRIMARY GROUP NO.	PER CAR	PART NO.	CODE
(T-386) 63 10-80 (LHD-LAC)	.....	1	347 2684	
(T-386) 63 10-80 (Left-WAC)	.....	1	349 1545	
(T-386) 63 10-80 (Right-WAC-Note 22.100-1 Type 1) ***(Use 448 1031)***	.....	1	349 0203	
(T-386) 63 10-80 (Right-WAC-Note 22.100-1 Type 2)	.....	1	348 8927	
(T-392) 63 10-80 (LHD-LAC)	.....	1	347 2681	
(T-392) 63 10-80 (Left-WAC)	.....	1	349 1481	
(T-392) 63 10-80 (Right-WAC-Note 22.100-1 Type 1)	.....	1	349 0200	
(T-392) 63 10-80 (Right-WAC-Note 22.100-1 Type 2)	.....	1	348 8923	
(T-393) 63 10-80 (LHD-LAC)	.....	1	347 2682	
(T-393) 63 10-80 (Left-WAC)	.....	1	349 1543	
(T-393) 63 10-80 (Right-WAC-Note 22.100-1 Type 1) ***(Replaces 349 0201)***	.....	1	448 1027	#
(T-393) 63 10-80 (Right-WAC-Note 22.100-1 Type 2)	.....	1	348 8924	
(T-394) 63 10-80 (LHD-LAC)	.....	1	347 2683	
(T-394) 63 10-80 (Left-WAC)	.....	1	349 1544	
(T-394) 63 10-80 (Right-WAC-Note 22.100-1 Type 1) ***(Replaces 349 0202)***	.....	1	448 1030	#
(T-394) 63 10-80 (Right-WAC-Note 22.100-1 Type 2)	.....	1	348 8925	
(T-395) 63 10-80 (LHD-LAC)	.....	1	347 2685	
(T-395) 63 10-80 (Left-WAC)	.....	1	349 1485	
(T-395) 63 10-80 (Right-WAC-Note 22.100-1 Type 1) ***(Replaces 349 0204)***	.....	1	448 1029	
(T-395) 63 10-80 (Right-WAC-Note 22.100-1 Type 2)	.....	1	348 8926	
(T-396) 63 10-80 (LHD-LAC)	.....	1	347 2684	
(T-396) 63 10-80 (Left-WAC)	.....	1	349 1545	
(T-396) 63 10-80 (Right-WAC-Note 22.100-1 Type 1) ***(Use 448 1031)***	.....	1	349 0203	
(T-396) 63 10-80 (Right-WAC-Note 22.100-1 Type 2)	.....	1	348 8927	
(T-397) 63 10-80 (LHD-LAC)	.....	1	347 2686	
(T-397) 63 10-80 (Left-WAC)	.....	1	349 1486	
(T-397) 63 10-80 (Right-WAC-Note 22.100-1 Type 1) ***(Replaces 349 0205)***	.....	1	448 1028	
(T-397) 63 10-80 (Right-WAC-Note 22.100-1 Type 2) ***(Replaces 349 0205)***	.....	1	348 8928	
(T-422)	.....	1	350 8074	
(T-433)	.....	1	350 8075	
(T-434)	.....	1	350 8076	
(T-435)	.....	1	350 8077	
(T-436)	.....	1	350 8080	
(T-438)	.....	1	350 8079	
(T-441)	.....	1	350 8074	
(T-442)	.....	1	350 8074	
(T-443)	.....	1	350 8075	
(T-444)	.....	1	350 8076	
(T-445)	.....	1	350 8077	
(T-446)	.....	1	350 8080	
(T-447)	.....	1	350 8078	
(T-448)	.....	1	350 8079	
(T-452) 64 10 (LHD-LAC)	.....	1	347 2681	
(T-452) 64 10 (Left-LHD-WAC)	.....	1	349 1481	
(T-452)(Right-LHD-WAC)	.....	1	349 0200	
(T-452) ***64 10 (RHD)***	.....	1	351 1749	
(T-453) 64 10 (LHD-LAC)	.....	1	350 8526	
(T-453) 64 10 (Left-LHD-WAC)	.....	1	350 8535	
(T-453)(Right-LHD-WAC)	.....	1	350 2157	
(T-453) ***64 10 (RHD)***	.....	1	351 2066	
(T-454) 64 10 (LHD-LAC)	.....	1	350 8527	
(T-454) 64 10 (Left-LHD-WAC)	.....	1	350 8536	
(T-454)(Right-LHD-WAC)	.....	1	350 2158	
(T-454) ***64 10 (RHD)***	.....	1	351 2067	
(T-462) 64 10 (LHD-LAC)	.....	1	347 2681	
(T-462) 64 10 (Left-LHD-WAC)	.....	1	349 1481	
(T-462)(Right-LHD-WAC)	.....	1	349 0200	
(T-462) ***64 10 (RHD)***	.....	1	351 1749	

Copyright 1963 American Motors Corp.

GROUP NO. — DESCRIPTION — YEAR and MODEL	PRIMARY GROUP NO.	PER CAR	PART NO.	CODE
(T-463) 64 10 (LHD-LAC)	.....	1	350 8526	
(T-463) 64 10 (Left-LHD-WAC)	.....	1	350 8535	
(T-463)(Right-LHD-WAC)	.....	1	350 2157	
(T-463) ***64 10 (RHD)***	.....	1	351 2066	
(T-464) 64 10 (LHD-LAC)	.....	1	350 8527	
(T-464) 64 10 (Left-LHD-WAC)	.....	1	350 8536	
(T-464)(Right-LHD-WAC)	.....	1	350 2158	
(T-464) ***64 10 (RHD)***	.....	1	351 2067	
(T-465) 64 10 (LHD-LAC)	.....	1	350 8528	
(T-465) 64 10 (Left-LHD-WAC)	.....	1	350 8537	
(T-465)(Right-LHD-WAC)	.....	1	350 2159	
(T-465) ***64 10 (RHD)***	.....	1	351 2068	
(T-466) 64 10 (LHD-LAC)	.....	1	350 8531	
(T-466) 64 10 (Left-LHD-WAC)	.....	1	350 8540	
(T-466)(Right-LHD-WAC)	.....	1	350 2161	
(T-466) ***64 10 (RHD)***	.....	1	351 2070	
(T-468) 64 10 (LHD-LAC)	.....	1	350 8530	
(T-468) 64 10 (Left-LHD-WAC)	.....	1	350 8539	
(T-468)(Right-LHD-WAC)	.....	1	350 2160	
(T-468) ***64 10 (RHD)***	.....	1	351 2069	
(T-471) 64 10 (LHD-LAC-Except Typhoon)	.....	1	347 2681	
(T-471) 64 10 (Left-LHD-WAC-Except Typhoon)	.....	1	349 1481	
(T-471)(Right-LHD-WAC-Except Typhoon)	.....	1	349 0200	
(T-471) 64 10 (Typhoon)	.....	1	352 0096	
(T-471) ***64 10 (RHD)***	.....	1	351 1749	
(T-472) 64 10 (LHD-LAC)	.....	1	347 2681	
(T-472) 64 10 (Left-LHD-WAC)	.....	1	349 1481	
(T-472)(Right-LHD-WAC)	.....	1	349 0200	
(T-472) ***64 10 (RHD)***	.....	1	351 1749	
(T-473) 64 10 (LHD-LAC)	.....	1	350 8526	
(T-473) 64 10 (Left-LHD-WAC)	.....	1	350 8535	
(T-473)(Right-LHD-WAC)	.....	1	350 2157	
(T-473) ***64 10 (RHD)***	.....	1	351 2066	
(T-474) 64 10 (LHD-LAC)	.....	1	350 8527	
(T-474) 64 10 (Left-LHD-WAC)	.....	1	350 8536	
(T-474)(Right-LHD-WAC)	.....	1	350 2158	
(T-474) ***64 10 (RHD)***	.....	1	351 2067	
(T-475) 64 10 (LHD-LAC)	.....	1	350 8528	
(T-475) 64 10 (Left-LHD-WAC)	.....	1	350 8537	
(T-475)(Right-LHD-WAC)	.....	1	350 2159	
(T-475) ***64 10 (RHD)***	.....	1	351 2068	
(T-476) 64 10 (LHD-LAC)	.....	1	350 8531	
(T-476) 64 10 (Left-LHD-WAC)	.....	1	350 8540	
(T-476)(Right-LHD-WAC)	.....	1	350 2161	
(T-476) ***64 10 (RHD)***	.....	1	351 2070	
(T-477) 64 10 (LHD-LAC)	.....	1	350 8532	
(T-477) 64 10 (Left-LHD-WAC)	.....	1	350 8541	
(T-477)(Right-LHD-WAC)	.....	1	350 2162	
(T-477) ***64 10 (RHD)***	.....	1	351 2071	
(T-478) 64 10 (LHD-LAC)	.....	1	350 8530	
(T-478) 64 10 (Left-LHD-WAC)	.....	1	350 8539	
(T-478)(Right-LHD-WAC)	.....	1	350 2160	
(T-478) ***64 10 (RHD)***	.....	1	351 2069	
(T-491)	.....	1	352 0096	
(T-492)	.....	1	352 0096	
(T-493)	.....	1	352 0097	
(T-494)	.....	1	352 0098	
(T-495)	.....	1	352 0099	
(T-496)	.....	1	352 0100	

Copyright 1963 American Motors Corp.

GROUP NO. — DESCRIPTION — YEAR and MODEL	PRIMARY GROUP NO.	PER CAR	PART NO.	CODE
(T-497)	.....	1	352 0101	
(T-498)	.....	1	352 0102	
(T-522)	.....	1	350 8074	
(T-532)	.....	1	350 8074	
(T-533)	.....	1	354 8102	
(T-534)	.....	1	354 8103	
(T-535)	.....	1	354 8104	
(T-536)	.....	1	354 8105	
(T-537)	.....	1	354 8106	
(T-541)	.....	1	350 8074	
(T-543)	.....	1	354 8102	
(T-544)	.....	1	354 8103	
(T-545)	.....	1	354 8104	
(T-546)	.....	1	354 8105	
(T-547)	.....	1	354 8106	
(T-548)	.....	1	350 8074	#
(T-552)(Left-LHD)	.....	1	351 6540	
(T-552)(Right-LHD)	.....	1	351 6530	
(T-552)***(RHD)***	.....	1	354 2546	
(T-553)(Left-LHD)	.....	1	354 2533	
(T-553)(Right-LHD)	.....	1	354 2532	
(T-553)***(RHD)***	.....	1	354 2547	
(T-557)(Left-LHD)	.....	1	354 2537	
(T-557)(Right-LHD)	.....	1	354 2536	
(T-557)***(RHD)***	.....	1	354 2549	
(T-562)(Left-LHD)	.....	1	351 6540	
(T-562)(Right-LHD)	.....	1	351 6530	
(T-562)***(RHD)***	.....	1	354 2546	
(T-563)(Left-LHD)	.....	1	354 2533	
(T-563)(Right-LHD)	.....	1	354 2532	
(T-563)***(RHD)***	.....	1	354 2547	
(T-564)(Left-LHD)	.....	1	354 2535	
(T-564)(Right-LHD)	.....	1	354 2534	
(T-564)***(RHD)***	.....	1	354 2548	
(T-565)(Left-LHD)	.....	1	354 2539	
(T-565)(Right-LHD)	.....	1	354 2538	
(T-565)***(RHD)***	.....	1	354 2550	
(T-566)(Left-LHD)	.....	1	354 2545	
(T-566)(Right-LHD)	.....	1	354 2544	
(T-566)***(RHD)***	.....	1	354 2551	
(T-567)(Left-LHD)	.....	1	354 2537	
(T-567)(Right-LHD)	.....	1	354 2536	
(T-567)***(RHD)***	.....	1	354 2549	
(T-571)(Right-LHD)	.....	1	351 6530	
(T-571)(Left-LHD)	.....	1	351 6540	
(T-571)***(RHD)***	.....	1	354 2546	
(T-573)(Left-LHD)	.....	1	354 2533	
(T-573)(Right-LHD)	.....	1	354 2532	
(T-573)***(RHD)***	.....	1	354 2547	
(T-574)(Left-LHD)	.....	1	354 2535	
(T-574)(Right-LHD)	.....	1	354 2534	
(T-574)***(RHD)***	.....	1	354 2548	
(T-575)(Left-LHD)	.....	1	354 2539	
(T-575)(Right-LHD)	.....	1	354 2538	
(T-575)***(RHD)***	.....	1	354 2550	
(T-576)(Left-LHD)	.....	1	354 2545	
(T-576)(Right-LHD)	.....	1	354 2544	
(T-576)***(RHD)***	.....	1	354 2551	
(T-577)(Left-LHD)	.....	1	354 2537	

Copyright 1963 American Motors Corp.

GROUP NO. — DESCRIPTION — YEAR and MODEL	PRIMARY GROUP NO.	PER CAR	PART NO.	CODE
(T-577)(Right-LHD)	.....	1	354 2536	
(T-577)***(RHD)***	.....	1	354 2549	
(T-578)(Left-LHD)	.....	1	351 6540	
(T-578)(Right-LHD)	.....	1	351 6530	
(T-578)***(RHD)***	.....	1	354 2546	
(T-582)(Left)	.....	1	351 6540	
(T-582)(Right)	.....	1	351 6530	
(T-583)(Left)	.....	1	354 2533	
(T-583)(Right)	.....	1	354 2532	
(T-584)(Left)	.....	1	354 2535	
(T-584)(Right)	.....	1	354 2534	
(T-585)(Left)	.....	1	354 2539	
(T-585)(Right)	.....	1	354 2538	
(T-586)(Left)	.....	1	354 2545	
(T-586)(Right)	.....	1	354 2544	
(T-587)(Right)	.....	1	354 2536	
(T-587)(Left)	.....	1	354 2537	
(T-591)	.....	1	351 6550	
(T-593)	.....	1	351 6551	
(T-594)	.....	1	351 6552	
(T-595)	.....	1	351 6554	
(T-596)	.....	1	351 6555	
(T-597)	.....	1	351 6553	
(T-598)	.....	1	351 6550	
ATTACHING PARTS				
Pad To Instrument Panel				
SCREW, Tapping 64-65 01	17.660	2	G161895	NA
BOLT, (Incl. Clip) ..... 65 50 (Marlin): 64-65 80	.....	6	400 1419	
SPACER ..... 64-65 01 (LHD)	.....	9	350 8029	
CLIP 61 01	.....	10	346 0281	
CLIP (Inner) 62-63 01	.....	2	346 0281	
NUT, Stamped ..... 64-65 01 (LHD-9 Req.): 60 10-20-80 (18 Req.): 61-62 10-20-80 (16 Req.): 63-64 10 (4 Req.): 63 80 (4 Req.): 64 80 (5 Req. -3/16" Stud)	17.428	AR	G274999	
NUT, Stamped 65 10-80	17.428	13	320 9550	
CLIP (Outer) ..... 62 01 (6 Req.): 63 01 (4 Req.)	29.070	AR	433 4654	
NUT, Speed 64-65 01	22.092	2	400 0512	
NUT, Stamped ..... 64 80 (10-24-6 Req.): 65 80 (10 Req.)	25.052	6	439 0742	
FASTENER ..... ***63 Thru 65 10 (RHD)***	.....	11	400 0835	
PAD, Instrument Panel Glove Box Door				
(T-021)	.....	1	344 3975	
(T-022)	.....	1	344 3975	
(T-023)	.....	1	344 3977	
(T-024)	.....	1	344 3979	
(T-025)	.....	1	344 3975	
(T-027)	.....	1	344 3975	
(T-028)	.....	1	344 3975	
(T-029)	.....	1	344 3975	
(T-030)	.....	1	344 3975	
(T-031)	.....	1	344 3975	
(T-032)	.....	1	344 3975	
(T-033)	.....	1	344 3977	
(T-034)	.....	1	344 3979	
(T-035)	.....	1	344 3975	
(T-037)	.....	1	344 3975	

Copyright 1963 American Motors Corp.

GROUP NO. — DESCRIPTION — YEAR and MODEL	PRIMARY GROUP NO.	PER CAR	PART NO.	CODE
(T-038)	.....	1	344 3975	#
(T-039)	.....	1	344 3975	#
(T-041)	.....	1	344 3981	#
(T-042)	.....	1	344 3975	#
(T-043)	.....	1	344 3977	#
(T-044)	.....	1	344 3979	#
(T-045)	.....	1	344 3975	#
(T-046)	.....	1	344 3975	#
(T-047)	.....	1	344 3975	#
(T-048)	.....	1	344 3975	#
(T-049)	.....	1	344 3975	#
(T-051)	.....	1	344 3981	#
(T-053)	.....	1	344 3977	#
(T-054)	.....	1	344 3979	#
(T-055)	.....	1	344 3975	#
(T-056)	.....	1	344 3975	#
(T-057)	.....	1	344 3975	#
(T-058)	.....	1	344 3975	#
(T-059)	.....	1	344 3975	#
(T-062)	.....	1	344 3975	#
(T-063)	.....	1	344 3977	#
(T-064)	.....	1	344 3979	#
(T-065)	.....	1	344 3975	#
(T-067)	.....	1	344 3975	#
(T-068)	.....	1	344 3975	#
(T-069)	.....	1	344 3975	#
(T-072)	.....	1	344 3975	#
(T-073)	.....	1	344 3977	#
(T-074)	.....	1	344 3979	#
(T-075)	.....	1	344 3975	#
(T-077)	.....	1	344 3975	#
(T-078)	.....	1	344 3975	#
(T-079)	.....	1	344 3975	#
(T-081)	.....	1	344 3981	#
(T-082)	.....	1	344 3975	#
(T-083)	.....	1	344 3977	#
(T-084)	.....	1	344 3979	#
(T-085)	.....	1	344 3975	#
(T-086)	.....	1	344 3975	#
(T-087)	.....	1	344 3975	#
(T-088)	.....	1	344 3975	#
(T-089)	.....	1	344 3975	#
(T-091)	.....	1	344 3981	#
(T-092)	.....	1	344 3975	#
(T-093)	.....	1	344 3977	#
(T-094)	.....	1	344 3979	#
(T-095)	.....	1	344 3975	#
(T-096)	.....	1	344 3975	#
(T-097)	.....	1	344 3975	#
(T-098)	.....	1	344 3975	#
(T-099)	.....	1	344 3975	#
(T-121)	.....	1	345 5228	#
(T-1212)	.....	1	347 0999	#
(T-122)	.....	1	345 5228	#
(T-1222)	.....	1	347 0999	#
(T-123)	.....	1	345 5232	#
(T-124)	.....	1	345 5236	#
(T-125)	.....	1	345 5228	#

Copyright 1963 American Motors Corp.

GROUP NO. — DESCRIPTION — YEAR and MODEL	PRIMARY GROUP NO.	PER CAR	PART NO.	CODE
(T-1252)	.....	1	347 0999	#
(T-126)	.....	1	345 5240	#
(T-128)	.....	1	345 5228	#
(T-1282)	.....	1	347 0999	#
(T-129)	.....	1	345 5228	#
(T-1292)	.....	1	347 0999	#
(T-130)	.....	1	345 5228	#
(T-131)	.....	1	345 5228	#
(T-132)	.....	1	345 5228	#
(T-133)	.....	1	345 5232	#
(T-134)	.....	1	345 5236	#
(T-135)	.....	1	345 5228	#
(T-136)	.....	1	345 5240	#
(T-138)	.....	1	345 5228	#
(T-1382)	.....	1	347 0999	#
(T-139)	.....	1	345 5228	#
(T-1392)	.....	1	347 0999	#
(T-141)	.....	1	345 5240	#
(T-142)	.....	1	345 5228	#
(T-1422)	.....	1	347 0999	#
(T-143)	.....	1	345 5232	#
(T-144)	.....	1	345 5236	#
(T-145)	.....	1	345 5228	#
(T-1452)	.....	1	347 0999	#
(T-146)	.....	1	345 5228	#
(T-1462)	.....	1	347 0999	#
(T-149)	.....	1	345 5228	#
(T-1492)	.....	1	347 0999	#
(T-151)	.....	1	345 5240	#
(T-152)	.....	1	345 5228	#
(T-1522)	.....	1	347 0999	#
(T-153)	.....	1	345 5232	#
(T-154)	.....	1	345 5236	#
(T-155)	.....	1	345 5228	#
(T-1552)	.....	1	347 0999	#
(T-156)	.....	1	345 5228	#
(T-1562)	.....	1	347 0999	#
(T-159)	.....	1	345 5228	#
(T-1592)	.....	1	347 0999	#
(T-162)	.....	1	345 5228	#
(T-1622)	.....	1	345 5228	#
(T-163)	.....	1	345 5232	#
(T-164)	.....	1	345 5236	#
(T-165)	.....	1	345 5228	#
(T-1652)	.....	1	345 5228	#
(T-166)	.....	1	345 5240	#
(T-168)	.....	1	345 5228	#
(T-1683)	.....	1	347 0999	#
(T-169)	.....	1	345 5228	#
(T-1692)	.....	1	345 5228	#
(T-1693)	.....	1	347 0999	#
(T-172)	.....	1	345 5228	#
(T-173)	.....	1	345 5232	#
(T-174)	.....	1	345 5236	#
(T-175)	.....	1	345 5228	#
(T-176)	.....	1	345 5240	#
(T-178)	.....	1	345 5228	#
(T-1783)	.....	1	347 0999	#

Copyright 1963 American Motors Corp.

GROUP NO. — DESCRIPTION — YEAR and MODEL	PRIMARY GROUP NO.	PER CAR	PART NO.	CODE
(T-179)		1	345 5228	
(T-1793)		1	347 0999	
(T-181)		1	345 5240	
(T-182)		1	345 5228	
(T-1822)		1	345 5228	
(T-1823)		1	347 0999	
(T-183)		1	345 5232	
(T-184)		1	345 5236	
(T-185)		1	345 5228	
(T-1852)		1	345 5228	
(T-1853)		1	347 0999	
(T-186)		1	345 5228	
(T-1862)		1	345 5228	
(T-1863)		1	347 0999	
(T-189)		1	345 5228	
(T-1892)		1	345 5228	
(T-1893)		1	347 0999	
(T-191)		1	345 5240	
(T-192)		1	345 5228	
(T-1923)		1	347 0999	
(T-193)		1	345 5232	
(T-194)		1	345 5236	
(T-195)		1	345 5228	
(T-1953)		1	347 0999	
(T-196)		1	345 5228	
(T-1963)		1	347 0999	
(T-199)		1	345 5228	
(T-1993)		1	347 0999	
(T-245)		1	347 7171	
(T-246)		1	346 9325	
(T-248)		1	347 7170	
(T-249)		1	347 7171	
(T-251)		1	347 0999	
(T-252)		1	347 0999	
(T-262)		1	347 0999	
(T-263)		1	346 9323	
(T-264)		1	346 9324	
(T-266)		1	346 9325	
(T-272)		1	347 0999	
(T-273)		1	346 9323	
(T-274)		1	346 9324	
(T-276)		1	346 9325	
(T-278)		1	347 7170	
(T-279)		1	347 7171	
(T-282)		1	347 0999	
(T-283)		1	346 9323	
(T-284)		1	346 9324	
(T-286)		1	346 9325	
(T-292)		1	347 0999	
(T-293)		1	346 9323	
(T-294)		1	346 9324	
(T-296)		1	346 9325	
(T-298)		1	347 7170	
(T-299)		1	347 7171	

Copyright 1963 American Motors Corp.

GROUP NO. — DESCRIPTION — YEAR and MODEL	PRIMARY GROUP NO.	PER CAR	PART NO.	CODE
ATTACHING PARTS Pad To Glove Box Door				
CLIP ..... 61 10-20-80 .....*(Replaces 343 0792)*	12.078	3	346 4507	
CLIP 62 10-80	.....	3	400 0559	
OVERLAY, Instrument Panel Glove Box Door				
65 01 (LHD-440)(LHD-440H)	.....	1	353 0212	
65 01 (RHD)	.....	1	353 0855	
63 10-80 (660)(880)	.....	1	349 2517	
63 10-80 (770)(990)	.....	1	348 2926	
64 10 (660-LHD)	.....	1	352 0787	
64 10 (770-LHD)	.....	1	350 9716	
64-65 10 (RHD)	.....	1	353 6186	
64 80 (990-LHD)	.....	1	350 9596	
ATTACHING PARTS Overlay To Glove Box Door				
SCREW, Tapping..... ***65 01 (RHD)***	.....	4	400 1561	
SCREW, Tapping..... 64 10 (770-LHD)	17.660	3	G163158	NA
OVERLAY, Instrument Panel (At Radio And Lighter Holes)				
64 10 (660-LHD)	.....	1	352 0780	
64 10 (770-LHD)	.....	1	350 9712	
63 10-80 (660)(880)	.....	1	349 2502	
63 10-80 (770)(990)	.....	1	348 2924	
64-65 10 (RHD)	.....	1	353 6187	
64 80 (990-LHD)	.....	1	350 9592	
OVERLAY, Instrument Panel (At Light Switch, Lighter And Radio Holes)				
65 10 (LHD-660-Less Clock)(Except Marlin)	.....	1	351 6474	#
65 10 (LHD-660-With Clock)(Except Marlin)	.....	1	351 6484	
65 10 (LHD-770)(Except Marlin)	.....	1	351 6470	
65 50 (Marlin)	.....	1	353 0300	
65 80 (LHD-880-Less Clock)	.....	1	351 6482	
65 80 (LHD-880-With Clock)	.....	1	351 6480	
65 80 (LHD-990)(LHD-990-H)	.....	1	351 6481	
OVERLAY, Instrument Panel (At Radio Holes)				
65 01 (LHD-440-Less Radio)(LHD-440-H-Less Radio)	.....	1	353 0213	
65 01 (RHD-Less Radio)	.....	1	353 0852	
65 01 (LHD-440-Push Button Radio)(LHD-440-H-Push Button Ratio)	.....	1	353 0211	
65 01 (RHD-Push Button Radio)	.....	1	353 0854	
65 01 (440-Manual Radio)(440-H-Manual Radio)	.....	1	353 0210	
65 01 (RHD-Manual Radio)	.....	1	353 0853	
ATTACHING PARTS Overlay To Instrument Panel (Less Radio)				
BOLT, Tee ..... 65 01 (440)(440-H)	.....	2	400 0635	
SCREW, Tapping ..... ***65 01 (RHD)***	.....	2	400 1561	
NUT, Hexagon..... 65 01 (440)(440-H)	.....	2	400 0517	
OVERLAY, Instrument Panel (At Brake Release)				
64 10 (660-LHD)	.....	1	352 0772	
63 10-80 (660-LAC)(880-LAC)	.....	1	349 2507	
63 10-80 (660-WAC)(880-WAC)	.....	1	349 2512	
63 10-80 (770-LAC)(990-LAC)	.....	1	348 2922	
63 10-80 (770-WAC)(990-WAC)	.....	1	349 2118	
64 10 (770-LHD)...(Incl. Lens)	.....	1	350 9719	
64-65 10 (RHD)	.....	1	353 6188	
64 80 (990-LHD)(With Courtesy Lights)	.....	1	350 9591	
64 80 (990-LHD)(Less Courtesy Lights)	.....	1	352 8964	

Copyright 1963 American Motors Corp.

GROUP NO. — DESCRIPTION — YEAR and MODEL	PRIMARY GROUP NO.	PER CAR	PART NO.	CODE
ATTACHING PARTS				
Overlay Panel To Instrument Panel				
NUT, Speed ..... 63 10-80 (LAC): 64 10 (660-LHD): 64 80 (Less Courtesy Lights): ***64-65 10 (RHD)***	.....	1	400 0631	#
NUT, Speed 64 10 (770-LHD)	22.060	2	400 0671	
OVERLAY, Instrument Control Identification				
(T-101)(LHD)	.....	1	345 8683	
(T-102)(LHD)	.....	1	345 8683	
(T-1022)(LHD)	.....	1	346 4562	
(T-103)(LHD)	.....	1	346 4563	
(T-104)(LHD)	.....	1	346 4564	
(T-105)(LHD)	.....	1	345 8683	
(T-1052)(LHD)	.....	1	346 4562	
(T-106)(LHD)	.....	1	346 4565	
(T-112)(LHD)	.....	1	345 8683	
(T-1122)(LHD)	.....	1	346 4562	
(T-113)(LHD)	.....	1	346 4563	
(T-114)(LHD)	.....	1	346 4564	
(T-116)(LHD)	.....	1	346 4565	
(T-128)(LHD)	.....	1	345 8683	
(T-1282)(LHD)	.....	1	346 4562	
(T-129)(LHD)	.....	1	345 8683	
(T-1292)(LHD)	.....	1	346 4562	
(T-138)(LHD)	.....	1	345 8683	
(T-1382)(LHD)	.....	1	346 4562	
(T-141)(LHD)	.....	1	346 4565	
(T-142)(LHD)	.....	1	345 8683	
(T-1422)(LHD)	.....	1	346 4562	
(T-143)(LHD)	.....	1	346 4563	
(T-144)(LHD)	.....	1	346 4564	
(T-145)(LHD)	.....	1	345 8683	
(T-1452)(LHD)	.....	1	346 4562	
(T-146)(LHD)	.....	1	345 8683	
(T-1462)(LHD)	.....	1	346 4562	
(T-149)(LHD)	.....	1	345 8683	
(T-1492)(LHD)	.....	1	346 4562	
(T-151)(LHD)	.....	1	346 4565	
(T-152)(LHD)	.....	1	345 8683	
(T-1522)(LHD)	.....	1	346 4562	
(T-153)(LHD)	.....	1	346 4563	
(T-154)(LHD)	.....	1	346 4564	
(T-155)(LHD)	.....	1	345 8683	
(T-1552)(LHD)	.....	1	346 4562	
(T-156)(LHD)	.....	1	345 8683	
(T-1562)(LHD)	.....	1	346 4562	
(T-159)(LHD)	.....	1	345 8683	
(T-1592)(LHD)	.....	1	346 4562	
(T-201)(LHD)	.....	1	347 4878	
(T-201)***(RHD)***	.....	1	347 4872	
(T-202)(LHD)	.....	1	347 4878	
(T-202)***(RHD)***	.....	1	347 4872	
(T-212)(LHD)	.....	1	347 4878	
(T-212)***(RHD)***	.....	1	347 4872	
(T-213)(LHD)	.....	1	347 4879	
(T-213)***(RHD)***	.....	1	347 4873	
(T-214)(LHD)	.....	1	347 4880	

Copyright 1963 American Motors Corp.

GROUP NO. — DESCRIPTION — YEAR and MODEL	PRIMARY GROUP NO.	PER CAR	PART NO.	CODE
(T-214)***(RHD)***		1	347 4874	
(T-216)(LHD)		1	347 4881	
(T-216)***(RHD)***		1	347 4875	
(T-222)(LHD)		1	347 4878	
(T-222)***(RHD)***		1	347 4872	
(T-223)(LHD)		1	347 4879	
(T-223)***(RHD)***		1	347 4873	
(T-224)(LHD)		1	347 4880	
(T-224)***(RHD)***		1	347 4874	
(T-225)(LHD)		1	347 4878	
(T-225)***(RHD)***		1	347 4872	
(T-226)(LHD)		1	347 4881	
(T-226)***(RHD)***		1	347 4875	
(T-228)(LHD)		1	347 4882	
(T-228)***(RHD)***		1	347 4876	
(T-229)(LHD)		1	347 4883	
(T-229)***(RHD)***		1	347 4877	
(T-232)(LHD)		1	347 4878	
(T-232)***(RHD)***		1	347 4872	
(T-233)(LHD)		1	347 4879	
(T-233)***(RHD)***		1	347 4873	
(T-234)(LHD)		1	347 4880	
(T-234)***(RHD)***		1	347 4874	
(T-235)(LHD)		1	347 4878	
(T-235)***(RHD)***		1	347 4872	
(T-236)(LHD)		1	347 4881	
(T-236)***(RHD)***		1	347 4875	
(T-238)(LHD)		1	347 4882	
(T-238)***(RHD)***		1	347 4876	
(T-239)(LHD)		1	347 4883	
(T-239)***(RHD)***		1	347 4877	
(T-245)(LHD)		1	347 4878	
(T-245)***(RHD)***		1	347 4872	
(T-246)(LHD)		1	347 4881	
(T-246)***(RHD)***		1	347 4875	
(T-248)(LHD)		1	347 4882	
(T-248)***(RHD)***		1	347 4876	
(T-249)(LHD)		1	347 4883	
(T-249)***(RHD)***		1	347 4877	
(T-301)(LHD)		1	349 8444	
(T-301)***(RHD)***		1	349 8244	
(T-302)(LHD)		1	349 8444	
(T-302)***(RHD)***		1	349 8244	
(T-312)(LHD)		1	349 8444	
(T-312)***(RHD)***		1	349 8244	
(T-313)(LHD)		1	349 8445	
(T-313)***(RHD)***		1	349 8245	
(T-314)(LHD)		1	349 8446	
(T-314)***(RHD)***		1	349 8246	
(T-315)(LHD)		1	349 8447	
(T-315)***(RHD)***		1	349 8247	
(T-316)(LHD)		1	347 4883	
(T-316)***(RHD)***		1	347 4877	
(T-322)(LHD)		1	349 8444	
(T-322)***(RHD)***		1	349 8244	
(T-323)(LHD)		1	349 8445	
(T-323)***(RHD)***		1	349 8245	
(T-324)(LHD)		1	349 8446	

Copyright 1963 American Motors Corp.

GROUP NO. — DESCRIPTION — YEAR and MODEL	PRIMARY GROUP NO.	PER CAR	PART NO.	CODE
(T-324)***(RHD)***	.....	1	349 8246	
(T-325)(LHD)	.....	1	349 8447	
(T-325)***(RHD)***	.....	1	349 8247	
(T-326)(LHD)	.....	1	347 4883	
(T-326)***(RHD)***	.....	1	347 4877	
(T-327)(LHD)	.....	1	349 8448	
(T-327)***(RHD)***	.....	1	349 8248	
(T-332)(LHD)	.....	1	349 8444	
(T-332)***(RHD)***	.....	1	349 8244	
(T-333)(LHD)	.....	1	349 8445	
(T-333)***(RHD)***	.....	1	349 8245	
(T-334)(LHD)	.....	1	349 8446	
(T-334)***(RHD)***	.....	1	349 8246	
(T-335)(LHD)	.....	1	349 8447	
(T-335)***(RHD)***	.....	1	349 8247	
(T-336)(LHD)	.....	1	347 4883	
(T-336)***(RHD)***	.....	1	347 4877	
(T-337)(LHD)	.....	1	349 8448	
(T-337)***(RHD)***	.....	1	349 8248	
(T-342)(LHD)	.....	1	349 8444	
(T-342)***(RHD)***	.....	1	349 8244	
(T-343)(LHD)	.....	1	349 8445	
(T-343)***(RHD)***	.....	1	349 8245	
(T-344)(LHD)	.....	1	349 8446	
(T-344)***(RHD)***	.....	1	349 8246	
(T-345)(LHD)	.....	1	349 8447	
(T-345)***(RHD)***	.....	1	349 8247	
(T-346)(LHD)	.....	1	347 4883	
(T-346)***(RHD)***	.....	1	347 4877	
(T-347)(LHD)	.....	1	349 8448	
(T-347)***(RHD)***	.....	1	349 8248	
ATTACHING PARTS				
Overlay To Instrument Panel				
NUT, Spring..... 62-63 01	17.421	2	G445177	NA
OVERLAY, Air Conditioning Control				
64 10-80 (WAC)	13.480	1	352 0768	
PLATE, Instrument Panel Control Backing				
60 10-20-80 (Defroster And Wiper Control)	.....	1	344 3785	
60 10-20-80 (Light Switch, Heater And Vent Control)	.....	1	344 3784	
61 10-20-80 (LHD-Wiper Control)	.....	1	344 8424	
61 10-20-80 (RHD-Wiper Control)	.....	1	344 8425	
61 10-20-80 (Light Switch, Heater Air Conditioning And Defroster)	.....	1	344 7877	
65 10 (LHD-Wiper Control, Light Switch And Blower)	.....	1	351 6606	
DIAL, Instrument Panel Control				
65 10 (LHD-Wiper Control, Light Switch And Blower)	3.510	1	351 6582	
BEZEL, Instrument Panel Control Overlay				
60 10-20-80 (4 Req.): 61 10-20-80 (3 Req.)	.....	AR	344 0788	
65 10 (LHD-Wiper Control, Light Switch And Blower)	.....	3	351 6641	
COVER, Instrument Panel Air Conditioning Opening				
64 19-7 (Typhoon-LAC)(Except Marlin)...(Incl. Nameplate)	.....	1	353 0651	
65 10 (LHD-LAC)(Except Marlin)	.....	1	351 6710	
65 50 (Marlin-LAC)	.....	1	353 0308	

Copyright 1963 American Motors Corp.

GROUP NO. — DESCRIPTION — YEAR and MODEL	PRIMARY GROUP NO.	PER CAR	PART NO.	CODE
64 80 (LAC)...(Incl. Nameplate)	.....	1	351 9900	
65 80 (LHD-880-LAC)...(Incl. Nameplate)	.....	1	351 6741	
65 80 (LHD-990-LAC)...(Incl. Nameplate)	.....	1	351 6742	
65 80 (LHD-990-H-LAC)...(Incl. Nameplate)	.....	1	351 6743	
ATTACHING PARTS				
Cover To Instrument Panel				
SCREW, Tapping..... 64 19 (Typhoon-LAC): 64 80 (LAC)	17.655	2	G168499	NA
SCREW, Tapping..... 65 10 (LAC)(Except Marlin)	17.660	3	G161860	NA
SCREW, Tapping..... 65 80 (LAC-10-12 x 3/4)	17.660	7	G443946	NA
SCREW, Hexagon ..... 65 50 (Marlin): 65 80 (LAC-8-15 x 5/8)	17.671	7	G9411429	NA
NUT, Speed..... 65 10-80 (LAC)	.....	3	400 1340	
Cover To Instrument Cluster Bezel				
CLIP, Stud..... 65 10 (LAC)	17.421	4	G173137	
Cover To Pad				
SCREW, Tapping..... 64 19 (Typhoon-LAC): 64 80 (LAC)	17.655	2	G168499	NA
Cover To Bracket				
RIVET..... 65 80 (LAC)	.....	2	400 1608	
NUT, Spring..... 65 80 (LAC)	17.421	2	G455168	NA
NAMEPLATE, Instrument Panel Air Conditioning Opening Cover				
64 80 (LAC)	.....	1	350 9748	
65 80 (LHD-880-LAC) ***(Use 351 6741)***	.....	1	351 6744	
65 80 (LHD-990-LAC)	.....	1	351 6745	
65 80 (LHD-990-H-LAC)	.....	1	351 6746	
"Classic 550" 65 10 (LHD-LAC)	22.060	1	351 7130	
"Classic 660" 65 10 (LHD-LAC)	22.060	1	351 7105	
"Classic 770" 65 10 (LHD-LAC)	22.060	1	351 7106	
"Classic 770H" 65 10 (LHD-LAC)	.....	1	351 7469	
ATTACHING PARTS				
Nameplate To Opening Cover				
NUT, Speed..... 65 10 (LHD-LAC)	.....	2	400 1533	
BRACKET, Air Conditioning Opening Cover				
65 50 (Marlin-LHD-LAC): 65 80 (LHD-LAC)	.....	2	351 6656	#
ATTACHING PARTS				
Bracket To Instrument Panel				
SCREW, Hexagon ..... 65 80 (LAC)	17.671	2	G9411429	
SPACER, Crash Pad To Instrument Panel				
63 10-80	.....	4	348 8411	
SEALER, Instrument Panel Overlay Backing Plate (Rubber)				
60 10-20-80 (2 Req.): 61 10-20-80 (Lights, Heater, Air Conditioning And Defroster-Also Used Less Heater-1Req.)	.....	AR	344 0537	
PANEL, Instrument Panel Finish				
60 01 (With Manual Radio And Clock Opening)	.....	1	342 5847	
60 01 (With Push Button Radio And Clock Opening)...(Incl. Moulding) ***(Ref. Pr. List)***	.....	1	899 0815	
60 01 (With Push Button Radio And Less Clock Opening)...(Incl. Moulding) ***(Ref. Pr. List)***	.....	1	899 0814	
60 01 (With Manual Radio And Less Clock Opening)	.....	1	342 5846	
60 01 (Less Radio And Clock Opening)	.....	1	343 0590	
60 01 (Less Radio And With Clock Opening)	.....	1	343 0591	

Copyright 1963 American Motors Corp.

GROUP NO. — DESCRIPTION — YEAR and MODEL	PRIMARY GROUP NO.	PER CAR	PART NO.	CODE
MOULDING, Instrument Panel				
60 01	.....	1	437 3284	
(Lower-Outer) 65 10 (LHD-660-Less Heater)(LHD-770-Less Heater): 65 80 (LHD-Less Heater)	.....	1	351 6467	
(Lower-Outer) 65 10 (LHD-660-With Heater)(LHD-770-With Heater) (Except Marlin)	.....	1	351 6518	
(Lower-Outer) 65 50 (Martin-With Heater): 65 80 (LHD-With Heater)	.....	1	351 6519	
(Lower-Inner) 65 10 (LHD-660)(LHD-770): 65 80 (LHD)	.....	1	351 6110	
(Right-Upper-Outer) 65 10 (LHD-770): 65 80 (LHD)	.....	1	351 6468	
(Left-Upper-Outer) 65 10 (LHD-770): 65 80 (LHD)	.....	1	351 6469	
(Instrument Cluster Opening) 65 10 (LHD-550)(Except Marlin)	.....	1	351 6761	
(Instrument Cluster Opening) 65 10 (LHD-660)(LHD-770)(Except Marlin)	.....	1	351 6760	
(Instrument Cluster Opening-Inner) 65 50 (Marlin): 65 80 (LHD)	.....	1	351 6115	
(Instrument Cluster Opening-Outer) 65 50 (Marlin): 65 80 (LHD)	.....	1	351 6114	
ATTACHING PARTS Lower Moulding To Instrument Panel				
NUT, Push 65 10-80	.....	4	400 1533	
NUT, Stamped 65 10-80	17.428	2	G274992	NA
Upper Moulding To Instrument Panel				
NUT, Push 65 10-80	22.060	4	400 1352	
Instrument Cluster Opening Moulding To Instrument Panel				
CLIP ..... 65 10-80 ..... *(Replaces 400 1571)*	.....	5	400 1460	
NUT, Stamped 65 10-80	17.428	1	G2749992	NA#
BEZEL, Instrument Panel Radio And Clock Opening				
60 10-20-80	.....	1	344 0615	
61 10-20-80 (Note 22.092-1)	.....	1	344 7647	
61 10-20-80 (Note 22.092-2): 62 10-80	15.320	1	346 6097	
ATTACHING PARTS Bezel To Instrument Panel				
SCREW, Tapping ..... 60 Thru 62 10-20-80	23.006	2	400 0055	
COVER, Instrument Panel Clock Opening (Less Clock)				
60 Thru 62 10-20-80 ..... *(Replaces 344 0847)*	.....	1	347 1309	
63-64 10: 63 80: ***65 10 (RHD)*** ..... *(Replaces 348 2592)*	.....	1	352 0860	
65 10 (LHD-550)	.....	1	351 6512	
ATTACHING PARTS Cover To Instrument Panel				
SCREW, Tapping ..... 60 Thru 62 10-20-80	23.006	2	400 0055	
NUT, Hexagon 63-64 10	3.360	2	400 0171	
CLIP 65 10 (LHD-550)	.....	2	400 1551	
COVER, Instrument Panel Radio Opening (Less Radio)				
61 Thru 63 01	.....	1	344 8418	
64 01: 65 01 (220)(330)	.....	1	350 0752	
60-61 10-20-80	.....	1	344 0932	
62 10-80	.....	1	347 1308	
63-64 10-80 (Police)	.....	1	316 9197	
65 10-80 (Police)	.....	1	317 6930	
(Dial Opening) 63-64 10-80 (550)(660)(880): ***65 10 (RHD): 163 10-80 (CAN)*** ..... *(Replaces 348 2832)*	.....	1	352 0862	
(Dial Opening) 64 10 (770): ***164 10 (CAN)***	.....	1	352 0766	
(Dial Opening) 65 10-80 (LHD)	.....	1	351 6631	
(Push Button Opening) 63-64 10-80 ..... *(Replaces 348 2841)*	.....	1	354 2526	
(Push Button Opening) 65 10-80 (LHD)	.....	1	351 6642	
(Push Button Opening) ***65 10 (RHD)***	.....	1	354 2526	
(Push Button Opening) ***163-164 10-80 (CAN)***	.....	1	349 0292	
(Push Button Opening) ***165 10-85-86-88-89 (Can)***	.....	1	351 6639	
(Push Button Opening) ***165 87 (Can)***	.....	1	320 9192	

Copyright 1963 American Motors Corp.

GROUP NO. — DESCRIPTION — YEAR and MODEL		PRIMARY GROUP NO.	PER CAR	PART NO.	CODE
ATTACHING PARTS	Cover To Instrument Panel				
RETAINER	*165 10 (Can)*	.....	1	351 6643	
SCREW, Tapping	61 Thru 63 01	17.654	2	G163467	NA
BOLT, Cover	60 Thru 62 10-20-80	.....	2	344 0032	
BOLT, Tee	64-65 01: 63 Thru 65 10-80	.....	2	400 0635	
CLIP	65 10-80	.....	2	400 1551	
NUT, Hexagon	64-65 01	26.039	2	400 0517	
NUT, Hexagon	60-61 10-20-80: 63 10-80 (Used With Bolt): 65 10-80	25.052	2	439 0742	
NUT (Push On)	*165 10-80 (Can)*	.....	2	400 1331	
NUT, Stamped	62 10-80	17.428	2	G446060	NA
NUT, Spring	63 10-80 (Used With Stud) *(Replaces 400 0156)*	13.017	2	400 0130	
NUT, Push	*163-164 10-80 (Can)*	7.215	2	400 0459	
CLAMP, Instrument Panel Radio Opening Cover (Less Radio)					
65 10-80 (LHD)		.....	2	351 7102	
BUMPER, Radio Speaker Mounting Plate (Less Radio)					
65 10-80 (LHD)		15.320	2	400 0154	
PLATE, Radio Speaker Mounting Plate (Less Radio)					
65 10-80 (LHD)		15.320	1	351 6618	
ATTACHING PARTS	Plate To Instrument Panel				
SCREW, Tapping	65 10-80 (LHD)	17.660	1	G161895	
NUT, Speed	65 10-80 (LHD)	14.108	1	400 0141	
SEAL, Radio Speaker Mounting Plate (Less Radio)					
65 10-80 (LHD)		15.320	1	351 6622	
PLUG, Instrument Panel Heater Control Switch Hole (Less Heater)					
61 Thru 63 01		.....	1	346 4458	
61-62 10-20-80	*(Replaces 314 7440)*	13.078	1	400 0088	
COVER, Instrument Panel Defroster Duct Opening (Less Heater)					
64-65 01		.....	1	352 2270	
COVER, Instrument Panel Heater And Defroster Controls (Less Heater)					
65 10-80		.....	1	354 2582	
ATTACHING PARTS	Cover To Instrument Panel				
SCREW, Tapping	65 10-80	17.660	2	G161895	
NUT, Stamped	64-65 01	17.428	1	320 9549	
COVER, Instrument Panel Heater Blower Switch (Less Heater)					
65 10 (Except Marlin)		.....	1	353 0738	
65 50 (Marlin): 65 80		.....	1	353 0739	
ATTACHING PARTS	Cover To Instrument Panel				
NUT, Speed	65 10 (Except Marlin)	.....	2	400 1480	
NUT, Speed	65 50 (Marlin): 65 80	13.017	2	400 1323	

Copyright 1963 American Motors Corp.

GROUP NO. — DESCRIPTION — YEAR and MODEL	PRIMARY GROUP NO.	PER CAR	PART NO.	CODE
COVER, Instrument Panel Map Light Opening (Less Map Light)				
65 50 (Marlin): 65 80	.....	1	353 0739	
ATTACHING PARTS Cover To Instrument Panel				
NUT, Stamped ..... 65 50 (Marlin)	17.428	1	G274992	NA#
NUT, Speed 65 80	.....	2	400 0459	
PLUG, Instrument Panel Glove Box Lamp Switch Hole (Less Glove Box Lamp)				
61 Thru 65 01: 63-64 10: 63 80	22.100	1	400 0368	
ATTACHING PARTS Plug To Instrument Panel				
NUT, Hexagon 61-62 10-20-80	17.406	1	G120368	
WASHER, Lock 61-62 10-20-80	17.820	1	G120214	NA
22.103 PLATE, Instrument Panel Name				
("American") 60 01	12.075	1	342 5784	
("American") 61-62 01 ***(Replaces 345 8305)***	22.060	1	448 0662	
("Rambler") 60 10	12.075	1	314 0694	
("Rambler") 61-62 10-20	.....	1	345 8138	
("Rebel") 60 20	12.075	1	342 5789	
("Ambassador") 60 80	12.075	1	314 0690	
("Ambassador") 61-62 80	.....	1	345 8088	
ATTACHING PARTS Plate To Dash Panel				
CLIP 60 01-10-20-80	12.125	4	437 7405	
CLIP ..... 61-62 01 (3 Req.): 61-62 10-20-80 (4 Req.) ***(Replaces 344 7893)***	.....	AR	400 0091	
22.120 COVER, Windshield Wiper Motor Access Hole				
61-62 10-20-80 ***(Replaces 344 7833)***	.....	1	348 7684	
ATTACHING PARTS Cover To Dash Panel				
SCREW, Tapping..... 60 10-20-80	17.671	4	G274773	NA
SCREW, Tapping..... 61-62 10-20-80 ***(Replaces 800 0095)***	17.671	6	G456766	
SEAL, Windshield Wiper Motor Deflector To Cowl Top				
62 10-80	.....	1	348 4949	
GASKET, Windshield Wiper Motor Access Hole				
61-62 10-20-80	.....	1	344 7968	
22.200 COIL, Electric Windshield Wiper Motor Field				
64-65 01: 63 Thru 65 10-80	.....	1	448 0998	
22.205 ARMATURE, Electric Windshield Wiper Motor				
64-65 01: 63 Thru 65 10-80	.....	1	448 0999	
22.210 HEAD, Electric Windshield Wiper Motor Commutator End				
64-65 01: 63 Thru 65 10-80	.....	1	448 0993	

Copyright 1963 American Motors Corp.

GROUP NO. — DESCRIPTION — YEAR and MODEL	PRIMARY GROUP NO.	PER CAR	PART NO.	CODE
SPRING SET, Electric Windshield Wiper Motor Brush				
64-65 01: 63 Thru 65 10-80	.....	1	448 1000	
BRUSH SET, Electric Windshield Wiper Motor				
64-65 01: 63 Thru 65 10-80	.....	1	448 0994	
22.215 HEAD, Electric Windshield Wiper Motor Drive End				
64-65 01: 63 Thru 65 10-80	.....	1	448 0992	
22.218 PLATE AND SWITCH, Electric Windshield Wiper Motor				
64-65 01: 63 Thru 65 10-80	.....	1	448 0996	
ATTACHING PARTS Plate To Head				
SCREW, Topping..... 64-65 01: 63 Thru 65 10-80	17.678	5	G9405022	NA
GASKET, Electric Windshield Wiper Motor Switch Plate				
64-65 01: 63 Thru 65 10-80	.....	1	448 1004	
22.222 PLATE, Electric Windshield Wiper Motor Switch Contact				
64-65 01: 63 Thru 65 10-80	.....	1	448 0995	
22.226 GEAR, Electric Windshield Wiper Motor				
64-65 01: 63 Thru 65 10-80	.....	1	448 0991	
ATTACHING PARTS Gear To Crank				
WASHER, Lock..... 64-65 01: 63 Thru 65 10-80	17.824	1	G120423	NA
NUT, Gear..... 64-65 01: 63 Thru 65 10-80	17.412	1	G120361	NA
KEY, Electric Windshield Wiper Motor Gear				
64-65 01: 63 Thru 65 10-80	.....	1	448 0990	
WASHER, Electric Windshield Wiper Drive Crank Thrust				
(Inner) 64-65 01: 63 Thru 65 10-80	.....	1	448 0988	
(Outer) 64-65 01: 63 Thru 65 10-80	.....	1	448 0989	
22.232 SCREW, Electric Windshield Wiper Motor Adjusting				
64-65 01: 63 Thru 65 10-80	.....	1	448 1001	
DISC, Electric Windshield Wiper Motor Adjusting				
64-65 01: 63 Thru 65 10-80	.....	1	448 1002	
22.238 CRANK, Electric Windshield Wiper Drive				
64-65 01	.....	1	448 1378	
63 Thru 65 10-80	.....	1	448 0987	
ATTACHING PARTS Crank To Motor				
WASHER, Spring..... 64-65 01: 63 Thru 65 10-80	23.121	1	400 0043	

Copyright 1963 American Motors Corp.

GROUP NO. — DESCRIPTION — YEAR and MODEL	PRIMARY GROUP NO.	PER CAR	PART NO.	CODE
22.242 WASHER, Electric Windshield Wiper Drive Crank Eccentric Spring				
64-65 01: 63 Thru 65 10-80	.....	1	349 0397	
SPRING, Electric Windshield Wiper Drive Crank Eccentric				
64-65 01: 63 Thru 65 10-80	.....	1	349 0395	
ACTUATOR, Electric Windshield Wiper Drive Link				
64-65 01: 63 Thru 65 10-80	.....	1	349 0396	
BUSHING, Electric Windshield Wiper Drive Crank Eccentric				
64-65 01: 63-64 10-80	.....	1	349 0394	
RETAINER, Electric Windshield Wiper Drive Crank Eccentric				
64-65 01: 63 Thru 65 10-80	.....	1	448 0986	
22.246 LINK, Electric Windshield Wiper Drive				
64-65 01	.....	1	350 0600	
63 Thru 65 10-80	.....	1	349 0393	
ATTACHING PARTS Link To Motor				
CLIP ..... 64-65 01: 63 Thru 65 10-80	.....	1	349 0399	
RETAINER ..... 64-65 01: 63 Thru 65 10-80	.....	1	349 0398	
22.250 LEAD, Electric Windshield Wiper Motor Wire				
64-65 01	.....	1	448 1376	
63-64 10-80	.....	1	448 0997	
65 10-80	.....	1	448 2838	
22.254 BRACKET, Electric Windshield Wiper Motor Lead Wire				
64-65 01: 63 Thru 65 10-80	.....	1	448 1003	

Copyright 1963 American Motors Corp.

GROUP NO. — DESCRIPTION — YEAR and MODEL	PRIMARY GROUP NO.	PER CAR	PART NO.	CODE

Copyright 1963 American Motors Corp.

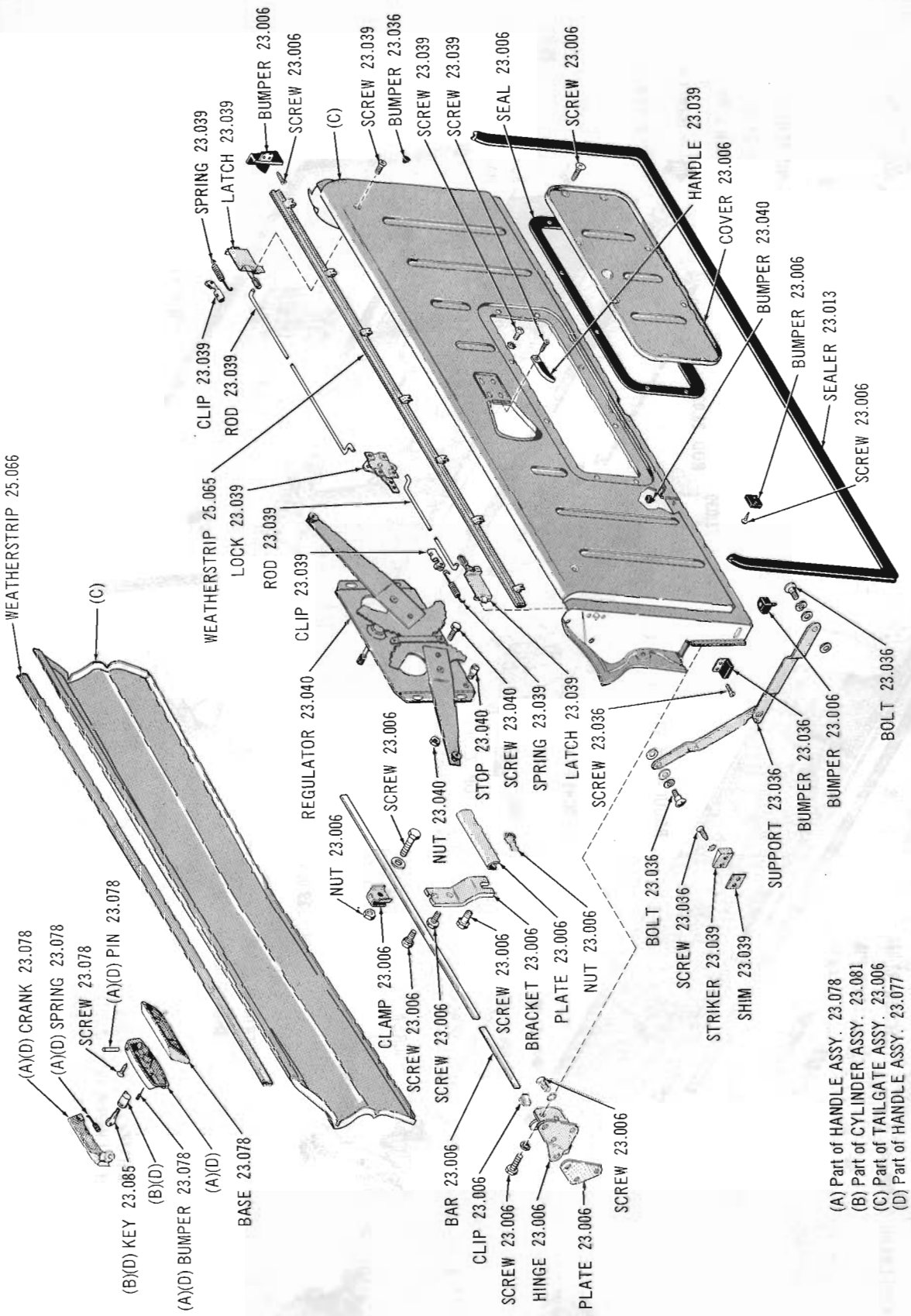

TAILGATE, HARDWARE AND SEALERS 63-64 18-88 (LVT-LER)

Copyright 1963 American Motors Corp.

TAILGATE, HARDWARE AND SEALERS 64-65 08 (LER)

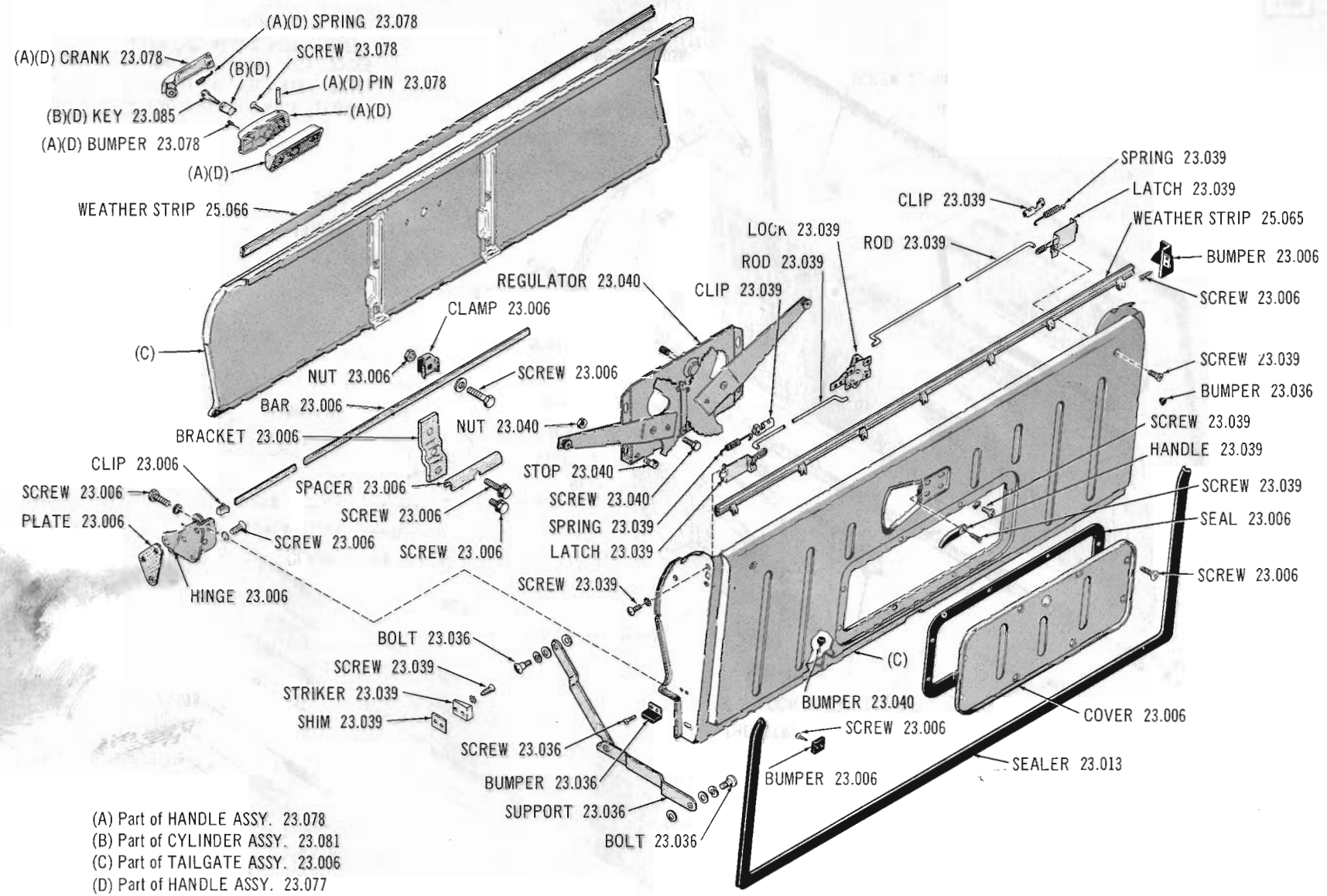

(A) Part of HANDLE ASSY. 23.078
(B) Part of CYLINDER ASSY. 23.081
(C) Part of TAILGATE ASSY. 23.006
(D) Part of HANDLE ASSY. 23.077

1597

Copyright 1963 American Motors Corp.

Printed in U.S.A.

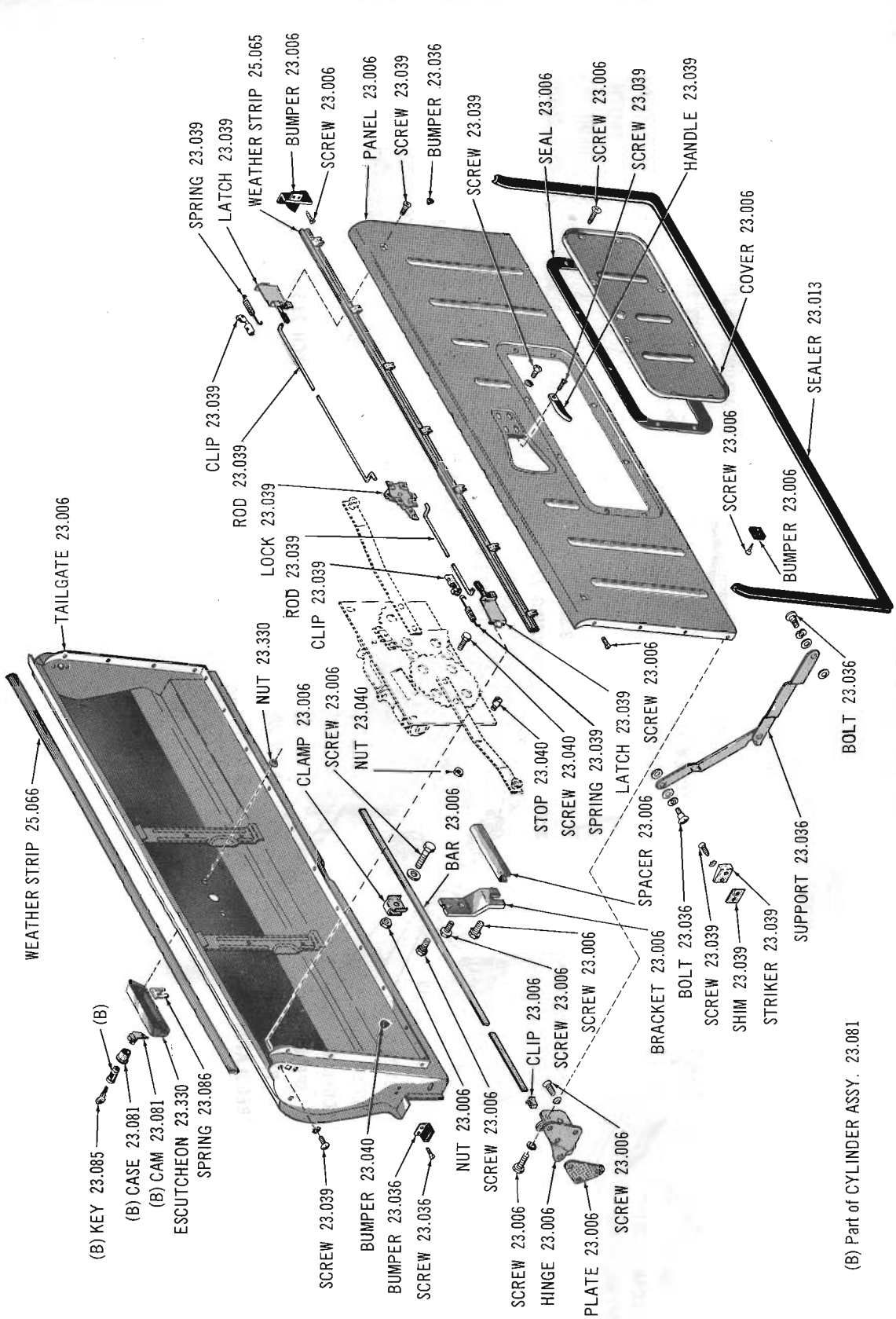

TAILGATE, HARDWARE AND SEALERS 64-65 08 (WER)

Copyright 1963 American Motors Corp.

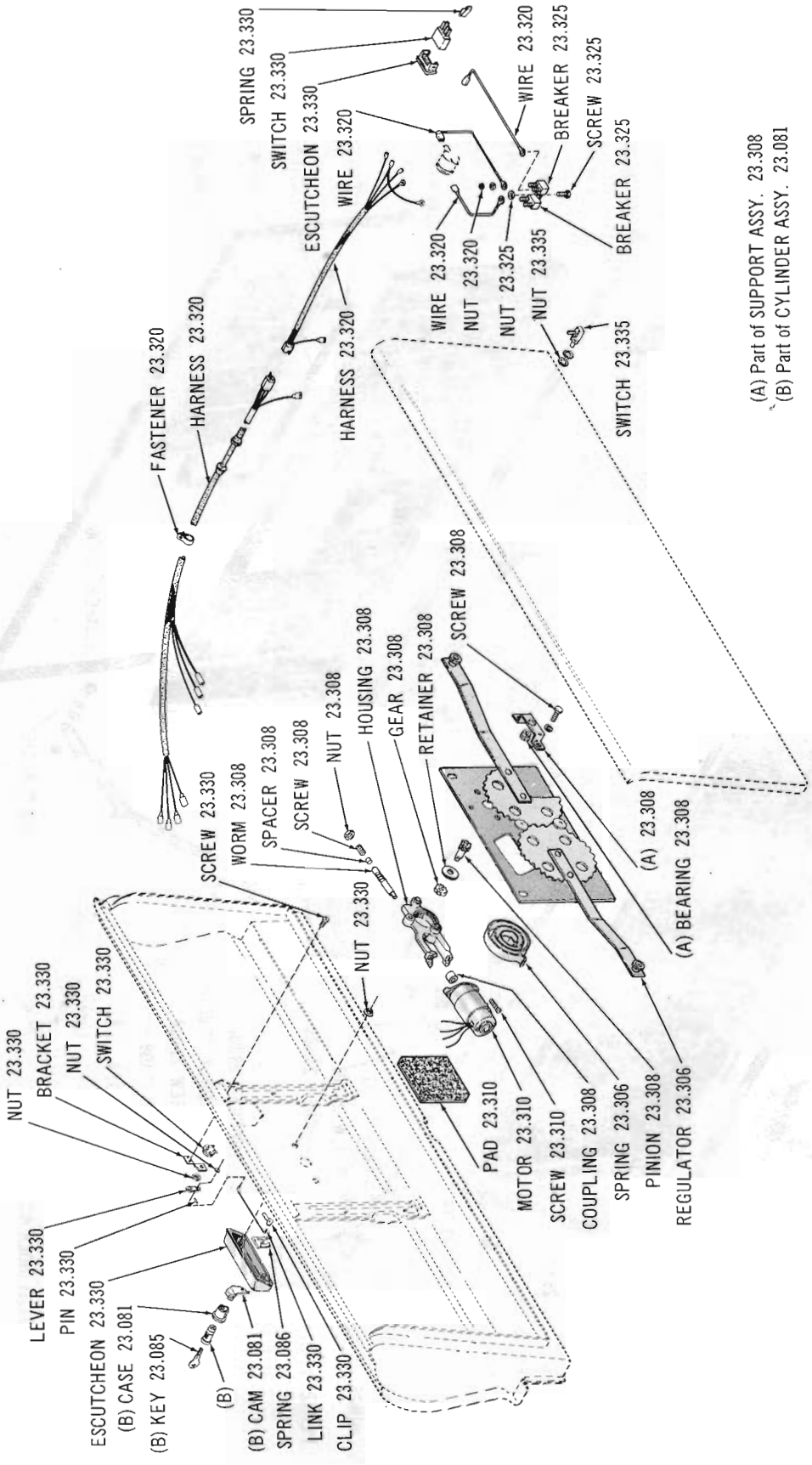

TAILGATE ELECTRIC WINDOW REGULATOR 64-65 08 (WER)

Copyright 1963 American Motors Corp.

Copyright 1963 American Motors Corp.

FRONT DOOR, HARDWARE AND SEALERS 63-64 15-18-85-88: 64-65 05-08

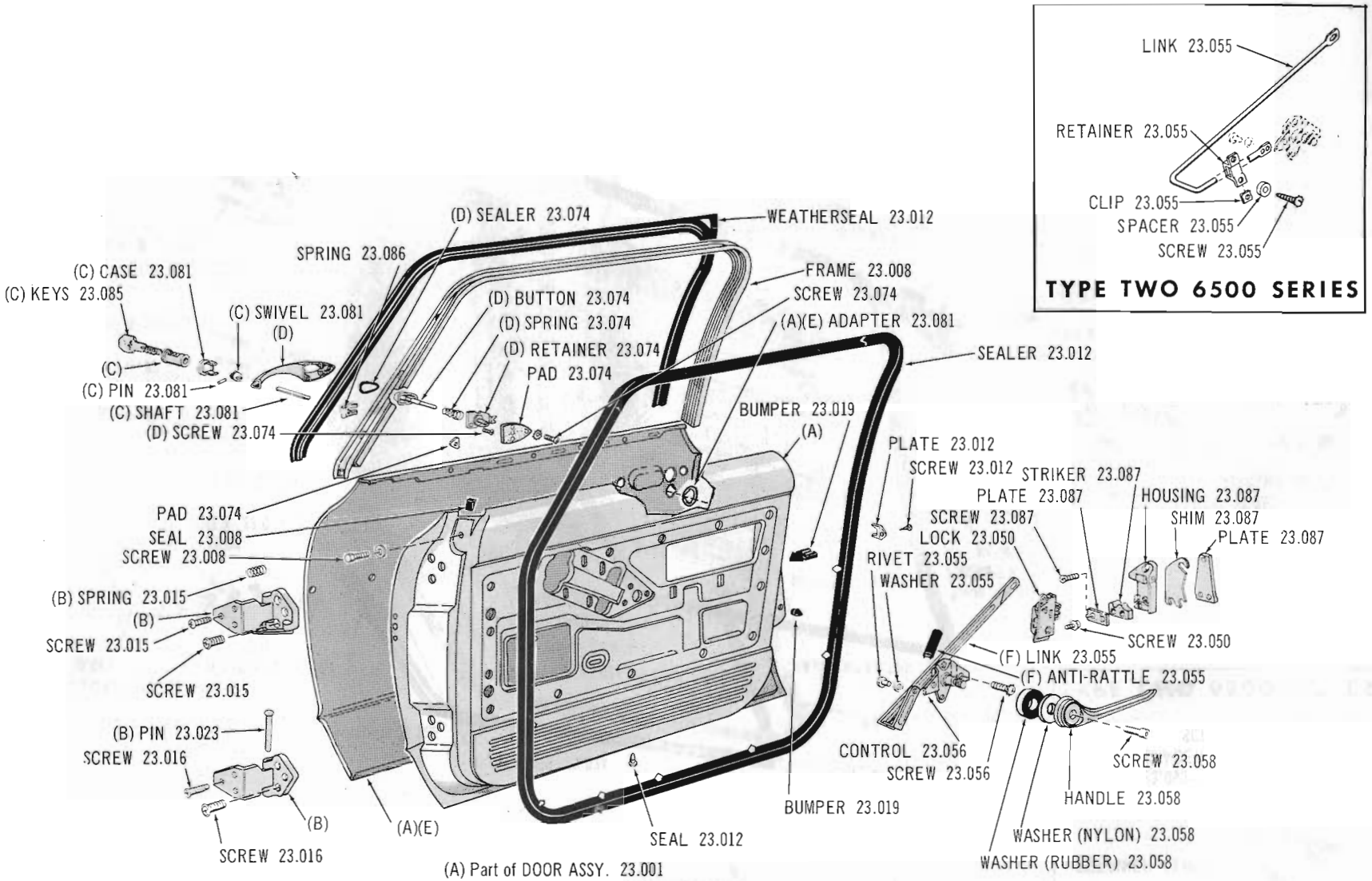

(A) Part of DOOR ASSY. 23.001
(B) Part of HINGE ASSY. 23.015 & 23.016
(C) Part of CYLINDER ASSY. 23.081
(D) Part of HANDLE ASSY. 23.074
(E) Part of PANEL ASSY. 23.001
(F) TYPE ONE 6500 SERIES

FRONT DOOR, HARDWARE AND SEALERS 63-64 16: 63 86: 64-65 06

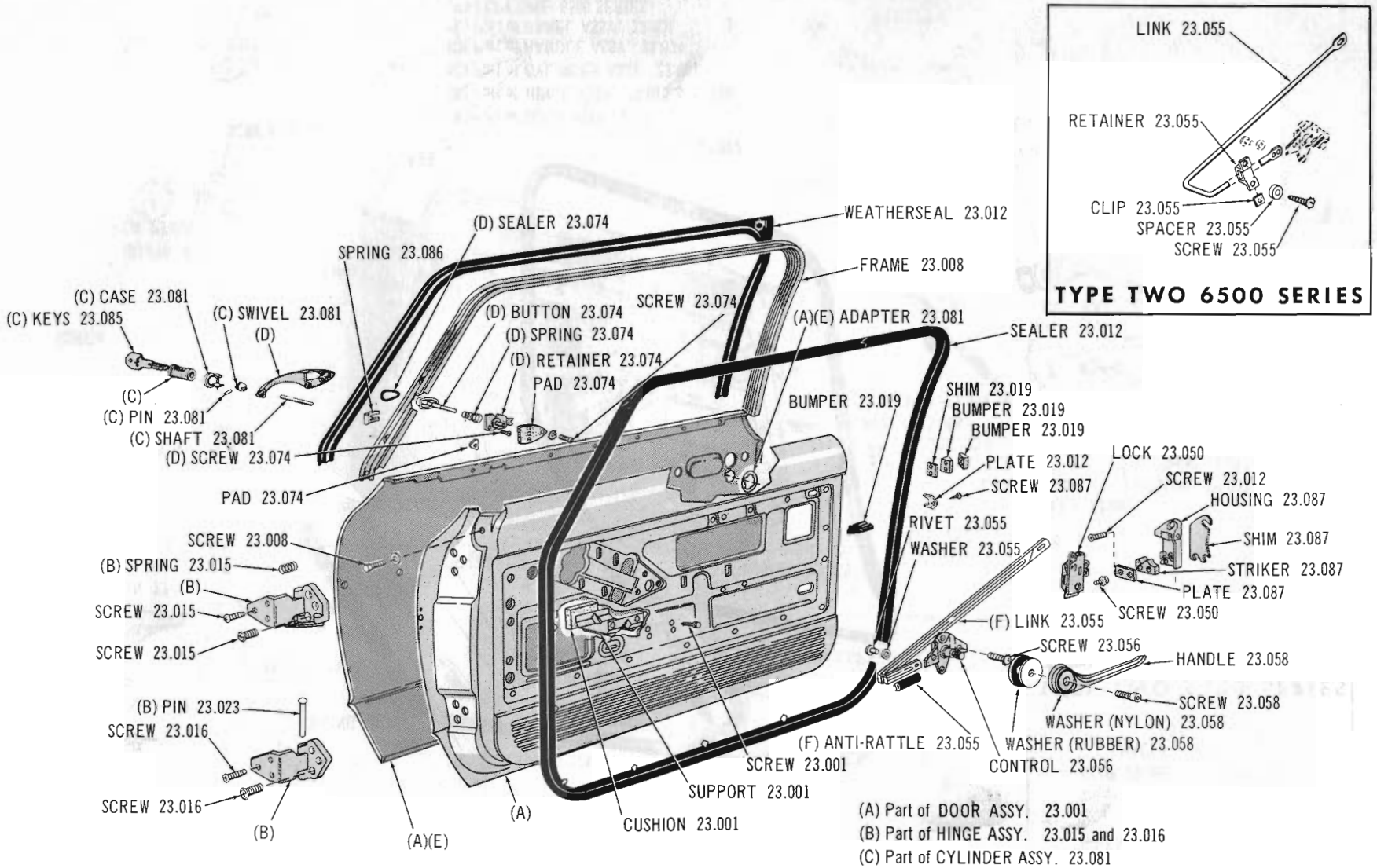

(A) Part of DOOR ASSY. 23.001
(B) Part of HINGE ASSY. 23.015 and 23.016
(C) Part of CYLINDER ASSY. 23.081
(D) Part of HANDLE ASSY. 23.074
(E) Part of PANEL ASSY. 23.001
(F) TYPE ONE 6500 SERIES

1670

Copyright 1963 American Motors Corp.

Printed in U.S.A.

FRONT DOOR, HARDWARE AND SEALERS 64 19-89; 64-65 07-09

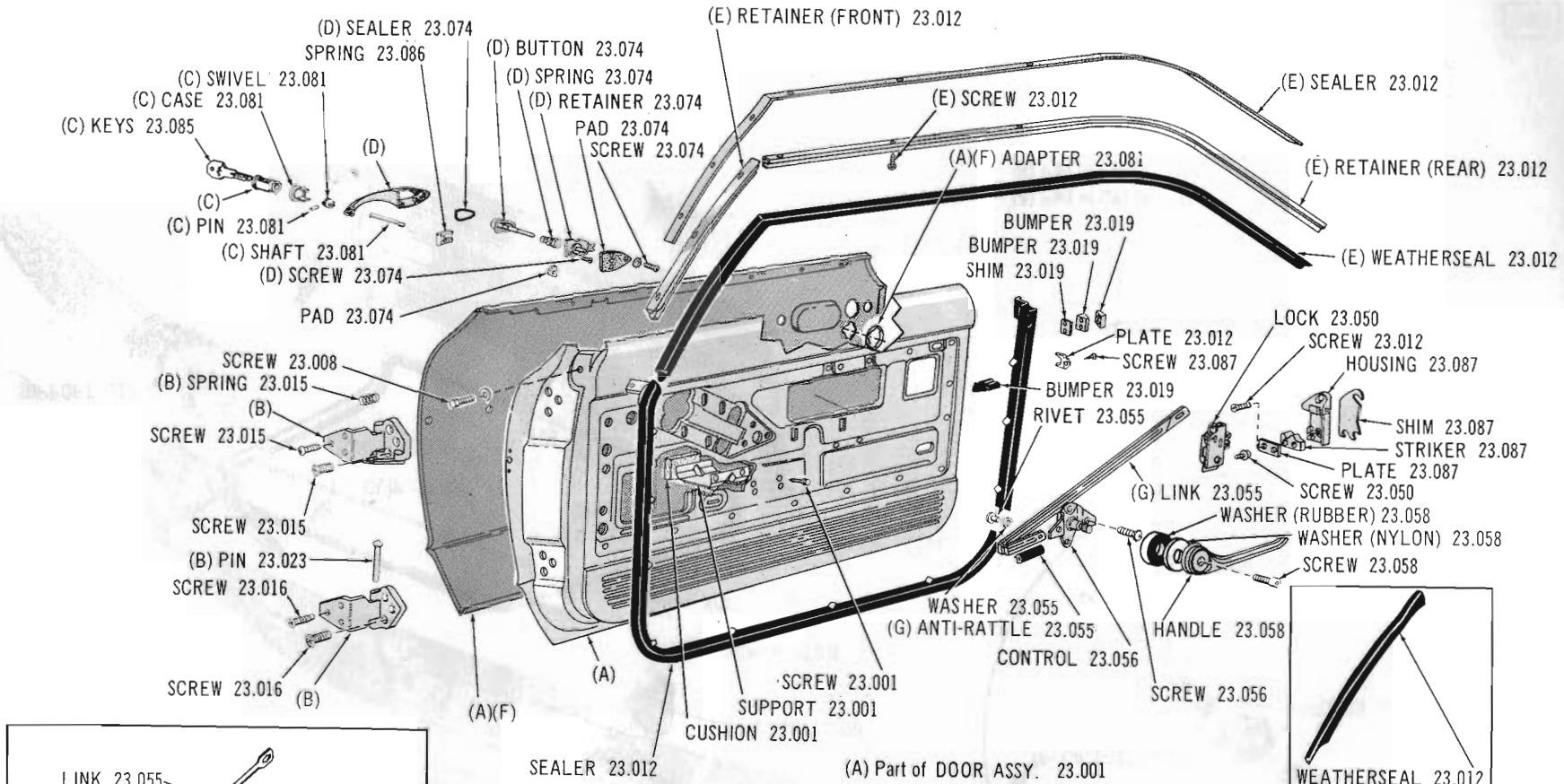

(A) Part of DOOR ASSY. 23.001
(B) Part of HINGE ASSY. 23.015 and 23.016
(C) Part of CYLINDER ASSY. 23.081
(D) Part of HANDLE ASSY. 23.074
(E) Used only on 09,19,89
(F) Part of PANEL ASSY. 23.001
(G) TYPE ONE 6500 SERIES

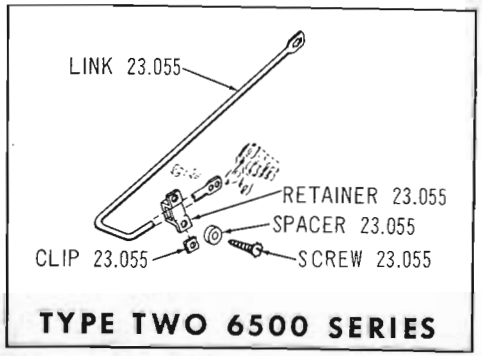

Copyright 1963 American Motors Corp.

Printed in U.S.A.

1663

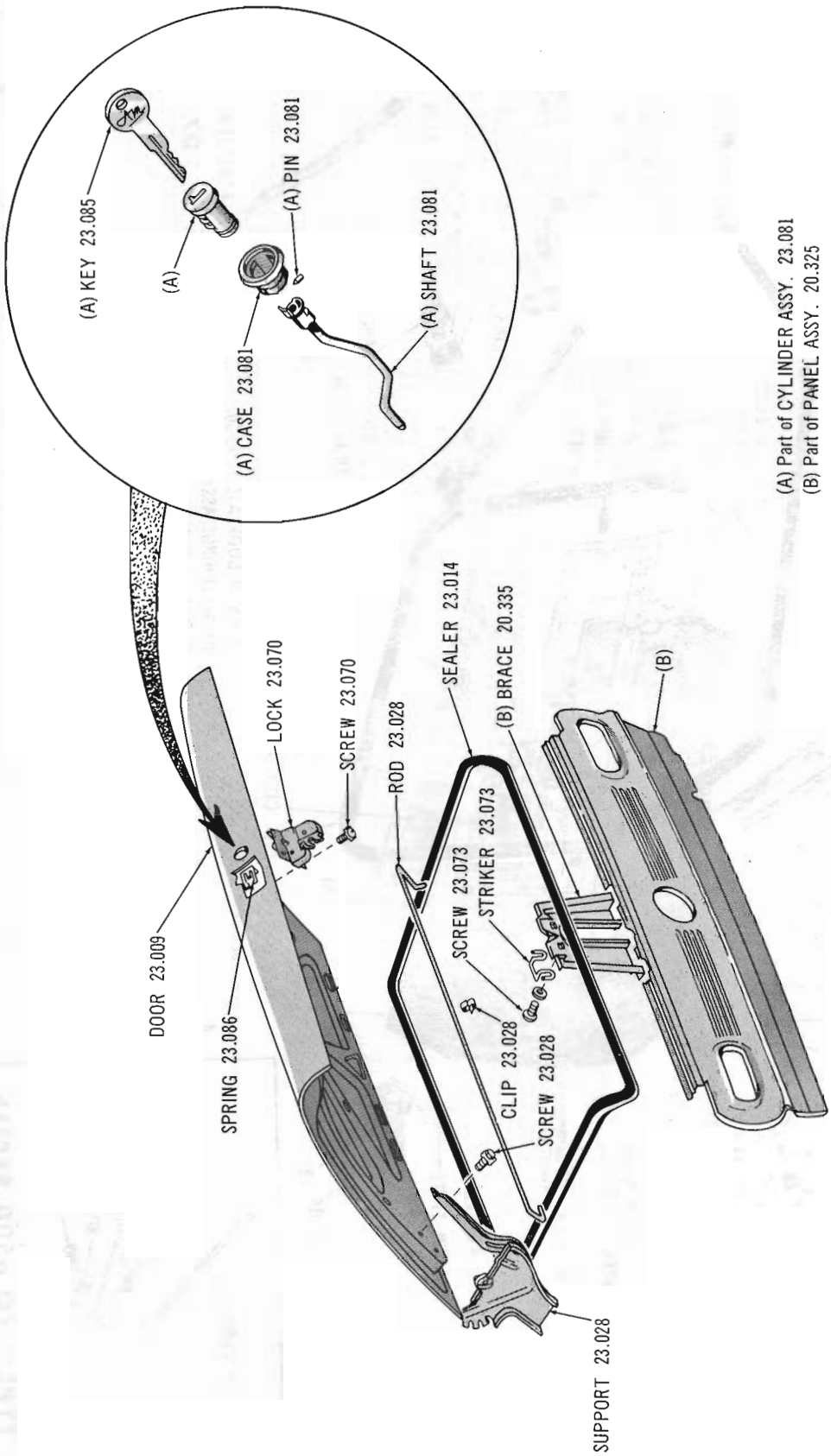

REAR DECK DOOR, HINGE AND LOWER CENTER PANEL 64-65 02-05-06-07-09

Copyright 1963 American Motors Corp.

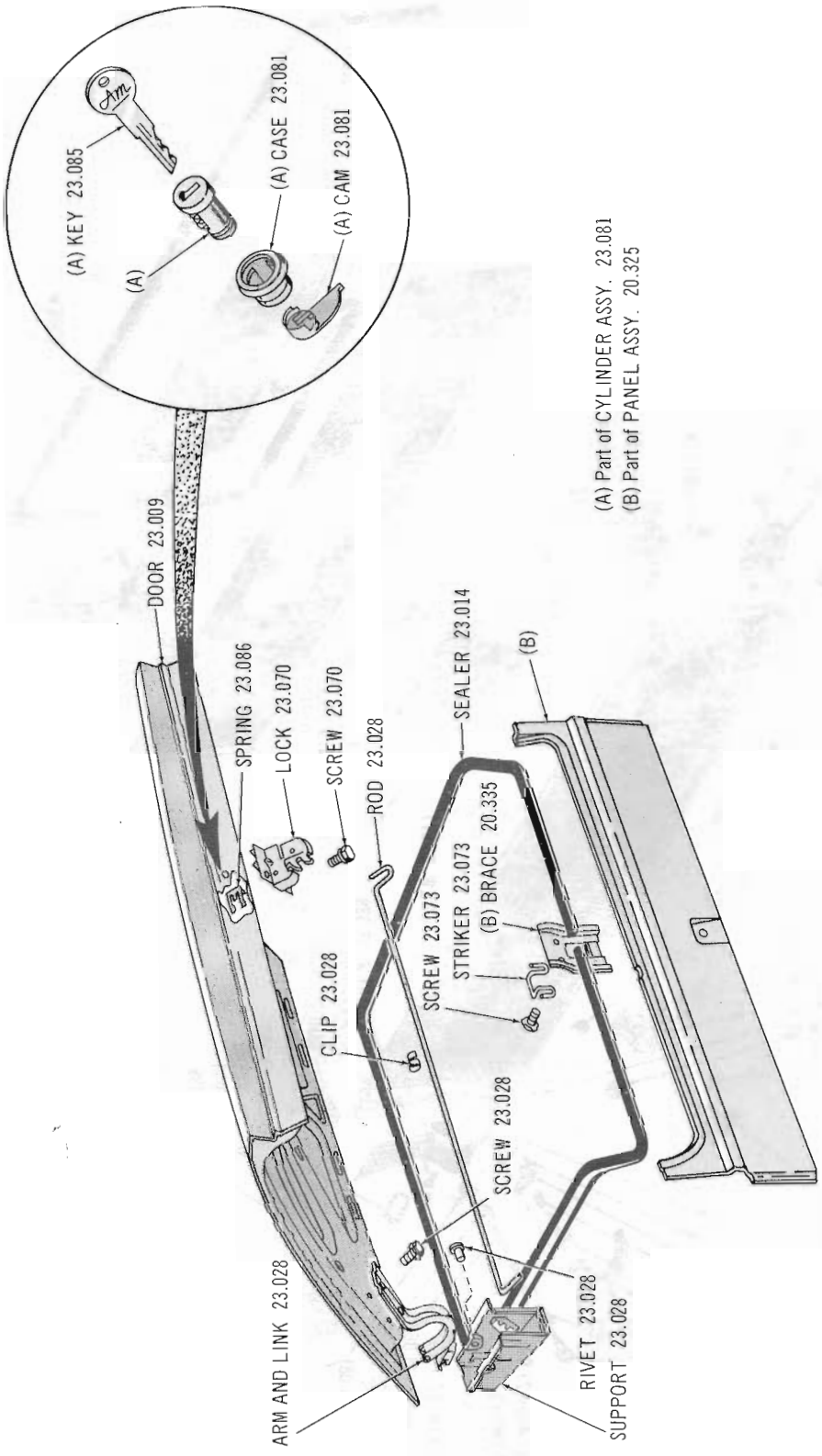

REAR DECK DOOR, HINGE AND LOWER CENTER PANEL 63-64 15-16-19-85-86-89

Copyright 1963 American Motors Corp.

TAILGATE, HARDWARE AND SEALERS 63-64 18-88 (WVT-LER)

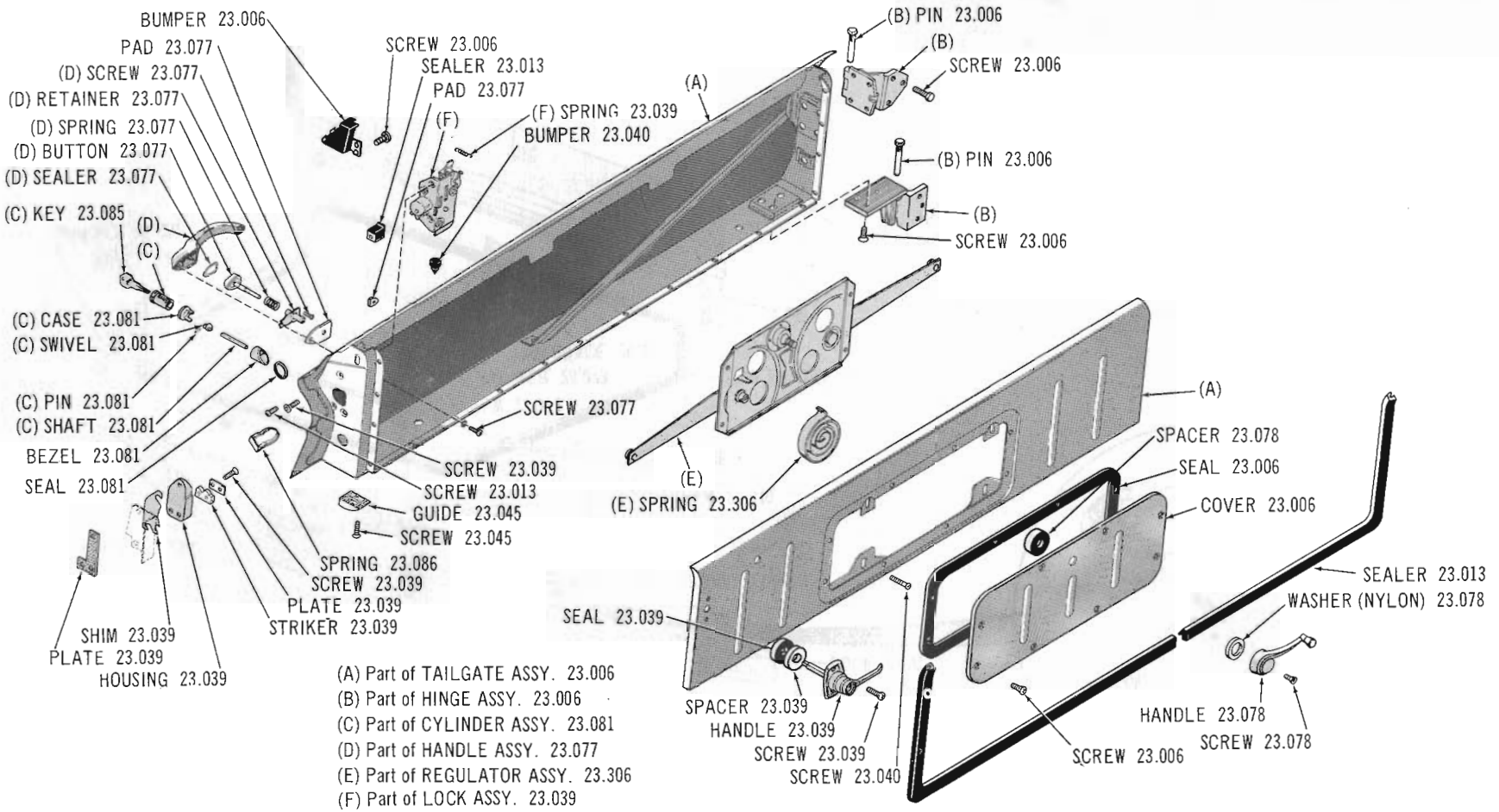

(A) Part of TAILGATE ASSY. 23.006
(B) Part of HINGE ASSY. 23.006
(C) Part of CYLINDER ASSY. 23.081
(D) Part of HANDLE ASSY. 23.077
(E) Part of REGULATOR ASSY. 23.306
(F) Part of LOCK ASSY. 23.039

1667

Copyright 1963 American Motors Corp.

Printed in U.S.A.

Copyright 1963 American Motors Corp.

Printed in U.S.A.

TAILGATE, HARDWARE AND SEALERS 63-64 18-88 (WVT-WER)

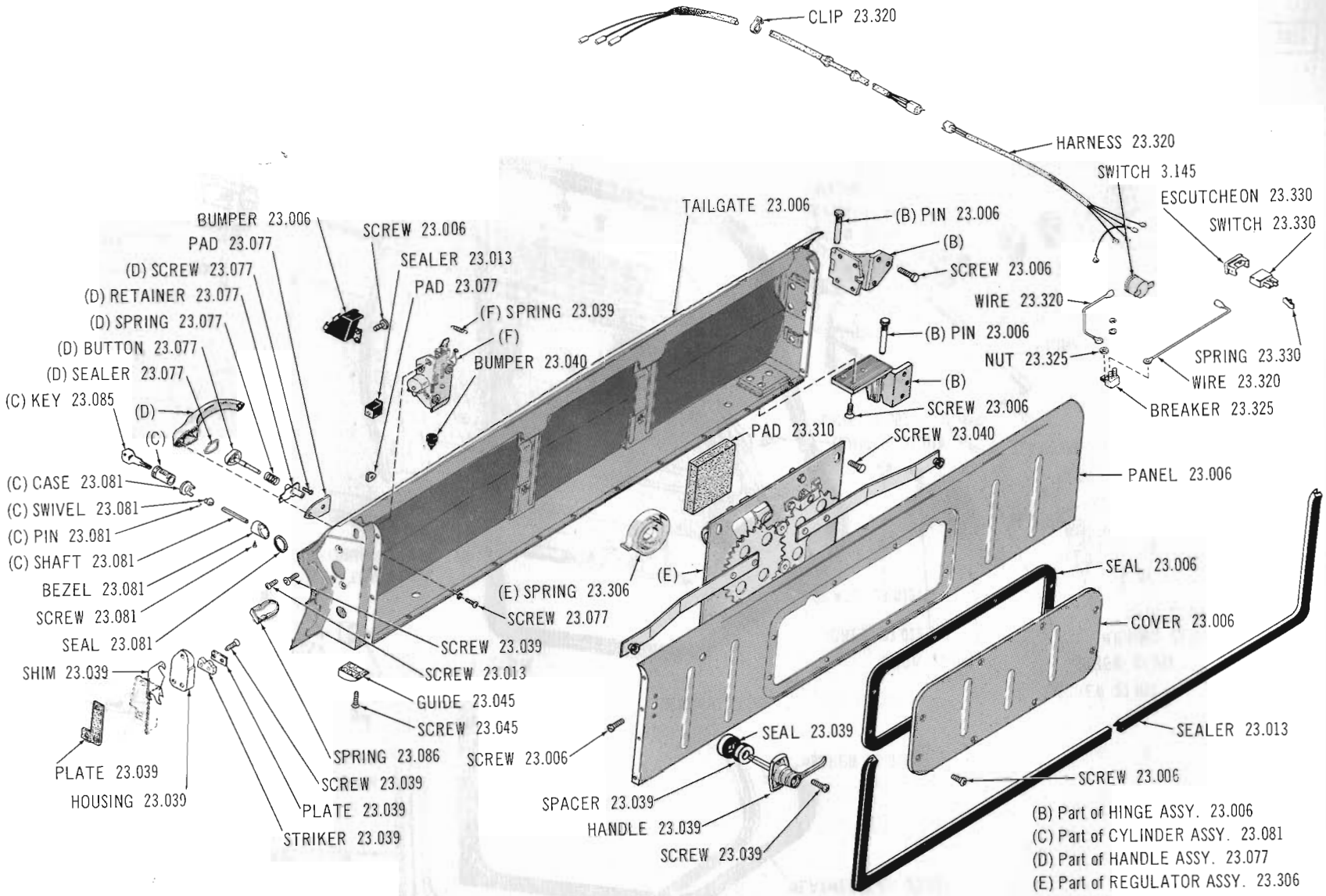

REAR DOOR, HARDWARE AND SEALERS 64-65 05-08; 63-64 15-18-85-88

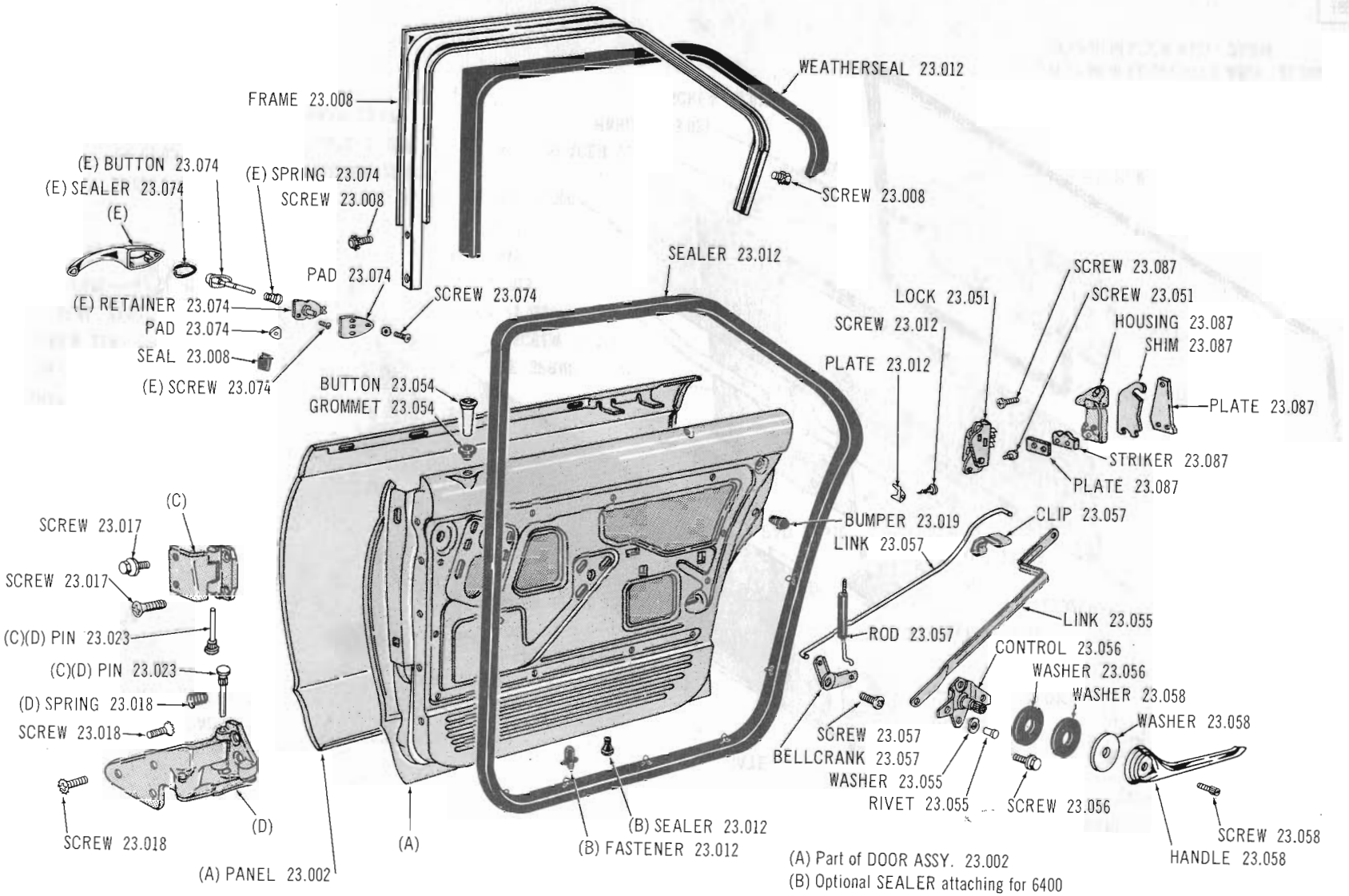

(A) Part of DOOR ASSY. 23.002
(B) Optional SEALER attaching for 6400
(C) Part of HINGE ASSY. 23.017
(D) Part of HINGE ASSY. 23.018
(E) Part of HANDLE ASSY. 23.074

1672

Copyright 1965 American Motors Corp.

Printed in U.S.A.

FRONT DOOR GLASS AND CHANNELS 64-65 07-09-19-89 (LER): 65 17-87

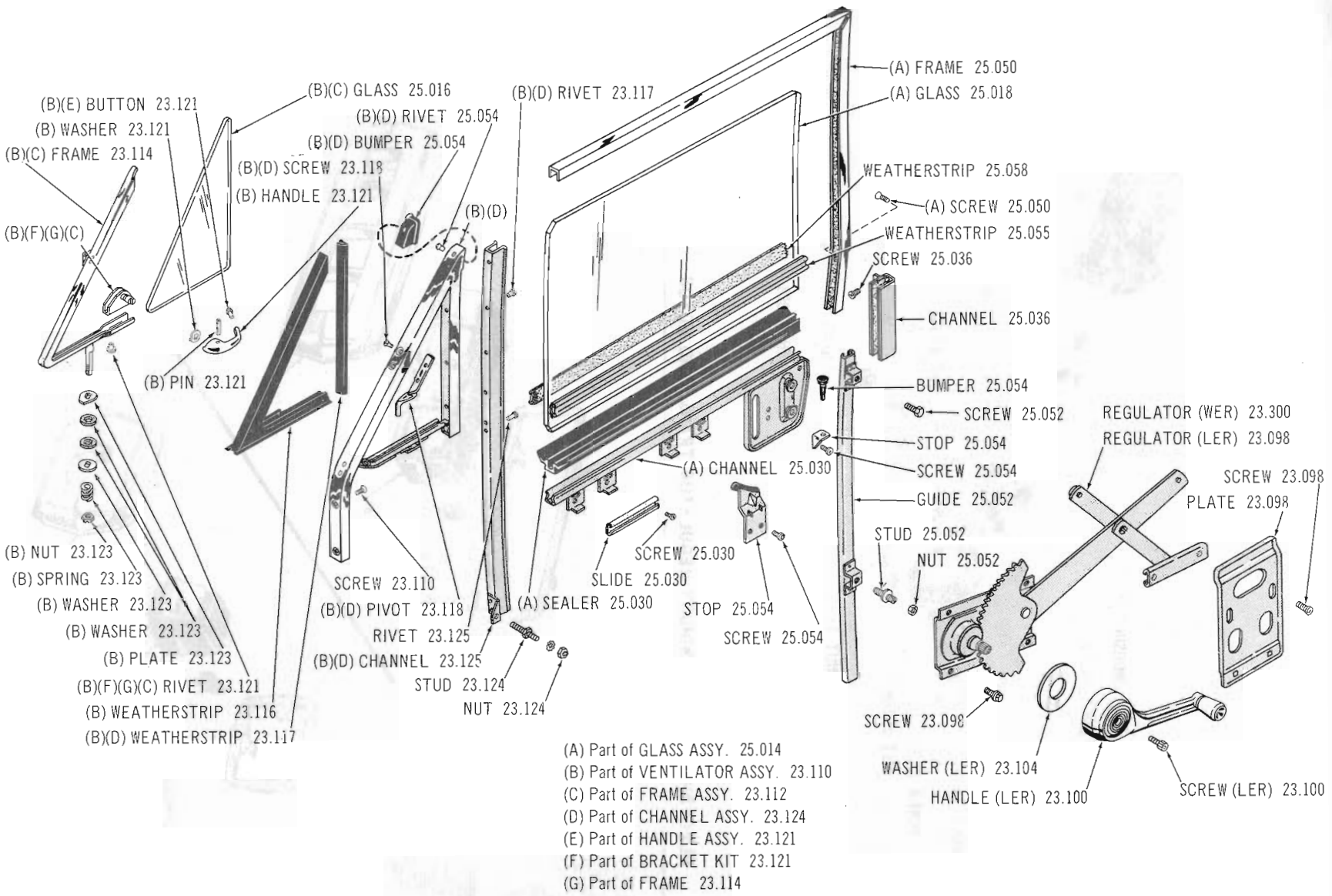

(A) Part of GLASS ASSY. 25.014
(B) Part of VENTILATOR ASSY. 23.110
(C) Part of FRAME ASSY. 23.112
(D) Part of CHANNEL ASSY. 23.124
(E) Part of HANDLE ASSY. 23.121
(F) Part of BRACKET KIT 23.121
(G) Part of FRAME 23.114

Copyright 1963 American Motors Corp.

Printed in U.S.A.

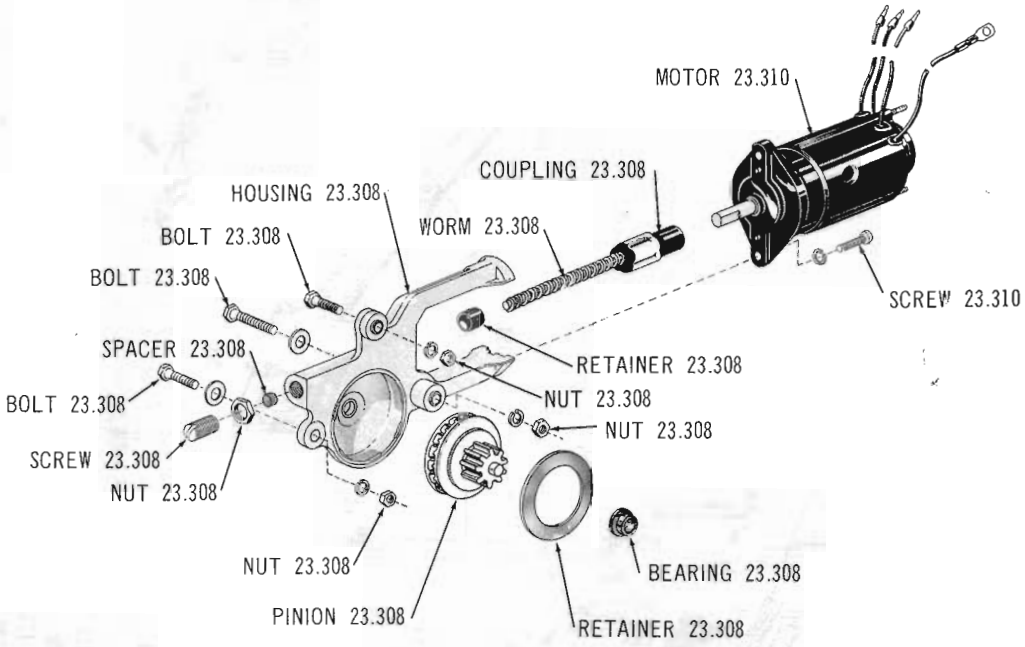

ELECTRIC OPERATED WINDOW REGULATOR TRANS. AND MOTOR **60 thru Current 10-20-80**

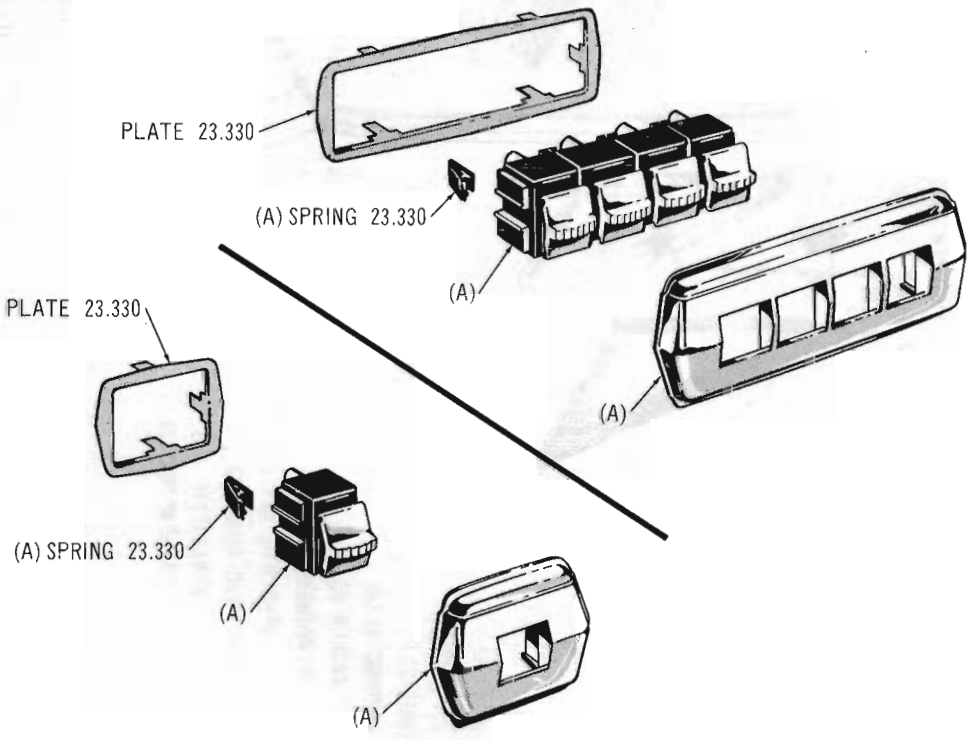

(A) Part of SWITCH ASSY. 23.330

ELECTRIC OPERATED WINDOW REGULATOR SWITCHES **60 (1st. type) 10-20-80**

Copyright 1963 American Motors Corp.

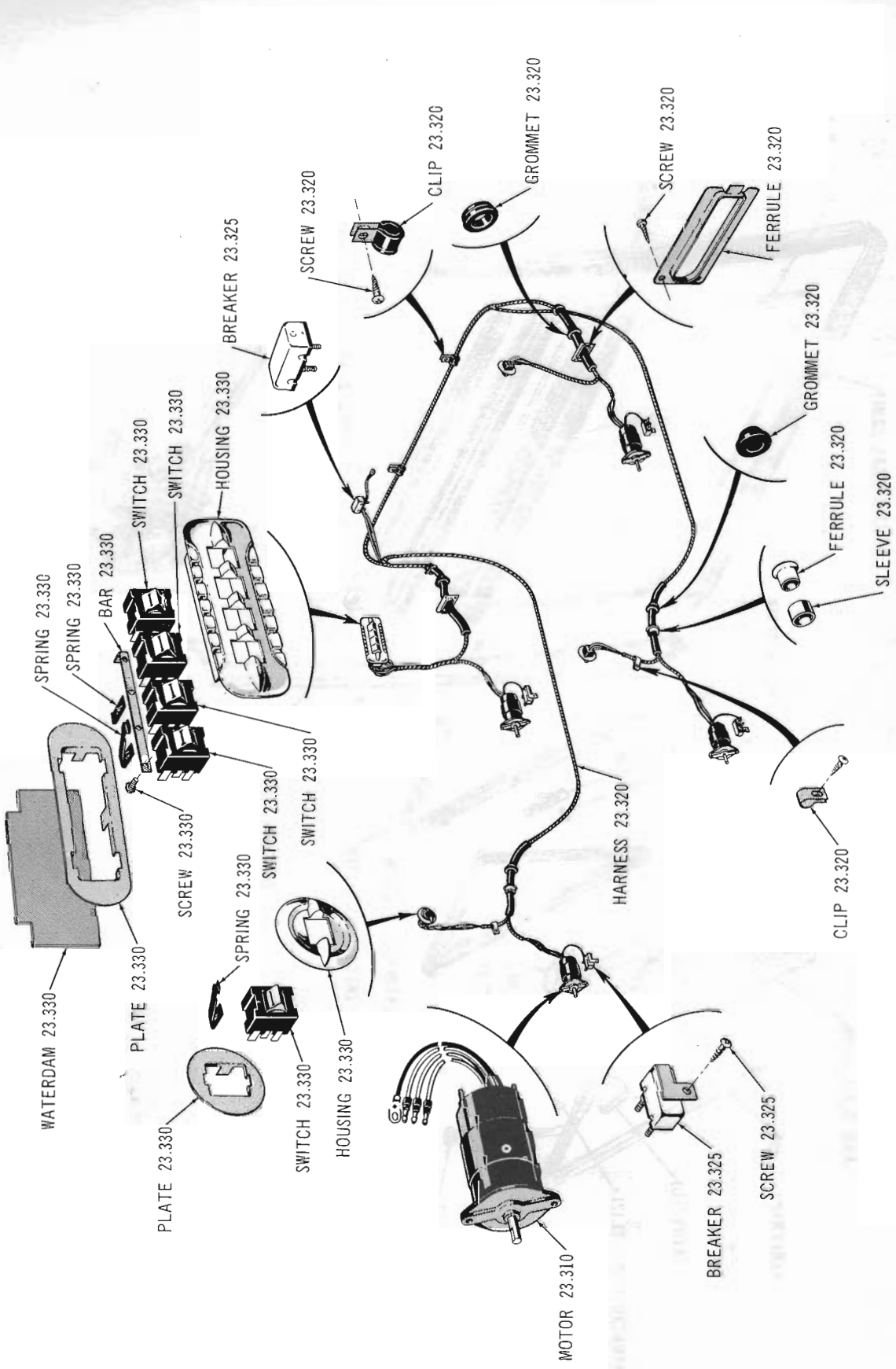

DOOR ELECTRIC OPERATED WINDOW REG. HARNESS AND SWITCHES 60 (2nd. type) thru 63 10-20-80

Copyright 1963 American Motors Corp.

FRONT DOOR GLASS AND CHANNELS 65 05-08-15-18-85-88

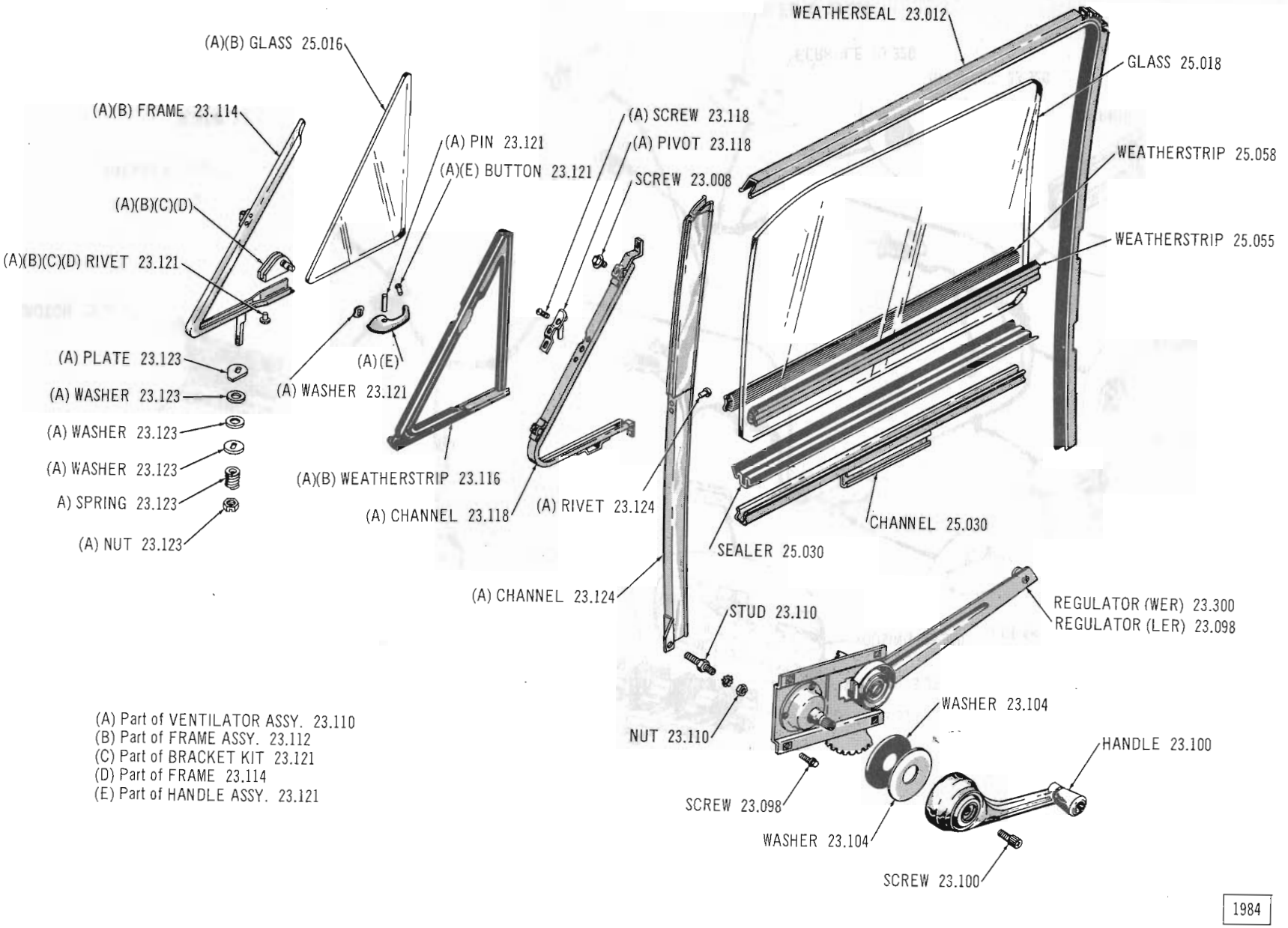

(A) Part of VENTILATOR ASSY. 23.110
(B) Part of FRAME ASSY. 23.112
(C) Part of BRACKET KIT 23.121
(D) Part of FRAME 23.114
(E) Part of HANDLE ASSY. 23.121

1984

Copyright 1963 American Motors Corp.

Printed in U.S.A.

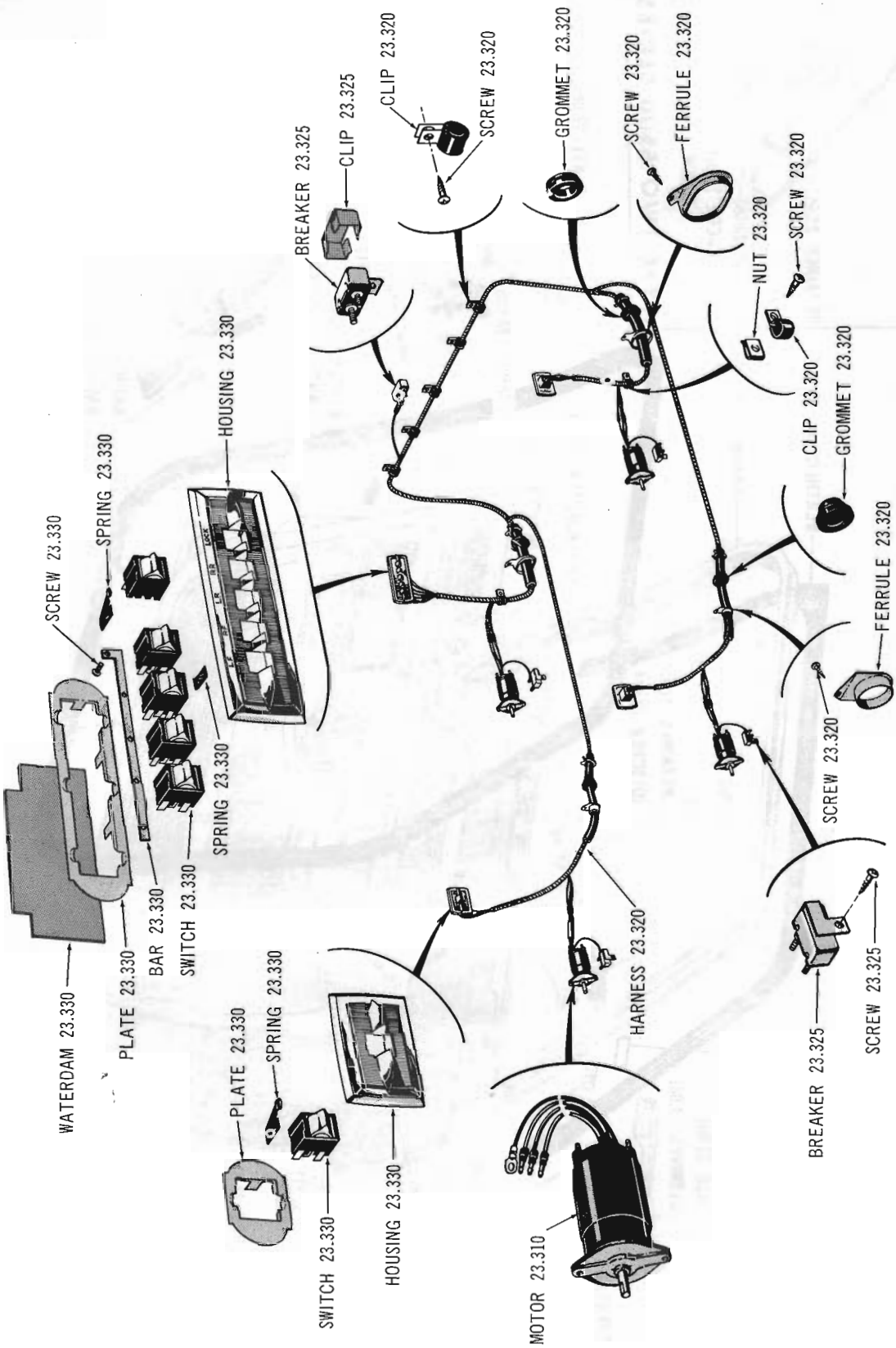

ELECTRIC OPERATED WINDOW REGULATOR HARNESS AND SWITCHES 64-65 10-80

Copyright 1963 American Motors Corp.

Copyright 1963 American Motors Corp.

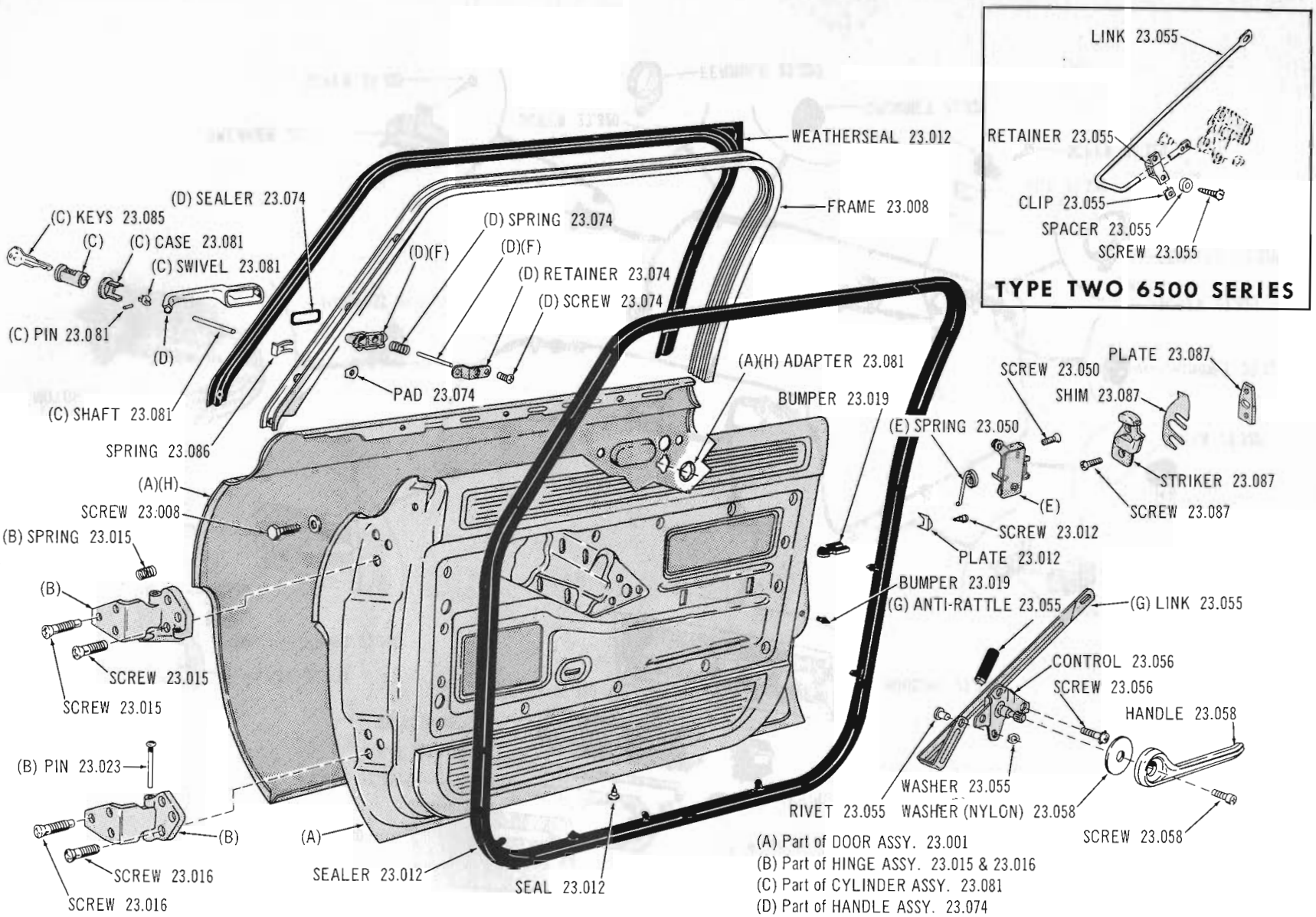

(A) Part of DOOR ASSY. 23.001
(B) Part of HINGE ASSY. 23.015 & 23.016
(C) Part of CYLINDER ASSY. 23.081
(D) Part of HANDLE ASSY. 23.074
(E) Part of LOCK ASSY. 23.050
(F) Part of BUTTON ASSY. 23.074
(G) TYPE ONE 6515-18-85-88
(H) Part of PANEL ASSY. 23.001

1959

Printed in U.S.A.

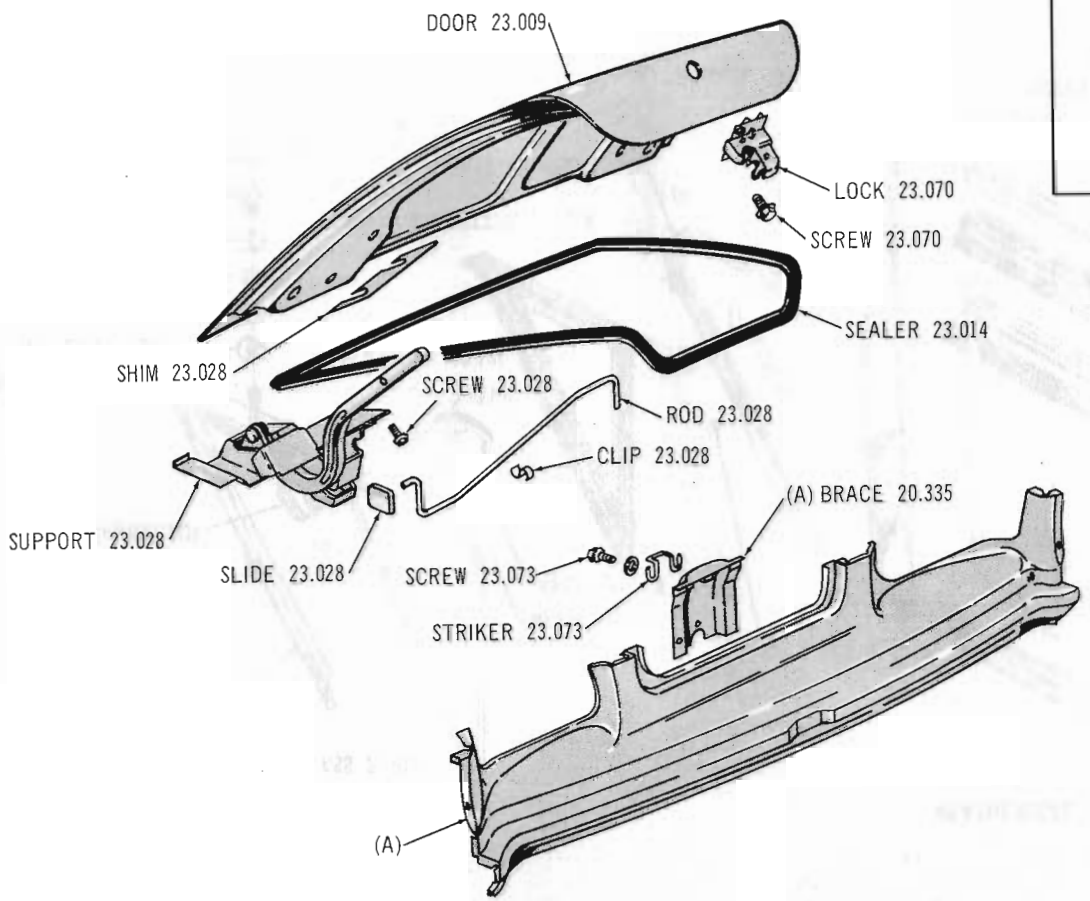

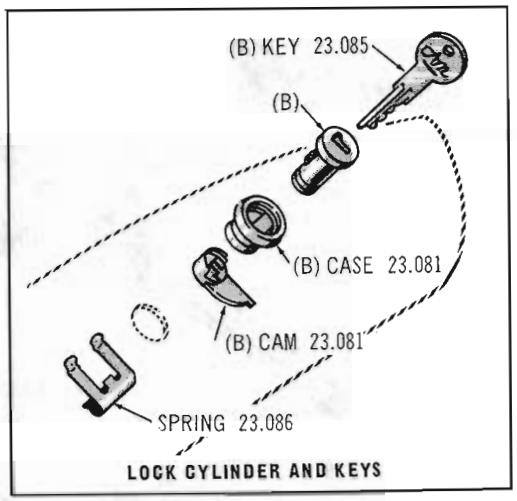

LOCK CYLINDER AND KEYS

(A) Part of PANEL ASSY. 20.325
(B) Part of CYLINDER ASSY. 23.081

2178

Copyright 1963 American Motors Corp.

Printed in U.S.A.

FRONT DOOR GLASS AND CHANNELS 63-64 05-06-08-15-16-18-85-86-88

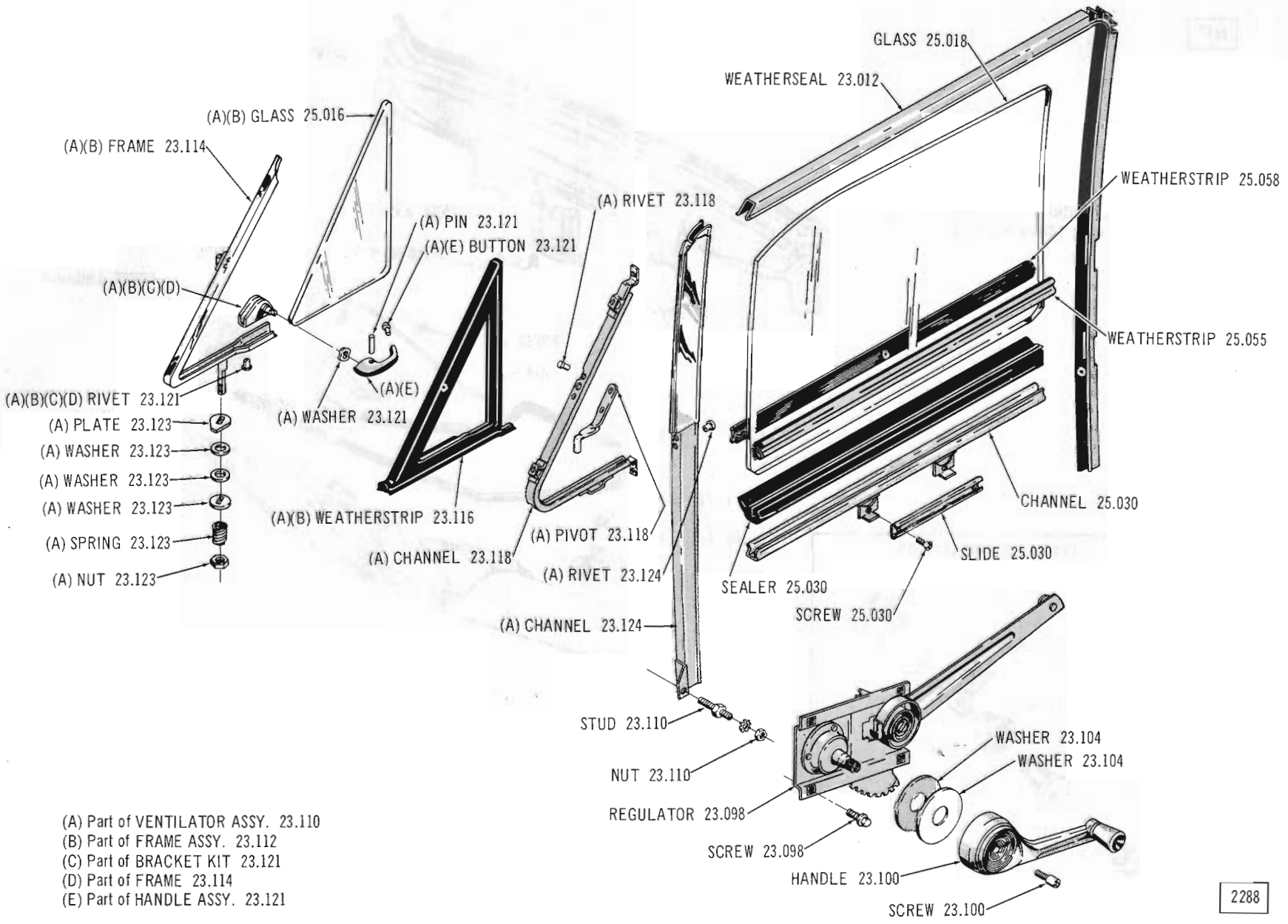

(A) Part of VENTILATOR ASSY. 23.110
(B) Part of FRAME ASSY. 23.112
(C) Part of BRACKET KIT 23.121
(D) Part of FRAME 23.114
(E) Part of HANDLE ASSY. 23.121

Copyright 1963 American Motors Corp.

Printed in U.S.A.

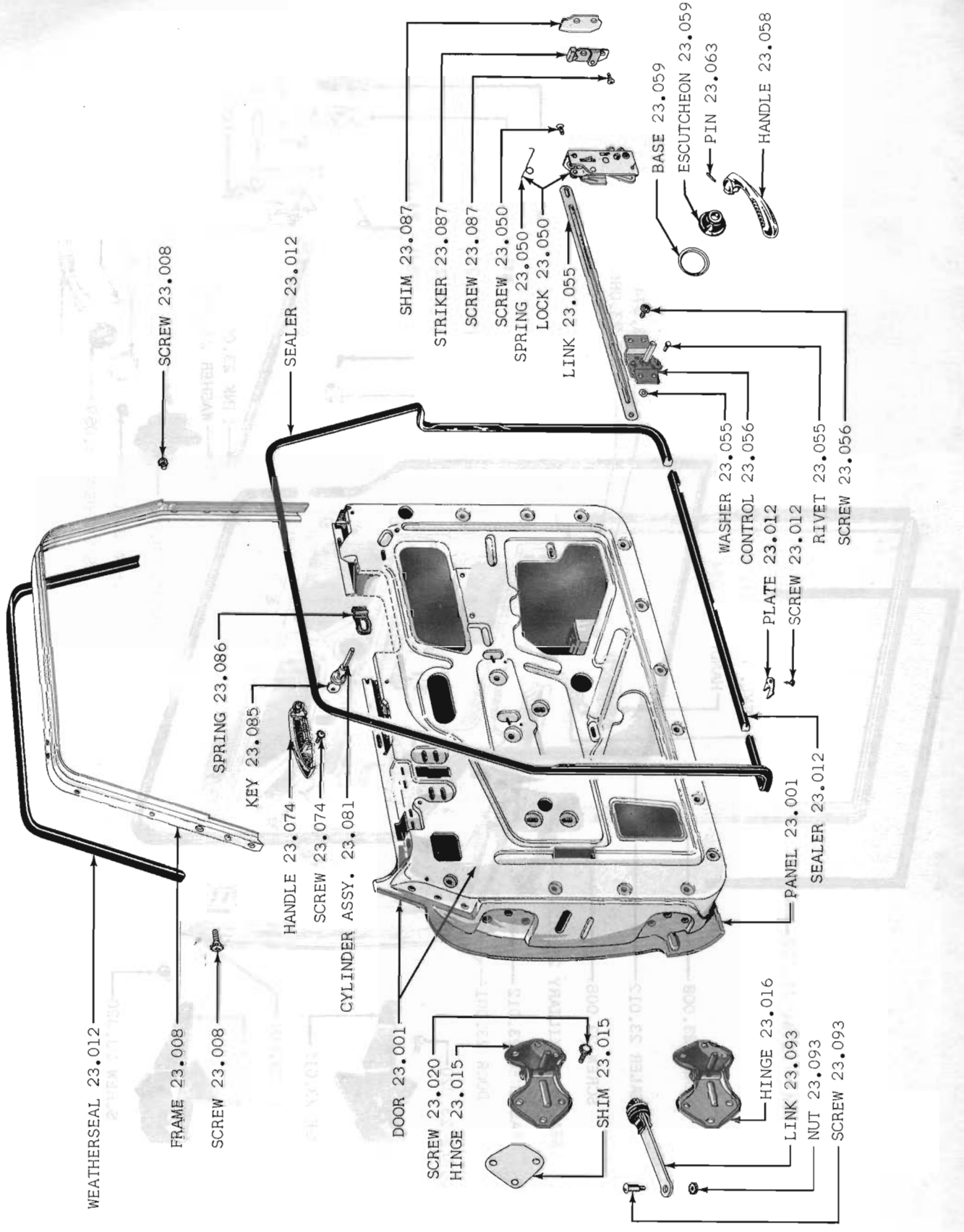

FIG. 23.001-1 FRONT DOOR, HARDWARE AND SEALERS 60 THRU 63 02-04-06

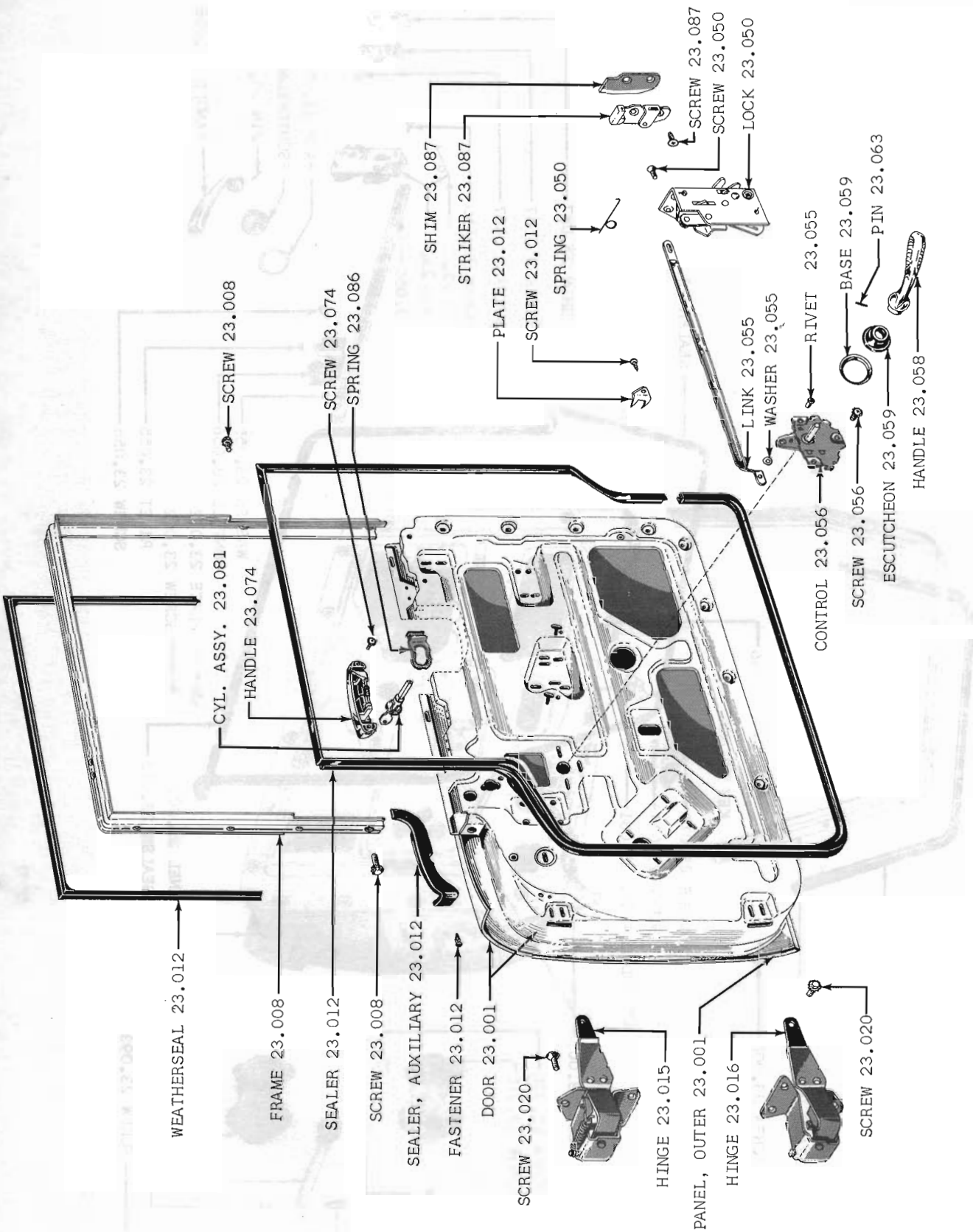

FIG. 23.001-3 FRONT DOOR, HARDWARE AND SEALERS 60 THRU 62 15-18-25-28-85-88

Printed in U.S.A.

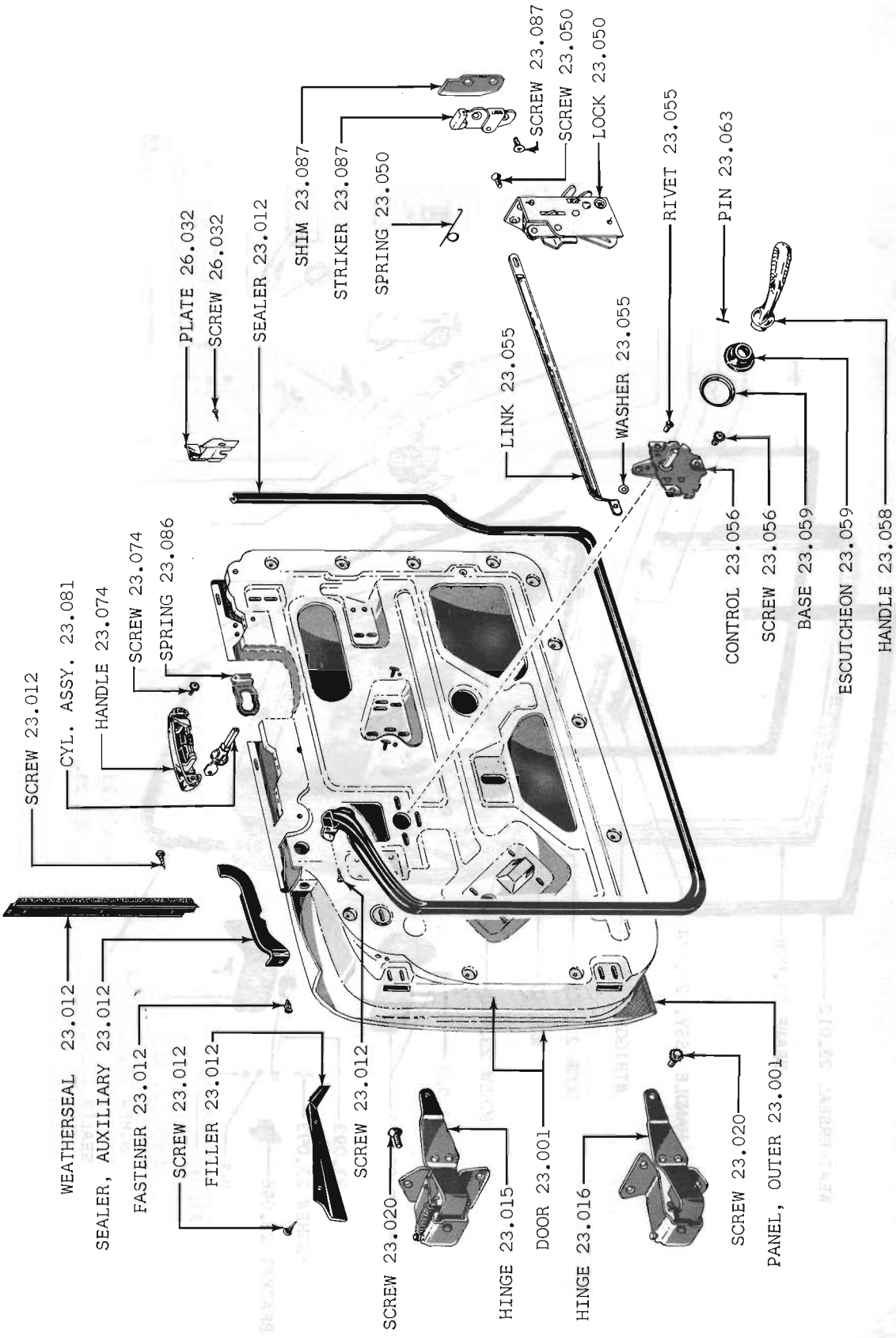

FIG. 23.001-4 FRONT DOOR, HARDWARE AND SEALERS 60 THRU 62 19-23-29-83-89

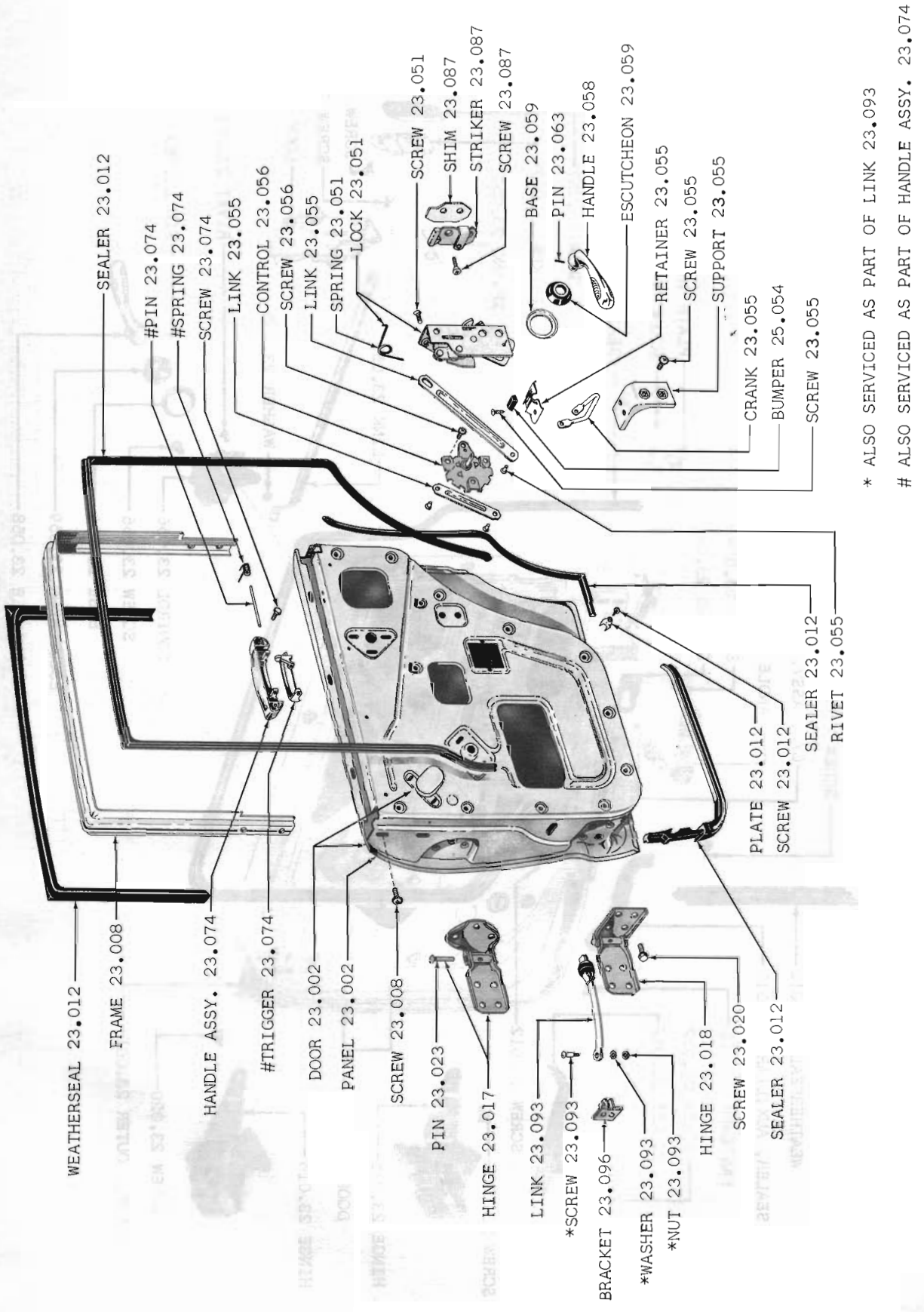

FIG. 23.002-1 REAR DOOR, HARDWARE AND SEALERS 60 THRU 63 05-08

Printed in U.S.A.

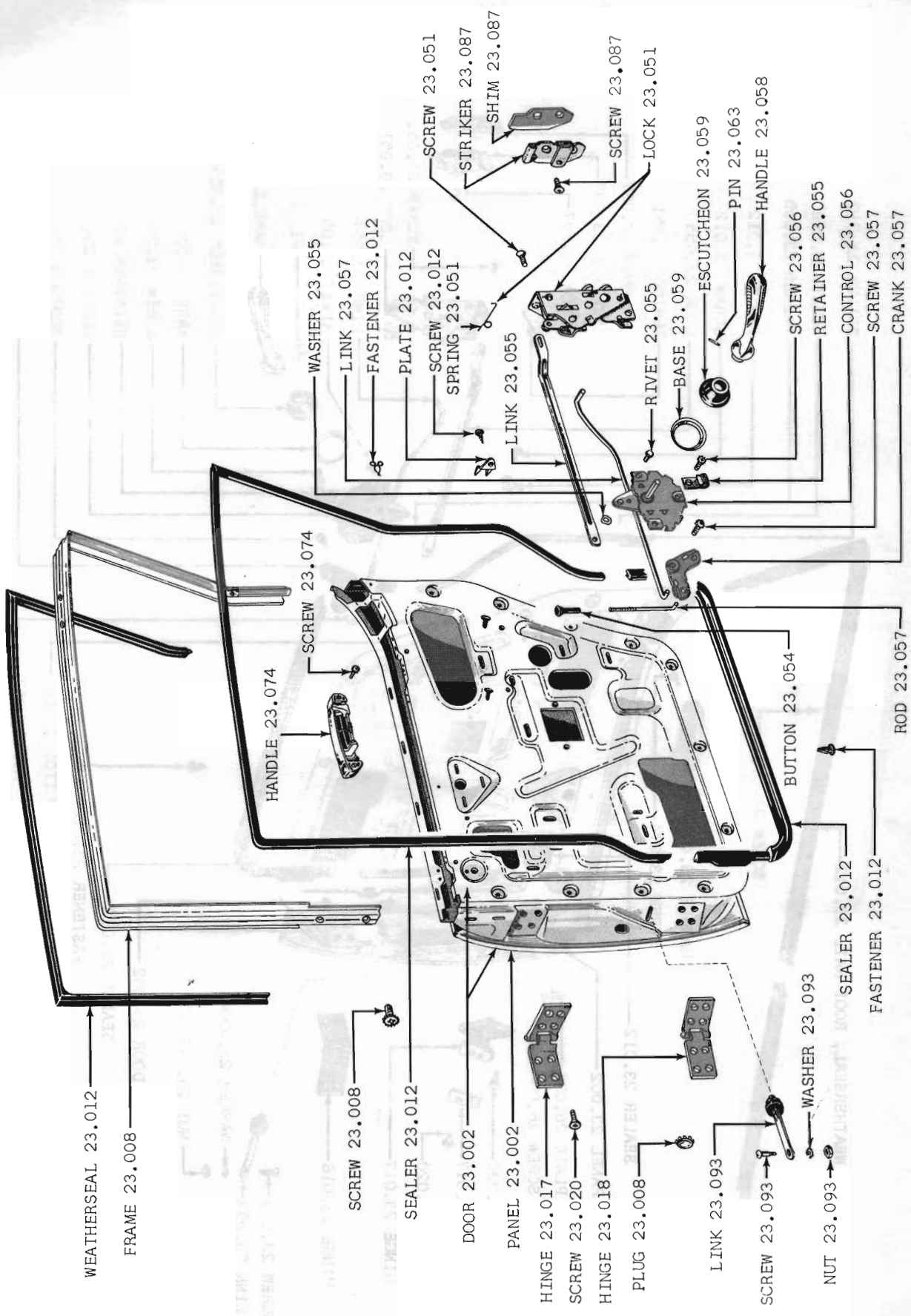

FIG. 23.002-3 REAR DOOR, HARDWARE AND SEALERS 60 THRU 62 15-18-25-28-85-88

Printed in U.S.A.

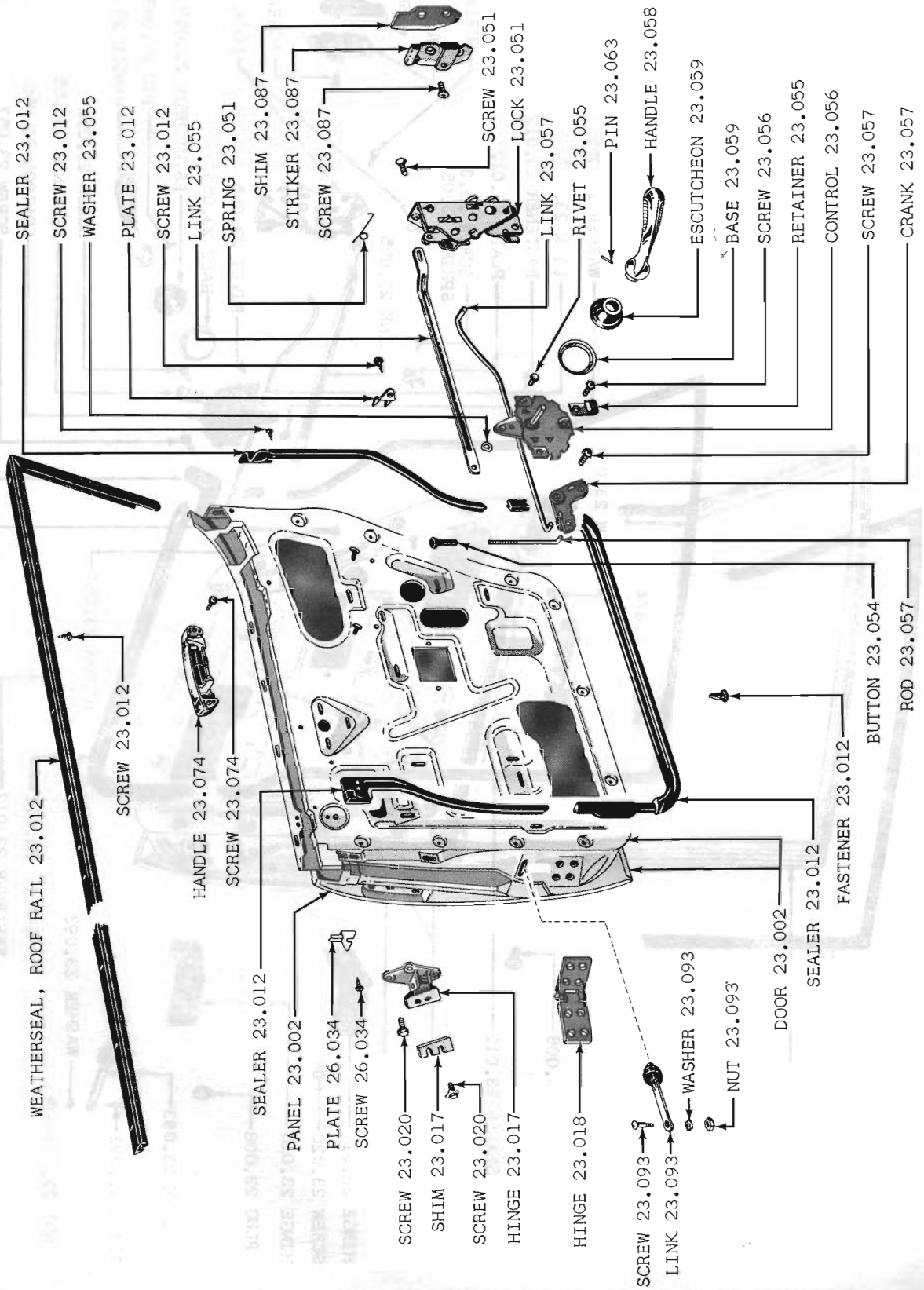

FIG. 23.002-4 REAR DOOR, HARDWARE AND SEALERS 60 THRU 62 19-23-29-83-89

Printed in U.S.A.

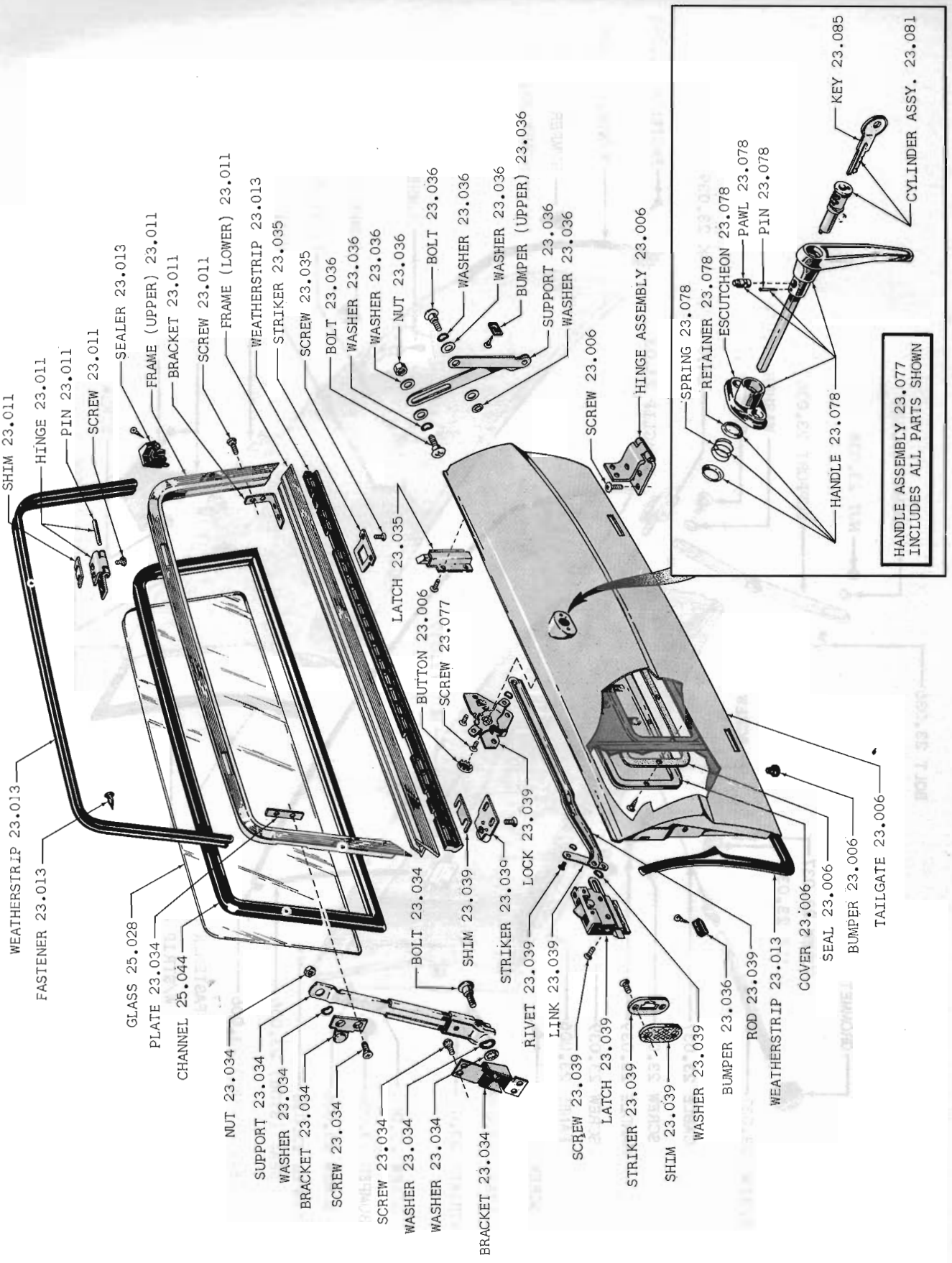

FIG. 23.006-1 TAILGATE AND LIFTGATE 60 THRU 63 04-08

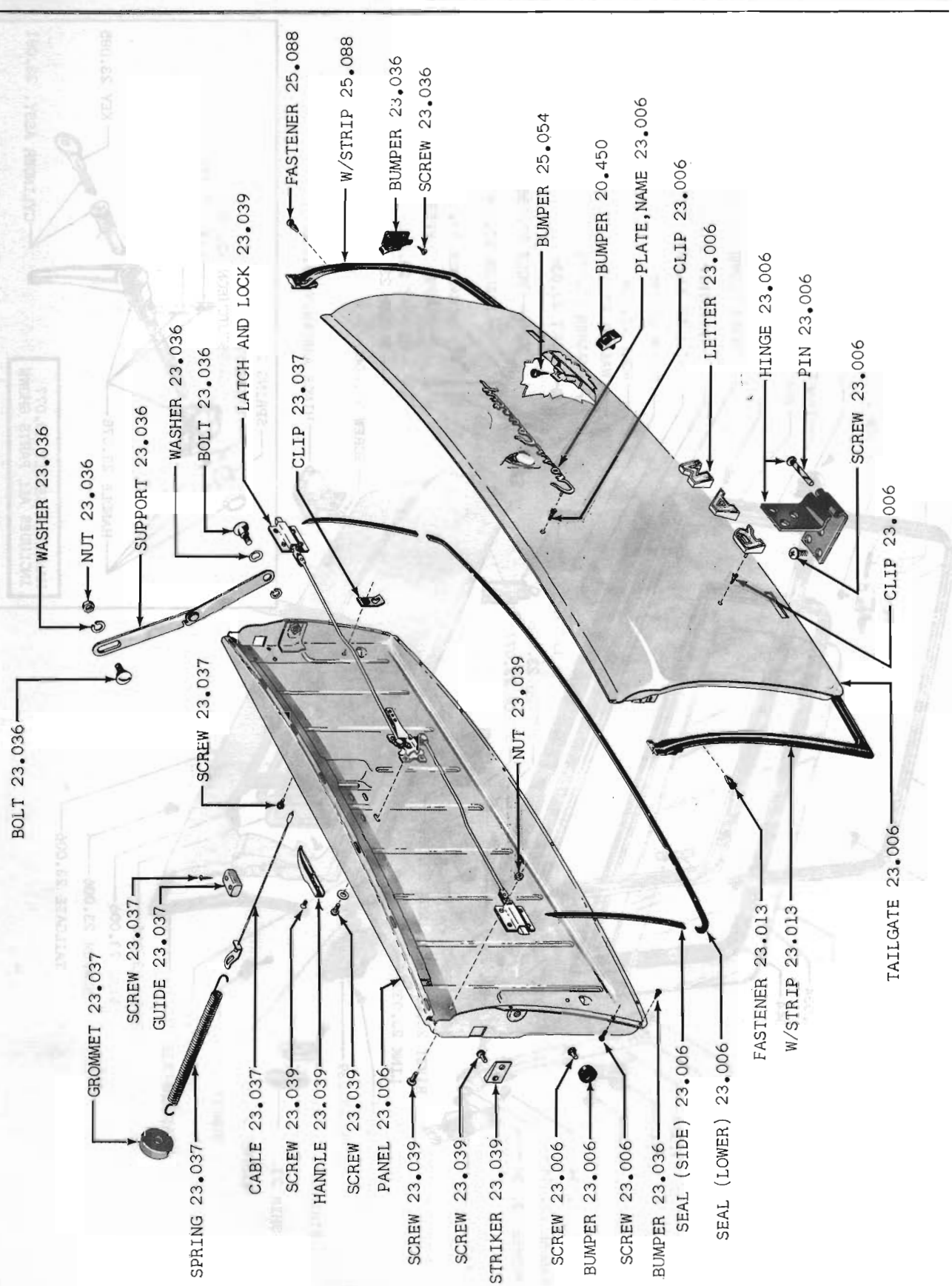

FIG. 23.006-3 TAILGATE, HARDWARE AND SEALERS 60 THRU 62 18-28-83-88 (LVT)

Printed in U.S.A.

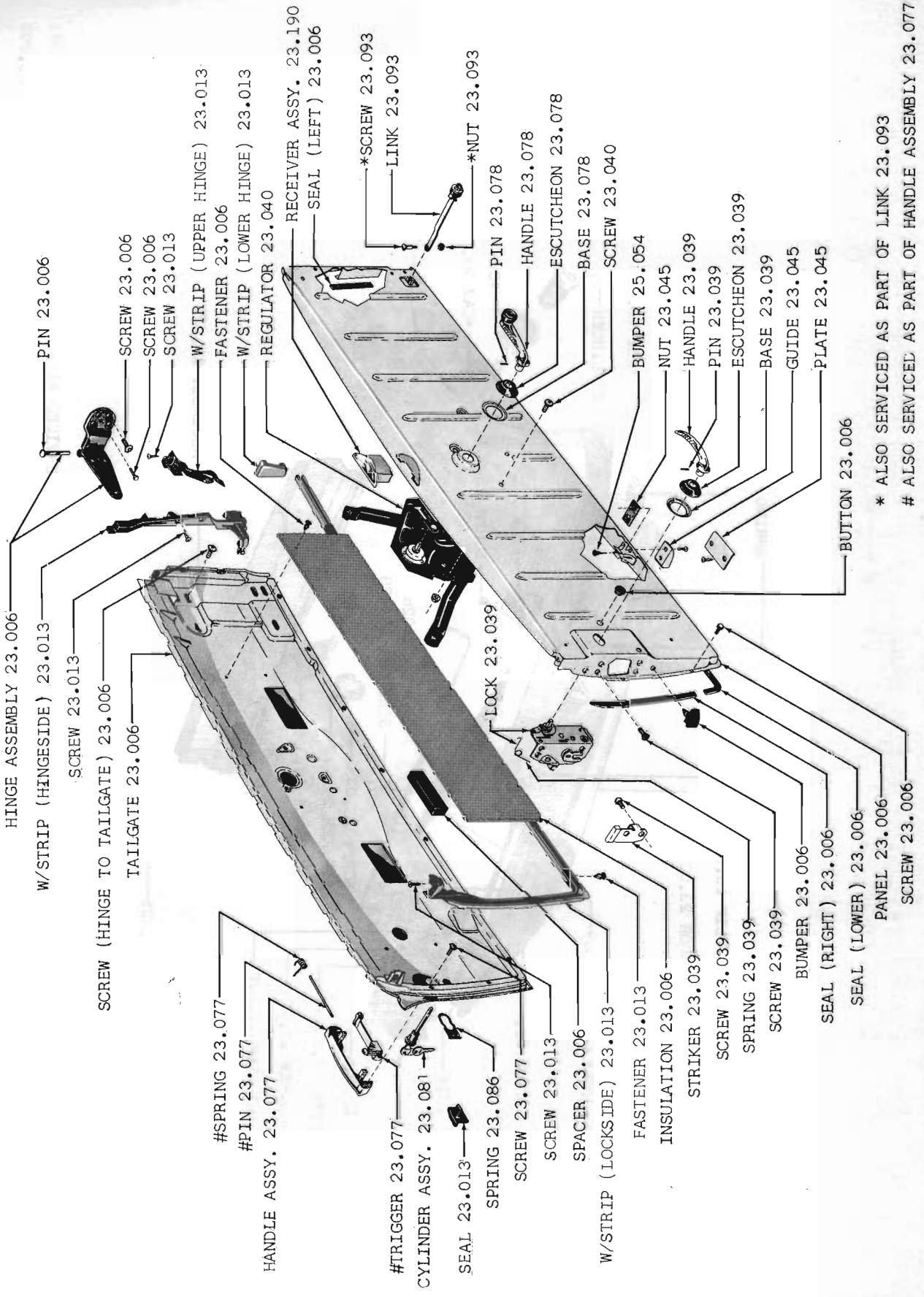

FIG. 23.006-4 TAILGATE, HARDWARE AND SEALERS 60 THRU 62 18-28-83-88 (WVT)

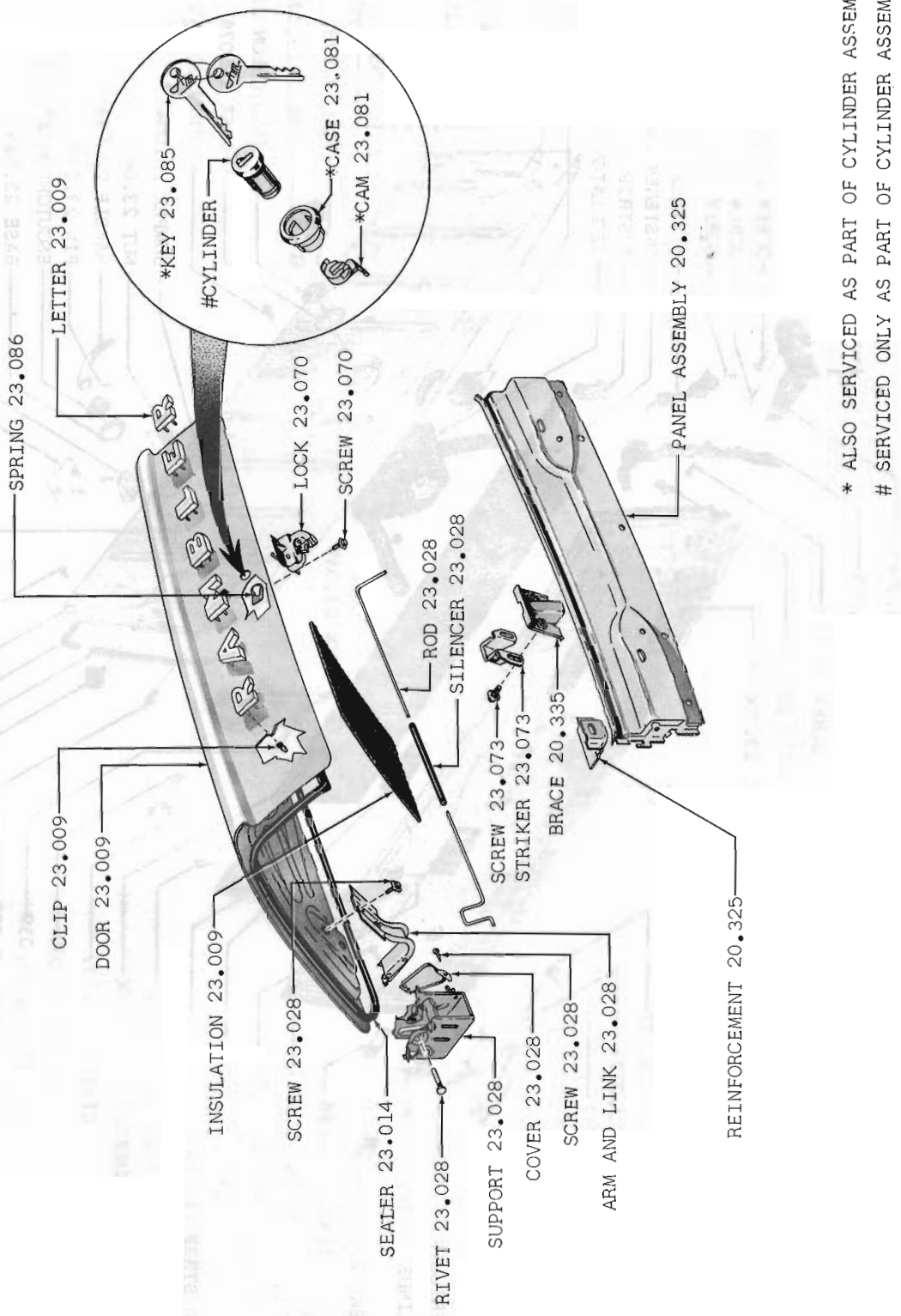

FIG. 23.009-3 REAR DECK DOOR HINGE AND LOWER CENTER PANEL 60 THRU 62 15-19-25-29-85-89

Printed in U.S.A.

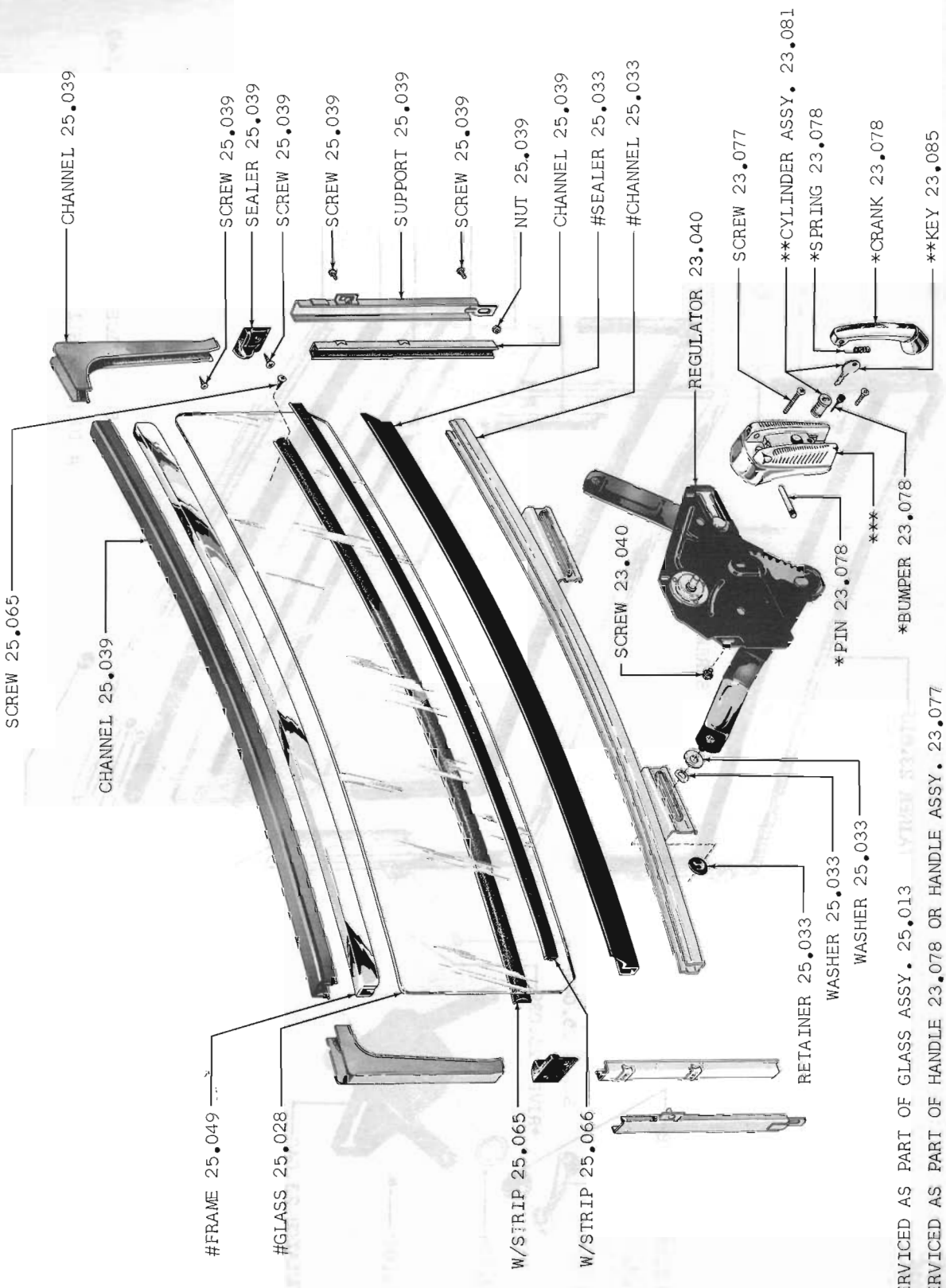

ALSO SERVICED AS PART OF GLASS ASSY. 25.013

* ALSO SERVICED AS PART OF HANDLE 23.078 OR HANDLE ASSY. 23.077

** ALSO SERVICED AS PART OF HANDLE ASSY. 23.077

*** SERVICED ONLY AS PART OF HANDLE 23.078 OR HANDLE ASSY 23.077

FIG. 23.040-3 TAILGATE GLASS AND CHANNELS 60 THRU 62 18-28-83-88 (LVT)

Printed in U.S.A.

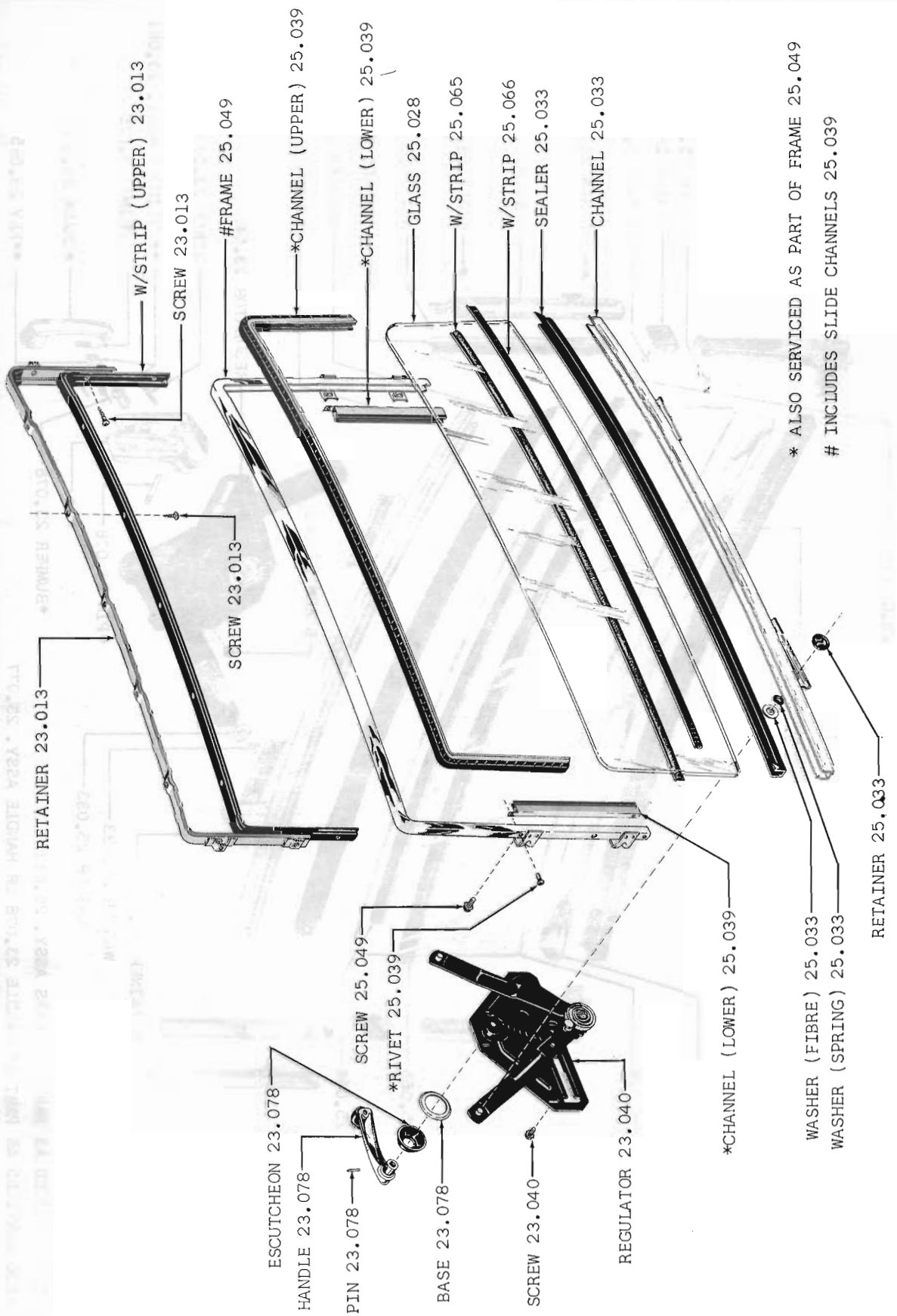

FIG. 23.040-4 TAILGATE GLASS AND CHANNELS 60 THRU 62 18-28-83-88 (WVT)

Printed in U.S.A.

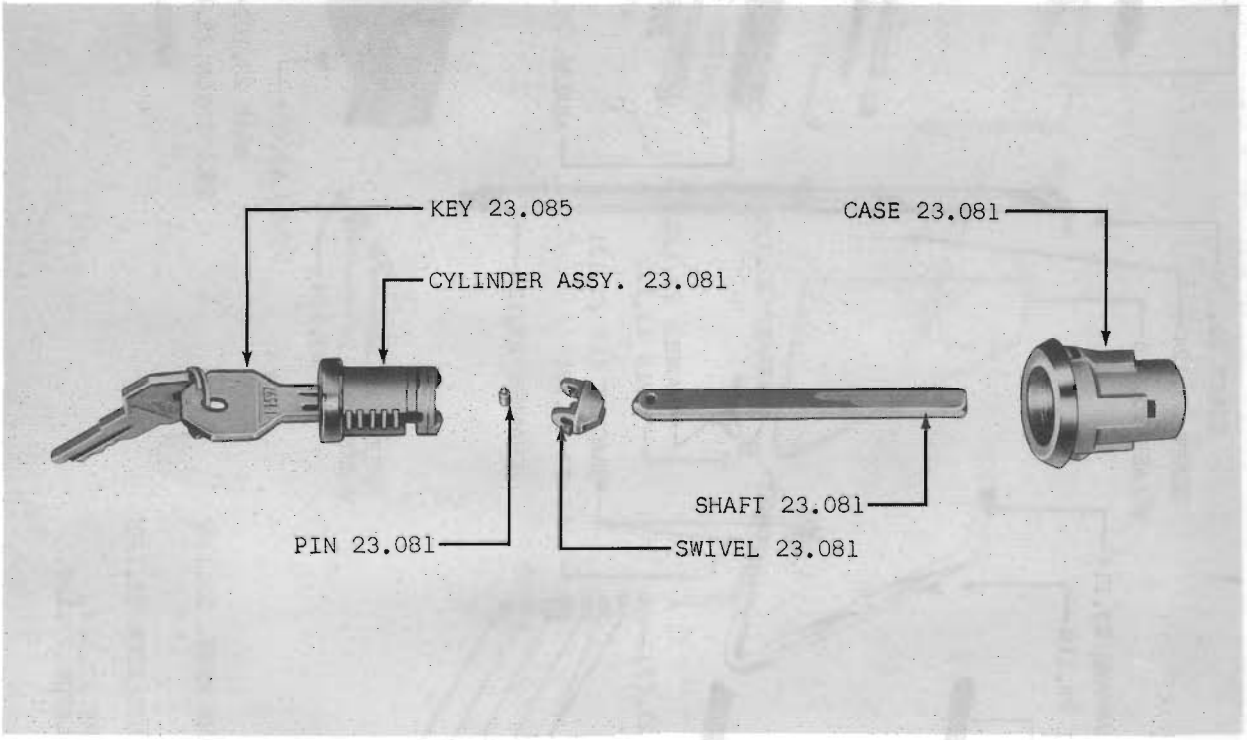

FIG. 23.081-1 DOOR LOCK CYLINDER AND KEYS 60 THRU CURRENT ALL MODELS

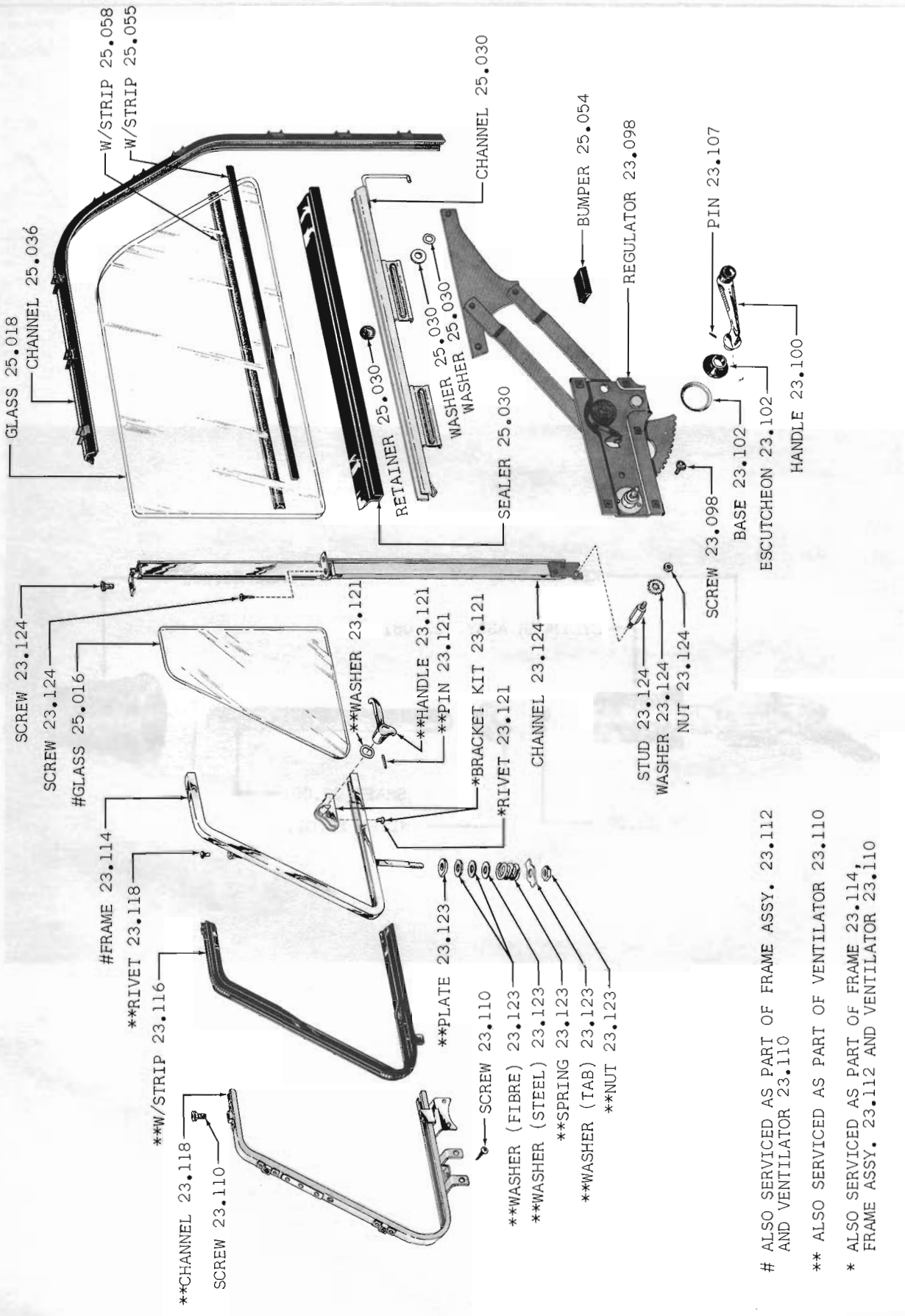

ALSO SERVICED AS PART OF FRAME ASSY. 23.112 AND VENTILATOR 23.110

** ALSO SERVICED AS PART OF VENTILATOR 23.110

* ALSO SERVICED AS PART OF FRAME 23.114, FRAME ASSY. 23.112 AND VENTILATOR 23.110

FIG. 23.100-1 FRONT DOOR GLASS AND CHANNELS 60 THRU 62 02-04-06

Printed in U.S.A.

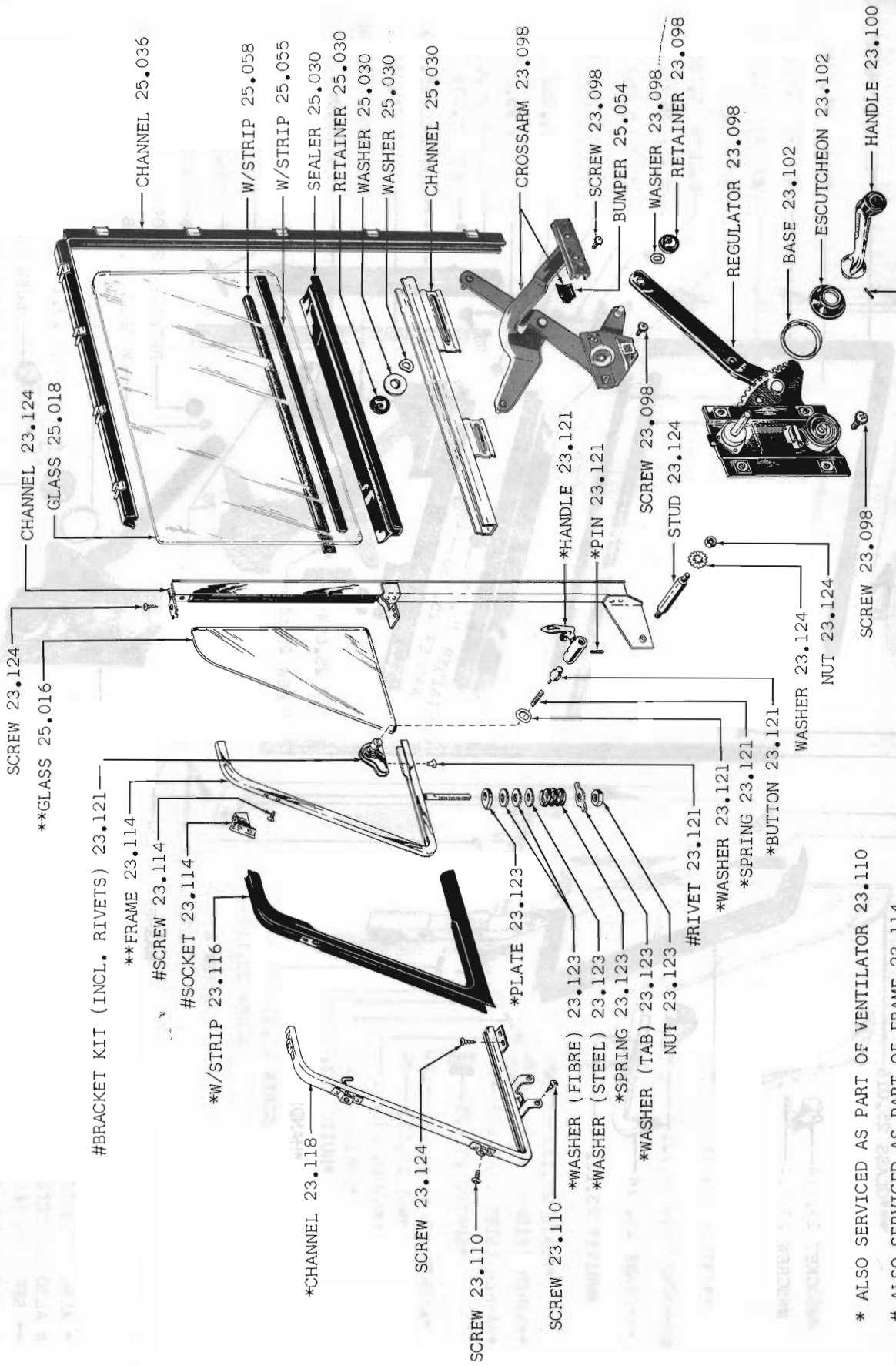

* ALSO SERVICED AS PART OF VENTILATOR 23.110

\# ALSO SERVICED AS PART OF FRAME 23.114, FRAME ASSY. 23.112 AND VENTILATOR 23.110

** ALSO SERVICED AS PART OF FRAME ASSY. 23.112. AND VENTILATOR 23.110

FIG. 23.100-3 FRONT DOOR GLASS AND CHANNELS 60-61 15-18-25-28-85-88

Printed in U.S.A.

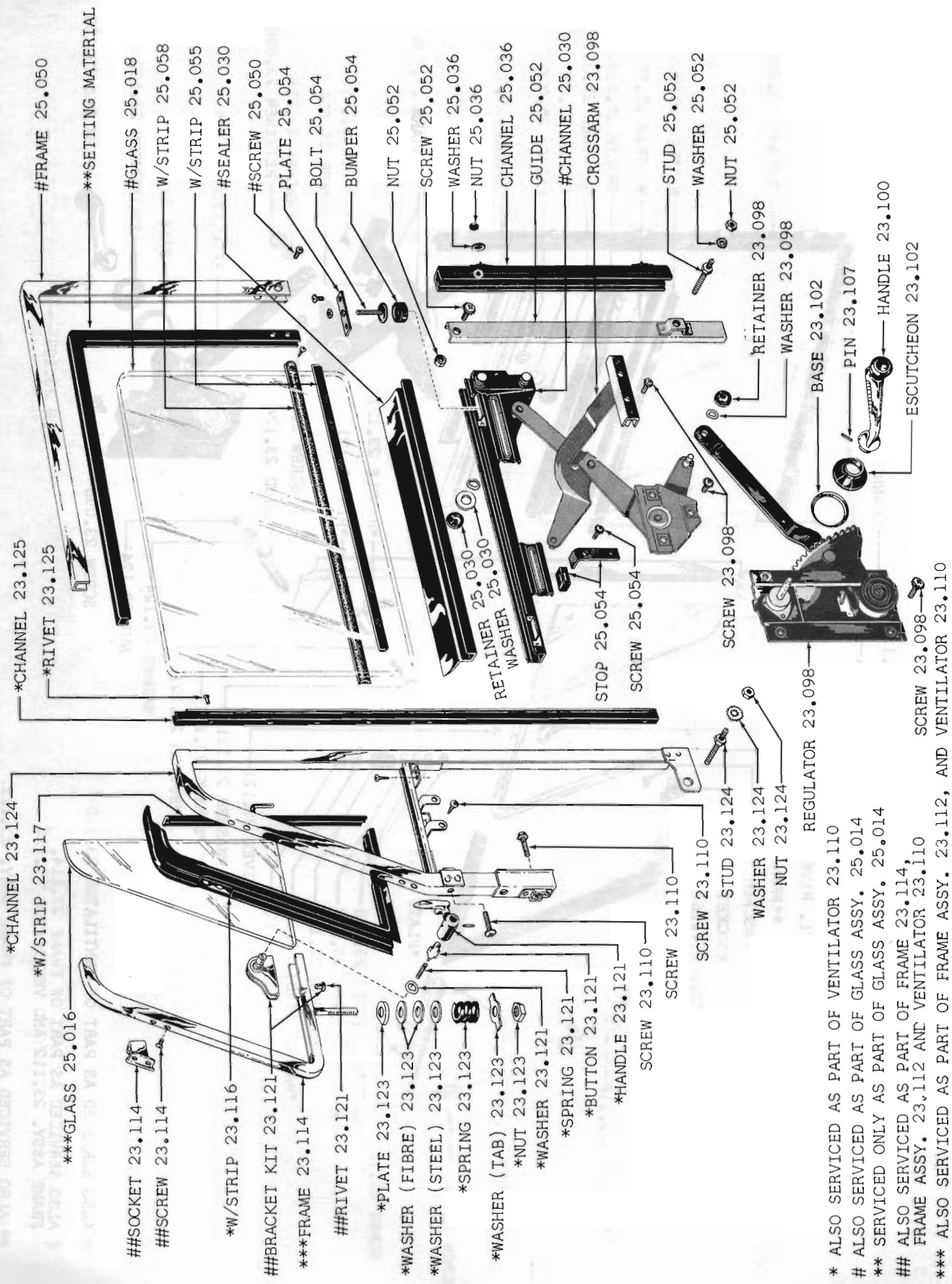

* ALSO SERVICED AS PART OF VENTILATOR 23.110
\# ALSO SERVICED AS PART OF GLASS ASSY. 25.014
** SERVICED ONLY AS PART OF GLASS ASSY. 25.014
\## ALSO SERVICED AS PART OF FRAME 23.114, FRAME ASSY. 23.112 AND VENTILATOR 23.110
*** ALSO SERVICED AS PART OF FRAME ASSY. 23.112, AND VENTILATOR 23.110

FIG. 23.100-4 FRONT DOOR GLASS AND CHANNELS 60 19-23-29-83-89

Printed in U.S.A.

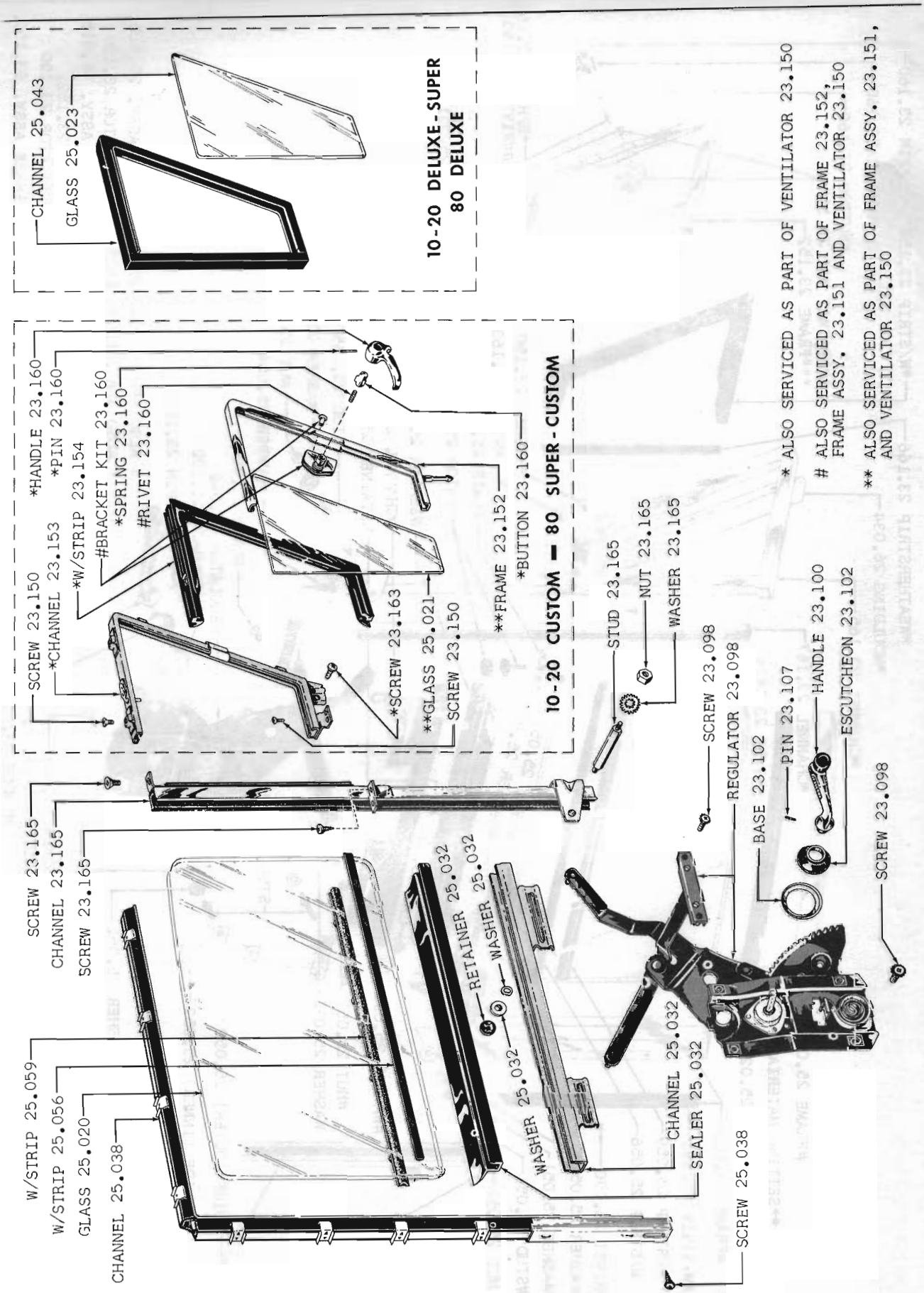

FIG. 23.150-3 REAR DOOR GLASS AND CHANNELS 60 THRU 62 15-18-25-28-85-88

Printed In U.S.A.

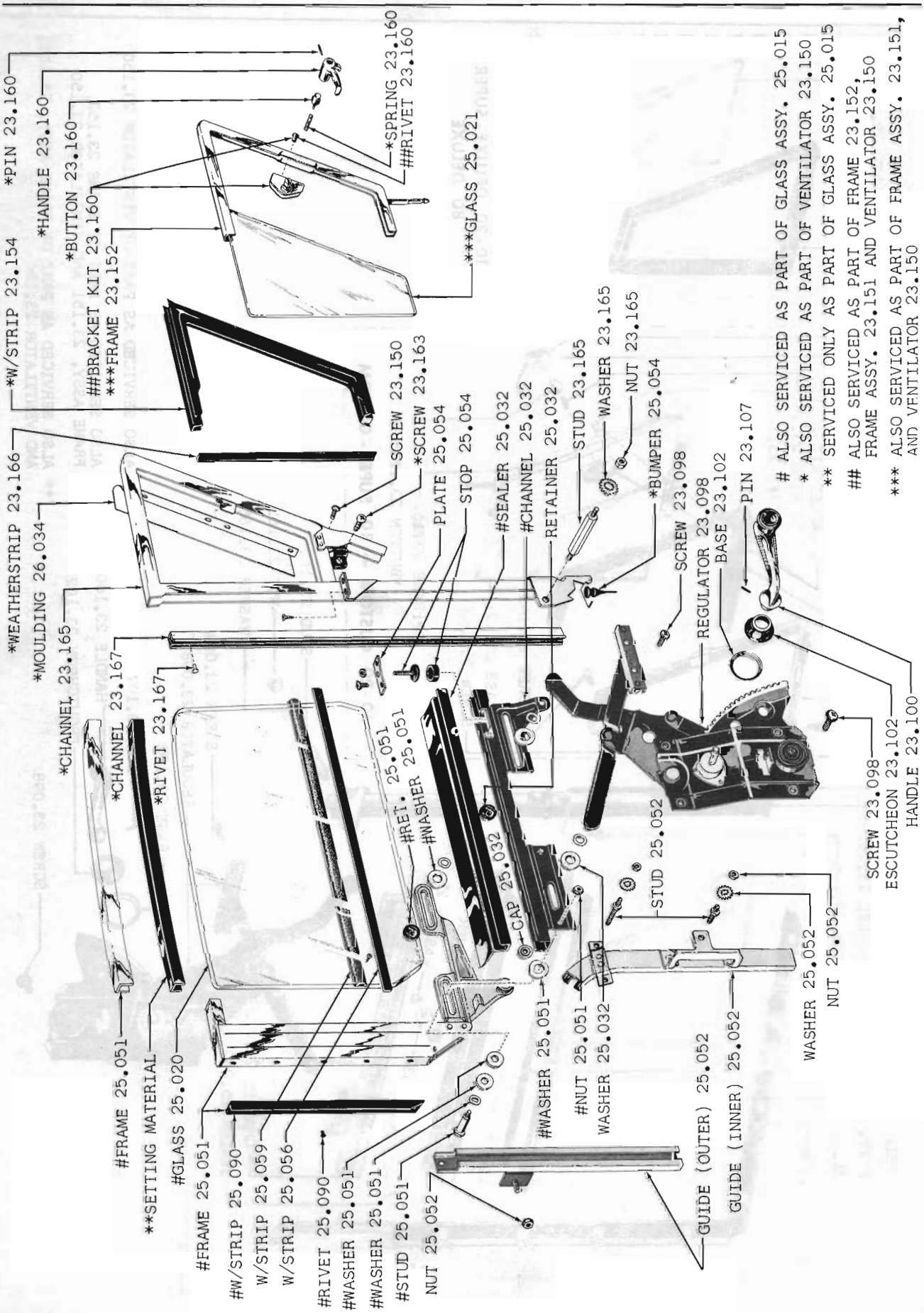

FIG. 23.150-4 REAR DOOR GLASS AND CHANNELS 60 19-23-29-83-89

GROUP NO. — DESCRIPTION — YEAR and MODEL	PRIMARY GROUP NO.	PER CAR	PART NO.	CODE
23.001 DOOR, Front (Incl. Outer Panel)				
(Left) 60 02-04-06	.....	1	447 8556	
(Left) 60 05	.....	1	447 8531	
(Left) 61 Thru 63 02-04-06	.....	1	447 8685	
(Left) 64 02-06 (Note 23.001-1 Type 1)	.....	1	448 0389	
(Left) 64 02-06-16 (Note 23.001-1 Type 2): 65 06	.....	1	448 1933	
(Left) 61 Thru 63 05-08	.....	1	447 8687	
(Left) 64 05-08 (Note 23.001-1 Type 1)	.....	1	448 0385	
(Left) 64 05-08-15-18-85-88 (Note 23.001-1 Type 2): 65 05-08	.....	1	448 1935	
(Left) 61 Thru 63 07-09	.....	1	447 9145	
(Left) 64 07-09 (Note 23.001-1 Type 1)	.....	1	448 1241	
(Left) 64 07-09-19-89 (Note 23.001-1 Type 2): 65 07-09	.....	1	448 1937	
(Left) 60 15-18-25-28-85-88	.....	1	447 8559	
(Left) 60 19-29-83-89	.....	1	447 8561	
(Left) 61 10-20-80	.....	1	447 8721	
(Left) 62 15-18-85-88	.....	1	447 9437	
(Left) 62 16-86	.....	1	447 9441	
(Left) 63-64 15-18-85-88 (Note 23.001-1 Type 1)	.....	1	448 0385	
(Left) 65 15-18-85-88	.....	1	448 2403	
(Left) 63-64 16-86 (Note 23.001-1 Type 1)	.....	1	448 0389	
(Left) 65 16-86	.....	1	448 2407	
(Left) 64 19-89 (Note 23.001-1 Type 1)	.....	1	448 1241	
(Left) 65 17-19-87-89	.....	1	448 2409	
(Right) 60 02-04-06	.....	1	447 8555	
(Right) 60 05	.....	1	447 8530	
(Right) 61 Thru 63 02-04-06	.....	1	447 8684	
(Right) 64 02-06 (Note 23.001-1 Type 1)	.....	1	448 0388	
(Right) 64 02-06-16 (Note 23.001-1 Type 2): 65 06	.....	1	448 1932	
(Right) 61 Thru 63 05-08	.....	1	447 8686	
(Right) 64 05-08 (Note 23.001-1 Type 1)	.....	1	448 0384	
(Right) 64 05-08-15-18-85-88 (Note 23.001-1 Type 2): 65 05-08	.....	1	448 1934	
(Right) 61 Thru 63 07-09	.....	1	447 9144	
(Right) 64 07-09 (Note 23.001-1 Type 1)	.....	1	448 1240	
(Right) 64 07-09-19-89 (Note 23.001-1 Type 2): 65 07-09	.....	1	448 1936	
(Right) 60 15-18-25-28-85-88	.....	1	447 8558	
(Right) 60 19-29-83-89	.....	1	447 8560	
(Right) 61 10-20-80	.....	1	447 8720	
(Right) 62 15-18-85-88	.....	1	447 9436	
(Right) 62 16-86	.....	1	447 9440	
(Right) 63-64 15-18-85-88 (Note 23.001-1 Type 1)	.....	1	448 0384	
(Right) 65 15-18-85-88	.....	1	448 2402	
(Right) 63-64 16-86 (Note 23.001-1 Type 1)	.....	1	448 0388	
(Right) 65 16-86	.....	1	448 2406	
(Right) 64 19-89 (Note 23.001-1 Type 1)	.....	1	448 1240	
(Right) 65 17-19-87-89	.....	1	448 2408	
PANEL, Front Door Outer				
(Left) 60 02-04-06	.....	1	343 2451	
(Left) 60 05	.....	1	344 3397	
(Left) 61 Thru 63 05-08	.....	1	447 8691	

NOTE 23.001-1: Two Types of Door Assemblies were used on the 64 01-10-80 Series. They can be identified as follows:

Type 1: The Distance between the Upper Hinge Lower Mounting Bolt and the center Mounting Bolt is 1-5/16 inches center to center.

Type 2: The Distance between the Upper Hinge Lower Mounting Bolt and the center Mounting Bolt is 7/8 inches center to center.

Copyright 1963 American Motors Corp.

GROUP NO. — DESCRIPTION — YEAR and MODEL	PRIMARY GROUP NO.	PER CAR	PART NO.	CODE
(Left) 64-65 05-08	.....	1	448 0391	
(Left) 61 Thru 63 02-04-06-07-09 ***(Replaces 344 6563)***	.....	1	344 6561	
(Left) 64-65 06-07-09	.....	1	448 0395	
(Left) 60 10-20-80	.....	1	344 0103	
(Left) 61 10-20-80	.....	1	447 8725	
(Left) 62 15-18-85-88	.....	1	447 9443	
(Left) 62 16-86	.....	1	447 9447	
(Left) 63-64 15-18-85-88	.....	1	448 0391	
(Left) 65 15-18-85-88	.....	1	448 2401	
(Left) 63-64 16-86: 64 19-89	.....	1	448 0395	
(Left) 65-16-17-19-86-87-89	.....	1	448 2405	
(Right) 60 02-04-06	.....	1	343 2450	
(Right) 60 05	.....	1	344 3396	
(Right) 61 Thru 63 05-08	.....	1	447 8690	
(Right) 64-65 05-08	.....	1	448 0390	
(Right) 61 Thru 63 02-04-06-07-09 ***(Replaces 344 6562)***	.....	1	344 6560	
(Right) 64-65 06-07-09	.....	1	448 0394	
(Right) 60 10-20-80	.....	1	344 0102	
(Right) 61 10-20-80	.....	1	447 8724	
(Right) 62 15-18-85-88	.....	1	447 9442	
(Right) 62 16-86	.....	1	447 9446	
(Right) 63-64 15-18-85-88	.....	1	448 0390	
(Right) 65 15-18-85-88	.....	1	448 2400	
(Right) 63-64 16-86: 64 19-89	.....	1	448 0394	
(Right) 65 16-17-19-86-87-89	.....	1	448 2404	
SUPPORT, Front Door Inner To Outer Panel				
62 16-86	.....	2	349 7044	
63 16-86	.....	2	347 2612	
64 16-19-89: 64-65 06-07-09 ***(Use 320 6250)***	.....	2	352 8871	#
65 10-80	.....	2	351 5173	
(Left) 60 Thru 62 02-04-06-07	.....	1	343 2249	
(Left) 63 02-04-06-07-09	.....	1	343 2247	
(Right) 60 Thru 62 02-04-06-07	.....	1	343 2248	
(Right) 63 02-04-06-07-09	.....	1	343 2246	
ATTACHING PARTS				
Support To Door				
SCREW, Tapping..... 60 02-04-06	17.660	6	G162013	NA
SCREW, Tapping..... 61 Thru 63 02-04-06-07-09	17.660	6	G162006	NA
SCREW, Tapping..... 62 16-86	17.671	4	G187303	NA
SCREW, Tapping..... 63 16-86: 64-65 06-07-09: 64 16-86: 65 10-80	17.671	4	320 9537	#
CUSHION, Front Door Strainer				
60 Thru 63 02-04-06-07-09 (3/8" Thick)	.....	2	343 1968	
64-65 06-07-09: 62 Thru 64 16-19-86-89: 65 10-80	.....	2	349 7043	
SUPPORT AND CUSHION SET, Front Door Inner To Outer Panel				
65 10-80	.....	1	320 6249	#
REINFORCEMENT KIT, Front Door Inner Panel (Incl. Reinforcements, Screws And Nuts)				
(Left) 63 16-86	.....	1	448 0971	
(Right) 63 16-86	.....	1	448 0970	

Copyright 1963 American Motors Corp.

GROUP NO. — DESCRIPTION — YEAR and MODEL	PRIMARY GROUP NO.	PER CAR	PART NO.	CODE
ATTACHING PARTS Reinforcement To Panel				
SCREW, Machine..... 63 16-86	17.610	6	G179051	
NUT, Hexagon..... 63 16-86	17.412	6	G271169	
MEDALLION, Front Door "Air Conditioned"				
60 Thru 62 01-10-20-80 (WAC)... (Incl. Clips)	.....	2	448 0036	
ATTACHING PARTS Medallion To Door				
CLIP..... 60 Thru 62 01-10-20-80 (WAC)	12.125	4	437 7405	
23.002 DOOR, Rear (Incl. Outer Panel)				
(Left) 60 05	.....	1	447 8533	
(Left) 61 Thru 63 05-08	.....	1	447 8689	
(Left) 64-65 05-08	.....	1	448 0387	
(Left) 60 15-18-25-28-85-88 ***(Replaces 447 8563)***	.....	1	447 9263	
(Left) 60 19-29-83-89	.....	1	447 8565	
(Left) 61 10-20-80 (Note 23.002-1)***(Ref. Pr. List)***	.....	1	447 8723	
(Left) 61 10-20-80 (Note 23.002-2)...(Incl. Check Link) ***(Replaces 447 9211)***	.....	1	320 5843	#
(Left) 62 15-18-85-88	.....	1	447 9439	
(Left) 63-64 15-18-85-88	.....	1	448 0387	
(Left) 65 15-18-85-88	.....	1	448 2415	
(Right) 60 05	.....	1	447 8532	
(Right) 61 Thru 63 05-08	.....	1	447 8688	
(Right) 64-65 05-08	.....	1	448 0386	
(Right) 60 15-18-25-28-85-88 ***(Replaces 447 8562)***	.....	1	447 9262	
(Right) 60 19-29-83-89	.....	1	447 8564	
(Right) 61 10-20-80 (Note 23.002-1)***(Ref. Pr. List)***	.....	1	447 8722	
(Right) 61 10-20-80 (Note 23.002-2)...(Incl. Check Link) ***(Replaces 447 9210)***	.....	1	320 5842	#
(Right) 62 15-18-85-88	.....	1	447 9438	
(Right) 63-64 15-18-85-88	.....	1	448 0386	
(Right) 65 15-18-85-88	.....	1	448 2414	
PANEL, Rear Door Outer				
(Left) 60 05	.....	1	343 2461	
(Left) 61 Thru 63 05-08	.....	1	447 8693	
(Left) 64-65 05-08	.....	1	448 0393	
(Left) 60 10-20-80	.....	1	344 0125	
(Left) 61 10-20-80	.....	1	447 8727	
(Left) 62 15-18-85-88	.....	1	447 9445	
(Left) 63-64 15-18-85-88	.....	1	448 0393	
(Left) 65 15-18-85-88	.....	1	448 2411	
(Right) 60 05	.....	1	343 2460	
(Right) 61 Thru 63 05-08	.....	1	447 8692	
(Right) 64-65 05-08	.....	1	448 0392	
(Right) 60 10-20-80	.....	1	344 0124	
(Right) 61 10-20-80	.....	1	447 8726	
(Right) 62 15-18-85-88	.....	1	447 9444	
(Right) 63-64 15-18-85-88	.....	1	448 0392	
(Right) 65 15-18-85-88	.....	1	448 2410	
SUPPORT AND CUSHION SET, Rear Door Inner To Outer Panel				
65 10-80	.....	1	320 6250	#

NOTE 23.002-1: Use Prior to Body No. 95600 And R-1245
NOTE 23.002-2: Use Beginning With Body No. 95600 And R-1245

Copyright 1963 American Motors Corp.

GROUP NO. — DESCRIPTION — YEAR and MODEL	PRIMARY GROUP NO.	PER CAR	PART NO.	CODE
MEDALLION, Rear Door "V-8"				
62 85 . . . (Incl. Clips)	12.125	2	448 0099	
ATTACHING PARTS Medallion To Door				
CLIP 62 85	12.125	6	437 7405	
23.006 TAILGATE				
60 04		1	343 1986	
61 04-08 ***(Replaces 447 8698)***		1	448 0724	
62 04-08 ***(Use 448 0434)***		1	348 1945	
63 04-08		1	448 0434	
64-65 08 (LER)		1	448 1250	
64-65 08 (WER)		1	448 1252	
60-61 18-28-83-88 (LVT)		1	447 8567	
60-61 18-28-88 (WVT)		1	447 8568	
62 18-88 (LVT)		1	447 9448	
62 18-88 (WVT)		1	447 9450	
63-64 18-88 (LVT-LER)		1	448 0397	
65 18-88 (LVT-LER)		1	448 2421	
63-64 18-88 (LVT-WER) . . . (Less Inner Panel)		1	448 0813	
65 18-88 (LVT-WER) . . . (Less Inner Panel)		1	448 2422	
63-64 18-88 (WVT-LER)		1	448 0398	
65 18-88 (WVT-LER)		1	448 2424	
63-64 18-88 (WVT-WER) . . . (Less Inner Panel)		1	448 0814	
65 18-88 (WVT-WER) . . . (Less Inner Panel)		1	448 2425	
PANEL, Tailgate Inner Cover				
60 Thru 62 18-28-83-88 (LVT)		1	344 4536	
64-65 08 (WER): 63-64 18-88 (LVT-WER)		1	351 2825	
60 Thru 62 18-28-88 (WVT)		1	344 3922	
63-64 18-88 (WVT-WER)		1	351 0564	
65 18-88 (LVT-WER)		1	351 0580	
65 18-88 (WVT-WER)		1	351 7068	
ATTACHING PARTS Panel To Tailgate				
SCREW, Tapping . . . . . 60 Thru 62 18-28-83-88		13	400 0055	
SCREW, Tapping . . . . . 64-65 08 (WER)	17.660	19	G164470	NA
SCREW, Tapping . . . . . 63-64 18-88 (WER)		19	400 0651	
SCREW, Tapping . . . . . 65 18-88 (WER)		19	400 0658	
SEAL, Tailgate Inner Cover Panel				
(Left) 60 Thru 62 18-28-83-88 (LVT)		1	342 1304	
(Left) 60 Thru 62 18-28-88 (WVT)		1	344 3928	
(Right) 60 Thru 62 18-28-83-88		1	342 1304	
(Bottom) 60 Thru 62 18-28-83-88		1	342 1303	

NOTE 23.006-1: Used On Tailgate With .187 Dia. Hole
NOTE 23.006-2: Used On Tailgate With .161 Dia. Hole
NOTE 23.006-3: Two Types of Upper Hinge Assembly were used on the Tailgate on models 63 18-88 (WVT). They can be identified as follows:
Type 1: Holes are countersunk and not tapped.
Type 2: Holes are not countersunk and are tapped.

Copyright 1963 American Motors Corp.

GROUP NO. — DESCRIPTION — YEAR and MODEL	PRIMARY GROUP NO.	PER CAR	PART NO.	CODE
COVER, Tailgate Inner Panel Access Hole				
61 Thru 63 04-08	.....	1	344 7052	
64-65 08: 63 Thru 65 18-88	.....	1	348 2300	
ATTACHING PARTS				
Cover To Tailgate				
SCREW, Tapping..... 61 Thru 63 04-08	17.669	6	800 0305	NA
SCREW, Tapping..... 64-65 08: 63 Thru 65 18-88	.....	8	400 0531	
SEAL, Tailgate Inner Panel Access Hole Cover				
61 Thru 63 04-08	.....	1	344 7053	
64-65 08: 63 Thru 65 18-88	.....	1	348 2303	
HINGE ASSEMBLY, Tailgate				
60 04	.....	2	435 6670	
61 Thru 63 04-08	.....	2	344 7040	
60 Thru 62 18-28-83-88 (LVT)	.....	2	341 1236	
60-61 18-28-88 (WVT)	.....	2	344 3576	
62 18-88 (WVT)	.....	2	346 2580	
(Left) 64-65 08	.....	1	350 0837	
(Left) 63-64 18-88 (LVT)	.....	1	348 2277	
(Left) 65 18-88 (LVT)	.....	1	351 5453	
(Right) 64-65 08	.....	1	350 0836	
(Right) 63-64 18-88 (LVT)	.....	1	348 2276	
(Right) 65 18-88 (LVT)	.....	1	351 5452	
(Upper) 63 18-88 (WVT-Note 23.006-3 Type 1)	.....	1	348 2556	
(Upper) 63 18-88 (WVT-Note 23.006-3 Type 2): 64 18-88 (WVT)	.....	1	448 0969	
(Upper) 65 18-88 (WVT)	.....	1	351 5454	
(Lower) 63-64 18-88 (WVT)	.....	1	348 2279	
(Lower) 65 18-88 (WVT)	.....	1	351 5455	
ATTACHING PARTS				
Hinge To Tailgate				
SCREW, Machine..... 60 Thru 63 04-08: 60 18-28-83-88 (L3S) .....***(Replaces 800 0243, 800 0113)***	17.610	6	400 1231	
SCREW, Machine..... 61-62 18-28-88 (LVT)	17.598	6	G453027	NA
SCREW, Machine..... 60 Thru 62 18-28-83-88 (WVT)	23.020	6	400 0016	
SCREW, Machine..... 63 18-88 (LVT)	23.020	6	400 0451	
SCREW, Machine..... 63-64 18-88 (WVT): 64 08-18-88 (LVT)	23.020	6	400 0029	
SCREW, Machine ..... 65 18-88 (LVT)	23.017	6	400 0659	
SCREW, Machine ..... 65 08 (6 Req.): 65 18-88 (WVT-7 Req.)	.....	AR	400 1577	
Hinge To Body				
SCREW, Machine..... 60 Thru 63 04-08.....***(Replaces 800 0243)***	17.610	6	400 1231	
SCREW, Machine..... 64 08-18-88 (LVT)	23.020	6	400 0029	
SCREW, Machine..... 65 08	.....	6	400 1577	
SCREW, Machine..... 60 18-28-83-88 (L3S).....***(Replaces 800 0113)***	17.610	6	400 1231	
SCREW, Machine..... 61-62 18-28-88 (LVT)	17.598	6	G453027	NA
SCREW, Machine..... 60-61 18-28-88 (WVT-1-1/8" Long)	.....	8	345 1740	
SCREW, Machine..... 60-61 18-28-88 (WVT-5/8" Long)	.....	2	344 5894	
SCREW, Machine..... 62 18-88 (WVT)	.....	8	400 0030	
SCREW, Machine..... 63 18-88 (LVT)	23.020	6	400 0451	
SCREW, Machine..... 63 18-88 (WVT-25/32" Long-Note 23.006-3 Type 1)	.....	6	400 0546	
SCREW, Machine..... 63 18-88 (WVT-1-1/16" Long-Note 23.006-3 Type 2-Upper): 64-65 18-88 (WVT-Upper)	23.020	3	400 0608	
SCREW, Machine..... 63 18-88 (WVT-1-3/8" Long-Note 23.006-3 Type 2-Lower): 64-65 18-88 (WVT-Lower)	.....	3	400 0678	
SCREW, Machine..... 65 18-88 (LVT)	.....	6	400 1464	
PLATE, Tapping ..... 63-64 18-88 (LVT): 64-65 08	.....	2	347 2860	
WASHER, Bite..... 63 18-88 (WVT-Note 23.006-1 Type 2-Upper): 64-65 18-88 (WVT-Upper)	28.015	3	400 0219	
PIN, Tailgate Hinge				
63 04-08	.....	2	435 6773	

Copyright 1963 American Motors Corp.

GROUP NO. — DESCRIPTION — YEAR and MODEL		PRIMARY GROUP NO.	PER CAR	PART NO.	CODE
60 Thru 62 18-28-83-88 (LVT)		.....	2	341 1239	
60 Thru 62 18-28-88 (WVT)		.....	2	344 3579	
(Upper) 63-64 18-88 (WVT)		.....	1	448 0451	
(Upper) 65 18-88 (WVT)		.....	1	351 5464	
(Lower) 63-64 18-88 (WVT)		.....	1	448 0452	
(Lower) 65 18-88 (WVT)		.....	1	351 5467	
LINK, Tailgate Upper Hinge Stop					
65 18-88 (WVT)		.....	1	351 7197	#
INSULATION, Tailgate					
60 Thru 62 18-28-88 (WVT)		.....	1	345 1341	
ATTACHING PARTS					
Insulation To Tailgate					
FASTENER	60 Thru 62 18-28-88 (WVT)	23.012	6	400 0316	
SPACER, Tailgate Sound Deadening					
60-61 18-28-88 (WVT)		.....	2	345 1489	
62 18-88 (WVT)		.....	2	347 7866	
BAR, Tailgate Hinge Torque					
64 08: 63-64 18-88 (LVT)		.....	1	347 2816	
65 08		.....	1	354 8873	
65 18-88 (LVT)		.....	1	351 6974	
ATTACHING PARTS					
Bar To Hinge					
CLIP	64-65 08: 63-64 18-88 (LVT)...*(Replaces 400 0188)*	.....	2	400 0545	
SCREW, Machine.....	65 18-88 (LVT)	23.017	1	400 0659	
WASHER, Bite.....	65 18-88 (LVT)	28.015	1	400 0219	
Bar To Bracket					
CLAMP	64-65 08: 63-64 18-88 (LVT) ...*(Replaces 354 8872)*	.....	1	348 5679	#
SCREW, Machine.....	64 08	17.626	1	G425642	NA
SCREW, Machine.....	63-64 18-88 (LVT)	.....	1	400 0593	
BOLT, Hexagon	64-65 08	.....	1	G181004	
WASHER, Lock	63 18-88 (LVT)	17.820	1	G120214	
NUT, Hexagon.....	64 08: 63 18-88 (LVT)	17.406	1	G120368	
NUT, Hexagon.....	65 08	17.412	1	G271187	
NUT, Hexagon.....	64 18-88 (LVT)	17.412	1	G271187	NA
SPACER, Tailgate Hinge Torque Bar Bracket					
64-65 08		.....	1	350 0173	
BRACKET, Tailgate Hinge Torque Bar Center					
63-64 18-88 (LVT)		.....	1	348 5856	
64-65 08		.....	1	350 1110	
ATTACHING PARTS					
Bracket To Body (Upper)					
SCREW, Machine.....	63-64 18-88 (LVT)	23.020	1	400 0608	
PLATE, Tapping	63-64 18-88 (LVT)	.....	1	348 5854	
Bracket To Body (Lower)					
SCREW, Machine.....	63-64 18-88 (LVT)	23.020	1	400 0608	
NUT, Speed	63-64 18-88 (LVT)	.....	1	400 0567	
Bracket To Rear Cross Sill					
SCREW, Machine.....	64-65 08 (1-3/4" Long)	.....	1	400 0187	
SCREW, Machine.....	64 08 (1-1/8" Long)	17.626	1	G425642	NA

Copyright 1963 American Motors Corp.

GROUP NO. — DESCRIPTION — YEAR and MODEL	PRIMARY GROUP NO.	PER CAR	PART NO.	CODE
BUMPER, Tailgate				
61 04-08	27.038	4	400 0335	
62-63 04-08 ***(Replaces 400 0205)***	27.038	4	400 0282	
60 Thru 62 18-28-83-88 (LVT)	.....	2	341 6528	
60 Thru 62 18-28-88 (WVT)	.....	1	400 0315	
63 Thru 65 18-88 (LVT-On Lower Center Pillar)	12.001	2	344 7763	
(Left) 63 Thru 65 18-88 (LVT-On Tailgate Opening Pillar): 64-65 08 (On Tailgate Opening Pillar)	.....	1	348 8231	
(Right) 63 Thru 65 18-88 (On Tailgate Opening Pillar): 64-65 08 (On Tailgate Opening Pillar)	.....	1	348 8230	
ATTACHING PARTS				
Bumper To Opening Pillar				
SCREW, Machine..... 60-61 18-28-83-88 (LVT)	17.616	2	G447121	NA
SCREW, Machine..... 62 18-88 (LVT)	23.074	2	400 0051	
SCREW, Tapping..... 64-65 08: 63 Thru 65 18-88	17.660	4	G161790	NA
Bumper To Lower Center Pillar				
SCREW, Tapping..... 63 Thru 65 18-88 (LVT)	17.660	2	G443946	NA
PLUG, Tailgate Hole Button				
60 04	17.494	2	G192769	NA
61 Thru 63 04-08	.....	1	346 4456	
60 Thru 62 18-28-88 (WVT)	.....	1	400 0048	
LETTER, Tailgate Name (For 6300 Thru Current Models Refer To Group 26 Illustrations)				
"A" 60-61 18-28 (1 Req.): 61 88 (3 Req.)...(Incl. Clips)	23.009	AR	448 0038	
"A" 62 18...(Incl. Clips)	23.009	1	448 0000	
"A" 60 83-88...(Less Clips)	23.009	3	344 0951	
"B" 60-61 18-28: 61 88...(Incl. Clips)	23.009	1	448 0039	
"B" 60 83-88...(Less Clips)	23.009	1	344 0953	
"B" 62 18...(Incl. Clips)	23.009	1	448 0001	
"D" 60 83-88...(Less Clips)	23.009	1	344 0955	
"D" 61 88...(Incl. Clips)	23.009	1	448 0040	
"E" 60-61 18-28...(Incl. Clips)	23.009	1	448 0041	
"E" 62 18...(Incl. Clips)	23.009	1	448 0002	
"L" 60-61 18-28...(Incl. Clips)	23.009	1	448 0042	
"L" 62 18...(Incl. Clips)	23.009	1	448 0003	
"M" 60-61 18-28: 61 88...(Incl. Clips)	23.009	1	448 0043	
"M" 60 83-88...(Less Clips)	23.009	1	344 0952	
"M" 62 18...(Incl. Clips)	23.009	1	448 0004	
"O" 60 83-88...(Less Clips)	23.009	1	344 0956	
"O" 61 88...(Incl. Clips)	23.009	1	448 0044	
"R" 60-61 18-28 (2 Req.): 61 88 (1 Req.)...(Incl. Clips)	23.009	AR	448 0045	
"R" 60 83-88...(Less Clips)	23.009	1	344 0957	
"R" 62 18...(Incl. Clips)	23.009	2	448 0005	
"S" 60 83-88...(Less Clips)	23.009	2	344 0954	
"S" 61 88...(Incl. Clips)	23.009	2	448 0046	
ATTACHING PARTS				
Letter To Tailgate				
CLIP..... 60 Thru 62 18-28 (14 Req.): 60-61 83-88 (20 Req.)	12.125	AR	437 7405	
CLIP..... 65 18 (14 Req.): 65 88 (20 Req.)	26.077	AR	400 0160	
PLATE, Tailgate Name (For 6300 Thru Current Models Refer To Group 26 Illustrations)				
"AMBASSADOR" 62 88...(Incl. Clips)	23.009	1	448 0098	
"CROSS COUNTRY" 60 18-28-83-88...(Less Clips)	.....	1	340 0080	
"CROSS COUNTRY" 61-62 18-28-88...(Incl. Clips)	.....	1	448 0037	
"CUSTOM" 60 04-18-28-83-88...(Less Clips)	12.075	1	314 0692	
"CUSTOM" 61-62 04-08-18-28: 62 88...(Incl. Clips)	23.009	1	448 0050	
"DELUXE" 60 04-18-28-88...(Less Clips)	23.009	1	344 0809	
"DELUXE" 61-62 04-08-18: 62 88...(Incl. Clips)	23.009	1	448 0048	

Copyright 1963 American Motors Corp.

GROUP NO. — DESCRIPTION — YEAR and MODEL	PRIMARY GROUP NO.	PER CAR	PART NO.	CODE
"RAMBLER" 60 04-83-88...(Less Clips)	12.075	1	314 0694	
"RAMBLER" 61 88...(Incl. Clips)	23.009	1	448 0047	
"SUPER" 60 04-18-28-88...(Less Clips)	12.075	1	314 0691	
"SUPER" 61 04-08-18-28...(Incl. Clips)	23.009	1	448 0049	
"400" 62 08-18-88...(Incl. Clips)	23.009	1	448 0051	
ATTACHING PARTS				
Nameplate To Tailgate				
CLIP ..... 60-61 04-08 (3 Req.): 60 18-28 (3 Req.): 60 83-88 (10 Req.): 61 18-28-88 (7 Req.): 62 04-08 (6 Req.): 62 18-88 (13 Req.)	12.125	AR	437 7405	
CLIP 64-65 08	.....	4	400 0506	
CLIP ..... 63 18-88...(Use With "Rambler")	23.009	5	400 0506	
CLIP ..... 63 18-88...(Use With "Cross Country")	12.125	8	437 7405	
CLIP 64-65 18: 64 88	23.009	4	400 0266	
NUMBER, Tailgate Model Designation (Incl. Clips) (Refer To Group 26 Illustrations)				
ATTACHING PARTS				
Number To Tailgate				
CLIP ..... 63 04-08-18-88 (Note 23.006-1)	26.077	6	400 0160	
CLIP ..... 63 18-88 (Note 23.006-2)	23.009	6	400 0266	
MEDALLION, Tailgate (Refer To Group 26 Illustration)				
ATTACHING PARTS				
Medallion To Tailgate				
CLIP 64 88	23.009	3	400 0266	
CLIP 65 88	.....	3	400 1334	
23.008 FRAME, Front Door Window				
(Left) 60-61 02-04-06	.....	1	345 2905	
(Left) 60 05	.....	1	345 2907	
(Left) 61 05-08	.....	1	345 3337	
(Left) 62-63 02-04-06	.....	1	348 9189	
(Left) 64 02-06 (Note 23.008-3 Type 1)	.....	1	350 0477	
(Left) 64 02-06 (Note 23.008-3 Type 2): 65 06	.....	1	448 1997	
(Left) 62-63 05-08	.....	1	348 9155	
(Left) 64 05-08 (Note 23.008-3 Type 1) ***(Use 448 1999)***	.....	1	350 0467	#
(Left) 64 05-08 (Note 23.008-3 Type 2): 65 05-08	.....	1	448 1999	
(Left) 60 15-18-25-28-85-88	.....	1	344 0203	
(Left) 61 10-20-80	.....	1	344 7743	
(Left) 62 15-18-85-88	.....	1	346 1453	
(Left) 63-64 15-18-85-88 (Note 23.008-3 Type 1) ***(Use 448 1747)***	.....	1	348 2243	
(Left) 64 15-18-85-88 (Note 23.008-3 Type 2)	.....	1	448 1747	
(Left) 65 15-18-85-88	.....	1	351 6193	
(Left) 62 16-86	.....	1	346 1397	
(Left) 63-64 16-86 (Note 23.008-3 Type 1) ***(Use 448 1749)***	.....	1	348 2249	
(Left) 64 16 (Note 23.008-3 Type 2)	.....	1	448 1749	
(Left) 65 16-86	.....	1	351 6197	
(Right) 60-61 02-04-06	.....	1	345 2904	
(Right) 60 05	.....	1	345 2906	
(Right) 61 05-08	.....	1	345 3336	
(Right) 62-63 02-04-06	.....	1	348 9188	
(Right) 64 02-06 (Note 23.008-3 Type 1)	.....	1	350 0476	
(Right) 64 02-06 (Note 23.008-3 Type 2): 65 06	.....	1	448 1996	
(Right) 62-63 05-08	.....	1	348 9154	

NOTE 23.008-1: Used on Cars not equipped with Ventilator.
NOTE 23.008-2: Used on Cars equipped with Ventilator.
NOTE 23.008-3: Two Types of Door Window Frames were used on the 64 01 10-80 Series. They can be identified as follows:
Type 1: Frame is fastened to Lockside at two points on front doors and hingeside on rear doors.
Type 2: Frame is fastened to lockside at three points on front doors and hingeside on rear doors.

Copyright 1963 American Motors Corp.

GROUP NO. — DESCRIPTION — YEAR and MODEL	PRIMARY GROUP NO.	PER CAR	PART NO.	CODE
(Right) 64-65 05-08 ...(Replaces 350 0466)	.....	1	448 1998	#
(Right) 60 15-18-25-28-85-88	.....	1	344 0202	
(Right) 61 10-20-80	.....	1	344 7742	
(Right) 62 15-18-85-88	.....	1	346 1452	
(Right) 63-64 15-18-85-88 (Note 23.008-3 Type 1) ... (Use 448 1746)	.....	1	348 2242	#
(Right) 64 15-18-85-88 (Note 23.008-3 Type 2)	.....	1	448 1746	
(Right) 65 15-18-85-88	.....	1	351 6192	
(Right) 62 16-86	.....	1	346 1396	
(Right) 63-64 16-86 (Note 23.008-3 Type 1) ... (Use 448 1748)	.....	1	348 2248	
(Right) 64 16 (Note 23.008-3 Type 2)	.....	1	448 1748	
(Right) 65 16-86	.....	1	351 6196	
ATTACHING PARTS				
Frame To Door				
SCREW, Machine..... 60 02-04-06 (1-5/8" Long)	.....	4	343 1715	
SCREW, Machine..... 60 02-04-06 (7/16" Long): 61 Thru 63 01 (7/16" Long) ...(Replaces 800 0239)	17.610	4	400 1227	
SCREW, Tapping..... 60 05: 61 Thru 63 01 (1" Long)	17.660	4	G449779	NA
SCREW, Machine..... 60-61 15-18-25-28-85-88 (7/16" Long) ...(Replaces 800 0239)	17.610	6	400 1227	
SCREW, Machine..... 60-61 15-18-25-28-85-88 (1-1/8" Long)	17.626	2	G423563	NA
SCREW, Machine..... 62 10-80 (6 Req.): 63 10-80 (8 Req.): 64 10-80 (4 Req. -7/16" Long)	.....	AR	400 0033	
WASHER, Plain..... 63-64 10-80	17.814	2	400 0480	
SCREW, Machine..... 64 02-05-06-08 (3/8" Long)	.....	4	400 0716	
SCREW, Machine..... 64-65 05-06-08 (5/8" Long)	.....	4	400 0609	
SCREW, Machine..... 64 02-05-06-08 (7/16" Long)	.....	4	400 0752	
SCREW, Machine..... 65 05-06-08 (3/8" Long)	.....	6	400 0776	
SCREW, Machine..... 65 10-80 (3/4" Long)	.....	4	400 0727	
SCREW, Machine..... 64-65 10-80 (15/32" Long)	.....	6	400 0617	
LUG, Front Door Window Frame				
60 Thru 63 01	.....	4	344 6418	
SEAL, Front Door Window Frame To Inner Panel				
63-64 10-80	.....	4	348 5671	
FRAME, Rear Door Window				
(Left) 60 05	.....	1	344 6417	
(Left) 61 05	.....	1	344 7047	
(Left) 61 08	.....	1	344 7051	
(Left) 62-63 05	.....	1	348 9335	
(Left) 62-63 08	.....	1	348 9321	
(Left) 64 05-08 (Note 23.008-3 Type 1)	.....	1	350 0487	
(Left) 64 05-08 (Note 23.008-3 Type 2): 65 05-08	.....	1	448 2001	
(Left) 60 15-18-25-28-85-88 (Note 23.008-1)	.....	1	344 1643	
(Left) 60 15-18-25-28-85-88 (Note 23.008-2)	.....	1	344 0207	
(Left) 61 10-20-80 (Note 23.008-1)	.....	1	344 7739	
(Left) 61 10-20-80 (Note 23.008-2)	.....	1	344 7735	
(Left) 62 15-18-85-88 (Note 23.008-1)	.....	1	346 1457	
(Left) 62 15-18-85-88 (Note 23.008-2)	.....	1	346 1461	
(Left) 63-64 15-18-85-88 ...(Replaces 348 2331)	.....	1	448 1745	#
(Left) 65 15-18-85-88	.....	1	351 6201	
(Right) 60 05	.....	1	344 6416	
(Right) 61 05	.....	1	344 7046	
(Right) 61 08	.....	1	344 7050	
(Right) 62-63 05	.....	1	348 9334	
(Right) 62-63 08	.....	1	348 9320	
(Right) 64 05-08 (Note 23.008-3 Type 1)	.....	1	350 0486	
(Right) 64 05-08 (Note 23.008-3 Type 2): 65 05-08	.....	1	448 2000	

Copyright 1963 American Motors Corp.

GROUP NO. — DESCRIPTION — YEAR and MODEL	PRIMARY GROUP NO.	PER CAR	PART NO.	CODE
(Right) 60 15-18-25-28-85-88 (Note 23.008-1)	.....	1	344 1642	
(Right) 60 15-18-25-28-85-88 (Note 23.008-2)	.....	1	344 0206	
(Right) 61 10-20-80 (Note 23.008-1)	.....	1	344 7738	
(Right) 61 10-20-80 (Note 23.008-2)	.....	1	344 7734	
(Right) 62 15-18-85-88 (Note 23.008-1)	.....	1	346 1456	
(Right) 62 15-18-85-88 (Note 23.008-2)	.....	1	346 1460	
(Right) 63-64 15-18-85-88 ***(Replaces 348 2330)***	.....	1	448 1744	
(Right) 65 15-18-85-88	.....	1	351 6200	
ATTACHING PARTS				
Frame To Door				
SCREW, Machine..... 60 Thru 63 05-08 (8 Req.): 60 15-18-25-28-85-88 (4 Req. -7/16" Long) 61 10-20-80 (6 Req. - 7/16" Long) ***(Replaces 800 0239)***	17.610	AR	400 1227	
SCREW, Machine..... 64 05-08	.....	8	400 0752	
SCREW, Machine..... 65 05-08	.....	10	400 0776	
SCREW, Machine..... 60 15-18-25-28-85-88 (4 Req. -1" Long): 61 10-20-80 (2 Req. -1" Long) ***(Replaces 800 0466)***	17.610	AR	400 1237	
SCREW, Machine..... 62 15-18-85-88 (7/16" Long)	.....	6	400 0033	
SCREW, Tapping..... 62 15-18-85-88 (3/4" Long)	22.056	2	400 0032	
SCREW, Machine..... 63 15-18-85-88 (15/32" Long): 64-65 15-18-85-88 (15/32" Long)	.....	6	400 0617	
SCREW, Machine..... 63 15-18-85-88 (3/8" Long)	27.038	2	400 0507	
SCREW, Machine..... 65 15-18-85-88 (3/4" Long)	.....	4	400 0727	
WASHER, Plain..... 63-64 15-18-85-88	17.814	2	400 0480	
PLUG, Rear Door Window Frame Screw Access Hole (On Door)				
60 Thru 62 15-18-25-28-85-88	27.038	2	400 0334	
SEAL, Rear Door Window Frame To Door				
62 15-18-85-88	.....	2	348 7155	
63-64 15-18-85-88	.....	4	348 5670	
23.009 DOOR, Rear Deck				
60 02-05-06	.....	1	342 5881	
61 Thru 63 02-05-06-07-09 ***(Replaces 447 8683, 345 3053)***	.....	1	448 0436	
64-65 05-06-07-09	.....	1	448 1246	
60-61 15-19-25-29-85-89	.....	1	447 8566	
62 15-16-85-86	.....	1	447 9471	
63-64 15-16-19-85-86-89	.....	1	448 0396	
65 15-16-17-19-85-86-87-89 (Except Marlin)	.....	1	353 9462	
65 59 (Marlin)	.....	1	351 726	
INSULATION, Rear Deck Door				
60 02-05-06	.....	1	343 1671	
61-62 02-05-06-07: 60 Thru 62 15-16-19-25-29-85-86-89	.....	2	345 0014	
PLUG, Rear Deck Door Button				
62 15-16-85-86	23.006	3	400 0048	
BUMPER, Rear Deck Door				
64-65 05-06-07-09	27.038	2	400 0282	
65 15-16-17-19-85-86-87-89	.....	2	351 5499	
LETTER, Rear Deck Name (For 6300 Thru Current Models Refer To Group 26 Illustrations)				
"A" 60-61 15-19-25-29 (1 Req.): 61 85 (3 Req.)...(Incl. Clips)	.....	AR	448 0038	
"A" 60 85-89...(Less Clips)	.....	3	344 0951	
"A" 62 15-16-86...(Incl. Clips)	.....	1	448 0000	

Copyright 1963 American Motors Corp.

GROUP NO. — DESCRIPTION — YEAR and MODEL	PRIMARY GROUP NO.	PER CAR	PART NO.	CODE
"B" 60-61 15-19-25-29: 61 85...(Incl. Clips)	.....	1	448 0039	#
"B" 60 85-89...(Less Clips)	.....	1	344 0953	#
"B" 62 15-16-86...(Incl. Clips)	.....	1	448 0001	#
"D" 60 85-89...(Less Clips)	.....	1	344 0955	#
"D" 61 85...(Incl. Clips)	.....	1	448 0040	#
"E" 60-61 15-19-25-29...(Incl. Clips)	.....	1	400 0041	#
"E" 62 15-16-86...(Incl. Clips)	.....	1	448 0002	#
"L" 60-61 15-19-25-29...(Incl. Clips)	.....	1	448 0042	#
"L" 62 15-16-86...(Incl. Clips)	.....	1	448 0003	#
"M" 60-61 15-19-25-29: 61 85...(Incl. Clips)	.....	1	448 0043	#
"M" 60 85-89...(Less Clips)	.....	1	344 0952	#
"M" 62 15-16-86...(Incl. Clips)	.....	1	448 0004	#
"O" 60 85-89...(Less Clips)	.....	1	344 0956	#
"O" 61 85...(Incl. Clips)	.....	1	448 0044	#
"R" 60-61 15-19-25-29 (2 Req.): 61 85 (1 Req.)...(Incl. Clips)	.....	AR	448 0045	#
"R" 60 85-89...(Less Clips)	.....	1	344 0957	#
"R" 62 15-16-86...(Incl. Clips)	.....	2	448 0005	#
"S" 60 85-89...(Less Clips)	.....	2	344 0954	#
"S" 61 85...(Incl. Clips)	.....	2	448 0046	#

ATTACHING PARTS
Letter To Door

CLIP	60-61 15-19-25-29 (14 Req.): 60-61 85-89 (20 Req.)	12.125	AR	437 7405	
CLIP	62 15-16	.....	14	400 0266	
CLIP	65 15-16-19	26.077	14	400 0160	

PLATE, Rear Deck Name (For 6300 Thru Current Models Refer To Group 26 Illustrations)

"AMBASSADOR" 62 85-86...(Incl. Clips)	.....	1	448 0098	#
"CUSTOM" 60 05-06-15-19-25-29-85-89...(Less Clips)	12.075	1	314 0692	#
"CUSTOM" 61 05-06-07-15-25: 62 05-06-15-16-85-86...(Incl. Clips)	.....	1	448 0050	#
"DELUXE" 60 02-05-06-15-25-85...(Less Clips)	.....	1	344 0809	#
"DELUXE" 61-62 02-05-06-15-16-25: 62 85-86...(Incl. Clips)	.....	1	448 0048	#
"RAMBLER" 60 85-89...(Less Clips)	12.075	1	314 0694	#
"RAMBLER" 61 85...(Incl. Clips)	.....	1	448 0047	#
"SUPER" 60 05-06-15-25-85...(Less Clips)	12.075	1	314 0691	#
"SUPER" 61 05-06-15-25...(Incl. Clips)	.....	1	448 0049	#
"400" 61-62 05-06-07-15-16-25: 62 85-86...(Incl. Clips)	.....	1	448 0051	#

ATTACHING PARTS
Name Plate To Door

CLIP	60-61 02-05-06-07-15-19-25-29: 61 85	12.125	3	437 7405	
CLIP	60 85-89	12.125	10	437 7405	
CLIP	62 02-05-06-07	12.125	5	437 7405	
CLIP	62 15-16-85-86	.....	8	400 0266	
CLIP	63 09 (2 Req.): 64-65 10 (4 Req.)	.....	AR	400 0266	
CLIP	63 15-16-85-86 (5 Req.): 64-65 02-05-06-07-09 (4 Req.)	.....	AR	400 0506	

NUMBER, Rear Deck Model Designation (Incl. Clips) (Refer To Group 26 Illustrations)

ATTACHING PARTS
Number To Door

CLIP	63 02-05-06-07-09	26.077	6	400 0160	
CLIP	63 15-16-85-86 (Note 23.006-1)	26.077	6	400 0160	
CLIP	63 15-16-85-86 (Note 23.006-2)	.....	6	400 0266	

MEDALLION, Rear Deck Door (Refer To Group 26 Illustrations)

Copyright 1963 American Motors Corp.

GROUP NO. — DESCRIPTION — YEAR and MODEL	PRIMARY GROUP NO.	PER CAR	PART NO.	CODE
ATTACHING PARTS				
Medallion To Door				
CLIP 64 85-89	.....	3	400 0266	
CLIP ..... 65 85-86-87-87 (Except Marlin)	.....	3	400 1335	
NUT ..... 65 59 (Marlin)	17.430	3	320 9545	
23.011 PANEL, Liftgate				
60 04	.....	1	435 7765	
FRAME, Liftgate				
(Upper) 61 04-08	.....	1	344 6891	
(Upper) 62 04-08 (Note 23.011-1 Type 1)	.....	1	447 9783	
(Upper) 62 04-08 (Note 23.011-1 Type 2): 63 04-08	.....	1	348 1659	
(Lower) 61 04-08	.....	1	344 6895	
(Lower) 62 04-08 (Note 23.011-1 Type 1)	.....	1	447 9784	
(Lower) 62 04-08 (Note 23.011-1 Type 2): 63 04-08	.....	1	348 1662	
HINGE, Liftgate				
(Left) 60 04	.....	1	435 7519	
(Left) 61 04-08 (Note 23.034-1 Type 1)	.....	1	344 7151	
(Left) 61 04-08 (Note 23.034-1 Type 2)	.....	1	346 0661	
(Left) 62-63 04-08	.....	1	348 1543	
(Right) 60 04	.....	1	435 7520	
(Right) 61 04-08 (Note 23.034-1 Type 1)	.....	1	344 7150	
(Right) 61 04-08 (Note 23.034-1 Type 2)	.....	1	346 0660	
(Right) 62-63 04-08	.....	1	348 1542	
Hinge To Frame				
SCREW, Machine ..... 61 Thru 63 04-08	17.586	4	G271157	NA
Hinge To Body				
BOLT, Hexagon 61 04-08	17.038	4	G181595	NA
SCREW, Machine 62-63 04-08	17.586	4	G445592	NA
SHIM, Liftgate Hinge				
60 04	.....	AR	435 9702	
62-63 04-08 (.0598 Thick)	.....	AR	348 9164	
62-63 04-08 (.1196 Thick)	.....	AR	347 1609	
62-63 04-08 (.1875 Thick)	.....	AR	348 9716	
PIN, Liftgate Hinge				
61 Thru 63 04-08	.....	2	344 7149	
BRACKET, Liftgate Lower Corner				
61 04-08	.....	2	346 3098	
62 04-08 (Note 23.011-1 Type 1)	.....	2	348 1627	
62 04-08 (Note 23.011-1 Type 2)	.....	2	347 4775	
ATTACHING PARTS				
Bracket To Frame				
SCREW, Machine ..... 61 04-08: 62 04-08 (1-1/2" Long-Note 23.011-1 Type 1)	17.586	8	G271157	NA
SCREW, Machine ..... 62 04-08 (3/8" Long-Note 23.011-1 Type 2): 63 04-08	23.034	8	400 0248	

NOTE 23.011-1: Two types of Frames and Brackets were installed on Model 62 04-08. They can be identified as follows:

Type 1: Lower Corner Bracket Mounts to Outer Surface of the Frame and Holes in the Bracket are not tapped.

Type 2: Lower Corner Bracket Mounts to Inner Surface of the Frame and Holes in the Bracket are tapped.

Copyright 1963 American Motors Corp.

GROUP NO. — DESCRIPTION — YEAR and MODEL	PRIMARY GROUP NO.	PER CAR	PART NO.	CODE
23.012 SEALER, Front Door				
(Left) 60 02-04-06 (Top And Sides)	.....	1	344 5803	
(Left) 60 02-04-06 (Bottom)	.....	1	435 0375	
(Left) 60 05 (Top And Sides)	.....	1	343 6557	
(Left) 60 05 (Bottom)	.....	1	343 6079	
(Left) 61 02-04-06 (Top And Sides)	.....	1	346 4749	
(Left) 61 02-04-06 (Bottom)	.....	1	447 9201	
(Left) 61 07 (Hingeside)	.....	1	346 0232	
(Left) 61 07 (Lockside)	.....	1	346 0239	
(Left) 61 07 (Lockside Upper Auxiliary)	.....	1	346 4761	
(Left) 61 07 (Lockside Upper Corner)	.....	1	346 0006	
(Left) 61 07 (Bottom)	.....	1	447 9201	
(Left) 62-63 02-04-06	.....	1	346 4749	
(Left) 64 02-06	.....	1	350 9607	
(Left) 65 06	.....	1	354 1517	
(Left) 61 Thru 63 05-08 *(Replaces 343 6557, 447 9205)*	.....	1	346 4751	
(Left) 64 05-08	.....	1	350 9605	
(Left) 65 05-08	.....	1	354 1513	
(Left) 62 07 (Hingeside, Lockside And Bottom)	.....	1	346 7395	
(Left) 62 07 (Lockside Upper Corner)	.....	1	346 0006	
(Left) 63 07-09 (Hingeside, Lockside And Bottom)	.....	1	349 9199	
(Left) 63 07-09 (Lockside Upper Corner)	.....	1	346 0006	
(Left) 64-65 07-09: 64 19-89 (Hingeside, Lockside And Bottom)	.....	1	350 1247	
(Left) 60 15-18-25-28-85-88 (Hingeside Auxiliary)	.....	1	344 4359	
(Left) 60 19-29-83-89 (Sides And Bottom)	.....	1	344 1011	
(Left) 60 19-29-83-89 (Hingeside Auxiliary)	.....	1	344 4359	
(Left) 61 10-20-80 (Hingeside Auxiliary)	.....	1	344 4359	
(Left) 60 15-18-25-28-85-88: 61 10-20-80: 62 15-18-85-88 (Top, Sides And Bottom) *(Replaces 344 1019)*	.....	1	346 9037	
(Left) 62 15-18-85-88 (Hingeside Auxiliary)	.....	1	344 4359	
(Left) 62 16-86 (Top, Sides And Bottom)	.....	1	346 1409	
(Left) 62 16-86 (Hingeside Auxiliary)	.....	1	344 4359	
(Left) 63 16-86 *(Replaces 348 2365, 348 8313)*	.....	1	352 0879	
(Left) 64 16-86	.....	1	353 9083	
(Left) 65 16-86	.....	1	354 3035	
(Left) 63 15-18-85-88 *(Replaces 348 2361, 348 8311)*	.....	1	352 0877	
(Left) 64 15-18-85-88	.....	1	352 9255	
(Left) 65 15-18-85-88	.....	1	354 3031	
(Left) 65 17-19-87-89	.....	1	354 3009	
(Right) 60 02-04-06 (Top And Sides)	.....	1	344 5802	
(Right) 60 02-04-06 (Bottom)	.....	1	435 0375	
(Right) 60 05 (Top And Sides)	.....	1	343 6556	
(Right) 60 05 (Bottom)	.....	1	343 6078	
(Right) 61 02-04-06 (Top And Sides)	.....	1	346 4748	
(Right) 61 02-04-06 (Bottom)	.....	1	447 9200	
(Right) 61 05-08 (Top And Sides)	.....	1	343 6556	
(Right) 61 05-08 (Bottom)	.....	1	346 4750	
(Right) 61 07 (Hingeside)	.....	1	346 0232	
(Right) 61 07 (Lockside)	.....	1	346 0238	
(Right) 61 07 (Lockside Upper Auxiliary)	.....	1	346 4760	
(Right) 61 07 (Lockside Upper Corner)	.....	1	346 0006	
(Right) 61 07 (Bottom)	.....	1	447 9200	
(Right) 62-63 02-04-06	.....	1	346 4748	
(Right) 64 02-06	.....	1	350 9606	
(Right) 65 06	.....	1	354 1516	
(Right) 62-63 05-08	.....	1	346 4750	
(Right) 64 05-08	.....	1	350 9604	
(Right) 65 05-08	.....	1	354 1512	
(Right) 62 07 (Hingeside, Lockside And Bottom)	.....	1	346 7394	
(Right) 62 07 (Lockside Upper Corner)	.....	1	346 0006	
(Right) 63 07-09 (Hingeside, Lockside And Bottom)	.....	1	349 9198	
(Right) 63 07-09 (Lockside Upper Corner)	.....	1	346 0006	

NOTE 23.012-1: Used Prior to Body No. 11894.
NOTE 23.012-2: Used Beginning with Body No. 11894.

Copyright 1963 American Motors Corp.

GROUP NO. — DESCRIPTION — YEAR and MODEL	PRIMARY GROUP NO.	PER CAR	PART NO.	CODE
(Right) 64-65 07-09: 64 19-89 (Hingeside, Lockside And Bottom)	.....	1	350 1246	
(Right) 60 15-18-25-28-85-88 (Hingeside Auxiliary)	.....	1	344 4358	
(Right) 60 19-29-83-89 (Sides And Bottom)	.....	1	344 1010	
(Right) 60 19-29-83-89 (Hingeside Auxiliary)	.....	1	344 4358	
(Right) 61 10-20-80 (Hingeside Auxiliary)	.....	1	344 4358	
(Right) 60 15-18-25-28-85-88: 61 10-20-80: 62 15-18-85-88 (Top, Sides And Bottom) ***(Replaces 344 1018)***	.....	1	346 9036	
(Right) 62 15-18-85-88 (Hingeside Auxiliary)	.....	1	344 4358	
(Right) 62 16-86 (Top, Sides And Bottom)	.....	1	346 1408	
(Right) 62 16-86 (Hingeside Auxiliary)	.....	1	344 4358	
(Right) 63 16-86 ***(Replaces 348 2364, 348 8312)***	.....	1	352 0878	
(Right) 64 16-86	.....	1	353 9082	
(Right) 65 16-86	.....	1	354 3034	
(Right) 63 15-18-85-88 ***(Replaces 348 2360, 348 8310)***	.....	1	352 0876	
(Right) 64 15-18-85-88	.....	1	352 9254	
(Right) 65 15-18-85-88	.....	1	354 3030	
(Right) 65 17-19-87-89	.....	1	354 3008	
ATTACHING PARTS				
Sealer To Door				
FASTENER ..... 61 Thru 63 01	12.022	2	400 0085	
FASTENER ..... 60 Thru 62 10-20-80 (10 Req.): 64-65 07-09-17-19-87-89 (8 Req.)	.....	AR	400 0316	
FASTENER, Screw Type 64-65 05-08-15-18-85-88	.....	36	400 1325	
FASTENER, Lock Type. 65 15-18-85-88	.....	28	400 1916	#
CLIP ..... 61 10-20-80 (6 Req.): 62 10-80 (10 Req.)	.....	AR	400 0373	
CLIP ..... 62 Thru 65 10-20-80: 60 Thru 65 01 ***(Replaces 341 6915)***	.....	4	400 0650	#
SEALER, Hole ..... 63 Thru 65 15-18-85-88 (28 Req.): 63-64 16-17-19-86-87-89 (34 Req.): 64-65 06-07-09 (34 Req.): 64 05-08 (28 Req.): 65 05-08 (32 Req.)	.....	AR	400 0138	
SCREW, Tapping..... 60 01	17.669	4	800 0272	NA
SCREW, Tapping..... 60 10-20-80 (2 Req.): 61 01-10-20-80 (4 Req.)	17.654	AR	G443824	NA
SCREW, Tapping..... 62 01-10-80: 63 01	17.669	4	G457002	NA
Sealer To Door (Hingeside)				
SCREW, Tapping..... 60 19-29-83-89	17.660	4	G161756	NA
Auxiliary Sealer To Door				
FASTENER ..... 60 Thru 62 10-20-80	.....	2	400 0316	
Sealer Clip To Door				
SCREW, Tapping..... 63-64 10-80: 64 02-05-06-08	17.654	4	G443824	
SCREW, Tapping..... 65 05-06-08	17.660	4	G161790	NA
SEALER, Rear Door				
(Left) 60 05 (Top And Sides-Note 23.012-1) ***(Ref. Pr. List)***	.....	1	343 2991	
(Left) 60 05 (Top And Sides-Note 23.012-2)	.....	1	343 6559	
(Left) 60 05 (Bottom)	.....	1	344 3805	
(Left) 60 05 (Lockside Outer)	.....	1	345 2891	
(Left) 60 05 (Lockside At Belt Line)	.....	1	345 2889	
(Left) 61 05-08 (Top And Sides)	.....	1	343 6721	
(Left) 61 05-08 (Bottom) ***(Ref. Pr. List)***	.....	1	344 7306	
(Left) 61 05-08 (Lockside Outer)	.....	1	345 9993	
(Left) 62-63 05-08	.....	1	346 4791	
(Left) 64 05-08	.....	1	350 9609	
(Left) 65 05-08	.....	1	354 1515	
(Left) 60 15-18-25-28-85-88 (Top And Sides)	.....	1	344 0295	
(Left) 60 15-18-25-28-85-88 (Bottom)	.....	1	344 1217	
(Left) 60 19-29-83-89 (Bottom)	.....	1	344 1421	
(Left) 60 19-29-83-89 (Hingeside)	.....	1	341 7072	
(Left) 60 19-29-83-89 (Lockside)	.....	1	344 0297	
(Left) 61 10-20-80 (Top And Sides)	.....	1	346 6195	
(Left) 61 10-20-80 (Bottom)	.....	1	344 1217	
(Left) 62 15-18-85-88 (Top, Sides And Bottom)	.....	1	346 6247	

Copyright 1963 American Motors Corp.

GROUP NO. — DESCRIPTION — YEAR and MODEL	PRIMARY GROUP NO.	PER CAR	PART NO.	CODE
(Left) 63-64 15-18-85-88 ..... *(Replaces 348 2363, 348 8309)*	.....	1	352 0881	
(Left) 65 15-18-85-88	.....	1	352 9257	
(Right) 60 05 (Top And Sides-Note 23.012-1) ..... *(Ref. Pr. List)*	.....	1	343 2990	
(Right) 60 05 (Top And Sides-Note 23.012-2)	.....	1	343 6558	
(Right) 60 05 (Bottom)	.....	1	344 3804	
(Right) 60 05 (Lockside Outer)	.....	1	345 2890	
(Right) 60 05 (Lockside At Belt Line)	.....	1	345 2888	
(Right) 61 05-08 (Top And Sides) ..... *(Ref. Pr. List)*	.....	1	343 6720	
(Right) 61 05-08 (Bottom)	.....	1	344 7306	
(Right) 61 05-08 (Lockside Outer)	.....	1	345 9992	
(Right) 62-63 05-08	.....	1	346 4790	
(Right) 64 05-08	.....	1	350 9608	
(Right) 65 05-08	.....	1	354 1514	
(Right) 60 15-18-25-28-85-88 (Top And Sides)	.....	1	346 6194	
(Right) 60 15-18-25-28-85-88 (Bottom)	.....	1	344 1216	
(Right) 60 19-29-83-89 (Bottom)	.....	1	344 1420	
(Right) 60 19-29-83-89 (Hingeside)	.....	1	341 7073	
(Right) 60 19-29-83-89 (Lockside)	.....	1	344 0296	
(Right) 61 10-20-80 (Top And Sides)	.....	1	346 6194	
(Right) 61 10-20-80 (Bottom)	.....	1	344 1216	
(Right) 62 15-18-85-88 (Top, Sides And Bottom)	.....	1	346 6246	
(Right) 63-64 15-18-85-88 ..... *(Replaces 348 2362, 348 8308)*	.....	1	352 0880	
(Right) 65 15-18-85-88	.....	1	352 9256	
ATTACHING PARTS				
Sealer To Door				
FASTENER 60-61 10-20-80: 62 15-18-85-88	.....	4	400 0316	
FASTENER, Screw Type 64-65 05-08-15-18-85-88	.....	36	400 1325	
FASTENER, Lock Type. 65 15-18-85-88	.....	26	400 1916	
CLIP ..... 60-61 05-08-10-20-80: 62 Thru 65 15-18-85-88: 63 Thru 65 05-08 ..... *(Replaces 341 6915)*	.....	4	400 0650	
SCREW, Tapping..... 60 10-20-80: 61 05-08-10-20-80	17.654	2	G443824	NA
SCREW, Tapping..... 62 15-18-85-88: 63 05-08	17.669	2	G457002	NA
CLIP 60 10-20-80	.....	2	438 8354	
SEALER, Hole ..... 63-64 15-18-85-88 (28 Req.): 64 05-08 (28 Req.): 65 05-08 (30 Req.): 65 15-18-85-88 (26 Req.)...	.....	AR	400 0138	
Sealer To Door (Hingeside)				
SCREW, Tapping..... 60 19-29-83-89	17.669	4	800 0272	NA
Sealer To Door (Lockside)				
SCREW, Tapping..... 60 19-29-83-89	17.654	2	G443824	NA
FILLER, Front Body Pillar Drain (On Cowl Side Panel)				
(Left) 60 Thru 62 10-20-80	.....	1	344 1475	
(Right) 60 Thru 62 10-20-80	.....	1	344 1474	
ATTACHING PARTS				
Filler To Panel				
SCREW, Tapping..... 60 Thru 62 10-20-80	17.654	8	G443824	NA
SEAL, Lockside At Belt Line				
(Left) 61 Thru 63 05-08	.....	1	345 9993	
(Right) 61 Thru 63 05-08	.....	1	345 9992	
ATTACHING PARTS				
Seal To Rear Door				
SCREW, Tapping..... 61 05-08	17.660	2	G161798	NA
SCREW, Tapping..... 62-63 05-08	17.660	6	G161790	NA
WEATHERSEAL, Front Door Window Frame				
60 Thru 63 02-04-06	.....	2	344 6404	
(Left) 64-65 06	.....	1	350 1101	
(Left) 60 Thru 63 05-08	.....	1	344 6401	

Copyright 1963 American Motors Corp.

GROUP NO. — DESCRIPTION — YEAR and MODEL	PRIMARY GROUP NO.	PER CAR	PART NO.	CODE
(Left) 64-65 05-08	.....	1	350 1103	
(Left) 60 15-18-25-28-85-88: 61 10-20-80	.....	1	344 0291	
(Left) 62 15-18-85-88	.....	1	346 1563	
(Left) 62 16-86	.....	1	346 1565	
(Left) 63 Thru 65 15-18-85-88	.....	1	347 2639	
(Left) 63 Thru 65 16-86	.....	1	347 2641	
(Right) 64-65 06	.....	1	350 1100	
(Right) 60 Thru 63 05-08	.....	1	344 6400	
(Right) 64-65 05-08	.....	1	350 1102	
(Right) 60 15-18-25-28-85-88: 61 10-20-80	.....	1	344 0290	
(Right) 62 15-18-85-88	.....	1	346 1562	
(Right) 62 16-86	.....	1	346 1564	
(Right) 63 Thru 65 15-18-85-88	.....	1	347 2638	
(Right) 63 Thru 65 16-86	.....	1	347 2640	
WEATHERSEAL, Rear Door Window Frame				
(Left) 60 05	.....	1	344 6403	
(Left) 60 15-18-25-28-85-88: 61 10-20-80	.....	1	344 0293	
(Left) 61 Thru 63 05-08	.....	1	345 8153	
(Left) 64-65 05-08	.....	1	350 1105	
(Left) 62 15-18-85-88	.....	1	346 1567	
(Left) 63 Thru 65 15-18-85-88	.....	1	347 2643	
(Right) 60 05	.....	1	344 6402	
(Right) 60 15-18-25-28-85-88: 61 10-20-80	.....	1	344 0292	
(Right) 61 Thru 63 05-08	.....	1	345 8152	
(Right) 64-65 05-08	.....	1	350 1104	
(Right) 62 15-18-85-88	.....	1	346 1566	
(Right) 63 Thru 65 15-18-85-88	.....	1	347 2642	
WEATHERSEAL, Roof Rail				
(Left) 63 09	.....	1	348 3497	
(Left) 60 19-29-83-89	.....	1	344 4465	
(Left) 64-65 09-19-89 (Except Marlin)	.....	1	352 0895	
(Left) 65 59 (Marlin)	.....	1	351 7331	
(Right) 63 09	.....	1	348 3496	
(Right) 60 19-29-83-89	.....	1	344 4464	
(Right) 64-65 09-19-89 (Except Marlin)	.....	1	352 0894	
(Right) 65 59 (Marlin)	.....	1	351 7330	
ATTACHING PARTS Weatherseal To Roof Rail				
SCREW, Tapping 63 09	17.660	18	G161895	NA
SCREW, Tapping ..... 60 19-29-83-89 (32 Req.): 64-65 09-19-89 (18 Req.)	17.660	AR	G161860	NA
SHIM 63 09	28.029	2	346 8998	
FILLER, Roof Rail Weatherstrip Front Retainer (Sponge)				
64-65 07-09-19-89	.....	2	353 5876	
RETAINER, Roof Rail Weatherseal				
(Left-Front) 64-65 09-19-89	.....	1	352 0891	
(Left-Rear) 64 09-19-89	.....	1	352 0893	#
(Left-Rear) 65 09-19-89 (Except Marlin)	.....	1	353 0565	#
(Left-Rear) 65 59 (Marlin)	.....	1	351 7333	
(Right-Front) 64-65 09-19-89	.....	1	352 0890	
(Right-Rear) 64 09-19-89	.....	1	352 0892	#
(Right-Rear) 65 09-19-89 (Except Marlin)	.....	1	353 0564	#
(Right-Rear) 65 59 (Marlin)	.....	1	351 7332	
ATTACHING PARTS Retainer To Roof				
SHIM ..... 65 59 (Marlin)	28.029	2	353 5999	#
SCREW, Tapping ..... 64-65 09-19-89 (18 Req.): 65 59 (Marlin-1/2" Long-16 Req.)	17.660	AR	G161860	NA#
SCREW, Tapping ..... 65 59 (Marlin-5/8" Long)	17.660	2	G161901	NA#

Copyright 1963 American Motors Corp.

GROUP NO. — DESCRIPTION — YEAR and MODEL	PRIMARY GROUP NO.	PER CAR	PART NO.	CODE
SEALER, Roof Rail Weatherseal Retainer To Roof Rail				
64-65 09-19-89 (Except Marlin-63-7/8" Long)	.....	2	350 9422	
64-65 09-19-59-89 (19-7/32" Long)	.....	2	352 8462	
65 59 (Marlin-72" Long)	.....	2	351 7334	
WEATHERSEAL, Front Body Pillar Upper				
(Left) 64 09: 64-65 07-17-87	.....	1	350 1021	
(Left) 61 Thru 63 07-09 ***(Replaces 346 0045)***	.....	1	350 5407	#
(Right) 61 Thru 63 07-09 ***(Replaces 346 0044)***	.....	1	350 5406	#
(Right) 64 09: 64-65 07-17-87	.....	1	350 1020	
ATTACHING PARTS Weatherseal To Front Body Pillar				
SCREW, Tapping..... 61 Thru 64 09: 61 Thru 65 07-17-87	17.660	6	G161860	NA
23.013 SEALER, Liftgate And Tailgate				
60 04 (Upper-On Body)	.....	1	345 2791	
60 04 (Lower-On Body)	.....	1	343 6151	
60 04 (Corner-On Liftgate)	.....	2	343 1947	
60 04 (Bottom-On Liftgate)	.....	1	340 0396	
61 04-08 (On Liftgate)	.....	1	346 4807	
61 04-08 (On Tailgate)	.....	1	344 7482	
62-63 04-08 (Upper-On Body)	.....	1	346 0722	
62-63 04-08 (Lower-On Liftgate)	.....	1	348 1988	
62-63 04-08 (Left-On Body At Belt Line)	.....	1	347 1592	
62-63 04-08 (Right-On Body At Belt Line)	.....	1	347 1593	
62-63 04-08 (On Tailgate)	.....	1	344 7482	
64 08-18-88 (LVT-Left-On Body)	.....	1	352 7763	
64 08-18-88 (LVT-Right-On Body)	.....	1	352 7762	
60-61 18-28-83-88 (LVT-Left)	.....	1	345 5647	
60-61 18-28-83-88 (LVT-Right)	.....	1	345 5646	
60-61 18-28-88 (WVT-Upper-On Body)	.....	1	344 3791	
60-61 18-28-88 (WVT-Hingeside-On Pillar)	.....	1	344 3986	
60-61 18-28-88 (WVT-Upper Hinge-On Tailgate)	.....	1	344 5861	
60-61 18-28-88 (WVT-Lower Hinge-On Tailgate)	.....	1	344 3861	
60-61 18-28-88 (WVT-On Lock Pillar At Belt Line)	.....	1	345 1769	
62 18-88 (LVT-Left)	.....	1	346 9023	
62 18-88 (LVT-Right)	.....	1	346 9022	
62 18-88 (WVT-Upper-On Body)	.....	1	344 3791	
60 Thru 62 18-28-88 (WVT-Lockside-On Tailgate) ***(Replaces 344 5890)***	.....	1	346 9024	
62 18-88 (WVT-Hingeside-On Tailgate)	.....	1	346 2594	
62 18-88 (WVT-Upper Hinge-On Tailgate)	.....	1	346 2578	
62 18-88 (WVT-Lower Hinge-On Tailgate)	.....	1	344 3861	
62 18-88 (WVT-On Lock Pillar At Belt Line)	.....	1	345 1769	
63 18-88 (LVT-Left-On Body) ***(Replaces 348 2905)***	.....	1	352 7763	#
63 18-88 (LVT-Right-On Body) ***(Replaces 348 2904)***	.....	1	352 7762	#
63 18-88 (WVT-Upper-On Body-Note 23.013-1 Type 1)	.....	1	347 2914	
63 18-88 (WVT-Upper-On Body-Note 23.013-1 Type 2): 64-65 18-88 (WVT-Upper-On Body)	.....	1	448 0782	
63 Thru 65 18-88 (WVT-Left-Lower-On Body)	.....	1	348 2907	
63 Thru 65 18-88 (WVT-Right-Lower-On Body)	.....	1	348 2906	
63 Thru 65 18-88 (WVT-Left-Upper Corner-On Tailgate)	.....	1	347 2163	
63 Thru 65 18-88 (WVT-Right-Upper Corner-On Tailgate)	.....	1	347 2162	
65 08-18-88 (LVT-Left-On Body)	.....	1	353 0635	
65 08-18-88 (LVT-Right-On Body)	.....	1	353 0634	
ATTACHING PARTS Liftgate Upper Sealer To Body				
FASTENER 62-63 04-08	25.088	11	400 0249	

NOTE 23.013-1: Two types of Tailgate Upper Sealers on Body were used on 63 18-88 (WVT) Models. They can be identified as follows:
Type 1: Rubber Stock above Retainer is 1/16" thick.
Type 2: Rubber Stock above Retainer is 1/4" thick.

Copyright 1963 American Motors Corp.

GROUP NO. — DESCRIPTION — YEAR and MODEL	PRIMARY GROUP NO.	PER CAR	PART NO.	CODE
Liftgate Belt Line Sealer To Body				
SCREW, Tapping..... 62-63 04-08	17.660	4	G161790	NA
Sealer To Tailgate				
FASTENER ..... 61 Thru 62 18-28-83-88 (LVT)	23.012	2	400 0316	
Lockside Sealer To Tailgate				
FASTENER ..... 60 Thru 62 18-28-88 (WVT)	23.012	4	400 0316	
SCREW, Tapping..... 60 Thru 62 18-28-88 (WVT)	17.660	3	G161790	NA
Hinge Side Sealer To Pillar				
SCREW, Tapping..... 60 Thru 62 18-28-88 (WVT)	17.660	4	G161790	NA
Upper Hinge Sealer To Tailgate				
SCREW, Tapping..... 60 Thru 62 18	17.660	3	G161790	NA
Sealer To Body				
SCREW, Tapping..... 63-64 18-88 (WVT-1-1/4" Long)	17.660	7	G161881	NA
SCREW, Tapping..... 63 Thru 65 18-88 (WVT-2" Long)	.....	6	400 0619	
Upper Corner Sealer To Tailgate				
SCREW, Tapping..... 63 18-88 (WVT)	17.669	2	G457002	NA
SCREW, Tapping..... 64-65 18-88 (WVT)	17.660	2	G161895	NA
RETAINER, Upper Sealer To Body				
60 04	.....	1	436 3411	
60 Thru 62 18-28-88 (WVT)	.....	1	344 3812	
ATTACHING PARTS				
Retainer To Body				
SCREW, Tapping..... 60 04	17.658	9	G128270	NA
SCREW, Tapping..... 60 Thru 62 18-28-88 (WVT-5/8" Long)	17.660	7	G161869	NA
SCREW, Tapping..... 60 Thru 62 18-28-88 (WVT-1" Long)	17.660	2	G161909	NA
SEALER KIT, Liftgate (Incl. Upper, Lower And Belt Line Sealers)				
61 04-08	.....	1	447 9311	

23.014 SEALER, Rear Deck Door

60 02-05-06	.....	1	345 2908	
61 Thru 63 02-05-06-07-09 ..... *(Replaces 346 4591)*	.....	1	348 9850	
64-65 05-06-07-09	.....	1	350 0814	
60 Thru 62 15-16-19-25-29-85-86-89	.....	1	344 1410	
63-64 15-16-19-85-86-89	.....	1	349 2084	
65 15-16-17-19-85-86-87-89 (Except Marlin)	.....	1	351 6818	
65 59 (Marlin)	.....	1	351 7390	

23.015 HINGE, Front Door Upper

(Left) 60 01	.....	1	436 8747	
(Left) 61 Thru 63 01	.....	1	344 6821	
(Left) 64 01 (Note 23.001-1 Type 1)	.....	1	347 2381	
(Left) 64 01-10-80 (Note 23.001-1 Type 2): 65 01	.....	1	352 8971	
(Left) 60 Thru 62 10-20-80	.....	1	341 1113	
(Left) 63-64 10-80 (Note 23.001-1 Type 1)	.....	1	347 2381	
(Left) 65 10-80	.....	1	351 5461	
(Right) 60 01	.....	1	436 8748	
(Right) 61 Thru 63 01	.....	1	344 6820	
(Right) 64 01 (Note 23.001-1 Type 1)	.....	1	347 2380	
(Right) 64 01-10-80 (Note 23.001-1 Type 2): 65 01	.....	1	352 8970	
(Right) 60 Thru 62 10-20-80	.....	1	341 1114	
(Right) 63-64 10-80 (Note 23.001-1 Type 1)	.....	1	347 2380	
(Right) 65 10-80	.....	1	351 5460	

Copyright 1963 American Motors Corp.

GROUP NO. — DESCRIPTION — YEAR and MODEL	PRIMARY GROUP NO.	PER CAR	PART NO.	CODE
ATTACHING PARTS				
Hinge To Body				
SCREW, Machine..... 60 Thru 63 01	.....	6	343 2014	
SCREW, Machine..... 60 Thru 62 10-20-80 (7/8" Long)	.....	6	400 0029	
SCREW, Machine..... 60 Thru 62 10-20-80 (1-1/16" Long).....*(Replaces 344 5829)*	.....	2	400 0084	
SCREW, Machine..... 64-65 01: 63 Thru 65 10-80	.....	6	400 0608	
WASHER, Sealing..... 63 10-80	12.075	6	400 0082	
Hinge To Door				
SCREW, Machine..... 60 01 (6 Req.): 61 Thru 63 01 (5 Req.)	.....	AR	343 2014	
SCREW, Machine..... 60 Thru 62 10-20-80.....*(Replaces 344 5895)*	.....	6	400 0016	
SCREW, Machine..... 63-64 10-80: 64 01	.....	6	400 0029	
SCREW, Machine..... 65 01-10-80	.....	6	400 1577	
STOP, Front Door Upper Hinge				
65 10 (660)(770)	.....	2	354 3954	
LEVER AND RIVET KIT, Front Door Upper Hinge Cam				
(Left) 60 Thru 62 10-20-80	.....	1	447 6013	
(Right) 60 Thru 62 10-20-80	.....	1	447 6014	
ROLLER AND RIVET KIT, Front Door Upper Hinge Cam				
60 Thru 62 10-20-80	.....	2	447 6012	
SPRING AND ROD ASSEMBLY, Front Door Upper Hinge Cam				
60 Thru 62 10-20-80	.....	2	447 9310	
SHIM, Front Door Upper Hinge				
60 01: 63 01	.....	AR	437 1411	
62 10-80 (.0359 Thick)	.....	AR	348 4679	
62 10-80 (.0598 Thick)	.....	AR	348 4678	
SPRING, Front Door Upper Hinge				
63-64 10-80: 64-65 01	.....	2	448 0805	#
65 10-80	.....	2	351 5465	
23.016 HINGE, Front Door Lower				
(Left) 60 01	23.015	1	436 8747	
(Left) 61 Thru 63 01	.....	1	345 2703	
(Left) 64-65 01	.....	1	347 2391	
(Left) 60 Thru 62 10-20-80	.....	1	341 1115	
(Left) 63-64 10-80	.....	1	347 2391	
(Left) 65 10-80	.....	1	351 5471	
(Right) 60 01	23.015	1	436 8748	
(Right) 61 Thru 63 01	.....	1	345 2702	
(Right) 64-65 01	.....	1	347 2390	
(Right) 60 Thru 62 10-20-80	.....	1	341 1116	
(Right) 63-64 10-80	.....	1	347 2390	
(Right) 65 10-80	.....	1	351 5470	

Copyright 1963 American Motors Corp.

GROUP NO. — DESCRIPTION — YEAR and MODEL		PRIMARY GROUP NO.	PER CAR	PART NO.	CODE
ATTACHING PARTS					
Hinge To Body					
SCREW, Machine.....	60 Thru 63 01.....	.....	6	343 2014	
SCREW, Machine.....	60 Thru 62 10-20-80 (7/8" Long).....	.....	6	400 0029	
SCREW, Machine.....	60 Thru 62 10-20-80 (1-1/16" Long).....*(Replaces 344 5829)*	.....	2	400 0084	
SCREW, Machine.....	64-65 01: 63 Thru 65 10-80.....	.....	6	400 0608	
WASHER, Sealing.....	63 10-80.....	12.075	6	400 0082	
Hinge To Door					
SCREW, Machine.....	60 01 (6 Req.): 61 Thru 63 01 (5 Req.).....	.....	AR	343 2014	
SCREW, Machine.....	60 Thru 62 10-20-80.....*(Replaces 344 5895)*	.....	6	400 0016	
SCREW, Machine.....	63-64 10-80: 64 01.....	.....	6	400 0029	
SCREW, Machine.....	65 01-10-80.....	.....	6	400 1577	
SHIM, Front Door Lower Hinge					
60 01: 63 01.....		.....	AR	437 1411	
62 10-80 (.0359 Thick).....		.....	AR	348 4679	
62 10-80 (.0598 Thick).....		.....	AR	348 4678	

23.017 HINGE, Rear Door Upper

(Left) 60 05.....	.....	1	437 5831	
(Left) 60-61 15-18-25-28-85-88.....	.....	1	341 1075	
(Left) 60 19-29-83-89.....	.....	1	343 0463	
(Left) 61 Thru 63 05-08.....	.....	1	344 6825	
(Left) 64-65 05-08.....	.....	1	347 2401	
(Left) 62 15-18-85-88.....	.....	1	347 6795	
(Left) 63-64 15-18-85-88.....	.....	1	347 2401	
(Left) 65 15-18-85-88.....	.....	1	351 5481	
(Right) 60 05.....	.....	1	437 5832	
(Right) 60-61 15-18-25-28-85-88.....	.....	1	341 1076	
(Right) 60 19-29-83-89.....	.....	1	343 0464	
(Right) 61 Thru 63 05-08.....	.....	1	344 6824	
(Right) 64-65 05-08.....	.....	1	347 2400	
(Right) 62 15-18-85-88.....	.....	1	347 6794	
(Right) 63-64 15-18-85-88.....	.....	1	347 2400	
(Right) 65 15-18-85-88.....	.....	1	351 5480	
ATTACHING PARTS				
Hinge To Body				
SCREW, Machine.....	60 05 (8 Req.): 61 Thru 63 05-08 (7 Req.).....	.....	AR	343 2014	
SCREW, Machine.....	60-61 15-18-25-28-85-88.....	.....	8	400 0029	
SCREW, Machine.....	60 19-29-83-89.....	.....	6	400 0016	
SCREW, Machine.....	62 15-18-85-88.....	.....	6	400 0451	
SCREW, Machine.....	63 15-18-85-88 (25/32" Long).....	23.006	4	400 0546	
SCREW, Machine.....	63 15-18-85-88 (3/4" Long).....	.....	4	400 0659	
SCREW, Machine.....	64-65 05-08: 63 Thru 65 15-18-85-88 (5/8" Long)..	23.020	4	400 0609	#
Hinge To Door					
SCREW, Machine.....	60 05 (7 Req.): 61 Thru 63 05-08 (5 Req.).....	.....	AR	343 2014	
SCREW, Machine.....	60-61 15-18-25-28-85-88 (8 Req.): 62 15-18-85-88 (5 Req.): 63-64 15-18-85-88 (4 Req.): 64 05-08 (4 Req.).....	.....	AR	400 0029	
SCREW, Machine.....	65 05-08-15-18-85-88.....	.....	6	400 1577	
SCREW, Machine.....	60 19-29-83-89.....	17.626	6	G425591	NA

Copyright 1963 American Motors Corp.

GROUP NO. — DESCRIPTION — YEAR and MODEL	PRIMARY GROUP NO.	PER CAR	PART NO.	CODE
SHIM, Rear Door Upper Hinge				
60 19-29-83-89 (.0299 Thick)	.....	AR	343 0337	
60 19-29-83-89 (.0598 Thick)	.....	AR	343 0338	
23.018 HINGE, Rear Door Lower				
(Left) 60 05	.....	1	437 5835	
(Left) 60 15-18-25-28-85-88: 61 10-20-80	.....	1	341 1081	
(Left) 60 19-29-83-89	.....	1	341 1866	
(Left) 61 Thru 63 05-08	.....	1	345 2507	
(Left) 64-65 05-08	.....	1	347 2411	
(Left) 62 15-18-85-88	.....	1	346 1421	
(Left) 63-64 15-18-85-88	.....	1	347 2411	
(Left) 65 15-18-85-88	.....	1	351 5491	
(Right) 60 05	.....	1	437 5836	
(Right) 60 15-18-25-28-85-88: 61 10-20-80	.....	1	341 1082	
(Right) 60 19-29-83-89	.....	1	341 1867	
(Right) 61 Thru 63 05-08	.....	1	345 2506	
(Right) 64-65 05-08	.....	1	347 2410	
(Right) 62 15-18-85-88	.....	1	346 1420	
(Right) 63-64 15-18-85-88	.....	1	347 2410	
(Right) 65 15-18-85-88	.....	1	351 5490	
ATTACHING PARTS				
Hinge To Body				
SCREW, Machine..... 60 05 (8 Req.): 61 Thru 63 05-08 (7 Req.)	.....	AR	343 2014	
SCREW, Machine..... 60 Thru 62 10-20-80	.....	8	400 0029	#
SCREW, Machine..... 63-64 15-18-85-88: 64-65 05-08	.....	6	400 0029	
Hinge To Door				
SCREW, Machine..... 60 05 (7 Req.): 61 Thru 63 05-08 (5 Req.)	.....	AR	343 2014	
SCREW, Machine..... 60-61 15-18-25-28-85-88 (8 Req.): 62 15-18-85-88 (5 Req.): 63-64 15-18-85-88 (4 Req.): 64 05-08 (4 Req.)	.....	AR	400 0029	
SCREW, Machine..... 65 05-08-15-18-85-88	.....	6	400 1577	
SCREW, Machine..... 60 19-29-83-89	.....	8	400 0029	
SPRING, Rear Door Lower Hinge				
63-64 15-18-85-88: 64-65 05-08	.....	2	448 0806	
65 15-18-85-88	.....	2	351 5465	
23.019 BUMPER, Door				
60 Thru 63 02-04-06-07-09 (On Lock Pillar)	.....	2	434 8105	
61 Thru 63 05-08 (On Center Pillar)	.....	2	346 4501	
61 07 (On Front Pillar)	.....	2	342 1137	
61 Thru 63 07-09 (On Door-Lockside)	.....	2	345 8808	
62-63 07-09 (On Front Pillar)	.....	2	434 8105	
63 07-09 (Door Hingeside)	.....	1	434 8105	

Copyright 1963 American Motors Corp.

GROUP NO. — DESCRIPTION — YEAR and MODEL	PRIMARY GROUP NO.	PER CAR	PART NO.	CODE
60 15-18-25-28-85-88 (On Center Pillar)	.....	2	438 5499	
60 19-29-83-89 (Front Door Lockside)	.....	2	437 8370	
60 19-29-83-89 (Rear Door Lockside)	.....	2	342 1137	
61 10-20-80 (On Center Pillar)	.....	2	344 7841	
61 15-25-85 (On Lower Deck Panel)	.....	2	347 6394	
62 15-16-85-86 (On Lower Deck Panel)	.....	2	347 6635	
63 10-80 (Front Door-Wedge Type)	.....	2	347 2387	
63 15-18-85-88 (Rear Door-On Body)	.....	2	347 2261	
63 15-18-85-88 (On Door Lockside-Button Type)	.....	6	400 0833	
64-65 05-08-15-18-85-88 (Button Type)	.....	8	400 0668	
64-65 01-10-80 (Front Door-Wedge Type)	.....	2	400 0669	
(Left) 64-65 07-09-17-19-87-89 (Die Casting-On Door)	.....	1	351 1761	
(Left) 64-65 07-09-17-19-87-89 (Nylon-On Body)	.....	1	351 1759	
(Right) 64-65 07-09-17-19-87-89 (Die Casting-On Door)	.....	1	351 1760	
(Right) 64-65 07-09-17-19-87-89 (Nylon-On Body)	.....	1	351 1758	
ATTACHING PARTS				
Bumper To Rear Door (Lockside)				
SCREW, Tapping..... 60 19-29-83-89	17.660	2	G161895	NA
Bumper To Door				
SCREW, Machine..... 61 Thru 63 07-09	17.586	4	G191981	NA
SCREW, Tapping..... 64-65 07-09-17-19-87-89	17.648	4	G161418	NA
Bumper To Front Pillar				
SCREW, Tapping..... 61 07	17.660	3	G161901	NA
SCREW, Tapping..... 64-65 07-09-17-19-87-89	17.648	4	G161418	NA
SHIM, Door Bumper				
61 Thru 63 07-09	.....	AR	345 8804	
64-65 07-09-17-19-87-89	.....	2	350 1017	
WEDGE, Door Bumper Contact (On Lock Pillar)				
61 Thru 63 07-09	.....	2	345 8806	
ATTACHING PARTS				
Wedge To Lock Pillar				
SCREW, Machine..... 61 Thru 63 07-09	.....	4	400 0204	
23.023 PIN, Front Door Hinge				
60 01	.....	4	436 8753	
63-64 10-80: 64-65 01	.....	4	347 2394	
65 10-80	23.006	4	351 5464	
(Upper) 61 Thru 63 01	.....	2	344 7088	
(Upper) 60 Thru 62 10-20-80	.....	2	438 6493	
(Lower) 61 Thru 63 01	.....	2	344 7089	
(Lower) 60 Thru 62 10-20-80	.....	2	438 6520	
PIN, Rear Door Hinge				
60 01	.....	4	436 8753	
60 10-20-80: 63-64 15-18-85-88: 64-65 05-08	23.006	4	341 1239	
65 10-80	.....	4	351 5464	
(Upper) 61 Thru 63 05-08	.....	2	436 8753	
(Upper) 61 10-20-80: 62 15-18-85-88	.....	2	341 1239	
(Lower) 61 Thru 63 05-08	.....	2	344 7089	
(Lower) 61 10-20-80: 62 15-18-85-88	.....	2	341 1239	

Copyright 1963 American Motors Corp.

GROUP NO. — DESCRIPTION — YEAR and MODEL		PRIMARY GROUP NO.	PER CAR	PART NO.	CODE
23.028 HINGE, Rear Deck Door (Incl. Spring)					
(Left) 60 02-05-06		.....	1	343 6107	
(Right) 60 02-05-06		.....	1	343 6106	
ATTACHING PARTS					
Hinge To Body					
SCREW, Machine.....	60 02-05-06	17.626	4	800 0017	NA
WASHER, Plain.....	60 02-05-06 (13/16" O.D.)	17.814	4	G120394	NA
WASHER, Plain.....	60 02-05-06 (7/8" O.D.) .....*(Replaces 800 0165)*	17.814	4	400 1104	
WASHER, Lock.....	60 02-05-06	17.824	4	G138542	NA
NUT, Hexagon.....	60 02-05-06	17.406	4	G120369	NA
SUPPORT, Rear Deck Door Hinge					
(Left) 61 Thru 63 02-05-06-09		.....	1	344 6985	
(Left) 61 Thru 63 07		.....	1	345 8795	
(Left) 64-65 07...(Incl. Hinge Arm)		.....	1	350 0427	
(Left) 64-65 02-05-06-09...(Incl. Hinge Arm)		.....	1	350 0429	
(Left) 60 Thru 62 15-16-19-25-29-85-86-89		.....	1	344 0645	
(Left) 63-64 15-16-85-86		.....	1	347 2937	
(Left) 64-65 19-89 (Except Marlin): 65 15-16-85-86 (Except Marlin)		.....	1	350 1363	#
(Left) 65 17-87 (Except Marlin)...(Incl. Hinge Arm)		.....	1	351 5045	#
(Left) 65 59 (Marlin)...(Incl. Hinge Arm)		.....	1	351 7225	#
(Right) 61 Thru 63 02-05-06-09		.....	1	344 6984	
(Right) 64-65 02-05-06-09...(Incl. Hinge Arm)		.....	1	350 0428	
(Right) 61 Thru 63 07		.....	1	345 8794	
(Right) 64-65 07...(Incl. Hinge Arm)		.....	1	350 0426	
(Right) 60 Thru 62 15-16-19-25-29-85-86-89		.....	1	344 0644	
(Right) 63-64 15-16-85-86		.....	1	347 2936	
(Right) 64-65 19-89 (Except Marlin): 65 15-16-85-86 (Except Marlin)		.....	1	350 1362	#
(Right) 65 17-87 (Except Marlin)...(Incl. Hinge Arm)		.....	1	351 5044	#
(Right) 65 59 (Marlin)...(Incl. Hinge Arm)		.....	1	351 7224	#
SHIM, Rear Deck Door Hinge Arm					
65 59 (Marlin-.041" Thick)		.....	2	351 7304	#
ARM, Rear Deck Door Hinge					
61 Thru 63 07		.....	2	345 8780	
ATTACHING PARTS					
Arm To Door					
SCREW, Machine.....	64-65 05-06-07-09	23.020	4	400 0608	
SCREW, Machine.....	61 Thru 63 07	23.020	4	400 0016	
Arm To Support					
RIVET, Solid.....	61 Thru 63 07	17.540	2	G134944	NA
ARM AND LINK, Rear Deck Door Hinge					
61 Thru 63 02-05-06-09		.....	2	344 6977	
60 Thru 62 15-16-19-25-29-85-86-89		.....	2	344 0649	
63-64 15-16-85-86		.....	2	348 5264	
64-65 19-89: 65 15-16-85-86		.....	2	351 2824	
ATTACHING PARTS					
Arm And Link To Support					
RIVET, Solid.....	61 Thru 63 02-05-06-09: 60 Thru 65 15-16-19-25-29-85-86-89	17.540	2	G134944	NA#
Arm And Link To Door					
SCREW, Machine.....	61 Thru 63 02-05-06-09: 60 Thru 62 15-16-19-25-29-85-86-89	23.020	4	400 0016	
SCREW, Machine.....	63 Thru 65 15-16-17-19-85-86-87-89	23.020	4	400 0608	

Copyright 1963 American Motors Corp.

GROUP NO. — DESCRIPTION — YEAR and MODEL	PRIMARY GROUP NO.	PER CAR	PART NO.	CODE
23.028 HINGE, Rear Deck Door (Incl. Spring)				
(Left) 60 02-05-06	.....	1	343 6107	
(Right) 60 02-05-06	.....	1	343 6106	
ATTACHING PARTS				
Hinge To Body				
SCREW, Machine..... 60 02-05-06	17.626	4	800 0017	NA
WASHER, Plain..... 60 02-05-06 (13/16" O. D.)	17.814	4	G120394	NA
WASHER, Plain..... 60 02-05-06 (7/8" O. D.) ***(Replaces 800 0165)***	17.814	4	400 1104	
WASHER, Lock..... 60 02-05-06	17.824	4	G138542	NA
NUT, Hexagon..... 60 02-05-06	17.406	4	G120369	NA
SUPPORT, Rear Deck Door Hinge				
(Left) 61 Thru 63 02-05-06-09	.....	1	344 6985	
(Left) 61 Thru 63 07	.....	1	345 8795	
(Left) 64-65 07...(Incl. Hinge Arm)	.....	1	350 0427	
(Left) 64-65 02-05-06-09...(Incl. Hinge Arm)	.....	1	350 0429	
(Left) 60 Thru 62 15-16-19-25-29-85-86-89	.....	1	344 0645	
(Left) 63-64 15-16-85-86	.....	1	347 2937	
(Left) 64-65 19-89 (Except Marlin): 65 15-16-85-86 (Except Marlin)	.....	1	350 1363	#
(Left) 65 17-87 (Except Marlin)...(Incl. Hinge Arm)	.....	1	351 5045	#
(Left) 65 59 (Marlin)...(Incl. Hinge Arm)	.....	1	351 7225	#
(Right) 61 Thru 63 02-05-06-09	.....	1	344 6984	
(Right) 64-65 02-05-06-09...(Incl. Hinge Arm)	.....	1	350 0428	
(Right) 61 Thru 63 07	.....	1	345 8794	
(Right) 64-65 07...(Incl. Hinge Arm)	.....	1	350 0426	
(Right) 60 Thru 62 15-16-19-25-29-85-86-89	.....	1	344 0644	
(Right) 63-64 15-16-85-86	.....	1	347 2936	
(Right) 64-65 19-89 (Except Marlin): 65 15-16-85-86 (Except Marlin)	.....	1	350 1362	#
(Right) 65 17-87 (Except Marlin)...(Incl. Hinge Arm)	.....	1	351 5044	#
(Right) 65 59 (Marlin)...(Incl. Hinge Arm)	.....	1	351 7224	#
SHIM, Rear Deck Door Hinge Arm				
65 59 (Marlin-.041" Thick)	.....	2	351 7304	#
ARM, Rear Deck Door Hinge				
61 Thru 63 07	.....	2	345 8780	
ATTACHING PARTS				
Arm To Door				
SCREW, Machine..... 64-65 05-06-07-09	23.020	4	400 0608	
SCREW, Machine..... 61 Thru 63 07	23.020	4	400 0016	
Arm To Support				
RIVET, Solid..... 61 Thru 63 07	17.540	2	G134944	NA
ARM AND LINK, Rear Deck Door Hinge				
61 Thru 63 02-05-06-09	.....	2	344 6977	
60 Thru 62 15-16-19-25-29-85-86-89	.....	2	344 0649	
63-64 15-16-85-86	.....	2	348 5264	
64-65 19-89: 65 15-16-85-86	.....	2	351 2824	
ATTACHING PARTS				
Arm And Link To Support				
RIVET, Solid..... 61 Thru 63 02-05-06-09: 60 Thru 65 15-16-19-25-29-85-86-89	17.540	2	G134944	NA#
Arm And Link To Door				
SCREW, Machine..... 61 Thru 63 02-05-06-09: 60 Thru 62 15-16-19-25-29-85-86-89	23.020	4	400 0016	
SCREW, Machine..... 63 Thru 65 15-16-17-19-85-86-87-89	23.020	4	400 0608	

Copyright 1963 American Motors Corp.

GROUP NO. — DESCRIPTION — YEAR and MODEL	PRIMARY GROUP NO.	PER CAR	PART NO.	CODE
ROD, Rear Deck Door Hinge Torque				
(Left) 61 Thru 63 02-05-06-09	.....	1	344 6981	
(Left) 64-65 02-05-06-09	.....	1	350 0443	
(Left) 61 Thru 63 07	.....	1	345 8783	
(Left) 64-65 07	.....	1	350 0441	
(Left) 60 Thru 62 15-16-19-25-29-85-86-89	.....	1	344 0647	
(Left) 63 Thru 65 15-16-85-86 (Except Marlin): 65 19-89 (Except Marlin)	.....	1	347 2269	#
(Left) 64 19-89 ***(Ref. Pr. List)***	.....	1	350 1369	
(Left) 65 17-87 (Except Marlin)	.....	1	351 5079	#
(Left) 65 59 (Marlin)	.....	1	351 7369	#
(Right) 61 Thru 63 02-05-06-09	.....	1	344 6980	
(Right) 64-65 02-05-06-09	.....	1	350 0442	
(Right) 61 Thru 63 07	.....	1	345 8782	
(Right) 64-65 07	.....	1	350 0440	
(Right) 60 Thru 62 15-16-19-25-29-85-86-89	.....	1	344 0646	
(Right) 63 Thru 65 15-16-85-86 (Except Marlin): 65 19-89 (Except Marlin)	.....	1	347 2268	#
(Right) 64 19-89 ***(Ref. Pr. List)***	.....	1	350 1368	
(Right) 65 17-87 (Except Marlin)	.....	1	351 5078	#
(Right) 65 59 (Marlin)	.....	1	351 7368	#
SLIDE, Rear Deck Door Torque Rod				
65 59 (Marlin)	.....	2	351 7070	#
SILENCER, Rear Deck Door Hinge Torque Rod				
61-62 02-05-06-07: 60 15-19-25-29-85-89	.....	2	344 0657	
COVER, Rear Deck Door Hinge				
61 02-05-06: 60-61 15-19-25-29-85-89	.....	2	344 0654	
ATTACHING PARTS				
Cover To Shelf Panel				
SCREW, Tapping 60 15-19-25-29-85-89	17.666	4	G161554	NA
SPRING, Rear Deck Door Hinge				
60 02-05-06	.....	2	343 2114	
BUMPER, Rear Deck Door Hinge				
61 Thru 63 07	12.001	2	344 7763	
ATTACHING PARTS				
Bumper To Belt Rail				
SCREW, Tapping ..... 61 Thru 63 07	17.660	2	G443946	NA
WASHER, Plain ..... 61 Thru 63 07	17.814	2	G120391	NA
CLIP, Rear Deck Door Hinge Torque Rod				
61-62 07	4.160	2	15 708	
63 07 (End)	4.160	2	15 708	
63 07 (Center)	13.440	2	400 0443	
64-65 02-05-06-07-09	22.050	1	314 7959	
61 Thru 65 15-16-17-19-85-86-87-89 ("S" Type)	.....	1	400 0021	#
65 15-16-17-19-85-86-87-89 (Loop Type)	.....	1	400 0443	#
ATTACHING PARTS				
Clip To Torque Rod				
BOLT, Hexagon 62 07	17.038	2	G180018	NA
NUT, Hexagon 62 07	17.412	2	G271172	NA
Clip To Rear Shelf Reinforcement				
SCREW, Tapping 65 15-16-17-19-85-86-87-89	17.671	1	G274773	#

Copyright 1963 American Motors Corp.

GROUP NO. — DESCRIPTION — YEAR and MODEL	PRIMARY GROUP NO.	PER CAR	PART NO.	CODE
Clip To Support				
BOLT, Hexagon 63 07	17.038	2	G180018	NA
NUT, Hexagon..... 63 07	17.412	2	G271172	NA
Clip To Belt Rail Stud				
NUT, Hexagon..... 63 07	17.412	1	G271172	NA
BRACE, Rear Deck Door Hinge Support				
(Left) 61 07	.....	1	345 8717	
(Left) 62-63 07	.....	1	348 1987	
(Right) 61 07	.....	1	345 8716	
(Right) 62-63 07	.....	1	348 1986	
23.034 SUPPORT, Liftgate				
(Left) 60 04	.....	1	435 7997	
(Left) 61 04-08 (Note 23.034-1 Type 1)	.....	1	344 7189	
(Left) 61 04-08 (Note 23.034-1 Type 2): 62-63 04-08	.....	1	346 0667	
(Right) 60 04	.....	1	435 7998	
(Right) 61 04-08 (Note 23.034-1 Type 1)	.....	1	344 7188	
(Right) 61 04-08 (Note 23.034-1 Type 2): 62-63 04-08	.....	1	346 0666	
ATTACHING PARTS				
Support To Body				
SCREW, Machine..... 60 04	.....	4	435 9840	
Support To Liftgate Bracket				
BOLT, Shoulder 60-61 04-08	.....	2	435 8240	
WASHER, Spring ..... 60 Thru 63 04-08	25.030	2	400 0324	
WASHER, Lock..... 60 Thru 63 04-08	17.824	2	G138538	NA
NUT, Hexagon..... 61 Thru 63 04-08	17.406	2	G120368	
Support To Pillar Bracket				
BOLT, Shoulder ..... 61 Thru 63 04-08	.....	2	435 8240	
WASHER, Spring ..... 61 Thru 63 04-08	25.030	2	400 0324	
WASHER, Lock..... 61 Thru 63 04-08	17.824	2	G138538	NA
BRACKET, Liftgate				
(Left) 60 04...(Incl. Spring)	.....	1	436 3861	
(Left) 61 Thru 63 04-08 (To Liftgate)	.....	1	346 4503	
(Left) 61 Thru 63 04-08 (To Pillar)	.....	1	344 7197	
(Right) 60 04...(Incl. Spring)	.....	1	436 3862	
(Right) 61 Thru 63 04-08 (To Liftgate)	.....	1	346 4502	
(Right) 61 Thru 63 04-08 (To Pillar)	.....	1	344 7196	
ATTACHING PARTS				
Bracket To Liftgate				
SCREW, Machine..... 60 04	23.110	4	435 0587	
SCREW, Machine..... 61 04-08	.....	4	346 4720	
SCREW, Machine..... 62-63 04-08	.....	4	400 0248	
WASHER, Lock 60 04	17.826	4	G454763	NA
PLATE, Tapping ..... 61 Thru 63 04-08	.....	2	344 7209	
Bracket To Pillar				
SCREW, Machine..... 61 04-08 (8 Req.): 62-63 04-08 (4 Req.)	.....	AR	346 4720	

NOTE 23.034-1: Two Types of Liftgate Supports were used on Models 61 04-08. They can be identified by the following Measurements. (Measure from Center of Bolt Holes).
Type 1: Closed Position 8-1/4". Open Position 14-1/2".
Type 2: Closed Position 8". Open Position 16-3/4".

Copyright 1963 American Motors Corp.

GROUP NO. — DESCRIPTION — YEAR and MODEL		PRIMARY GROUP NO.	PER CAR	PART NO.	CODE
SPRING, Liftgate Bracket					
60 04		.....	2	433 8968	
23.035 LATCH, Liftgate					
61 Thru 63 04-08		23.039	2	348 1660	
ATTACHING PARTS					
Latch To Liftgate					
SCREW, Machine.....	61 Thru 63 04-08.....*(Replaces 344 6979)*	23.039	8	400 0502	
STRIKER, Liftgate Latch					
61 04-08		.....	2	346 4605	
62-63 04-08		23.039	2	348 1628	
ATTACHING PARTS					
Striker To Liftgate					
SCREW, Machine.....	61 04-08	.....	4	346 4606	
SCREW, Machine.....	62-63 04-08	17.586	8	G271157	NA
23.036 SUPPORT, Tailgate					
(Left) 60 04		.....	1	435 8003	
(Left) 61 Thru 63 04-08		.....	1	344 6921	
(Left) 64-65 08		.....	1	350 0819	#
(Left) 60 Thru 62 18-28-83-88 (LVT)		.....	1	342 1375	
(Left) 63-64 18-88 (LVT)		.....	1	348 2317	
(Left) 65 18-88 (LVT)		.....	1	351 5175	#
(Right) 60 04		.....	1	435 8004	
(Right) 61 Thru 63 04-08		.....	1	344 6920	
(Right) 64-65 08		.....	1	350 0818	#
(Right) 60 Thru 62 18-28-83-88 (LVT)		.....	1	342 1376	
(Right) 63-64 18-88 (LVT)		.....	1	348 2316	
(Right) 65 18-88 (LVT)		.....	1	351 5174	#
ATTACHING PARTS					
Support To Tailgate					
SCREW, Machine.....	60 04.....*(Replaces 800 0243)*	17.610	6	400 1231	
SCREW, Shoulder	64-65 08	23.034	2	435 8240	#
BOLT, Machine.....	61 Thru 63 04-08	.....	2	400 0215	
BOLT, Machine.....	60 Thru 65 18-28-83-88 (LVT)	.....	2	400 0357	#
WASHER, Plain.....	62-63 04-08-18-88 (LVT)	17.814	4	800 0177	
WASHER, Plain.....	64 08-18-88 (LVT)	17.814	2	400 0482	
WASHER, Lock	61 Thru 63 04-08: 60 Thru 63 18-28-83-88 (LVT)	17.824	2	G138538	NA
WASHER, Spring.....	61 Thru 65 04-08: 60 Thru 65 18-28-83-88 (LVT)	25.030	2	400 0324	#
WASHER, Plain.....	64 18 (LVT): 64 08	17.814	2	400 0480	
Support To Tailgate Opening Pillar					
BOLT, Shoulder	60 04	23.039	2	435 6778	
BOLT, Machine.....	61 04-08: 60 Thru 65 18-28-83-88 (LVT)	.....	2	400 0357	#
BOLT, Machine.....	62-63 04-08	.....	2	400 0215	
SCREW, Shoulder	64-65 08	.....	2	435 8240	#
WASHER, Lock	60 Thru 63 04-08: 60-61 18-28-83-88 (LVT)	17.824	2	G138538	NA
WASHER, Lock	62-63 18-88 (LVT)	17.820	2	G120214	NA
WASHER, Plain.....	60 04 (2 Req.): 62-63 04-08 (4 Req.): 62-63 18-88 (LVT-2 Req.).....*(Replaces 800 0177)*	17.814	AR	400 0482	
WASHER, Plain.....	64 08-18-88 (LVT)	17.814	2	400 0482	
WASHER, Spring.....	60 Thru 65 04-08: 60 Thru 64 18-28-83-88 (LVT)	25.030	2	400 0324	#
NUT, Hexagon.....	62-63 04-08: 60 Thru 63 18-28-83-88 (LVT)	17.406	2	G120368	NA

Copyright 1963 American Motors Corp.

GROUP NO. — DESCRIPTION — YEAR and MODEL	PRIMARY GROUP NO.	PER CAR	PART NO.	CODE
BUMPER, Tailgate Support				
60 04 (On Auxiliary Side Floor Pan)	.....	2	435 7539	
61 Thru 64 04-08 (Lower-On Auxiliary Side Floor Pan)	.....	2	344 7240	
61 Thru 63 04-08 (Upper-On Tailgate)	.....	2	346 4472	
60 Thru 62 18-28-83-88 (Left-On Auxiliary Side Floor Pan-LVT)	.....	1	342 7611	
60 Thru 62 18-28-83-88 (Right-On Auxiliary Side Floor Pan-LVT)	.....	1	342 7612	
64-65 08: 63-64 18-88 (Lower-On Auxiliary Side Floor Pan-LVT)	.....	2	344 7240	
64 08 (Upper-On Tailgate) 63 Thru 65 18-88 (LVT-Upper-On Tailgate)	.....	2	347 2528	
64-65 08 (On Tailgate Inner Panel)	.....	2	352 2267	
65 18-88 (LVT-Lower-On Auxiliary Side Floor Pan)	.....	2	351 5105	
ATTACHING PARTS				
Bumper To Auxiliary Floor Pan				
SCREW, Tapping..... 60 Thru 63 04-08	17.666	4	G161651	NA
SCREW, Tapping..... 60 Thru 62 18-28-83-88 (LVT)	17.660	6	G161860	NA
SCREW, Tapping..... 63 Thru 65 18-88 (LVT): 64-65 08 (On Floor Panel)	17.660	4	G161801	NA
SCREW, Tapping..... 64-65 08 (On Tailgate Inner Panel)	17.660	4	G161790	NA
Bumper To Tailgate (Upper)				
SCREW, Tapping..... 61 Thru 63 04-08: 63 18-88 (LVT)	17.660	2	G161869	NA
23.037 SPRING, Tailgate Counterbalance				
60 Thru 62 18-28-83-88 (LVT)	.....	1	345 1799	
CABLE, Tailgate Counterbalance (Incl. Connector And Ferrules)				
60 Thru 62 18-28-83-88 (LVT)	.....	1	341 6665	
GUIDE, Tailgate Counterbalance Cable				
60 Thru 62 18-28-83-88 (LVT)	.....	1	341 6659	
BRACKET, Tailgate Counterbalance Spring				
60 18-28-83-88 (L3S)	.....	1	341 6658	
ATTACHING PARTS				
Spring Bracket To Extension Panel				
SCREW, Machine..... 60 18-28-83-88 (L3S)	17.598	2	G160515	NA
WASHER, Lock..... 60 18-28-83-88 (L3S)	17.820	2	G103319	NA
NUT, Hexagon..... 60 18-28-83-88 (L3S)	17.410	2	G124818	NA
CLIP, Tailgate Counterbalance Cable Attaching				
60 Thru 62 18-28-83-88 (LVT)	.....	1	341 6666	
ATTACHING PARTS				
Cable Clip To Tailgate				
SCREW, Machine..... 60 Thru 62 18-28-83-88 (LVT)	17.598	1	G188749	NA
GROMMET, Tailgate Counterbalance Spring				
60-61 18-28-83-88 (LVT-2 Req.): 62 18-88 (LVT-1 Req.)	5.164	AR	530 0890	

Copyright 1963 American Motors Corp.

GROUP NO. — DESCRIPTION — YEAR and MODEL	PRIMARY GROUP NO.	PER CAR	PART NO.	CODE
23.039 LATCH, Tailgate				
61 04-08	.....	2	344 7182	
60 18-28-83-88 (L3S-Note 23.039-1)...(Incl. Lock) .....*(Ref. Pr. List)*	.....	1	343 5852	
60 18-28-83-88 (L3S-Note 23.039-2): 61-62 18-28-88 (LVT)	.....	2	344 6244	
(Left) 60 04	.....	1	435 7749	
(Left) 62-63 04-08	.....	1	348 1673	
(Left) 63 Thru 65 18-88 (LVT): 64-65 08.....*(Replaces 348 2307)*	.....	1	348 5859	
(Right) 60 04	.....	1	435 7750	
(Right) 62-63 04-08	.....	1	348 1672	
(Right) 63 Thru 65 18-88 (LVT): 64-65 08.....*(Replaces 348 2306)*	.....	1	348 5858	
ATTACHING PARTS				
Latch To Mounting Bracket				
BOLT, Shoulder 60 04	.....	2	435 6778	
WASHER, Lock 60 04	17.824	2	G138538	NA
WASHER, Plain..... 60 04.....*(Replaces 800 0177)*	17.814	2	400 0482	
WASHER, Spring 60 04	25.030	2	400 0324	
Latch And Lock To Tailgate (Center)				
SCREW, Machine..... 60 18-28-83-88 (L3S)	17.610	4	G451271	NA
WASHER, Plain..... 60 18-28-83-88 (L3S).....*(Replaces 800 0139)*	.....	4	400 0481	
Latch And Lock To Tailgate (Outer)				
SCREW, Machine..... 60 18-28-83-88 (L3S)	17.598	8	G191988	NA
NUT, Hexagon..... 60 18-28-83-88 (L3S)	17.406	8	G120375	NA
Latch To Tailgate				
SCREW, Machine..... 61 04-08.....*(Replaces 344 6979)*	.....	8	400 0502	
SCREW, Machine..... 62-63 04-08	.....	8	400 0242	
SCREW, Machine..... 61-62 18-28-88 (LVT)	17.598	8	G454542	NA
SCREW, Machine..... 63 Thru 65 18-88 (LVT-7/16" Long): 64-65 08 (7/16" Long)	.....	4	400 0501	
SCREW, Machine..... 63 Thru 65 18-88 (LVT-5/8" Long): 64-65 08 (5/8" Long)	.....	2	400 0502	
WASHER, Plain..... 61 18-28-88 (LVT-4 Req.): 62 18-88 (LVT-8 Req.).....*(Replaces 800 0139)*	.....	AR	400 0481	
NUT, Hexagon..... 61-62 18-28-88 (LVT)	17.406	8	G120375	
LOCK, Tailgate				
61 04-08	.....	2	344 7183	
62-63 04-08	.....	1	348 1674	
64-65 08: 60 18-28-83-88 (L3S-Note 23.039-2): 61 Thru 65 18-28-88 (LVT) ...	.....	1	344 6243	
60-61 18-28-88 (WVT)	.....	1	344 3934	
62 18-88 (WVT)	.....	1	346 2590	
63-64 18-88 (WVT)	.....	1	348 2304	
65 18-88 (WVT)	.....	1	353 0558	
ATTACHING PARTS				
Lock To Tailgate				
SCREW, Machine..... 61 Thru 63 04-08	25.035	3	344 6979	
SCREW, Machine..... 60 18-28-88 (W3S)	17.592	4	G186932	NA
SCREW, Machine..... 61-62 18-28-88 (LVT)	17.610	4	G451271	NA#
SCREW, Machine..... 64-65 08: 63 Thru 65 18-88 (LVT)	.....	4	400 0644	#
SCREW, Machine..... 61-62 18-28-88 (WVT-4 Req.): 63 Thru 65 18-88 (WVT-3 Req.)	17.592	AR	G187704	NA
Lock To Tailgate Handle				
SCREW, Machine..... 62-63 04-08	20.450	1	435 8218	

NOTE 23.039-1: Use Prior to Body No. 86292.
NOTE 23.039-2: Use Beginning with Body No. 86292.

Copyright 1963 American Motors Corp.

GROUP NO. — DESCRIPTION — YEAR and MODEL		PRIMARY GROUP NO.	PER CAR	PART NO.	CODE
SPRING, Tailgate Lock Trip Lever Return					
60 Thru 62 18-28-88 (WVT)		23.050	1	343 7674	
SPRING, Tailgate Lock Handle Lever Return					
62 18-88 (WVT)		.....	1	447 9782	
63-64 18-88 (WVT)		.....	1	448 2353	#
65 18-88 (WVT)		.....	1	448 3377	#
ROD, Tailgate Lock To Latch					
61 04-08		.....	2	344 7184	
60 18-28-83-88 (L3S-Note 23.039-2): 61 18-28-88 (LVT)		.....	2	344 6245	
62 18-88 (LVT)		.....	2	347 9185	
64-65 08: 63 Thru 65 18-88 (LVT)		.....	2	348 2295	
(Left) 62-63 04-08		.....	1	348 1671	
(Right) 62-63 04-08		.....	1	348 1670	
ATTACHING PARTS					
Rod To Latch					
CLIP	61 04-08: 60 18-28-83-88 (L3S-Note 23.039-2): 61 18-28-88 (LVT)	4.256	2	313 1561	
CLIP	64-65 08: 62 Thru 65 18-88 (LVT)	23.071	2	400 0439	
RIVET, Tubular	62-63 04-08	17.558	2	G137312	NA
WASHER, Wave	62-63 04-08	23.055	2	400 0308	
Rod To Lock					
RIVET, Tubular	62-63 04-08	17.558	2	G137312	NA
WASHER, Wave	62-63 04-08	23.055	2	400 0308	
STRIKER, Tailgate Latch					
61 Thru 63 04-08		.....	2	344 7225	
64-65 08: 60 Thru 65 18-28-83-88 (LVT)		.....	2	341 7476	
60 Thru 62 18-28-88 (WVT)		23.087	1	341 6511	
63-64 18-88 (WVT)		23.087	1	349 2120	
65 18-88 (WVT)		23.087	1	353 0501	
ATTACHING PARTS					
Striker To Tailgate Opening Pillar					
SCREW, Machine	61 04-08: 60-61 18-28-88 (LVT)	17.592	4	G455166	NA
SCREW, Machine	62-63 04-08	.....	4	400 0252	
SCREW, Machine	60 Thru 62 18-28-88 (WVT)	.....	2	400 0045	
SCREW, Machine	64-65 08: 62 Thru 65 18-88 (LVT)	.....	4	400 0456	
SCREW, Machine	63-64 18-88 (WVT)	23.087	3	400 0416	
SCREW, Machine	65 18-88 (WVT)	23.087	2	400 1573	
PLATE, Tapping	63-64 18-88 (WVT)	.....	1	347 2498	
PLATE, Tapping	65 18-88 (WVT)	23.087	1	354 2833	
GRIP, Tailgate Latch Handle					
60 04		.....	2	436 1805	
STRIKER, Liftgate Cam					
(Left) 62-63 04-08		.....	1	348 9421	
(Right) 62-63 04-08		.....	1	348 9420	
ATTACHING PARTS					
Striker To Liftgate					
SCREW, Machine	62-63 04-08	.....	4	400 0244	

Copyright 1963 American Motors Corp.

GROUP NO. — DESCRIPTION — YEAR and MODEL		PRIMARY GROUP NO.	PER CAR	PART NO.	CODE
HANDLE, Tailgate Latch Release					
64-65 08: 60 Thru 65 18-28-83-88 (LVT)		.....	1	343 5853	
ATTACHING PARTS					
Handle To Latch Rod					
SCREW, Machine.....	60 Thru 63 18-28-83-88 (LVT): 64-65 08-18-88 (LVT)	17.592	1	G271079	NA
HANDLE, Tailgate Lock Release					
60-61 18-28-83-88 (WVT)		23.058	1	437 5746	
62 18-88 (WVT)	*(Replaces 346 1491)*	23.058	1	349 7042	
63 18-88 (WVT)		.....	1	348 2311	
64 18-88 (WVT)		.....	1	350 9688	
65 18-88 (WVT)		.....	1	353 0654	
ATTACHING PARTS					
Handle To Lock					
PIN	60-61 18-28-83-88 (WVT)	23.063	1	436 7527	
CLIP	62 18-88 (WVT)	29.105	1	400 0109	
SCREW, Tapping.....	63 Thru 65 18-88 (WVT)	17.654	2	G167602	NA
SEAL, Tailgate Lock Release Handle (Rubber)					
64-65 18-88 (WVT)		.....	1	400 1405	
HOUSING, Tailgate Lock Striker					
63-64 18-88 (WVT)		23.087	1	349 2125	
PLATE, Tailgate Lock Striker Retainer					
63-64 18-88 (WVT)		23.087	1	349 2123	
ESCUTCHEON, Tailgate					
60-61 18-28-88 (WVT)		23.102	1	344 5745	
BASE, Tailgate Escutcheon					
60-61 18-28-88 (WVT)		23.059	1	435 6561	
BRACKET, Tailgate Latch Mounting					
(Left) 60 04		.....	1	435 7977	
(Right) 60 04		.....	1	435 7978	
ATTACHING PARTS					
Bracket To Body					
SCREW, Machine.....	60 04	17.616	6	G271126	NA
LINK, Tailgate Latch To Rod					
(Left) 62-63 04-08		.....	1	348 1745	
(Right) 62-63 04-08		.....	1	348 1744	
ATTACHING PARTS					
Link To Latch					
RIVET, Tubular	62-63 04-08	17.558	2	G137312	NA
WASHER, Wave.....	62-63 04-08	23.055	2	400 0308	

Copyright 1963 American Motors Corp.

GROUP NO. — DESCRIPTION — YEAR and MODEL	PRIMARY GROUP NO.	PER CAR	PART NO.	CODE
Link To Rod				
RIVET, Tubular 62-63 04-08	17.558	2	G137312	NA
WASHER, Wave 62-63 04-08	23.055	2	400 0308	
SHIM, Tailgate Latch Striker				
62-63 04-08	.....	AR	348 1699	
63 Thru 65 18-88 (LVT-.0359 Thick): 64-65 08 (.0359 Thick)	.....	AR	348 8024	
63 Thru 65 18-88 (LVT-.0598 Thick): 64-65 08 (.0598 Thick)	.....	AR	348 8023	
63-64 18-88 (WVT-.0359 Thick)	23.087	AR	349 2115	
63-64 18-88 (WVT-.0598 Thick	23.087	AR	349 2114	
65 18-88 (WVT-.036" Thick)	23.087	AR	354 2634	
65 18-88 (WVT-061" Thick)	23.087	AR	354 2633	
SHIM, Tailgate Cam Striker				
62-63 04-08	.....	AR	348 9500	
SPACER, Tailgate Lock Release Handle				
62 Thru 64 18-88 (WVT)	.....	2	400 0389	
SPRING, Tailgate Latch Link Retainer				
64-65 08: 63 Thru 65 18-88 (LVT)	29.131	2	447 8806	
23.040 REGULATOR, Tailgate Window				
64-65 08 (LER)	.....	1	352 0882	
60 18-28-83-88 (L3S-Note 23.040-1 Type 1)	.....	1	341 1908	
60 18-28-83-88 (L3S-Note 23.040-1 Type 2): 61-62 18-28-88 (LVT)	.....	1	344 6207	
60 18-28-88 (W3S-Note 23.040-1 Type 1)	.....	1	344 3868	
60 18-28-88 (W3S-Note 23.040-1 Type 2): 61 18-28-88 (WVT)	.....	1	344 6208	
62 18-88 (WVT)	.....	1	346 2504	
63-64 18-88 (LVT-LER)	.....	1	348 2269	
65 18-88 (LVT-LER)	.....	1	351 7194	
63 18-88 (WVT-LER)	.....	1	348 2302	
64-65 18-88 (WVT-LER)	.....	1	352 0898	
ATTACHING PARTS Regulator To Tailgate				
SCREW, Machine..... 60 18-28-83-88	23.098	4	345 1607	
SCREW, Machine..... 61-62 18-28-88 (LVT): 63 18-88 (LER): 64-65 08-18-88 (LER)	23.098	4	400 0137	
SCREW, Machine..... 61-62 18-28-88 (WVT)	23.056	4	400 0075	
NUT, Hexagon..... 60 Thru 62 18-28-88 (WVT)	17.412	4	G272474	NA
WASHER, Tailgate Window Regulator Shaft Sealing				
63 Thru 65 18-88 (WVT)	.....	1	400 0627	
STOP, Tailgate Window Regulator Arm				
63 Thru 65 18-88 (LVT-LER): 64-65 08	.....	1	400 0198	
ATTACHING PARTS Stop To Regulator				
NUT, Hexagon..... 63 Thru 65 18-88 (LVT): 64-65 08	17.412	1	G271172	NA

NOTE 23.040-1: Two Types of Regulators were used on the 60 10-20-80 Series. They can be identified as follows:
Type 1: Support Brackets on Bottom Channel are 17-7/8" apart.
Type 2: Support Brackets on Bottom Channel are 17-3/8" apart.

Copyright 1963 American Motors Corp.

GROUP NO. — DESCRIPTION — YEAR and MODEL	PRIMARY GROUP NO.	PER CAR	PART NO.	CODE
BUMPER, Tailgate Window Regulator				
63 Thru 65 18-88: 64-65 08	23.019	1	434 8105	
23.045 GUIDE, Tailgate				
60 Thru 62 18-28-88 (WVT)	.....	1	344 3944	
63 Thru 65 18-88 (WVT)	.....	1	348 8949	
ATTACHING PARTS Guide To Tailgate				
SCREW, Tapping..... 60 Thru 62 18-28-88 (WVT)	17.660	2	G443946	NA
SCREW, Tapping..... 63 Thru 65 18-88 (WVT)	17.660	2	G161909	NA
NUT, Spring..... 60 Thru 62 18-28-88 (WVT)	17.422	2	G445283	NA
PLATE, Tailgate Guide				
60 Thru 62 18-28-88 (WVT)	.....	1	344 3848	
23.050 LOCK, Front Door				
(Left) 60 01	.....	1	436 7609	
(Left) 61 Thru 63 01	.....	1	344 7055	
(Left) 64-65 01 (Use With Flat Type Link): 63-64 10-80	.....	1	348 2337	#
(Left) 65 01 (Use With Rod Type Link)	.....	1	351 6187	#
(Left) 60 10-20-80: 61 10-20-80 (LVL)	.....	1	341 1032	
(Left) 61 10-20-80 (WVL)	.....	1	346 0531	
(Left) 62 10-80 (LVL)	.....	1	346 1415	
(Left) 62 10-80 (WVL)	.....	1	346 1307	
(Left) 65 10-80 (Use With Flat Type Link)	.....	1	353 0461	#
(Left) 65 10-80 (Use With Rod Type Link)	.....	1	351 6185	#
(Right) 60 01	.....	1	436 7610	
(Right) 61 Thru 63 01	.....	1	344 7054	
(Right) 64-65 01 (Use With Flat Type Link): 63-64 10-80	.....	1	348 2336	#
(Right) 65 01 (Use With Rod Type Link)	.....	1	351 6186	#
(Right) 60 10-20-80: 61 10-20-80 (LVL)	.....	1	341 1033	
(Right) 61 10-20-80 (WVL)	.....	1	346 0530	
(Right) 62 10-80 (LVL)	.....	1	346 1414	
(Right) 62 10-80 (WVL)	.....	1	346 1306	
(Right) 65 10-80 (Use With Flat Type Link)	.....	1	353 0460	#
(Right) 65 10-80 (Use With Rod Type Link)	.....	1	351 6184	#
ATTACHING PARTS Lock To Door				
SCREW, Machine..... 60-61 01-10-20-80	17.592	8	G186932	NA
SCREW, Machine..... 62 Thru 65 01-10-80	17.592	8	G187704	NA
SPRING, Front Door Lock Trip Lever Return				
60 Thru 63 01: 60-61 10-20-80	.....	2	343 7674	
SPRING, Front Door Lock Contact Lever Return				
65 10-80	.....	2	448 2833	
23.051 LOCK, Rear Door				
(Left) 60 05	.....	1	344 3429	
(Left) 61 05-08	.....	1	344 7073	
(Left) 62-63 05-08	.....	1	346 1269	
(Left) 64-65 05-08: 63-64 15-18-85-88	.....	1	348 2339	
(Left) 60 10-20-80: 61 10-20-80 (LVL)	.....	1	341 0631	
(Left) 61 10-20-80 (WVL)	.....	1	346 0533	
(Left) 62 15-18-85-88 (LVL)	.....	1	346 1417	
(Left) 62 15-18-85-88 (WVL)	.....	1	346 1309	
(Left) 65 15-18-85-88	.....	1	353 0463	

Copyright 1963 American Motors Corp.

GROUP NO. — DESCRIPTION — YEAR and MODEL	PRIMARY GROUP NO.	PER CAR	PART NO.	CODE
(Right) 60 05		1	344 3428	
(Right) 61 05-08		1	344 7072	
(Right) 62-63 05-08		1	346 1268	
(Right) 64-65 05-08: 63-64 15-18-85-88		1	348 2338	
(Right) 60 10-20-80: 61 10-20-80 (LVL)		1	341 0632	
(Right) 61 10-20-80 (WVL)		1	346 0532	
(Right) 62 15-18-85-88 (LVL)		1	346 1416	
(Right) 62 15-18-85-88 (WVL)		1	346 1308	
(Right) 65 15-18-85-88		1	353 0462	
ATTACHING PARTS Lock To Door				
SCREW, Machine..... 60-61 05-08-10-20-80	17.592	8	G186932	NA
SCREW, Machine..... 62 Thru 65 05-08-15-18-85-88	17.592	6	G187704	NA
SPRING, Rear Door Lock Trip Lever Return				
60 Thru 63 05-08: 60-61 10-20-80	23.050	2	343 7674	
SPRING, Rear Door Lock Contact Lever Return				
65 15-18-85-88	23.050	2	448 2833	
23.054 BUTTON, Rear Door Lock Push				
60-61 10-20-80		2	437 8848	
62 Thru 65 05-08: 62-63 15-18-85-88		2	346 2541	
64-65 15-18-85-88		2	352 0962	
GROMMET, Rear Door Lock Push Button				
64-65 05-08-15-18-85-88		2	400 0682	
23.055 LINK, Remote Control To Front Door Lock				
60 Thru 63 02-04-06-07-09		2	447 5674	
60 Thru 63 05-08		2	437 4810	
65 05-08-15-18-85-88 (Rod Type)		2	351 6188	
(Left) 60-61 10-20-80: 62 15-18-85-88		1	344 0337	
(Left) 62 16-86		1	346 1485	
(Left) 64-65 05-08 (Flat Type): 63 Thru 65 15-18-85-88 (Flat Type) (Incl. Control) ***(Replaces 348 2369)***		1	352 0707	
(Left) 63 16-86		1	448 0669	
(Left) 64 16-19-89: 64-65 06-07-09 (Flat Type)		1	352 8743	
(Left) 65 06-07-09 (Rod Type) ***(Use 351 6207)***		1	351 6289	#
(Left) 65 16-17-19-86-87-89 (Flat Type)		1	353 0661	
(Left) 65 16-17-19-86-87-89 (Rod Type)		1	351 6207	
(Right) 60-61 10-20-80: 62 15-18-85-88		1	344 0336	
(Right) 62 16-86		1	346 1484	
(Right) 64-65 05-08 (Flat Type): 63 Thru 65 15-18-85-88 (Flat Type) (Incl. Control) ***(Replaces 348 2368)***		1	352 0706	
(Right) 63 16-86		1	448 0668	
(Right) 64 16-19-89: 64-65 06-07-09 (Flat Type)		1	352 8742	
(Right) 65 06-07-09 (Rod Type) ***(Use 351 6206)***		1	351 6288	#
(Right) 65 16-17-19-86-87-89 (Flat Type)		1	353 0660	
(Right) 65 16-17-19-86-87-89 (Rod Type)		1	351 6206	
ATTACHING PARTS Link To Remote Control				
Rivet, Tubular..... 60 Thru 65 01-10-20-80		2	400 0307	
WASHER, Spring..... 60 Thru 65 01-10-20-80		2	400 0308	
ANTI-RATTLE, Front Door Remote Control Link (Rubber)				
63 Thru 65 10-80: 64-65 01		2	350 5668	

Copyright 1963 American Motors Corp.

GROUP NO. — DESCRIPTION — YEAR and MODEL	PRIMARY GROUP NO.	PER CAR	PART NO.	CODE
RETAINER, Front Door Remote Control Link				
65 01-10-80	.....	2	351 5080	
ATTACHING PARTS				
Retainer To Inner Panel				
SPACER 65 01	.....	4	400 1711	
SPACER 65 10-80	.....	4	400 1703	
CLIP, ("J" Type) 65 01-10-80	.....	4	400 1610	
CLIP, ("U" Type) 65 01-10-80	.....	4	400 1932	
SCREW, Machine..... 65 01-10-80 (3/4" Long)	.....	4	400 1705	
SCREW, Machine..... 65 01-10-80 (1/2" Long)(Use With "J" Type Clip)	17.626	4	G425625	NA#
SCREW, Tapping..... 65 01-10-80 (1/2" Long)(Use With "U" Type Clip)	17.671	4	G274773	NA#
LINK, Remote Control To Rear Door Lock				
60 05 (Bellcrank To Lock)	.....	2	344 3679	
60 05 (Control To Bellcrank)	.....	2	344 3678	
61 Thru 63 05-08 (Bellcrank To Lock)	.....	2	344 6588	
60-61 10-20-80	.....	2	344 0566	
63-64 15-18-85-88: 64-65 05-08 ***(Replaces 348 2351)***	.....	2	348 2350	
65 15-18-85-88	.....	2	353 0664	
(Left) 61 Thru 63 05-08 (Control To Bellcrank)	.....	1	348 1683	
(Left) 62 15-18-85-88	.....	1	346 1639	
(Right) 61 Thru 63 05-08 (Control To Bellcrank)	.....	1	348 1682	
(Right) 62 15-18-85-88	.....	1	346 1638	
ATTACHING PARTS				
Link To Remote Control				
RIVET, Tubular ..... 60 Thru 65 01-10-20-80	.....	2	400 0307	
WASHER, Spring ..... 60 Thru 65 01-10-20-80	.....	2	400 0308	
Link To Bellcrank				
RIVET, Tubular ..... 62 Thru 65 05-08	.....	4	400 0307	
WASHER, Spring ..... 62 Thru 65 05-08	.....	4	400 0308	
RETAINER, Rear Door Link				
60-61 10-20-80	.....	2	341 5481	
SPRING, Front Door Link Anti-Rattle				
61 Thru 63 02-04-06-07-09	.....	2	348 0530	
BELLCRANK, Rear Door Locking				
(Left) 62-63 05-08	.....	1	343 2324	
(Right) 62-63 05-08	.....	1	343 2325	
SUPPORT, Rear Door Locking Bellcrank				
60 Thru 63 05-08	.....	2	344 3671	
ATTACHING PARTS				
Support To Door				
SCREW, Machine..... 62-63 05-08	23.098	4	400 0230	
RETAINER, Rear Door Locking Bellcrank				
60 Thru 63 05-08	.....	2	344 3672	
ATTACHING PARTS				
Retainer To Support				
SCREW, Tapping..... 60 Thru 63 05-08	17.660	4	G9411535	NA
HOSE, Front Door Link Anti-Rattle				
63 10-80 ***(Discontinued)***	.....	2	350 4675	

Copyright 1963 American Motors Corp.

GROUP NO. — DESCRIPTION — YEAR and MODEL	PRIMARY GROUP NO.	PER CAR	PART NO.	CODE
23.056 CONTROL, Front Door Lock Remote				
60-61 05-08	.....	2	447 8612	
62 05-08	.....	2	447 9274	
63 05-08	.....	2	350 5545	
62-63 10-80	.....	2	346 1684	
64 01-10-80	.....	2	352 0714	
65 01-10-80	.....	2	354 3002	
(Left) 60-61 02-04-06-07	.....	1	435 2637	
(Left) 62-63 02-04-06-07-09	.....	1	447 9273	
(Left) 60-61 10-20-80	.....	1	437 0891	
(Right) 60-61 02-04-06-07	.....	1	435 2638	
(Right) 62-63 02-04-06-07-09	.....	1	447 9272	
(Right) 60-61 10-20-80	.....	1	437 0892	
ATTACHING PARTS				
Control To Door				
SCREW, Machine..... 60-61 01: 60 10-20-80	23.300	6	438 3373	
SCREW, Machine..... 62-63 01	23.098	7	400 0230	
SCREW, Machine..... 61 Thru 63 10-20-80	.....	6	400 0075	
SCREW, Machine..... 64-65 01-10-80	23.098	6	400 0572	
CONTROL, Rear Door Lock Remote				
60-61 05-08	.....	2	447 8612	
62 05-08	.....	2	447 9274	
63 05-08	.....	2	346 1684	
62 10-80	.....	2	346 1684	
(Left) 60-61 10-20-80	.....	1	437 0891	
(Left) 63 10-80	.....	1	351 0513	
(Left) 64-65 05-08-15-18-85-88	.....	1	352 0717	
(Right) 60-61 10-20-80	.....	1	437 0892	
(Right) 63 10-80	.....	1	351 0512	
(Right) 64-65 05-08-15-18-85-88	.....	1	352 0716	
ATTACHING PARTS				
Control To Door				
SCREW, Machine..... 64-65 05-08-15-18-85-88	23.098	6	400 0572	
SCREW, Machine..... 60-61 01: 60 10-20-80	23.300	6	438 3373	
SCREW, Machine..... 62-63 01	23.098	7	400 0230	
SCREW, Machine..... 61 Thru 63 10-20-80	.....	6	400 0075	
WASHER, Rubber 64-65 05-08-15-18-85-88	23.060	2	400 0393	
23.057 BELLCRANK, Rear Door Push Button Locking				
(Left) 60-61 05-08	23.055	1	343 2325	
(Left) 62-63 05-08	.....	1	447 9269	
(Left) 64-65 05-08: 63 Thru 65 15-18-85-88	.....	1	348 2359	
(Left) 60-61 10-20-80: 62 15-18-85-88	.....	1	436 7627	
(Right) 60-61 05-08	23.055	1	343 2324	
(Right) 62-63 05-08	.....	1	447 9268	
(Right) 64-65 05-08: 63 Thru 65 15-18-85-88	.....	1	348 2358	
(Right) 60-61 10-20-80: 62 15-18-85-88	.....	1	436 7628	
ATTACHING PARTS				
Bellcrank To Door				
SCREW, Machine..... 60-61 10-20-80: 62 Thru 65 15-18-85-88: 64-65 05-08	23.098	2	400 0572	
Bellcrank To Bracket				
SCREW, Machine..... 62-63 05-08	17.626	2	G440405	NA

Copyright 1963 American Motors Corp.

GROUP NO. — DESCRIPTION — YEAR and MODEL	PRIMARY GROUP NO.	PER CAR	PART NO.	CODE
LINK, Rear Door Push Button Locking Bellcrank To Lock				
62 15-18-85-88	.....	2	346 6491	
(Left) 62-63 05-08	.....	1	346 1263	
(Left) 64-65 05-08: 63-64 15-18-85-88	.....	1	348 2347	
(Left) 60-61 10-20-80	.....	1	346 6491	
(Left) 65 15-18-85-88	.....	1	353 0455	
(Right) 62-63 05-08	.....	1	346 1262	
(Right) 64-65 05-08: 63-64 15-18-85-88	.....	1	348 2346	
(Right) 60-61 10-20-80	.....	1	341 0258	
(Right) 65 15-18-85-88	.....	1	353 0454	
GROMMET, Rear Door Push Button Locking Link Anti-Rattle				
63 15-18-85-88 *(Replaces 316 8853)*	3.166	2	400 0649	
CLIP, Rear Door Push Button Locking Link Anti-Rattle				
63 Thru 65 15-18-85-88: 64-65 05-08	.....	2	400 0657	
ROD, Rear Door Push Button Locking Control				
64 05-08: 63-64 15-18-85-88 *(Replaces 348 2349)*	.....	2	348 2348	#
60-61 10-20-80: 62 15-18-85-88	.....	2	436 7712	
65 05-08-15-18-85-88	.....	2	351 5799	#
(Left) 62-63 05-08	.....	1	346 1265	
(Right) 62-63 05-08	.....	1	346 1264	
BRACKET, Rear Door Push Button Locking Control				
62-63 05-08	.....	2	447 9270	
ATTACHING PARTS Bracket To Door				
SCREW, Machine..... 62-63 05-08	23.098	2	400 0230	
23.058 HANDLE, Remote Control				
64-65 01	.....	4	350 9715	
62-63 01-10-80 *(Replaces 346 1491)*	.....	4	349 7042	
(Front) 60-61 01-10-20-80	.....	2	437 5746	
(Rear) 60-61 05-08	.....	2	343 2190	
(Rear) 60-61 10-20-80	.....	2	437 5746	
(Left) 64-65 10-80	.....	2	350 9455	
(Right) 64-65 10-80	.....	2	350 9454	
ATTACHING PARTS Handle To Control				
SCREW, Socket..... 64-65 01-10-80	29.105	4	400 0826	
SPRING, Remote Control Handle Tension				
62-63 01-10-80	.....	4	346 2574	
WASHER, Remote Control Handle To Control				
62-63 01-10-80	23.060	4	346 2560	
64-65 01-10-80 (Nylon)	.....	4	350 9687	
64-65 10-80 (Rubber)	.....	4	400 0687	

Copyright 1963 American Motors Corp.

GROUP NO. — DESCRIPTION — YEAR and MODEL	PRIMARY GROUP NO.	PER CAR	PART NO.	CODE
23.059 ESCUTCHEON, Remote Control Handle				
60 01 (Black)	.....	4	435 6563	#
61 01-10-20-80 (Blue)	.....	4	345 5511	#
60 01-10-20-80 (Gray)	23.102	4	344 5745	#
61 01-10-20-80 (Gray)	.....	4	345 5509	#
61 01-10-20-80 (Green)	.....	4	345 5513	#
61 01-10-20-80 (Silver)	.....	4	347 0876	#
61 01-10-20-80 (Tan)	.....	4	345 5515	#
BASE, Remote Control Handle Escutcheon				
60-61 01-10-20-80	.....	4	435 6561	
23.060 WASHER, Remote Control Handle Escutcheon				
61 10-20-80	.....	4	400 0393	
23.063 PIN, Remote Control Handle				
60-61 01-10-20-80	.....	4	436 7527	
CLIP, Remote Control Handle				
62-63 01-10-80	29.105	4	400 0109	
23.064 POWER UNIT, Front Door Vacuum Door Lock				
(Left) 61 10-20-80	.....	1	346 0535	
(Left) 62 10-80	.....	1	346 1031	
(Right) 61 10-20-80	.....	1	346 0534	
(Right) 62 10-80	.....	1	346 1030	
ATTACHING PARTS				
Unit To Front Door Lock				
CLIP (Left) ..... 61 10-20-80 ..... *(Replaces 346 5951)*	.....	1	400 0303	
CLIP (Left) 62 10-80	.....	1	400 0303	
CLIP (Right) 61-62 10-20-80	.....	1	400 0302	
Unit To Front Door				
SCREW, Machine..... 61 10-20-80	17.598	8	800 0077	NA
SCREW, Machine..... 62 10-80	17.598	8	G454542	NA
POWER UNIT, Rear Door Vacuum Door Lock				
(Left) 61 15-18-25-28-85-88	.....	1	346 0537	
(Left) 62 15-18-85-88	.....	1	346 1049	
(Right) 61 15-18-25-28-85-88	.....	1	346 0536	
(Right) 62 15-18-85-88	.....	1	346 1048	
ATTACHING PARTS				
Unit To Rear Door Lock				
CLIP (Left) ..... 61-62 10-20-80 ..... *(Replaces 346 5951)*	.....	1	400 0303	#
CLIP (Right) 61-62 10-20-80	.....	1	400 0302	
Unit To Rear Door				
SCREW, Machine..... 61 10-20-80	17.598	8	800 0077	NA
SCREW, Machine..... 62 10-80	17.598	8	G454542	NA

Copyright 1963 American Motors Corp.

GROUP NO. — DESCRIPTION — YEAR and MODEL	PRIMARY GROUP NO.	PER CAR	PART NO.	CODE
23.065 VALVE, Vacuum Door Lock Selector				
61-62 10-20-80	.....	1	346 0546	
ATTACHING PARTS Valve To Bracket				
NUT, Round..... 61-62 10-20-80	.....	1	400 0309	
KNOB, Vacuum Door Lock Selector Valve				
61-62 10-20-80	.....	1	346 0543	
BRACKET, Vacuum Door Lock Selector Valve Mounting				
61 10-20-80	.....	1	346 6030	
62 10-80	.....	1	346 0544	
ATTACHING PARTS Bracket To Instrument Panel				
SCREW, Tapping..... 61-62 10-20-80	17.671	2	G274773	NA
23.066 VALVE, Vacuum Door Lock Seat Shut Off				
61-62 10-20-80	.....	1	346 0539	
PLATE, Vacuum Door Lock Seat Shut Off Valve Actuating				
61-62 10-20-80	.....	1	346 0540	
23.067 HARNESS, Vacuum Door Lock Tubing				
61 10-20-80: 62 15-18-85-88	.....	1	346 0541	
62 16-86	.....	1	346 1349	
ATTACHING PARTS Harness To Instrument Panel				
CLIP..... 61-62 10-20-80	3.165	1	400 0305	
TEE, Vacuum Harness At Manifold				
61-62 10	13.020	1	343 8786	
TEE, Vacuum Door Lock Harness				
61-62 10-20-80 (WVL)	.....	6	448 0818	
CONNECTOR, Vacuum Harness At Manifold				
61-62 20-80	.....	1	316 2232	
ATTACHING PARTS Connector To Manifold				
ELBOW..... 62 80 (WAT)	.....	1	316 5649	
TUBE, Front Door Vacuum Lock Tubing Harness				
61-62 10-80	.....	2	342 8610	
TUBE, Rear Door Vacuum Lock Tubing Harness				
61-62 15-18-25-28-85-88	13.115	2	320 2248	

Copyright 1963 American Motors Corp.

GROUP NO. — DESCRIPTION — YEAR and MODEL	PRIMARY GROUP NO.	PER CAR	PART NO.	CODE
GROMMET, Vacuum Door Lock Tubing Harness				
61-62 10-20-80 (In Front Pillar)	23.320	2	400 0094	
61-62 10-20-80 (In Center Pillar)	23.320	2	437 7679	
FERRULE, Front Door Vacuum Lock Tubing Harness				
61-62 10-20-80	23.320	2	344 1589	
FERRULE, Rear Door Vacuum Lock Tubing Harness				
61-62 15-18-25-28-85-88	23.320	2	437 7678	
SLEEVE, Rear Door Vacuum Lock Tubing Harness				
61-62 15-18-25-28-85-88	23.320	2	437 7677	
CLAMP, Vacuum Door Lock Tubing Harness Hose				
61-62 10-20-80	17.108	2	320 3076	
23.068 VALVE, Front Door Vacuum Lock Deactivator				
61-62 10-20-80	.....	2	346 0574	
ATTACHING PARTS Valve To Front Door Body Pillar				
NUT, Hexagon 61-62 10-20-80	.....	2	400 0301	
23.070 LOCK, Liftgate				
60 04	.....	1	435 6777	
ATTACHING PARTS Lock To Liftgate				
SCREW, Machine..... 60 04	17.586	3	G187440	NA
SCREW, Machine..... 60 04	17.616	2	G187987	NA
LOCK, Rear Deck				
60 02-05-06	.....	1	438 7995	
61 Thru 65 02-05-06-07-09: 60-61 15-19-25-29-85-89	.....	1	344 0790	#
62 15-16-85-86	.....	1	346 1325	
63-64 15-16-19-85-86-89	.....	1	347 2312	
65 15-16-17-19-85-86-87-89	.....	1	351 5421	#
ATTACHING PARTS Lock To Rear Deck				
SCREW, Machine..... 60 02-05-06	17.626	2	G425640	NA
SCREW, Machine..... 61 Thru 63 02-05-06-07-09: 60 Thru 62 15-16-19-25-29-85-86-89.....*(Replaces 800 0110)*	17.598	3	400 1008	
SCREW, Machine..... 63 Thru 65 15-16-17-19-85-86-87-89	22.056	3	400 0058	#
SCREW, Machine..... 64-65 05-06-07-09	17.626	3	G423336	NA#
LINK, Rear Deck Lock Cylinder				
62 15-16-85-86 (Note 23.081-1 Type 1)	.....	1	346 2750	
62 15-16-85-86 (Note 23.081-1 Type 2)	.....	1	348 4684	

Copyright 1963 American Motors Corp.

GROUP NO. — DESCRIPTION — YEAR and MODEL	PRIMARY GROUP NO.	PER CAR	PART NO.	CODE
ATTACHING PARTS				
Link To Lock				
CLIP — 62 15-16-85-86	.....	1	400 0439	
Link To Lock Cylinder				
NUT, Speed — 62 15-16-85-86 (Note 23.081-1 Type 2)	.....	1	400 0494	
SPRING, Rear Deck Lock Link Retainer				
62 15-16-85-86 (Note 23.081-1 Type 2)	29.131	1	447 8806	
23.073 STRIKER, Liftgate Lock				
60 04	.....	2	343 1984	
ATTACHING PARTS				
Striker To Liftgate				
SCREW — 60 04	.....	4	343 6279	
SHIM, Liftgate Lock Striker				
60 04	.....	AR	343 1983	
STRIKER, Rear Deck Lock				
60 02-05-06	.....	1	436 7632	
61 Thru 63 02-05-06-07-09: 60 Thru 62 15-16-19-25-29-85-86-89	.....	1	343 5825	
63 15-16-85-86: 64-65 05-06-07-09-15-16-17-19-85-86-87-89	.....	1	349 2086	#
ATTACHING PARTS				
Striker To Lower Panel Brace				
SCREW, Machine — 60 02-05-06	15.245	2	432 9360	
SCREW, Machine — 61 Thru 63 02-05-06-07-09: 60 Thru 62 15-16-19-25-29-85-86-89 ***(Replaces 344 5895)***	23.020	2	400 0016	
SCREW, Machine — 63 15-16-85-86: 64-65 05-06-07-09-15-16-17-19-85-86-87-89	23.020	2	400 0608	#
WASHER, Plain — 64 02-05-06-07-09-15-16-19-85-89 ***(Replaces 400 0484)***	17.814	2	400 1107	
23.074 HANDLE, Front Door Outside (Incl. Trigger, Pin And Spring)				
(Left) 60 01-10-20-80	.....	1	341 0505	
(Left) 61 Thru 63 02-04-06-07-09	.....	1	346 4815	
(Left) 61-62 05-08	.....	1	346 0683	
(Left) 63 05-08	.....	1	346 0685	
(Left) 61 10-20-80	.....	1	344 7693	
(Left) 62 10-80	.....	1	346 2571	
(Right) 60 01-10-20-80	.....	1	341 0506	
(Right) 61 Thru 63 02-04-06-07-09	.....	1	346 4814	
(Right) 61-62 05-08	.....	1	346 0682	
(Right) 63 05-08	.....	1	346 0684	
(Right) 61 10-20-80	.....	1	344 7692	
(Right) 62 10-80	.....	1	346 2570	
ATTACHING PARTS				
Handle To Front Door				
SCREW, Machine — 60 Thru 63 01	17.616	4	G179372	NA
SCREW, Machine — 60 Thru 62 10-20-80	.....	4	400 0051	

NOTE 23.074-1: Use with .126" Dia. Pin.
NOTE 23.074-2: Use with .156" Dia. Pin.

Copyright 1963 American Motors Corp.

GROUP NO. — DESCRIPTION — YEAR and MODEL	PRIMARY GROUP NO.	PER CAR	PART NO.	CODE
HANDLE, Rear Door Outside (Incl. Trigger, Pin And Spring)				
(Left) 60 05: 60-61 10-20-80	.....	1	341 0505	
(Left) 61 Thru 63 05-08	.....	1	346 0685	
(Left) 62 15-18-85-88	.....	1	346 2571	
(Right) 60 05: 60-61 10-20-80	.....	1	341 0506	
(Right) 61 Thru 63 05-08	.....	1	346 0684	
(Right) 62 15-18-85-88	.....	1	346 2570	
ATTACHING PARTS Handle To Rear Door				
SCREW, Machine..... 60 Thru 63 05-08	17.616	4	G179372	NA
SCREW, Machine..... 60 Thru 62 10-20-80	.....	4	400 0051	
HANDLE, Door Outside (Incl. Push Button, Spring, Rod And Retainer)				
64-65 01: 63-64 10-80	.....	4	348 2400	#
65 10-80	.....	4	351 6810	#
ATTACHING PARTS Handle To Door				
SCREW, Machine..... 64-65 01: 63-64 10-80	.....	8	400 0051	#
SCREW, Machine..... 65 10-80	.....	8	G191984	NA#
WASHER, Plain..... 64-65 01: 63-64 10-80	.....	8	400 0481	#
TRIGGER, Front Door Outside Handle				
(Left) 60 01 (Note 23.074-1)	.....	1	341 0507	
(Left) 60 01 (Note 23.074-2)	.....	1	345 0021	
(Left) 61 Thru 63 02-04-06-07-09	.....	1	346 4775	
(Left) 61 05-08 ..... *(Ref. Pr. List)*	.....	1	344 6837	
(Left) 62 05-08	.....	1	346 0679	
(Left) 63 05-08	.....	1	346 0681	
(Left) 60-61 10-20-80 (Note 23.074-1)	.....	1	341 0507	
(Left) 60-61 10-20-80 (Note 23.074-2)	.....	1	345 0021	
(Left) 62 10-80	.....	1	346 2573	
(Right) 60 01 (Note 23.074-1)	.....	1	341 0508	
(Right) 60 01 (Note 23.074-2)	.....	1	345 0020	
(Right) 61 Thru 63 02-04-06-07-09	.....	1	346 4774	
(Right) 61 05-08	.....	1	344 6836	
(Right) 62 05-08	.....	1	346 0678	
(Right) 63 05-08	.....	1	346 0682	
(Right) 60-61 10-20-80 (Note 23.074-1)	.....	1	341 0508	
(Right) 60-61 10-20-80 (Note 23.074-2)	.....	1	345 0020	
(Right) 62 10-80	.....	1	346 2572	
TRIGGER, Rear Door Outside Handle				
(Left) 60 05 (Note 23.074-1)	.....	1	341 0507	
(Left) 60 05 (Note 23.074-2)	.....	1	345 0021	
(Left) 61 05-08	.....	1	344 6837	
(Left) 62-63 05-08	.....	1	346 0681	
(Left) 60-61 10-20-80 (Note 23.074-1)	.....	1	341 0507	
(Left) 60-61 10-20-80 (Note 23.074-2)	.....	1	345 0021	
(Left) 62 15-18-85-88	.....	1	346 2573	
(Right) 60 05 (Note 23.074-1)	.....	1	341 0508	
(Right) 60 05 (Note 23.074-2)	.....	1	345 0020	
(Right) 61 05-08	.....	1	344 6836	
(Right) 62 05-08	.....	1	346 0680	
(Right) 63 05-08	.....	1	346 0682	
(Right) 60-61 10-20-80 (Note 23.074-1)	.....	1	341 0508	
(Right) 60-61 10-20-80 (Note 23.074-2)	.....	1	345 0020	
(Right) 62 15-18-85-88	.....	1	346 2572	

Copyright 1963 American Motors Corp.

GROUP NO. — DESCRIPTION — YEAR and MODEL	PRIMARY GROUP NO.	PER CAR	PART NO.	CODE
BUTTON, Door Outside Handle				
64-65 01: 63-64 10-80	.....	4	448 1429	#
65 10-80	.....	4	320 5479	#
RETAINER, Door Outside Handle Button				
64-65 01: 63-64 10-80	.....	4	448 1428	#
65 10-80	.....	4	351 6819	#
ATTACHING PARTS Retainer To Handle				
SCREW, Machine..... 64-65 01: 63 Thru 65 10-80	17.598	1	G273228	NA#
SPRING, Door Outside Handle Button Return				
64-65 01: 63-64 10-80	.....	4	448 1427	#
65 10-80	.....	4	351 6821	#
SEALER, Door Outside Handle Button				
64-65 01: 63-64 10-80	.....	4	448 1431	#
65 10-80	.....	4	351 6817	#
SPRING, Door Outside Handle Trigger Return				
60 Thru 63 01: 60 Thru 62 10-20-80 ***(Replaces 436 7955)***	.....	4	346 0655	
PIN, Door Outside Handle Trigger Hinge				
60 Thru 63 01: 60 Thru 62 10-20-80 (.126" Dia.)	.....	4	341 0509	
60-61 10-20-80 (.156" Dia.)	.....	4	345 0022	
PAD, Door Outside Handle				
64-65 01 (Small): 63-64 10-80 (Small)	.....	4	348 2682	#
65 10-80 (Small)	.....	4	351 6814	#
64-65 01 (Large): 63-64 10-80 (Large)	.....	4	348 2683	#
65 10-80 (Large)	.....	4	351 6816	#
23.077 HANDLE ASSEMBLY, Tailgate				
61 04-08...(Incl. Regular Cylinder And Keys)	.....	1	447 8728	
61 04-08...(Incl. Special Cylinder And Keys-Specify Key Number)	.....	1	447 8729	
62-63 04-08...(Incl. Regular Cylinder And Keys)	.....	1	447 9515	
62-63 04-08...(Incl. Special Cylinder And Keys-Specify Key Number)	.....	1	447 9516	
64-65 08...(Incl. Regular Cylinder And Keys)	.....	1	448 1742	#
64-65 08...(Incl. Special Cylinder And Keys-Specify Key Number)	.....	1	448 1743	#
60-61 18-28-83-88 (LVT)...(Incl. Regular Cylinder And Keys)	.....	1	447 8590	
60-61 18-28-83-88 (LVT)...(Incl. Special Cylinder And Keys-Specify Key Number)	.....	1	447 8591	
60 Thru 62 18-28-88 (WVT)...(Incl. Trigger, Spring And Pin)	.....	1	344 3988	
62 18-88 (LVT)...(Incl. Regular Cylinder And Keys)	.....	1	447 9452	
62 18-88 (LVT)...(Incl. Special Cylinder And Key-Specify Key Number)	.....	1	447 9472	
63-64 18-88 (LVT)...(Incl. Regular Cylinder And Keys)	.....	1	448 0471	
65 18-88 (LVT-LER)...(Incl. Regular Cylinder And Keys)	.....	1	448 2427	#
63-64 18-88 (LVT)...(Incl. Special Cylinder And Keys-Specify Key Number)	.....	1	448 0472	
65 18-88 (LVT-LER)...(Incl. Special Cylinder And Keys-Specify Key Number)	.....	1	448 2426	#
63-64 18-88 (WVT)...(Incl. Push Button, Spring, Rod And Retainer)	.....	1	348 2310	
65 18-88 (WVT)...(Incl. Push Button, Spring, Rod And Retainer)	23.074	1	351 6810	#

Copyright 1963 American Motors Corp.

GROUP NO. — DESCRIPTION — YEAR and MODEL	PRIMARY GROUP NO.	PER CAR	PART NO.	CODE
ATTACHING PARTS				
Handle To Tailgate (Inner)				
SCREW, Machine..... 61 Thru 63 04-08.....	20.450	1	435 8218	
Handle To Base				
SCREW, Tapping..... 63-64 18-88 (LVT).....***(Replaces 400 0515)***	.....	2	400 0430	
Handle To Tailgate (Outer)				
SCREW, Machine..... 61 Thru 63 04-08.....	.....	2	400 0276	
SCREW, Tapping..... 64-65 08 (LER-3/4" Long).....	.....	1	400 0817	
SCREW, Tapping..... 64-65 08 (LER-1-11/32" Long).....	.....	1	400 0818	
SCREW, Machine..... 60 Thru 64 18-28-88 (WVT-#10-24 x 5/8).....	20.074	2	400 0051	
SCREW, Tapping..... 60-61 18-28-83-88 (LVT-3/4" Long).....	.....	1	344 4759	
SCREW, Tapping..... 60 Thru 62 18-28-83-88 (LVT-1-1/2" Long).....	23.078	1	400 0355	
SCREW, Tapping..... 62-18-88 (LVT-7/8" Long).....	.....	1	400 0430	
SCREW, Machine..... 63 18-88 (WVT-#10-24 x 1/2).....	23.074	2	400 0052	
SCREW, Machine..... 65 18-88 (WVT).....	17.598	2	G191984	
SCREW, Tapping..... 65 18-88 (LVT-LER).....	23.078	2	400 1347	
WASHER, Plain..... 63-64 18-88 (WVT).....***(Replaces 800 0451)***	17.814	1	400 0486	
HANDLE ASSEMBLY, Liftgate				
60 04...(Incl. Regular Cylinder And Keys).....	.....	1	447 8610	
60 04...(Incl. Special Cylinder And Keys-Specify Key Number).....	.....	1	447 8611	
ATTACHING PARTS				
Handle To Liftgate (Inner)				
SCREW, Machine..... 60 04.....	20.450	1	435 8218	
Handle To Liftgate (Outer)				
SCREW, Machine..... 60 04.....	.....	2	400 0276	
TRIGGER, Tailgate Handle				
60 Thru 62 18-28-88 (WVT).....	.....	1	344 3987	
SPRING, Tailgate Handle Trigger Return				
60 Thru 62 18-28-88 (WVT).....	23.074	1	346 0655	
PIN, Tailgate Handle Trigger Hinge				
60 Thru 62 18-28-88 (WVT).....	23.074	1	341 0509	
PAD, Tailgate Handle				
63-64 18-88 (WVT-Small).....	23.074	1	348 2682	
65 18-88 (WVT-Small).....	23.074	1	351 6814	
63-64 18-88 (WVT-Large).....	23.074	1	348 2683	
65 18-88 (WVT-Large).....	23.074	1	351 6816	
BUTTON, Tailgate Outside Handle				
63-64 18-88 (WVT).....	23.074	1	448 1430	
65 18-88 (WVT).....	23.074	1	320 5479	
RETAINER, Tailgate Outside Handle Button				
63-64 18-88 (WVT).....	23.074	1	448 1428	
65 18-88 (WVT).....	23.074	1	351 6819	

Copyright 1963 American Motors Corp.

GROUP NO. — DESCRIPTION — YEAR and MODEL	PRIMARY GROUP NO.	PER CAR	PART NO.	CODE
ATTACHING PARTS				
Retainer To Handle				
SCREW, Machine..... 63 Thru 65 18-88 (WVT).....	17.598	1	G273228	NA
SPRING, Tailgate Outside Handle Button Return				
63-64 18-88 (WVT).....	23.074	1	448 1427	
65 18-88 (WVT).....	23.074	1	351 6821	
SEALER, Tailgate Outside Handle Button				
63-64 18-88 (WVT).....	23.074	1	448 1431	
65 18-88 (WVT).....	23.074	1	351 6817	
HANDLE ASSEMBLY, Rear Deck Door				
62 Thru 65 15-85 (Taxi)...(Incl. Regular Cylinder And Keys).....	.....	1	447 9535	
62 Thru 65 15-85 (Taxi)...(Incl. Special Cylinder And Keys-Specify Key Number).....	.....	1	447 9536	
ATTACHING PARTS				
Handle To Deck Door				
SCREW, Machine..... ***62 Thru 65 15-85 (Taxi)***.....	23.078	2	400 0429	
PLATE, Tapping ..... ***62 Thru 65 15-85 (Taxi)***.....	.....	1	346 2739	
23.078 HANDLE, Tailgate Window Regulator				
64-65 08 (LER)...(Incl. Crank).....	.....	1	350 0816	
60-61 18-28-83-88 (LVT-Chrome Knob)...(Incl. Crank)	.....	1	344 0692	
61 18-28-88 (WVT-Blue Knob).....	23.100	1	345 5505	
60 18-28-88 (W3S-Gray Knob).....	23.100	1	344 5743	
61 18-28-88 (WVT-Gray Knob).....	23.100	1	345 5504	
61 18-28-88 (WVT-Green Knob).....	23.100	1	345 5506	
61 18-28-88 (WVT-Tan Knob).....	23.100	1	345 5507	#
62 18-88 (LVT)...(Incl. Crank).....	.....	1	346 1345	
62-63 18-88 (WVT).....	23.100	1	346 2551	#
63-64 18-88 (LVT-LER)...(Incl. Crank).....	.....	1	348 2308	
65 18-88 (LVT-LER).....	.....	1	351 7181	
64 18-88 (WVT-LER).....	23.100	1	350 9453	
65 18-88 (WVT).....	23.100	1	351 5829	
ATTACHING PARTS				
Handle To Regulator				
PIN ..... 60-61 18-28-88 (WVT).....	23.063	1	436 7527	
CLIP..... 62-63 18-88 (WVT-LER).....	29.105	1	400 0109	
SCREW, Socket ..... 64-65 18-88 (WVT).....	29.105	1	400 0826	
Handle To Tailgate				
SCREW, Tapping..... 65 18-88 (LVT-LER-1 3/16" Long).....	.....	1	400 1347	#
SCREW, Tapping..... 64-65 08 (LER-23/32" Long): 65 18-88 (LVT-LER-25/32" Long).....	.....	1	400 0817	#
SCREW, Tapping..... 64-65 08 (LER-1-11/32" Long).....	.....	1	400 0818	
CRANK, Tailgate Window Regulator Handle				
60 Thru 62 18-28-83-88 (LVT).....	.....	1	345 1684	
64-65 08 (LER): 63 Thru 65 18-88 (LVT-LER)	.....	1	448 0845	
ATTACHING PARTS				
Crank To Handle				
PIN ..... 64-65 08 (LER): 60 Thru 65 18-28-83-88 (LVT-LER)	.....	1	400 0039	

Copyright 1963 American Motors Corp.

GROUP NO. — DESCRIPTION — YEAR and MODEL	PRIMARY GROUP NO.	PER CAR	PART NO.	CODE
SPRING, Tailgate Window Regulator Crank				
64-65 08 (LER): 60 Thru 65 18-28-83-88 (LVT-LER)	.....	1	345 1685	
BUMPER, Tailgate Window Regulator Crank				
64-65 08 (LER): 60 Thru 65 18-28-83-88 (LVT-LER)	.....	1	400 0035	
ESCUTCHEON, Tailgate Window Regulator Handle				
60 18-28-88 (W3S)	23.102	1	344 5745	
61 18-28-88 (WVT-Blue)	23.059	1	345 5511	
61 18-28-88 (WVT-Gray)	23.059	1	345 5509	
61 18-28-88 (WVT-Green)	23.059	1	345 5513	
61 18-28-88 (WVT-Tan)	23.059	1	345 5515	
BASE, Tailgate Window Regulator Handle Escutcheon				
60-61 18-28-88 (WVT)	23.059	1	435 6561	
BASE, Tailgate Window Regulator Handle				
63-64 18-88 (LVT-LER)	.....	1	347 2608	
ATTACHING PARTS				
Base To Tailgate				
SCREW, Tapping..... 63-64 18-88 (LVT-LER)	23.077	2	400 0430	
SPACER, Tailgate Window Regulator Handle (Rubber)				
62 Thru 64 18-88 (WVT-LER)	23.039	1	400 0389	
WASHER, Tailgate Window Regulator Handle (Nylon)				
62-63 18-88 (WVT-LER)	23.060	1	346 2560	
64-65 18-88 (WVT-LER)	23.058	1	350 9687	#
HANDLE, Liftgate (Incl. Pawl, Escutcheon, Spring, Retainer And Pin)				
60 04	.....	1	343 1829	
PAWL, Liftgate Handle Locking				
60 04	.....	1	447 8465	
ESCUTCHEON, Liftgate Handle				
60 04	.....	1	447 8466	
SPRING, Liftgate Handle				
60 04	.....	1	447 8467	
RETAINER, Liftgate Handle Spring				
60 04	.....	2	447 8468	
PIN, Liftgate Handle Spring Retainer				
60 04	.....	1	447 8469	

Copyright 1963 American Motors Corp.

GROUP NO. — DESCRIPTION — YEAR and MODEL	PRIMARY GROUP NO.	PER CAR	PART NO.	CODE
HANDLE, Tailgate Lock (Incl. Pawl, Escutcheon, Spring, Retainer And Pin)				
61 04-08	.....	1	344 7186	
62-63 04-08	.....	1	348 1740	
PAWL, Tailgate Lock Handle				
61 Thru 63 04-08	.....	1	447 8465	
ESCUTCHEON, Tailgate Lock Handle				
61 Thru 63 04-08	.....	1	447 8466	
SPRING, Tailgate Lock Handle				
61 Thru 63 04-08	.....	1	447 8467	
RETAINER, Tailgate Lock Handle Spring				
61 Thru 63 04-08	.....	2	447 8468	
PIN, Tailgate Lock Handle Spring Retainer				
61 Thru 63 04-08	.....	1	447 8469	
HANDLE, Rear Deck Door				
60 02-05-06	.....	1	342 5852	
61 Thru 63 01...(Incl. Nuts)	.....	1	448 0191	
61 15-25-85 (Taxi)	.....	1	344 6647	
62 Thru 64 15-85 (Taxi): 65 15-85-86-87-89 (Fleet)	.....	1	346 2708	#
63 85-86 (990)...(Incl. Nuts)	.....	1	448 0241	
ATTACHING PARTS Handle To Door				
PLATE, Tapping ..... ***61 Thru 64 15-25-85 (Taxi): 65 15-85-86-87-89 (Fleet)***	23.077	1	346 2739	#
SCREW, Machine..... ***61 Thru 64 15-25-85 (Taxi): 65 15-85-86-87-89 (Fleet)***	.....	2	400 0429	#
WASHER, Plain..... 60 02-05-06	17.814	2	G120392	NA
WASHER, Lock..... 60 02-05-06	17.820	2	G120380	NA
NUT, Lock..... 61-62 01	12.078	3	344 1668	
NUT, Lock..... 63 01-85-86	.....	3	400 0391	
NUT, Hexagon..... 60 02-05-06	17.406	2	G120375	
SPACER, Rear Deck Door Handle Shaft				
61 Thru 64 15-85 (Taxi): 65 15-85-86-87-89 (Fleet).....(Replaces 344 7083)	.....	1	346 2737	#
LEVER, Rear Deck Door Handle Locking				
61 15-25-85 (Taxi)	.....	1	346 6031	
62 15-85 (Taxi)	.....	1	347 1106	
63-64 15-85 (Taxi): 65 15-85-86-87-89 (Fleet)	.....	1	348 2635	#
ATTACHING PARTS Lever To Handle				
SCREW, Machine..... ***61 Thru 64 15-25-85 (Taxi): 65 15-85-86-87-89 (Fleet)***	17.610	1	G451271	NA#
WASHER, Plain..... ***63-64 15-85 (Taxi): 65 15-85-86-87-89 (Fleet)***	17.814	1	G120391	NA#

Copyright 1963 American Motors Corp.

GROUP NO. — DESCRIPTION — YEAR and MODEL	PRIMARY GROUP NO.	PER CAR	PART NO.	CODE
SEAL, Rear Deck Door Handle				
60 02-05-06	5.160	2	313 0998	
61 15-25-85 (Taxi)	.....	1	346 6057	
62 Thru 64 15-85 (Taxi): 65 15-85-86-87-89 (Fleet)	.....	1	346 2738	
HANDLE, Tailgate				
61 Thru 63 01...(Incl. Nuts)	.....	1	448 0191	
ATTACHING PARTS Handle To Tailgate				
NUT, Lock..... 61-62 01	12.078	3	344 1668	
NUT, Lock..... 63 01	.....	3	400 0391	
23.081 CYLINDER ASSEMBLY, Door Lock				
60 01...(Incl. Regular Cylinder And Keys)	.....	2	447 8602	
60 01...(Incl. Special Cylinder And Keys-Specify Key Number)	.....	2	447 8603	
61 Thru 63 01...(Incl. Regular Cylinder And Keys)	.....	2	447 8699	
61 Thru 63 01...(Incl. Special Cylinder And Keys-Specify Key Number)	.....	2	447 8700	
60-61 10-20-80...(Incl. Regular Cylinder And Keys)	.....	2	447 8576	
60-61 10-20-80...(Incl. Special Cylinder And Keys-Specify Key Number)	.....	2	447 8577	
62 10-80...(Incl. Regular Cylinder And Keys)	.....	2	447 9462	
62 10-80...(Incl. Special Cylinder And Keys-Specify Key Number)	.....	2	447 9463	
64-65 01: 63 Thru 65 10-80...(Incl. Regular Cylinder And Keys)	.....	2	447 8576	
64-65 01: 63 Thru 65 10-80...(Incl. Special Cylinder And Keys-Specify Key Numbers)	.....	2	447 8577	
ADAPTER, Front Door Lock Cylinder Housing				
64 01: 65 01-10-50-80	.....	2	448 3374	#
CASE, Door Lock Cylinder				
60 Thru 65 01-10-20-80	.....	2	447 5152	
SHAFT, Door Lock Cylinder				
60 01	.....	2	447 5783	
61 Thru 63 01	.....	2	447 8701	
60-61 10-20-80: 64-65 01: 63 Thru 65 10-80	.....	2	447 6045	
62 10-80	.....	2	447 9468	
SWIVEL, Door Lock Cylinder				
60 Thru 65 01-10-20-80	.....	2	447 5154	
PIN, Door Lock Cylinder Pivot				
60 Thru 65 01-10-20-80	.....	2	447 5155	
BEZEL, Door Lock Cylinder				
61 Thru 63 01	.....	2	344 6844	
SEAL, Door Lock Cylinder Bezel				
61 Thru 63 01	.....	2	344 6974	

NOTE 23.081-2: Two types of Rear Deck Lock Cylinders and Locking links were used on Model 62 15-16-85-86. They can be identified as follows:

Type 1: Locking Link has a closed loop end which loops over the lock Cylinder Cam.

Type 2: Locking Link has a hook end which passes thru the lock Cylinder Cam and locked in place with a speed nut.

Copyright 1963 American Motors Corp.

GROUP NO. — DESCRIPTION — YEAR and MODEL	PRIMARY GROUP NO.	PER CAR	PART NO.	CODE
CYLINDER ASSEMBLY, Tailgate Lock				
61 Thru 63 04-08...(Incl. Regular Cylinder And Keys)	.....	1	447 8606	
61 Thru 63 04-08...(Incl. Special Cylinder And Keys-Specify Key Number)	.....	1	447 8607	
60 Thru 62 18-28-83-88 (LVT)...(Incl. Regular Cylinder And Keys)	.....	1	447 8580	
60 Thru 62 18-28-83-88 (LVT)...(Incl. Special Cylinder And Keys-Specify Key Number)	.....	1	447 8581	
60-61 18-28-88 (WVT)...(Incl. Regular Cylinder And Keys)	.....	1	447 8582	
60-61 18-28-88 (WVT)...(Incl. Special Cylinder And Keys-Specify Key Number)	.....	1	447 8583	
62 18-88 (WVT)...(Incl. Regular Cylinder And Keys)	.....	1	447 9464	
62 18-88 (WVT)...(Incl. Special Cylinder And Keys-Specify Key Number)	.....	1	447 9465	
63 Thru 65 18-88 (LVT-LER): 64-65 08 (LER)...(Incl. Regular Cylinder And Keys)...***(Replaces 448 0465)***	.....	1	448 0842	
63 Thru 65 18-88 (LVT-LER): 64-65 08 (LER...(Incl. Special Cylinder And Keys-Specify Key Number) ...***(Replaces 448 0466)***	.....	1	448 0843	
63 Thru 65 18-88 (WVT)...(Incl. Regular Cylinder And Keys)	.....	1	447 8576	
63 Thru 65 18-88 (WVT)...(Incl. Special Cylinder And Keys - Specify Key Number)	.....	1	447 8577	
CASE, Tailgate Lock Cylinder				
60 Thru 65 18-28-88 (WVT)	.....	1	447 5152	
SCREW, Tailgate Lock Cylinder To Bezel Retaining				
63 Thru 65 18-88 (WVT)	13.017	1	400 0621	
SHAFT, Tailgate Lock Cylinder				
60-61 18-28-88 (WVT)	.....	1	447 8594	
62 18-88 (WVT)	.....	1	447 9469	
63 Thru 65 18-88 (WVT)	.....	1	447 6045	
SWIVEL, Tailgate Lock Cylinder				
60 Thru 65 18-28-88 (WVT)	.....	1	447 5154	
PIN, Tailgate Lock Cylinder Pivot				
60 Thru 65 18-28-88 (WVT)	.....	1	447 5155	
BEZEL, Tailgate Lock Cylinder				
63-64 18-88 (WVT)	.....	1	347 2117	
SEAL, Tailgate Lock Cylinder Bezel				
63 Thru 65 18-88 (WVT)	.....	1	344 6974	
CYLINDER ASSEMBLY, Tailgate Electric Operated Window Regulator Switch				
63 Thru 65 18-88 (LVT-WER): 64-65 08 (WER)...(Incl. Regular Cylinder And Keys)	.....	1	448 0787	
63 Thru 65 18-88 (LVT-WER): 64-65 08 (WER)...(Incl. Special Cylinder And Keys-Specify Key Number)	.....	1	448 0792	
CAM, Tailgate Electric Operated Window Regulator Switch Cylinder				
63 Thru 65 18-88 (LVT-WER): 64-65 08 (WER)	.....	1	448 0793	

Copyright 1963 American Motors Corp.

GROUP NO. — DESCRIPTION — YEAR and MODEL	PRIMARY GROUP NO.	PER CAR	PART NO.	CODE
CASE, Tailgate Electric Operated Window Regulator Lock Cylinder				
63 Thru 65 18-88 (LVT-WER): 64-65 08 (WER)	.....	1	447 9470	
CYLINDER ASSEMBLY, Rear Deck Lock				
60 02-05-06...(Incl. Regular Cylinder And Keys)	.....	1	447 8604	
60 02-05-06...(Incl. Special Cylinder And Keys-Specify Key Number)	.....	1	447 8605	
61 Thru 63 02-05-06-07-09...(Incl. Regular Cylinder And Keys)	.....	1	447 8578	—
61 Thru 63 02-05-06-07-09...(Incl. Special Cylinder And Keys-Specify Key Number)	.....	1	447 8579	
60-61 15-19-25-29-85-89...(Incl. Regular Cylinder And Keys)	.....	1	447 8578	
60-61 15-19-25-29-85-89...(Incl. Special Cylinder And Keys-Specify Key Number)	.....	1	447 8579	
62 15-16-85-86 (Note 23.081-2 Type 1)...(Incl. Regular Cylinder And Keys)	.....	1	447 9466	
62 15-16-85-86 (Note 23.081-2 Type 2)...(Incl. Regular Cylinder And Keys)	.....	1	447 9828	
62 15-16-85-86 (Note 23.081-2 Type 1)...(Incl. Special Cylinder And Keys-Specify Key Number)	.....	1	447 9467	
62 15-16-85-86 (Note 23.081-2 Type 2)...(Incl. Special Cylinder And Keys-Specify Key Number)	.....	1	447 9830	
63 Thru 65 15-16-17-19-85-86-87-89...(Incl. Regular Cylinder And Keys)	.....	1	448 0468	
63 Thru 65 15-16-17-19-85-86-87-89...(Incl. Special Cylinder And Keys-Specify Key Number)	.....	1	448 0469	
64-65 05-06-07-09...(Incl. Regular Cylinder And Keys)	.....	1	448 1196	
64-65 05-06-07-09...(Incl. Special Cylinder And Keys-Specify Key Number)	.....	1	448 1197	
CASE, Rear Deck Lock Cylinder				
60 02-05-06	.....	1	447 5152	
61 Thru 63 02-05-06-07-09: 60-61 15-19-25-29-85-89: 63 Thru 65 15-16-17-19-85-86-87-89	.....	1	447 8415	
64-65 05-06-07-09	.....	1	448 2260	
62 15-16-85-86	.....	1	447 9470	
CAM, Rear Deck Lock Cylinder				
61 Thru 63 02-05-06-07-09: 60 Thru 62 15-16-19-25-29-85-86-89 (Note 23.081-2 Type 1) ...*(Replaces 447 9772)*	.....	1	447 8416	
62 15-16-85-86 (Note 23.081-2 Type 2)	.....	1	447 9829	
63 Thru 65 15-16-17-19-85-86-87-89	.....	1	448 0470	
SHAFT, Rear Deck Lock Cylinder				
60 02-05-06	.....	1	447 8289	
64-65 05-06-07-09	.....	1	448 1198	
SWIVEL, Rear Deck Lock Cylinder				
60 02-05-06	.....	1	447 5154	
PIN, Rear Deck Lock Cylinder Pivot				
60 02-05-06	.....	1	447 5155	
GASKET, Rear Deck Lock Cylinder Hole				
60 02-05-06	15.030	1	313 5435	
62 15-16-85	.....	1	348 4035	

Copyright 1963 American Motors Corp.

GROUP NO. — DESCRIPTION — YEAR and MODEL	PRIMARY GROUP NO.	PER CAR	PART NO.	CODE
CYLINDER ASSEMBLY, Liftgate Lock				
60 04...(Incl. Regular Cylinder And Keys)	.....	1	447 8606	
60 04...(Incl. Special Cylinder And Keys-Specify Key Number)	.....	1	447 8607	
CYLINDER ASSEMBLY, Rear Deck Handle Lock				
62 Thru 64 15-85 (Taxi): 65 15-85-86-87-89 (Fleet)...(Incl. Regular Cylinder And Keys)	.....	1	447 8606	#
62 Thru 64 15-85 (Taxi): 65 15-85-86-87-89 (Fleet)...(Incl. Special Cylinder And Keys-Specify Key Number)	.....	1	447 8607	#
23.085 KEY, Lock Cylinder (Liftgate)				
(Blank) 60 01	.....	2	344 5763	
(Coded) 60 01...(Specify Key Number)	.....	2	447 8592	
KEY, Lock Cylinder (Door, Ignition And Tailgate)				
(Blank) 60 Thru 65 01-10-20-80	.....	2	344 5763	
(Coded) 60 Thru 65 01-10-20-80...(Specify Key Number)	.....	2	447 8592	
KEY, Lock Cylinder (Glove Box And Rear Deck)				
(Blank) 60 Thru 65 01-10-20-80	.....	2	344 5762	
(Coded) 60 Thru 65 01-10-20-80...(Specify Key Number)	.....	2	447 8593	
23.086 SPRING, Cylinder Lock Retainer (Door)				
60 02-04-06	.....	2	435 0458	
60 05: 60 Thru 62 10-20-80	.....	2	436 7673	
61 Thru 63 02-04-06-07-09	.....	2	344 6841	
61 Thru 63 05-08	.....	2	344 6840	
64-65 01: 63 Thru 65 10-80	.....	2	348 2879	
SPRING, Cylinder Lock Retainer (Rear Deck)				
60 02-05-06	23.081	1	437 3383	
61 Thru 63 02-05-06-07-09: 60 Thru 62 15-16-19-25-29-85-86-89	.....	1	436 7673	
64-65 05-06-07-09: 63 Thru 65 15-16-17-19-85-86-87-89	.....	1	348 2879	#
SPRING, Cylinder Lock Retainer (Tailgate)				
60 Thru 62 18-28-88 (WVT)	.....	1	435 0458	
63 Thru 65 18-88 (WVT)	.....	1	347 2045	
64-65 08 (WER): 63 Thru 65 18-88 (LVT-WER)	.....	1	348 2879	
23.087 STRIKER, Door Lock				
63-64 10-80: 64-65 01	.....	4	349 2120	
(Left) 60 Thru 63 01: 60-61 10-20-80	.....	2	341 6511	
(Left) 62 10-80	.....	2	346 1127	
(Left) 65 10-80	.....	2	353 0501	
(Right) 60 Thru 63 01: 60-61 10-20-80	.....	2	341 6512	
(Right) 62 10-80	.....	2	346 1126	
(Right) 65 10-80	.....	2	353 0500	

Copyright 1963 American Motors Corp.

GROUP NO. — DESCRIPTION — YEAR and MODEL	PRIMARY GROUP NO.	PER CAR	PART NO.	CODE
ATTACHING PARTS Striker To Body				
SCREW, Machine..... 60 Thru 63 01: 60-61 10-20-80	23.039	8	400 0045	
SCREW, Machine..... 62 10-80 (8 Req.): 63-64 15-18-85-88 (12 Req.): 63 16-86 (6 Req.): 64-65 05-08 (12 Req.): 64 02-06-07-09-16-19-89 (6 Req.)	.....	AR	400 0416	
SCREW, Machine..... 65 10-80	.....	8	400 1573	
SHIM, Door Lock Striker				
60 Thru 63 01 (.0359" Thick): 60-61 10-20-80 (.0359" Thick)	.....	AR	437 0167	
60 Thru 63 01 (.0598" Thick): 60-61 10-20-80 (.0598" Thick)	.....	AR	437 0168	
62 10-80 (.0359" Thick)	.....	AR	348 7024	
62 10-80 (.0598" Thick)	.....	AR	348 7025	
63-64 10-80 (.0359" Thick): 64-65 01 (.0359" Thick)	.....	AR	349 2115	
63-64 10-80 (.0598" Thick): 64-65 01 (.0598" Thick)	.....	AR	349 2114	
65 10-80 (.036" Thick)	.....	AR	354 2634	
65 10-80 (.061" Thick)	.....	AR	354 2633	
HOUSING, Door Lock Striker				
(Left) 63-64 10-80: 64-65 01	.....	2	349 2125	
(Right) 63-64 10-80: 64-65 01	.....	2	349 2124	
PLATE, Door Lock Striker Retainer				
(Left) 63-64 10-80: 64-65 01	.....	2	349 2123	
(Right) 63-64 10-80: 64-65 01	.....	2	349 2122	
PLATE, Door Lock Striker Tapping (On Center Pillar)				
62 10-80	.....	2	346 1412	
65 10-80	.....	2	354 2833	
(Left) 63-64 15-18-85-88: 64-65 05-08	.....	1	347 2505	
(Right) 63-64 15-18-85-88: 64-65 05-08	.....	1	347 2504	
23.093 LINK, Front Door Check (Incl. Screw, Washer And Nut)				
60 01	.....	2	447 8534	
61 Thru 63 01	.....	2	447 8804	
ATTACHING PARTS Link To Bracket				
SCREW, Shoulder ..... 60 Thru 63 01	.....	2	343 1844	
NUT, Hexagon..... 60 Thru 63 01	17.412	2	G271482	NA
LINK, Rear Door Check (Incl. Screw, Washer And Nut)				
60 05	.....	2	447 8534	
61 Thru 63 05-08 ***(Replaces 447 8805)***	.....	2	447 8804	
60 10-20-80: 61 10-20-80 (Note 23.002-1)	.....	2	447 7229	
61 10-20-80 (Note 23.002-2): 62 15-18-85-88	.....	2	447 9212	
ATTACHING PARTS Link To Center Pillar Bracket				
SCREW, Shoulder ..... 60 Thru 63 05-08	.....	2	343 1844	
SCREW, Shoulder 60-61 10-20-80: 62 15-18-85-88	.....	2	437 3327	
NUT, Hexagon..... 60-61 10-20-80: 62 15-18-85-88	17.412	2	G271482	NA

Copyright 1963 American Motors Corp.

GROUP NO. — DESCRIPTION — YEAR and MODEL	PRIMARY GROUP NO.	PER CAR	PART NO.	CODE
LINK, Tailgate Check (Incl. Screw, Washer And Nut)				
60-61 18-28-88 (WVT)	.....	1	447 8573	
62 18-88 (WVT)	.....	1	447 9453	
ATTACHING PARTS Link To Tailgate				
SCREW, Shoulder ..... 60-61 10-20-80 (WVT): 62 18-88 (WVT)	.....	2	437 3327	
NUT, Hexagon ..... 60-61 10-20-80 (WVT): 62 18-88 (WVT)	17.412	2	G271482	NA
23.096 BRACKET, Door Check Link (In Center Pillar)				
60 05	.....	2	436 5757	
61 Thru 63 05-08	.....	2	343 5777	
60-61 10-20-80	.....	2	341 1040	
62 15-18-85-88	20.195	2	436 5725	
BRACKET, Door Check Link (In Rear Door)				
60 10-20-80: 61 10-20-80 (Note 23.002-1)	.....	2	437 8419	
GUIDE, Door Check Link (In Door)				
60 Thru 63 01	.....	4	343 5778	
GUIDE, Door Check Link (In Rear Door And Extension Panel)				
61 15-18-25-28-85-88 (Note 23.002-2): 62 15-18-85-88	.....	2	346 5763	
RETAINER, Tailgate Check Link (In Extension Panel)				
60 18-28-88 (W3S)	.....	1	344 5864	
61-62 18-28-88 (WVT)	.....	1	346 5528	
ATTACHING PARTS Retainer To Support				
NUT, Hexagon ..... 60 Thru 62 18-28-88 (WVT)	17.412	2	G271169	
23.098 REGULATOR, Front Door Window				
60 05 ..... *(Replaces 437 3616)*	.....	2	437 3615	
(Left) 60-61 02-04-06	.....	1	343 2018	
(Left) 62-63 02-04-06	.....	1	346 2621	
(Left) 64 06-16-86 (LER)	.....	1	352 0705	#
(Left) 65 06-16-86 (LER)	.....	1	354 3131	#
(Left) 61 05-08 (Note 23.098-1 Type 1)	.....	1	344 7465	
(Left) 61 05-08 (Note 23.098-1 Type 2)	.....	1	346 0565	

NOTE 23.098-1: Two Types of Front Door Window Regulators were installed on the 61 05-08-10-20-80 (LER) Series. They can be identified as follows:
Type 1: Regulator requires the use of a Separate Crossarm Assembly.
Type 2: Regulator does not require the use of a Crossarm Assembly.

NOTE 23.098-2: Two Types of Rear Door Window Regulators were installed on the 61 10-20-80 (LER) Series. They can be identified as follows:
Type 1: This Regulator has two Operating Arms.
Type 2: This Regulator has one Operating Arm.

NOTE 23.098-3: Two Types of Regulators were used on the 63 10-80 (LER). They can be identified as follows:
Type 1: Requires approximately 2-1/4 turns to raise or lower Window.
Type 2: Requires approximately 3-1/2 turns to raise or lower Window.

Copyright 1963 American Motors Corp.

GROUP NO. — DESCRIPTION — YEAR and MODEL	PRIMARY GROUP NO.	PER CAR	PART NO.	CODE
(Left) 61 07	.....	1	345 8735	
(Left) 62-63 05-08	.....	1	346 2625	
(Left) 64 05-08-15-18-85-88 (LER)	.....	1	352 0701	
(Left) 65 05-08-15-18-85-88 (LER)	.....	1	354 3127	
(Left) 62-63 07-09	.....	1	346 2623	
(Left) 60 15-18-25-28-85-88 (LER): 61 10-20-80 (LER-Note 23.098-1 Type 1).	.....	1	344 1407	
(Left) 60 19-29-83-89 (LER)	.....	1	344 0331	
(Left) 61 10-20-80 (LER-Note 23.098-1 Type 2)	.....	1	346 0609	
(Left) 62 15-18-85-88 (LER)	.....	1	346 1471	
(Left) 62 16-86 (LER)	.....	1	346 1475	
(Left) 63 15-18-85-88 (LER) ***(Replaces 347 2365)***	.....	1	348 7761	
(Left) 63 16-86 (LER-Note 23.098-3 Type 1)	.....	1	347 2367	
(Left) 63 16-86 (LER-Note 23.098-3 Type 2)	.....	1	348 5349	
(Left) 64-65 07-09-17-19-87-89 (LER)	.....	1	350 0977	
(Right) 60-61 02-04-06	.....	1	343 2017	
(Right) 62-63 02-04-06	.....	1	346 2620	
(Right) 64 06-16-86 (LER)	.....	1	352 0704	
(Right) 65 06-16-86 (LER)	.....	1	354 3130	
(Right) 61 05-08 (Note 23.098-1 Type 1)	.....	1	344 7464	
(Right) 61 05-08 (Note 23.098-1 Type 2)	.....	1	346 0564	
(Right) 61 07	.....	1	345 8734	
(Right) 62-63 05-08	.....	1	346 2624	
(Right) 64 05-08-15-18-85-88 (LER)	.....	1	352 0700	
(Right) 65 05-08-15-18-85-88 (LER)	.....	1	354 3126	
(Right) 62-63 07-09	.....	1	346 2622	
(Right) 60 15-18-25-28-85-89 (LER): 61 10-20-80 (LER-Note 23.098-1 Type 1)	.....	1	344 1406	
(Right) 60 19-29-83-89 (LER)	.....	1	344 0330	
(Right) 61 10-20-80 (LER-Note 23.098-1 Type 2)	.....	1	346 0608	
(Right) 62 15-18-85-88 (LER)	.....	1	346 1470	
(Right) 62 16-86 (LER)	.....	1	346 1474	
(Right) 63 15-18-85-88 (LER-Note 23.098-3 Type 1) ***(Use 348 7760)***	.....	1	347 2364	
(Right) 63 15-18-85-88 (LER-Note 23.098-3 Type 2)	.....	1	348 7760	
(Right) 63 16-86 (LER) ***(Replaces 347 2366)***	.....	1	348 5348	
(Right) 64-65 07-09-17-19-87-89 (LER)	.....	1	350 0976	
ATTACHING PARTS				
Regulator To Door				
SCREW, Machine..... 60 01: 60 Thru 62 10-20-80 (LER)	23.056	10	400 0075	
SCREW, Machine..... 61 01	23.300	10	438 3373	
SCREW, Machine..... 62-63 01	.....	10	400 0230	
SCREW, Machine..... 64-65 01: 63 Thru 65 10-80	.....	8	400 0572	
REGULATOR, Rear Door Window				
(Left) 60-61 05-08	.....	1	344 345	
(Left) 62-63 05-08	.....	1	346 262	
(Left) 64 05-08-15-18-85-88 (LER)	.....	1	352 0703	
(Left) 65 05-08-15-18-85-88 (LER)	.....	1	354 3129	
(Left) 60 15-18-25-28-85-88 (LER): 61 10-20-80 (LER-Note 23.098-2 Type 1).	.....	1	344 1409	
(Left) 60 19-29-83-89 (LER)	.....	1	342 1308	
(Left) 61 10-20-80 (LER-Note 23.098-2 Type 2)	.....	1	346 0563	
(Left) 62 15-18-85-88 (LER)	.....	1	346 1473	
(Left) 63 15-18-85-88 (LER-Note 23.098-3 Type 1) ***(Use 348 7763)***	.....	1	347 2371	#
(Left) 63 15-18-85-88 (LER-Note 23.098-3 Type 2)	.....	1	348 7763	
(Right) 60-61 05-08	.....	1	344 3456	
(Right) 62-63 05-08	.....	1	346 2626	
(Right) 64 05-08-15-18-85-88 (LER)	.....	1	352 0702	
(Right) 65 05-08-15-18-85-88 (LER)	.....	1	354 3128	
(Right) 60 15-18-25-28-85-88 (LER): 61 10-20-80 (LER-Note 23.098-2 Type 1)	.....	1	344 1408	
(Right) 60 19-29-83-89 (LER)	.....	1	342 1309	
(Right) 61 10-20-80 (LER-Note 23.098-2 Type 2)	.....	1	346 0562	
(Right) 62 15-18-85-88 (LER)	.....	1	346 1472	
(Right) 63 15-18-85-88 (LER) ***(Replaces 347 2370)***	.....	1	348 7762	

Copyright 1963 American Motors Corp.

GROUP NO. — DESCRIPTION — YEAR and MODEL	PRIMARY GROUP NO.	PER CAR	PART NO.	CODE
ATTACHING PARTS				
Regulator To Door				
SCREW, Machine..... 60 05-10-20-80 (LER-3/8" Long).....	23.056	8	400 0075	
SCREW, Machine..... 61 05-08.....	23.300	8	438 3373	
SCREW, Machine..... 62-63 05-08.....	.....	8	400 0230	
SCREW, Machine..... 60 10-20-80 (LER-1/2" Long).....	.....	4	342 9712	
SCREW, Machine..... 61 Thru 63 15-18-25-28-85-88 (LER).....	23.056	8	400 0075	
SCREW, Machine..... 64-65 05-08-15-18-85-88 (LER).....	.....	8	400 0572	
PLATE, Front Door Window Regulator Crossarm Mounting				
64 07-09-19-89.....	.....	2	350 0979	
(Left) 65 07-09-17-19-87-89.....	.....	1	354 3051	
(Right) 65 07-09-17-19-87-89.....	.....	1	354 3050	
ATTACHING PARTS				
Plate To Inner Panel				
SCREW, Machine..... 64-65 07-09-17-19-87-89.....	.....	4	400 0137	
Plate To Regulator Slide Channel				
SCREW, Machine..... 64-65 07-09-17-19-87-89 (1-1/2" Long).....	.....	8	400 0137	
CROSSARM, Front Door Window Regulator				
(Left) 60 05.....	.....	1	437 6691	
(Left) 61 05-08.....	.....	1	344 7467	
(Left) 60-61 10-20-80.....	.....	1	438 5945	
(Left) 62 16-86 (LER).....	.....	1	346 1933	
(Right) 60 05.....	.....	1	437 6692	
(Right) 61 05-08.....	.....	1	344 7466	
(Right) 60-61 10-20-80.....	.....	1	438 5946	
(Right) 62 16-86 (LER).....	.....	1	346 1932	
ATTACHING PARTS				
Crossarm To Door				
SCREW, Machine..... 60-61 05-08.....	23.300	10	438 3373	
SCREW, Machine..... 60 10-20-80 (6 Req. -3/8" Long): 61 10-20-80 (10 Req.): 62 16-86 (LER-8 Req.).....	23.056	AR	400 0075	
SCREW, Machine..... 60 10-20-80 (1/2" Long).....	.....	4	342 9712	
Crossarm To Regulator				
CLIP..... 60-61 05-08-10-20-80: 62 16-86 (LER).....	25.030	2	400 0323	
WASHER, Spring..... 60-61 05-08-10-20-80: 62 16-86 (LER).....	25.030	2	400 0324	
WASHER, Fibre..... 62 16-86 (LER).....	25.030	2	400 0326	
23.100 HANDLE, Door Window Regulator				
60 01-10-20-80 (Gray Knob).....	.....	4	344 5743	
61 01-10-20-80 (Blue Knob).....	.....	4	345 5505	
61 01-10-20-80 (Gray Knob).....	.....	4	345 5504	
61 01-10-20-80 (Green Knob).....	.....	4	345 5506	
61 01-10-20-80 (Silver Knob).....	.....	4	347 0977	
61 01-10-20-80 (Tan Knob).....	.....	4	345 5507	
62-63 01-10-80 (Black Knob).....	.....	4	346 2551	
64-65 01.....	.....	4	350 9710	
(Left) 64 10-80.....	.....	2	350 9453	
(Left) 65 10-80.....	.....	2	351 5829	
(Right) 64 10-80.....	.....	2	350 9452	
(Right) 65 10-80.....	.....	2	351 5828	
ATTACHING PARTS				
Handle To Regulator				
SCREW, Socket..... 64-65 01-10-80.....	29.105	4	400 0826	

Copyright 1963 American Motors Corp.

GROUP NO. — DESCRIPTION — YEAR and MODEL	PRIMARY GROUP NO.	PER CAR	PART NO.	CODE
SPRING, Door Window Regulator Handle Tension				
62-63 01-10-80 (LER): 65 15-18-85-88	23.058	4	346 2574	#
23.102 ESCUTCHEON, Door Window Regulator Handle				
60 01	23.059	4	435 6563	
60 01-10-20-80 (LER-Gray)	.....	4	344 5745	
61 01-10-20-80 (LER-Blue)	23.059	4	345 5511	
61 01-10-20-80 (LER-Gray)	23.059	4	345 5509	
61 01-10-20-80 (LER-Green)	23.059	4	345 5513	
61 01-10-20-80 (LER-Silver)	23.059	4	347 0876	
61 01-10-20-80 (LER-Tan)	23.059	4	345 5515	
BASE, Door Window Regulator Handle Escutcheon				
60-61 01-10-20-80 (LER)	23.059	4	435 6561	
23.104 WASHER, Door Window Regulator Handle				
60-61 01	23.060	4	433 5002	
62-63 01-10-80	23.060	4	346 2560	
61 10-20-80	23.060	4	400 0393	
64-65 01-10-80 (Nylon)	23.058	4	350 9687	
64-65 01-10-80 (Rubber)	23.058	4	400 0687	
23.107 PIN, Door Window Regulator Handle				
60-61 01-10-20-80	23.063	4	436 7527	
CLIP, Door Window Regulator Handle				
62-63 01-10-80	29.105	4	400 0109	
23.110 VENTILATOR, Front Door (Incl. Clear Glass)				
(Left) 61 Thru 63 07-09	.....	1	345 8261	
(Left) 60 Thru 63 02-04-06 ***(Replaces 343 2635)***	.....	1	348 1975	
(Left) 60 Thru 63 05-08 ***(Replaces 343 2651)***	.....	1	348 1751	
(Left) 60 15-18-25-28-85-88: 61 10-20-80	.....	1	344 0211	
(Left) 60 19-29-83-89	.....	1	344 0221	
(Left) 62 10-80 (Note 23.110-1 Type 1)	.....	1	346 1551	
(Left) 62 10-80 (Note 23.110-1 Type 2)	.....	1	348 4057	
(Left) 63 10-80: 64-65 05-06-08-15-16-18-85-86-88	.....	1	348 5333	
(Left) 64-65 07-09-17-19-87-89	.....	1	350 1051	
(Right) 60-61 05-08	.....	1	343 2650	
(Right) 61 Thru 63 07-09	.....	1	345 8260	
(Right) 60 Thru 63 02-04-06 ***(Replaces 343 2634)***	.....	1	348 1974	
(Right) 62-63 05-08	.....	1	348 1750	
(Right) 64-65 07-09-17-19-87-89	.....	1	350 1050	
(Right) 60 15-18-25-28-85-88: 61 10-20-80	.....	1	344 0210	
(Right) 60 19-29-83-89	.....	1	344 0220	
(Right) 62 10-80 (Note 23.110-1 Type 1)	.....	1	346 1550	
(Right) 62 10-80 (Note 23.110-1 Type 2)	.....	1	348 4056	
(Right) 63 10-80: 64-65 05-06-08-15-16-18-85-86-88	.....	1	348 5332	

NOTE 23.110-1: Two Types of Ventilators and Division Channels were used on the 62 10-80 Series. They can be identified as follows:

Type 1: Ventilator and Division Channel are two separate units and installed in the door independently of each other.

Type 2: Ventilator and Division Channel are Riveted together into one unit and installed in the Door as in Assembly.

Copyright 1963 American Motors Corp.

GROUP NO. — DESCRIPTION — YEAR and MODEL	PRIMARY GROUP NO.	PER CAR	PART NO.	CODE
ATTACHING PARTS				
Ventilator To Door Window Frame				
SCREW, Machine..... 60 01-15-18-25-28-85-88: 61 Thru 65 10-20-80	23.118	6	438 0229	
SCREW, Machine..... 61 Thru 63 02-04-05-06-08.....	.....	6	346 3738	
SCREW, Machine..... 64-65 05-06-08.....	.....	6	400 0717	
Ventilator To Door Inner Panel				
SCREW, Tapping..... 60 Thru 62 01 (8 Req.): 60 10-20-80 (4 Req. -1/2" Long): 61-62 10-20-80 (8 Req.).....	17.660	AR	G161895	NA
SCREW, Tapping..... 60 10-20-80 (3/8" Long).....	17.669	4	800 0272	NA
Ventilator To Door Hingeside				
SCREW, Machine..... 61 Thru 63 07-09.....	23.008	4	343 1715	
SCREW, Machine..... 60 19-29-83-89.....	17.626	4	G423565	NA
SCREW, Machine..... 64 07-09.....	23.008	4	400 0617	
Ventilator To Door Inner Panel (At Belt Line)				
SCREW, Tapping..... 63 01 (2 Req.): 63 10-80 (4 Req.): 64-65 01-10-80 (2 Req.).....	17.660	AR	G161895	NA
NUT, Speed..... 63 Thru 65 10-80: 64-65 01.....	.....	2	400 0196	
Ventilator To Door Inner Panel (Lower)				
STUD..... 63 01.....*(Replaces 435 0455)*	23.124	2	400 0298	
STUD..... 63-64 10-80: 64 01.....	23.124	2	400 0618	
STUD..... 65 01-10-80.....	23.124	2	400 1439	
WASHER, Lock..... 63 Thru 65 01-10-80.....	17.826	2	G173124	NA
NUT, Hexagon..... 63 Thru 65 01-10-80.....	17.406	2	G120375	
VENTILATOR, Front Door (Incl. Solex Glass)				
(Left) 60-61 05-08.....	.....	1	343 2633	
(Left) 61 Thru 63 07-09.....	.....	1	346 3329	
(Left) 64-65 07-09-17-19-87-89.....	.....	1	350 1053	
(Left) 62-63 02-04-06.....	.....	1	348 1977	
(Left) 62-63 05-08.....	.....	1	348 1757	
(Left) 60 15-18-25-28-85-88: 61 10-20-80.....	.....	1	344 0439	
(Left) 60 19-29-83-89.....	.....	1	344 0437	
(Left) 62 10-80 (Note 23.110-1 Type 1).....	.....	1	346 1553	
(Left) 62 10-80 (Note 23.110-1 Type 2).....	.....	1	348 4059	
(Left) 63 10-80: 64-65 05-06-08-15-16-18-85-86-88.....	.....	1	348 5335	
(Right) 60-61 02-04-06.....	.....	1	343 2636	
(Right) 60-61 05-08.....	.....	1	343 2632	
(Right) 61 Thru 63 07-09.....	.....	1	346 3328	
(Right) 64-65 07-09-17-19-87-89.....	.....	1	350 1052	
(Right) 62-63 02-04-06.....	.....	1	348 1976	
(Right) 62-63 05-08.....	.....	1	348 1756	
(Right) 60 15-18-25-28-85-88: 61 10-20-80.....	.....	1	344 0438	
(Right) 62 10-80 (Note 23.110-1 Type 1).....	.....	1	346 1552	
(Right) 62 10-80 (Note 23.110-1 Type 2).....	.....	1	348 4058	
(Right) 63 10-80: 64-65 05-06-08-15-16-18-85-86-88.....	.....	1	348 5334	
ATTACHING PARTS				
Ventilator To Door Window Frame				
SCREW, Machine..... 60 01-15-18-25-28-85-88: 61 Thru 65 10-20-80	23.118	6	438 0229	
SCREW, Machine..... 61 Thru 63 02-04-05-06-08.....	.....	6	346 3738	
SCREW, Machine..... 64-65 05-06-08.....	.....	6	400 0717	

Copyright 1963 American Motors Corp.

GROUP NO. — DESCRIPTION — YEAR and MODEL		PRIMARY GROUP NO.	PER CAR	PART NO.	CODE
	Ventilator To Door Inner Panel				
SCREW, Tapping.....	60 Thru 62 01 (8 Req.): 60 10-20-80 (4 Req. -1/2" Long): 61-62 10-20-80 (8 Req.)	17.660	AR	G161895	NA
SCREW, Tapping.....	60 10-20-80 (3/8" Long)	17.669	4	800 0272	NA
	Ventilator To Door Hingeside				
SCREW, Machine.....	61 Thru 63 07-09	23.008	4	343 1715	
SCREW, Machine.....	60 19-29-83-89	17.626	4	G423565	NA
SCREW, Machine.....	64 07-09	23.008	4	400 0617	
	Ventilator To Door Inner Panel (At Belt Line)				
SCREW, Tapping.....	63 01 (2 Req.): 63 10-80 (4 Req.): 64 01-10-80 (2 Req.)	17.660	AR	G161895	NA
NUT, Speed.....	63 Thru 65 10-80: 64-65 01	.....	2	400 0196	#
	Ventilator To Door Inner Panel (Lower)				
STUD.....	63 01 ***(Replaces 435 0455)***	23.124	2	400 0298	
STUD.....	63-64 10-80: 64 01	23.124	2	400 0618	
STUD.....	65 01-10-80	23.124	2	400 1439	#
WASHER, Lock.....	63 Thru 65 01-10-80	17.826	2	G173124	NA#
NUT, Hexagon.....	63 Thru 65 01-10-80	17.406	2	G120375	#

23.112 FRAME ASSEMBLY, Front Door Ventilator (Incl. Clear Glass)

(Left) 60 Thru 63 02-04-06	.....	1	447 8536	
(Left) 60 Thru 63 05-08	.....	1	447 8544	
(Left) 61 Thru 63 07-09	.....	1	447 9183	
(Left) 60-61 10-20-80	.....	1	447 8512	
(Left) 62 10-80	.....	1	447 9279	
(Left) 63 Thru 65 10-80: 64-65 01	.....	1	448 0243	#
(Right) 60 Thru 63 02-04-06	.....	1	447 8535	
(Right) 60 Thru 63 05-08	.....	1	447 8543	
(Right) 61 Thru 63 07-09	.....	1	447 9182	
(Right) 60-61 10-20-80	.....	1	447 8511	
(Right) 62 10-80	.....	1	447 9278	
(Right) 63 Thru 65 10-80: 64-65 01	.....	1	448 0242	#

ATTACHING PARTS

Ventilator Support Pivot (Upper)

RIVET, Shoulder.....	60 01: 61 Thru 63 02-04-05-06-08	.....	2	344 6090	
RIVET, Shoulder.....	61 Thru 63 07-09	.....	2	346 4795	

FRAME ASSEMBLY, Front Door Ventilator (Incl. Solex Glass)

(Left) 60 Thru 63 02-04-06	.....	1	447 8538	
(Left) 60 Thru 63 05-08	.....	1	447 8546	
(Left) 61 Thru 63 07-09	.....	1	447 9185	
(Left) 60-61 10-20-80	.....	1	447 8514	
(Left) 62 10-80	.....	1	447 9281	
(Left) 63 Thru 65 10-80: 64-65 01	.....	1	448 0245	#
(Right) 60 Thru 63 02-04-06	.....	1	447 8537	
(Right) 60 Thru 63 05-08	.....	1	447 8545	
(Right) 61 Thru 63 07-09	.....	1	447 9184	
(Right) 60-61 10-20-80	.....	1	447 8513	
(Right) 62 10-80	.....	1	447 9280	
(Right) 63 Thru 65 10-80: 64-65 01	.....	1	448 0244	#

ATTACHING PARTS

Ventilator Support Pivot (Upper)

RIVET, Shoulder.....	60 01: 61 Thru 63 02-04-05-06-08	.....	2	344 6090	
RIVET, Shoulder.....	61 Thru 63 07-09	.....	2	346 4795	

Copyright 1963 American Motors Corp.

GROUP NO. — DESCRIPTION — YEAR and MODEL	PRIMARY GROUP NO.	PER CAR	PART NO.	CODE
23.114 FRAME, Front Door Ventilator				
(Left) 60 Thru 63 02-04-06	.....	1	447 8540	
(Left) 60 Thru 63 05-08	.....	1	447 8548	
(Left) 61 Thru 63 07-09	.....	1	447 9187	
(Left) 60-61 10-20-80	.....	1	447 8516	
(Left) 62 10-80	.....	1	447 9277	
(Left) 63 Thru 65 10-80: 64-65 01	.....	1	448 0247	#
(Right) 60 Thru 63 02-04-06	.....	1	447 8539	
(Right) 60 Thru 63 05-08	.....	1	447 8547	
(Right) 61 Thru 63 07-09	.....	1	447 9186	
(Right) 60-61 10-20-80	.....	1	447 8515	
(Right) 62 10-80	.....	1	447 9276	
(Right) 63 Thru 65 10-80: 64-65 01	.....	1	448 0246	#
ATTACHING PARTS Ventilator Support Pivot (Upper)				
RIVET, Shoulder..... 60 01: 61 Thru 63 02-04-05-06-08	23.112	2	344 6090	
RIVET, Shoulder..... 61 Thru 63 07-09	23.112	2	346 4795	
SOCKET, Front Door Ventilator Upper Pivot				
(Left) 60 Thru 62 10-20-80	.....	1	344 0721	
(Right) 60 Thru 62 10-20-80	.....	1	344 0720	
ATTACHING PARTS Socket To Frame				
SCREW, Machine..... 60 Thru 62 10-20-80	.....	4	400 0042	
23.116 WEATHERSTRIP, Front Door Ventilator				
(Left) 60 Thru 63 02-04-06	.....	1	344 6111	
(Left) 60 Thru 63 05-08	.....	1	344 6109	
(Left) 61 Thru 63 07-09	.....	1	345 8289	
(Left) 60 15-18-25-28-85-88: 61 10-20-80	.....	1	344 0213	
(Left) 60 19-29-83-89	.....	1	344 0223	
(Left) 62 10-80	.....	1	346 1549	
(Left) 64-65 07-09-17-19-87-89	.....	1	350 9489	#
(Left) 63 10-80: 64-65 05-06-08-15-16-18-85-86-88 ***(Replaces 448 0253)***	.....	1	348 7995	#
(Right) 60 Thru 63 02-04-06	.....	1	344 6110	
(Right) 60 Thru 63 05-08	.....	1	344 6108	
(Right) 61 Thru 63 07-09	.....	1	345 8288	
(Right) 60 15-18-25-28-85-88: 61 10-20-80	.....	1	344 0212	
(Right) 60 19-29-83-89	.....	1	344 0222	
(Right) 62 10-80	.....	1	346 1548	
(Right) 64-65 07-09-17-19-87-89	.....	1	350 9488	#
(Right) 63 10-80: 64-65 05-06-08-15-16-18-85-86-88 ***(Replaces 448 0252)***	.....	1	348 7994	#
23.117 WEATHERSTRIP, Front Door Glass And Ventilator Division Channel				
61 Thru 63 07-09	.....	2	345 8286	
60 19-29-83-89	.....	2	438 5789	
64-65 07-09-17-19-87-89	.....	2	448 1387	#
ATTACHING PARTS Weatherstrip To Channel				
RIVET, Tubular ..... 61 Thru 63 07-09: 60 19-29-83-89	17.558	10	G135499	NA
RIVET, Tubular 64-65 07-09-17-19-87-89	.....	8	448 1388	#

Copyright 1963 American Motors Corp.

GROUP NO. — DESCRIPTION — YEAR and MODEL	PRIMARY GROUP NO.	PER CAR	PART NO.	CODE
23.118 CHANNEL, Front Door Ventilator				
(Left) 60-61 02-04-06	.....	1	447 8542	
(Left) 60-61 05-08	.....	1	447 8554	
(Left) 62-63 02-04-06	23.116	1	447 9521	
(Left) 62-63 05-08	23.116	1	447 9523	
(Left) 60 15-18-25-28-85-88: 61 10-20-80	.....	1	344 0217	
(Left) 62 10-80 (Note 23.110-1 Type 1)	.....	1	346 1543	
(Left) 62 10-80 (Note 23.110-1 Type 2)	.....	1	348 4053	
(Left) 63 10-80: 64-65 05-06-08-15-16-18-85-86-88	.....	1	448 0249	
(Right) 60-61 02-04-06	.....	1	447 8541	
(Right) 60-61 05-08	.....	1	447 8553	
(Right) 62-63 02-04-06	23.116	1	447 9520	
(Right) 62-63 05-08	23.116	1	447 9522	
(Right) 60 15-18-25-28-85-88: 61 10-20-80	.....	1	344 0216	
(Right) 62 10-80 (Note 23.110-1 Type 1)	.....	1	346 1542	
(Right) 62 10-80 (Note 23.110-1 Type 2)	.....	1	348 4052	
(Right) 63 10-80: 64-65 05-06-08-15-16-18-85-86-88	.....	1	448 0248	
RIVET, Ventilator Upper Pivot				
60 01: 61-62 02-04-05-06-08: 63 01	23.112	2	344 6090	
PIVOT, Front Door Ventilator Upper				
(Left) 63 10-80: 64-65 05-06-08-15-16-18-85-86-88	.....	1	448 0261	
(Left) 64-65 07-09-17-19-87-89	.....	1	350 9501	
(Right) 63 10-80: 64-65 05-06-08-15-16-18-85-86-88	.....	1	448 0260	
(Right) 64-65 07-09-17-19-87-89	.....	1	350 9500	
ATTACHING PARTS Pivot To Channel				
SCREW, Tapping — 63 10-80: 64-65 05-06-08-15-16-18-85-86-88	.....	4	448 0262	
SCREW, Machine — 64-65 07-09-17-19-87-89	.....	4	448 1386	
23.121 HANDLE, Front Door Ventilator Lock				
(Left) 60 01: 61 Thru 63 02-04-05-06-08	.....	1	344 6079	
(Left) 61 Thru 63 07-09	.....	1	436 4907	
(Left) 60 Thru 62 10-20-80	.....	1	342 2887	
(Left) 64-65 01: 63 Thru 65 10-80	.....	1	448 0255	
(Right) 60 01: 61 Thru 63 02-04-05-06-08	.....	1	344 6078	
(Right) 61 Thru 63 07-09	.....	1	436 4908	
(Right) 60 Thru 62 10-20-80	.....	1	342 2888	
(Right) 64-65 01: 63 Thru 65 10-80	.....	1	448 0254	
ATTACHING PARTS Handle To Bracket				
PIN — 60 01: 61 Thru 63 02-04-05-06-08	.....	2	344 6084	
PIN — 61 Thru 63 07-09-10-20-80: 64-65 01-10-80	.....	2	400 0034	
WASHER, Spring — 60 01: 61 Thru 63 02-04-05-06-08	.....	2	344 6083	
WASHER, Spring — 61 Thru 63 07-09	.....	2	436 4906	
WASHER, Spring — 61 Thru 65 10-20-80: 64-65 01 ***(Replaces 448 0256)***	.....	2	400 0043	
BUTTON, Front Door Ventilator Lock Handle Release				
60 Thru 62 10-20-80	.....	2	342 4017	
BUTTON, Front Door Ventilator Lock Handle (Nylon)				
64-65 01: 63 Thru 65 10-80	.....	2	320 4462	

Copyright 1963 American Motors Corp.

GROUP NO. — DESCRIPTION — YEAR and MODEL		PRIMARY GROUP NO.	PER CAR	PART NO.	CODE
SPRING, Front Door Ventilator Lock Handle Button					
60 Thru 62 10-20-80		.....	2	342 4015	
BRACKET KIT, Front Door Ventilator Lock Handle Mounting (Incl. Bracket And Rivets)					
61 Thru 63 07-09		.....	2	447 9190	
(Left) 60 01: 61 Thru 63 02-04-05-06-08		.....	1	447 8749	
(Left) 60 Thru 62 10-20-80		.....	1	447 8704	
(Left) 64-65 01: 63 Thru 65 10-80		.....	1	448 0265	
(Right) 60 01: 61 Thru 63 02-04-05-06-08		.....	1	447 8748	
(Right) 60 Thru 62 10-20-80		.....	1	447 8703	
(Right) 64-65 01: 63 Thru 65 10-80		.....	1	448 0264	
ATTACHING PARTS					
Bracket To Frame					
RIVET, Tubular	60 Thru 65 01-10-20-80	.....	6	344 6089	
23.123 PLATE, Front Door Ventilator Friction Unit					
60 Thru 65 01-10-20-80		.....	2	342 2882	
ATTACHING PARTS					
Plate To Frame					
SPRING.....	60 Thru 65 01-10-20-80	.....	2	435 9017	
WASHER, Fibre.....	60 Thru 64 01-10-20-80	.....	4	400 0044	#
WASHER, Fibre.....	65 01-10-80 ***(Use 400 0044)***	.....	4	400 1426	#
WASHER, Steel.....	60 Thru 63 01	.....	2	344 6093	
WASHER, Steel.....	60 Thru 65 10-20-80: 64-65 01	.....	2	435 9021	
WASHER, Tab.....	60 Thru 62 01	.....	2	344 6094	
WASHER, Tab.....	60 Thru 62 10-20-80	.....	2	435 9022	
NUT, Hexagon.....	60-61 01-10-20-80	.....	2	435 9018	
NUT, Hexagon.....	62 Thru 65 01-10-80	.....	2	400 0238	
23.124 CHANNEL, Front Door Glass And Ventilator Division					
(Left) 60-61 01		.....	1	344 3549	
(Left) 61 Thru 63 07-09		.....	1	447 9189	
(Left) 62-63 02-04-05-06-08		.....	1	348 1753	
(Left) 60 15-18-25-28-85-88: 61 10-20-80		.....	1	342 2927	
(Left) 60 19-29-83-88		.....	1	447 8518	
(Left) 62 10-80 (Note 23.110-1 Type 1)		.....	1	346 1741	
(Left) 62 10-80 (Note 23.110-1 Type 2)		.....	1	348 4061	
(Left) 63 10-80: 64-65 05-06-08-15-16-18-85-86-88		.....	1	448 0251	
(Left) 64-65 07-09-17-19-87-89		.....	1	448 1391	
(Right) 60-61 01		.....	1	344 3548	
(Right) 61 Thru 63 07-09		.....	1	447 9188	
(Right) 62-63 02-04-05-06-08		.....	1	348 1752	
(Right) 60 15-18-25-28-85-88: 61 10-20-80		.....	1	342 2928	
(Right) 60 19-29-83-88		.....	1	447 8517	
(Right) 62 10-80 (Note 23.110-1 Type 1)		.....	1	346 1740	
(Right) 62 10-80 (Note 23.110-1 Type 2)		.....	1	348 4060	
(Right) 63 10-80: 64-65 05-06-08-15-16-18-85-86-88		.....	1	448 0250	
(Right) 64-65 07-09-17-19-87-89		.....	1	448 1390	
ATTACHING PARTS					
Channel To Window Frame					
SCREW, Machine.....	60 01-15-18-25-28-85-88: 61 02-04-05-06-08: 61-62 10-20-80	23.118	2	438 0229	
SCREW, Machine.....	62-63 02-04-05-06-08	23.110	2	346 3738	

Copyright 1963 American Motors Corp.

GROUP NO. — DESCRIPTION — YEAR and MODEL		PRIMARY GROUP NO.	PER CAR	PART NO.	CODE
	Channel To Door Inner Panel (At Belt Line)				
SCREW, Tapping.....	63 Thru 65 01-10-80.....	17.660	4	G161895	NA
	Channel To Ventilator Channel (Upper)				
SCREW, Tapping.....	62-63 02-04-05-06-08: 62 10-80 (Note 23.110-1 Type 2).....	17.648	2	G163718	NA
RIVET, Tubular	64-65 01: 63 Thru 65 10-80	23.121	2	344 6089	
	Channel To Ventilator Channel (Lower)				
BRACKET	62-63 02-04-06	.....	2	348 1980	
BRACKET	62-63 05-08	.....	2	348 9353	
RIVET, Tubular	62 10-80 (Note 23.110-1 Type 2): 63 02-04-05-06-08.....	23.121	4	344 6089	
	Channel To Door				
SCREW, Tapping.....	60 Thru 62 01-10-20-80.....	17.660	4	G161895	NA
STUD.....	60 Thru 62 01: 61 10-20-80 ....*(Replaces 435 0455)*	.....	2	400 0298	
STUD.....	60 15-18-25-28-85-88: 61-62 10-20-80.....*(Replaces 436 7545)*	.....	2	400 0338	
STUD.....	60 19-29-83-89	.....	2	437 3776	
WASHER, Lock.....	60 01: 61 01-10-20-80.....	17.826	2	G454763	NA
WASHER, Lock.....	60 10-20-80: 62 01-10-80.....	17.826	2	G173124	
NUT, Hexagon.....	60 Thru 62 01-10-20-80.....	17.406	2	G120375	
	Channel To Door Inner Panel (Lower)				
STUD.....	63 01	.....	2	400 0298	
STUD.....	63-64 10-80: 64 01.....	.....	2	400 0618	
STUD.....	65 01-10-80	.....	2	400 1439	
WASHER, Lock.....	63 Thru 65 01-10-80.....	17.826	2	G173124	
NUT, Hexagon.....	63 Thru 65 01-10-80.....	17.406	2	G120375	
	BRACKET KIT, Front Door Glass And Ventilator Division Channel Upper Pivot				
(Left) 61 Thru 63 07-09		.....	1	447 9207	
(Right) 61 Thru 63 07-09		.....	1	447 9206	
	SHIM STOCK, Front Door Glass And Ventilator Division Channel Glass Slide (50 Ft. Roll)				
62 Thru 65 01-10-80.....		.....	AR	447 9906	
23.125	**CHANNEL, Front Door Division Channel Glass Slide**				
60 19-29-83-89		.....	2	438 5784	
61 Thru 63 07-09.....		.....	2	345 8282	
(Left) 63 10-80: 64-65 05-06-08-15-16-18-85-86-88 ..... *(Use 448 0251)*		.....	1	448 0455	#
(Left) 64-65 07-09-17-19-87-89		.....	1	448 2325	
(Right) 63 10-80: 64-65 05-06-08-15-16-18-85-86-88 ..... *(Use 448 0250)*		.....	1	448 0454	#
(Right) 64-65 07-09-17-19-87-89		.....	1	448 2324	
	ATTACHING PARTS				
	Channel To Channel				
RIVET, Tubular	61 Thru 63 07-09: 60 19-29-83-89: 63 10-80: 64-65 05-06-08-15-16-18-85-86-88.....	17.558	10	G135499	NA
RIVET, Tubular	64-65 07-09-17-19-87-89 (1/8 x 5/32).....	.....	4	448 1388	
RIVET, Tubular	64-65 07-09-17-19-87-89 (9/64 x 7/32).....	.....	2	448 2326	
RIVET, Tubular	64-65 07-09-17-19-87-89 (.145 x 7/32).....	25.054	1	448 1389	

Copyright 1963 American Motors Corp.

GROUP NO. — DESCRIPTION — YEAR and MODEL	PRIMARY GROUP NO.	PER CAR	PART NO.	CODE
23.150 VENTILATOR, Rear Door (Incl. Clear Glass)				
(Left) 60 15-18-25-28-85-88: 61 10-20-80	.....	1	344 0301	
(Left) 60 19-29-83-89	.....	1	344 0311	
(Left) 62 15-18-85-88 (Note 23.110-1 Type 1)	.....	1	346 1601	
(Left) 62 15-18-85-88 (Note 23.110-1 Type 2)	.....	1	348 4023	
(Right) 60 15-18-25-28-85-88: 61 10-20-80	.....	1	344 0300	
(Right) 60 19-29-83-89	.....	1	344 0310	
(Right) 62 15-18-85-88 (Note 23.110-1 Type 1)	.....	1	346 1600	
(Right) 62 15-18-85-88 (Note 23.110-1 Type 2)	.....	1	348 4022	
ATTACHING PARTS				
Ventilator To Window Frame				
SCREW, Machine..... 60 Thru 62 15-18-25-28-85-88	23.118	4	438 0229	
Ventilator To Door				
SCREW, Tapping..... 60 Thru 62 15-18-25-28-85-88	17.660	4	G161895	NA
SCREW, Machine..... 60 19-29-83-89 *(Replaces 800 0243)*	17.610	4	400 1231	
VENTILATOR, Rear Door (Incl. Solex Glass)				
(Left) 60 15-18-25-28-85-88: 61 10-20-80 *(Order Comp.)*	.....	1	344 0941	
(Left) 62 15-18-85-88 (Note 23.110-1 Type 1)	.....	1	346 1603	
(Left) 62 15-18-85-88 (Note 23.110-1 Type 2)	.....	1	348 4025	
(Right) 60 15-18-25-28-85-88: 61 10-20-80	.....	1	344 0940	
(Right) 62 15-18-85-88 (Note 23.110-1 Type 1)	.....	1	346 1602	
(Right) 62 15-18-85-88 (Note 23.110-1 Type 2)	.....	1	348 4024	
ATTACHING PARTS				
Ventilator To Window Frame				
SCREW, Machine..... 60 Thru 62 15-18-25-28-85-88	23.118	4	438 0229	
Ventilator To Door				
SCREW, Tapping..... 60 Thru 62 15-18-25-28-85-88	17.660	4	G161895	NA
SCREW, Machine..... 60 19-29-83-89 *(Replaces 800 0243)*	17.610	4	400 1231	
23.151 FRAME ASSEMBLY, Rear Door Ventilator (Incl. Clear Glass)				
(Left) 60-61 15-18-25-28-85-88	.....	1	447 8520	
(Left) 60 19-29-83-89	.....	1	447 8524	
(Left) 62 15-18-85-88	.....	1	447 9283	
(Right) 60-61 15-18-25-28-85-88	.....	1	447 8519	
(Right) 60 19-29-83-89	.....	1	447 8523	
(Right) 62 15-18-85-88	.....	1	447 9282	
FRAME ASSEMBLY, Rear Door Ventilator (Incl. Solex Glass)				
(Left) 60-61 15-18-25-28-85-88	.....	1	447 8522	
(Left) 62 15-18-85-88	.....	1	447 9285	
(Right) 60-61 15-18-25-28-85-88	.....	1	447 8521	
(Right) 60 19-29-83-89	.....	1	447 8525	
(Right) 62 15-18-85-88	.....	1	447 9284	

Copyright 1963 American Motors Corp.

GROUP NO. — DESCRIPTION — YEAR and MODEL	PRIMARY GROUP NO.	PER CAR	PART NO.	CODE
23.152 FRAME, Rear Door Ventilator				
(Left) 60-61 15-18-25-28-85-88	.....	1	344 0757	
(Left) 62 15-18-85-88	.....	1	346 1607	
(Right) 60-61 15-18-25-28-85-88	.....	1	344 0756	
(Right) 60 19-29-83-89	.....	1	344 0762	
(Right) 62 15-18-85-88	.....	1	346 1606	
23.153 CHANNEL, Rear Door Ventilator				
(Left) 60-61 15-18-25-28-85-88	.....	1	344 0307	
(Left) 62 15-18-85-88 (Note 23.110-1 Type 1)	.....	1	346 1613	
(Left) 62 15-18-85-88 (Note 23.110-1 Type 2)	.....	1	348 4033	
(Right) 60-61 15-18-25-28-85-88	.....	1	344 0306	
(Right) 62 15-18-85-88 (Note 23.110-1 Type 1)	.....	1	346 1612	
(Right) 62 15-18-85-88 (Note 23.110-1 Type 2)	.....	1	348 4032	
23.154 WEATHERSTRIP, Rear Door Ventilator				
(Left) 60-61 15-18-25-28-85-88	.....	1	344 0303	
(Left) 60 19-29-83-88	.....	1	344 0325	
(Left) 62 15-18-85-88	.....	1	346 1615	
(Right) 60-61 15-18-25-28-85-88	.....	1	344 0302	
(Right) 60 19-29-83-89	.....	1	344 0324	
(Right) 62 15-18-85-88	.....	1	346 1614	
23.160 HANDLE, Rear Door Ventilator Lock				
(Left) 60-61 10-20-80	.....	1	435 9011	
(Left) 62 15-18-85-88	.....	1	341 5384	
(Right) 60-61 10-20-80	.....	1	435 9010	
(Right) 62 15-18-85-88	.....	1	341 5385	
ATTACHING PARTS Handle To Bracket				
PIN 60-61 10-20-80: 62 15-18-85-88	23.121	2	400 0034	
BUTTON, Rear Door Ventilator Lock Handle				
60-61 10-20-80: 62 15-18-85-88	23.121	2	435 9012	
SPRING, Rear Door Ventilator Lock Handle Button				
60-61 10-20-80: 62 15-18-85-88	23.121	2	435 9009	
BRACKET KIT, Rear Door Ventilator Lock Handle (Incl. Bracket And Rivets)				
60-61 10-20-80: 62 15-18-85-88	.....	2	447 8706	
ATTACHING PARTS Bracket To Frame				
RIVET, Tubular 60-61 10-20-80: 62 15-18-85-88	23.121	4	344 6089	
23.163 SCREW, Rear Door Ventilator Friction Unit Tension				
SCREW, Tapping..... 60-61 10-20-80: 62 15-18-85-88	17.664	2	G145131	NA

Copyright 1963 American Motors Corp.

GROUP NO. — DESCRIPTION — YEAR and MODEL	PRIMARY GROUP NO.	PER CAR	PART NO.	CODE
23.165 CHANNEL, Rear Door Glass And Ventilator Division				
(Left) 64-65 05-08	.....	1	354 8735	
(Left) 60 15-18-25-28-85-88 (Note 23.165-1)	.....	1	344 0323	
(Left) 60 15-18-25-28-85-88 (Note 23.165-2)	.....	1	344 0321	
(Left) 60 19-29-83-89 (Note 23.165-2)	.....	1	447 8528	
(Left) 61 15-18-25-28-85-88 (Note 23.165-1)	.....	1	345 1915	
(Left) 61 15-18-25-28-85-88 (Note 23.165-2)	.....	1	345 1913	
(Left) 62 15-18-85-88 (Note 23.165-1)	.....	1	346 1627	
(Left) 62 15-18-85-88 (Note 23.110-1 Type 1 And Note 23.165-2)	.....	1	346 1625	#
(Left) 62 15-18-85-88 (Note 23.110-1 Type 2 And Note 23.165-2)	.....	1	348 4027	
(Left) 63-64 15-18-85-88	.....	1	348 5331	
(Left) 65 15-18-85-88	.....	1	351 5867	
(Right) 64-65 05-08	.....	1	354 8734	
(Right) 60 15-18-25-28-85-88 (Note 23.165-1)	.....	1	344 0322	
(Right) 60 15-18-25-28-85-88 (Note 23.165-2)	.....	1	344 0320	
(Right) 60 19-29-83-89 (Note 23.165-2)	.....	1	447 8527	
(Right) 61 10-20-80 (Note 23.165-1)	.....	1	345 1914	
(Right) 61 10-20-80 (Note 23.165-2)	.....	1	345 1912	
(Right) 62 15-18-85-88 (Note 23.165-1)	.....	1	346 1626	
(Right) 62 15-18-85-88 (Note 23.110-1 Type 1 And Note 23.165-2)	.....	1	346 1624	
(Right) 62 15-18-85-88 (Note 23.110-1 Type 2 And Note 23.165-2)	.....	1	348 4026	
(Right) 63-64 15-18-85-88	.....	1	348 5330	
(Right) 65 15-18-85-88	.....	1	351 5866	
ATTACHING PARTS				
Channel To Window Frame				
SCREW, Machine	60 Thru 65 15-18-25-28-85-88	23.118	2	438 0229
SCREW, Machine	64 05-08	23.110	2	400 0717
NUT, Speed	63 Thru 65 15-18-85-88: 64-65 05-08	23.165	2	400 0535
Channel To Door				
SCREW, Tapping	60-61 10-20-80: 62 15-18-85-88	17.660	4	G161895 NA
STUD	60-61 10-20-80: 62 15-18-85-88	23.124	2	400 0338
WASHER, Lock	60-61 10-20-80: 62 15-18-85-88	17.826	2	G173124
NUT, Hexagon	60-61 10-20-80: 62 15-18-85-88	17.406	2	G120375
Channel To Door Inner Panel (At Belt Line)				
SCREW, Tapping	64-65 05-08: 64 15-18	.....	2	400 1441
SCREW, Tapping	63 15-18: 64 85-88	17.654	2	G162488 NA
SCREW, Tapping	65 15-18-85-88	.....	2	400 1449
WASHER, Finish	64 85-88 (In Crash Pad)	.....	2	400 1401
WASHER, Finish	65 85-88 (In Crash Pad)	.....	2	G173207
Channel To Door Inner Panel (Lower)				
STUD	63-64 15-18-85-88: 64 05-08	23.124	2	400 0618
STUD	65 05-08-15-18-85-88	.....	2	400 1439
WASHER, Lock	64-65 05-08: 63 Thru 65 15-18-85-88	17.826	2	G173124
NUT, Hexagon	64-65 05-08: 63 Thru 65 15-18-85-88	17.406	2	G120375
Channel To Ventilator Channel (Upper)				
RIVET, Tubular	62 15-18-85-88 (Note 23.110-1 Type 2)	17.558	4	G138025 NA
Channel To Ventilator Channel (Lower)				
RIVET, Tubular	62 15-18-85-88 (Note 23.110-1 Type 2)	17.558	4	G142938 NA

NOTE 23.165-1: Used on cars not equipped with Ventilator.
NOTE 23.165-2: Used on cars equipped with Ventilator.

Copyright 1963 American Motors Corp.

GROUP NO. — DESCRIPTION — YEAR and MODEL	PRIMARY GROUP NO.	PER CAR	PART NO.	CODE
23.166 WEATHERSTRIP, Rear Door Division Channel				
60 19-29-83-89	.....	2	344 0299	
ATTACHING PARTS Weatherstrip To Channel				
RIVET, Tubular 60 19-29-83-89	17.558	6	G118129	NA
23.167 CHANNEL, Rear Door Division Channel Glass Slide				
60 19-29-83-89	.....	2	344 0313	
ATTACHING PARTS Channel To Channel				
RIVET, Tubular 60 19-29-83-89	17.558	6	G118129	NA
23.182 RETAINER, Rear Door Ash Receiver				
60 Thru 65 05-08: 60-61 10-20-80: 62 Thru 65 15-18-85-88	.....	2	437 1452	#
ATTACHING PARTS Retainer To Door				
SCREW, Tapping..... 60 Thru 63 05-08: 60-61 10-20-80: 62-63 15-18-85-88	17.669	4	G457002	NA
SCREW, Tapping..... 64-65 05-08-15-18-85-88	17.660	4	G161815	NA#
PLATE, Rear Door Ash Receiver Retainer				
63 Thru 65 15-18-85-88: 64-65 05-08	.....	2	347 2207	#
ATTACHING PARTS Plate To Door				
SCREW, Tapping..... 63 Thru 65 15-18-85-88: 64-65 05-08	17.669	4	G457002	NA#
23.184 BOX, Rear Door Ash Receiver				
60 Thru 65 05-08: 60-61 10-20-80: 62 Thru 65 15-18-85-88	.....	2	311 484	#
23.186 PLATE, Rear Door Ash Receiver Cover (In Prime)				
60-61 05-08-10-20-80	.....	2	447 8679	
62 Thru 65 05-08-15-18-85-88 *(Replaces 348 6440)*	.....	2	349 5530	#
23.188 KNOB, Rear Door Ash Receiver				
60-61 05-08-10-20-80	.....	2	436 8178	
62 Thru 65 05-08: 62-63 15-18-85-88	.....	2	346 1785	#
64-65 15-18-85-88	.....	2	352 0374	#
ATTACHING PARTS Knob To Box				
SCREW, Machine..... 60-61 05-08-10-20-80	17.616	2	G443642	NA
SCREW, Machine..... 62 Thru 65 05-08-15-18-85-88	17.616	4	G443642	NA#
23.190 RECEIVER ASSEMBLY, Tailgate Ash				
60 Thru 62 18-28-83-88 (WVT)	.....	1	510 8725	

Copyright 1963 American Motors Corp.

GROUP NO. — DESCRIPTION — YEAR and MODEL	PRIMARY GROUP NO.	PER CAR	PART NO.	CODE
23.195 PANEL, Front Door Trim Panel Kickpad				
(Left) 61 05	.....	1	346 0751	
(Left) 61 07	.....	1	346 0753	
(Left) 62 06-07 (400): 63 07-09 (440)	.....	1	347 1545	
(Left) 62 05-08 (400)	.....	1	347 1547	
(Left) 61 15-25	.....	1	346 0741	
(Left) 61 85	.....	1	347 0935	
(Left) 62 15-18-85-88 (400)	.....	1	347 1539	
(Left) 62 16-86 (400)	.....	1	347 1537	
(Right) 61 05	.....	1	346 0750	
(Right) 61 07	.....	1	346 0752	
(Right) 62 06-07 (400): 63 07-09 (440)	.....	1	347 1544	
(Right) 62 05-08 (400)	.....	1	347 1546	
(Right) 61 15-25	.....	1	346 0740	
(Right) 61 85	.....	1	347 0934	
(Right) 62 15-18-85-88 (400)	.....	1	347 1538	
(Right) 62 16-86 (400)	.....	1	347 1536	
ATTACHING PARTS Panel To Door				
SCREW ..... 61 05 (12 Req.): 61 07 (14 Req.): 62 06-07 (4 Req.): 63 07-09 (4 Req.): 62 05-08 (4 Req.): 61 15-25 (10 Req.): 62 15-18-85-88 (10 Req.): 62 16-86 (12 Req.): 61 85 (10 Req.)	29.019	AR	439 5412	
PANEL, Rear Door Trim Panel Kickpad				
(Left) 61 05	.....	1	346 0755	
(Left) 62 05-08 (400)	.....	1	347 1549	
(Left) 61 15-25	.....	1	346 0743	
(Left) 61 85	.....	1	347 5069	
(Left) 62 15-18-85-88 (400)	.....	1	347 1541	
(Right) 61 05	.....	1	346 0754	
(Right) 62 05-08 (400)	.....	1	347 1548	
(Right) 61 15-25	.....	1	346 0742	
(Right) 61 85	.....	1	347 5068	
(Right) 62 15-18-85-88 (400)	.....	1	347 1540	
ATTACHING PARTS Panel To Door				
SCREW 61-62 05-08: 61 15-25-85: 62 15-18-85-88	29.019	8	439 5412	
23.198 MOULDING, Front Door Trim Panel				
61 05	.....	2	346 0776	
61 07	.....	2	346 0777	
62 06-07 (400-Upper)	.....	2	346 2153	
62 06-07 (400-Lower)	.....	2	346 0777	
62 05-08 (400-Upper)	.....	2	346 2150	
62 05-08 (400-Lower)	.....	2	346 0776	
64-65 05 (Lower): 64-65 08 (330-Lower)	.....	2	349 3578	#
63 06-07-09 (440)	.....	2	346 0777	
64-65 06 (330): 64-65 07-09	.....	4	349 3265	#
63 05-08 (440)	.....	2	346 0776	

NOTE 23.198-1: Use with Master Switch.
NOTE 23.198-2: Use with Individual Switch.

Copyright 1963 American Motors Corp.

GROUP NO. — DESCRIPTION — YEAR and MODEL	PRIMARY GROUP NO.	PER CAR	PART NO.	CODE
64-65 05-08 (330-Upper)(440-Upper)	.....	2	349 3248	
60 10-20-80 (Custom)	.....	2	342 2372	
61 15-25-85	.....	2	346 0778	
62 15-18 (400-Upper)	.....	2	346 2160	
62 15-18 (400-Center)	.....	2	346 2160	
62 15-18 (400-Lower)	.....	2	346 0778	
62 16 (400-Upper)	.....	2	346 2166	
62 16 (400-Center)	.....	2	346 2166	
62 16 (400-Lower)	.....	2	346 2808	
63 Thru 65 15-18 (770-Upper-Except Marlin)	.....	2	349 3248	#
64-65 15-18 (770-Lower-Except Marlin)	.....	2	349 3578	#
63 15-18 (770-Left-Lower)	.....	1	349 3579	
63 15-18 (770-Right-Lower)	.....	1	349 3578	
64 19 (Typhoon-Bottom)	.....	2	349 3265	
63-64 16-19 (770-Except Typhoon): 65 17-19 (43-1/2" Long-Except Marlin)	.....	4	349 3265	#
62 85-88 (400-Left-Upper)	.....	1	346 2795	
62 85-88 (400-Right-Upper)	.....	1	346 2794	
62 85-88 (400-Center)	.....	2	346 2798	
62 85-88 (400-Lower)	.....	2	346 0778	
62 86 (400-Left-Upper)	.....	1	346 2797	
62 86 (400-Right-Upper)	.....	1	346 2796	
62 86 (400-Center)	.....	2	346 2799	
62 86 (400-Lower)	.....	2	346 2808	
63 80 (LER-990-Left-Front)	.....	1	349 3137	
63 80 (LER-990-Right-Front)	.....	1	349 3136	
63 80 (WER-990-Left-Front)	.....	1	349 3139	
63 80 (WER-990-Right-Front)	.....	1	349 3138	
63 85-88 (LER-990-Left-Rear)	.....	1	349 3141	
63 85-88 (LER-990-Right-Rear)	.....	1	349 3140	
63 85-88 (WER-990-Left-Rear-Note 23.198-1)	.....	1	349 3143	
63 85-88 (WER-990-Left-Rear-Note 23.198-2)	.....	1	348 5375	
63 85-88 (WER-990-Right-Rear)	.....	1	349 3142	
63 86 (LER-990-Left-Rear)	.....	1	349 3147	
63 86 (LER-990-Right-Rear)	.....	1	349 3146	
63 86 (WER-990-Left-Rear)	.....	1	349 3149	
63 86 (WER-990-Right-Rear)	.....	1	349 3148	
64-65 85-88 (Left-Lower-32" Long)	.....	1	350 1519	
64-65 85-88 (Right-Lower-32" Long)	.....	1	350 1518	
64 85-88 (Overlay-21-15/16" Long)	.....	4	350 1924	
64 85-88 (Upper-35" Long)	.....	2	350 2991	
64 85-88-89 (LER-Intermediate-Front-7-13/16" Long)	.....	2	352 0268	
64 85-88 (LER-Intermediate-Rear-24-5/8" Long)	.....	2	352 0238	
64 85-88 (WER-Intermediate-Rear-Right Side-30-7/64" Long)	.....	1	352 0270	
64 85-88 (WER-Intermediate-Rear-Left Side-28-7/32" Long)	.....	1	352 0271	
64 85-88-89 (WER-Intermediate-Front-2" Long)	.....	2	352 0272	
64 89 (Upper-43-1/64" Long): 64 19 (Typhoon-Upper)	.....	2	350 2306	
64-65 87-89 (Lower-42-7/8" Long): 65 59 (Marlin-Lower-42-7/8" Long)	.....	2	350 2364	#
64 89 (Overlay-23-3/4" Long)	.....	4	350 2544	
64 89 (LER-Intermediate-Rear-33" Long)	.....	2	352 0250	
64 89 (WER-Intermediate-Rear-38-15/32" Long-Right Side)	.....	1	352 0254	
64 89 (WER-Intermediate-Left Side-36-5/8" Long)	.....	1	352 0255	
64 85-88-89 (Overlay-End-4 Req.): 65 85-87-88-89 (Overlay-End-2 Req.): 65 59 (Marlin-Overlay-End-2 Req.)	.....	AR	352 0381	#
65 86 (880-Upper)	.....	2	349 3265	
65 87-89 (Upper And Lower-Overlay-38-3/4" Long): 65 59 (Marlin-Overlay-38-3/4" Long)	.....	4	353 1392	#
65 85-88 (Upper-Overlay-29-3/4" Long)	.....	2	353 1524	
65 85-88 (Lower-Overlay-29-1/8" Long)	.....	2	353 1525	
65 85-88 (880-Upper-35" Long)	.....	2	349 3248	
65 85-88 (Upper And Lower Insert-Curved-20-1/2" Long)	.....	4	353 1526	
65 87-89 (Upper And Lower Insert-Curved-30-1/2" Long): 65 59 (Marlin-30-1/2" Long)	.....	4	353 1694	#

Copyright 1963 American Motors Corp.

GROUP NO. — DESCRIPTION — YEAR and MODEL	PRIMARY GROUP NO.	PER CAR	PART NO.	CODE
MOULDING, Rear Door Trim Panel				
61 05 ..... *(Replaces 346 0773)*	.....	2	346 0772	
62 05-08 (400-Front-Upper)	.....	2	346 2151	
62 05-08 (400-Rear-Upper)	.....	2	346 2152	
62 05-08 (400-Lower)	.....	2	346 2766	
63 05-08 (440)	.....	2	346 2766	
64-65 05-08 (330-Upper)(440-Upper)	.....	2	349 3262	
60 10-20-80 (Custom)	.....	2	342 2382	
64-65 05 (Lower): 64-65 08 (330-Lower)	.....	2	349 3580	
61 15-25 ..... *(Replaces 346 0775)*	.....	2	346 0774	
62 15-18 (400-Left-Upper-Front)	.....	1	346 2163	
62 15-18 (400-Right-Upper-Front)	.....	1	346 2162	
62 15-18 (400-Left-Upper-Rear)	.....	1	346 2165	
62 15-18 (400-Right-Upper-Rear)	.....	1	346 2164	
62 15-18 (400-Center)	.....	2	346 2769	
62 15-18 (400-Lower)	.....	2	346 2816	
63 Thru 65 15-18 (770-Upper) ..... *(Replaces 349 3263)*	.....	2	349 3262	
63 Thru 65 15-18 (770-Lower) ..... *(Replaces 349 3581)*	.....	2	349 3580	
61 85 (Left)	.....	1	347 5141	
61 85 (Right)	.....	1	347 5140	
62 85-88 (400-Upper-Front)	.....	2	346 2800	
62 85-88 (400-Upper-Rear)	.....	2	346 2793	
62 85-88 (400-Center-Left-Front)	.....	1	346 2803	
62 85-88 (400-Center-Right-Front)	.....	1	346 2802	
62 85-88 (400-Center-Left-Center)	.....	1	346 2805	
62 85-88 (400-Center-Right-Center)	.....	1	346 2804	
62 85-88 (400-Center-Left-Rear)	.....	1	347 6611	
62 85-88 (400-Center-Right-Rear)	.....	1	347 6610	
62 85-88 (400-Lower)	.....	2	346 2816	
63 85-88 (LER-990-Upper-Left)	.....	1	349 3159	
63 85-88 (LER-990-Upper-Right)	.....	1	349 3158	
63 85-88 (LER-990-Front-Left)	.....	1	349 3151	
63 85-88 (LER-990-Front-Right)	.....	1	349 3150	
63 85-88 (WER-990-Front-Left)	.....	1	349 3153	
63 85-88 (WER-990-Front-Right)	.....	1	349 3152	
63 85-88 (990-Rear-Upper-Left)	.....	1	349 3157	
63 85-88 (990-Rear-Upper-Right)	.....	1	349 3156	
63 85-88 (990-Rear-Lower-Left)	.....	1	349 3155	
63 85-88 (990-Rear-Lower-Right)	.....	1	349 3154	
64-65 85-88 (Left-Lower-23-7/8" Long)	.....	1	350 1695	
64-65 85-88 (Right-Lower-23-7/8" Long)	.....	1	350 1694	
64 85-88 (Upper-31-1/4" Long)	.....	2	350 2994	
64 85-88 (WER-7-1/4" Long)	.....	2	350 8840	
64 85-88 (LER-Intermediate-Rear-9-15/16" Long)	.....	2	352 0276	
64 85-88 (LER-Intermediate-Front-3-13/16" Long)	.....	2	352 0278	
64 85-88 (LER-Intermediate-Center-9-1/2" Long)	.....	2	352 0279	
64 85-88 (WER-Intermediate-Front-15-21/32" Long)	.....	2	352 0282	
64 85-88 (Overlay-Lower-20-1/4" Long)	.....	2	351 9157	
64 85-88 (Overlay-Upper-21-7/8" Long)	.....	2	351 9156	
64 85-88 (Front End Of Overlay)	.....	2	352 0381	
65 85-88 (Left-LER-Upper-28-15/16" Long)	.....	1	353 1291	
65 85-88 (Right-LER-Upper-28-15/16" Long)	.....	1	353 1290	
65 85-88 (Upper-Overlay-27-3/8" Long)	.....	2	353 1528	
65 85-88 (Lower-Overlay-25-7/8" Long)	.....	2	353 1530	
65 85-88 (Left-Upper-Curved-28-15/16" Long)	.....	1	353 1533	
65 85-88 (Right-Upper-Curved-28-15/16" Long)	.....	1	353 1532	
65 85-88 (Left-Lower-Curved-23-1/8" Long)	.....	1	353 1535	
65 85-88 (Right-Lower-Curved-23-1/8" Long)	.....	1	353 1534	
65 85-88 (880-Upper-31 1/2" Long)	.....	2	349 3262	
RETAINER, Door Trim Panel Overlay End Moulding				
64 85-88-89 (6 Req.): 65 85-87-88-89 (2 Req.): 65 59 (Marlin-2 Req.)	.....	AR	350 2301	#

Copyright 1963 American Motors Corp.

GROUP NO. — DESCRIPTION — YEAR and MODEL	PRIMARY GROUP NO.	PER CAR	PART NO.	CODE
CLIP, Moulding Joint				
63 80 (990)	.....	4	349 4997	
23.203 OVERLAY, Front Door Trim Panel				
64 85-88	.....	2	352 0274	
64 89	.....	2	352 0248	
65 59 (Marlin)	.....	2	353 1394	#
OVERLAY, Rear Door Trim Panel				
(Left) 64 85-88	.....	1	350 1927	
(Right) 64 85-88	.....	1	350 1926	
23.205 MOULDING, Tailgate Carpet				
64-65 88 (990-Lower)	.....	1	350 8557	
ATTACHING PARTS Moulding To Tailgate				
SCREW, Tapping..... 64-65 88 (990)	17.669	5	G457002	NA
STRIP, Tailgate Carpet Skid				
64-65 88 (990-LVT)	.....	5	351 9696	
23.210 PAD, Front Door Crash				
(T-471) 64 19 (Typhoon)(Left)	.....	1	352 0003	
(T-471) 64 19 (Typhoon)(Right)	.....	1	352 0002	
(T-491) 64 85-88 (Left)	.....	1	352 0141	
(T-491) 64 85-88 (Right)	.....	1	352 0140	
(T-491) 64 89 (Left)	.....	1	352 0003	
(T-491) 64 89 (Right)	.....	1	352 0002	
(T-492) 64 85-88 (Left)	.....	1	352 0141	
(T-492) 64 85-88 (Right)	.....	1	352 0140	
(T-492) 64 89 (Left)	.....	1	352 0003	
(T-492) 64 89 (Right)	.....	1	352 0002	
(T-493) 64 85-88 (Left)	.....	1	352 0143	
(T-493) 64 85-88 (Right)	.....	1	352 0142	
(T-493) 64 89 (Left)	.....	1	352 0005	
(T-493) 64 89 (Right)	.....	1	352 0004	
(T-494) 64 85-88 (Left)	.....	1	352 0145	
(T-494) 64 85-88 (Right)	.....	1	352 0144	
(T-494) 64 89 (Left)	.....	1	352 0007	
(T-494) 64 89 (Right)	.....	1	352 0006	
(T-495) 64 85-88 (Left)	.....	1	352 0147	
(T-495) 64 85-88 (Right)	.....	1	352 0146	
(T-495) 64 89 (Left)	.....	1	352 0009	
(T-495) 64 89 (Right)	.....	1	352 0008	
(T-496) 64 85-88 (Left)	.....	1	352 0149	
(T-496) 64 85-88 (Right)	.....	1	352 0148	
(T-496) 64 89 (Left)	.....	1	352 0011	
(T-496) 64 89 (Right)	.....	1	352 0010	
(T-497) 64 85-88 (Left)	.....	1	352 0151	
(T-497) 64 85-88 (Right)	.....	1	352 0150	
(T-497) 64 89 (Left)	.....	1	352 0013	
(T-497) 64 89 (Right)	.....	1	352 0012	

Copyright 1963 American Motors Corp.

GROUP NO. — DESCRIPTION — YEAR and MODEL	PRIMARY GROUP NO.	PER CAR	PART NO.	CODE
(T-498) 64 85-88 (Left)	.....	1	352 0153	
(T-498) 64 85-88 (Right)	.....	1	352 0152	
(T-498) 64 89 (Left)	.....	1	352 0015	
(T-498) 64 89 (Right)	.....	1	352 0014	
(T-591) 65 85-88 (Left)	.....	1	353 1043	
(T-591) 65 85-88 (Right)	.....	1	353 1042	
(T-591) 65 87-89 (Left): 65 59 (Marlin-Left)	.....	1	353 1083	#
(T-591) 65 87-89 (Right): 65 59 (Marlin-Right)	.....	1	353 1082	#
(T-593) 65 85-88 (Left)	.....	1	353 1045	
(T-593) 65 85-88 (Right)	.....	1	353 1044	
(T-593) 65 87-89 (Left)	.....	1	353 1085	
(T-593) 65 87-89 (Right)	.....	1	353 1084	
(T-594) 65 85-88 (Left)	.....	1	353 1047	
(T-594) 65 85-88 (Right)	.....	1	353 1046	
(T-594) 65 87-89 (Left)	.....	1	353 1087	
(T-594) 65 87-89 (Right)	.....	1	353 1086	
(T-595) 65 85-88 (Left)	.....	1	353 1051	
(T-595) 65 85-88 (Right)	.....	1	353 1050	
(T-595) 65 87-89 (Left): 65 59 (Marlin-Left)	.....	1	353 1091	#
(T-595) 65 87-89 (Right): 65 59 (Marlin-Right)	.....	1	353 1090	#
(T-596) 65 85-88 (Left)	.....	1	353 1053	
(T-596) 65 85-88 (Right)	.....	1	353 1052	
(T-596) 65 87-89 (Left)	.....	1	353 1093	
(T-596) 65 87-89 (Right)	.....	1	353 1092	
(T-597) 65 85-88 (Left)	.....	1	353 1049	
(T-597) 65 85-88 (Right)	.....	1	353 1048	
(T-597) 65 87-89 (Left): 65 59 (Marlin-Left)	.....	1	353 1089	#
(T-597) 65 87-89 (Right): 65 59 (Marlin-Right)	.....	1	353 1088	#
(T-598) 65 85-88 (Left)	.....	1	353 1043	
(T-598) 65 85-88 (Right)	.....	1	353 1042	
(T-598) 65 87-89 (Left): 65 59 (Marlin-Left)	.....	1	353 1083	#
(T-598) 65 87-89 (Right): 65 59 (Marlin-Right)	.....	1	353 1082	#

PAD, Rear Door Crash

(T-491) 64 85-88 (Left)	.....	1	351 9599	
(T-491) 64 85-88 (Right)	.....	1	351 9598	
(T-492) 64 85-88 (Left)	.....	1	351 9599	
(T-492) 64 85-88 (Right)	.....	1	351 9598	
(T-493) 64 85-88 (Left)	.....	1	351 9601	
(T-493) 64 85-88 (Right)	.....	1	351 9600	
(T-494) 64 85-88 (Left)	.....	1	351 9603	
(T-494) 64 85-88 (Right)	.....	1	351 9602	
(T-495) 64 85-88 (Left)	.....	1	351 9605	
(T-495) 64 85-88 (Right)	.....	1	351 9604	
(T-496) 64 85-88 (Left)	.....	1	351 9607	
(T-496) 64 85-88 (Right)	.....	1	351 9606	
(T-497) 64 85-88 (Left)	.....	1	351 9609	
(T-497) 64 85-88 (Right)	.....	1	351 9608	
(T-498) 64 85-88 (Left)	.....	1	351 9611	
(T-498) 64 85-88 (Right)	.....	1	351 9610	
(T-591) 65 85-88 (Left)	.....	1	353 1063	
(T-591) 65 85-88 (Right)	.....	1	353 1062	
(T-593) 65 85-88 (Left)	.....	1	353 1065	
(T-593) 65 85-88 (Right)	.....	1	353 1064	
(T-594) 65 85-88 (Left)	.....	1	353 1067	
(T-594) 65 85-88 (Right)	.....	1	353 1066	
(T-595) 65 85-88 (Left)	.....	1	353 1071	
(T-595) 65 85-88 (Right)	.....	1	353 1070	

Copyright 1963 American Motors Corp.

GROUP NO. — DESCRIPTION — YEAR and MODEL	PRIMARY GROUP NO.	PER CAR	PART NO.	CODE
(T-596) 65 85-88 (Left)	.....	1	353 1073	
(T-596) 65 85-88 (Right)	.....	1	353 1072	
(T-597) 65 85-88 (Left)	.....	1	353 1069	
(T-597) 65 85-88 (Right)	.....	1	353 1068	
(T-598) 65 85-88 (Left)	.....	1	353 1063	
(T-598) 65 85-88 (Right)	.....	1	353 1062	

23.300 REGULATOR, Front Door Electric Operated Window

(Left) 60 15-18-25-28-85-88 (Note 23.300-1 Type 1)	.....	1	447 8402	
(Left) 60 10-20-80 (Note 23.300-1 Type 2): 61 10-20-80	.....	1	447 8652	
(Left) 62 15-18-85-88	.....	1	447 9497	
(Left) 62 16-86	.....	1	447 9501	
(Left) 63 Thru 65 15-18-85-88	.....	1	448 0429	
(Left) 64-65 17-19-87-89	.....	1	448 1563	#
(Left) 63 Thru 65 16-86	.....	1	448 0433	
(Right) 60 15-18-25-28-85-88 (Note 23.300-1 Type 1)	.....	1	447 8403	
(Right) 60 10-20-80 (Note 23.300-1 Type 2): 61 10-20-80	.....	1	447 8651	
(Right) 62 15-18-85-88	.....	1	447 9496	
(Right) 62 16-86	.....	1	447 9500	
(Right) 63 Thru 65 15-18-85-88	.....	1	448 0428	
(Right) 63 Thru 65 16-86	.....	1	448 0432	
(Right) 64-65 17-19-87-89	.....	1	448 1562	#

ATTACHING PARTS
Regulator To Door

SCREW, Machine.....	60 10-20-80 (Note 23.300-1 Type 2)	.....	8	438 3373	
SCREW, Machine.....	60 15-18-25-28-85-88 (3/8" Long-Note 23.300-1 Type 1)	.....	16	438 3373	
SCREW, Machine.....	60 15-18-25-28-85-88 (1/2" Long-Note 23.300-1 Type 1)	23.098	2	342 9712	
SCREW, Machine.....	61 10-20-80 (8 Req.): 62 10-80 (10 Req.)	23.056	AR	400 0075	
SCREW, Machine.....	63 Thru 65 10-80	23.098	8	400 0572	

SPRING, Front Door Electric Operated Window Regulator Balance

63 Thru 65 10-80	.....	2	448 0426	

BUSHING, Front Door Electric Operated Window Regulator Pinion Shaft

60 15-18-25-28-85-88 (Note 23.300-1 Type 1)	.....	2	447 6023	

STOP, Front Door Electric Operated Window Regulator

60 10-20-80 (Note 23.300-1 Type 2): 61-62 10-20-80	.....	2	345 7900	

ATTACHING PARTS
Stop To Regulator

WASHER, Lock.....	60 10-20-80 (Note 23.300-1 Type 2): 61-62 10-20-80	17.826	2	G173124	NA
NUT, Hexagon.....	60 10-20-80 (Note 23.300-1 Type 2): 61-62 10-20-80	17.406	2	G120375	

NOTE 23.300-1: Two Types of Regulators were installed on Models 60 15-18-25-28-85-88. They can be identified as follows:
Type 1: Regulator Assembly is equipped with Leece Neville Motor.
Type 2: Regulator Assembly is equipped with American Bosch Motor. On Models 60 19-29-83-89, only the Type 2 Regulators were installed.

Copyright 1963 American Motors Corp.

GROUP NO. — DESCRIPTION — YEAR and MODEL	PRIMARY GROUP NO.	PER CAR	PART NO.	CODE
BUMPER, Front Door Electric Operated Window Regulator				
60 10-20-80 (Note 23.300-1 Type 2): 61 10-20-80	25.054	2	438 6610	
CROSSARM, Front Door Electric Operated Window Regulator				
(Left) 62 10-80	23.098	1	438 5945	
(Right) 62 10-80	23.098	1	438 5946	
ATTACHING PARTS				
Crossarm To Door				
SCREW, Machine..... 62 10-80	23.056	8	400 0075	
Crossarm To Regulator				
CLIP..... 62 10-80	25.030	2	400 0323	
WASHER, Spring..... 62 10-80	25.030	2	400 0324	
WASHER, Fibre..... 62 10-80	25.030	2	400 0326	
23.305 REGULATOR, Rear Door Electric Operated Window				
(Left) 60 15-18-25-28-85-88 (Note 23.300-1 Type 1)...(Incl. Transmission And Coupling)	.....	1	447 5729	
(Left) 60 10-20-80 (Note 23.300-1 Type 2): 61 10-20-80	.....	1	447 8654	
(Left) 62 15-18-85-88	.....	1	447 9499	
(Left) 63 Thru 65 15-18-85-88	.....	1	448 0431	
(Right) 60 15-18-25-28-85-88 (Note 23.300-1 Type 1)	.....	1	447 5730	
(Right) 60 10-20-80 (Note 23.300-1 Type 2): 61 10-20-80	.....	1	447 8653	
(Right) 62 15-18-85-88	.....	1	447 9498	
(Right) 63 Thru 65 15-18-85-88	.....	1	448 0430	
ATTACHING PARTS				
Regulator To Door				
SCREW, Machine..... 60 10-20-80 (3/8" Long)	.....	8	438 3373	
SCREW, Machine..... 60 10-20-80 (1/2" Long)	.....	4	342 9712	
SCREW, Machine..... 61-62 15-18-25-28-85-88 (12 Req.)	23.056	12	400 0075	
SCREW, Machine..... 63 Thru 65 15-18-85-88	23.098	16	400 0572	
BUMPER, Rear Door Electric Operated Window Regulator				
60-61 10-20-80	25.054	2	438 6610	
62 15-18-85-88	29.154	2	346 4461	
SPRING, Rear Door Electric Operated Window Regulator Balance				
63 Thru 65 15-18-85-88	.....	2	448 0426	
STUD, Rear Door Electric Operated Window Regulator Stop				
61 15-18-25-28-85-88	25.052	2	437 3776	
ATTACHING PARTS				
Stud To Regulator				
WASHER, Plain..... 61 15-18-25-28-85-88 ..... *(Replaces 800 0451)*	17.814	2	400 0486	
NUT, Hexagon..... 61 15-18-25-28-85-88 ..... *(Replaces 400 0508)*	17.412	2	G271172	
BRACKET, Rear Door Electric Operated Window Regulator Stop				
62 15-18-85-88	.....	2	346 6973	

Copyright 1963 American Motors Corp.

GROUP NO. — DESCRIPTION — YEAR and MODEL		PRIMARY GROUP NO.	PER CAR	PART NO.	CODE
ATTACHING PARTS					
Bracket To Regulator					
SCREW, Machine.....	62 15-18-85-88 ..... *(Replaces 800 0110)*	17.598	2	400 1008	
WASHER, Plain.....	62 15-18-85-88 ..... *(Replaces 800 0451)*	17.814	2	400 0486	
WASHER, Lock.....	62 15-18-85-88	17.826	2	G173124	NA
NUT, Hexagon.....	62 15-18-85-88	17.406	2	G120375	
ARM, Rear Door Electric Operated Window Regulator (Incl. Pivot Plate)					
63-64 15-18-85-88 ..... *(Replaces 448 0425)*		.....	2	448 0424	
(Left) 65 15-18-85-88		.....	1	448 2835	
(Right) 65 15-18-85-88		.....	1	448 2834	
ATTACHING PARTS					
Pivot Plate To Door					
SCREW, Machine.....	63-64 15-18-85-88	23.056	8	400 0075	
Arm To Regulator					
RETAINER.....	63 Thru 65 15-18-85-88.....	25.030	2	400 0323	
23.306 REGULATOR, Tailgate Electric Operated Window					
64-65 08: 63 Thru 65 18-88 (Use With 9 Tooth Pinion)...(Less Pinion) ..... *(Replaces 448 0804)(Use 448 2903)*		.....	1	448 0803	#
64-65 08-18-88 (Use With 6 Tooth Pinion)...(Incl. Pinion).....		.....	1	448 2903	
ATTACHING PARTS					
Regulator To Tailgate Support					
SCREW, Machine.....	63 Thru 65 18-88 (5/8" Long): 64-65 08 (5/8" Long)	23.040	3	400 0413	
SCREW, Machine.....	64-65 08-18-88 (7/16" Long).....	23.039	1	400 0501	
NUT, Clinch	63 Thru 65 18-88: 64-65 08	17.440	4	G127619	NA
SPRING, Tailgate Electric Operated Window Regulator Balance					
64-65 08: 63 Thru 65 18-88		.....	2	448 0802	
23.307 COUPLING, Rear Door Electric Operated Window Regulator Motor To Transmission					
60 15-18-25-28-85-88 (Note 23.300-1 Type 1).....		.....	2	447 5724	
23.308 HOUSING, Front Door Electric Operated Window Regulator Transmission					
(Left) 60 10-20-80 (Note 23.300-1 Type 2): 61 10-20-80.....		.....	1	344 1491	
(Left) 62 10-80		.....	1	447 9505	
(Left) 63 Thru 65 15-16-18-85-86-88		.....	1	448 0419	
(Left) 64-65 17-19-87-89		.....	1	448 0418	
(Right) 60 10-20-80 (Note 23.300-1 Type 2): 61 10-20-80.....		.....	1	344 1492	
(Right) 62 10-80		.....	1	447 9504	
(Right) 63 Thru 65 15-16-18-85-86-88		.....	1	448 0418	
(Right) 64-65 17-19-87-89		.....	1	448 0419	
ATTACHING PARTS					
Housing To Regulator					
BOLT, Hexagon	60-61 10-20-80 (1-1/8" Long).....	17.038	2	G106321	NA
BOLT, Hexagon	60-61 10-20-80 (3/4" Long).....	17.038	4	G100109	NA
BOLT, Hexagon	62 10-80 (7/8" Long).....	17.038	4	G180021	NA
BOLT, Hexagon	62 10-80 (2 Req.-1-1/8" Long): 63 Thru 65 10-80 (6 Req.)	17.038	AR	G180023	NA
WASHER, Plain.....	60-61 10-20-80.....	17.814	6	G118773	NA
WASHER, Plain.....	62 10-80.....	17.814	6	G120392	NA
WASHER, Lock.....	60-61 10-20-80.....	17.820	6	G113114	NA
WASHER, Lock.....	62-63 10-80.....	17.820	6	G121637	NA
NUT, Hexagon.....	60 Thru 65 10-20-80.....	17.406	6	G120375	

Copyright 1963 American Motors Corp.

GROUP NO. — DESCRIPTION — YEAR and MODEL	PRIMARY GROUP NO.	PER CAR	PART NO.	CODE
HOUSING, Rear Door Electric Operated Window Regulator Transmission				
(Left) 60 15-18-25-28-85-88 (Note 23.300-1 Type 1)	23.303	1	447 5761	
(Left) 60 10-20-80 (Note 23.300-1 Type 2): 61 10-20-80	.....	1	344 1493	
(Left) 62 15-18-85-88	.....	1	447 9511	
(Left) 63 Thru 65 15-18-85-88	.....	1	448 0419	
(Right) 60 15-18-25-28-85-88 (Note 23.300-1 Type 1)	23.303	1	447 5762	
(Right) 60 10-20-80 (Note 23.300-1 Type 2): 61 10-20-80	.....	1	344 1494	
(Right) 62 15-18-85-88	.....	1	447 9510	
(Right) 63 Thru 65 15-18-85-88	.....	1	448 0418	
ATTACHING PARTS Housing To Regulator				
BOLT, Hexagon ..... 60-61 10-20-80 (5/8" Long): 62 15-18-85-88 (5/8" Long)	17.038	2	G106319	NA
BOLT, Hexagon ..... 60-61 10-20-80 (3/4" Long)	17.038	2	G100109	NA
BOLT, Hexagon ..... 60-61 10-20-80 (1-1/8" Long)	17.038	2	G106321	NA
BOLT, Hexagon ..... 62 15-18-85-88 (7/8" Long-2 Req.)	17.038	2	G180021	NA
BOLT, Hexagon ..... 62 15-18-85-88 (2 Req.-1-1/8" Long): 63 Thru 65 15-18-85-88 (6 Req.)	17.038	AR	G180023	NA
WASHER, Plain..... 60-61 10-20-80	17.814	4	G118773	NA
WASHER, Plain..... 62 15-18-85-88	17.814	6	G120392	NA
WASHER, Lock 60-61 10-20-80	17.820	6	G113114	NA
WASHER, Lock ..... 62 Thru 65 10-80	17.820	6	G121637	NA
NUT, Hexagon..... 60 Thru 65 10-20-80	17.406	6	G120375	
HOUSING, Tailgate Electric Operated Window Regulator Transmission				
64-65 08: 63 Thru 65 18-88	.....	1	448 0795	
ATTACHING PARTS Housing To Regulator				
BOLT, Hexagon ..... 64-65 08: 63 Thru 65 18-88	17.038	3	G180023	NA
WASHER, Lock ..... 64-65 08: 63 Thru 65 18-88	17.820	3	G121637	NA
COVER, Front Door Electric Operated Window Regulator Transmission Housing				
60 15-18-25-28-85-88 (Note 23.300-1 Type 1)	.....	2	447 6030	
ATTACHING PARTS Cover To Housing				
INSULATOR..... 60 15-18-25-28-85-88 (Note 23.300-1 Type 1)	.....	2	447 6031	
PLATE, Tapping ..... 60 15-18-25-28-85-88 (Note 23.300-1 Type 1)	.....	2	447 6032	
SCREW, Machine..... 60 15-18-25-28-85-88 (Note 23.300-1 Type 1)	17.602	6	G132148	NA
WASHER, Lock ..... 60 15-18-25-28-85-88 (Note 23.300-1 Type 1)	17.820	6	G106497	NA
COVER, Rear Door Electric Operated Window Regulator Transmission Housing				
60 15-18-25-28-85-88 (Note 23.300-1 Type 1)	23.303	2	447 5763	
ATTACHING PARTS Cover To Housing				
SCREW, Machine..... 60 15-18-25-28-85-88 (Note 23.300-1 Type 1)	23.303	6	447 5769	
PINION, Front Door Electric Operated Window Regulator				
60 15-18-25-28-85-88 (Note 23.300-1 Type 1)	.....	2	447 6027	
60 10-20-80 (Note 23.300-1 Type 2): 61 10-20-80	.....	2	344 1499	
62 Thru 65 10-80	.....	2	447 9507	

Copyright 1963 American Motors Corp.

GROUP NO. — DESCRIPTION — YEAR and MODEL	PRIMARY GROUP NO.	PER CAR	PART NO.	CODE
PINION, Rear Door Electric Operated Window Regulator				
60 15-18-25-28-85-88 (Note 23.300-1 Type 1)	23.303	2	447 5765	
60 10-20-80 (Note 23.300-1 Type 2): 61 15-18-23-28-85-88	.....	2	344 1499	
62 Thru 65 15-18-85-88	.....	2	447 9507	
PINION, Tailgate Electric Operated Window Regulator				
63-64 18-88: 64 08 (9 Tooth)	.....	1	448 0796	
64-65 08-18-88 (6 Tooth)	.....	1	448 2261	
BEARING, Door Electric Operated Window Regulator Pinion Shaft End				
60 10-20-80 (Note 23.300-1 Type 2): 61 Thru 65 10-20-80	.....	4	344 1522	
SUPPORT ASSEMBLY, Tailgate Electric Operated Window Regulator Pinion Shaft				
63 Thru 65 18-88: 64-65 08...(Incl. Bearing)	.....	1	448 1432	#
ATTACHING PARTS Support To Regulator				
BOLT, Hexagon ..... 64-65 08: 63 Thru 65 18-88	17.038	2	G180023	NA
WASHER, Lock ..... 64-65 08: 63 Thru 65 18-88	17.820	2	G121637	NA
BEARING, Tailgate Electric Operated Window Regulator Pinion Shaft End				
63 Thru 65 18-88: 64-65 08	.....	1	344 1522	
RETAINER, Door Electric Operated Window Regulator Pinion Grease				
60 10-20-80 (Note 23.300-1 Type 2): 61 10-20-80	.....	4	344 1505	
62 Thru 65 10-80	.....	4	447 9506	
RETAINER, Tailgate Electric Operated Window Regulator Pinion Grease				
63 Thru 65 18-88: 64-65 08	.....	1	447 9506	
GEAR, Front Door Electric Operated Window Regulator Pinion				
60 15-18-25-28-85-88 (Note 23.300-1 Type 1)	.....	2	447 6029	
62 Thru 65 10-80	.....	2	447 9508	
GEAR, Rear Door Electric Operated Window Regulator Pinion				
60 15-18-25-28-85-88 (Note 23.300-1 Type 1)	23.303	2	447 5764	
62 Thru 65 15-18-85-88	.....	2	447 9508	
GEAR, Tailgate Electric Operated Window Regulator Pinion				
63 Thru 65 18-88: 64-65 08	.....	1	447 9508	
SPACER, Front Door Electric Operated Window Regulator Pinion Gear				
60 15-18-25-28-85-88 (Note 23.300-1 Type 1)	.....	2	447 6028	
RETAINER, Rear Door Electric Operated Window Regulator Pinion Gear				
60 15-18-25-28-85-88 (Note 23.300-1 Type 1)	.....	2	447 5768	
WASHER, Rear Door Electric Operated Window Regulator Pinion Gear				
60 15-18-25-28-85-88 (Note 23.300-1 Type 1)	23.303	2	447 5766	

Copyright 1963 American Motors Corp.

GROUP NO. — DESCRIPTION — YEAR and MODEL	PRIMARY GROUP NO.	PER CAR	PART NO.	CODE
WORM, Door Electric Operated Window Regulator				
60 10-20-80 (Note 23.300-1 Type 2)...(Incl. Coupling): 61 10-20-80...(Incl. Coupling)	.....	4	344 1506	
62 10-80...(Incl. Coupling)	.....	4	447 9509	
63 Thru 65 10-80...(Less Coupling)	.....	4	448 0420	
WORM, Tailgate Electric Operated Window Regulator				
63 Thru 65 10-80...(Less Coupling): 64-65 08...(Less Coupling)	.....	4	448 0420	
COUPLING, Door Electric Operated Window Regulator Worm				
63 Thru 65 10-80	.....	4	448 0421	
COUPLING, Tailgate Electric Operated Window Regulator Worm				
63 Thru 65 18-88: 64-65 08	.....	1	448 0421	#
RETAINER, Door Electric Operated Window Regulator Worm Grease				
60 10-20-80 (Note 23.300-1 Type 2): 61 Thru 65 10-20-80	.....	4	344 1542	
RETAINER, Tailgate Electric Operated Window Regulator Worm Grease				
63 Thru 65 18-88: 64-65 08	.....	1	344 1542	
SPACER, Door Electric Operated Window Regulator Worm End				
60 10-20-80 (Note 23.300-1 Type 2): 61 Thru 65 10-20-80	.....	4	344 1543	
SPACER, Tailgate Electric Operated Regulator Worm End				
63 Thru 65 18-88: 64-65 08	.....	1	344 1543	
SCREW, Door Electric Operated Window Regulator Worm Set				
60 10-20-80 (Note 23.300-1 Type 2): 61 Thru 65 10-20-80	.....	4	344 1544	
SCREW, Tailgate Electric Operated Regulator Worm Set				
63 Thru 65 18-88: 64-65 08	.....	1	344 1544	
PLATE, Door Electric Window Regulator Transmission Pinion Retainer				
63 Thru 65 10-80	.....	4	448 0422	
NUT, Door Electric Operated Window Regulator Worm Set Screw				
60 10-20-80 (Note 23.300-1 Type 2): 61 Thru 65 10-20-80	.....	4	344 1545	
NUT, Tailgate Operated Window Regulator Worm Set Screw				
63 Thru 65 18-88: 64-65 08	.....	1	344 1545	
23.310 MOTOR, Front Door Electric Operated Window Regulator				
60 10-20-80 (Note 23.300-1 Type 2): 61-62 10-20-80 ***(Replaces 447 8663)***	.....	2	447 9512	
63 Thru 65 15-16-18-85-86-88	.....	2	448 0423	
64-65 17-19-87-89	.....	2	448 1560	#
(Left) 60 15-18-25-28-85-88 (Note 23.300-1 Type 1)	.....	1	447 8355	
(Right) 60 15-18-25-28-85-88 (Note 23.300-1 Type 1)	.....	1	447 8356	

Copyright 1963 American Motors Corp.

GROUP NO. — DESCRIPTION — YEAR and MODEL	PRIMARY GROUP NO.	PER CAR	PART NO.	CODE
ATTACHING PARTS				
Motor To Transmission Housing				
SCREW, Machine..... 60 10-20-80 (Note 23.300-1 Type 2): 61-62				
10-20-80: 64-65 19-89	.....	4	344 1546	
SCREW, Machine..... 63 Thru 65 15-16-18-85-86-88.....	17.602	4	G132124	NA
WASHER, Lock..... 60 10-20-80 (Note 23.300-1 Type 2): 61 Thru 63				
10-20-80: 64 15-16-18-85-88	17.820	4	G131183	NA
MOTOR, Rear Door Electric Operated Window Regulator				
60 15-18-25-28-85-88 (Note 23.300-1 Type 1).....	.....	2	447 7318	
60 10-20-80 (Note 23.300-1 Type 2): 61-62 10-20-80 ..... *(Replaces 447 8663)*	.....	2	447 9512	
63-64 15-18-85-88: 65 15-18-85-88 (Use With 15 Amp. Breaker).....	.....	2	448 0423	#
65 15-18-85-88 (Use With 20 Amp. Breaker)	.....	2	353 0348	#
ATTACHING PARTS				
Motor To Transmission Housing				
GROMMET ..... 60 15-18-25-28-85-88 (Note 23.300-1 Type 1).....	12.060	4	310 5702	
WASHER ..... 60 15-18-25-28-85-88 (Note 23.300-1 Type 1).....	24.205	8	447 5738	
SCREW, Machine..... 60 10-20-80 (Note 23.300-1 Type 2): 61-62				
15-18-25-28-85-88.....	.....	4	344 1546	
SCREW, Machine..... 63 Thru 65 15-18-85-88.....	17.602	4	G132124	NA
WASHER, Lock..... 60 10-20-80 (Note 23.300-1 Type 2): 61 Thru 65				
15-18-25-28-85-88.....	17.820	4	G131183	NA
MOTOR, Tailgate Electric Operated Window Regulator				
64-65 08: 63 Thru 65 18-88	.....	1	448 0797	
ATTACHING PARTS				
Motor To Transmission Housing				
SCREW, Machine..... 64-65 08: 63 Thru 65 18-88	17.602	2	G132124	NA
WASHER, Lock..... 64-65 08: 63 Thru 65 18-88	17.820	2	G131183	NA
PAD, Front Door Electric Operated Window Regulator Motor Anti-Rattle				
60 15-18-25-28-85-88 (Note 23.300-1 Type 1).....	.....	2	343 0171	
63 Thru 65 10-80.....	.....	2	351 0140	
PAD, Rear Door Electric Operated Window Regulator Motor Anti-Rattle				
60 15-18-25-28-85-88 (Note 23.300-1 Type 1)..... *(Replaces 343 0804)*	.....	2	343 0171	
PAD, Tailgate Electric Operated Window Regulator Motor Anti-Rattle				
64-65 08: 63 Thru 65 18-88	.....	1	351 0518	
23.320 HARNESS, Door Electric Operated Window Regulator Wiring (Complete)				
60 15-18-25-28-85-88 (Note 23.300-1 Type 1).....	.....	1	343 0802	
60 10-20-80 (Note 23.300-1 Type 2): 61-62 10-20-80	.....	1	344 1557	
63 15-18-85-88	.....	1	350 3250	
64 15-18-85-88 (With Electric Regulator On Front And Rear Doors).....	.....	1	317 2480	
65 15-18-85-88 (LHD-With Electric Regulators On Front And Rear Doors)	.....	1	317 6546	
63 16-86	.....	1	350 3251	
64 16: 64 15-18-85-88 (With Electric Regulator On Front Doors Only).....	.....	1	317 2482	
65 10-80 (LHD-With Electric Regulator On Front Doors Only)	.....	1	317 6545	
64 19-89	.....	1	317 2481	
65 19-89 (LHD).....	.....	1	317 6547	
65 17-87 (LHD).....	.....	1	318 0321	

Copyright 1963 American Motors Corp.

GROUP NO. — DESCRIPTION — YEAR and MODEL	PRIMARY GROUP NO.	PER CAR	PART NO.	CODE
HARNESS, Tailgate Electric Operated Window Regulator Wiring				
64 08 (Instrument Panel To Tailgate)	.....	1	317 2488	
65 08 (Instrument Panel To Tailgate)	.....	1	317 6548	
64-65 08 (In Tailgate)	.....	1	317 2489	
63 18-88 (LVT-In Tailgate)	.....	1	349 0423	
64 18-88 (LVT-In Tailgate)	.....	1	317 3359	
65 18-88 (LVT-In Tailgate)	.....	1	317 9373	
63 18-88 (LVT-Instrument Panel To Tailgate)	.....	1	349 0425	
64 18-88 (LVT-Instrument Panel To Tailgate)	.....	1	317 3358	
65 18-88 (LHD-LVT-Instrument Panel To Tailgate)	.....	1	317 6549	
63 18-88 (WVT)	.....	1	349 0424	
64-65 18-88 (WVT)	.....	1	317 3360	
ATTACHING PARTS				
Harness to Tailgate				
CLIP 63-64 18-88	.....	1	400 0825	
Harness To Body				
FASTENER 64 08	3.165	2	400 0305	
Harness To Cowl Vent Air Chamber				
CLIP 64-65 10-80	3.165	5	400 0553	
SCREW 64-65 10-80	.....	5	400 0616	
WIRE, Tailgate Electric Window Regulator (Ignition Switch To Circuit Breaker)				
64 08 (Accessory Side)	.....	1	317 1131	
63-64 18-88 (Accessory Side)	.....	1	350 5347	
64 08 (Battery Side)	.....	1	317 1134	
63-64 18-88 (LVT-Battery Side)	.....	1	350 5349	
65 08 (LHD): 65 18-88 (LVT-Battery Side)	.....	1	317 6542	
65 08 (LHD): 65 18-88 (Accessory Side)	.....	1	317 6543	
WIRE, Tailgate Electric Window Regulator (Instrument Panel Switch To Circuit Breaker)				
64 08	.....	1	317 3300	
63-64 18-88	.....	1	350 5348	
65 08-18-88	.....	1	317 6544	
ATTACHING PARTS				
Wire To Breaker				
WASHER, Lock 64 08	.....	4	G131096	NA
NUT, Hexagon 64 08	.....	4	G120614	NA
CLIP, Door Electric Operated Window Regulator Wiring Harness				
60 10-20-80 (To Dash)	5.040	2	312 3848	
61 10-20-80 (To Dash)	3.210	2	312 3849	
61-62 10-20-80 (To Rear Door)	3.192	2	47 740	
64 10-80 (To Dash)	3.165	5	400 0553	
64 10-80 (Front Door)	13.440	2	400 0443	
ATTACHING PARTS				
Clip To Dash Panel				
SCREW, Tapping 60-61 10-20-80	17.671	2	800 0093	NA
Clip To Front Door				
SCREW, Tapping 64 10-80	13.017	2	400 0616	
NUT, Speed 64 10-80	23.110	2	400 0196	
Clip To Rear Door				
SCREW, Tapping 61 10-20-80	17.669	2	800 0272	NA
SCREW, Tapping 62 10-80	17.669	2	G457002	NA

Copyright 1963 American Motors Corp.

GROUP NO. — DESCRIPTION — YEAR and MODEL	PRIMARY GROUP NO.	PER CAR	PART NO.	CODE
TUBING, Rear Door Electric Operated Window Regulator Wiring Harness				
60 15-18-25-28-85-88 (Note 23.300-1 Type 1).....*(Replaces 343 0276)*	13.115	2	320 2248	
GROMMET, Door Electric Operated Window Regulator Wiring Harness				
60 10-20-80 (Note 23.300-1 Type 2-In Front Pillar): 61-62 10-20-80 (In Front Pillar): 63 Thru 65 10-80 (In Front Door).....*(Replaces 344 1473)*	.....	2	400 0094	
60 Thru 62 10-20-80 (In Center Pillar): 63 Thru 65 10-80 (In Rear Door) .....*(Replaces 437 7679)*	.....	2	400 0092	
FERRULE, Front Door Electric Operated Window Regulator Wiring Harness				
60 10-20-80 (Note 23.300-1 Type 2): 61-62 10-20-80	.....	2	344 1589	
63-64 10-80	.....	2	348 7935	
(Left) 65 10-80	.....	1	351 7051	
(Right) 65 10-80	.....	1	351 7050	
ATTACHING PARTS — Ferrule To Door				
SCREW, Tapping..... 60 10-20-80 (Note 23.300-1 Type 2): 61-62 10-20-80.....	17.660	4	G161753	NA
SCREW, Tapping..... 63 Thru 65 10-80.....	17.660	2	G161860	NA
FERRULE, Rear Door Electric Operated Window Regulator Wiring Harness				
60 Thru 62 10-20-80.....	.....	2	437 7678	
63 Thru 65 15-18-85-88.....	.....	2	348 7889	
ATTACHING PARTS — Ferrule To Door				
SCREW, Tapping..... 63 Thru 65 15-18-85-88.....	17.660	2	G161860	NA
SLEEVE, Rear Door Electric Operated Window Regulator Wiring Harness				
60 Thru 62 10-20-80.....	.....	2	437 7677	
23.325 BREAKER, Door Electric Operated Window Regulator Circuit				
60 15-18-25-28-85-88 (Note 23.300-1 Type 1).....	3.154	2	439 0679	
60 Thru 64 10-20-80 (15 Amp-On Doors)	.....	4	344 1432	#
63 10-80 (30 Amp-On Fuse Panel).....	3.154	1	439 0679	
64-65 10-80 (On Dash).....	.....	1	317 1130	
(Front Door) 65 10-80 (15 Amps.)	.....	2	344 1432	#
(Rear Door) 65 15-18-85-88 (15 Amps.).....	.....	2	344 1432	#
(Rear Door) 65 15-18-85-88 (20 Amps.).....	.....	2	353 0349	#
ATTACHING PARTS — Breaker To Dash				
CLIP..... 60 15-18-25-28-85-88.....	3.154	2	439 0686	
SCREW, Tapping..... 60 15-18-25-28-85-88.....	17.669	2	800 0272	NA
SCREW, Tapping..... 64-65 10-80.....	13.017	1	400 0616	
Breaker To Door				
SCREW, Tapping..... 60 Thru 65 10-20-80.....	17.660	4	G161895	NA

Copyright 1963 American Motors Corp.

GROUP NO. — DESCRIPTION — YEAR and MODEL	PRIMARY GROUP NO.	PER CAR	PART NO.	CODE
BREAKER, Tailgate Electric Operated Window Regulator Circuit				
63 Thru 65 18-88 (WVT-1 Req.)(LVT-2 Req.): 64-65 08 (2 Req.)	.....	AR	349 0464	
ATTACHING PARTS				
Breaker To Clutch And Brake Pedal Bracket				
SCREW, Tapping..... 64-65 08	17.660	2	G161897	NA
NUT, Hexagon..... 63 Thru 65 18-88 (LVT-4 Req.)(WVT-2 Req.): 64-65 08 (4 Req.)	2.050	AR	345 8271	
23.330 SWITCH ASSEMBLY, Door Electric Operated Window Regulator Control (Incl. Housing)				
(Master) 60 15-18-25-28-85-88 (Note 23.300-1 Type 1)	.....	1	341 1581	
(Individual) 60 15-18-25-28-85-88 (Note 23.300-1 Type 1)	.....	3	341 1582	
ATTACHING PARTS				
Master Switch To Housing				
SPRING..... 60 15-18-25-28-85-88 (Note 23.300-1 Type 1)	.....	4	447 8430	
Individual Switch To Housing				
SPRING..... 60 15-18-25-28-85-88 (Note 23.300-1 Type 1)	.....	6	447 8430	
SWITCH, Door Electric Operated Window Regulator Control (Less Housing)				
60 10-20-80 (Note 23.300-1 Type 2)	.....	7	344 1566	
(Gray) 61 10-20-80	.....	7	345 5214	
(Black) 61 Thru 65 10-20-80	.....	7	346 6086	
ATTACHING PARTS				
Master Switch To Housing				
SPRING (Center)..... 60 10-20-80 (Note 23.300-1 Type 2): 61 Thru 63 10-20-80	.....	4	437 7104	
SPRING..... 60 10-20-80 (Note 23.300-1 Type 2): 61 Thru 65 10-20-80	24.220	4	437 7109	
Individual Switch To Housing				
SPRING..... 60 10-20-80 (Note 23.300-1 Type 2): 61 Thru 65 10-20-80	24.220	6	437 7109	
SWITCH, Tailgate Electric Operated Window Regulator Control				
63 Thru 65 18-88 (On Instrument Panel): 64-65 08 (On Instrument Panel)	.....	1	346 6086	
63 Thru 65 18-88 (LVT-In Tailgate): 64-65 08 (In Tailgate)	.....	1	448 0808	
ATTACHING PARTS				
Switch To Instrument Panel Escutcheon				
SPRING..... 64-65 08: 63 Thru 65 18-88	24.220	2	437 7109	
Switch To Bracket				
NUT, Hexagon..... 64-65 08: 63 Thru 65 18-88 (LVT)	.....	1	448 0809	
HOUSING, Electric Operated Window Regulator Control				
(Master) 64-65 10-80	.....	1	352 0812	
(Master) 60 10-20-80 (Note 23.300-1 Type 2): 61 Thru 63 10-20-80	.....	1	437 7103	
(Individual) 60 10-20-80 (Note 23.300-1 Type 2): 61 Thru 63 10-20-80	.....	3	437 7107	
(Individual) 64-65 10-80	.....	3	352 0816	

Copyright 1963 American Motors Corp.

GROUP NO. — DESCRIPTION — YEAR and MODEL	PRIMARY GROUP NO.	PER CAR	PART NO.	CODE
PLATE, Electric Operated Window Regulator Control Switch Mounting				
(Master) 64-65 10-80	.....	1	352 0813	#
(Master) 60 15-18-25-28-85-88 (Note 23.300-1 Type 1)	.....	1	531 0093	
(Master) 60 10-20-80 (Note 23.300-1 Type 2): 61 Thru 63 10-20-80	.....	1	437 7105	
(Individual) 60 15-18-25-28-85-88 (Note 23.300-1 Type 1)	.....	3	531 0095	
(Individual) 60 10-20-80 (Note 23.300-1 Type 2): 61 Thru 63 10-20-80	.....	3	437 7110	
(Individual) 64-65 10-80	.....	3	352 0817	#
SWITCH, Door Electric Operated Window Regulator Safety				
64-65 10-80	.....	1	352 0811	#
BAR, Electric Operated Window Regulator Control Master Switch Bus				
60 10-20-80 (Note 23.300-1 Type 2): 61 Thru 63 10-20-80	.....	1	344 4471	
64-65 10-80	.....	1	448 2398	#
ATTACHING PARTS Bus Bar To Master Switch				
SCREW, Machine..... 60 10-20-80 (Note 23.300-1 Type 2): 61 Thru 65 10-20-80	24.220	4	437 7578	#
WATERDAM, Electric Operated Window Regulator Control Switch				
60 15-18-25-28-85-88 (Note 23.300-1 Type 1): 61 Thru 65 10-20-80	.....	4	438 2105	#
ESCUTCHEON, Tailgate Electric Operated Window Switch				
63 Thru 65 18-88 (On Instrument Panel): 64-65 08 (On Instrument Panel)	.....	1	349 0432	#
63-64 18-88 (LVT-On Tailgate)	.....	1	349 0426	
64-65 08 (On Tailgate)	.....	1	350 9336	#
65 18-88 (LVT-On Tailgate)	.....	1	351 6957	#
ATTACHING PARTS Escutcheon To Tailgate				
NUT, Hexagon..... 63 Thru 65 18-88 (LVT): 64-65 08	25.052	2	439 0742	#
BRACKET, Tailgate Electric Operated Window Control Switch Mounting				
63 Thru 65 18-88 (LVT-In Tailgate): 64-65 08 (In Tailgate)	.....	1	349 0430	#
ATTACHING PARTS Bracket To Tailgate Support				
SCREW, Machine..... 64-65 08: 63 Thru 65 18-88 (LVT)	17.610	2	G451271	NA#
LINK, Tailgate Electric Operated Window Control Switch To Lock				
63-64 18-88 (LVT)	.....	1	349 0445	
64-65 08	.....	1	350 9528	#
65 18-88 (LVT)	.....	1	351 6956	#
ATTACHING PARTS Link To Switch				
CLIP..... 63 18-88 (LVT)	.....	1	400 0652	
CLIP..... 64-65 08-18-88 (LVT)	.....	1	400 0672	#
Link To Lock Cylinder				
NUT, Speed..... 63 Thru 65 18-88 (LVT): 64-65 08	23.070	1	400 0494	#

Copyright 1963 American Motors Corp.

GROUP NO. — DESCRIPTION — YEAR and MODEL	PRIMARY GROUP NO.	PER CAR	PART NO.	CODE
LEVER, Tailgate Electric Operated Window Control Switch				
64-65 08: 63 Thru 65 18-88 (LVT)	.....	1	448 0810	#
ATTACHING PARTS Lever To Switch				
PIN, Spring ..... 63 Thru 65 18-88 (LVT): 64-65 08	17.472	1	G274306	NA#
23.335 SWITCH, Tailgate Electric Operated Window Regulator Control Safety				
63 Thru 65 18-88 (LVT-In Rear Auxiliary Floor Panel): 64-65 08 (In Rear Auxiliary Floor Panel)	.....	1	349 0422	#
ATTACHING PARTS Switch To Floor Panel				
WASHER, Lock ..... 64-65 08: 63 Thru 65 18-88 (LVT)	17.824	1	G131718	NA#
NUT, Hexagon ..... 64-65 08: 63 Thru 65 18-88 (LVT)	.....	1	400 0827	#

Copyright 1963 American Motors Corp.

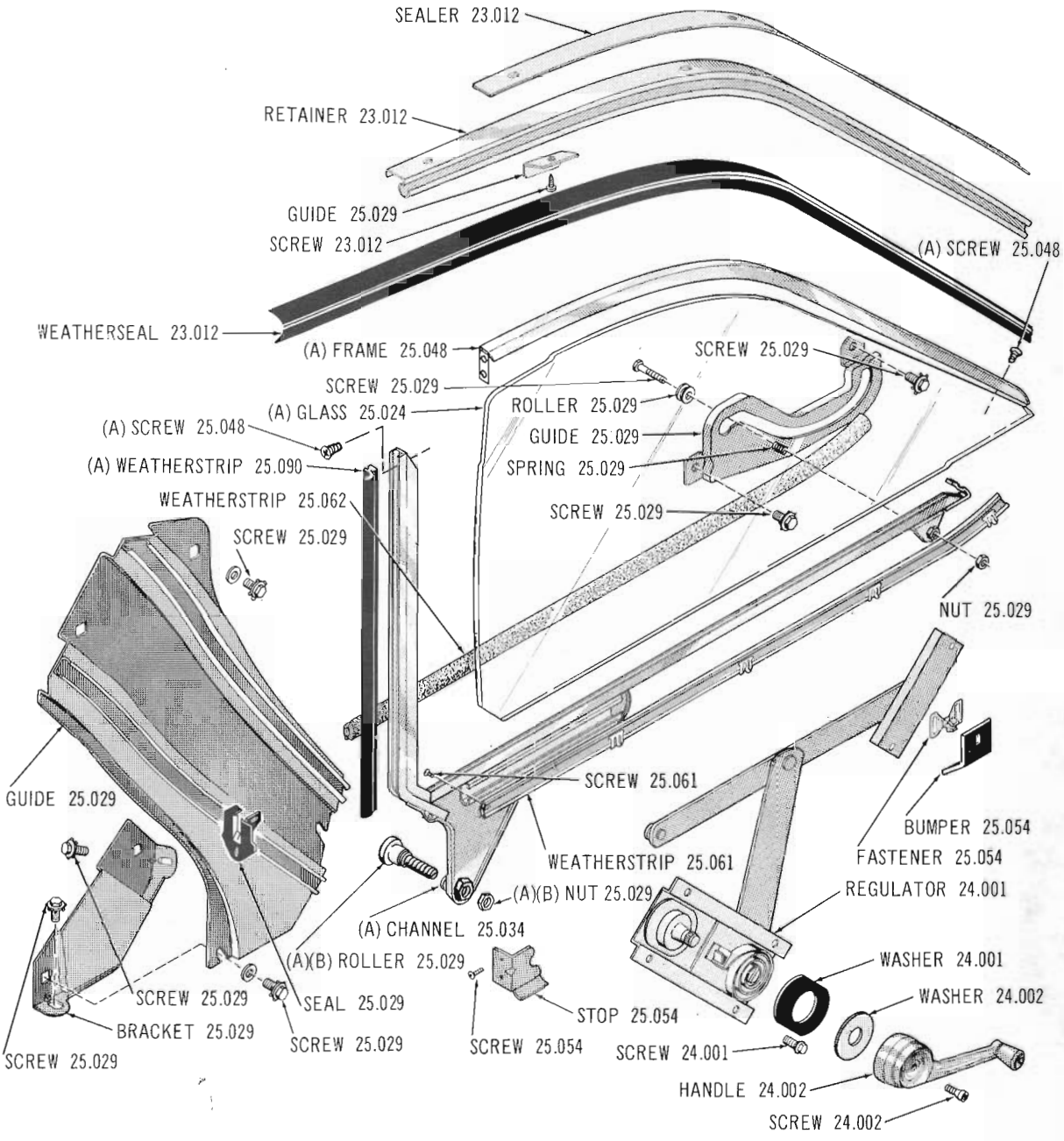

(A) Part of GLASS ASSY. 25.029
(B) Part of CHANNEL ASSY. 25.034

1654

REAR QUARTER LOWERING GLASS AND CHANNEL 64-65 09-19-89 (Except Marlin)

Copyright 1963 American Motors Corp.

Copyright 1963 American Motors Corp.

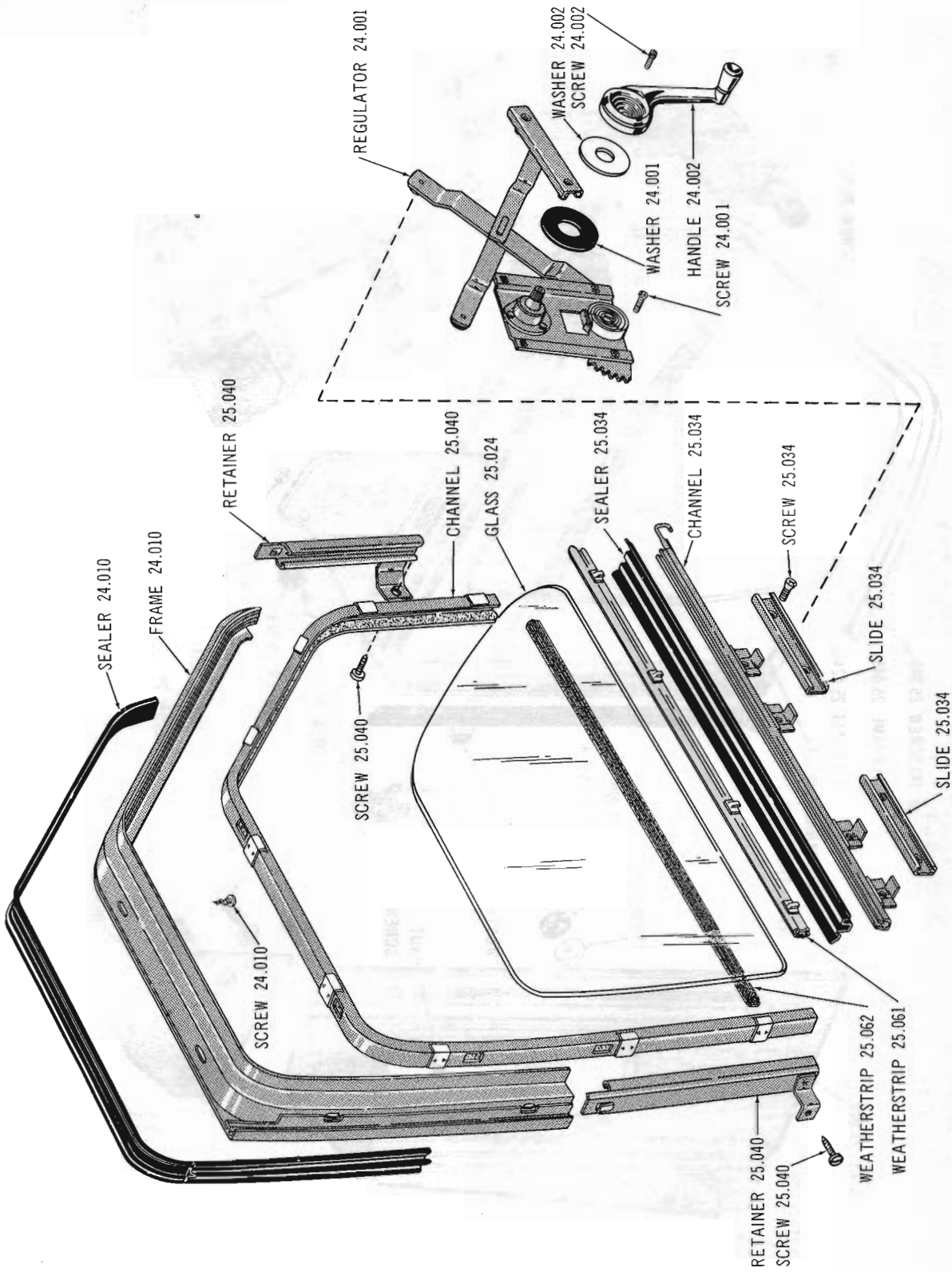

REAR QUARTER LOWERING GLASS AND CHANNELS 64-65 06: 63 thru Current 16-86 (LER)

Copyright 1963 American Motors Corp.

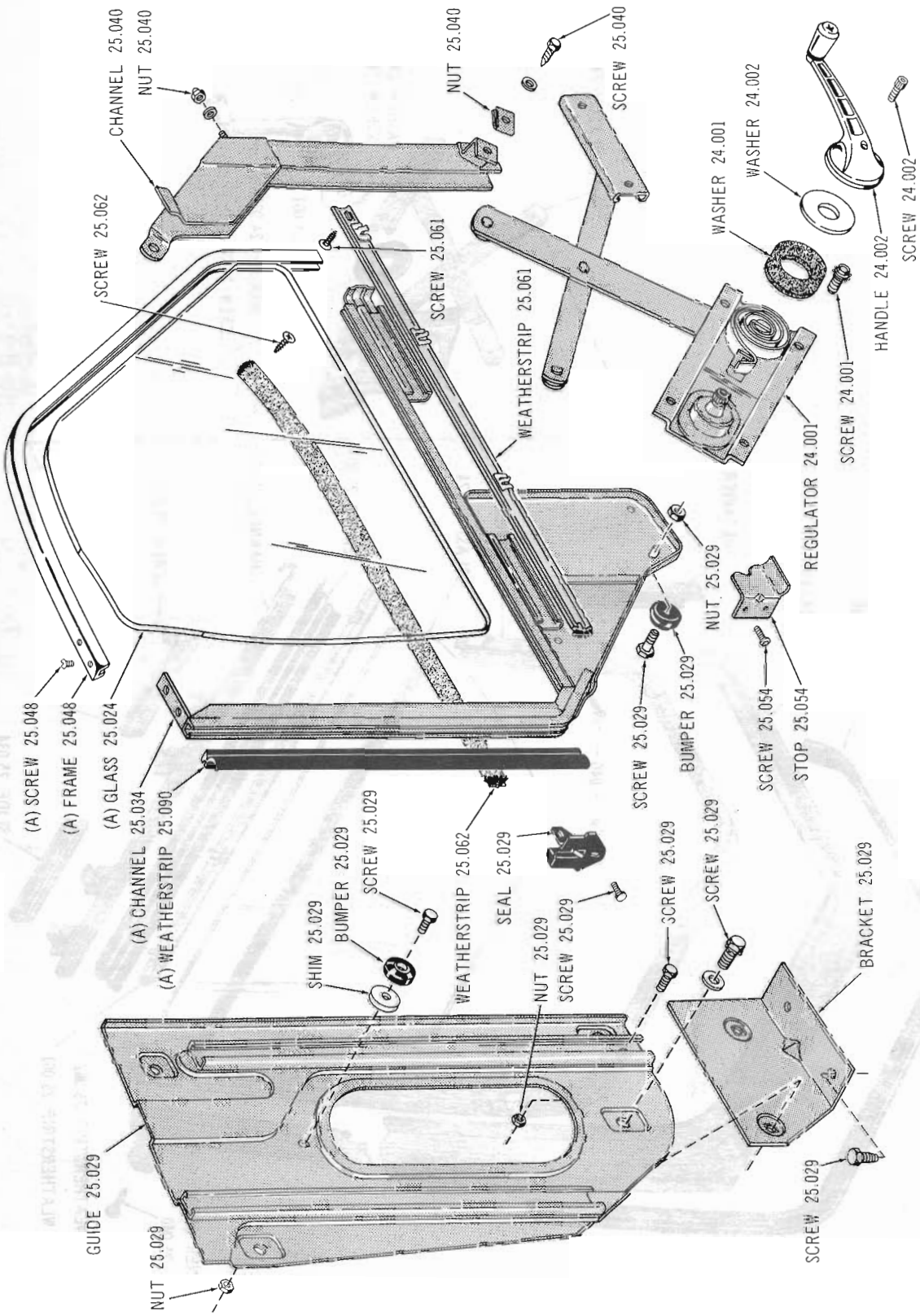

REAR QUARTER LOWERING GLASS AND CHANNELS 64 07: 63 07-17-87

Copyright 1963 American Motors Corp.

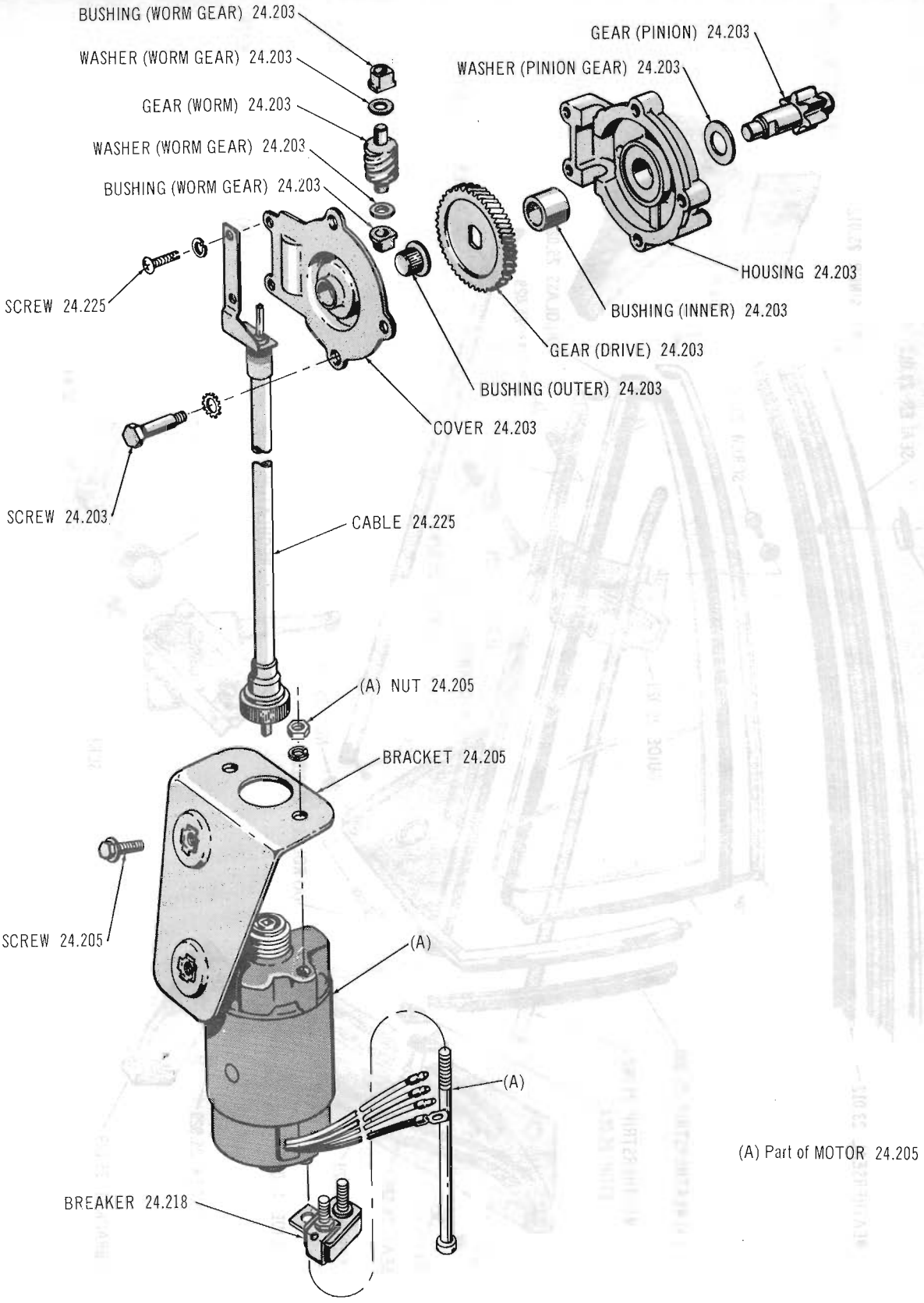

(A) Part of MOTOR 24.205

2133

REAR QUARTER ELEC. WINDOW REGULATOR TRANS. AND MOTOR 65 17-87: 65 59-7 (Marlin)

Copyright 1963 American Motors Corp.

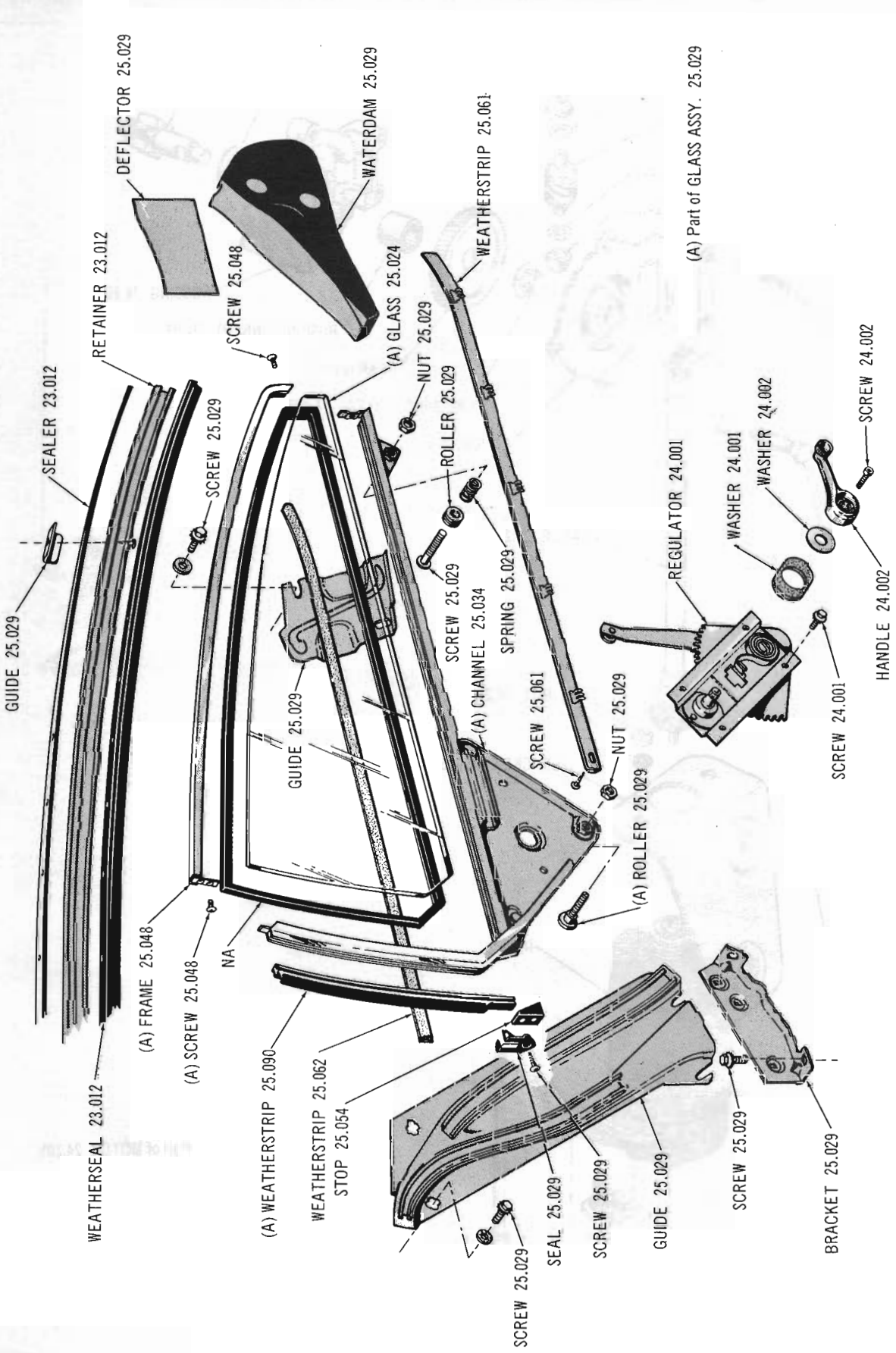

REAR QUARTER LOWERING GLASS AND CHANNELS 65 59-7 (Marlin)

Copyright 1963 American Motors Corp.

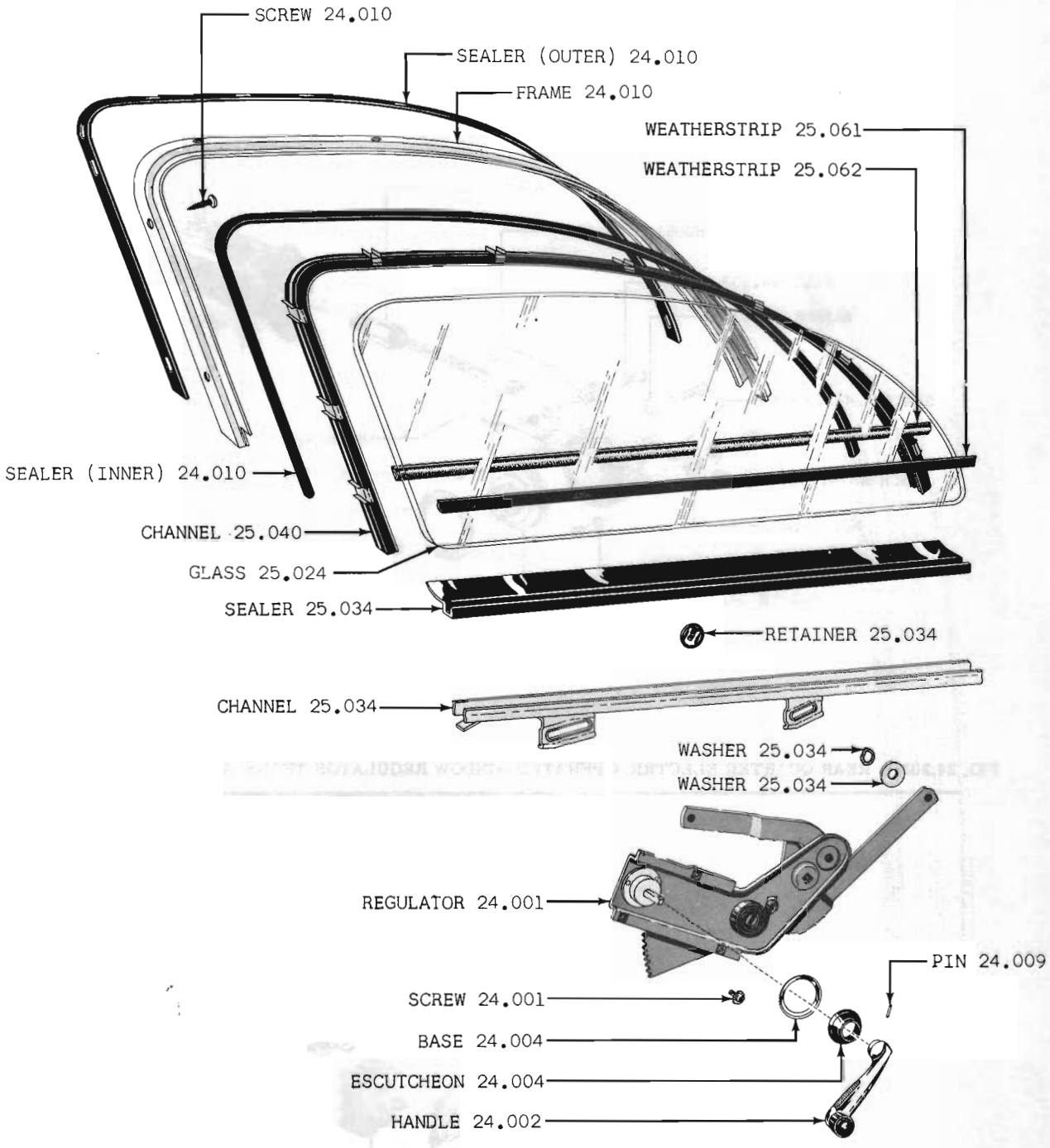

FIG. 24.000-1 REAR QUARTER LOWERING GLASS AND CHANNELS 60-61 02-06

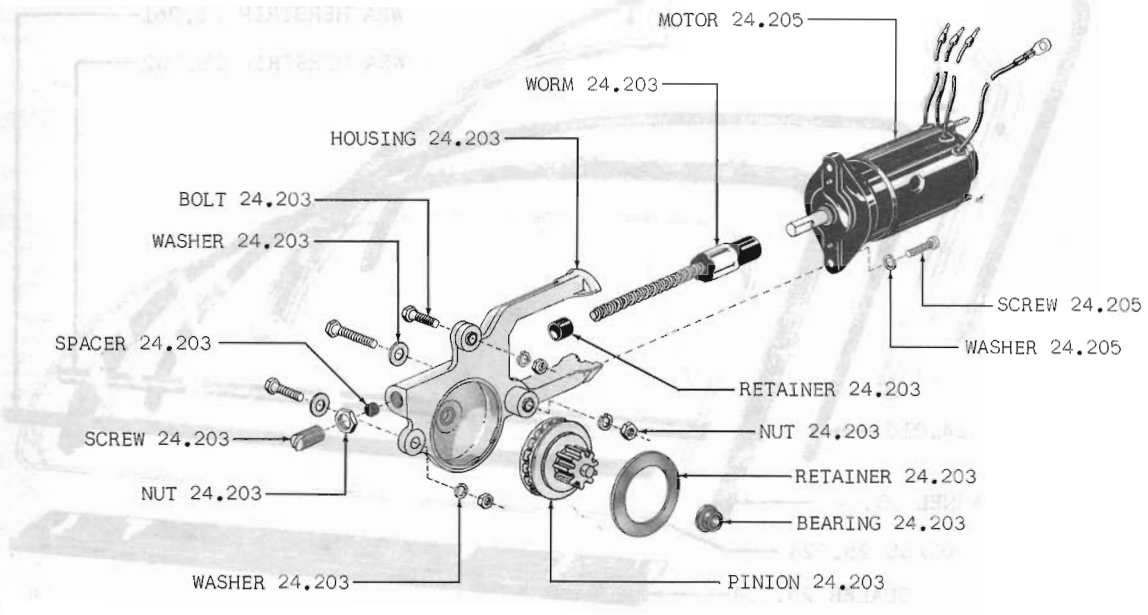

FIG. 24.203-3 REAR QUARTER ELECTRIC OPERATED WINDOW REGULATOR TRANS. AND MOTOR 62 16-86: 64-65 19-89

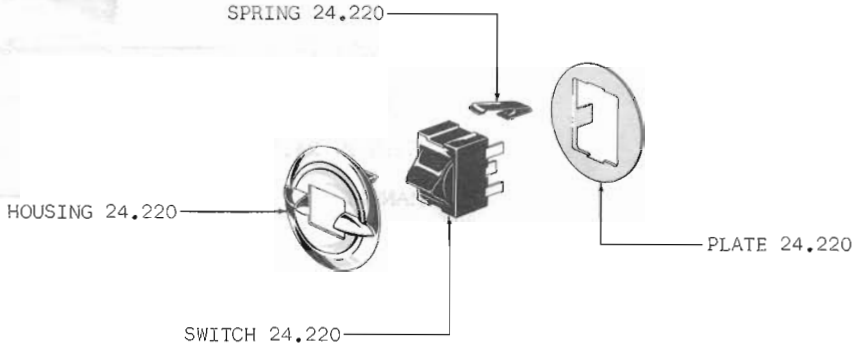

FIG. 24.220-3 REAR QUARTER ELECTRIC OPERATED WINDOW REGULATOR CONTROL SWITCH 62 16-86: 64-65 19-89

GROUP NO. — DESCRIPTION — YEAR and MODEL	PRIMARY GROUP NO.	PER CAR	PART NO.	CODE
24.001 REGULATOR, Rear Quarter Window				
(Left) 60-61 06	.....	1	344 3815	
(Left) 61 07	.....	1	345 8439	
(Left) 62-63 06	.....	1	346 2619	
(Left) 62-63 07-09	.....	1	346 2617	
(Left) 64 07	.....	1	350 0953	
(Left) 62 16-86 (LER)	.....	1	346 1477	
(Left) 64-65 09-19-89 (LER-Except Marlin)	.....	1	350 0955	
(Left) 63 16-86	.....	1	348 2207	
(Left) 64-65 06-16-86 (LER-Except Marlin)	.....	1	352 0699	
(Left) 65 07-17-87 (LER-Except Marlin)	.....	1	351 6409	
(Left) 65 59 (Marlin-LER)	.....	1	351 7315	
(Right) 60-61 06	.....	1	344 3814	
(Right) 61 07	.....	1	345 8438	
(Right) 62-63 06	.....	1	346 2618	
(Right) 62-63 07-09	.....	1	346 2616	
(Right) 64 07	.....	1	350 0952	
(Right) 62 16-86 (LER)	.....	1	346 1476	
(Right) 64-65 09-19-89 (LER-Except Marlin)	.....	1	350 0954	
(Right) 63 16-86	.....	1	348 2206	
(Right) 64-65 06-16-86 (LER-Except Marlin)	.....	1	352 0698	
(Right) 65 07-17-87 (LER-Except Marlin)	.....	1	351 6408	
(Right) 65 59 (Marlin-LER)	.....	1	351 7314	
ATTACHING PARTS Regulator To Quarter Panel				
SCREW, Machine..... 60 06	23.300	8	438 3373	
SCREW, Machine..... 61 Thru 63 06-07-09	23.098	8	400 0230	
SCREW, Machine..... 62 16-86 (LER-8 Req.): 63 16-86 (12 Req.): 64-65 06-09 (12 Req.)	23.056	AR	400 0075	
SCREW, Machine..... 64-65 07-16-17-19-86-87-89	23.098	12	400 0572	
WASHER, Bite..... 65 19-89	25.029	8	400 0690	
WASHER, Rear Quarter Window Regulator Shaft				
64-65 06: 63 Thru 65 16-86	.....	2	400 0556	
64-65 07-09-17-19-87-89	.....	2	400 0677	
24.002 HANDLE, Rear Quarter Window Regulator				
60 06	23.100	2	344 5743	
61 06-07 (Blue Knob)	23.100	2	345 5505	
61 06-07 (Gray Knob)	23.100	2	345 5504	
61 06-07 (Green-Knob)	23.100	2	345 5506	
61 06-07 (Silver Knob)	23.100	2	347 0977	
61 06-07 (Tan Knob)	23.100	2	345 5507	
62-63 06-07-09-16-86	23.100	2	346 2551	
64-65 06-07-09	23.100	2	350 9710	
(Left) 64 16-19-89	23.100	1	350 9453	
(Left) 65 16-17-19-86-87-89	23.100	1	351 5829	#
(Right) 64 16-19-89	23.100	1	350 9452	
(Right) 65 16-17-19-86-87-89	23.100	1	351 5828	#
ATTACHING PARTS Handle To Regulator				
SCREW, Socket..... 64-65 06-07-09-16-17-19-86-87-89	29.105	2	400 0826	
WASHER..... 64-65 06-07-09-16-17-19-86-87-89	23.058	2	350 9687	
SPRING, Rear Quarter Window Regulator Handle Tension				
62-63 06-07-09-16-86	23.058	2	346 2574	

Copyright 1963 American Motors Corp.

GROUP NO. — DESCRIPTION — YEAR and MODEL	PRIMARY GROUP NO.	PER CAR	PART NO.	CODE
24.004 ESCUTCHEON, Rear Quarter Window Regulator Handle				
60 06 (Black)	23.059	2	435 6563	
60 06 (Gray)	23.102	2	344 5745	
61 06-07 (Blue)	23.059	2	345 5511	
61 06-07 (Gray)	23.059	2	345 5509	
61 06-07 (Green)	23.059	2	345 5513	
61 06-07 (Silver)	23.059	2	347 0876	
61 06-07 (Tan)	23.059	2	345 5515	
BASE, Rear Quarter Window Regulator Handle Escutcheon				
60-61 06-07	23.059	2	435 6561	
24.008 WASHER, Rear Quarter Window Regulator Handle Escutcheon				
60-61 06-07	23.060	2	433 5002	
62-63 06-07-09-16-86	23.060	2	346 2560	
64-65 06-07-09-16-17-19-86-87-89	23.058	2	350 9687	#
24.009 PIN, Rear Quarter Window Regulator Handle				
60-61 06-07	23.063	2	436 7527	
CLIP, Rear Quarter Window Regulator Handle				
62-63 06-07-09-16-86	29.105	2	400 0109	
24.010 FRAME, Rear Quarter Window				
(Left) 60 02-06	.....	1	344 3801	
(Left) 60 05	.....	1	344 3887	
(Left) 61 02-06	.....	1	344 7001	
(Left) 61 05	.....	1	344 7027	
(Left) 62-63 02-06	.....	1	348 9343	
(Left) 64-65 06	.....	1	350 0575	
(Left) 62-63 05	.....	1	348 9327	
(Left) 62 16-86	.....	1	346 1371	
(Left) 63-64 16-86	.....	1	348 2095	
(Left) 65 16-86	.....	1	351 6203	
(Left-Front) 61 04	.....	1	344 7215	
(Left-Front) 62-63 04	.....	1	348 9347	
(Left-Rear) 61 04-08	.....	1	344 7219	
(Left-Rear) 62-63 04-08	.....	1	348 9339	
(Right) 60 02-06	.....	1	344 3800	
(Right) 60 05	.....	1	344 3886	
(Right) 61 02-06	.....	1	344 7000	
(Right) 61 05	.....	1	344 7026	
(Right) 62-63 02-06	.....	1	348 9342	
(Right) 64-65 06	.....	1	350 0574	
(Right) 62-63 05	.....	1	348 9326	
(Right) 62 16-86	.....	1	346 1370	
(Right) 63-64 16-86	.....	1	348 2094	
(Right) 65 16-86	.....	1	351 6202	
(Right-Front) 61 04	.....	1	344 7214	
(Right-Front) 62-63 04	.....	1	348 9346	
(Right-Rear) 61 04-08	.....	1	344 7218	
(Right-Rear) 62-63 04-08	.....	1	348 9338	

Copyright 1963 American Motors Corp.

GROUP NO. — DESCRIPTION — YEAR and MODEL	PRIMARY GROUP NO.	PER CAR	PART NO.	CODE
ATTACHING PARTS				
Frame To Body				
SCREW, Tapping..... 60 02-06 (12 Req.): 61 Thru 63 02-06 (14 Req.)	17.660	AR	G162013	NA
SCREW, Tapping..... 60 05	17.648	6	G161415	NA
SCREW, Tapping..... 61-62 05	17.655	6	G188954	NA
SCREW, Tapping..... 63 05	17.654	6	G162474	NA
SCREW, Tapping..... 62 16-86 (14 Req.): 63 Thru 65 16-86 (12 Req.)	17.660	AR	G161909	NA#
SCREW, Tapping..... 64-65 06 (1" Long).....	17.655	6	G168611	NA#
SCREW, Tapping..... 64-65 06 (1-1/2" Long).....	17.660	6	G161933	NA#
Front Window Frame To Body				
SCREW, Tapping..... 61 Thru 63 04	17.666	18	G161651	NA
Rear Window Frame To Body				
SCREW, Tapping..... 61 Thru 63 04-08.....	17.666	22	G161651	NA
BRACKET, Rear Quarter Window Frame Support				
62-63 04-08	.....	4	347 4767	
ATTACHING PARTS				
Bracket To Body				
SCREW, Tapping..... 62-63 04-08	26.001	4	400 0026	
SEALER, Rear Quarter Window Frame				
60 02-06 (Inner).....	.....	2	343 6575	
60 02-06 (Outer)	.....	2	343 6149	
60 05 (Left)	.....	1	343 6567	
60 05 (Right)	.....	1	343 6566	
61 Thru 63 02-06 (Inner)	.....	2	343 6651	
61 Thru 63 02-06 (Outer)	.....	2	344 7028	
61 Thru 63 05 (Left)	.....	1	345 9163	
61 Thru 63 05 (Right)	.....	1	345 9162	
61 Thru 63 04 (Front)	.....	2	344 7446	
61 04-08 (Rear-Front)	.....	2	346 4762	
61 04-08 (Rear-Upper-Left)	.....	1	345 8063	
61 04-08 (Rear-Upper-Right)	.....	1	346 4762	
62-63 04-08 (Rear)	.....	2	346 4762	
62 16-86 (Left)	.....	1	346 1393	
62 16-86 (Right)	.....	1	346 1392	
63 Thru 65 16-86 (Left)	.....	1	347 2603	#
63 Thru 65 16-86 (Right)	.....	1	347 2602	#
64-65 06 (Left)	.....	1	350 0581	#
64-65 06 (Right)	.....	1	350 0580	#
24.011 VENTILATOR, Rear Quarter (Incl. Clear Glass)				
(Left) 62 16-86 (Note 24.011-1 Type 1)	.....	1	346 1999	
(Left) 62 16-86 (Note 24.011-1 Type 2)	.....	1	348 4039	
(Right) 62 16-86 (Note 24.011-1 Type 1)	.....	1	346 1998	
(Right) 62 16-86 (Note 24.011-1 Type 2)	.....	1	348 4038	

NOTE 24.011-1: Two types of Ventilators and Division Channels were used on the 62 16-86 Models. They can be identified as follows:

Type 1: Ventilator and Division Channel are Two Separate Units and Installed in the Body Independently of each other.

Type 2: Ventilator and Division Channel are Riveted together into One Unit and Installed in the Body as an Assembly.

Copyright 1963 American Motors Corp.

GROUP NO. — DESCRIPTION — YEAR and MODEL	PRIMARY GROUP NO.	PER CAR	PART NO.	CODE
ATTACHING PARTS				
Ventilator To Window Frame				
RETAINER..... 62 16-86	.....	6	346 1524	
Ventilator To Regulator Panel				
SCREW, Tapping..... 62 16-86	17.660	4	G161895	NA
VENTILATOR, Rear Quarter (Incl. Solex Glass)				
(Left) 62 16-86 (Note 24.011-1 Type 1)	.....	1	346 1997	
(Left) 62 16-86 (Note 24.011-1 Type 2)	.....	1	348 4041	
(Right) 62 16-86 (Note 24.011-1 Type 1)	.....	1	346 1996	
(Right) 62 16-86 (Note 24.011-1 Type 2)	.....	1	348 4040	
ATTACHING PARTS				
Ventilator To Window Frame				
RETAINER..... 62 16-86	.....	6	346 1524	
Ventilator To Regulator Panel				
SCREW, Tapping..... 62 16-86	17.660	4	G161895	NA
24.012 FRAME ASSEMBLY, Rear Quarter Ventilator (Incl. Clear Glass)				
(Left) 62 16-86	23.151	1	447 9283	
(Right) 62 16-86	23.151	1	447 9282	
FRAME ASSEMBLY, Rear Quarter Ventilator (Incl. Solex Glass)				
(Left) 62 16-86	23.151	1	447 9285	
(Right) 62 16-86	23.151	1	447 9284	
24.014 FRAME, Rear Quarter Ventilator				
(Left) 62 16-86	23.152	1	346 1607	
(Right) 62 16-86	23.152	1	346 1606	
24.016 CHANNEL, Rear Quarter Ventilator				
(Left) 62 16-86 (Note 24.011-1 Type 1)	.....	1	346 1523	
(Left) 62 16-86 (Note 24.011-1 Type 2)	.....	1	348 4045	
(Right) 62 16-86 (Note 24.011-1 Type 1)	.....	1	346 1522	
(Right) 62 16-86 (Note 24.011-1 Type 2)	.....	1	348 4044	
24.018 WEATHERSTRIP, Rear Quarter Ventilator				
(Left) 62 16-86	23.154	1	346 1615	
(Right) 62 16-86	23.154	1	346 1614	
24.020 HANDLE, Rear Quarter Ventilator Lock				
(Left) 62 16-86	23.160	1	341 5384	
(Right) 62 16-86	23.160	1	341 5385	
ATTACHING PARTS				
Handle To Bracket				
PIN 62 16-86	23.121	2	400 0034	

Copyright 1963 American Motors Corp.

GROUP NO. — DESCRIPTION — YEAR and MODEL	PRIMARY GROUP NO.	PER CAR	PART NO.	CODE
BUTTON, Rear Quarter Ventilator Lock Handle Release				
62 16-86	23.121	2	435 9012	
SPRING, Rear Quarter Ventilator Lock Handle Button				
62 16-86	23.121	2	435 9009	
BRACKET KIT, Rear Quarter Ventilator Lock Handle Mounting				
62 16-86	23.160	2	447 8706	
ATTACHING PARTS				
Bracket To Frame				
RIVET, Tubular 62 16-86	23.121	4	344 6089	
24.022 SCREW, Rear Door Ventilator Friction Unit Tension				
62 16-86	17.664	2	G145131	NA
24.025 CHANNEL, Rear Quarter Glass And Ventilator Division				
(Left) 62 16-86 (Note 24.025-1)	.....	1	346 1465	
(Left) 62 16-86 (Note 24.011-1 Type 1 And Note 24.025-2)	.....	1	346 1463	
(Left) 62 16-86 (Note 24.011-1 Type 2 And Note 24.025-2)	.....	1	348 4043	
(Right) 62 16-86 (Note 24.025-1)	.....	1	346 1464	
(Right) 62 16-86 (Note 24.011-1 Type 1 And Note 24.025-2)	.....	1	346 1462	
(Right) 62 16-86 (Note 24.011-1 Type 2 And Note 24.025-2)	.....	1	348 4042	
ATTACHING PARTS				
Channel To Window Frame				
SCREW, Tapping..... 62 16-86	17.669	2	G457002	NA
Channel To Ventilator Channel				
RIVET, Tubular ..... 62 16-86 (Note 24.011-1 Type 2)	17.558	8	G138025	NA
Channel To Regulator Panel				
SCREW, Tapping..... 62 16-86	17.660	4	G161895	NA
STUD..... 62 16-86	23.124	2	400 0338	
WASHER, Lock 62 16-86	17.826	2	G173124	NA
NUT, Hexagon..... 62 16-86	17.406	2	G120375	NA
24.038 LATCH, Side Front Window				
60 04 (Left On Front-Right On Rear)	.....	2	343 1840	
60 04 (Right On Front-Left On Rear)	.....	2	343 1841	
(Left) 61-62 04	.....	2	343 1840	
(Right) 61-62 04	.....	2	343 1841	
STRIKER, Side Front Window Latch				
(Front) 60 04	.....	2	343 1845	
(Front) 61-62 04	.....	2	344 7316	
(Rear) 60 04	.....	2	343 1846	
(Rear) 61 04	.....	2	344 7317	
(Rear) 62 04	.....	2	348 9828	
ATTACHING PARTS				
Striker To Body				
SCREW, Tapping..... 60 Thru 62 04	17.669	8	G457002	NA

NOTE 24.025-1: Used on Cars not Equipped with Ventilator.
NOTE 24.025-2: Used on Cars Equipped with Ventilator.

Copyright 1963 American Motors Corp.

GROUP NO. — DESCRIPTION — YEAR and MODEL	PRIMARY GROUP NO.	PER CAR	PART NO.	CODE
BUTTON, Rear Quarter Ventilator Lock Handle Release				
62 16-86	23.121	2	435 9012	
SPRING, Rear Quarter Ventilator Lock Handle Button				
62 16-86	23.121	2	435 9009	
BRACKET KIT, Rear Quarter Ventilator Lock Handle Mounting				
62 16-86	23.160	2	447 8706	
ATTACHING PARTS				
Bracket To Frame				
RIVET, Tubular 62 16-86	23.121	4	344 6089	
24.022 SCREW, Rear Door Ventilator Friction Unit Tension				
62 16-86	17.664	2	G145131	NA
24.025 CHANNEL, Rear Quarter Glass And Ventilator Division				
(Left) 62 16-86 (Note 24.025-1)	.....	1	346 1465	
(Left) 62 16-86 (Note 24.011-1 Type 1 And Note 24.025-2)	.....	1	346 1463	
(Left) 62 16-86 (Note 24.011-1 Type 2 And Note 24.025-2)	.....	1	348 4043	
(Right) 62 16-86 (Note 24.025-1)	.....	1	346 1464	
(Right) 62 16-86 (Note 24.011-1 Type 1 And Note 24.025-2)	.....	1	346 1462	
(Right) 62 16-86 (Note 24.011-1 Type 2 And Note 24.025-2)	.....	1	348 4042	
ATTACHING PARTS				
Channel To Window Frame				
SCREW, Tapping..... 62 16-86	17.669	2	G457002	NA
Channel To Ventilator Channel				
RIVET, Tubular ..... 62 16-86 (Note 24.011-1 Type 2)	17.558	8	G138025	NA
Channel To Regulator Panel				
SCREW, Tapping..... 62 16-86	17.660	4	G161895	NA
STUD..... 62 16-86	23.124	2	400 0338	
WASHER, Lock 62 16-86	17.826	2	G173124	NA
NUT, Hexagon..... 62 16-86	17.406	2	G120375	NA
24.038 LATCH, Side Front Window				
60 04 (Left On Front-Right On Rear)	.....	2	343 1840	
60 04 (Right On Front-Left On Rear)	.....	2	343 1841	
(Left) 61-62 04	.....	2	343 1840	
(Right) 61-62 04	.....	2	343 1841	
STRIKER, Side Front Window Latch				
(Front) 60 04	.....	2	343 1845	
(Front) 61-62 04	.....	2	344 7316	
(Rear) 60 04	.....	2	343 1846	
(Rear) 61 04	.....	2	344 7317	
(Rear) 62 04	.....	2	348 9828	
ATTACHING PARTS				
Striker To Body				
SCREW, Tapping..... 60 Thru 62 04	17.669	8	G457002	NA

NOTE 24.025-1: Used on Cars not Equipped with Ventilator.
NOTE 24.025-2: Used on Cars Equipped with Ventilator.

Copyright 1963 American Motors Corp.

GROUP NO. — DESCRIPTION — YEAR and MODEL	PRIMARY GROUP NO.	PER CAR	PART NO.	CODE
LOCK, Side Front Window				
63 04	.....	2	436 3409	
ATTACHING PARTS Lock To Body				
SCREW, Machine..... 63 04	.....	4	400 0279	
PLATE, Side Front Window Lock Tapping				
63 04	.....	2	349 9254	
24.050 RECEIVER ASSEMBLY, Rear Quarter Ash				
61-62 07...(Incl. Retainer)	23.190	2	510 8725	
63 Thru 65 07: 63 09 (440H): 65 17-87...(Less Retainer)	.....	2	447 9945	#
63 09 (440)	.....	2	350 5162	
SPRING, Rear Quarter Ash Receiver Cover				
63 Thru 65 07: 63 09: 65 17-87	.....	2	447 9947	#
24.052 RETAINER, Rear Quarter Side Ash Receiver				
60 Thru 63 04-06	24.050	2	435 4946	
63 Thru 65 07: 63 09 (440H): 65 17-87	.....	2	447 9946	#
63 09 (440)	.....	2	350 5154	
63 16-86: 64-65 06-09-16-19-86-89	23.182	2	437 1452	#
ATTACHING PARTS Retainer To Rear Quarter Panel				
SCREW, Tapping..... 60 Thru 63 04-06: 62 16-86	17.655	2	G168496	NA
SCREW, Tapping..... 63 09 (440)	17.660	4	G161869	NA
SCREW, Tapping..... 64-65 06-09-16-19-86-89	17.660	4	G161815	NA#
SCREW, Tapping..... 63 16-86	17.660	4	G161790	NA
WATERSHIELD, Rear Quarter Ash Receiver Retainer				
64-65 06-09-16-19-86-89	.....	2	350 7360	#
24.054 BOX, Rear Quarter Side Ash Receiver				
60 Thru 63 04-06: 62 16-86	.....	2	435 5403	
63 16-86: 64-65 06-09-16-19-86-89	23.184	2	311 484	#
24.056 PLATE, Rear Quarter Side Ash Receiver Cover				
60 Thru 63 04-06: 62 16-86	.....	2	435 5404	
63 Thru 65 16-19-86-89: 64-65 06-09 ***(Replaces 348 6440)***	23.186	2	349 5530	#
24.058 KNOB, Rear Quarter Side Ash Receiver				
60 04-06	27.062	2	343 2364	#
61 04-06 (Gray)	27.062	2	345 9086	#
61 Thru 63 04-06 (Black): 62 16-86	.....	2	346 4514	#
63 16-86: 64-65 06-09	23.188	2	346 1785	#
64-65 16-19-86-89	23.188	2	352 0374	#
ATTACHING PARTS Knob To Receiver				
SCREW, Tapping..... 60 Thru 63 04-06: 62 16-86	17.664	2	G115137	NA
SCREW, Machine..... 63 16-86: 64-65 06-09-16-19-86-89	17.616	2	G443642	NA#

Copyright 1963 American Motors Corp.

GROUP NO. — DESCRIPTION — YEAR and MODEL	PRIMARY GROUP NO.	PER CAR	PART NO.	CODE
24.065 MOULDING, Rear Quarter Side Trim Panel				
64-65 06 (330-Upper): 64-65 09 (Upper)	.....	2	349 3264	
64 06 (330-Lower): 64 09 (Lower)	.....	2	349 3247	
62-63 07	.....	2	346 2155	
63 09 (440)	.....	2	349 0830	
62 16 (400)	.....	2	346 2168	
63 16 (770-Upper): 64 16-19 (Upper-Except Typhoon): 65 19-86 (Upper-Except Marlin)	.....	2	349 3264	
64-65 07 (10-7/8" Long): 65 17 (10-7/8" Long-Except Marlin) ***(Replaces 350 1869)***	.....	2	350 1868	
64-65 07-17-87 (Curved-Upper-Except Marlin) ***(Replaces 350 2417)***	.....	2	350 2416	
64-65 07-17-87 (Curved-Lower-25" Long-Except Marlin)	.....	2	351 7678	
64 07 (Curved-Lower-29" Long)	.....	2	350 2418	
62 86 (400-Upper)	.....	2	346 2791	
62 86 (400-Lower)	.....	2	347 6612	
63-64 16-19 (770-Lower)	.....	2	349 3247	
63 86 (990-Upper-Left)	.....	1	349 3195	
63 86 (990-Upper-Right)	.....	1	349 3194	
63 86 (990-Lower-Left)	.....	1	349 3193	
63 86 (990-Lower-Right)	.....	1	349 3192	
63 86 (990-Front-Left)	.....	1	349 3197	
63 86 (990-Front-Right)	.....	1	349 3196	
64 89 (990-LER-Intermediate-Rear-17-3/8" Long)	.....	2	350 8082	
64 89 (Upper-26" Long): 64 19 (Typhoon-26" Long)	.....	2	350 8106	
64 89 (990-Lower-8" Long)	.....	2	350 8582	
64 89 (Left-Lower-19" Long)	.....	1	352 9243	
64 89 (Right-Lower-19" Long)	.....	1	352 9242	
64 89 (990-Upper-Overlay-15" Long)	.....	2	350 8634	
64 89 (990-Lower-Overlay-13-5/16" Long)	.....	2	350 8635	
64 89 (990-LER-Intermediate-Front-5-13/32" Long)	.....	2	352 0236	
64 89 (990-WER-Intermediate-24-5/8" Long)	.....	2	352 0238	
64 89 (990-Overlay End-Front-3-5/16" Long)	.....	2	352 0381	
65 87 (Upper-Overlay-10-19/32" Long)	.....	2	353 1322	
65 87 (Left-Upper Insert-Curved -Front-LER)	.....	1	353 1997	
65 87 (Left-Upper Insert-Curved-Front-WER)	.....	1	351 8347	
65 87 (Right-Upper Insert-Curved-Front-LER)	.....	1	353 1996	
65 87 (Right-Upper Insert-Curved-Front-WER)	.....	1	351 8346	
65 87 (Left-Upper Insert-Rear-4" Long-LER)	.....	1	353 1689	
65 87 (Right-Upper Insert-Rear-4" Long-LER)	.....	1	353 1688	
65 89 (Left-WER-Upper-23-7/8" Long): 65 59 (Marlin-Left-WER-Upper-23-7/8" Long)	.....	1	353 1289	
65 89 (Right-WER-Upper-23-7/8" Long): 65 59 (Marlin-Right-WER-Upper-23-7/8" Long)	.....	1	353 1288	
65 89 (LER-Upper-Overlay-23" Long): 65 59 (Marlin-LER-Upper-Overlay-23" Long)	.....	2	353 1342	
65 89 (WER-Upper-Overlay-19-3/32" Long): 65 59 (Marlin-WER-Upper-Overlay-19-3/32" Long)	.....	2	353 1531	
65 89 (Lower-Overlay-17-1/2" Long): 65 59 (Marlin-Lower-Overlay-17-1/2" Long)	.....	2	353 1343	
65 89 (Left-Lower Insert-Curved-17-13/16" Long): 65 59 (Marlin-Left-Lower Insert-Curved-17-13/16" Long)	.....	1	353 1697	
65 89 (Right-Lower Insert-Curved-17-13/16" Long): 65 59 (Marlin-Right-Lower Insert-Curved-17-13/16" Long)	.....	1	353 1696	
65 89 (Left-LER-Upper Insert-Rear-18-3/8" Long): 65 59 (Marlin-Left-LER-Upper Insert-Rear-18-3/8" Long)	.....	1	353 1699	
65 89 (Right-LER-Upper Insert-Rear-18-3/8" Long): 65 59 (Marlin-Right-LER-Upper Insert-Rear-18-3/8" Long)	.....	1	353 1698	
65 59 (Marlin-WER-1-1/4" Long-Front)	.....	2	355 5054	#

Copyright 1963 American Motors Corp.

GROUP NO. — DESCRIPTION — YEAR and MODEL	PRIMARY GROUP NO.	PER CAR	PART NO.	CODE
65 89 (Left-LER-Upper Insert-Front-3-3/4" Long): 65 59 (Marlin-Left-LER-Upper Insert-Front-3-3/4" Long)	.....	1	353 1995	
65 89 (Right-LER-Upper Insert-Front-3-3/4" Long): 65 59 (Marlin-Right-LER-Upper Insert-Front-3-3/4" Long)	.....	1	353 1994	
RETAINER, Rear Quarter Overlay End Moulding				
64 89 (990)	.....	1	350 2301	
24.068 ORNAMENT, Rear Quarter Side Roof Trim Panel				
(Left) 63 09	.....	1	348 3493	
(Right) 63 09	.....	1	348 3492	
ATTACHING PARTS Ornament To Ragboard				
NUT, Speed 63 09	.....	6	400 0162	
24.070 OVERLAY, Rear Quarter Trim Panel				
(Left) 64 89	.....	1	350 8625	
(Left) 65 59 (Marlin-LER)	.....	1	353 1345	
(Left) 65 59 (Marlin-WER)	.....	1	353 1465	
(Right) 64 89	.....	1	350 8624	
(Right) 65 59 (Marlin-LER)	.....	1	353 1344	
(Right) 65 59 (Marlin-WER)	.....	1	353 1464	
24.075 PAD, Rear Quarter Crash				
(T-471) 64 19 (Typhoon)(Left)	.....	1	352 0019	
(T-471) 64 19 (Typhoon)(Right)	.....	1	352 0018	
(T-491) 64 89 (Left)	.....	1	352 0019	
(T-491) 64 89 (Right)	.....	1	352 0018	
(T-492) 64 89 (Left)	.....	1	352 0019	
(T-492) 64 89 (Right)	.....	1	352 0018	
(T-493) 64 89 (Left)	.....	1	352 0021	
(T-493) 64 89 (Right)	.....	1	352 0020	
(T-494) 64 89 (Left)	.....	1	352 0023	
(T-494) 64 89 (Right)	.....	1	352 0022	
(T-495) 64 89 (Left)	.....	1	352 0025	
(T-495) 64 89 (Right)	.....	1	352 0024	
(T-496) 64 89 (Left)	.....	1	352 0027	
(T-496) 64 89 (Right)	.....	1	352 0026	
(T-497) 64 89 (Left)	.....	1	352 0029	
(T-497) 64 89 (Right)	.....	1	352 0028	
(T-498) 64 89 (Left)	.....	1	352 0031	
(T-498) 64 89 (Right)	.....	1	352 0030	
(T-591) 65 87 (Left)	.....	1	353 1103	
(T-591) 65 87 (Right)	.....	1	353 1102	
(T-591) 65 89 (Left)	.....	1	353 1023	
(T-591) 65 89 (Right)	.....	1	353 1022	
(T-593) 65 87 (Left)	.....	1	353 1105	
(T-593) 65 87 (Right)	.....	1	353 1104	
(T-593) 65 89 (Left)	.....	1	353 1025	
(T-593) 65 89 (Right)	.....	1	353 1024	
(T-594) 65 87 (Left)	.....	1	353 1107	
(T-594) 65 87 (Right)	.....	1	353 1106	
(T-594) 65 89 (Left)	.....	1	353 1027	
(T-594) 65 89 (Right)	.....	1	353 1026	

Copyright 1963 American Motors Corp.

GROUP NO. — DESCRIPTION — YEAR and MODEL	PRIMARY GROUP NO.	PER CAR	PART NO.	CODE
(T-595) 65 87 (Left)	.....	1	353 1111	
(T-595) 65 87 (Right)	.....	1	353 1110	
(T-595) 65 89 (Left)	.....	1	353 1031	
(T-595) 65 89 (Right)	.....	1	353 1030	
(T-596) 65 87 (Left)	.....	1	353 1113	
(T-596) 65 87 (Right)	.....	1	353 1112	
(T-596) 65 89 (Left)	.....	1	353 1033	
(T-596) 65 89 (Right)	.....	1	353 1032	
(T-597) 65 87 (Left)	.....	1	353 1109	
(T-597) 65 87 (Right)	.....	1	353 1108	
(T-597) 65 89 (Left)	.....	1	353 1029	
(T-597) 65 89 (Right)	.....	1	353 1028	
(T-598) 65 87 (Left)	.....	1	353 1103	
(T-598) 65 87 (Right)	.....	1	353 1102	
(T-598) 65 89 (Left)	.....	1	353 1023	
(T-598) 65 89 (Right)	.....	1	353 1022	

24.200 REGULATOR, Rear Quarter Electric Operated Window

(Left) 62 16-86	.....	1	447 9503	
(Left) 64-65 19-89 (Except Marlin)	.....	1	448 1559	
(Left) 65 17-87 (Except Marlin)	.....	1	351 6389	
(Left) 65 59 (Marlin)	.....	1	351 7317	
(Right) 62 16-86	.....	1	447 9502	
(Right) 64-65 19-89 (Except Marlin)	.....	1	448 1558	
(Right) 65 17-87 (Except Marlin)	.....	1	351 6388	
(Right) 65 59 (Marlin)	.....	1	351 7316	

ATTACHING PARTS
Regulator To Panel

SCREW, Machine	62 16-86: 64-65 17-19-87-89	23.056	8	400 0075	

SPRING, Rear Quarter Electric Operated Window Regulator Balance

64-65 19-89	23.300	2	448 0426	

24.203 HOUSING, Rear Quarter Electric Operated Window Regulator Transmission

65 17-87: 65 59 (Marlin)	.....	2	448 2983	
(Left) 62 16-86	23.308	1	447 9505	
(Left) 64-65 19-89 (Except Marlin)	23.308	1	448 0419	
(Right) 62 16-86	23.308	1	447 9504	
(Right) 64-65 19-89 (Except Marlin)	23.308	1	448 0418	

ATTACHING PARTS
Housing To Regulator

BOLT, Hexagon	62 16-86 (7/8" Long-2 Req.): 64-65 19-89 (7/8" Long-1 Req.)	17.038	AR	G180021	NA
BOLT, Hexagon	62 16-86 (1-1/8" Long-1 Req.): 64-65 19-89 (1-1/8" Long-2 Req.)	17.038	AR	G180023	NA
SCREW, Machine	65 17-87: 65 59 (Marlin)	17.626	6	G440408	NA#
WASHER, Plain	62 16-86	17.814	3	G120392	NA
WASHER, Lock	62 16-86: 64-65 19-89	17.820	3	G121637	NA
NUT, Hexagon	62 16-86: 64-65 19-89	17.406	3	G120375	

GEAR, Rear Quarter Electric Operated Window Regulator Housing Pinion

62 16-86: 64-65 19-89 (Except Marlin)	23.308	2	447 9508	
65 17-87: 65 59 (Marlin)	23.308	2	448 2989	

Copyright 1963 American Motors Corp.

GROUP NO. — DESCRIPTION — YEAR and MODEL	PRIMARY GROUP NO.	PER CAR	PART NO.	CODE
BEARING, Rear Quarter Electric Operated Window Regulator Pinion Shaft End				
62 16-86: 64-65 19-89 (Except Marlin)	23.308	2	344 1522	
PINION, Rear Quarter Electric Operated Window Regulator Housing				
62 16-86: 64-65 19-89 (Except Marlin)	23.308	2	447 9507	
RETAINER, Rear Quarter Electric Operated Window Regulator Housing Pinion Grease				
62 16-86: 64-65 19-89 (Except Marlin)	23.308	2	447 9506	
WORM, Rear Quarter Electric Operated Window Regulator Housing (Incl. Coupling)				
62 16-86	23.308	2	447 9509	
64-65 19-89 (Except Marlin)	23.308	2	448 0420	
COUPLING, Rear Quarter Electric Operated Window Regulator Worm				
64-65 19-89 (Except Marlin)	23.308	2	448 0421	
RETAINER, Rear Quarter Electric Operated Window Regulator Housing Worm Grease				
62 16-86	23.308	2	344 1542	
SPACER, Rear Quarter Electric Operated Window Regulator Housing Worm End				
62 16-86: 64-65 19-89 (Except Marlin)	23.308	2	344 1543	
SCREW, Rear Quarter Electric Operated Window Regulator Housing Worm End Set				
62 16-86: 64-65 19-89 (Except Marlin)	23.308	2	344 1544	
NUT, Rear Quarter Electric Operated Window Regulator Housing Worm Set Screw Lock				
62 16-86: 64-65 19-89 (Except Marlin)	23.308	2	344 1545	
PLATE, Rear Quarter Electric Window Regulator Transmission Pinion Retainer				
64-65 19-89 (Except Marlin)	23.308	2	448 0422	
COVER, Rear Quarter Electric Operated Window Regulator Transmission				
65 17-87: 65 59 (Marlin)	.....	2	448 2986	
ATTACHING PARTS				
Cover To Housing				
SCREW, Machine..... 65 17-87: 65 59 (Marlin)	17.626	6	G440408	NA#
GEAR, Rear Quarter Electric Operated Window Regulator Transmission Drive				
65 17-87: 65 59 (Marlin)	.....	2	448 2987	
GEAR, Rear Quarter Electric Operated Window Regulator Transmission Worm				
65 17-87: 65 59 (Marlin)	.....	2	448 2988	

Copyright 1963 American Motors Corp.

GROUP NO. — DESCRIPTION — YEAR and MODEL	PRIMARY GROUP NO.	PER CAR	PART NO.	CODE
BUSHING, Rear Quarter Electric Operated Window Regulator Transmission				
65 17-87 (Worm Gear): 65 59 (Marlin)(Worm Gear)	.....	4	448 2990	
65 17-87 (Pinion Gear-Inner): 65 59 (Marlin)(Pinion Gear-Inner)	.....	2	448 2991	
65 17-87 (Pinion Gear-Outer): 65 59 (Marlin)(Pinion Gear-Outer)	.....	2	448 2992	
WASHER, Rear Quarter Electric Operated Window Regulator Transmission				
65 17-87 (Worm Gear): 65 59 (Marlin)(Worm Gear)	.....	4	448 2993	
65 17-87 (Pinion Gear): 65 59 (Marlin)(Worm Gear)	.....	2	448 2994	
24.205 MOTOR, Rear Quarter Electric Operated Window Regulator				
62 16-86	23.310	2	447 9512	
64-65 19-89 (Except Marlin)	.....	2	448 1560	
65 17-87: 65 59 (Marlin)	.....	2	448 2982	
ATTACHING PARTS				
Motor To Housing				
SCREW, Machine..... 62 16-86: 64-65 19-89 (Except Marlin)	23.310	4	344 1546	
WASHER, Lock ..... 62 16-86: 64-65 19-89 (Except Marlin)	17.820	4	G131183	NA
Motor To Bracket				
NUT, Hexagon..... 65 17-87: 65 59 (Marlin)	17.412	4	G120622	NA#
BRACKET, Rear Quarter Window Electric Motor Mounting				
(Left) 65 17-87 (Except Marlin)	.....	1	351 7089	
(Left) 65 59 (Marlin) ..... *(Use 353 0928)*	.....	1	353 0929	#
(Right) 65 17-87 (Except Marlin)	.....	1	351 7088	
(Right) 65 59 (Marlin)	.....	1	353 0928	
ATTACHING PARTS				
Bracket To Rear Pillar Brace				
SCREW, Machine..... 65 17-87 (Except Marlin)	23.040	4	400 0413	#
Bracket To Regulator Panel				
SCREW, Tapping..... 65 59 (Marlin)	29.120	4	400 0583	#
24.215 HARNESS, Rear Quarter Electric Operated Window Regulator Wiring				
62 16-86	23.320	1	344 1557	
64 19-89	23.320	1	317 2481	
65 17-87	23.320	1	318 0321	
65 19-89	23.320	1	317 6547	
ATTACHING PARTS				
Harness To Reinforcement				
CLIP..... 64-65 17-19-87-89	3.165	2	400 0553	
SCREW, Tapping..... 64-65 17-19-87-89	13.017	2	400 0616	
NUT, Speed..... 64-65 17-19-87-89	23.110	2	400 0196	
GROMMET, Rear Quarter Wiring Harness				
64-65 17-19-87-89 (In Uniside)	.....	2	317 2459	

Copyright 1963 American Motors Corp.

GROUP NO. — DESCRIPTION — YEAR and MODEL	PRIMARY GROUP NO.	PER CAR	PART NO.	CODE
24.218 BREAKER, Rear Quarter Electric Operated Window Regulator Circuit				
62 16-86: 65 17-87 (On Motor): 65 59 (Marlin-On Motor)	23.325	2	344 1432	#
64-65 17-19-87-89 (On Dash)	23.325	1	317 1130	
ATTACHING PARTS Breaker To Panel				
CLIP 64-65 17-19-87-89	3.154	1	439 0690	
SCREW, Tapping..... 62 16-86	17.660	2	G161895	NA
24.220 SWITCH, Rear Quarter Electric Operated Window Regulator Control (Less Housing)				
62 16-86: 64-65 17-19-87-89	23.330	2	346 6086	
HOUSING, Rear Quarter Electric Operated Window Regulator Control Switch				
62 16-86	.....	2	437 7107	
64-65 17-19-87-89	23.330	2	352 0816	
PLATE, Rear Quarter Electric Operated Window Regulator Control Switch				
62 16-86	23.330	2	437 7110	
64-65 17-19-87-89	23.330	2	352 0817	
WATERDAM, Rear Quarter Electric Operated Window Regulator Control Switch				
62 16-86: 64-65 17-19-87-89	23.330	2	438 2105	
SPRING, Rear Quarter Electric Operated Window Regulator Control Switch To Housing				
62 16-86: 64-65 17-19-87-89	.....	4	437 7109	
24.225 CABLE, Rear Quarter Electric Operated Window Regulator Motor				
(Left) 65 17-87: 65 59 (Marlin)	.....	1	448 2985	
(Right) 65 17-87: 65 59 (Marlin)	.....	1	448 2984	
ATTACHING PARTS Cable Bracket To Transmission Housing				
SCREW, Tapping..... 65 17-87: 65 59 (Marlin)	17.666	4	G274565	NA
WASHER, Plain..... 65 17-87: 65 59 (Marlin)	17.814	4	G446142	NA

Copyright 1963 American Motors Corp.

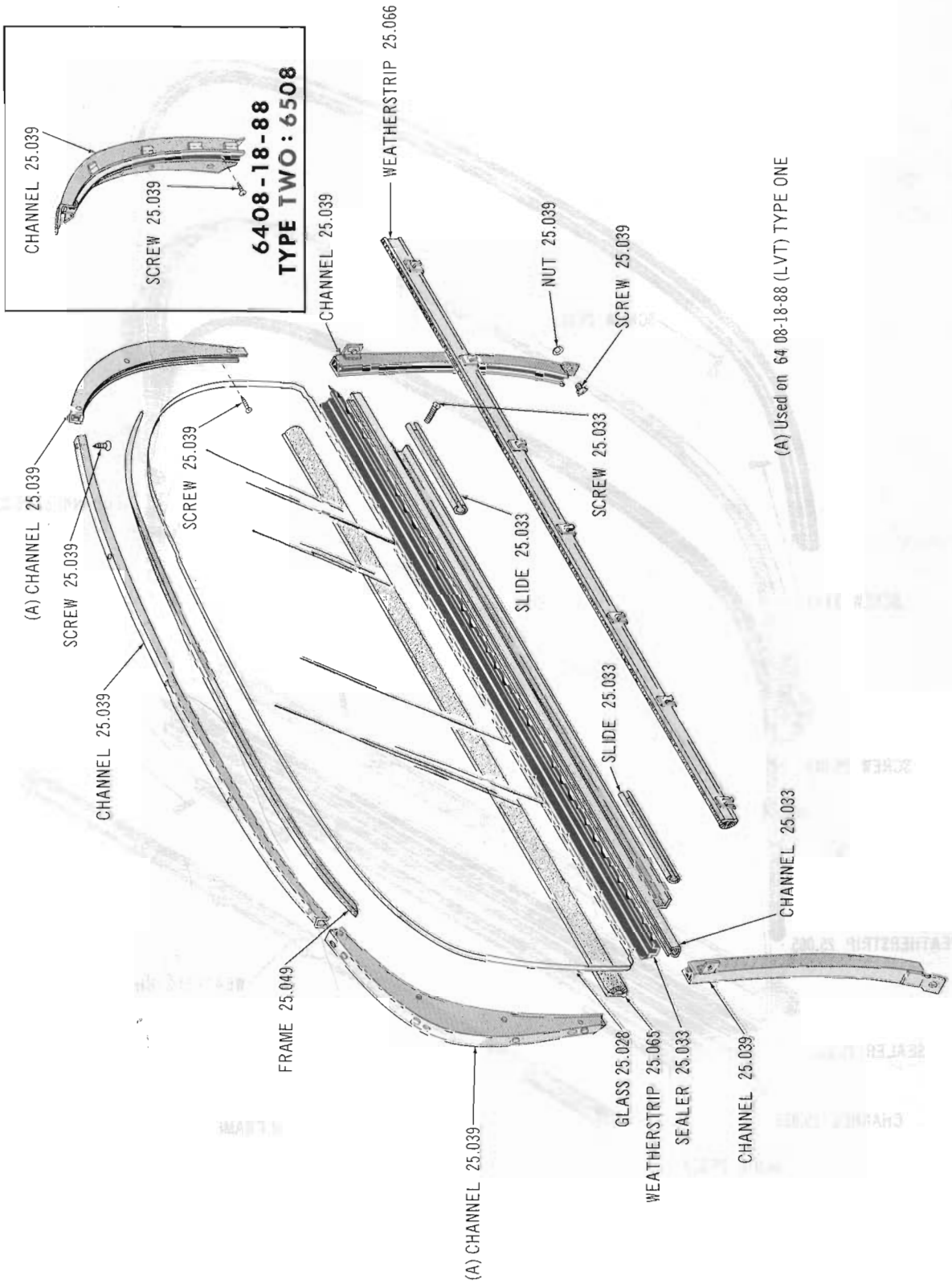

TAILGATE GLASS AND CHANNELS 64-65 08: 63-64 18-88 (LVT)

Copyright 1963 American Motors Corp.

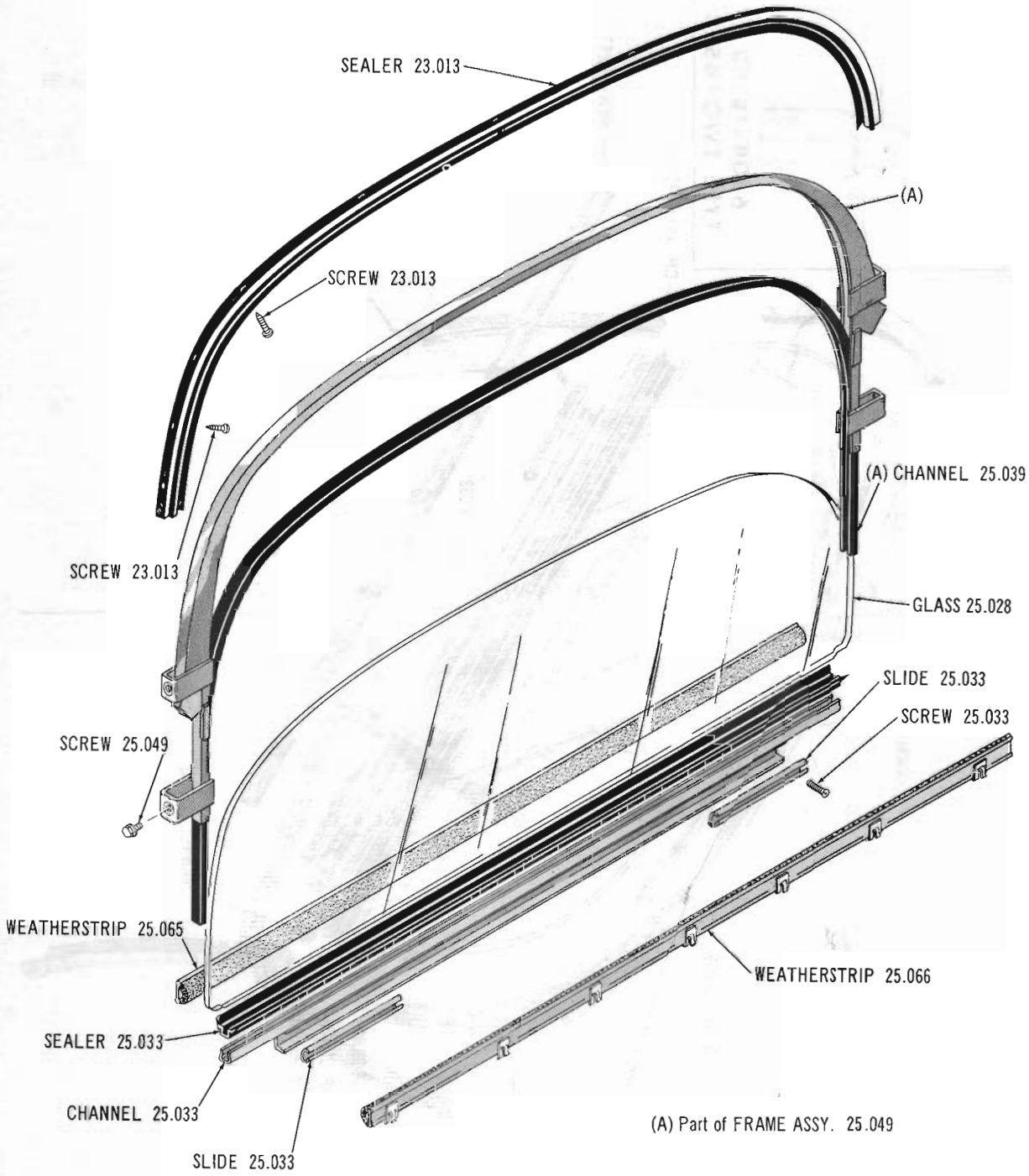

(A) Part of FRAME ASSY. 25.049

TAILGATE GLASS AND CHANNELS 63 thru Current 18-88 (WVT)

Copyright 1963 American Motors Corp.

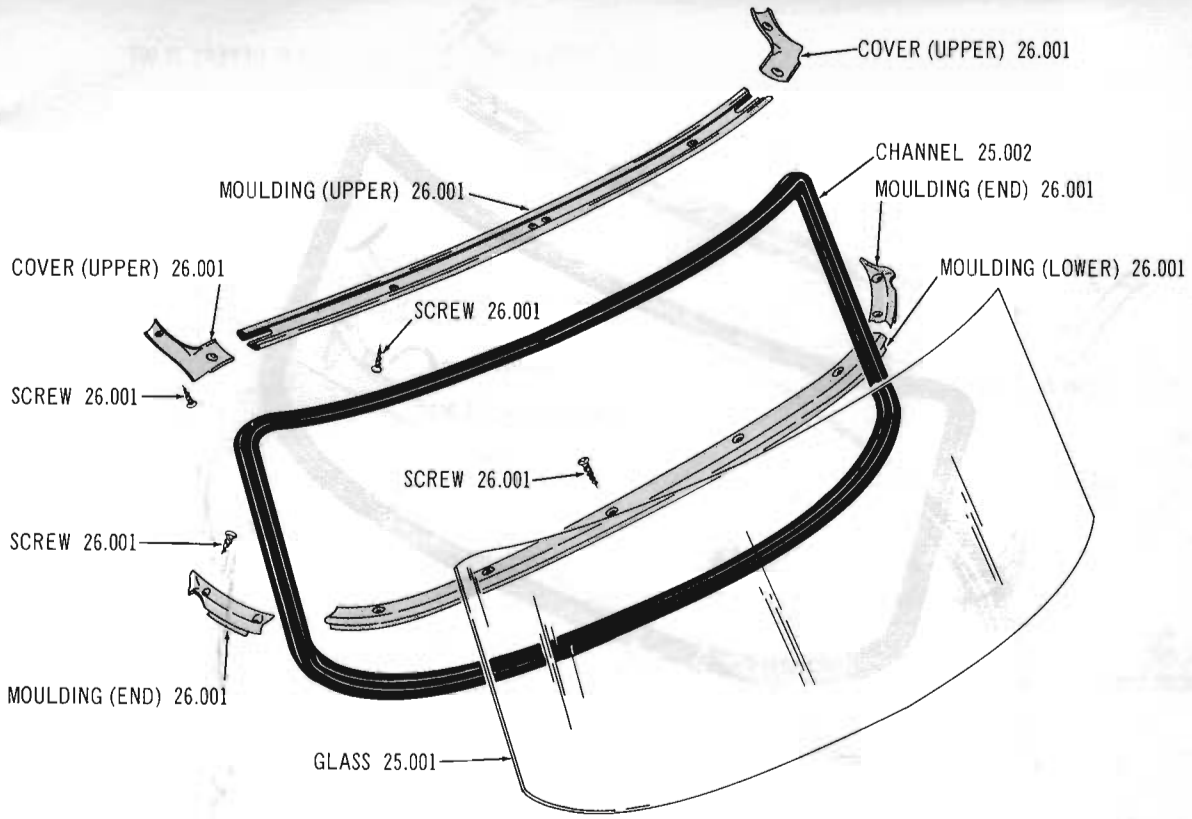

WINDSHIELD GLASS, CHANNEL AND FINISH MOULDINGS 64 01 (LCV)

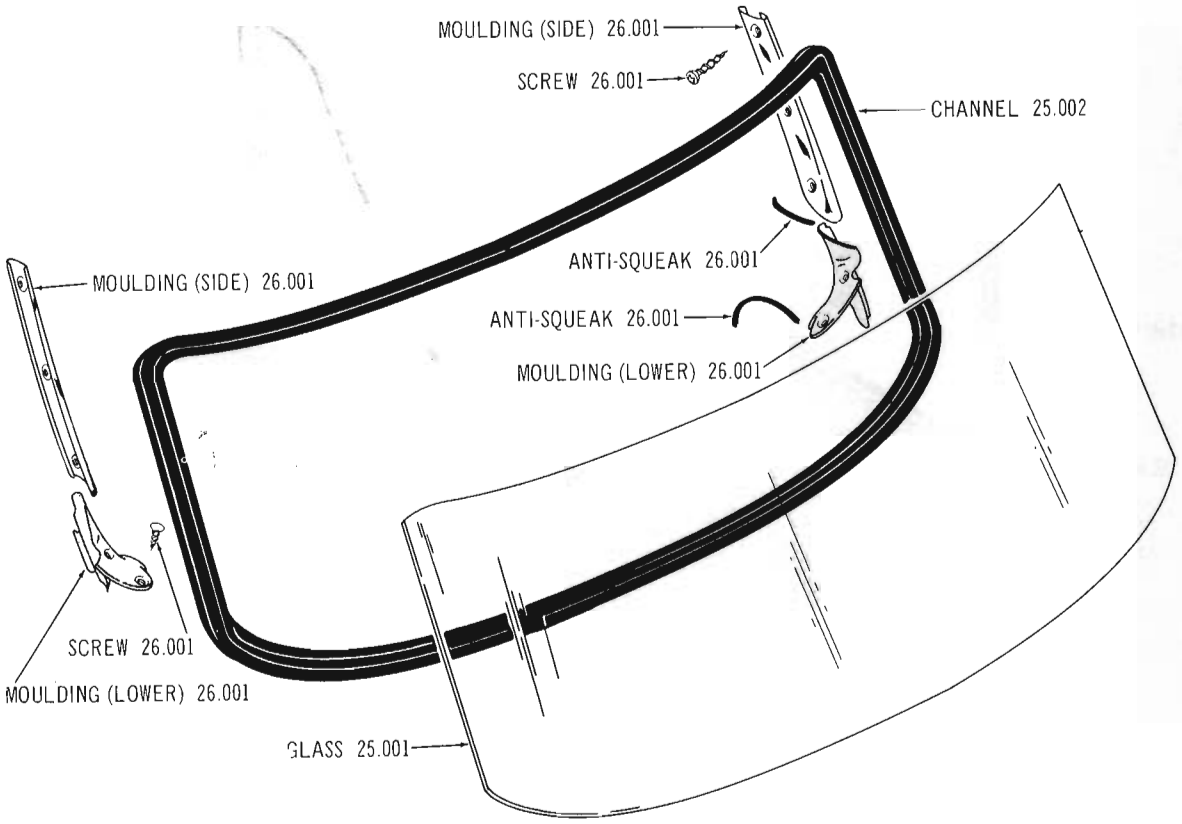

WINDSHIELD GLASS, CHANNEL AND FINISH MOULDINGS 64 07

Copyright 1963 American Motors Corp.

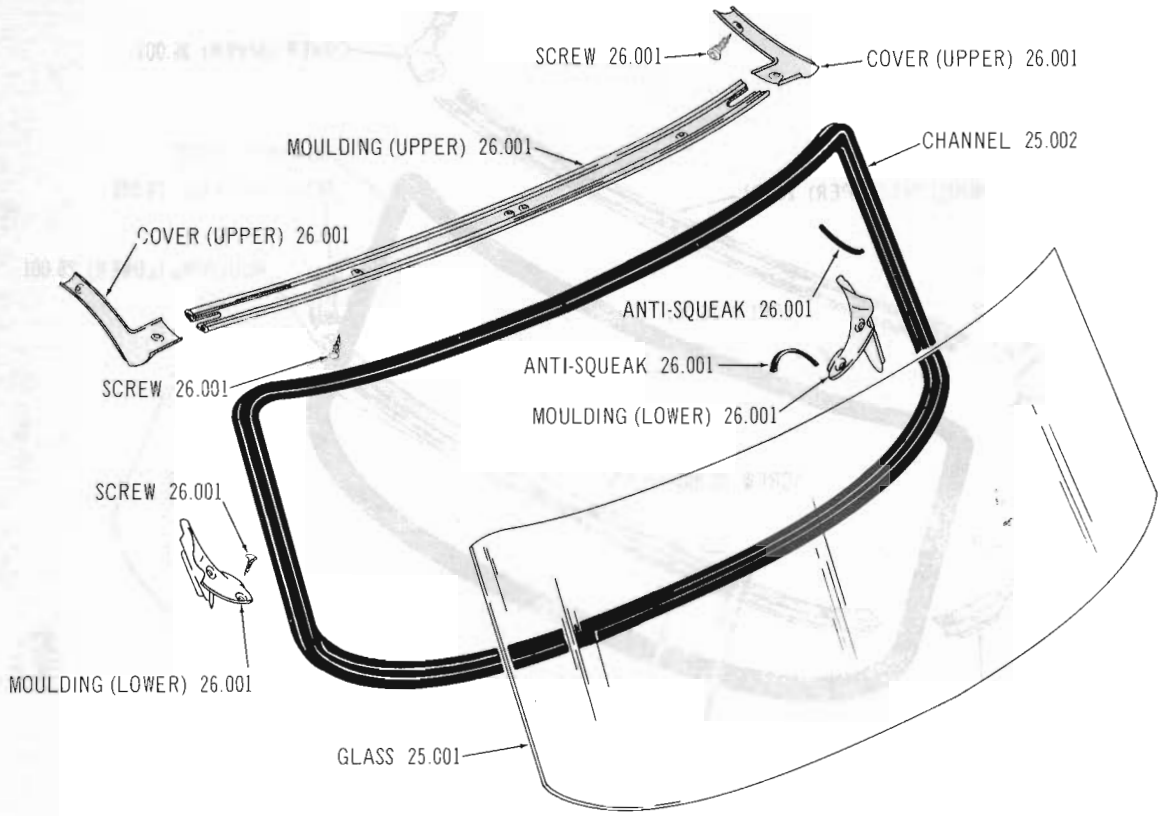

WINDSHIELD GLASS, CHANNEL AND FINISH MOULDINGS 63 thru Current 10-80

Copyright 1963 American Motors Corp.

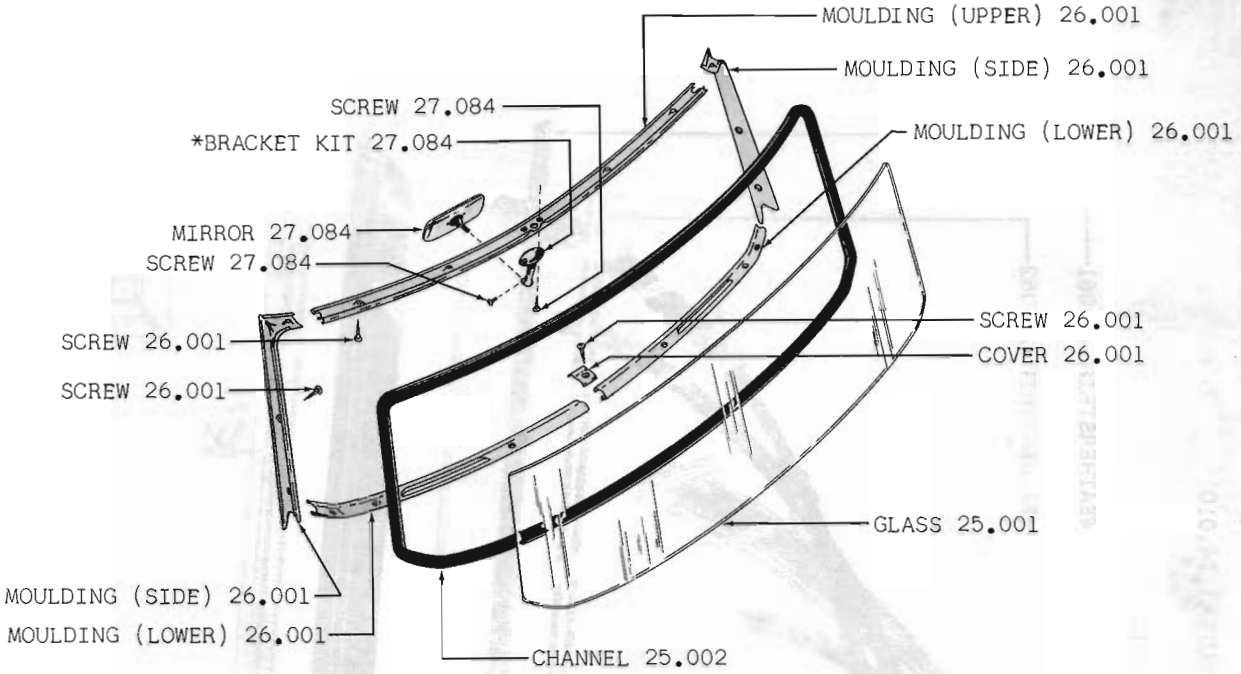

* INCLUDES SCREW (MIRROR TO BRACKET) 27.084

FIG. 25.001-1 WINDSHIELD GLASS, CHANNEL AND FINISH MOULDINGS 60 THRU 63 01

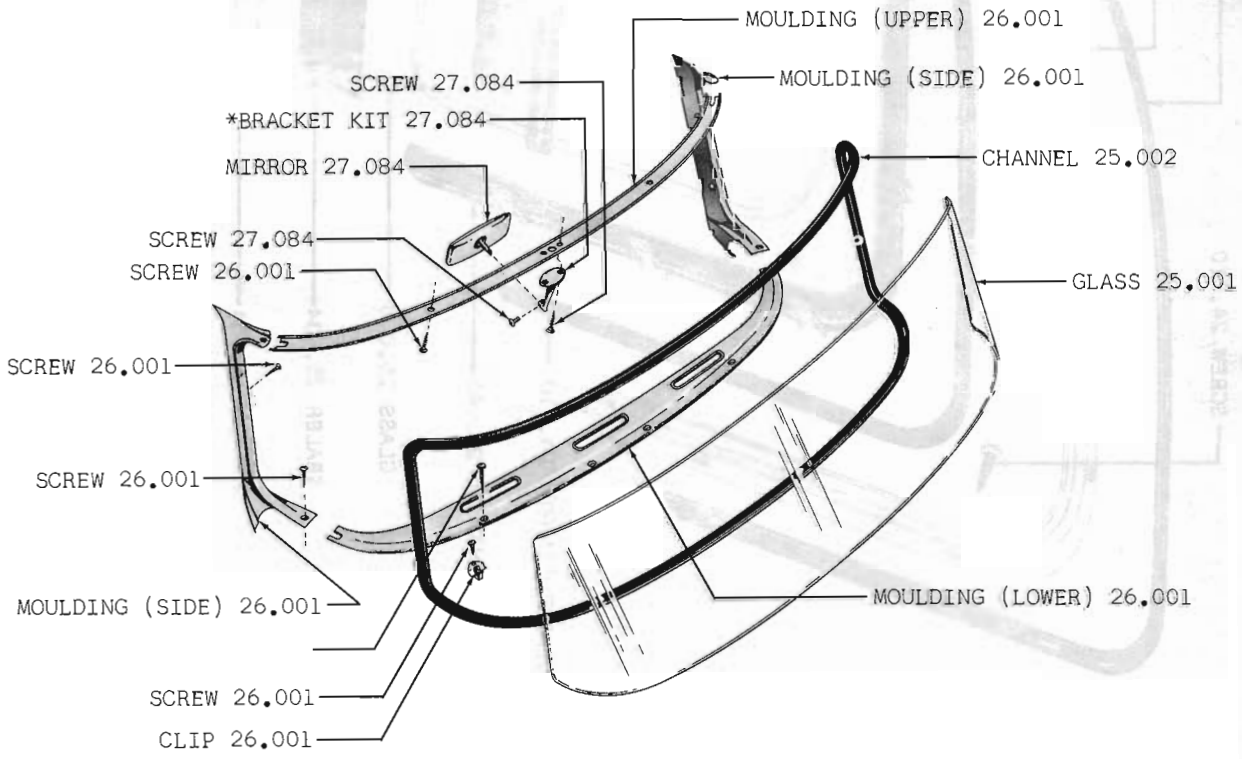

* INCLUDES SCREW (MIRROR TO BRACKET) 27.084

FIG. 25.001-3 WINDSHIELD GLASS, CHANNEL AND FINISH MOULDINGS 60 THRU 62 10-20-80

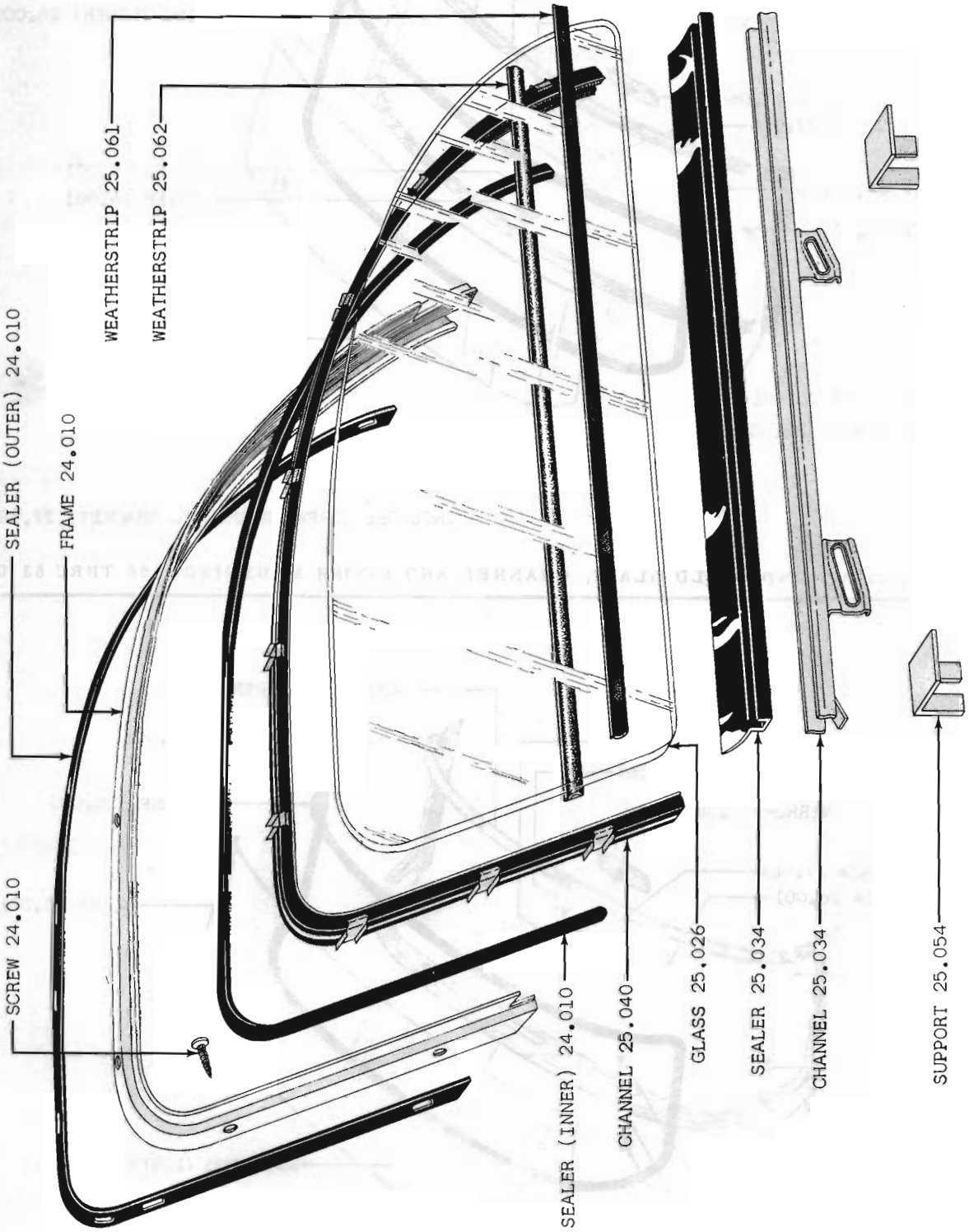

FIG. 25.026-1 REAR QUARTER STATIONARY GLASS AND CHANNELS 60 THRU 62 02-06

Printed in U.S.A.

FIG. 25.026-3 REAR QUARTER STATIONARY WINDOW AND FINISH MLDGS. 60

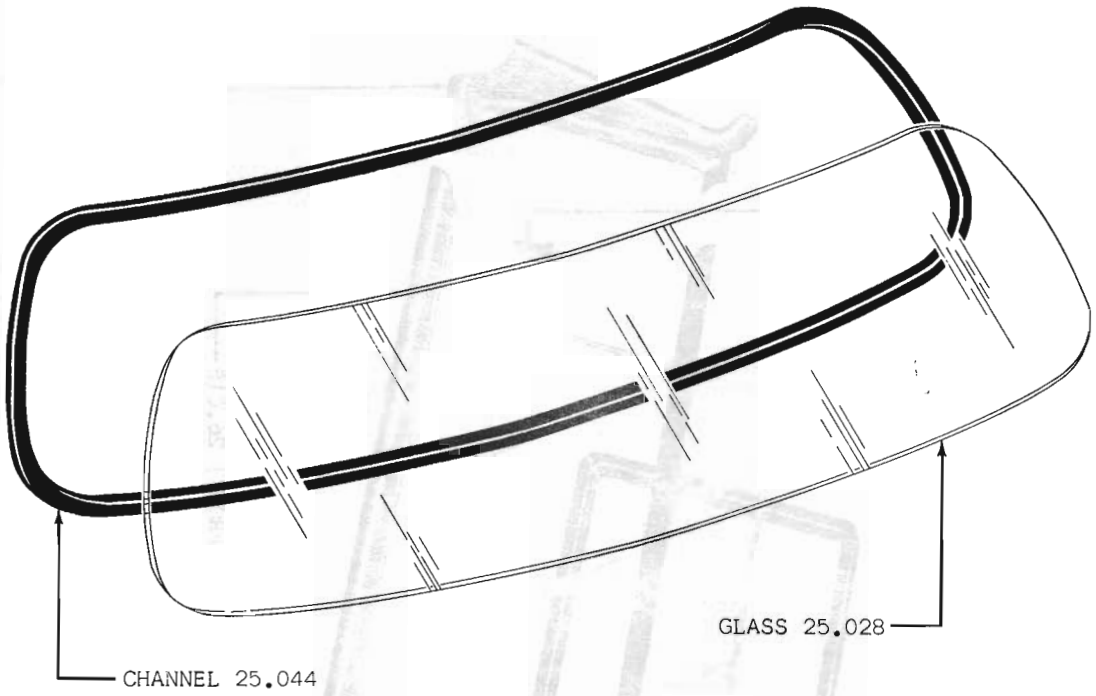

FIG. 25.028-1 REAR WINDOW GLASS AND CHANNEL 60 THRU CURRENT 01 SEDAN

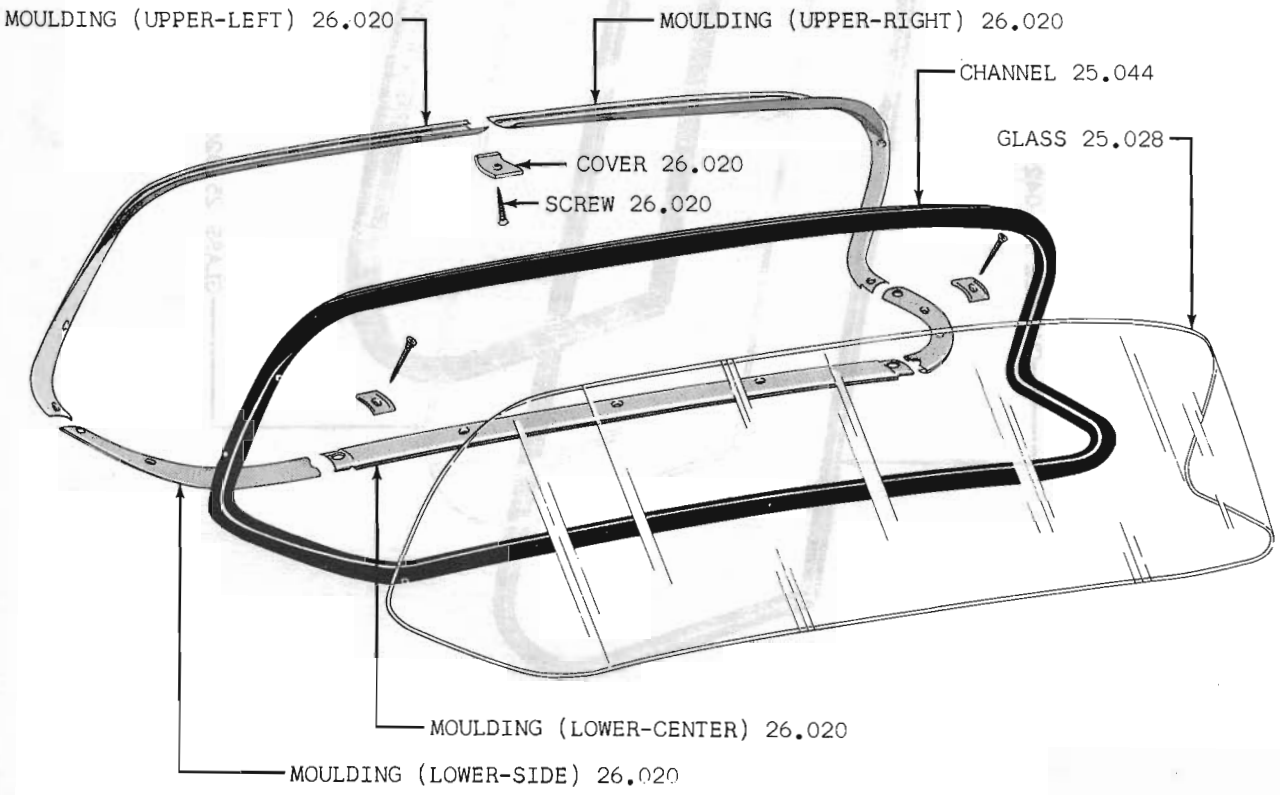

FIG. 25.028-3 REAR WINDOW GLASS, CHANNEL AND FINISH MOULDINGS 60 THRU 62 10-20-80 SEDAN

Printed in U.S.A.

GROUP NO. — DESCRIPTION — YEAR and MODEL	PRIMARY GROUP NO.	PER CAR	PART NO.	CODE
25.001 GLASS, Windshield (Note 25.000-1)				
(Clear)(W316) 60 01		1	437 3160	
(Clear)(W606) 61 Thru 63 01		1	344 6600	
(Clear)(W646) 64-65 01		1	350 0530	
(Clear)(W592) 60-61 10-20		1	344 0050	
(Clear)(W620) 62 10-80		1	346 1382	
(Clear)(W624) 63 10-80: 64-65 15-16-18-85-86-88		1	347 2650	
(Clear)(W593) 60-61 80		1	344 0051	
(Clear)(W645) 64-65 17-19-87-89		1	350 1340	
(Solex)(W316) 60 01		1	437 3319	
(Solex)(W606) 61 Thru 63 01		1	344 6601	
(Sunshade Solex)(W646) 64-65 01		1	350 0531	
(Solex)(W592) 60-61 10-20		1	344 0053	
(Solex)(W620) 62 10-80		1	346 1383	
(Solex)(W593) 60-61 80		1	344 0054	
(Sunshade Solex)(W624) 63 10-80: 64-65 15-16-18-85-86-88 *(Replaces 347 2651)*		1	349 0400	
(Sunshade Solex)(W645) 64-65 17-19-87-89		1	350 1341	
25.002 CHANNEL, Windshield Glass				
60 01 (Note 25.002-1)		1	340 0020	
60 01 (Note 25.002-2)		1	340 0019	
61 Thru 63 01 (Note 25.002-1)		1	344 7170	
61 Thru 63 01 (Note 25.002-2)		1	344 7171	
64-65 05-06-08-09		1	350 0532	
64-65 07		1	352 2323	
60-61 10-20-80 *(Use 346 1384)*		1	345 1783	#
62 10-80		1	346 1384	
63 10-80		1	347 2652	
64-65 15-16-18-85-86-88		1	350 9714	
64-65 19-89		1	350 1342	
65 17-87		1	351 5104	
CLIP, Windshield Glass Channel (Upper)				
60 Thru 62 10-20-80		1	345 1761	
ATTACHING PARTS Clip To Body				
CLIP ..... 60 Thru 62 10-20-80	26.001	1	400 0026	
25.013 GLASS ASSEMBLY, Tailgate Lowering (Incl. Chrome Frame And Bottom Channel)				
(Clear) 60 18-28-83-88 (L3S-Note 25.013-1 Type1)		1	341 2227	
(Clear) 60 18-28-83-88 (L3S-Note 25.013-1 Type 2): 61-62 18-28-88 (LVT)		1	344 6168	
(Solex) 60 18-28-83-88 (L3S-Note 25.013-1 Type 2): 61-62 18-28-88 (LVT)		1	344 6169	

NOTE 25.000-1: Curved Glass Items are available from your local American Motors Parts Warehouse. Flat Glass Items are supplied by the Vender listed in the General Information section of this Parts Catalog. If unable to obtain Flat Glass locally, contact your American Motors Field Parts Warehouse Manager.

NOTE 25.002-1: Used on Cars less Reveal Moulding..

NOTE 25.002-2: Used on Cars with Reveal Moulding.

NOTE 25.013-1: Two Types of Bottom Channels were used on the 60 10-20-80 Series. They can be identified as follows:
Type 1: Support Brackets on Bottom Channel are 17-7/8" apart.
Type 2: Support Brackets on Bottom Channel are 17-3/8" apart.

Copyright 1963 American Motors Corp.

GROUP NO. — DESCRIPTION — YEAR and MODEL	PRIMARY GROUP NO.	PER CAR	PART NO.	CODE
25.014 GLASS ASSEMBLY, Front Door Lowering (Incl. Chrome Frame and Bottom Channel)				
(Left-Clear) 61 Thru 63 07-09	.....	1	345 8301	
(Left-Clear) 64 07-09-19-89	.....	1	350 1061	
(Left-Clear) 65 07-09-17-19-87-89	.....	1	353 0811	
(Left-Clear) 60 19-29-83-89	.....	1	342 3095	
(Left-Solex) 61 Thru 63 07-09	.....	1	346 3165	
(Left-Solex) 64 07-09-19-89	.....	1	350 1063	
(Left-Solex) 65 07-09-17-19-87-89	.....	1	353 0813	
(Right-Clear) 61 Thru 63 07-09	.....	1	345 8300	
(Right-Clear) 64 07-09-19-89	.....	1	350 1060	
(Right-Clear) 65 07-09-17-19-87-89	.....	1	353 0810	
(Right-Clear) 60 19-29-83-89	.....	1	342 3096	
(Right-Solex) 61 Thru 63 07-09	.....	1	346 3164	
(Right-Solex) 64 07-09-19-89	.....	1	350 1062	
(Right-Solex) 65 07-09-17-19-87-89	.....	1	353 0812	
25.015 GLASS ASSEMBLY, Rear Door Lowering (Incl. Chrome Frame And Bottom Channel)				
(Left-Clear) 60 19-29-83-89	.....	1	344 0347	
(Left-Solex) 60 19-29-83-89	.....	1	344 0349	
(Right-Clear) 60 19-29-83-89	.....	1	344 0346	
(Right-Solex) 60 19-29-83-89	.....	1	344 0348	
25.016 GLASS, Front Door Ventilator (Ref. Note 25.000-1)				
(Flat-Clear)(2290T) 60 Thru 63 02-04-06	.....	2	344 6085	
(Flat-Clear)(2291T) 60 Thru 63 05-08	.....	2	344 6096	
(Flat-Clear)(2378T) 61 Thru 63 07-09	.....	2	345 8816	
(Flat-Clear)(2287T) 60-61 10-20-80	.....	2	344 0218	
(Flat-Clear)(2387T) 62 10-80	.....	2	346 1534	
(Flat-Solex)(2290T) 60 Thru 63 02-04-06	.....	2	344 6086	
(Flat-Solex)(2291T) 60 Thru 63 05-08	.....	2	344 6097	
(Flat-Solex)(2378T) 61 Thru 63 07-09	.....	2	346 3330	
(Flat-Solex)(2287T) 60-61 10-20-80	.....	2	344 0219	
(Flat-Solex)(2387T) 62 10-80	.....	2	346 1535	
(Curved-Clear-Left)(V3136) 64-65 01: 63 Thru 65 10-80	.....	1	348 2129	
(Curved-Clear-Right)(V3135) 64-65 01: 63 Thru 65 10-80	.....	1	348 2128	
(Curved-Solex-Left)(V3136) 64-65 01: 63 Thru 65 10-80	.....	1	348 2131	
(Curved-Solex-Right)(V3135) 64-65 01: 63 Thru 65 10-80	.....	1	348 2130	
25.018 GLASS, Front Door Lowering (Ref. Note 25.000-1)				
(Flat-Clear)(4254T) 60 Thru 63 02-04-06	.....	2	344 0948	
(Flat-Clear)(4256T) 60 Thru 63 05-08	.....	2	344 3888	
(Flat-Clear)(4335T) 61 Thru 63 07-09	.....	2	345 8316	
(Flat-Clear)(4159T) 60 15-18-25-28-85-88: 61 10-20-80	.....	2	342 2924	
(Flat-Clear)(4157T) 60 19-29-83-89	.....	2	342 3105	
(Flat-Clear)(4340T) 62 15-18-85-88	.....	2	346 1800	
(Flat-Clear)(4338T) 62 16-86	.....	2	346 1806	
(Flat-Solex)(4335T) 61 Thru 63 07-09	.....	2	346 3166	
(Flat-Solex)(4159T) 60 15-18-25-28-85-88: 61 10-20-80	.....	2	342 2923	
(Flat-Solex)(4157T) 60 19-29-83-89	.....	2	342 3106	
(Flat-Solex)(4340T) 62 15-18-85-88	.....	2	346 1801	
(Flat-Solex)(4338T) 62 16-86	.....	2	346 1807	

Copyright 1963 American Motors Corp.

GROUP NO. — DESCRIPTION — YEAR and MODEL	PRIMARY GROUP NO.	PER CAR	PART NO.	CODE
(Curved-Clear-Left)(D3145) 63-64 15-18-85-88: 64 05-08	.....	1	348 2133	
(Curved-Clear-Left)(D3390) 65 05-08-15-18-85-88	.....	1	353 0713	#
(Curved-Clear-Left)(D3138) 63 16-86: 64 02-06-16	.....	1	348 2137	
(Curved-Clear-Left)(D3387) 65 06-16-86	.....	1	353 0721	#
(Curved-Clear-Left)(D3202) 64 07-09-19-89	.....	1	350 1149	
(Curved-Clear-Left)(D3382) 65 07-09-17-19-87-89	.....	1	353 0817	#
(Curved-Clear-Right)(D3144) 63-64 15-18-85-88: 64 05-08	.....	1	348 2132	
(Curved-Clear-Right)(D3389) 65 05-08-15-18-85-88	.....	1	353 0712	#
(Curved-Clear-Right)(D3137) 63 16-86: 64 02-06-16	.....	1	348 2136	
(Curved-Clear-Right)(D3386) 65 06-16-86	.....	1	353 0720	#
(Curved-Clear-Right)(D3201) 64 07-09-19-89	.....	1	350 1148	
(Curved-Clear-Right)(D3381) 65 07-09-17-19-87-89	.....	1	353 0816	#
(Curved-Solex-Left)(D3145) 63-64 15-18-85-88: 64 05-08	.....	1	348 2135	
(Curved-Solex-Left)(D3390) 65 05-08-15-18-85-88	.....	1	353 0715	#
(Curved-Solex-Left)(D3138) 63 16-86: 64 02-06-16	.....	1	348 2139	
(Curved-Solex-Left)(D3387) 65 06-16-86	.....	1	353 0723	#
(Curved-Solex-Left)(D3202) 64 07-09-19-89	.....	1	350 1151	
(Curved-Solex-Left)(D3382) 65 07-09-17-19-87-89	.....	1	353 0819	#
(Curved-Solex-Right)(D3144) 63-64 15-18-85-88: 64 05-08	.....	1	348 2134	
(Curved-Solex-Right)(D3389) 65 05-08-15-18-85-88	.....	1	353 0714	#
(Curved-Solex-Right)(D3137) 63 16-86: 64 02-06-16	.....	1	348 2138	
(Curved-Solex-Right)(D3386) 65 06-16-86	.....	1	353 0722	#
(Curved-Solex-Right)(D3201) 64 07-09-19-89	.....	1	350 1150	
(Curved-Solex-Right)(D3381) 65 07-09-17-19-87-89	.....	1	353 0818	#
25.020 GLASS, Rear Door Lowering (Ref. Note 25.000-1)				
(Flat-Clear)(4257T) 60 05	.....	2	344 3532	
(Flat-Clear)(4299T) 61 Thru 63 05	.....	2	344 6866	
(Flat-Clear)(4300T) 61 Thru 63 08	.....	2	344 6862	
(Flat-Clear)(4253T) 60 15-18-25-28-85-88: 61 10-20-80	.....	2	344 0364	
(Flat-Clear)(4252T) 60 19-29-83-89	.....	2	344 0350	
(Flat-Clear)(4341T) 62 15-18-85-88	.....	2	346 1724	
(Flat-Solex)(4257T) 60 05	.....	2	344 3533	
(Flat-Solex)(4299T) 61 Thru 63 05	.....	2	344 6867	
(Flat-Solex)(4300T) 61 Thru 63 08	.....	2	344 6863	
(Flat-Solex)(4253T) 60 15-18-25-28-85-88: 61 10-20-80	.....	2	344 0365	
(Flat-Solex)(4252T) 60 19-29-83-89	.....	2	344 0351	
(Flat-Solex)(4341T) 62 15-18-85-88	.....	2	346 1725	
(Curved-Clear-Left)(D3147) 63-64 15-18-85-88: 64 05-08	.....	1	348 2149	
(Curved-Clear-Left)(D3392) 65 05-08-15-18-85-88	.....	1	353 0717	#
(Curved-Clear-Right)(D3146) 63-64 15-18-85-88: 64 05-08	.....	1	348 2148	
(Curved-Clear-Right)(D3391) 65 05-08-15-18-85-88	.....	1	353 0716	#
(Curved-Solex-Left)(D3147) 63-64 15-18-85-88: 64 05-08	.....	1	348 2151	
(Curved-Solex-Left)(D3392) 65 05-08-15-18-85-88	.....	1	353 0719	#
(Curved-Solex-Right)(D3146) 63-64 15-18-85-88: 64 05-08	.....	1	348 2150	
(Curved-Solex-Right)(D3391) 65 05-08-15-18-85-88	.....	1	353 0718	#
25.021 GLASS, Rear Door Ventilator (Ref. Note 25.000-1)				
(Flat-Clear)(2288T) 60 61 10-20-80	.....	2	344 0308	
(Flat-Clear)(2388T) 62 15-18-85-88	.....	2	346 1608	
(Flat-Solex)(2288T) 60-61 10-20-80	.....	2	344 0309	
(Flat-Solex)(2388T) 62 15-18-85-88	.....	2	346 1609	
25.022 GLASS, Rear Quarter Ventilator (Ref. Note 25.000-1)				
(Flat-Clear)(2388T) 62 16-86	25.021	2	346 1608	
(Flat-Solex)(2388T) 62 16-86	25.021	2	346 1609	

Copyright 1963 American Motors Corp.

GROUP NO. — DESCRIPTION — YEAR and MODEL	PRIMARY GROUP NO.	PER CAR	PART NO.	CODE
25.023 GLASS, Rear Door Stationary Window (Ref. Note 25.000-1)				
(Flat-Clear)(2289T) 60 15-18-25-28-85-88: 61 10-20-80	.....	2	344 0328	
(Flat-Clear)(2389T) 62 16-86	.....	2	346 1618	
(Flat-Solex)(2389T) 62 16-86	.....	2	346 1619	
(Curved-Clear-Left)(Q3142) 63 Thru 65 15-18-85-88: 64-65 05-08	.....	1	348 2145	
(Curved-Clear-Right)(Q3141) 63 Thru 65 15-18-85-88: 64-65 05-08	.....	1	348 2144	
(Curved-Solex-Left)(Q3142) 63 Thru 65 15-18-85-88: 64-65 05-08	.....	1	348 2147	
(Curved-Solex-Right)(Q3141) 63 Thru 65 15-18-85-88: 64-65 05-08	.....	1	348 2146	
25.024 GLASS, Rear Quarter Lowering (Ref. Note 25.000-1)				
(Flat-Clear)(4255T) 60 06	.....	2	344 3692	
(Flat-Clear)(4298T) 61 Thru 63 06	.....	2	344 7008	
(Flat-Clear)(2379T) 61 Thru 63 07-09	.....	2	345 8294	
(Flat-Clear)(4339T) 62 16-86	.....	2	346 1374	
(Flat-Solex)(4255T) 60 06	.....	2	344 3693	
(Flat-Solex)(4298T) 61 Thru 63 06	.....	2	344 7009	
(Flat-Solex)(2379T) 61 Thru 63 07-09	.....	2	345 8295	
(Flat-Solex)(4339T) 62 16-86	.....	2	346 1375	
(Curved-Clear-Left)(Q3210) 64-65 06	.....	1	350 1091	
(Curved-Clear-Left)(Q3208) 64-65 07-17-87 (Except Marlin)	.....	1	350 1135	#
(Curved-Clear-Left)(Q3204) 64-65 09-19-89 (Except Marlin)	.....	1	350 1193	#
(Curved-Clear-Left)(Q3140) 63 Thru 65 16-86 (Except Marlin)	.....	1	348 2447	#
(Curved-Clear-Left)(Q3384) 65 59 (Marlin)	.....	1	353 0241	#
(Curved-Clear-Right)(Q3209) 64-65 06	.....	1	350 1090	
(Curved-Clear-Right)(Q3207) 64-65 07-17-87 (Except Marlin)	.....	1	350 1134	#
(Curved-Clear-Right)(Q3203) 64-65 09-19-89 (Except Marlin)	.....	1	350 1192	#
(Curved-Clear-Right)(Q3139) 63 Thru 65 16-86 (Except Marlin)	.....	1	348 2446	#
(Curved-Clear-Right)(Q3383) 65 59 (Marlin)	.....	1	353 0240	#
(Curved-Solex-Left)(Q3210) 64-65 06	.....	1	350 1093	
(Curved-Solex-Left)(Q3208) 64-65 07-17-87 (Except Marlin)	.....	1	350 1137	#
(Curved-Solex-Left)(Q3204) 64-65 09-19-89 (Except Marlin)	.....	1	350 1195	#
(Curved-Solex-Left)(Q3140) 63 Thru 65 16-86 (Except Marlin)	.....	1	348 2449	#
(Curved-Solex-Left)(Q3384) 65 59 (Marlin)	.....	1	353 0243	#
(Curved-Solex-Right)(Q3209) 64-65 06	.....	1	350 1092	
(Curved-Solex-Right)(Q3207) 64-65 07-17-87 (Except Marlin)	.....	1	350 1136	#
(Curved-Solex-Right)(Q3203) 64-65 09-19-89 (Except Marlin)	.....	1	350 1194	#
(Curved-Solex-Right)(Q3139) 63 Thru 65 16-86 (Except Marlin)	.....	1	348 2448	#
(Curved-Solex-Right)(Q3383) 65 59 (Marlin)	.....	1	353 0242	#
25.025 GLASS, Side Front Window (Ref. Note 25.000-1)				
(Flat-Front Half-Clear)(2889S) 60 04	.....	2	435 6902	
(Flat-Rear Half-Clear)(2888S) 60 04	.....	2	435 6903	
(Flat-Front Half-Clear)(2327T) 61 Thru 63 04	.....	2	344 7120	
(Flat-Rear Half-Clear)(2328T) 61 Thru 63 04	.....	2	344 7122	
(Flat-Front Half-Solex)(2889S) 60 04	.....	2	436 8485	
(Flat-Rear Half-Solex)(2888S) 60 04	.....	2	436 8486	
(Flat-Front Half-Solex)(2327T) 61 Thru 63 04	.....	2	344 7121	
(Flat-Rear Half-Solex)(2328T) 61 Thru 63 04	.....	2	344 7123	
25.026 GLASS, Rear Quarter Stationary (Ref. Note 25.000-1)				
(Flat-Clear)(4255T) 60 02	.....	2	344 3692	
(Flat-Clear)(2292T) 60 05	.....	2	344 3798	
(Flat-Clear)(4298T) 61 Thru 63 02	25.024	2	344 7008	
(Flat-Clear)(2329T) 61 Thru 63 05	.....	2	344 7018	
(Flat-Clear)(1045T) 61 Thru 63 08	.....	2	344 7132	
(Flat-Clear)(1033T) 60 Thru 62 18-28-83-88	.....	2	344 0376	
(Flat-Clear)(2389T) 62 16-86	25.023	2	346 1618	

Copyright 1963 American Motors Corp.

GROUP NO. — DESCRIPTION — YEAR and MODEL	PRIMARY GROUP NO.	PER CAR	PART NO.	CODE
(Flat-Solex)(4255T) 60 02	.....	2	344 3693	
(Flat-Solex)(2292T) 60 05	.....	2	344 3799	
(Flat-Solex)(4298T) 61 Thru 63 02	23.024	2	344 7009	
(Flat-Solex)(2329T) 61 Thru 63 05	.....	2	344 7019	
(Flat-Solex)(1045T) 61 Thru 63 08	.....	2	344 7133	
(Flat-Solex)(1033T) 60 Thru 62 18-28-83-88	.....	2	344 0377	
(Flat-Solex)(2389T) 62 16-86	25.023	2	346 1619	
(Curved-Clear-Left)(Q3213) 64-65 08	.....	1	350 0535	
(Curved-Clear-Left)(Q3149) 63 Thru 65 18-88	.....	1	348 2059	
(Curved-Clear-Right)(Q3212) 64-65 08	.....	1	350 0534	
(Curved-Clear-Right)(Q3148) 63 Thru 65 18-88	.....	1	348 2058	
(Curved-Solex-Left)(Q3213) 64-65 08	.....	1	350 0537	
(Curved-Solex-Left)(Q3149) 63 Thru 65 18-88	.....	1	348 2061	
(Curved-Solex-Right)(Q3212) 64-65 08	.....	1	350 0536	
(Curved-Solex-Right)(Q3148) 63 Thru 65 18-88	.....	1	348 2060	

25.027 GLASS, Side Rear Window (Ref. Note 25.000-1)

(Flat-Clear)(1045T) 61 Thru 63 04	25.026	2	344 7132	
(Flat-Solex)(2890S) 60 04	.....	2	436 8487	
(Flat-Solex)(1045T) 61 Thru 63 04	25.026	2	344 7133	

25.028 GLASS, Liftgate (Ref. Note 25.000-1)

(Curved-Clear)(B201) 60 04	.....	1	435 6901	
(Flat-Clear)(1044T) 61 04-08	.....	1	344 6988	
(Flat-Clear)(1059T) 62-63 04-08	.....	1	348 1678	
(Flat-Solex)(1044T) 61 04-08 *(Discontinued)*	.....	1	344 6989	
(Flat-Solex)(1059T) 62-63 04-08	.....	1	348 1679	

GLASS, Rear Window (Ref. Note 25.000-1)

(Curved-Clear)(B556) 60 02-05-06	.....	1	342 9029	
(Curved-Clear)(B3097) 61 Thru 63 02-05-06	.....	1	344 6610	
(Curved-Clear)(B3211) 64-65 05-06	.....	1	350 0590	
(Curved-Clear)(B3152) 63 09	.....	1	349 0042	
(Curved-Clear)(B3206) 64-65 09	.....	1	350 1040	
(Curved-Clear)(B3059) 60 Thru 62 15-16-19-25-29-85-86-89	.....	1	344 0052	
(Curved-Clear)(B3143) 63-64 15-16-85-86	.....	1	347 2664	
(Curved-Clear)(B3388) 65 15-16-85-86 (Except Marlin)	.....	1	351 6044	
(Curved-Clear)(B3205) 64-65 19-89 (Except Marlin)	.....	1	350 1350	
(Curved-Solex)(B556) 60 02-05-06	.....	1	342 5826	
(Curved-Solex)(B3097) 61 Thru 63 02-05-06	.....	1	344 6611	
(Curved-Solex)(B3211) 64-65 05-06	.....	1	350 0591	
(Curved-Solex)(B3152) 63 09	.....	1	349 0043	
(Curved-Solex)(B3059) 60 Thru 62 15-16-19-25-29-85-86-89	.....	1	344 0055	
(Curved-Solex)(B3143) 63 15-16-85-86	.....	1	347 2665	
(Curved-Sunshade Solex)(B3206) 64-65 09	.....	1	350 1041	
(Curved-Sunshade Solex)(B3143) 63-64 15-16-85: 63 86	.....	1	349 0401	
(Curved-Sunshade Solex)(B3388) 65 15-16-85-86 (Except Marlin)	.....	1	351 6045	
(Curved-Sunshade Solex)(B3205) 64-65 19-89 (Except Marlin)	.....	1	350 1351	
(Curved-Sunshade Solex)(B3385) 65 59 (Marlin)	.....	1	351 7381	
(Curved-Tinted Solex)(B3385) 65 59 (Marlin)	.....	1	354 3674	

GLASS, Tailgate (Ref. Note 25.000-1)

(Curved-Clear)(B440) 60 Thru 62 18-28-83-88 (LVT)	.....	1	341 1258	
(Curved-Clear)(B3060) 60 Thru 62 18-28-88 (WVT)	.....	1	344 3858	
(Curved-Clear)(B3150) 64-65 08: 63 Thru 65 18-88 (LVT)	.....	1	348 2280	
(Curved-Clear)(B3151) 63 Thru 65 18-88 (WVT)	.....	1	348 2282	
(Curved-Solex)(B440) 60 Thru 62 18-28-83-88 (LVT)	.....	1	341 2320	
(Curved-Solex)(B3060) 60 Thru 62 18-28-88 (WVT)	.....	1	344 3859	
(Curved-Solex)(B3150) 64-65 08: 63 Thru 65 18-88 (LVT)	.....	1	348 2281	
(Curved-Solex)(B3151) 63 Thru 65 18-88 (WVT)	.....	1	348 2283	

Copyright 1963 American Motors Corp.

GROUP NO. — DESCRIPTION — YEAR and MODEL	PRIMARY GROUP NO.	PER CAR	PART NO.	CODE
25.029 GLASS ASSEMBLY, Rear Quarter Window Lowering (Incl. Chrome Frame And Bottom Channel)				
(Left-Clear) 61 Thru 63 07-09	.....	1	345 8321	
(Right-Clear) 61 Thru 63 07-09	.....	1	345 8320	
(Left-Clear) 64-65 07-17-87 (LER)(Except Marlin)	.....	1	350 1001	
(Left-Clear) 65 17-87 (WER)(Except Marlin)	.....	1	353 0911	
(Right-Clear) 64-65 07-17-87 (LER)(Except Marlin)	.....	1	350 1000	
(Right-Clear) 65 17-87 (WER)(Except Marlin)	.....	1	353 0910	
(Left-Clear) 64 09-19-89 (LER-Note 25.029-1 Type 1)	.....	1	350 1011	
(Left-Clear) 64 09-19-89 (Note 25.029-1 Type 2): 65 09-19-89 (Except Marlin) ***(Replaces 353 7631)***	.....	1	320 5897	#
(Right-Clear) 64 09-19-89 (LER-Note 25.029-1 Type 1) ***(Use 320 5896)***	.....	1	350 1010	#
(Left-Clear) 64 19-89 (WER)	.....	1	350 9617	
(Right-Clear) 64 09-19-89 (Note 25.029-1 Type 2): 65 09-19-89 (Except Marlin) ***(Replaces 353 7630)***	.....	1	320 5896	#
(Right-Clear) 64 19-89 (WER)	.....	1	350 9616	
(Left-Clear) 65 59 (Marlin)	.....	1	351 7341	
(Right-Clear) 65 59 (Marlin)	.....	1	351 7340	
(Left-Solex) 61 Thru 63 07-09	.....	1	345 8323	
(Right-Solex) 61 Thru 63 07-09	.....	1	345 8322	
(Left-Solex) 64-65 07-17-87 (LER)(Except Marlin)	.....	1	350 1003	
(Left-Solex) 65 17-87 (WER)(Except Marlin)	.....	1	353 0913	
(Right-Solex) 64-65 07-17-87 (LER)(Except Marlin)	.....	1	350 1002	
(Right-Solex) 65 17-87 (WER)(Except Marlin)	.....	1	353 0912	
(Left-Solex) 64 09-19-89 (LER-Note 25.029-1 Type 1)	.....	1	350 1013	
(Left-Solex) 64 09-19-89 (Note 25.029-1 Type 2): 65 09-19-89 (Except Marlin)	.....	1	353 7637	
(Left-Solex) 64 19-89 (WER)	.....	1	350 9619	
(Right-Solex) 64 09-19-89 (LER-Note 25.029-1 Type 1)	.....	1	350 1012	
(Right-Solex) 64 09-19-89 (Note 25.029-1 Type 2): 65 09-19-89 (Except Marlin)	.....	1	353 7636	
(Right-Solex) 64 19-89 (WER)	.....	1	350 9618	
(Left-Solex) 65 59 (Marlin)	.....	1	351 7343	
(Right-Solex) 65 59 (Marlin)	.....	1	351 7342	
GUIDE, Rear Quarter Glass Channel				
(Left-Front) 64-65 07-17-87 (Except Marlin)	.....	1	350 0999	
(Left-Front) 64-65 09-19-89 (Except Marlin)	.....	1	350 1183	
(Left-Front) 65 59 (Marlin)	.....	1	351 7321	
(Right-Front) 64-65 07-17-87 (Except Marlin)	.....	1	350 0998	
(Right-Front) 64-65 09-19-89 (Except Marlin)	.....	1	350 1182	
(Right-Front) 65 59 (Marlin)	.....	1	351 7320	
ATTACHING PARTS				
Guide To Uniside Lower Bracket				
SCREW, Machine..... 64-65 07-09-17-19-87-89	23.040	4	400 0413	
WASHER, Plain..... 64-65 07-17-87	17.814	4	G120392	NA
WASHER, Bite..... 64-65 09-19-89	.....	4	400 0690	
Guide To Belt Rail				
SCREW, Machine..... 64-65 07-09-17-19-87-89	23.040	4	400 0413	
WASHER, Plain..... 64-65 07-17-87	17.814	4	G120392	
WASHER, Bite..... 64-65 09-19-89	.....	4	400 0690	
BRACKET, Rear Quarter Glass Channel Guide				
(Left) 64-65 07-17-87 (Except Marlin)	.....	1	350 1033	
(Left) 64-65 09-19-89 (Except Marlin)	.....	1	350 1187	
(Left) 65 59 (Marlin)	.....	1	353 0227	
(Right) 64-65 07-17-87 (Except Marlin)	.....	1	350 1032	
(Right) 64-65 09-19-89 (Except Marlin)	.....	1	350 1186	
(Right) 65 59 (Marlin)	.....	1	353 0226	

NOTE 25.029-1: Two Types Of Glass Assemblies were used on the 64 09-19-89 models. They can be identified as follows:
Type 1: Frame has a Welded Stud for Front Stop Contact.
Type 2: Frame has no Welded Stud for Front Stop Contact.

Copyright 1963 American Motors Corp.

GROUP NO. — DESCRIPTION — YEAR and MODEL	PRIMARY GROUP NO.	PER CAR	PART NO.	CODE
ATTACHING PARTS				
Bracket To Uniside And Channel Support				
SCREW, Tapping..... 64-65 07-17-87 (4 Req.): 64-65 09-19-89 (2 Req.)..	23.006	AR	400 0318	
SCREW, Machine..... 64-65 09-19-89 (6 Req.): 64-65 07-17-87 (4 Req.)..	23.040	AR	400 0413	
WASHER, Bite..... 64-65 07-17-87	.....	4	400 0690	
GUIDE, Rear Quarter Window (At Belt Rail)				
(Left-Rear) 64-65 09-19-89 (Except Marlin)	.....	1	350 1179	
(Left-Rear) 65 59 (Marlin)	.....	1	353 0245	
(Right-Rear) 64-65 09-19-89 (Except Marlin)	.....	1	350 1178	
(Right-Rear) 65 59 (Marlin).....	.....	1	353 0244	
ATTACHING PARTS				
Guide To Belt Rail And Side Roof Rail				
SCREW, Machine 64-65 09	23.040	4	400 0413	
SCREW, Machine 64-65 19-89	23.006	4	400 0318	
Guide To Channel Bracket				
ROLLER..... 64-65 09-19-89	.....	2	350 1387	#
SPRING..... 64-65 09-19-89	.....	2	350 1359	#
SCREW, Machine..... 64-65 09-19-89 (Except Marlin). ***(Replaces 400 0888)***	.....	2	400 0698	#
SCREW, Adjusting ..... 65 59 (Marlin).....	.....	2	400 1515	#
NUT, Jam..... 64-65 09-19-89.....	17.410	2	G124818	#
GUIDE, Rear Quarter Window (At Roof Rail)				
64-65 09-19-89	.....	2	352 0899	
BRACKET, Rear Quarter Window Lowering Pivot				
(Left) 61 Thru 63 07-09	.....	1	345 8417	
(Right) 61 Thru 63 07-09	.....	1	345 8416	
ATTACHING PARTS				
Bracket To Panel				
SCREW, Adjusting ..... 61 Thru 63 07-09.....	.....	4	345 8413	
WASHER, Lock..... 61 Thru 63 07-09.....	17.826	4	G178532	NA
NUT, Hexagon..... 61 Thru 63 07-09.....	17.406	4	G120368	
BUMPER, Rear Quarter Window Anti Rattle				
64-65 07-17-87	.....	4	350 0989	
ATTACHING PARTS				
Bumper To Window Bracket				
SCREW, Machine..... 64-65 07-17-87	17.626	2	G442279	NA
NUT, Hexagon..... 64-65 07-17-87	17.412	2	G271169	
Bumper To Guide				
SHIM..... 64-65 07-17-87	.....	2	400 0873	
SCREW, Machine..... 64-65 07-17-87	17.626	2	G442279	NA
NUT, Hexagon..... 64-65 07-17-87	17.412	2	G271169	
ROLLER, Rear Quarter Glass Bottom Channel To Guide				
65 09-19-89	.....	2	448 2357	
ATTACHING PARTS				
Roller To Channel				
NUT, Jam..... 65 09-19-89.....	17.410	2	G124818	NA#
PLATE, Rear Quarter Window Lowering Pivot Bracket Adjusting				
(Left) 61 Thru 63 07-09	.....	1	345 8415	
(Right) 61 Thru 63 07-09	.....	1	345 8414	

Copyright 1963 American Motors Corp.

GROUP NO. — DESCRIPTION — YEAR and MODEL	PRIMARY GROUP NO.	PER CAR	PART NO.	CODE
ATTACHING PARTS Plate To Panel And Bracket				
SCREW, Adjusting ..... 61 Thru 63 07-09	.....	4	345 8413	
WASHER, Lock ..... 61 Thru 63 07-09	17.826	4	G178532	NA
NUT, Hexagon ..... 61 Thru 63 07-09	17.406	4	G120368	
PIVOT, Rear Quarter Window Lowering				
61 Thru 63 07-09	.....	2	345 8045	
WASHER, Rear Quarter Window Lowering Pivot				
61 Thru 63 07-09	.....	2	400 0701	
SEAL, Rear Quarter Window Lowering (At Lock Pillar)				
61 Thru 63 07-09	.....	2	346 0004	
(Left) 64-65 07-09-17-19-87-89 ***(Replaces 350 1189)***	.....	1	353 6009	
(Right) 64-65 07-09-17-19-87-89 ***(Replaces 350 1188)***	.....	1	353 6008	
ATTACHING PARTS Seal To Lock Pillar				
SCREW, Tapping 64-65 07-09-17-19-87-89	17.660	2	G163162	NA
SEAL, Rear Quarter Window Belt (Rear)				
(Left) 64-65 09-19-89	.....	1	352 8289	
(Right) 64-65 09-19-89	.....	1	352 8288	
DEFLECTOR, Rear Quarter Window Water				
65 59 (Marlin)	.....	2	353 0249	
WATERDAM, Rear Quarter Window				
(Left) 65 59 (Marlin)	.....	1	353 0235	
(Right) 65 59 (Marlin)	.....	1	353 0234	
25.030 CHANNEL, Front Door Lowering Glass Bottom				
(Left) 60 Thru 63 02-04-06	.....	1	435 0335	
(Left) 60 05: 61 05-08 (Note 25.030-1 Type 1)	.....	1	437 3693	
(Left) 61 05-08 (Note 25.030-1 Type 2): 62-63 05-08	.....	1	346 0573	
(Left) 61 Thru 63 07-09	.....	1	345 8311	
(Left) 64-65 07-09-17-19-87-89	.....	1	350 1157	
(Left) 60 15-18-25-28-85-88: 61 10-20-80 (Note 25.030-1 Type 1)	.....	1	342 2925	
(Left) 60 19-29-83-89	.....	1	342 3099	
(Left) 61 10-20-80 (Note 25.030-1 Type 2): 62 15-18-85-88	.....	1	346 0552	
(Left) 62 16-86	.....	1	346 1573	
(Left) 63-64 15-18-85-88: 64 05-08	.....	1	348 2371	
(Left) 65 05-08-15-18-85-88	.....	1	350 0797	
(Left) 63 16-86: 64 02-06-16	.....	1	348 2375	
(Left) 65 06-16-86	.....	1	350 0799	
(Right) 60 Thru 63 02-04-06	.....	1	435 0336	
(Right) 60 05: 61 05-08 (Note 25.030-1 Type 1)	.....	1	437 3694	
(Right) 61 05-08 (Note 25.030-1 Type 2): 62-63 05-08	.....	1	346 0572	
(Right) 61 Thru 63 07-09	.....	1	345 8310	
(Right) 64-65 07-09-17-19-87-89	.....	1	350 1156	
(Right) 60 15-18-25-28-85-88: 61 10-20-80 (Note 25.030-1 Type 1)	.....	1	342 2926	
(Right) 60 19-29-83-89	.....	1	342 3100	
(Right) 61 10-20-80 (Note 25.030-1 Type 2): 62 15-18-85-88	.....	1	346 0552	

NOTE 25.030-1: Two Types of Bottom Channels were used on the 61 05-08-10-20-80 (LER) Series. They can be identified as follows:
Type 1: Channel has two Regulator Arm Support Brackets.
Type 2: Channel has one Regulator Arm Support Bracket.

Copyright 1963 American Motors Corp.

GROUP NO. — DESCRIPTION — YEAR and MODEL	PRIMARY GROUP NO.	PER CAR	PART NO.	CODE
(Right) 62 16-86	.....	1	346 1572	
(Right) 63-64 15-18-85-88: 64 05-08	.....	1	348 2370	
(Right) 65 05-08-15-18-85-88	.....	1	350 0796	
(Right) 63 16-86: 64 02-06-16	.....	1	348 2374	
(Right) 65 06-16-86	.....	1	350 0798	
ATTACHING PARTS				
Channel To Regulator Stud				
RETAINER..... 60 Thru 63 01: 60 Thru 62 10-20-80	.....	4	400 0323	
WASHER, Fibre..... 60 Thru 63 01: 60 Thru 62 10-20-80	.....	4	400 0326	
WASHER, Spring..... 60 Thru 63 01: 60 Thru 62 10	.....	4	400 0324	
SEALER, Front Door Lowering Glass Bottom Channel				
60 Thru 63 05-08	.....	2	437 3695	
61 Thru 63 07-09	.....	2	345 8314	
61 Thru 63 02-04-06	.....	2	435 6899	
60-61 10-20-80	.....	2	342 3104	
62 10-80	.....	2	346 1557	
63 10-80 ***(Replaces 347 2377)***	.....	2	348 8888	
64-65 01-10-80	.....	2	351 9972	
SLIDE, Front Door Lowering Glass Bottom Channel				
64 02-05-06-08: 63-64 15-16-18-85-86-88	.....	2	348 5847	
64-65 07-09-17-19-87-89	.....	2	348 5850	
ATTACHING PARTS				
Slide To Channel				
SCREW, Machine..... 64 01: 63-64 10-80: 65 07-09-17-19-87-89	17.586	4	G456833	NA
25.032 CHANNEL, Rear Door Lowering Glass Bottom				
(Left) 60 Thru 63 05-08	.....	1	344 3875	
(Left) 60 15-18-25-28-85-88: 61 10-20-80 (Note 25.030-1 Type 1)	.....	1	344 0367	
(Left) 60 19-29-83-89	.....	1	344 0355	
(Left) 61 10-20-80 (Note 25.030-1 Type 2)	.....	1	346 0567	
(Left) 62 15-18-85-88 (LER)	.....	1	346 1571	
(Left) 62 15-18-85-88 (WER)	.....	1	346 1839	
(Left) 63-64 15-18-85-88: 64 05-08	.....	1	348 2373	
(Left) 65 05-08-15-18-85-88	.....	1	350 0801	
(Right) 60 Thru 63 05-08	.....	1	344 3874	
(Right) 60 15-18-25-28-85-88: 61 10-20-80 (Note 25.030-1 Type 1)	.....	1	344 0366	
(Right) 60 19-29-83-89	.....	1	344 0354	
(Right) 61 10-20-80 (Note 25.030-1 Type 2)	.....	1	346 0566	
(Right) 62 15-18-85-88 (LER)	.....	1	346 1570	
(Right) 62 15-18-85-88 (WER)	.....	1	346 1838	
(Right) 63-64 15-18-85-88: 64 05-08	.....	1	348 2372	
(Right) 65 05-08-15-18-85-88	.....	1	350 0800	
ATTACHING PARTS				
Channel To Regulator Stud				
RETAINER..... 60-61 05-08: 60 15-18-25-28-85-88: 61 10-20-80 ***(Replaces 434 3587)***	25.030	4	400 0323	
CAP..... 60 19-29-83-89	.....	2	341 1940	
CLIP..... 62-63 05-08: 62 15-18-85-88	25.030	4	400 0323	
WASHER, Fibre..... 60 Thru 63 05-08: 60-61 10-20-80: 62 15-18-85-88	25.030	4	400 0326	
WASHER, Spring..... 60 Thru 63 05-08: 60-61 10-20-80: 62 15-18-85-88	25.030	4	400 0324	
SEALER, Rear Door Lowering Glass Bottom Channel				
60-61 10-20-80: 62 15-18-85-88	.....	2	344 0356	
63 05-08	25.030	2	435 6899	
63 15-18-85-88 ***(Replaces 347 2377)***	25.030	2	348 8888	
64-65 05-08-15-18-85-88 (LER)	.....	2	351 9972	
64-65 15-18-85-88 (WER)	.....	2	353 0936	
(Left) 60 Thru 62 05-08	25.030	1	435 6899	
(Right) 60 Thru 62 05-08	25.034	1	435 5300	

Copyright 1963 American Motors Corp.

GROUP NO. — DESCRIPTION — YEAR and MODEL	PRIMARY GROUP NO.	PER CAR	PART NO.	CODE
SLIDE, Rear Door Lowering Glass Bottom Channel				
63-64 15-18-85-88: 64 05-08	25.030	2	348 5847	
ATTACHING PARTS Slide To Channel				
SCREW, Machine..... 63-64 15-18-85-88: 64 05-08	17.586	4	G456833	NA
25.033 CHANNEL, Tailgate Glass Bottom				
60 18-28-83-88 (L3S-Note 25.013-1 Type 1)	.....	1	341 1756	
60 18-28-83-88 (L3S-Note 25.013-1 Type 2): 61-62 18-28-88 (LVT)	.....	1	344 6199	
60 18-28-88 (W3S-Note 25.013-1 Type 1)	.....	1	344 3927	
60 18-28-88 (W3S-Note 25.013-1 Type 2): 61-62 18-28-88 (WVT)	.....	1	344 6209	
63 Thru 65 18-88 (LVT-LER)...(Less Slide): 64-65 08 (LER)...(Less Slide)..	.....	1	348 2288	
63 Thru 65 18-88 (LVT-WER)...(Less Slide): 64-65 08 (WER)...(Less Slide)..	.....	1	349 0448	
63 Thru 65 18-88 (WVT-LER)...(Less Slide)	.....	1	348 2290	
63 Thru 65 18-88 (WVT-WER)...(Less Slide)	.....	1	349 0447	
ATTACHING PARTS Channel To Regulator Stud				
RETAINER..... 60 Thru 62 18-28-83-88	25.030	4	400 0323	
WASHER, Fibre..... 60 Thru 62 18-28-83-88	25.030	4	400 0326	
WASHER, Spring..... 60 Thru 62 18-28-83-88	25.030	4	400 0324	
SEALER, Tailgate Glass Bottom Channel				
60 Thru 62 18-28-83-88	.....	1	341 1902	
64-65 08: 63 Thru 65 18-88 ***(Replaces 347 2720)***	.....	1	348 8879	
SLIDE, Tailgate Glass Bottom Channel				
63 Thru 65 18-88 (LER): 64-65 08 (LER)	25.030	2	348 5847	
63 Thru 65 18-88 (WER): 64-65 08 (WER)	.....	2	349 0451	
ATTACHING PARTS Slide To Channel				
SCREW, Machine..... 63 Thru 65 18-88 (LER): 64-65 08 (LER)	17.586	4	G456833	NA
SCREW, Machine..... 63 Thru 65 18-88 (WER): 64-65 08 (WER)	17.626	4	G425567	NA
25.034 CHANNEL, Rear Quarter Lowering Glass Bottom				
(Left) 61 Thru 63 02-06	.....	1	344 7011	
(Left) 61 Thru 63 07-09	.....	1	345 8327	
(Left) 64-65 07-17-87 (LER)(Except Marlin)	.....	1	350 1167	
(Left) 62 16-86	.....	1	346 1377	
(Left) 64-65 06: 63 Thru 65 16-86 (Except Marlin)	.....	1	348 2453	
(Left) 64 09-19-89 (LER-Note 25.029-1 Type 1) ***(Use 320 6115)***	.....	1	350 1279	#
(Left) 64 09-19-89 (Note 25.029-1 Type 2): 65 09-19-89 (Except Marlin) ***(Replaces 353 7629)***	.....	1	320 6115	#
(Left) 64 09-19-89 (WER)	.....	1	350 9535	
(Left) 65 17-87 (WER)(Except Marlin)	.....	1	353 0915	
(Left) 65 59 (Marlin)	.....	1	353 0255	
(Right) 60 02-06	.....	1	435 0338	
(Right) 61 Thru 63 02-06	.....	1	344 7010	
(Right) 61 Thru 63 07-09	.....	1	345 8326	
(Right) 64-65 07-17-87 (LER)(Except Marlin)	.....	1	350 1166	
(Right) 64 09-19-89 (LER-Note 25.029-1 Type 1)	.....	1	350 1278	
(Right) 64 09-19-89 (Note 25.029-1 Type 2): 65 09-19-89 (Except Marlin) ***(Replaces 353 7628)***	.....	1	320 6114	#
(Right) 64 09-19-89 (Note 25.029-1 Type 2): 65 09-19-89 (Except Marlin)	.....	1	353 7628	
(Right) 64 09-19-89 (WER)	.....	1	350 9534	
(Right) 62 16-86	.....	1	346 1376	
(Right) 64-65 06: 63 Thru 65 16-86 (Except Marlin)	.....	1	348 2452	
(Right) 65 17-87 (WER)(Except Marlin)	.....	1	353 0914	
(Right) 65 59 (Marlin)	.....	1	353 0254	

Copyright 1963 American Motors Corp.

GROUP NO. — DESCRIPTION — YEAR and MODEL	PRIMARY GROUP NO.	PER CAR	PART NO.	CODE
ATTACHING PARTS Channel To Regulator Stud				
CLIP ..... 60 06: 61 Thru 63 02-06: 62 16-86	25.030	4	400 0323	
WASHER, Fibre..... 60 06: 61 Thru 63 02-06: 62 16-86	25.030	4	400 0326	
WASHER, Spring..... 60 06: 61 Thru 63 02-06: 62 16-86	25.030	4	400 0324	
SEALER, Rear Quarter Lowering Glass Bottom Channel				
60 02-06 .....*(Replaces 435 5300)*	25.030	2	435 6899	
61 Thru 63 02-06.....	.....	2	346 3094	
62 16-86	25.030	2	346 1557	
63 16-86 .....*(Replaces 347 2377)*	25.030	2	348 8888	
64-65 06-16-86	25.030	2	351 9972	
SLIDE, Rear Quarter Lowering Glass Bottom Channel				
64-65 06: 63 Thru 65 16-86	.....	4	348 5850	
ATTACHING PARTS Slide To Channel				
SCREW, Machine..... 64-65 06: 63 Thru 65 16-86	17.586	8	G456833	NA
25.036 CHANNEL, Front Door Lowering Glass Slide				
(Rubber) 61 Thru 63 02-04-06	.....	2	346 0672	
(Rubber) 64 02-06 (Note 25.036-1 Type 1)	.....	2	352 2662	
(Rubber) 64 02-06 (Note 25.036-1 Type 2): 65 06	.....	2	448 2002	
(Rubber) 61 Thru 63 05-08.....	.....	2	346 0670	
(Rubber) 64-65 05-08 .....*(Replaces 352 2663)*	.....	2	448 2003	#
(Rubber) 62 15-18-85-88.....	.....	2	346 2722	
(Rubber) 62 16-86.....	.....	2	346 2723	
(Rubber) 63-64 15-18-85-88 (Note 23.036-1 Type 1).....*(Replaces 348 5323)*	.....	2	348 2250	
(Rubber) 64 15-18-85-88 (Note 25.036-1 Type 2): 65 15-18-85-88	.....	2	448 1750	
(Rubber) 63-64 16-86 (Note 25.036-1 Type 1).....*(Replaces 348 5324)*	.....	2	348 2251	#
(Rubber) 64 16 (Note 25.036-1 Type 2).....	.....	2	448 1751	
(Rubber) 65 16-86.....	.....	2	354 2992	
(Felt) 60 Thru 62 02-04-06.....	.....	2	344 6420	
(Felt) 63 02-04-06	.....	2	448 1939	
(Felt) 60 Thru 62 05-08.....	.....	2	344 6422	
(Felt) 63 05-08	.....	2	448 1940	
(Felt) 61 Thru 63 07-09.....	.....	2	345 8785	
(Felt) 60 19-29-83-89	.....	2	436 8403	
(Felt) 60 15-18-25-28-85-88: 61 10-20-80: 62 15-18-85-88.....	.....	2	342 3184	
(Felt) 62 16-86	.....	2	346 1814	
(Left-Rear) 64-65 07-09: 64 19-89	.....	1	350 1127	
(Right-Rear) 64-65 07-09: 64 19-89	.....	1	350 1126	
(Rear) 65 17-19-87-89	.....	2	351 7299	
ATTACHING PARTS Channel To Door				
SCREW, Tapping..... 64 07-09-19-89	17.660	4	G167077	NA
SCREW, Tapping..... 65 07-09-19-89	25.054	4	400 0658	#
WASHER, Lock..... 61 Thru 63 07-09.....	17.822	4	G138479	NA
WASHER, Plain..... 61 Thru 63 07-09 .....*(Replaces 800 0139)*	23.039	2	400 0481	
NUT, Hexagon..... 60 19-29-83-89	25.052	4	439 0742	
NUT, Hexagon..... 61 Thru 63 07-09.....	17.412	4	G120361	NA
NUT, Stamped 65 17-19-87-89	17.428	4	G441256	NA

NOTE 25.036-1: Two Types of Door Lowering Glass Slide Channels were used on the 64 01-10-80 series. They can be identified as follows:

Type 1: Channel has 2 notches for frame fastening on front door lockside and rear door hingeside.

Type 2: Channel has 3 notches for frame fastening on front door lockside and rear door hingeside.

Copyright 1963 American Motors Corp.

GROUP NO. — DESCRIPTION — YEAR and MODEL	PRIMARY GROUP NO.	PER CAR	PART NO.	CODE
SHIM STOCK, Front Door Lowering Glass Slide Channel Plastic (50 Foot Roll)				
62 Thru 65 01-10-80	23.124	AR	447 9906	
25.037 CHANNEL, Side Front Window Glass Slide				
60 04 (Lower)	.....	2	343 1660	
60 04 (Upper-Left)	.....	1	343 1664	
60 04 (Upper-Right)	.....	1	343 1665	
60 04 (Center-Stationary-Left)	.....	1	435 8603	
60 04 (Center-Stationary-Right)	.....	1	435 8604	
61 04 (Lower)	.....	2	346 4561	
61 04 (Upper)	.....	2	344 7288	
61 04 (Center-Stationary)	.....	2	344 7426	
62 04 (Lower)	.....	2	348 9181	
62 04 (Upper)	.....	2	348 9183	
62 04 (Center-Stationary)	.....	2	344 7426	
63 04 (Lower-Left)	.....	1	349 9259	
63 04 (Lower-Right)	.....	1	349 9258	
63 04 (Upper-Left)	.....	1	349 9257	
63 04 (Upper-Right)	.....	1	349 9256	
63 04 (Center-Left-Note 25.037-1 Type 1)...(Incl. Weatherstrip)	.....	1	448 0857	
63 04 (Center-Left-Note 25.037-1 Type 2)...(Incl. Weatherstrip)	.....	1	349 9247	
63 04 (Center-Right-Note 25.037-1 Type 1)...(Incl. Weatherstrip)	.....	1	448 0856	
63 04 (Center-Right-Note 25.037-1 Type 2)...(Incl.. Weatherstrip)	.....	1	349 9246	
FILLER, Side Front Window Glass Slide Upper Channel Rear				
63 04	.....	2	349 9255	
25.038 CHANNEL, Rear Door Lowering Glass Slide				
(Rubber) 61 Thru 63 05	.....	2	346 0671	
(Rubber) 61 Thru 63 08	.....	2	346 0674	
(Rubber) 64 05-08 (Note 25.036-1 Type 1)	.....	2	352 2664	
(Rubber) 64 05-08 (Note 25.036-1 Type 2): 65 05-08	.....	2	448 2004	
(Rubber) 62 15-18-85-88	.....	2	346 2724	
(Rubber) 63-64 15-18-85-88 (Note 25.036-1 Type 1) ***(Replaces 348 5325)***	.....	2	348 2253	
(Rubber) 64 15-18-85-88 (Note 25.036-1 Type 2): 65 15-18-85-88	.....	2	448 1752	
(Felt) 60 05 (Note 25.036-1) ***(Use 344 6424)***	.....	2	343 2403	#
(Felt) 60 05 (Note 25.036-2)	.....	2	344 6424	
(Felt) 61-62 05	.....	2	344 6889	
(Felt) 63 05	.....	2	448 1942	
(Felt) 61-62 08	.....	2	344 6887	
(Felt) 63 08	.....	2	448 1941	
(Felt) 61 10-20-80	.....	2	344 0359	
(Felt) 62 15-18-85-88	.....	2	346 1816	
(Felt) 60 15-18-25-28-85-88	.....	2	344 0359	
RETAINER, Rear Door Lowering Glass Slide Channel				
(Left) 62 15-18-85-88	.....	1	346 1355	
(Right) 62 15-18-85-88	.....	1	346 1354	

NOTE 25.037-1: Two Types of Channel were used on the 63 04. They can be identified as follows:
Type 1: Handle is located at bottom of Channel.
Type 2: Handle is located at center of Channel.

Copyright 1963 American Motors Corp.

GROUP NO. — DESCRIPTION — YEAR and MODEL	PRIMARY GROUP NO.	PER CAR	PART NO.	CODE
ATTACHING PARTS Retainer To Door				
SCREW, Tapping..... 62 15-18-85-88	17.660	2	G161895	NA
SHIM STOCK, Rear Door Lowering Glass Slide Channel Plastic (50 Foot Roll)				
62-63 05-08-15-18-85-88	23.124	AR	447 9906	
25.039 CHANNEL, Tailgate Lowering Glass Slide				
64-65 08 (In Tailgate-Left)	.....	1	348 2087	
64-65 08 (In Tailgate-Right)	.....	1	348 2086	
64 08 (Upper-On Body-Note 25.039-4)	.....	1	448 0966	
64 08 (Upper-On Body-Note 25.039-5): 65 08 (Upper-On Body)	.....	1	354 2408	
60 Thru 62 18-28-83-88 (LVT-In Tailgate)	.....	2	341 6588	
60 Thru 62 18-28-83-88 (LVT-On Body Side-Left)	.....	1	341 1743	
60 Thru 62 18-28-83-88 (LVT-On Body Side-Right)	.....	1	341 1744	
60 Thru 62 18-28-83-88 (LVT-On Moulding)	.....	1	341 1708	
60 Thru 62 18-28-88 (WVT-On Window Frame-Upper)	.....	1	344 3929	
60 Thru 62 18-28-88 (WVT-On Window Frame-Lower)	.....	1	344 3933	
63 Thru 65 18-88 (LVT-In Tailgate-Left)	.....	1	348 2087	
63 Thru 65 18-88 (LVT-In Tailgate-Right)	.....	1	348 2086	
63 18-88 (LVT-On Body-Upper-Note 25.039-1 Type 1): 64 18-88 (LVT-On Body Upper)	.....	1	448 0966	
63 18-88 (LVT-On Body-Upper-Note 25.039-1 Type 2)	.....	1	348 5328	
63 18-88 (LVT-On Body Side-Left-Note 25.039-2 Type 1): 64 08-18-88 (LVT-On Body Side-Left-Note 25.039-3 Type 1)	.....	1	448 0965	
63 18-88 (LVT-On Body Side-Left-Note 25.039-2 Type 2)	.....	1	348 5327	
63 18-88 (LVT-On Body Side-Right-Note 25.039-2 Type 1): 64 08-18-88 (LVT-On Body Side-Right-Note 25.039-3 Type 1)	.....	1	448 0964	
63 18-88 (LVT-On Body Side-Right-Note 25.039-2 Type 2)	.....	1	348 5326	
63 Thru 65 18-88 (WVT-On Window Frame)	.....	1	348 2298	#
64-65 08-18-88 (LVT-On Body Side-Left-Note 25.039-3 Type 2) ***(Replaces 352 0965, 352 0967, 352 0969, 352 0971, 352 0973, 352 0975, 352 0977)***	.....	1	350 9459	
64-65 08-18-88 (LVT-On Body Side-Right-Note 25.039-3 Type 2) ***(Replaces 352 0964, 352 0966, 352 0968, 352 0970, 352 0972, 352 0974, 352 0976)***	.....	1	350 9458	
65 18-88 (LVT-Upper-On Body)	.....	1	354 2408	
ATTACHING PARTS Side Channel To Tailgate Panel				
SCREW, Tapping..... 60-61 18-28-83-88 (LVT)	17.655	2	G168496	NA

NOTE 25.039-1: Two Types of Lowering Glass Slide Channels to Body (upper) were used on Models 63 18-88 (LVT). They can be identified as follows:
Type 1: Channel is 41-7/16" long and has three Mounting Holes.
Type 2: Channel is 43-7/32" long and has five Mounting Holes.

NOTE 25.039-2: Two Types of Lowering Glass Slide Channels to Body (Side) were used on Models 63 18-88 (LVT). They can be identified as follows:
Type 1: Upper Section of Channel is cut back 1/2" from edge of Retainer.
Type 2: Upper section of Channel is cut back 1" from edge of Retainer.

NOTE 25.039-3: Two Types of Side Channels were used on 64 08-18-88 (LVT) Models. They can be identified as follows:
Type 1: Channel does not have a Moulding Flange.
Type 2: Channel has a Painted Moulding Flange.

NOTE 25.039-4: Used Prior To Car Body No. 81735

NOTE 25.039-5: Used beginning with Car Body No. 81735

Copyright 1963 American Motors Corp.

GROUP NO. — DESCRIPTION — YEAR and MODEL	PRIMARY GROUP NO.	PER CAR	PART NO.	CODE
Channel To Window Frame				
RIVET, Tubular ..... 60 Thru 62 18-28-88 (WVT)	17.558	4	G144543	NA
Channel To Tailgate (Lower)				
SCREW, Machine..... 63 18-88 (LVT)	17.598	2	800 0045	NA
SCREW, Machine..... 64 08-18-88 (LVT)	.....	4	400 0648	#
SCREW, Machine..... 65 08-18-88 (LVT)	.....	4	400 1466	#
NUT, Speed ..... 63 Thru 65 18-88 (LVT): 64-65 08	.....	2	400 0543	
Channel To Tailgate (Upper)				
SCREW, Machine..... 63 18-88 (LVT)	17.610	2	G451271	NA
NUT, Speed..... 63 18-88 (LVT)	13.475	2	400 0425	
Channel To Body (Side)				
SCREW, Machine..... 63 18-88 (LVT-Note 25.039-1)	17.610	6	G451271	NA
SCREW, Machine..... 63 18-88 (LVT-Note 25.039-2)	.....	4	400 0648	
SCREW, Tapping..... 64-65 08-18-88 (LVT-3/4" Long)	17.655	4	G168496	NA
SCREW, Tapping..... 64-65 08-18-88 (LVT-1/2" Long)	17.660	6	G161860	NA
Channel To Body (Upper)				
SCREW, Machine..... 63 18-88 (LVT-Note 25.039-1)	17.610	3	G451271	NA
SCREW, Machine..... 63 18-88 (LVT-Note 25.039-2)	17.610	5	G451271	NA
SCREW, Tapping..... 64-65 18-88 (LVT): 64-65 08	17.655	5	G168496	NA
SUPPORT, Tailgate Lowering Glass Slide Channel				
(Left) 60 Thru 62 18-28-83-88 (LVT)	.....	1	341 7149	
(Right) 60 Thru 62 18-28-83-88 (LVT)	.....	1	341 7150	
ATTACHING PARTS				
Support To Tailgate				
SCREW, Machine..... 60 Thru 62 18-28-83-88 (LVT)	17.598	4	G188749	NA
NUT, Hexagon ..... 60 Thru 62 18-28-83-88 (LVT)	17.412	4	G120361	NA
SEALER, Tailgate Lowering Glass Slide Channel (Bottom Of Body Side)				
(Left) 60-61 18-28-83-88 (LVT)	.....	1	344 4805	
(Left) 62 18-88 (LVT)	.....	1	348 7269	
(Right) 60-61 18-28-83-88 (LVT)	.....	1	344 4804	
(Right) 62 18-88 (LVT)	.....	1	348 7268	
ATTACHING PARTS				
Sealer To Tailgate Pillar				
SCREW, Tapping..... 60-61 18-28-83-88 (LVT)	17.669	4	800 0272	NA
SCREW, Tapping..... 62 18-88 (LVT)	17.669	2	G457002	NA
25.040 CHANNEL, Rear Quarter Lowering Glass Slide				
64-65 06 ..... *(Replaces 350 1094)*	.....	2	352 2680	#
(Felt) 60 02-06	.....	2	342 5935	
(Felt) 61-62 02-06	.....	2	344 6885	
(Felt) 63 02-06	.....	2	448 1938	
(Rubber) 61 Thru 63 02-06	.....	2	346 0673	
(Rubber) 62 16-86 ..... *(Replaces 346 1390)*	.....	2	346 1362	
(Rubber) 63 Thru 65 16-86 ..... *(Replaces 348 5329)*	.....	2	348 2188	
(Left-Felt) 64 07 (Rear)	.....	1	350 9253	
(Left) 65 07-17-87 (Rear)	.....	1	353 0617	
(Right-Felt) 64 07 (Rear)	.....	1	350 9252	
(Right) 65 07-17-87 (Rear)	.....	1	353 0616	

Copyright 1963 American Motors Corp.

GROUP NO. — DESCRIPTION — YEAR and MODEL	PRIMARY GROUP NO.	PER CAR	PART NO.	CODE
ATTACHING PARTS				
Channel To Belt Rail				
WASHER, Plain..... 64-65 07-17-87	17.814	2	400 1081	
NUT, Stamped..... 64-65 07-17-87	17.428	2	G441256	NA
Channel To Inner Panel (Lower)				
SCREW, Tapping..... 64-65 07-17-87	3.165	2	400 0478	
WASHER, Lock..... 64-65 07-17-87	17.826	2	G178388	NA
NUT, Spring..... 64-65 07-17-87	17.426	2	G445446	
SHIM STOCK, Rear Quarter Lowering Glass Slide Channel Plastic (50 Foot Roll)				
62-63 02-06-16-86	23.124	AR	447 9906	
RETAINER, Rear Quarter Lowering Glass Slide Channel				
(Left) 62 16-86		1	346 1515	
(Left-Front) 63 Thru 65 16-86		1	348 2287	
(Left-Front) 64-65 06		1	350 9069	
(Left-Rear) 63 Thru 65 16-86		1	349 0145	
(Left-Rear) 64-65 06		1	350 9073	
(Right) 62 16-86		1	346 1514	
(Right-Front) 63 Thru 65 16-86		1	348 2286	
(Right-Front) 64-65 06		1	350 9068	
(Right-Rear) 63 Thru 65 16-86		1	349 0144	
(Right-Rear) 64-65 06		1	350 9072	
ATTACHING PARTS				
Retainer To Body				
SCREW, Tapping..... 62 16-86 (2 Req.): 63 Thru 65 16-86 (4 Req.): 65 06 (4 Req.)	17.660	AR	G161895	NA
SCREW, Tapping..... 64 06 ***(Replaces 800 0274)***	17.669	2	400 1267	NA
25.041 CHANNEL, Side Rear Window Stationary Glass				
60 04		2	436 1793	
61 Thru 63 04		2	346 4754	
25.042 CHANNEL, Rear Quarter Stationary Glass				
61 Thru 63 08	25.041	2	346 4754	
62 16-86	25.043	2	346 1616	
(Left) 61 Thru 63 05		1	344 7025	
(Left) 64-65 08 (220)		1	350 0869	
(Left) 64-65 08 (330)		1	350 0583	
(Left) 60 18-28-83-89; 61-62 18-28-88		1	348 4659	
(Left) 63 Thru 65 18-88		1	348 2063	
(Right) 60 05		1	344 3796	
(Right) 61 Thru 63 05		1	344 7024	
(Right) 64-65 08 (220)		1	350 0868	
(Right) 64-65 08 (330)		1	350 0582	
(Right) 60 18-28-83-89; 61-62 18-28-88		1	348 4658	
(Right) 63 Thru 65 18-88		1	348 2062	
25.043 CHANNEL, Rear Door Stationary Glass				
60 15-18-25-28-85-88; 61 10-20-80		2	344 0326	
62 15-18-85-88		2	346 1616	
(Left) 64-65 05-08; 63 Thru 65 15-18-85-88 ***(Replaces 352 1633)***		1	348 2377	
(Right) 64-65 05-08; 63 Thru 65 15-18-85-88 ***(Replaces 352 1632)***		1	348 2376	

Copyright 1963 American Motors Corp.

GROUP NO. — DESCRIPTION — YEAR and MODEL	PRIMARY GROUP NO.	PER CAR	PART NO.	CODE
25.044 CHANNEL, Liftgate And Rear Window Glass				
60 02-05-06	.....	1	343 1622	
60 04	.....	1	313 6906	
61 Thru 63 02-05-06	.....	1	345 2867	
64-65 05-06	.....	1	350 0592	
61 04-08	.....	1	344 6992	
62-63 04-08	.....	1	348 1680	
63 09	.....	1	349 0044	
64-65 09	.....	1	350 1042	
60 Thru 62 15-16-19-25-29-85-86-89	.....	1	344 0710	
63-64 15-16-85-86	.....	1	347 2663	
65 15-16-85-86 (Except Marlin)	.....	1	351 6046	#
64-65 19-89 (Except Marlin)	.....	1	350 1352	#
65 59 (Marlin)	.....	1	353 0696	#
25.047 FRAME, Side Front Window Glass				
(Front Half-Upper) 62 04	.....	1	348 9174	
(Front Half-Lower) 62 04	.....	1	348 9175	
(Rear Half-Upper) 62 04	.....	1	348 9176	
(Rear Half-Lower) 62 04	.....	1	348 9177	
25.048 FRAME, Rear Quarter Window Glass Upper				
(Left) 61 Thru 63 07-09	.....	1	346 3107	
(Left) 64-65 07-17-87 (Except Marlin)	.....	1	350 1131	#
(Left) 64-65 09-19-89 (Except Marlin)	.....	1	350 1199	#
(Left) 65 59 (Marlin)	.....	1	353 0259	#
(Right) 61 Thru 63 07-09	.....	1	346 3106	
(Right) 64-65 07-17-87 (Except Marlin)	.....	1	350 1130	#
(Right) 64-65 09-19-89 (Except Marlin)	.....	1	350 1198	#
(Right) 65 59 (Marlin)	.....	1	353 0258	#
ATTACHING PARTS				
Frame To Bottom Channel (Front)				
SCREW, Machine..... 61 Thru 65 07-09-17-19-87-89	23.114	4	400 0042	
Frame To Bottom Channel (Rear)				
SCREW, Tapping..... 61 Thru 63 07-09	17.648	4	G163718	NA
SCREW, Machine..... 64-65 07-09-17-19-87-89	23.114	4	400 0042	
25.049 FRAME, Tailgate Glass				
60 Thru 62 18-28-83-88 (LVT)	.....	1	341 6648	
60 Thru 62 18-28-88 (WVT)...(Incl. Slide Channels)	.....	1	344 3865	
64 08: 63-64 18-88 (LVT)	.....	1	348 2292	
63 Thru 65 18-88 (WVT)...(Incl. Slide Channels)	.....	1	348 2404	
ATTACHING PARTS				
Frame To Tailgate				
SCREW, Machine..... 60-61 18-28-88 (WVT)	23.098	6	345 1607	
SCREW, Machine..... 62 18-88 (WVT-Hexagon Head)	23.006	5	400 0318	
SCREW, Machine..... 62 18-88 (WVT-Oval Head)	.....	1	400 0317	
SCREW, Machine..... 63 18-88 (WVT-#12-24 x 5/8)	23.040	4	400 0413	
SCREW, Machine..... 63 Thru 65 18-88 (WVT-1/4-20 x 5/8)	.....	4	400 0585	
25.050 FRAME, Front Door Lowering Glass				
61 Thru 63 07-09	.....	2	346 4722	
(Left) 60 19-29-83-89	.....	1	342 3101	
(Left) 64 07-09-19-89	.....	1	350 1153	
(Left) 65 07-09-17-19-87-89	.....	1	353 0815	

Copyright 1963 American Motors Corp.

GROUP NO. — DESCRIPTION — YEAR and MODEL	PRIMARY GROUP NO.	PER CAR	PART NO.	CODE
(Right) 60 19-29-83-89	.....	1	342 3102	
(Right) 64 07-09-19-89	.....	1	350 1152	
(Right) 65 07-09-17-19-87-89	.....	1	353 0814	
ATTACHING PARTS				
Frame To Bottom Channel				
SCREW, Tapping..... 61 Thru 63 07-09	17.646	4	G440961	NA
SCREW, Machine..... 60 19-29-83-89	17.592	4	G156762	NA
SCREW, Tapping..... 64-65 07-09-17-19-87-89	17.648	4	G162653	NA
25.051 FRAME, Rear Door Lowering Glass				
(Top) 60 19-29-83-89	.....	2	344 0353	
(Front-Left) 60 19-29-83-89...(Incl. Weatherstrip)	.....	1	447 8575	
(Front-Right) 60 19-29-83-89...(Incl. Weatherstrip)	.....	1	447 8574	
ATTACHING PARTS				
Front Frame To Bottom Channel				
STUD..... 60 19-29-83-89	.....	2	342 5503	
WASHER, Dished 60 19-29-83-89	.....	4	436 4122	
WASHER, Spring..... 60 19-29-83-89	25.030	2	400 0324	
NUT, Hexagon 60 19-29-83-89	17.412	2	G271172	NA
25.052 GUIDE, Front Door Glass Channel				
60 19-29-83-89	.....	2	341 1166	
64-65 07-09-17-19-87-89	.....	2	350 1465	
ATTACHING PARTS				
Guide To Door				
STUD..... 60 19-29-83-89	.....	2	437 3776	
STUD..... 64 07-09-19-89 (3/4" Long)	.....	2	400 0641	
STUD..... 64 07-09-19-89 (1-3/16" Long)	.....	2	400 0737	
STUD..... 65 07-09-17-19-87-89	23.124	2	400 1439	
SCREW, Machine..... 60 19-29-83-89	17.598	2	G454542	NA
SCREW, Machine..... 64-65 07-09-17-19-87-89	23.098	2	400 0137	#
WASHER, Lock..... 60 19-29-83-89	17.820	2	G120380	NA
WASHER, Lock..... 64-65 07-09-17-19-87-89	17.826	2	G173124	
NUT, Hexagon..... 60 19-29-83-89: 64-65 07-09-17-19-87-89	17.406	2	G120375	
GUIDE, Rear Door Glass Channel				
(Left-Front-Outer) 60 19-29-83-89	.....	1	344 0393	
(Left-Front-Inner) 60 19-29-83-89 (LER)	.....	1	342 1310	
(Left-Front-Inner) 60 19-29-83-89 (WER)	.....	1	341 1641	
(Right-Front-Outer) 60 19-29-83-89	.....	1	344 0392	
(Right-Front-Inner) 60 19-29-83-89 (LER)	.....	1	342 1311	
(Right-Front-Inner) 60 19-29-83-89 (WER)	.....	1	341 1642	
ATTACHING PARTS				
Outer Guide To Door (Upper)				
SCREW, Tapping..... 60 19-29-83-89	17.660	2	G161860	NA
NUT, Spring..... 60 19-29-83-89	17.426	2	G446965	
Outer Guide To Door (Lower)				
NUT, Hexagon..... 60 19-29-83-89	17.406	2	G120375	
Inner Guide To Door				
STUD..... 60 19-29-83-89 (1-3/16" Long)	.....	2	437 3776	
STUD..... 60 19-29-83-89 (15/16" Long)	.....	4	341 0909	
WASHER, Lock..... 60 19-29-83-89	17.826	6	G173124	

Copyright 1963 American Motors Corp.

GROUP NO. — DESCRIPTION — YEAR and MODEL	PRIMARY GROUP NO.	PER CAR	PART NO.	CODE
25.054 BUMPER, Front Door Glass Stop				
60 Thru 63 02-04-06-07-09	.....	2	343 1967	
64-65 07-09-19-89 (On Bottom Channel)	20.450	2	400 0313	
60-61 05-08	.....	2	432 2138	
60 Thru 62 10-20-80 (In Crossarm)	.....	2	438 2263	
61 10-20-80 (On Division Channel)	20.450	2	400 0313	
(Left) 64-65 07-09-17-19-87-89 (On Division Channel)	.....	1	350 9509	
(Right) 64-65 07-09-17-19-87-89 (On Division Channel)	.....	1	350 9508	
ATTACHING PARTS				
Bumper To Channel				
RIVET 64-65 07-09-17-19-87-89	.....	1	448 1389	
STOP, Front Door Glass (Upper)				
61 07 (Upper)	.....	4	342 8400	
62 07 (Upper-On Door Upper Flange)	.....	4	342 8400	
62 07 (Upper-On Side Of Panel-Left)	.....	2	348 9230	
62 07 (Upper-On Side Of Panel-Right)	.....	2	348 9231	
63 07-09 (Upper-Left)	.....	2	348 9230	
63 07-09 (Upper-Right)	.....	2	348 9231	
60 19-29-83-89 (Upper-Front)	.....	2	342 8400	
60 19-29-83-89 (Upper-Rear)	.....	2	341 1168	
64 07-09-19-89 (Front-Left-On-Door Inner Panel)	.....	1	352 7923	#
64 07-09-19-89 (Front-Right-On-Door Inner Panel)	.....	1	352 7922	#
64 07-09-19-89 (Rear-On Bottom Channel)	.....	2	350 1074	
65 07-09-17-19-87-89 (Rear-On Bottom Channel)	.....	2	353 0820	
ATTACHING PARTS				
Front Upper Stop To Door				
PLATE, Tapping 60 19-29-83-89	.....	2	436 4160	
SCREW, Machine..... 60 19-29-83-89	17.610	4	G451603	NA
SCREW, Machine..... 64 07-09-19-89	23.098	4	400 0137	#
NUT, Hexagon..... 60 19-29-83-89	17.412	2	G120614	NA
Rear Upper Stop To Door				
SCREW, Machine..... 60 19-29-83-89	23.300	8	438 3373	
Upper Stop To Door				
PLATE, Tapping 61 07	.....	4	436 4160	
SCREW, Machine..... 61 07	17.610	8	G451603	NA
NUT, Hexagon..... 61 07	17.412	4	G120614	NA
Upper Stop To Door Upper Flange				
PLATE, Tapping 62 07	.....	4	436 4160	
SCREW, Machine..... 62 07	17.610	8	G451603	NA
NUT, Hexagon..... 62 07	17.412	4	G120614	NA
Upper Stop To Side Of Door Inner Panel				
SCREW, Machine..... 62-63 07-09	.....	8	400 0247	
Stop To Bottom Channel				
SCREW, Machine 64-65 07-09-17-19-87-89	17.598	4	G271113	NA
BUMPER, Rear Door Glass Stop				
60 Thru 63 05-08	.....	2	344 3838	
60-61 10-20-80 (On Division Channel)	20.450	2	400 0313	

Copyright 1963 American Motors Corp.

GROUP NO. — DESCRIPTION — YEAR and MODEL	PRIMARY GROUP NO.	PER CAR	PART NO.	CODE
STOP, Rear Door Glass				
(Upper-Front) 60 19-29-83-89	.....	4	341 3007	
(Upper-Rear) 60 19-29-83-89	.....	2	342 8400	
ATTACHING PARTS				
Front Upper Stop To Door				
SCREW, Machine..... 60 19-29-83-89	17.598	4	G454542	NA
Rear Upper Stop To Door				
PLATE, Tapping 60 19-29-83-89	.....	2	436 4160	
SCREW, Machine 60 19-29-83-89	17.610	4	G451603	NA
NUT, Hexagon..... 60 19-29-83-89	17.412	2	G120614	NA
SUPPORT, Rear Door Glass Stop Bumper				
60 Thru 63 05-08	23.055	2	344 3671	
ATTACHING PARTS				
Support To Door				
SCREW, Machine..... 60-61 05-08	23.300	4	438 3373	
SCREW, Machine..... 62-63 05-08	23.098	4	400 0230	
RETAINER, Rear Door Glass Stop Bumper				
60 Thru 63 05-08	23.055	2	344 3672	
ATTACHING PARTS				
Retainer To Support				
SCREW, Tapping..... 60 Thru 63 05-08	17.660	4	G9411535	NA
BUMPER, Tailgate Glass Stop				
60 Thru 63 18-28-83-88	20.450	2	400 0313	
SUPPORT, Rear Quarter Window				
60 02 (Front-With Stationary Window)	.....	2	344 0759	
60 Thru 62 05	.....	2	344 0108	
61 Thru 63 02 (With Stationary Window)	.....	2	345 3583	
63 05	24.010	2	347 4767	
ATTACHING PARTS				
Support To Panel				
SCREW, Tapping..... 60 02	17.660	4	G161895	NA
SCREW, Tapping..... 61 Thru 63 02 ***(Replaces 800 0095)***	17.671	4	G456766	
SCREW, Tapping..... 60 Thru 62 05	17.669	4	800 0272	NA
SCREW, Tapping..... 63 05	26.001	2	400 0026	
WASHER, Lock..... 60 02	17.822	4	G138479	NA

Copyright 1963 American Motors Corp.

GROUP NO. — DESCRIPTION — YEAR and MODEL	PRIMARY GROUP NO.	PER CAR	PART NO.	CODE
STOP, Rear Quarter Window				
61 Thru 63 07-09	.....	2	345 8737	
(Left) 64 07-17-87 (LER)	.....	1	350 1015	#
(Left) 64 09-19-89 (LER-Metal)	.....	1	350 1171	
(Left) 64-65 09-19-89 (LER-Rubber): 65 07-17-87	.....	1	352 8613	#
(Right) 64 07-17-87 (LER)	.....	1	350 1014	#
(Right) 64 09-19-89 (LER-Metal)	.....	1	350 1170	
(Right) 64-65 09-19-89 (LER-Rubber): 65 07-17-87	.....	1	352 8612	#
ATTACHING PARTS				
Stop To Panel				
SCREW, Machine..... 61 07	23.300	4	438 3373	
SCREW, Machine..... 62-63 07-09	23.098	4	400 0230	
SCREW, Tapping..... 64 07 (LER-8-18 x 1/2")	17.660	4	G163162	NA
SCREW, Machine..... 64-65 09-19-89 (LER): 64-65 07-17-87 (LER-10-24 x 7/16")	.....	4	400 0658	
BUMPER, Rear Quarter Window				
61 Thru 63 07-09	20.450	2	400 0313	
64-65 09-19-89 (Except Marlin)	.....	2	350 0826	
65 59 (Marlin)	.....	2	353 0250	
ATTACHING PARTS				
Bumper To Panel				
FASTENER 64-65 09-19-89	.....	2	400 0834	
25.055 WEATHERSTRIP, Front Door Glass Moulding Side				
60 Thru 63 02-04-06	.....	2	343 6380	
60 Thru 63 05-08	.....	2	437 3734	
63 Thru 65 15-18-85-88: 64-65 05-08 ..... *(Replaces 348 7831)*	.....	2	348 7830	
61 Thru 63 07-09	.....	2	346 4781	
64-65 06-07-09: 63 Thru 65 16-86: 63-64 19-89	.....	2	348 2357	
60 15-18-25-28-85-88: 61 10-20-80: 62 15-18-85-88	.....	2	344 0274	
60 19-29-83-89	.....	2	344 0275	
62 16-86	.....	2	346 1836	
65 17-19-87-89	.....	2	354 3350	
25.056 WEATHERSTRIP, Rear Door Glass Moulding Side				
60 Thru 63 05-08	.....	2	343 6379	
60 15-18-25-28-85-88: 61 10-20-80	.....	2	344 0276	
62 15-18-85-88	.....	2	346 1837	
63 15-18-85-88 (Note 25.056-1 Type 2): 64-65 05-08-15-18-85-88	.....	2	348 2354	
(Left) 60 19-29-83-89	.....	1	344 0287	
(Left) 63 15-18-85-88 (Note 25.056-1 Type 1)	.....	1	348 2355	
(Right) 60 19-29-83-89	.....	1	344 0286	
(Right) 63 15-18-85-88 (Note 25.056-1 Type 1)	.....	1	448 0868	
25.058 WEATHERSTRIP, Front Door Glass Body Side				
60 Thru 63 02-04-06 ..... *(Replaces 349 9130)*	.....	2	350 5138	
64-65 06: 63 Thru 65 16-86 ..... *(Replaces 348 8859)*	25.055	2	348 2357	
60 Thru 63 05-08 ..... *(Replaces 349 9129)*	.....	2	350 5140	

NOTE 25.056-1: Two Types of Weatherstrip were used on 63 15-18-85-88 Models. They can be identified as follows:
Type 1: The Weatherstrip is 23.42" long.
Type 2: The Weatherstrip is 22.91" long.

Copyright 1963 American Motors Corp.

GROUP NO. — DESCRIPTION — YEAR and MODEL	PRIMARY GROUP NO.	PER CAR	PART NO.	CODE
64-65 05-08: 63 Thru 65 15-18-85-88 ..... *(Replaces 348 7831, 348 8858)*	.....	2	348 7830	
60 15-18-25-28-85-88: 61 10-20-80: 62 15-18-85-88	.....	2	345 1902	
62 16-86	.....	2	346 1406	
(Left) 61 Thru 63 07-09	.....	1	346 4783	
(Left) 60 19-29-83-89	.....	1	345 1905	
(Left) 64-65 07-09-17-19-87-89	.....	1	350 1069	
(Right) 60 19-29-83-89	.....	1	342 3086	
(Right) 61 Thru 63 07-09	.....	1	346 4782	
(Right) 64-65 07-09-17-19-87-89	.....	1	350 1068	
ATTACHING PARTS				
Weatherstrip To Panel				
SCREW, Tapping..... 60 19-29-83-89	17.660	2	G161790	NA

25.059 WEATHERSTRIP, Rear Door Glass Body Side

60 Thru 63 05-08 ..... *(Replaces 349 9128)*	.....	2	350 5139	
62 15-18-85-88	.....	2	346 1834	
63 15-18-85-88 (Note 25.056-1 Type 2): 64-65 05-08-15-18-85-88 ..... *(Replaces 348 8860)*	25.056	2	348 2354	
(Left) 60 15-18-25-28-85-88: 61 10-20-80	.....	1	344 0271	
(Left) 60 19-29-83-89	.....	1	344 0273	
(Left) 63 15-18-85-88 (Felt-Note 25.056-1 Type 1)	25.056	1	348 2355	
(Right) 60 15-18-25-28-85-88: 61 10-20-80	.....	1	344 0270	
(Right) 60 19-29-83-89	.....	1	344 0272	
(Right) 63 15-18-85-88 (Felt-Note 25.056-1 Type 1)	.....	1	448 0868	
ATTACHING PARTS				
Weatherstrip To Panel				
SCREW, Tapping..... 60 19-29-83-89	17.660	2	G161790	NA

25.061 WEATHERSTRIP, Rear Quarter Glass Inner

60 Thru 63 02-06 ..... *(Replaces 342 5929)*	.....	2	344 7033	
61 Thru 63 07-09	.....	2	345 8177	
64 07 (2 Clips)	.....	2	350 1026	
62 16-86	.....	2	346 1672	
63 Thru 65 16-86 (Except Marlin)	.....	2	348 2466	
65 17-87 (Except Marlin)	.....	2	351 5076	
(Left) 64-65 06	.....	1	350 9413	
(Left) 64-65 07 (3 Clips)	.....	1	354 7565	
(Left) 64-65 09	.....	1	350 1029	
(Left) 64-65 19-89 (Except Marlin)	.....	1	350 9319	
(Left) 65 59 (Marlin)	.....	1	351 7371	
(Right) 64-65 06	.....	1	350 9412	
(Right) 64-65 07 (3 Clips)	.....	1	354 7564	
(Right) 64-65 09	.....	1	350 1028	
(Right) 64-65 19-89 (Except Marlin)	.....	2	350 9318	
(Right) 65 59 (Marlin)	.....	1	351 7370	
ATTACHING PARTS				
Weatherstrip To Inner Panel				
SCREW, Tapping..... 64-65 07-09-17-19-87-89	17.648	2	G161373	NA

Copyright 1963 American Motors Corp.

GROUP NO. — DESCRIPTION — YEAR and MODEL	PRIMARY GROUP NO.	PER CAR	PART NO.	CODE
25.062 WEATHERSTRIP, Rear Quarter Glass Outer				
60 02-06	.....	2	342 5931	
61 Thru 63 02-06 *(Replaces 344 7032)*	.....	2	350 5416	
62 16-86	.....	2	346 1670	
63 Thru 65 16-86 (Except Marlin) *(Replaces 348 8862)*	25.061	2	348 2466	
(Left) 61 Thru 63 07-09	.....	1	346 4379	
(Left) 64-65 07	.....	1	350 1023	
(Left) 64-65 06	.....	1	350 9412	
(Left) 64-65 09	.....	1	350 1097	
(Left) 64-65 19-89 (Except Marlin)	.....	1	350 9317	
(Left) 65 17-87 (Except Marlin)	.....	1	351 5053	
(Left) 65 59 (Marlin)	.....	1	351 7373	
(Right) 61 Thru 63 07-09	.....	1	346 4378	
(Right) 64-65 07	.....	1	350 1022	
(Right) 64-65-06	.....	1	350 9413	
(Right) 64-65 09	.....	1	350 1096	
(Right) 64-65 19-89 (Except Marlin)	.....	1	350 9316	
(Right) 65 17-87 (Except Marlin)	.....	1	351 5052	
(Right) 65 59 (Marlin)	.....	1	351 7372	
ATTACHING PARTS Weatherstrip To Outer Panel				
SCREW, Tapping..... 64-65 07-17-87	17.648	2	G161373	NA
25.065 WEATHERSTRIP, Tailgate Glass Inner				
60 Thru 62 18-28-83-88 (LVT)	.....	1	341 1294	
60 Thru 62 18-28-88 (WVT)	.....	1	344 3915	
64-65 08: 63 Thru 65 18-88 (LVT)	.....	1	348 2909	
63 Thru 65 18-88 (WVT)	.....	1	348 2911	
ATTACHING PARTS Weatherstrip To Tailgate				
SCREW, Tapping..... 60 Thru 62 18-28-83-88 (LVT)	17.654	2	G443824	NA
25.066 WEATHERSTRIP, Tailgate Glass Outer				
60 Thru 62 18-28-83-88 (LVT)	.....	1	344 5973	
60 Thru 62 18-28-88 (WVT)	.....	1	344 3909	
64-65 08: 63 Thru 65 18-88 (LVT) *(Replaces 348 8863)*	.....	1	348 7832	
63 Thru 65 18-88 (WVT) *(Replaces 348 8864)*	.....	1	348 7829	
25.090 WEATHERSTRIP, Rear Door Window Frame Front				
(Left) 60 19-29-83-89	.....	1	341 6700	
(Right) 60 19-29-83-89	.....	1	341 6701	
ATTACHING PARTS Weatherstrip To Frame				
RIVET, Tubular 60 19-29-83-89	17.558	8	G111873	NA
WEATHERSTRIP, Rear Quarter Window Frame Front				
61 Thru 63 07-09	.....	2	345 8724	
(Left) 64 07	.....	1	350 1191	
(Left) 65 07: 64-65 09-19-89 (Except Marlin)	.....	1	350 1249	#
(Left) 65 59 (Marlin)	.....	1	358 5269	#
(Right) 64 07	.....	1	350 1190	
(Right) 65 07: 64-65 09-19-89 (Except Marlin)	.....	1	350 1248	#
(Right) 65 59 (Marlin)	.....	1	358 5268	#

Copyright 1963 American Motors Corp.

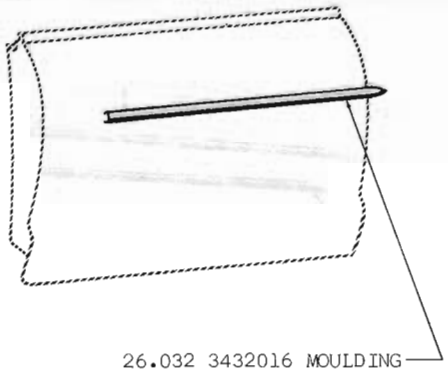

26.032 3432016 MOULDING

ATTACHING PARTS, WHEN REQUIRED, INCLUDED WITH ALL PARTS SHOWN

DOOR MOULDINGS 60 01 (Super)(Custom) 2 Dr.

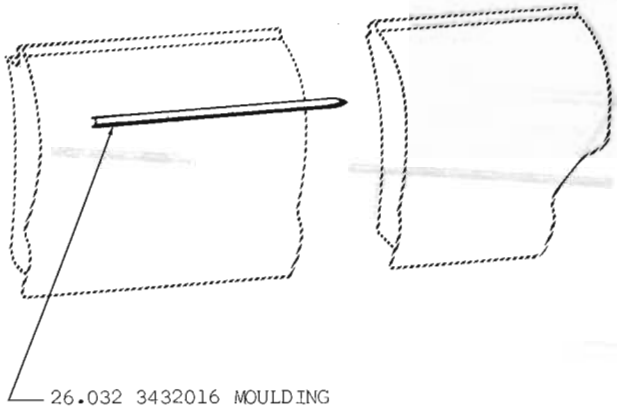

26.032 3432016 MOULDING

ATTACHING PARTS, WHEN REQUIRED, INCLUDED WITH ALL PARTS SHOWN

DOOR MOULDINGS 60 01 (Super)(Custom) 4 Dr.

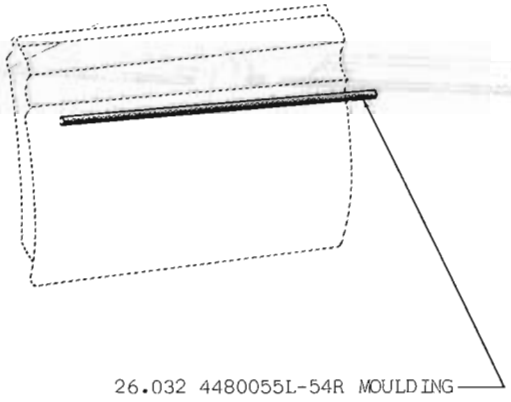

26.032 4480055L-54R MOULDING

ATTACHING PARTS, WHEN REQUIRED, INCLUDED WITH ALL PARTS SHOWN

DOOR MOULDINGS 61-62 01 (Super)(Custom)(400) 2 Dr.: 63 04 (330): 63 06 (330)(440)

Copyright 1963 American Motors Corp.

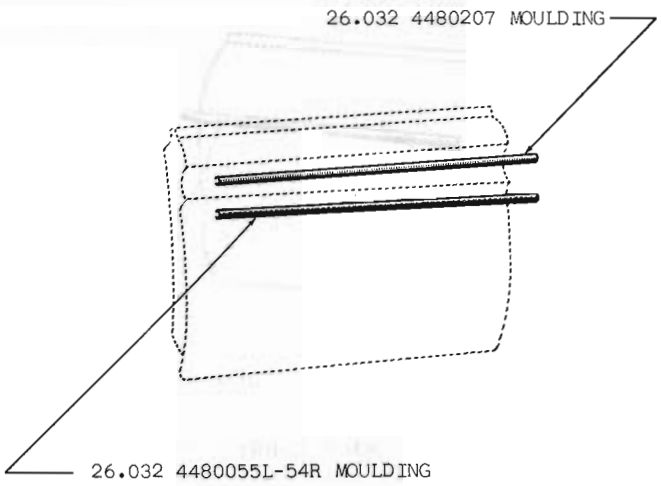

ATTACHING PARTS, WHEN REQUIRED, INCLUDED WITH ALL PARTS SHOWN

DOOR MOULDINGS 63 07-09 (440)

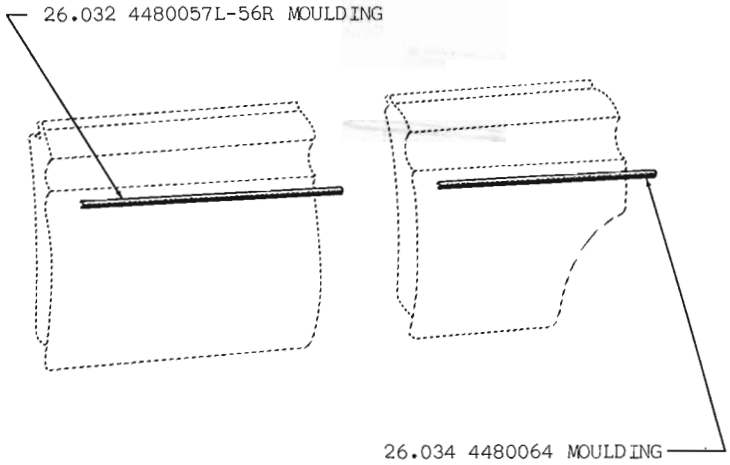

ATTACHING PARTS, WHEN REQUIRED, INCLUDED WITH ALL PARTS SHOWN

DOOR MOULDINGS 61-62 01 (Super)(Custom)(400) 4 Dr.: 63 01 (330)(440) 4 Dr.

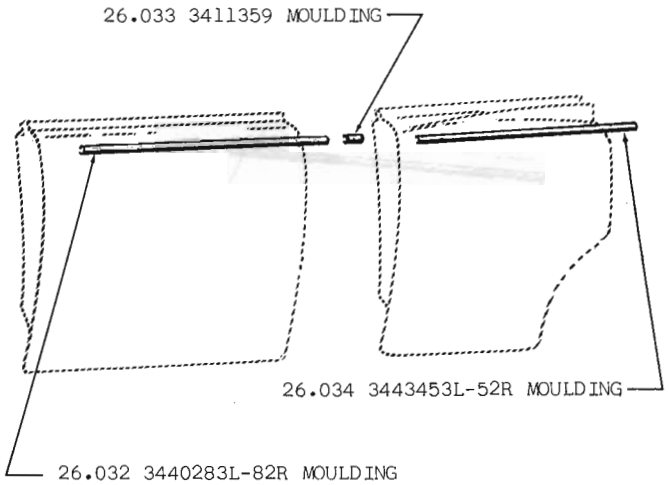

ATTACHING PARTS, WHEN REQUIRED, INCLUDED WITH ALL PARTS SHOWN

DOOR MOULDINGS 60 10-20 (Deluxe)

Copyright 1963 American Motors Corp.

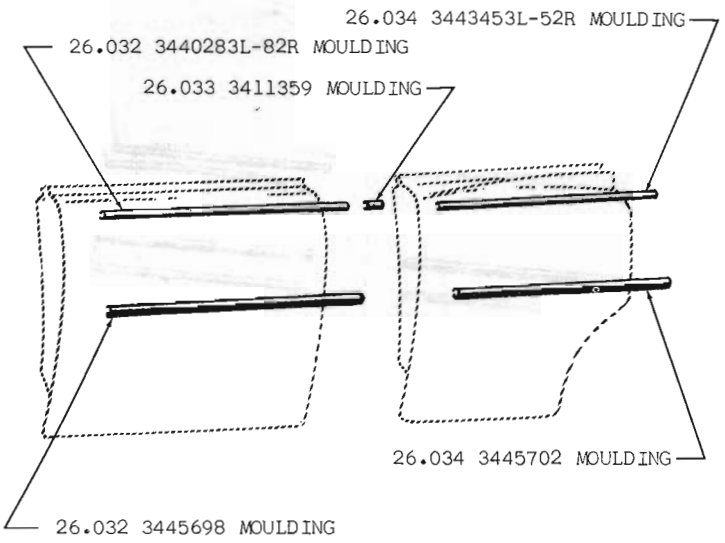

ATTACHING PARTS, WHEN REQUIRED, INCLUDED WITH ALL PARTS SHOWN

DOOR MOULDINGS 60 10-20 (Super)

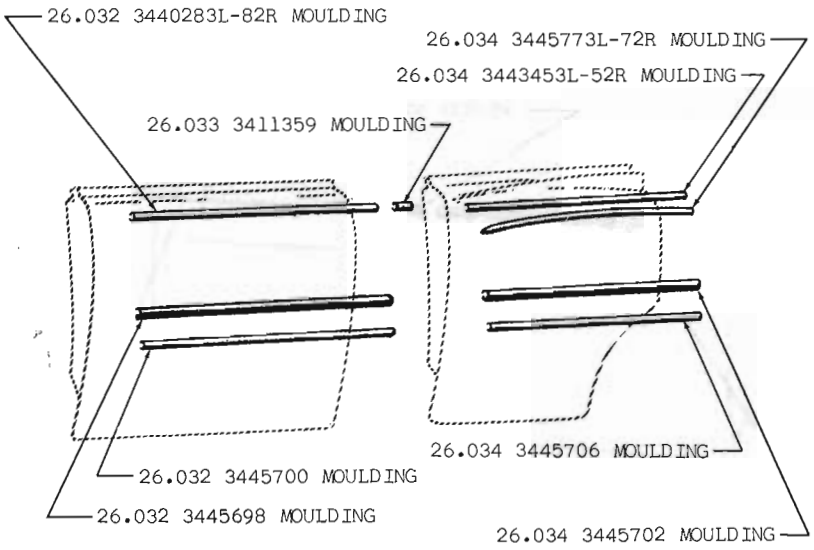

ATTACHING PARTS, WHEN REQUIRED, INCLUDED WITH ALL PARTS SHOWN

DOOR MOULDINGS 60 15-18-25-28 (Custom)

Copyright 1963 American Motors Corp.

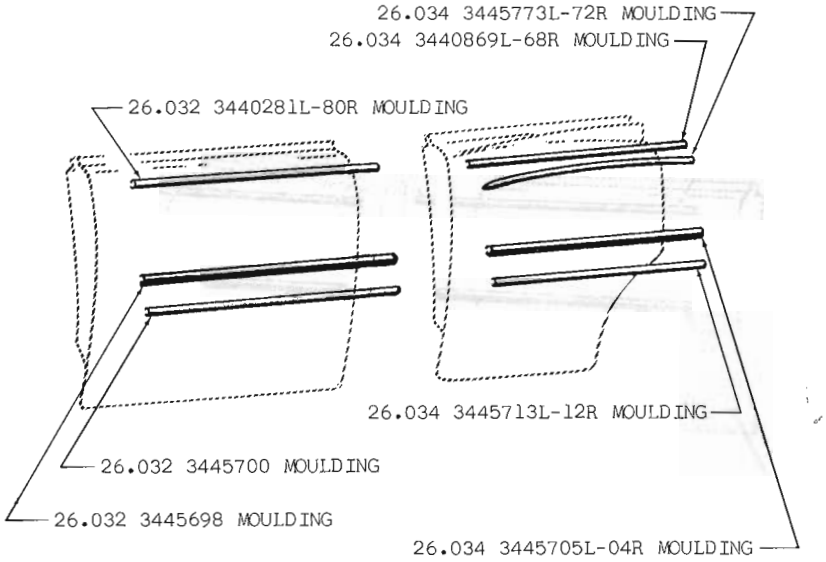

ATTACHING PARTS, WHEN REQUIRED, INCLUDED WITH ALL PARTS SHOWN

DOOR MOULDINGS 60 19-29 (Custom)

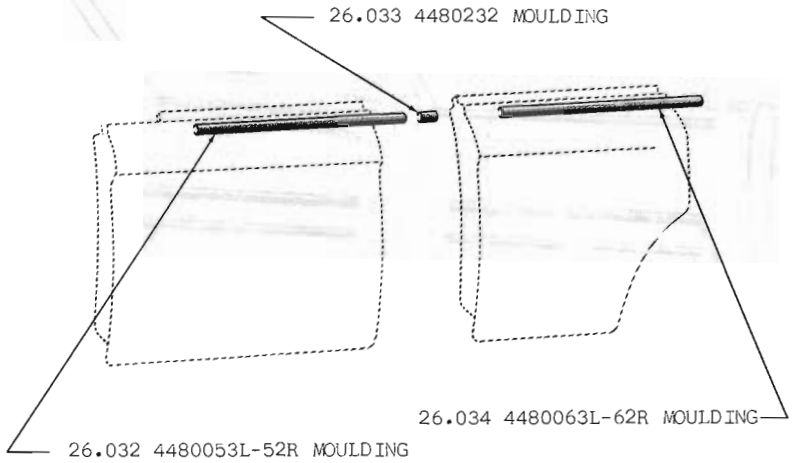

ATTACHING PARTS, WHEN REQUIRED, INCLUDED WITH ALL PARTS SHOWN

DOOR MOULDINGS 61 10-20 (Deluxe)

Copyright 1963 American Motors Corp.

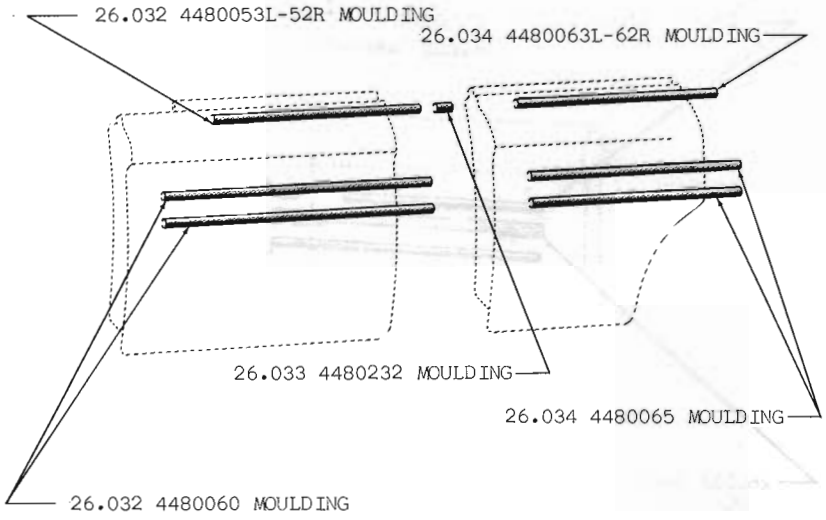

ATTACHING PARTS, WHEN REQUIRED, INCLUDED WITH ALL PARTS SHOWN

DOOR MOULDINGS 61 10-20 (Super)

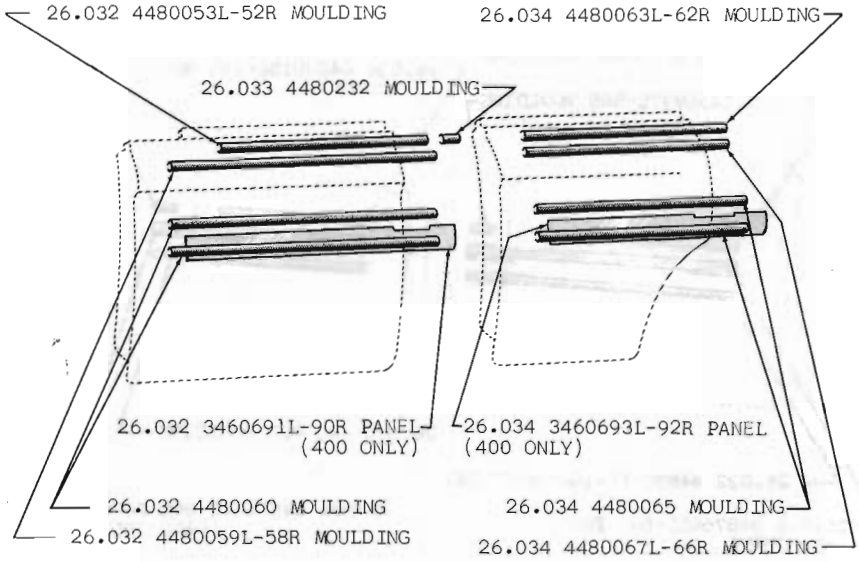

ATTACHING PARTS, WHEN REQUIRED, INCLUDED WITH ALL PARTS SHOWN

DOOR MOULDINGS 61 10-20 (Custom)(400)

Copyright 1963 American Motors Corp.

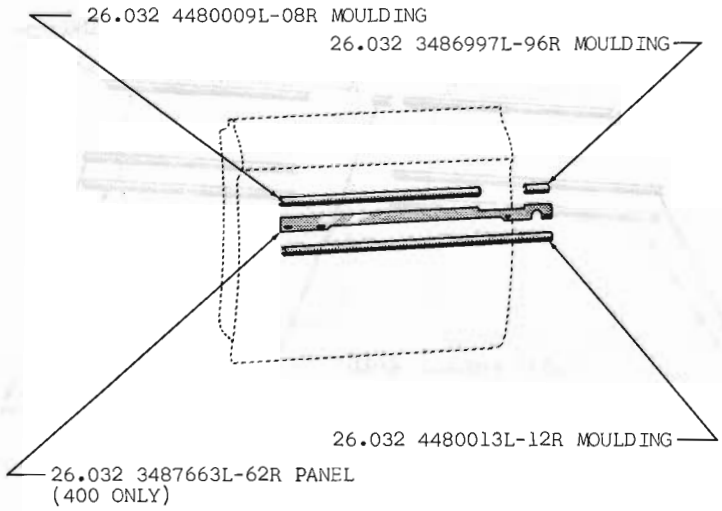

ATTACHING PARTS, WHEN REQUIRED, INCLUDED WITH ALL PARTS SHOWN

DOOR MOULDINGS 62 10 (Custom)(400) 2 Dr.

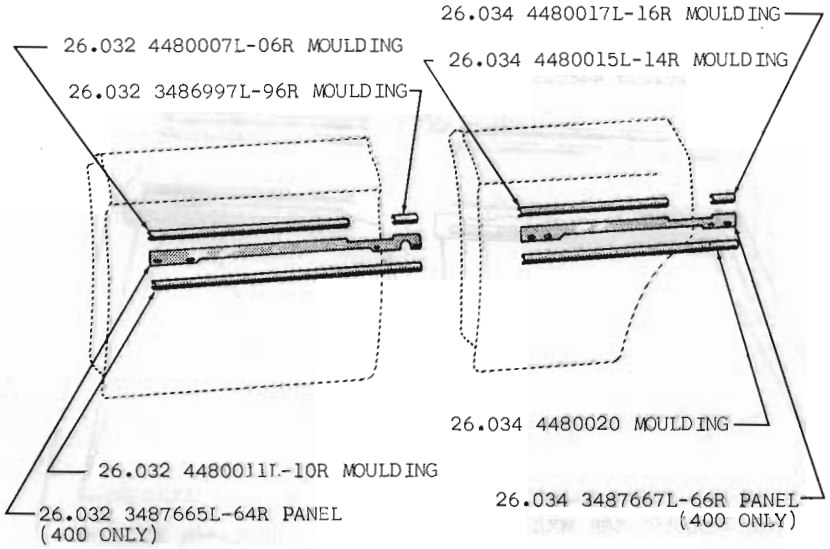

ATTACHING PARTS, WHEN REQUIRED, INCLUDED WITH ALL PARTS SHOWN

DOOR MOULDINGS 62 10 (Custom)(400) 4 Dr.

Copyright 1963 American Motors Corp.

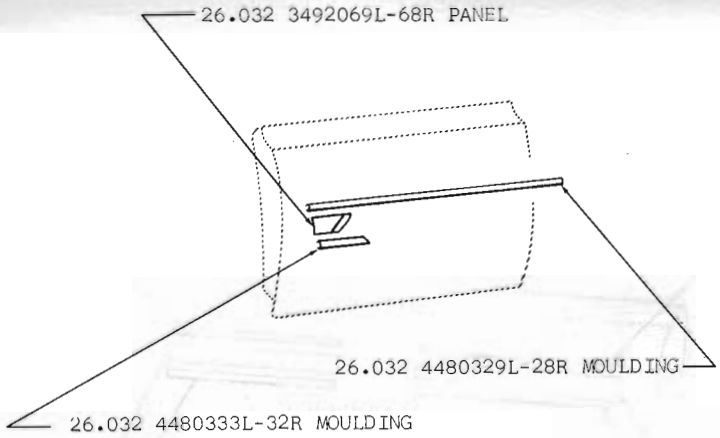

ATTACHING PARTS, WHEN REQUIRED, INCLUDED WITH ALL PARTS SHOWN

DOOR MOULDINGS 63 10 (660) 2 Dr.

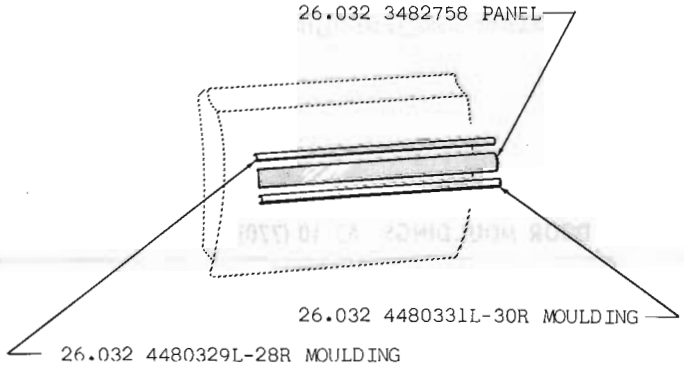

ATTACHING PARTS, WHEN REQUIRED, INCLUDED WITH ALL PARTS SHOWN

DOOR MOULDINGS 63 10 (770) 2 Dr.

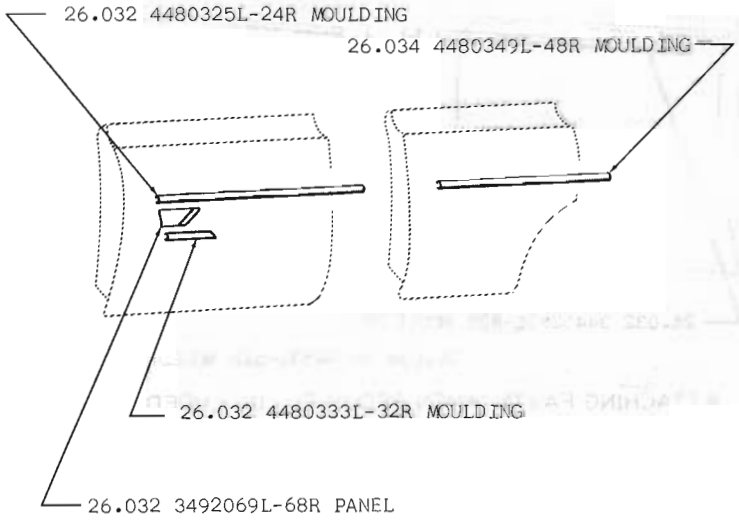

ATTACHING PARTS, WHEN REQUIRED, INCLUDED WITH ALL PARTS SHOWN

DOOR MOULDINGS 63 10 (660) 4 Dr.

Copyright 1963 American Motors Corp.

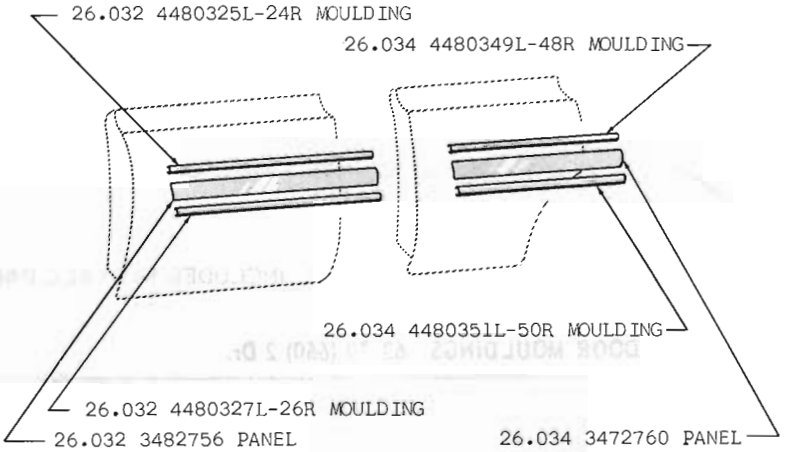

ATTACHING PARTS, WHEN REQUIRED, INCLUDED WITH ALL PARTS SHOWN

DOOR MOULDINGS 63 10 (770) 4 Dr.

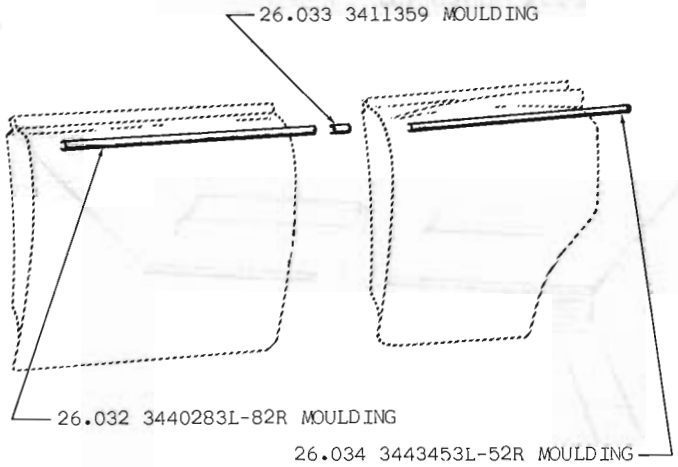

ATTACHING PARTS, WHEN REQUIRED, INCLUDED WITH ALL PARTS SHOWN

DOOR MOULDINGS 60 80 (Deluxe)

Copyright 1963 American Motors Corp.

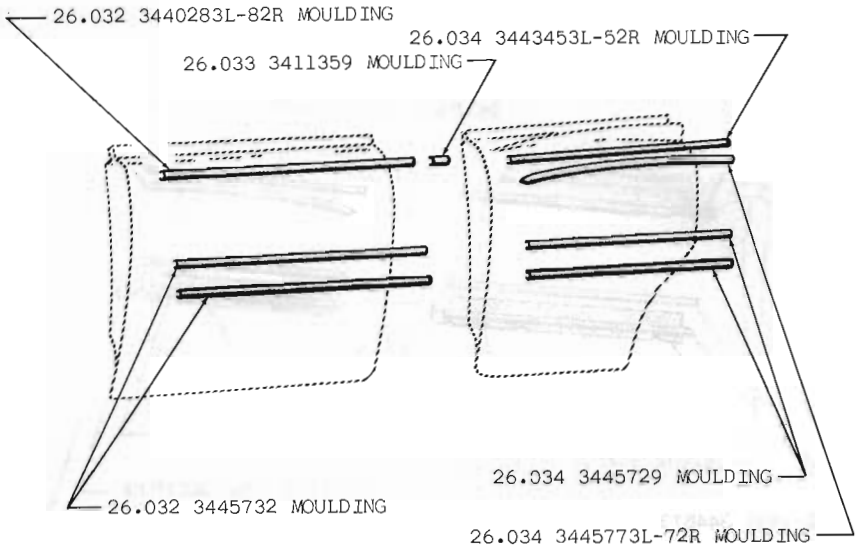

ATTACHING PARTS, WHEN REQUIRED, INCLUDED WITH ALL PARTS SHOWN

DOOR MOULDINGS 60 80 (Super)

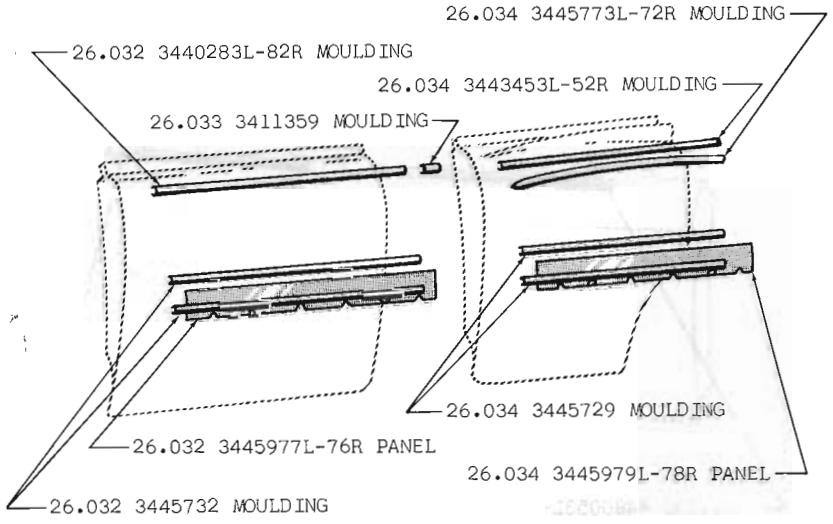

ATTACHING PARTS, WHEN REQUIRED, INCLUDED WITH ALL PARTS SHOWN

DOOR MOULDINGS 60 85-88 (Custom)

Copyright 1963 American Motors Corp.

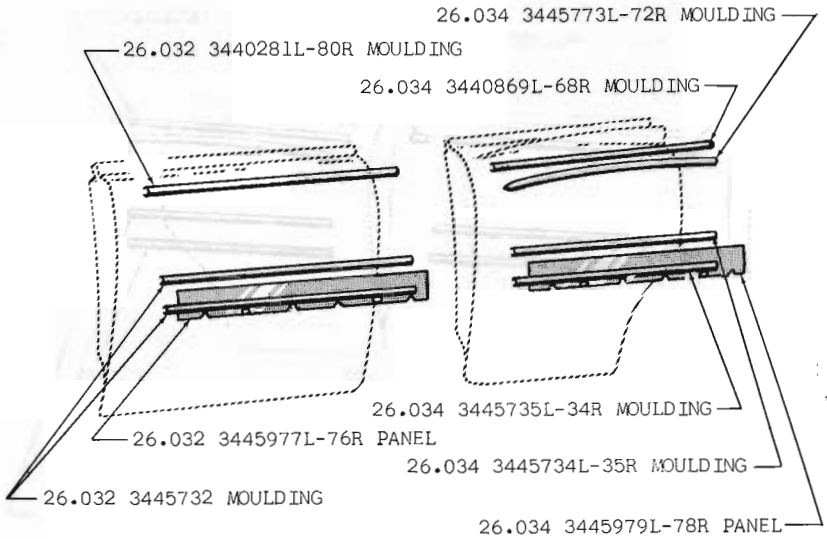

ATTACHING PARTS, WHEN REQUIRED, INCLUDED WITH ALL PARTS SHOWN

DOOR MOULDINGS 60 83-89 (Custom)

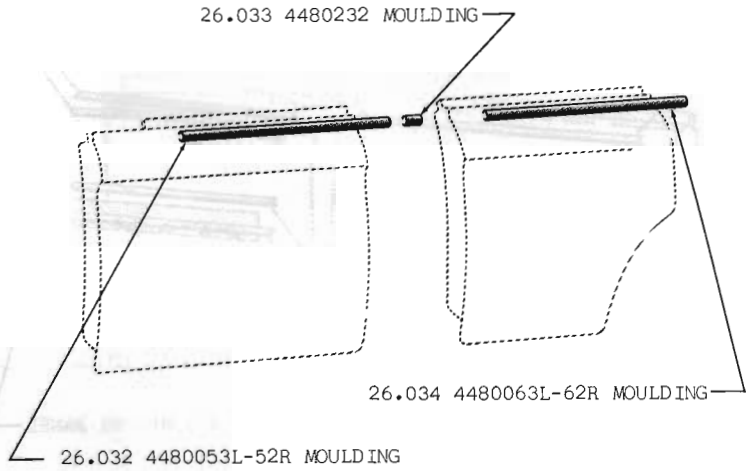

ATTACHING PARTS, WHEN REQUIRED, INCLUDED WITH ALL PARTS SHOWN

DOOR MOULDINGS 61 80 (Deluxe)

Copyright 1963 American Motors Corp.

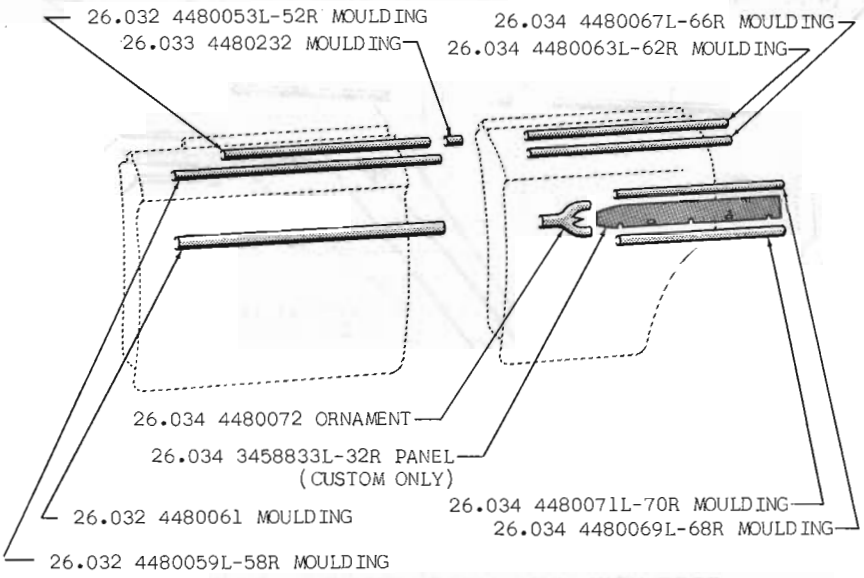

ATTACHING PARTS, WHEN REQUIRED, INCLUDED WITH ALL PARTS SHOWN

DOOR MOULDINGS 61 80 (Super)(Custom)

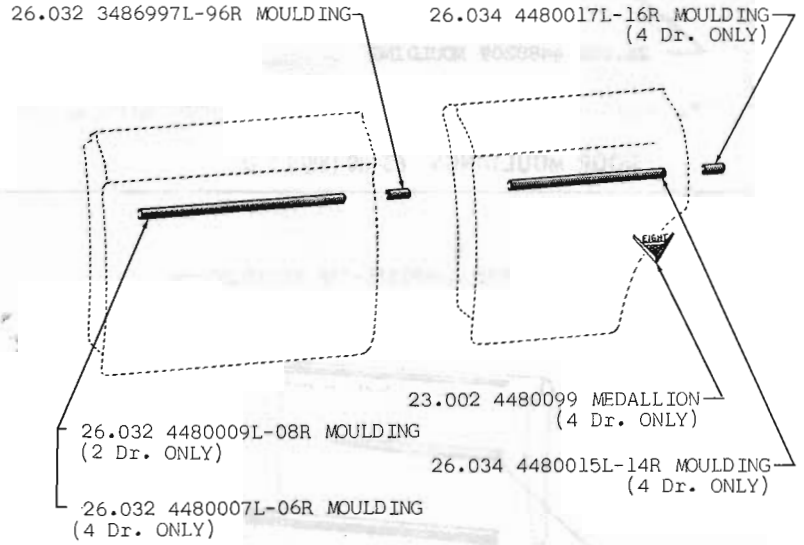

ATTACHING PARTS, WHEN REQUIRED, INCLUDED WITH ALL PARTS SHOWN

DOOR MOULDINGS 62 80 (Custom) 2 Dr. and 4 Dr.

Copyright 1963 American Motors Corp.

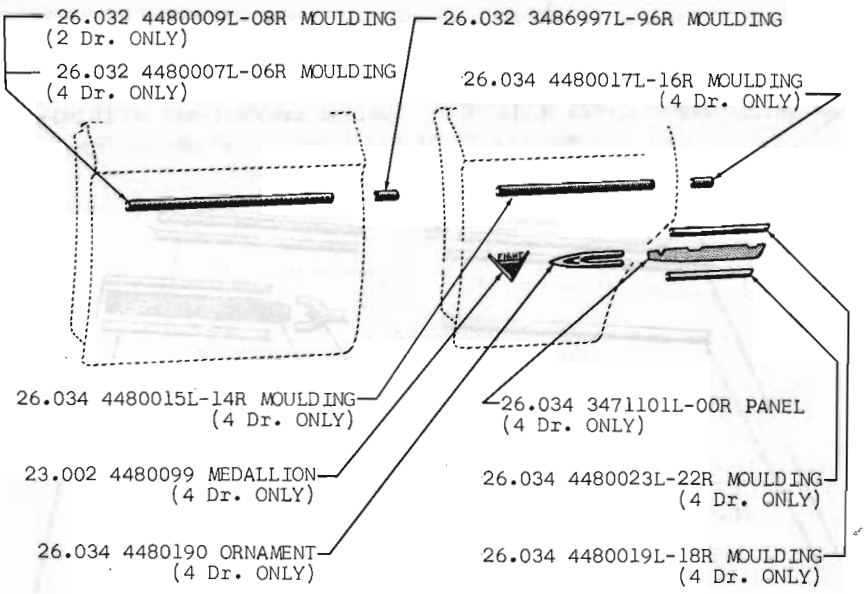

ATTACHING PARTS, WHEN REQUIRED, INCLUDED WITH ALL PARTS SHOWN

DOOR MOULDINGS 62 80 (400) 2 Dr. and 4 Dr.

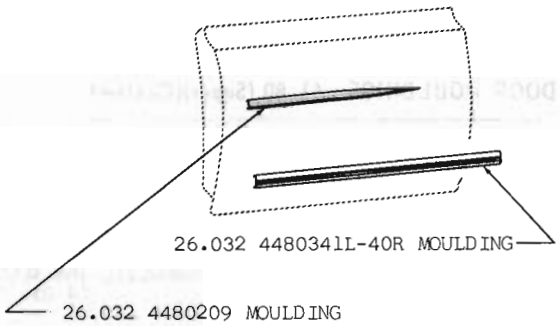

ATTACHING PARTS, WHEN REQUIRED, INCLUDED WITH ALL PARTS SHOWN

DOOR MOULDINGS 63 80 (880) 2 Dr.

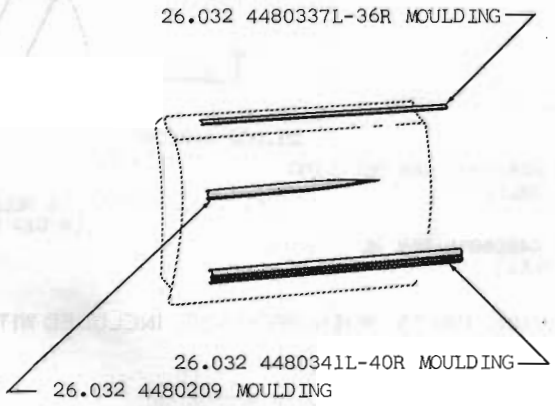

ATTACHING PARTS, WHEN REQUIRED, INCLUDED WITH ALL PARTS SHOWN

DOOR MOULDINGS 63 80 (990) 2 Dr.

Copyright 1963 American Motors Corp.

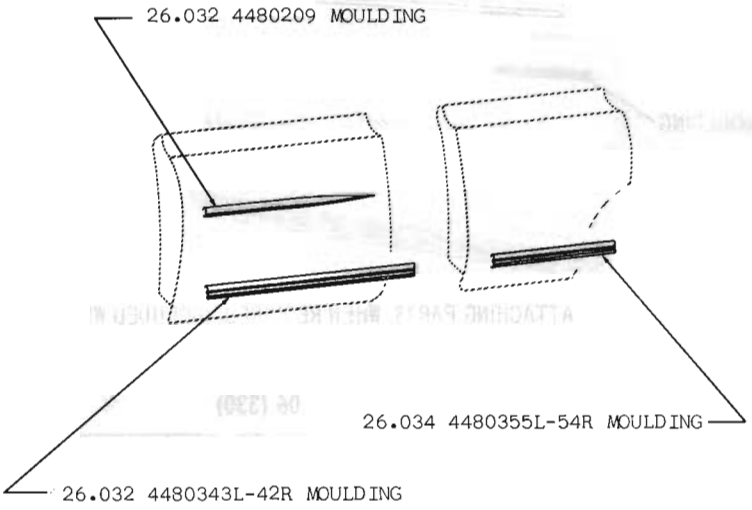

ATTACHING PARTS, WHEN REQUIRED, INCLUDED WITH ALL PARTS SHOWN

DOOR MOULDINGS 63 80 (880) 4 Dr.

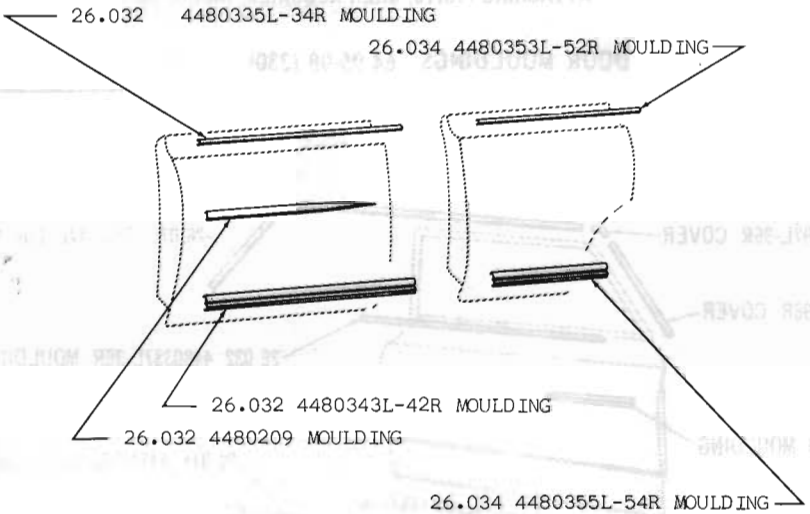

ATTACHING PARTS, WHEN REQUIRED, INCLUDED WITH ALL PARTS SHOWN

DOOR MOULDINGS 63 80 (990) 4 Dr.

Copyright 1963 American Motors Corp.

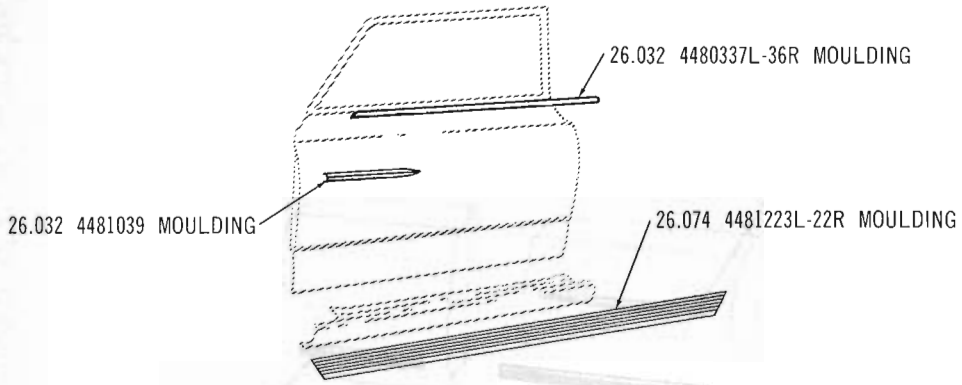

ATTACHING PARTS, WHEN REQUIRED, INCLUDED WITH ALL PARTS SHOWN

DOOR MOULDINGS 64 06 (330)

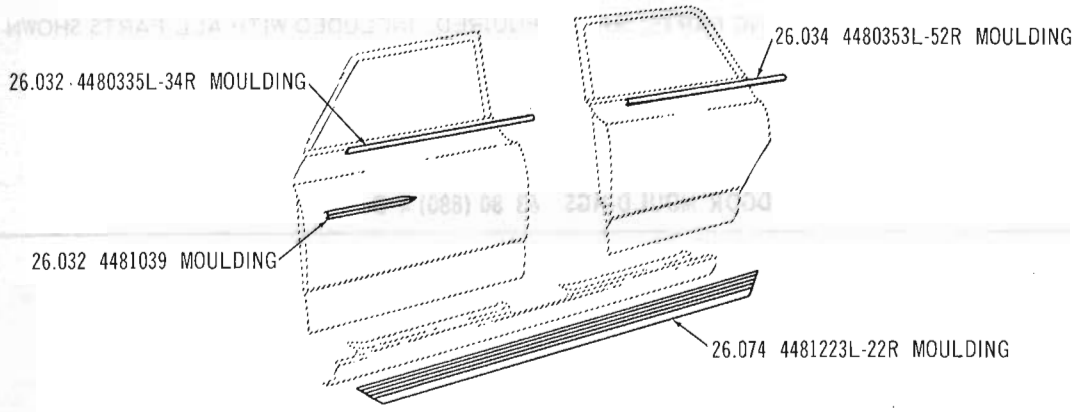

ATTACHING PARTS, WHEN REQUIRED, INCLUDED WITH ALL PARTS SHOWN

DOOR MOULDINGS 64 05-08 (330)

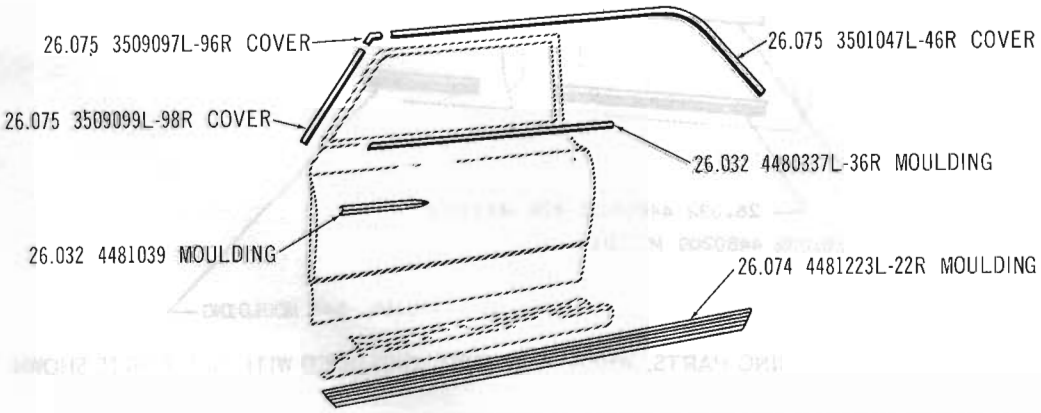

ATTACHING PARTS, WHEN REQUIRED, INCLUDED WITH ALL PARTS SHOWN

DOOR MOULDINGS 64 07-09 (440): 64 09 (440-H)

Copyright 1963 American Motors Corp.

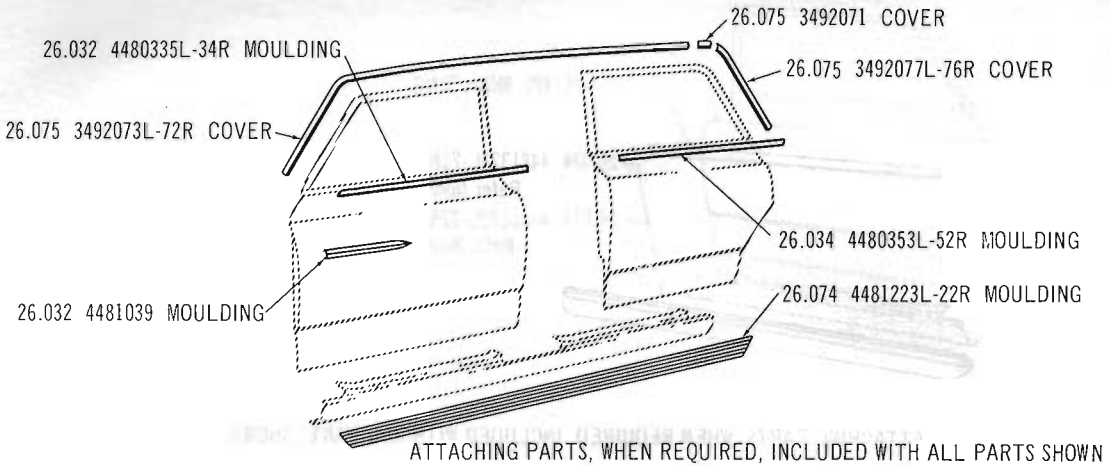

ATTACHING PARTS, WHEN REQUIRED, INCLUDED WITH ALL PARTS SHOWN

DOOR MOULDINGS 64 05 (440)

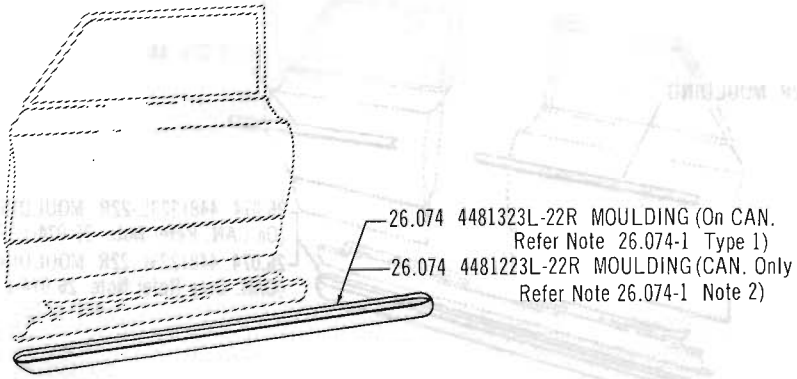

ATTACHING PARTS, WHEN REQUIRED, INCLUDED WITH ALL PARTS SHOWN

DOOR MOULDINGS 64 16 (550)

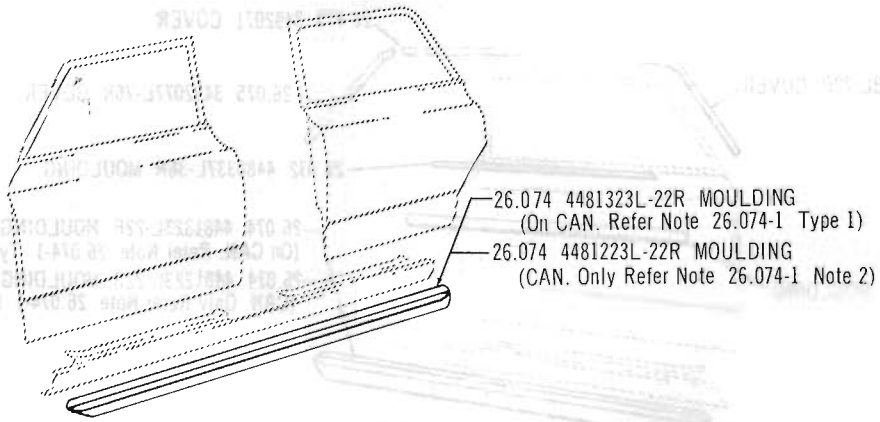

ATTACHING PARTS, WHEN REQUIRED, INCLUDED WITH ALL PARTS SHOWN

DOOR MOULDINGS 64 15-18 (550)

Copyright 1963 American Motors Corp.

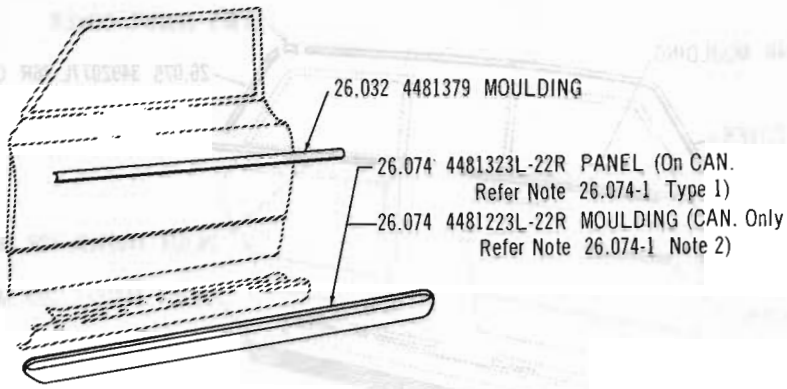

ATTACHING PARTS, WHEN REQUIRED, INCLUDED WITH ALL PARTS SHOWN

DOOR MOULDINGS 64 16 (660)

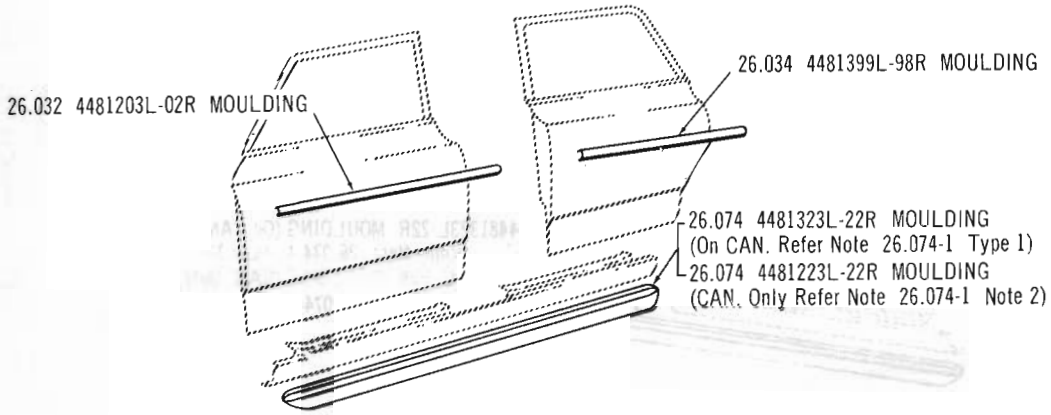

ATTACHING PARTS, WHEN REQUIRED, INCLUDED WITH ALL PARTS SHOWN

DOOR MOULDINGS 64 15-18 (660)

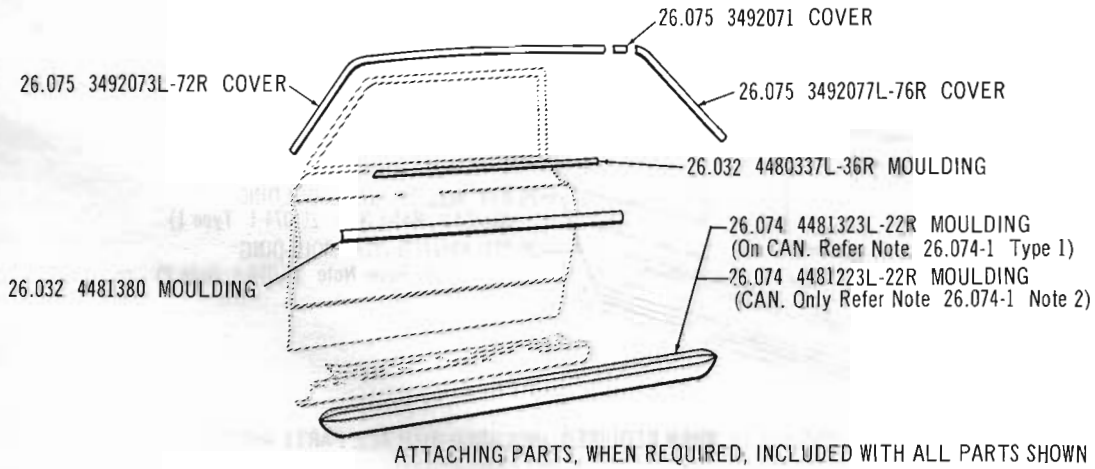

ATTACHING PARTS, WHEN REQUIRED, INCLUDED WITH ALL PARTS SHOWN

DOOR MOULDINGS 64 16 (770)

Copyright 1963 American Motors Corp.

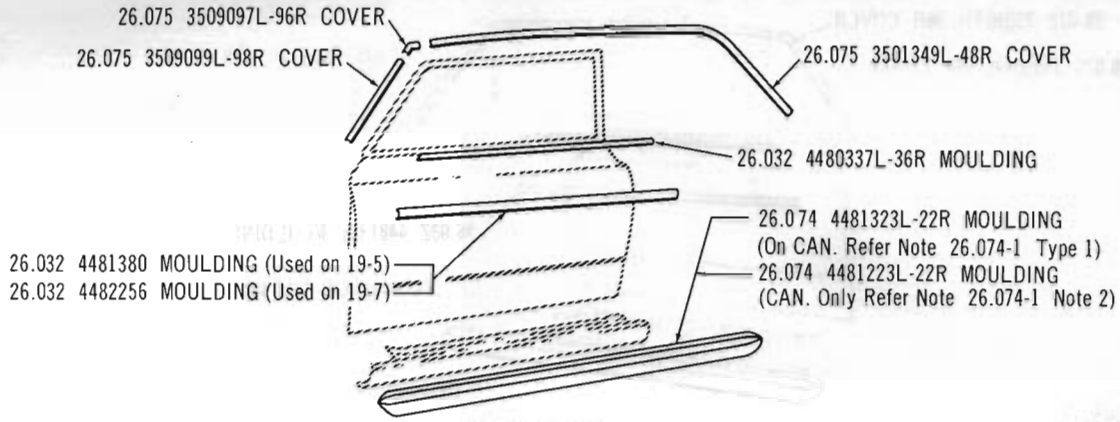

ATTACHING PARTS, WHEN REQUIRED, INCLUDED WITH ALL PARTS SHOWN

DOOR MOULDINGS 64 19 (770)

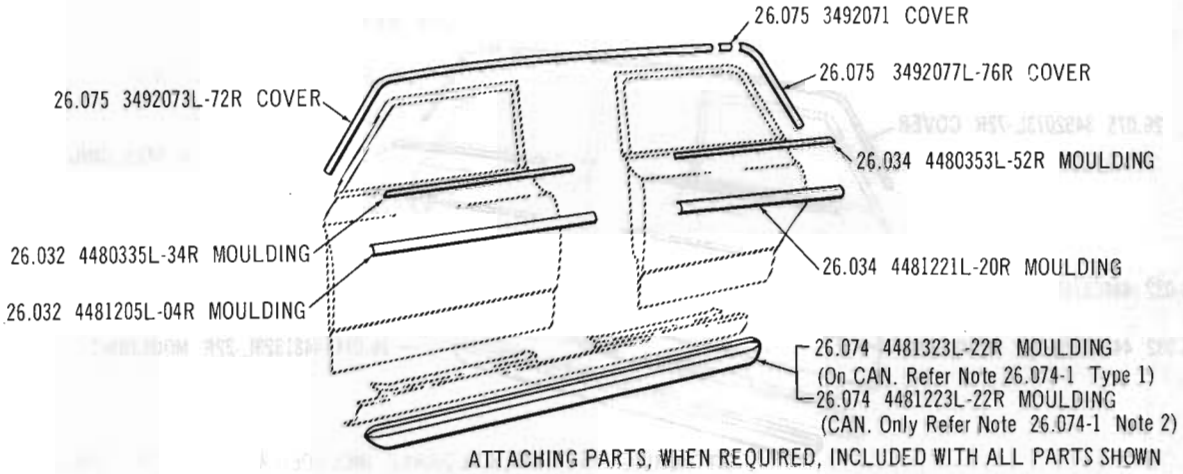

ATTACHING PARTS, WHEN REQUIRED, INCLUDED WITH ALL PARTS SHOWN

DOOR MOULDINGS 64 15 (770)

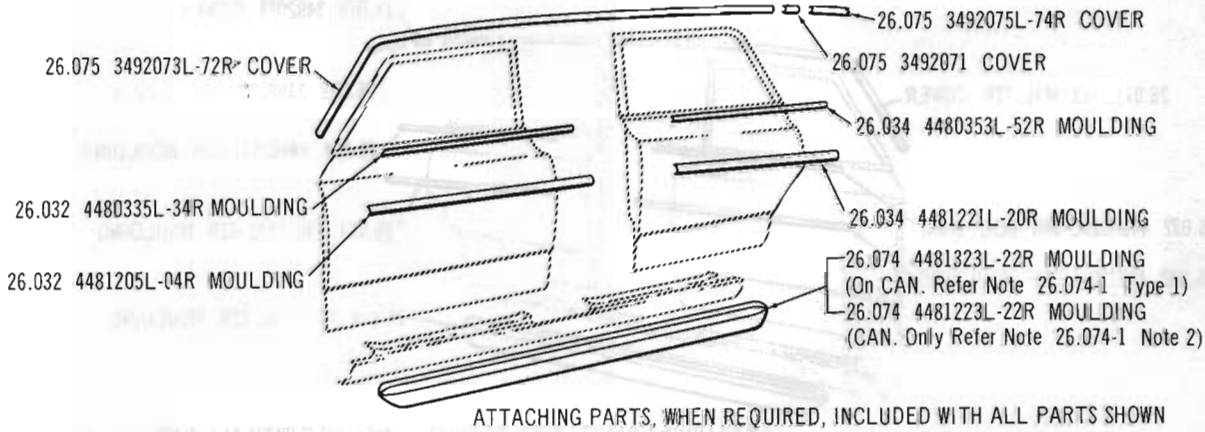

ATTACHING PARTS, WHEN REQUIRED, INCLUDED WITH ALL PARTS SHOWN

DOOR MOULDINGS 64 18 (770)

Copyright 1963 American Motors Corp.

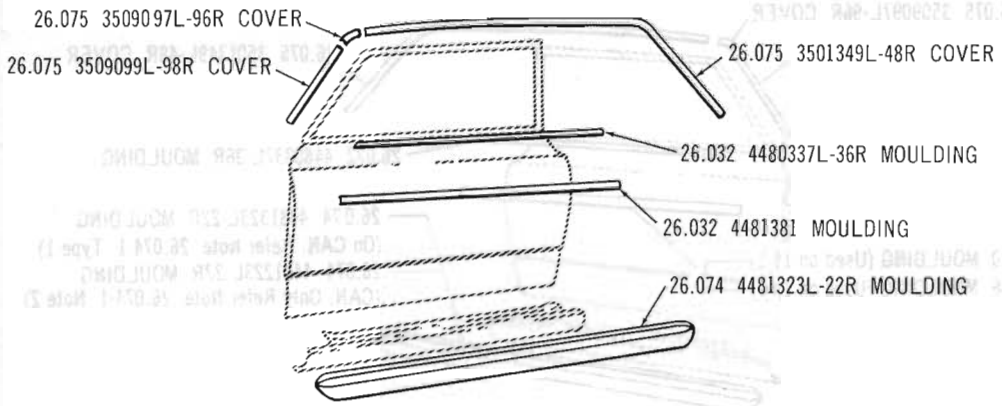

ATTACHING PARTS, WHEN REQUIRED, INCLUDED WITH ALL PARTS SHOWN

DOOR MOULDINGS 64 89 (990)

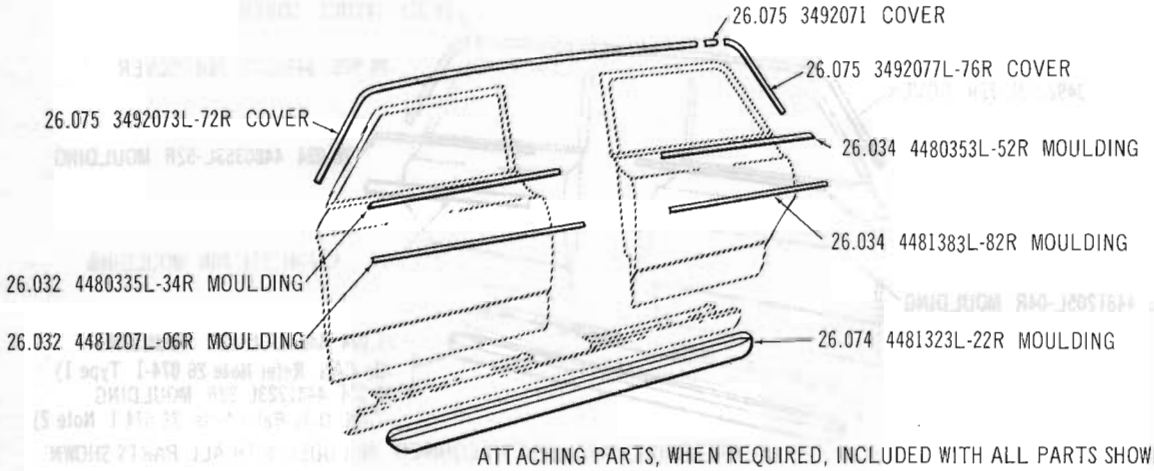

ATTACHING PARTS, WHEN REQUIRED, INCLUDED WITH ALL PARTS SHOWN

DOOR MOULDINGS 64 85 (990)

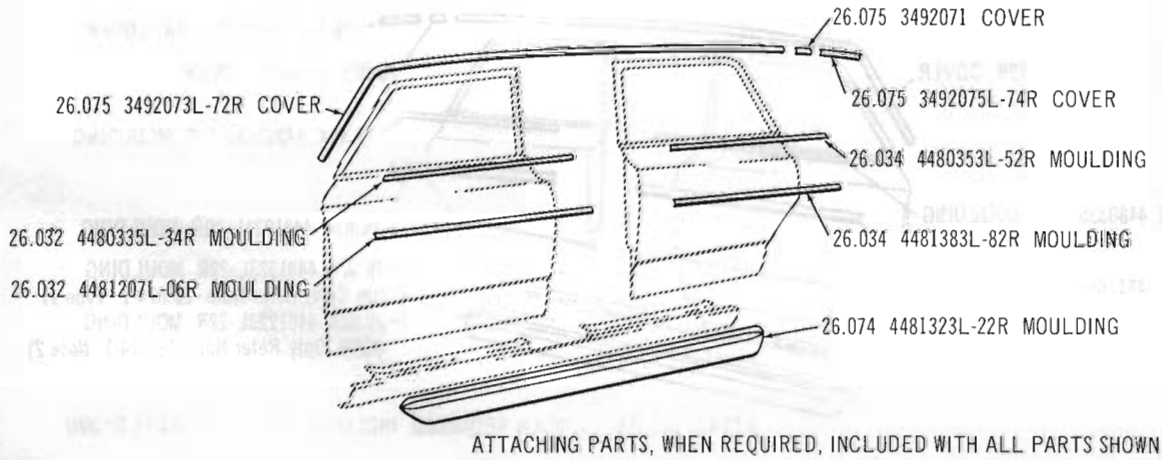

ATTACHING PARTS, WHEN REQUIRED, INCLUDED WITH ALL PARTS SHOWN

DOOR MOULDINGS 64 88 (990)

Copyright 1963 American Motors Corp.

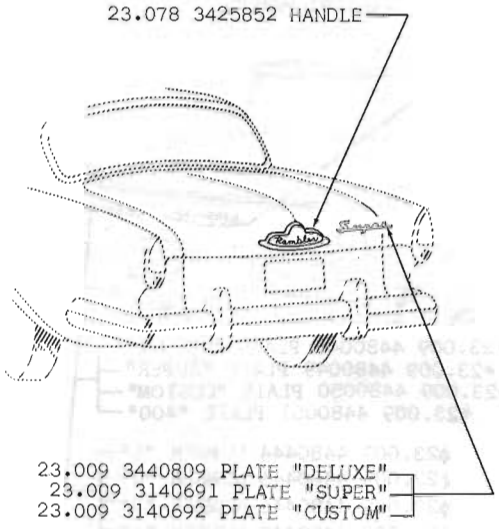

ATTACHING PARTS, WHEN REQUIRED, INCLUDED WITH ALL PARTS SHOWN

REAR MOULDINGS 60 01 (Sedan)

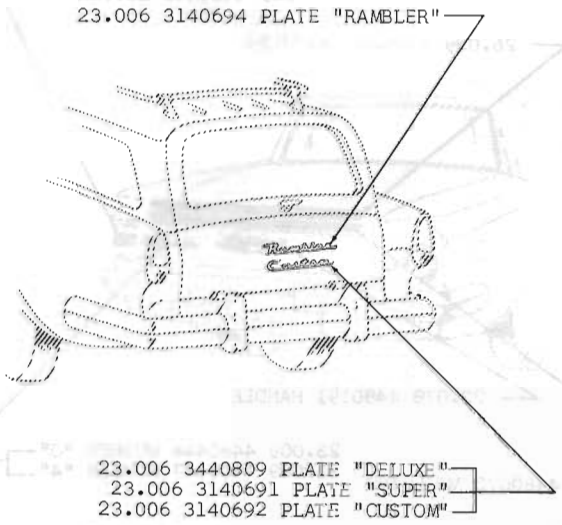

ATTACHING PARTS, WHEN REQUIRED, INCLUDED WITH ALL PARTS SHOWN

REAR MOULDINGS 60 01 (Wagon)

Copyright 1963 American Motors Corp.

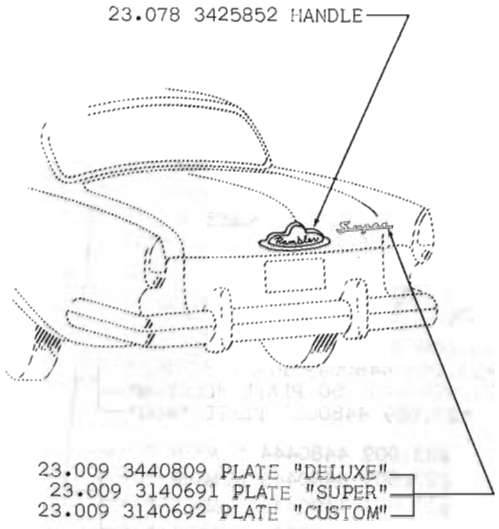

ATTACHING PARTS, WHEN REQUIRED, INCLUDED WITH ALL PARTS SHOWN

REAR MOULDINGS 60 01 (Sedan)

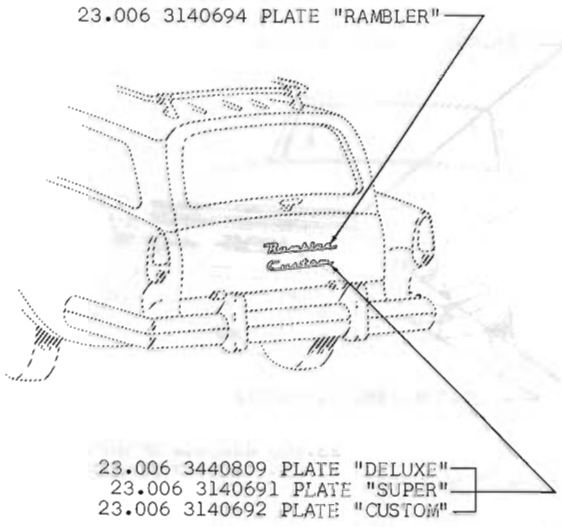

ATTACHING PARTS, WHEN REQUIRED, INCLUDED WITH ALL PARTS SHOWN

REAR MOULDINGS 60 01 (Wagon)

Copyright 1963 American Motors Corp.

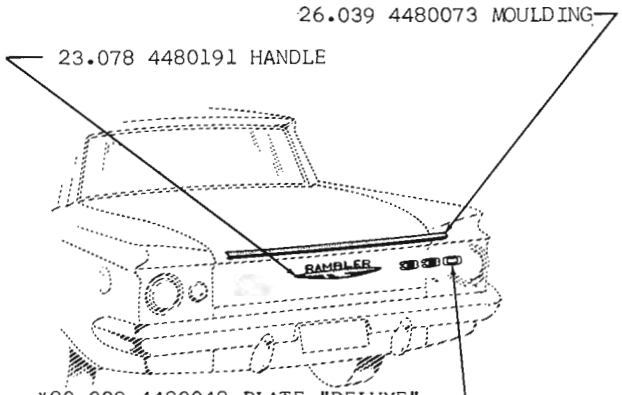

*23.009 4480048 PLATE "DELUXE"
*23.009 4480049 PLATE "SUPER"
*23.009 4480050 PLATE "CUSTOM"
*23.009 4480051 PLATE "400"

ϕ23.009 4480444 NUMBER "0"
ϕ23.009 4480445 NUMBER "2"
ϕ23.009 4480446 NUMBER "3"
ϕ23.009 4480447 NUMBER "4"

*Used only on 61-62 01
ϕUsed only on 63 01

ATTACHING PARTS, WHEN REQUIRED, INCLUDED WITH ALL PARTS SHOWN

REAR MOULDINGS 61-62 01 (Custom)(400) Sedan: 63 05-06 (220)(330)(440) Sedan

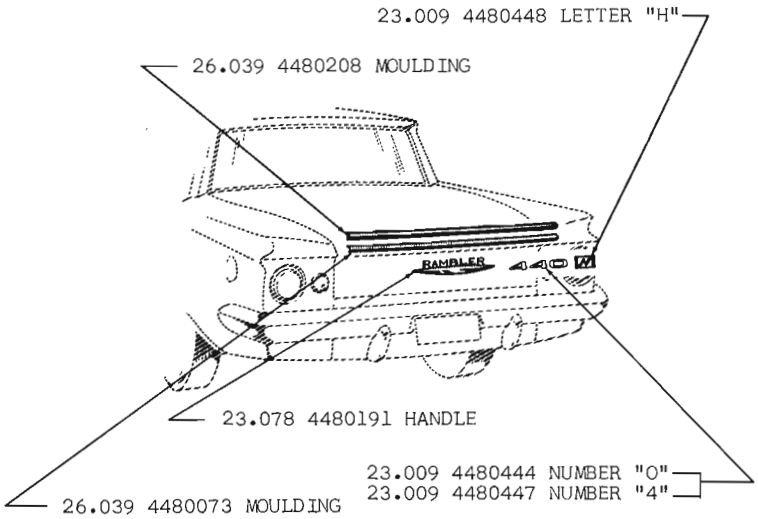

ATTACHING PARTS, WHEN REQUIRED, INCLUDED WITH ALL PARTS SHOWN

REAR MOULDINGS 63 07-09 (440) Sedan

Copyright 1963 American Motors Corp.

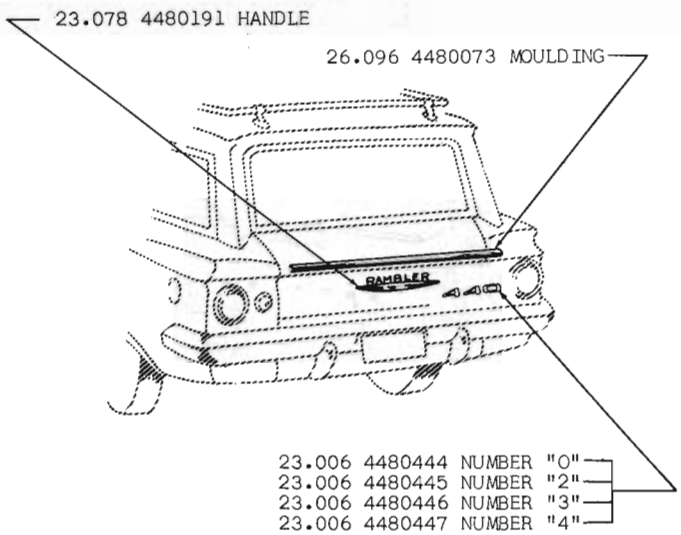

ATTACHING PARTS, WHEN REQUIRED, INCLUDED WITH ALL PARTS SHOWN

REAR MOULDINGS 63 01 (220)(330)(440) Wagon

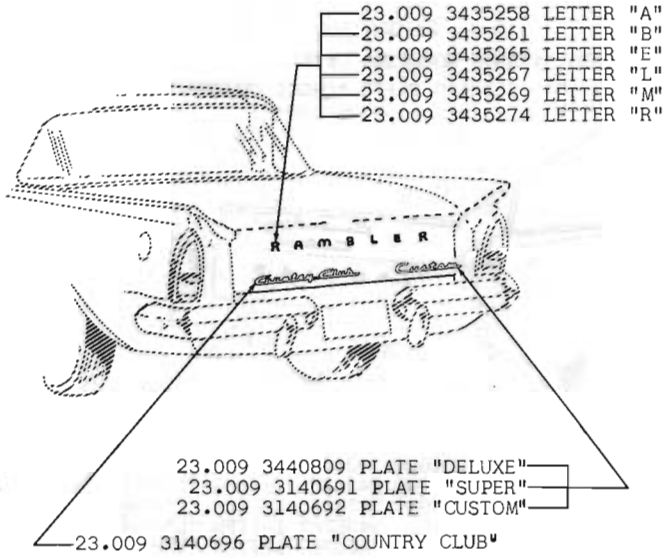

ATTACHING PARTS, WHEN REQUIRED, INCLUDED WITH ALL PARTS SHOWN

REAR MOULDINGS 60 10 Sedan

Copyright 1963 American Motors Corp.

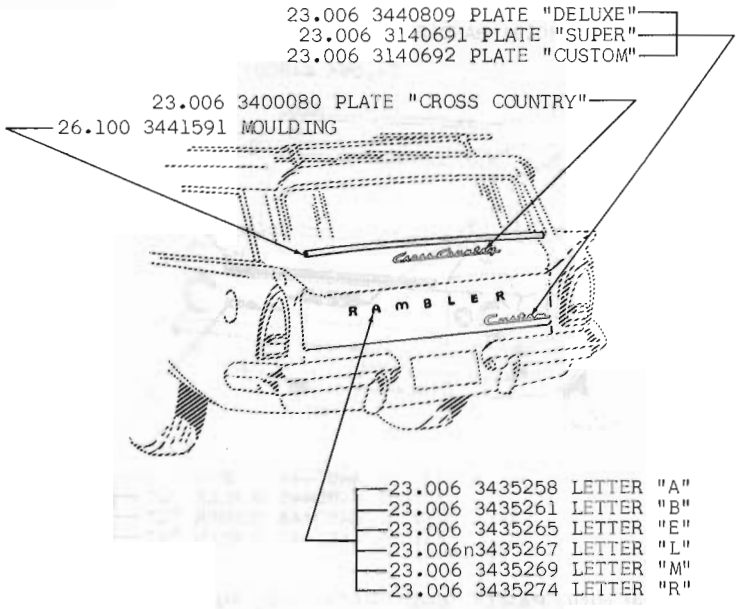

ATTACHING PARTS, WHEN REQUIRED, INCLUDED WITH ALL PARTS SHOWN

REAR MOULDINGS 60 10 Wagon (L3S)

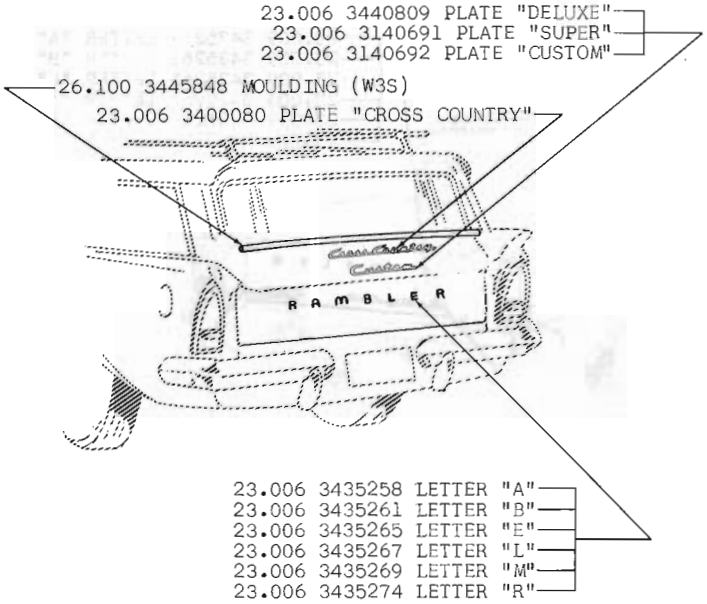

ATTACHING PARTS, WHEN REQUIRED, INCLUDED WITH ALL PARTS SHOWN

REAR MOULDINGS 60 10 Wagon (W3S)

Copyright 1963 American Motors Corp.

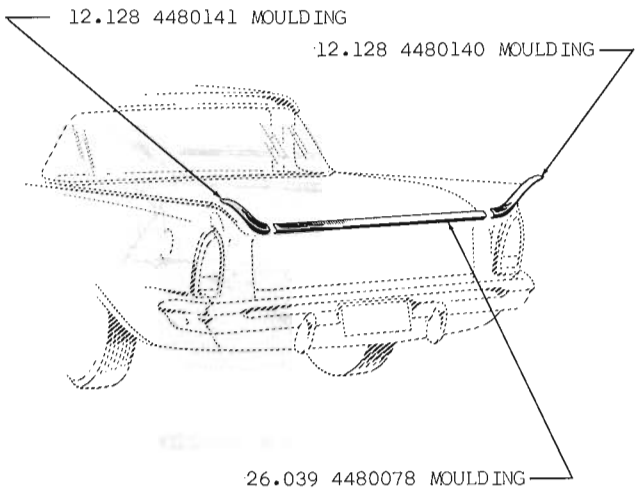

ATTACHING PARTS, WHEN REQUIRED, INCLUDED WITH ALL PARTS SHOWN

REAR MOULDINGS 61 10-20 (Custom) Sedan

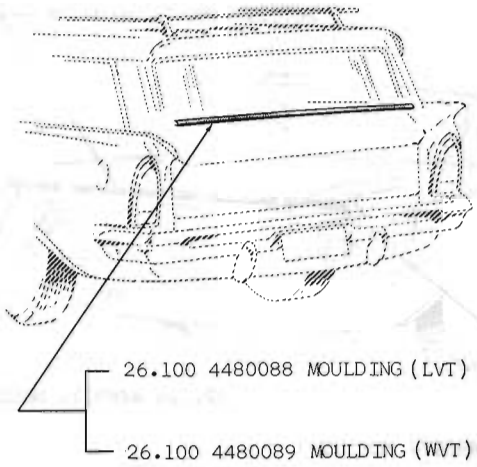

ATTACHING PARTS, WHEN REQUIRED, INCLUDED WITH ALL PARTS SHOWN

REAR MOULDINGS 61 10-20 (Deluxe)(Super) Wagon

Copyright 1963 American Motors Corp.

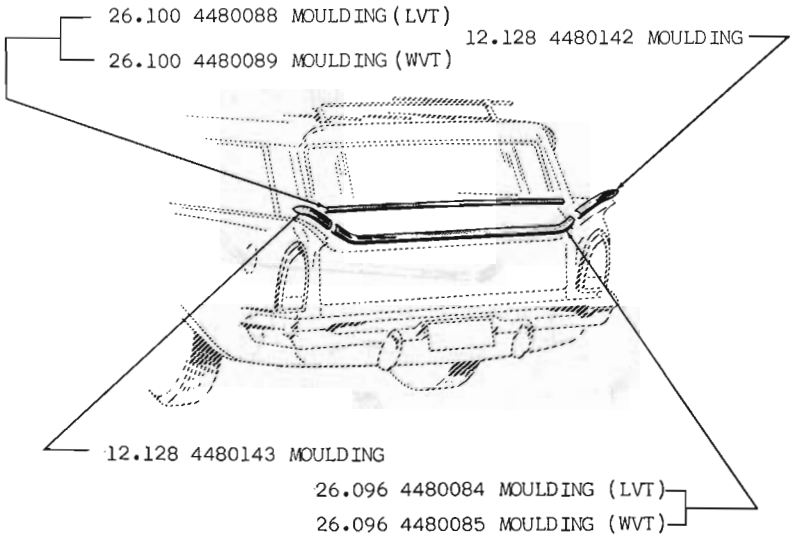

ATTACHING PARTS, WHEN REQUIRED, INCLUDED WITH ALL PARTS SHOWN

REAR MOULDINGS 61 10-20 (Custom) Wagon

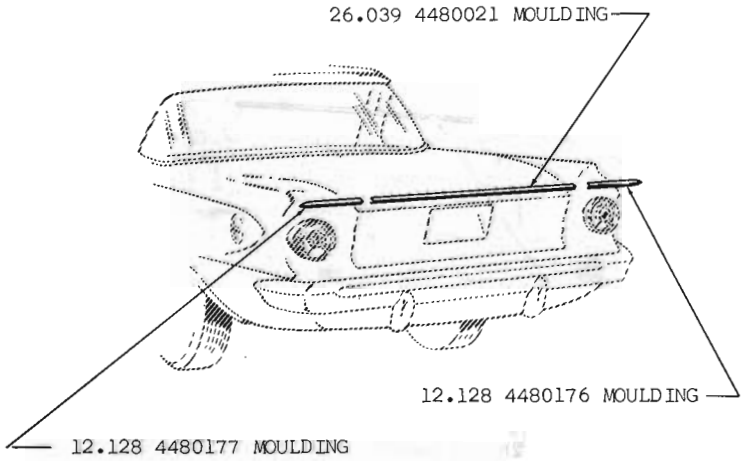

ATTACHING PARTS, WHEN REQUIRED, INCLUDED WITH ALL PARTS SHOWN

REAR MOULDINGS 62 10 (Custom) Sedan

Copyright 1963 American Motors Corp.

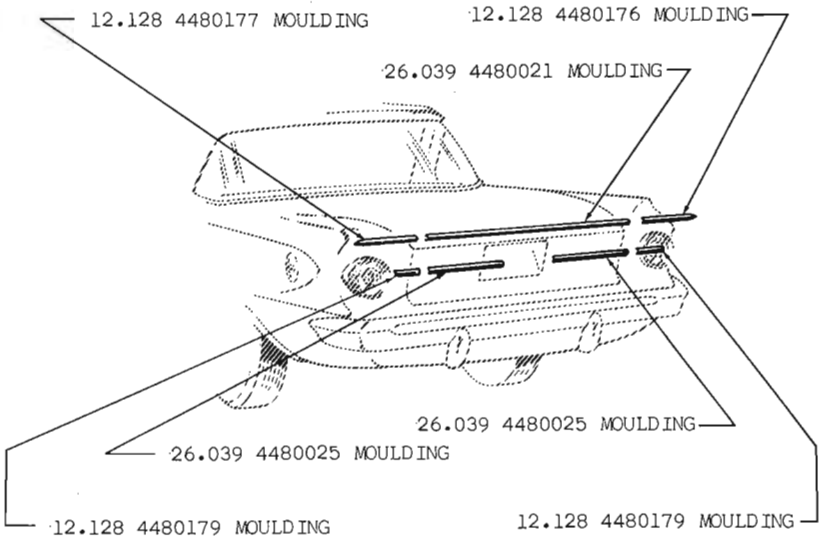

ATTACHING PARTS, WHEN REQUIRED, INCLUDED WITH ALL PARTS SHOWN

REAR MOULDINGS 62 10 (400) Sedan

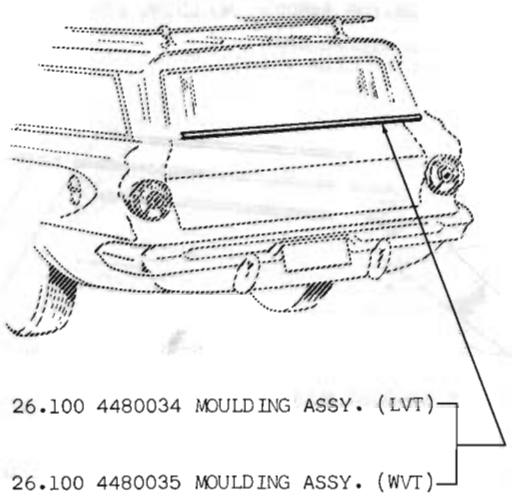

ATTACHING PARTS, WHEN REQUIRED, INCLUDED WITH ALL PARTS SHOWN

REAR MOULDINGS 62 10 (Deluxe) Wagon

Copyright 1963 American Motors Corp.

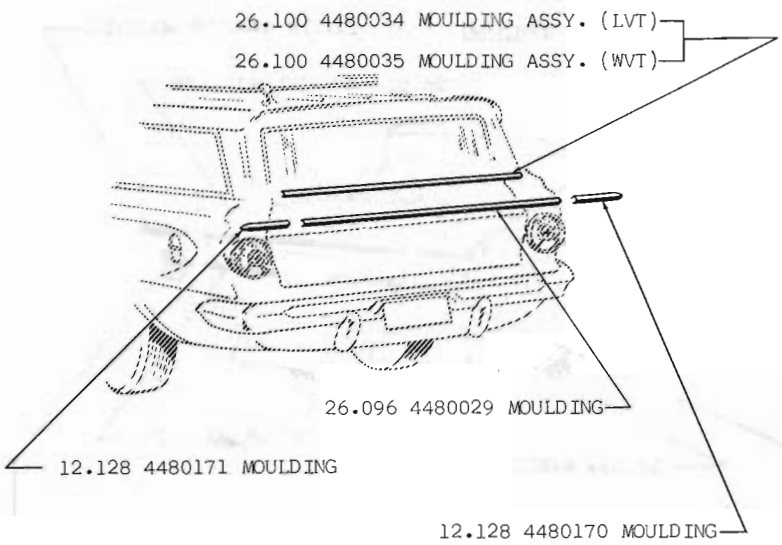

ATTACHING PARTS, WHEN REQUIRED, INCLUDED WITH ALL PARTS SHOWN

REAR MOULDINGS 62 10 (Custom) Wagon

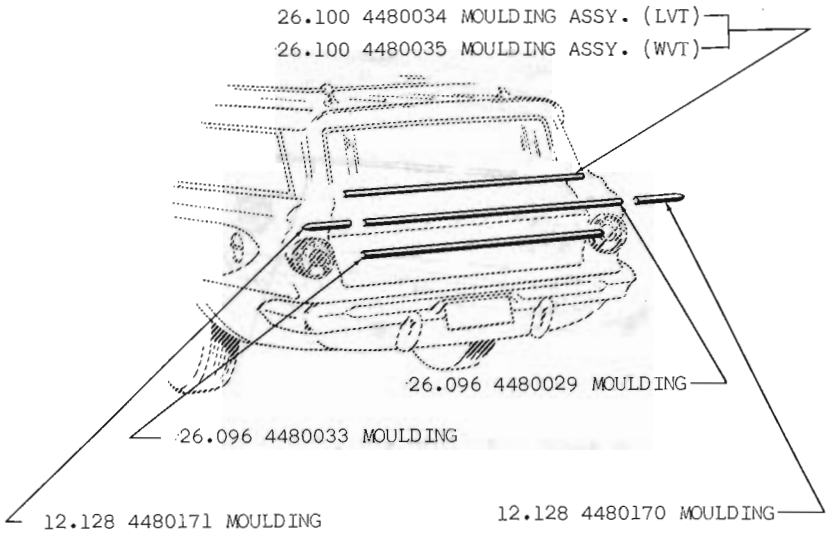

ATTACHING PARTS, WHEN REQUIRED, INCLUDED WITH ALL PARTS SHOWN

REAR MOULDINGS 62 10 (400) Wagon

Copyright 1963 American Motors Corp.

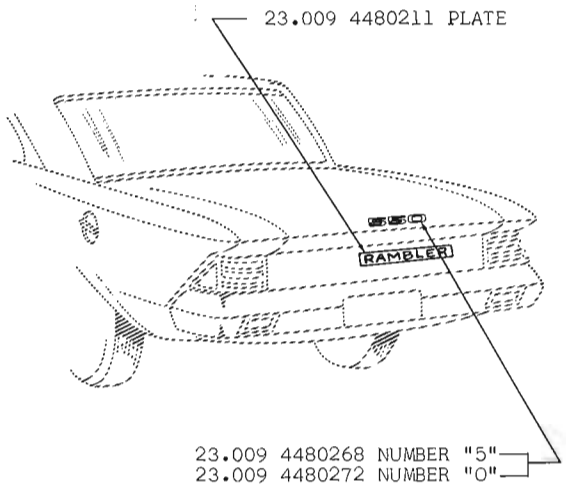

ATTACHING PARTS, WHEN REQUIRED, INCLUDED WITH ALL PARTS SHOWN

REAR MOULDINGS 63 10 (550) Sedan

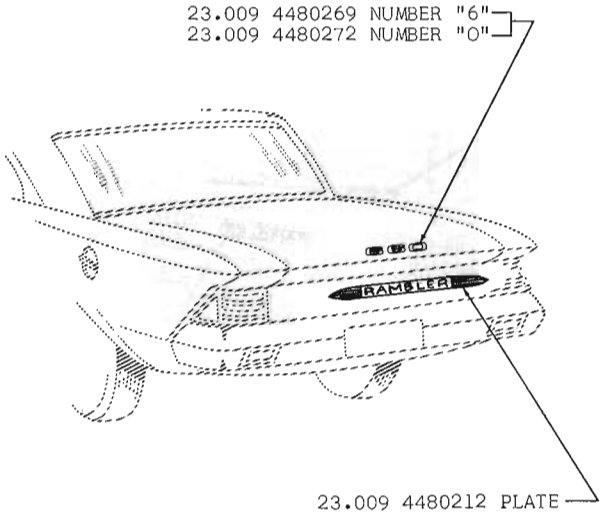

ATTACHING PARTS, WHEN REQUIRED, INCLUDED WITH ALL PARTS SHOWN

REAR MOULDINGS 63 10 (660) Sedan

Copyright 1963 American Motors Corp.

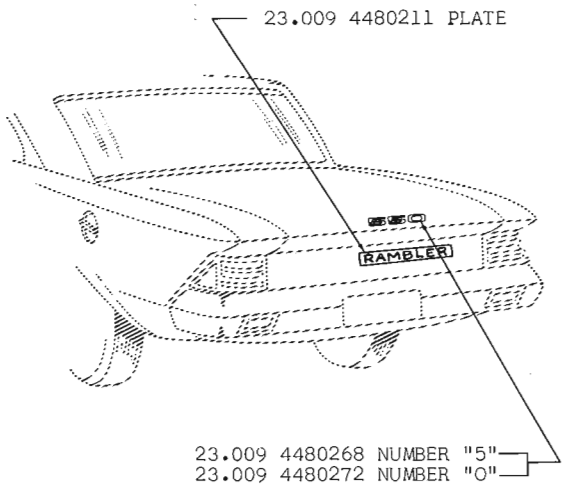

ATTACHING PARTS, WHEN REQUIRED, INCLUDED WITH ALL PARTS SHOWN

REAR MOULDINGS 63 10 (550) Sedan

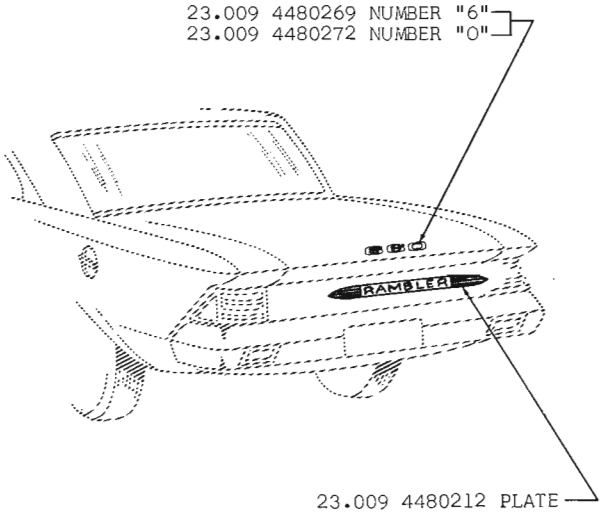

ATTACHING PARTS, WHEN REQUIRED, INCLUDED WITH ALL PARTS SHOWN

REAR MOULDINGS 63 10 (660) Sedan

Copyright 1963 American Motors Corp.

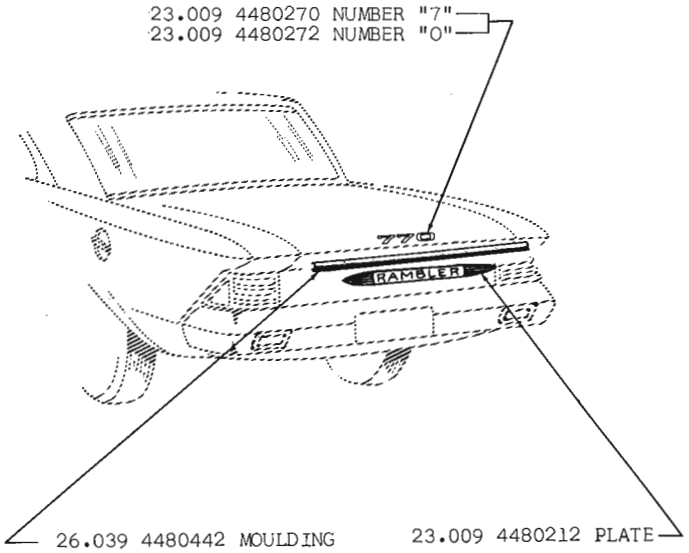

ATTACHING PARTS, WHEN REQUIRED, INCLUDED WITH ALL PARTS SHOWN

REAR MOULDINGS 63 10 (770) Sedan

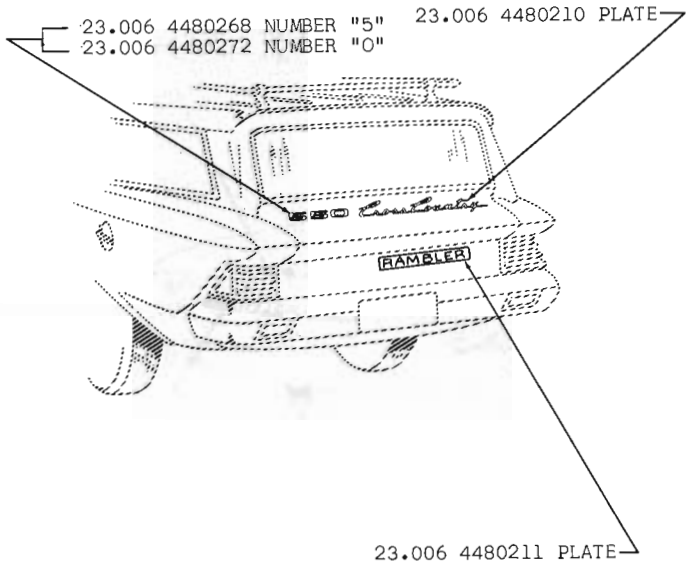

ATTACHING PARTS, WHEN REQUIRED, INCLUDED WITH ALL PARTS SHOWN

REAR MOULDINGS 63 10 (550) Wagon

Copyright 1963 American Motors Corp.

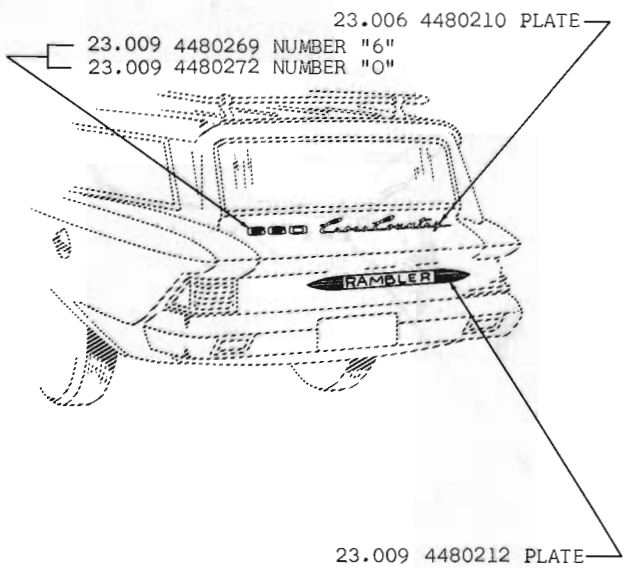

ATTACHING PARTS, WHEN REQUIRED, INCLUDED WITH ALL PARTS SHOWN

REAR MOULDINGS 63 10 (660) Wagon

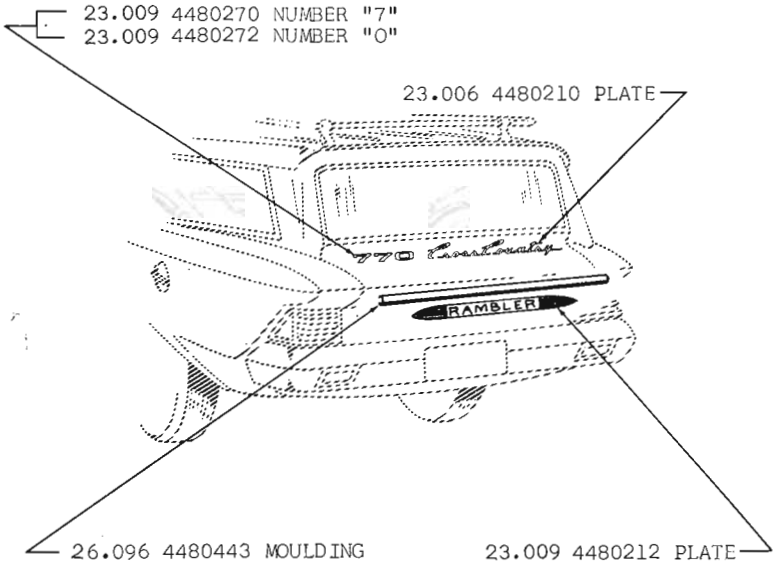

ATTACHING PARTS, WHEN REQUIRED, INCLUDED WITH ALL PARTS SHOWN

REAR MOULDINGS 63 10 (770) Wagon

Copyright 1963 American Motors Corp.

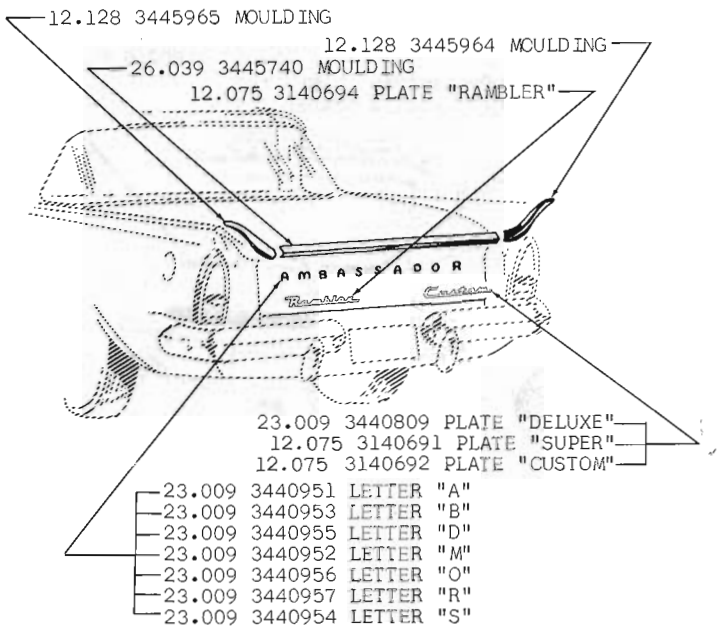

ATTACHING PARTS, WHEN REQUIRED, INCLUDED WITH ALL PARTS SHOWN

REAR MOULDINGS 60 80 Sedan

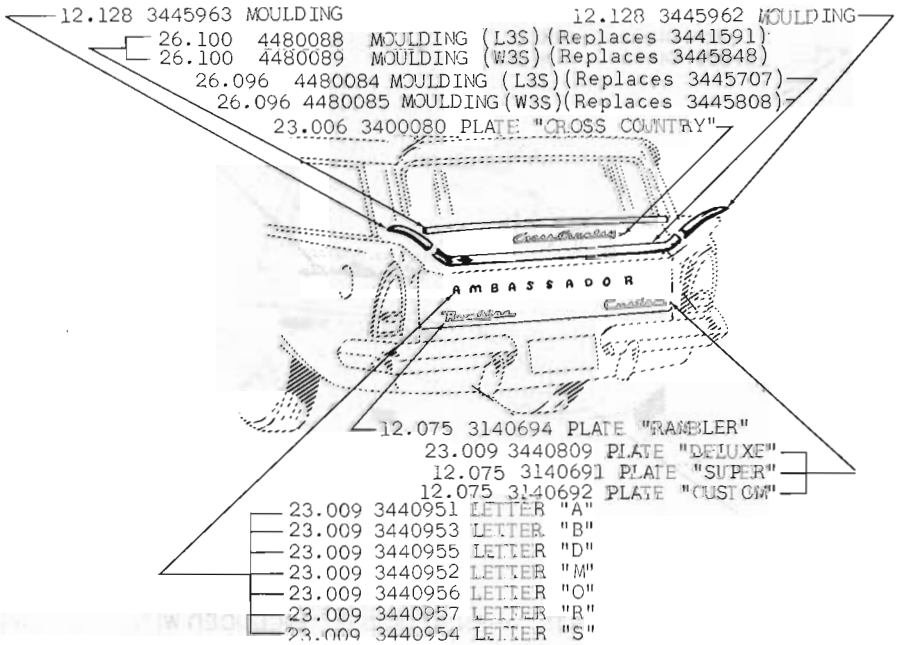

ATTACHING PARTS, WHEN REQUIRED, INCLUDED WITH ALL PARTS SHOWN

REAR MOULDINGS 60 80 (Wagon)

Copyright 1963 American Motors Corp.

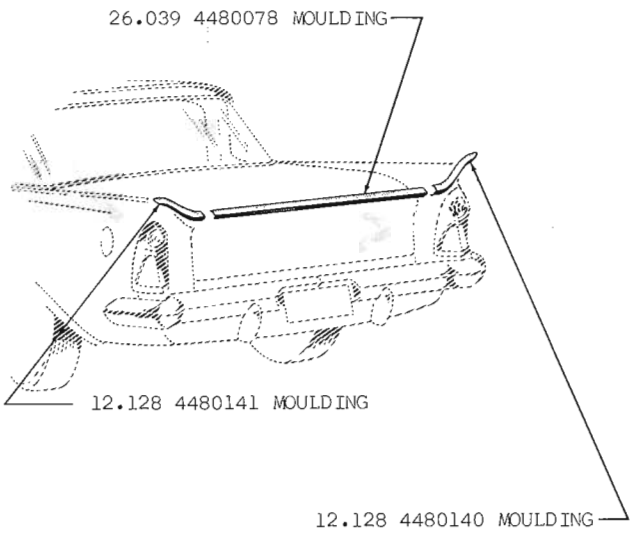

ATTACHING PARTS, WHEN REQUIRED, INCLUDED WITH ALL PARTS SHOWN

REAR MOULDINGS 61 80 (Super) Sedan

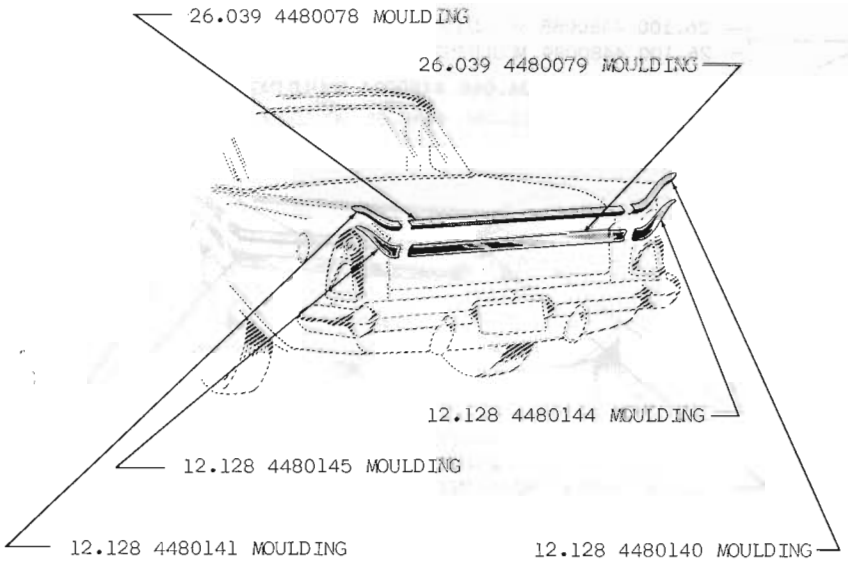

ATTACHING PARTS, WHEN REQUIRED, INCLUDED WITH ALL PARTS SHOWN

REAR MOULDINGS 61 80 (Custom) Sedan

Copyright 1963 American Motors Corp.

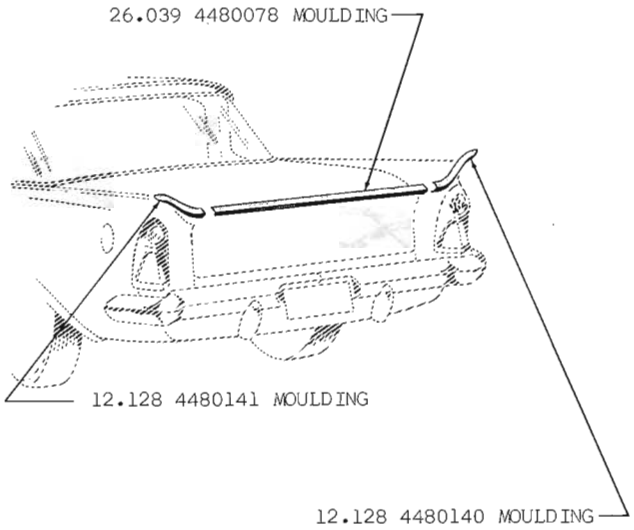

ATTACHING PARTS, WHEN REQUIRED, INCLUDED WITH ALL PARTS SHOWN

REAR MOULDINGS 61 80 (Super) Sedan

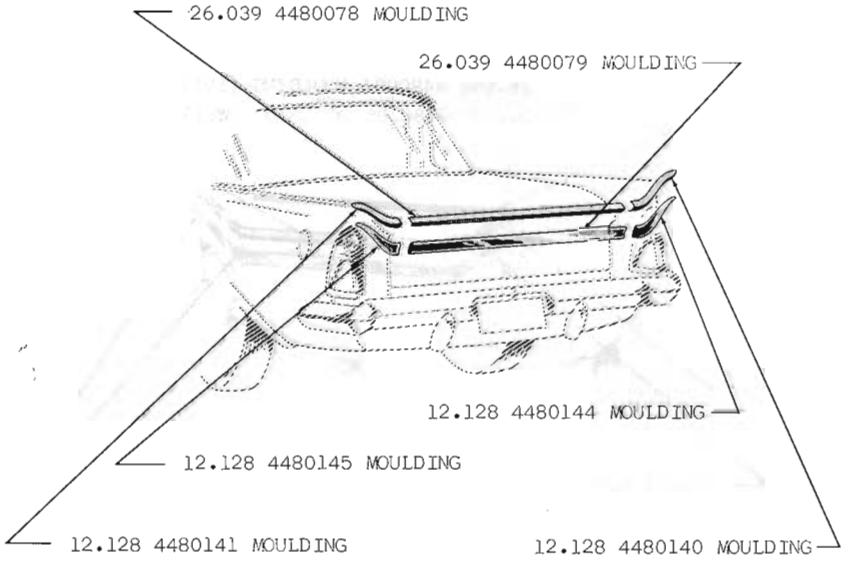

ATTACHING PARTS, WHEN REQUIRED, INCLUDED WITH ALL PARTS SHOWN

REAR MOULDINGS 61 80 (Custom) Sedan

Copyright 1963 American Motors Corp.

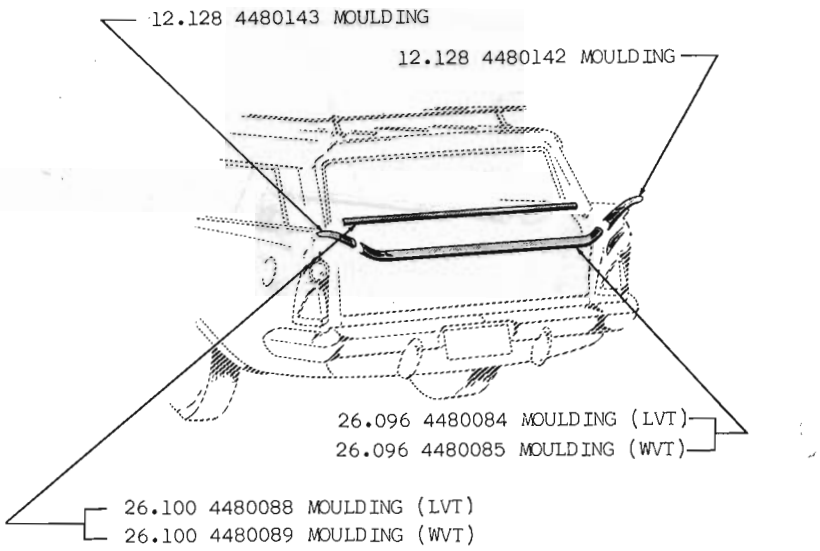

ATTACHING PARTS, WHEN REQUIRED, INCLUDED WITH ALL PARTS SHOWN

REAR MOULDINGS 61 80 (Super) Wagon

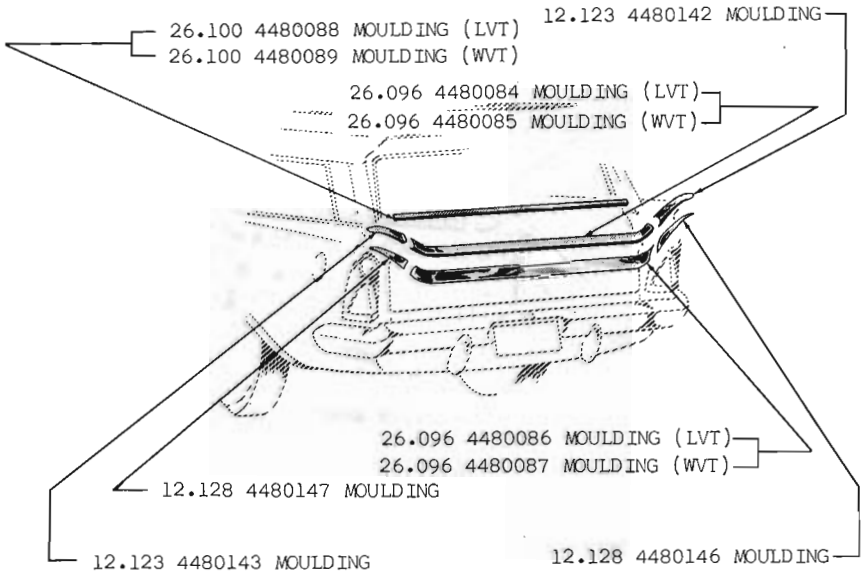

ATTACHING PARTS, WHEN REQUIRED, INCLUDED WITH ALL PARTS SHOWN

REAR MOULDINGS 61 80 (Custom) Wagon

Copyright 1963 American Motors Corp.

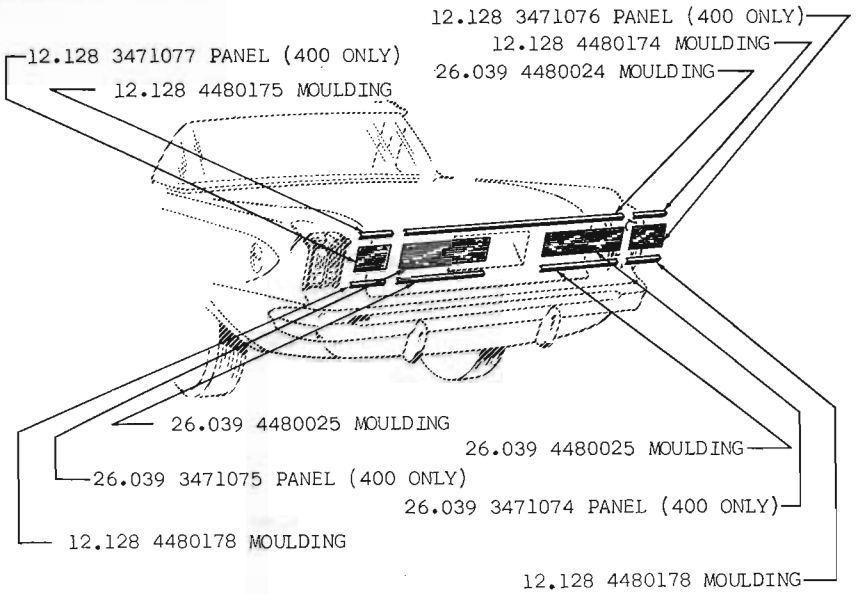

ATTACHING PARTS, WHEN REQUIRED, INCLUDED WITH ALL PARTS SHOWN

REAR MOULDINGS 62 80 (Custom)(400) Sedan

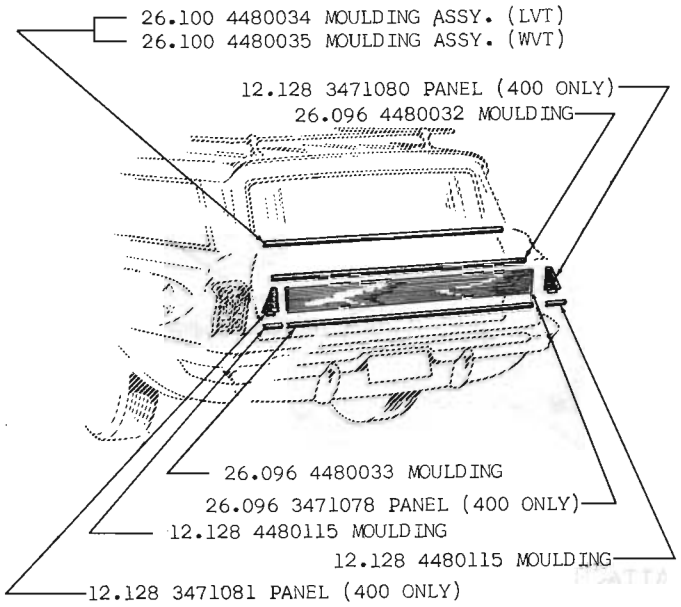

ATTACHING PARTS, WHEN REQUIRED, INCLUDED WITH ALL PARTS SHOWN

REAR MOULDINGS 62 80 (Custom)(400) Wagon

Copyright 1963 American Motors Corp.

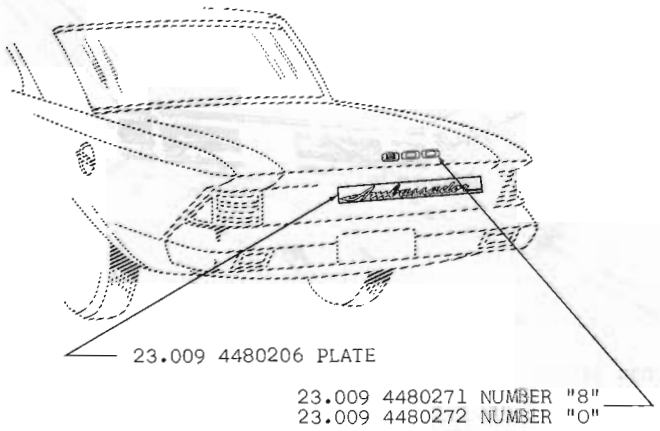

ATTACHING PARTS, WHEN REQUIRED, INCLUDED WITH ALL PARTS SHOWN

REAR MOULDINGS 63 80 (800) Sedan

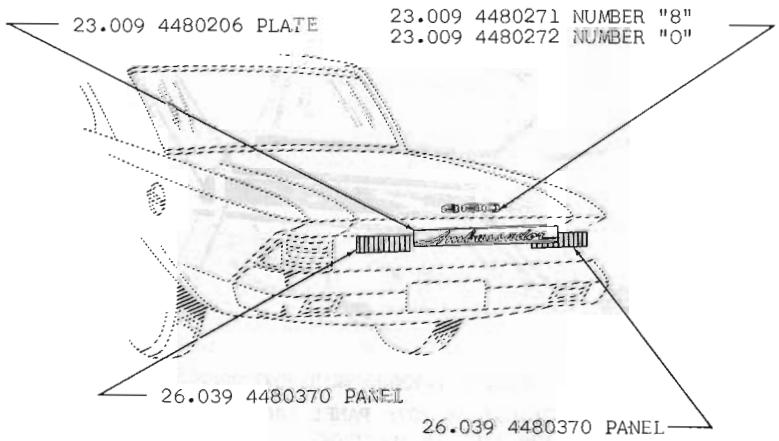

ATTACHING PARTS, WHEN REQUIRED, INCLUDED WITH ALL PARTS SHOWN

REAR MOULDINGS 63 80 (880) Sedan

Copyright 1963 American Motors Corp.

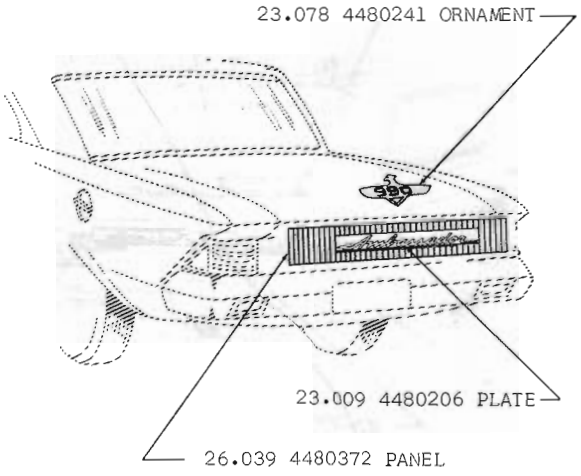

ATTACHING PARTS, WHEN REQUIRED, INCLUDED WITH ALL PARTS SHOWN

REAR MOULDINGS 63 80 (990) Sedan

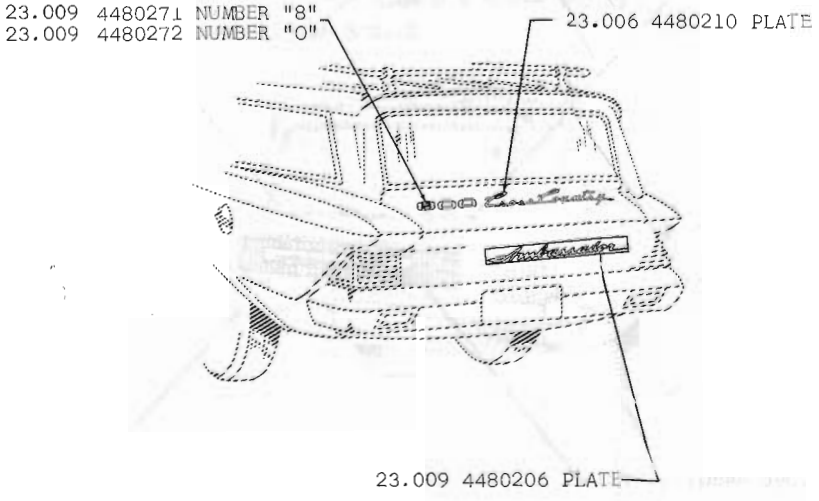

ATTACHING PARTS, WHEN REQUIRED, INCLUDED WITH ALL PARTS SHOWN

REAR MOULDINGS 63 80 (800) Wagon

Copyright 1963 American Motors Corp.

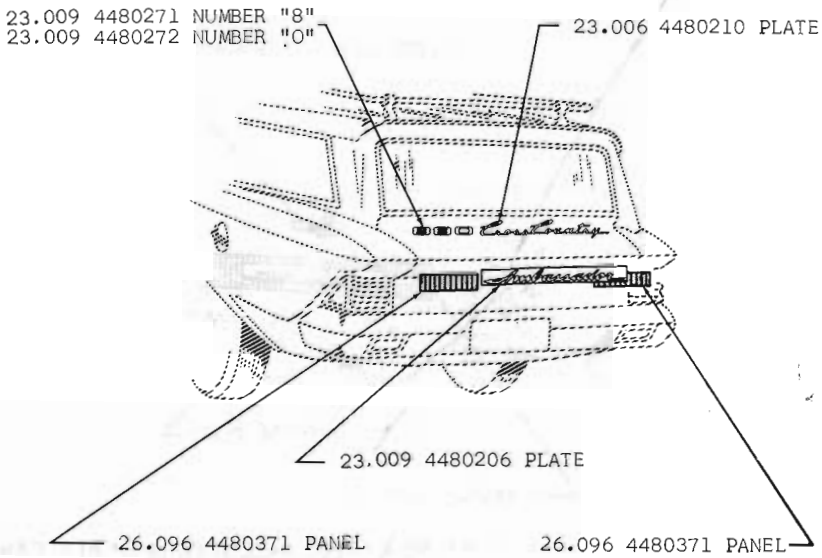

ATTACHING PARTS, WHEN REQUIRED, INCLUDED WITH ALL PARTS SHOWN

REAR MOULDINGS 63 80 (880) Wagon

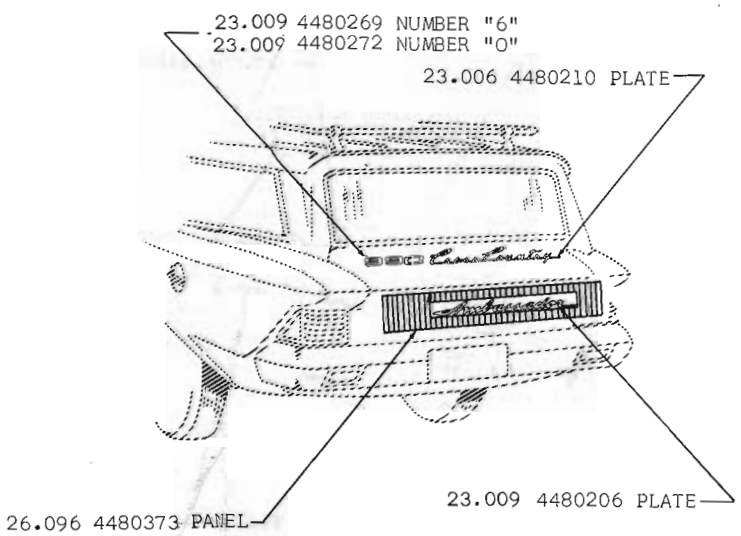

ATTACHING PARTS, WHEN REQUIRED, INCLUDED WITH ALL PARTS SHOWN

REAR MOULDINGS 63 80 (990) Wagon

Copyright 1963 American Motors Corp.

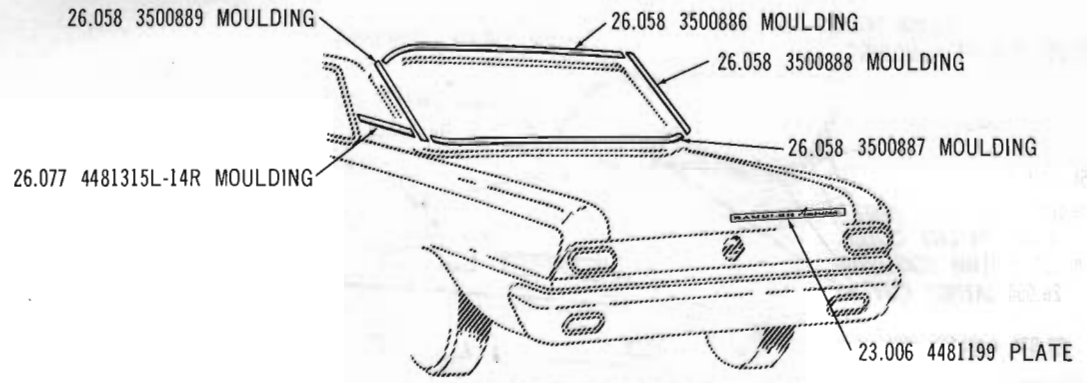

ATTACHING PARTS, WHEN REQUIRED, INCLUDED WITH ALL PARTS SHOWN

REAR MOULDINGS 64 05-06 (220)

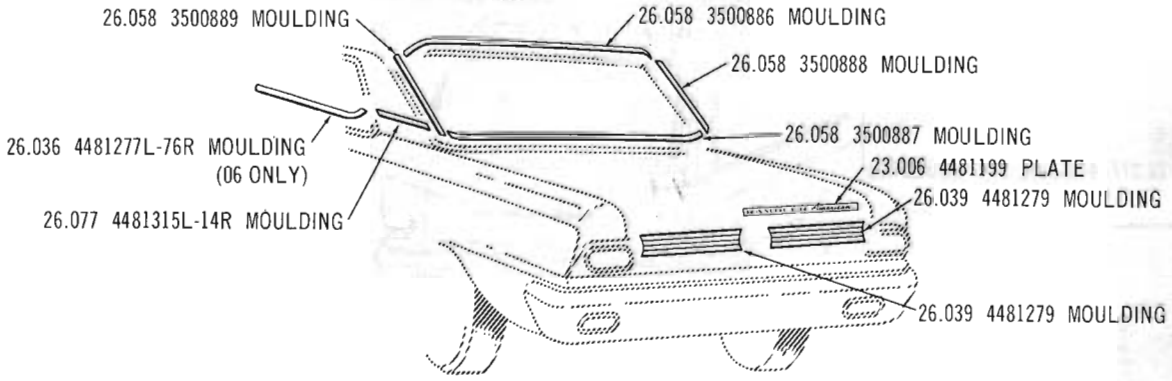

ATTACHING PARTS, WHEN REQUIRED, INCLUDED WITH ALL PARTS SHOWN

REAR MOULDINGS 64 05-06 (330): 64 05 (440)

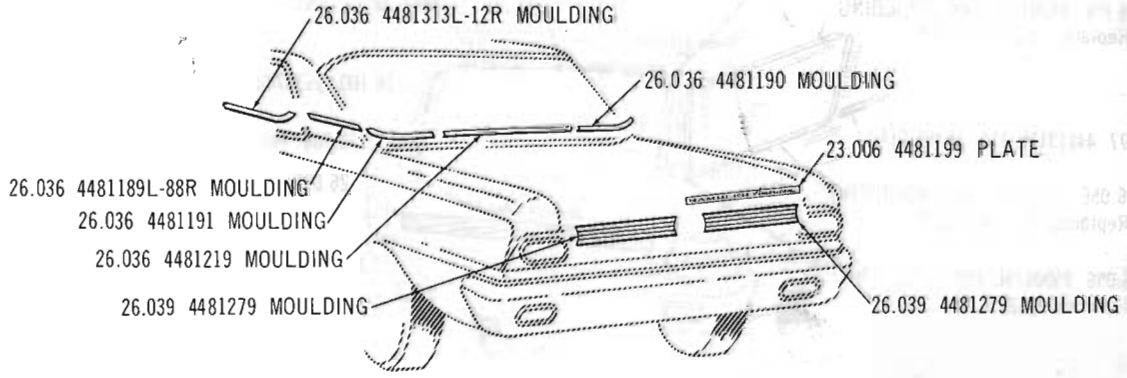

ATTACHING PARTS, WHEN REQUIRED, INCLUDED WITH ALL PARTS SHOWN

REAR MOULDINGS 64 07 (440)

Copyright 1963 American Motors Corp.

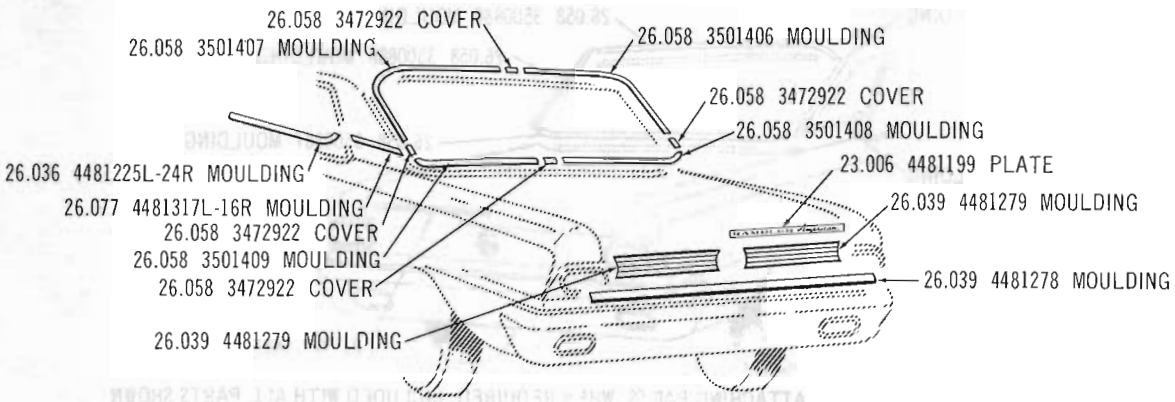

ATTACHING PARTS, WHEN REQUIRED, INCLUDED WITH ALL PARTS SHOWN

REAR MOULDINGS 64 09 (440)(440-H)

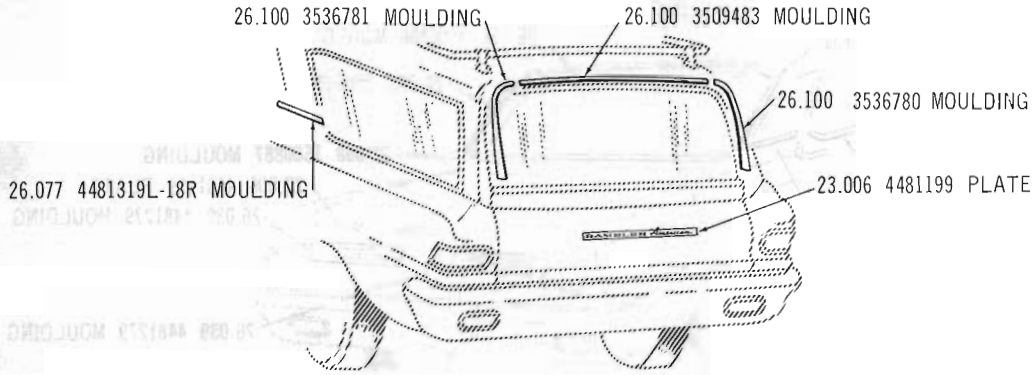

ATTACHING PARTS, WHEN REQUIRED, INCLUDED WITH ALL PARTS SHOWN

REAR MOULDINGS 64 08 (220)

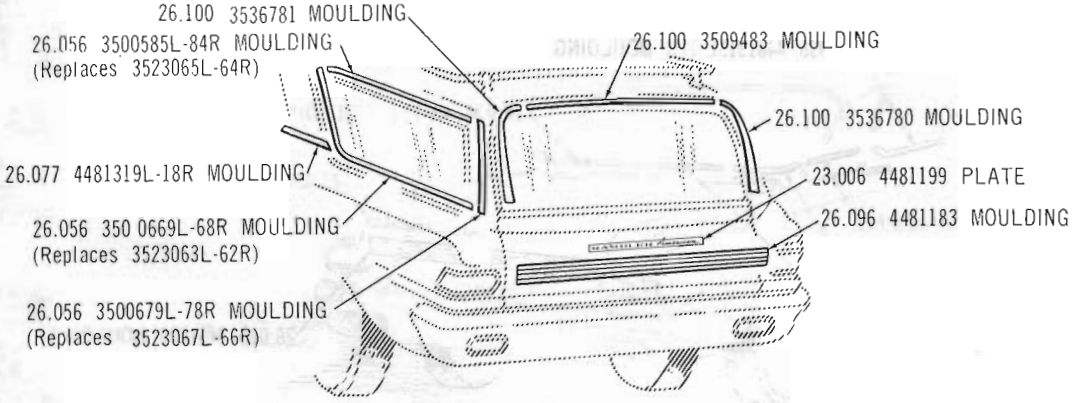

ATTACHING PARTS, WHEN REQUIRED, INCLUDED WITH ALL PARTS SHOWN

REAR MOULDINGS 64 08 (330)

Copyright 1963 American Motors Corp.

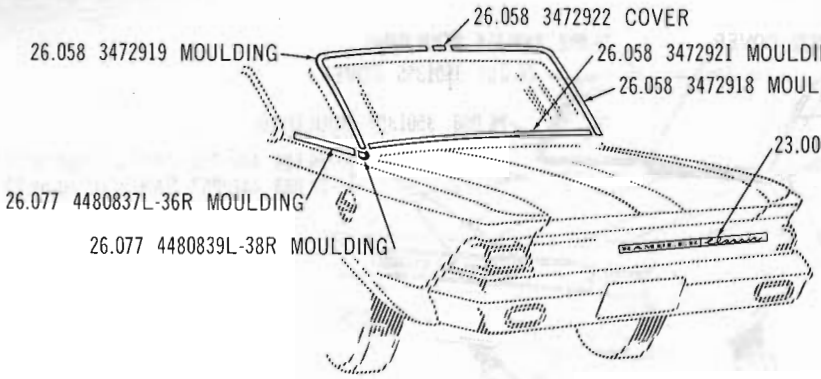

ATTACHING PARTS, WHEN REQUIRED, INCLUDED WITH ALL PARTS SHOWN

REAR MOULDINGS 64 15-16 (550)

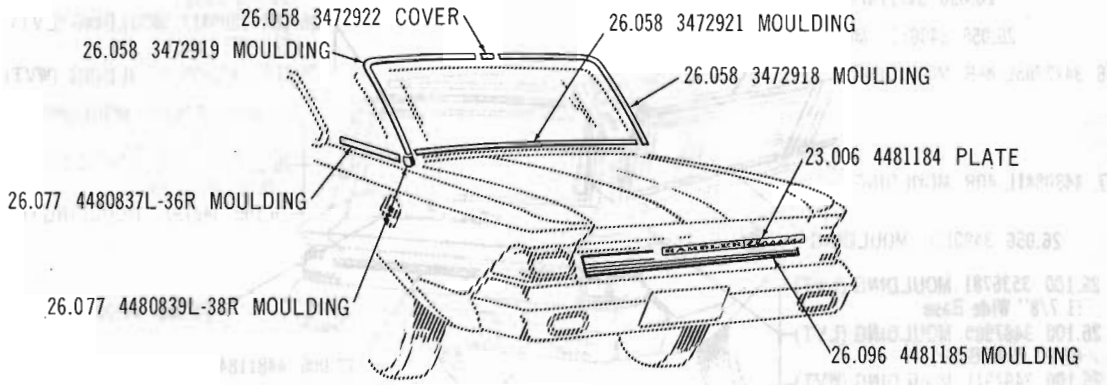

ATTACHING PARTS, WHEN REQUIRED, INCLUDED WITH ALL PARTS SHOWN

REAR MOULDINGS 64 15-16 (660)

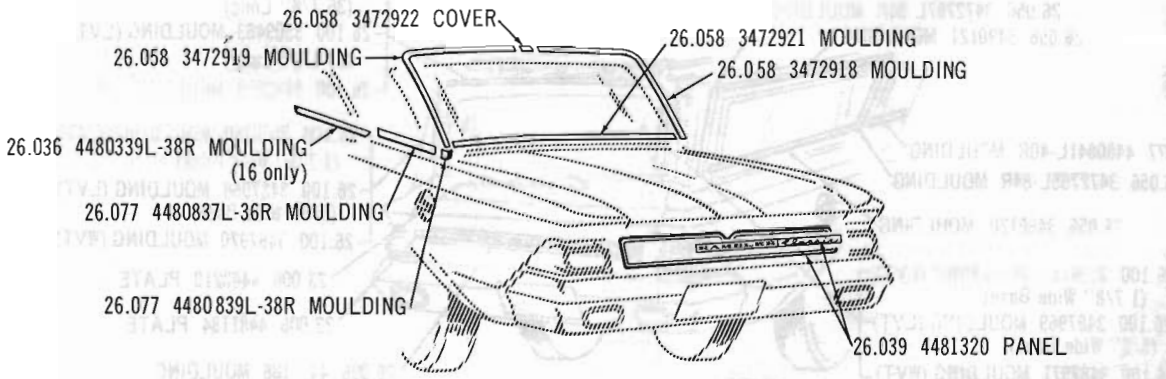

ATTACHING PARTS. WHEN REQUIRED, INCLUDED WITH ALL PARTS SHOWN

REAR MOULDINGS 64 15-16 (770)

Copyright 1963 American Motors Corp.

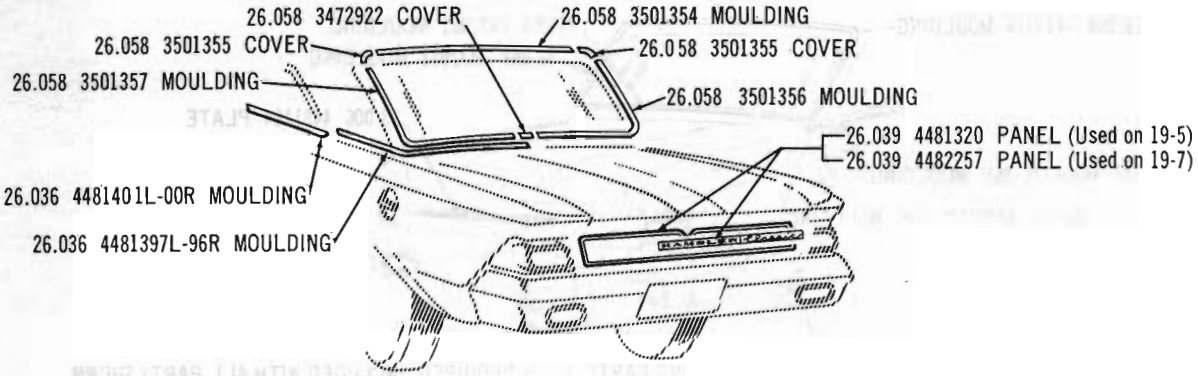

ATTACHING PARTS, WHEN REQUIRED, INCLUDED WITH ALL PARTS SHOWN

REAR MOULDINGS 64 19 (770)

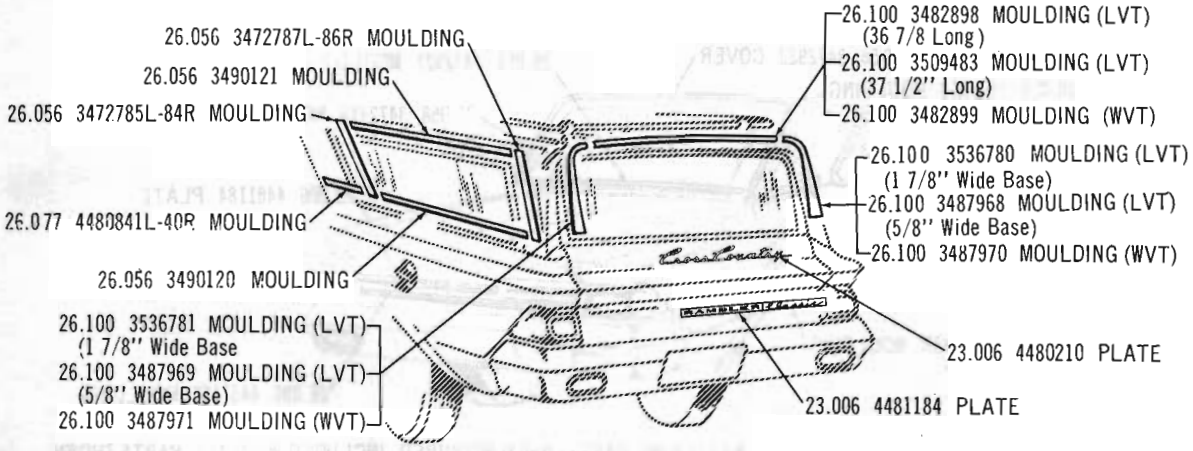

ATTACHING PARTS, WHEN REQUIRED, INCLUDED WITH ALL PARTS SHOWN

REAR MOULDINGS 64 18 (550)

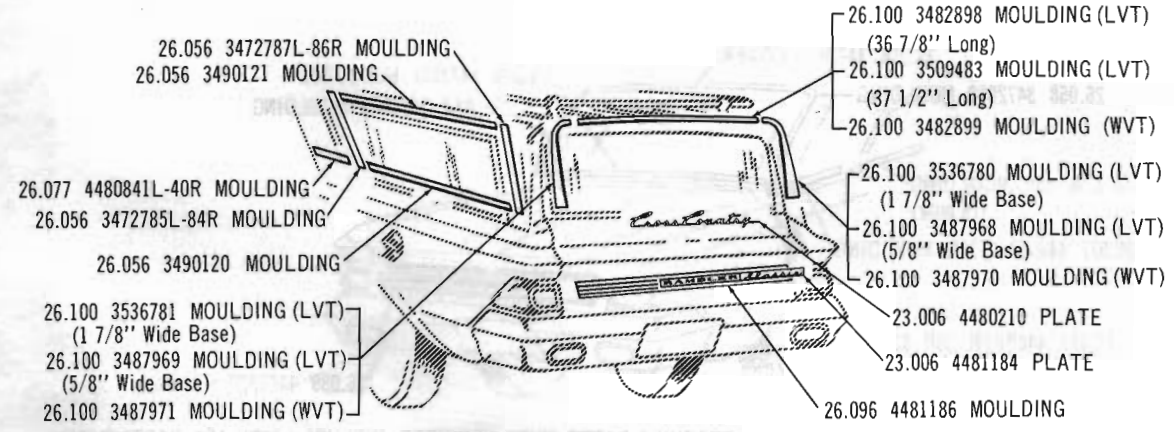

ATTACHING PARTS, WHEN REQUIRED, INCLUDED WITH ALL PARTS SHOWN

REAR MOULDINGS 64 18 (660)

Copyright 1963 American Motors Corp.

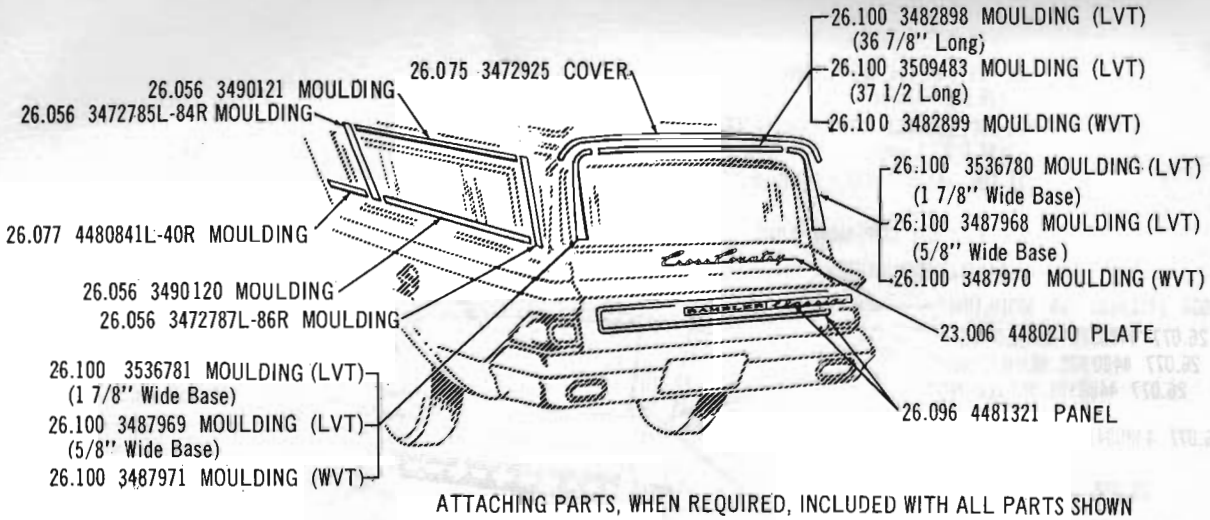

ATTACHING PARTS, WHEN REQUIRED, INCLUDED WITH ALL PARTS SHOWN

REAR MOULDINGS 64 18 (770)

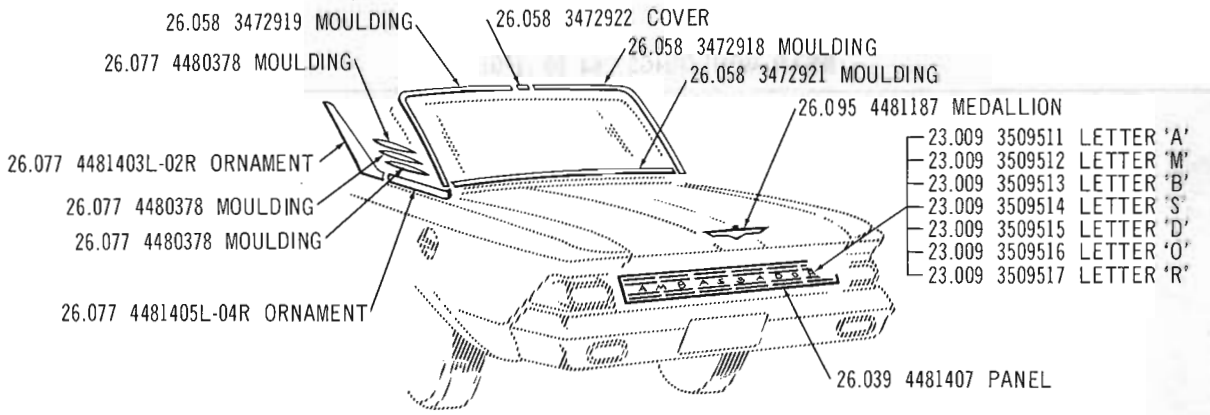

ATTACHING PARTS, WHEN REQUIRED, INCLUDED WITH ALL PARTS SHOWN

REAR MOULDINGS 64 85 (990)

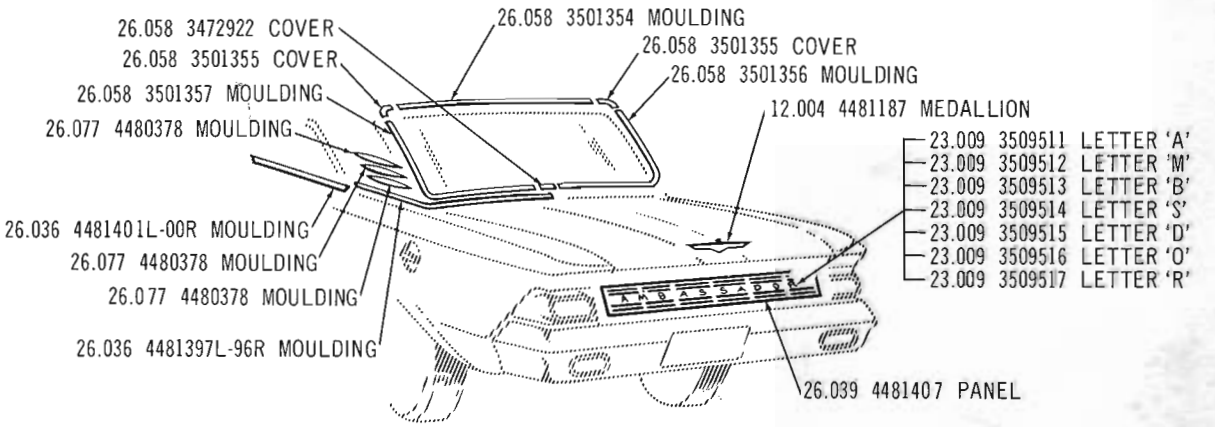

ATTACHING PARTS, WHEN REQUIRED, INCLUDED WITH ALL PARTS SHOWN

REAR MOULDINGS 64 89 (990)

Copyright 1963 American Motors Corp.

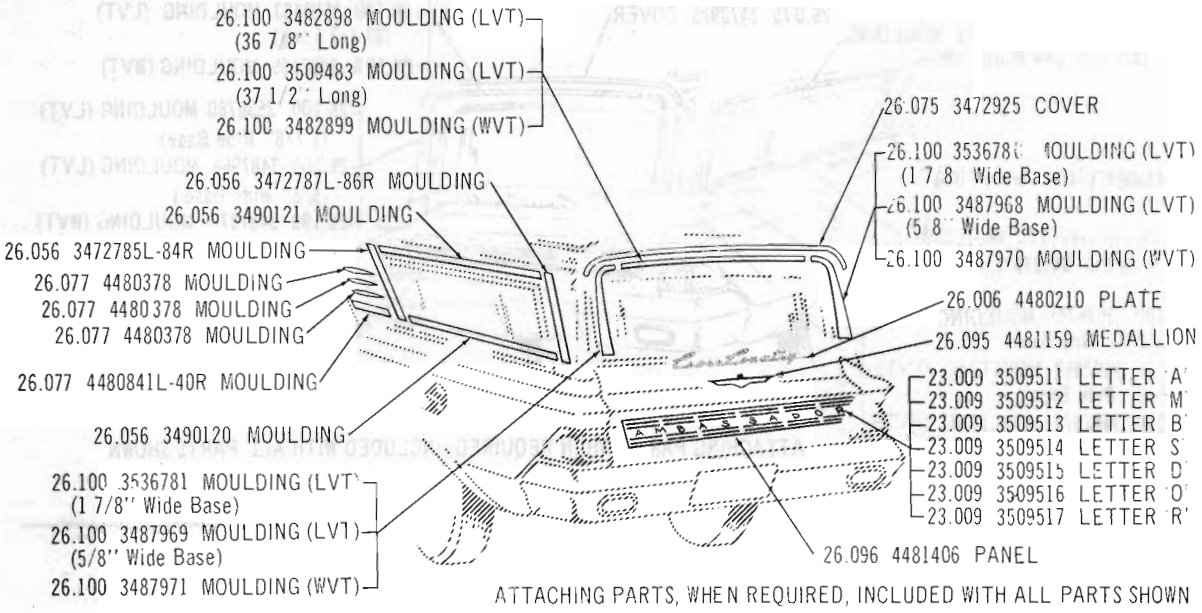

ATTACHING PARTS, WHEN REQUIRED, INCLUDED WITH ALL PARTS SHOWN

REAR MOULDINGS 64 88 (990)

Copyright 1963 American Motors Corp.

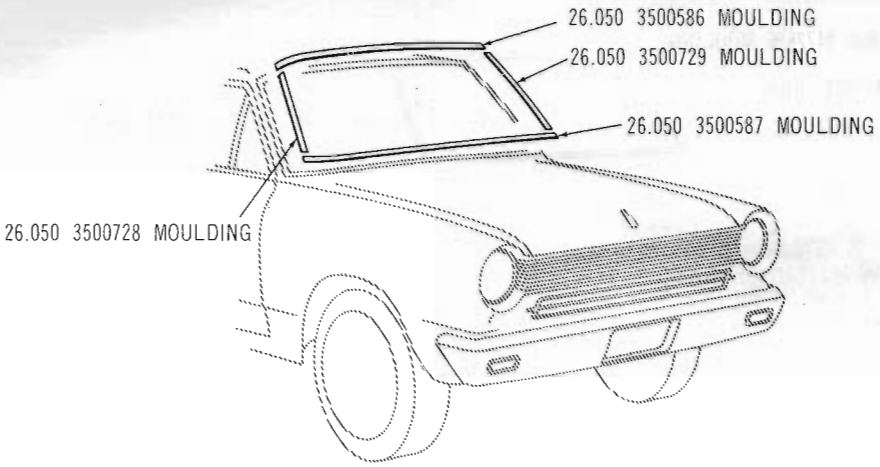

ATTACHING PARTS, WHEN REQUIRED, INCLUDED WITH ALL PARTS SHOWN

WINDSHIELD MOULDINGS 64-65 01

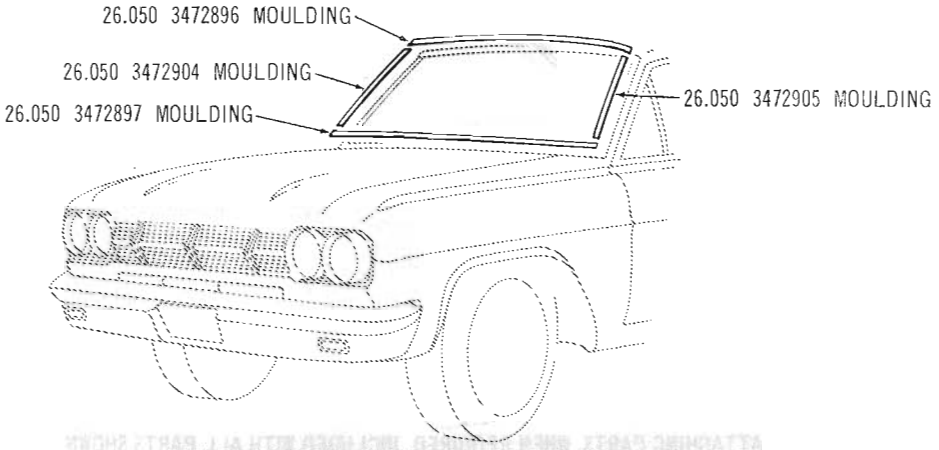

ATTACHING PARTS, WHEN REQUIRED, INCLUDED WITH ALL PARTS SHOWN

WINDSHIELD MOULDINGS 65 15-16-18 (550)(660): 65 15-18 (770)

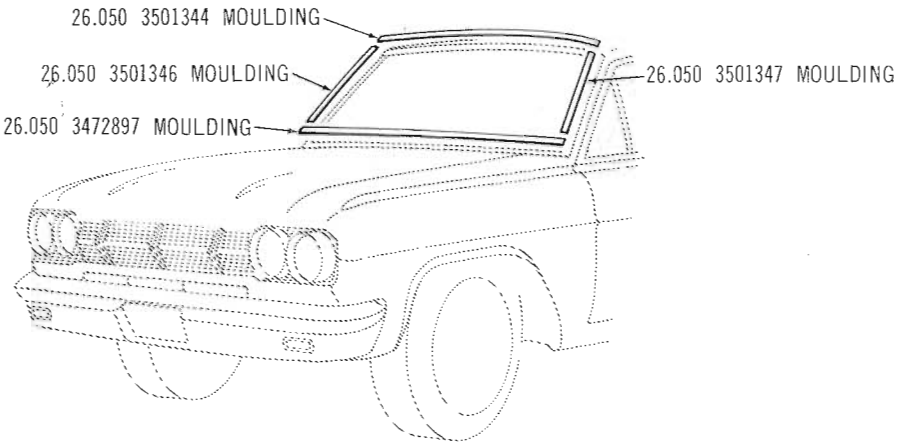

ATTACHING PARTS, WHEN REQUIRED, INCLUDED WITH ALL PARTS SHOWN

WINDSHIELD MOULDINGS 65 17-19 (770): 65 19 (770-H)

Copyright 1963 American Motors Corp.

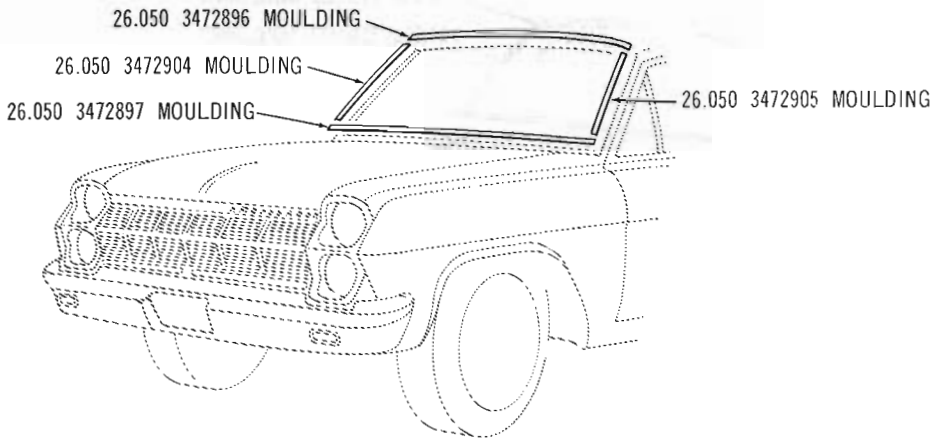

ATTACHING PARTS, WHEN REQUIRED, INCLUDED WITH ALL PARTS SHOWN

WINDSHIELD MOULDINGS 65 85-86-88 (880): 65 85-88 (990)

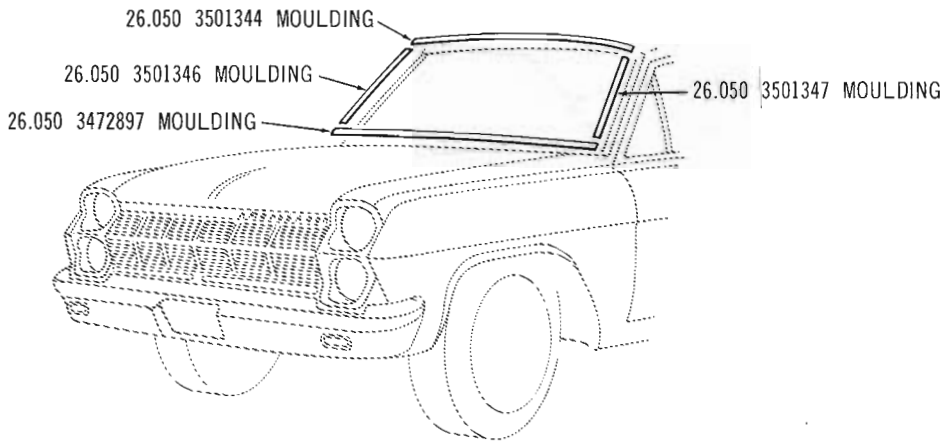

ATTACHING PARTS, WHEN REQUIRED, INCLUDED WITH ALL PARTS SHOWN

WINDSHIELD MOULDINGS 65 87-89 (990): 65 89 (990-H)

Copyright 1963 American Motors Corp.

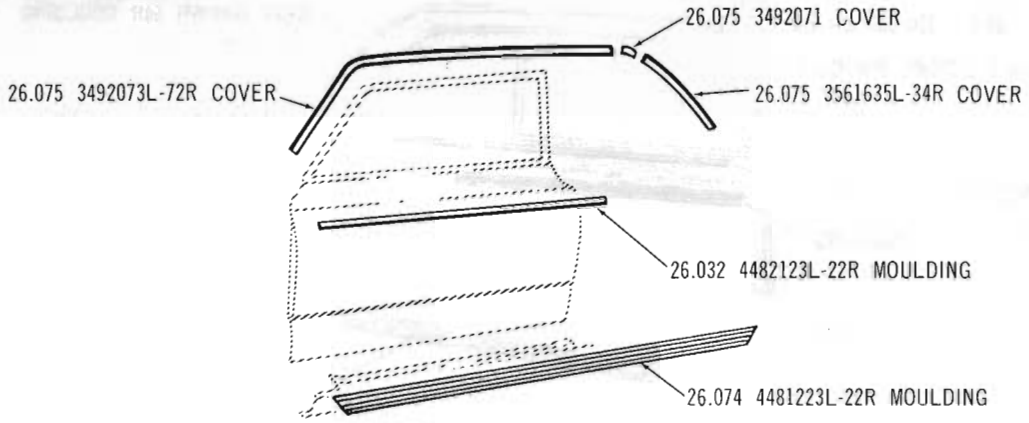

ATTACHING PARTS, WHEN REQUIRED INCLUDED WITH ALL PARTS SHOWN

DOOR MOULDINGS 65 06 (330)

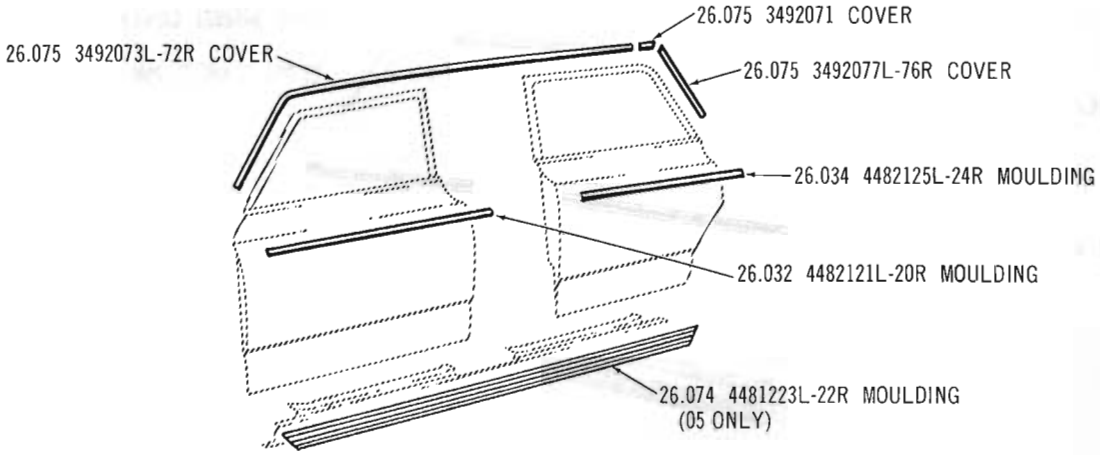

ATTACHING PARTS, WHEN REQUIRED, INCLUDED WITH ALL PARTS SHOWN

DOOR MOULDINGS 65 05-08 (330)

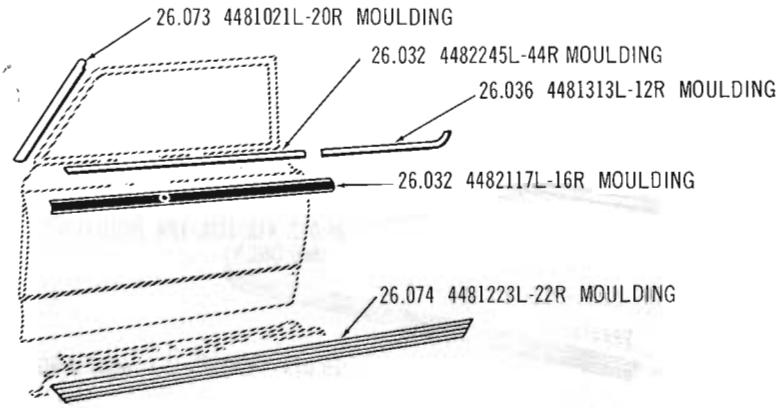

ATTACHING PARTS, WHEN REQUIRED, INCLUDED WITH ALL PARTS SHOWN

DOOR MOULDINGS 65 07 (440)

Copyright 1963 American Motors Corp.

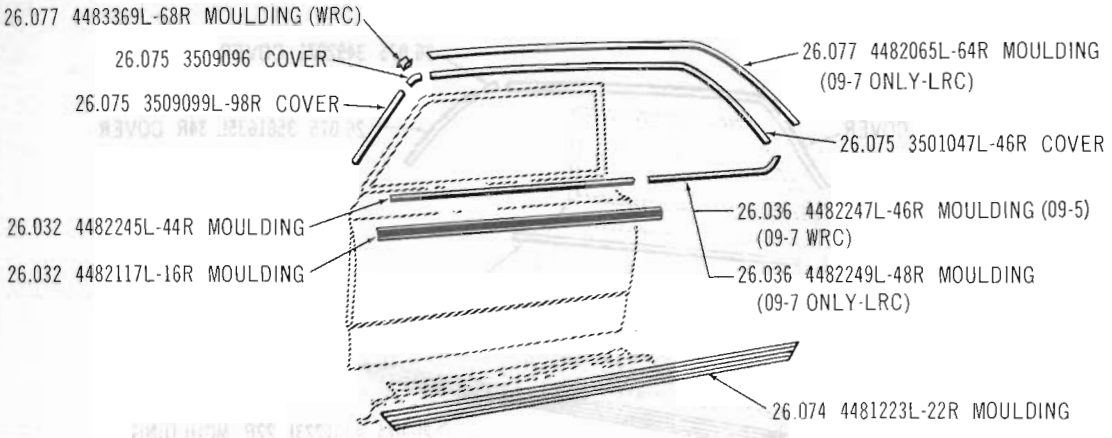

2010

ATTACHING PARTS, WHEN REQUIRED, INCLUDED WITH ALL PARTS SHOWN

DOOR MOULDINGS 65 09 (440)(440-H)

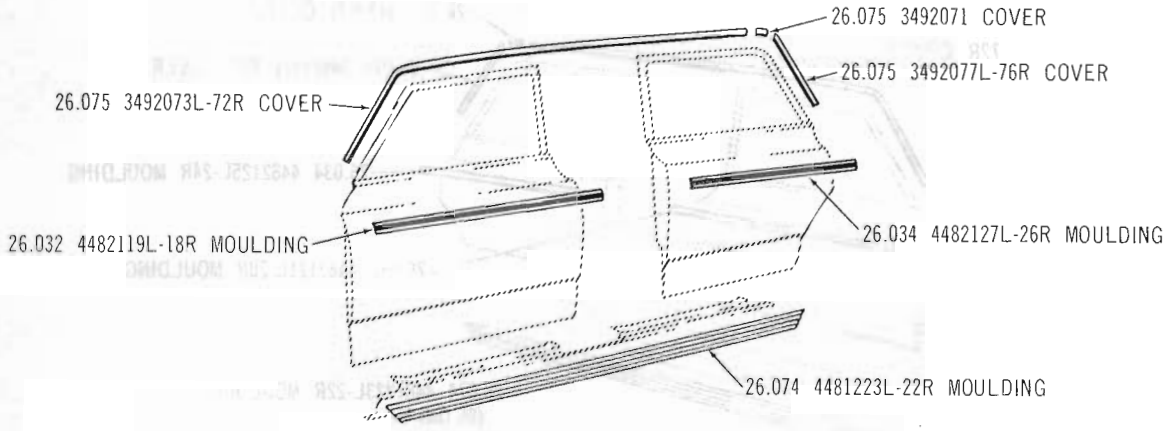

ATTACHING PARTS, WHEN REQUIRED, INCLUDED WITH ALL PARTS SHOWN

DOOR MOULDINGS 65 05 (440)

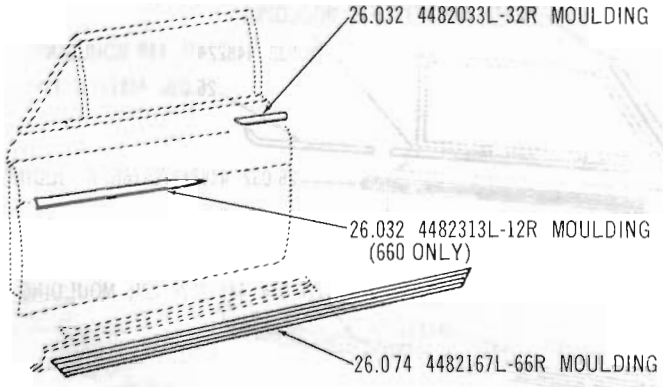

ATTACHING PARTS, WHEN REQUIRED, INCLUDED WITH ALL PARTS SHOWN

DOOR MOULDINGS 65 16 (550)(660)

Copyright 1963 American Motors Corp.

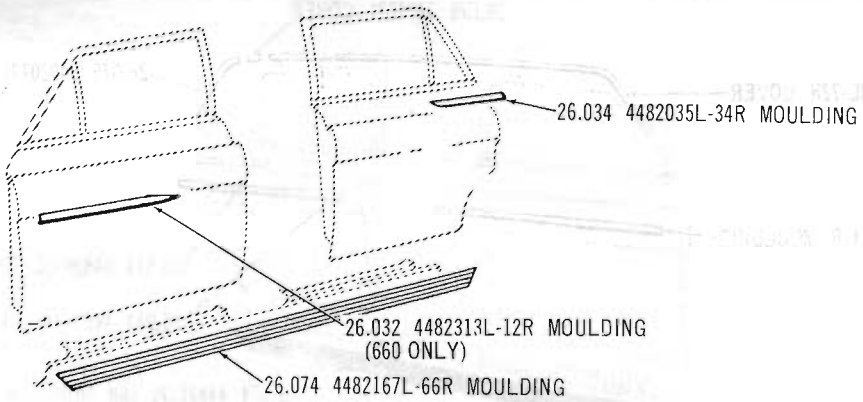

ATTACHING PARTS, WHEN REQUIRED, INCLUDED WITH ALL PARTS SHOWN

DOOR MOULDINGS 65 15-18 (550)(660)

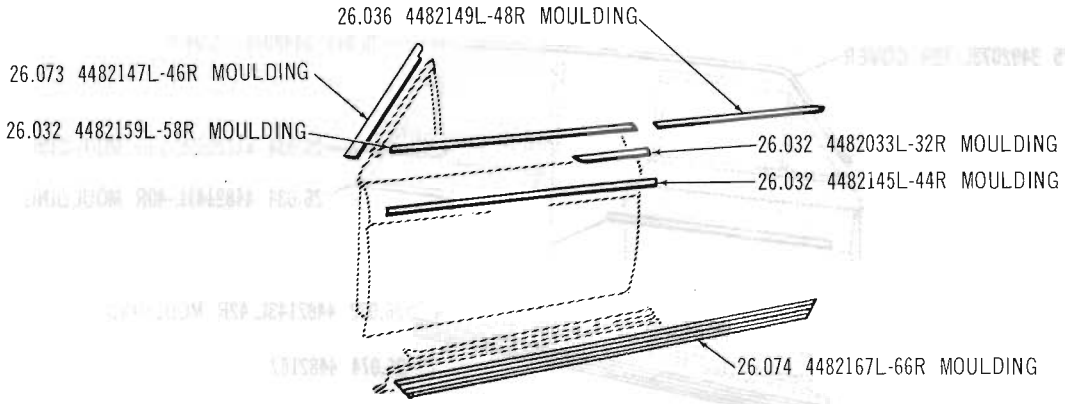

ATTACHING PARTS, WHEN REQUIRED, INCLUDED WITH ALL PARTS SHOWN

DOOR MOULDINGS 65 17 (770)

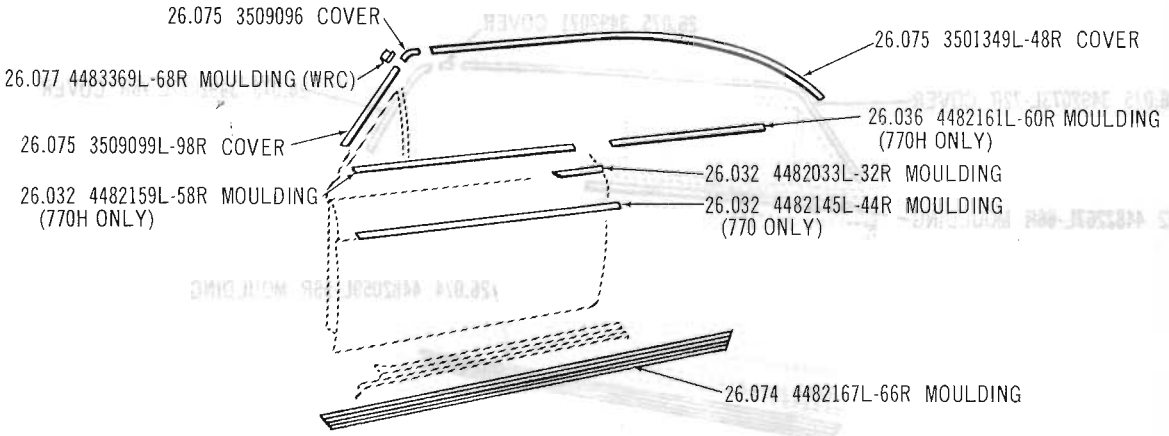

2044

ATTACHING PARTS, WHEN REQUIRED, INCLUDED WITH ALL PARTS SHOWN

DOOR MOULDINGS 65 19 (770)(770-H)(Except Marlin)

Copyright 1963 American Motors Corp.

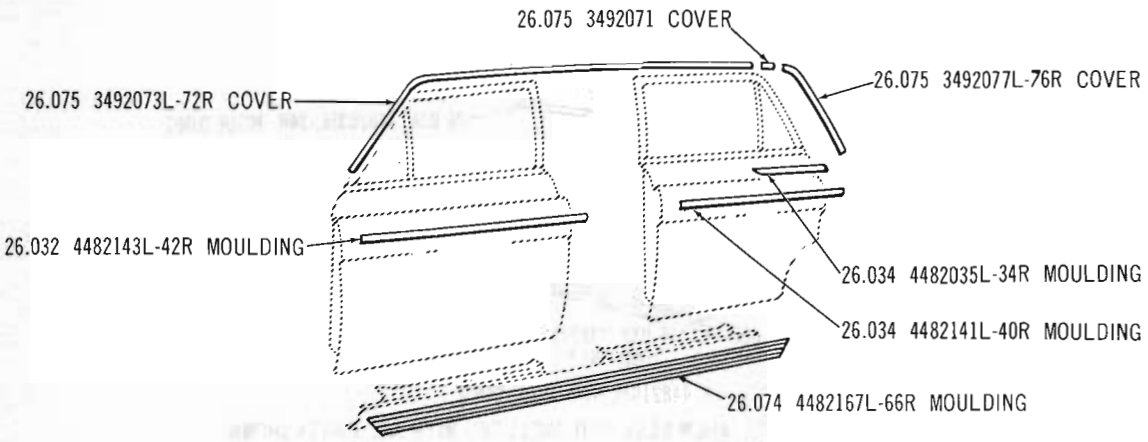

ATTACHING PARTS, WHEN REQUIRED, INCLUDED WITH ALL PARTS SHOWN

DOOR MOULDINGS 65 15 (770)

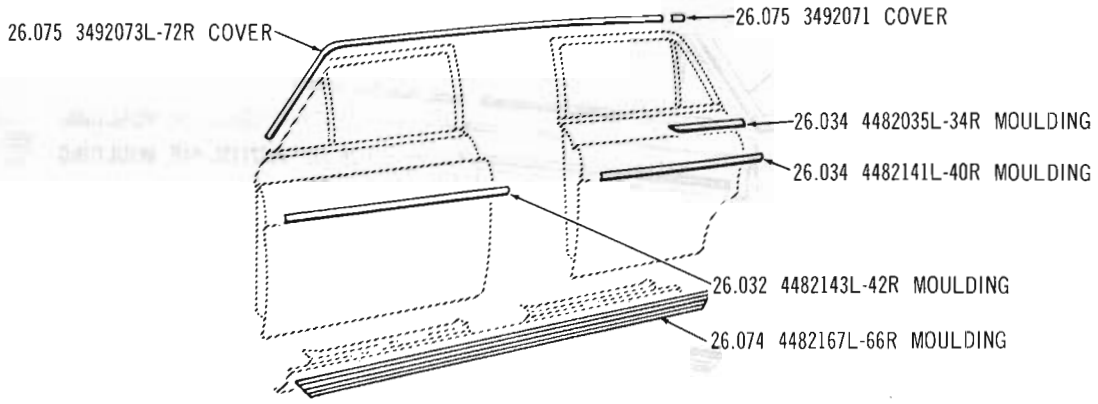

ATTACHING PARTS, WHEN REQUIRED, INCLUDED WITH ALL PARTS SHOWN

DOOR MOULDINGS 65 18 (770)

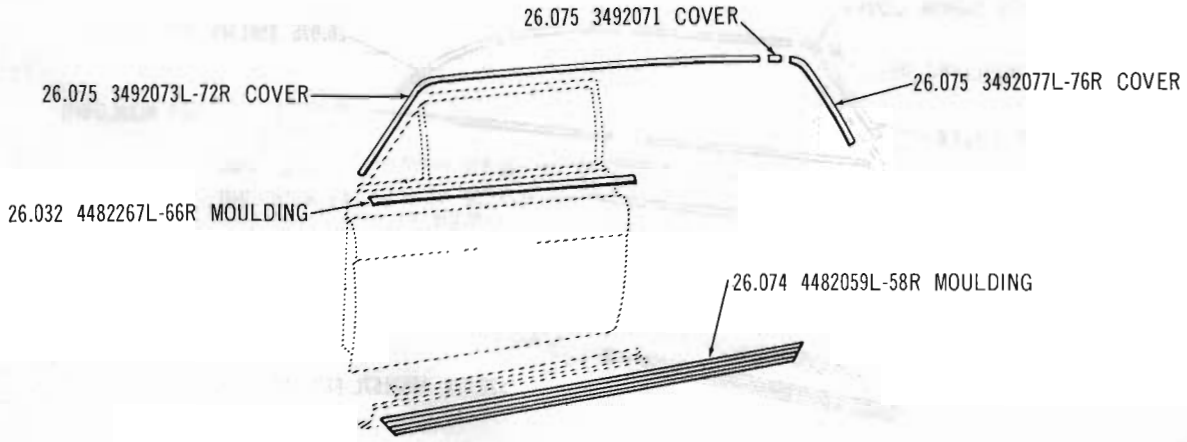

ATTACHING PARTS, WHEN REQUIRED, INCLUDED WITH ALL PARTS SHOWN

DOOR MOULDINGS 65 86 (880)

Copyright 1963 American Motors Corp.

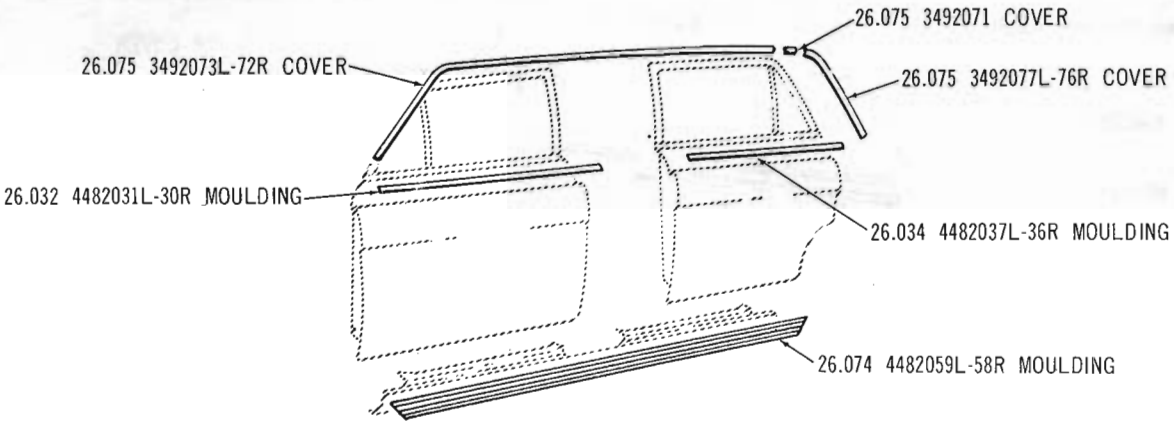

ATTACHING PARTS, WHEN REQUIRED, INCLUDED WITH ALL PARTS SHOWN

DOOR MOULDINGS 65 85 (880)

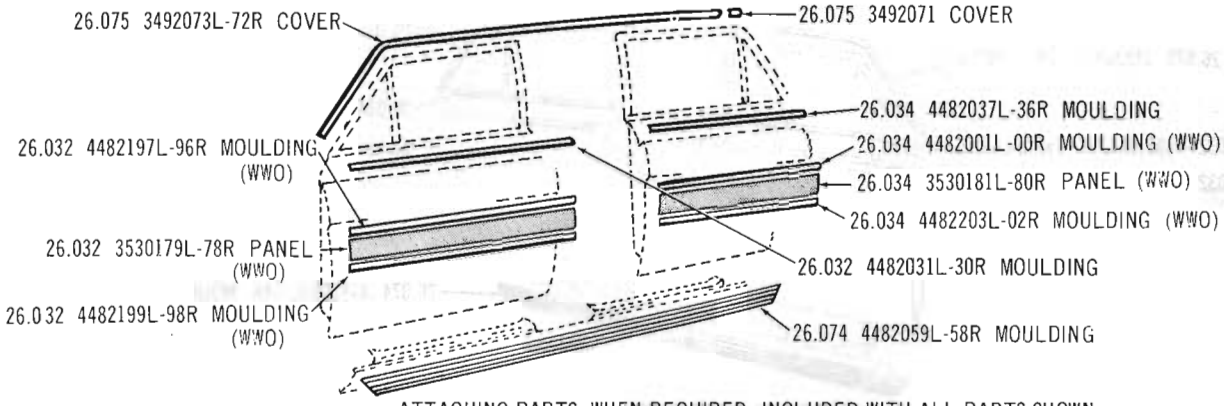

ATTACHING PARTS, WHEN REQUIRED, INCLUDED WITH ALL PARTS SHOWN

DOOR MOULDINGS 65 88 (880)

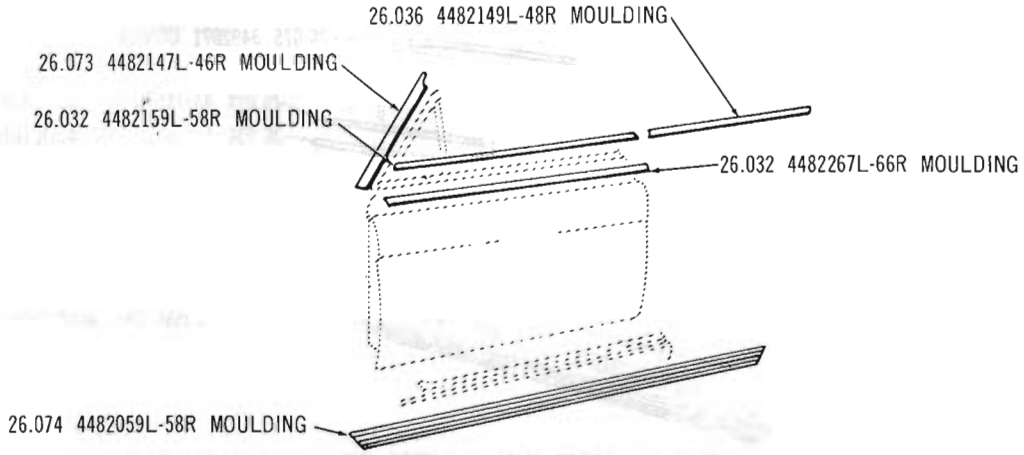

ATTACHING PARTS, WHEN REQUIRED, INCLUDED WITH ALL PARTS SHOWN

DOOR MOULDINGS 65 87 (990)

Copyright 1963 American Motors Corp.

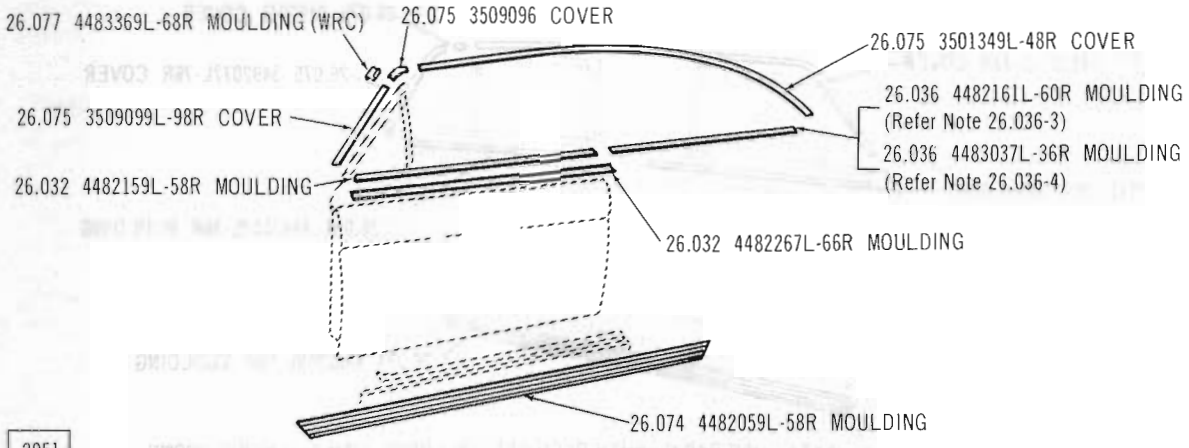

2051

ATTACHING PARTS, WHEN REQUIRED, INCLUDED WITH ALL PARTS SHOWN

DOOR MOULDINGS 65 89 (990)(990-H)

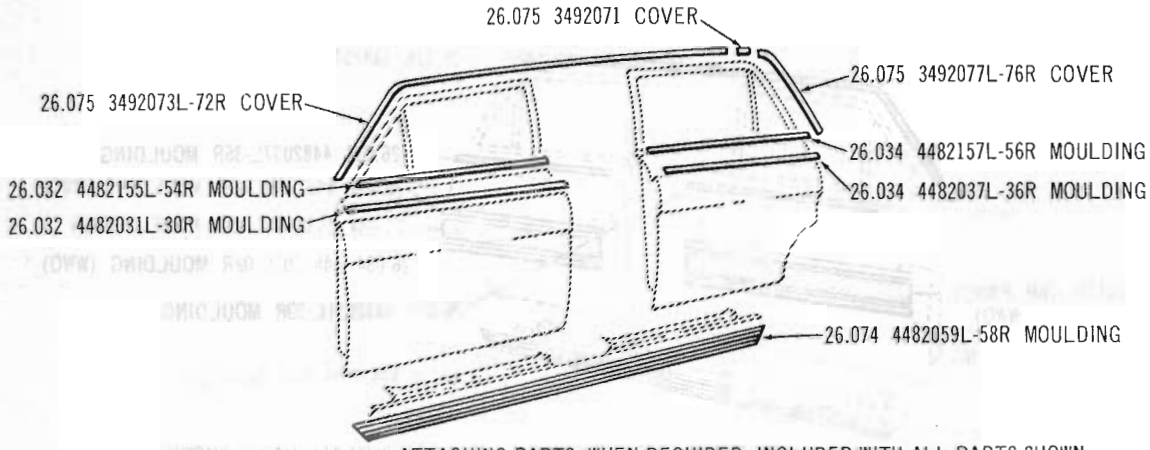

ATTACHING PARTS, WHEN REQUIRED, INCLUDED WITH ALL PARTS SHOWN

DOOR MOULDINGS 65 85 (990)

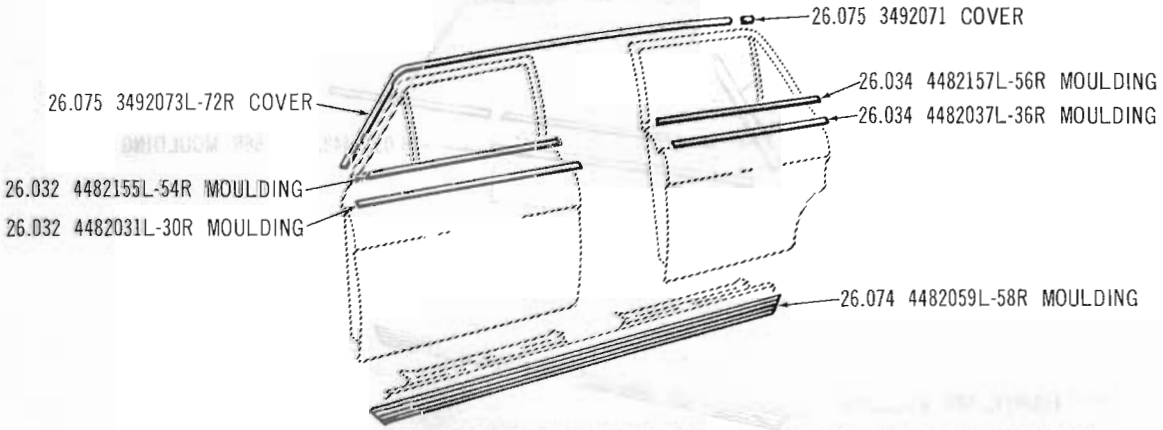

ATTACHING PARTS, WHEN REQUIRED, INCLUDED WITH ALL PARTS SHOWN

DOOR MOULDING 65 88 (990-LWO)

Copyright 1963 American Motors Corp.

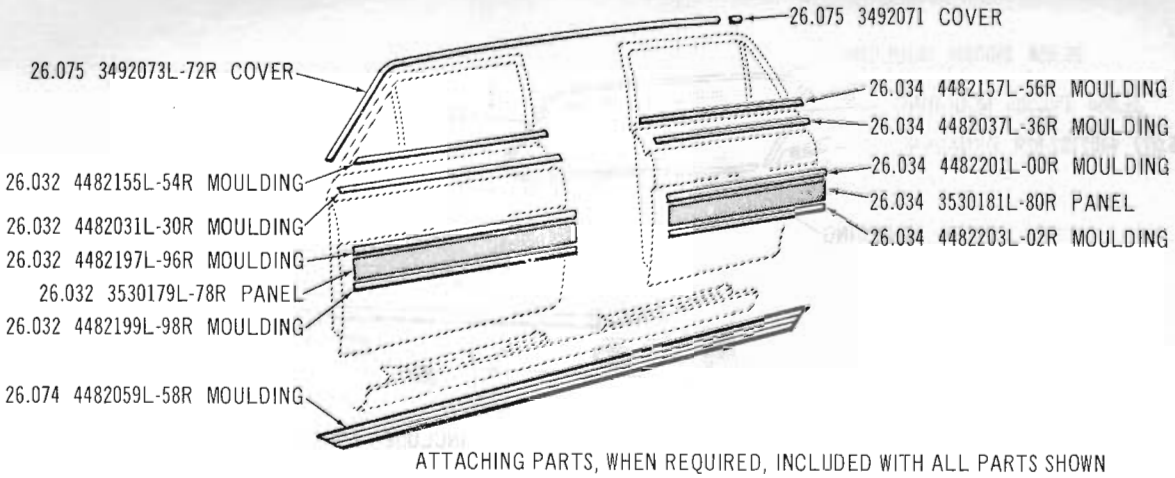

ATTACHING PARTS, WHEN REQUIRED, INCLUDED WITH ALL PARTS SHOWN

DOOR MOULDINGS 65 88 (990-WWQ)

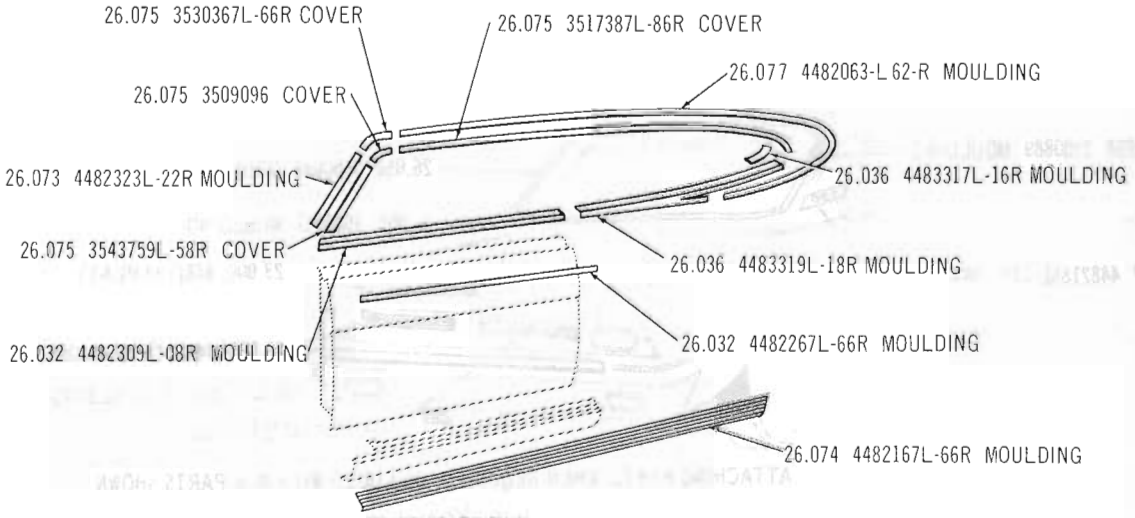

ATTACHING PARTS, WHEN REQUIRED, INCLUDED WITH ALL PARTS SHOWN

DOOR MOULDINGS 65 59-7 (Marlin)

Copyright 1963 American Motors Corp.

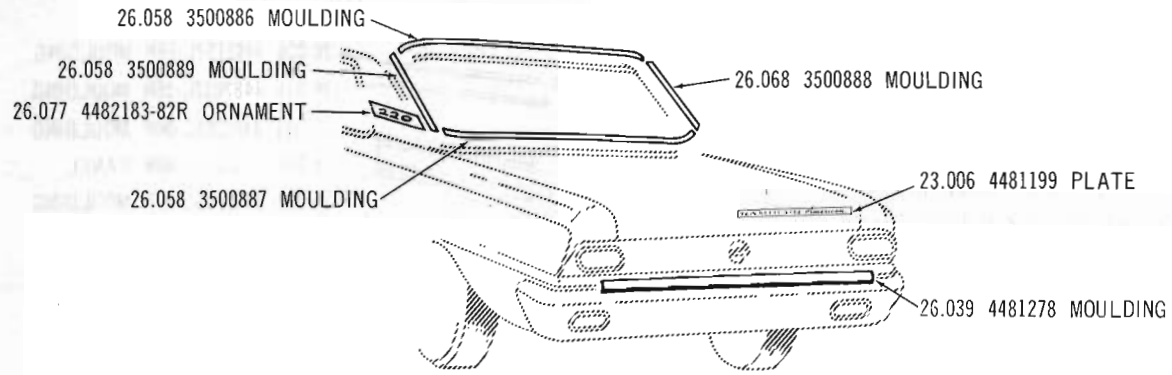

ATTACHING PARTS, WHEN REQUIRED, INCLUDED WITH ALL PARTS SHOWN

REAR MOULDINGS 65 05-06 (220)

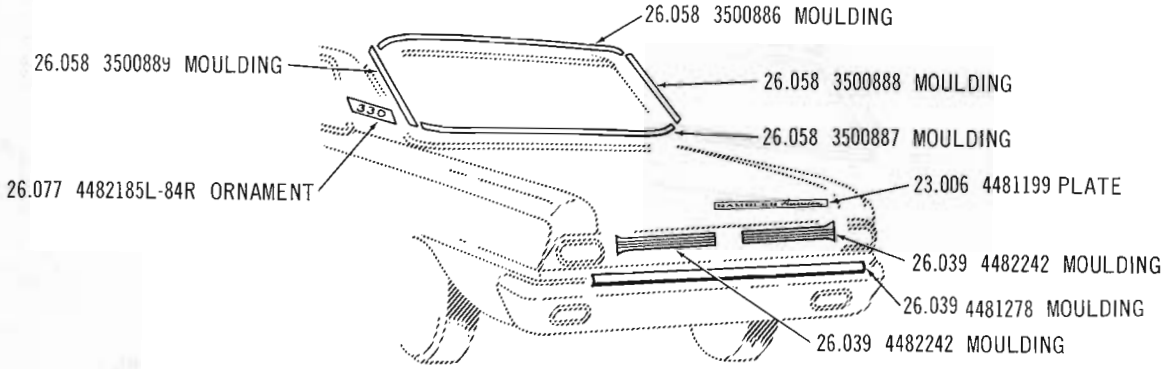

ATTACHING PARTS, WHEN REQUIRED, INCLUDED WITH ALL PARTS SHOWN

REAR MOULDINGS 65 05-06 (330)

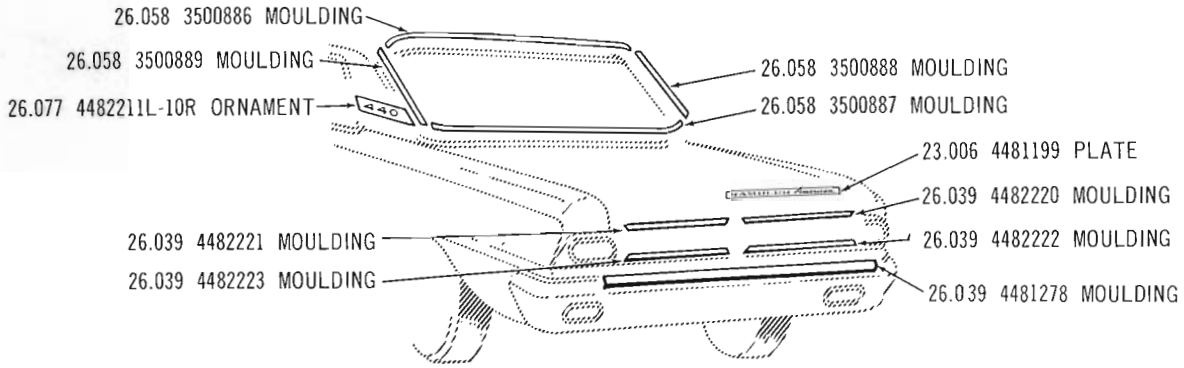

ATTACHING PARTS, WHEN REQUIRED, INCLUDED WITH ALL PARTS SHOWN

REAR MOULDINGS 65 05 (440)

Copyright 1963 American Motors Corp.

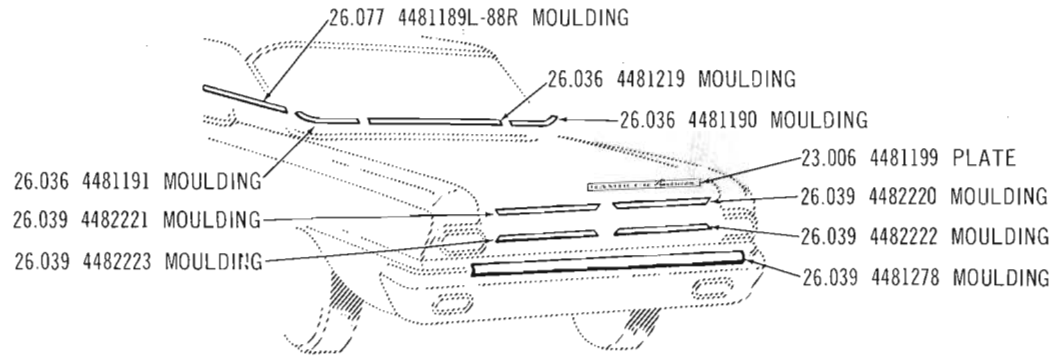

ATTACHING PARTS, WHEN REQUIRED, INCLUDED WITH ALL PARTS SHOWN

REAR MOULDINGS 65 07 (440)

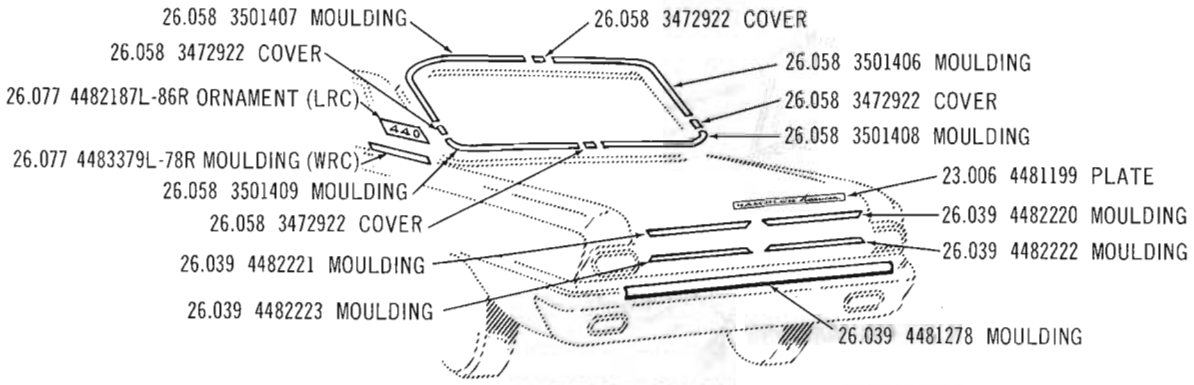

ATTACHING PARTS, WHEN REQUIRED, INCLUDED WITH ALL PARTS SHOWN

2016

REAR MOULDINGS 65 09 (440)

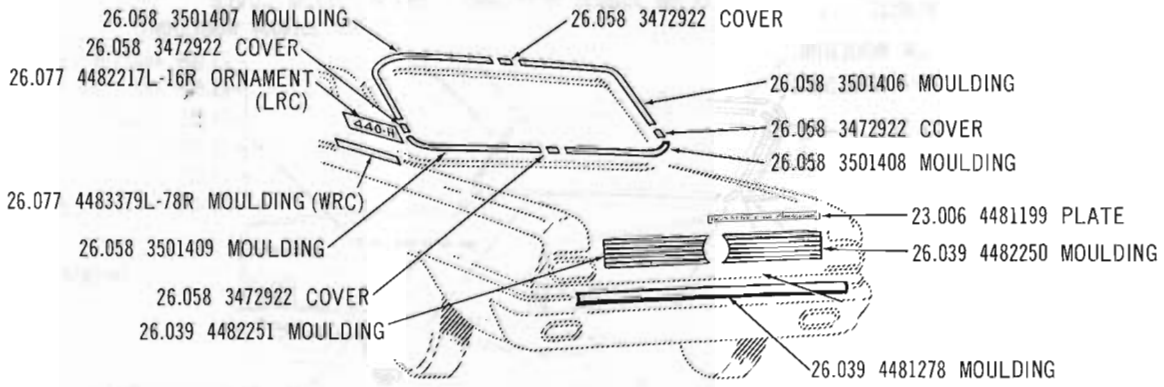

ATTACHING PARTS, WHEN REQUIRED, INCLUDED WITH ALL PARTS SHOWN

2017

REAR MOULDINGS 65 09 (440-H)

Copyright 1963 American Motors Corp.

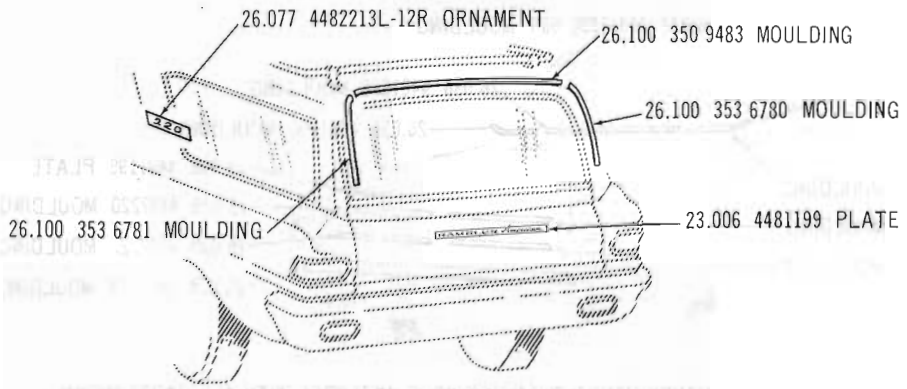

ATTACHING PARTS, WHEN REQUIRED, INCLUDED WITH ALL PARTS SHOWN 2018

REAR MOULDINGS 65 08 (220)

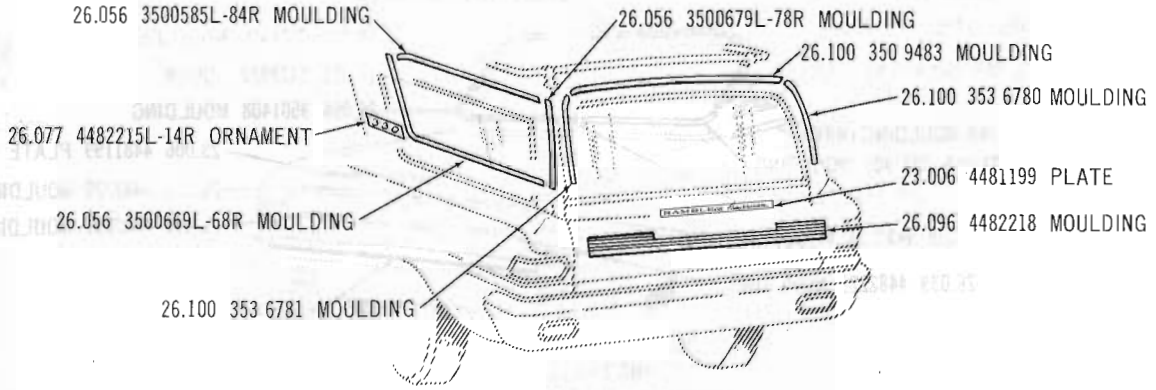

ATTACHING PARTS, WHEN REQUIRED, INCLUDED WITH ALL PARTS SHOWN 2019

REAR MOULDINGS 65 08 (330)

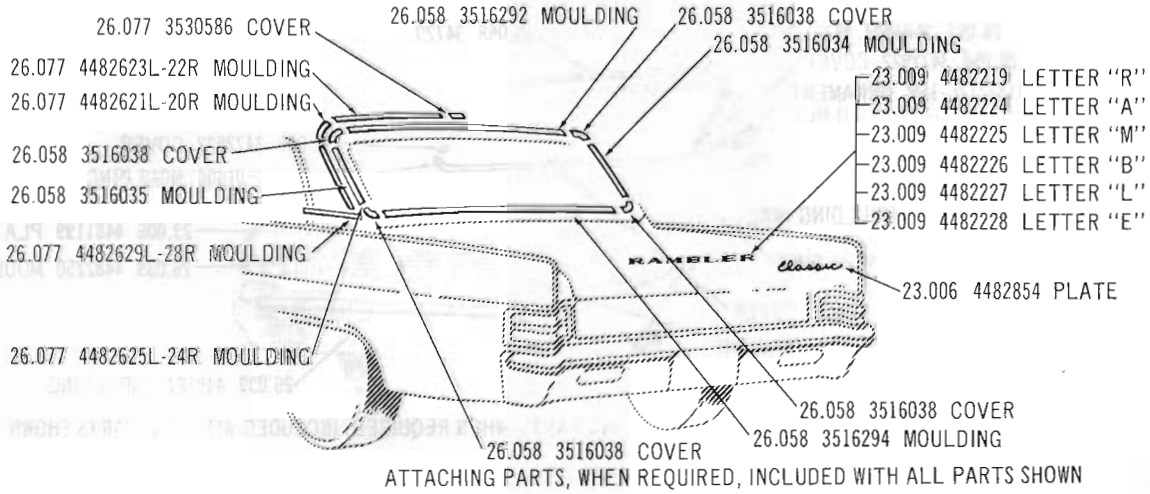

ATTACHING PARTS, WHEN REQUIRED, INCLUDED WITH ALL PARTS SHOWN

REAR MOULDINGS 65 15-16 (550)

Copyright 1963 American Motors Corp.

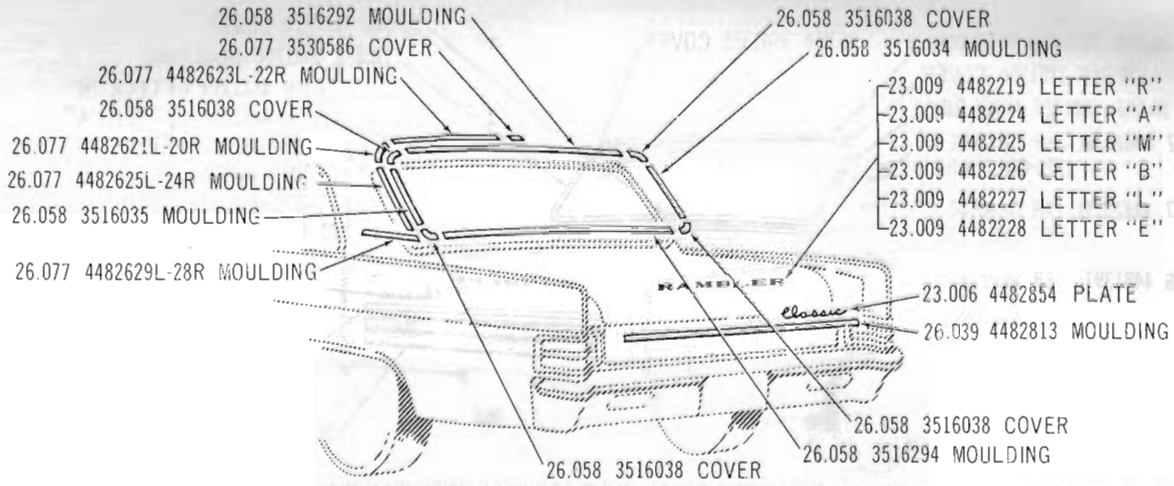

ATTACHING PARTS, WHEN REQUIRED, INCLUDED WITH ALL PARTS SHOWN

REAR MOULDINGS 65 15-16 (660)

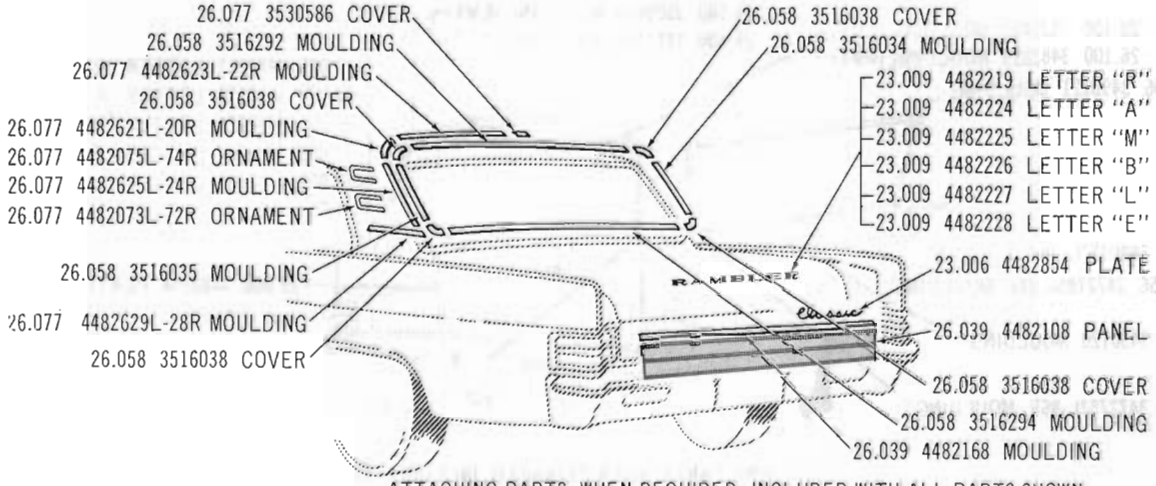

ATTACHING PARTS, WHEN REQUIRED, INCLUDED WITH ALL PARTS SHOWN

REAR MOULDINGS 65 15 (770)

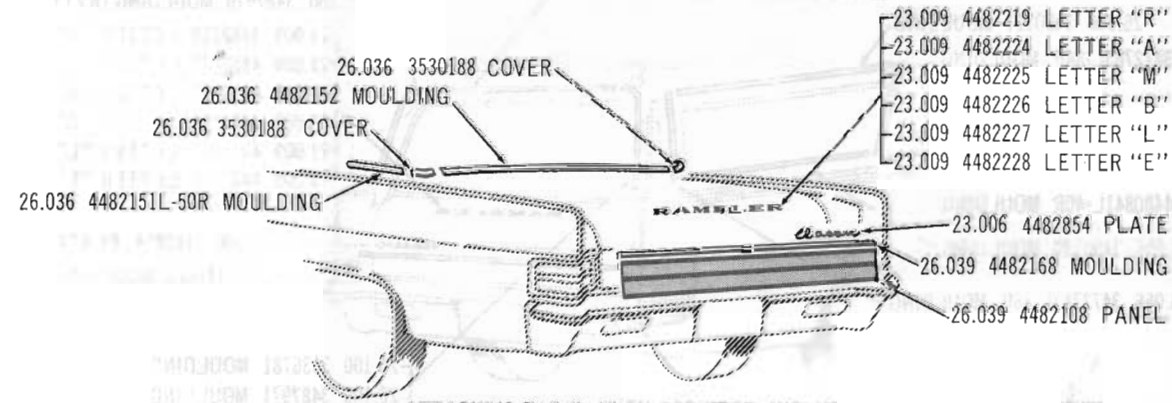

ATTACHING PARTS, WHEN REQUIRED, INCLUDED WITH ALL PARTS SHOWN

REAR MOULDINGS 65 17 (770)

Copyright 1963 American Motors Corp.

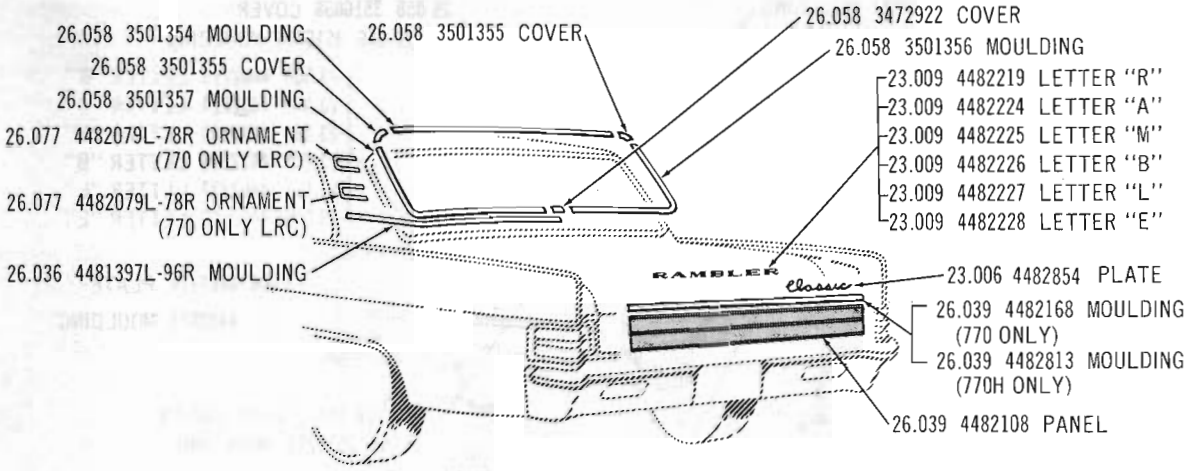

ATTACHING PARTS, WHEN REQUIRED, INCLUDED WITH ALL PARTS SHOWN

REAR MOULDINGS 65 19 (770)(770-H)(Except Marlin)

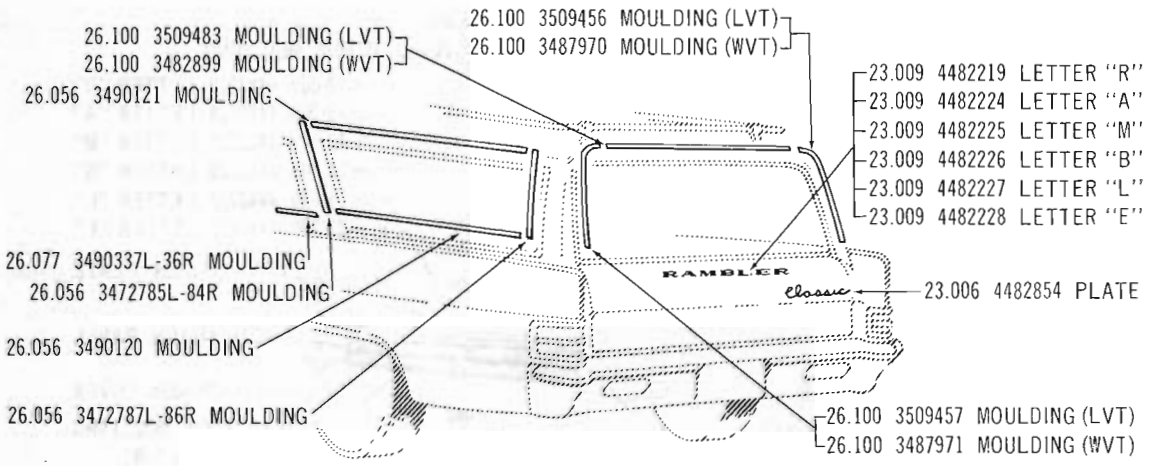

ATTACHING PARTS, WHEN REQUIRED, INCLUDED WITH ALL PARTS SHOWN

REAR MOULDINGS 65 18 (550)

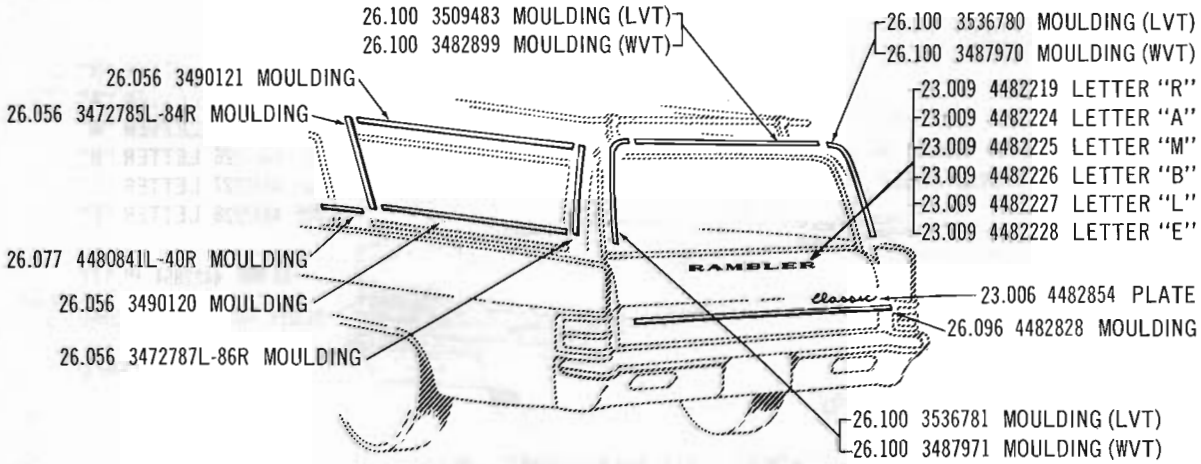

ATTACHING PARTS, WHEN REQUIRED, INCLUDED WITH ALL PARTS SHOWN

REAR MOULDING 65 18 (660)

Copyright 1963 American Motors Corp.

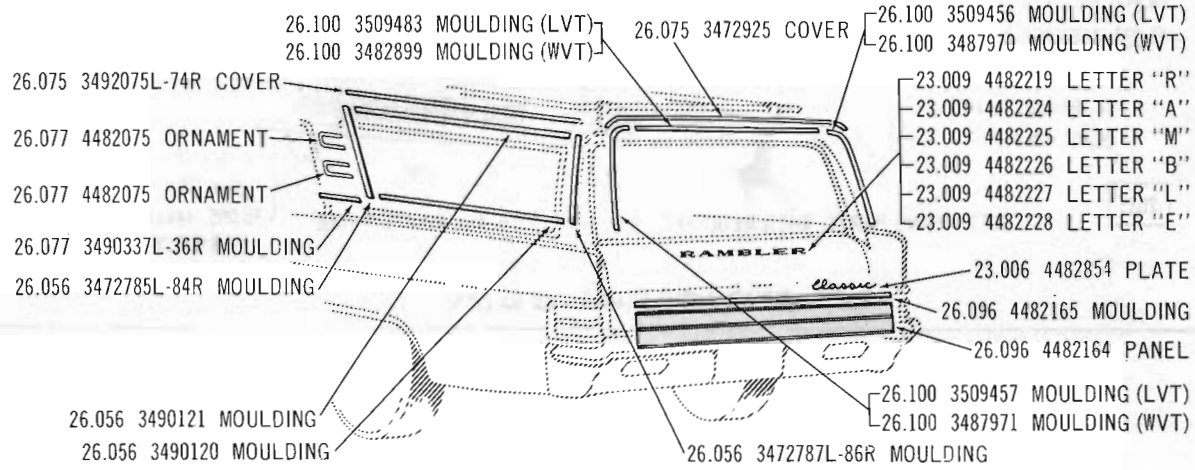

ATTACHING PARTS, WHEN REQUIRED, INCLUDED WITH ALL PARTS SHOWN

REAR MOULDINGS 65 18 (770)

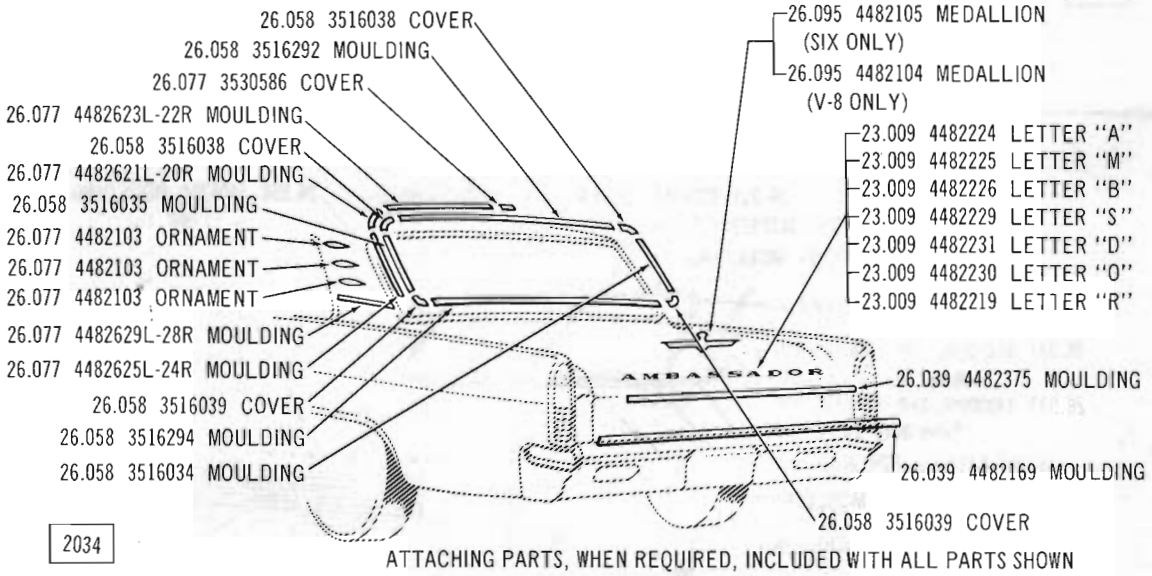

2034

ATTACHING PARTS, WHEN REQUIRED, INCLUDED WITH ALL PARTS SHOWN

REAR MOULDINGS 65 85-86 (880)

Copyright 1963 American Motors Corp.

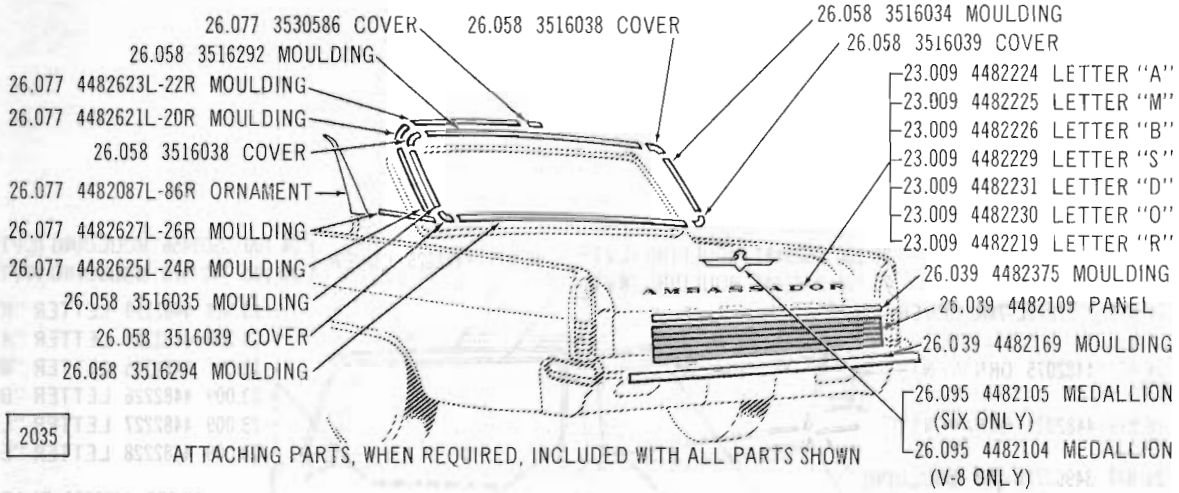

ATTACHING PARTS, WHEN REQUIRED, INCLUDED WITH ALL PARTS SHOWN

REAR MOULDINGS 65 85 (990)

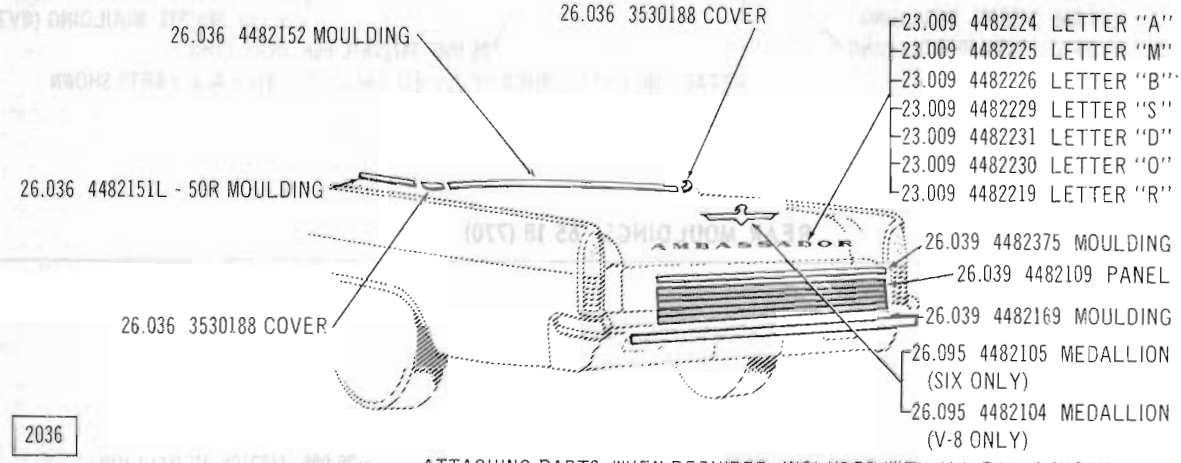

ATTACHING PARTS, WHEN REQUIRED, INCLUDED WITH ALL PARTS SHOWN

REAR MOULDINGS 65 87 (990)

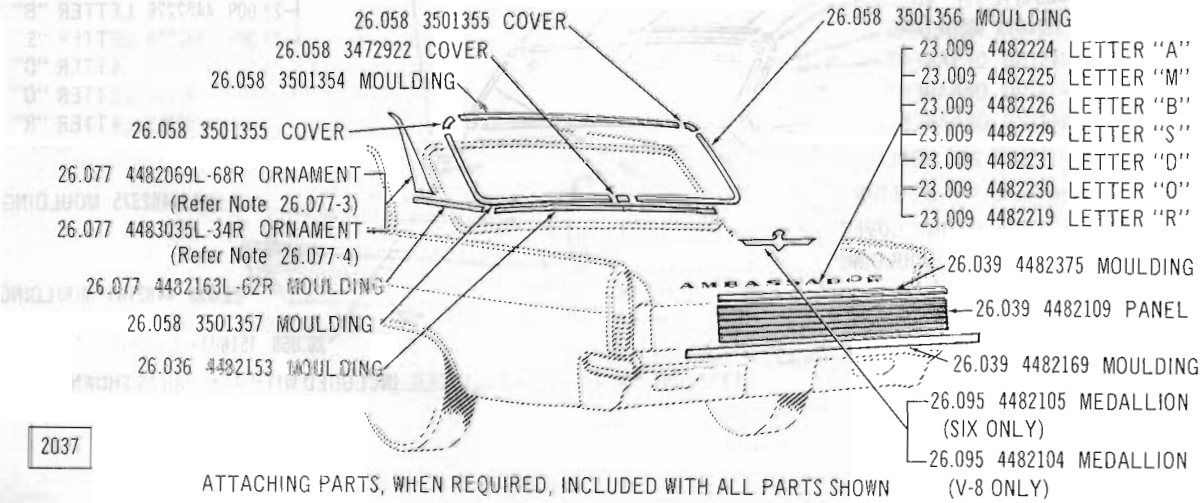

ATTACHING PARTS, WHEN REQUIRED, INCLUDED WITH ALL PARTS SHOWN

REAR MOULDINGS 65 89 (990)(990-H)

Copyright 1963 American Motors Corp.

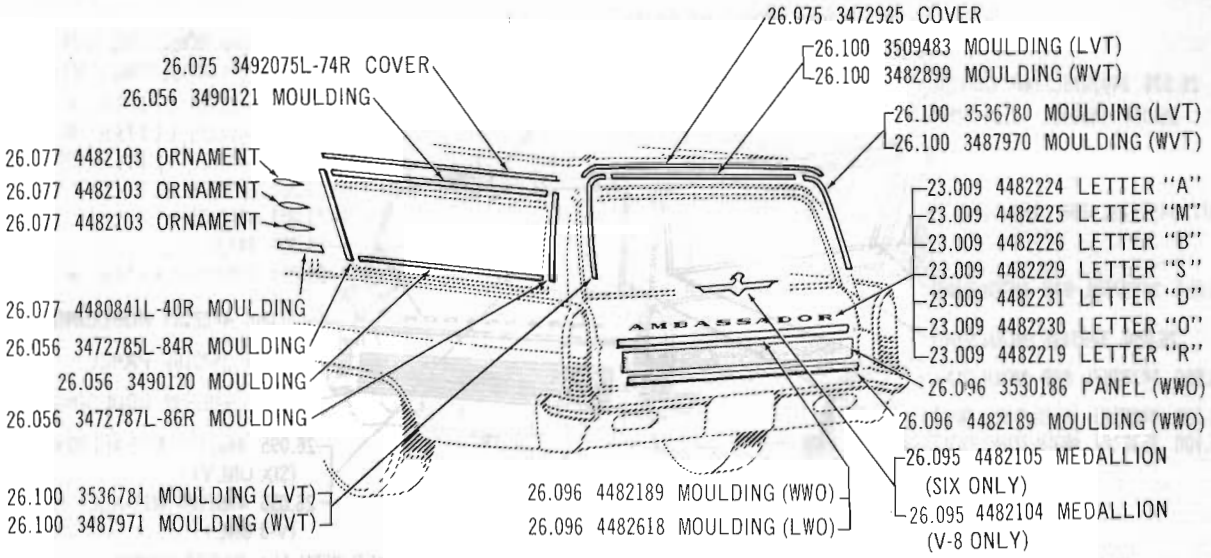

ATTACHING PARTS, WHEN REQUIRED, INCLUDED WITH ALL PARTS SHOWN

REAR MOULDINGS 65 88 (880)

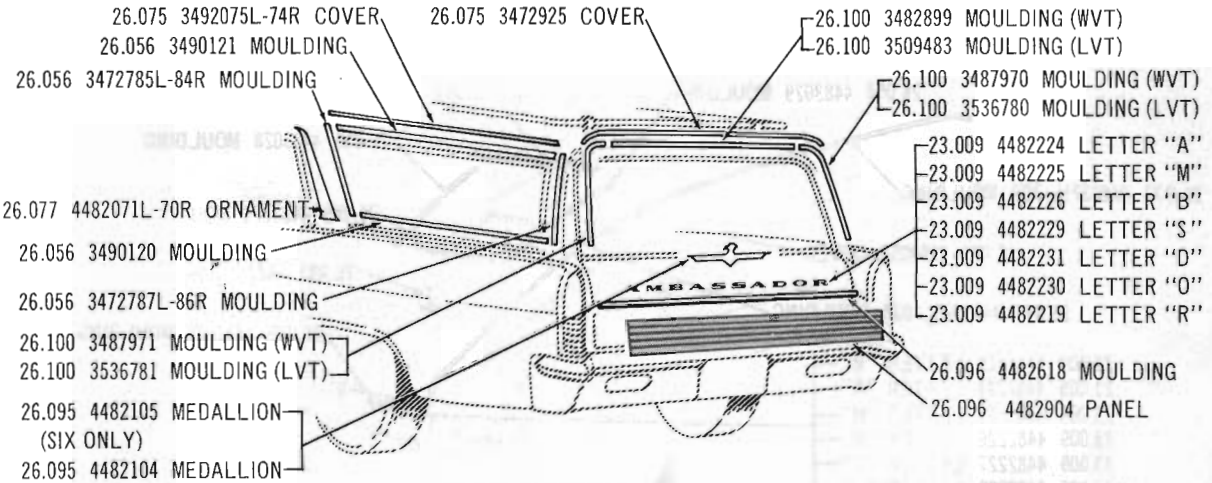

ATTACHING PARTS, WHEN REQUIRED, INCLUDED WITH ALL PARTS SHOWN

REAR MOULDINGS 65 88 (990-LWO)

Copyright 1963 American Motors Corp.

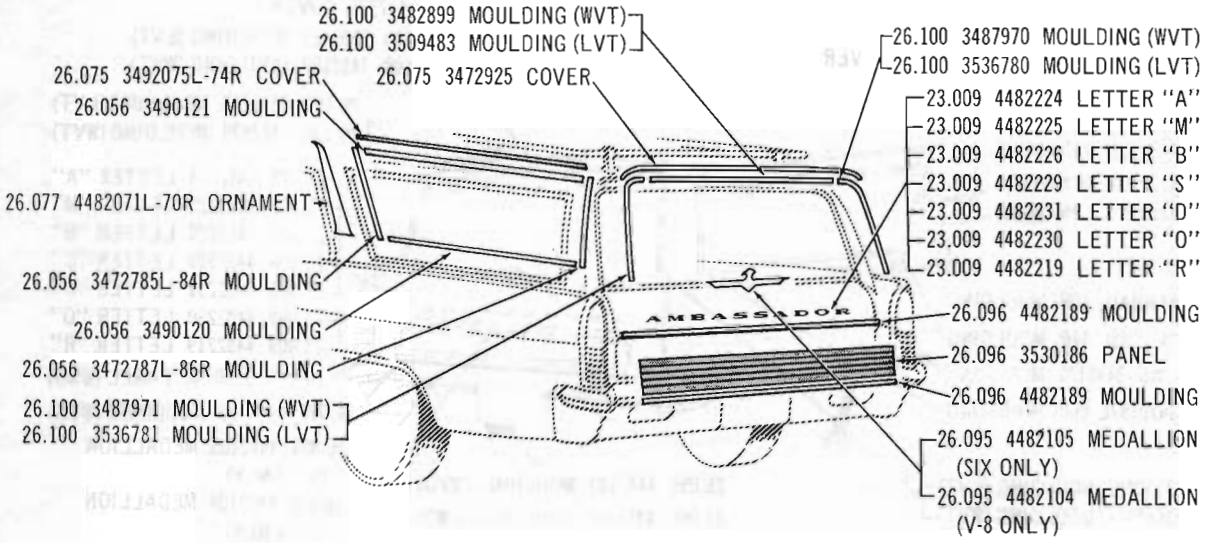

ATTACHING PARTS, WHEN REQUIRED, INCLUDED WITH ALL PARTS SHOWN

REAR MOULDINGS 65 88 (990-WWO)

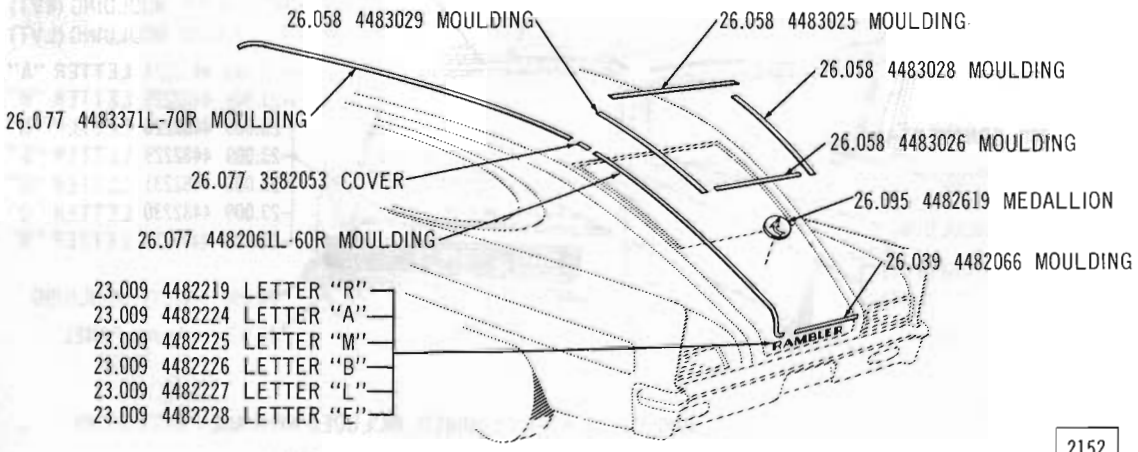

2152

ATTACHING PARTS, WHEN REQUIRED, INCLUDED WITH ALL PARTS SHOWN

REAR MOULDINGS 65 59-7 (Marlin)

Copyright 1963 American Motors Corp.

GROUP NO. — DESCRIPTION — YEAR and MODEL	PRIMARY GROUP NO.	PER CAR	PART NO.	CODE
26.001 MOULDING, Windshield Finish (Note 26.001-1)				
(Upper) 60 01	.....	1	340 0556	
(Upper) 61 Thru 63 02-04-05-06-08 ***(Replaces 345 3188, 347 3376)***	.....	1	346 7178	
(Upper) 61-63 07 ***(Replaces 346 0201, 347 3377)***	.....	1	346 7208	
(Upper) 63 09	.....	1	348 3718	
(Upper) 64-65 02-05-06-08-09	.....	1	350 2081	
(Upper) 64-65 09 (Chrome)	.....	1	350 1627	
(Upper) 62 10-80	.....	1	347 7144	
(Upper) 63 10-80	.....	1	348 3399	
(Upper) 64-65 15-16-18-85-86-88	.....	1	351 2247	
(Upper) 64-65 19-89 (Painted)(Except Marlin)	.....	1	351 9452	
(Upper) 60-61 80 ***(Replaces 344 0670)***	.....	1	345 5015	
(Upper) 64-65 19-89 (Chrome): 65 59 (Marlin)	.....	1	350 8135	
(Lower) 60-61 10-20-80 ***(Replaces 344 0890)***	.....	1	345 5014	
(Lower) 62 10-80	.....	1	347 0788	
(Lower) 64-65 10 (Except Marlin): 65 80 (880)	.....	1	352 0384	
(Lower) 64 19 (Typhoon): 64-65 80 (990): 65 59 (Marlin)	.....	1	352 0476	
(Lower-Left) 60 01	.....	1	340 0553	
(Lower-Left) 62-63 01 ***(Replaces 344 7107, 345 3363)***	.....	1	346 7163	
(Lower-Left) 64-65 01	.....	1	350 8043	
(Lower-Left) 63 10-80 ***(Use 351 0419)***	.....	1	349 0373	
(Lower-Left) 64 10: ***65 15-16-18-19 (RHD)***	.....	1	350 9943	
(Lower-Left-End) 64 19 (Typhoon): 64-65 80 (990): 65 59 (Marlin)	.....	1	352 0451	
(Lower-Left-End) 65 15-16-18-19 (Except Marlin): 65 85-86-88 (880)	.....	1	351 6395	
(Lower-Left-End) 65 17	.....	1	351 5109	
(Lower-Left-End) 65 87	.....	1	353 0333	
(Lower-Right) 60 01	.....	1	340 0554	
(Lower-Right) 62-63 01 ***(Replaces 347 3363)***	.....	1	346 7162	
(Lower-Right) 64-65 01	.....	1	350 8042	
(Lower-Right) 63 10-80 ***(Replaces 349 0372)***	.....	1	351 0418	
(Lower-Right) 64 10: ***65 15-16-18-19 (RHD)***	.....	1	350 9942	
(Lower-Right-End) 64 19 (Typhoon): 64-65 80 (990): 65 59 (Marlin)	.....	1	352 0450	
(Lower-Right-End) 65 15-16-18-19 (Except Marlin): 65 85-86-88 (880)	.....	1	351 6394	
(Lower-Right-End) 65 17	.....	1	351 5108	
(Lower-Right-End) 65 87	.....	1	353 0332	
(Side-Left) 60 01	.....	1	340 0557	
(Side-Left) 61 07 ***(Replaces 346 0209)***	.....	1	346 7127	
(Side-Left) 62-63 02-04-05-06-08 ***(Replaces 344 7413, 348 3359)***	.....	1	346 7111	
(Side-Left) 62-63 07 ***(Replaces 347 3365)***	.....	1	346 7127	
(Side-Left) 63 09	.....	1	348 3789	
(Side-Left) 64-65 07 (Chrome)	.....	1	350 2119	
(Side-Left) 60-61 10-20	.....	1	345 5019	
(Side-Left) 62 10-80	.....	1	347 7149	
(Side-Left) 65 17-87	.....	1	351 5121	
(Side-Left) 60-61 80	.....	1	345 5021	
(Side-Right) 60 01	.....	1	340 0558	
(Side-Right) 61 Thru 63 02-04-05-06-08 ***(Replaces 344 7412, 347 3358)***	.....	1	346 7110	
(Side-Right) 61 Thru 63 07 ***(Replaces 346 0208, 347 3364)***	.....	1	346 7126	
(Side-Right) 63 09	.....	1	348 3788	
(Side-Right) 64-65 07 (Chrome)	.....	1	350 2118	
(Side-Right) 60-61 10-20	.....	1	345 5018	
(Side-Right) 62 10-80	.....	1	347 7148	
(Side-Right) 65 17-87	.....	1	351 5120	
(Side-Right) 60-61 80	.....	1	345 5020	

NOTE 26.001-1: Body Finish Mouldings are Serviced in one Shade unless otherwise noted and must be Painted to the color desired.

Copyright 1963 American Motors Corp.

GROUP NO. — DESCRIPTION — YEAR and MODEL	PRIMARY GROUP NO.	PER CAR	PART NO.	CODE
ATTACHING PARTS				
Upper Moulding To Body				
SCREW, Tapping..... 60 01	17.654	4	G162413	NA
SCREW, Tapping..... 61 01: 62-63 02-04-05-06-08	17.654	4	G162416	NA
SCREW, Tapping..... 62-63 07-09	17.655	4	G168496	NA
SCREW, Tapping..... 60 Thru 62 10-20-80: 64 10-80: 65 05-06-08-09: 65 59 (Marlin)	.....	2	400 0026	
SCREW, Tapping..... 63 10-80	17.655	2	G168528	NA
SPACER..... 65 10-80	.....	3	358 5300	#
Lower Moulding To Body				
SCREW, Tapping..... 60 01 (7 Req.): 61 Thru 63 01 (4 Req.)	17.654	AR	G162418	NA
SCREW, Tapping..... 65 05-06-08-09	17.665	4	G145420	NA
SCREW, Tapping..... 60-61 10-20-80	17.654	4	G162420	NA
SCREW, Tapping..... 62 10-80 (2 Req.): 64 10-80 (2 Req.): 65 80 (6 Req.)	.....	AR	400 0607	
SCREW, Tapping..... 63 10-80	.....	2	400 0661	
SCREW, Tapping..... 65 59 (Marlin)	17.655	6	G168528	
Lower Moulding To Instrument Panel				
CLIP, Spacer..... 60-61 10-20-80 (Super)(Custom): 62 10-80 (Custom)(400)	.....	6	344 0589	
Lower End Moulding To Body				
SCREW, Tapping..... 65 59 (Marlin)	17.655	6	G168528	NA
SCREW, Tapping..... 65 80	.....	2	400 0607	
Clip To Instrument Panel				
SCREW, Tapping..... 60 10-20-80 (Super)(Custom)	17.669	6	G455525	NA
SCREW, Tapping..... 61 10-20-80 (Super)(Custom)	17.648	6	G161371	NA
SCREW, Tapping..... 62 10-80 (Custom)(400)	17.660	6	G161790	NA
Side Moulding To Body				
SCREW, Tapping..... 60 01 (1-1/4" Long): 60 Thru 62 10-20-80				
SCREW, Tapping..... 60-61 01 (1" Long)	17.654	4	G162413	NA
SCREW, Tapping..... 62-63 01	17.654	6	G162416	NA
SCREW, Tapping..... 65 07	17.654	2	G162402	NA
SCREW, Tapping..... 60 Thru 62 10-20-80 (1-3/4" Long)	17.655	2	G168528	NA
COVER, Windshield Finish Lower Moulding				
60 01	.....	1	437 3264	
63 01 (Less Clock) ..... *(Replaces 344 7116, 347 3422)*	.....	1	346 7340	
ATTACHING PARTS				
Cover To Body				
SCREW, Tapping..... 61 01 (Less Clock)	17.654	2	G162420	NA
SCREW, Tapping..... 62-63 01 (Less Clock)	17.655	2	G168528	NA
COVER, Windshield Finish Upper Joint Moulding				
(Left) 64 02-05-06-08	.....	1	350 2093	
(Left) 64-65 09 (Painted)	.....	1	352 0623	
(Left) 64-65 09 (Chrome)	.....	1	350 1669	
(Left) 63 10-80: 64-65 15-16-18-85-86-88	.....	1	348 3411	
(Left) 64-65 19-89 (Painted)	.....	1	351 9467	
(Left) 64-65 19-89 (Chrome)	.....	1	350 8147	
(Left-End) 65 05-06-08	.....	1	354 0135	
(Right) 64 02-05-06-08	.....	1	350 2092	
(Right) 64-65 09 (Painted)	.....	1	352 0622	
(Right) 64-65 09 (Chrome)	.....	1	350 1668	
(Right) 63 10-80: 64-65 15-16-18-85-86-88	.....	1	348 3410	
(Right) 64-65 19-89 (Painted)	.....	1	351 9466	
(Right) 64-65 19-89 (Chrome)	.....	1	350 8146	
(Right-End) 65 05-06-08	.....	1	354 0134	

Copyright 1963 American Motors Corp.

GROUP NO. — DESCRIPTION — YEAR and MODEL	PRIMARY GROUP NO.	PER CAR	PART NO.	CODE
ATTACHING PARTS				
Cover To Body				
SCREW, Tapping..... 64 09 (2 Req.): 65 05-06-08 (2 Req.): 64-65 19-89 (4 Req.)	.....	AR	400 0026	#
SCREW, Tapping..... 63 10-80 (3/4" Long): 64 15-16-18-85-88	17.655	2	G168496	NA
SCREW, Tapping..... 63 10-80 (1-3/4" Long): 64 15-16-18-85-88	17.655	2	G168528	NA
ANTI-SQUEAK, Windshield Side Finish Moulding (Bulk)				
61 Thru 65 01: 62-63 10-80	.....	AR	346 4771	
WELT, Windshield Finish Side Moulding (Bulk)				
(Tan) 61 01.....	.....	AR	345 4273	
(Gray) 61 01	.....	AR	345 4270	
(Blue) 61 01	.....	AR	345 4271	
(Green) 61 01	.....	AR	345 4272	
26.010 MOULDING, Front Door Finish (Incl. Weatherstrip-Note 26.001-1)				
(Left) 60-61 02-04-06 ..... *(Ref. Pr. List)*	.....	1	345 3201	
(Left) 60-61 05-08 ..... *(Replaces 343 2291)*	.....	1	345 3245	
(Left-Gray) 61 07	.....	1	346 0421	
(Left-Silver) 61-62 07	.....	1	347 4783	
(Left-Blue) 61 07	.....	1	346 0423	
(Left-Green) 61 07	.....	1	346 0425	
(Left-Tan) 61 07	.....	1	346 0427	
(Left-Blue) 62 07	.....	1	346 7203	
(Left-Green) 62 07	.....	1	346 7205	
(Left-Copper) 62 07	.....	1	346 7207	
(Left-Aqua) 62 07	.....	1	348 0087	
(Left-Gold) 62-63 07-09	.....	1	348 0089	
(Left) 62-63 02-04-06 ..... *(Replaces 347 3437)*	.....	1	346 7237	
(Left) 62-63 05-08 ..... *(Replaces 347 3433)*	.....	1	346 7185	
(Left-Black) 63 07-09	.....	1	346 7201	
(Left-Blue) 63 07-09	.....	1	349 6723	
(Left-Aqua) 63 07-09	.....	1	349 6725	
(Left-Red) 63 07-09	.....	1	349 6727	
(Left-Metallic Maroon) 63 07-09.....	.....	1	349 6729	
(Left) 60 15-18-25-28: 60-61 85-88 (Deluxe)(Super): 61 10-20 ..... *(Replaces 344 1615)*	.....	1	345 5031	
(Left-Chrome) 61 15-25	.....	1	346 0699	
(Left-Gold) 62 15-18: 62 85-88 (Deluxe And Custom)	.....	1	347 7105	
(Left-Gold) 62 16: 62 86 (Deluxe And Custom)	.....	1	347 7101	
(Right-Gray) 61 07	.....	1	346 0420	
(Right-Silver) 61-62 07	.....	1	347 4782	
(Right-Blue) 61 07	.....	1	346 0422	
(Right-Green) 61 07	.....	1	346 0424	
(Right-Tan) 61 07	.....	1	346 0426	
(Right) 62 05-08	.....	1	347 3432	
(Right-Blue) 62 07	.....	1	346 7202	
(Right-Green) 62 07	.....	1	346 7204	
(Right-Copper) 62 07	.....	1	346 7206	
(Right-Aqua) 62 07	.....	1	348 0086	
(Right-Gold) 62-63 07-09	.....	1	348 0088	
(Right) 60-63 02-04-06 ..... *(Replaces 345 3200, 343 2284)*	.....	1	346 7236	
(Right) 60-63 05-08 ..... *(Replaces 345 3244, 343 2290)*	.....	1	346 7184	

Copyright 1963 American Motors Corp.

GROUP NO. — DESCRIPTION — YEAR and MODEL	PRIMARY GROUP NO.	PER CAR	PART NO.	CODE
(Right-Black) 63 07-09	.....	1	346 7200	
(Right-Blue) 63 07-09	.....	1	349 6722	
(Right-Aqua) 63 07-09	.....	1	349 6724	
(Right-Red) 63 07-09	.....	1	349 6726	
(Right-Metallic Maroon) 63 07-09	.....	1	349 6728	
(Right) 60 15-18-25-28: 60 85-88 (Deluxe)(Super): 61 10-20-80 ***(Replaces 344 1614)***	.....	1	345 5030	
(Right) 60 19-29	.....	1	344 1622	
(Right-Chrome) 61 15-25	.....	1	346 0698	
(Right) 62 15-18: 62 85-88 (Deluxe)(Custom)	.....	1	347 7104	
(Right) 62 16: 62 86 (Deluxe)(Custom)	.....	1	347 7100	
ATTACHING PARTS Moulding To Door				
SCREW, Tapping..... 60-61 01 (12 Req. -#8-15): 60 10-20-80 (12 Req. -#8-15): 61 10-20-80 (6 Req. -#8-15)	17.669	AR	800 0272	NA
SCREW, Tapping..... 61 01 (6 Req. -#8-18): 62-63 02-04-06-07-09 (12 Req.): 62-63 05-08 (8 Req.): 61 10-20-80 (12 Req. -#8-18): 62 80 (6 Req.)	17.669	AR	G457002	NA
SCREW, Tapping..... 60 10-20-80 (#10-12)	17.660	2	G161894	NA
WASHER, Plain..... 62-63 07-09	17.814	12	G446152	NA
26.014 MOULDING, Rear Door Finish (Incl. Weatherstrip-Note 26.001-1)				
60-61 05-08 ***(Replaces 343 2276)***	.....	2	345 3212	
(Left) 62-63 05-08 ***(Replaces 348 0233)***	.....	1	346 1871	
(Left-Painted) 60 15-18-25-28: 61 10-20: 60 85-88 (Deluxe And Super): 61 80 (Deluxe And Super) ***(Replaces 344 0429)***	.....	1	345 5035	
(Left-Chrome) 61 15-25	.....	1	346 0703	
(Left) 62 15-18: 62 85-88 (Deluxe)(Custom)	.....	1	347 7179	
(Right) 62-63 05-08 ***(Replaces 348 0232)***	.....	1	346 1870	
(Right-Painted) 60 15-18-25-28: 61 10-20: 60 85-88 (Deluxe And Super): 61 80 (Deluxe And Super)	.....	1	345 5034	
(Right-Chrome) 60 19-29	.....	1	344 0860	
(Right-Chrome) 61 15-25	.....	1	346 0702	
(Right) 62 15-18: 62 85-88	.....	1	347 7178	
ATTACHING PARTS Moulding To Door				
CLIP..... 60 Thru 63 05-08: 60-61 10-20-80: 62 85-88 (Deluxe And Custom)	26.010	4	436 8095	
CLIP..... 60 19-29-83-89	.....	2	341 6753	
SCREW, Tapping..... 60-61 05-08 (8 Req.): 60 10-20-80 (8 Req.): 61 80 (Deluxe And Super-6 Req.)	17.669	AR	800 0272	NA
SCREW, Tapping ..... 62-63 05-08 (8 Req.): 62 85-88 (Deluxe And Custom-6 Req.)	17.669	AR	G457002	NA
SCREW, Tapping..... 60 19-29-83-89	17.660	4	G161860	NA
26.017 MOULDING, Side Window Finish (Note 26.001-1)				
(Left-Upper) 60 04	.....	1	343 1832	
(Left-Upper) 61 04	.....	1	345 3149	
(Left-Upper) 62 04	.....	1	347 3351	
(Left-Upper) 63 04	.....	1	349 9501	
(Left-Lower) 60 04	.....	1	340 0532	
(Left-Lower) 61 04	.....	1	345 3157	
(Left-Lower) 62 04	.....	1	347 3427	
(Left-Lower) 63 04	.....	1	349 9463	

Copyright 1963 American Motors Corp.

GROUP NO. — DESCRIPTION — YEAR and MODEL	PRIMARY GROUP NO.	PER CAR	PART NO.	CODE
(Right-Upper) 60 04	.....	1	343 1833	
(Right-Upper) 61 04	.....	1	345 3148	
(Right-Upper) 62 04	.....	1	347 3350	
(Right-Upper) 63 04	.....	1	349 9500	
(Right-Lower) 61 04	.....	1	345 3156	
(Right-Lower) 62 04	.....	1	347 3426	
(Right-Lower) 63 04	.....	1	349 9462	
ATTACHING PARTS				
Upper Moulding To Window				
SCREW, Tapping..... 60 04	17.654	12	G162415	NA
SCREW, Tapping..... 61 Thru 63 04	17.655	12	G168528	NA
Lower Moulding To Window				
SCREW, Tapping..... 60-61 04 (#8-15)	17.669	8	800 0272	NA
SCREW, Tapping..... 61 Thru 63 04 (#8-18)	17.669	8	G457002	NA
26.018 MOULDING, Rear Quarter Window Finish (Note 26.001-1)				
(Left) 60 02-06...(Incl. Weatherstrip)	.....	1	342 5939	
(Left) 60 05	.....	1	344 3991	
(Left) 61 05	.....	1	345 3141	
(Left-Gray) 61 07...(Incl. Weatherstrip)	.....	1	346 0403	
(Left-Silver) 61 07...(Incl. Weatherstrip)	.....	1	347 4779	
(Left-Blue) 61 07...(Incl. Weatherstrip)	.....	1	346 0405	
(Left-Green) 61 07...(Incl. Weatherstrip)	.....	1	346 0407	
(Left-Tan) 61 07...(Incl. Weatherstrip)	.....	1	346 0409	
(Left-Silver) 62 07...(Incl. Weatherstrip)	.....	1	347 4779	
(Left-Blue) 62 07...(Incl. Weatherstrip)	.....	1	346 7223	
(Left-Green) 62 07...(Incl. Weatherstrip)	.....	1	346 7225	
(Left-Copper) 62 07...(Incl. Weatherstrip)	.....	1	346 7227	
(Left-Aqua) 62 07...(Incl. Weatherstrip)	.....	1	348 0079	
(Left-Gold) 62-63 07...(Incl. Weatherstrip)	.....	1	348 0081	
(Left-Black) 61 Thru 63 02-06...(Incl. Weatherstrip) ***(Replaces 345 3131, 347 3357)***	.....	1	346 7089	
(Left-Black) 62-63 05...(Incl. Weatherstrip) ***(Replaces 345 8995)***	.....	1	346 7251	
(Left-Black) 63 07...(Incl. Weatherstrip)	.....	1	346 7221	
(Left-Metallic Medium Blue) 63 07...(Incl. Weatherstrip)	.....	1	349 6781	
(Left-Metallic Medium Aqua) 63 07...(Incl. Weatherstrip)	.....	1	349 6783	
(Left-Briarcliff Red) 63 07...(Incl. Weatherstrip)	.....	1	349 6785	
(Left-Metallic Maroon) 63 07...(Incl. Weatherstrip)	.....	1	349 6787	
(Left-Black) 63 09...(Incl. Weatherstrip)	.....	1	349 8627	
(Left-Metallic Medium Blue) 63 09...(Incl. Weatherstrip)	.....	1	349 8629	
(Left-Metallic Medium Aqua) 63 09...(Incl. Weatherstrip)	.....	1	349 8631	
(Left-Gold) 63 09...(Incl. Weatherstrip)	.....	1	349 8633	
(Left-Briarcliff Red) 63 09...(Incl. Weatherstrip)	.....	1	349 8623	
(Left-Metallic Maroon) 63 09...(Incl. Weatherstrip)	.....	1	349 8625	
(Left-Chrome) 65 59 (Marlin)	.....	1	353 1611	
(Left-Front) 60-61 18-28-83-88 (LVT) ***(Replaces 344 3511)***	.....	1	345 5041	
(Left-Front) 60-61 18-28-88 (WVT) ***(Replaces 344 6022)***	.....	1	345 5039	
(Left-Front) 62 18-88 (LVT): 62 16-86 ***(Replaces 347 6931)***	.....	1	347 0797	
(Left-Rear) 60 18-28-88 (WVT-Plastic) ***(Replaces 344 3811)***	.....	1	346 6049	
(Left-Rear) 61-62 18-28-88 (LVT) ***(Replaces 347 0802, 344 6041)***	.....	1	347 0799	
(Left-Rear) 62 18-88 (WVT)	.....	1	347 0801	
(Left-Rear-Upper) 60 04	.....	1	340 0530	
(Left-Rear-Upper) 61-63 04-08 ***(Replaces 345 3165, 347 3369)***	.....	1	346 7097	
(Left-Rear-Lower) 61 04-08	.....	1	345 3173	
(Left-Rear-Lower): 60 04: 62-63 04-08 ***(Replaces 340 0528, 347 3353)***	.....	1	346 7073	
(Right) 60 02-06...(Incl. Weatherstrip)	.....	1	342 5940	

Copyright 1963 American Motors Corp.

GROUP NO. — DESCRIPTION — YEAR and MODEL	PRIMARY GROUP NO.	PER CAR	PART NO.	CODE
(Right) 61 05	.....	1	345 3140	
(Right-Gray) 61 07...(Incl. Weatherstrip)	.....	1	346 0402	
(Right-Silver) 61 07...(Incl. Weatherstrip)	.....	1	347 4778	
(Right-Blue) 61 07...(Incl. Weatherstrip)	.....	1	346 0404	
(Right-Tan) 61 07...(Incl. Weatherstrip)	.....	1	346 0408	
(Right-Silver) 62 07...(Incl. Weatherstrip)	.....	1	347 4778	
(Right-Blue) 62 07...(Incl. Weatherstrip)	.....	1	346 7222	
(Right-Green) 62 07...(Incl. Weatherstrip)	.....	1	346 7224	
(Right-Copper) 62 07...(Incl. Weatherstrip)	.....	1	346 7226	
(Right-Aqua) 62 07...(Incl. Weatherstrip)	.....	1	348 0078	
(Right-Gold) 62-63 07...(Incl. Weatherstrip)	.....	1	348 0080	
(Right-Black) 61-63 02-06...(Incl. Weatherstrip) ***(Replaces 345 3130)***	.....	1	346 7088	
(Right-Black) 62-63 05...(Incl. Weatherstrip) ***(Replaces 346 8994)***	.....	1	346 7250	
(Right-Black) 63 07...(Incl. Weatherstrip)	.....	1	346 7220	
(Right-Metallic Medium Blue) 63 07...(Incl. Weatherstrip)	.....	1	349 6780	
(Right-Metallic Medium Aqua) 63 07...(Incl. Weatherstrip)	.....	1	349 6782	
(Right-Briarcliff Red) 63 07...(Incl. Weatherstrip)	.....	1	349 6784	
(Right-Metallic Maroon) 63 07...(Incl. Weatherstrip)	.....	1	349 6786	
(Right-Black) 63 09...(Incl. Weatherstrip)	.....	1	349 8626	
(Right-Metallic Medium Blue) 63 09...(Incl. Weatherstrip)	.....	1	349 8628	
(Right-Metallic Medium Aqua) 63 09...(Incl. Weatherstrip)	.....	1	349 8630	
(Right-Gold) 63 09...(Incl. Weatherstrip)	.....	1	349 8632	
(Right-Briarcliff Red) 63 09...(Incl. Weatherstrip)	.....	1	349 8622	
(Right-Metallic Maroon) 63 09...(Incl. Weatherstrip)	.....	1	349 8624	
(Right-Chrome) 65 59 (Marlin)	.....	1	353 1610	
(Right) 62 16-86	.....	1	347 6930	
(Right-Front) 60-62 18-28-83-88 ***(Replaces 344 3510)***	.....	1	347 0796	
(Right-Rear) 60 18-28-88 (LVT): 62 18-28-88 (LVT)	.....	1	347 0798	#
(Right-Rear) 61 18-28-88 (LVT)	.....	1	346 6040	#
(Right-Rear) 60-62 18-28-88 (WVT) ***(Replaces 344 3810, 346 6048)***	.....	1	347 0800	
(Right-Rear-Upper) 60 04	.....	1	340 0531	
(Right-Rear-Upper) 61 Thru 63 04-08 ***(Replaces 345 3164, 347 3368)***	.....	1	346 7096	
(Right-Rear-Lower) 60 04	.....	1	340 0529	
(Right-Rear-Lower) 61 04-08	.....	1	345 3172	
(Right-Rear-Lower) 62-63 04-08 ***(Replaces 347 3352)***	.....	1	346 7072	

ATTACHING PARTS

Moulding To Body

SCREW, Tapping.....	60-61 02-05 (3/8" Long): 60 06: 61 04-08 (3/8" Long)	17.669	10	800 0272	NA
SCREW, Tapping.....	60 05 (2 Req. -1-3/4" Long): 61 Thru 63 05 (4 Req. -1-3/4" Long)	17.654	AR	G162421	NA
SCREW, Tapping.....	61-62 04-08 (12 Req. -8-18 x 3/8"): 62-63 02-06 (10 Req.): 62 05 (4 Req. -3/8" Long): 62-63 07 (6 Req.): 63 04 (12 Req. -3/8" Long): 63 09 (8 Req.): 62 16-86 (6 Req.)	17.669	AR	G457002	NA
SCREW, Tapping.....	61 Thru 63 04 (14 Req. -1-3/4" Long): 61 08 (14 Req. -1-3/4" Long): 63 08 (14 Req. -1-3/4" Long): 61 18-28-88 (16 Req.)	17.655	AR	G168528	NA
SCREW, Tapping.....	63 05 (5/8" Long)	17.669	4	800 0274	NA
SCREW, Tapping..	60 18-28-83-88 (16 Req. -1-1/4" Long): 62 18-88 (20 Req.)	26.001	AR	400 0026	
SCREW, Tapping.....	60 18-28-83-88 (3/4" Long)	17.654	4	G148547	NA
SCREW, Tapping.....	65 59 (Marlin)	17.655	10	G168488	NA

Copyright 1963 American Motors Corp.

GROUP NO. — DESCRIPTION — YEAR and MODEL	PRIMARY GROUP NO.	PER CAR	PART NO.	CODE
26.020 MOULDING, Rear Window Finish (Note 26.001-1)				
(Upper) 64-65 02-05-06	.....	1	350 2131	
(Upper) 64-65 08: 63-65 18-88	.....	1	349 0515	
(Upper) 64-65 09	.....	1	350 2192	
(Upper) 64-65 09 (Chrome)	.....	1	350 2191	
(Upper) 60-61 18-28-88 (WVT)	.....	1	344 3023	
(Upper) 60 Thru 62 18-28-83-88 (LVT)...(Incl. Channel) ***(Replaces 447 7381)***	.....	1	347 0804	#
(Upper) 62 18-88 (WVT)	.....	1	347 0805	
(Upper) 63 10-80: 64 15-16-85	.....	1	348 3454	
(Upper) 64-65 19-89 (Except Marlin)	.....	1	351 9459	
(Upper) 64-65 19-89 (Chrome)(Except Marlin)	.....	1	350 8165	
(Upper) 65 15-16-85-86	.....	1	351 6432	
(Upper-Left) 63 09	.....	1	349 0639	
(Upper-Left) 64 08 (330)	.....	1	350 0585	
(Upper-Left) 60-62 15-16-19-25-29-85-86 ***(Replaces 344 0723)***	.....	1	347 0791	
(Upper-Left) 65 59 (Marlin)	.....	1	353 0283	
(Upper-Right) 63 09	.....	1	349 0638	
(Upper-Right) 64 08 (330)	.....	1	350 0584	
(Upper-Right) 60-62 15-16-19-25-29-85-86-89 ***(Replaces 344 0722)***	.....	1	347 0790	
(Upper-Right) 65 59 (Marlin)	.....	1	353 0282	
(Lower) 64 19-89	.....	1	352 8905	
(Lower) 65 19 (Except Marlin)	.....	1	354 2046	
(Lower) 65 19-89 (Chrome)(Except Marlin)	.....	1	354 3062	
(Lower-Left) 64 08 (330)	.....	1	350 0669	
(Lower-Left) 65 59 (Marlin)	.....	1	353 0373	#
(Lower-Right) 64 08 (330)	.....	1	350 0668	
(Lower-Right) 65 59 (Marlin)	.....	1	353 0372	#
(Lower-Side-Left) 60-61 15-19-25-29-85-89: 62 15-16-85-86 ***(Replaces 344 0733)***	.....	1	347 0793	
(Lower-Side-Right) 60-61 15-19-25-29-85-89: 62 15-16-85-86 ***(Replaces 344 0732)***	.....	1	347 0792	
(Side-Left) 65 59 (Marlin)	.....	1	353 0293	
(Side-Right) 65 59 (Marlin)	.....	1	353 0292	
(Lower-Center) 60-61 15-19-25-29-85-89: 62 15-16-85-86 ***(Replaces 344 0705)***	.....	1	347 0795	
ATTACHING PARTS Moulding To Body				
SCREW, Tapping..... 63 09: 60 15-19-29-85-89 (1-1/4" Long)	17.655	8	G145419	NA
SCREW, Tapping..... 64 09-15-16-19-85-89 (9 Req.): 65 01 (3 Req.): 62 15-16-85-86 (8 Req.-1-1/4" Long): 63 Thru 65 10-80 (3 Req.)	26.001	AR	400 0026	#
SCREW, Tapping..... 60 Thru 62 15-19-25-29-85-89 (1-3/4" Long): 62 16-86 (1-3/4" Long)	17.655	7	G168528	NA
SCREW, Tapping..... 60-61 18-28-83-88	17.654	5	G148547	NA
SCREW, Tapping..... 62 18-88	17.655	5	G168496	NA
SPACER 64-65 19-89	.....	7	350 8173	
COVER, Rear Window Finish Moulding				
63 09	.....	1	349 0616	
(Left) 64-65 02-05-06	.....	1	350 2143	
(Left) 63 10-80: 64 15-16-85	.....	1	348 3433	
(Right) 64-65 02-05-06	.....	1	350 2142	
(Right) 63 10-80: 64 15-16-85	.....	1	348 3432	
(Upper) 60-61 15-19-25-29-85-89	.....	1	345 5027	
(Upper) 62 15-16-85-86	.....	1	347 0794	
(Upper) 65 59 (Marlin)	.....	1	353 0781	
(Upper-Left) 64-65 08	.....	1	350 2627	
(Upper-Left) 64-65 09 (Chrome)	.....	1	350 2203	

Copyright 1963 American Motors Corp.

GROUP NO. — DESCRIPTION — YEAR and MODEL	PRIMARY GROUP NO.	PER CAR	PART NO.	CODE
(Upper-Left) 64-65 19-89	.....	1	351 9481	
(Upper-Left) 64-65 19-89 (Chrome)	.....	1	350 8179	
(Upper-Left) 65 15-16-85-86	.....	1	351 6445	
(Upper-Right) 64-65 08	.....	1	320 2626	
(Upper-Right) 64-65 09 (Chrome)	.....	1	350 2202	
(Upper-Right) 64-65 19-89	.....	1	351 9480	
(Upper-Right) 64-65 19-89 (Chrome)	.....	1	350 8178	
(Upper-Right) 65 15-16-85-86	.....	1	351 6444	
(Lower) 60-61 15-19-25-29-85-89: 62 15-16-85-86.....*(Replaces 341 1399)*	.....	1	347 0789	
(Lower) 65 59 (Marlin)	.....	1	353 0791	
(Lower-Left) 64-65 09	.....	1	350 2205	
(Lower-Right) 64-65 09	.....	1	350 2204	
ATTACHING PARTS				
Cover To Body				
SCREW, Tapping..... 63 09: 60 15-19-25-29-85-89 (1-1/4" Long)	17.655	1	G145419	NA
SCREW, Tapping..... 65 08	17.665	6	G168499	NA
SCREW, Tapping..... 60 Thru 62 15-19-25-29-85-89 (1-3/4" Long): 62 16-86 (1-3/4" Long)	17.655	2	G168528	NA
SCREW, Tapping..... 62 15-16-85-86 (1 Req. -1-1/4" Long): 63 10-80 (4 Req.): 64 09 (2 Req.): 65 05-06 (6 Req.): 65 09 (4 Req.): 64 10-80 (6 Req.)	26.001	AR	400 0026	
CAP, Rear Window Finish Moulding End				
(Left) 63 Thru 65 18-88	.....	1	349 0525	
(Left) 65 19	.....	1	354 2053	
(Left) 65 19-89 (Chrome)	.....	1	350 2319	
(Right) 63 Thru 65 18-88	.....	1	349 0524	
(Right) 65 19	.....	1	354 2052	
(Right) 65 19-89 (Chrome)	.....	1	350 2318	
ATTACHING PARTS				
Cap To Body				
SCREW, Tapping..... 63 10-80 (1-1/4" Long): 64-65 15-16-19-85-89 (1-1/4" Long)	26.001	4	400 0026	
SCREW, Tapping..... 63-64 10-80 (3/4" Long)	17.655	2	G168496	NA
SCREW, Tapping..... 64-65 18-88 (1-1/4" Long)	.....	4	400 0683	
26.028 MOULDING, Side Roof Rail Finish (Note 26.001-1)				
(Left) 60 19-29-83-89	.....	1	344 0923	
(Left) 65 59 (Marlin)	27.022	1	353 1373	
(Right) 60 19-29-83-89	.....	1	344 0922	
(Right) 65 59 (Marlin)	27.022	1	353 1372	
ATTACHING PARTS				
Moulding To Body				
SCREW, Tapping..... 60 19-29-83-89	17.655	14	G168495	NA
26.031 COVER, Front Door Belt Ledge				
(Left) 60 15-18-25-28-85-88	.....	1	344 0889	
(Left) 60 19-29-83-89	.....	1	344 0285	
(Right) 60 15-18-25-28-85-88	.....	1	344 0888	
(Right) 60 19-29-83-89	.....	1	344 0284	
ATTACHING PARTS				
Cover To Door				
SCREW, Tapping..... 60 10-20-80	17.660	6	G161791	NA
26.032 MOULDING, Front Door (Refer To Group 26 Illustrations)				

Copyright 1963 American Motors Corp.

GROUP NO. — DESCRIPTION — YEAR and MODEL	PRIMARY GROUP NO.	PER CAR	PART NO.	CODE
ATTACHING PARTS				
Belt Moulding To Door				
CLIP, Steel 61 10-20-80	26.034	4	344 0194	
CLIP, Tubular..... 65 59 (Marlin).....	.....	14	400 0519	#
CLIP, Plastic ..... 64 01-10-80 (14 Req.): 63 85-88 (12 Req.): 63 86 (14 Req.)	.....	AR	400 0150	
CLIP, Plastic 65 09	.....	14	400 1520	
CLIP, Plastic ..... 65 15-18-85-88 (10 Req.): 65 19-89 (12 Req.).....	.....	AR	400 1517	
CLIP, Anti-Slide 65 09	.....	2	400 1518	
CLIP, Anti-Slide ..... 64 01-10-80 (4 Req.): 65 07 (2 Req.): 63 85-88 (2 Req.).....	.....	AR	400 0577	
SCREW, Tapping..... 61 10-20-80	17.660	4	G161791	NA
Top Moulding To Door				
CLIP, Tubular..... 65 16-17-19	23.006	4	400 0519	
CLIP, Plastic ..... 65 59 (Marlin)	.....	12	400 1339	#
CLIP, Anti-Slide 65 80	.....	2	400 1545	
Upper Moulding To Door				
CLIP, Wire..... 60 01	.....	6	439 6858	
CLIP, Wire..... 61 01	.....	12	400 0055	
CLIP, Wire..... 62 04-06-07 (12 Req.): 62 05-08 (10 Req.).....	12.078	AR	346 4507	
CLIP, Wire..... 61 10-20 (Custom): 61 80 (Super)(Custom)	12.128	10	344 6003	
CLIP, Wire..... 62 15-18-85-88 (10 Req.): 62 16-86 (12 Req.).....	12.078	AR	400 0381	
CLIP, Wire..... 60 80	.....	12	344 5888	
CLIP, Plastic ..... 62 15-18-85-88 (10 Req.): 62 16-86 (12 Req.).....	12.078	AR	400 0435	
CLIP, Plastic 63 15-16-18	12.078	10	400 0428	
CLIP, Steel 63 80	23.009	4	400 0506	
RETAINER, Nylon ..... 62 04 (12 Req.): 62-63 06-07 (12 Req.): 62-63 05 (10 Req.): 62 08 (10 Req.): 63 08 (12 Req.).....	.....	AR	400 0131	
BOLT, Tee 60 01	.....	2	343 2019	
BOLT, Tee ..... 61-62 01 (2 Req. -13/32" Long): 63 05 (4 Req.): 63 06-07-09 (2 Req.)	.....	2	400 0200	
BOLT, Tee ..... 61 01 (9/32" Long).....	26.034	2	342 5269	
BOLT, Tee 63 15-16-18	26.034	2	400 0496	
BOLT, Tee ..... 65 88 (WWO)	.....	4	400 1440	
NUT, Hexagon..... 60-61 01: 63 15-16-18: 65 88 (WWO)	25.052	2	439 0742	
NUT, Hexagon..... 62 01 (2 Req.): 63 05 (4 Req.): 63 06-07-09 (2 Req.)	17.412	AR	G271166	NA
Center Moulding To Door				
CLIP, Wire..... 61 10-20 (Super)(Custom).....	12.128	12	400 0428	
CLIP..... 64 02-05-07	12.078	2	400 0877	
FASTENER ..... 64 02-05-07.....	12.078	2	400 0855	
FASTENER 64 02-05-07	12.078	2	400 0857	
Lower Moulding To Door				
RETAINER, Nylon ..... 63 05 (10 Req.): 63 06-07-09 (12 Req.).....	12.078	AR	400 0131	
CLIP, Wire..... 60 10-20	12.078	12	346 4507	
CLIP, Wire..... 60 80	.....	12	344 5888	
CLIP, Wire..... 61 80	26.037	12	343 0825	
CLIP, Plastic..... 61 10-20 (12 Req. -Super)(12 Req. -Custom): 62-63 15-18 (10 Req.): 62 16 (14 Req.): 63 16 (10 Req.) .....***(Replaces 400 0380)***	12.128	AR	400 0428	
CLIP, Plastic 65 88 (990-WWD)	26.034	16	400 1371	
FASTENER 63 15-18	.....	2	400 0513	
FASTENER ..... 63 85-88 (12 Req.): 63 86 (14 Req.).....***(Replaces 400 0166)***	12.078	AR	400 0624	
BOLT, Tee ..... 63 05 (4 Req.): 63 06-07-09 (2 Req.).....	.....	AR	400 0200	
NUT, Hexagon..... 65 88 (WWO).....	.....	4	439 0742	

Copyright 1963 American Motors Corp.

GROUP NO. — DESCRIPTION — YEAR and MODEL	PRIMARY GROUP NO.	PER CAR	PART NO.	CODE
BOLT, Tee 62 10	.....	2	400 0386	
BOLT, Tee 63 15-16-18	.....	4	400 0496	
BOLT, Tee ..... 65 88 (WWO)	.....	4	400 1440	
NUT, Hexagon..... 63 05 (4 Req.): 63 06-07-09 (2 Req.).....	17.412	AR	G271166	NA
NUT, Hexagon..... 62 10 (2 Req.): 63 15-16-18 (4 Req.)	25.052	AR	439 0742	
Side Moulding To Door				
CLIP 64 01	12.078	2	400 0877	
CLIP ..... 64 15-18 (660-8 Req.): 64 16 (10 Req.).....	.....	AR	400 0871	
CLIP 64 15-18 (770)	.....	4	400 0872	
CLIP ..... 64 85-88 (8 Req.): 64 89 (10 Req.).....	.....	AR	400 0868	
CLIP, Plastic ..... 65 05-08 (330-1 Req.): 65 06 (330-14 Req.).....	.....	AR	400 0761	
CLIP, Plastic ..... 65 05 (440-12 Req.): 65 07-09 (440-440-H-14 Req.)	.....	AR	400 0759	
CLIP, Plastic ..... 65 17-19 (10 Req.): 65 15-18 (770-8 Req.)(660-4 Req.).....	.....	AR	400 1507	
CLIP, Anti-Slide 65 01	.....	2	400 0759	
CLIP, Anti-Slide ..... 65 10 (770): 65 80 (990).....	.....	2	400 1544	
FASTENER, Snap-in ... 64 01	12.078	2	400 0855	
FASTENER, Screw 64 01	.....	2	400 0749	
BOLT, Tee 64 15-16-18-19	.....	4	400 1311	
BOLT, Tee ..... 65 15-18 (770-2 Req.): 65 16-17-19 (770-4 Req.)...	.....	AR	400 1373	
BOLT, Tee 65 10	.....	2	400 1365	
BOLT, Tee 64 85-88-89	.....	4	400 0665	
NUT, Sealed 64 01	12.078	2	400 0523	
NUT, Hexagon..... 64-65 10-80	25.052	4	439 0742	
PLATE, Front Door Lock Face				
(Left) 60 19-29-83-89	.....	1	341 6705	
(Right) 60 19-29-83-89	.....	1	341 6706	
ATTACHING PARTS				
Plate To Door				
SCREW, Tapping..... 60 19-29-83-89	17.660	2	G161791	NA
PANEL, Front Door (Refer To Group 26 Illustrations)				
26.033 MOULDING, Center Body Pillar				
60 15-18-28-85-88	.....	2	341 1359	
61 10-20-80 .....*(Replaces 344 7790)*	.....	2	448 0232	
ATTACHING PARTS				
Moulding To Pillar				
CLIP, Steel 60-61 10-20-80	12.125	4	437 7405	
OVERLAY, Center Body Pillar				
61 01-10-20-80: 60 15-18-25-28-85-88.....	.....	2	345 1931	
ATTACHING PARTS				
Overlay To Pillar				
SCREW, Tapping..... 60-61 10-20-80	26.059	8	400 0388	
26.034 MOULDING, Rear Door (Refer To Group 26 Illustrations)				

Copyright 1963 American Motors Corp.

GROUP NO. — DESCRIPTION — YEAR and MODEL	PRIMARY GROUP NO.	PER CAR	PART NO.	CODE
ATTACHING PARTS				
Belt Moulding To Door				
CLIP, Anti-Slide ..... 64 05-08 (330)(440): 64 15-18-85-88 (770)(990): 63 85-86-88	26.032	4	400 0577	
CLIP, Plastic ..... 64 05-08 (330)(440): 65 07: 64 15-18-85-88 (770)(990): 63 85-86	26.032	12	400 0150	
CLIP, Plastic 65 15-18-85-88	26.023	8	400 1517	
CLIP, Steel ..... 60 10-20-80 (6 Req.): 61 10-20-80 (4 Req.)	.....	AR	344 0194	
SCREW, Tapping..... 60 10-20-80 (6 Req.): 60 19-29-83-89 (2 Req.)	17.669	AR	800 0272	NA
SCREW, Tapping..... 60 15-18-25-28-85-88 (3/8" Long)	29.358	2	341 0259	
SCREW, Tapping..... 60 15-18-25-28-85-88 (1/2" Long)	17.660	2	G161894	NA
SCREW, Tapping..... 61 10-20-80	17.669	4	G455508	NA
Top Moulding To Door				
BOLT, Tee 65 15-18	23.006	2	400 0519	
NUT, Crown..... 65 15-18	.....	2	320 9545	
NUT, Hexagon..... 65 88 (WWO)	.....	2	439 0742	
Upper Moulding To Door				
RETAINER..... 63 05-08	26.032	6	400 0131	
CLIP, Wire..... 61-62 05-08	12.078	6	346 4507	
CLIP, Wire..... 60 10-20-80	26.032	2	344 5888	
CLIP, Wire..... 62 15-18-85-88 (Custom)(400)	12.078	8	400 0381	
CLIP, Wire..... 61 10-20 (Custom-10 Req.): 61 80 (Super-Custom 10 Req.): 62 15-18-85-88 (Custom)(400-8 Req.).	12.078	AR	400 0381	
CLIP, Plastic ..... 62 15-18-85-88 (Custom)(400)	12.078	8	400 0435	
CLIP, Plastic 63 15-18	12.078	8	400 0428	
FASTENER 60 10-20-80	.....	8	344 6005	
SCREW, Tapping..... 61 05-08	.....	4	342 5269	
BOLT, Tee ..... 61 Thru 63 05-08.....	26.032	4	400 0200	
BOLT, Tee ..... 65 88 (WWO)	26.032	2	400 1440	
BOLT, Tee 63 15-18	26.032	2	400 0496	
NUT, Hexagon..... 61 05-08 (4 Req.): 63 15-18 (2 Req.): 65 88 (WWO-4 Req.)	25.052	AR	439 0742	
NUT, Hexagon..... 62 05-08 (2 Req.): 63 05-08 (4 Req.): 60 80 (2 Req.)	17.412	AR	G271166	NA
NUT, Lock..... 62 15-18-85-86 (Custom)(400)	12.128	2	400 0392	
Center Moulding To Door				
CLIP, Wire..... 60 10-20	26.032	8	341 1546	
CLIP, Plastic..... 61 10-20-80 (6 Req. -Super)(6 Req. -Custom): 62 85-88 (2 Req. -400) .....***(Replaces 400 0380)***	12.078	AR	400 0428	
CLIP, Wire..... 60 80	26.032	8	344 5888	
CLIP, Plastic 64 85-88	26.032	8	400 0868	
BOLT, Tee ..... 60 10-20 (2 Req. -Super)(4 Req. -Custom).....	12.128	AR	439 6733	
BOLT, Tee ..... 61 10-20-80 (2 Req. -Super)(2 Req. -Custom): 62 85-88 (4 Req. -400)	26.032	AR	400 0386	
BOLT, Tee 60 80	27.200	2	400 0374	
BOLT, Tee 64 85-88	26.032	2	400 0665	
NUT, Hexagon..... 60 10-20 (2 Req. -Super)(4 Req. -Custom) 60 80 (2 Req.): 61 10-20-80 (2 Req. -Super)(2 Req. -Custom): 62 85-88 (4 Req. -400): 64 85-88 (4 Req.)	25.052	AR	439 0742	
Lower Moulding To Door				
CLIP, Wire..... 60 10-20	12.078	8	346 4507	
CLIP, Plastic..... 60-61 10-20-80 (6 Req. -Super)(6 Req. -Custom): 62 15-18 (8 Req.): 62 85-88 (2 Req. -400) .....***(Replaces 400 0380)***	12.078	AR	400 0428	

Copyright 1963 American Motors Corp.

GROUP NO. — DESCRIPTION — YEAR and MODEL		PRIMARY GROUP NO.	PER CAR	PART NO.	CODE
CLIP, Wire	60 80	26.032	8	344 5888	
BOLT, Tee	60 10-20	26.032	2	343 9927	
BOLT, Tee	61 10-20-80 (2 Req.): 62 15-18 (2 Req.): 62 85-88 (4 Req. -400)	26.032	AR	400 0386	
BOLT, Tee	63 15-18	26.032	2	400 0496	
BOLT, Tee	60 80	27.200	2	400 0374	
BOLT, Tee	65 88 (WWO)	26.032	2	400 1440	
NUT, Hexagon	60 10-20-80 (2 Req.): 61 10-20-80 (2 Req. -Super) (2 Req. -Custom): 62-63 15-18 (2 Req.): 62 85-88 (2 Req. -400): 65 88 (WWO-2 Req.)	25.052	AR	439 0742	
	Side Moulding To Door				
FASTENER	63 85-86	26.032	8	400 0166	
CLIP	64 15-18	.....	6	400 0886	
CLIP	64 85-88	26.032	8	400 0868	
CLIP, Plastic	65 05-08 (330)	26.032	10	400 0761	
CLIP, Plastic	65 05 (440)	26.032	10	400 0759	
CLIP, Plastic	65 88 (990-WWO)	.....	14	400 1371	
CLIP, Anti-Slide	65 05-08 (330)(440)	26.032	2	400 0760	
CLIP, Anti-Slide	65 15-18 (770)	.....	4	400 1544	
CLIP, Anti-Slide	65 15-18 (770)	26.032	6	400 1507	
BOLT, Tee	65 10 (770)	.....	4	400 1365	
BOLT, Tee	64 85-88	26.032	4	400 0665	
NUT, Hexagon	64 85-88	25.052	4	439 0742	
	Moulding To Ventilator Frame				
RIVET	60 19-29-89	17.558	4	G144543	NA
	PANEL, Rear Door Overlay (Refer To Group 26 Illustrations)				
	ATTACHING PARTS				
	Panel To Body				
SCREW, Tapping	62 85-88 (400)	12.078	4	400 0398	
	ORNAMENT, Rear Door Moulding (Refer To Group 26 Illustrations)				
	ATTACHING PARTS				
	Ornament To Body				
SCREW, Tapping	61 80	17.658	4	G144810	NA
CLIP, Steel	61 80	.....	2	343 5006	
CLIP, Wire	62 85 (400)	.....	4	400 0452	
CLIP, Sidewing	62 85 (400)	.....	2	400 0414	

26.035 MOULDING, Rear Body Pillar Belt

(Left) 60-61 10-20: 60 80: 61 80 (Deluxe)(Super) ***(Replaces 344 4633)***	.....	1	448 0075	
(Right) 60-61 10-20: 60 80: 61 80 (Deluxe)(Super) ***(Replaces 344 4632)***	.....	1	448 0074	
ATTACHING PARTS				
Moulding To Pillar				
CLIP — 60-61 10-20: 60 80: 61 80 (Deluxe)(Super)	12.125	4	437 7405	

26.036 MOULDING, Rear Quarter Body Belt (Refer Group 26 Illustrations For 1964-1965 Models)

(Left) 60 04	.....	1	344 0987
(Left) 60 05-06	.....	1	438 2069
(Left) 61 Thru 63 07...(Incl. Attaching Parts)	.....	1	448 0077
(Left) 63 09...(Incl. Attaching Parts)	.....	1	448 0193
(Left) 63 86...(Incl. Attaching Parts)	.....	1	448 0339

NOTE 26.036-1: Used prior to Body No.
NOTE 26.036-2: Used beginning with Body No.
NOTE 26.036-3: Used prior to Body No.
NOTE 26.036-4: Used beginning with Body No.

Copyright 1963 American Motors Corp.

GROUP NO. — DESCRIPTION — YEAR and MODEL		PRIMARY GROUP NO.	PER CAR	PART NO.	CODE
(Right) 60 04		.....	1	344 0986	
(Right) 60 05-06		.....	1	438 2070	
(Right) 61 Thru 63 07...(Incl. Attaching Parts)		.....	1	448 0076	
(Right) 63 09...(Incl. Attaching Parts)		.....	1	448 0192	
(Right) 63 85-88...(Incl. Attaching Parts)		.....	1	448 0338	
ATTACHING PARTS					
Moulding To Body					
STUD	61 Thru 63 07 (Less Hole)	.....	14	345 8837	
STUD	61 Thru 63 07 (With Hole)	28.073	4	346 0147	
SCREW, Tapping	61 Thru 63 07 (1/2" Long)	.....	2	400 0213	
SCREW, Tapping	61 Thru 63 07 (3/8" Long)	.....	2	400 0240	
SCREW, Tapping	64 07	17.660	2	G163095	NA
SCREW, Tapping	65 80 (990)(990-H)	.....	2	400 1519	
RETAINER	61 Thru 63 07	.....	12	345 8831	
CLIP, Wire	60 04 (18 Req.): 60 05-06 (4 Req.)	.....	AR	343 5089	
CLIP, Plastic	63 09	26.077	8	400 0186	
CLIP, Plastic	64 06-09 (8 Req.): 64 16 (10 Req.): 63 85-88 (10 Req.)	26.032	AR	400 0150	
CLIP, Plastic	64 06-09	.....	2	400 0867	
CLIP, Plastic	65 09 (440-10 Req.)(440-H-8 Req.)	.....	AR	400 1520	
CLIP, Plastic	65 19-89	.....	8	400 1517	
CLIP, Plastic	65 89	.....	7	400 1363	
CLIP, Yellow	64-65 07	.....	2	400 0831	
CLIP, Blue	64-65 07	.....	2	400 0841	
CLIP, Anti-Slide	64 16: 63 85-88	26.032	4	400 0577	
FASTENER	65 19	.....	10	400 0689	
Center Moulding To Body					
STUD	64-65 07 (With Holes)	.....	3	400 0823	
STUD	64-65 07 (Less Holes)	.....	4	400 0824	
STUD	65 17-87	.....	7	400 1376	
SCREW, Tapping	64-65 07	.....	3	400 0735	
Rear Side Moulding To Body					
STUD	64-65 07 (With Holes)	.....	6	400 0823	
STUD	64-65 07 (Less Holes)	.....	2	400 0824	
STUD	65 17-87	.....	10	400 1376	
SCREW, Tapping	64-65 07	.....	3	400 0735	
Front Side Moulding To Body					
STUD	64-65 07 (With Holes)	.....	4	400 0823	
STUD	64-65 07 (Less Holes)	.....	4	400 0824	
SCREW, Tapping	64-65 07	.....	4	400 0735	
CLIP, Tubular	65 17-87	.....	4	400 0506	

26.039 MOULDING, Rear Deck (Refer To Group 26 Illustrations)

ATTACHING PARTS					
Moulding To Deck Panel					
CLIP, Plastic	62 15-16 (Fits 11/32" Hole)	.....	6	400 0436	
CLIP, Plastic	62 15-16-85-86 (Fits 1/4" Hole) ***(Replaces 400 0447)***	12.078	6	400 0428	
CLIP, Plastic	62 85-86 (Fits 11/32" Hole)	.....	6	400 0434	
CLIP, Plastic	65 05-07 (440)	.....	12	400 0763	
CLIP, Plastic	65 10 (Except Marlin)	.....	6	400 1508	#
CLIP, Plastic	65 59 (Marlin)	.....	5	400 0689	#
CLIP, Plastic	65 80	.....	6	400 1534	
CLIP, Wire	61-62 05-06-07 ***(Replaces 343 0792)***	12.078	6	346 4507	
CLIP, Wire	62 15-16 (Fits 5/16" Hole)	12.128	6	400 0119	

Copyright 1963 American Motors Corp.

GROUP NO. — DESCRIPTION — YEAR and MODEL		PRIMARY GROUP NO.	PER CAR	PART NO.	CODE
(Right) 60 04		.....	1	344 0986	
(Right) 60 05-06		.....	1	438 2070	
(Right) 61 Thru 63 07...(Incl. Attaching Parts)		.....	1	448 0076	
(Right) 63 09...(Incl. Attaching Parts)		.....	1	448 0192	
(Right) 63 85-88...(Incl. Attaching Parts)		.....	1	448 0338	
ATTACHING PARTS					
Moulding To Body					
STUD	61 Thru 63 07 (Less Hole)	.....	14	345 8837	
STUD	61 Thru 63 07 (With Hole)	28.073	4	346 0147	
SCREW, Tapping	61 Thru 63 07 (1/2" Long)	.....	2	400 0213	
SCREW, Tapping	61 Thru 63 07 (3/8" Long)	.....	2	400 0240	
SCREW, Tapping	64 07	17.660	2	G163095	NA
SCREW, Tapping	65 80 (990)(990-H)	.....	2	400 1519	
RETAINER	61 Thru 63 07	.....	12	345 8831	
CLIP, Wire	60 04 (18 Req.): 60 05-06 (4 Req.)	.....	AR	343 5089	
CLIP, Plastic	63 09	26.077	8	400 0186	
CLIP, Plastic	64 06-09 (8 Req.): 64 16 (10 Req.): 63 85-88 (10 Req.)	26.032	AR	400 0150	
CLIP, Plastic	64 06-09	.....	2	400 0867	
CLIP, Plastic	65 09 (440-10 Req.)(440-H-8 Req.)	.....	AR	400 1520	
CLIP, Plastic	65 19-89	.....	8	400 1517	
CLIP, Plastic	65 89	.....	7	400 1363	
CLIP, Yellow	64-65 07	.....	2	400 0831	
CLIP, Blue	64-65 07	.....	2	400 0841	
CLIP, Anti-Slide	64 16: 63 85-88	26.032	4	400 0577	
FASTENER	65 19	.....	10	400 0689	
Center Moulding To Body					
STUD	64-65 07 (With Holes)	.....	3	400 0823	
STUD	64-65 07 (Less Holes)	.....	4	400 0824	
STUD	65 17-87	.....	7	400 1376	
SCREW, Tapping	64-65 07	.....	3	400 0735	
Rear Side Moulding To Body					
STUD	64-65 07 (With Holes)	.....	6	400 0823	
STUD	64-65 07 (Less Holes)	.....	2	400 0824	
STUD	65 17-87	.....	10	400 1376	
SCREW, Tapping	64-65 07	.....	3	400 0735	
Front Side Moulding To Body					
STUD	64-65 07 (With Holes)	.....	4	400 0823	
STUD	64-65 07 (Less Holes)	.....	4	400 0824	
SCREW, Tapping	64-65 07	.....	4	400 0735	
CLIP, Tubular	65 17-87	.....	4	400 0506	

26.039 MOULDING, Rear Deck (Refer To Group 26 Illustrations)

ATTACHING PARTS					
Moulding To Deck Panel					
CLIP, Plastic	62 15-16 (Fits 11/32" Hole)	.....	6	400 0436	
CLIP, Plastic	62 15-16-85-86 (Fits 1/4" Hole) ***(Replaces 400 0447)***	12.078	6	400 0428	
CLIP, Plastic	62 85-86 (Fits 11/32" Hole)	.....	6	400 0434	
CLIP, Plastic	65 05-07 (440)	.....	12	400 0763	
CLIP, Plastic	65 10 (Except Marlin)	.....	6	400 1508	#
CLIP, Plastic	65 59 (Marlin)	.....	5	400 0689	#
CLIP, Plastic	65 80	.....	6	400 1534	
CLIP, Wire	61-62 05-06-07 ***(Replaces 343 0792)***	12.078	6	346 4507	
CLIP, Wire	62 15-16 (Fits 5/16" Hole)	12.128	6	400 0119	

Copyright 1963 American Motors Corp.

GROUP NO. — DESCRIPTION — YEAR and MODEL		PRIMARY GROUP NO.	PER CAR	PART NO.	CODE
CLIP, Wire	62 85-86 (Fits 5/16" Hole)	.....	6	400 0117	
RETAINER	62-63 02-05-06-07-09	26.032	6	400 0131	
FASTENER, Bolt	64 05-06-07-09 (Unsealed): 65 05-06 (330)	.....	6	400 0801	
FASTENER, Bolt	64 09 (Sealed): 65 01	12.128	3	400 0851	
FASTENER, Bolt	65 10	.....	2	400 1508	
FASTENER, Bolt	65 85-86-87-89	.....	2	400 1534	
FASTENER, Bolt	65 85-87-89	.....	8	400 1393	
FASTENER, Snap-In	64 09: 65 01	12.128	4	400 0850	
FASTENER, Snap-In	65 15-17-19 (770)	.....	4	400 1503	
FASTENER, Snap-In	65 85-87-89 (990)	.....	4	400 1506	
FASTENER	61 15-25 (Custom) 60-61 85-89	.....	6	344 6006	
FASTENER	63 15-16	.....	7	400 0165	
FASTENER	61 85 (Custom)	.....	6	346 6191	
FASTENER, Bolt	65 15-17-19 (770)	.....	8	400 1500	
SCREW, Tapping	60 05-06 *(Replaces 800 0276)*	17.669	6	400 1269	
SCREW, Tapping	65 85-86-87-89	.....	8	400 1366	
BOLT, Tee	61 85 (Custom)	12.128	6	346 0271	
BOLT, Tee	65 09 (440-H)	.....	12	400 0551	
WASHER, Sealing	61 85 (Custom)	13.155	2	400 0369	
NUT, Lock	64 05-06-07-09 (Unsealed): 65 05-06 (330)	26.096	6	400 0802	
NUT, Sealed	64 09 (Sealed-3 Req.): 65 09 (440-H-12 Req.)	12.128	12	400 0614	
NUT, Sealed	61 15-25 (Custom-6 Req.): 61 85 (12 Req.)	.....	AR	400 0060	
NUT, Tee	60 85-89	26.077	6	341 1607	
NUT, Stamped	65 15-16-17-19	17.428	2	G441266	

PANEL, Rear Deck Overlay (Refer To Group 26 Illustrations)

ATTACHING PARTS

Overlay Panel To Deck Panel

CLIP	64 15-16-19	26.034	6	400 0886	
CLIP, Sealed	63 85-86	23.009	4	400 0506	
FASTENER	63 85-86	.....	2	400 0522	
FASTENER, Sidewing	65 85-86-87-89	.....	4	400 1506	
BOLT, Tee	63 85-86: 64 85-89	.....	8	400 0551	
BOLT, Tee	65 85-86-87-89	.....	8	400 1393	
NUT, Hexagon	63 85-86: 64 85-89	.....	5	400 0517	
NUT, Sealed	63 85-86	12.078	3	400 0523	
NUT, Sealed	64 85-89	.....	6	400 0634	
NUT, Stamped	65 85-86-87-89	17.428	8	G144567	

LETTER, Rear Deck (Refer To Group 26 Illustrations)

ATTACHING PARTS

Letter To Deck Panel

CLIP, Sealed	65 80	26.077	20	400 0160	
NUT, Sealed	65 10	26.095	14	400 0869	#

26.050 MOULDING, Windshield Reveal

(Upper) 64 01	.....	1	350 0586	
(Upper) 60 10-20 *(Ref. Pr. List)*	.....	1	344 4472	
(Upper) 63 10-80: 64 15-16-18-85-88	.....	1	347 2896	
(Upper) 64 19-89	.....	1	350 1344	
(Upper) 60 80 *(Ref. Pr. List)*	.....	1	344 4474	
(Upper-Left) 60 01	.....	1	437 3201	
(Upper-Left) 61 Thru 63 01	.....	1	344 7431	
(Upper-Left) 61 10-20	.....	1	345 1619	
(Upper-Left) 62 10-80	.....	1	346 1389	

Copyright 1963 American Motors Corp.

GROUP NO. — DESCRIPTION — YEAR and MODEL	PRIMARY GROUP NO.	PER CAR	PART NO.	CODE
(Upper-Left) 61 80	.....	1	345 1621	
(Upper-Right) 60 01	.....	1	437 3202	
(Upper-Right) 61 Thru 63 01	.....	1	344 7430	
(Upper-Right) 61 10-20	.....	1	345 1618	
(Upper-Right) 62 10-80	.....	1	346 1388	
(Upper-Right) 61 80	.....	1	345 1620	
(Lower) 60 01	.....	1	437 3203	
(Lower) 61 Thru 63 01	.....	1	344 7432	
(Lower) 64 01	.....	1	350 0587	
(Lower) 63 10-80: 64 10-80	.....	1	347 2897	
(Lower-Left) 60 Thru 62 10-20-80 ***(Replaces 344 5871)***	.....	1	345 1625	#
(Lower-Right) 60 Thru 62 10-20-80 ***(Replaces 344 5870)***	.....	1	345 1624	#
(Side-Left) 64 01	.....	1	350 0729	
(Side-Left) 63 10-80: 64 15-16-18-85-88	.....	1	347 2905	
(Side-Left) 64 19-89	.....	1	350 1347	
(Side-Right) 64 01	.....	1	350 0728	
(Side-Right) 63 10-80: 64 15-16-18-85-88	.....	1	347 2904	
(Side-Right) 64 19-89	.....	1	350 1346	
ATTACHING PARTS Moulding To Body				
CLIP ..... 65 59 (Marlin)	.....	22	400 1377	
COVER, Windshield Reveal				
60 10-20-80 (4 Req. -1-1/4"): 61 10-20-80 (2 Req. -1-1/4"): 62 10-80 (4 Req. -1-1/4")	.....	AR	344 4476	
60 10-20-80 (2 Req. -2-1/8"): 61 10-20-80 (2 Req. -2-1/8"): 62 10-80 (1 Req. -2-1/8")	.....	AR	345 1911	
60 10-20-80 (6-1/2")	.....	2	345 1610	
(Top) 60 Thru 63 01	26.060	1	437 3205	
(Corner) 60 01	26.060	2	437 3204	
(Corner) 61 Thru 63 01	.....	2	344 7434	
CLIP, Reveal Moulding Corner				
61 01	.....	AR	346 4473	
26.056 MOULDING, Rear Quarter Window Reveal (Refer Group 26 Illustrations For 1964-1965 Models)				
(Upper) 60 Thru 62 18-28-83-88	.....	2	344 4456	
(Upper) 63 18-88	.....	2	349 0121	
(Lower) 63 18-88	.....	2	349 0120	
(Lower & Front-Left) 60 Thru 62 18-28-83-88	.....	1	344 4461	
(Lower & Front-Right) 60 Thru 62 18-28-83-88	.....	1	344 4460	
(Front-Left) 63 18-88	.....	1	347 2785	
(Front-Right) 63 18-88	.....	1	347 2784	
(Rear) 60 Thru 62 18-28-83-88	.....	2	344 4462	
(Rear-Left) 63 18-88	.....	1	347 2787	
(Rear-Right) 63 18-88	.....	1	347 2786	
COVER, Rear Quarter Window Reveal				
(Upper-Front) 60 Thru 62 18-28-83-88	.....	2	344 4504	
(Upper-Rear) 60 Thru 62 18-28-83-88	.....	2	344 4506	
(Lower-Rear) 60 Thru 62 18-28-83-88	.....	2	344 4508	

Copyright 1963 American Motors Corp.

GROUP NO. — DESCRIPTION — YEAR and MODEL	PRIMARY GROUP NO.	PER CAR	PART NO.	CODE
26.058 MOULDING, Rear Window Reveal (Refer Group 26 Illustrations For 1964-1965 Models)				
(Upper) 61 02-05-06: 62 05-06 (Custom)(400): 63 05-06 (330)(400)	.....	1	345 3278	
(Upper) 62 02-05-06 (Deluxe): 63 02-05-06 (220)	.....	1	347 1657	
(Upper-Left) 63 09	.....	1	349 0047	
(Upper-Left) 60 Thru 62 15-16-19-25-29-85-86-89	.....	1	344 4631	
(Upper-Left) 60 Thru 62 18-28-83-88 (LVT)	.....	1	344 0781	
(Upper-Left) 60 Thru 62 18-28-88 (WVT)	.....	1	345 1925	
(Upper-Left) 63 15-16-85-86	.....	1	347 2919	
(Upper-Right) 63 09	.....	1	349 0046	
(Upper-Right) 60 Thru 62 15-16-19-25-29-85-86-89	.....	1	344 4630	
(Upper-Right) 60 Thru 62 18-28-83-88 (LVT)	.....	1	344 0780	
(Upper-Right) 60 Thru 62 18-28-88 (WVT)	.....	1	345 1924	
(Upper-Right) 63 15-16-85-86	.....	1	347 2918	
(Lower) 61 02-05-06: 62 05-06 (Custom)(400): 63 05-06 (330)(400)	.....	1	345 3279	
(Lower) 62 02-05-06 (Deluxe): 63 02-05-06 (220)	.....	1	347 1658	
(Lower) 63 15-16-85-86	.....	1	347 2921	
(Lower-Left) 63 09 (Note 26.058-1 Type 1)	.....	1	349 0048	
(Lower-Left) 63 09 (Note 26.058-1 Type 2)	.....	1	350 5573	
(Lower-Left) 60 Thru 62 15-16-19-25-29-85-86-89	.....	1	344 1675	
(Lower-Right) 63 09 (Note 26.058-1 Type 2)	.....	1	350 5572	
(Lower-Right) 60 Thru 62 15-16-19-25-29-85-86-89	.....	1	344 1674	
COVER, Rear Window Reveal (Refer Group 26 Illustrations For 1964-1965 Models)				
60 Thru 62 18-28-83-88	.....	1	345 1308	
60 15-19-25-29-85-89: 61-62 15-85: 61 25: 62 86 ***(Replaces 344 1678)***	26.050	4	344 4476	
61-62 15-85: 61 25: 62 86	.....	4	344 4476	
(Upper) 63 09-15-16-85-86	.....	1	347 2922	
(Lower) 63 09	.....	1	350 5570	
26.059 PANEL, Side Roof Trim...(Incl. Medallion)				
(Left) 60-61 80 (Custom) ***(Replaces 344 3687)***	.....	1	448 0229	
(Left) 62 85-88 (400) ***(Replaces 346 1689)***	.....	1	448 0027	
(Left) 62 86 (400)	.....	1	346 1691	
(Right) 60-61 80 (Custom) ***(Replaces 344 3686)***	.....	1	448 0228	
(Right) 62 85-88 (400) ***(Replaces 346 1688)***	.....	1	448 0026	
(Right) 62 86 (400)	.....	1	346 1690	
ATTACHING PARTS Panel To Roof				
SCREW, Tapping..... 60-61 80 (Custom-12 Req.): 62 80 (400-6 Req.)	.....	AR	400 0388	
MEDALLION, Side Roof Trim Panel				
60-61 80 (Custom): 62 80 (400)	.....	2	344 3691	
60 80 (Super): 61 80 (Deluxe)(Super): 62 80 (Deluxe) (Custom) ***(Replaces 344 3690)***	.....	2	448 0028	
ATTACHING PARTS Medallion To Roof				
CLIP..... 60-61 80 (Super): 61-62 80 (Deluxe): 62 80 (Custom)	.....	4	400 0387	

NOTE 26.058-1: Two Types of Mouldings were used on the 63 09. They can be identified as follows:
Type 1: A one piece moulding.
Type 2: A two piece moulding with a cover in the center.

Copyright 1963 American Motors Corp.

GROUP NO. — DESCRIPTION — YEAR and MODEL	PRIMARY GROUP NO.	PER CAR	PART NO.	CODE
26.073 MOULDING, Front Pillar Side				
(Left) 64-65 07...(Incl. Attaching Parts)	.....	1	448 1021	
(Right) 64-65 07...(Incl. Attaching Parts)	.....	1	448 1020	
ATTACHING PARTS Moulding To Body				
SCREW, Tapping..... 64-65 07: 65 17-87	17.648	4	G161415	NA
26.074 MOULDING, Rocker Panel (Refer To Group 26 Illustrations)				
ATTACHING PARTS Moulding To Panel				
FASTENER ..... 64-65 01 (20 Req.): 64 10-80 (14 Req.)	.....	AR	400 0837	
FASTENER 65 10-80	.....	12	400 1360	
SCREW, Tapping..... 64 01-10-80 (3/8" Long)	12.078	8	400 0398	
SCREW, Tapping..... 64 01-10-80 (5/8" Long): 65 01	26.060	4	439 2504	
SCREW, Tapping..... 65 10-80	.....	4	400 1550	
SHIELD, Rocker Panel Moulding				
(Front-End) 65 10-80	.....	2	400 1562	
(Rear-End) 65 10-80	.....	2	400 1563	
26.075 COVER, Drip Moulding Snap On (Refer Group 26 Illustrations For 1964-1965 Models)				
(Rear Window) 60-61 18-28-83-88	.....	1	344 0399	
(Rear Window) 62 18-88 (400)	.....	1	346 1955	
(Side-Left) 63 09	.....	1	349 0081	
(Side-Left-Front) 60-61 15-25-85: 62 15-16-85-86 (400)	.....	1	345 1723	
(Side-Left-Front) 60-61 18-28-88: 62 18-88 (400)	.....	1	344 0911	
(Side-Left-Front) 60 19-29-89	.....	1	345 1725	
(Side-Left-Front) 60 83	.....	1	344 0915	
(Side-Left-Rear) 60-61 18-28-88	.....	1	344 0913	
(Side-Left-Rear) 62 18-88 (400)	.....	1	346 1957	
(Side-Left-Rear) 60 83	.....	1	344 0917	
(Side-Right) 63 09	.....	1	349 0080	
(Side-Right-Front) 60-61 15-25-85: 62 15-16-85-86 (400)	.....	1	345 1722	
(Side-Right-Front) 60-61 18-28-88: 62 18-88 (400)	.....	1	344 0910	
(Side-Right-Front) 60 19-29-89	.....	1	345 1724	
(Side-Right-Front) 60 83	.....	1	344 0914	
(Side-Right-Rear) 60-61 18-28-88	.....	1	344 0912	
(Side-Right-Rear) 62 18-88 (400)	.....	1	346 1956	
(Side-Right-Rear) 60 83	.....	1	344 0916	
(Front-Left) 63 10-80	.....	1	349 2073	
(Front-Right) 63 10-80	.....	1	349 2072	
(Rear) 63 18-88	.....	1	347 2925	
(Rear-Left) 63 10-80	.....	1	349 2077	
(Rear-Left) 63 18-88	.....	1	349 2075	
(Rear-Right) 63 10-80	.....	1	349 2076	
(Rear-Right) 63 18-88	.....	1	349 2074	
(Joint) 61 10-20-80 (Deluxe): 61 10-20 (Super): 62 10-80 (Deluxe)(Custom): 64 15-16-18 (550)(660)	.....	2	344 0395	

NOTE 26.074-1: Two Types of Rocker Panal Mouldings were used on the 164 10 CAN. They can be identified as follows:
Type 1: Less Embossed Ridges.
Type 2: With Embossed Ridges.

Copyright 1963 American Motors Corp.

GROUP NO. — DESCRIPTION — YEAR and MODEL	PRIMARY GROUP NO.	PER CAR	PART NO.	CODE
(Joint) 63-64 10-80	.....	2	349 2071	
(Joint-Front) 60 15-18-25-28-85-88	.....	2	344 0395	
(Joint-Rear) 60-61 18-28-88: 62 18-88 (400)	.....	2	344 5919	
(Joint-Rear) 60 83	.....	2	344 5920	

26.077 MOULDING, Roof Rear Side (Refer Group 26 Illustrations For 1964-1965 Models)

(Side-Left) 61 05-06 (Custom): 62-63 05-06 (400)	.....	2	448 0081	
(Side-Left) 63 15-16-85-86	.....	1	448 0837	
(Side-Left) 63 18-88	.....	1	448 0841	
(Side-Right) 61 05-06 (Custom): 62-63 05-06 (400)	.....	2	448 0080	
(Side-Right) 63 15-16-85-86	.....	1	448 0836	
(Side-Right) 63 18-88	.....	1	448 0840	
(Rear) 63 88	.....	4	448 0378	
(Rear-Left) 60 15-19-25-29-85-89 (Note 26.077-1)	.....	1	447 8745	
(Rear-Left) 60 15-19-25-29-85-89 (Note 26.077-2): 61 15-25-85	.....	1	448 0227	
(Rear-Left) 62 15-16-85-86 (400)	.....	1	448 0231	
(Rear-Left) 63 15-16-85-86	.....	1	448 0839	
(Rear-Right) 60-15-19-25-29-85-89 (Note 26.077-1) ***(Ref. Pr. List)***	.....	1	447 8744	
(Rear-Right) 60 15-19-25-29-85-89 (Note 26.077-2): 61 15-25-85	.....	1	448 0226	
(Rear-Right) 62 15-16-85-86 (400)	.....	1	448 0230	
(Rear-Right) 63 15-16-85-86	.....	1	448 0838	

ATTACHING PARTS

Moulding To Roof Panel

SCREW, Tapping	60 15-19-25-29-85-89 (5/8" Long)	17.660	2	G161901	NA
SCREW, Tapping	60-61 15-19-25-29-85-89 (1/2" Long)	17.660	6	G161897	NA
SCREW, Tapping	60 15-19-26-29-85-89: 61 15-25-85 (3/8" Long) ***(Replaces 344 4725)***	29.358	6	341 0259	
SCREW, Tapping	62 15-16-85-86	.....	9	400 0073	
SCREW, Tapping	63 15-16-85-86: 64 15-16	.....	2	400 0516	
RETAINER	62-63 05-06	26.032	8	400 0131	
CLIP, Wire	61 05-06 ***(Replaces 343 0792)***	12.078	8	346 4507	
CLIP, Steel	60-61 15-19-25-29-85-89	.....	6	344 0379	
CLIP, Steel	63 88	.....	8	400 0160	
CLIP, Steel	64 09 (440-H-20 Req.): 65 59 (Marlin-32 Req.)	.....	AR	400 0762	
CLIP, Plastic	63 15-16-85-88 (3 Req.): 63 Thru 65 18-88 (4 Req.): 64 15-16 (3 Req.): 64 19-89 (8 Req.)	.....	AR	400 0186	
CLIP	64 02-05-06-08 (4 Req.): 64 09 (6 Req.)	.....	AR	400 0729	
CLIP, Plastic	65 15-16-85-86	.....	22	400 0762	
FASTENER, Sidewing	65 15-16-85-86	.....	2	400 1505	#

Corner Moulding To Side And Upper Mouldings

CLIP	65 15-16-85-86	.....	4	351 7427	

COVER, Roof Panel Rear Trim Moulding

(Center) 60-61 15-19-25-29-85-89 ***(Replaces 344 4627)***	.....	1	448 0236	
(Center) 62 15-16-85-86 (400) ***(Replaces 346 2519)***	.....	1	448 0234	

ATTACHING PARTS

Cover To Roof Panel

SCREW, Cover	60 15-19-25-29-85-89: 61 15-25-85 ***(Replaces 344 4725)***	29.358	1	341 0259	

MOULDING, Roof Side Extension Panel (Refer Group 26 Illustrations For 1964-1965 Models)

ATTACHING PARTS

Moulding To Body

CLIP, Plastic	64 02-05-06-08-10-80	27.276	2	400 0168	
CLIP, Snap-In	64 19-89	.....	6	400 0689	

NOTE 26.077-1: Used prior to Body No. 69398.
NOTE 26.077-2: Used beginning with Body No. 69398.
NOTE 26.077-3: Used prior to Body No.
NOTE 26.077-4: Used beginning with Body No.

Copyright 1963 American Motors Corp.

GROUP NO. — DESCRIPTION — YEAR and MODEL	PRIMARY GROUP NO.	PER CAR	PART NO.	CODE
MOULDING, Roof Panel Front				
(Center-Left) 63 09	.....	1	448 0817	
(Center-Right) 63 09	.....	1	448 0816	
(End-Left) 63 09	.....	1	448 0239	
(End-Right) 63 09	.....	1	448 0238	
ATTACHING PARTS				
Moulding To Roof Panel				
RETAINER 63 09	.....	9	400 0153	
SPACER 63 09	.....	2	400 0284	
SCREW, Tapping 63 09	.....	2	400 0285	
COVER, Roof Panel Front Center Joint				
63 09	.....	1	350 5429	
ORNAMENT, Roof Side Extension (Refer Group 26 Illustrations For 1964-1965 Models)				
(Left) 60-61 18-28-83-88	.....	1	448 0083	
(Left) 62 18-88 (400): 62 88 (Custom)	.....	1	448 0031	
(Left-Upper) 63 85-86	.....	1	448 0375	
(Left-Lower) 63 85-86	.....	1	448 0377	
(Right) 60-61 18-28-83-88	.....	1	448 0082	
(Right) 62 18-88 (400): 62 88 (Custom)	.....	1	448 0030	
(Right-Upper) 63 85-86	.....	1	448 0374	
(Right-Lower) 63 85-86	.....	1	448 0376	
(Spear) 63 85-86	.....	4	448 0379	
ATTACHING PARTS				
Ornament To Roof Extension				
CLIP, Steel ..... 60 18-28-83-88: 62 18-88 (400): 62 88 (Custom)	26.034	10	343 5006	
CLIP, Plastic ..... 60-61 18-28-83-88: 62 18-88 (400): 62 88 (Custom) .	.....	10	400 0379	
NUT, Sealed ..... 65 01 (4 Req.): 63 85-86 (8 Req.)	.....	AR	400 0509	
SCREW 65 09 (440-H)	.....	2	G166303	NA
Upper Ornament To Roof Extension				
NUT, Sealed 63 85-86: 64 85	.....	8	400 0509	
Lower Ornament To Roof Extension				
SCREW, Tapping 63 85-86	.....	2	400 0516	
NUT, Sealed 63 85-86: 64 85	.....	2	400 0509	
NAMEPLATE, Roof Side Extension (Refer Group 26 Illustrations For 65 Models)				
63 09	.....	2	448 0240	
(Left) 63 88	.....	1	448 0441	
(Right) 63 88	.....	1	448 0440	
ATTACHING PARTS				
Nameplate To Roof Extension				
SCREW, Tapping 63 09	23.009	4	400 0266	
CLIP, Sealed 65 08-09: 63 88	23.009	4	400 0506	
NUT 65 05-06	.....	4	400 0509	

26.095 ORNAMENT, Rear Deck And Tailgate (Handle)(Refer To Group 26 Illustrations)

Copyright 1963 American Motors Corp.

GROUP NO. — DESCRIPTION — YEAR and MODEL	PRIMARY GROUP NO.	PER CAR	PART NO.	CODE
MOULDING, Roof Panel Front				
(Center-Left) 63 09	.....	1	448 0817	
(Center-Right) 63 09	.....	1	448 0816	
(End-Left) 63 09	.....	1	448 0239	
(End-Right) 63 09	.....	1	448 0238	
ATTACHING PARTS Moulding To Roof Panel				
RETAINER..... 63 09	.....	9	400 0153	
SPACER..... 63 09	.....	2	400 0284	
SCREW, Tapping..... 63 09	.....	2	400 0285	
COVER, Roof Panel Front Center Joint				
63 09	.....	1	350 5429	
ORNAMENT, Roof Side Extension (Refer Group 26 Illustrations For 1964-1965 Models)				
(Left) 60-61 18-28-83-88	.....	1	448 0083	
(Left) 62 18-88 (400): 62 88 (Custom)	.....	1	448 0031	
(Left-Upper) 63 85-86	.....	1	448 0375	
(Left-Lower) 63 85-86	.....	1	448 0377	
(Right) 60-61 18-28-83-88	.....	1	448 0082	
(Right) 62 18-88 (400): 62 88 (Custom)	.....	1	448 0030	
(Right-Upper) 63 85-86	.....	1	448 0374	
(Right-Lower) 63 85-86	.....	1	448 0376	
(Spear) 63 85-86	.....	4	448 0379	
ATTACHING PARTS Ornament To Roof Extension				
CLIP, Steel..... 60 18-28-83-88: 62 18-88 (400): 62 88 (Custom)	26.034	10	343 5006	
CLIP, Plastic..... 60-61 18-28-83-88: 62 18-88 (400): 62 88 (Custom) .	.....	10	400 0379	
NUT, Sealed..... 65 01 (4 Req.): 63 85-86 (8 Req.).....	.....	AR	400 0509	
SCREW..... 65 09 (440-H).....	.....	2	G166303	NA
Upper Ornament To Roof Extension				
NUT, Sealed..... 63 85-86: 64 85.....	.....	8	400 0509	
Lower Ornament To Roof Extension				
SCREW, Tapping..... 63 85-86.....	.....	2	400 0516	
NUT, Sealed..... 63 85-86: 64 85.....	.....	2	400 0509	
NAMEPLATE, Roof Side Extension (Refer Group 26 Illustrations For 65 Models)				
63 09	.....	2	448 0240	
(Left) 63 88	.....	1	448 0441	
(Right) 63 88	.....	1	448 0440	
ATTACHING PARTS Nameplate To Roof Extension				
SCREW, Tapping..... 63 09	23.009	4	400 0266	
CLIP, Sealed..... 65 08-09: 63 88.....	23.009	4	400 0506	
NUT..... 65 05-06.....	.....	4	400 0509	
26.095 ORNAMENT, Rear Deck And Tailgate (Handle)(Refer To Group 26 Illustrations)				

Copyright 1963 American Motors Corp.

GROUP NO. — DESCRIPTION — YEAR and MODEL		PRIMARY GROUP NO.	PER CAR	PART NO.	CODE
ATTACHING PARTS					
	Ornament To Rear Deck				
SEAL, Rubber	60 02-05-06	5.160	2	313 0998	
WASHER, Lock	60 02-05-06	17.820	2	G103319	NA
WASHER, Plain	60 02-05-06	17.814	2	G103339	NA
NUT, Sealed	61-62 01	12.078	3	344 1668	
NUT, Sealed	63 01	23.078	3	400 0391	
MEDALLION, Rear Deck And Tailgate (Refer To Group 26 Illustrations)					
ATTACHING PARTS					
	Medallion To Rear Deck				
NUT, Sealed	65 59 (Marlin)	.....	3	320 9545	
NUT, Sealed	63 80	23.078	2	400 0391	
CLIP	64 85-89	.....	3	400 0869	
CLIP	64 88	23.009	3	400 0266	
CLIP	65 18	23.006	3	400 1334	
GASKET, Deck Door Medalion					
65 59 (Marlin)		.....	1	353 0726	#

26.096 MOULDING, Tailgate (Refer To Group 26 Illustrations)

ATTACHING PARTS					
	Moulding To Tailgate				
RETAINER	62-63 04-08	26.032	6	400 0131	
FASTENER, Snap-In	64-65 08	.....	5	400 0808	
FASTENER, Snap-In	65 18 (770-WVT-4 Req.)(700-LVT-8 Req.)	.....	AR	400 1502	
FASTENER, Snap-In	65 88 (990-WVT-4 Req.)(990-LVT-8 Req.)	.....	AR	400 1505	
FASTENER, Bolt	64 08	.....	2	400 0863	
FASTENER, Bolt	65 18 (770-WVT-8 Req.)(770-LVT-4 Req.)	.....	AR	400 1500	
FASTENER, Bolt	65 88	12.126	2	400 1567	
FASTENER, Bolt	65 88 (WVT-WWO-8 Req.)(LVT-WWO-2 Req.)	26.034	AR	400 1393	
FASTENER	61 18-28-88 (1-1/6" Long): 60 83-88	.....	8	344 6007	
FASTENER	63 18	.....	6	400 0179	
FASTENER	61 88 (2-1/16" Long)	.....	6	346 0272	
FASTENER	61 88 (2" Long)	.....	2	346 0269	
CLIP, Wire	62 18 (Fits 5/16" Hole)*(Replaces 400 0120)*	12.128	8	400 0119	
CLIP	64 15-16 (4 Req.): 64 18 (7 Req.)	.....	AR	400 0828	
CLIP, Wire	62 88 (Fits 5/16" Hole)*(Replaces 400 0118)*	26.039	8	400 0117	
CLIP, Plastic	65 08	.....	2	400 0552	
CLIP, Plastic	62 18 (Fits 11/32" Hole)	26.039	8	400 0436	
CLIP, Plastic	62 18 (400-Fits 1/4" Hole): 62 88 (Fits 1/4" Hole)*(Replaces 400 0380)*	12.078	8	400 0428	
CLIP, Plastic	65 18	.....	4	400 1509	
CLIP, Plastic	62 88 (Fits 11/32" Hole)	26.039	8	400 0434	
CLIP, Plastic	65 88	.....	4	400 1534	
CLIP, Plastic	65 88 (990-WVT-WWO-4 Req.)(990-LVT-WWO-10 Req.)	.....	AR	400 1371	
BOLT, Tee	63 18	26.039	2	400 0176	
BOLT, Tee	65 18	26.039	2	400 1537	
NUT, Hexagon	64 08	.....	2	400 0802	
NUT, Hexagon	63 18	26.039	2	400 0517	
NUT, Stamped	65 18	17.428	2	G441256	
PANEL, Tailgate Overlay (Refer To Group 26 Illustrations)					
ATTACHING PARTS					
	Panel To Tailgate				
SCREW, Tapping	62 88 (400)	12.078	3	400 0398	
CLIP	64 18	.....	7	400 0887	
CLIP, Sealed	63 80	23.009	4	400 0506	
CLIP	64 88	.....	7	400 0552	
NUT, Hexagon	64 88	26.039	7	400 0517	

Copyright 1963 American Motors Corp.

GROUP NO. — DESCRIPTION — YEAR and MODEL	PRIMARY GROUP NO.	PER CAR	PART NO.	CODE
LETTER, Tailgate (Refer To Group 26 Illustrations)				
ATTACHING PARTS				
Letter To Tailgate				
CLIP, Sealed..... 65 80	26.077	20	400 0160	
26.100 MOULDING, Tailgate Window Reveal (Refer Group 26 Illustrations For 1964-1965 Models)				
61-62 18-28-83-88 (LVT) ...(Incl. Weatherstrip).....*(Replaces 344 1591)*	.....	1	448 0088	
61-62 18-28-83-88 (WVT)...(Incl. Weatherstrip).....*(Replaces 344 5848)*	.....	1	448 0089	
62 18-88 (LVT)...(Incl. Weatherstrip)	.....	1	448 0034	
62 18-88 (WVT)...(Incl. Weatherstrip)	.....	1	448 0035	
(Upper) 63 18-88 (LVT)	.....	1	348 2898	
(Upper) 63 18-88 (WVT-Note 26.100-1 Type 1).....	.....	1	348 2899	
(Upper) 63 18-88 (WVT-Note 26.100-1 Type 2).....	.....	1	448 0783	
(Side-Left) 63 18-88 (LVT).....	.....	1	348 7969	
(Side-Left) 63 18-88 (WVT-Note 26.100-1 Type 1)	.....	1	348 7971	
(Side-Left) 63 18-88 (WVT-Note 26.100-1 Type 2).....	.....	1	448 0785	
(Side-Right) 63 18-88 (LVT)	.....	1	348 7968	
(Side-Right) 63 18-88 (WVT-Note 26.001-1 Type 1) .....*(Replaces 348 7970)*	.....	1	448 0784	#
(Side-Right) 63 18-88 (WVT-Note 26.100-1 Type 2).....	.....	1	448 0784	
ATTACHING PARTS				
Moulding To Tailgate				
CLIP, Steel..... 60-61 18-28-83-88	.....	7	344 4485	
CLIP, Steel..... 62 18-88	.....	7	400 0128	
CLIP, Left..... 64-65 08 (Upper): 64-65 18-88 (LVT-Upper).....	.....	1	400 0693	
CLIP, Left..... 64-65 08 (Center): 64-65 18-88 (LVT-Center)	.....	1	400 0695	
CLIP, Left..... 64-65 08 (Lower): 64-65 18-88 (LVT-Lower)	.....	1	400 0697	
CLIP, Right..... 64-65 08 (Upper): 64-65 18-88 (LVT-Upper).....	.....	1	400 0692	
CLIP, Right..... 64-65 08 (Center): 64-65 18-88 (LVT-Center)	.....	1	400 0694	
CLIP, Right..... 64-65 08 (Lower): 64-65 18-88 (LVT-Lower)	.....	1	400 0696	

NOTE 26.100-1: Two Types of Tailgate Sealers were used on the 63 18-88 (WVT). They can be identified as follows:
Type 1: Rubber Stock above Retainer is 1/16" Thick.
Type 2: Rubber Stock above Retainer is 1/4" Thick.

Copyright 1963 American Motors Corp.

GROUP NO. — DESCRIPTION — YEAR and MODEL	PRIMARY GROUP NO.	PER CAR	PART NO.	CODE

Copyright 1963 American Motors Corp.

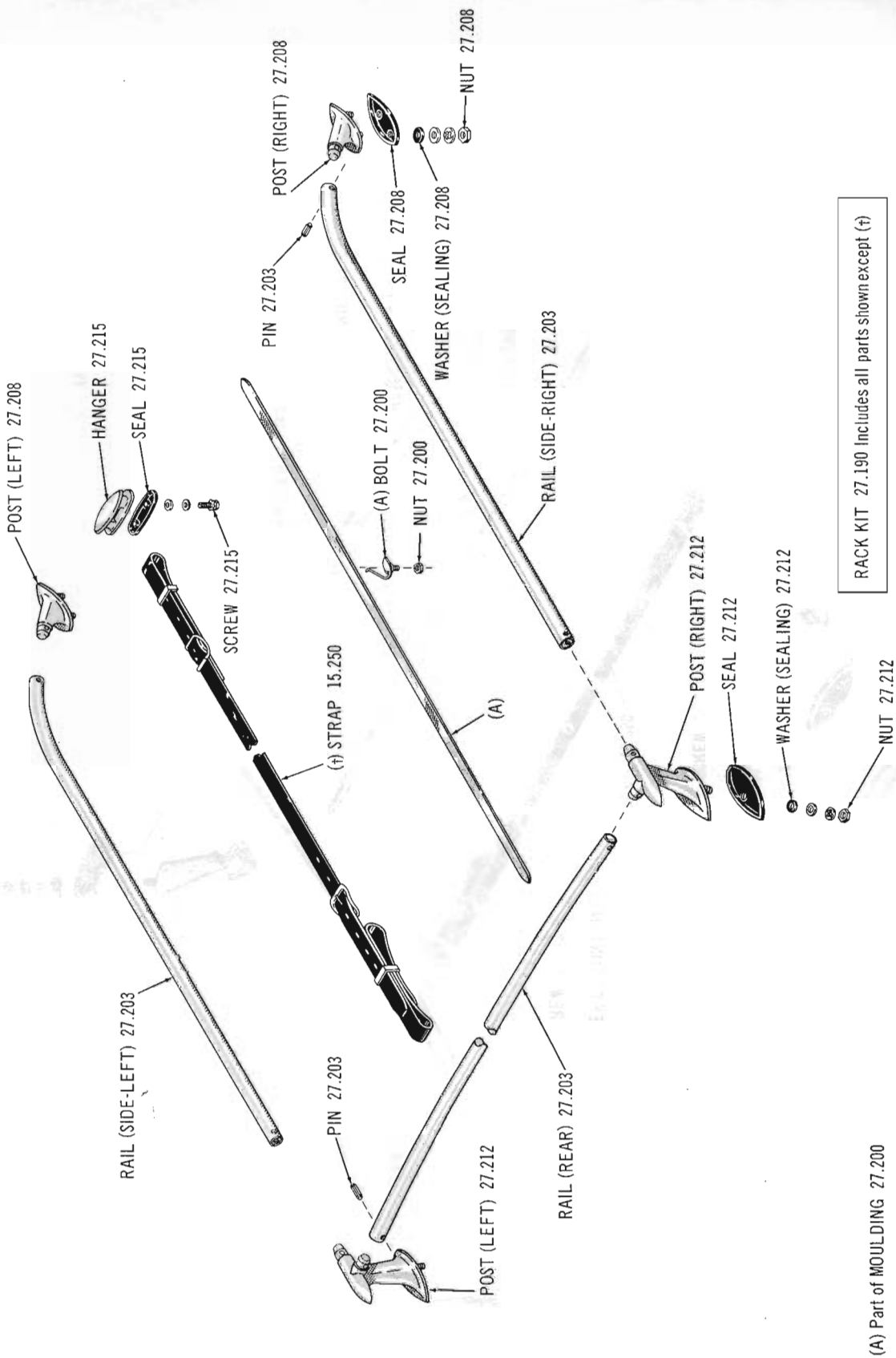

LUGGAGE RACK 61 thru Current 04-08

Copyright 1963 American Motors Corp.

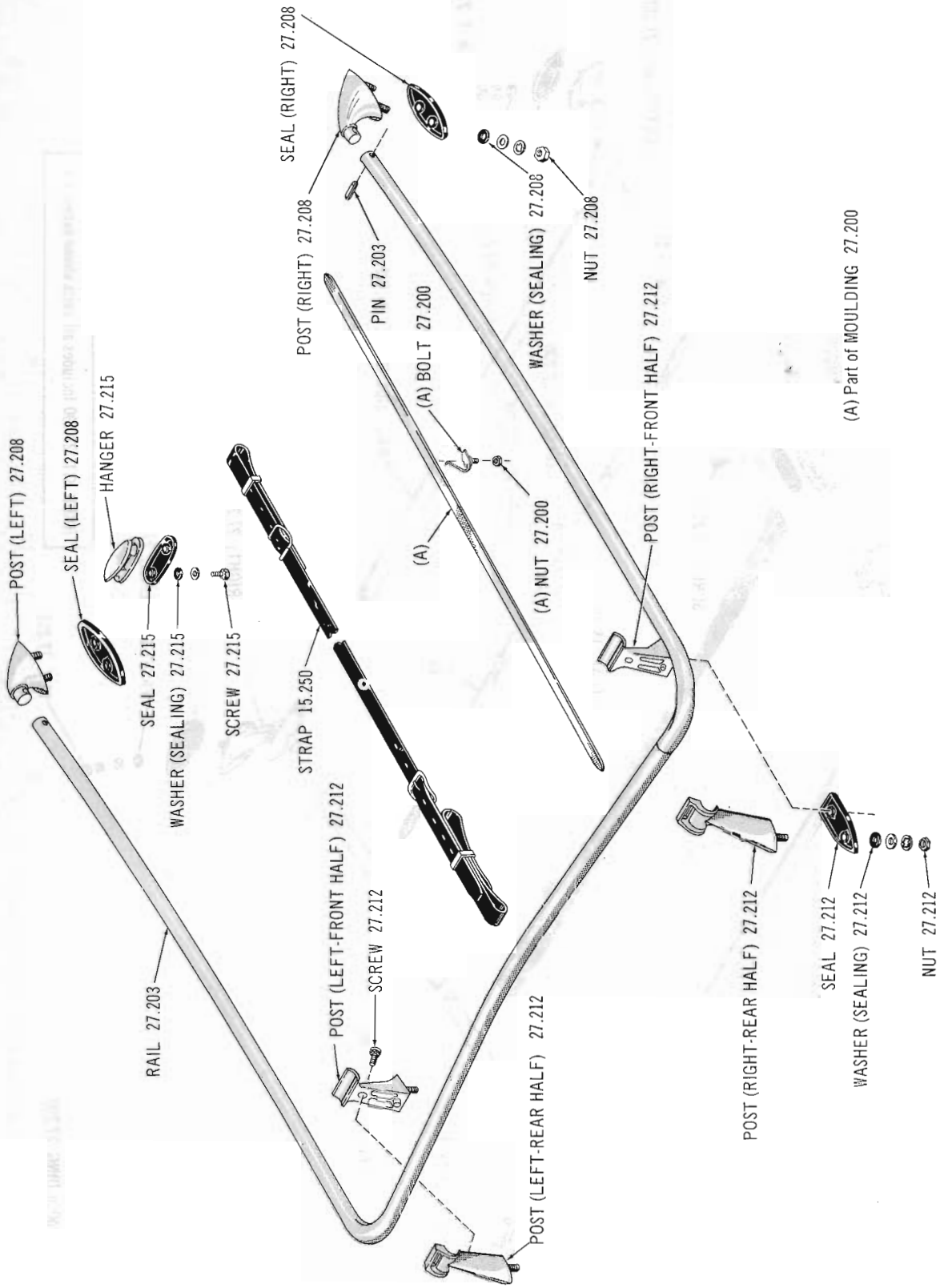

LUGGAGE RACK 60 thru Current 18-28-88

Copyright 1963 American Motors Corp.

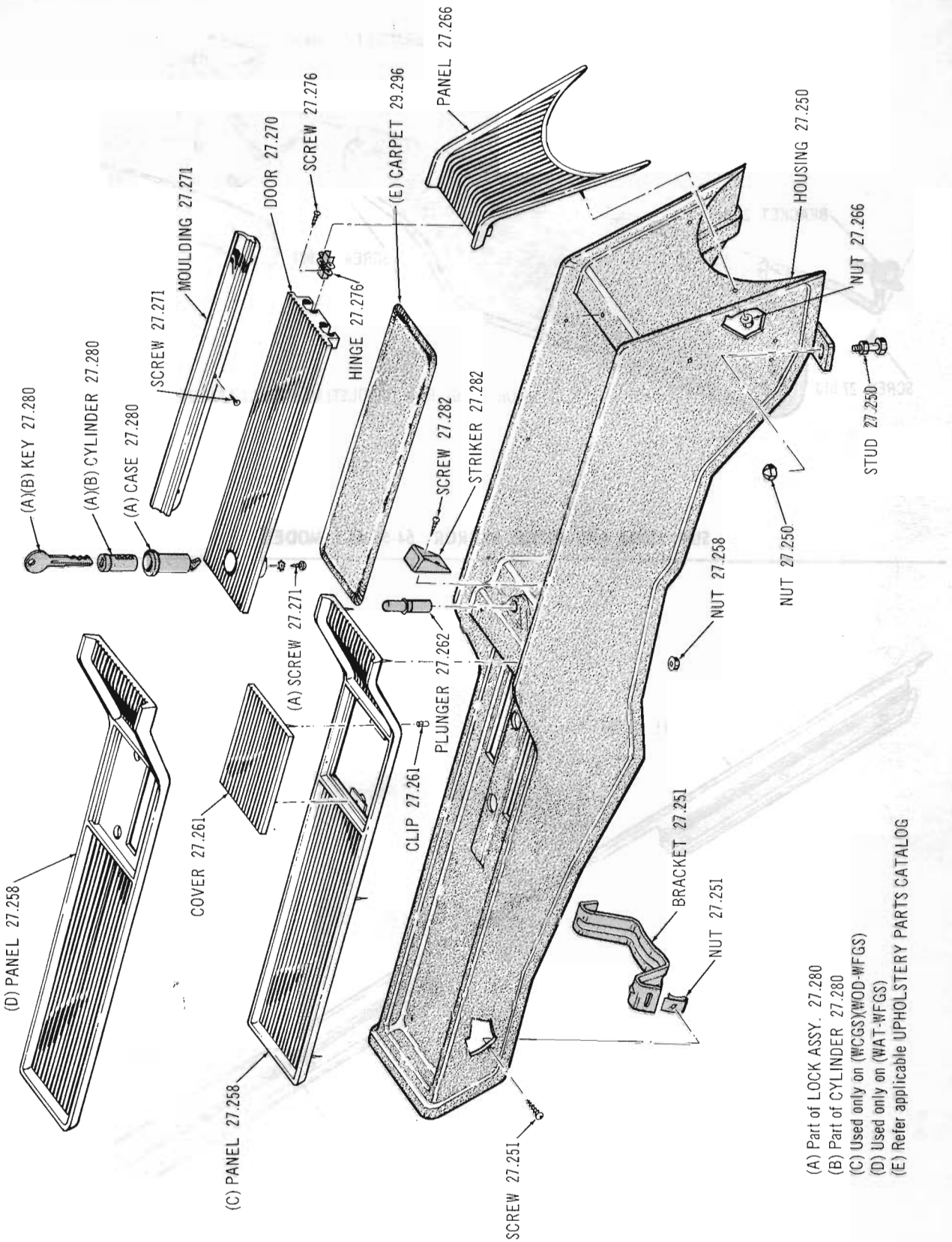

FLOOR CONSOLE 64-65 ALL MODELS

Copyright 1963 American Motors Corp.

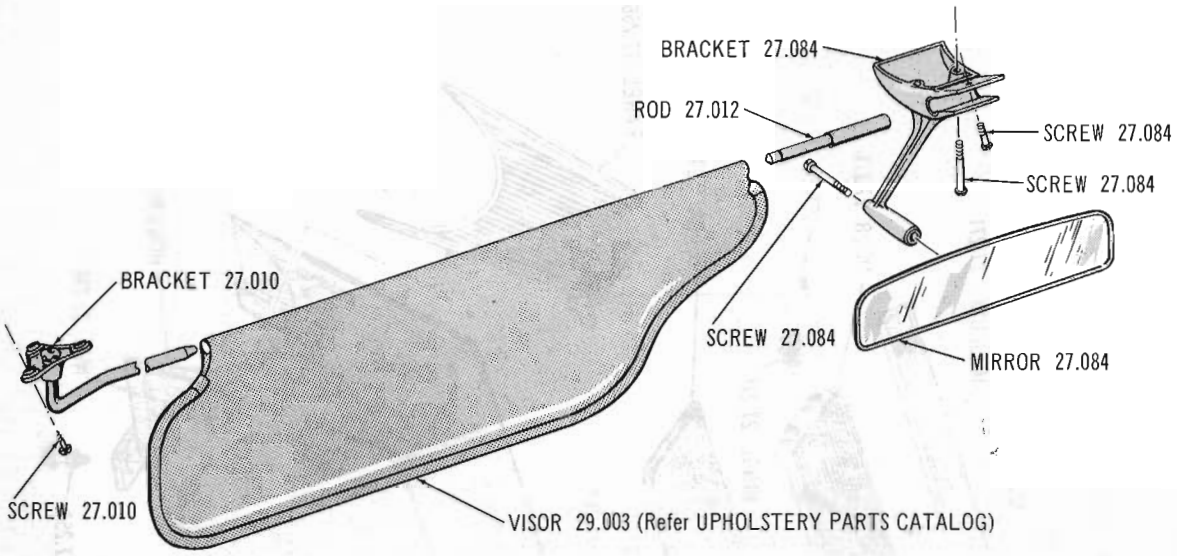

SUN VISOR AND INSIDE MIRROR 64-65 ALL MODELS

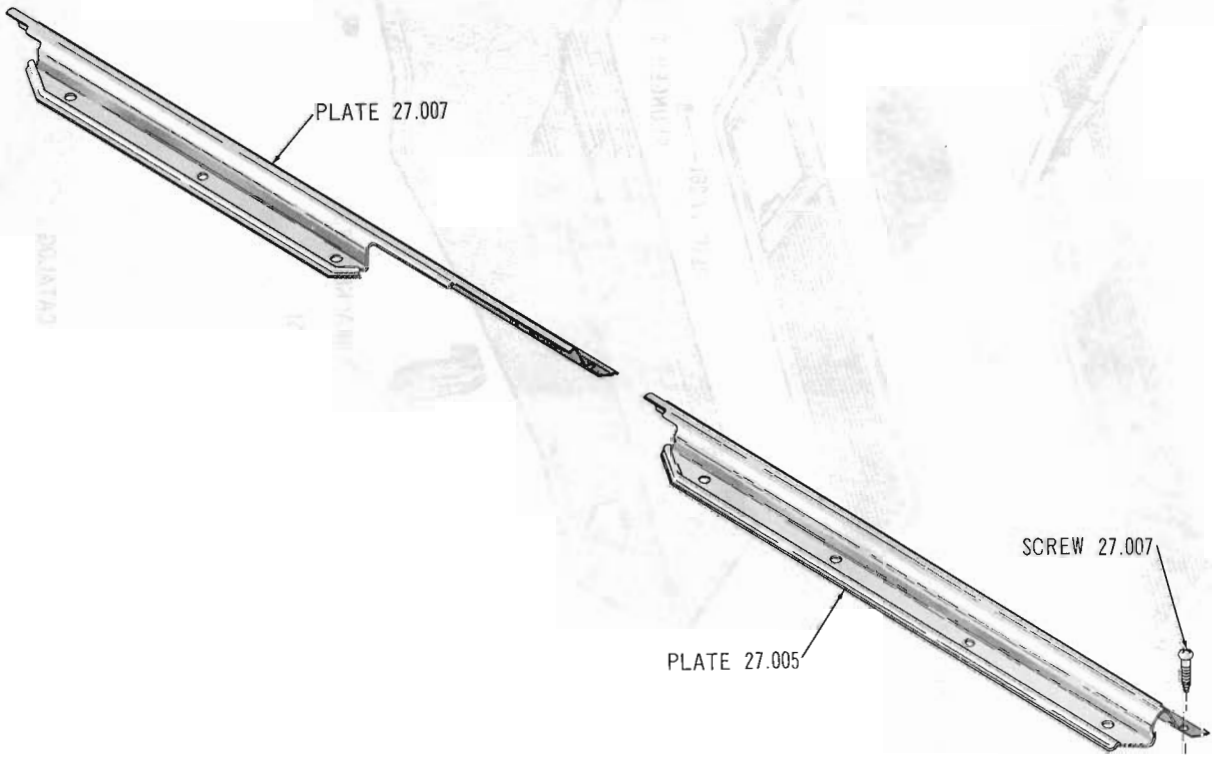

FRONT AND REAR DOOR SCUFF PLATE 64-65 ALL MODELS

Copyright 1963 American Motors Corp.

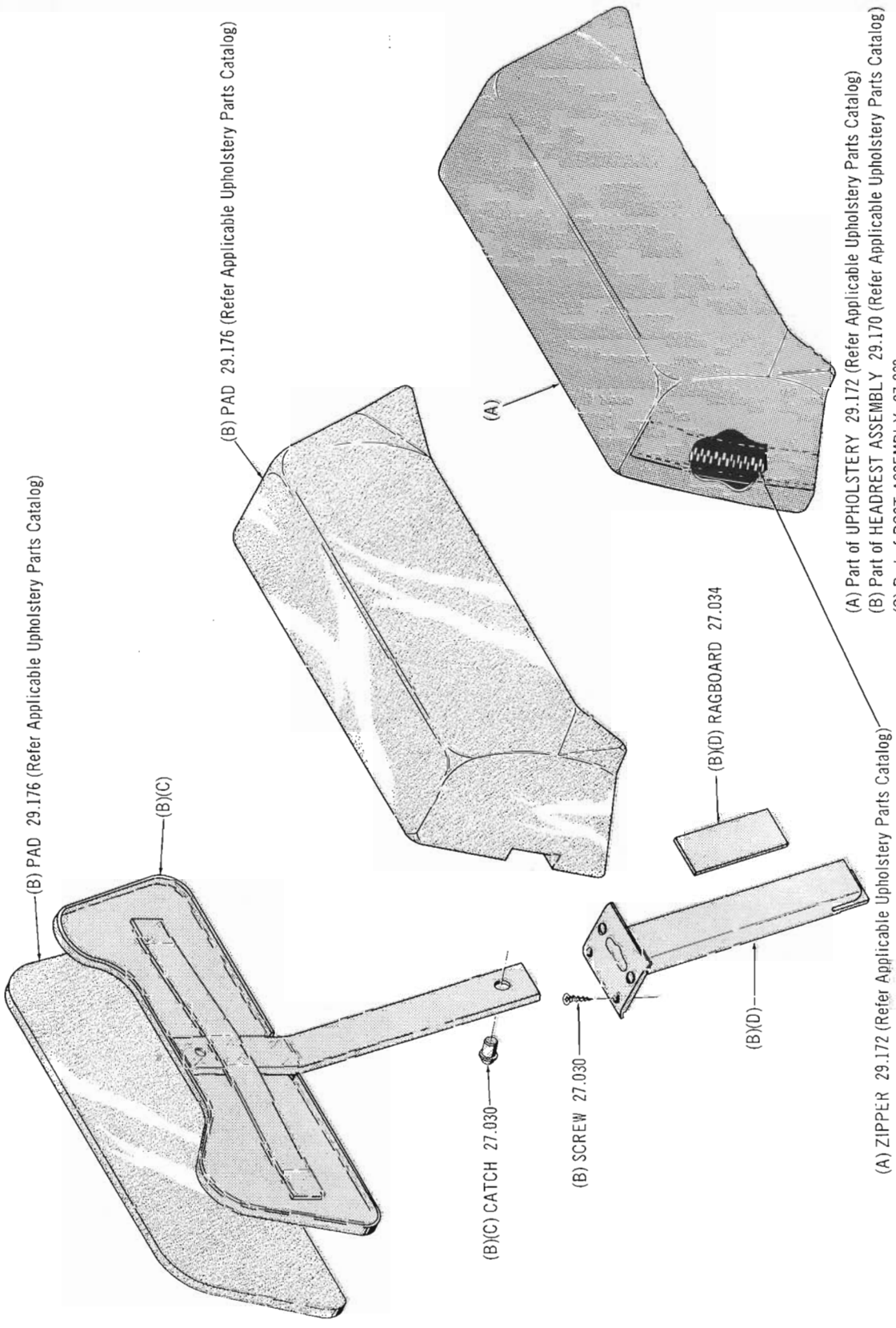

HEADREST ASSEMBLY 65 ALL MODELS

Copyright 1963 American Motors Corp.



Copyright 1963 American Motors Corp.

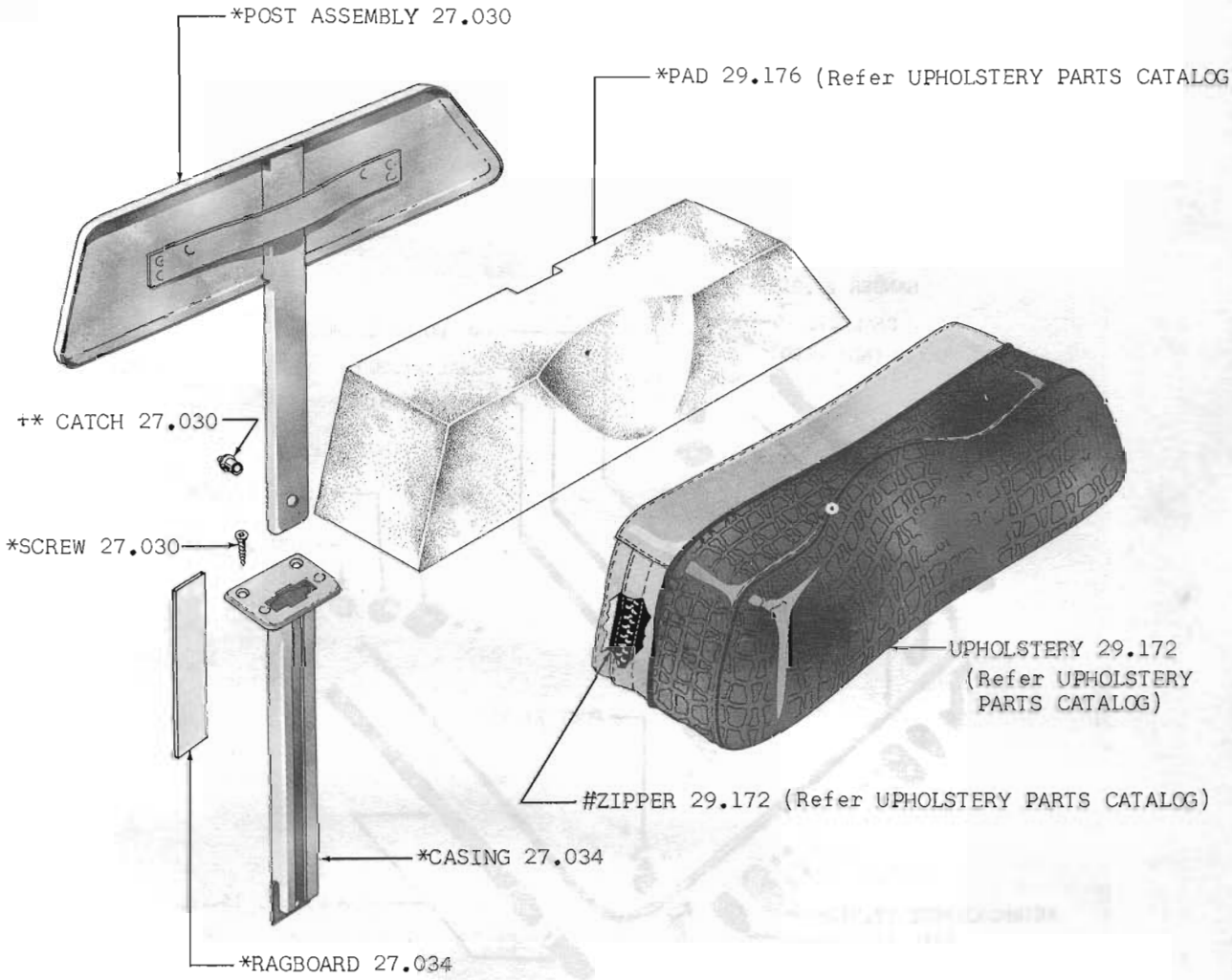

\+ ALSO SERVICED AS PART OF POST ASSEMBLY 27.030
* ALSO SERVICED AS PART OF HEADREST ASSEMBLY 29.170 (Refer UPHOLSTERY PARTS CATALOG)
\# ALSO SERVICED AS PART OF UPHOLSTERY 29.172 (Refer UPHOLSTERY PARTS CATALOG)

FIG. 27.030-1 HEADREST ASSEMBLY 60 THRU 64 ALL MODELS

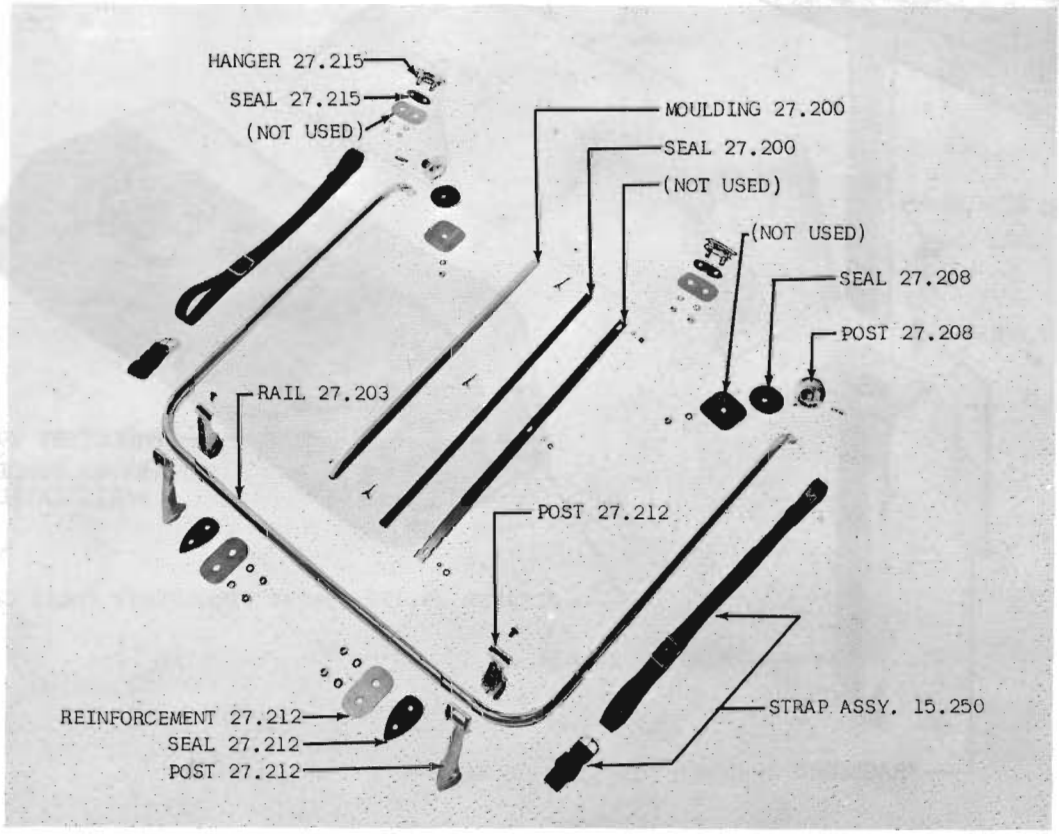

FIG. 27.200-3 LUGGAGE RACK 60 04

Printed in U.S.A.

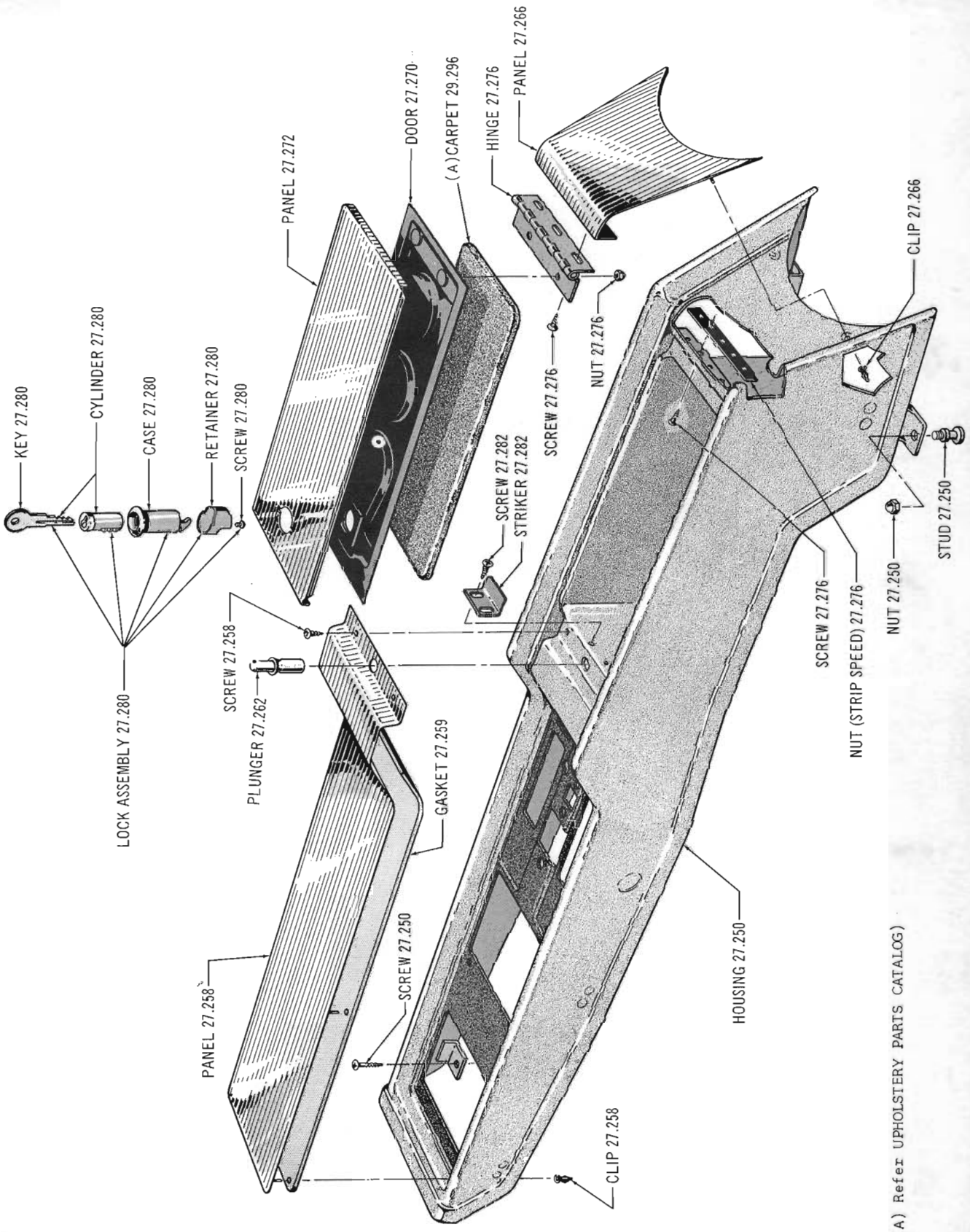

FIG. 27.250-1 FLOOR CONSOLE 63 ALL MODELS

Printed in U.S.A.

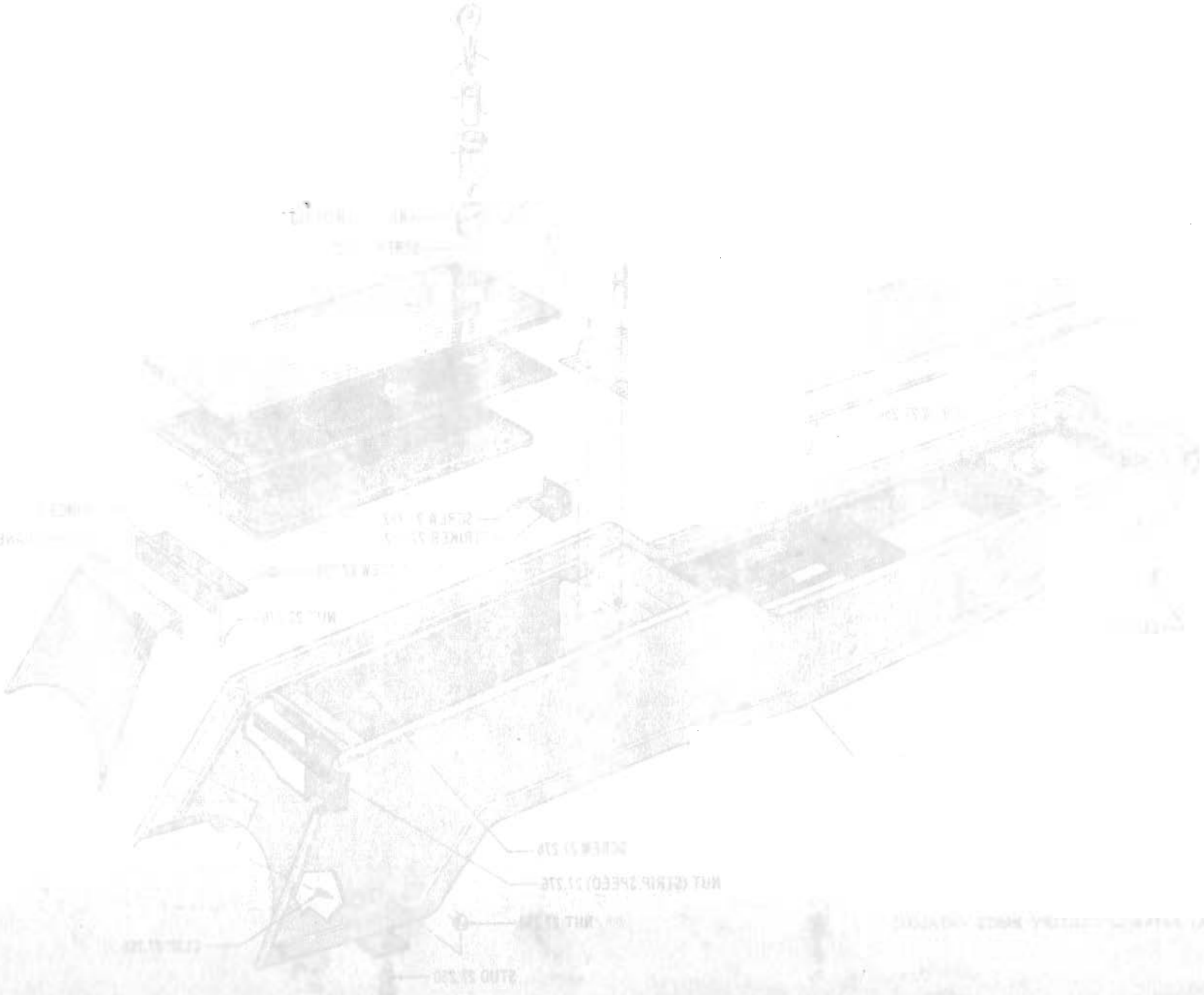

GROUP NO. — DESCRIPTION — YEAR and MODEL	PRIMARY GROUP NO.	PER CAR	PART NO.	CODE
27.005 PLATE, Front Door Scuff				
60 02-04-06	.....	2	435 0425	
60 05	.....	2	437 3947	
64-65 06-07-09: 63 16-86: 64 16-19-89	.....	2	348 2166	
60 10-20-80	.....	2	341 1370	
61 10-20-80: 62 15-18-85-88	.....	2	345 5633	
62 16-86	.....	2	346 1906	
65 16-17-19-86-87-89	.....	2	351 5188	
(Left) 61 Thru 63 02-04-06-07-09	.....	1	345 9901	
(Left) 61 Thru 63 05-08	.....	1	345 9905	
(Left) 64-65 05-08: 63-64 15-18-85-88	.....	1	348 2165	
(Left) 65 15-18-85-88	.....	1	351 5185	
(Right) 61 Thru 63 02-04-06-07-09	.....	1	345 9900	
(Right) 61 Thru 63 05-08	.....	1	345 9904	
(Right) 64-65 05-08: 63-64 15-18-85-88	.....	1	348 2164	
(Right) 65 15-18-85-88	.....	1	351 5184	
ATTACHING PARTS Plate To Body				
SCREW, Tapping..... 60 02-04-06 (14 Req.): 60 05 (10 Req.): 61 Thru 63 02-04-06-07 (10 Req. -5/8" Long): 61 Thru 63 05-08 (8 Req. -5/8" Long): 64 02-06-09 (22 Req.): 64 07 (Pointed Tip-10 Req.): 62 15-18-85-88 (10 Req.): 62 16-86 (12 Req. -5/8" Long): 63-64 15-18-85-88 (16 Req.): 63-64 16-19-86-89 (22 Req.)	26.060	AR	439 2504	
SCREW, Tapping..... 62 02-04-06-07 (4 Req. -7/8" Long): 62 05-08 (2 Req. -7/8" Long)	.....	AR	400 0241	
SCREW, Tapping..... 62 16-86 (4 Req. -1-1/4" Long): 63 02-04-06-07-09 (4 Req. -1-1/4" Long): 63 05-08 (2 Req. -1-1/4" Long)	17.654	AR	G162416	NA
SCREW, Tapping..... 64-65 05-08 (16 Req.): 65 06-09-16-17-19-87-89 (22 Req.): 65 07 (10 Req. -3/4" Long)	.....	AR	400 1407	
SCREW, Tapping..... 64 07 (Blunt Tip): 65 07 (5/8" Long)	.....	12	400 0705	
27.007 PLATE, Rear Door Scuff				
60 10-20-80	.....	2	341 1371	
(Left) 60 05	.....	1	344 3793	
(Left) 61 Thru 63 05-08	.....	1	345 9903	
(Left) 64 05-08-15-18-85-88: 65 05-08: 63 15-18-85-88	.....	1	347 2871	
(Left) 61-62 15-18-85-88	.....	1	345 5635	
(Left) 65 15-18-85-88	.....	1	351 5187	
(Right) 60 05	.....	1	344 3792	
(Right) 61 Thru 63 05-08	.....	1	345 9902	
(Right) 64 05-08-15-18-85-88: 65 05-08: 63 15-18-85-88	.....	1	347 2870	
(Right) 61-62 15-18-86-88	.....	1	345 5634	
(Right) 65 15-18-85-88	.....	1	351 5186	
ATTACHING PARTS Plate To Body				
SCREW, Tapping..... 60 05-10-20-80 (6 Req.): 61 Thru 63 05-08 (4 Req.): 61-62 15-18-85-88 (6 Req.): 63-64 15-18-85-88 (14 Req.)	26.060	AR	439 2504	
SCREW, Tapping..... 64-65 05-08: 65 15-18-85-88	27.005	14	400 1407	
27.010 BRACKET, Sun Visor (Incl. Rod)				
(Chrome) 60 01: 61 04-06-08	29.003	2	435 5232	
(Chrome) 62-63 02-04-05-06-08	.....	2	348 1529	
(Chrome) 60-61 10-20	.....	2	344 3228	#

Copyright 1963 American Motors Corp.

GROUP NO. — DESCRIPTION — YEAR and MODEL	PRIMARY GROUP NO.	PER CAR	PART NO.	CODE
(Chrome) 60-61 80	29.003	2	344 3020	
(Chrome) 62 10-80	.....	2	344 3228	#
(Chrome-Left) 61 Thru 63 07-09	.....	1	346 0191	
(Chrome-Left) 64-65 02-05-06-08-09: 63 Thru 65 10-80	.....	1	348 3281	
(Chrome-Left) 64-65 07: 65 17-87	.....	1	350 1969	
(Chrome-Right) 61 Thru 63 07-09	.....	1	346 0190	
(Chrome-Right) 64-65 07: 65 17-87	.....	1	350 1968	
(Chrome-Right) 64-65 02-05-06-08-09: 63 Thru 65 10-80	.....	1	348 3280	
(Gray) 60 01	29.003	2	343 2333	
(Gray) 60 10-20	29.003	2	344 3229	
(Gray) 60 80	29.003	2	344 3021	
(Silver) 61 02-04-05-06-08	29.003	2	345 3226	
(Silver) 62-63 02-04-05-06-08	.....	2	348 1530	
(Silver-Left) 64 01: 65 05-06-08: 63 Thru 65 10-80	.....	1	348 3283	
(Silver-Right) 64 01: 65 05-06-08: 63 Thru 65 10-80	.....	1	348 3282	
(Silver) 61-62 10: 62 80	.....	2	345 4179	
(Silver) 61 80	29.003	2	345 4250	

ATTACHING PARTS

Bracket To Windshield Header Bar

SCREW, Tapping	60 01 (4 Req.): 61 Thru 63 02-04-05-06-08 (4 Req.): 64 02-05-06-08-09 (4 Req.): 60 Thru 62 10-20 (4 Req.): 62 80 (4 Req.): 60-61 80 (6 Req.): 63 10-80 (6 Req.): 65 10-80 (6 Req.)	17.654	AR	G162474	NA
SCREW, Tapping	61 Thru 63 07-09 (1" Long)	17.654	4	G162482	NA
SCREW, Tapping	63 07-09 (4 Req. -1-1/2" Long): 64 07 (2 Req. -1-1/2" Long)	17.654	AR	G162488	NA
SCREW, Tapping	64 07 (7/8" Long)	17.654	2	G162479	NA
SCREW, Tapping	64 10-80	26.006	6	400 0531	

BRACKET, Sun Visor Retaining (Plastic)

(T-262)	.....	2	347 1698
(T-263)	.....	2	347 1699
(T-264)	.....	2	347 1700
(T-266)	.....	2	347 1701
(T-272)	.....	2	347 1698
(T-273)	.....	2	347 1699
(T-274)	.....	2	347 1700
(T-275)	.....	2	347 1698
(T-276)	.....	2	347 1701
(T-278)	.....	2	347 1702
(T-279)	.....	2	347 1703
(T-282)	.....	2	347 1698
(T-283)	.....	2	347 1699
(T-284)	.....	2	347 1700
(T-286)	.....	2	347 1701
(T-292)	.....	2	347 1698
(T-293)	.....	2	347 1699
(T-294)	.....	2	347 1700
(T-295)	.....	2	347 1698
(T-296)	.....	2	347 1701
(T-298)	.....	2	347 1702
(T-299)	.....	2	347 1703
(T-301) 63 02-04-05-06-08	.....	2	349 0874
(T-301) 63 07-09	.....	1	348 3287
(T-302) 63 02-04-05-06-08	.....	2	349 0874
(T-302) 63 07-09	.....	1	348 3287

Copyright 1963 American Motors Corp.

GROUP NO. — DESCRIPTION — YEAR and MODEL	PRIMARY GROUP NO.	PER CAR	PART NO.	CODE
(T-312) 63 02-04-05-06-08		2	349 0874	#
(T-312) 63 07-09		1	348 3287	#
(T-313) 63 04-05-06-08		2	349 0875	#
(T-313) 63 07-09		1	348 3288	#
(T-314) 63 04-05-06-08		2	349 0876	#
(T-314) 63 07-09		1	348 3289	#
(T-315) 63 05-06-08		2	349 0950	#
(T-315) 63 07-09		1	348 3290	#
(T-316) 63 04-05-06-08		2	347 1703	#
(T-316) 63 07-09		1	348 3292	#
(T-322) 63 02-04-05-06-08		2	349 0874	#
(T-322) 63 07-09		1	348 3287	#
(T-323) 63 04-05-06-08		2	349 0875	#
(T-323) 63 07-09		1	348 3288	#
(T-324) 63 04-05-06-08		2	349 0876	#
(T-324) 63 07-09		1	348 3289	#
(T-325) 63 05-06-08		2	349 0950	#
(T-325) 63 07-09		1	348 3290	#
(T-326) 63 04-05-06-08		2	347 1703	#
(T-326) 63 07-09		1	348 3292	#
(T-327) 63 05-06-08		2	349 0877	#
(T-327) 63 07-09		1	348 3291	#
(T-332) 63 02-04-05-06-08		2	349 0874	#
(T-332) 63 07-09		1	348 3287	#
(T-333) 63 04-05-06-08		2	349 0875	#
(T-333) 63 07-09		1	348 3288	#
(T-334) 63 04-05-06-08		2	349 0876	#
(T-334) 63 07-09		1	348 3289	#
(T-335) 63 05-06-08		2	349 0950	#
(T-335) 63 07-09		1	348 3290	#
(T-336) 63 04-05-06-08		2	347 1703	#
(T-336) 63 07-09		1	348 3292	#
(T-337) 63 05-06-08		2	349 0877	#
(T-337) 63 07-09		1	348 3291	#
(T-342) 63 02-04-05-06-08		2	349 0874	#
(T-342) 63 07-09		1	348 3287	#
(T-343) 63 04-05-06-08		2	349 0875	#
(T-343) 63 07-09		1	348 3288	#
(T-344) 63 04-05-06-08		2	349 0876	#
(T-344) 63 07-09		1	348 3289	#
(T-345) 63 05-06-08		2	349 0950	#
(T-345) 63 07-09		1	348 3290	#
(T-346) 63 04-05-06-08		2	347 1703	#
(T-346) 63 07-09		1	348 3292	#
(T-347) 63 05-06-08		2	349 0877	#
(T-347) 63 07-09		1	348 3291	#
(T-351)		1	348 3287	#
(T-352)		1	348 3287	#
(T-353)		1	348 3288	#
(T-354)		1	348 3289	#
(T-362)		1	348 3287	#
(T-363)		1	348 3288	#
(T-364)		1	348 3289	#
(T-365)		1	348 3290	#
(T-366) 63 10		1	348 3292	#
(T-366) *163 10 (CAN)*		1	347 6478	#
(T-372)		1	348 3287	#
(T-373)		1	348 3288	#

Copyright 1963 American Motors Corp.

GROUP NO. — DESCRIPTION — YEAR and MODEL	PRIMARY GROUP NO.	PER CAR	PART NO.	CODE
(T-374)	.....	1	348 3289	#
(T-375)	.....	1	348 3290	#
(T-376) 63 10	.....	1	348 3292	#
(T-376) ***163 10 (CAN)***	.....	1	347 6478	#
(T-377)	.....	1	348 3291	#
(T-382)	.....	1	348 3287	#
(T-383)	.....	1	348 3288	#
(T-384)	.....	1	348 3289	#
(T-385)	.....	1	348 3290	#
(T-386) 63 80	.....	1	348 3292	#
(T-386) ***163 80 (CAN)***	.....	1	347 6478	#
(T-392)	.....	1	348 3287	#
(T-393)	.....	1	348 3288	#
(T-394)	.....	1	348 3289	#
(T-395)	.....	1	348 3290	#
(T-396) 63 80	.....	1	348 3292	#
(T-396) ***163 80 (CAN)***	.....	1	347 6478	#
(T-397)	.....	1	348 3291	s
ATTACHING PARTS				
Bracket To Windshield Header Bar				
SCREW, Tapping..... 63 01-10-80	17.660	2	G161872	NA
SCREW, Tapping..... 62 10-80	17.654	2	G148545	NA
SHIM, Sun Visor Retaining Bracket (Rubber)				
63 07-09	.....	1	349 0836	
27.012 RCD, Sun Visor End Retaining (Plastic)				
(T-262)	.....	2	347 1688	#
(T-264)	.....	2	347 1690	#
(T-266)	.....	2	347 1691	#
(T-272)	.....	2	347 1688	#
(T-274)	.....	2	347 1690	#
(T-275)	.....	2	347 1688	#
(T-276)	.....	2	347 1691	#
(T-278)	.....	2	347 1692	#
(T-279)	.....	2	347 1693	#
(T-282)	.....	2	347 1688	#
(T-284)	.....	2	347 1690	#
(T-286)	.....	2	347 1691	#
(T-292)	.....	2	347 1688	#
(T-294)	.....	2	347 1690	#
(T-295)	.....	2	347 1688	#
(T-296)	.....	2	347 1691	#
(T-298)	.....	2	347 1692	#
(T-299)	.....	2	347 1693	#
(T-301)	.....	2	348 3871	#
(T-302)	.....	2	348 3871	#
(T-312)	.....	2	348 3871	#
(T-313)	.....	2	348 3872	#
(T-314)	.....	2	348 3873	#
(T-315)	.....	2	348 3877	#
(T-316)	.....	2	347 1693	#
(T-322)	.....	2	348 3871	#
(T-323)	.....	2	348 3872	#
(T-324)	.....	2	348 3873	#

Copyright 1963 American Motors Corp.

GROUP NO. — DESCRIPTION — YEAR and MODEL	PRIMARY GROUP NO.	PER CAR	PART NO.	CODE
(T-325)	.....	2	348 3877	
(T-326)	.....	2	347 1693	
(T-327)	.....	2	348 3875	
(T-332)	.....	2	348 3871	
(T-333)	.....	2	348 3872	
(T-334)	.....	2	348 3873	
(T-335)	.....	2	348 3877	
(T-336)	.....	2	347 1693	
(T-337)	.....	2	348 3875	
(T-342)	.....	2	348 3871	
(T-343)	.....	2	348 3872	
(T-344)	.....	2	348 3873	
(T-345)	.....	2	348 3877	
(T-346)	.....	2	347 1693	
(T-347)	.....	2	348 3875	
(T-351)	.....	2	348 3871	
(T-352)	.....	2	348 3871	
(T-353)	.....	2	348 3872	
(T-354)	.....	2	348 3873	
(T-362)	.....	2	348 3871	
(T-363)	.....	2	348 3872	
(T-364)	.....	2	348 3873	
(T-365)	.....	2	348 3877	
(T-366) 63 10	.....	2	347 1693	
(T-366) ***163 10 (CAN)***	.....	2	347 6477	
(T-372)	.....	2	348 3871	
(T-373)	.....	2	348 3872	
(T-374)	.....	2	348 3873	
(T-375)	.....	2	348 3877	
(T-376) 63 10	.....	2	347 1693	
(T-376) ***163 10 (CAN)***	.....	2	347 6477	
(T-377)	.....	2	348 3875	
(T-382)	.....	2	348 3871	
(T-383)	.....	2	348 3872	
(T-384)	.....	2	348 3873	
(T-385)	.....	2	348 3877	
(T-386) 63 80	.....	2	347 1693	
(T-386) ***163 80 (CAN)***	.....	2	347 6477	
(T-392)	.....	2	348 3871	
(T-393)	.....	2	348 3872	
(T-394)	.....	2	348 3873	
(T-395)	.....	2	348 3877	
(T-396) 63 80	.....	2	347 1693	
(T-396) ***163 80 (CAN)***	.....	2	347 6477	
(T-397)	.....	2	348 3875	
64-65 01-10-80 (Plastic)	.....	2	352 0154	
65 01-10-80 (Steel)	.....	2	353 1911	

27.014 HANDLE, Assist

60 Thru 65 15-25-85 (Taxi)	.....	2	343 0557	

ATTACHING PARTS

Handle To Rear Door Inner Panel

SCREW, Tapping.....	***60 Thru 62 15-25-85 (Taxi)***	17.652	8	G440895	NA
SCREW, Tapping.....	***63-64 15-85 (Taxi)***	17.654	8	G162500	NA

PAD, Assist Handle

63 Thru 65 15-85 (Taxi)	.....	4	348 8303	

Copyright 1963 American Motors Corp.

GROUP NO. — DESCRIPTION — YEAR and MODEL	PRIMARY GROUP NO.	PER CAR	PART NO.	CODE
27.018 RAIL, Rear Seat Back Robe				
60 Thru 62 18-28-83-88: 63 Thru 65 18-88	.....	1	342 2467	
ATTACHING PARTS Robe Rail To Stanchion				
SCREW, Tapping..... 60 Thru 65 18-28-83-88	17.660	2	G161790	NA
STANCHION, Rear Seat Back Robe Rail				
(Left) 60 Thru 62 18-28-83-88: 63 Thru 65 18-88	.....	1	343 0075	
(Right) 60 Thru 62 18-28-83-88: 63 Thru 65 18-88	.....	1	343 0076	
ATTACHING PARTS Stanchion To Seat Back				
SCREW, Tapping..... 60 Thru 65 18-28-83-88	17.654	4	G162517	NA
27.020 STRIP, Rear Auxiliary Floor Carpet Skid				
64-65 88 (L3S)	.....	5	352 0076	
64-65 88 (W3S-5-1/2" Long)	.....	1	353 6468	
64-65 88 (W3S-9-1/2" Long)	.....	4	353 6466	
64-65 88 (W3S-14-3/4" Long)	.....	5	353 6467	
27.022 RETAINER, Headlining				
(Left-Front) 60 02-04-06	29.014	1	343 2381	
(Left-Front) 60 05	29.014	1	344 3947	
(Left-Center) ***64-65 08 (Export)***	.....	1	352 3019	
(Left-Center) ***63 Thru 65 18-88 (Export)***	.....	1	348 8033	
(Left-Front) 61 Thru 63 02-04-06	.....	1	344 7419	
(Left-Front) 61 Thru 63 05-08	.....	1	344 7421	
(Left-Front) ***64-65 02-05-06-08 (Export): 63-64 10-80 (Export): 65 15-16-18-85-86-88 (Export)***	.....	1	348 7801	#
(Left-Front) 60 15-18-25-28-85-88: ***61-62 10-20-80 (Export)***	.....	1	344 5953	
(Left-Rear) 60 05	29.014	1	344 6009	
(Left-Rear) 61 Thru 63 05	.....	1	344 7423	
(Left-Rear) 61 Thru 63 08	.....	1	344 7425	
(Left-Rear) ***64-65 02-05-06 (Export)***	.....	1	352 3017	
(Left-Rear) ***64-65 08 (Export)***	.....	1	352 3021	
(Left-Rear) 60 15-18-25-28-85-88: ***61-62 10-20-80 (Export-33-31/64" Long)***	.....	1	344 5955	
(Left-Rear) ***62 10-80 (Export-37" Long)***	.....	1	348 4191	
(Left-Rear) ***63 Thru 65 15-16-85-86 (Export)***	.....	1	348 7803	
(Left-Rear) ***63 Thru 65 18-88 (Export)***	.....	1	348 7805	
(Right-Front) 60 02-04-06	29.014	1	343 2380	
(Right-Front) 60 05	29.014	1	344 3946	
(Right-Front) 61 Thru 63 02-04-06	.....	1	344 7418	
(Right-Front) 61 Thru 63 05-08	.....	1	344 7420	
(Right-Front) ***64-65 02-05-06-08 (Export): 63-64 10-80 (Export): 65 15-16-18-85-86-88 (Export)***	.....	1	348 7800	
(Right-Front) 60 15-18-25-28-85-88: ***61-62 10-20-80 (Export)***	.....	1	344 5952	
(Right-Center) ***64-65 08 (Export)***	.....	1	352 3018	
(Right-Center) ***63 Thru 65 18-88 (Export)***	.....	1	348 8032	
(Right-Rear) 60 05	29.014	1	344 6008	
(Right-Rear) 61 Thru 63 05	.....	1	344 7422	
(Right-Rear) 61 Thru 63 08	.....	1	344 7424	
(Right-Rear) ***64-65 02-05-06 (Export)***	.....	1	352 3016	
(Right-Rear) ***64-65 08 (Export)***	.....	1	352 3020	

NOTE 27.022-1: These Mouldings are only serviced in Prime and must be painted the desired color.

NOTE 27.022-2: The Moulding Side Retainer Clip Holes are in two positions on the 64 01 Models. They can be identified as follows:

Type 1: Clip Holes are spaced 5/16" on the Retainer.

Type 2: Clip Holes are spaced 5/8" on the Retainer .

Copyright 1963 American Motors Corp.

GROUP NO. — DESCRIPTION — YEAR and MODEL	PRIMARY GROUP NO.	PER CAR	PART NO.	CODE
(Right-Rear) 60 15-18-25-28-85-88: ***61-62 10-20-80 (Export-33-31/64" Long)***	.....	1	344 5954	
(Right-Rear) ***63 Thru 65 15-16-85-86 (Export)***	.....	1	348 7802	
(Right-Rear) ***63 Thru 65 18-88 (Export)***	.....	1	348 7804	
ATTACHING PARTS Retainer To Side Roof Rail				
SCREW, Tapping..... 60 02-04-06 (8 Req.): 60 05 (20 Req.): ***60 15-18-25 -28-85-88 (Export-10 Req.): 61 Thru 63 10-20-80 (Export-10 Req.)*** ***(Replaces 800 0107)***	17.671	AR	400 1044	
SCREW, Tapping..... 61 Thru 65 02-04-05-06-08	17.671	18	G9414261	NA
MOULDING, Headlining Side Retainer (All Metal)				
(Left) 64 09 (440)(Note 27.022-1)(Note 27.022-2 Type 1)... ***(Replaces 351 9235)***	.....	1	320 5840	#
(Left) 64 09 (440)(Note 27.022-1)(Note 27.022-2 Type 2): 65 09 (440) ***(Use 448 2864)(Replaces 352 2729)***	.....	1	352 2731	
(Left) 64 09 (440H)(Note 27.022-2 Type 1)	.....	1	350 2061	
(Left) 64 09 (440H)(Note 27.022-2 Type 2): 65 09 (440H)..... ***(Use 448 2863)***	.....	1	352 2727	
(Left) 64-65 19: 64 89 (990)(Note 27.022-1): 65 89 (990)	.....	1	351 9435	
(Left) 65 59 (Marlin)	.....	1	353 1373	#
(Left) 65 19 (770H): 64-65 89 (990H)	.....	1	350 8113	
(Right) 64 09 (440)(Note 27.022-1)(Note 27.022-2 Type 1).. ***(Replaces 351 9234)***	.....	1	320 5839	#
(Right) 64 09 (440)(Note 27.022-1)(Note 27.022-2): 65 09 (440) ***(Use 448 2865)(Replaces 352 2728)***	.....	1	352 2730	
(Right) 64 09 (440H)(Note 27.022-2 Type 1)	.....	1	350 2060	
(Right) 64 09 (440H)(Note 27.022-2 Type 2): 65 09 (440H)..... ***(Use 448 2862)***	.....	1	352 2726	
(Right) 64-65 19: 64 89 (990)(Note 27.022-1): 65 89 (990)	.....	1	351 9434	
(Right) 65 19 (770H): 64-65 89 (990H)	.....	1	350 8112	
(Right) 65 59 (Marlin)	.....	1	353 1372	#
ATTACHING PARTS Moulding To Side Roof Rail				
CLIP..... 64-65 09-19-89 (Note 27.022-2 Type 1).....	29.014	8	400 0322	
CLIP..... 64 09 (Note 27.022-2 Type 2).....	.....	8	400 0730	
PROTECTOR, Headlining Retainer Side Roof Rail (Rubber)				
60 02-06	29.014	2	343 1148	
61-62 02-06 ***(Discontinued)***	.....	2	346 3259	
61-62 05	29.014	2	346 3935	
63 02-06	.....	2	349 9985	
RETAINER, Rear Opening Header Headlining				
61 Thru 63 04-08	.....	1	344 6878	
ATTACHING PARTS Retainer To Side Roof Rail				
SCREW, Tapping..... 61 Thru 63 04-08	17.660	5	G161895	NA
27.024 BOW, Headlining Trim (Refer Note 27.024-2)				
(No. 1) 64 09 (440H-Gray End-Note 27.024-1 Type 1)	.....	1	352 0565	
(No. 1) 64 09 (440H-Gray End-Note 27.024-1 Type 2)	.....	1	320 5423	
(No. 1) 64 89 (990H-Black End-Note 27.024-1 Type 1)	.....	1	350 8818	
(No. 1) 64 89 (990H-Green End-Note 27.024-1 Type 2)	.....	1	353 6283	
(No. 1) 64 89 (990H-Green End-Note 27.024-1 Type 3): 65 19 (770H-Green End): 65 89 (990H-Green End)	.....	1	351 8817	

NOTE 27.024-1: Two Types of Headlining Trim Bows were used on the 64 09 (440H) and three on the 64 89 (990H) series. They can be identified as follows:
- Type 1: Has a Satin finish and is used with a Headlining Trim Bow Cap.
- Type 2: Has a Satin finish and is not used with a Headlining Trim Bow Cap.
- Type 3: Has a Buffed and Polish bright finish and is not used with a Headlining Trim Bow Cap.

NOTE 27.024-2: The Headlining Trim Bows used on the 64 09 (440H) and the 64 89 (990H) are Chrome and color coded on the reverse side.

Copyright 1963 American Motors Corp.

GROUP NO. — DESCRIPTION — YEAR and MODEL	PRIMARY GROUP NO.	PER CAR	PART NO.	CODE
(No. 2) 64 09 (440H-Gold End-Note 27.024-1 Type 1)	.....	1	350 2037	
(No. 2) 64 09 (440H-Gold End-Note 27.024-1 Type 2)	.....	1	320 5422	
(No. 2) 64 89 (990H-Black End-Note 27.024-1 Type 1)	.....	1	350 8818	
(No. 2) 64 89 (990H-Red End-Note 27.024-1 Type 2)	.....	1	353 6284	
(No. 2) 64 89 (990H-Red End-Note 27.024-1 Type 3): 65 19 (770H-Red End): 65 89 (990H-Red End)	.....	1	351 8818	
(No. 3) 64 09 (440H-Red End-Note 27.024-1 Type 1)	.....	1	352 0382	
(No. 3) 64 09 (440H-Red End-Note 27.024-1 Type 2)	.....	1	320 5421	
(No. 3) 64 89 (990H-Brown End-Note 27.024-1 Type 1)	.....	1	350 8833	
(No. 3) 64 89 (990H-Yellow End-Note 27.024-1 Type 2)	.....	1	353 6285	
(No. 3) 64 89 (990H-Yellow End-Note 27.024-1 Type 3): 65 19 (770H-Yellow End): 65 89 (990H-Yellow End)	.....	1	351 8819	
REINFORCEMENT, Headlining Trim Bow				
64 09 (440H): 65 19 (770H): 64-65 89 (990H)	29.017	3	350 2279	
CAP, Headlining Trim Bow				
64 09 (440H): 64 89 (990H)	.....	6	352 0467	
MOULDING, Headlining Side				
65 59 (Marlin)	.....	2	353 1400	
RETAINER, Headlining Side Moulding				
(Left) 65 59 (Marlin)	.....	1	353 1379	
(Right) 65 59 (Marlin)	.....	1	353 1378	
ATTACHING PARTS				
Retainer To Side Roof Rail				
CLIP ..... 65 59 (Marlin)	.....	16	400 1530	
SCREW, Tapping..... 65 59 (Marlin)	17.660	4	G161860	NA
27.026 WIRE, Headlining Listing (Note 27.026-1)				
(No. 1) 60 02-05-06 (Black)	29.016	1	342 9451	
(No. 1) 60 04 (Maroon)	29.016	1	342 9452	
(No. 1) 61 02-04-06-08 (Black)	.....	1	344 6961	
(No. 1) 62-63 02-04-05-06-08 (Beige Or Brown)	.....	1	344 6963	
(No. 1) ***64-65 02-05-06-08 (Export-Blue)***	.....	1	352 2745	
(No. 1 60 10-20 (Galvanized Or Prime): ***61 10-20 (Export-Galvanized Or Prime)***	29.016	1	344 3000	
(No. 1) ***62 10-80 (Export-Black)***	.....	1	348 7529	
(No. 1) ***63 Thru 65 15-16-85-86 (Export-Blue)***	.....	1	348 7785	
(No. 1) ***63 Thru 65 18-88 (Export-Black)***	.....	1	348 7791	
(No. 1) 60 80 (White): ***60 80 (Export-White)***	29.016	1	344 3002	
(No. 2) 60 02-05-06 (Maroon)	29.016	1	342 9452	
(No. 2) 60 04 (Pink)	29.016	1	343 1782	
(No. 2) 61 Thru 63 02-05-06 (Maroon)	.....	1	344 6962	
(No. 2) 61 Thru 63 04-08 (Red)	.....	1	345 3288	
(No. 2) ***64-65 02-05-06 (Export-Blue)***	.....	1	352 2745	
(No. 2) ***64-65 08 (Export-Tan)***	.....	1	352 2749	
(No. 2) 60 10-20 (White): ***61 10-20 (Export-White)***	29.016	1	344 3002	
(No. 2) ***62 10-80 (Export-Orange)***	.....	1	348 7530	
(No. 2) ***63-64 15-16-85-86 (Export-Red)***	.....	1	348 7786	
(No. 2) ***63 Thru 65 18-88 (Export-Tan)***	.....	1	348 7792	
(No. 2) 60 83-88 (Blue): ***61 88 (Export-Blue)***	.....	1	344 3004	
(No. 2) 60 85-89 (Green): ***61 85 (Export-Green)***	29.016	1	344 3003	
(No. 3) 60 02-05-06 (Beige Or Orange)	29.016	1	342 9453	
(No. 3) 60 04 (White)	.....	1	343 1783	
(No. 3) 61 Thru 63 02-05-06 (Beige)	.....	1	344 6963	
(No. 3) 61 Thru 63 04-08	.....	1	345 3289	
(No. 3) ***64-65 02-05-06 (Export-Red)***	.....	1	352 2746	#

NOTE 27.026-1: Listing Wires are numbered from the Windshield to the rear of the Car.

Copyright 1963 American Motors Corp.

GROUP NO. — DESCRIPTION — YEAR and MODEL	PRIMARY GROUP NO.	PER CAR	PART NO.	CODE
(No. 3) ***64-65 08 (Export-Maroon)***	.....	1	352 2750	
(No. 3) 60 10-20 (Green): ***61 15-25 (Export-Green)***	29.016	1	344 3003	
(No. 3) 60 18-88 (Blue): ***61 18-28-85 (Export-Blue)***	.....	1	344 3004	
(No. 3) ***62 15-85 (Export-Pink)***	.....	1	348 7531	
(No. 3) ***62 18-88 (Export-Red)***	.....	1	344 3005	
(No. 3) ***63 Thru 65 15-16-85-86 (Export-Red)***	.....	1	348 7786	
(No. 3) ***63 Thru 65 18-88 (Export-Maroon)***	.....	1	348 7793	
(No. 3) 60 83-88 (Red): ***(Export-Red)***	.....	1	344 3005	
(No. 3) 60 85-89 (Blue)...(Incl. Domelight Support)	20.425	1	344 3015	
(No. 4) 60 02-05-06 (Gray)	29.016	1	342 9454	
(No. 4) 60 04 (Blue)	29.016	1	343 1784	
(No. 4) 61 Thru 63 02-05-06 (Gray)	.....	1	344 6964	
(No. 4) 61 Thru 63 04-08 (Blue)	.....	1	345 3290	
(No. 4) ***64-65 02-05-06 (Export-White)***	.....	1	352 2747	
(No. 4) ***64-65 08 (Export-Gray)***	.....	1	352 2751	
(No. 4) 60 15-19-25-29 (Blue)...(Incl. Domelight Support)	20.425	1	344 3015	
(No. 4) 60 18-28-85-89 (Red): ***61 18-28-85 (Export-Red)***	.....	1	344 3005	
(No. 4) ***61 15-25 (Export-Blue): 62 15-85 (Export-Blue)***	.....	1	344 3004	
(No. 4) ***62 18-88 (Export-Blue)***	.....	1	344 3009	
(No. 4) ***63 Thru 65 15-16-85-86 (Export-White)***	.....	1	348 7788	
(No. 4) ***63 Thru 65 18-88 (Export-Gray)***	.....	1	348 7794	
(No. 4) 60 83-88 (Blue): ***61 88 (Export-Blue)***	.....	1	344 3009	
(No. 5) 60 02-05-06 (Lavender)	29.016	1	342 9455	
(No. 5) 60 04 (Green)	29.016	1	343 1785	
(No. 5) 61 Thru 63 02-05-06 (Lavender Or Blue)	.....	1	344 6965	
(No. 5) 61 Thru 63 04-08	.....	1	345 3291	
(No. 5) ***64-65 02-05-06 (Export-Yellow)***	.....	1	352 2748	
(No. 5) ***64-65 08 (Export-Brown)***	.....	1	352 2752	
(No. 5) 60 15-19-25-29 (Red): ***61 15-25 (Export-Red): 62 15-85 (Export-Red)***	.....	1	344 3005	
(No. 5) 60 18-28 (Green): ***62 18-88 (Export-Green)***	.....	1	344 3010	
(No. 5) 60 18-28 (Blue): ***61 18-28 (Export-Blue)***	.....	1	344 3009	
(No. 5) ***63-64 15-16-85-86 (Export-Yellow)***	.....	1	348 7789	
(No. 5) ***63 Thru 65 18-88 (Export-Brown)***	.....	1	348 7795	
(No. 5) ***65 15-16-85-86 (Export-Green)***	.....	1	355 1613	
(No. 5) 60 85-89 (Lavender Or Yellow): ***61 85 (Export-Lavender Or Yellow)***	.....	1	344 3006	
(No. 5) ***61 88 (Export-Green)***	.....	1	344 3010	
(No. 6) 60 04 (Yellow)	29.016	1	343 1786	
(No. 6) 61 Thru 63 04-08 (Yellow)	.....	1	345 3292	
(No. 6) ***64-65 08 (Export-Orange)***	.....	1	352 2753	
(No. 6) 60 15-19-25-29 (Lavender Or Yellow): ***61 15-25 (Export- Lavender Or Yellow)***	.....	1	344 3006	
(No. 6) 60 18-28 (Green): ***61 18-28 (Export-Green)***	.....	1	344 3010	
(No. 6) ***62 15-85 (Export-Lavender Or Yellow)***	.....	1	344 3006	
(No. 6) ***62 18-88 (Export-Purple)***	.....	1	344 3011	
(No. 6) ***63 Thru 65 18-88 (Export-Orange)***	.....	1	348 7796	
(No. 6) 60 83-88 (Purple): ***61 88 (Export-Purple)***	.....	1	344 3011	
(No. 7) ***64-65 08 (Export-Green)***	.....	1	352 2754	
(No. 7) 60 18-28 (Purple): ***61 18-28 (Export-Purple)***	.....	1	344 3011	
(No. 7) ***62 18-88 (Export-Gray)***	.....	1	344 3012	
(No. 7) ***63 Thru 65 18-88 (Export-Green)***	.....	1	348 7797	
(No. 7) 60 83-88 (Gray)	29.016	1	341 1830	
(No. 7) ***63 88 (Export-Gray)***	.....	1	344 3012	
(No. 8) ***64-65 08 (Export-Pink)***	.....	1	352 2755	
(No. 8) 60 18-28 (Gray)	29.016	1	341 1830	
(No. 8) ***61 18-28 (Export-Gray)***	.....	1	344 3012	
(No. 8) ***62 18-88 (Export-Brown)***	.....	1	344 3013	
(No. 8) ***63 Thru 65 18-88 (Export-Pink)***	.....	1	248 7798	
(No. 8) 60 83-88 (Brown): ***61 88 (Export-Brown)***	.....	1	344 3013	
(No. 9) 60 18-28 (Brown): ***61 18-28 (Export-Brown)***	.....	1	344 3013	

Copyright 1963 American Motors Corp.

GROUP NO. — DESCRIPTION — YEAR and MODEL	PRIMARY GROUP NO.	PER CAR	PART NO.	CODE
EYELET, Headlining Listing Wire				
60 Thru 62 01 (14 Req.): 60 15-25-85 (12 Req.): ***61-62 15-16-85-86 (Export-12 Req.): 60 18-88 (Export-18 Req.): 61 18-28 (Export-18 Req.): 61 85 (Export-10 Req.): 61 88 (Export-16 Req.): 62 18-88 (Export-18 Req.).***	.....	AR	316 383	
63-64 02-05-06 (12 Req.): 63-64 04-08 (16 Req.): ***65 05-06-08 (Export)***	.....	AR	400 0289	
63 04-08 (Wire No. 1 Only)	.....	2	400 0288	
63 Thru 65 15-16-85-86 (Export-12 Req.): 63 Thru 65 18-88 (Export-18 Req.)	.....	AR	400 0288	
27.030 POST ASSEMBLY, Front Seat Back Headrest (Incl. Frame And Friction Catch)				
62 01-10-80	.....	2	346 2817	
63-64 01-10-80	.....	2	348 3384	
65 01-10-80	.....	2	351 8470	
60-61 10-20-80	29.174	2	344 6230	
CATCH, Front Seat Back Headrest Post Assembly Friction				
62 Thru 65 01: 60 Thru 65 10-20-80	.....	2	447 8409	
27.034 CASING, Front Seat Back Headrest (Incl. Top Plate)				
62 Thru 64 01-10: 62 80: 63 80 (800)(880)(990-WBS)	.....	2	346 2818	
65 01-10-80	.....	2	351 8471	
60-61 10-20-80	29.171	2	343 5732	
63 80 (990-WNRS)(990-WRS)(990-WIRS): 64 80	.....	2	349 7953	
ATTACHING PARTS Casing To Seat Frame				
SCREW, Tapping..... 62 01: 60 Thru 62 10-20-80	17.655	2	G188973	NA
SCREW, Tapping..... 63 Thru 65 01-10-80	17.655	2	G168496	NA
RAGBOARD, Front Seat Back Headrest Casing Protector				
62 Thru 65 01: 60 Thru 65 10-20-80	.....	2	343 5740	
27.038 BUTTON, Plug				
(For 7/32" Dia. Hole) 62-63 07-09: 63-64 10-80	23.006	AR	400 0048	
(For 3/8" Dia. Hole) 63 Thru 65 10-80	.....	1	400 0576	
(For 13/32" Dia. Hole) 63 Thru 65 10-80	.....	2	400 0550	
(For 1/2" Dia. Hole) 61 01: 64 01: 60 Thru 65 10-20-80	.....	AR	400 0335	
(For 1/2" Dia. Hole) 61 04-08: 62-63 01 ***(Replaces 400 0205)***	.....	AR	400 0282	
(For 1.2" Dia. Hole) 62-63 10-80	.....	2	400 0335	
(For 9/16" Dia. Hole) 60-61 10-20-80: 64-65 10-80	22.100	AR	400 0368	
(For 5/8" Dia. Hole-Rubber) 60 10-20-80	23.074	AR	438 6636	
(For 5/8" Dia. Hole-Steel) 60 10-20-80: 64-65 10-80	17.494	AR	G142081	
(For 5/8" Dia. Hole) 64-65 18-88	17.494	AR	G142079	
(For 3/4" Dia. Hole-Plastic) 61 02-04-06-07	29.340	2	346 3739	
(For 3/4" Dia. Hole-Rubber) 61 01-10-20-80: 64-65 18-88	.....	AR	400 0327	
(For 3/4" Dia. Hole-Plastic) 60 01-10-20-80: 62 Thru 65 01-10-20-80 ***(Replaces 343 1154)***	.....	AR	400 0333	
(For 3/4" Dia. Hole-Rubber) 61 04-08: 60 10-20-80: 62 10-80 ***(Replaces 400 0212)***	.....	AR	400 0327	
(For 1" Dia. Hole-Rubber) 60-61 01-10-20-80	29.340	AR	437 2959	
(For 1" Dia. Hole-Plastic) 60-61 01-10-20-80	.....	AR	400 0334	#
(For 1" Dia. Hole-23/64" Depth) 62 Thru 65 01-10-80	.....	AR	400 0334	
(For 1" Dia. Hole) 63-64 01-10-80 (WBS-WFC): 65 01-10-80	.....	1	400 0180	

Copyright 1963 American Motors Corp.

GROUP NO. — DESCRIPTION — YEAR and MODEL	PRIMARY GROUP NO.	PER CAR	PART NO.	CODE
(For 1" Dia. Hole-9/16" Depth) 64-65 01: 62 Thru 65 10-80	.....	AR	400 0377	
(For 1" Dia. Hole-Rubber) 64-65 01: 63 Thru 65 10-80	.....	2	400 0329	
(For 1" Dia. Hole-Steel) 63 Thru 65 18-88 (W3S)...(Incl. Seal)	23.006	1	400 0561	
(For 1-1/4" Dia. Hole) 60 Thru 65 01-10-20-80 .....***(Replaces 343 1223)***	.....	AR	400 0328	
(For 1-1/4" Dia. Hole-Plastic) 64-65 01	.....	1	400 0714	
(For 1-1/4" Dia. Hole-Rubber) 60-61 10-20-80	8.192	1	315 3393	
(For 1-1/4" Dia. Hole) 63-64 10-80: 65 18-88	.....	AR	400 0331	
(For 1-1/2" Dia. Hole) 61 Thru 63 07 (WAT)	.....	1	400 0211	
(For 1-1/2" Dia. Hole) 64-65 01-10-80: 63 10-80	.....	AR	400 0499	
(For 1-3/4" Dia. Hole) 64-65 05-08: 63 Thru 65 15-18-85-88	.....	2	400 0534	
(For 3" Dia. Hole) 64-65 01 (WOD)	.....	1	400 0725	
(For 3" Dia. Hole) 64 01 (LOW): 63 Thru 65 10-80	.....	2	400 0507	
(For 3-1/2" x 3/4" Dia. Hole) 63 10-80	.....	2	400 0498	

27.084 MIRROR, Inside Rear View

(Chrome) 60-61 01...(Incl. Bracket 2-3/4" Long)	.....	1	343 6898	
(Chrome) 61 Thru 63 04-08...(Incl. Bracket 4-3/8" Long)	.....	1	346 0161	
(Chrome) 62-63 02-05-06-07...(Incl. Bracket)	.....	1	343 6898	
(Chrome) 64-65 01...(Less Bracket)	.....	1	352 0585	
(Chrome) ***164 01 (CAN):*** 64-65 10-80...(Less Bracket)	.....	1	352 0232	
(Chrome) 60-61 10-20-80...(Less Bracket)	.....	1	344 3826	
(Chrome) 62-63 10-80...(Incl. Bracket)	.....	1	447 9531	
(Glareproof) 60-61 01-10-20-80 .....***(Ref. Pr. List)***	.....	1	899 0486	
(Glareproof) 62-63 01...(Incl. Bracket)	15.270	1	899 1015	
(Glareproof) 62-63 01...(Less Bracket)	.....	1	348 1594	
(Glareproof) 64-65 01-10-80...(Less Bracket)	15.270	1	899 1358	
(Glareproof) 62-63 10-80...(Incl. Bracket)	15.270	1	899 1014	
(Gray) 60 01...(Incl. Bracket) .....***(Replaces 343 2127)***	.....	1	344 6256	
(Silver) 61 01...(Incl. Bracket 2-3/4" Long)	.....	1	345 3138	
(Silver) 61 Thru 63 04-08...(Incl. Bracket 4-3/8" Long)	.....	1	346 0162	
(Silver) 62 02-05-06-07...(Incl. Bracket)	.....	1	345 3138	
(Silver) 63 02-05-06-09...(Incl.. Bracket)	.....	1	345 3138	
(Silver) 64-65 01...(Less Bracket)	.....	1	352 0586	
(Silver) ***164 01-10 (Can):*** 64-65 10: 65 80 ...(Less Bracket)	.....	1	351 9144	
(Silver) 61 10-20...(Incl. Bracket)	.....	1	345 5221	
(Silver) 62-63 10-80...(Incl. Bracket)	.....	1	447 9532	

ATTACHING PARTS

Mirror To Bracket

SCREW, Machine.....	60-61 01-10-20-80	17.592	1	G157105	NA
SCREW, Machine.....	64 01-10-80 (1-1/2" Long): 65 01-10-80	17.640	1	400 1531	
SCREW, Machine.....	64 10-80 (1-3/4" Long)	17.592	1	G157004	

PAD, Rear View Mirror (With Glareproof Mirror)

60 Thru 63 01	.....	1	343 5044	

BRACKET, Rear View Mirror

(Chrome) 60-61 01...(Incl. Screw And Pad) .....***(Ref. Pr. List)***	27.084	1	899 0948	
(Chrome) 62-63 01 (With Glare Proof Mirror)	.....	1	341 6950	
(Chrome) 64-65 01-15-16-18-85-88.....***(Replaces 352 0426)***	.....	1	320 5869	
(Chrome) 60-61 10-20	27.084	1	341 1783	
(Chrome) 64 19-89: 65 17-19-87-89 ..... ***(Use 320 5870)***	.....	1	352 0233	
(Chrome) 60-61 80...(Incl. Screw)	.....	1	320 2277	
(Silver) 64-65 01-10.....***(Replaces 352 0425)***	.....	1	320 5868	
(Silver) ***164-165 01-10-80 (CAN)***	.....	1	351 4957	
(Silver) 62 10-80 (Deluxe And Custom-2 Holes)	.....	1	447 9760	
(Silver) 62 10-80 (Deluxe And Custom-3 Holes)	.....	1	447 9537	
(Silver) 63 10-80	.....	1	447 9991	

Copyright 1963 American Motors Corp.

GROUP NO. — DESCRIPTION — YEAR and MODEL	PRIMARY GROUP NO.	PER CAR	PART NO.	CODE
ATTACHING PARTS				
Bracket To Body				
SCREW, Tapping..... 60 01-10-20-80	17.654	2	G162416	NA
SCREW, Tapping..... 61 01	17.654	2	G162418	NA
SCREW, Tapping..... 64-65 01-10-80: 61 10-20-80	17.655	2	G168528	NA
SCREW, Tapping..... 64-65 01-10-80	17.655	1	G168499	NA
PLATE, Rear View Mirror Fastening				
(Chrome) 62 10-80 (400-3 Holes)	.....	1	447 9538	
(Chrome) 62 10-80 (400-2 Holes)	.....	1	447 9761	
(Chrome) 63 10-80	.....	1	447 9992	
(Silver) 61 10-20	.....	1	345 5223	
ATTACHING PARTS				
Plate To Body				
SCREW, Tapping..... 62-63 01	17.654	2	G162418	NA
SCREW, Tapping..... 62 10-80 (Front End)	17.655	2	G168528	NA
SCREW, Tapping..... 62 10-80 (Rear End)	17.655	1	G168496	NA
SCREW, Tapping..... 63 10-80	17.655	2	G168528	NA
Plate To Retainer				
SCREW, Machine..... 62-63 10-80	17.592	1	G156655	NA
SPACER, Rear View Mirror				
64 01	.....	1	350 0723	
65 17-87	.....	1	351 7234	
65 59 (Marlin)	.....	1	356 2878	
ATTACHING PARTS				
Spacer To Body				
SCREW, Tapping..... 64 07: 65 17-87	17.660	1	G161871	NA
NUT, Rear View Mirror Locking				
(Cadmium) 62 10-80 (Deluxe And Custom): 63 10-80	17.410	1	G124920	NA
(Chromium) 62 10-80 (400): 63 10-80	17.410	1	G124921	NA
(Silver) 62-63 01: 61 10-20	.....	1	345 5224	
STUDBALL, Rear View Mirror				
62-63 10-80	.....	1	346 1577	
RETAINER, Rear View Mirror				
62-63 10-80	.....	1	447 9533	
27.130 HOOK, Coat				
163-164 10-80 (Can)	.....	2	347 6476	#
165 05-06-08-09 (CAN)	.....	2	355 2136	
165 10-80 (CAN)	.....	2	355 2033	
(Chrome) 60 Thru 63 01: 60 10-20-80: 65 59 (Marlin)	.....	AR	345 1191	
(T-121)	.....	2	346 0461	
(T-122)	.....	2	346 0461	
(T-123)	.....	2	346 0462	
(T-124)	.....	2	346 0463	
(T-125)	.....	2	346 0461	
(T-126)	.....	2	346 0464	
(T-128)	.....	2	346 0461	
(T-129)	.....	2	346 0461	
(T-130)	.....	2	346 0461	

Copyright 1963 American Motors Corp.

GROUP NO. — DESCRIPTION — YEAR and MODEL	PRIMARY GROUP NO.	PER CAR	PART NO.	CODE
(T-131)	.....	2	346 0461	#
(T-132)	.....	2	346 0461	#
(T-133)	.....	2	346 0462	#
(T-134)	29.120	2	346 0463	#
(T-135)	.....	2	346 0461	#
(T-136)	.....	2	346 0464	#
(T-138)	.....	2	346 0461	#
(T-139)	.....	2	346 0461	#
(T-141)	.....	2	346 0461	#
(T-142)	.....	2	346 0461	#
(T-143)	.....	2	346 0462	#
(T-144)	29.120	2	346 0463	#
(T-145)	.....	2	346 0461	#
(T-146)	.....	2	346 0464	#
(T-149)	.....	2	346 0461	#
(T-151)	.....	2	346 0461	#
(T-152)	.....	2	346 0461	#
(T-153)	.....	2	346 0462	#
(T-154)	29.120	2	346 0463	#
(T-155)	.....	2	346 0461	#
(T-156)	.....	2	346 0464	#
(T-159)	.....	2	346 0461	#
(T-162)	.....	2	346 0461	#
(T-163)	.....	2	346 0462	#
(T-164)	29.120	2	346 0463	#
(T-165)	.....	2	346 0461	#
(T-166)	.....	2	346 0464	#
(T-168)	.....	2	346 0461	#
(T-169)	.....	2	346 0461	#
(T-172)	.....	2	346 0461	#
(T-173)	.....	2	346 0462	#
(T-174)	29.120	2	346 0463	#
(T-175)	.....	2	346 0461	#
(T-176)	.....	2	346 0464	#
(T-178)	.....	2	346 0461	#
(T-179)	.....	2	346 0461	#
(T-181)	.....	2	346 0461	#
(T-182)	.....	2	346 0461	#
(T-183)	.....	2	346 0462	#
(T-184)	29.120	2	346 0463	#
(T-185)	.....	2	346 0461	#
(T-186)	.....	2	346 0464	#
(T-189)	.....	2	346 0461	#
(T-191)	.....	2	346 0461	#
(T-192)	.....	2	346 0461	#
(T-193)	.....	2	346 0462	#
(T-194)	29.120	2	346 0463	#
(T-195)	.....	2	346 0461	#
(T-196)	.....	2	346 0464	#
(T-199)	.....	2	346 0461	#
(T-245)	.....	2	347 6661	#
(T-246)	.....	2	346 9057	#
(T-248)	.....	2	348 6215	#
(T-249)	.....	2	348 6216	#
(T-252)	.....	2	347 6661	#
(T-262)	.....	2	347 6661	#
(T-263)	.....	2	346 9055	#
(T-264)	.....	2	346 9056	#

Copyright 1963 American Motors Corp.

GROUP NO. — DESCRIPTION — YEAR and MODEL	PRIMARY GROUP NO.	PER CAR	PART NO.	CODE
(T-266)	.....	2	346 9057	#
(T-272)	.....	2	347 6661	#
(T-273)	.....	2	346 9055	#
(T-274)	.....	2	346 9056	#
(T-275)	.....	2	347 6661	#
(T-276)	.....	2	349 3134	#
(T-278)	.....	2	348 6215	#
(T-279)	.....	2	348 6216	#
(T-282)	.....	2	347 6661	#
(T-283)	.....	2	346 9055	#
(T-284)	.....	2	346 9056	#
(T-286)	.....	2	346 9057	#
(T-292)	.....	2	347 6661	#
(T-293)	.....	2	346 9055	#
(T-294)	.....	2	346 9056	#
(T-295)	.....	2	347 6661	#
(T-296)	.....	2	346 9057	#
(T-298)	.....	2	348 6215	#
(T-299)	.....	2	348 6216	#
(T-312)	.....	2	349 3130	#
(T-313)	.....	2	349 3131	#
(T-314)	.....	2	349 3132	#
(T-315)	.....	2	349 3130	#
(T-316)	.....	2	348 6216	#
(T-322)	.....	2	349 3130	#
(T-323)	.....	2	349 3131	#
(T-324)	.....	2	349 3132	#
(T-325)	.....	2	349 3130	#
(T-326)	.....	2	348 6216	#
(T-327)	.....	2	349 3134	#
(T-342)	.....	2	349 3130	#
(T-343)	.....	2	349 3131	#
(T-344)	.....	2	349 3132	#
(T-345)	.....	2	349 3130	#
(T-346)	.....	2	348 6216	#
(T-347)	.....	2	349 3134	#
(T-351)	.....	2	349 3130	#
(T-352)	.....	2	349 3130	#
(T-353)	.....	2	349 3131	#
(T-354)	.....	2	349 3132	#
(T-362)	.....	2	349 3130	#
(T-363)	.....	2	349 3131	#
(T-364)	.....	2	349 3132	#
(T-365)	.....	2	349 3130	#
(T-366) 63 10	.....	2	348 6216	#
(T-366) ***163 10 (CAN)***	.....	2	347 6476	#
(T-372)	.....	2	349 3130	#
(T-373)	.....	2	349 3131	#
(T-374)	.....	2	349 3132	#
(T-375)	.....	2	349 3130	#
(T-376) 63 10	.....	2	348 6216	#
(T-376) ***163 10 (CAN)***	.....	2	347 6476	#
(T-377)	.....	2	349 3134	#
(T-382)	.....	2	349 3130	#
(T-383)	.....	2	349 3131	#
(T-384)	.....	2	349 3132	#
(T-385)	.....	2	349 3130	#
(T-386) 63 80	.....	2	348 6216	#

Copyright 1963 American Motors Corp.

GROUP NO. — DESCRIPTION — YEAR and MODEL	PRIMARY GROUP NO.	PER CAR	PART NO.	CODE
(T-392)	.....	2	349 3130	
(T-393)	.....	2	349 3132	
(T-394)	.....	2	349 3133	
(T-395)	.....	2	349 3130	
(T-396) 63 80	.....	2	348 6216	
(T-397)	.....	2	349 3134	
(T-422)	.....	2	349 3130	
(T-432)	.....	2	349 3130	
(T-433)	.....	2	350 2311	
(T-434)	.....	2	350 2312	
(T-435)	.....	2	349 3130	
(T-436)	.....	2	350 2315	
(T-438)	.....	2	350 2313	
(T-441)	.....	2	349 3130	
(T-442)	.....	2	349 3130	
(T-443)	.....	2	350 2311	
(T-444)	.....	2	350 2312	
(T-445)	.....	2	349 3130	
(T-446)	.....	2	350 2315	
(T-447)	.....	2	350 2314	
(T-448)	.....	2	350 2313	
(T-452)	.....	2	349 3130	
(T-453)	.....	2	350 2311	
(T-454)	.....	2	350 2312	
(T-462)	.....	2	349 3130	
(T-463)	.....	2	350 2311	
(T-464)	.....	2	350 2312	
(T-465)	.....	2	349 3130	
(T-466) 63 10	.....	2	350 2315	
(T-468)	.....	2	350 2313	
(T-471)	.....	2	349 3130	
(T-472)	.....	2	349 3130	
(T-473)	.....	2	350 2311	
(T-474)	.....	2	350 2312	
(T-475)	.....	2	350 2314	
(T-476) 63 10	.....	2	350 2315	
(T-477)	.....	2	349 3130	
(T-478)	.....	2	350 2313	
(T-491)	.....	2	349 3130	
(T-492)	.....	2	349 3130	
(T-493)	.....	2	350 2311	
(T-494)	.....	2	350 2312	
(T-495)	.....	2	349 3130	
(T-496) 63 80	.....	2	350 2315	
(T-497)	.....	2	350 2314	
(T-498)	.....	2	350 2313	
(T-522)	.....	2	353 8256	
(T-532)(220 Model)	.....	2	356 3120	#
(T-532)(330 Model)	.....	2	353 8256	#
(T-533)	.....	2	353 8257	
(T-534)	.....	2	353 8258	
(T-535)	.....	2	351 8248	
(T-536)	.....	2	353 8260	
(T-537)	.....	2	353 8259	
(T-541)	.....	2	353 8256	
(T-543)	.....	2	353 8257	
(T-544)	.....	2	353 8258	
(T-545)	.....	2	351 8248	
(T-546)	.....	2	353 8260	
(T-547)	.....	2	353 8259	

Copyright 1963 American Motors Corp.

GROUP NO. — DESCRIPTION — YEAR and MODEL	PRIMARY GROUP NO.	PER CAR	PART NO.	CODE
(T-392)	.....	2	349 3130	
(T-393)	.....	2	349 3132	
(T-394)	.....	2	349 3133	
(T-395)	.....	2	349 3130	
(T-396) 63 80	.....	2	348 6216	
(T-397)	.....	2	349 3134	
(T-422)	.....	2	349 3130	
(T-432)	.....	2	349 3130	
(T-433)	.....	2	350 2311	
(T-434)	.....	2	350 2312	
(T-435)	.....	2	349 3130	
(T-436)	.....	2	350 2315	
(T-438)	.....	2	350 2313	
(T-441)	.....	2	349 3130	
(T-442)	.....	2	349 3130	
(T-443)	.....	2	350 2311	
(T-444)	.....	2	350 2312	
(T-445)	.....	2	349 3130	
(T-446)	.....	2	350 2315	
(T-447)	.....	2	350 2314	
(T-448)	.....	2	350 2313	
(T-452)	.....	2	349 3130	
(T-453)	.....	2	350 2311	
(T-454)	.....	2	350 2312	
(T-462)	.....	2	349 3130	
(T-463)	.....	2	350 2311	
(T-464)	.....	2	350 2312	
(T-465)	.....	2	349 3130	
(T-466) 63 10	.....	2	350 2315	
(T-468)	.....	2	350 2313	
(T-471)	.....	2	349 3130	
(T-472)	.....	2	349 3130	
(T-473)	.....	2	350 2311	
(T-474)	.....	2	350 2312	
(T-475)	.....	2	350 2314	
(T-476) 63 10	.....	2	350 2315	
(T-477)	.....	2	349 3130	
(T-478)	.....	2	350 2313	
(T-491)	.....	2	349 3130	
(T-492)	.....	2	349 3130	
(T-493)	.....	2	350 2311	
(T-494)	.....	2	350 2312	
(T-495)	.....	2	349 3130	
(T-496) 63 80	.....	2	350 2315	
(T-497)	.....	2	350 2314	
(T-498)	.....	2	350 2313	
(T-522)	.....	2	353 8256	
(T-532)(220 Model)	.....	2	356 3120	#
(T-532)(330 Model)	.....	2	353 8256	#
(T-533)	.....	2	353 8257	
(T-534)	.....	2	353 8258	
(T-535)	.....	2	351 8248	
(T-536)	.....	2	353 8260	
(T-537)	.....	2	353 8259	
(T-541)	.....	2	353 8256	
(T-543)	.....	2	353 8257	
(T-544)	.....	2	353 8258	
(T-545)	.....	2	351 8248	
(T-546)	.....	2	353 8260	
(T-547)	.....	2	353 8259	

Copyright 1963 American Motors Corp.

GROUP NO. — DESCRIPTION — YEAR and MODEL	PRIMARY GROUP NO.	PER CAR	PART NO.	CODE
(T-548)	.....	2	353 8256	
(T-552)	.....	2	353 8256	
(T-553)	.....	2	353 8257	
(T-557)	.....	2	353 8259	
(T-562)	.....	2	353 8256	
(T-563)	.....	2	353 8257	
(T-564)	.....	2	353 8258	
(T-565)	.....	2	351 8248	
(T-566)	.....	2	353 8260	
(T-567)	.....	2	353 8259	
(T-571)	.....	2	353 8256	
(T-573)	.....	2	353 8257	
(T-574)	.....	2	353 8258	
(T-575)	.....	2	351 8248	
(T-576)	.....	2	353 8260	
(T-577)	.....	2	353 8259	
(T-578)	.....	2	353 8256	
(T-582)	.....	2	353 8256	
(T-583)	.....	2	353 8257	
(T-584)	.....	2	353 8258	
(T-585)	.....	2	351 8248	
(T-586)	.....	2	353 8260	
(T-587)	.....	2	353 8259	
(T-591)	.....	2	353 8256	
(T-593)	.....	2	353 8257	
(T-594)	.....	2	353 8258	
(T-595)	.....	2	351 8248	
(T-596)	.....	2	353 8260	
(T-597)	.....	2	353 8259	
(T-598)	.....	2	353 8256	
ATTACHING PARTS				
Hook To Roof Rail				
SCREW, Tapping..... 60-61 01 (1 Req.): 60 10-20-80 (2 Req. -3/4" Long): 62 01 (Deluxe-1 Req.): 62 01 (Custom And 400-2 Req.): 63 01 (2 Req. -3/4" Long)	17.654	AR	G162474	NA
SCREW, Tapping..... 63 09 (1-1/4" Long): 64-65 01	17.655	2	G178849	NA
SCREW, Tapping..... 60 10-20-80 (1" Long).....	17.654	2	G162413	NA
SCREW, Tapping..... 61 Thru 65 10-20-80.....	26.001	2	400 0026	
RAGBOARD, Coat Hook Backing				
60 01 (1 Req.): ***61 Thru 65 10-20-80 (Export-2 Req.)***.....	.....	AR	436 6714	
60 15-18-25-28-85-88..... ***(Discontinued)***	.....	2	345 1736	
ATTACHING PARTS				
Ragboard To Roof				
NAIL..... ***62 Thru 65 10-80 (Export)***.....	29.302	2	437 7976	
27.140 NET, Handi-Pak (Incl. Net, Support And Screws)				
63 Thru 65 10-80: 60-61 80.....	.....	1	320 4478	
ATTACHING PARTS				
Support To Windshield Header Bar				
SCREW, Tapping..... 63 Thru 65 10-80: 60-61 80	17.669	2	G457002	NA
Net To Side Roof Rail				
SCREW, Tapping..... 63 Thru 65 10-80: 60-61 80	29.019	2	439 5412	#
NET, Windshield Header Package (Less Support)				
63 Thru 65 10-80: 60-61 80.....	.....	1	345 0977	
62 80.....	.....	1	347 0974	

Copyright 1963 American Motors Corp.

GROUP NO. — DESCRIPTION — YEAR and MODEL	PRIMARY GROUP NO.	PER CAR	PART NO.	CODE
ATTACHING PARTS				
Net To Side Roof Rail				
SCREW, Tapping ..... 63 Thru 65 10-80: 60-61 80	29.019	2	439 5412	#
SCREW, Tapping..... 62 80	.....	2	400 0445	
SUPPORT, Windshield Header Package Net				
63 Thru 65 10-80: 60-61 80	.....	1	345 0979	#
62 80	.....	1	346 6685	
ATTACHING PARTS				
Support To Windshield Header Bar				
SCREW, Tapping..... 63 Thru 65 10-80: 60-61 80	17.669	2	G457002	NA#
SCREW, Tapping..... 62 80 (Pan Head).....	17.660	1	G161872	NA
SCREW, Tapping..... 62 80 (Oval Head)	17.655	1	G168496	NA
RAGBOARD, Windshield Header Package Net				
63 10-80: 60-61 80.....	27.130	2	436 6714	
SOCKET, Windshield Header Package Net				
63 Thru 65 10: 60 Thru 65 80.....	17.270	1	G141998	#
BUTTON, Windshield Header Package Net				
63 Thru 65 10: 60 Thru 65 80.....	17.270	1	G141994	#
27.190 RACK KIT, Luggage (Complete)				
60 04	.....	1	320 9511	
61 Thru 63 04-08..... *(Order Comp.)*	.....	1	320 2773	
64-65 08	.....	1	448 0929	
27.200 MOULDING, Luggage Rack				
60 04...(Less Bolts And Nuts)	.....	6	343 2272	
64-65 08: 63 Thru 65 18-88 ...(Incl. Bolts & Nuts)	.....	7	448 0213	
60 Thru 62 18-28-83-88...(Incl. Bolts And Nuts).....	.....	9	448 0090	
(Inner) 61 Thru 63 04-08...(Incl. Bolts And Nuts)	.....	4	448 0092	
(Outer) 61 Thru 63 04-08...(Incl. Bolts And Nuts).....	.....	2	448 0091	
ATTACHING PARTS				
Moulding To Roof Panel				
BOLT, Tee..... 60 04	.....	18	343 2987	
BOLT, Tee ..... 61 Thru 63 04-08.....*(Replaces 346 4586)*	.....	24	400 0505	
BOLT, Tee..... 60 Thru 62 18-28-83-88.....	.....	34	400 0374	
BOLT, Tee..... 64 08 (20 Req.): 63-64 18-88 (28 Req.)	.....	AR	400 0505	
CLIP, Plastic..... 65 08 (20 Req.): 65 18-88 (28 Req.).....	.....	AR	400 0762	
CLIP, Anti-Slide..... 65 08 (20 Req.): 65 18-88 (7 Req.).....	.....	AR	400 1557	
NUT, Hexagon..... 60 04 (18 Req.): 61 Thru 63 04-08 (24 Req.): 60 Thru 62 18-28-83-88 (34 Req.): 63 18-88 (28 Req.)	25.052	AR	439 0742	
NUT, Hexagon..... 64 08 (20 Req.): 64 18-88 (28 Req.).....	26.039	AR	400 0517	

Copyright 1963 American Motors Corp.

GROUP NO. — DESCRIPTION — YEAR and MODEL	PRIMARY GROUP NO.	PER CAR	PART NO.	CODE
27.203 RAIL, Luggage Rack				
60 04	.....	1	343 2023	
(Side) 61 Thru 63 04-08	.....	2	344 7260	
(Rear) 61 Thru 63 04-08	.....	1	344 7262	
(Rear) 64 08 (Note 29.212-1 Type 1)	.....	1	350 0611	
(Rear) 64 08 (Note 27.212-1 Type 2): 65 08	.....	1	352 3201	
60-61 18-28-83-88	.....	1	344 0061	
62 18-88	.....	1	347 5616	
63 Thru 65 18-88	.....	1	347 2939	
(Side-Left) 64-65 08	.....	1	350 5760	
(Side-Right) 64-65 08	.....	1	350 5761	
ATTACHING PARTS				
Rail To Post				
PIN ..... 60 04 (Front): 60 Thru 63 18-28-83-88 (Front)	.....	2	400 0017	
PIN ..... 61 Thru 63 04-08 (Front)	.....	2	345 3216	
PIN ..... 61 Thru 63 04-08 (Rear)	.....	4	345 3217	
PIN ..... 64-65 08 (11/16" Long)	.....	4	400 0263	
PIN ..... 64-65 08 (13/16" Long)	.....	2	400 0746	
PIN 64-65 18-88	.....	2	400 0448	
27.208 POST, Luggage Rack Front				
(Left) 60 04	.....	1	437 8759	
(Left) 61 Thru 63 04-08	.....	1	344 7267	
(Left) 64-65 08	29.208	1	350 0608	
(Left) 60-61 18-28-83-88	.....	1	437 8759	
(Left) 62 18-88	.....	1	346 5963	
(Left) 63 18-88 (Note 27.208-3 Type 1)	.....	1	448 0915	
(Left) 63 18-88 (Note 27.208-3 Type 2): 64-65 18-88	.....	1	347 2987	
(Right) 60 04	.....	1	437 8760	
(Right) 61 Thru 63 04-08	.....	1	344 7266	
(Right) 64-65 08	29.208	1	350 0609	
(Right) 60-61 18-28-83-88	.....	1	437 8760	
(Right) 62 18-88	.....	1	346 5962	
(Right) 63 18-88 (Note 27.208-3 Type 1)	.....	1	448 0914	
(Right) 63 18-88 (Note 27.208-3 Type 2): 64-65 18-88	.....	1	347 2986	
ATTACHING PARTS				
Front Half To Rear Half				
SCREW, Machine 64 18-88	.....	2	400 1415	
Post To Roof Panel				
WASHER, Lock ..... 60 Thru 63 04-08: 61 18-28-88	17.822	2	G138485	NA
WASHER, Lock ..... 64-65 08: 63-64 18-88 (Note 27.208-3 Type 2)	17.824	4	G138538	NA
WASHER, Lock ..... 60 18-28-83-88: 62 18-88: 63 18-88 (Note 27.208-3 Type 1)	17.824	2	G138538	NA
WASHER, Plain ..... 61 Thru 63 04-08: 60 Thru 62 18-28-83-88: 63 18-88 (Note 27.208-3 Type 1) ..... ***(Replaces 800 0157)***	17.814	2	400 0480	
WASHER, Plain 64-65 08	.....	4	400 0883	
WASHER, Plain ..... 63 18-88 (Note 27.208-3 Type 2): 64 18-88	23.036	4	400 0480	

NOTE 27.208-1: This Nut is used on the Post having Studs with 5/16-18 Thread.
NOTE 27.208-2: This Nut is used on the Post having Studs with 5/16-24 Thread.
NOTE 27.208-3: Two Types of Posts were used on the 63 18-88: They can be identified as follows:
Type 1: Post has one Stud.
Type 2: Post has two Studs.

Copyright 1963 American Motors Corp.

GROUP NO. — DESCRIPTION — YEAR and MODEL		PRIMARY GROUP NO.	PER CAR	PART NO.	CODE
WASHER, Sealing	60 Thru 65 04-08-18-28-83-88 (1" O. D.)	12.075	4	400 0082	
WASHER, Sealing	60 Thru 62 18-28-83-88 (3/4" O. D.): 63 18-88 (3/4" O. D. -Note 27.208-3 Type 1) ***(Use 400 0082)***	.....	2	400 0083	#
WASHER, Sealing	63 18-88 (3/4" O. D. -Note 17.208-3 Type 2) ***(Use 400 0082)***	.....	4	400 0083	#
NUT, Hexagon	60 04-18-28-83-88: 61 04-08-18-28-83-88 (Note 27.208-1): 62-63 04-08	17.406	2	G120376	NA
NUT, Hexagon	64-65 08	17.406	4	G120376	NA
NUT, Hexagon	61 18-28-83-88 (Note 27.208-2): 62 18-88: 63 18-88 (Note 27.208-3 Type 1)	17.406	2	G120368	
NUT, Hexagon	63 18-88 (Note 27.208-3 Type 2)	17.406	4	G120368	

REINFORCEMENT, Luggage Rack Front Post

60 04		.....	2	343 2107	

SEAL, Luggage Rack Front Post

60 04: 60 Thru 62 18-28-83-88		.....	2	437 8388	
61 Thru 63 04-08		.....	2	344 7272	
64-65 08		.....	2	350 0620	
63 18-88 (Note 27.208-3 Type 1)		.....	2	347 2950	
(Left) 63 18-88 (Note 27.208-3 Type 2): 64-65 18-88		.....	1	348 8833	
(Right) 63 18-88 (Note 27.208-3 Type 2): 64-65 18-88		.....	1	348 8832	

27.212 POST, Luggage Rack Rear

(Left) 61 Thru 64 04-08 (Note 27.212-1 Type 1)		.....	1	344 7271	
(Left) 64 08 (Note 27.212-1 Type 2): 65 08		.....	1	448 1755	
(Left-Front Half) 60 04: 60 Thru 62 18-28-83-88	***(Replaces 341 0161)***	.....	1	346 5967	
(Left-Front Half) 63 Thru 65 18-88		.....	1	348 2863	
(Left-Rear Half) 60 04: 60 Thru 62 18-28-83-88	***(Replaces 341 0165)***	.....	1	346 5971	
(Left-Rear Half) 63 Thru 65 18-88		.....	1	348 2867	
(Right) 61 Thru 64 04-08 (Note 27.212-1 Type 1)		.....	1	344 7270	
(Right) 64 08 (Note 27.212-1 Type 2): 65 08		.....	1	448 1754	
(Right-Front Half) 60 04: 60-61 18-28-83-88		.....	1	341 0162	
(Right-Front Half) 62 18-88		.....	1	346 5966	
(Right-Front Half) 63 Thru 65 18-88		.....	1	348 2862	
(Right-Rear Half) 60 04: 60-61 18-28-83-88		.....	1	341 0166	
(Right-Rear Half) 62 18-88		.....	1	346 5970	
(Right-Rear Half) 63 Thru 65 18-88		.....	1	348 2866	

ATTACHING PARTS

Post To Roof Panel

WASHER, Lock	60 04 (4 Req.): 61 Thru 63 04-08 (2 Req.)	17.822	AR	G138485	NA
WASHER, Lock	64-65 08 (4 Req.): 60 Thru 65 18-28-83-88 (4 Req.)	17.824	AR	G138538	NA
WASHER, Plain	60-61 04-08-18-28-83-88 (2 Req.): 62-63 04-08-18-88 (4 Req): 64-65 18-88 (4 Req.)	17.814	AR	400 0480	
WASHER, Plain	64-65 08	.....	4	400 0883	
WASHER, Sealing	60 Thru 65 04-08-18-28-83-88 (1" O. D.)	12.075	4	400 0082	
WASHER, Sealing	60 18-28-83-88 (3/4" O. D.)	27.208	4	400 0083	
NUT, Hexagon	60 04-18-28-83-88 (4 Req.): 61 04-08-18-88 (2 Req. -Note 27.208-1): 62-63 04-08 (2 Req.): 64-65 08 (4 Req.)	17.406	AR	G120376	NA
NUT, Hexagon	61 18-28-83-88 (2 Req. -Note 27.208-2): 62 Thru 65 18-88 (4 Req.)	17.406	AR	G120368	

NOTE 27.212-1: Two Types of Rear Luggage Rails were used on the 64 08 Model. They can be identified *as follows:*

Type 1: The Rear Rail is round in shape.

Type 2: The Rear Rail is streamlined in Shape.

Copyright 1963 American Motors Corp.

GROUP NO. — DESCRIPTION — YEAR and MODEL		PRIMARY GROUP NO.	PER CAR	PART NO.	CODE
WASHER, Sealing	60 Thru 65 04-08-18-28-83-88 (1" O. D.)	12.075	4	400 0082	
WASHER, Sealing	60 Thru 62 18-28-83-88 (3/4" O. D.): 63 18-88 (3/4" O. D. -Note 27.208-3 Type 1) ***(Use 400 0082)***		2	400 0083	#
WASHER, Sealing	63 18-88 (3/4" O. D. -Note 17.208-3 Type 2) ***(Use 400 0082)***		4	400 0083	#
NUT, Hexagon	60 04-18-28-83-88: 61 04-08-18-28-83-88 (Note 27.208-1): 62-63 04-08	17.406	2	G120376	NA
NUT, Hexagon	64-65 08	17.406	4	G120376	NA
NUT, Hexagon	61 18-28-83-88 (Note 27.208-2): 62 18-88: 63 18-88 (Note 27.208-3 Type 1)	17.406	2	G120368	
NUT, Hexagon	63 18-88 (Note 27.208-3 Type 2)	17.406	4	G120368	

REINFORCEMENT, Luggage Rack Front Post

60 04			2	343 2107	

SEAL, Luggage Rack Front Post

60 04: 60 Thru 62 18-28-83-88			2	437 8388	
61 Thru 63 04-08			2	344 7272	
64-65 08			2	350 0620	
63 18-88 (Note 27.208-3 Type 1)			2	347 2950	
(Left) 63 18-88 (Note 27.208-3 Type 2): 64-65 18-88			1	348 8833	
(Right) 63 18-88 (Note 27.208-3 Type 2): 64-65 18-88			1	348 8832	

27.212 POST, Luggage Rack Rear

(Left) 61 Thru 64 04-08 (Note 27.212-1 Type 1)			1	344 7271	
(Left) 64 08 (Note 27.212-1 Type 2): 65 08			1	448 1755	
(Left-Front Half) 60 04: 60 Thru 62 18-28-83-88 ***(Replaces 341 0161)***			1	346 5967	
(Left-Front Half) 63 Thru 65 18-88			1	348 2863	
(Left-Rear Half) 60 04: 60 Thru 62 18-28-83-88 ***(Replaces 341 0165)***			1	346 5971	
(Left-Rear Half) 63 Thru 65 18-88			1	348 2867	
(Right) 61 Thru 64 04-08 (Note 27.212-1 Type 1)			1	344 7270	
(Right) 64 08 (Note 27.212-1 Type 2): 65 08			1	448 1754	
(Right-Front Half) 60 04: 60-61 18-28-83-88			1	341 0162	
(Right-Front Half) 62 18-88			1	346 5966	
(Right-Front Half) 63 Thru 65 18-88			1	348 2862	
(Right-Rear Half) 60 04: 60-61 18-28-83-88			1	341 0166	
(Right-Rear Half) 62 18-88			1	346 5970	
(Right-Rear Half) 63 Thru 65 18-88			1	348 2866	

ATTACHING PARTS

Post To Roof Panel

WASHER, Lock	60 04 (4 Req.): 61 Thru 63 04-08 (2 Req.)	17.822	AR	G138485	NA
WASHER, Lock	64-65 08 (4 Req.): 60 Thru 65 18-28-83-88 (4 Req.)	17.824	AR	G138538	NA
WASHER, Plain	60-61 04-08-18-28-83-88 (2 Req.): 62-63 04-08-18-88 (4 Req): 64-65 18-88 (4 Req.)	17.814	AR	400 0480	
WASHER, Plain	64-65 08		4	400 0883	
WASHER, Sealing	60 Thru 65 04-08-18-28-83-88 (1" O. D.)	12.075	4	400 0082	
WASHER, Sealing	60 18-28-83-88 (3/4" O. D.)	27.208	4	400 0083	
NUT, Hexagon	60 04-18-28-83-88 (4 Req.): 61 04-08-18-88 (2 Req. -Note 27.208-1): 62-63 04-08 (2 Req.): 64-65 08 (4 Req.)	17.406	AR	G120376	NA
NUT, Hexagon	61 18-28-83-88 (2 Req. -Note 27.208-2): 62 Thru 65 18-88 (4 Req.)	17.406	AR	G120368	

NOTE 27.212-1: Two Types of Rear Luggage Rails were used on the 64 08 Model. They can be identified as follows:

Type 1: The Rear Rail is round in shape.

Type 2: The Rear Rail is streamlined in Shape.

Copyright 1963 American Motors Corp.

GROUP NO. — DESCRIPTION — YEAR and MODEL	PRIMARY GROUP NO.	PER CAR	PART NO.	CODE
REINFORCEMENT, Luggage Rack Rear Post				
60 04	.....	2	343 2106	
61 Thru 63 04-08	.....	2	344 7278	
64-65 08	.....	2	350 0386	
(Left) 60 Thru 62 18-28-83-88	.....	1	344 0745	
(Right) 60 Thru 62 18-28-83-88	.....	1	344 0744	
ATTACHING PARTS				
Reinforcement To Roof Panel				
SCREW, Tapping..... 61 Thru 63 04-08	17.660	4	G161895	NA
SCREW, Tapping..... 60-61 18-28-83-88 (3/4" Long). ***(Replaces 344 5895)***	23.020	2	400 0016	
SCREW, Machine..... 61-62 18-28-88 (7/8" Long)	17.598	2	G453027	NA
Front Half To Rear Half				
SCREW, Machine..... 60 04: 60 Thru 65 18-28-83-88	.....	2	400 0020	
SEAL, Luggage Rack Rear Post				
60 04	.....	2	437 8389	
61 Thru 63 04-08 ***(Replaces 344 7329)***	.....	2	344 7328	
64-65 08	.....	2	350 0621	
63 Thru 65 18-88	.....	2	347 2951	
(Left) 60 Thru 62 18-28-83-88	.....	1	344 0747	
(Right) 60 Thru 62 18-28-83-88	.....	1	344 0746	
27.215 HANGER, Luggage Rack Strap				
60 Thru 63 04-08: 60 18-28-83-88	.....	2	437 8765	
64-65 08-18-88: 62-63 18-88	.....	2	346 5953	
61 18-28-88 ***(Ref. Pr. List)***	.....	2	345 5306	
ATTACHING PARTS				
Strap Hanger To Roof Panel				
SCREW, Tapping..... 64-65 08: 61 Thru 65 18-28-88 ***(Replaces 344 4626)***	22.056	4	400 0032	
WASHER, Lock..... 60 04: 61 04-08-18-28-88 (Note 27.215-1): 62-63 04-08	17.822	4	G138485	NA
WASHER, Lock..... 60 18-28-83-88: 65 18-88	17.824	4	G138538	NA
WASHER, Plain..... 60 04-18-28-83-88 (6 Req.): 61 Thru 65 04-08-18-88 (4 Req.)	17.814	AR	400 0480	
WASHER, Sealing..... 60 Thru 65 04-08-18-28-83-88	12.075	4	400 0082	
NUT, Hexagon..... 60 04-18-28-83-88: 61 04-08-18-28-88: 62-63 04-08	17.406	4	G120376	NA
NUT, Hexagon..... 62 Thru 65 18-88	17.406	4	G120368	#
SEAL, Luggage Rack Strap Hanger				
60 Thru 65 04-08-18-28-83-88	.....	2	437 8390	
27.250 HOUSING, Console				
(T-342) 63 01	.....	1	349 0111	
(T-342) 63 10-80	.....	1	349 0101	
(T-343) 63 01	.....	1	349 0112	
(T-343) 63 10-80	.....	1	349 0102	
(T-344) 63 01	.....	1	349 0113	
(T-344) 63 10-80	.....	1	349 0103	
(T-345) 63 01	.....	1	349 0115	
(T-345) 63 10-80	.....	1	349 0105	

Copyright 1963 American Motors Corp.

GROUP NO. — DESCRIPTION — YEAR and MODEL	PRIMARY GROUP NO.	PER CAR	PART NO.	CODE
(T-346) 63 01	.....	1	349 0114	
(T-346) 63 10-80	.....	1	349 0104	
(T-347) 63 01	.....	1	349 0116	
(T-347) 63 10-80	.....	1	349 0106	
(T-441) 64 01	.....	1	350 0561	
(T-442) 64 01	.....	1	350 0568	
(T-443) 64 01	.....	1	350 0562	
(T-444) 64 01	.....	1	350 0563	
(T-445) 64 01	.....	1	350 0565	
(T-446) 64 01	.....	1	350 0567	
(T-447) 64 01	.....	1	350 0566	
(T-448) 64 01	.....	1	350 0564	
(T-471) 64 10 (WCGS)(WOD-WFGS)	.....	1	350 9361	
(T-471) 64 10 (V8-WAT-WFGS)	.....	1	352 0951	
(T-472) 64 10 (WCGS)(WOD-WFGS)	.....	1	350 9361	
(T-472) 64 10 (V8-WAT-WFGS)	.....	1	352 0958	
(T-473) 64 10 (WCGS)(WOD-WFGS)	.....	1	350 9362	
(T-473) 64 10 (V8-WAT-WFGS)	.....	1	352 0952	
(T-474) 64 10 (WCGS)(WOD-WFGS)	.....	1	350 9363	
(T-474) 64 10 (V8-WAT-WFGS)	.....	1	352 0953	
(T-475) 64 10 (WCGS)(WOD-WFGS)	.....	1	350 9365	
(T-475) 64 10 (V8-WAT-WFGS)	.....	1	352 0955	
(T-476) 64 10 (WCGS)(WOD-WFGS)	.....	1	350 9367	
(T-476) 64 10 (V8-WAT-WFGS)	.....	1	352 0957	
(T-477) 64 10 (WCGS)(WOD-WFGS)	.....	1	350 9366	
(T-477) 64 10 (V8-WAT-WFGS)	.....	1	352 0956	
(T-478) 64 10 (WCGS)(WOD-WFGS)	.....	1	350 9364	
(T-478) 64 10 (V8-WAT-WFGS)	.....	1	352 0954	
(T-491) 64 80 (WCGS)(WOD-WFGS)	.....	1	350 9670	
(T-491) 64 80 (WAT-WFGS)	.....	1	352 0941	
(T-492) 64 80 (WCGS)(WOD-WFGS)	.....	1	350 9677	
(T-492) 64 80 (WAT-WFGS)	.....	1	352 0948	
(T-493) 64 80 (WCGS)(WOD-WFGS)	.....	1	350 9671	
(T-493) 64 80 (WAT-WFGS)	.....	1	352 0942	
(T-494) 64 80 (WCGS)(WOD-WFGS)	.....	1	350 9672	
(T-494) 64 80 (WAT-WFGS)	.....	1	352 0943	
(T-495) 64 80 (WCGS)(WOD-WFGS)	.....	1	350 9674	
(T-495) 64 80 (WAT-WFGS)	.....	1	352 0945	
(T-496) 64 80 (WCGS)(WOD-WFGS)	.....	1	350 9676	
(T-496) 64 80 (WAT-WFGS)	.....	1	352 0947	
(T-497) 64 80 (WCGS)(WOD-WFGS)	.....	1	350 9675	
(T-497) 64 80 (WAT-WFGS)	.....	1	352 0946	
(T-498) 64 80 (WCGS)(WOD-WFGS)	.....	1	350 9673	
(T-498) 64 80 (WAT-WFGS)	.....	1	352 0944	
(T-541) 65 01 (WCGS)(WOD-WFGS)	.....	1	350 0561	
(T-541) 65 01 (OHV-232-WAT-WFGS)	.....	1	317 7047	
(T-543) 65 01 (WCGS)(WOD-WFGS)	.....	1	317 6217	
(T-543) 65 01 (OHV-232-WAT-WFGS)	.....	1	317 7048	
(T-544) 65 01 (WCGS)(WOD-WFGS)	.....	1	317 6218	
(T-544) 65 01 (OHV-232-WAT-WFGS)	.....	1	317 7049	

Copyright 1963 American Motors Corp.

GROUP NO. — DESCRIPTION — YEAR and MODEL	PRIMARY GROUP NO.	PER CAR	PART NO.	CODE
(T-545) 65 01 (WCGS)(WOD-WFGS)	.....	1	317 6219	
(T-545) 65 01 (OHV-232-WAT-WFGS)	.....	1	317 7050	
(T-546) 65 01 (WCGS)(WOD-WFGS)	.....	1	317 6220	
(T-546) 65 01 (OHV-232-WAT-WFGS)	.....	1	317 7051	
(T-547) 65 01 (WCGS)(WOD-WFGS)	.....	1	317 6221	
(T-547) 65 01 (OHV-232-WAT-WFGS)	.....	1	317 7052	
(T-548) 65 01 (WCGS)(WOD-WFGS)	.....	1	350 0561	#
(T-548) 65 01 (OHV-232-WAT-WFGS)	.....	1	317 7047	#
(T-571) 65 10 (WCGS)(WOD-WFGS)	.....	1	350 9361	
(T-571) 65 10 (V8-WAT-WFGS)(OHV-232-WAT-WFGS)	.....	1	352 0951	
(T-573) 65 10 (WCGS)(WOD-WFGS)	.....	1	317 6225	
(T-573) 65 10 (OHV-232-WAT-WFGS)(V8-WAT-WFGS)	.....	1	317 6138	
(T-574) 65 10 (WCGS)(WOD-WFGS)	.....	1	317 6226	
(T-574) 65 10 (OHV-232-WAT-WFGS)(V8-WAT-WFGS)	.....	1	317 6139	
(T-575) 65 10 (WCGS)(WOD-WFGS)	.....	1	317 6227	
(T-575) 65 10 (OHV-232-WAT-WFGS)(V8-WAT-WFGS)	.....	1	317 6140	
(T-576) 65 10 (WCGS)(WOD-WFGS)	.....	1	317 6228	
(T-576) 65 10 (OHV-232-WAT-WFGS)(V8-WAT-WFGS)	.....	1	317 6141	
(T-577) 65 10 (WCGS)(WOD-WFGS)	.....	1	317 6229	
(T-577) 65 10 (OHV-232-WAT-WFGS)(V8-WAT-WFGS)	.....	1	317 6142	
(T-578) 65 10 (WCGS)(WOD-WFGS)	.....	1	350 9361	
(T-578) 65 10 (OHV-232-WAT-WFGS)(V8-WAT-WFGS)	.....	1	352 0951	
(T-591) 65 80 (990-WCGS)(990-WOD-WFGS)(990H-WCGS)(990H-WOD-WFGS)	.....	1	350 9670	
(T-591) 65 80 (990-WAT-WFGS)(990H-WAT-WFGS)	.....	1	352 0941	
(T-593) 65 80 (990-WCGS)(990-WOD-WFGS)(990H-WCGS)(990H-WOD-WFGS)	.....	1	317 6143	
(T-593) 65 80 (990-WAT-WFGS)(990H-WAT-WFGS)	.....	1	317 6133	
(T-594) 65 80 (990-WCGS)(990-WOD-WFGS)(990H-WCGS)(990H-WOD-WFGS)	.....	1	317 6144	
(T-594) 65 80 (990-WAT-WFGS)(990H-WAT-WFGS)	.....	1	317 6134	
(T-595) 65 80 (990-WCGS)(990-WOD-WFGS)(990H-WCGS)(990H-WOD-WFGS)	.....	1	317 6145	
(T-595) 65 80 (990-WAT-WFGS)(990H-WAT-WFGS)	.....	1	317 6135	
(T-596) 65 80 (990-WCGS)(990-WOD-WFGS)(990H-WCGS)(990H-WOD-WFGS)	.....	1	317 6146	
(T-596) 65 80 (990-WAT-WFGS)(990H-WAT-WFGS)	.....	1	317 6136	
(T-597) 65 80 (990-WCGS)(990-WOD-WFGS)(990H-WCGS)(990H-WOD-WFGS)	.....	1	317 6147	
(T-597) 65 80 (990-WAT-WFGS)(990H-WAT-WFGS)	.....	1	317 6137	
(T-598) 65 80 (990-WCGS)(990-WOD-WFGS)(990H-WCGS)(990H-WOD-WFGS)	.....	1	350 9670	
(T-598) 65 80 (990-WAT-WFGS)(990H-WAT-WFGS)	.....	1	352 0941	

ATTACHING PARTS

Console Housing To Floor Pan

STUD	63 10-80	.....	2	400 0581	
STUD	64-65 01-10-80	.....	2	400 0874	
STUD	65 10-80	25.054	2	400 0834	
SCREW, Tapping	63 01 (6 Req.): 63 10-80 (4 Req.) ***(Replaces 800 0099)***	17.671	AR	400 0479	
WASHER, Plain	64-65 01-10-80	17.814	2	400 1085	
NUT, Stamped	64-65 01-10-80: 63 10-80	17.426	2	G441262	NA

Copyright 1963 American Motors Corp.

GROUP NO. — DESCRIPTION — YEAR and MODEL	PRIMARY GROUP NO.	PER CAR	PART NO.	CODE
27.251 BRACKET, Console Housing Mounting				
64-65 01-10-80 (WCGS-2 Req.)(WFGS-1 Req.)	.....	AR	350 0287	
ATTACHING PARTS				
Console Housing To Bracket				
SCREW, Tapping..... 64-65 01: 64-65 10-80	17.654	4	G168608	NA
NUT, "U" ..... 64-65 01-10-80 (WCGS-4 Req.)(WFGS-2 Req.)	7.014	AR	316 7425	
27.258 PANEL, Console Housing Front Overlay				
63 01-10-80 (WCGS-Note 27.258-1 Type 1) ***(Ref. Pr. List)***	.....	1	448 0920	
63 01-10-80 (WCGS-Note 27.258-1 Type 2) ***(Replaces 349 0085)***	.....	1	320 5844	
63 01 (WFGS-Note 27.258-1 Type 1)	.....	1	448 0919	
63 01 (WFGS-Note 27.258-1 Type 2)	.....	1	349 0222	
64-65 01-10-80 (WCGS)(WOD-WFGS)	.....	1	350 9478	
65 01-10-80 (OHV-232-WAT-WFGS): 64-65 10-80 (V8-WAT-WFGS)	.....	1	352 0950	
63 10-80 (WFGS-Note 27.258-1 Type 1)	.....	1	448 0918	
63 10-80 (WFGS-Note 27.258-1 Type 2)	.....	1	349 0084	
ATTACHING PARTS				
Panel To Console Housing				
CLIP ..... 63 01-10-80 (WFGS-Note 27.258-1 Type 1)	12.125	4	437 7405	
CLIP ..... 63 01-10-80 (WCGS-Note 27.258-1 Type 1): 64 01-10-80	12.125	4	437 7405	
SCREW, Tapping..... 63 01-10-80 (3/4" Long-WFGS-Note 27.258-1 Type 2)	17.655	4	G168593	NA
SCREW, Tapping..... 63 01-10-80 (3/4" Long-WCGS-Note 27.258-1 Type 2)	17.655	6	G168593	NA
SCREW, Tapping..... 63 01-10-80 (3/8" Long)	17.660	2	G161790	NA
NUT, Speed ..... 63 01-10-80 (WFGS-Note 27..258-1 Type 2)	7.014	4	316 7425	
NUT, Speed ..... 63 01-10-80 (WCGS-Note 27.258-1 Type 2)	7.014	6	316 7425	
NUT, Lock..... 64-65 01-10-80	12.128	6	400 0392	
27.259 GASKET, Console Housing Front Overlay Panel				
63 01 (WFGS)	.....	1	350 5765	
63 01-10-80 (WCGS)	.....	1	350 5764	
63 10-80 (WFGS)	.....	1	350 5766	

NOTE 27.258-1: Two Types of Overlay Panels were used on the 63 01-10-80 Series. They can be identified as follows:
Type 1: Panel is fastened to the Housing with Clips.
Type 2: Panel is fastened to the Housing with Screws and Speed Nuts.

Copyright 1963 American Motors Corp.

GROUP NO. — DESCRIPTION — YEAR and MODEL	PRIMARY GROUP NO.	PER CAR	PART NO.	CODE
27.261 COVER, Console Housing Front Overlay Panel				
64-65 01-10-80 (WCGS)	.....	1	350 9480	
ATTACHING PARTS				
Cover To Overlay Panel				
CLIP ..... 64 01-10-80 (WCGS)	.....	2	400 0856	
NUT, Lock ..... 64-65 01-10-80 (WCGS)	12.128	2	400 0392	
27.262 PLUNGER, Console Compartment Door Lift				
63 Thru 65 01-10-80	.....	1	350 5178	
27.266 PANEL, Console Housing Rear Overlay				
63 01	.....	1	349 0086	
64-65 01-10-80	.....	1	350 9482	
63 10-80	.....	1	349 0087	
ATTACHING PARTS				
Panel To Console Housing				
SCREW, Tapping 64-65 01-10-80	17.671	1	G274626	NA
NUT, Lock 64-65 01-10-80	12.128	2	400 0392	
27.270 DOOR, Console Compartment				
63 01-10-80	.....	1	349 0291	
64-65 01-10-80	.....	1	350 9472	
27.271 MOULDING, Console Compartment Door Opening				
64-65 01-10-80	.....	2	352 0744	
ATTACHING PARTS				
Moulding To Console Housing				
SCREW, Tapping 64-65 01-10-80	17.649	6	G274472	NA
27.272 PANEL, Console Compartment Door Overlay				
63 01-10-80	.....	1	349 0088	
27.276 HINGE, Console Compartment Door				
63 01-10-80	.....	1	349 0096	
64-65 01-10-80	.....	2	350 9474	
ATTACHING PARTS				
Hinge To Console				
SCREW, Tapping 63 01-10-80	.....	3	400 0707	
SCREW, Tapping 64-65 01-10-80	.....	4	400 0740	
NUT, Strip Speed 63 01-10-80	.....	1	400 0168	
Hinge To Door				
NUT, Stamped 63 01-10-80	17.428	2	G441259	NA
SCREW, Tapping 64-65 01-10-80	.....	4	400 0740	
Strip Nut To Console				
SCREW, Tapping 63 01-10-80	17.646	2	G125702	NA

Copyright 1963 American Motors Corp.

GROUP NO. — DESCRIPTION — YEAR and MODEL	PRIMARY GROUP NO.	PER CAR	PART NO.	CODE
27.280 LOCK ASSEMBLY, Console Compartment Door (Incl. Keys)				
63-64 01-10-80 (Regular)	22.073	1	447 8608	
63-64 01-10-80 (Special-Specify Key No.)	22.073	1	447 8609	
65 01-10-80 (Regular)	.....	1	448 2394	
65 01-10-80 (Special)	.....	1	448 2395	
CYLINDER, Console Compartment Door Lock (Incl. Keys)				
63-64 01-10-80 (Regular)	22.073	1	447 8586	
63-64 01-10-80 (Special-Specify Key No.)	22.073	1	447 8587	
65 01-10-80 (Regular)	.....	1	447 8606	
65 01-10-80 (Special-Specify Key No.)	.....	1	447 8607	
KEY, Console Compartment Door Lock				
(Blank) 63 Thru 65 01-10-80	23.085	2	344 5762	
(Coded) 63 Thru 65 01-10-80	23.085	2	447 8593	
CASE, Console Compartment Door Lock				
63 Thru 65 01-10-80	22.073	1	447 5616	
ATTACHING PARTS Case To Retainer				
SCREW, Machine..... 63 01-10-80	17.616	1	G271085	NA
RETAINER, Console Compartment Door Lock				
63 01-10-80	22.073	1	437 3298	
ATTACHING PARTS Case To Compartment Door				
SCREW, Machine..... 64 01-10-80	17.616	1	G271085	NA
27.282 STRIKER, Console Compartment Door Lock				
63 01-10-80	.....	1	349 0099	
64-65 01-10-80	.....	1	350 9476	
ATTACHING PARTS Striker To Console Housing				
SCREW, Tapping..... 63 01-10-80	27.276	2	400 0707	
SCREW, Tapping..... 64-65 01-10-80	17.660	2	G161860	NA
SHIM, Console Compartment Door Lock Striker				
64-65 01-10-80	10.069	AR	312 4316	
27.285 RETAINER, Rear Compartment Ash Receiver				
63 Thru 65 18-88 (W3S)	23.182	1	437 1452	
ATTACHING PARTS Retainer To Lower Rear Panel				
SCREW, Tapping..... 63 Thru 65 18-88 (W3S)	17.660	2	G161790	NA

Copyright 1963 American Motors Corp.

GROUP NO. — DESCRIPTION — YEAR and MODEL	PRIMARY GROUP NO.	PER CAR	PART NO.	CODE
27.287 BOX, Rear Compartment Ash Receiver				
63 Thru 65 18-88 (W3S)	23.184	1	311 484	
27.290 PLATE, Rear Compartment Ash Receiver Cover				
63 Thru 65 18-88 (W3S) ***(Replaces 348 6440)***	23.186	1	349 5530	
27.292 KNOB, Rear Compartment Ash Receiver				
63 18-88 (W3S)	23.188	1	346 1785	
64-65 18-88 (W3S)	23.188	1	352 0374	
ATTACHING PARTS				
Knob To Receiver				
SCREW, Machine..... 63 Thru 65 18-88 (W3S)	17.616	1	G443642	NA
27.300 MOULDING, Rear Shelf Panel Front				
65 59	.....	1	351 7807	
27.310 COVER, Roof Top Vinyl				
65 09	.....	1	358 2364	
65 19-89	.....	1	358 5177	
COVER, Lower Rear Window Opening Vinyl				
65 19-89	.....	1	358 5183	
ATTACHING PARTS				
Vinyl Roof Covering To Windshield Opening Reinforcement				
NAIL, Screw ..... 65 09-19-89 (WRC)	17.380	2	G455384	NA#
Vinyl Roof Covering To Rear Window Opening Reinforcement				
NAIL, Screw ..... 65 09-19-89 (WRC)	17.380	2	G455384	NA#
CEMENT, Vinyl Roof Cover To Roof				
65 09-19-89 (WRC)(1 Quart)	30.020	AR	448 3394	#
SEALER, Vinyl Roof Cover To Drip Rail				
65 09-19-89 (WRC)(12 Oz. Cartridge)	30.026	AR	448 3395	#

Copyright 1963 American Motors Corp.

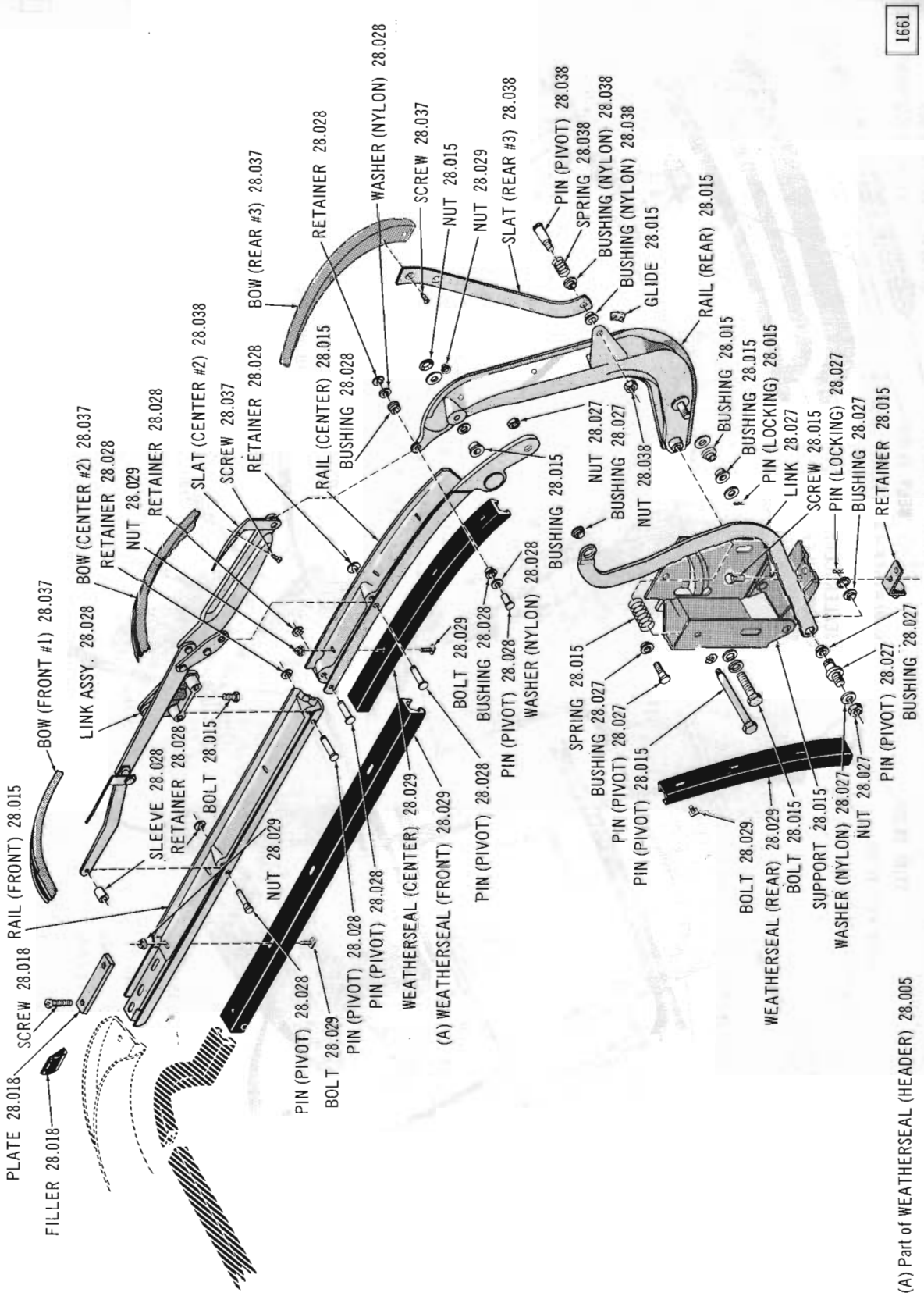

FOLDING TOP RAILS, LINKS AND WEATHERSEALS 64 07 (1st Type)

Copyright 1963 American Motors Corp.

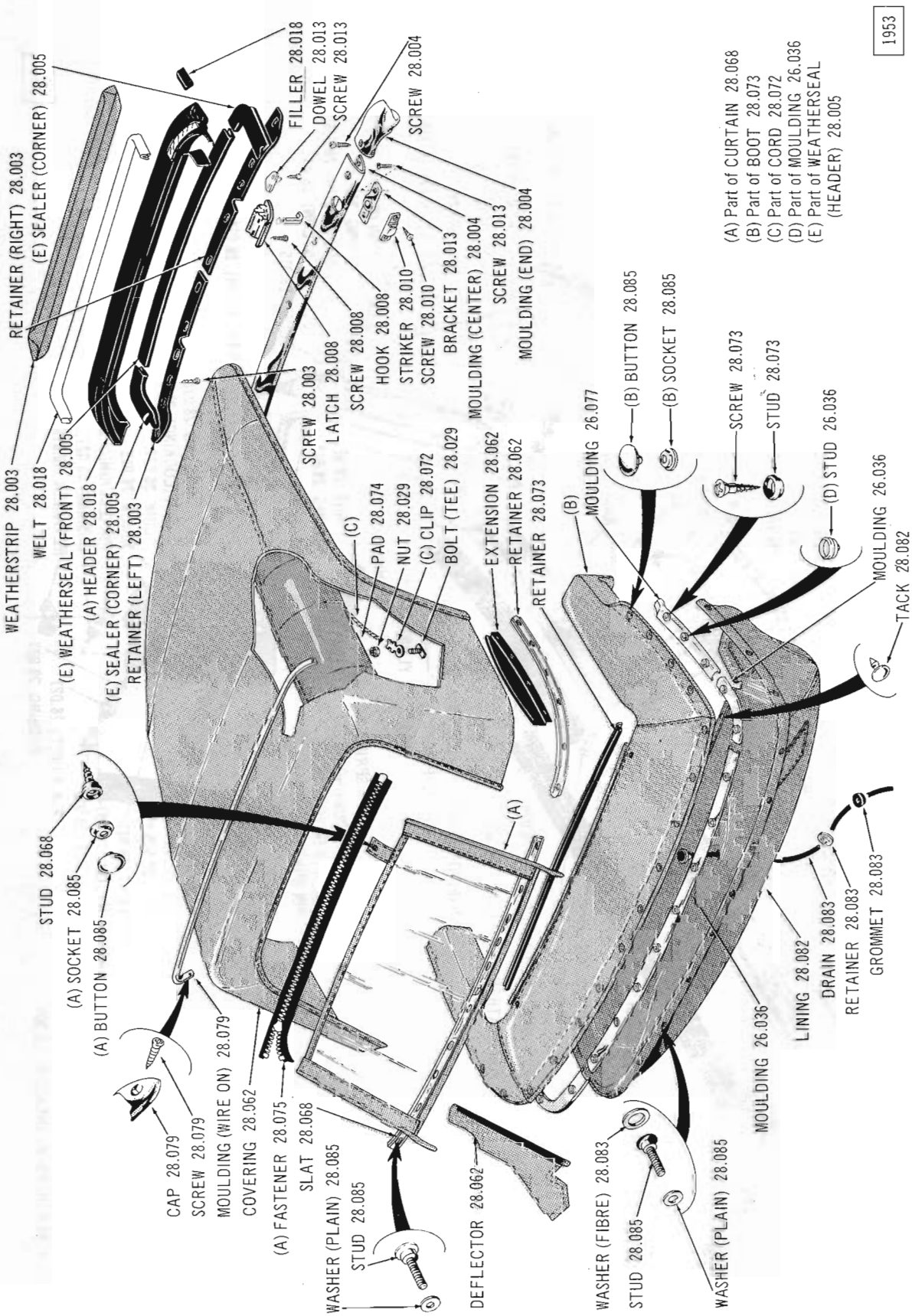

FOLDING TOP COVERING AND HEADER 64 07

Copyright 1963 American Motors Corp.

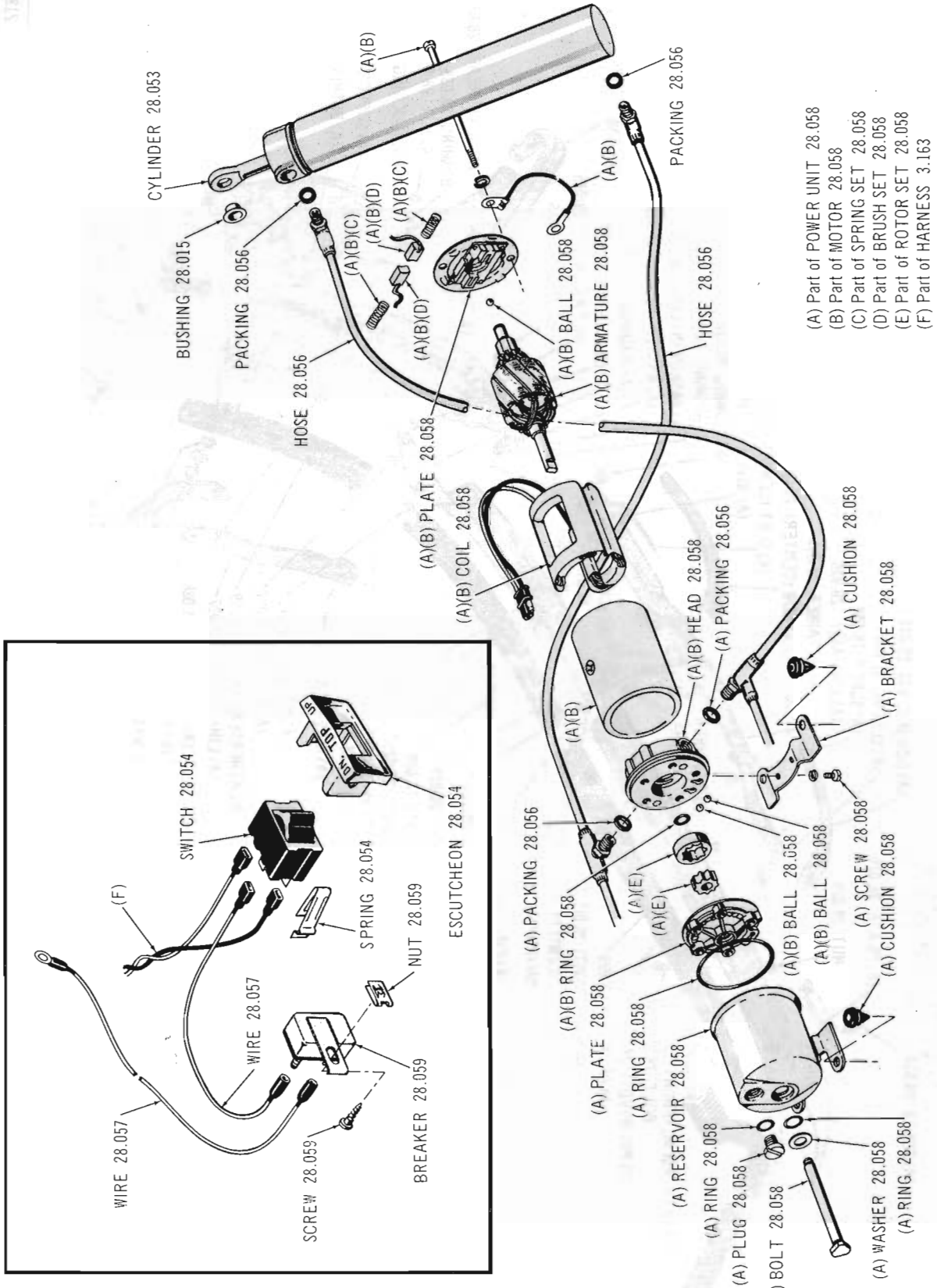

FOLDING TOP HYDRAULIC CYLINDER AND POWER UNIT 64-65 07: 65 17-87

Copyright 1963 American Motors Corp.

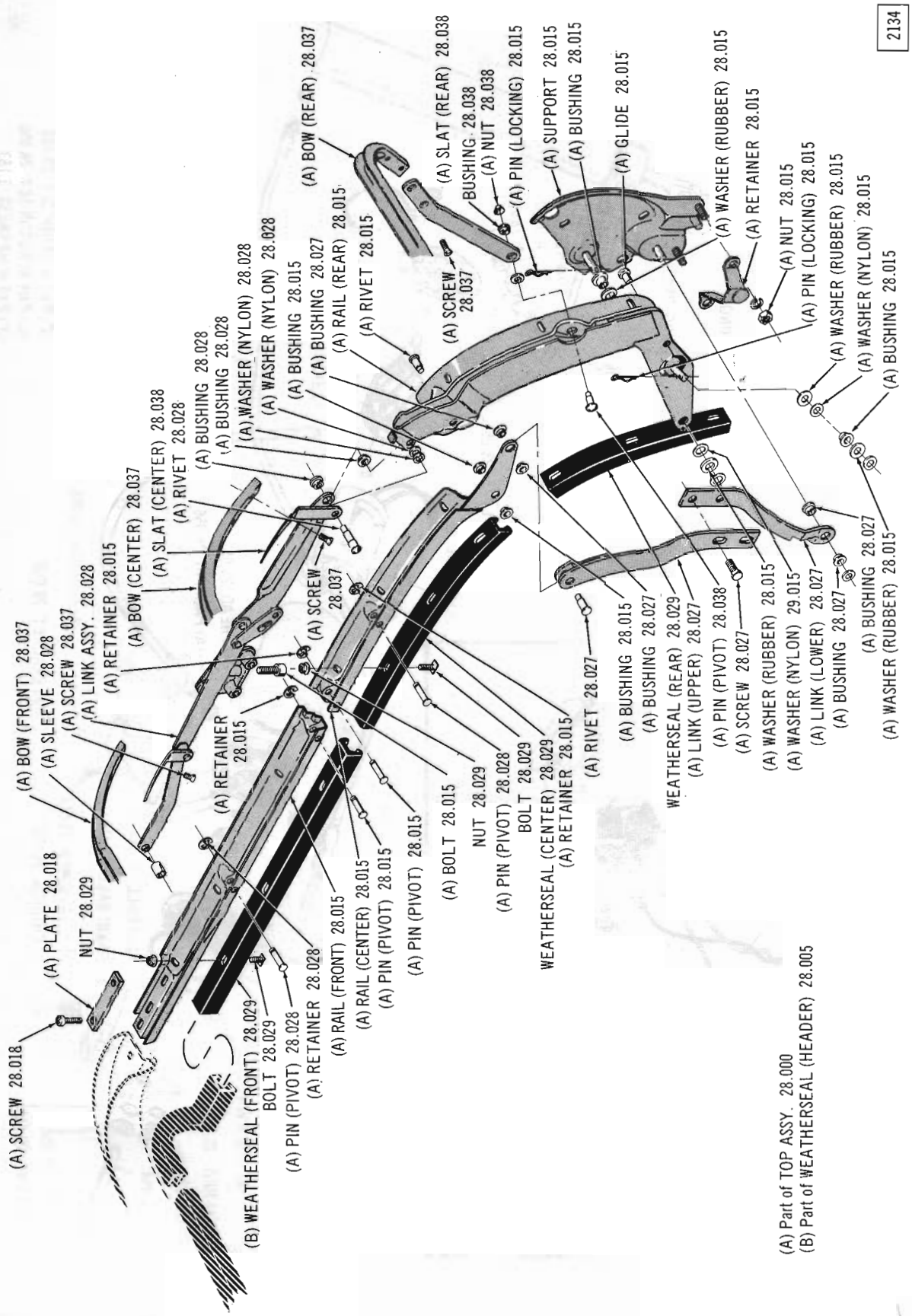

FOLDING TOP RAILS, LINKS AND WEATHERSEALS 64 07 (2nd. type): 65 07-17-87

Copyright 1963 American Motors Corp.

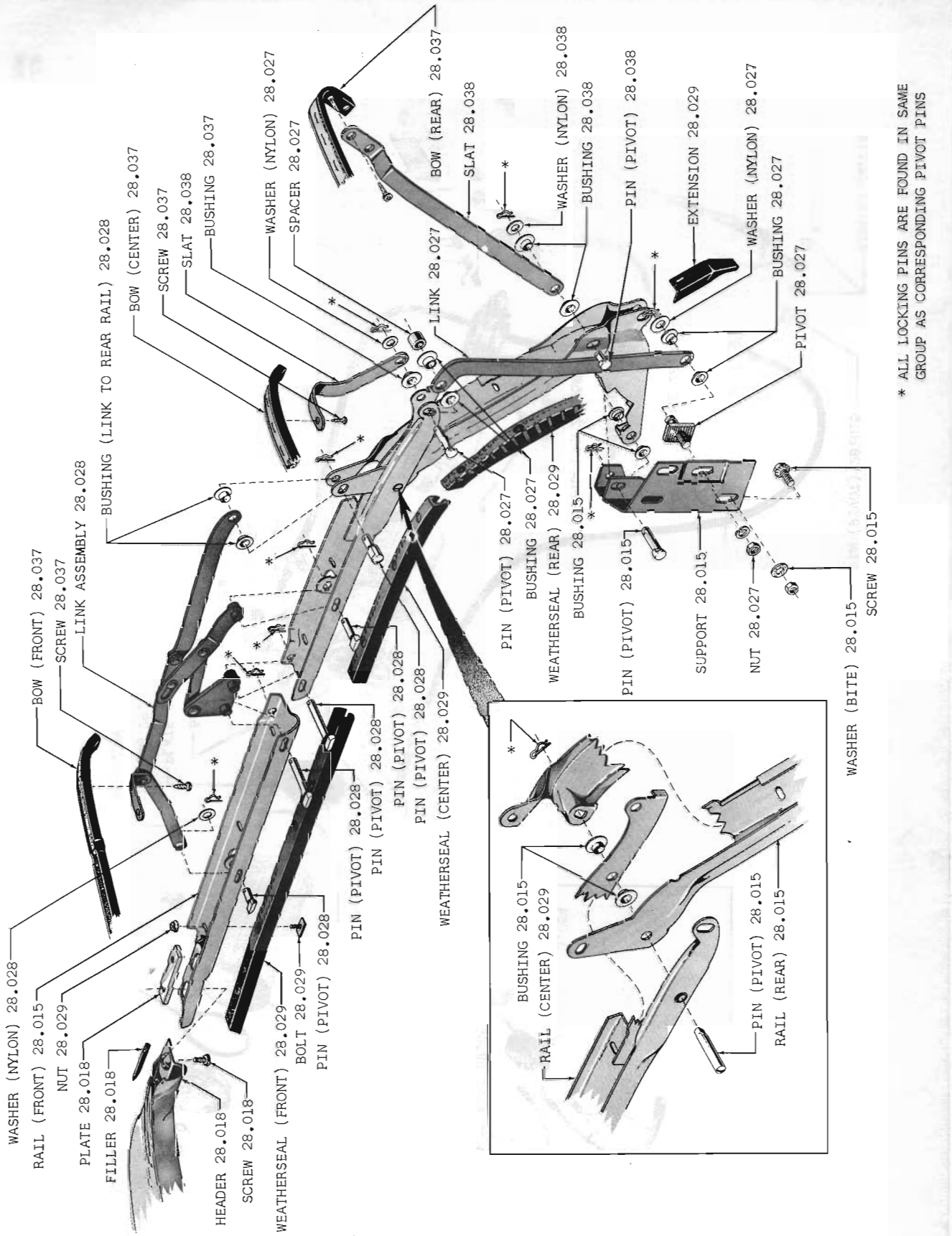

FIG. 28.015-1 FOLDING TOP RAILS, LINKS AND WEATHERSEALS 61 THRU 63 07

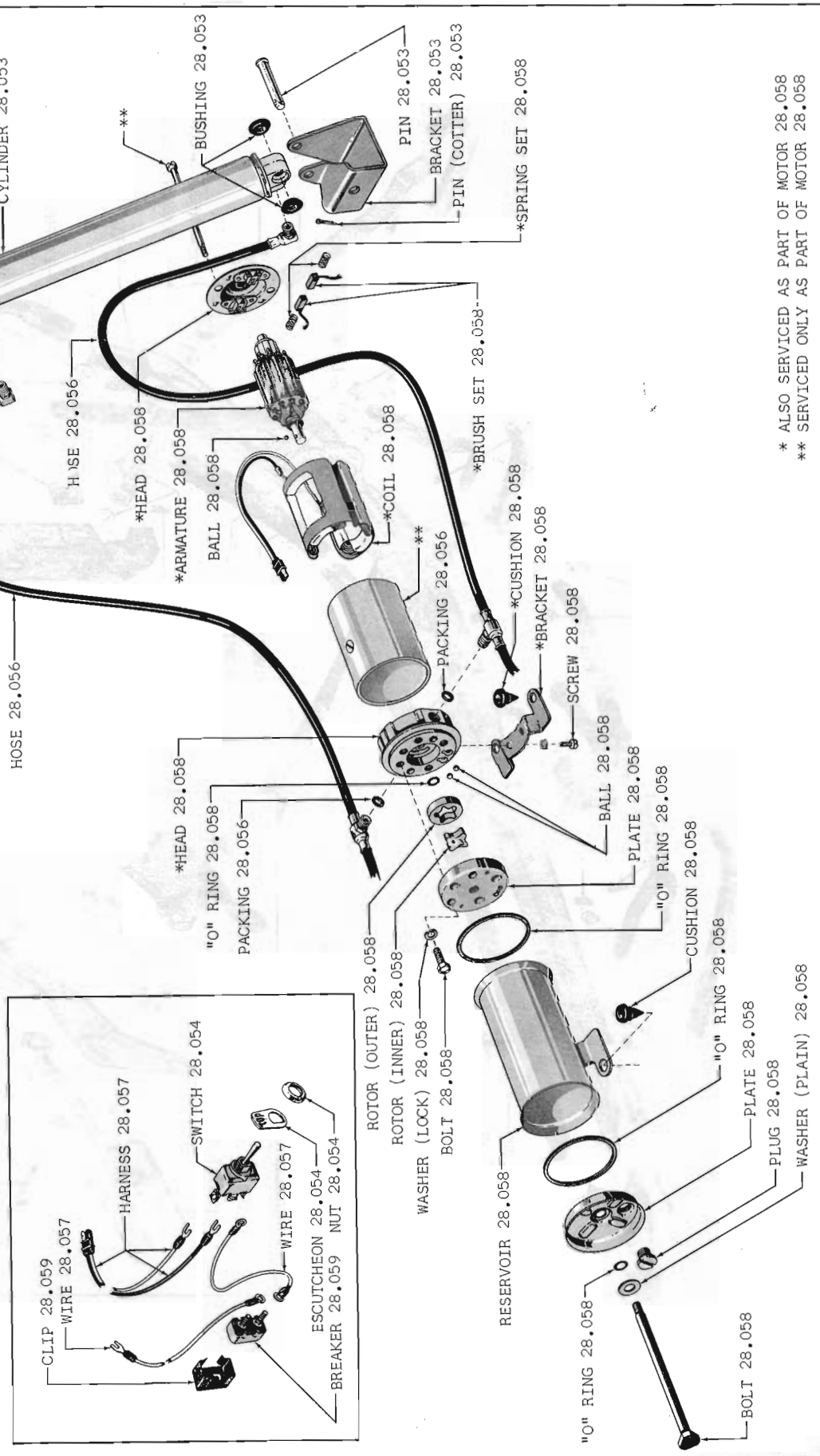

FIG. 28.053-1 FOLDING TOP CYLINDER AND POWER UNIT 61 THRU 63 07

Printed In U.S.A.

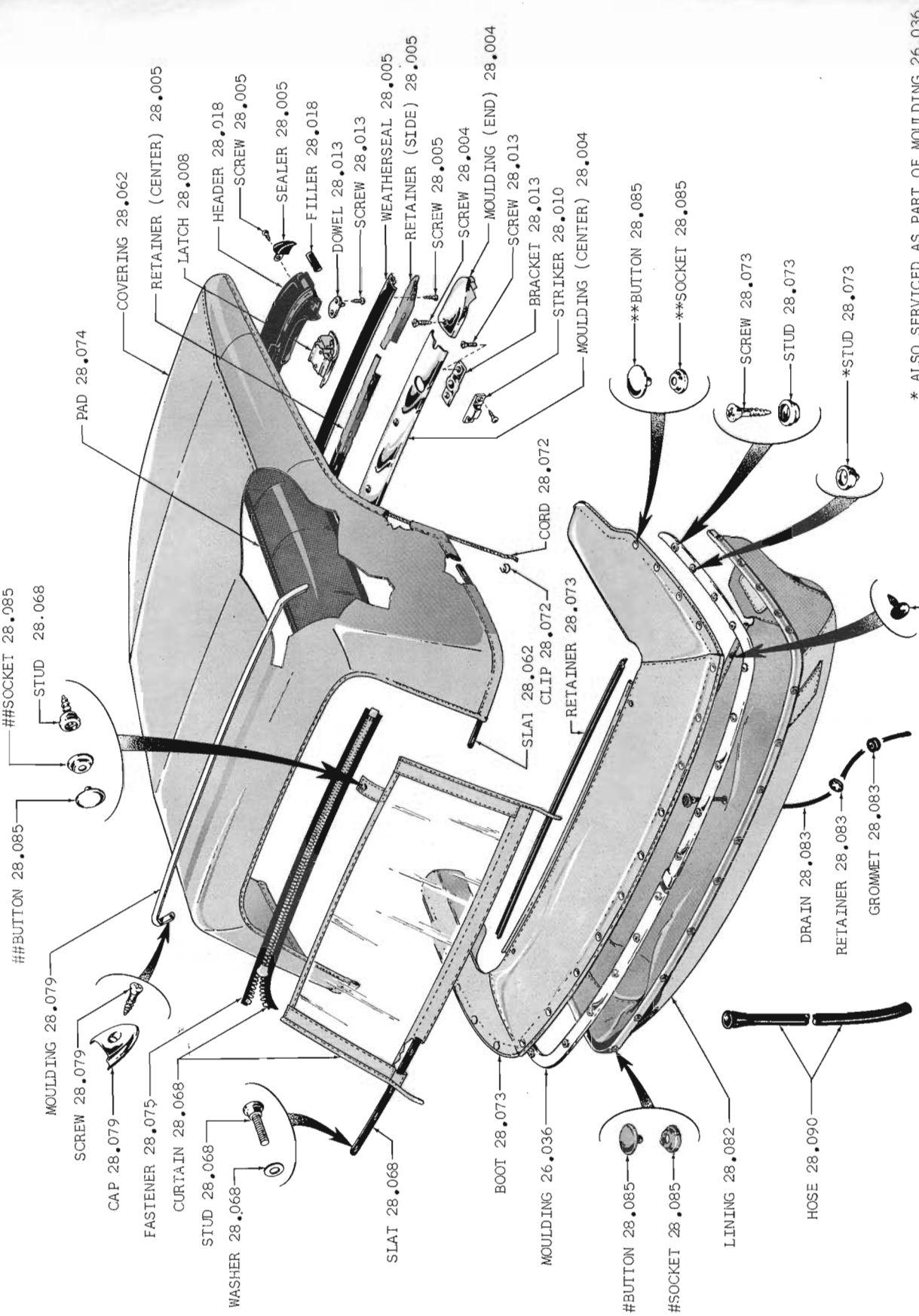

FIG. 28.062-1 FOLDING TOP COVERING AND HEADER 61 THRU 63 07

Printed in U.S.A.



GROUP NO. — DESCRIPTION — YEAR and MODEL	PRIMARY GROUP NO.	PER CAR	PART NO.	CODE
28.000 TOP ASSEMBLY, Folding Top (Less Trim)(Incls. Bows, Header, Rails, Links And Supports).				
64 07 (Note 28.015-1 Type 1)	.....	1	350 8704	
64 07 (Note 28.015-1 Type 2): 65 07	.....	1	351 9080	
65 17-87	.....	1	351 7505	
28.003 WEATHERSTRIP, Folding Top Header				
(Black) 64 07	.....	1	351 9624	
(Black) 65 07	.....	1	353 2289	
(Black) 65 17-87	.....	1	353 2296	
(White) 64 07	.....	1	351 9623	
(White) 65 07	.....	1	353 2293	
(White) 65 17-87	.....	1	353 2297	
(Gold) 64 07	.....	1	351 9625	
(Turquoise) 64 07	.....	1	351 9626	
(Blue) 65 07	.....	1	353 2294	
(Blue) 65 17-87	.....	1	353 2298	
(Aqua) 65 07	.....	1	353 2295	
(Aqua) 65 17-87	.....	1	353 2299	
ATTACHING PARTS Weatherstrip To Header				
RETAINER..... 64-65 07	.....	2	350 2345	
RETAINER..... 65 17-87	.....	2	351 8246	
SCREW, Tapping..... 64-65 07: 65 17-87	.....	14	400 0161	
28.004 MOULDING, Windshield Header Trim				
(Center) 61 Thru 63 07	.....	1	346 0220	
(Center) 64-65 07	.....	1	350 2348	
(Center) 65 17-87	.....	1	351 5062	
(End-Left) 61 Thru 63 07	.....	1	346 0219	
(End-Left) 64-65 07	.....	1	350 1379	
(End-Left) 65 17-87	.....	1	351 5061	
(End-Right) 61 Thru 63 07	.....	1	346 0218	
(End-Right) 64-65 07	.....	1	350 1378	
(End-Right) 65 17-87	.....	1	351 5060	
ATTACHING PARTS Moulding To Windshield Header Bar				
SCREW, Tapping..... 61 Thru 63 07	17.654	6	G162413	NA
SCREW, Tapping..... 64-65 07	17.654	8	G162402	NA
SCREW, Tapping..... 65 17-87	26.060	10	439 2504	
28.005 WEATHERSEAL, Folding Top Front Header (Incl. Corners And Front Sides)				
64-65 07 (Incl. Corners And Front Sides).....(Replaces *350 2340, 350 2342, 350 2343, 350 8882, 350 8883)*	.....	1	352 0640	
65 17-87 (Incl. Corners And Front Sides)	.....	1	353 3568	
WEATHERSEAL, Folding Top Front Header (Front)				
61 Thru 63 07	.....	1	345 8420	
64-65 07: 65 17-87	.....	1	350 2340	
ATTACHING PARTS Weatherseal To Header				
RETAINER..... 61 Thru 63 07 (Center)	.....	1	346 0088	
RETAINER..... 61 Thru 63 07 (Side-Left)	.....	1	346 0087	
RETAINER..... 61 Thru 63 07 (Side-Right)	.....	1	346 0086	
SCREW, Tapping..... 61 Thru 63 07	.....	15	G161790	NA
SCREW, Tapping..... 65 17-87	17.669	2	400 1264	NA
SEALER, Folding Top Front Header Corner				
(Left) 61 Thru 63 07	.....	1	346 4595	
(Left) 64-65 07	.....	1	350 2343	

Copyright 1963 American Motors Corp.

GROUP NO. — DESCRIPTION — YEAR and MODEL	PRIMARY GROUP NO.	PER CAR	PART NO.	CODE
(Left) 65 17-87	.....	1	351 7389	#
(Right) 61 Thru 63 07	.....	1	346 4594	
(Right) 64-65 07	.....	1	350 2342	
(Right) 65 17-87	.....	1	351 7388	
ATTACHING PARTS Corner Sealer To Header				
SCREW, Tapping..... 61 Thru 63 07	17.660	2	G161790	NA
28.008 LATCH, Folding Top Front Header				
61-62 07	.....	2	346 0062	
63 07	.....	2	347 1750	
64 07	.....	2	350 8717	
65 07-17-87	.....	2	320 6139	
ATTACHING PARTS Latch To Header				
SCREW, Machine..... 61 Thru 65 07: 65 17-87	17.626	8	G425623	NA
HOOK, Folding Top Front Header Latch				
64-65 07: 65 17-87	.....	2	448 2252	
28.010 STRIKER, Folding Top Front Header Latch				
61 Thru 63 07	.....	2	345 8936	
64-65 07: 65 17-87	.....	2	350 1073	
ATTACHING PARTS Striker To Windshield Header Bar				
SCREW, Tapping..... 61 Thru 65 07: 65 17-87	17.654	4	G167562	NA
28.013 DOWEL, Folding Top Front Header				
61 Thru 63 07	.....	2	345 8935	
64 07	.....	2	350 8895	
65 07-17-87	.....	2	320 6138	
ATTACHING PARTS Dowel To Folding Top Front Header				
SCREW, Machine..... 61 Thru 65 07: 65 17-87	17.592	4	G446632	NA
BRACKET, Folding Top Front Header				
61 Thru 63 07	.....	2	345 8768	
64-65 07: 65 17-87	.....	2	350 1048	
ATTACHING PARTS Bracket To Cowl Top				
SCREW, Machine..... 61 Thru 63 07	17.592	4	G187012	NA
SCREW, Machine..... 64-65 07: 65 17-87	17.586	4	G156248	NA
28.015 RAIL, Folding Top Side				
(Left-Front) 61 Thru 63 07	.....	1	345 8955	
(Left-Front) 64-65 07: 65 17-87	.....	1	350 8727	
(Left-Center) 61 Thru 63 07	.....	1	345 8949	
(Left-Center) 64 07 (Note 28.015-1 Type 1)	.....	1	350 8729	
(Left-Center) 64 07 (Note 28.015-1 Type 2): 65 07-17-87	.....	1	351 9787	

NOTE 28.015-1: Two Types of Top Assemblies were used on the 64 07. They can be identified as follows:

Type 1: Folding Top is power operated with the one piece balance link having provisions for adjustment at the Support Bracket.

Type 2: Folding Top is either power or manually operated with the two piece balance link having provisions for adjustment at the serrated joint of the two halves.

Copyright 1963 American Motors Corp.

GROUP NO. — DESCRIPTION — YEAR and MODEL	PRIMARY GROUP NO.	PER CAR	PART NO.	CODE
(Left-Rear) 61-62 07	.....	1	345 8943	
(Left-Rear) 63 07	.....	1	350 5401	
(Left-Rear) 64 07 (Note 28.015-1 Type 1)	.....	1	350 8737	
(Left-Rear) 64 07 (Note 28.015-1 Type 2): 65 07-17-87	.....	1	351 9775	
(Right-Front) 61 Thru 63 07	.....	1	345 8954	
(Right-Front) 64-65 07: 65 17-87	.....	1	350 8726	
(Right-Center) 61 Thru 63 07	.....	1	345 8948	
(Right-Center) 64 07 (Note 28.015-1 Type 1)	.....	1	350 8728	
(Right-Center) 64 07 (Note 28.015-1 Type 2): 65 07-17-87	.....	1	351 9786	
(Right-Rear) 61-62 07	.....	1	345 8942	
(Right-Rear) 63 07	.....	1	350 5400	
(Right-Rear) 64 07 (Note 28.015-1 Type 1)	.....	1	350 8736	
(Right-Rear) 64 07 (Note 28.015-1 Type 2): 65 07-17-87	.....	1	351 9774	
ATTACHING PARTS				
Front Rail To Center Rail				
PIN, Pivot ..... 61 Thru 63 07	.....	4	345 8965	
PIN, Pivot ..... 64-65 07: 65 17-87 ***(Replaces 350 8732)***	.....	2	320 5860	
PIN, Locking ..... 61 Thru 63 07 ***(Replaces 345 8994)***	.....	4	400 0407	
RETAINER 64-65 07: 65 17-87	.....	2	350 8733	
Center Rail To Rear Rail				
PIN, Pivot ..... 61 Thru 63 07	.....	2	345 8978	
PIN, Locking ..... 61 Thru 63 07 ***(Replaces 345 8994)***	.....	2	400 0407	
BUSHING ..... 61 Thru 63 07	.....	2	346 0576	
BUSHING ..... 64 07 (Note 28.015-1 Type 1)	.....	4	350 8920	
BUSHING, Nylon ..... 64 07 (Note 28.015-1 Type 2): 65 07-17-87 ***(Use 353 1980)***	.....	4	352 0466	
BUSHING, Nylon 65 07-17-87	.....	4	353 1980	
WASHER, Nylon ..... 64 07 (Note 28.015-1 Type 1)	.....	2	350 8931	
WASHER, Plain ..... 64 07 (Note 28.015-1 Type 1)	17.814	2	G120394	NA
NUT, Push ..... 64 07 (Note 28.015-1 Type 1)	.....	2	350 8934	
RIVET ..... 64 07 (Note 28.015-1 Type 2): 65 07-17-87	.....	2	350 1937	
Rear Rail To Support				
PIN, Pivot ..... 61 Thru 63 07	.....	2	400 0217	
PIN, Pivot ..... 64 07 (Note 28.015-1 Type 1)	.....	2	350 8912	
SPRING 64 07	.....	2	350 2680	
PIN, Locking ..... 61 Thru 63 07: 64 07 (Note 28.015-1 Type 2): 65 07-17-87 ***(Replaces 345 8994)***	.....	2	400 0407	
BUSHING 61 07	.....	4	346 0576	
BUSHING, Nylon ..... 64 07 (Note 28.015-1 Type 1)	.....	2	350 8767	
BUSHING, Nylon ..... 64 07 (Note 28.215-1 Type 2): 65 07-17-87	.....	2	350 8962	
WASHER, Nylon ..... 64 07 (Note 28.015-1 Type 2): 65 07-17-87	.....	2	350 2139	
WASHER, Rubber ..... 64 07 (Note 28.015-1 Type 2): 65 07-17-87	.....	4	350 8963	
WASHER, Plain ..... 64 07 (Note 28.015-1 Type 2): 65 07-17-87	17.814	2	G120394	
BUSHING 62-63 07	.....	2	349 5552	
WASHER, Lock 64 07	17.822	2	G135629	NA
Rear Rail To Hydraulic Cylinder				
PIN, Pivot ..... 61 Thru 63 07	.....	2	346 0058	
PIN, Pivot 64 07	.....	2	350 8914	
PIN, Locking ..... 61 Thru 64 07 ***(Replaces 345 8994)***	.....	2	400 0407	
BUSHING ..... 61 Thru 63 07	.....	4	346 0093	
BUSHING, Nylon 64-65 07: 65 17-87	.....	2	350 8962	#
WASHER, Nylon 64-65 07: 65 17-87	.....	2	350 8964	
WASHER, Rubber ..... 64 07 (Note 28.015-1 Type 1): 65 07-17-87	.....	2	350 8963	
WASHER, Plain ..... 64 07 (Note 28.015-1 Type 1): 65 07-17-87	17.814	2	G120394	NA
Rear Rail To Actuator Counter-Balance				
BUSHING ..... 64-65 07 (LPT)	.....	2	350 8962	
WASHER, Nylon ..... 64-65 07 (LPT)	.....	2	350 8964	
WASHER, Plain ..... 64-65 07 (LPT)	.....	4	G120394	
PIN, Locking ..... 61 Thru 63 07 ***(Replaces 345 8994)***	.....	2	400 0407	

Copyright 1963 American Motors Corp.

GROUP NO. — DESCRIPTION — YEAR and MODEL	PRIMARY GROUP NO.	PER CAR	PART NO.	CODE
SUPPORT, Folding Top Rear Side Rail				
(Left) 61 Thru 63 07	.....	1	345 8957	
(Left) 64 07 (Note 28.015-1 Type 1)	.....	1	350 8909	
(Left) 64 07 (Note 28.015-1 Type 2): 65 07-17-87	.....	1	351 9763	
(Right) 61 Thru 63 07	.....	1	345 8956	
(Right) 64 07 (Note 28.015-1 Type 1)	.....	1	350 8908	
(Right) 64 07 (Note 28.015-1 Type 2): 65 07-17-87	.....	1	351 9762	
ATTACHING PARTS Support To Body				
SCREW, Machine ..... 61 Thru 63 07	.....	6	400 0203	
BOLT, Hexagon 64 07	17.038	6	G181637	NA
BOLT, Hexagon 64-65 07: 65 17-87	17.038	6	G448695	NA
WASHER, Bite ..... 61 Thru 63 07 (1" Dia.) ..... ***(Replaces 311 1365)***	10.003	2	310 8995	
WASHER, Bite ..... 62-63 07 (1-1/8" Dia.)	.....	4	400 0219	
WASHER, Lock 64-65 07: 65 17-87	17.820	6	G120382	NA
WASHER, Plain 64-65 07: 65 17-87	17.814	6	G446548	NA
SPACER 62-63 07	10.069	AR	312 4317	
NUT, Hexagon ..... 61 Thru 63 07	17.412	6	G271193	NA
GLIDE, Folding Top Cam				
64 07 (Note 28.015-1 Type 1)	.....	2	350 8914	
64 07 (Note 28.015-1 Type 2): 65 07-17-87	.....	2	350 2199	
RETAINER, Folding Top Pivot Support				
64 07 (Note 28.015-1 Type 1)	.....	2	350 2710	
(Left) 64 07 (Note 28.015-1 Type 2): 65 07-17-87	.....	1	351 9771	
(Right) 64 07 (Note 28.015-1 Type 2): 65 07-17-87	.....	1	351 9770	
ATTACHING PARTS Retainer To Pivot Support				
SCREW, Machine ..... 64 07 (Note 28.015-1 Type 1)	17.626	2	G425599	NA
NUT, Hexagon ..... 64 07 (Note 28.015-1 Type 2): 65 07-17-87	17.412	4	G271193	NA
LINK, Folding Top Rear Side Rail Support				
61 Thru 63 07	.....	2	346 4969	
ATTACHING PARTS Link To Body				
SCREW, Tapping ..... 61 Thru 63 07	.....	4	400 0216	
BOLT, Folding Top Rail Stop				
BOLT, Hexagon 64-65 07: 65 17-87	.....	2	350 8917	
SCREW, Socket Head ... 65 07-17-87	.....	2	354 9149	
28.018 HEADER, Folding Top Front				
61 Thru 63 07	.....	1	345 8927	
64-65 07	.....	1	448 1262	
65 17-87	.....	1	448 2399	
ATTACHING PARTS Header To Side Rails				
SCREW, Machine 61-62 07: 64-65 07: 65 17-87	17.598	4	G274857	NA
SCREW, Machine 63 07	17.626	4	G425639	NA
PLATE, Tapping ..... 61 Thru 65 07: 65 17-87	.....	2	345 8937	

Copyright 1963 American Motors Corp.

GROUP NO. — DESCRIPTION — YEAR and MODEL		PRIMARY GROUP NO.	PER CAR	PART NO.	CODE
FILLER, Folding Top Front Header Side					
61 Thru 63 07		.....	2	346 0094	
64-65 07: 65 17-87		.....	2	350 8718	
WELT, Folding Top Header Pinch					
64-65 07-17-87	***(Replaces 350 2665)***	.....	1	353 2292	
TACKING STRIP, Folding Top Header					
64-65 07-17-87		.....	1	351 7508	#
28.027 LINK, Folding Top Balance					
(Left) 61 Thru 63 07		.....	1	345 8971	
(Left) 64 07 (Note 28.015-1 Type 1)		.....	1	350 8743	
(Left-Upper) 64 07 (Note 28.015-1 Type 2): 65 07-17-87		.....	1	353 1743	
(Left-Lower) 64 07 (Note 28.015-1 Type 2): 65 07-17-87		.....	1	352 0287	
(Right) 61 Thru 63 07		.....	1	345 8970	
(Right) 64 07 (Note 28.015-1 Type 1)		.....	1	350 8742	
(Right-Upper) 64 07 (Note 28.015-1 Type 2): 65 07-17-87		.....	1	353 1742	
(Right-Lower) 64 07 (Note 28.015-1 Type 2): 65 07-17-87		.....	1	352 0286	
ATTACHING PARTS					
Balance Link To Rear Side Rail					
PIN, Pivot	61 Thru 63 07	.....	2	345 8979	
PIN, Locking	61 Thru 63 07 ***(Replaces 345 8994)***	28.015	2	400 0407	
BUSHING	61 Thru 63 07	.....	6	346 0577	
SPACER	61 Thru 63 07	28.038	2	346 0061	
WASHER, Nylon	61 Thru 63 07	.....	2	346 0090	
Balance Link To Center Rail					
PIN, Pivot	64 07 (Note 28.015-1 Type 1)	.....	2	350 8880	
BUSHING	64 07 (Note 28.015-1 Type 2): 65 07-17-87 ***(Use 353 1980)***	.....	4	352 0466	
BUSHING, Nylon	64 07 (Note 28.015-1 Type 1)	.....	4	346 0578	
NUT, Jam	64 07 (Note 28.015-1 Type 1)	17.410	2	G124925	NA
RIVET	64 07 (Note 28.015-1 Type 2): 65 07-17-87	.....	2	350 1940	
Balance Link To Rear Side Rail Support					
PIVOT	61 Thru 63 07: 64 07 (Note 28.015-1 Type 1)	.....	2	345 8962	
BUSHING	61 Thru 63 07 (2 Req.): 64 07 (4 Req. -Note 28.015-1 Type 1)	.....	AR	346 0578	
BUSHING, Nylon	64 07 (Note 28.015-1 Type 2): 65 07-17-87 ***(Use 353 1980)***	.....	4	352 0466	
WASHER, Nylon	61 Thru 63 07: 64 07 (Note 28.015-1 Type 1)	.....	4	346 0092	
PIN, Locking	61 Thru 65 07: 65 17-87 ***(Replaces 345 8994)***	28.015	2	400 0407	
NUT, Hexagon	61 Thru 63 07: 64 07 (Note 28.015-1 Type 1)	17.412	2	G271193	NA
WASHER, Plain	64 07 (Note 28.015-1 Type 2): 65 07-87-89)	.....	2	G466188	NA
Upper Balance Link To Lower Balance Link					
SCREW, Machine	65 07-17-87	.....	4	G425900	NA
28.028 LINK ASSEMBLY, Folding Top Side					
(Left) 61 Thru 63 07		.....	1	345 8981	
(Left) 64 07 (Note 28.015-1 Type 1)		.....	1	350 8731	
(Left) 64 07 (Note 28.015-1 Type 2): 65 07-17-87		.....	1	350 1929	
(Right) 61 Thru 63 07		.....	1	345 8980	
(Right) 64 07 (Note 28.015-1 Type 1)		.....	1	350 8730	
(Right) 64 07 (Note 28.015-1 Type 2): 65 07-17-87		.....	1	350 1928	

NOTE 28.028-1: **Two Types of Pivot Pin, Links to Rear Rail, were used on the 64 07. They can be identified as follows:**
Type 1: Pivot Pin has groove.
Type 2: Pivot Pin does not have groove.

Copyright 1963 American Motors Corp.

GROUP NO. — DESCRIPTION — YEAR and MODEL	PRIMARY GROUP NO.	PER CAR	PART NO.	CODE
ATTACHING PARTS				
Link To Front Rail (Front)				
PIN, Pivot ..... 61 Thru 63 07	.....	2	345 8972	
PIN, Pivot ..... 64-65 07: 65 17-87 .....*(Replaces 350 8734)*	.....	2	320 5861	
PIN, Locking ..... 64-65 07 (LPT) .....*(Replaces 345 8994)*	.....	2	400 0407	
SLEEVE 64-65 07: 65 17-87	.....	2	350 2258	
WASHER, Nylon ..... 61 Thru 63 07	28.027	2	346 0090	
RETAINER 64-65 07: 65 17-87	28.015	2	350 8733	
Link To Front Rail (Rear)				
PIN, Pivot ..... 61 Thru 63 07	28.015	2	345 8965	
PIN, Pivot ..... 64-65 07: 65 17-87 .....*(Replaces 350 8732)*	.....	2	320 5860	
PIN, Locking ..... 61 Thru 63 07 .....*(Replaces 345 8994)*	28.015	2	400 0407	
RETAINER 64-65 07: 65 17-87	28.015	2	350 8733	
Link To Center Rail (Front)				
PIN, Pivot ..... 61 Thru 63 07	28.015	2	345 8965	
PIN, Pivot ..... 64-65 07: 65 17-87 .....*(Replaces 350 8732)*	28.015	2	320 5860	
PIN, Locking ..... 61 Thru 63 07 .....*(Replaces 345 8994)*	28.015	2	400 0407	
RETAINER 64-65 07: 65 17-87	28.015	2	350 8733	
Link To Center Rail (Center)				
PIN, Pivot ..... 61 Thru 63 07	.....	2	345 8975	
PIN, Pivot ..... 64-65 07: 65 17-87 .....*(Replaces 350 8734)*	.....	2	320 5861	
PIN, Locking ..... 61 Thru 63 07 .....*(Replaces 345 8994)*	28.015	2	400 0407	
RETAINER 64-65 07: 65 17-87	28.015	2	350 8733	
Link To Rear Rail				
PIN, Pivot ..... 61 Thru 63 07	.....	2	346 0056	
PIN, Pivot ..... 64 07 (Note 28.028-1 Type 1 And 28.015-1 Type 1) .	.....	2	350 8802	
PIN, Pivot ..... 64 07 (Note 28.028-1 Type 2 And 28.015-1 Type 1) .	.....	2	448 2009	
PIN, Locking ..... 61 Thru 63 07 .....*(Replaces 345 8994)*	28.015	2	400 0407	
RETAINER ..... 64 07 (Note 28.028-1 Type 1)	28.015	2	350 8733	
NUT, Push ..... 64 07 (Note 28.028-1 Type 2): 65 07	.....	2	400 0755	
BUSHING ..... 61 Thru 65 07: 65 17-87	28.027	4	346 0577	
WASHER, Nylon ..... 64 07 (5/16 I.D.)	28.027	2	346 0090	
WASHER, Nylon ..... 64-65 07: 65 17-87 (3/8 I.D.)	.....	2	346 0091	
RIVET ..... 64 07 (Note 28.015-1 Type 2): 65 17-87	.....	2	350 1941	

28.029 WEATHERSEAL, Folding Top Side Rail

(Left-Front) 61 Thru 63 07	.....	1	345 8761	
(Left-Front) 64-65 07: 65 17-87	.....	1	350 8883	
(Left-Center) 61 Thru 63 07	.....	1	345 8763	
(Left-Center) 64-65 07: 65 17-87	.....	1	350 8885	
(Left-Rear) 61 Thru 63 07	.....	1	345 8765	
(Left-Rear) 64-65 07: 65 17-87	.....	1	350 8887	
(Right-Front) 61 Thru 63 07	.....	1	345 8760	
(Right-Front) 64-65 07: 65 17-87	.....	1	350 8882	
(Right-Center) 61 Thru 63 07	.....	1	345 8762	
(Right-Center) 64-65 07: 65 17-87	.....	1	350 8884	
(Right-Rear) 61 Thru 63 07	.....	1	345 8764	
(Right-Rear) 64-65 07: 65 17-87	.....	1	350 8886	
ATTACHING PARTS				
Weatherseal To Side Rail				
BOLT, Tee ..... 61-62 07 (16 Req.): 63 07 (18 Req.): 64-65 07 (20 Req.): 65 17-87 (20 Req.) ..*(Replaces 344 8493)*	.....	AR	400 0237	
NUT, Hexagon ..... 61-62 07 (16 Req.): 63 07 (18 Req.): 64-65 07 (14 Req.)	25.052	AR	439 0742	
NUT, Stamped 64-65 07: 65 17-87	26.096	6	400 0802	

Copyright 1963 American Motors Corp.

GROUP NO. — DESCRIPTION — YEAR and MODEL	PRIMARY GROUP NO.	PER CAR	PART NO.	CODE
EXTENSION, Folding Top Side Rear Rail Weather-seal				
61-62 07 ..... *(Replaces 345 8766, 345 8767, 346 4808, 346 4809)*	28.062	1	346 4999	
ATTACHING PARTS				
Extension To Rear Side Rail				
BOLT, Tee 61-62 07	.....	2	400 0237	
NUT, Hexagon 61-62 07	25.052	2	439 0742	
SHIM, Folding Top Side Rail Front Weatherseal				
61 07 (.06 Thick)	.....	AR	346 7345	
61 07 (.12 Thick)	.....	AR	346 7346	
62 Thru 64 07 ..... *(Use 353 5999)*	.....	2	346 8998	#
65 07	.....	2	353 5999	
28.037 BOWS, Folding Top				
(Front-#1) 61 Thru 63 07	.....	1	346 0082	
(Front #1) 64-65 07	.....	1	350 8708	
(Front #1) 65 17-87	.....	1	351 7516	
(Center-#2) 61 Thru 63 07	.....	1	346 0084	
(Center #2) 64-65 07	.....	1	350 8708	
(Center #2) 65 17-87	.....	1	351 7516	
(Rear-#3) 61 Thru 63 07	.....	1	346 0055	
(Rear #3) 64 07 (Note 28.015-1 Type 1)	.....	1	350 8781	
(Rear #3) 64 07 (Note 28.015-1 Type 2): 65 07	.....	1	448 2253	
(Rear #3) 65 17-87	.....	1	448 2806	
ATTACHING PARTS				
Front Bow To Side Link Assembly				
SCREW, Tapping 61 07	.....	4	346 0060	
SCREW, Tapping ..... 62 Thru 65 07: 65 17-87	.....	4	346 4811	
Center Bow Slat To Center Side Rail				
PIN, Pivot 64 07	28.037	2	350 8802	
WASHER, Nylon 64 07	.....	2	346 0090	
WASHER, Nylon 65 07-17-87	.....	4	346 0091	
BUSHING 65 07-17-87	.....	4	346 0577	
RETAINER 64 07	28.015	2	350 8733	
RIVET 65 07-17-87	.....	2	350 1941	
Center Bow To Slat				
SCREW, Tapping 61 07: 64 07	.....	4	346 0060	
SCREW, Tapping ..... 62 Thru 65 07: 65 17-87	.....	4	346 4811	
Rear Bow To Slat				
SCREW, Tapping 61 07	.....	4	346 0060	
SCREW, Tapping ..... 62 Thru 65 07: 65 17-87	.....	4	346 4811	
STOP, Folding Top Bow (For #2 Bow)				
61 07	.....	2	346 0587	
ATTACHING PARTS				
Bow Stop To Bow				
SCREW, Tapping 61 07	.....	2	346 0588	

Copyright 1963 American Motors Corp.

GROUP NO. — DESCRIPTION — YEAR and MODEL	PRIMARY GROUP NO.	PER CAR	PART NO.	CODE
28.038 SLAT, Folding Top Center Bow				
64 07 (Note 28.015-1 Type 1)	.....	2	350 2235	
64 07 (Note 28.015-1 Type 2): 65 07-17-87	.....	2	353 1076	
(Left) 61 Thru 63 07	.....	1	345 8969	
(Right) 61 Thru 63 07	.....	1	345 8968	
ATTACHING PARTS Center Bow Slat To Rear Side Rail				
PIN, Pivot — 61 Thru 63 07	28.027	2	345 8979	
PIN, Locking — 61 Thru 63 07 ***(Replaces 345 8994)***	28.015	2	400 0407	
BUSHING — 61 Thru 63 07	28.027	6	346 0577	
SPACER — 61 Thru 63 07	.....	2	346 0061	
WASHER, Nylon — 61 Thru 63 07	28.027	2	346 0090	
SLAT, Folding Top Rear Bow				
(Left) 61 Thru 63 07	.....	1	345 8967	
(Left) 64 07 (Note 28.015-1 Type 1)	.....	1	350 8787	
(Left) 64 07 (Note 28.015-1 Type 2): 65 07	.....	1	351 9799	
(Left) 65 17-87	.....	1	352 0049	
(Right) 61 Thru 63 07	.....	1	345 8966	
(Right) 64 07 (Note 28.015-1 Type 1)	.....	1	350 8786	
(Right) 64 07 (Note 28.015-1 Type 2): 65 07	.....	1	351 9798	
(Right) 65 17-87	.....	1	352 0048	
ATTACHING PARTS Rear Bow Slat To Rear Side Rail				
PIN, Pivot — 61 Thru 63 07	.....	2	346 0057	
PIN, Pivot — 64 07 (Note 28.015-1 Type 1)	.....	2	350 8879	
PIN, Pivot — 64 07 (Note 28.015-1 Type 2)	.....	2	351 9767	
BUSHING — 64 07 (Note 28.015-1 Type 2): 65 07-17-87	.....	4	352 0466	
WASHER, Plain — 64 07 (Note 28.015-1 Type 2): 65 07-17-87	.....	2	G446188	NA
NUT — 64 07 (Note 28.015-1 Type 1)	.....	2	G271187	NA
NUT, Push — 64 07 (Note 28.015-1 Type 2): 65 07-17-87	.....	2	353 1671	
PIN, Locking — 61 Thru 63 07 ***(Replaces 345 8994)***	28.015	2	400 0407	
BUSHING — 61 Thru 63 07	28.027	4	346 0577	
BUSHING — 64 07 (Note 28.015-1 Type 1)	28.027	2	346 0578	
WASHER, Nylon — 61 Thru 63 07	.....	2	346 0090	
SPRING — 64-65 07: 65 17-87	.....	2	350 8929	
PROTECTOR, Folding Top Rear Bow Slat				
64 07	.....	2	320 9547	
28.050 ACTUATOR ASSEMBLY, Folding Top Manual Operating Counter Balance				
64-65 07 (LPT)	.....	2	351 9820	
28.053 CYLINDER, Folding Top Hydraulic Operating				
61 07 (Note 28.053-1)	.....	2	447 9275	
61 07 (Note 28.053-2): 62 07: 63 07 (Note 28.053-3 Type 1)	.....	2	345 8845	
63 07 (Note 28.053-3 Type 2)	.....	2	350 5357	
64-65 07: 65 17-87	.....	2	350 8776	

NOTE 28.053-1: Cylinder Length is 28-5/8" from Eye to Eye in the extended position.
NOTE 28.053-2: Cylinder Length is 29" from Eye to Eye in the extended position.
NOTE 28.053-3: Two Types of Hydraulic Cylinders and Hoses were used on Model 63 07. They can be identified as follows:
Type 1: Hose to Cylinder Fittings have a 1/2-20 Thread.
Type 2: Hose to Cylinder Fittings have a 7/16-24 Thread.

Copyright 1963 American Motors Corp.

GROUP NO. — DESCRIPTION — YEAR and MODEL	PRIMARY GROUP NO.	PER CAR	PART NO.	CODE
ATTACHING PARTS				
Cylinder To Bracket				
PIN, Clevis ..... 61 Thru 63 07	.....	2	345 8419	
PIN, Locking ..... 61 Thru 63 07	28.015	2	345 8994	
BUSHING ..... 61 Thru 63 07	.....	4	345 8846	
Cylinder To Support				
BUSHING 64-65 07: 65 17-87	.....	4	350 8960	
BRACKET, Folding Top Hydraulic Operating Cylinder Mounting (Welded To Floor)				
61 Thru 63 07	.....	2	345 8428	
28.054 SWITCH, Folding Top Operating Control				
61 Thru 63 07	.....	1	345 8013	
64 07	.....	1	350 1036	
65 07-17-87	.....	1	317 6907	
ATTACHING PARTS				
Switch To Instrument Panel				
NUT, Lock ..... 61 Thru 63 07	.....	1	345 8273	
Switch To Escutcheon				
SPRING 64-65 07: 65 17-87	24.220	2	437 7109	
ESCUTCHEON, Folding Top Operating Control Switch				
61 Thru 63 07	.....	1	345 8203	
64-65 07: 65 17-87	.....	1	350 1037	#
WIRE, Folding Top Operating Control Switch Extension				
65 07 (RHD-WPT): 65 17 (RHD)	.....	1	317 6555	
28.056 HOSE, Folding Top Power Unit To Hydraulic Cylinder				
61 07 (2 Req.): 62 07 (2 Req.): 63 07 (Note 28.053-3 Type 1-2 Req.) ..... ***(Replaces 345 8280)***	.....	AR	345 8281	
63 07 (Note 28.053-3 Type 2)	.....	2	350 5359	
64-65 07: 65 17-87 (To Bottom Of Cylinder)	.....	1	350 9334	
64-65 07: 65 17-87 (To Top Of Cylinder)	.....	1	350 9335	
CLIP, Folding Top Power Unit To Hydraulic Cylinder Hose Support				
61 07	.....	2	345 8244	
ATTACHING PARTS				
Clip To Body				
SCREW, Tapping 61 07	17.646	2	G440961	NA
PACKING, Folding Top Power Unit To Hydraulic Cylinder Hose				
(Hose To Power Unit) 61 Thru 65 07: 65 17-87	.....	2	447 9154	
(Hose To Cylinder) 63 07 (Note 28.053-3 Type 2): 64-65 07: 65 17-87	.....	2	448 0854	

Copyright 1963 American Motors Corp.

GROUP NO. — DESCRIPTION — YEAR and MODEL	PRIMARY GROUP NO.	PER CAR	PART NO.	CODE
28.057 HARNESS, Folding Top Power Unit Wiring (For 64-65 Series See Group 3.163)				
61 Thru 63 07 (Switch To Power Unit)	.....	1	346 3508	
WIRE, Ignition Switch To Circuit Breaker				
61 Thru 63 07 *(Replaces 346 3507, 347 3452)*	13.072	1	316 0624	
64 07	.....	1	317 1131	#
65 07-17-87	23.320	1	317 6543	#
WIRE, Circuit Breaker To Top Switch				
61 Thru 63 07	.....	1	346 3506	
64 07	.....	1	317 1132	
65 07-17-87	23.320	1	317 6544	#
28.058 POWER UNIT, Folding Top Operating (Incl. Motor And Pump)				
64-65 07 (WPT): 65 17-87	.....	1	350 9332	
MOTOR, Folding Top Operating Power Unit (Incl. Mounting Bracket And Cushion)				
61-62 07: 63 07 (Note 28.058-1 Type 1)	.....	1	447 9149	
63 07 (Note 28.058-1 Type 2-Autolite)	.....	1	448 0847	
64-65 07: 65 17-87	.....	1	448 1271	#
HEAD, Folding Top Operating Power Unit Motor				
(Commutator End) 61-62 07: 63 07 (Note 28.058-1 Type 1)	.....	1	447 9216	#
(Commutator End) 63 07 (Note 28.058-1 Type 2-Autolite): 64-65 07 (Note 28.058-2 Type 1): 65 17-87 (Note 28.058-2 Type 1)	.....	1	448 0885	#
(Drive End) 61-62 07: 63 07 (Note 28.058-1 Type 1)	.....	1	447 9213	#
(Drive End) 63 07 (Note 28.058-1 Type 2-Autolite): 64-65 07 (Note 28.058-2 Type 1): 65 17-87 (Note 28.058-2 Type 1)	.....	1	448 0883	#
ARMATURE, Folding Top Operating Power Unit Motor				
61-62 07: 63 07 (Note 28.058-1 Type 1)	.....	1	447 9215	
63 07 (Note 28.058-1 Type 2-Autolite): 64-65 07 (Note 28.058 Type 1): 65 17-87 (Note 28.058-2 Type 1)	.....	1	448 0887	#
BRUSH SET, Folding Top Operating Power Unit Motor				
61-62 07: 63 07 (Note 28.058-1 Type 1)	.....	1	447 9217	
63 07 (Note 28.058-1 Type 2-Autolite): 64-65 07 (Note 28.058-2 Type 1): 65 17-87 (Note 28.058-2 Type 1)	.....	1	448 0886	#
SPRING SET, Folding Top Operating Power Unit Motor Brush				
61-62 07: 63 07 (Note 28.058-1 Type 1)	.....	1	447 9218	
63 07 (Note 28.058-1 Type 2-Autolite): 64-65 07 (Note 28.058-2 Type 1): 65 17-87 (Note 28.058-2 Type 1)	.....	1	448 0882	#
BRACKET, Folding Top Operating Power Unit Motor Mounting				
61 Thru 63 07	.....	1	447 9180	
64-65 07: 65 17-87	.....	1	448 1273	

NOTE 28.058-1: Two Types of Power Units were used on Model 63 07. They can be identified as follows:
Type 1: This Power Unit is equipped with Autolite Motor EMJ-4110.
Type 2: This Power Unit is equipped with Autolite Motor ESQ-4001 or Delco Motor #5044494.

NOTE 28.058-2: Optional Folding Top Power Unit Motors were used on the 64-65 07 and 65 17-87. They can be identified as follows:
Type 1: Motor is a Autolite ESQ-4001.
Type 2: Motor is a Delco #5044494.

Copyright 1963 American Motors Corp.

GROUP NO. — DESCRIPTION — YEAR and MODEL	PRIMARY GROUP NO.	PER CAR	PART NO.	CODE
ATTACHING PARTS				
Mounting Bracket To Motor				
SCREW, Machine ..... 61 Thru 65 07: 65 17-87	17.602	2	G120216	NA
WASHER, Lock ..... 61 Thru 65 07: 65 17-87	17.820	2	G131183	NA
Motor Ground Wire To Seat Back Panel				
SCREW, Machine 64-65 07: 65 17-87	17.598	1	G454542	NA
NUT, Hexagon 64-65 07: 65 17-87	17.406	1	G120375	
WASHER 64-65 07: 65 17-87	17.820	1	G120380	NA
CUSHION, Folding Top Operating Power Unit Motor Mounting				
61 Thru 65 07: 65 17-87	.....	2	345 8811	
PLATE, Folding Top Operating Power Unit Pump Cover (Incl. Rocker Arm)				
61-62 07: 63 07 (Note 28.058-1 Type 1)	.....	1	447 9152	
63 07 (Note 28.058-1 Type 2): 64-65 07: 65 17-87	.....	1	448 0849	
ATTACHING PARTS				
Pump Cover Plate To Motor				
BOLT, Hexagon ..... 61-62 07: 63 07 (Note 28.058-1 Type 1)	.....	5	447 9158	
BOLT, Hexagon ..... 63 07 (Note 28.058-1 Type): 64-65 07-17-87	.....	5	448 0855	
WASHER, Lock ..... 61-62 07: 63 07 (Note 28.058-1 Type 1)	.....	5	447 9159	
ROTOR, Folding Top Operating Power Unit Pump				
(Outer) 61-62 07: 63 07 (Note 28.058-1 Type 1)	.....	1	447 9151	
(Outer) 63 07 (Note 28.058-1 Type 2): 64-65 07: 65 17-87 ..... *(Ref. Pr. List)*	.....	1	448 0852	
(Inner) 61-62 07: 63 07 (Note 28.058-1 Type 1)	.....	1	447 9150	
(Inner) 63 07 (Note 28.058-1 Type 2): 64-65 07: 65 17-87 ..... *(Ref. Pr. List)*	.....	1	448 0851	
BALL, Folding Top Operating Power Unit Pump Drive				
61 Thru 63 07 (1/8" Dia.)	17.018	1	G145635	
63 07 (Note 28.058-1 Type 2): 64-65 07: 65 17-87 (3/16 Dia.)	17.018	1	G145641	
61 Thru 65 07: 65 17-87 (1/4" Dia.)	17.018	2	G145639	
RING, Folding Top Operating Power Unit Pump Armature Shaft "O"				
61-62 07: 63 07 (Note 28.058-1 Type 1)	.....	1	447 9157	
63 07 (Note 28.058-1 Type 2): 64-65 07: 65 17-87	.....	1	448 0850	
COIL, Folding Top Operating Power Unit Motor Field				
61-62 07: 63 07 (Note 28.058-1 Type 1)	.....	1	447 9214	
63 07 (Note 28.058-1 Type 2-Autolite): 64-65 07 (Note 28.058-2 Type 1): 65 17-87 (Note 28.058-2 Type 1)	.....	1	448 0884	
RESERVOIR, Folding Top Operating Power Unit				
61-62 07: 63 07 (Note 28.058-1 Type 1)	.....	1	447 9148	
63 07 (Note 28.058-1 Type 2)	.....	1	448 0848	
64-65 07: 65 17-87	.....	1	448 1274	
PLATE, Folding Top Operating Power Unit Reservoir End				
61 Thru 63 07	.....	1	447 9147	
ATTACHING PARTS				
Reservoir End Plate To Pump Cover				
BOLT ..... 61-62 07: 63 07 (Note 28.058-1 Type 1)	.....	1	447 9153	
BOLT ..... 63 07 (Note 28.058-1 Type 2)	.....	1	448 0853	
BOLT 64-65 07: 65 17-87	.....	1	448 1272	
WASHER, Plain ..... 61 Thru 65 07: 65 17-87	.....	1	447 9161	
"O" RING ..... 61 Thru 65 07: 65 17-87	.....	1	447 9155	

Copyright 1963 American Motors Corp.

GROUP NO. — DESCRIPTION — YEAR and MODEL	PRIMARY GROUP NO.	PER CAR	PART NO.	CODE
PLUG, Folding Top Operating Power Unit Reservoir Filler (Incl. "O" Ring)				
61 Thru 65 07: 65 17-87	.....	1	447 9146	
RING, Folding Top Operating Power Unit Reservoir End "O"				
61 Thru 63 07 (2 Req.): 64-65 07: 65 17-87 (1 Req.)	.....	AR	447 9156	
CUSHION, Folding Top Operating Power Unit Reservoir Mounting				
61 Thru 65 07: 65 17-87	.....	2	345 8811	
28.059 BREAKER, Folding Top Operating Circuit				
61 Thru 63 07	3.154	1	439 0679	
64-65 07: 65 17-87	23.325	1	317 1130	
CLIP, Folding Top Operating Circuit Breaker Mounting				
61 Thru 63 07	3.154	1	439 0686	
28.062 COVERING, Folding Top (Less Back Curtain)				
(Black) 61-62 07: 63 07 (Note 28.068-1 Type 1)	.....	1	346 3594	
(Black) 63 07 (Note 28.068-1 Type 2)	.....	1	350 5380	
(Black) 64 07 (Note 28.015-1 Type 1) ***(Replaces 448 1264)***	.....	1	352 0547	
(Black) 64 07 (Note 28.015-1 Type 2)	.....	1	353 3904	
(Black) 65 07	.....	1	353 2076	
(Black) 65 17-87	.....	1	353 4944	
(White) 61-62 07: 63 07 (Note 28.068-1 Type 1)	.....	1	346 3597	
(White) 63 07 (Note 28.068-1 Type 2)	.....	1	350 5379	
(White) 64 07 (Note 28.015-1 Type 1) ***(Replaces 448 1266)***	.....	1	352 0548	
(White) 64 07 (Note 28.015-1 Type 2)	.....	1	353 3901	
(White) 65 07	.....	1	353 2073	
(White) 65 17-87	.....	1	353 4941	
(Gold) 64 07 (Note 28.015-1 Type 1) ***(Replaces 448 1268)***	.....	1	352 0549	
(Gold) 64 07 (Note 28.015-1 Type 2)	.....	1	353 3902	
(Turquoise) 64 07 (Note 28.015-1 Type 1) ***(Replaces 448 1270)***	.....	1	352 0550	
(Turquoise) 64 07 (Note 28.015-1 Type 2)	.....	1	353 3903	
(Blue) 65 07	.....	1	353 2074	
(Blue) 65 17-87	.....	1	353 4942	
(Aqua) 65 07	.....	1	353 2075	
(Aqua) 65 17-87	.....	1	353 4943	
ATTACHING PARTS				
Covering To Side Belt Rail				
SLAT — 61 Thru 63 07 (Left) ***(Replaces 346 0581)***	28.068	1	346 4779	
SLAT — 61 Thru 63 07 (Right) ***(Replaces 346 0580)***	28.068	1	346 4778	
RETAINER — 64-65 07 (Left)	.....	1	350 8927	
RETAINER — 65 17-87 (Left)	.....	1	351 7519	
RETAINER — 64-65 07 (Right)	.....	1	350 8926	
RETAINER — 65 17-87 (Right)	.....	1	351 7518	
STUD — 61 Thru 63 07 ***(Replaces 346 0499)***	.....	10	400 0229	
WASHER, Plain — 61 07	17.814	10	G446152	NA
WASHER, Plain — 62-63 07 ***(Replaces 800 0141)***	17.814	10	400 1081	
Covering To Front And Center Bows				
RETAINER — 64-65 07	.....	2	350 8957	
RETAINER — 65 17-87	.....	2	351 7507	
SCREW, Tapping — 64-65 07	.....	6	G163098	NA
EXTENSION, Folding Top Covering Side Belt Rail Retainer				
64 07 (Left)	.....	1	350 8835	
64 07 (Right)	.....	1	350 8834	

Copyright 1963 American Motors Corp.

GROUP NO. — DESCRIPTION — YEAR and MODEL	PRIMARY GROUP NO.	PER CAR	PART NO.	CODE
DEFLECTOR, Folding Top Covering Belt Rail Water				
(Rear) 62-63 07	.....	2	348 9571	
(Side) 62-63 07	.....	2	346 4999	
(Left) 64 07	.....	1	448 2825	
(Right) 64 07	.....	1	448 2824	
BAFFLE KIT, Folding Top Covering Belt Rail Water				
65 07-17-87	.....	1	320 6991	
28.068 CURTAIN, Folding Top Back (Incl. Window And Slide Fastener)				
64-65 07 ...*(Replaces 448 1263, 448 1265, 448 1267, 448 1269)*	.....	1	352 0546	
65 17-87	.....	1	353 2654	
(Black) 61-62 07: 63 07 (Note 28.068-1 Type 1)	.....	1	346 3586	
(Black) 63 07 (Note 28.068-1 Type 2)	.....	1	350 5372	
(White) 61-62 07: 63 07 (Note 28.068-1 Type 2)	.....	1	346 3587	
(White) 63 07 (Note 28.068-1 Type 2) ...*(Use 350 5372)*	.....	1	350 5507	
ATTACHING PARTS Curtain To Center Belt Rail				
SLAT ... 61 Thru 63 07 ...*(Replaces 346 0582)*	.....	1	346 4780	
SLAT ... 64-65 07	.....	1	350 8928	
SLAT ... 65 17-87	.....	1	351 7520	
STUD ... 61 Thru 63 07 ...*(Replaces 346 0449)*	28.062	9	400 0229	
WASHER, Plain ... 61 07	17.814	9	G446152	NA
WASHER, Plain ... 62-63 07 ...*(Replaces 800 0141)*	17.814	9	400 1081	
Curtain Strap To Rear Bow				
STUD ... 61 07 (2 Req.): 62 Thru 65 07 (1 Req.): 65 17-87 (1 Req.)	.....	AR	346 0054	
28.072 CORD, Folding Top Side Quarter Retainer				
61 Thru 63 07	.....	2	346 0649	
64-65 07: 65 17-87	.....	2	448 2818	
CLIP, Folding Top Side Quarter Retainer Cord				
61 Thru 63 07	.....	2	346 0650	
64-65 07: 65 17-87	.....	4	448 2819	
ATTACHING PARTS Clip To Belt Rail				
SCREW, Machine ... 61 Thru 63 07	17.626	2	G187572	NA
WASHER, Plain ... 61 Thru 63 07 ...*(Replaces 800 0141)*	17.814	2	400 1081	
NUT, Sealing ... 61 Thru 63 07	.....	2	400 0220	
CABLE, Folding Top Side Quarter Retainer				
(Left) 65 07-17-87 ...*(Use 353 1914)*	.....	1	353 1915	#
(Right) 65 07-17-87	.....	1	353 1914	
ATTACHING PARTS Cable To Rear Rail				
BOLT, Tee ... 65 07-17-87	.....	2	400 0237	
NUT, Hexagon ... 65 07-17-87	.....	2	439 0742	

NOTE 28.068-1: Two Types of Top Coverings and Back Curtains were used on Model 63 07. They can be identified as follows:

Type 1: This Curtain measures 23-1/2" from Top to Bottom at the Center Line. This Curtain has a fabric border below the Vinylite Window.

Type 2: This Curtain measures 22-3/4" from Top to Bottom at the Center Line. There is no fabric border below the Vinylite Window.

Copyright 1963 American Motors Corp.

GROUP NO. — DESCRIPTION — YEAR and MODEL	PRIMARY GROUP NO.	PER CAR	PART NO.	CODE
Cable To Front Bracket				
NUT, Hexagon..... 65 07-17-87	17.412	2	G120361	NA
28.073 BOOT, Folding Top Dust				
(Black) 61 Thru 63 07 ***(Replaces 346 3582)***	.....	1	348 3143	
(Black) 64 07	.....	1	350 2328	
(Black) 65 07	.....	1	354 9166	
(Black) 65 17-87	.....	1	351 8577	
(White) 61 Thru 63 07 ***(Replaces 346 3581)***	.....	1	348 3144	
(White) 64 07	.....	1	350 2330	
(White) 65 07	.....	1	351 7849	
(White) 65 17-87	.....	1	351 8580	
(Gold) 64 07	.....	1	350 2329	
(Turquoise) 64 07	.....	1	350 2331	
(Blue) 65 07	.....	1	351 7850	
(Blue) 65 17-87	.....	1	351 8578	
(Aqua) 65 07	.....	1	351 7851	
(Aqua) 65 17-87	.....	1	351 8579	
ATTACHING PARTS				
Boot To Belt Rail Moulding				
STUD..... 61 Thru 63 07	26.036	18	345 8837	
STUD..... 65 17-87	26.036	19	400 1376	
Boot To Rear Seat Back				
RETAINER..... 61 Thru 63 07	.....	1	346 0196	
RETAINER..... 64-65 07	.....	1	350 2338	
RETAINER..... 65 17-87	.....	1	351 8586	
SCREW, Tapping..... 61 Thru 63 07	17.666	7	G161651	NA
SCREW, Tapping..... 65 17-87	17.666	9	G161645	NA
Boot To Rear Quarter Upper Trim Panel				
STUD..... 61 07 (6 Req.): 62-63 07 (6 Req.)	.....	AR	346 0147	
STUD..... 64-65 07 (1/2" Long): 65 07-17-87 (1/2" Long)	.....	2	400 0822	
STUD..... 64 07 (5/8" Long): 65 07-17-87 (5/8" Long)	.....	2	400 0821	
SCREW, Tapping..... 61 07	17.666	6	G161651	NA
SCREW, Machine..... 62-63 07	17.586	4	G155845	NA
WASHER, Plain 62-63 07	17.814	4	G446152	NA
NUT, Hexagon 62-63 07	17.412	4	G271482	NA
28.074 PAD, Folding Top Quarter Stay				
(Left) 61 Thru 63 07	.....	1	346 3593	
(Right) 61 Thru 63 07	.....	1	346 3592	
(Left) 64-65 07: 65 17-87	.....	1	352 0543	
(Right) 64-65 07: 65 17-87	.....	1	352 0542	
28.075 FASTENER, Folding Top Back Curtain Slide (Zipper)				
61 Thru 63 07	.....	1	346 0438	
64 07 (Note 28.075-1 Type 1)	.....	1	351 9622	
64 07 (Note 28.075-1 Type 2): 65 07-17-87	.....	1	353 4878	

NOTE 28.075-1: Two Types of Folding Top Back Curtain Slide Fasteners (Zippers) were used on the 64 07. They can be identified as follows:
Type 1: The Metal length of the Fastener is 49-1/2" long.
Type 2: The Metal Length of the Fastener is 45-3/4" Long.

NOTE 28.077-1: Two Types of Hold Down Knob and Brackets were used on the 65 07 manually operated top. They can be identified as follows:
Type 1: Hold Down Bracket attaches to Rear Quarter Trim Panel Support with a spacer and two screws.
Type 2: Hold Down Bracket attaches to Support Bracket with two screws and Support Bracket is attached to Trim Support with four screws.

Copyright 1963 American Motors Corp.

GROUP NO. — DESCRIPTION — YEAR and MODEL	PRIMARY GROUP NO.	PER CAR	PART NO.	CODE
28.077 KNOB AND BRACKET, Manual Top Hold Down				
64 07: 65 07 (LPT-Note 28.077-1 Type 1)	.....	2	351 9714	
65 07 (LPT-Note 28.077-1 Type 2)	.....	2	448 2138	
ATTACHING PARTS				
Bracket To Trim Panel				
SCREW, Tapping..... 64 07: 65 07 (LPT-Note 28.077-1 Type 1)	17.671	4	G9414263	NA
WASHER, Lock ..... 64 07: 65 07 (LPT-Note 28.077-1 Type 1)	17.822	4	G121752	NA
Bracket To Support				
SCREW, Tapping..... 65 07 (LPT-Note 28.077-1 Type 2)	23.006	4	400 0318	
SUPPORT, Manual Top Hold Down Bracket				
65 07 (LPT-Note 28.077-1 Type 2)	.....	2	351 8050	
SPACER, Manual Top Hold Down Bracket				
64 07: 65 07 (LPT-Note 28.077-1 Type 1)	.....	2	354 8095	
ATTACHING PARTS				
Support To Rear Trim Panel Support				
SCREW, Tapping..... 65 07 (LPT-Note 28.077-1 Type 2)...*(Discontinued)*	.....	8	400 1521	#
28.079 MOULDING, Folding Top Wire On				
(Black) 61 Thru 63 07	.....	1	346 0506	
(Black) 64 07	.....	1	448 2005	
(Black) 65 07-17-87	.....	1	448 2820	
(White) 61 Thru 63 07	.....	1	346 0507	
(White) 64 07	.....	1	448 2006	
(White) 65 07-17-87	.....	1	448 2821	
(Gold) 64 07 ..... *(Use 448 2007)*	.....	1	352 0587	
(Turquoise) 64 07 ..... *(Use 448 2008)*	.....	1	352 0588	
(Blue) 65 07-17-87	.....	1	448 2822	
(Aqua) 65 07-17-87	.....	1	448 2823	
CAP, Folding Top Wire On Moulding End				
(Left) 61 Thru 65 07: 65 17-87	.....	1	346 0523	
(Right) 61 Thru 65 07: 65 17-87	.....	1	346 0522	
ATTACHING PARTS				
Cap To Rear Bow				
SCREW, Tapping..... 61 Thru 65 07: 65 17-87	17.654	2	G9411797	NA
28.082 LINING, Folding Top Well				
61 Thru 63 07	.....	1	346 3588	
64-65 07	.....	1	350 2336	
65 17-87	.....	1	351 8585	
ATTACHING PARTS				
Lining To Rear Wheelhouse To Floor Reinforcement				
TACK..... 61 Thru 64 07	.....	9	346 0144	
SCREW, Tapping..... 64-65 07: 65 17-87	.....	9	400 0745	
WASHER, Folding Top Well Lining Plastic				
62 Thru 65 07: 65 17-87	.....	19	400 0250	
28.083 DRAIN, Folding Top Well Lining				
61 Thru 64 07	.....	1	345 8859	
65 07-17-87	.....	1	352 1006	

Copyright 1963 American Motors Corp.

GROUP NO. — DESCRIPTION — YEAR and MODEL	PRIMARY GROUP NO.	PER CAR	PART NO.	CODE
RETAINER, Folding Top Well Lining Drain				
61 Thru 65 07: 65 17-87	.....	1	345 8899	
GROMMET, Folding Top Well Lining Drain				
61 Thru 65 07: 65 17-87	.....	1	345 8891	
WASHER, Folding Top Well Lining Drain Fibre				
63 Thru 65 07: 65 17-87	25.030	2	400 0326	
28.085 BUTTON, Folding Top Back Curtain Fastener (Chrome)				
61 Thru 64 07	17.270	2	G141994	
SOCKET, Folding Top Back Curtain Fastener (Chrome)				
61 Thru 65 07: 65 17-87	17.270	2	G141998	
BUTTON, Folding Top Dust Boot Fastener (Chrome)				
61 Thru 65 07	17.270	24	G141994	
SOCKET, Folding Top Dust Boot Fastener (Chrome)				
61 Thru 64 07	17.270	24	G141998	
BUTTON, Folding Top Well Lining Fastener (Black)				
61-62 07	.....	19	346 0437	
STUD, Folding Top Dust Boot Fastener (Chrome)				
65 17-87	26.036	20	400 1376	
SOCKET, Folding Top Well Lining Fastener (Black)				
61-62 07	.....	19	346 0436	
STUD, Folding Top Well Lining Fastener				
63 Thru 65 07: 65 17-87	28.062	19	400 0229	
WASHER, Folding Top Well Lining Fastener Stud (Plain)				
63-64 07 *(Replaces 800 0141)*	17.814	19	400 1081	
WASHER, Folding Top Well Lining Fastener (Plastic)				
62 Thru 64 07	28.082	19	400 0250	
28.090 HOSE, Rear Belt Rail Drain				
61 07 (2 Req.): 62-63 07 (1 Req.) *(Replaces 346 4630)*	.....	1	347 3455	
28.091 TUBE, Side Belt Rail Drain				
62-63 07	.....	2	348 9876	
FERRULE, Side Belt Rail Drain Tube				
62-63 07	.....	2	348 9877	
GROMMET, Side Belt Rail Drain Tube (At Wheelhouse)				
62-63 07	.....	2	348 9875	

Copyright 1963 American Motors Corp.

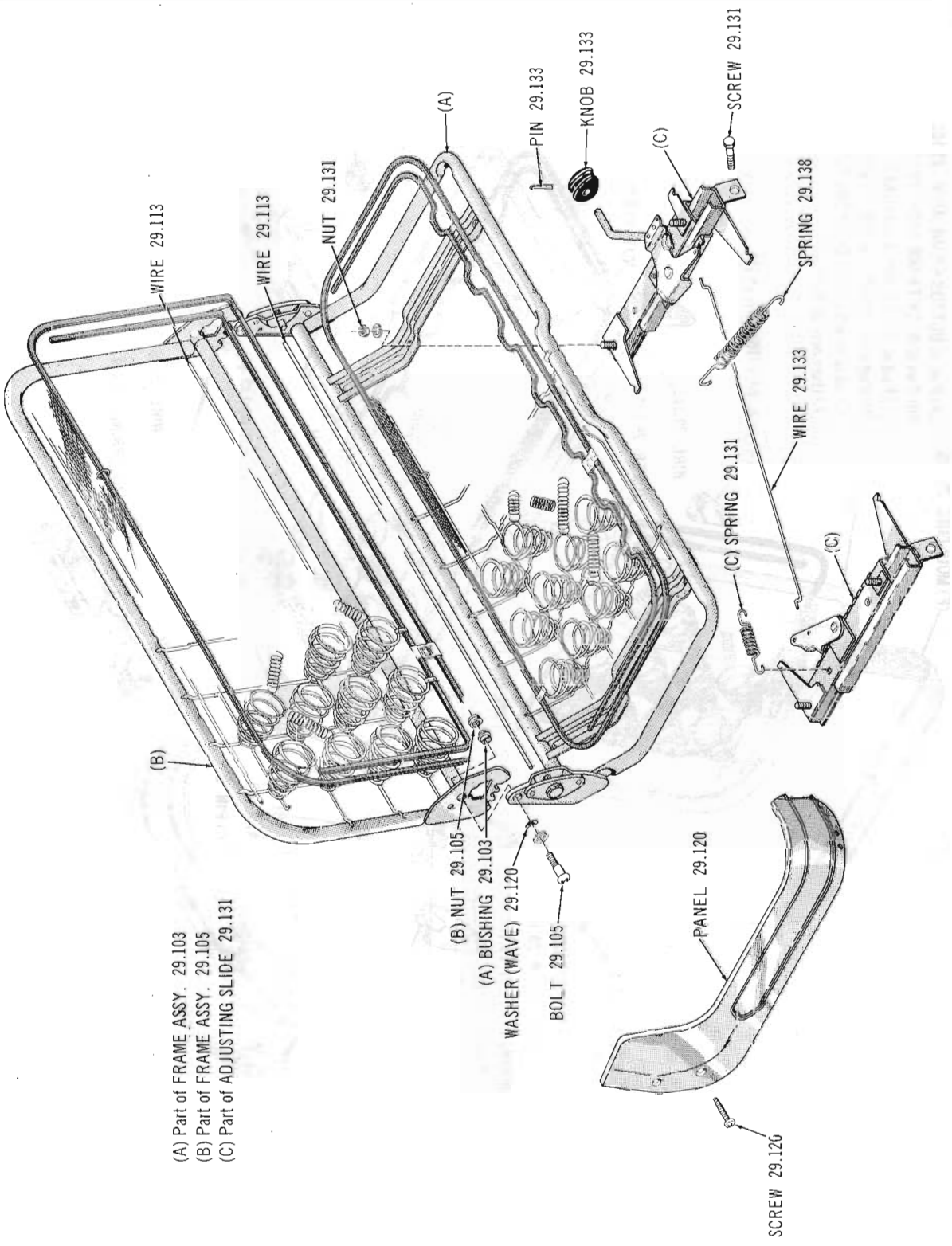

FRONT SEAT 60 thru 64 ALL MODELS (WFS)

Copyright 1963 American Motors Corp.

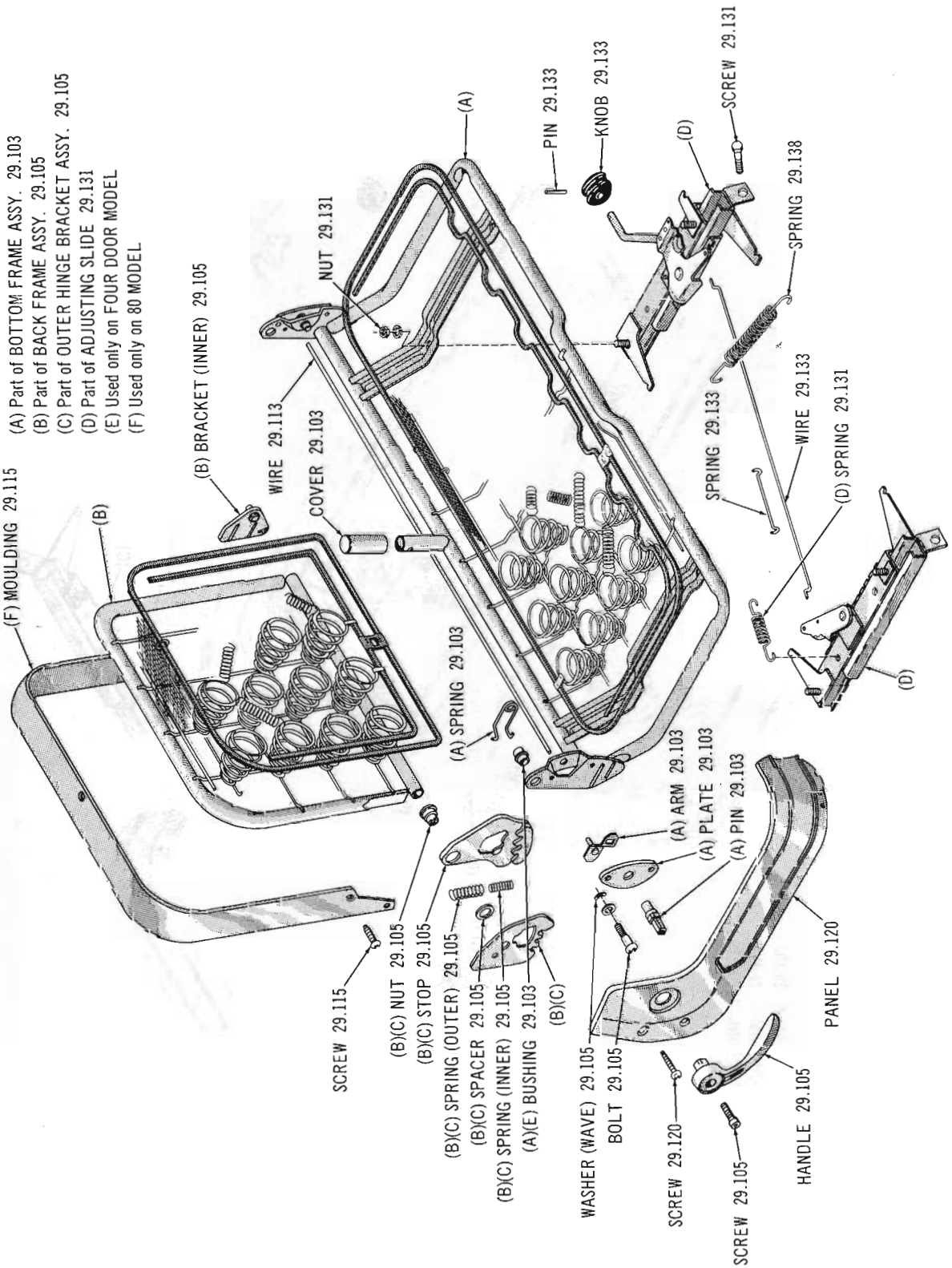

FRONT SEAT 60 thru 64 ALL MODELS (WRS)

Copyright 1963 American Motors Corp.

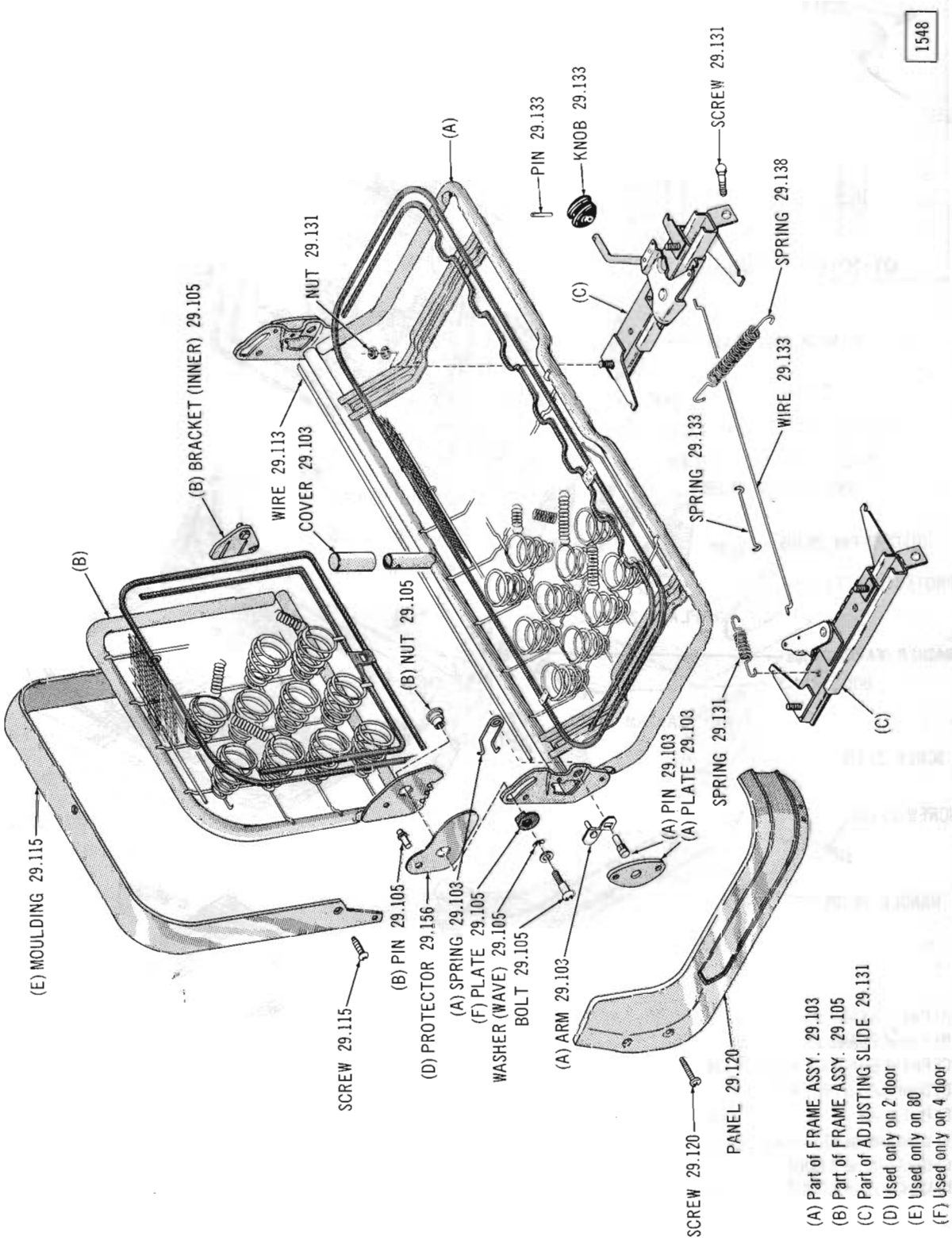

FRONT SEAT 60 thru 64 ALL MODELS (WNRS)

Copyright 1963 American Motors Corp.

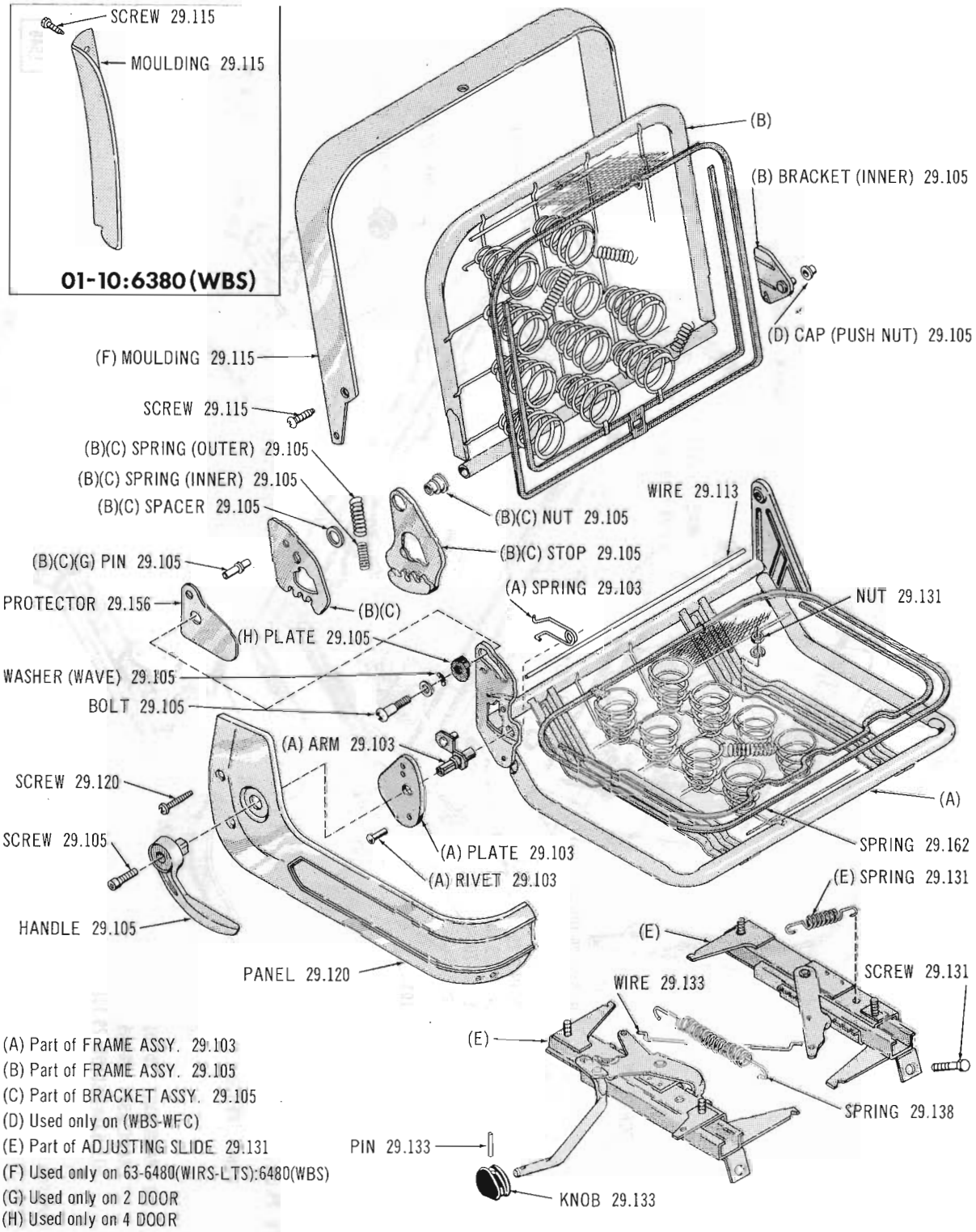

(A) Part of FRAME ASSY. 29.103
(B) Part of FRAME ASSY. 29.105
(C) Part of BRACKET ASSY. 29.105
(D) Used only on (WBS-WFC)
(E) Part of ADJUSTING SLIDE 29.131
(F) Used only on 63-6480(WIRS-LTS):6480(WBS)
(G) Used only on 2 DOOR
(H) Used only on 4 DOOR

FRONT SEAT 64 01: 63-64 10-80 (WIRS-LTS)(WBS-LTS)

Copyright 1963 American Motors Corp.

(A) Refer to applicable UPHOLSTERY PARTS CATALOG
(B) Part of FRAME ASSY. 29.142
(C) Used only on (WBS-WCC)

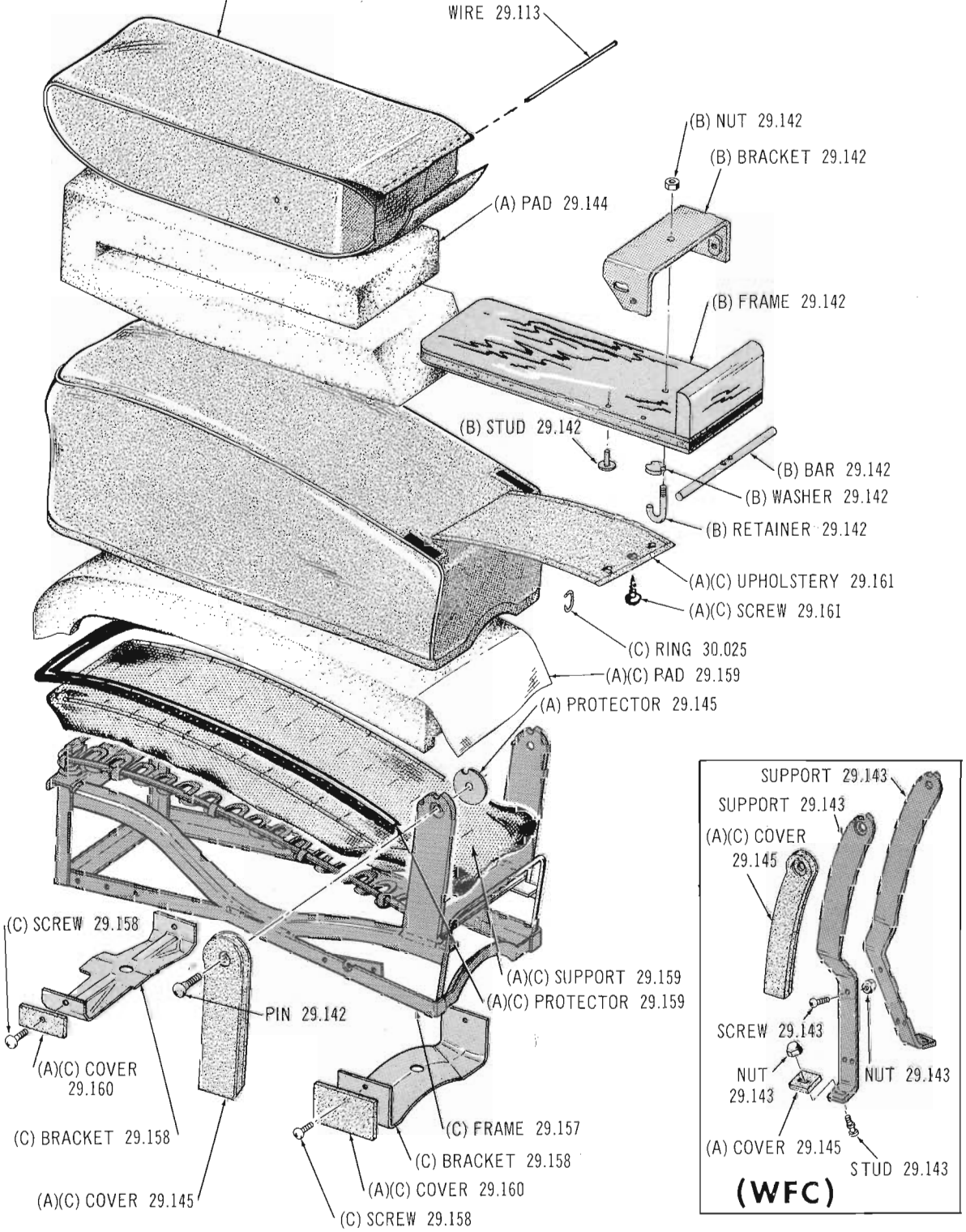

FRONT SEAT CENTER CUSHION AND ARMREST 64-65 80 (WBS)

Copyright 1963 American Motors Corp.

Copyright 1963 American Motors Corp.

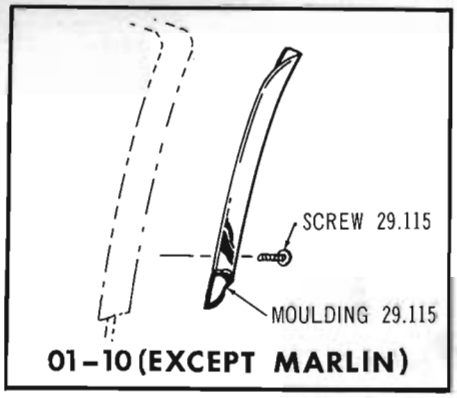

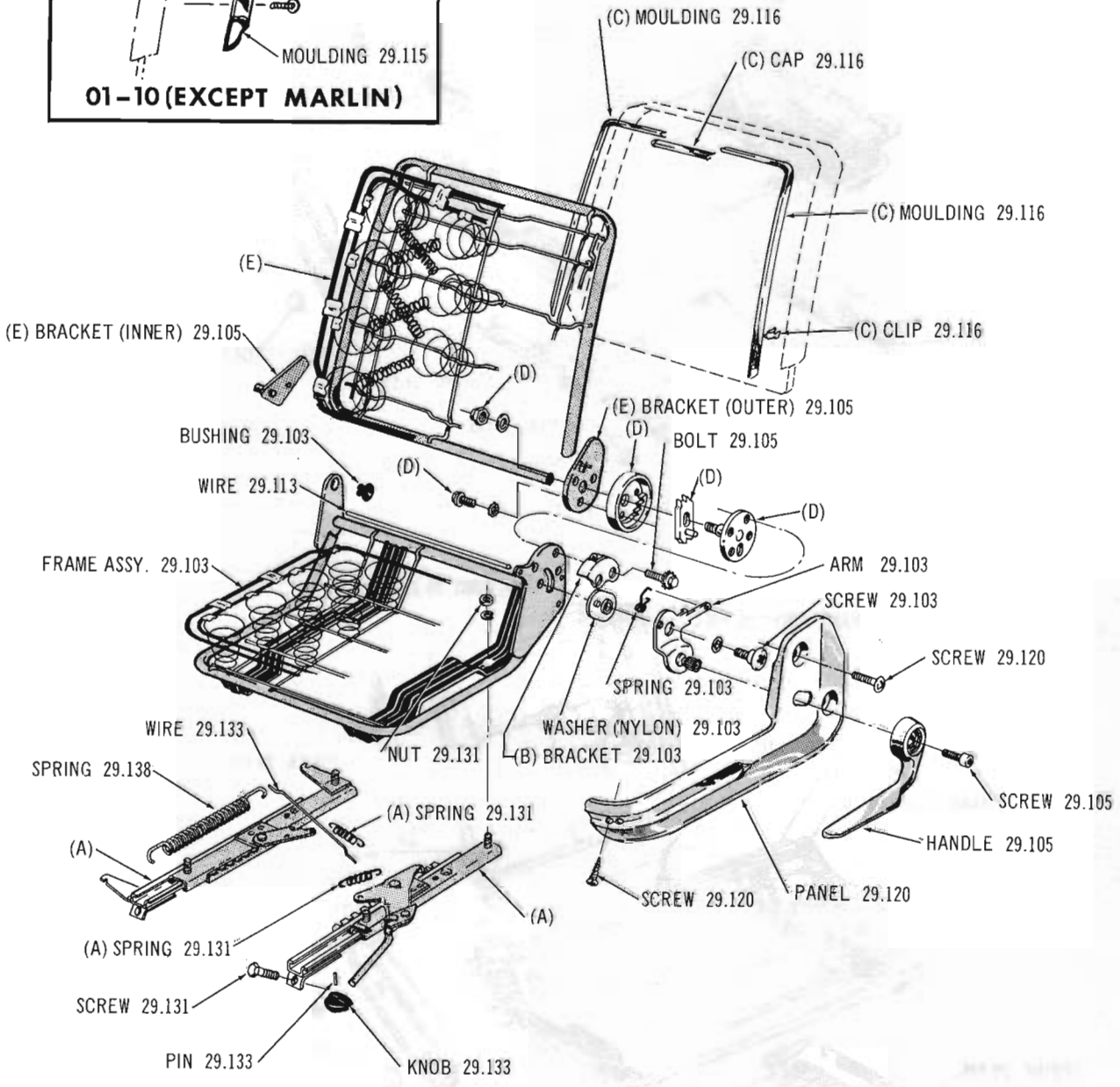

(A) Part of SLIDE 29.131
(B) Used only on 4 DOOR MODELS
(C) Used only on 50-80
(D) Part of DRUM ASSY. KIT 29.105
(E) Part of FRAME ASSY. 29.105

2102

FRONT SEAT 65 ALL MODELS (WIRS-WBS)(WRS)

Copyright 1963 American Motors Corp.

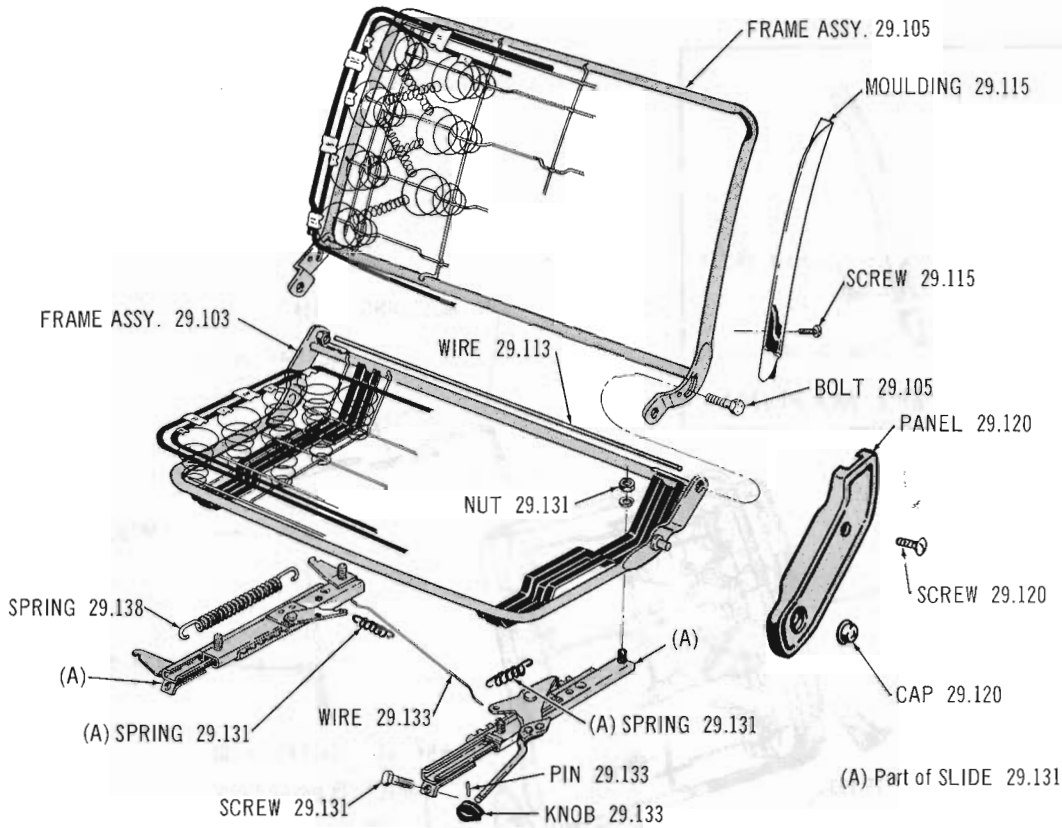

FRONT SEAT 65 01-10-80 (WFS)

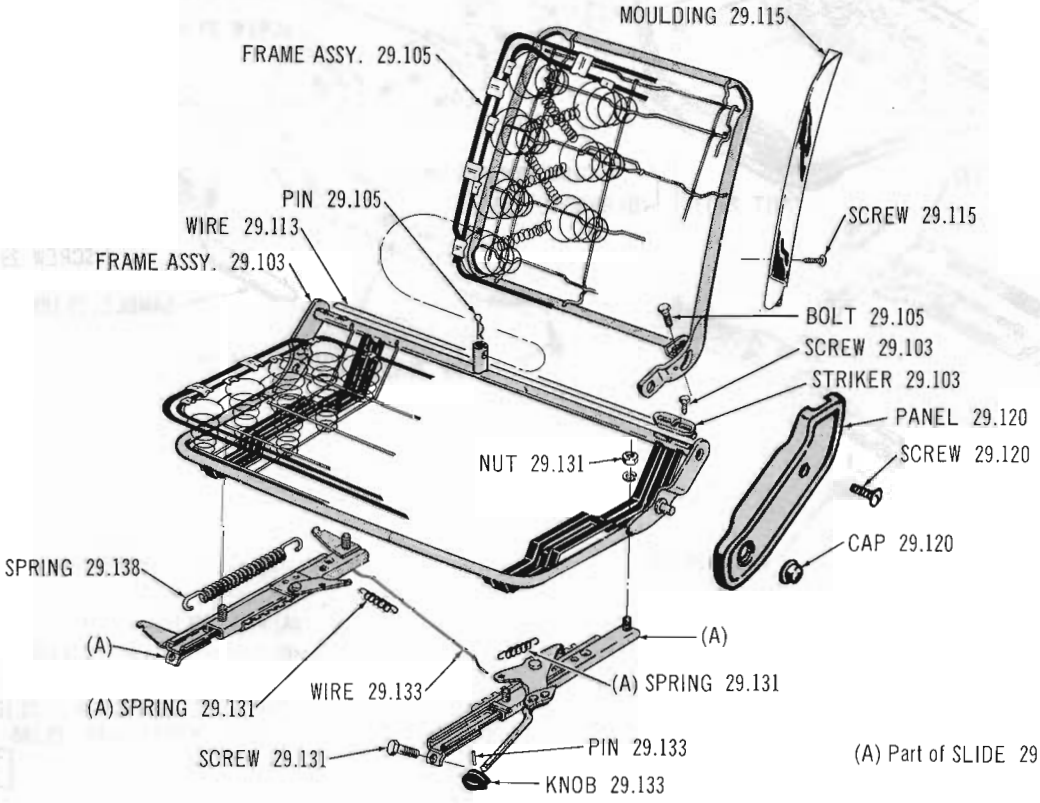

FRONT SEAT 65 ALL MODELS (WNRS)

Copyright 1963 American Motors Corp.

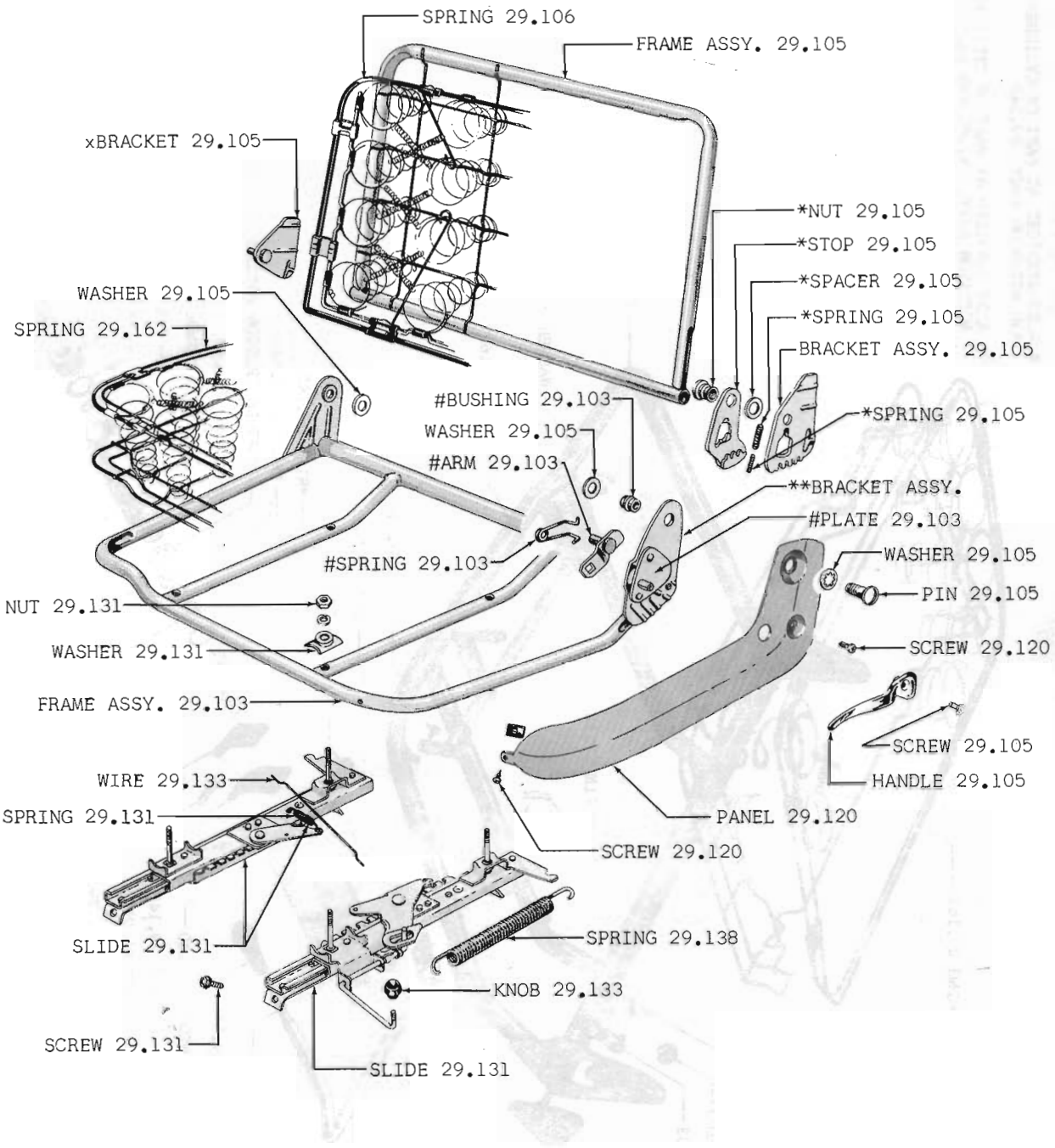

* ALSO SERVICED AS PART OF BRACKET ASSY. 29.105 and FRAME ASSY. 29.105

x ALSO SERVICED AS PART OF FRAME ASSY. 29.105

ALSO SERVICED AS PART OF FRAME ASSY. 29.103

** ONLY SERVICED AS PART OF FRAME ASSY. 29.103

FIG. 29.103-3 INDIVIDUAL RECLINING FRONT SEATS 60 THRU 62 10-20-80

Printed in U.S.A.

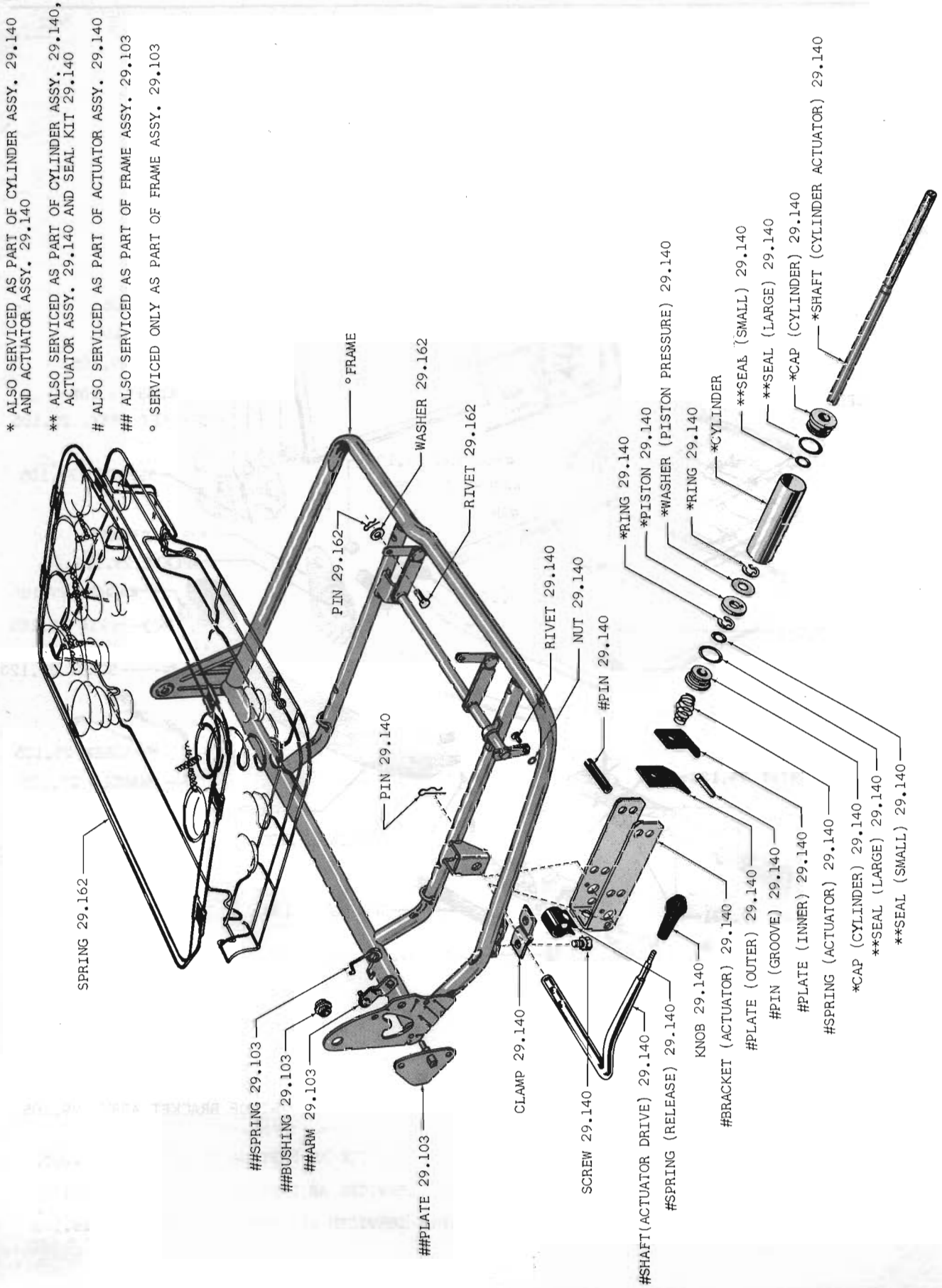

FIG. 29.103-4 FRONT SEAT TILT LOUNGE ASSEMBLY 62-63 ALL MODELS

Printed in U.S.A.

GROUP NO. — DESCRIPTION — YEAR and MODEL	PRIMARY GROUP NO.	PER CAR	PART NO.	CODE
29.100 SEAT ASSEMBLY, Trimmed Front (Less Cushion) (Order Component Parts) (Note 29.100-1)				
29.101 BACK ASSEMBLY, Trimmed Front Seat (Order Component Parts) (Note 29.100-1)				
29.103 FRAME ASSEMBLY, Front Seat Bottom (Note 29.100-1)				
60 01 (WNRS) ***(Replaces 342 9077)***	.....	1	343 6405	
60 01 (WRS) ***(Replaces 343 6404)***	.....	1	447 8301	
61 01 (WNRS)	.....	1	345 8598	
61 01 (WRS)	.....	1	345 8593	
62 02-04-06-07-16-86 (WNRS): 63 02-04-06-07-09 (WNRS)	.....	1	348 6839	
62 02-04-06-07-16-86 (WRS): 63 02-04-06-07-09 (WRS)	.....	1	346 2464	
62 05-08-15-18-85-88 (WFS): 63 05-08 (WFS)	.....	1	346 2460	
62 05-08-15-18-85-88 (WNRS): 63 05-08 (WNRS)	.....	1	348 6833	
62 05-08-15-18-85-88 (WRS): 63 05-08 (WRS)	.....	1	346 2463	
163 02-04-06-07 (Can-WNRS)	.....	1	346 9575	
163 01 (Can-WNRS-Heavy Duty): 63 16-86 (WNRS-Heavy Duty) ...(Incl. Spring)	.....	1	448 0747	
163 02-04-07-09 (Can-WRS)	.....	1	346 9577	
163 05-08 (Can-WFS)	.....	1	346 9576	
163 05-08 (Can-WRS)	.....	1	346 9574	
64 02-06-07 (WNRS): ***164 05-08 (Can-WNRS)*** ...(Incl Regular Spring) ***(Ref. Pr. List)***	.....	1	350 2051	
64 02-06-07 (WRS)...(Incl. Regular Spring) ***(Use 448 3242)***	.....	1	350 2053	
64 05-08 (WFS)...(Incl. Regular Spring)	.....	1	350 2050	
64 05-08 (WRS)...(Incl. Regular Spring) ***(Use 448 3242)***	.....	1	350 2052	
64 09 (WNRS)...(Incl. Regular Spring)	.....	1	351 9754	
64 09 (WRS)...(Incl. Regular Spring)	.....	1	351 9755	
64 01 (WRS-Heavy Duty)...(Incl. Spring)	.....	1	448 2088	
64 02-06 (WNRS-Heavy Duty-Note 29.103-3 Type 2): 65 06 (WNRS-Heavy Duty)...(Incl. Spring)	.....	1	351 8409	
64 05-08 (WFS-Heavy Duty-Note 29.103-3 Type 2): 65 05-08 (WFS-Heavy Duty) ...(Incl. Spring)	.....	1	351 8408	
65 05-08 (WFS)...(Incl. Regular Spring)	.....	1	351 8410	
65 05-06-07-08 (WRS)...(Incl. Regular Spring)	.....	1	351 8412	
65 05-06-08 (WRS-Heavy Duty)...(Incl. Spring)	.....	1	448 2908	
65 06-07 (WNRS)...(Incl. Regular Spring)	.....	1	351 8411	
65 09 (WNRS)...(Incl. Regular Spring)	.....	1	353 1816	
65 09 (WRS): ***165 01 (Can-WRS)***...(Incl. Regular Spring	.....	1	353 1550	#
60 10-20-80 (WFS)	.....	1	341 7129	
60 10-20-80 (WNRS)	.....	1	344 4766	
60 10-20-80 (WRS)	.....	1	344 4352	
61 10-20-80 (WFS)	.....	1	345 8911	
61 10-20-80 (WNRS)	.....	1	345 8666	
61 10-20-80 (WRS)	.....	1	345 8663	
63 15-18-85-88 (WFS)...(Incl. Regular Spring)	.....	1	348 3970	

NOTE 29.100-1: The Front Seats are available in 5 distinct Types. They are:

WFS - With Full Seat	- 1 Piece Cushion - 1 Piece Back
WNRS- With Non-Reclining Seat	- 1 Piece Cushion - 2 Piece Back
WRS - With Reclining Seat	- 1 Piece Cushion - 2 Piece Back
WIRS- With Individual Reclining Seat	- 2 Piece Cushion - 2 Piece Back
WBS - With Bucket Seat	- 2 Piece Cushion - 2 Piece Back

It is important that all requests for Seat Parts include this information. Also be sure to specify Left or Right in all cases where a 2 Piece Cushion or a 2 Piece Back is involved.

NOTE 29.103-1: This Part was used prior to Body No. 18823.

NOTE 29.103-2: This Part was used after Body No. 18823.

NOTE 29.103-3: Two Types of Seats were used on Fleet Models (WFS)(WNRS). They can be identified as follows:

Type 1: Bottom and Back Frames have Outer Hinge Brackets.

Type 2: Bottom and Back Frames are less Outer Hinge Brackets (Hockey Stick Type).

Copyright 1963 American Motors Corp.

GROUP NO. — DESCRIPTION — YEAR and MODEL	PRIMARY GROUP NO.	PER CAR	PART NO.	CODE
63 15-18-85-88 (WFS-Heavy Duty)...(Incl. Spring)	.....	1	448 0746	
63 15-18-85-88 (WRS)...(Incl. Regular Spring)	.....	1	348 3974	
63 15-18-85-88 (WRS-Heavy Duty)...(Incl. Spring)	.....	1	448 0748	
63 16-86 (WNRS)...(Incl. Regular Spring)	.....	1	348 3971	
63 16-86 (WRS)...(Incl. Regular Spring)	.....	1	348 3973	
63 16-86 (WRS-Heavy Duty)...(Incl. Spring)	.....	1	448 0749	
64 15-18 (WFS-Note 29. 103-3 Type 1)...(Incl. Regular Spring)	.....	1	350 8280	
64 15-18 (WFS-Note 29. 103-3 Type 2): 65 15-18-85-88 (WFS)...(Incl. Regular Spring)	.....	1	351 8840	
64 15-18 (WRS)...(Incl. Regular Spring) ***(Use 448 3243)***	.....	1	350 8282	
64 15-18 (WFS-Heavy Duty-Note 29. 103-3 Type 1)...(Incl. Spring)	.....	1	448 2089	
64 15-18 (WFS-Heavy Duty-Note 29. 103-3 Type 2): 65 15-18 (WFS-Heavy Duty) ...(Incl. Spring)	.....	1	351 8887	
64 16 (WNRS-Note 29. 103-3 Type 1): ***164 15-18 (Can-WNRS)***...(Incl. Regular Spring) ***(Ref. Pr. List)***	.....	1	350 8281	
64 16 (WNRS-Note 29. 103-3 Type 2): 65 16-17-85-86-87-88 (WNRS)...(Incl. Regular Spring)	.....	1	351 8842	
64 16 (WRS)...(Incl. Regular Spring) ***(Use 448 3243)***	.....	1	350 8283	
64 16 (WNRS-Heavy Duty-Note 29. 103-3 Type 1)...(Incl. Spring)	.....	1	448 2090	
64 16 (WNRS-Heavy Duty-Note 29. 103-3 Type 2): 65 16 (WNRS-Heavy Duty) ...(Incl. Spring)	.....	1	351 8843	
64 19 (WNRS)...(Incl. Regular Spring)	.....	1	351 9751	
64 19 (WRS)...(Incl. Regular Spring)	.....	1	351 9750	
64 10 (WRS-Heavy Duty)...(Incl. Spring)	.....	1	448 2091	
65 15-16-17-18-85-86-87-88 (WRS)...(Incl. Regular Spring)	.....	1	351 8859	
65 15-16-18 (WRS-Heavy Duty)...(Incl. Spring)	.....	1	448 2909	
65 19-89 (WNRS)...(Incl. Regular Spring)	.....	1	353 1815	
65 19-89 (WRS): ***165 10-80 (Can-WRS)***...(Incl. Regular Spring)	.....	1	351 8858	#
64 85-88 (WNRS)...(Incl. Regular Spring)	.....	1	351 9404	
64 89 (WNRS)...(Incl. Regular Spring)	.....	1	351 9795	
(Left) 61 01 (WIRS)	.....	1	345 8613	
(Left) 61 01 (WBS): 61 10-20-80 (WIRS)(WBS)	.....	1	346 0431	
(Left) 62 02-04-06-07 (WIRS)(WBS): 63 02-04-06-07-09 (WIRS-LTS)	.....	1	346 2493	
(Left) 62 05-08 (WIRS)(WBS): 63 05-08 (WIRS-LTS)	.....	1	346 2491	
(Left) 63 02-04-06-07-09 (WIRS-WTS)	.....	1	349 0553	
(Left) 63 05-08 (WIRS-WTS)	.....	1	349 0581	
(Left) 63 05-08 (WBS-LTS)	.....	1	347 1415	
(Left) 63 05-08 (WBS-WTS)	.....	1	346 2419	
(Left) 63 06-07-09 (WBS-LTS)	.....	1	347 1417	
(Left) 63 06-07-09 (WBS-WTS)	.....	1	346 2421	
(Left) 64 02-06-07-09 (WIRS): 64 02-06-07-09-16-19 (WBS-LFC)	.....	1	350 2057	
(Left) 64 05-08 (WIRS): 64 05-08-15-18-85-88 (WBS-LFC)	.....	1	350 2055	
(Left) 64 05-08 (WBS-WFC) ***(Use 448 3241)***	.....	1	350 2483	
(Left) 64 07-09 (WBS-WFC) ***(Use 448 3241)***	.....	1	350 2485	
(Left) 65 01-10 (WBS-LFC)...(Incl. Regular Spring)	.....	1	351 8423	
(Left) 65 01-10 (WBS-WFC)...(Incl. Regular Spring)	.....	1	351 8419	
(Left) 65 05-06-07-08 (WIRS)...(Incl. Regular Spring)	.....	1	351 8415	
(Left) ***65 05-06-08 (WIRS-Heavy Duty***...(Incl. Spring)	.....	1	448 2911	
(Left) 65 09 (WIRS)...(Incl. Regular Spring)	.....	1	353 1733	
(Left) 60 10-20-80 (WIRS)	.....	1	344 1397	
(Left) 62 15-18-85-88 (WIRS)(WBS)	.....	1	348 5057	
(Left) 62 16-86 (WIRS)(WBS)	.....	1	348 5059	
(Left) 63 15-18-85-88 (WIRS-LTS)	.....	1	348 3983	
(Left) 63 15-18-85-88 (WIRS-WTS)	.....	1	348 3981	
(Left) 63 15-18-85-88 (WBS-LTS)	.....	1	348 3987	
(Left) 63 15-18-85-88 (WBS-WTS)	.....	1	348 3825	

Copyright 1963 American Motors Corp.

GROUP NO. — DESCRIPTION — YEAR and MODEL	PRIMARY GROUP NO.	PER CAR	PART NO.	CODE
(Left) 63 16-86 (WIRS-LTS)	.....	1	348 3977	
(Left) 63 16-86 (WIRS-WTS)	.....	1	348 3979	
(Left) 63 16-86 (WBS-LTS)	.....	1	348 3985	
(Left) 63 16-86 (WBS-WTS)	.....	1	348 3823	
(Left) 64 10-80 (WIRS)	.....	1	448 3245	#
(Left) 64 15-18-85-88 (WBS-WFC) ***(Use 448 3247)***	.....	1	352 0337	
(Left) 64 16-19-89 (WBS-WFC) ***(Use 448 3247)***	.....	1	352 0339	
(Left) 65 15-16-17-18-85-86-87-88 (WIRS)...(Incl. Regular Spring)	.....	1	351 8867	
(Left) ***65 15-16-18 (WIRS-Heavy Duty)***...(Incl. Spring)	.....	1	448 2913	
(Left) 65 19-89 (WIRS): 65 59 (Marlin-WIRS): ***165 10-80 (Can-WIRS)***...(Incl. Regular Spring)	.....	1	351 8865	
(Left) 65 59 (Marlin-WBS): 65 80 (WBS)...(Incl. Regular Spring)	.....	1	351 8873	
(Right) 61 01 (WIRS)	.....	1	345 8612	
(Right) 61 01 (WBS): 61 10-20-80 (WIRS)(WBS)	.....	1	346 0430	
(Right) 62 02-04-06-07 (WIRS-LTS)(WBS-LTS): 63 02-04-06-07-09 (WIRS-LTS)	.....	1	346 2492	
(Right) 62 02-04-06-07 (WIRS-WTS)(WBS-WTS): 63 02-04-06-07-09 (WIRS-WTS)	.....	1	347 1284	
(Right) 62 05-08 (WIRS-LTS)(WBS-LTS): 63 05-08 (WIRS-LTS)	.....	1	346 2490	
(Right) 62 05-08 (WIRS-WTS)(WBS-WTS): 63 05-08 (WIRS-WTS)	.....	1	347 1250	
(Right) 63 05-08 (WBS-LTS)	.....	1	347 1414	
(Right) 63 05-08 (WBS-WTS)	.....	1	346 2418	
(Right) 63 06-07-09 (WBS-LTS)	.....	1	347 1416	
(Right) 63 06-07-09 (WBS-WTS)	.....	1	346 2420	
(Right) 64 02-06-07-09 (WIRS): 64 02-06-07-09-16-19 (WBS-LFC)	.....	1	350 2056	
(Right) 64 05-08 (WIRS): 64 05-08-15-18-85-88 (WBS-LFC)	.....	1	350 2054	
(Right) 64 05-08 (WBS-WFC) ***(Use 448 3240)***	.....	1	350 2482	
(Right) 64 07-09 (WBS-WFC) ***(Use 448 3240)***	.....	1	350 2484	
(Right) 65 01-10 (WBS-LFC)...(Incl. Regular Spring)	.....	1	351 8422	
(Right) 65 01-10 (WBS-WFC)...(Incl. Regular Spring)	.....	1	351 8418	
(Right) 65 05-06-07-08 (WIRS)...(Incl. Regular Spring)	.....	1	351 8414	
(Right) ***65 05-06-08 (WIRS-Heavy Duty)***...(Incl. Spring)	.....	1	448 2910	
(Right) 65 09 (WIRS)...(Incl. Regular Spring)	.....	1	353 1732	
(Right) 60 10-20-80 (WIRS)	.....	1	344 1398	
(Right) 62 15-18-85-88 (WIRS-LTS)(WBS-LTS)	.....	1	348 5056	
(Right) 62 15-18-85-88 (WIRS-WTS)(WBS-WTS)	.....	1	348 7698	
(Right) 62 16-86 (WIRS-LTS)(WBS-LTS)	.....	1	348 5058	
(Right) 62 16-86 (WIRS-WTS) (WBS-WTS)	.....	1	348 7696	
(Right) 63 15-18-85-88 (WIRS-LTS)	.....	1	348 3982	
(Right) 63 15-18-85-88 (WIRS-WTS)	.....	1	348 3980	
(Right) 63 15-18-85-88 (WBS-LTS)	.....	1	348 3986	
(Right) 63 15-18-85-88 (WBS-WTS)	.....	1	348 3824	
(Right) 63 16-86 (WIRS-LTS)	.....	1	348 3976	
(Right) 63 16-86 (WIRS-WTS)	.....	1	348 3978	
(Right) 63 16-86 (WBS-LTS)	.....	1	348 3984	
(Right) 63 16-86 (WBS-WTS)	.....	1	348 3822	
(Right) 64 15-18 (WIRS) ***(Use 448 3244)***	.....	1	350 8284	
(Right) 64 15-18-85-88 (WBS-WFC) ***(Use 448 3246)***	.....	1	352 0336	
(Right) 64 16-19-89 (WIRS) ***(Use 448 3244)***	.....	1	350 8286	
(Right) 64 16-19-89 (WBS-WFC) ***(Use 448 3246)***	.....	1	352 0338	
(Right) 65 15-16-17-18-85-86-87-88 (WIRS)...(Incl. Regular Spring)	.....	1	351 8866	
(Right) ***65 15-16-18 (WIRS-Heavy Duty)***...(Incl. Spring)	.....	1	448 2912	
(Right) 65 19-89 (WIRS): 65 59 (Marlin-WIRS): ***165 10-80 (Can-WIRS)***...(Incl. Regular Spring)	.....	1	351 8864	
(Right) 65 59 (Marlin-WIRS): 65 80 (WBS)...(Incl. Regular Spring)	.....	1	351 8872	
BRACE, Seat Cushion Diagonal Wire				
65 01-10-50-80	.....	AR	448 3308	
PLATE, Bottom Frame Outer Hinge				
60 Thru 64 01-10-20-80 (WRS)(WIRS)(WBS) ***(Replaces 343 5675)***	.....	2	343 5676	

Copyright 1963 American Motors Corp.

GROUP NO. — DESCRIPTION — YEAR and MODEL	PRIMARY GROUP NO.	PER CAR	PART NO.	CODE
ARM, Bottom Frame Outer Hinge Adjusting				
64 01-10-80 (WRS)(WIRS)(WBS) ..... *(Ref. Pr. List)*	.....	2	351 3109	
60 Thru 63 10-20-80 (WRS)(WIRS)(WBS)	.....	2	343 5670	
63-64 10-80 (WNRS)	.....	2	351 0342	
(Left) 65 01-10-80 (WRS)(WIRS)(WBS)	.....	1	351 8639	
(Right) 65 01-10-80 (WRS)(WIRS)(WBS)	.....	1	351 8638	
ATTACHING PARTS Arm To Bottom Frame Bracket				
SCREW, Shoulder ..... 65 01-10-80 (WRS)(WIRS)(WBS)	.....	2	400 1324	
WASHER, Nylon ..... 65 01-10-80 (WRS)(WIRS)(WBS)	.....	2	351 8643	
WASHER, Steel ..... 65 10-80 (WRS)(WIRS)(WBS)	.....	2	400 1527	
SPRING, Bottom Frame Outer Hinge Adjusting Arm Adjusting				
(Left) 65 01-10-80 (WRS)(WIRS)(WBS)	.....	1	353 2227	
(Right) 65 01-10-80 (WRS)(WIRS)(WBS)	.....	1	353 2226	
BRACKET, Bottom Frame Outer Hinge Adjusting Stop				
(Left) 65 05-08-15-18-85-88 (WRS)(WIRS)(WBS)	.....	2	351 8869	
(Right) 65 05-08-18-85-88 (WRS)(WIRS)(WBS)	.....	2	351 8868	
ATTACHING PARTS Stop Bracket To Bottom Frame Outer Bracket				
BOLT, Hexagon ..... 65 05-08-15-18-85-88 (WRS)(WIRS)(WBS)	.....	4	400 1367	
WASHER, Internal Tooth 65 05-08-15-18-85-88 (WRS)(WIRS)(WBS)	.....	4	400 1397	
SPRING, Bottom Frame Outer Hinge				
(Left) 60 Thru 64 01-10-20-80 (WRS)(WIRS)(WBS)	.....	1	343 5672	#
(Right) 60 Thru 64 01-10-20-80 (WRS)(WIRS)(WBS)	.....	1	343 5673	#
BUSHING, Bottom Frame Outer Hinge				
60 Thru 64 05-08-15-18-25-28-85-88 (WFS)(WRS)(WIRS)(WBS)	.....	2	344 1383	
BUSHING, Bottom Frame Inner Hinge				
64-65 01-10-80 (WBS)(WIRS)	.....	2	352 0465	
BUTTON, Bottom Frame End Plug				
60 01 (WNRS)	29. 340	2	437 2959	
WASHER, Bottom Frame Center Hinge Bracket				
60-61 01 (WRS)(WIRS)	29. 105	1	436 8017	
POST, Bottom Frame Center				
60-61 10-20-80 (WNRS)(WRS): 62-63 01-10-80 (WNRS)(WRS)	.....	1	343 5674	
PIN, Bottom Frame Outer Hinge Trip Pivot				
61 01 (WBS): 61 10-20-80 (WRS)(WIRS)(WBS): 62-63 01-10-80 (WRS)(WIRS) (WBS)	.....	2	345 8573	
60 Thru 64 02-04-06-07-09-16-86 (WNRS): 64 85-88-89 (WNRS)	.....	2	348 6838	
64 10-80 (WRS)(WIRS)(WRS)	.....	2	350 1697	

Copyright 1963 American Motors Corp.

GROUP NO. — DESCRIPTION — YEAR and MODEL	PRIMARY GROUP NO.	PER CAR	PART NO.	CODE
STRIKER, Bottom Frame				
65 01-10-80 (WNRS): 64 16 (WNRS-Note 29.103-3 Type 2)	.....	2	351 9992	
ATTACHING PARTS Striker To Bottom Frame				
SCREW, Tapping..... 65 01-10-80 (WNRS): 64 16 (WNRS)	17.660	4	G179061	#
CLIP, Front Seat Cushion Spring Reinforcement				
"C" 60 Thru 65 01-10-20-80: 65 50 ***(Replaces 434 5051)***	29.106	AR	348 8056	#
"U" 60 Thru 65 01-10-20-80: 65 50	29.106	AR	447 8809	#
COVER, Bottom Frame Center Post				
(T-041)	.....	1	344 2089	
(T-047)	.....	1	344 2089	
(T-048)	.....	1	344 2089	
(T-051)	.....	1	344 2089	
(T-057)	.....	1	344 2089	
(T-058)	.....	1	344 2089	
(T-081)	.....	1	344 2089	
(T-087)	.....	1	344 2089	
(T-088)	.....	1	344 2089	
(T-091)	.....	1	344 2089	
(T-097)	.....	1	344 2089	
(T-098)	.....	1	344 2089	
(T-125)	.....	1	345 4413	
(T-1252)	.....	1	345 4413	
(T-129)	.....	1	345 4415	
(T-1292)	.....	1	345 4415	
(T-135)	.....	1	345 4413	
(T-139)	.....	1	345 4415	
(T-1392)	.....	1	345 4415	
(T-145)	.....	1	345 4413	
(T-1452)	.....	1	345 4413	
(T-155)	.....	1	345 4413	
(T-1552)	.....	1	345 4413	
(T-165)	.....	1	345 4413	
(T-1652)	.....	1	345 4413	
(T-169)	.....	1	345 4415	
(T-1692)	.....	1	345 4415	
(T-1693)	.....	1	345 4415	
(T-175)	.....	1	345 4413	
(T-179)	.....	1	345 4415	
(T-1793)	.....	1	345 4415	
(T-185)	.....	1	345 4413	
(T-1852)	.....	1	345 4413	
(T-1853)	.....	1	345 4413	
(T-195)	.....	1	345 4413	

Copyright 1963 American Motors Corp.

GROUP NO. — DESCRIPTION — YEAR and MODEL	PRIMARY GROUP NO.	PER CAR	PART NO.	CODE
(T-1953)		1	345 4413	
(T-201)		1	347 7303	
(T-202)		1	347 7303	
(T-212)		1	347 7303	
(T-213)		1	346 9467	
(T-215)		1	347 7303	
(T-216)		1	346 9469	
(T-222)		1	347 7303	
(T-223)		1	346 9467	
(T-225)		1	347 7303	
(T-226)		1	346 9469	
(T-229)		1	347 7302	
(T-232)		1	347 7303	
(T-233)		1	346 9467	
(T-235)		1	347 7303	
(T-236)		1	346 9469	
(T-239)		1	347 7302	
(T-251)		1	347 7303	
(T-252)		1	347 7303	
(T-262)		1	347 7303	
(T-263)		1	346 9467	
(T-265)		1	347 7303	
(T-266)		1	346 9469	
(T-270)		1	347 7303	
(T-272)		1	347 7303	
(T-273)		1	346 9467	
(T-275)		1	347 7303	
(T-276)		1	346 9469	
(T-279)		1	347 7302	
(T-282)		1	347 7303	
(T-283)		1	346 9467	
(T-285)		1	347 7303	
(T-286)		1	346 9469	
(T-292)		1	347 7303	
(T-293)		1	346 9467	
(T-295)		1	347 7303	
(T-296)		1	346 9469	
(T-299)		1	347 7302	
(T-301)		1	349 8552	
(T-302)		1	349 8552	
(T-312)		1	349 8552	
(T-313)		1	349 8553	
(T-314)		1	349 8554	
(T-314)		1	349 8554	
(T-315)		1	345 4413	
(T-316)		1	349 8555	
(T-322)		1	349 8552	
(T-323)		1	349 8553	
(T-324)		1	349 8554	
(T-325)		1	345 4413	
(T-326)		1	347 7302	
(T-327)		1	349 8556	

Copyright 1963 American Motors Corp.

GROUP NO. — DESCRIPTION — YEAR and MODEL	PRIMARY GROUP NO.	PER CAR	PART NO.	CODE
(T-332)	.....	1	349 8552	#
(T-333)	.....	1	349 8553	#
(T-334)	.....	1	349 8554	#
(T-335)	.....	1	345 4413	#
(T-336)	.....	1	347 7302	#
(T-337)	.....	1	349 8556	#
(T-351)	.....	1	349 8552	#
(T-352)	.....	1	349 8552	#
(T-353)	.....	1	349 8553	#
(T-354)	.....	1	349 8554	#
(T-362)	.....	1	349 8552	#
(T-363)	.....	1	349 8553	#
(T-364)	.....	1	349 8554	#
(T-365)	.....	1	345 4413	#
(T-366)	.....	1	349 8555	#
(T-372)	.....	1	349 8552	#
(T-373)	.....	1	349 8553	#
(T-374)	.....	1	349 8554	#
(T-375)	.....	1	345 4413	#
(T-376)	.....	1	347 7302	#
(T-377)	.....	1	349 8556	#
(T-382)	.....	1	349 8552	#
(T-383)	.....	1	349 8553	#
(T-384)	.....	1	349 8554	#
(T-385)	.....	1	345 4413	#
(T-386)	.....	1	347 7302	#
(T-392)	.....	1	349 8552	#
(T-393)	.....	1	349 8553	#
(T-394)	.....	1	349 8554	#
(T-395)	.....	1	345 4413	#
(T-396)	.....	1	347 7302	#
(T-397)	.....	1	349 8556	#
(T-422)(Note 29.103-3 Type 1)	.....	1	349 8552	#
(T-422)(Note 29.103-3 Type 2)	.....	1	353 2240	#
(T-432)	.....	1	349 8552	#
(T-433)	.....	1	350 8001	#
(T-434)	.....	1	350 8002	#
(T-435)	.....	1	350 8003	#
(T-436)	.....	1	350 8006	#
(T-438)	.....	1	350 8005	#
(T-441)	.....	1	350 8000	#
(T-442)	.....	1	349 8552	#
(T-443)	.....	1	350 8001	#
(T-444)	.....	1	350 8002	#
(T-445)	.....	1	350 8003	#
(T-446)	.....	1	350 8006	#
(T-447)	.....	1	350 8007	#
(T-448)	.....	1	350 8005	#
(T-452)(Note 29.103-3 Type 1)	.....	1	349 8552	#
(T-452)(Note 29.103-3 Type 2)	.....	1	353 2240	#
(T-453)	.....	1	350 8001	#
(T-454)	.....	1	350 8002	#
(T-462)	.....	1	349 8552	#
(T-463)	.....	1	350 8001	#
(T-464)	.....	1	350 8002	#
(T-465)	.....	1	350 8003	#
(T-466)	.....	1	350 8006	#
(T-468)	.....	1	350 8005	#
(T-471)	.....	1	350 8000	#
(T-472)	.....	1	349 8552	#
(T-473)	.....	1	350 8001	#
(T-474)	.....	1	350 8002	#

Copyright 1963 American Motors Corp.

GROUP NO. — DESCRIPTION — YEAR and MODEL	PRIMARY GROUP NO.	PER CAR	PART NO.	CODE
(T-475)	.....	1	350 8003	#
(T-476)	.....	1	350 8006	#
(T-477)	.....	1	350 8007	#
(T-478)	.....	1	350 8005	#
(T-491)	.....	1	350 8000	#
(T-492)	.....	1	349 8552	#
(T-493)	.....	1	350 8001	#
(T-494)	.....	1	350 8002	#
(T-495)	.....	1	350 8003	#
(T-496)	.....	1	350 8006	#
(T-497)	.....	1	350 8007	#
(T-498)	.....	1	350 8005	#
(T-522)(WNRS)	.....	1	353 2240	#
(T-522)(WRS)	.....	1	353 2249	#
(T-532)(WNRS)	.....	1	353 2258	#
(T-532)(WRS)	.....	1	353 2255	#
(T-533)(WNRS)	.....	1	353 2242	#
(T-533)(WRS)	.....	1	353 2250	#
(T-534)(WNRS)	.....	1	353 2243	#
(T-534)(WRS)	.....	1	353 2251	#
(T-535)(WNRS)	.....	1	353 2244	#
(T-535)(WRS)	.....	1	353 2252	#
(T-536)(WNRS)	.....	1	353 2246	#
(T-536)(WRS)	.....	1	353 2253	#
(T-537)(WNRS)	.....	1	353 2245	#
(T-537)(WRS)	.....	1	353 2254	#
(T-541)(WNRS)	.....	1	353 2240	#
(T-541)(WRS)	.....	1	353 2249	#
(T-543)(WNRS)	.....	1	353 2242	#
(T-543)(WRS)	.....	1	353 2250	#
(T-544)(WNRS)	.....	1	353 2243	#
(T-544)(WRS)	.....	1	353 2251	#
(T-545)(WNRS)	.....	1	353 2244	#
(T-545)(WRS)	.....	1	353 2252	#
(T-546)(WNRS)	.....	1	353 2246	#
(T-546)(WRS)	.....	1	353 2253	#
(T-547)(WNRS)	.....	1	353 2245	#
(T-547)(WRS)	.....	1	353 2254	#
(T-548)(WNRS)	.....	1	353 2258	#
(T-548)(WRS)	.....	1	353 2255	#
(T-552)(WNRS)	.....	1	353 2258	#
(T-552)(WRS)	.....	1	353 2255	#
(T-553)(WNRS)	.....	1	353 2242	#
(T-553)(WRS)	.....	1	353 2250	#
(T-557)(WNRS)	.....	1	353 2245	#
(T-557)(WRS)	.....	1	353 2254	#
(T-562)(WNRS)	.....	1	353 2258	#
(T-562)(WRS)	.....	1	353 2255	#
(T-563)(WNRS)	.....	1	353 2242	#
(T-563)(WRS)	.....	1	353 2250	#
(T-564)(WNRS)	.....	1	353 2243	#
(T-564)(WRS)	.....	1	353 2251	#
(T-565)(WNRS)	.....	1	353 2244	#
(T-565)(WRS)	.....	1	353 2252	#
(T-566)(WNRS)	.....	1	353 2246	#
(T-566)(WRS)	.....	1	353 2253	#
(T-567)(WNRS)	.....	1	353 2245	#
(T-567)(WRS)	.....	1	353 2254	#
(T-571)(WNRS)	.....	1	353 2240	#
(T-571)(WRS)	.....	1	353 2249	#
(T-573)(WNRS)	.....	1	353 2242	#
(T-573)(WRS)	.....	1	353 2250	#
(T-574)(WNRS)	.....	1	353 2243	#
(T-574)(WRS)	.....	1	353 2251	#
(T-575)(WNRS)	.....	1	353 2244	#

Copyright 1963 American Motors Corp.

GROUP NO. — DESCRIPTION — YEAR and MODEL	PRIMARY GROUP NO.	PER CAR	PART NO.	CODE
(T-575)(WRS)	.....	1	353 2252	
(T-576)(WNRS)	.....	1	353 2246	
(T-576)(WRS)	.....	1	353 2253	
(T-577)(WNRS)	.....	1	353 2245	
(T-577)(WRS)	.....	1	353 2254	
(T-578)(WNRS)	.....	1	353 2258	
(T-578)(WRS)	.....	1	353 2255	
(T-582)(WNRS)	.....	1	353 2258	
(T-582)(WRS)	.....	1	353 2255	
(T-583)(WNRS)	.....	1	353 2242	
(T-583)(WRS)	.....	1	353 2250	
(T-584)(WNRS)	.....	1	353 2243	
(T-584)(WRS)	.....	1	353 2251	
(T-585)(WNRS)	.....	1	353 2244	
(T-585)(WRS)	.....	1	353 2252	
(T-586)(WNRS)	.....	1	353 2246	
(T-586)(WRS)	.....	1	353 2253	
(T-587)(WNRS)	.....	1	353 2245	
(T-587)(WRS)	.....	1	353 2254	
(T-591)(WNRS)	.....	1	353 2240	
(T-591)(WRS)	.....	1	353 2249	
(T-593)(WNRS)	.....	1	353 2242	
(T-593)(WRS)	.....	1	353 2250	
(T-594)(WNRS)	.....	1	353 2243	
(T-594)(WRS)	.....	1	353 2251	
(T-595)(WNRS)	.....	1	353 2244	
(T-595)(WRS)	.....	1	353 2252	
(T-596)(WNRS)	.....	1	353 2246	
(T-596)(WRS)	.....	1	353 2253	
(T-597)(WNRS)	.....	1	353 2245	
(T-597)(WRS)	.....	1	353 2254	
(T-598)(WNRS)	.....	1	353 3708	
(T-598)(WRS)	.....	1	353 2255	

CAP, Bottom Frame Center Post Cover

(T-422)(Note 29.103-3 Type 2)	.....	1	353 3701	
(T-452)(Note 29.103-3 Type 2)	.....	1	353 3701	
(T-522)	.....	1	353 3701	
(T-532)	.....	1	353 3708	
(T-533)	.....	1	353 3703	
(T-534)	.....	1	353 3704	
(T-535)	.....	1	353 3705	
(T-536)	.....	1	353 3707	
(T-537)	.....	1	353 3706	
(T-541)	.....	1	353 3701	
(T-543)	.....	1	353 3703	
(T-544)	.....	1	353 3704	
(T-545)	.....	1	353 3705	
(T-546)	.....	1	353 3707	
(T-547)	.....	1	353 3706	
(T-548)	.....	1	353 3708	
(T-552)	.....	1	353 3708	
(T-553)	.....	1	353 3703	
(T-557)	.....	1	353 3706	
(T-562)	.....	1	353 3708	
(T-563)	.....	1	353 3703	
(T-564)	.....	1	353 3704	
(T-565)	.....	1	353 3705	
(T-566)	.....	1	353 3707	
(T-567)	.....	1	353 3706	
(T-571)	.....	1	353 3701	
(T-573)	.....	1	353 3703	
(T-574)	.....	1	353 3704	
(T-575)	.....	1	353 3705	
(T-576)	.....	1	353 3707	

Copyright 1963 American Motors Corp.

GROUP NO. — DESCRIPTION — YEAR and MODEL	PRIMARY GROUP NO.	PER CAR	PART NO.	CODE
(T-577)	.....	1	353 3706	
(T-578)	.....	1	353 3708	
(T-582)	.....	1	353 3708	
(T-583)	.....	1	353 3703	
(T-584)	.....	1	353 3704	
(T-585)	.....	1	353 3705	
(T-586)	.....	1	353 3707	
(T-587)	.....	1	353 3706	
(T-591)	.....	1	353 3701	
(T-593)	.....	1	353 3703	
(T-594)	.....	1	353 3704	
(T-595)	.....	1	353 3705	
(T-596)	.....	1	353 3707	
(T-597)	.....	1	353 3706	
(T-598)	.....	1	353 3708	
29. 105 FRAME ASSEMBLY, Non-Reclining Front Seat Back (Note 29. 100-1)				
62 05-08-15-18-85-88 (WFS): 63 05-08 (WFS)	.....	1	346 2862	
163 05-08 (CAN-WFS): 63 15-18-85-88 (WFS-Note 29. 103-3 Type 1) ...(Incl. Regular Spring)	.....	1	348 3975	
163 05-08 (CAN-WFS-Heavy Duty): 63-64 15-18-85-88 (WFS-Heavy Duty-Note 29. 103-3 Type 1) ...(Incl. Spring)	.....	1	448 0725	
64 05-08 (WFS)...(Incl. Regular Spring)	.....	1	350 2643	
65 05-08 (WFS)...(Incl. Regular Spring)	.....	1	351 8426	
64 05-08 (WFS-Heavy Duty-Note 29. 103-3 Type 2): 65 05-08 (WFS-Heavy Duty) ...(Incl. Spring)	.....	1	351 8427	
60 15-18-85-88 (WFS-Police Cars)...(Incl. Bottom Frame) ....***(Discontinued)***	.....	1	343 0741	
61 15-18-85-88 (WFS)	.....	1	346 0386	
61 15-18-85-88 (WFS-Police Cars)...(Incl. Bottom Frame)....***(Discontinued)***	.....	1	345 5642	
62 15-18-85-88 (WFS-Police Cars)...(Incl. Bottom Frame)	.....	1	346 2863	
64 15-18 (WFS-Note 29. 103-3 Type 2): 65 15-18 (WFS)...(Incl. Regular Spring)	.....	1	351 8841	
64 15-18 (WFS-Heavy Duty-Note 29. 103-3 Type 2): 65 15-18 (WFS-Heavy Duty)...(Incl. Spring)	.....	1	351 8757	
(Left) 60 01	.....	1	342 9135	
(Left) 61 02-04-06-07	.....	1	345 8587	
(Left) 61 05-08 (WNRS)	.....	1	345 8611	
(Left) 62 01-10-80 (WNRS-Note 29. 105-1)	.....	1	348 6857	
(Left) 63 02-04-06-08-09 (WNRS)...(Incl. Regular Spring)	.....	1	350 5105	
(Left) ***63 02-04-06-07-09 (WNRS-Heavy Duty)***...(Incl. Spring)	.....	1	448 0729	
(Left) ***163 01 (CAN-WNRS-Heavy Duty): 63-64 16-19 (WNRS-Heavy Duty): 63 86 (WNRS-800-Heavy Duty)(WNRS-880-Heavy Duty)***...(Incl. Spring)	.....	1	448 0731	
(Left) ***163 01 (CAN-WNRS):*** 63-64 16-19 (WNRS-Note 29. 103-3 Type 1): 63 86 (WNRS-800)(WNRS-880)...(Incl. Regular Spring)	.....	1	348 3833	
(Left) 64 02-06-07-09 (WNRS)...(Incl. Regular Spring)	.....	1	350 2645	
(Left) ***64 02-06 (WNRS-Heavy Duty-Note 29. 103-3 Type 2): 65 06 (WNRS-Heavy Duty)***...(Incl. Spring)	.....	1	351 8431	
(Left) ***164 05-08 (CAN)***...(Incl. Regular Spring)	.....	1	347 6473	
(Left) 65 06-07-09 (WNRS)...(Incl. Regular Spring)	.....	1	351 8429	
(Left) 60 10-20-80 (WNRS)	.....	1	345 1277	
(Left) 61 10-20-80 (WNRS)	.....	1	447 8819	
(Left) 64 16 (WNRS-Note 29. 103-3 Type 2)...(Incl. Regular Spring)	.....	1	351 8845	
(Left) ***64 16 (WNRS-Heavy Duty-Note 29. 103-3 Type 2)***...(Incl. Spring)	.....	1	351 8759	
(Left) ***164 15-18 (CAN)***...(Incl. Regular Spring)	.....	1	347 6475	
(Left) 65 16-17-19-85-87-88-89 (WNRS)...(Incl. Regular Spring)	.....	1	351 8845	
(Left) ***65 16 (WNRS-Heavy Duty)***...(Incl. Spring)	.....	1	351 8759	
(Left) 63 86 (WNRS-990)...(Incl. Regular Spring)	.....	1	348 8041	
(Left) 64 80 (WNRS)...(Incl. Regular Spring)	.....	1	351 9407	
(Right) 60 01	.....	1	342 9136	
(Right) 61 02-04-06-07	.....	1	345 8586	

NOTE 29. 105-1: This Part is less Outer Hinge Stop Pin which is required on 2 Door Models only. Order Pin separately if needed.

Copyright 1963 American Motors Corp.

GROUP NO. — DESCRIPTION — YEAR and MODEL	PRIMARY GROUP NO.	PER CAR	PART NO.	CODE
(Right) 61 05-08 (WNRS))	.....	1	345 8610	
(Right) 62 01-10-80 (WNRS-Note 29.105-1)	.....	1	348 6856	
(Right) 63 02-04-06-07-09 (WNRS)...(Incl. Regular Spring)	.....	1	350 5104	
(Right) ***63 02-04-06-07-09 (WNRS-Heavy Duty)***...(Incl. Spring)	.....	1	448 0728	
(Right) ***163 01 (CAN-WNRS):*** 63-64 16-19 (WNRS-Note 29.103-3 Type 1): 63 86 (WNRS-800)(WNRS-880)...(Incl. Regular Spring)	.....	1	348 3832	
(Right) ***163 01 (CAN-WNRS-Heavy Duty): 63-64 16-19 (WNRS-Heavy Duty): 63 86 (WNRS-800-Heavy Duty)(WNRS-880-Heavy Duty)***...(Incl. Spring)	.....	1	448 0730	
(Right) 64 02-06-07-09 (WNRS)...(Incl. Regular Spring)	.....	1	350 2644	
(Right) ***64-65 02-06 (WNRS-Heavy Duty-Note 29.103-3 Type 2)***...(Incl. Spring)	.....	1	351 8430	
(Right) ***164 05-08 (CAN)***...(Incl. Regular Spring)	.....	1	347 6472	
(Right) 65 06-07-09 (WNRS)...(Incl. Regular Spring)	.....	1	351 8428	
(Right) 60 10-20-80 (WNRS)	.....	1	345 1276	
(Right) 61 10-20-80 (WNRS) ***(Discontinued)***	.....	1	447 8818	
(Right) ***64 16 (WNRS-Note 29.103-3 Type 2)***...(Incl. Regular Spring)	.....	1	351 8844	
(Right) ***64 16 (WNRS-Heavy Duty-Note 29.103-3 Type 2)***...(Incl. Spring)	.....	1	351 8758	
(Right) ***164 15-18 (CAN)***...(Incl. Regular Spring)	.....	1	347 6474	
(Right) 65 16-17-19-85-86-87-88-89 (WNRS)...(Incl. Regular Spring)	.....	1	351 8844	
(Right) ***65 16 (WNRS-Heavy Duty)***...(Incl. Spring)	.....	1	351 8758	
(Right) 63 86 (WNRS-990)...(Incl. Regular Spring)	.....	1	348 8040	
(Right) 64 80 (WNRS)...(Incl. Regular Spring)	.....	1	351 9406	
ATTACHING PARTS				
Back Outer Hinge To Bottom Frame				
CAP	60 01	.....	2	342 9183	
PIN, Cotter	60 01	17.460	2	G103372	NA
BOLT, Pivot	61 01 (WNRS)	.....	2	437 1460	
BOLT, Pivot	60-63 01-10-20-80 ***(Replaces 344 1381)***	.....	2	400 0397	
WASHER, Lock	61 01 (WNRS)	17.824	2	G115551	NA
WASHER, Fibre	61 01 (WNRS)	.....	2	436 2857	
WASHER, Plain	62-63 01-10-80 (WNRS) ***(Replaces 800 0453)***	17.814	2	400 1172	
WASHER, Wave	62-63 01-10-80 (WNRS)	.....	2	400 0462	
Back Center Hinge To Bottom Frame				
CAP (Push Nut)	65 01-10-80 (WFS)(WNRS)	.....	2	400 1529	
PIN, Cotter	60 01	17.460	2	G103373	NA
PIN, Pivot	61 01	.....	2	437 1114	
PIN, Locking	65 01-10-80 (WNRS)	29.162	1	400 0407	
WASHER, Plain	60 01 ***(Replaces 800 0161)***	.....	2	400 1100	
WASHER, Fibre	60-61 01	.....	2	436 2857	
WASHER, Plain	64 01	.....	2	400 0483	
Back To Bottom Frame				
SCREW, Machine	60 05	17.608	2	G178760	NA
SCREW, Machine	62-63 05-08 (WFS-2" Long): 61 Thru 63 15-18-25-28-88 (WFS-2" Long)	17.610	1	G179072	NA
SCREW, Machine	62-63 05-08 (WFS-2-1/4" Long): 61 Thru 63 15-18-25-28-85-88 (WFS-2-1/4" Long)	17.610	2	G9413200	NA
SCREW, Machine	60 15-18-25-28-85-88 (WFS-2" Long)	17.610	1	G191941	NA
SCREW, Machine	60 15-18-25-28-88 (WFS-2-1/4" Long)	.....	2	341 6660	
SCREW, Machine	65 10-80 (WFS)(WNRS)	23.006	2	400 0678	
WASHER, Cup	60 05: 62-63 05-08 (WFS): 60 Thru 63 15-18-85-88 (WFS-Rectangular)	.....	4	343 8648	
WASHER, Lock	60 05: 62-63 05-08 (WFS): 60 Thru 63 15-18-85-88 (WFS)	17.820	3	G120214	
WASHER, Cup	60 15-18-25-28-85-88 (WFS-Round)	.....	3	435 0468	

Copyright 1963 American Motors Corp.

GROUP NO. — DESCRIPTION — YEAR and MODEL	PRIMARY GROUP NO.	PER CAR	PART NO.	CODE
NUT, Hexagon..... 60 05: 60 15-18-25-28-85-88 (WFS)...(Incl. Lockwasher).....	17.406	3	G120376	NA
NUT, Hexagon..... 62-63 05-08 (WFS): 61 Thru 63 15-18-25-28-85-88 (WFS).....	17.406	3	G120368	
MECHANISM ASSEMBLY, Non-Reclining Front Seat Back				
(Left) ***165 01-10 (Can)***.....	.....	1	355 7261	
(Right) ***165 01-10 (Can)***.....	.....	1	355 7260	
NUT, Seat Back Outer Hinge				
60-61 10-20-80 (WNRS): 62 Thru 64 01-10-80 (WNRS).....	.....	2	344 1382	
PIN, Seat Back Outer Hinge Stop				
62-63 02-04-06-07-09-16-86: 64 07-09-16.....	.....	2	346 2763	
BOLT, Seat Back Lock				
64-65 02-06-07-09-16 (WNRS-Note 29.103-3 Type 2): 65 17-19-86-87-89 (WNRS).....	.....	2	351 9991	
PLATE, Seat Back Outer Hinge Lock				
(Left) 64 05-08-15-18-85-88 (WNRS).....	.....	1	351 9669	#
(Right) 64 05-08-15-18-85-88 (WNRS).....	.....	1	351 9668	#
FRAME ASSEMBLY, Reclining Front Seat Back (Note 29.100-1)				
(Left) 60 02-04-06.....	.....	1	342 9122	
(Left) 60 05.....	.....	1	344 3019	
(Left) 61 02-04-06-07 (WRS)(WIRS).....	.....	1	345 8583	
(Left) 61 05-08 (WRS)(WIRS).....	.....	1	345 8611	
(Left) 61 05-15-25-85 (WBS)..... ***(Ref. Pr. List)***	.....	1	347 5775	
(Left) 61 07 (WBS)..... ***(Ref. Pr. List)***	.....	1	347 6707	
(Left) 62 02-04-06-07-16-86 (WRS)(WIRS).....	.....	1	347 7273	
(Left) 62 05-08-15-18-85-88 (WRS)(WIRS).....	.....	1	347 7275	
(Left) 62 05-08-15-18-85-88 (WBS).....	.....	1	347 1241	
(Left) 62 06-07-16-86 (WBS).....	.....	1	347 1239	
(Left) 63 02-04-06-07-09 (WRS)(WIRS)...(Incl. Regular Spring).....	.....	1	350 5129	
(Left) ***163 02-04-06-07-09 (CAN-WRS)(CAN-WIRS):*** 63-64 16-19 (WRS)(WIRS): 63 86 (WRS-800)(WRS-880)(WIRS-800)(WIRS-880)...(Incl. Regular Spring).....	.....	1	348 3017	
(Left) ***63 02-04-06-07-09 (WRS-Heavy Duty)(WIRS-Heavy Duty)***...(Incl. Spring)..	.....	1	448 0733	
(Left) ***163 02-04-06-07-09 (CAN-WRS-Heavy Duty)(CAN-WIRS-Heavy Duty) 63-64 16-19 (WRS-Heavy Duty)(WIRS-Heavy Duty): 63 86 (WRS-800-Heavy Duty) (WRS-880-Heavy Duty)(WIRS-800-Heavy Duty)(WIRS-880-Heavy Duty)***...(Incl. Spring).....	.....	1	448 0739	
(Left) 63 05-08 (WRS)(WIRS)...(Incl. Regular Spring).....	.....	1	350 5115	
(Left) ***63 05-08 (WRS-Heavy Duty)(WIRS-Heavy Duty)***...(Incl. Spring).....	.....	1	448 0735	
(Left) ***163 05-08 (CAN-WRS)(CAN-WIRS):*** 63-64 15-18 (WRS)(WIRS): 63 85-88 (WRS-800)(WRS-880)(WIRS-800)(WIRS-880)...(Incl. Regular Spring).....	.....	1	348 3019	
(Left) ***163 05-08 (CAN-WRS-Heavy Duty)(CAN-WIRS-Heavy Duty): 63-64 15-18 (WRS-Heavy Duty)(WIRS-Heavy Duty): 63 85-88 (WRS-800-Heavy Duty) (WRS-880-Heavy Duty)(WIRS-800-Heavy Duty)(WIRS-880-Heavy Duty)***...(Incl. Spring).....	.....	1	448 0737	
(Left) 63 05-08 (WBS)...(Incl. Regular Spring).....	.....	1	348 3829	
(Left) 63 06-07-09 (WBS)...(Incl. Regular Spring).....	.....	1	348 3827	
(Left) ***64 01 (WRS-Heavy Duty)(WIRS-Heavy Duty)***.....	.....	1	448 2093	
(Left) 64 01 (WRS)(WIRS)...(Incl. Regular Spring).....	.....	1	350 2649	#
(Left) 64 05-08 (WBS-LFC)...(Incl. Regular Spring).....	.....	1	351 9615	
(Left) 64 05-08 (WBS-WFC)...(Incl. Regular Spring).....	.....	1	350 2505	

Copyright 1963 American Motors Corp.

GROUP NO. — DESCRIPTION — YEAR and MODEL	PRIMARY GROUP NO.	PER CAR	PART NO.	CODE
(Left) 64 06-07-09 (WBS-LFC)...(Incl. Regular Spring)	.....	1	351 9617	
(Left) 64 07-09 (WBS-WFC)...(Incl. Regular Spring)	.....	1	350 2507	
(Left) 65 01 (WRS)(WIRS)...(Incl. Regular Spring)	.....	1	351 8433	
(Left) ***65 01 (WRS-Heavy Duty)(WIRS-Heavy Duty)***...(Incl. Spring)	.....	1	448 2915	
(Left) 65 01-10 (WBS-LFC)...(Incl. Regular Spring)	.....	1	351 8441	
(Left) 65 01-10 (WBS-WFC)(Except Marlin)...(Incl. Regular Spring)	.....	1	351 8437	
(Left) 60 10-20-80	.....	1	345 1327	
(Left) 61 10-20-80 (WRS)(WIRS)	.....	1	447 8821	
(Left) 63 16-86 (WBS): 64 89 (WBS-WFC)(WBS-WCC)...(Incl. Regular Spring)	.....	1	348 3905	
(Left) 63 15-18-85-88 (WBS): 64 85-88 (WBS-WFC)(WBS-WCC)...(Incl. Regular Spring)	.....	1	348 3907	
(Left) 64 15-18 (WBS-LFC)...(Incl. Regular Spring) ***(Use 351 9377)***	.....	1	351 9375	
(Left) 64 15-18 (WBS-WFC)...(Incl. Regular Spring)	.....	1	351 9621	
(Left) 64 16-19 (WBS-LFC)...(Incl. Regular Spring)	.....	1	351 9377	
(Left) 64 16-19 (WBS-WFC)...(Incl. Regular Spring)	.....	1	351 9619	
(Left) 65 10-80 (WRS)(WIRS)(Except Marlin)...(Incl. Regular Spring)	.....	1	351 8861	
(Left) ***65 10 (WRS-Heavy Duty)(WIRS-Heavy Duty)***...(Incl. Spring)	.....	1	448 2917	
(Left) 63 85-88 (WRS-990)(WIRS-990)...(Incl. Regular Spring)	.....	1	348 8039	
(Left) 63 86 (WRS-990)(WIRS-990)...(Incl. Regular Spring)	.....	1	348 8037	
(Left) 64 85-88 (WIRS)...(Incl. Regular Spring)	.....	1	351 9415	
(Left) 65 50 (Marlin-WBS): 65 80 (WBS-WFC)...(Incl. Regular Spring)	.....	1	351 8879	
(Right) 60 02-04-06	.....	1	342 9123	
(Right) 60 05 ***(Discontinued)***	.....	1	344 3018	
(Right) 61 02-04-06-07 (WRS)(WIRS)	.....	1	345 8582	
(Right) 61 05-08 (WRS)(WIRS)	.....	1	345 8610	
(Right) 62 04-06-07-16-86 (WRS)(WIRS)	.....	1	347 7272	
(Right) 62 05-08-15-18-85-88 (WRS)(WIRS)	.....	1	347 7274	
(Right) 62 05-08-15-85-88 (WBS)	.....	1	347 1240	
(Right) 62 06-07-16-86 (WBS)	.....	1	347 1238	
(Right) 63 02-04-06-07-09 (WRS)(WIRS)...(Incl. Regular Spring)	.....	1	350 5128	
(Right) ***63 02-04-06-07-09 (WRS-Heavy Duty)(WIRS-Heavy Duty)***...(Incl. Spring)	.....	1	448 0732	
(Right) ***163 02-04-06-07-09 (Can-WRS)(Can-WIRS):*** 63-64 16-19 (WRS)(WIRS): 63 86 (WRS-800)(WRS-880)(WIRS-800)(WIRS-880)...(Incl. Regular Spring)	.....	1	348 3016	
(Right) 64 06-07-09 (WBS-LFC)...(Incl. Regular Spring)	.....	1	351 9616	
(Right) ***163 02-04-06-09 (Can-WRS-Heavy Duty)(Can-WIRS-Heavy Duty): 63-64 16-19 (WRS-Heavy Duty)(WIRS-Heavy Duty): 63 86 (WRS-800-Heavy Duty) (WRS-880-Heavy Duty)(WIRS-800-Heavy Duty)(WIRS-880-Heavy Duty)...*** (Incl. Spring)	.....	1	448 0738	
(Right) 63 05-08 (WRS)(WIRS)...(Incl. Regular Spring)	.....	1	350 5114	
(Right) ***63 05-08 (WRS-Heavy Duty)(WIRS-Heavy Duty)***...(Incl. Spring)	.....	1	448 0734	
(Right) ***163 05-08 (Can-WRS)(Can-WIRS):*** 63-64 15-18 (WRS)(WIRS): 63 85-88 (WRS-800)(WRS-880)(WIRS-800)(WIRS-880)...(Incl. Regular Spring) ***(Use 348 3016)***	.....	1	348 3018	#
(Right) ***163 05-08 (Can-WRS-Heavy Duty)(Can-WIRS-Heavy Duty): 63-64 15-18 (WRS-Heavy Duty)(WIRS-Heavy Duty): 63 85-88 (WRS-800-Heavy Duty) (WRS-880-Heavy Duty)(WIRS-800-Heavy Duty)(WIRS-880-Heavy Duty)...*** (Incl. Spring)	.....	1	448 0736	
(Right) 63 05-08 (WBS)...(Incl. Regular Spring)	.....	1	348 3828	
(Right) 63 06-07-09 (WBS)...(Incl. Regular Spring)	.....	1	348 3826	
(Right) ***64 01 (WRS-Heavy Duty)(WIRS-Heavy Duty)***	.....	1	448 2092	
(Right) 64 02-06-07-09 (WRS)(WIRS)...(Incl. Regular Spring)	.....	1	350 2648	
(Right) 64 05-08 (WRS)(WIRS)...(Incl. Regular Spring) ***(Use 350 2648)***	.....	1	350 2646	
(Right) 64 05-08 (WBS-LFC)...(Incl. Regular Spring)	.....	1	351 9614	
(Right) 64 05-08 (WBS-WFC)...(Incl. Regular Spring)	.....	1	350 2504	
(Right) 64 07-09 (WBS-WFC)...(Incl. Regular Spring)	.....	1	350 2506	
(Right) 65 01 (WRS)(WIRS)	.....	1	351 8432	
(Right) ***65 01 (WRS-Heavy Duty)(WIRS-Heavy Duty)***	.....	1	448 2914	
(Right) 65 01-10 (WBS-LFC)...(Incl. Regular Spring)	.....	1	351 8440	
(Right) 65 01-10 (WBS-WFC) (Except Marlin)...(Incl. Regular Spring)	.....	1	351 8436	
(Right) 60 10-20-80	.....	1	345 1326	
(Right) 61 10-20-80 (WRS)(WIRS)	.....	1	447 8820	
(Right) 63 15-18-85-88 (WBS): 64 85-88 (WBS-WFC)(WBS-WCC)...(Incl. Regular Spring)	.....	1	348 3906	
(Right) 63 16-86 (WBS): 64 89 (WBS-WFC)(WBS-WCC)...(Incl. Regular Spring)	.....	1	348 3904	
(Right) 64 15-18 (WBS-LFC)...(Incl. Regular Spring)	.....	1	351 9374	

Copyright 1963 American Motors Corp.

GROUP NO. — DESCRIPTION — YEAR and MODEL	PRIMARY GROUP NO.	PER CAR	PART NO.	CODE
(Right) 64 15-18 (WBS-WFC)...(Incl. Regular Spring)	.....	1	351 9620	
(Right) 64 16-19 (WBS-LFC)...(Incl. Regular Spring)	.....	1	351 9376	
(Right) 64 16-19 (WBS-WFC)...(Incl. Regular Spring)	.....	1	351 9618	
(Right) 65 10-80 (WRS)(WIRS)(Except Marlin)...(Incl. Regular Spring)	.....	1	351 8860	
(Right) ***65 10 (WRS-Heavy Duty)(WIRS-Heavy Duty)***...(Incl. Regular Spring)	.....	1	448 2916	
(Right) 63 85-88 (WRS-990)(WIRS-990)...(Incl. Regular Spring)	.....	1	348 8038	
(Right) 63 86 (WRS-990)(WIRS-990)...(Incl. Regular Spring)	.....	1	348 8036	
(Right) 64 89 (990-WIRS)...(Incl. Regular Spring)	.....	1	351 9412	
(Right) 64 85-88 (WIRS)...(Incl. Regular Spring)	.....	1	351 9414	
(Right) 65 50 (Marlin-WBS); 65 80 (WBS-WFC)...(Incl. Regular Spring)	.....	1	351 8878	
ATTACHING PARTS				
Back Outer Hinge To Bottom Frame				
BOLT, Pivot ..... 60-61 01 (WRS)(WIRS)	.....	2	437 1460	
BOLT, Pivot ..... 60-63 01-10-20-80: 64 01-10-80***(Replaces 344 1381)***	.....	2	400 0397	
WASHER, Lock ..... 60-61 01 (WRS)(WIRS)	17.824	2	G115551	NA
WASHER, Fibre ..... 60-61 01 (WRS)(WIRS)	.....	2	436 2857	
WASHER, Wave ..... 61 01 (WBS): 60-61 10-20-80: 62 Thru 64 01-10-80	.....	2	400 0462	
CLIP, Spring ..... 61 01 (WBS): 61 10-20-80	.....	2	400 0109	
SPACER, Steel ..... 61 01 (WBS): 61 10-20-80	.....	2	346 6064	
Back Center Hinge To Bottom Frame				
WASHER, Fibre ..... 60-61 01 (WRS-1-1/4" O. D.)(WIRS-1-1/4" O. D.)	.....	2	436 2857	
WASHER, Fibre ..... 60-61 01 (WRS-1" O. D.)(WIRS-1" O. D.)	.....	2	436 8016	
SPRING, Coil ..... 60-61 01 (WRS)(WIRS)	.....	2	436 7373	
CAP (Push Nut) ..... 63 Thru 65 01-10-80 (WBS-WFC)	.....	2	400 0155	
Back Frame To Bottom Frame				
SCREW, Machine ..... 65 05-08-15-18-85-88 (WRS)(WIRS)(WBS)	.....	4	400 1367	
WASHER, Internal Tooth 65 05-08-15-18-85-88 (WRS)(WIRS)(WBS)	.....	4	400 1397	
DRUM ASSEMBLY KIT, Front Seat Reclining				
(Left) 65 01-10-80	.....	1	448 2997	
(Right) 65 01-10-80	.....	1	448 2996	
BRACKET ASSEMBLY, Left Front Seat Back Hinge				
(Inner) 60-61 02-04-06-07 (WRS)(WIRS)	.....	1	341 7144	
(Inner) 60-61 05-08 (WRS)(WIRS)	.....	1	342 1069	
(Inner) 61 01 (WBS): 62-63 01: 60 Thru 62 10-20-80	.....	1	343 5693	
(Inner) ***163 01 (Can):*** 64 01 (WBS)(WRS)(WIRS): 63-64 10-80 (WRS)(WIRS)(WBS)	.....	1	348 3586	
(Inner) 65 01-10-80 (WRS)(WIRS)(WBS)	.....	1	353 2229	
(Outer) 60-61 02-04-06-07 (WRS)(WIRS)	.....	1	341 7145	
(Outer) 60-61 05-08 (WRS)(WIRS)	.....	1	342 1066	
(Outer) 61 Thru 63 05-08 (WBS): 62-63 05-08 (WRS)(WIRS): 60-61 10-20-80: 62 15-18-85-88	.....	1	344 1393	
(Outer) 61 07 (WBS)	.....	1	346 0795	
(Outer) 62-63 02-04-06-07-09: 62 16-86	.....	1	346 2455	
(Outer) ***163 02-04-06-07-09 (Can):*** 64 07-09-16-19-89: 63 16-86	.....	1	348 3567	
(Outer) ***163 05-08 (Can):*** 64 05-08: 63-64 15-18-85-88	.....	1	348 3327	
(Outer) 65 01-10-80 (WRS)(WIRS)(WBS)	.....	1	353 2235	
BRACKET ASSEMBLY, Right Front Seat Back Hinge				
(Inner) 60-61 02-04-06-07 (WRS)(WIRS)	.....	1	341 7143	
(Inner) 60-61 05-08 (WRS)(WIRS)	.....	1	342 1068	
(Inner) 61 01 (WBS): 62-63 01: 60 Thru 62 10-20-80	.....	1	343 5692	
(Inner) ***163 01 (Can):*** 64 01 (WBS)(WRS)(WIRS): 63-64 10-80 (WRS)(WIRS)(WBS)	.....	1	348 3587	
(Inner) 65 01-10-80 (WRS)(WIRS)(WBS)	.....	1	353 2228	
(Outer) 60-61 02-04-06-07 (WRS)(WIRS)	.....	1	341 7146	
(Outer) 60-61 05-08 (WRS)(WIRS)	.....	1	342 1067	
(Outer) 61 Thru 63 05-08 (WBS): 62-63 05-08 (WRS)(WIRS): 60-61 10-20-80 62 15-18-85-88	.....	1	344 1394	
(Outer) 61 07 (WBS)	.....	1	346 0794	
(Outer) 62-63 02-04-06-07-09: 62 16-86	.....	1	346 2454	
(Outer) ***163 02-04-06-07-09 (Can):*** 64 07-09-16-19-89: 63 16-86	.....	1	348 3566	
(Outer) ***163 05-08 (Can):*** 64 05-08: 63-64 15-18-85-88	.....	1	348 3326	
(Outer) 65 01-10-80 (WRS)(WIRS)(WBS)	.....	1	353 2234	

Copyright 1963 American Motors Corp.

GROUP NO. — DESCRIPTION — YEAR and MODEL	PRIMARY GROUP NO.	PER CAR	PART NO.	CODE
GEAR, Seat Back Internal Ring				
(Left) 65 01-10-80 (WRS)(WIRS)(WBS) ...*(Ref. Pr. List)*	.....	1	351 8853	
(Right) 65 01-10-80 (WBS)(WIRS)(WBS) ...*(Ref. Pr. List)*	.....	1	351 8852	
ATTACHING PARTS				
Ring Gear To Back Frame				
BOLT, Hexagon ..... 65 01-10-80 (WRS-1/4-28 × 5/16)(WIRS-1/4-28 × 5/16) (WBS-1/4-28 × 5/16)	.....	2	400 1386	
BOLT, Hexagon ..... 65 01-10-80 (WRS-10-32 × 5/16)(WIRS-10-32 × 5/16) (WBS-10-32 × 5/16)	.....	4	400 1387	
GEAR, Seat Back Shuttle				
(Left) 65 01-10-80 (WRS)(WIRS)(WBS) ...*(Ref. Pr. List)*	.....	1	351 8847	
(Right) 65 01-10-80 (WRS)(WIRS)(WBS) ...*(Ref. Pr. List)*	.....	1	351 8846	
PLATE, Seat Back Ring Gear Backing				
(Left) 65 01-10-80 (WRS)(WIRS)(WBS) ...*(Ref. Pr. List)*	.....	1	353 2233	
(Right) 65 01-10-80 (WRS)(WIRS)(WBS) ...*(Ref. Pr. List)*	.....	1	353 2232	
ATTACHING PARTS				
Backing Plate To Seat Bottom Frame Outer Hinge Bracket				
BOLT, Hexagon ..... 65 01-10-80 (WRS-1/4-28 × 5/16)(WIRS-1/4-28 × 5/16)(WBS-1/4-28 × 5/16)	.....	2	400 1386	
BOLT, Hexagon ..... 65 05-08-15-18-85-88 (WRS-10-32 × 5/16)(WIRS-10-32 × 5/16)(WBS-10-32 × 5/16)	.....	2	400 1387	
BOLT, Hexagon ..... 65 06-07-09-16-17-19-89 (WRS-10-32 × 5/16) (WIRS-10-32 × 5/16)(WBS-10-32 × 5/16): 65 59 (Marlin-WIRS-10-32 × 5/16)(Marlin-WBS-10-32 × 5/16)	.....	6	400 1387	#
SCREW, Machine..... 65 05-08-15-18-85-88 (WRS-10-32 × 9/16) (WIRS-10-32 × 9/16)(WBS-10-32 × 9/16)	.....	4	400 1367	
Backing Plate Stud To Seat Back Outer Hinge Bracket				
WASHER, Spring ..... 65 01-10-80 (WRS)(WIRS)(WBS).....	.....	2	400 0898	
WASHER, Plain..... 65 01-10-80 (WRS)(WIRS)(WBS).....	.....	2	G274517	NA
NUT, Hexagon..... 65 01-10-80 (WRS)(WIRS)(WBS).....	.....	2	400 1390	
ROD, Seat Back Adjusting				
61 01 (WRS)(WIRS).....	.....	2	345 8678	
(Left) 60 01.....	.....	1	342 9133	
(Right) 60 01.....	.....	1	342 9134	
SPRING, Seat Back Adjusting Rod				
(Left) 60-61 01 (WRS)(WIRS) ...*(Replaces 341 7132)*	.....	1	438 9083	
(Right) 60-61 01 (WRS)(WIRS).....	.....	1	341 7133	
HANDLE, Seat Back Adjusting				
(Left) 60 01 (Off Set).....	.....	1	436 2855	
(Left) 60 01 (Straight).....	.....	1	344 6223	
(Left) 61 01 (WRS)(WIRS)	.....	1	344 8147	
(Left) 61 01 (WBS): 61 10-20-80: 62-63 01-10-80.....	.....	1	345 8571	
(Left) 64 01-10-80.....	.....	1	352 0341	
(Left) 65 01-10-80	.....	1	353 1139	
(Left) 60 10-20-80.....	.....	1	344 6213	
(Right) 60 01 (Off Set)	.....	1	436 2856	
(Right) 60 01 (Straight).....	.....	1	344 6222	
(Right) 61 01 (WRS)(WIRS)	.....	1	344 8146	
(Right) 61 01 (WBS): 61 10-20-80: 62-63 01-10-80	.....	1	345 8570	
(Right) 64 01-10-80	.....	1	352 0340	
(Right) 65 01-10-80	.....	1	353 1138	
(Right) 60 10-20-80 ...*(Replaces 343 5489)*	.....	1	344 6212	

Copyright 1963 American Motors Corp.

GROUP NO. — DESCRIPTION — YEAR and MODEL	PRIMARY GROUP NO.	PER CAR	PART NO.	CODE
ATTACHING PARTS				
Handle To Adjusting Rod				
PIN, Cotter ..... 60-61 01 (WRS)(WIRS).....	17.460	2	G121224	NA
Handle To Bottom Frame				
SCREW, Machine..... 60 10-20-80 (3/4" Long): 63 10-80 (3/4" Long)....	17.592	2	G271208	NA
SCREW, Machine..... 60-63 01-10-20-80 .....*(Replaces 344 4542)*	17.592	2	G9415982	NA
WASHER, Lock 63 10-80	17.820	2	G131096	NA
WASHER, Fibre..... 63 10-80	.....	2	345 1787	
SCREW, Machine..... 64-65 01-10-80	.....	2	400 0826	
STOP, Seat Back Outer Hinge				
(Left) 61 01 (WBS): 60-61 10-20-80: 62-63 01-10-80.....	.....	1	343 5685	
(Right) 61 01 (WBS): 60-61 10-20-80: 62-63 01-10-80.....	.....	1	343 5686	
PLATE, Seat Back Outer Hinge Lock				
(Left) 64 05-08-15-18-85-88 (WBS)(WRS)(WIRS)	.....	1	351 9669	
(Right) 64 05-08-15-18-85-88 (WBS)(WRS)(WIRS)	.....	1	351 9668	
NUT, Seat Back Outer Hinge Bolt				
61 01 (WBS): 60-61 10-20-80: 62 Thru 64 01-10-80.....	.....	2	344 1382	
SPACER, Seat Outer Hinge				
61 01 (WBS): 60-61 10-20-80: 62 Thru 64 01-10-80.....	.....	2	343 5690	
PIN, Seat Back Outer Hinge Stop				
62-63 02-04-06-07-09-16-86: 64 07-09-16-19-89.....	.....	2	346 2763	
SPRING, Seat Back Outer Hinge				
(Inner) 61 01 (WBS): 60-61 10-20-80: 62 Thru 64 01-10-80.....	.....	2	343 9416	
(Outer) 61 01 (WBS): 60-61 10-20-80: 62 Thru 64 01-10-80	.....	2	343 9418	
BUTTON, Seat Back Outer Hinge Anti-Rattle (Nylon)				
63 10-80 (WRS)(WIRS)(WBS).....	23.121	2	320 4462	
STOP KIT, Seat Back Center Bracket Hinge				
60 01	.....	1	447 5990	
29.106 SPRING, Front Seat Back (Note 29.100-1)(Note 29.106-1)				
62-63 05-08 (WFS): 62 15-18-85-88 (WFS)	.....	1	346 2864	
60 10-20-80 (WFS).....	.....	1	343 0642	
62-63 05-08 (WFS-Heavy Duty): 62 15-18-85-88 (WFS-Heavy Duty)	.....	1	447 9822	
60 10-20-80 (WFS-Heavy Duty).....	.....	1	447 8452	
61 10-20-80 (WFS).....	.....	1	346 0385	
61 10-20-80 (WFS-Heavy Duty).....	.....	1	447 8832	
(Left) 60 01 (WNRS).....	.....	1	343 6233	
(Left) 60 01 (WRS).....	.....	1	343 6239	
(Left) 61 01 (WNRS)(WRS)(WIRS).....	.....	1	447 8815	
(Left) ***61 01 (WNRS-Heavy Duty)(WRS-Heavy Duty)(WIRS-Heavy Duty)***.....	.....	1	447 8823	
(Left) 61 01-10-20-80 (WBS).....*(Ref. Pr. List)*	.....	1	347 5777	

NOTE 29.106-1: The Front Seat Back Spring on the 63 and Later Models is only available as part of the Front Seat Back Frame listed in Group 29.105 except on Models 63 05-08 (WFS).

Copyright 1963 American Motors Corp.

GROUP NO. — DESCRIPTION — YEAR and MODEL	PRIMARY GROUP NO.	PER CAR	PART NO.	CODE
(Left) 62 01-10-80 (WNRS)(WRS)(WIRS)	.....	1	346 2095	
(Left) ***62 01-10-80 (WNRS-Heavy Duty)(WRS-Heavy Duty)(WIRS-Heavy Duty)***	.....	1	447 9825	
(Left) 62 01-10-80 (WBS)	.....	1	347 1243	
(Left) 60 10-20-80 (WNRS)(WRS)(WIRS)	.....	1	345 1329	
(Left) 61 10-20-80 (WNRS)(WRS)(WIRS)	.....	1	447 8817	
(Left) ***61 10-20-80 (WNRS-Heavy Duty)(WRS-Heavy Duty)(WIRS-Heavy Duty)***	.....	1	447 8831	
(Right) 60 01 (WNRS) ***(Discontinued)***	.....	1	343 6232	
(Right) 60 01 (WRS)	.....	1	343 6238	
(Right) 61 01 (WNRS)(WRS)(WIRS)	.....	1	447 8814	
(Right) 61 01-10-20-80 (WBS) ***(Ref. Pr. List)***	.....	1	347 5776	
(Right) ***61 01 (WNRS-Heavy Duty)(WRS-Heavy Duty)(WIRS-Heavy Duty)***	.....	1	447 8822	
(Right) 62 01-10-80 (WNRS)(WRS)(WIRS)	.....	1	346 2094	
(Right) 62 01-10-80 (WBS)	.....	1	347 1242	
(Right) ***62 01-10-80 (WNRS-Heavy Duty)(WRS-Heavy Duty)(WIRS-Heavy Duty)***	.....	1	447 9824	
(Right) 60 10-20-80 (WNRS)(WRS)(WIRS)	.....	1	345 1328	
(Right) ***60 10-20-80 (WNRS-Heavy Duty)(WRS-Heavy Duty)(WIRS-Heavy Duty)***	.....	1	447 8665	
(Right) 61 10-20-80 (WNRS)(WRS)(WIRS)	.....	1	447 8816	
(Right) ***61 10-20-80 (WNRS-Heavy Duty)(WRS-Heavy Duty)(WIRS-Heavy Duty)***	.....	1	447 8830	
CLIP, Front Seat Back Spring Reinforcement				
"C" 60 Thru 64 01-10-20-80 ***(Replaces 434 5051)***	.....	AR	348 8056	
"U" 60 Thru 64 01-10-20-80	.....	AR	447 8809	
29.110 SUPPORT, Front Seat Back (Bed Brackets)				
61 01 (WRS)(WIRS)(WBS) ***(Replaces 344 6579)***	.....	2	344 6578	
62-63 01 (WRS)(WIRS)(WBS): 60 Thru 62 10-20-80 (WRS)(WIRS)(WBS)	.....	2	438 0890	
64 02-05-06-08-09 (WRS)(WIRS)(WBS): 63-64 10-80 (WRS)(WIRS)(WBS)	.....	2	348 3022	
65 01-10-80 (WRS)(WIRS)(WBS)	.....	2	353 2290	
29.113 WIRE, Front Seat Upholstery (Note 29.100-1)				
(5-1/4" Long) 64 80 (WBS)	.....	1	352 9268	
(14" Long) 61-62 01-10-20-80 (WBS): 63 01 (WBS)	.....	8	347 6332	
(15-3/4" Long) 62 80 (WNRS)(WRS)(WIRS)	.....	4	348 4685	
(16" Long) 61 01-10-20-80 (WBS): 62 Thru 65 01-10-80 (WBS): 64 80 (WNRS): 65 59 (Marlin-WBS)	.....	4	347 6225	
(17-1/2" Long-Straight Type) 60 Thru 62 80 (WNRS)(WRS)(WIRS): 65 10-80 (WBS-WFC): 65 59 (Marlin-WBS)	.....	4	342 6818	
(17-1/2" Long-Corrugated Type) 64 80 (6 Req.): 65 80 (990-2 Req.)	.....	AR	352 7863	
(18-1/8" Long-Straight Type) 63 Thru 65 01-10-80 (WBS-4 Req.): 65 59 (Marlin-WBS-2 Req.)	.....	AR	348 4686	
(18-1/8" Long-Corrugated Type) 64 80 ***(Use 352 5317)***	.....	4	352 7865	#
(19" Long) 61 Thru 63 01-10-20-80 (WBS)	.....	4	347 6226	
(20-1/2" Long) 62-63 01 (WFS): 60 Thru 62 10-20-80 (WFS) ***(Replaces 341 2617)***	.....	1	346 5425	
(21-1/4" Long) 65 10 (WBS-LFC): 61-62 80 (WNRS)(WRS)(WIRS)	.....	2	345 7622	
(22-1/2" Long) 64-65 01 (WNRS)(WRS)(WBS-LFC): 65 10 (WBS-LFC): 60 80 (WNRS)(WRS)(WIRS): 65 59 (Marlin-WIRS)	.....	4	342 6862	
(23-7/8" Long) 61 01-10-20-80 (WNRS)(WIRS)(WRS): 62 01-10-80: 63 Thru 65 01-10-80 (WNRS)(WRS)(WIRS): 65 59 (Marlin-WIRS)	.....	4	345 7621	
(25-1/4" Long) 60 10-20-80 (WNRS)(WRS)(WIRS)	.....	4	341 2094	
(28-3/4" Long) 62-63 01 (WFS): 61-62 10-20-80 (WFS)	.....	1	346 5743	
(29-3/4" Long) 60 10-20-80 (WFS) ***(Replaces 341 2618)***	.....	1	346 5743	
(31" Long) 60 01	.....	2	345 1273	
(39" Long) 61 Thru 65 01-10-20-80 (WFS)(WNRS)(WRS): ***163 01-10-80 (Can-WFS) (Can-WNRS)(Can-WRS)***	.....	1	345 0846	
(48-3/4" Long) 64-65 01 (WFS)(WNRS)(WRS): 65 01 (WBS-LFC)	.....	1	343 1232	
(50-1/2" Long) 64-65 10-80 (WFS-2 Req.)(WNRS-1 Req.)	.....	AR	346 5305	
(54-3/8" Long) 60 10-20-80 (WFS)	.....	1	341 2615	

Copyright 1963 American Motors Corp.

GROUP NO. — DESCRIPTION — YEAR and MODEL	PRIMARY GROUP NO.	PER CAR	PART NO.	CODE
29.114 WIRE, Rear Seat Upholstery (Corrugated Type)				
(8" Long) 64 88	.....	2	352 7862	
(17-1/2" Long) 64 80	.....	6	352 7863	
(18-1/8" Long) 64 80	.....	4	352 7865	
(18-3/4" Long) 64 89 (990-H)	.....	2	352 5318	
(21-7/8" Long) 65 59 (Marlin-WBS): 64-65 89 (WBS)	.....	2	352 7864	
(22-3/4" Long) 64 89 (990H)	.....	1	352 5317	
29.115 MOULDING, Left Front Seat Back (Note 29.100-1)				
(Inner) 60 01-10-20-80 (WBS)	.....	1	347 6552	
(Inner) 62-63 01 (WBS): 62 10-80 (WBS)	.....	1	347 6946	
(Inner) 64 01-10 (WBS-LFC)	.....	1	351 9403	
(Inner) 64 01-10 (WBS-WFC): 63 10-80 (WBS)	.....	1	349 0760	
(Inner) 65 01-10 (WBS)	.....	1	351 8615	
(Outer) 61 01-10-20-80 (WBS)	.....	1	347 6553	
(Outer) 62 05-08-15-18-85-88 (WNRS)(WRS)(WIRS)(WBS): 63 05-08 (WBS)	.....	1	347 6947	
(Outer) 62 06-07-16-86 (WNRS)(WRS)(WIRS)(WBS): 63 06-07-09 (WBS)	.....	1	347 6949	
(Outer) 64 01-10 (WBS-LFC)	.....	1	351 9401	
(Outer) 64 01-10 (WBS-WFC): 63 10-80 (WBS)	.....	1	349 0761	
(Outer) 65 01-10 (WBS)	.....	1	351 8613	
65 17-19-80 (WNRS-Note 29.115-1 Type 1)	.....	1	349 0761	
65 17-19-80 (WNRS-Note 29.115-1 Type 2)	.....	1	355 7477	
63-64 80 (WNRS-Less Headrest)(WIRS-Less Headrest)(WIRS-Less Headrest)	.....	1	349 1499	
63-64 80 (WNRS-With Headrest)(WRS-With Headrest)(WIRS-With Headrest)	.....	1	349 1497	
64 80 (WBS-Less Headrest)	.....	1	350 8639	
64 80 (WBS-With Headrest)	.....	1	350 8637	
MOULDING, Right Front Seat Back (Note 29.100-1)				
(Inner) 61 01-10-20-80 (WBS)	.....	1	347 6553	
(Inner) 62-63 01 (WBS): 62 10-80 (WBS)	.....	1	347 6947	
(Inner) 64 01-10 (WBS-LFC)	.....	1	351 9402	
(Inner) 64 01-10 (WBS-WFC): 63 10-80 (WBS)	.....	1	349 0761	
(Inner) 65 01-10 (WBS)	.....	1	351 8614	
(Outer) 61 01-10-20-80 (WBS)	.....	1	347 6552	
(Outer) 62 05-08-15-18-88 (WNRS)(WRS)(WIRS)(WBS): 63 05-08 (WBS)	.....	1	347 6946	
(Outer) 62 06-07-16-86 (WNRS)(WRS)(WIRS)(WBS): 63 06-07-09	.....	1	347 6948	
(Outer) 64 01-10 (WBS-LFC)	.....	1	351 9400	
(Outer) 64 01-10 (WBS-WFC): 63 10-80 (WBS)	.....	1	349 0760	
(Outer) 65 01-10 (WBS)	.....	1	351 8612	
65 17-19-80 (WNRS-Note 29.115-1 Type 1)	.....	1	349 0760	
65 17-19-80 (WNRS-Note 29.115-1 Type 2)	.....	1	355 7476	
63-64 80 (WNRS-Less Headrest)(WRS-Less Headrest)(WIRS-Less Headrest)	.....	1	349 1498	
63-64 80 (WNRS-With Headrest)(WIRS-With Headrest)(WIRS-With Headrest)	.....	1	349 1496	
64 80 (WBS-Less Headrest)	.....	1	350 8638	
64 80 (WBS-With Headrest)	.....	1	350 8636	
MOULDING, Full Front Seat Back (Note 29.100-1)				
(Left) 65 15-18 (WFS-Note 29.115-1 Type 1)	.....	1	349 0761	
(Left) 65 15-18 (WFS-Note 29.115-1 Type 2)	.....	1	355 7477	
(Right) 65 15-18 (WFS-Note 29.115-1 Type 1)	.....	1	349 0760	
(Right) 65 15-18 (WFS-Note 29.115-1 Type 2)	.....	1	355 7476	

NOTE 29.115-1: Two Types of Mouldings were used on the 65 10-80 (WFS)(WNRS) Models. They can be identified as follows:
Type 1: Moulding is less 1/2" Dia. hole at the bottom end.
Type 2: Moulding has a 1/2" Dia. hole at the bottom end.

Copyright 1963 American Motors Corp.

GROUP NO. — DESCRIPTION — YEAR and MODEL	PRIMARY GROUP NO.	PER CAR	PART NO.	CODE
ATTACHING PARTS				
Seat Back Moulding To Back Frame				
SCREW, Tapping..... 61 Thru 63 01 (WBS-8 Req.): 61-62 10-80 (WBS-8 Req.): 62 01-10-80 (WNRS-4 Req.)(WRS-4 Req.) (WIRS-4 Req.)	17.654	AR	G162413	NA
SCREW, Tapping..... 63 10-80 (WBS)	17..592	8	G167602	NA
SCREW, Tapping..... 64 10 (WBS-WFC)	26.060	8	439 2504	
SCREW, Tapping..... 65 15-18 (WFS): 65 10-80 (WNRS)	17.655	4	G168584	NA
SCREW, Tapping..... 63 80 (WNRS-1/4" Long)(WRS-1/4" Long) (WIRS-1/4" Long)	17.660	2	G167071	NA
SCREW, Tapping..... 63 80 (WNRS-5/8" Long)(WRS-5/8" Long) (WIRS-5/8" Long)	17.655	4	G168901	NA
SCREW, Tapping..... 65 01 (WBS)	.....	8	G168581	NA
Moulding Retainer To Back Frame				
SCREW, Tapping..... 63 80 (WNRS)(WRS)(WIRS)	17.666	4	G161643	NA
BRACKET, Front Seat Back Side Moulding				
64 01-10 (WBS-LFC)	.....	4	351 9399	
29.116 MOULDING, Left Front Seat Back Kickpanel				
(Inner) 65 50 (Marlin-WIRS): 65 80 (WRS)(WIRS)	.....	1	353 1181	
(Outer) 65 50 (Marlin-WIRS): 65 80 (WRS)(WIRS)	.....	1	353 1183	
(Inner) 65 50 (Marlin-WBS): 65 80 (WBS)	.....	1	353 1185	
(Outer) 65 50 (Marlin-WBS): 65 80 (WBS)	.....	1	353 1187	
MOULDING, Right Front Seat Back Kickpanel				
(Inner) 65 50 (Marlin-WIRS): 65 80 (WRS)(WIRS)	.....	1	353 1180	
(Outer) 65 50 (Marlin-WIRS): 65 80 (WRS)(WIRS)	.....	1	353 1182	
(Inner) 65 50 (Marlin-WBS): 65 80 (WBS)	.....	1	353 1184	
(Outer) 65 50 (Marlin-WBS): 65 80 (WBS)	.....	1	353 1186	
ATTACHING PARTS				
Moulding To Kickpanel				
CLIP..... 65 50 (Marlin-WIRS-16 Req.): 65 80 (WRS-16 Req.): (WIRS-16 Req.): 65 50 (Marlin-WBS-12 Req.) 65 80 (WBS-WFC-12 Req.)	.....	AR	351 8090	
CAP, Front Seat Back Kickpanel Moulding (Less Headrest)				
65 80 (WRS)(WIRS)(WBS)	.....	2	351 8553	
ATTACHING PARTS				
Cap To Kickpanel				
CLIP..... 65 50 (Marlin-WRS)(Marlin-WIRS)(Marlin-WBS): 65 80 (WRS)(WIRS)(WBS)	.....	2	351 8090	
29.120 PANEL, Front Seat Sidewing Trim (Note 29.100-1)(Note 29.120-2)				
(Left) 60 01 (WRS)(WIRS)(Note 29.120-2)	.....	1	345 2771	
(Right) 60 01 (WRS)(WIRS(Note 29.120-2)	.....	1	345 2770	
(Left) 60 10-20-80 (WFS)	.....	1	343 5371	
(Right) 60 10-20-80 (WFS)	.....	1	353 5370	
(Left 60 10-20-80 (WNRS)	.....	1	344 4791	
(Right) 60 10-20-80 (WNRS)	.....	1	344 4790	
(Left) 60 10-20-80 (WRS)(WIRS)	.....	1	343 5379	
(Right) 60 10-20-80 (WRS)(WIRS)	.....	1	343 5378	

NOTE 29.120-1: Two Types of Panels were used on the 63 05-08-15-18-85-88 Models. They can be identified as follows:
Type 1: Length 23-5/16", Top Rear has One raised reinforcement with a Straight Rear Edge.
Type 2: Length 22", Top Rear has Two raised reinforcements with a tapered Rear Edge.

NOTE 29.120-2: The Sidewing Panels used on the 1960 Series are serviced either in Prime or in One Color. Panel must be painted the Color desired.

Copyright 1963 American Motors Corp.

GROUP NO. — DESCRIPTION — YEAR and MODEL	PRIMARY GROUP NO.	PER CAR	PART NO.	CODE
(T-121)(Left)(WNRS)		1	345 8653	
(T-121)(Right)(WNRS)		1	345 8652	
(T-121)(Left)(WRS)(WIRS)		1	345 8561	
(T-121)(Right)(WRS)(WIRS) ***(Replaces 345 8560)***		1	345 8652	
(T-1212)(Left)(WNRS)		1	345 8653	
(T-1212)(Right)(WNRS)		1	345 8652	
(T-1212)(Left)(WRS)(WIRS)		1	345 8561	
(T-122)(Right)(WRS)(WIRS) ***(Replaces 345 8560)***		1	345 8652	
(T-122)(Left)(WNRS)		1	345 8653	
(T-122)(Right)(WNRS)		1	345 8652	
(T-122)(Left)(WRS)(WIRS)		1	345 8561	
(T-1222)(Right)(WRS)(WIRS) ***(Replaces 345 8560)***		1	345 8652	#
(T-1222)(Left)(WNRS)		1	345 8653	
(T-1222)(Right)(WNRS)		1	345 8652	
(T-1222)(Left)(WRS)(WIRS)		1	345 8561	
(T-122) (Right)(WRS)(WIRS)		1	345 8560	
(T-123)(Left)(WNRS)		1	345 8655	
(T-123)(Right)(WNRS)		1	345 8654	
(T-123)(Left)(WRS)(WIRS) ***(Use 345 8655)***		1	345 8563	
(T-123)(Right)(WRS)(WIRS)		1	345 8562	
(T-124)(Left)(WNRS)		1	345 8657	
(T-124)(Right)(WNRS)		1	345 8656	
(T-124)(Left)(WRS)(WIRS)		1	345 8565	
(T-124)(Right)(WRS)(WIRS) ***(Use 345 8656)***		1	345 8564	
(T-125)(Left)(WNRS)		1	345 8653	
(T-125)(Right)(WNRS)		1	345 8652	
(T-125)(Left)(WRS)(WIRS)		1	345 8561	
(T-125)(Right)(WRS)(WIRS) ***(Replaces 345 8560)***		1	345 8652	
(T-1252)(Left)(WNRS)		1	345 8653	
(T-1252)(Right)(WNRS)		1	345 8652	
(T-1252)(Left)(WRS)(WIRS)		1	345 8561	
(T-1252)(Right)(WRS)(WIRS) ***(Replaces 345 8560)***		1	345 8652	
(T-126)(Left)(WNRS)		1	345 8659	
(T-126)(Right)(WNRS)		1	345 8658	
(T-126)(Left)(WRS)(WIRS)		1	345 8567	
(T-126)(Right)(WRS)(WIRS)		1	345 8566	
(T-127)(Left)		1	345 8549	
(T-127)(Right)		1	345 8548	
(T-1272)(Left)		1	347 4523	
(T-1272)(Right)		1	347 4522	
(T-128)(Left) 61 01		1	345 8549	
(T-128)(Right) 61 01		1	345 8548	
(T-128)(Left) 61 10-20 (WNRS)		1	345 8653	
(T-128)(Right) 61 10-20 (WNRS)		1	345 8652	
(T-128)(Left) 61 10 20 (WRS)(WIRS)		1	345 8561	
(T-128)(Right) 61 10-20 (WRS)(WIRS) ***(Replaces 345 8560)***		1	345 8652	
(T-1282)(Left) 61 01		1	347 4523	
(T-1282)(Right) 61 01		1	347 4522	
(T-1282)(Left) 61 10-20 (WNRS) ***(Use 349 7169)***		1	347 6389	
(T-1282)(Right) 61 10-20 (WNRS) ***(Use 349 7168)***		1	347 6388	
(T-1282)(Left) 61 10-20 (WRS)(WIRS)		1	347 6387	
(T-1282)(Right) 61 10-20 (WRS)(WIRS) ***(Use 349 7168)(Replaces 347 6386)***		1	347 6388	
(T-129)(Left) 61 01		1	345 8549	
(T-129)(Right) 61 01		1	345 8548	
(T-129)(Left) 61 10-20 (WNRS)		1	345 8653	
(T-129)(Right) 61 10-20 (WNRS)		1	345 8652	
(T-129)(Left) 61 10-20 (WRS)(WIRS)		1	345 8561	
(T-129)(Right) 61 10-20 (WRS)(WIRS) ***(Replaces 345 8560)***		1	345 8652	

Copyright 1963 American Motors Corp.

GROUP NO. — DESCRIPTION — YEAR and MODEL	PRIMARY GROUP NO.	PER CAR	PART NO.	CODE
(T-1292)(Left) 61 01	.....	1	347 4523	
(T-1292)(Right) 61 01	.....	1	345 4522	
(T-1292)(Left) 61 10-20 (WNRS) *(Use 349 7169)*	.....	1	347 6389	
(T-1292)(Right) 61 10-20 (WNRS) *(Use 349 7168)*	.....	1	347 6388	
(T-1292)(Left) 61 10-20 (WRS)(WIRS)	.....	1	347 6387	
(T-1292)(Right 61 10-20 (WRS)(WIRS) *(Use 349 7168)(Replaces 347 6386)*	.....	1	347 6388	
(T-130)(Left)(WNRS)	.....	1	345 8653	
(T-130)(Right)(WNRS)	.....	1	345 8652	
(T-130)(Left)(WRS)(WIRS)	.....	1	345 8561	
(T-130)(Right)(WRS)(WIRS) *(Replaces 345 8560)*	.....	1	345 8652	#
(T-131)(Left)(WNRS)	.....	1	345 8653	
(T-131)(Right)(WNRS)	.....	1	345 8652	
(T-131)(Left)(WRS)(WIRS)	.....	1	345 8561	
(T-131)(Right)(WRS)(WIRS) *(Replaces 345 8560)*	.....	1	345 8652	#
(T-132)(Left)(WNRS)	.....	1	345 8653	
(T-132)(Right)(WNRS)	.....	1	345 8652	
(T-132)(Left)(WRS)(WIRS)	.....	1	345 8561	
(T-132)(Right)(WRS)(WIRS) *(Replaces 345 8560)*	.....	1	345 8652	#
(T-133)(Left)(WNRS)	.....	1	345 8655	
(T-133)(Right)(WNRS)	.....	1	345 8654	
(T-133)(Left)(WRS)(WIRS) *(Use 345 8655)*	.....	1	345 8563	
(T-133)(Right)(WRS)(WIRS)	.....	1	345 8562	
(T-134)(Left)(WNRS)	.....	1	345 8657	
(T-134)(Right)(WNRS)	.....	1	345 8656	
(T-134)(Left)(WRS)(WIRS)	.....	1	345 8565	
(T-134)(Right)(WRS)(WIRS) *(Use 345 8656)*	.....	1	345 8564	
(T-135)(Left)(WNRS)	.....	1	345 8653	
(T-135)(Right)(WNRS)	.....	1	345 8652	
(T-135)(Left)(WRS)(WIRS)	.....	1	345 8561	
(T-135)(Right)(WRS)(WIRS) *(Replaces 345 8560)*	.....	1	345 8652	#
(T-136)(Left)(WNRS)	.....	1	345 8659	
(T-136)(Right)(WNRS)	.....	1	345 8658	
(T-136)(Left)(WRS)(WIRS)	.....	1	345 8567	
(T-136)(Right)(WRS)(WIRS)	.....	1	345 8566	
(T-137)(Left)	.....	1	345 8549	
(T-137)(Right)	.....	1	345 8548	
(T-1372)(Left)	.....	1	347 4523	
(T-1372)(Right)	.....	1	347 4522	
(T-138)(Left) 61 01	.....	1	345 8549	
(T-138)(Right) 61 01	.....	1	345 8548	
(T-138)(Left) 61 10-20 (WNRS)	.....	1	345 8653	
(T-138)(Right) 61 10-20 (WNRS)	.....	1	345 8652	
(T-138)(Left) 61 10-20 (WRS)(WIRS)	.....	1	345 8561	
(T-138)(Right) 61 10-20 (WRS)(WIRS) *(Replaces 345 8560)*	.....	1	345 8652	#
(T-1382)(Left) 61 01	.....	1	347 4523	
(T-1382)(Right) 61 01	.....	1	347 4522	
(T-1382)(Left) 61 10-20 (WNRS) *(Use 349 7169)*	.....	1	347 6389	
(T-1382)(Right) 61 10-20 (WNRS) *(Use 349 7168)*	.....	1	347 6388	
(T-1382)(Left) 61 10-20 (WRS)(WIRS)	.....	1	347 6387	
(T-1382)(Right) 61 10-20 (WRS)(WIRS) *(Use 349 7168)(Replaces 347 6386)*	.....	1	347 6388	
(T-139)(Left) 61 01	.....	1	345 8549	
(T-139)(Right 61 01	.....	1	345 8548	
(T-139)(Left) 61 10-20 (WNRS)	.....	1	345 8653	
(T-139)(Right) 61 10-20 (WNRS)	.....	1	345 8652	
(T-139)(Left) 61 10-20 (WRS)(WIRS)	.....	1	345 8561	
(T-139)(Right) 61 10-20 (WRS)(WIRS) *(Replaces 345 8560)*	.....	1	345 8652	#
(T-1392)(Left) 61 01	.....	1	347 4523	
(T1392)(Right) 61 01	.....	1	347 4522	

Copyright 1963 American Motors Corp.

GROUP NO. — DESCRIPTION — YEAR and MODEL	PRIMARY GROUP NO.	PER CAR	PART NO.	CODE
(T-1392)(Left) 61 10-20 (WNRS) ... *(Use 349 7169)*	.....	1	347 6389	
(T-1392)(Right) 61 10-20 (WNRS) ... *(Use 349 7168)*	.....	1	347 6388	
(T-1392)(Left) 61 10-20 (WRS)(WIRS)	.....	1	347 6387	
(T-1392)(Right) 61 10-20 (WRS)(WIRS) ... *(Use 349 7168)(Replaces 347 6386)*	.....	1	347 6388	
(T-140)(Left)	.....	1	345 8555	
(T-140)(Right)	.....	1	345 8554	
(T-141)(Left) 61 01	.....	1	345 8555	
(T-141)(Right) 61 01	.....	1	345 8554	
(T-141)(Left) 61 10-20 ... *(Replaces 345 8567)*	.....	1	345 8659	
(T-141)(Right) 61 10-20 ... *(Replaces 345 8566)*	.....	1	345 8658	
(T-142)(Left) 61 01	.....	1	345 8549	
(T-142)(Right) 61 01	.....	1	345 8548	
(T-142)(Left) 61 10-20 (WNRS)	.....	1	345 8653	
(T-142)(Right) 61 10-20 (WNRS)	.....	1	345 8652	
(T-142)(Left) 61 10-20 (WRS)(WIRS)	.....	1	345 8561	
(T-142)(Right) 61 10-20 (WRS)(WIRS) ... *(Replaces 345 8560)*	.....	1	345 8652	#
(T-1422)(Left) 61 01	.....	1	347 4523	
(T-1422)(Right) 61 01	.....	1	347 4522	
(T-1422)(Left) 61 10-20 (WNRS) ... *(Use 349 7169)*	.....	1	347 6389	
(T-1422)(Right) 61 10-20 (WNRS) ... *(Use 349 7168)*	.....	1	347 6388	
(T-1422)(Left) 61 10-20 (WRS)(WIRS)	.....	1	347 6387	
(T-1422)(Right) 61 10-20 (WRS)(WIRS) ... *(Use 349 7168)(Replaces 347 6386)*	.....	1	347 6388	
(T-143)(Left) 61 01	.....	1	345 8551	
(T-143)(Right) 61 01	.....	1	355 8550	
(T-143)(Left) 61 10-20 (WNRS)	.....	1	345 8655	
(T-143)(Right) 61 10-20 (WNRS)	.....	1	345 8654	
(T-143)(Left) 61 10-20 (WRS)(WIRS) ... *(Use 345 8655)*	.....	1	345 8563	
(T-143)(Right) 61 10-20 (WRS)(WIRS)	.....	1	345 8562	
(T-144)(Left) 61 01	.....	1	345 8553	
(T-144)(Right) 61 01	.....	1	345 8552	
(T-144)(Left) 61 10-20 (WNRS)	.....	1	345 8657	
(T-144)(Right) 61 10-20 (WNRS)	.....	1	345 8656	
(T-144)(Left) 61 10-20 (WRS)(WIRS)	.....	1	345 8565	
(T-144)(Right) 61 10-20 (WRS)(WIRS) ... *(Use 345 8656)*	.....	1	345 8564	
(T-145)(Left) 61 01	.....	1	345 8549	
(T-145)(Right) 61 01	.....	1	345 8548	
(T-145)(Left) 61 10-20 (WNRS)	.....	1	345 8653	
(T-145)(Right) 61 10-20 (WNRS)	.....	1	345 8652	
(T-145)(Left) 61 10-20 (WRS)(WIRS)	.....	1	345 8561	
(T-145)(Right) 61 10-20 (WRS)(WIRS) ... *(Replaces 345 8560)*	.....	1	345 8652	#
(T-1452)(Left) 61 01	.....	1	347 4523	
(T-1452)(Right) 61 01	.....	1	347 4522	
(T-1452)(Left) 61 10-20 (WNRS) ... *(Use 349 7169)*	.....	1	347 6389	
(T-1452)(Right) 61 10-20 (WNRS) ... *(Use 349 7168)*	.....	1	347 6388	
(T-1452)(Left) 61 10-20 (WRS)(WIRS)	.....	1	347 6387	
(T-1452)(Right) 61 10-20 (WRS)(WIRS) ... *(Use 349 7168)(Replaces 347 6386)*	.....	1	347 6388	
(T-146)(Left) 61 01	.....	1	345 8549	
(T-146)(Right) 61 01	.....	1	345 8548	
(T-146)(Left) 61 10-20 (WNRS)	.....	1	345 8653	
(T-146)(Left) 61 10-20 (WNRS)	.....	1	345 8653	
(T-146)(Right) 61 10-20 (WNRS)	.....	1	345 8652	
(T-146)(Left) 61 10-20 (WRS)(WIRS)	.....	1	345 8561	
(T-146)(Right) 61 10-20 (WRS)(WIRS) ... *(Replaces 345 8560)*	.....	1	345 8652	#
(T-1462)(Left) 61 01	.....	1	347 4523	
(T-1462)(Right) 61 01	.....	1	347 4522	
(T-1462)(Left) 61 10-20 (WNRS) ... *(Use 349 7169)*	.....	1	347 6389	
(T-1462)(Right) 61 10-20 (WNRS) ... *(Use 349 7168)*	.....	1	347 6388	
(T-1462)(Left) 61 10-20 (WRS)(WIRS)	.....	1	347 6387	

Copyright 1963 American Motors Corp.

GROUP NO. — DESCRIPTION — YEAR and MODEL	PRIMARY GROUP NO.	PER CAR	PART NO.	CODE
(T-1462)(Right) 61 10-20 (WRS)(WIRS) ..... *(Use 349 7168)(Replaces 347 6386)*	.....	1	347 6388	
(T-147)(Left) 61 01	.....	1	345 8549	
(T-147)(Right) 61 01	.....	1	345 8548	
(T-1472)(Left) 61 01	.....	1	347 4523	
(T-1472)(Right) 61 01	.....	1	347 4522	
(T-148)(Left) 61 01	.....	1	345 8551	
(T-148)(Right) 61 01	.....	1	345 8550	
(T-149)(Left) 61 01	.....	1	345 8549	
(T-149)(Right) 61 01	.....	1	345 8548	
(T-149)(Left) 61 10-20 (WNRS)	.....	1	345 8653	
(T-149)(Right) 61 10-20 (WNRS)	.....	1	345 8652	
(T-149)(Left) 61 10-20 (WRS)(WIRS)	.....	1	345 8561	
(T-149)(Right) 61 10-20 (WRS)(WIRS) ..... *(Replaces 345 8560)*	.....	1	345 8652	#
(T-1492)(Left) 61 01	.....	1	347 4523	
(T-1492)(Right) 61 01	.....	1	347 4522	
(T-1492)(Left) 61 10-20 (WNRS) ..... *(Use 349 7169)*	.....	1	347 6389	
(T-1492)(Right) 61 10-20 (WNRS) ..... *(Use 349 7168)*	.....	1	347 6388	
(T-1492)(Left) 61 10-20 (WRS)(WIRS)	.....	1	347 6387	
(T-1492)(Right) 61 10-20 (WRS)(WIRS) ..... *(Use 349 7168)(Replaces 347 6386)*	.....	1	347 6388	
(T-150)(Left) 61 01	.....	1	345 8553	
(T-150)(Right) 61 01	.....	1	345 8552	
(T-151)(Left) 61 01	.....	1	345 8555	
(T-151)(Right) 61 01	.....	1	345 8554	
(T-151)(Left) 61 10-20 (WNRS)	.....	1	345 8659	
(T-151)(Right) 61 10-20 (WNRS)	.....	1	345 8658	
(T-151)(Left) 61 10-20 (WRS)(WIRS) ..... *(Replaces 345 8567)*	.....	1	345 8659	
(T-151)(Right) 61 10-20 (WRS)(WIRS) ..... *(Replaces 345 8566)*	.....	1	345 8658	
(T-152)(Left) 61 01	.....	1	345 8549	
(T-152)(Right) 61 01	.....	1	345 8548	
(T-152)(Left) 61 10-20 (WNRS)	.....	1	345 8653	
(T-152)(Right) 61 10-20 (WNRS)	.....	1	345 8652	
(T-152)(Left) 61 10-20 (WRS)(WIRS)	.....	1	345 8561	
(T-152)(Right) 61 10-20 (WRS)(WIRS) ..... *(Replaces 345 8560)*	.....	1	345 8652	#
(T-1522)(Left) 61 01	.....	1	347 4523	
(T-1522)(Right) 61 01	.....	1	347 4522	
(T-1522)(Left) 61 10-20 (WNRS) ..... *(Use 349 7169)*	.....	1	347 6389	
(T-1522)(Right) 61 10-20 (WNRS) ..... *(Use 349 7168)*	.....	1	347 6388	
(T-1522)(Left) 61 10-20 (WRS)(WIRS)	.....	1	347 6387	
(T-1522)(Right) 61 10-20 (WRS)(WIRS) ..... *(Use 349 7168)(Replaces 347 6386)*	.....	1	347 6388	
(T-153)(Left) 61 01	.....	1	345 8551	
(T-153)(Right) 61 01	.....	1	345 8550	
(T-153)(Left) 61 10-20 (WNRS)	.....	1	345 8655	
(T-153)(Right) 61 10-20 (WNRS)	.....	1	345 8654	
(T-153)(Left) 61 10-20 (WRS)(WIRS) ..... *(Use 345 8655)*	.....	1	345 8563	
(T-153)(Right) 61 10-20 (WRS)(WIRS)	.....	1	345 8562	
(T-154)(Left) 61 01	.....	1	345 8553	
(T-154)(Right) 61 01	.....	1	345 8552	
(T-154)(Left) 61 10-20 (WNRS)	.....	1	345 8657	
(T-154)(Right) 61 10-20 (WNRS)	.....	1	345 8656	
(T-154)(Left) 61 10-20 (WRS)(WIRS)	.....	1	345 8565	
(T-154)(Right) 61 10-20 (WRS)(WIRS) ..... *(Use 345 8656)*	.....	1	345 8564	
(T-155)(Left) 61 01	.....	1	345 8549	
(T-155)(Right) 61 01	.....	1	345 8548	
(T-155)(Left) 61 10-20 (WNRS)	.....	1	345 8653	
(T-155)(Right) 61 10-20 (WNRS)	.....	1	345 8652	
(T-155)(Left) 61 10-20 (WRS)(WIRS)	.....	1	345 8561	
(T-155)(Right) 61 10-20 (WRS)(WIRS) ..... *(Replaces 345 8560)*	.....	1	345 8652	#
(T-1552)(Left) 61 01	.....	1	347 4523	

Copyright 1963 American Motors Corp.

GROUP NO. — DESCRIPTION — YEAR and MODEL	PRIMARY GROUP NO.	PER CAR	PART NO.	CODE
(T-1552)(Right) 61 01	.....	1	347 4522	
(T-1552)(Left) 61 10-20 (WNRS) ***(Use 349 7169)***	.....	1	347 6389	
(T-1552)(Right) 61 10-20 (WNRS) ***(Use 349 7168)***	.....	1	347 6388	
(T-1552)(Left) 61 10-20 (WRS)(WIRS)	.....	1	347 6387	
(T-1552)(Right) 61 10-20 (WRS)(WIRS) ***(Use 349 7168)(Replaces 347 6386)***	.....	1	347 6388	
(T-156)(Left) 61 01	.....	1	345 8549	
(T-156)(Right) 61 01	.....	1	345 8548	
(T-156)(Left) 61 10-20 (WNRS)	.....	1	345 8653	
(T-156)(Right) 61 10-20 (WNRS)	.....	1	345 8652	
(T-156)(Left) 61 10-20 (WRS)(WIRS)	.....	1	345 8561	
(T-156)(Right) 61 10-20 (WRS)(WIRS) ***(Replaces 345 8560)***	.....	1	345 8652	#
(T-1562)(Left) 61 01	.....	1	347 4523	
(T-1562)(Right) 61 01	.....	1	347 4522	
(T-1562)(Left) 61 10-20 (WNRS) ***(Use 349 7169)***	.....	1	347 6389	
(T-1562)(Right) 61 10-20 (WNRS) ***(Use 349 7168)***	.....	1	347 6388	
(T-1562)(Left) 61 10-20 (WRS)(WIRS)	.....	1	347 6387	
(T-1562)(Right) 61 10-20 (WRS)(WIRS) ***(Use 349 7168)(Replaces 347 6386)***	.....	1	347 6388	
(T-157)(Left) 61 01	.....	1	345 8549	
(T-157)(Right) 61 01	.....	1	345 8548	
(T-1572)(Left) 61 01	.....	1	347 4523	
(T-1572)(Right) 61 01	.....	1	347 4522	
(T-158)(Left) 61 01	.....	1	345 8549	
(T-158)(Right) 61 01	.....	1	345 8548	
(T-1582)(Left) 61 01	.....	1	347 4523	
(T-1582)(Right) 61 01	.....	1	347 4522	
(T-159)(Left) 61 01	.....	1	345 8549	
(T-159)(Right) 61 01	.....	1	345 8548	
(T-159)(Left) 61 10-20 (WNRS)	.....	1	345 8653	
(T-159)(Right) 61 10-20 (WNRS)	.....	1	345 8652	
(T-159)(Left) 61 10-20 (WRS)(WIRS)	.....	1	345 8561	#
(T-159)(Right) 61 10-20 (WRS)(WIRS) ***(Replaces 345 8560)***	.....	1	345 8652	#
(T-1592)(Left) 61 01	.....	1	347 4523	
(T-1592)(Right) 61 01	.....	1	347 4522	
(T-1592)(Left) 61 10-20 (WNRS) ***(Use 349 7169)***	.....	1	347 6389	
(T-1592)(Right) 61 10-20 (WNRS) ***(Use 349 7168)***	.....	1	347 6388	
(T-1592)(Left) 61 10-20 (WRS)(WIRS)	.....	1	347 6387	
(T-1592)(Right) 61 10-20 (WRS)(WIRS) ***(Use 349 7168)(Replaces 347 6386)***	.....	1	347 6388	
(T-160)(Left) 61 01	.....	1	345 8549	
(T-160)(Right) 61 01	.....	1	345 8548	
(T-1602)(Left) 61 01	.....	1	347 4523	
(T-1602)(Right) 61 01	.....	1	347 4522	
(T-162)(Left) 61 80 (WNRS)	.....	1	345 8653	
(T-162)(Right) 61 80 (WNRS)	.....	1	345 8652	
(T-162)(Left) 61 80 (WRS)(WIRS)	.....	1	345 8561	#
(T-162)(Right) 61 80 (WRS)(WIRS) ***(Replaces 345 8560)***	.....	1	345 8652	#
(T-1622)(Left) 61 80 (WNRS) ***(Use 349 7169)***	.....	1	347 6389	
(T-1622)(Right) 61 80 (WNRS) ***(Use 349 7168)***	.....	1	347 6388	
(T-1622)(Left) 61 80 (WRS)(WIRS)	.....	1	347 6387	
(T-1622)(Right) 61 80 (WRS)(WIRS) ***(Use 349 7168)(Replaces 347 6386)***	.....	1	347 6388	
(T-163)(Left) 61 80 (WNRS)	.....	1	345 8655	
(T-163)(Right) 61 80 (WNRS)	.....	1	345 8654	
(T-163)(Left) 61 80 (WRS)(WIRS) ***(Use 345 8655)***	.....	1	345 8563	
(T-163)(Right) 61 80 (WRS)(WIRS)	.....	1	345 8562	
(T-164)(Left) 61 80 (WNRS)	.....	1	345 8657	
(T-164)(Right) 61 80 (WNRS)	.....	1	345 8656	
(T-164)(Left) 61 80 (WRS)(WIRS)	.....	1	345 8565	
(T-164)(Right) 61 80 (WNRS)(WIRS) ***(Use 345 8656)***	.....	1	345 8564	
(T-165)(Left) 61 80 (WNRS)	.....	1	345 8653	

Copyright 1963 American Motors Corp.

GROUP NO. — DESCRIPTION — YEAR and MODEL	PRIMARY GROUP NO.	PER CAR	PART NO.	CODE
(T-165)(Right) 61 80 (WNRS)	.....	1	345 8652	
(T-165)(Left) 61 80 (WRS)(WIRS)	.....	1	345 8561	
(T-165)(Right) 61 80 (WRS)(WIRS) ***(Replaces 354 8560)***	.....	1	345 8652	#
(T-1652)(Left) 61 80 (WNRS) ***(Use 349 7169)***	.....	1	347 6389	
(T-1652)(Right) 61 80 (WNRS) ***(Use 349 7168)***	.....	1	347 6388	
(T-1652)(Left) 61 80 (WRS)(WIRS)	.....	1	347 6387	
(T-1652)(Right) 61 80 (WRS)(WIRS) ***(Use 349 7168)(Replaces 347 6386)***	.....	1	347 6388	
(T-166)(Left) 61 80 (WNRS)	.....	1	345 8659	
(T-166)(Right) 61 80 (WNRS)	.....	1	345 8658	
(T-166)(Left) 61 80 (WRS)(WIRS) ***(Replaces 345 8567)***	.....	1	345 8659	
(T-166)(Right) 61 80 (WRS)(WIRS) ***(Replaces 345 8566)***	.....	1	345 8658	
(T-168)(Left) 61 80 (WNRS)	.....	1	345 8653	
(T-168)(Right) 61 80 (WNRS)	.....	1	345 8652	
(T-168)(Left) 61 80 (WRS)(WIRS)	.....	1	345 8561	
(T-168)(Right) 61 80 (WRS)(WIRS) ***(Replaces 345 8560)***	.....	1	345 8652	#
(T-1682)(Left) 61 80 (WNRS) ***(Use 349 7169)***	.....	1	347 6389	
(T-1682)(Right) 61 80 (WNRS) ***(Use 349 7168)***	.....	1	347 6388	
(T-1682)(Left) 61 80 (WRS)(WIRS)	.....	1	347 6387	
(T-1682)(Right) 61 80 ***(Use 349 7168)(Replaces 347 6386)***	.....	1	347 6388	
(T-1683)(Left) 61 80 (WNRS) ***(Use 349 7169)***	.....	1	347 6389	
(T-1683)(Right) 61 80 (WNRS) ***(Use 349 7168)***	.....	1	347 6388	
(T-1683)(Left) 61 80 (WRS)(WIRS)	.....	1	347 6387	
(T-1683)(Right) 61 80 (WRS)(WIRS) ***(Use 349 7168)(Replaces 347 6386)***	.....	1	347 6388	
(T-169)(Left) 61 80 (WNRS)	.....	1	345 8653	
(T-169)(Right) 61 80 (WNRS)	.....	1	345 8652	
(T-169)(Left) 61 80 (WRS)(WIRS)	.....	1	345 8561	
(T-169)(Right) 61 80 (WRS)(WIRS) ***(Replaces 345 8560)***	.....	1	345 8562	
(T-1692)(Left) 61 80 (WNRS) ***(Use 349 7169)***	.....	1	347 6389	
(T-1692)(Right) 61 80 (WNRS) ***(Use 349 7168)***	.....	1	347 6388	
(T-1692)(Left) 61 80 (WRS)(WIRS)	.....	1	347 6387	
(T-1692)(Right) 61 80 (WRS)(WIRS) ***(Use 349 7168)(Replaces 347 6386)***	.....	1	347 6388	
(T-1693)(Left) 61 80 (WNRS) ***(Use 349 7169)***	.....	1	347 6389	
(T-1693)(Right) 61 80 (WNRS) ***(Use 349 7168)***	.....	1	347 6388	
(T-1693)(Left) 61 80 (WRS)(WIRS)	.....	1	347 6387	
(T-1693)(Right) 61 80 (WRS)(WIRS) ***(Use 349 7168)(Replaces 347 6386)***	.....	1	347 6388	
(T-172)(Left) 61 80 (WNRS)	.....	1	345 8653	
(T-172)(Right) 61 80 (WNRS)	.....	1	345 8652	
(T-172)(Left) 61 80 (WRS)(WIRS)	.....	1	345 8561	
(T-172)(Right) 61 80 (WRS)(WIRS) ***(Replaces 345 8560)***	.....	1	345 8652	#
(T-173)(Left) 61 80 (WNRS)	.....	1	345 8655	
(T-173)(Right) 61 80 (WNRS)	.....	1	345 8654	
(T-173)(Left) 61 80 (WRS)(WIRS) ***(Use 345 8655)***	.....	1	345 8563	
(T-173)(Right) 61 80 (WRS)(WIRS)	.....	1	345 8562	
(T-174)(Left) 61 80 (WNRS)	.....	1	345 8657	
(T-174)(Right) 61 80 (WNRS)	.....	1	345 8656	
(T-174)(Left) 61 80 (WRS)(WIRS)	.....	1	345 8565	
(T-174)(Right) 61 80 (WRS)(WIRS) ***(Use 345 8656)***	.....	1	345 8564	
(T-175)(Left) 61 80 (WNRS)	.....	1	345 8653	
(T-175)(Right) 61 80 (WNRS)	.....	1	345 8652	
(T-175)(Left) 61 80 (WRS)(WIRS)	.....	1	345 8561	
(T-175)(Right) 61 80 (WRS)(WIRS) ***(Replaces 345 8560)***	.....	1	345 8652	#
(T-176)(Left) 61 80 (WNRS)	.....	1	345 8659	
(T-176)(Right) 61 80 (WNRS)	.....	1	345 8658	
(T-176)(Left) 61 80 (WRS)(WIRS) ***(Replaces 345 8567)***	.....	1	345 8659	
(T-176)(Right) 61 80 (WRS)(WIRS) ***(Replaces 345 8566)***	.....	1	345 8658	
(T-178)(Left) 61 80 (WNRS)	.....	1	345 8653	
(T-178)(Right) 61 80 (WNRS)	.....	1	345 8652	
(T-178)(Left) 61 80 (WRS)(WIRS)	.....	1	345 8561	
(T-178)(Right) 61 80 (WRS)(WIRS) ***(Replaces 345 8560)***	.....	1	345 8652	#

Copyright 1963 American Motors Corp.

GROUP NO. — DESCRIPTION — YEAR and MODEL	PRIMARY GROUP NO.	PER CAR	PART NO.	CODE
(T-1783)(Left) 61 80 (WNRS) ... *(Use 349 7169)*	.....	1	347 6389	
(T-1783)(Right) 61 80 (WNRS) ... *(Use 349 7168)*	.....	1	347 6388	
(T-1783)(Left) 61 80 (WRS)(WIRS)	.....	1	347 6387	
(T-1783)(Right) 61 80 (WRS)(WIRS) ... *(Use 349 7168)(Replaces 347 6386)*	.....	1	347 6388	
(T-179)(Left) 61 80 (WNRS)	.....	1	345 8653	
(T-179)(Right) 61 80 (WNRS)	.....	1	345 8652	
(T-179)(Left) 61 80 (WRS)(WIRS)	.....	1	345 8561	
(T-179)(Right) 61 80 (WRS)(WIRS) ... *(Replaces 345 8560)*	.....	1	345 8652	#
(T-1793)(Left) 61 80 (WNRS) ... *(Use 349 7169)*	.....	1	347 6389	
(T-1793)(Right) 61 80 (WNRS) ... *(Use 349 7168)*	.....	1	347 6388	
(T-1793)(Left) 61 80 (WRS)(WIRS)	.....	1	347 6387	
(T-1793)(Right) 61 80 (WRS)(WIRS) ... *(Use 349 7168)(Replaces 347 6386)*	.....	1	347 6388	
(T-181)(Left) 61 80 (WNRS)	.....	1	345 8659	
(T-181)(Right) 61 80 (WNRS)	.....	1	345 8658	
(T-181)(Left) 61 80 (WRS)(WIRS) ... *(Replaces 345 8567)*	.....	1	345 8659	
(T-181)(Right) 61 80 (WRS)(WIRS) ... *(Replaces 345 8566)*	.....	1	345 8658	
(T-182)(Left) 61 80 (WNRS)	.....	1	345 8653	
(T-182)(Right) 61 80 (WNRS)	.....	1	345 8652	
(T-182)(Left) 61 80 (WRS)(WIRS)	.....	1	345 8561	
(T-182)(Right) 61 80 (WRS)(WIRS) ... *(Replaces 345 8560)*	.....	1	345 8652	#
(T-1822)(Left) 61 80 (WNRS) ... *(Use 349 7169)*	.....	1	347 6389	
(T-1822)(Right) 61 80 (WNRS) ... *(Use 349 7168)*	.....	1	347 6388	
(T-1822)(Left) 61 80 (WRS)(WIRS)	.....	1	347 6387	
(T-1822)(Right) 61 80 (WRS)(WIRS) ... *(Use 349 7168)(Replaces 347 6386)*	.....	1	347 6388	
(T-1823)(Left) 61 80 (WNRS) ... *(Use 349 7169)*	.....	1	347 6389	
(T-1823)(Right) 61 80 (WNRS) ... *(Use 349 7168)*	.....	1	347 6388	
(T-1823)(Left) 61 80 (WRS)(WIRS)	.....	1	347 6387	
(T-1823)(Right) 61 80 (WRS)(WIRS) ... *(Use 349 7168)(Replaces 347 6386)*	.....	1	347 6388	
(T-183)(Left) 61 80 (WNRS)	.....	1	345 8655	
(T-183)(Right) 61 80 (WNRS)	.....	1	345 8654	
(T-183)(Left) 61 80 (WRS)(WIRS) ... *(Use 345 8655)*	.....	1	345 8563	
(T-183)(Right) 61 80 (WRS)(WIRS)	.....	1	345 8562	
(T-184)(Left) 61 80 (WNRS)	.....	1	345 8657	
(T-184)(Right) 61 80 (WNRS)	.....	1	345 8656	
(T-184)(Left) 61 80 (WRS)(WIRS)	.....	1	345 8565	
(T-184)(Right) 61 80 (WRS)(WIRS) ... *(Use 345 8656)*	.....	1	345 8564	
(T-185)(Left) 61 80 (WNRS)	.....	1	345 8653	
(T-185)(Right) 61 80 (WNRS)	.....	1	345 8652	
(T-185)(Left) 61 80 (WRS)(WIRS)	.....	1	345 8561	
(T-185)(Right) 61 80 (WRS)(WIRS) ... *(Replaces 345 8560)*	.....	1	345 8652	#
(T-1852)(Left) 61 80 (WNRS) ... *(Use 349 7169)*	.....	1	347 6389	
(T-1852)(Right) 61 80 (WNRS) ... *(Use 349 7168)*	.....	1	347 6388	
(T-1852)(Left) 61 80 (WRS)(WIRS)	.....	1	347 6387	
(T-1852)(Right) 61 80 (WRS)(WIRS) ... *(Use 349 7168)(Replaces 347 6386)*	.....	1	347 6388	
(T-1853)(Left) 61 80 (WNRS) ... *(Use 349 7169)*	.....	1	347 6389	
(T-1853)(Right) 61 80 (WNRS) ... *(Use 349 7168)*	.....	1	347 6388	
(T-1853)(Left) 61 80 (WRS)(WIRS)	.....	1	347 6387	
(T-1853)(Right) 61 80 (WRS)(WIRS) ... *(Use 349 7168)(Replaces 347 6386)*	.....	1	347 6388	
(T-186)(Left) 61 80 (WNRS)	.....	1	345 8653	
(T-186)(Right) 61 80 (WNRS)	.....	1	345 8652	
(T-186)(Left) 61 80 (WRS)(WIRS)	.....	1	345 8561	
(T-186)(Right) 61 80 (WRS)(WIRS) ... *(Replaces 345 8560)*	.....	1	345 8652	#
(T-1862)(Left) 61 80 (WNRS) ... *(Use 349 7169)*	.....	1	347 6389	
(T-1862)(Right) 61 80 (WNRS) ... *(Use 349 7168)*	.....	1	347 6388	
(T-1862)(Left) 61 80 (WRS)(WIRS)	.....	1	347 6387	
(T-1862)(Right) 61 80 (WRS)(WIRS) ... *(Use 349 7168)(Replaces 347 6386)*	.....	1	347 6388	
(T-1863) (Right) 61 80 (WNRS) ... *(Use 349 7168)*	.....	1	347 6388	
(T-1863)(Left) 61 80 (WNRS) ... *(Use 349 7169)*	.....	1	347 6389	

Copyright 1963 American Motors Corp.

GROUP NO. — DESCRIPTION — YEAR and MODEL	PRIMARY GROUP NO.	PER CAR	PART NO.	CODE
(T-1863)(Left) 61 80 (WRS)(WIRS)	.....	1	347 6387	
(T-1863)(Right) 61 80 (WRS)(WIRS) ***(Use 349 7168)(Replaces 347 6386)***	.....	1	347 6388	
(T-189)(Left) 61 80 (WNRS)	.....	1	345 8653	
(T-189)(Right) 61 80 (WNRS)	.....	1	345 8652	
(T-189)(Left) 61 80 (WRS)(WIRS)	.....	1	345 8561	
(T-189)(Right) 61 80 (WRS)(WIRS) ***(Replaces 345 8560)***	.....	1	345 8652	#
(T-1892)(Left) 61 80 (WNRS) ***(Use 349 7169)***	.....	1	347 6389	
(T-1892)(Right) 61 80 (WNRS) ***(Use 349 7168)***	.....	1	347 6388	
(T-1893)(Left) 61 80 (WNRS) ***(Use 349 7169)***	.....	1	347 6389	
(T-1892)(Left) 61 80 (WRS)(WIRS)	.....	1	347 6387	
(T-1892)(Right) 61 80 (WRS)(WIRS) ***(Use 349 7168)(Replaces 347 6386)***	.....	1	347 6388	
(T-1893)(Left) 61 80 (WNRS) ***(Use 349 7169)***	.....	1	347 6389	
(T-1893)(Right) 61 80 (WNRS) ***(Use 349 7168)***	.....	1	347 6388	
(T-1893)(Left) 61 80 (WRS)(WIRS)	.....	1	347 6387	
(T-1893)(Right) 61 80 (WRS)(WIRS) ***(Use 349 7168)(Replaces 347 6386)***	.....	1	347 6388	
(T-190)(Left) 61 01-10-20-80 (WBS)	.....	1	347 0809	
(T-190)(Right) 61 01-10-20-80 (WBS)	.....	1	347 0808	
(T-191)(Left) 61 80 (WNRS)	.....	1	345 8659	
(T-191)(Right) 61 80 (WNRS)	.....	1	345 8658	
(T-191)(Left) 61 80 (WRS)(WNRS) ***(Replaces 345 8567)***	.....	1	345 8659	
(T-191)(Right) 61 80 (WRS)(WIRS) ***(Replaces 345 8566)***	.....	1	345 8658	
(T-192)(Left) 61 80 (WNRS)	.....	1	345 8653	
(T-192)(Right) 61 80 (WNRS)	.....	1	345 8652	
(T-192)(Left) 61 80 (WRS)(WIRS)	.....	1	345 8561	#
(T-192)(Right) 61 80 (WRS)(WIRS) ***(Replaces 345 8560)***	.....	1	345 8652	#
(T-1923)(Left) 61 80 (WNRS) ***(Use 349 7169)***	.....	1	347 6389	
(T-1923)(Right) 61 80 (WNRS) ***(Use 349 7168)***	.....	1	347 6388	
(T-1923)(Left) 61 80 (WRS)(WIRS)	.....	1	347 6387	
(T-1923)(Right) 61 80 (WRS)(WIRS) ***(Use 349 7168)(Replaces 347 6386)***	.....	1	347 6388	
(T-193)(Left) 61 80 (WNRS)	.....	1	345 8654	
(T-193)(Right) 61 80 (WNRS)	.....	1	345 8655	
(T-193)(Left) 61 80 (WRS)(WIRS) ***(Use 345 8655)***	.....	1	345 8563	
(T-193)(Right) 61 80 (WRS)(WIRS)	.....	1	345 8562	
(T-194)(Left) 61 80 (WNRS)	.....	1	345 8657	
(T-194)(Right) 61 80 (WNRS)	.....	1	345 8656	
(T-194)(Left) 61 80 (WRS)(WIRS)	.....	1	345 8565	
(T-194)(Right) 61 80 (WRS)(WIRS) ***(Use 345 8656)***	.....	1	345 8564	
(T-195)(Left) 61 80 (WNRS)	.....	1	345 8653	
(T-195)(Right) 61 80 (WNRS)	.....	1	345 8652	
(T-195)(Left) 61 80 (WRS)(WIRS)	.....	1	345 8561	
(T-195)(Right) 61 80 (WRS)(WIRS) ***(Replaces 345 8560)***	.....	1	345 8652	#
(T-1953)(Left) 61 80 (WNRS) ***(Use 349 7169)***	.....	1	347 6389	
(T-1953)(Right) 61 80 (WNRS) ***(Use 349 7168)***	.....	1	347 6388	
(T-1953)(Left) 61 80 (WRS)(WIRS)	.....	1	347 6387	
(T-1953)(Right) 61 80 (WRS)(WIRS) ***(Use 349 7168)(Replaces 347 6386)***	.....	1	347 6388	
(T-196)(Left) 61 80 (WNRS)	.....	1	345 8653	
(T-196)(Right) 61 80 (WNRS)	.....	1	345 8652	
(T-196)(Left) 61 80 (WRS)(WIRS)	.....	1	345 8561	
(T-196)(Right) 61 80 (WRS)(WIRS) ***(Replaces 345 8560)***	.....	1	345 8652	#
(T-1963)(Left) 61 80 (WNRS) ***(Use 349 7169)***	.....	1	347 6389	
(T-1963)(Right) 61 80 (WNRS) ***(Use 349 7168)***	.....	1	347 6388	
(T-1963)(Left) 61 80 (WRS)(WIRS)	.....	1	347 6387	
(T-1963)(Right) 61 80 (WRS)(WIRS) ***(Use 349 7168)(Replaces 347 6386)***	.....	1	347 6388	
(T-197)(Left) 61 01-10-20-80 (WBS)	.....	1	347 0809	
(T-197)(Right) 61 01-10-20-80 (WBS)	.....	1	347 0808	
(T-198)(Left) 61 01-10-20-80 (WBS)	.....	1	347 0809	
(T-198)(Right) 61 01-10-20-80 (WBS)	.....	1	347 0808	
(T-199)(Left) 61 80 (WNRS)	.....	1	345 8653	

Copyright 1963 American Motors Corp.

GROUP NO. — DESCRIPTION — YEAR and MODEL	PRIMARY GROUP NO.	PER CAR	PART NO.	CODE
(T-199)(Right) 61 80 (WNRS)	.....	1	345 8652	
(T-199)(Left) 61 80 (WRS)(WIRS)	.....	1	345 8561	
(T-199)(Right) 61 80 (WRS)(WIRS) ***(Replaces 345 8560)***	.....	1	345 8652	#
(T-1993)(Left) 61 80 (WNRS) ***(Use 349 7169)***	.....	1	347 6389	
(T-1993)(Right) 61 80 (WNRS) ***(Use 349 7168)***	.....	1	347 6388	
(T-1993)(Left) 61 80 (WRS)(WIRS)	.....	1	347 6387	
(T-1993)(Right) 61 80 (WRS)(WIRS) ***(Use 349 7168)(Replaces 347 6386)***	.....	1	347 6388	
(T-212)(Left) 62 04-06 (WNRS)	.....	1	349 7015	
(T-212)(Right) 62 04-06 (WNRS)	.....	1	349 7014	
(T-212)(Left) 62 04-06 (WRS)(WIRS)	.....	1	348 6209	
(T-212)(Right) 62 04-06 (WRS)(WIRS)	.....	1	348 6208	
(T-212)(Left) 62 05-08 (WNRS)	.....	1	349 7169	
(T-212)(Right) 62 05-08 (WNRS)	.....	1	349 7168	
(T-212)(Left) 62 05-08 (WRS)(WIRS)	.....	1	348 6203	
(T-212)(Right) 62 05-08 (WRS)(WIRS)	.....	1	348 6202	
(T-213)(Left) 62 04-06 (WNRS)	.....	1	349 7017	
(T-213)(Right) 62 04-06 (WNRS)	.....	1	349 7016	
(T-213)(Left) 62 04-06 (WRS)(WIRS)	.....	1	346 2395	
(T-213)(Right) 62 04-06 (WRS)(WIRS)	.....	1	346 2394	
(T-213)(Left) 62 05-08 (WNRS)	.....	1	349 7171	
(T-213)(Right) 62 05-08 (WNRS)	.....	1	349 7170	
(T-213)(Left) 62 05-08 (WRS)(WIRS)	.....	1	347 0361	
(T-213)(Right) 62 05-08 (WRS)(WIRS)	.....	1	347 0360	
(T-214)(Left) 62 04-06 (WNRS)	.....	1	349 7019	
(T-214)(Right) 62 04-06 (WNRS)	.....	1	349 7018	
(T-214)(Left) 62 04-06 (WRS)(WIRS)	.....	1	346 2397	
(T-214)(Right) 62 04-06 (WRS)(WIRS)	.....	1	346 2396	
(T-214)(Left) 62 05-08 (WNRS)	.....	1	349 7173	
(T-214)(Right) 62 05-08 (WNRS)	.....	1	349 7172	
(T-214)(Left) 62 05-08 (WRS)(WIRS)	.....	1	347 0363	
(T-214)(Right) 62 05-08 (WRS)(WIRS)	.....	1	347 0362	
(T-215)(Left) 62 04-06 (WNRS)	.....	1	349 7015	
(T-215)(Right) 62 04-06 (WNRS)	.....	1	349 7014	
(T-215)(Left) 62 04-06 (WRS)(WIRS)	.....	1	348 6209	
(T-215)(Right) 62 04-06 (WRS)(WIRS)	.....	1	348 6208	
(T-215)(Left) 62 05-08 (WNRS)	.....	1	349 7169	
(T-215)(Right) 62 05-08 (WNRS)	.....	1	349 7168	
(T-215)(Left) 62 05-08 (WRS)(WIRS)	.....	1	348 6203	
(T-215)(Right) 62 05-08 (WRS)(WIRS)	.....	1	348 6202	
(T-216)(Left) 62 04-06 (WNRS)	.....	1	349 7021	
(T-216)(Right) 62 04-06 (WNRS)	.....	1	349 7020	
(T-216)(Left) 62 04-06 (WRS)(WIRS)	.....	1	346 2399	
(T-216)(Right) 62 04-06 (WRS)(WIRS)	.....	1	346 2398	
(T-216)(Left) 62 05-08 (WNRS)	.....	1	349 7175	
(T-216)(Right) 62 05-08 (WNRS)	.....	1	349 7174	
(T-216)(Left) 62 05-08 (WRS)(WIRS)	.....	1	347 0365	
(T-216)(Right) 62 05-08 (WRS)(WIRS)	.....	1	347 0364	
(T-222)(Left) 62 06-07 (WNRS)	.....	1	348 7501	
(T-222)(Right) 62 06-07 (WNRS)	.....	1	348 7500	
(T-222)(Left) 62 06-07 (WRS)(WIRS) ***(Replaces 348 7503)***	.....	1	348 5385	
(T-222)(Right) 62 06-07 (WRS)(WIRS) ***(Replaces 348 7502)***	.....	1	348 5384	
(T-222)(Left) 62 05-08 (WNRS)	.....	1	348 7499	
(T-222)(Right) 62 05-08 (WNRS)	.....	1	348 7498	
(T-222)(Left) 62 05-08 (WRS)(WIRS)	.....	1	348 7527	
(T-222)(Right) 62 05-08 (WRS)(WIRS)	.....	1	348 7526	
(T-223)(Left) 62 06-07 (WNRS)	.....	1	348 7501	
(T-223)(Right) 62 06-07 (WNRS)	.....	1	348 7500	
(T-223)(Left) 62 06-07 (WRS)(WIRS) ***(Replaces 348 7503)***	.....	1	348 5385	

Copyright 1963 American Motors Corp.

GROUP NO. — DESCRIPTION — YEAR and MODEL	PRIMARY GROUP NO.	PER CAR	PART NO.	CODE
(T-223)(Right) 62 06-07 (WRS)(WIRS) ***(Replaces 348 7502)***	.....	1	348 5384	
(T-223)(Left) 62 05-08 (WNRS)	.....	1	348 7499	
(T-223)(Right) 62 05-08 (WNRS)	.....	1	248 7498	
(T-223)(Left) 62 05-08 (WRS) (WIRS)	.....	1	348 7527	
(T-223)(Right) 62 05-08 (WRS)(WIRS)	.....	1	348 7526	
(T-224)(Left) 62 06-07 (WNRS)	.....	1	348 7501	
(T-224)(Right) 62 06-07 (WNRS)	.....	1	348 7500	
(T-224)(Left) 62 06-07 (WRS)(WIRS) ***(Replaces 348 7503)***	.....	1	348 5385	
(T-224)(Right) 62 06-07 (WRS)(WIRS) ***(Replaces 348 7502)***	.....	1	348 5384	
(T-224)(Left) 62 05-08 (WNRS)	.....	1	348 7499	
(T-224)(Right) 62 05-08 (WNRS)	.....	1	348 7498	
(T-224)(Left) 62 05-08 (WRS)(WIRS)	.....	1	348 7527	
(T-224)(Right) 62 05-08 (WRS)(WIRS)	.....	1	348 7526	
(T-225)(Left) 62 06-07 (WNRS)	.....	1	348 7501	
(T-225)(Right) 62 06-07 (WNRS)	.....	1	348 7500	
(T-225)(Left) 62 06-07 (WRS)(WIRS) ***(Replaces 348 7503)***	.....	1	348 5385	
(T-225)(Right) 62 06-07 (WRS)(WIRS) ***(Replaces 348 7502)***	.....	1	348 5384	
(T-225)(Left) 62 05-08 (WNRS)	.....	1	348 7499	
(T-225)(Right) 62 05-08 (WNRS)	.....	1	348 7498	
(T-225)(Left) 62 05-08 (WRS)(WIRS)	.....	1	348 7527	
(T-225)(Right) 62 05-08 (WRS)(WIRS)	.....	1	348 7526	
(T-226)(Left) 62 06-07 (WNRS)	.....	1	348 7501	
(T-226)(Right) 62 06-07 (WNRS)	.....	1	348 7500	
(T-226)(Left) 62 06-07 (WRS)(WIRS) ***(Replaces 348 7503)***	.....	1	348 5385	
(T-226)(Right) 62 06-07 (WRS)(WIRS) ***(Replaces 348 7502)***	.....	1	348 5384	
(T-226)(Left) 62 05-08 (WNRS)	.....	1	348 7499	
(T-226)(Right) 62 05-08 (WNRS)	.....	1	348 7498	
(T-226)(Left) 62 05-08 (WRS)(WIRS)	.....	1	348 7527	
(T-226)(Right) 62 05-08 (WRS)(WIRS)	.....	1	348 7526	
(T-228)(Left) 62 06-07 (WNRS)	.....	1	348 7501	
(T-228)(Right) 62 06-07 (WNRS)	.....	1	348 7500	
(T-228)(Left) 62 06-07 (WRS)(WIRS) ***(Replaces 348 7503)***	.....	1	348 5385	
(T-228)(Right) 62 06-07 (WRS)(WIRS) ***(Replaces 348 7502)***	.....	1	348 5384	
(T-228)(Left) 62 05-08 (WNRS)	.....	1	348 7499	
(T-228)(Right) 62 05-08 (WNRS)	.....	1	348 7498	
(T-228)(Left) 62 05-08 (WRS)(WIRS)	.....	1	348 7527	
(T-228)(Right) 62 05-08 (WRS)(WIRS)	.....	1	348 7526	
(T-229)(Left) 62 06-07 (WNRS)	.....	1	348 7501	
(T-229)(Right) 62 06-07 (WNRS)	.....	1	348 7500	
(T-229)(Left) 62 06-07 (WRS)(WIRS) ***(Replaces 348 7503)***	.....	1	348 5385	
(T-229)(Right) 62 06-07 (WRS)(WIRS) ***(Replaces 348 7502)***	.....	1	348 5384	
(T-229)(Left) 62 05-08 (WNRS)	.....	1	348 7499	
(T-229)(Right) 62 05-08 (WNRS)	.....	1	348 7498	
(T-229)(Left) 62 05-08 (WRS)(WIRS)	.....	1	348 7527	
(T-229)(Right) 62 05-08 (WRS)(WIRS)	.....	1	348 7526	
(T-232)(Left) 62 07 (WNRS)	.....	1	348 7501	
(T-232)(Right) 62 07 (WNRS)	.....	1	348 7500	
(T-232)(Left) 62 07 (WRS)(WIRS) ***(Replaces 348 7503)***	.....	1	348 5385	
(T-232)(Right) 62 07 (WRS)(WIRS) ***(Replaces 348 7502)***	.....	1	348 5384	
(T-233)(Left) 62 07 (WNRS)	.....	1	348 7501	
(T-233)(Right) 62 07 (WNRS)	.....	1	348 7500	
(T-233)(Left) 62 07 (WRS)(WIRS) ***(Replaces 348 7503)***	.....	1	348 5385	
(T-233)(Right) 62 07 (WRS)(WIRS) ***(Replaces 348 7502)***	.....	1	348 5384	
(T-234)(Left) 62 07 (WNRS)	.....	1	348 7501	
(T-234)(Right) 62 07 (WNRS)	.....	1	348 7500	
(T-234)(Left) 62 07 (WRS)(WIRS) ***(Replaces 348 7503)***	.....	1	348 5385	
(T-234)(Right) 62 07 (WRS)(WIRS) ***(Replaces 348 7502)***	.....	1	348 5384	
(T-235)(Left) 62 07 (WNRS)	.....	1	348 7501	

Copyright 1963 American Motors Corp.

GROUP NO. — DESCRIPTION — YEAR and MODEL	PRIMARY GROUP NO.	PER CAR	PART NO.	CODE
(T-235)(Right) 62 07 (WNRS)	.....	1	348 7500	
(T-235)(Left) 62 07 (WRS)(WIRS) ***(Replaces 348 7503)***	.....	1	348 5385	
(T-235)(Right) 62 07 (WRS)(WIRS) ***(Replaces 348 7502)***	.....	1	348 5384	
(T-236)(Left) 62 07 (WNRS)	.....	1	348 7501	
(T-236)(Right) 62 07 (WNRS)	.....	1	348 7500	
(T-236)(Left) 62 07 (WRS)(WIRS) ***(Replaces 348 7503)***	.....	1	348 5385	
(T-236)(Right) 62 07 (WRS)(WIRS) ***(Replaces 348 7502)***	.....	1	348 5384	
(T-238)(Left) 62 07 (WNRS)	.....	1	348 7501	
(T-238)(Right) 62 07 (WNRS)	.....	1	348 7500	
(T-238)(Left) 62 07 (WRS)(WIRS) ***(Replaces 348 7503)***	.....	1	348 5385	
(T-238)(Right) 62 07 (WRS)(WIRS) ***(Replaces 348 7502)***	.....	1	348 5384	
(T-239)(Left) 62 07 (WNRS)	.....	1	348 7501	
(T-239)(Right) 62 07 (WNRS)	.....	1	348 7500	
(T-239)(Left) 62 07 (WRS)(WIRS) ***(Replaces 348 7503)***	.....	1	348 5385	
(T-239)(Right) 62 07 (WRS)(WIRS) ***(Replaces 348 7502)***	.....	1	348 5384	
(T-242)(Left) 62 06-07-16-86 (WNRS)	.....	1	348 7501	
(T-242)(Right) 62 06-07-16-86 (WNRS)	.....	1	348 7500	
(T-242)(Left) 62 05-08-15-18-85-88 (WNRS)	.....	1	348 7499	
(T-242)(Right) 62 05-08-15-18-85-88 (WNRS)	.....	1	348 7498	
(T-242)(Left) 62 06-07-16-86 (WRS)(WIRS)(WBS) ***(Replaces 348 7503)***	.....	1	348 5385	
(T-242)(Right) 62 06-07-16-86 (WRS)(WIRS)(WBS) ***(Replaces 348 7502)***	.....	1	348 5384	
(T-242)(Left) 62 05-08-15-18-85-88 (WRS)(WIRS)(WBS)	.....	1	348 7527	
(T-242)(Right) 62 05-08-15-18-85-88 (WRS)(WIRS)(WBS)	.....	1	348 7526	
(T-243)(Left) 62 06-07-16-86 (WNRS)	.....	1	348 7501	
(T-243)(Right) 62 06-07-16-86 (WNRS)	.....	1	348 7500	
(T-243)(Left) 62 05-08-15-18-85-88 (WNRS)	.....	1	348 7499	
(T-243)(Right) 62 05-08-15-18-85-88 (WNRS)	.....	1	348 7498	
(T-243)(Left) 62 06-07-16-86 (WRS)(WIRS)(WBS) ***(Replaces 348 7503)***	.....	1	348 5385	
(T-243)(Right) 62 06-07-16-86 (WRS)(WIRS)(WBS) ***(Replaces 348 7502)***	.....	1	348 5384	
(T-243)(Left) 62 05-08-15-18-85-88 (WRS)(WIRS)(WBS)	.....	1	348 7527	
(T-243)(Right) 62 05-08-15-18-85-88 (WRS)(WIRS)(WBS)	.....	1	348 7526	
(T-244)(Left) 62 06-07-16-86 (WNRS)	.....	1	348 7501	
(T-244)(Right) 62 06-07-16-86 (WNRS)	.....	1	348 7500	
(T-244)(Left) 62 05-08-15-18-85-88 (WNRS)	.....	1	348 7499	
(T-244)(Right) 62 05-08-15-18-85-88 (WNRS)	.....	1	348 7498	
(T-244)(Left) 62 06-07-16-86 (WRS)(WIRS)(WBS) ***(Replaces 348 7503)***	.....	1	348 5385	
(T-244)(Right) 62 06-07-16-86 (WRS)(WIRS)(WBS) ***(Replaces 348 7502)***	.....	1	348 5384	
(T-244)(Left) 62 05-08-15-18-85-88 (WRS)(WIRS)(WBS)	.....	1	348 7527	
(T-244)(Right) 62 05-08-15-18-85-88 (WRS)(WIRS)(WBS)	.....	1	348 7526	
(T-245)(Left) 62 06-07-16-86 (WNRS)	.....	1	348 7501	
(T-245)(Right) 62 06-07-16-86 (WNRS)	.....	1	348 7500	
(T-245)(Left) 62 05-08-15-18-85-88 (WNRS)	.....	1	348 7499	
(T-245)(Right) 62 05-08-15-18-85-88 (WNRS)	.....	1	348 7498	
(T-245)(Left) 62 05-08-15-18-85-88 (WRS)(WIRS)(WBS)	.....	1	348 7527	
(T-245)(Right) 62 05-08-15-18-85-88 (WRS)(WIRS)(WBS)	.....	1	348 7526	
(T-245)(Left) 62 06-07-16-86 (WRS)(WIRS)(WBS) ***(Replaces 348 7503)***	.....	1	348 5385	
(T-245)(Right) 62 06-07-16-86 (WRS)(WIRS)(WBS) ***(Replaces 348 7502)***	.....	1	348 5384	#
(T-246)(Left) 62 06-07-16-86 (WNRS)	.....	1	348 7501	
(T-246)(Right) 62 06-07-16-86 (WNRS)	.....	1	348 7500	
(T-246)(Left) 62 05-08-15-18-85-88 (WNRS)	.....	1	348 7499	
(T-246)(Right) 62 05-08-15-18-85-88 (WNRS)	.....	1	348 7498	
(T-246)(Left) 62 06-07-16-86 (WRS)(WIRS)(WBS) ***(Replaces 348 7503)***	.....	1	348 5385	
(T-246)(Right) 62 06-07-16-86 (WRS)(WIRS)(WBS) ***(Replaces 348 7502)***	.....	1	348 5384	
(T-246)(Left) 62 05-08-15-18-85-88 (WRS)(WIRS)(WBS)	.....	1	348 7527	
(T-246)(Right) 62 05-08-15-18-85-88 (WRS)(WIRS)(WBS)	.....	1	348 7526	
(T-248)(Left) 62 06-07-16-86 (WNRS)	.....	1	348 7501	
(T-248)(Right) 62 06-07-16-86 (WNRS)	.....	1	348 7500	
(T-248)(Left) 62 05-08-15-18-85-88 (WNRS)	.....	1	348 7499	

Copyright 1963 American Motors Corp.

GROUP NO. — DESCRIPTION — YEAR and MODEL	PRIMARY GROUP NO.	PER CAR	PART NO.	CODE
(T-248)(Right) 62 05-08-15-18-85-88 (WNRS)	.....	1	348 7498	
(T-248)(Left) 62 06-07-16-86 (WRS)(WIRS)(WBS) ***(Replaces 348 7503)***	.....	1	348 5385	
(T-248)(Right) 62 06-07-16-86 (WRS)(WIRS)(WBS) ***(Replaces 348 7502)***	.....	1	348 5384	
(T-248)(Left) 62 05-08-15-18-85-88 (WRS)(WIRS)(WBS)	.....	1	348 7527	
(T-248)(Right) 62 05-08-15-18-85-88 (WRS)(WIRS)(WBS)	.....	1	348 7526	
(T-249)(Left) 62 06-07-16-86 (WNRS)	.....	1	348 7501	
(T-249)(Right) 62 06-07-16-86 (WNRS)	.....	1	348 7500	
(T-249)(Left) 62 05-08-15-18-85-88 (WNRS)	.....	1	348 7499	
(T-249)(Right) 62 05-08-15-18-85-88 (WNRS)	.....	1	348 7498	
(T-249)(Left) 62 06-07-16-86 (WRS)(WIRS)(WBS) ***(Replaces 348 7503)***	.....	1	348 5385	
(T-249)(Right) 62 06-07-16-86 (WRS)(WIRS)(WBS) ***(Replaces 348 7502)***	.....	1	348 5384	
(T-249)(Left) 62 05-08-15-18-85-88 (WRS)(WIRS)(WBS)	.....	1	348 7527	
(T-249)(Right) 62 05-08-15-18-85-88 (WRS)(WIRS)(WBS)	.....	1	348 7526	
(T-251)(Left) 62 15-18-85 (WNRS)	.....	1	349 7169	
(T-251)(Right) 62 15-18-85 (WNRS)	.....	1	349 7168	
(T-251)(Left) 62 16-86 (WNRS)	.....	1	349 7015	
(T-251)(Right) 62 16-86 (WNRS)	.....	1	349 7014	
(T-251)(Left) 62 16-86-(WRS)(WIRS)	.....	1	348 6209	
(T-251)(Right) 62 16-86 (WRS)(WIRS)	.....	1	348 6208	
(T-251)(Left) 62 15-18 (WRS)(WIRS)	.....	1	348 6203	
(T-251)(Right) 62 15-18 (WRS)(WIRS)	.....	1	348 6202	
(T-252)(Left) 62 16-86 (WIRS)	.....	1	348 6209	
(T-252)(Right) 62 16-86 (WIRS)	.....	1	348 6208	
(T-252)(Left) 62 15-18-85 (WIRS)	.....	1	348 6203	
(T-252)(Right) 62 15-18-85	.....	1	348 6202	
(T-262)(Left) 62 16 (WNRS)	.....	1	349 7015	
(T-262)(Right) 62 16 (WNRS)	.....	1	349 7014	
(T-262)(Left) 62 16 (WRS)(WIRS)	.....	1	348 6209	
(T-262)(Right) 62 16 (WRS)(WIRS)	.....	1	348 6208	
(T-262)(Left) 62 15-18 (WNRS)	.....	1	349 7169	
(T-262)(Right) 62 15-18 (WNRS)	.....	1	349 7168	
(T-262)(Left) 62 15-18 (WRS)(WIRS)	.....	1	348 6203	
(T-262)(Right) 62 15-18 (WRS)(WIRS)	.....	1	348 6202	
(T-263)(Left) 62 16 (WNRS)	.....	1	349 7017	
(T-263)(Right) 62 16 (WNRS)	.....	1	349 7016	
(T-263)(Left) 62 16 (WRS)(WIRS)	.....	1	346 2395	
(T-263)(Right) 62 16 (WRS)(WIRS)	.....	1	346 2394	
(T-263)(Left) 62 15-18 (WNRS)	.....	1	349 7171	
(T-263)(Right) 62 15-18 (WNRS)	.....	1	349 7170	
(T-263)(Left) 62 15-18 (WRS)(WIRS)	.....	1	347 0361	
(T-263)(Right) 62 15-18 (WRS)(WIRS)	.....	1	347 0360	
(T-264)(Left) 62 16 (WNRS)	.....	1	349 7019	
(T-264)(Right) 62 16 (WNRS)	.....	1	349 7018	
(T-264)(Left) 62 16 (WRS)(WIRS)	.....	1	346 2397	
(T-264)(Right) 62 16 (WRS)(WIRS)	.....	1	346 2396	
(T-264)(Left) 62 15-18 (WNRS)	.....	1	349 7173	
(T-264)(Right) 62 15-18 (WNRS)	.....	1	349 7172	#
(T-264)(Left) 62 15-18 (WRS)(WIRS)	.....	1	347 0363	
(T-264)(Right) 62 15-18 (WRS)(WIRS)	.....	1	347 0362	
(T-265)(Left) 62 16 (WNRS)	.....	1	349 7015	
(T-265)(Right) 62 16 (WNRS)	.....	1	349 7014	
(T-265)(Left) 62 16 (WRS)(WIRS)	.....	1	348 6209	
(T-265)(Right) 62 16 (WRS)(WIRS)	.....	1	348 6208	
(T-265)(Left) 62 15-18 (WNRS)	.....	1	349 7169	
(T-265)(Right) 62 15-18 (WNRS)	.....	1	349 7168	
(T-265)(Left) 62 15-18 (WRS)(WIRS)	.....	1	348 6203	
(T-265)(Right) 62 15-18 (WRS)(WIRS)	.....	1	348 6202	
(T-266)(Left) 62 16 (WNRS)	.....	1	349 7021	

Copyright 1963 American Motors Corp.

GROUP NO. — DESCRIPTION — YEAR and MODEL	PRIMARY GROUP NO.	PER CAR	PART NO.	CODE
(T-266)(Right) 62 16 (WNRS)	.....	1	349 7020	
(T-266)(Left) 62 16 (WRS)(WIRS)	.....	1	346 2399	
(T-266)(Right) 62 16 (WRS)(WIRS)	.....	1	346 2398	
(T-266)(Left) 62 15-18 (WNRS)	.....	1	349 7175	
(T-266)(Right) 62 15-18 (WNRS)	.....	1	349 7174	
(T-266)(Left) 62 15-18 (WRS)(WIRS)	.....	1	347 0365	
(T-266)(Right) 62 15-18 (WRS)(WIRS)	.....	1	347 0364	
(T-272)(Left) 62 16 (WNRS)	.....	1	348 7501	
(T-272)(Right) 62 16 (WNRS)	.....	1	348 7500	
(T-272)(Left) 62 16 (WRS)(WIRS) ***(Replaces 348 7503)***	.....	1	348 5385	
(T-272)(Right) 62 16 (WRS)(WIRS) ***(Replaces 348 7502)***	.....	1	348 5384	
(T-272)(Left) 62 15-18 (WNRS)	.....	1	348 7499	
(T-272)(Right) 62 15-18 (WNRS)	.....	1	348 7498	
(T-272)(Left) 62 15-18 (WRS)(WIRS)	.....	1	348 7527	
(T-272)(Right) 62 15-18 (WRS)(WIRS)	.....	1	348 7526	
(T-273)(Left) 62 16 (WNRS)	.....	1	348 7501	
(T-273)(Right) 62 16 (WNRS)	.....	1	348 7500	
(T-273)(Left) 62 16 (WRS)(WIRS) ***(Replaces 348 7503)***	.....	1	348 5385	
(T-273)(Right) 62 16 (WRS)(WIRS) ***(Replaces 348 7502)***	.....	1	348 5384	
(T-273)(Left) 62 15-18 (WNRS)	.....	1	348 7499	
(T-273)(Right) 62 15-18 (WNRS)	.....	1	348 7498	
(T-273)(Left) 62 15-18 (WRS)(WIRS)	.....	1	348 7527	
(T-273)(Right) 62 15-18 (WRS)(WIRS)	.....	1	348 7526	
(T-274)(Left) 62 16 (WNRS)	.....	1	348 7501	
(T-274)(Right) 62 16 (WNRS)	.....	1	348 7500	
(T-274)(Left) 62 16 (WRS)(WIRS) ***(Replaces 348 7503)***	.....	1	348 5385	
(T-274)(Right) 62 16 (WRS)(WIRS) ***(Replaces 348 7502)***	.....	1	348 5384	
(T-274)(Left) 62 15-18 (WNRS)	.....	1	348 7499	
(T-274)(Right) 62 15-18 (WNRS)	.....	1	348 7498	
(T-274)(Left) 62 15-18 (WRS)(WIRS)	.....	1	348 7527	
(T-274)(Right) 62 15-18 (WRS)(WIRS)	.....	1	348 7526	
(T-275)(Left) 62 16 (WNRS)	.....	1	348 7501	
(T-275)(Right) 62 16 (WNRS)	.....	1	348 7500	
(T-275)(Left) 62 16 (WRS)(WIRS) ***(Replaces 348 7503)***	.....	1	348 5385	
(T-275)(Right) 62 16 (WRS)(WIRS) ***(Replaces 348 7502)***	.....	1	348 5384	
(T-275)(Left) 62 15-18 (WNRS)	.....	1	348 7499	
(T-275)(Right) 62 15-18 (WNRS)	.....	1	348 7498	
(T-275)(Left) 62 15-18 (WRS)(WIRS)	.....	1	348 7527	
(T-275)(Right) 62 15-18 (WRS)(WIRS)	.....	1	348 7526	
(T-276)(Left) 62 16 (WNRS)	.....	1	348 7501	
(T-276)(Right) 62 16 (WNRS)	.....	1	348 7500	
(T-276)(Left) 62 16 (WRS)(WIRS) ***(Replaces 348 7503)***	.....	1	348 5385	
(T-276)(Right) 62 16 (WRS)(WIRS) ***(Replaces 348 7502)***	.....	1	348 5384	
(T-276)(Left) 62 15-18 (WNRS)	.....	1	348 7499	
(T-276)(Right) 62 15-18 (WNRS)	.....	1	348 7498	
(T-276)(Left) 62 15-18 (WRS)(WIRS)	.....	1	348 7527	
(T-276)(Right) 62 15-18 (WRS)(WIRS)	.....	1	348 7526	
(T-278)(Left) 62 16 (WNRS)	.....	1	348 7501	
(T-278)(Right) 62 16 (WNRS)	.....	1	348 7500	
(T-278)(Left) 62 16 (WRS)(WIRS) ***(Replaces 348 7503)***	.....	1	348 5385	#
(T-278)(Right) 62 16 (WRS)(WIRS) ***(Replaces 348 7502)***	.....	1	348 5384	
(T-278)(Left) 62 15-18 (WNRS)	.....	1	348 7499	
(T-278)(Right) 62 15-18 (WNRS)	.....	1	348 7498	
(T-278)(Left) 62 15-18 (WRS)(WIRS)	.....	1	348 7527	
(T-278)(Right) 62 15-18 (WRS)(WIRS)	.....	1	348 7526	
(T-279)(Left) 62 16 (WNRS)	.....	1	348 7501	
(T-279)(Right) 62 16 (WNRS)	.....	1	348 7500	
(T-279)(Left) 62 16 (WRS)(WIRS) ***(Replaces 348 7503)***	.....	1	348 5385	

Copyright 1963 American Motors Corp.

GROUP NO. — DESCRIPTION — YEAR and MODEL	PRIMARY GROUP NO.	PER CAR	PART NO.	CODE
(T-279)(Right) 62 16 (WRS)(WIRS) ...(Replaces 348 7502)	.....	1	348 5384	
(T-279)(Left) 62 15-18 (WNRS)	.....	1	348 7499	
(T-279)(Right) 62 15-18 (WNRS)	.....	1	348 7498	
(T-279)(Left) 62 15-18 (WRS)(WIRS)	.....	1	348 7527	
(T-279)(Right) 62 15-18 (WRS)(WIRS)	.....	1	348 7526	
(T-282)(Left) 62 85-88 (WNRS)(WRS)(WIRS) ...(Replaces 348 6203)	.....	1	349 7169	
(T-282)(Right) 62 85-88 (WNRS)(WRS)(WIRS) ...(Replaces 348 6202)	.....	1	349 7168	
(T-282)(Left) 62 86 (WNRS)	.....	1	349 7015	
(T-282)(Right) 62 86 (WNRS)	.....	1	349 7014	
(T-282)(Left) 62 86 (WRS)(WIRS)	.....	1	348 6209	
(T-282)(Right) 62 86 (WRS)(WIRS)	.....	1	348 6208	
(T-283)(Left) 62 85-88 (WNRS)	.....	1	349 7171	
(T-283)(Right) 62 85-88 (WNRS)	.....	1	349 7170	
(T-283)(Left) 62 85-88 (WRS)(WIRS)	.....	1	347 0361	
(T-283)(Right) 62 85-88 (WRS)(WIRS)	.....	1	347 0360	
(T-283)(Left) 62 86 (WNRS)	.....	1	349 7017	
(T-283)(Right) 62 86 (WNRS)	.....	1	349 7016	
(T-283)(Left) 62 86 (WRS)(WIRS)	.....	1	346 2395	
(T-283)(Right) 62 86 (WRS)(WIRS)	.....	1	346 2394	
(T-284)(Left) 62 85-88 (WNRS)	.....	1	349 7173	
(T-284)(Right) 62 85-88 (WNRS)	.....	1	349 7172	
(T-284)(Left) 62 85-88 (WRS)(WIRS)	.....	1	347 0363	
(T-284)(Right) 62 85-88 (WRS)(WIRS)	.....	1	347 0362	
(T-284)(Left) 62 86 (WNRS)	.....	1	349 7019	
(T-284)(Right) 62 86 (WNRS)	.....	1	349 7018	
(T-284)(Left) 62 86 (WRS)(WIRS)	.....	1	346 2397	
(T-284)(Right) 62 86 (WRS)(WIRS)	.....	1	346 2396	
(T-285)(Left) 62 85-88 (WNRS)(WRS)(WIRS) ...(Replaces 348 6202)	.....	1	349 7169	
(T-285)(Right) 62 85-88 (WNRS)(WRS)(WIRS) ...(Replaces 348 6203)	.....	1	349 7168	
(T-285)(Left) 62 86 (WNRS)	.....	1	349 7015	
(T-285)(Right) 62 86 (WNRS)	.....	1	349 7014	
(T-285)(Left) 62 86 (WRS)(WIRS)	.....	1	348 6209	
(T-285)(Right) 62 86 (WRS)(WIRS)	.....	1	348 6208	
(T-286)(Left) 62 85-88 (WNRS)	.....	1	349 7175	
(T-286)(Right) 62 85-88 (WNRS)	.....	1	349 7174	
(T-286)(Left) 62 85-88 (WRS)(WIRS)	.....	1	347 0365	
(T-286)(Right) 62 85-88 (WRS)(WIRS)	.....	1	347 0364	
(T-286)(Left) 62 86 (WNRS)	.....	1	349 7021	
(T-286)(Right) 62 86 (WNRS)	.....	1	349 7020	
(T-286)(Left) 62 86 (WRS)(WIRS)	.....	1	346 2399	
(T-286)(Right) 62 86 (WRS)(WIRS)	.....	1	346 2398	
(T-292)(Left) 62 85-88 (WNRS)	.....	1	348 7499	
(T-292)(Right) 62 85-88 (WNRS)	.....	1	348 7498	
(T-292)(Left) 62 85-88 (WRS)(WIRS)(WBS)	.....	1	348 7527	
(T-292)(Right) 62 85-88 (WRS)(WIRS)(WBS)	.....	1	348 7526	
(T-292)(Left) 62 86 (WNRS)	.....	1	348 7501	
(T-292)(Right) 62 86 (WNRS)	.....	1	348 7500	
(T-292)(Left) 62 86 (WRS)(WIRS)(WBS) ...(Replaces 348 7503)	.....	1	348 5385	
(T-292)(Right) 62 86 (WRS)(WIRS)(WBS) ...(Replaces 348 7502)	.....	1	348 5384	
(T-293)(Left) 62 85-88 (WNRS)	.....	1	348 7499	
(T-293)(Right) 62 85-88 (WNRS)	.....	1	348 7498	
(T-293)(Left) 62 85-88 (WRS)(WIRS)(WBS)	.....	1	348 7527	
(T-293)(Right) 62 85-88 (WRS)(WIRS)(WBS)	.....	1	348 7526	
(T-293)(Left) 62 86 (WNRS)	.....	1	348 7501	
(T-293)(Right) 62 86 (WNRS)	.....	1	348 7500	
(T-293)(Left) 62 86 (WRS)(WIRS)(WBS) ...(Replaces 348 7503)	.....	1	348 5385	
(T-293)(Right) 62 86 (WRS)(WIRS)(WBS) ...(Replaces 348 7502)	.....	1	348 5384	
(T-294)(Left) 62 85-88 (WNRS)	.....	1	348 7499	

Copyright 1963 American Motors Corp.

GROUP NO. — DESCRIPTION — YEAR and MODEL	PRIMARY GROUP NO.	PER CAR	PART NO.	CODE
(T-279)(Right) 62 16 (WRS)(WIRS) ...(Replaces 348 7502)	.....	1	348 5384	
(T-279)(Left) 62 15-18 (WNRS)	.....	1	348 7499	
(T-279)(Right) 62 15-18 (WNRS)	.....	1	348 7498	
(T-279)(Left) 62 15-18 (WRS)(WIRS)	.....	1	348 7527	
(T-279)(Right) 62 15-18 (WRS)(WIRS)	.....	1	348 7526	
(T-282)(Left) 62 85-88 (WNRS)(WRS)(WIRS) ...(Replaces 348 6203)	.....	1	349 7169	
(T-282)(Right) 62 85-88 (WNRS)(WRS)(WIRS) ...(Replaces 348 6202)	.....	1	349 7168	
(T-282)(Left) 62 86 (WNRS)	.....	1	349 7015	
(T-282)(Right) 62 86 (WNRS)	.....	1	349 7014	
(T-282)(Left) 62 86 (WRS)(WIRS)	.....	1	348 6209	
(T-282)(Right) 62 86 (WRS)(WIRS)	.....	1	348 6208	
(T-283)(Left) 62 85-88 (WNRS)	.....	1	349 7171	
(T-283)(Right) 62 85-88 (WNRS)	.....	1	349 7170	
(T-283)(Left) 62 85-88 (WRS)(WIRS)	.....	1	347 0361	
(T-283)(Right) 62 85-88 (WRS)(WIRS)	.....	1	347 0360	
(T-283)(Left) 62 86 (WNRS)	.....	1	349 7017	
(T-283)(Right) 62 86 (WNRS)	.....	1	349 7016	
(T-283)(Left) 62 86 (WRS)(WIRS)	.....	1	346 2395	
(T-283)(Right) 62 86 (WRS)(WIRS)	.....	1	346 2394	
(T-284)(Left) 62 85-88 (WNRS)	.....	1	349 7173	
(T-284)(Right) 62 85-88 (WNRS)	.....	1	349 7172	
(T-284)(Left) 62 85-88 (WRS)(WIRS)	.....	1	347 0363	
(T-284)(Right) 62 85-88 (WRS)(WIRS)	.....	1	347 0362	
(T-284)(Left) 62 86 (WNRS)	.....	1	349 7019	
(T-284)(Right) 62 86 (WNRS)	.....	1	349 7018	
(T-284)(Left) 62 86 (WRS)(WIRS)	.....	1	346 2397	
(T-284)(Right) 62 86 (WRS)(WIRS)	.....	1	346 2396	
(T-285)(Left) 62 85-88 (WNRS)(WRS)(WIRS) ...(Replaces 348 6202)	.....	1	349 7169	
(T-285)(Right) 62 85-88 (WNRS)(WRS)(WIRS) ...(Replaces 348 6203)	.....	1	349 7168	
(T-285)(Left) 62 86 (WNRS)	.....	1	349 7015	
(T-285)(Right) 62 86 (WNRS)	.....	1	349 7014	
(T-285)(Left) 62 86 (WRS)(WIRS)	.....	1	348 6209	
(T-285)(Right) 62 86 (WRS)(WIRS)	.....	1	348 6208	
(T-286)(Left) 62 85-88 (WNRS)	.....	1	349 7175	
(T-286)(Right) 62 85-88 (WNRS)	.....	1	349 7174	
(T-286)(Left) 62 85-88 (WRS)(WIRS)	.....	1	347 0365	
(T-286)(Right) 62 85-88 (WRS)(WIRS)	.....	1	347 0364	
(T-286)(Left) 62 86 (WNRS)	.....	1	349 7021	
(T-286)(Right) 62 86 (WNRS)	.....	1	349 7020	
(T-286)(Left) 62 86 (WRS)(WIRS)	.....	1	346 2399	
(T-286)(Right) 62 86 (WRS)(WIRS)	.....	1	346 2398	
(T-292)(Left) 62 85-88 (WNRS)	.....	1	348 7499	
(T-292)(Right) 62 85-88 (WNRS)	.....	1	348 7498	
(T-292)(Left) 62 85-88 (WRS)(WIRS)(WBS)	.....	1	348 7527	
(T-292)(Right) 62 85-88 (WRS)(WIRS)(WBS)	.....	1	348 7526	
(T-292)(Left) 62 86 (WNRS)	.....	1	348 7501	
(T-292)(Right) 62 86 (WNRS)	.....	1	348 7500	
(T-292)(Left) 62 86 (WRS)(WIRS)(WBS) ...(Replaces 348 7503)	.....	1	348 5385	
(T-292)(Right) 62 86 (WRS)(WIRS)(WBS) ...(Replaces 348 7502)	.....	1	348 5384	
(T-293)(Left) 62 85-88 (WNRS)	.....	1	348 7499	
(T-293)(Right) 62 85-88 (WNRS)	.....	1	348 7498	
(T-293)(Left) 62 85-88 (WRS)(WIRS)(WBS)	.....	1	348 7527	
(T-293)(Right) 62 85-88 (WRS)(WIRS)(WBS)	.....	1	348 7526	
(T-293)(Left) 62 86 (WNRS)	.....	1	348 7501	
(T-293)(Right) 62 86 (WNRS)	.....	1	348 7500	
(T-293)(Left) 62 86 (WRS)(WIRS)(WBS) ...(Replaces 348 7503)	.....	1	348 5385	
(T-293)(Right) 62 86 (WRS)(WIRS)(WBS) ...(Replaces 348 7502)	.....	1	348 5384	
(T-294)(Left) 62 85-88 (WNRS)	.....	1	348 7499	

Copyright 1963 American Motors Corp.

GROUP NO. — DESCRIPTION — YEAR and MODEL	PRIMARY GROUP NO.	PER CAR	PART NO.	CODE
(T-294)(Right) 62 85-88 (WNRS)	.....	1	348 7498	
(T-294)(Left) 62 85-88 (WRS)(WIRS)(WBS)	.....	1	348 7527	
(T-294)(Right) 62 85-88 (WRS)(WIRS)(WBS)	.....	1	348 7526	
(T-294)(Left) 62 86 (WNRS)	.....	1	348 7501	
(T-294)(Right) 62 86 (WNRS)	.....	1	348 7500	
(T-294)(Left) 62 86 (WRS)(WIRS)(WBS) ***(Replaces 348 7503)***	.....	1	348 5385	
(T-294)(Right) 62 86 (WRS)(WIRS)(WBS) ***(Replaces 348 7502)***	.....	1	348 5384	
(T-295)(Left) 62 85-88 (WNRS)	.....	1	348 7499	
(T-295)(Right) 62 85-88 (WNRS)	.....	1	348 7498	
(T-295)(Left) 62 85-88 (WRS)(WIRS)(WBS)	.....	1	348 7527	
(T-295)(Right) 62 85-88 (WRS)(WIRS)(WBS)	.....	1	348 7526	
(T-295)(Left) 62 86 (WNRS)	.....	1	348 7501	
(T-295)(Right) 62 86 (WNRS)	.....	1	348 7500	
(T-295)(Left) 62 86 (WRS)(WIRS)(WBS) ***(Replaces 348 7503)***	.....	1	348 5385	
(T-295)(Right) 62 86 (WRS)(WIRS)(WBS) ***(Replaces 348 7502)***	.....	1	348 5384	
(T-296)(Left) 62 85-88 (WNRS)	.....	1	348 7499	
(T-296)(Right) 62 85-88 (WNRS)	.....	1	348 7498	
(T-296)(Left) 62 85-88 (WRS)(WIRS)(WBS)	.....	1	348 7527	
(T-296)(Right) 62 85-88 (WRS)(WIRS)(WBS)	.....	1	348 7526	#
(T-296)(Left) 62 86 (WNRS)	.....	1	348 7501	#
(T-296)(Right) 62 86 (WNRS)	.....	1	348 7500	
(T-296)(Left) 62 86 (WRS)(WIRS)(WBS) ***(Replaces 348 7503)***	.....	1	348 5385	
(T-296)(Right) 62 86 (WRS)(WIRS)(WBS) ***(Replaces 348 7502)***	.....	1	348 5384	
(T-298)(Left) 62 85-88 (WNRS)	.....	1	348 7499	
(T-298)(Right) 62 85-88 (WNRS)	.....	1	348 7498	
(T-298)(Left) 62 85-88 (WRS)(WIRS)(WBS)	.....	1	348 7527	
(T-298)(Right) 62 85-88 (WRS)(WIRS)(WBS)	.....	1	348 7526	
(T-298)(Left) 62 86 (WNRS)	.....	1	348 7501	
(T-298)(Right) 62 86 (WNRS)	.....	1	348 7500	
(T-298)(Left) 62 86 (WRS)(WIRS)(WBS) ***(Replaces 348 7503)***	.....	1	348 5385	
(T-298)(Right) 62 86 (WRS)(WIRS)(WBS) ***(Replaces 348 7502)***	.....	1	348 5384	
(T-299)(Left) 62 85-88 (WNRS)	.....	1	348 7499	
(T-299)(Right) 62 85-88 (WNRS)	.....	1	348 7498	
(T-299)(Left) 62 85-88 (WRS)(WIRS)(WRS)	.....	1	348 7527	
(T-299)(Right) 62 85-88 (WRS)(WIRS)(WBS)	.....	1	348 7526	
(T-299)(Left) 62 86 (WNRS)	.....	1	348 7501	
(T-299)(Right) 62 86 (WNRS)	.....	1	348 7500	
(T-299)(Left) 62 86 (WRS)(WIRS)(WBS) ***(Replaces 348 7503)***	.....	1	348 5385	
(T-299)(Right) 62 86 (WRS)(WIRS)(WBS) ***(Replaces 348 7502)***	.....	1	348 5384	
(T-312)(Left) 63 01 (WFS-Note 29.120-1 Type 1) (WNRS-Note 29.120-1 Type 1) ***(Ref. Pr. List)***	.....	1	349 0947	
(T-312)(Right) 63 01 (WFS-Note 29.120-1 Type 1) (WNRS-Note 29.120-1 Type 1) ***(Ref. Pr. List)***	.....	1	349 0946	
(T-312)(Left) 63 01 (WFS-Note 29.120-1 Type 2)(WNRS-Note 29.120-1 Type 2)	.....	1	349 0939	
(T-312)(Right) 63 01 (WFS-Note 29.120-1 Type 2)(WNRS-Note 29.120-1 Type 2)	.....	1	349 0938	
(T-312)(Left) 63 01 (WRS-Note 29.120-1 Type 1) (WIRS-Note 29.120-1 Type 1) ***(Ref. Pr. List)***	.....	1	349 0943	
(T-312)(Right) 63 01 (WRS-Note 29.120-1 Type 1) (WIRS-Note 29.120-1 Type 1) ***(Ref. Pr. List)***	.....	1	349 0942	
(T-312)(Left) 63 01 (WRS-Note 29.120-1 Type 2)(WIRS-Note 29.120-1 Type 2)	.....	1	349 0935	
(T-312)(Right) 63 01 (WRS-Note 29.120-1 Type 2)(WIRS-Note 29.120-1 Type 2)	.....	1	349 0934	
(T-313)(Left) 63 01 (WFS-Note 29.120-1 Type 1) (WNRS-Note 29.120-1 Type 1) ***(Ref. Pr. List)***	.....	1	349 8545	
(T-313)(Right) 63 01 (WFS-Note 29.120-1 Type 1) (WNRS-Note 29.120-1 Type 1) ***(Ref. Pr. List)***	.....	1	349 8544	
(T-313)(Left) 63 01 (WFS-Note 29.120-1 Type 2)(WNRS-Note 29.120-1 Type 2)	.....	1	349 8567	
(T-313)(Right) 63 01 (WFS-Note 29.120-1 Type 2)(WNRS-Note 29.120-1 Type 2)	.....	1	349 8566	
(T-313)(Left) 63 01 (WRS-Note 29.120-1 Type 1) (WIRS-Note 29.120-1 Type 1) ***(Ref. Pr. List)***	.....	1	349 8535	

Copyright 1963 American Motors Corp.

GROUP NO. — DESCRIPTION — YEAR and MODEL	PRIMARY GROUP NO.	PER CAR	PART NO.	CODE
(T-313)(Right) 63 01 (WRS-Note 29.120-1 Type 1) (WIRS-Note 29.120-1 Type 1)...(Ref. Pr. List)	.....	1	349 8534	
(T-313)(Left) 63 01 (WRS-Note 29.120-1 Type 2)(WIRS-Note 29.120-1 Type 2)..	.....	1	349 8577	
(T-313)(Right) 63 01 (WRS-Note 29.120-1 Type 2)(WIRS-Note 29.120-1 Type 2).	.....	1	349 8576	
(T-314)(Left) 63 01 (WFS-Note 29.120-1 Type 1) (WNRS-Note 29.120-1 Type 1)...(Ref. Pr. List)	.....	1	349 8547	
(T-314)(Right) 63 01 (WFS-Note 29.120-1 Type 1) (WNRS-Note 29.120-1 Type 1)...(Ref. Pr. List)	.....	1	349 8546	
(T-314)(Left) 63 01 (WFS-Note 29.120-1 Type 2)(WNRS-Note 29.120-1 Type 2).	.....	1	349 8569	
(T-314)(Right) 63 01 (WFS-Note 29.120-1 Type 2)(WNRS-Note 29.120-1 Type 2)	.....	1	349 8568	
(T-314)(Left) 63 01 (WRS-Note 29.120-1 Type 1) (WIRS-Note 29.120-1 Type 1)...(Ref. Pr. List)	.....	1	349 8537	
(T-314)(Right) 63 01 (WRS-Note 29.120-1 Type 1) (WIRS-Note 29.120-1 Type 1)...(Ref. Pr. List)	.....	1	349 8536	
(T-314)(Left) 63 01 (WRS-Note 29.120-1 Type 2)(WIRS-Note 29.120-1 Type 2)..	.....	1	349 8579	
(T-314)(Right) 63 01 (WRS-Note 29.120-1 Type 2)(WIRS-Note 29.120-1 Type 2).	.....	1	349 8578	
(T-315)(Left) 63 01 (WFS-Note 29.120-1 Type 1) (WNRS-Note 29.120-1 Type 1)...(Ref. Pr. List)	.....	1	349 8549	
(T-315)(Right) 63 01 (WFS-Note 29.120-1 Type 1) (WNRS-Note 29.120-1 Type 1)...(Ref. Pr. List)	.....	1	349 8548	
(T-315)(Left) 63 01 (WFS-Note 29.120-1 Type 2)(WNRS-Note 29.120-1 Type 2).	.....	1	349 8571	
(T-315)(Right) 63 01 (WFS-Note 29.120-1 Type 2)(WNRS-Note 29.120-1 Type 2)	.....	1	349 8570	
(T-315)(Left) 63 01 (WRS-Note 29.120-1 Type 1) (WIRS-Note 29.120-1 Type 1)...(Ref. Pr. List)	.....	1	349 8539	
(T-315)(Right) 63 01 (WRS-Note 29.120-1 Type 1) (WIRS-Note 29.120-1 Type 1)...(Ref. Pr. List)	.....	1	349 8538	
(T-315)(Left) 63 01 (WRS-Note 29.120-1 Type 2)(WIRS-Note 29.120-1 Type 2)..	.....	1	349 8581	
(T-315)(Right) 63 01 (WRS-Note 29.120-1 Type 2)(WIRS-Note 29.120-1 Type 2).	.....	1	349 8580	
(T-316)(Left) 63 01 (WFS-Note 29.120-1 Type 1) (WNRS-Note 29.120-1 Type 1)...(Ref. Pr. List)	.....	1	349 0949	
(T-316)(Right) 63 01 (WFS-Note 29.120-1 Type 1) (WNRS-Note 29.120-1 Type 1)...(Ref. Pr. List)	.....	1	349 0948	
(T-316)(Left) 63 01 (WFS-Note 29.120-1 Type 2)(WNRS-Note 29.120-1 Type 2).	.....	1	349 0941	
(T-316)(Right) 63 01 (WFS-Note 29.120-1 Type 2)(WNRS-Note 29.120-1 Type 2)	.....	1	349 0940	
(T-316)(Left) 63 01 (WRS-Note 29.120-1 Type 1) (WIRS-Note 29.120-1 Type 1)...(Ref. Pr. List)	.....	1	349 0945	
(T-316)(Right) 63 01 (WRS-Note 29.120-1 Type 1) (WIRS-Note 29.120-1 Type 1)...(Ref. Pr. List)	.....	1	349 0944	
(T-316)(Left) 63 01 (WRS-Note 29.120-1 Type 2)(WIRS-Note 29.120-1 Type 2)..	.....	1	349 0937	
(T-316)(Right) 63 01 (WRS-Note 29.120-1 Type 2)(WIRS-Note 29.120-1 Type 2)	.....	1	349 0936	
(T-322)(Left) 63 01 (WFS)(WNRS)...	.....	1	348 5387	
(T-322)(Right) 63 01 (WFS)(WNRS)...	.....	1	348 5386	
(T-322)(Left) 63 01 (WRS)(WIRS)...(Replaces 348 7503)	.....	1	348 5385	
(T-322)(Right) 63 01 (WRS)(WIRS)...(Replaces 348 7502)	.....	1	348 5384	
(T-323)(Left) 63 01 (WFS)(WNRS)...	.....	1	348 5387	
(T-323)(Right) 63 01 (WFS)(WNRS)...	.....	1	348 5386	
(T-323)(Left) 63 01 (WRS)(WIRS)...(Replaces 348 7503)	.....	1	348 5385	
(T-323)(Right) 63 01 (WRS)(WIRS)...(Replaces 348 7502)	.....	1	348 5384	
(T-324)(Left) 63 01 (WFS)(WNRS)...	.....	1	348 5387	
(T-324)(Right) 63 01 (WFS)(WNRS)...	.....	1	348 5386	
(T-324)(Left) 63 01 (WRS)(WIRS)...(Replaces 348 7503)	.....	1	348 5385	
(T-324)(Right) 63 01 (WRS)(WIRS)...(Replaces 348 7502)	.....	1	348 5384	
(T-325)(Left) 63 01 (WFS)(WNRS)...	.....	1	348 5387	
(T-325)(Right) 63 01 (WFS)(WNRS)...	.....	1	348 5386	
(T-325)(Left) 63 01 (WRS)(WIRS)...(Replaces 348 7503)	.....	1	348 5385	
(T-325)(Right) 63 01 (WRS)(WIRS)...(Replaces 348 7502)	.....	1	348 5384	
(T-326)(Left) 63 01 (WFS)(WNRS)...	.....	1	348 5387	
(T-326)(Right) 63 01 (WFS)(WNRS)...	.....	1	348 5386	

Copyright 1963 American Motors Corp.

GROUP NO. — DESCRIPTION — YEAR and MODEL	PRIMARY GROUP NO.	PER CAR	PART NO.	CODE
(T-326)(Left) 63 01 (WRS)(WIRS) ...(Replaces 348 7503)	.....	1	348 5385	
(T-326)(Right) 63 01 (WRS)(WIRS) ...(Replaces 348 7502)	.....	1	348 5384	
(T-327)(Left) 63 01 (WFS)(WNRS)	.....	1	348 5387	
(T-327)(Right) 63 01 (WFS)(WNRS)	.....	1	348 5386	
(T-327)(Left) 63 01 (WRS)(WIRS) ...(Replaces 348 7503)	.....	1	348 5385	
(T-327)(Right) 63 01 (WRS)(WIRS) ...(Replaces 348 7502)	.....	1	348 5384	
(T-332)(Left) 63 01 (WFS)(WNRS)	.....	1	348 5387	
(T-332)(Right) 63 01 (WFS)(WNRS)	.....	1	348 5386	
(T-332)(Left) 63 01 (WRS)(WIRS) ...(Replaces 348 7503)	.....	1	348 5385	
(T-332)(Right) 63 01 (WRS)(WIRS) ...(Replaces 348 7502)	.....	1	348 5384	
(T-333)(Left) 63 01 (WFS)(WNRS)	.....	1	348 5387	
(T-333)(Right) 63 01 (WFS)(WNRS)	.....	1	348 5386	
(T-333)(Left) 63 01 (WRS)(WIRS) ...(Replaces 348 7503)	.....	1	348 5385	
(T-333)(Right) 63 01 (WRS)(WIRS) ...(Replaces 348 7502)	.....	1	348 5384	
(T-334)(Left) 63 01 (WFS)(WNRS)	.....	1	348 5387	
(T-334)(Right) 63 01 (WFS)(WNRS)	.....	1	348 5386	
(T-334)(Left) 63 01 (WRS)(WIRS) ...(Replaces 348 7503)	.....	1	348 5385	
(T-334)(Right) 63 01 (WRS)(WIRS) ...(Replaces 348 7502)	.....	1	348 5384	#
(T-335)(Left) 63 01 (WFS)(WNRS)	.....	1	348 5387	
(T-335)(Right) 63 01 (WFS)(WNRS)	.....	1	348 5386	
(T-335)(Left) 63 01 (WRS)(WIRS) ...(Replaces 348 7503)	.....	1	348 5385	
(T-335)(Right) 63 01 (WRS)(WIRS) ...(Replaces 348 7502)	.....	1	348 5384	
(T-336)(Left) 63 01 (WFS)(WNRS)	.....	1	348 5387	
(T-336)(Right) 63 01 (WFS)(WNRS)	.....	1	348 5386	
(T-336)(Left) 63 01 (WRS)(WIRS) ...(Replaces 348 7503)	.....	1	348 5385	
(T-336)(Right) 63 01 (WRS)(WIRS) ..(Replaces 348 7502)	.....	1	348 5384	
(T-337)(Left) 63 01 (WFS)(WNRS)	.....	1	348 5387	
(T-337)(Right) 63 01 (WFS)(WNRS)	.....	1	348 5386	
(T-337)(Left) 63 01 (WRS)(WIRS) ...(Replaces 348 7503)	.....	1	348 5385	
(T-337)(Right) 63 01 (WRS)(WIRS) ...(Replaces 348 7502)	.....	1	348 5384	
(T-342)(Left-Inner) 63 01-10-80 (WBS-LFC)	.....	1	351 0295	
(T-342)(Right-Inner) 63 01-10-80 (WBS-LFC)	.....	1	351 0294	
(T-342)(Left-Outer) 63 01-10-80 (WBS)	.....	1	348 7773	
(T-342)(Right-Outer) 63 01-10-80 (WBS)	.....	1	348 7772	
(T-343)(Left-Inner) 63 01-10-80 (WBS-LFC)	.....	1	351 0295	
(T-343)(Right-Inner) 63 01-10-80 (WBS-LFC)	.....	1	351 0294	
(T-343)(Left-Outer) 63 01-10-80 (WBS)	.....	1	348 7773	
(T-343)(Right-Outer) 63 01-10-80 (WBS)	.....	1	348 7772	
(T-344)(Left-Inner) 63 01-10-80 (WBS-LFC)	.....	1	351 0295	
(T-344)(Right-Inner) 63 01-10-80 (WBS-LFC)	.....	1	351 0294	
(T-344)(Left-Outer) 63 01-10-80 (WBS)	.....	1	348 7773	
(T-344)(Right-Outer) 63 01-10-80 (WBS)	.....	1	348 7772	
(T-345)(Left-Inner) 63 01-10-80 (WBS-LFC)	.....	1	351 0295	
(T-345)(Right-Inner) 63 01-10-80 (WBS-LFC)	.....	1	351 0294	
(T-345)(Left-Outer) 63 01-10-80 (WBS)	.....	1	348 7773	
(T-345)(Right-Outer) 63 01-10-80 (WBS)	.....	1	348 7772	
(T-346)(Left-Inner) 63 01-10-80 (WBS-LFC)	.....	1	351 0295	
(T-346)(Right-Inner) 63 01-10-80 (WBS-LFC)	.....	1	351 0294	
(T-346)(Left-Outer) 63 01-10-80 (WBS)	.....	1	348 7773	
(T-346)(Right-Outer) 63 01-10-80 (WBS)	.....	1	348 7772	
(T-347)(Left-Inner) 63 01-10-80 (WBS-LFC)	.....	1	351 0295	
(T-347)(Right-Inner) 63 01-10-80 (WBS-LFC)	.....	1	351 0294	
(T-347)(Left-Outer) 63 01-10-80 (WBS)	.....	1	348 7773	
(T-347)(Right-Outer) 63 01-10-80 (WBS)	.....	1	348 7772	
(T-351)(Left) 63 10-80 (WFS)(WNRS)	.....	1	349 1529	
(T-351)(Right) 63 10-80 (WFS)(WNRS)	.....	1	349 1528	
(T-351)(Left) 63 10-80 (WRS)	.....	1	349 1535	
(T-351)(Right) 63 10-80 (WRS)	.....	1	349 1534	

Copyright 1963 American Motors Corp.

GROUP NO. — DESCRIPTION — YEAR and MODEL	PRIMARY GROUP NO.	PER CAR	PART NO.	CODE
(T-351)(Left) 63 10-80 (WIRS-Note 29.120-1 Type 1) ***(Ref. Pr. List)***	.....	1	349 0943	
(T-351)(Right) 63 10-80 (WIRS-Note 29.120-1 Type 1) ***(Ref. Pr. List)***	.....	1	349 0942	
(T-351)(Left) 63 10-80 (WIRS-Note 29.120-1 Type 2)	.....	1	349 0935	
(T-351)(Right) 63 10-80 (WIRS-Note 29.120-1 Type 2)	.....	1	349 0934	
(T-352)(Left) 63 10-80 (WFS)(WNRS)	.....	1	349 1529	
(T-352)(Right) 63 10-80 (WFS)(WNRS)	.....	1	349 1528	
(T-352)(Left) 63 10-80 (WRS)	.....	1	349 1535	
(T-352)(Right) 63 10-80 (WRS)	.....	1	349 1534	
(T-352)(Left) 63 10-80 (WIRS-Note 29.120-1 Type 1) ***(Ref. Pr. List)***	.....	1	349 0943	
(T-352)(Right) 63 10-80 (WIRS-Note 29.120-1 Type 1) ***(Ref. Pr. List)***	.....	1	349 0942	
(T-352)(Left) 63 10-80 (WIRS-Note 29.120-1 Type 2)	.....	1	349 0935	
(T-352)(Right) 63 10-80 (WIRS-Note 29.120-1 Type 2)	.....	1	349 0934	
(T-353)(Left) 63 10-80 (WFS)(WNRS)	.....	1	349 1531	
(T-353)(Right) 63 10-80 (WFS)(WNRS)	.....	1	349 1530	
(T-353)(Left) 63 10-80 (WRS)	.....	1	349 1537	
(T-353)(Right) 63 10-80 (WRS)	.....	1	349 1536	
(T-353)(Left) 63 10-80 (WIRS-Note 29.120-1 Type 1) ***(Ref. Pr. List)***	.....	1	349 8535	
(T-353)(Right) 63 10-80 (WIRS-Note 29.120-1 Type 1) ***(Ref. Pr. List)***	.....	1	349 8534	
(T-353)(Left) 63 10-80 (WIRS-Note 29.120-1 Type 2)	.....	1	349 8577	
(T-353)(Right) 63 10-80 (WIRS-Note 29.120-1 Type 2)	.....	1	349 8576	
(T-354)(Left) 63 10-80 (WFS)(WNRS)	.....	1	349 1533	
(T-354)(Right) 63 10-80 (WFS)(WNRS)	.....	1	349 1532	
(T-354)(Left) 63 10-80 (WRS)	.....	1	349 1539	
(T-354)(Right) 63 10-80 (WRS)	.....	1	349 1538	
(T-354)(Left) 63 10-80 (WIRS-Note 29.120-1 Type 1) ***(Ref. Pr. List)***	.....	1	349 8537	
(T-354)(Right) 63 10-80 (WIRS-Note 29.120-1 Type 1) ***(Ref. Pr. List)***	.....	1	349 8536	
(T-354)(Left) 63 10-80 (WIRS-Note 29.120-1 Type 2) ***(Ref. Pr. List)***	.....	1	349 8579	
(T-354)(Right) 63 10-80 (WIRS-Note 29.120-1 Type 2) ***(Ref. Pr. List)***	.....	1	349 8578	
(T-362)(Left) 63 15-18 (WFS-Note 29.120-1 Type 1) ***(Ref. Pr. List)***	.....	1	349 0947	
(T-362)(Right) 63 15-18 (WFS-Note 29.120-1 Type 1) ***(Ref. Pr. List)***	.....	1	349 0946	
(T-362)(Left) 63 10 (WFS-Note 29.120-1 Type 2)(WNRS-Note 29.120-1 Type 2)	.....	1	349 0939	
(T-362)(Right) 63 10 (WFS-Note 29.120-1 Type 2)(WNRS-Note 29.120-1 Type 2)	.....	1	349 0938	
(T-362)(Left) 63 15-18 (WRS-Note 29.120-1 Type 1) (WIRS-Note 29.120-1 Type 1) ***(Ref. Pr. List)***	.....	1	349 0943	
(T-362)(Right) 63 15-18 (WRS-Note 29.120-1 Type 1) (WIRS-Note 29.120-1 Type 1) ***(Ref. Pr. List)***	.....	1	349 0942	
(T-362)(Left) 63 10 (WRS-Note 29.120-1 Type 2) (WIRS-Note 29.120-1 Type 2) ***(Ref. Pr. List)***	.....	1	349 0935	
(T-362)(Right) 63 10 (WRS-Note 29.120-1 Type 2) (WIRS-Note 29.120-1 Type 2) ***(Ref. Pr. List)***	.....	1	349 0934	
(T-363)(Left) 63 15-18 (WFS-Note 29.120-1 Type 1) ***(Ref. Pr. List)***	.....	1	349 8545	
(T-363)(Right) 63 15-18 (WFS-Note 29.120-1 Type 1) ***(Ref. Pr. List)***	.....	1	349 8544	
(T-363)(Left) 63 10 (WFS-Note 29.120-1 Type 2)(WNRS-Note 29.120-1 Type 2)	.....	1	349 8567	
(T-363)(Right) 63 10 (WFS-Note 29.120-1 Type 2)(WNRS-Note 29.120-1 Type 2)	.....	1	349 8566	
(T-363)(Left) 63 15-18 (WRS-Note 29.120-1 Type 1) (WIRS-Note 29.120-1 Type 1) ***(Ref. Pr. List)***	.....	1	349 8535	
(T-363)(Right) 63 15-18 (WRS-Note 29.120-1 Type 1) (WIRS-Note 29.120-1 Type 1) ***(Ref. Pr. List)***	.....	1	349 8534	
(T-363)(Left) 63 10 (WRS-Note 29.120-1 Type 2)(WIRS-NOTE 29.120-1 Type 2)	.....	1	349 8577	
(T-363)(Right) 63 10 (WRS-Note 29.120-1 Type 2)(WIRS-Note 29.120-1 Type 2)	.....	1	349 8576	
(T-364)(Left) 63 15-18 (WFS-Note 29.120-1 Type 1) ***(Ref. Pr. List)***	.....	1	349 8547	
(T-364)(Right) 63 15-18 (WFS-Note 29.120-1 Type 1) ***(Ref. Pr. List)***	.....	1	349 8546	
(T-364)(Left) 63 10 (WFS-Note 29.120-1 Type 2)(WNRS-Note 29.120-1 Type 2)	.....	1	349 8569	
(T-364)(Right) 63 10 (WFS-Note 29.120-1 Type 2)(WNRS-Note 29.120-1 Type 2)	.....	1	349 8568	
(T-364)(Left) 63 15-18 (WRS-Note 29.120-1 Type 1) (WIRS-Note 29.120-1 Type 1) ***(Ref. Pr. List)***	.....	1	349 8537	
(T-364)(Right) 63 15-18 (WRS-Note 29.120-1 Type 1) (WIRS-Note 29.120-1 Type 1) ***(Ref. Pr. List)***	.....	1	349 8536	
(T-364)(Left) 63 10 (WRS-Note 29.120-1 Type 2)(WIRS-Note 29.120-1 Type 2)	.....	1	349 8579	
(T-364)(Right) 63 10 (WRS-Note 29.120-1 Type 2)(WIRS-Note 29.120-1 Type 2)	.....	1	349 8578	
(T-365)(Left) 63 15-18 (WFS-Note 29.120-1 Type 1) ***(Ref. Pr. List)***	.....	1	349 8549	
(T-365)(Right) 63 15-18 (WFS-Note 29.120-1 Type 1) ***(Ref. Pr. List)***	.....	1	349 8548	
(T-365)(Left) 63 10 (WFS-Note 29.120-1 Type 2)(WNRS-Note 29.120-1 Type 2)	.....	1	349 8571	
(T-365)(Right) 63 10 (WFS-Note 29.120-1 Type 2)(WNRS-Note 29.120-1 Type 2)	.....	1	349 8570	
(T-365)(Left) 63 15-18 (WRS-Note 29.120-1 Type 1) (WIRS-Note 29.120-1 Type 1) ***(Ref. Pr. List)***	.....	1	349 8539	

Copyright 1963 American Motors Corp.

GROUP NO. — DESCRIPTION — YEAR and MODEL	PRIMARY GROUP NO.	PER CAR	PART NO.	CODE
(T-351)(Left) 63 10-80 (WIRS-Note 29.120-1 Type 1) ..... *(Ref. Pr. List)*	.....	1	349 0943	
(T-351)(Right) 63 10-80 (WIRS-Note 29.120-1 Type 1) ..... *(Ref. Pr. List)*	.....	1	349 0942	
(T-351)(Left) 63 10-80 (WIRS-Note 29.120-1 Type 2)	.....	1	349 0935	
(T-351)(Right) 63 10-80 (WIRS-Note 29.120-1 Type 2)	.....	1	349 0934	
(T-352)(Left) 63 10-80 (WFS)(WNRS)	.....	1	349 1529	
(T-352)(Right) 63 10-80 (WFS)(WNRS)	.....	1	349 1528	
(T-352)(Left) 63 10-80 (WRS)	.....	1	349 1535	
(T-352)(Right) 63 10-80 (WRS)	.....	1	349 1534	
(T-352)(Left) 63 10-80 (WIRS-Note 29.120-1 Type 1) ..... *(Ref. Pr. List)*	.....	1	349 0943	
(T-352)(Right) 63 10-80 (WIRS-Note 29.120-1 Type 1) ..... *(Ref. Pr. List)*	.....	1	349 0942	
(T-352)(Left) 63 10-80 (WIRS-Note 29.120-1 Type 2)	.....	1	349 0935	
(T-352)(Right) 63 10-80 (WIRS-Note 29.120-1 Type 2)	.....	1	349 0934	
(T-353)(Left) 63 10-80 (WFS)(WNRS)	.....	1	349 1531	
(T-353)(Right) 63 10-80 (WFS)(WNRS)	.....	1	349 1530	
(T-353)(Left) 63 10-80 (WRS)	.....	1	349 1537	
(T-353)(Right) 63 10-80 (WRS)	.....	1	349 1536	
(T-353)(Left) 63 10-80 (WIRS-Note 29.120-1 Type 1) ..... *(Ref. Pr. List)*	.....	1	349 8535	
(T-353)(Right) 63 10-80 (WIRS-Note 29.120-1 Type 1) ..... *(Ref. Pr. List)*	.....	1	349 8534	
(T-353)(Left) 63 10-80 (WIRS-Note 29.120-1 Type 2)	.....	1	349 8577	
(T-353)(Right) 63 10-80 (WIRS-Note 29.120-1 Type 2)	.....	1	349 8576	
(T-354)(Left) 63 10-80 (WFS)(WNRS)	.....	1	349 1533	
(T-354)(Right) 63 10-80 (WFS)(WNRS)	.....	1	349 1532	
(T-354)(Left) 63 10-80 (WRS)	.....	1	349 1539	
(T-354)(Right) 63 10-80 (WRS)	.....	1	349 1538	
(T-354)(Left) 63 10-80 (WIRS-Note 29.120-1 Type 1) ..... *(Ref. Pr. List)*	.....	1	349 8537	
(T-354)(Right) 63 10-80 (WIRS-Note 29.120-1 Type 1) ..... *(Ref. Pr. List)*	.....	1	349 8536	
(T-354)(Left) 63 10-80 (WIRS-Note 29.120-1 Type 2) ..... *(Ref. Pr. List)*	.....	1	349 8579	
(T-354)(Right) 63 10-80 (WIRS-Note 29.120-1 Type 2) ..... *(Ref. Pr. List)*	.....	1	349 8578	
(T-362)(Left) 63 15-18 (WFS-Note 29.120-1 Type 1) ..... *(Ref. Pr. List)*	.....	1	349 0947	
(T-362)(Right) 63 15-18 (WFS-Note 29.120-1 Type 1) ..... *(Ref. Pr. List)*	.....	1	349 0946	
(T-362)(Left) 63 10 (WFS-Note 29.120-1 Type 2)(WNRS-Note 29.120-1 Type 2) .	.....	1	349 0939	
(T-362)(Right) 63 10 (WFS-Note 29.120-1 Type 2)(WNRS-Note 29.120-1 Type 2)	.....	1	349 0938	
(T-362)(Left) 63 15-18 (WRS-Note 29.120-1 Type 1) (WIRS-Note 29.120-1 Type 1) ..... *(Ref. Pr. List)*	.....	1	349 0943	
(T-362)(Right) 63 15-18 (WRS-Note 29.120-1 Type 1) (WIRS-Note 29.120-1 Type 1) ..... *(Ref. Pr. List)*	.....	1	349 0942	
(T-362)(Left) 63 10 (WRS-Note 29.120-1 Type 2) (WIRS-Note 29.120-1 Type 2) ..... *(Ref. Pr. List)*	.....	1	349 0935	
(T-362)(Right) 63 10 (WRS-Note 29.120-1 Type 2) (WIRS-Note 29.120-1 Type 2) ..... *(Ref. Pr. List)*	.....	1	349 0934	
(T-363)(Left) 63 15-18 (WFS-Note 29.120-1 Type 1) ..... *(Ref. Pr. List)*	.....	1	349 8545	
(T-363)(Right) 63 15-18 (WFS-Note 29.120-1 Type 1) ..... *(Ref. Pr. List)*	.....	1	349 8544	
(T-363)(Left) 63 10 (WFS-Note 29.120-1 Type 2)(WNRS-Note 29.120-1 Type 2) .	.....	1	349 8567	
(T-363)(Right) 63 10 (WFS-Note 29.120-1 Type 2)(WNRS-Note 29.120-1 Type 2)	.....	1	349 8566	
(T-363)(Left) 63 15-18 (WRS-Note 29.120-1 Type 1) (WIRS-Note 29.120-1 Type 1) ..... *(Ref. Pr. List)*	.....	1	349 8535	
(T-363)(Right) 63 15-18 (WRS-Note 29.120-1 Type 1) (WIRS-Note 29.120-1 Type 1) ..... *(Ref. Pr. List)*	.....	1	349 8534	
(T-363)(Left) 63 10 (WRS-Note 29.120-1 Type 2)(WIRS-NOTE 29.120-1 Type 2)	.....	1	349 8577	
(T-363)(Right) 63 10 (WRS-Note 29.120-1 Type 2)(WIRS-Note 29.120-1 Type 2).	.....	1	349 8576	
(T-364)(Left) 63 15-18 (WFS-Note 29.120-1 Type 1) ..... *(Ref. Pr. List)*	.....	1	349 8547	
(T-364)(Right) 63 15-18 (WFS-Note 29.120-1 Type 1) ..... *(Ref. Pr. List)*	.....	1	349 8546	
(T-364)(Left) 63 10 (WFS-Note 29.120-1 Type 2)(WNRS-Note 29.120-1 Type 2) .	.....	1	349 8569	
(T-364)(Right) 63 10 (WFS-Note 29.120-1 Type 2)(WNRS-Note 29.120-1 Type 2)	.....	1	349 8568	
(T-364)(Left) 63 15-18 (WRS-Note 29.120-1 Type 1) (WIRS-Note 29.120-1 Type 1) ..... *(Ref. Pr. List)*	.....	1	349 8537	
(T-364)(Right) 63 15-18 (WRS-Note 29.120-1 Type 1) (WIRS-Note 29.120-1 Type 1) ..... *(Ref. Pr. List)*	.....	1	349 8536	
(T-364)(Left) 63 10 (WRS-Note 29.120-1 Type 2)(WIRS-Note 29.120-1 Type 2)..	.....	1	349 8579	
(T-364)(Right) 63 10 (WRS-Note 29.120-1 Type 2)(WIRS-Note 29.120-1 Type 2).	.....	1	349 8578	
(T-365)(Left) 63 15-18 (WFS-Note 29.120-1 Type 1) ..... *(Ref. Pr. List)*	.....	1	349 8549	
(T-365)(Right) 63 15-18 (WFS-Note 29.120-1 Type 1) ..... *(Ref. Pr. List)*	.....	1	349 8548	
(T-365)(Left) 63 10 (WFS-Note 29.120-1 Type 2)(WNRS-Note 29.120-1 Type 2) .	.....	1	349 8571	
(T-365)(Right) 63 10 (WFS-Note 29.120-1 Type 2)(WNRS-Note 29.120-1 Type 2)	.....	1	349 8570	
(T-365)(Left) 63 15-18 (WRS-Note 29.120-1 Type 1) (WIRS-Note 29.120-1 Type 1) ..... *(Ref. Pr. List)*	.....	1	349 8539	

Copyright 1963 American Motors Corp.

GROUP NO. — DESCRIPTION — YEAR and MODEL	PRIMARY GROUP NO.	PER CAR	PART NO.	CODE
(T-365)(Right) 63 15-18 (WRS-Note 29.120-1 Type 1) (WIRS-Note 29.120-1 Type 1)...(Ref. Pr. List)	.....	1	349 8538	
(T-365)(Left) 63 10 (WRS-Note 29.120-1 Type 2)(WIRS-Note 29.120-1 Type 2)..	.....	1	349 8581	
(T-365)(Right) 63 10 (WRS-Note 29.120-1 Type 2)(WIRS-Note 29.120-1 Type 2).	.....	1	349 8580	
(T-366)(Left) 63 15-18 (WFS-Note 29.120-1 Type 1).....(Ref. Pr. List)	.....	1	349 0949	
(T-366)(Right) 63 15-18 (WFS-Note 29.120-1 Type 1).....(Ref. Pr. List)	.....	1	349 0948	
(T-366)(Left) 63 10 (WFS -Note 29.120-1 Type 2)(WNRS-Note 29.120-1 Type 2).	.....	1	349 0941	
(T-366)(Right) 63 10 (WFS-Note 29.120-1 Type 2)(WNRS-Note 29.120-1 Type 2)	.....	1	349 0940	
(T-366)(Left) 63 15-18 (WRS-Note 29.120-1 Type 1) (WIRS-Note 29.120-1 Type 1).....(Ref. Pr. List)	.....	1	349 0945	
(T-366)(Right) 63 15-18 (WRS-Note 29.120-1 Type 1) (WIRS-Note 29.120-1 Type 1).....(Ref. Pr. List)	.....	1	349 0944	
(T-366)(Left) 63 10 (WRS-Note 29.120-1 Type 2)(WIRS-Note 29.120-1 Type 2)..	.....	1	349 0937	
(T-366)(Right) 63 10 (WRS-Note 29.120-1 Type 2)(WIRS-Note 29.120-1 Type 2).	.....	1	349 0936	
(T-372)(Left)(63 10 (WNRS).....	.....	1	348 5387	
(T-372)(Right) 63 10 (WNRS).....	.....	1	348 5386	
(T-372)(Left) 63 10 (WRS)(WIRS)	.....	1	348 5385	
(T-372)(Right) 63 10 (WRS)(WIRS)	.....	1	348 5384	
(T-372)(Left-Inner) 63 10 (WBS-LFC).....	.....	1	351 0295	
(T-372)(Right-Inner) 63 10 (WBS-LFC).....	.....	1	351 0294	
(T-372)(Left-Outer) 63 10 (WBS)	.....	1	348 7773	
(T-372)(Right-Outer)(63 10 (WBS).....	.....	1	348 7772	
(T-373)(Left)(63 10 (WNRS).....	.....	1	348 5387	
(T-373)(Right) 63 10 (WNRS).....	.....	1	348 5386	
(T-373)(Left) 63 10 (WRS)(WIRS)	.....	1	348 5385	
(T-373)(Right) 63 10 (WRS)(WIRS).....	.....	1	348 5384	
(T-373)(Left-Inner) 63 10 (WBS-LFC).....	.....	1	351 0295	
(T-373)(Right-Inner) 63 10 (WBS-LFC).....	.....	1	351 0294	
(T-373)(Left-Outer) 63 10 (WBS)	.....	1	348 7773	
(T-373)(Right-Outer) 63 10 (WBS)	.....	1	348 7772	
(T-374)(Left) 63 10 (WNRS).....	.....	1	348 5387	
(T-374)(Right) 63 10 (WNRS).....	.....	1	348 5386	
(T-374)(Left) 63 10 (WRS)(WIRS)	.....	1	348 5385	
(T-374)(Right) 63 10 (WRS)(WIRS)	.....	1	348 5384	
(T-374)(Left-Inner) 63 10 (WBS-LFC).....	.....	1	351 0295	
(T-374)(Right-Inner) 63 10 (WBS-LFC).....	.....	1	351 0294	
(T-374)(Left-Outer) 63 10 (WBS)	.....	1	348 7773	
(T-374)(Right-Outer) 63 10 (WBS)	.....	1	348 7772	
(T-375)(Left) 63 10 (WNRS).....	.....	1	348 5387	
(T-375)(Right) 63 10 (WNRS).....	.....	1	348 5386	
(T-375)(Left) 63 10 (WRS)(WIRS)	.....	1	348 5385	
(T-375)(Right) 63 10 (WRS)(WIRS)	.....	1	348 5384	
(T-375)(Left-Inner) 63 10 (WBS-LFC).....	.....	1	351 0295	
(T-375)(Right-Inner) 63 10 (WBS-LFC).....	.....	1	351 0294	
(T-375)(Left-Outer) 63 10 (WBS)	.....	1	348 7773	
(T-375)(Right-Outer) 63 10 (WBS)	.....	1	348 7772	
(T-376)(Left) 63 10 (WNRS).....	.....	1	348 5387	
(T-376)(Right) 63 10 (WNRS).....	.....	1	348 5386	
(T-376)(Left) 63 10 (WRS)(WIRS)	.....	1	348 5385	
(T-376)(Right) 63 10 (WRS)(WIRS)	.....	1	348 5384	
(T-376)(Left-Inner) 63 10 (WBS-LFC).....	.....	1	351 0295	
(T-376)(Right-Inner) 63 10 (WBS-LFC).....	.....	1	351 0294	
(T-376)(Left-Outer) 63 10 (WBS)	.....	1	348 7773	
(T-376)(Right-Outer) 63 10 (WBS)	.....	1	348 7772	
(T-377)(Left) 63 10 (WNRS).....	.....	1	348 5387	
(T-377)(Right) 63 10 (WNRS).....	.....	1	348 5386	
(T-377)(Left) 63 10 (WRS)(WIRS)	.....	1	348 5385	
(T-377)(Right) 63 10 (WRS)(WIRS)	.....	1	348 5384	
(5-377)(Left-Inner) 63 10 (WBS-LFC).....	.....	1	351 0295	
(T-377)(Right-Inner) 63 10 (WBS-LFC).....	.....	1	351 0294	
(T-377)(Left-Outer) 63 10 (WBS)	.....	1	348 7773	
(T-377)(Right-Outer) 63 10 (WBS)	.....	1	348 7772	
(T-382)(Left) 63 85-88 (WFS-Note 29.120-1 Type 1).....(Ref. Pr. List)	.....	1	349 0947	
(T-382)(Right) 63 85-88 (WFS-Note 29.120-1 Type 1).....(Ref. Pr. List)	.....	1	349 0946	

Copyright 1963 American Motors Corp.

GROUP NO. — DESCRIPTION — YEAR and MODEL	PRIMARY GROUP NO.	PER CAR	PART NO.	CODE
(T-382)(Left) 63 80 (WFS-Note 29.120-1 Type 2)(WNRS-Note 29.120-1 Type 2)	.....	1	349 0939	
(T-382)(Right) 63 80 (WFS-Note 29.120-1 Type 2)(WNRS-Note 29.120-1 Type 2)	.....	1	349 0938	
(T-382)(Left) 63 85-88 (WRS-Note 29.120-1 Type 1) (WIRS-Note 29.120-1 Type 1) ***(Ref. Pr. List)***	.....	1	349 0943	
(T-382)(Right) 63 85-88 (WRS-Note 29.120-1 Type 1) (WIRS-Note 29.120-1 Type 1) ***(Ref. Pr. List)***	.....	1	349 0942	
(T-382)(Left) 63 80 (WRS-Note 29.120-1 Type 2)(WIRS-Note 29.120-1 Type 2)	.....	1	349 0935	
(T-382)(Right) 63 80 (WRS-Note 29.120-1 Type 2)(WIRS-Note 29.120-1 Type 2)	.....	1	349 0934	
(T-383)(Left) 63 85-88 (WFS-Npte 29.120-1 Type 1) ***(Ref. Pr. List)***	.....	1	349 8545	
(T-383)(Right) 63 85-88 (WFS-Note 29.120-1 Type 1) ***(Ref. Pr. List)***	.....	1	349 8544	
(T-383)(Left) 63 80 (WFS-Note 29.120-1 Type 2)(WNRS-Note 29.120-1 Type 2)	.....	1	349 8567	
(T-383)(Right) 63 80 (WFS-Note 29.120-1 Type 2)(WNRS-Note 29.120-1 Type 2)	.....	1	349 8566	
(T-383)(Left) 63 85-88 (WRS-Note 29.120-1 Type 1) (WNRS-Note 29.120-1 Type 1) ***(Ref. Pr. List)***	.....	1	349 8535	
(T-383)(Right) 63 85-88 (WRS-Note 29.120-1 Type 1) (WIRS-Note 29.120-1 Type 1) ***(Ref. Pr. List)***	.....	1	349 8534	
(T-383)(Left) 63 80 (wrs-Note 29.120-1 Type 2)(WIRS-Note 29.120-1 Type 2)	.....	1	349 8577	
(T-383)(Right) 63 80 (WRS-Note 29.120-1 Type 2)(WIRS-Note 29.120-1 Type 2)	.....	1	349 8576	
(T-384)(Left) 63 85-88 (WFS-Note 29.120-1 Type 1) ***(Ref. Pr. List)***	.....	1	349 8547	
(T-384)(Right) 63 85-88 (WFS-Note 29.120-1 Type 1) ***(Ref. Pr. List)***	.....	1	349 8546	
(T-384)(Left) 63 80 (WFS-Note 29.120-1 Type 2)(WNRS-Note 29.120-1 Type 2)	.....	1	349 8569	
(T-384)(Right) 63 80 (WFS-Note 29.120-1 Type 2)(WNRS-Note 29.120-1 Type 2)	.....	1	349 8568	
(T-384)(Left) 63 85-88 (WRS-Note 29.120-1 Type 1) (WIRS-Note 29.120-1 Type 1) ***(Ref. Pr. List)***	.....	1	349 8537	
(T-384)(Right) 63 85-88 (WRS-Note 29.120-1 Type 1) (WIRS-Note 29.120-1 Type 1) ***(Ref. Pr. List)***	.....	1	349 8536	
(T-384)(Left) 63 80 (WRS-Note 29.120-1 Type 2)(WIRS-Note 29.120-1 Type 2)	.....	1	349 8579	
(T-384)(Right) 63 80 (WRS-Note 29.120-1 Type 2)(WIRS-Note 29.120-1 Type 2)	.....	1	349 8578	
(T-385)(Left) 63 85-88 (WFS-Note 29.120-1 Type 1) ***(Ref. Pr. List)***	.....	1	349 8549	
(T-385)(Right) 63 85-88 (WFS-Note 29.120-1 Type 1) ***(Ref. Pr. List)***	.....	1	349 8548	
(T-385)(Left) 63 80 (WFS-Note 29.120-1 Type 2)(WNRS-Note 29.120-1 Type 2)	.....	1	349 8571	
(T-385)(Right) 63 80 (WFS-Note 29.120-1 Type 2)(WNRS-Note 29.120-1 Type 2)	.....	1	349 8570	
(T-385)(Left) 63 85-88 (WRS-Note 29.120-1 Type 1) (WIRS-Note 29.120-1 Type 1) ***(Ref. Pr. List)***	.....	1	349 8539	
(T-385)(Right) 63 85-88 (WRS-Note 29.120-1 Type 1) (WIRS-Note 29.120-1 Type 1) ***(Ref. Pr. List)***	.....	1	349 8538	
(T-385)(Left) 63 80 (WRS-Note 29.120-1 Type 2)(WIRS-Note 29.120-1 Type 2)	.....	1	349 8581	
(T-385)(Right) 63 80 (WRS-Note 29.120-1 Type 2)(WIRS-Note 29.120-1 Type 2)	.....	1	349 8580	
(T-386)(Left) 63 85-88 (WFS-Note 29.120-1 Type 1) ***(Ref. Pr. List)***	.....	1	349 0949	
(T-386)(Right) 63 85-88 (WFS-Note 29.120-1 Type 1) ***(Ref. Pr. List)***	.....	1	349 0948	
(T-386)(Left) 63 80 (WFS-Note 29.120-1 Type 2)(WNRS-Note 29.120-1 Type 2)	.....	1	349 0941	
(T-386)(Right) 63 80 (WFS-Note 29.120-1 Type 2)(WNRS-Note 29.120-1 Type 2)	.....	1	349 0940	
(T-386)(Left) 63 85-88 (WRS-Note 29..120-1 Type 1) (WIRS-Note 29.120-1 Type 1) ***(Ref. Pr. List)***	.....	1	349 0945	
(T-386)(Right) 63 85-88 (WRS-Note 29.120-1 Type 1) (WIRS-Note 29.120-1 Type 1) ***(Ref. Pr. List)***	.....	1	349 0944	
(T-386)(Left) 63 80 (WRS-Note 29.120-1 Type 2)(WIRS-Note 29.120-1 Type 2)	.....	1	349 0937	
(T-386)(Right) 63 80 (WRS-Note 29.120-1 Type 2)(WIRS-Note 29.120-1 Type 2)	.....	1	349 0936	
(T-392)(Left) 63 80 (WFS)(WNRS)	.....	1	348 5387	
(T-392)(Right) 63 80 (WFS)(WNRS)	.....	1	348 5386	
(T-392)(Left) 63 80 (WRS)(WIRS) ***(Replaces 348 7503)***	.....	1	348 5385	
(T-392)(Right) 63 80 (WRS)(WIRS) ***(Replaces 348 7502)***	.....	1	348 5384	
(T-392)(Left-Inner) 63 80 (WBS-LFC)	.....	1	351 0295	
(T-392)(Right-Inner) 63 80 (WBS-LFC)	.....	1	351 0294	
(T-392)(Left-Outer) 63 80 (WBS)	.....	1	348 7773	
(T-392)(Right-Outer) 63 80 (WBS)	.....	1	348 7772	
(T-393)(Left) 63 80 (WFS)(WNRS)	.....	1	348 5387	
(T-393)(Right) 63 80 (WFS)(WNRS)	.....	1	348 5386	
(T-393)(Left) 63 80 (WRS)(WIRS) ***(Replaces 348 7503)***	.....	1	348 5385	
(T-393)(Right) 63 80 (WRS)(WIRS) ***(Replaces 348 7502)***	.....	1	348 5384	
(T-393)(Left-Inner) 63 80 (WBS-LFC)	.....	1	351 0295	
(T-393)(Right-Inner) 63 80 (WBS-LFC)	.....	1	351 0294	
(T-393)(Left-Outer) 63 80 (WBS)	.....	1	348 7773	
(T-393)(Right-Outer) 63 80 (WBS)	.....	1	348 7772	
(T-394)(Left) 63 80 (WFS)(WNRS)	.....	1	348 5387	
(T-394)(Right) 63 80 (WFS)(WNRS)	.....	1	348 5386	
(T-394)(Left) 63 80 (WRS)(WIRS) ***(Replaces 348 7503)***	.....	1	348 5385	

Copyright 1963 American Motors Corp.

GROUP NO. — DESCRIPTION — YEAR and MODEL	PRIMARY GROUP NO.	PER CAR	PART NO.	CODE
(T-394)(Right) 63 80 (WRS)(WIRS) ***(Replaces 348 7502)***	.....	1	348 5384	
(T-394)(Left-Inner) 63 80 (WBS-LFC)	.....	1	351 0295	
(T-394)(Right-Inner) 63 80 (WBS-LFC)	.....	1	351 0294	
(T-394)(Left-Outer) 63 80 (WBS)	.....	1	348 7773	
(T-394)(Right-Outer) 63 80 (WBS)	.....	1	348 7772	
(T-395)(Left) 63 80 (WFS)(WNRS)	.....	1	348 5387	
(T-395)(Right) 63 80 (WFS)(WNRS)	.....	1	348 5386	
(T-395)(Left) 63 80 (WRS)(WIRS) ***(Replaces 348 7503)***	.....	1	348 5385	
(T-395)(Right) 63 80 (WRS)(WIRS) ***(Replaces 348 7502)***	.....	1	348 5384	
(T-395)(Left-Inner) 63 80 (WBS-LFC)	.....	1	351 0295	
(T-395)(Right-Inner) 63 80 (WBS-LFC)	.....	1	351 0294	
(T-395)(Left-Outer) 63 80 (WBS)	.....	1	348 7773	
(T-395)(Right-Outer) 63 80 (WBS)	.....	1	348 7772	
(T-396)(Left) 63 80 (WFS)(WNRS)	.....	1	348 5387	
(T-396)(Right) 63 80 (WFS)(WNRS)	.....	1	348 5386	
(T-396)(Left) 63 80 (WRS)(WIRS) ***(Replaces 348 7503)***	.....	1	348 5385	
(T-396)(Right) 63 80 (WRS)(WIRS) ***(Replaces 348 7502)***	.....	1	348 5384	
(T-396)(Left-Inner) 63 80 (WBS-LFC)	.....	1	351 0295	
(T-396)(Right-Inner) 63 80 (WBS-LFC)	.....	1	351 0294	
(T-396)(Left-Outer) 63 80 (WBS)	.....	1	348 7773	
(T-396)(Right-Outer) 63 80 (WBS)	.....	1	348 7772	
(T-397)(Left) 63 80 (WFS)(WNRS)	.....	1	348 5387	
(T-397)(Right) 63 80 (WFS)(WNRS)	.....	1	348 5386	
(T-397)(Left) 63 80 (WRS)(WIRS) ***(Replaces 348 7503)***	.....	1	348 5385	
(T-397)(Right) 63 80 (WRS)(WIRS) ***(Replaces 348 7502)***	.....	1	348 5384	
(T-397)(Left-Inner) 63 80 (WBS-LFC)	.....	1	351 0295	
(T-397)(Right-Inner) 63 80 (WBS-LFC)	.....	1	351 0294	
(T-397)(Left-Outer) 63 80 (WBS)	.....	1	348 7773	
(T-397)(Right-Outer) 63 80 (WBS)	.....	1	348 7772	
(T-422)(Left)(WFS)(WNRS)	.....	1	350 1995	
(T-422)(Right)(WFS)(WNRS)	.....	1	350 1994	
(T-422)(Left)(WRS)	.....	1	350 1989	
(T-422)(Right)(WRS)	.....	1	350 1988	
(T-422)(Left)(WIRS)	.....	1	350 2421	
(T-422)(Right)(WIRS)	.....	1	350 2420	
(T-432)(Left)(WFS-Note 29.103-1 Type 1)(WRS-Note 29.103-1 Type 1)	.....	1	350 2441	
(T-432)(Right)(WFS-Note 29.103-1 Type 1)(WNRS-Note 29.103-1 Type 1)	.....	1	350 2440	
(T-432)(Left)(WFS-Note 29.103-1 Type 2)(WNRS-Note 29.103-1 Type 2)	.....	1	353 2743	
(T-432)(Right)(WFS-Note 29.103-1 Type 2)(WNRS-Note 29.103-1 Type 2)	.....	1	353 2742	
(T-432)(Left)(WRS)(WIRS)	.....	1	350 2421	
(T-432)(Right)(WRS)(WIRS)	.....	1	350 2420	
(T-433)(Left)(WFS)(WNRS)	.....	1	350 2443	
(T-433)(Right)(WFS)(WNRS)	.....	1	350 2442	
(T-433)(Left)(WRS)(WIRS)	.....	1	350 2423	
(T-433)(Right)(WRS)(WIRS)	.....	1	350 2422	
(T-434)(Left)(WFS)(WNRS)	.....	1	350 2445	
(T-434)(Right)(WFS)(WNRS)	.....	1	350 2444	
(T-434)(Left)(WRS)(WIRS)	.....	1	350 2425	
(T-434)(Right)(WRS)(WIRS)	.....	1	350 2424	
(T-435)(Left)(WFS)(WNRS)	.....	1	350 2447	
(T-435)(Right)(WFS)(WNRS)	.....	1	350 2446	
(T-435)(Left)(WRS)(WIRS)	.....	1	350 2427	
(T-435)(Right)(WRS)(WIRS)	.....	1	350 2426	
(T-436)(Left)(WFS)(WNRS)	.....	1	350 2449	
(T-436)(Right)(WFS)(WNRS)	.....	1	350 2448	
(T-436)(Left)(WRS)(WIRS)	.....	1	350 2429	
(T-436)(Right)(WRS)(WIRS)	.....	1	350 2428	
(T-438)(Left)(WFS)(WNRS)	.....	1	350 2451	
(T-438)(Right)(WFS)(WNRS)	.....	1	350 2450	
(T-438)(Left)(WRS)(WIRS)	.....	1	350 2431	
(T-438)(Right)(WRS)(WIRS)	.....	1	350 2430	
(T-441)(Left)(WFS)(WNRS)	.....	1	351 9151	
(T-441)(Right)(WFS)(WNRS)	.....	1	351 9150	
(T-441)(Left)(WRS)(WIRS)(WBS)	.....	1	351 9155	
(T-441)(Right)(WRS)(WIRS)(WBS)	.....	1	351 9154	
(T-442)(Left)(WFS)(WNRS)	.....	1	351 9151	
(T-442)(Right)(WFS)(WNRS)	.....	1	351 9150	

Copyright 1963 American Motors Corp.

GROUP NO. — DESCRIPTION — YEAR and MODEL	PRIMARY GROUP NO.	PER CAR	PART NO.	CODE
(T-442)(Left)(WRS)(WIRS)(WBS)	.....	1	351 9155	
(T-442)(Right)(WRS)(WIRS)(WBS)	.....	1	351 9154	
(T-443)(Left)(WFS)(WNRS)	.....	1	351 9151	
(T-443)(Right)(WFS)(WNRS)	.....	1	351 9150	
(T-443)(Left)(WRS)(WIRS)(WBS)	.....	1	351 9155	
(T-443)(Right)(WRS)(WIRS)(WBS)	.....	1	351 9154	
(T-444)(Left)(WFS)(WNRS)	.....	1	351 9151	
(T-444)(Right)(WFS)(WNRS)	.....	1	351 9150	
(T-444)(Left)(WRS)(WIRS)(WBS)	.....	1	351 9155	
(T-444)(Right)(WRS)(WIRS)(WBS)	.....	1	351 9154	
(T-445)(Left)(WFS-WNRS)	.....	1	351 9151	
(T-445)(Right)(WFS)(WNRS)	.....	1	351 9150	
(T-445)(Left)(WRS)(WIRS)(WBS)	.....	1	351 9155	
(T-445)(Right)(WRS)(WIRS)(WBS)	.....	1	351 9154	
(T-446)(Left)(WFS)(WNRS)	.....	1	351 9151	
(T-446)(Right)(WFS)(WNRS)	.....	1	351 9150	
(T-446)(Left)(WRS)(WIRS)(WBS)	.....	1	351 9155	
(T-446)(Right)(WRS)(WIRS)(WBS)	.....	1	351 9154	
(T-447)(Left)(WFS)(WNRS)	.....	1	351 9151	
(T-447)(Right)(WFS)(WNRS)	.....	1	351 9150	
(T-447)(Left)(WRS)(WIRS)(WBS)	.....	1	351 9155	
(T-447)(Right)(WRS)(WIRS)(WBS)	.....	1	351 9154	
(T-448)(Left)(WFS)(WNRS)	.....	1	351 9151	
(T-448)(Right)(WFS)(WNRS)	.....	1	351 9150	
(T-448)(Left)(WRS)(WIRS)(WBS)	.....	1	351 9155	
(T-448)(Right)(WRS)(WIRS)(WBS)	.....	1	351 9154	
(T-452)(Left)(WFS-Note 29.103-3 Type 1)(WNRS-Note 29.103-3 Type 1)	.....	1	350 1995	
(T-452)(Right)((WFS-Note 29.103-3 Type 1)(WNRS-Note 29.103-3 Type 1)	.....	1	350 1994	
(T-452)(Left)(WFS-Note 29.103-3 Type 2)(WNRS-Note 29.103-3 Type 2)	.....	1	353 2743	
(T-452)(Right)(WFS-Note 29.103-3 Type 2)(WNRS-Note 29.103-3 Type 2)	.....	1	353 2742	
(T-452)(Left)(WRS)	.....	1	350 1989	
(T-452)(Right)(WRS)	.....	1	350 1988	
(T-452)(Left)(WIRS)	.....	1	350 8489	
(T-452)(Right)(WIRS)	.....	1	350 8488	
(T-453)(Left)(WFS)(WNRS)	.....	1	350 1997	
(T-453)(Right)(WFS)(WNRS)	.....	1	350 1996	
(T-453)(Left)(WRS)	.....	1	350 1991	
(T-453)(Right)(WRS)	.....	1	350 1990	
(T-453)(Left)(WIRS)	.....	1	350 8491	
(T-453)(Right)(WIRS)	.....	1	350 8490	
(T-454)(Left)(WFS)(WNRS)	.....	1	350 1999	
(T-454)(Right)(WFS)(WNRS)	.....	1	350 1998	
(T-454)(Left)(WRS)	.....	1	350 1993	
(T-454)(Right)(WRS)	.....	1	350 1992	
(T-454)(Left)(WIRS)	.....	1	350 8493	
(T-454)(Right)(WIRS)	.....	1	350 8492	
(T-462)(Left)(WFS)(WNRS)	.....	1	350 8503	
(T-462)(Right)(WFS)(WNRS)	.....	1	350 8502	
(T-462)(Left)(WRS)(WIRS)	.....	1	350 8489	
(T-462)(Right)(WRS)(WIRS)	.....	1	350 8488	
(T-463)(Left)(WFS)(WNRS)	.....	1	350 8505	
(T-463)(Right)(WFS)(WNRS)	.....	1	350 8504	
(T-463)(Left)(WRS)(WIRS)	.....	1	350 8491	
(T-463)(Right)(WRS)(WIRS)	.....	1	350 8490	
(T-464)(Left)(WFS)(WNRS)	.....	1	350 8507	
(T-464)(Right)(WFS)(WNRS)	.....	1	350 8506	
(T-464)(Left)(WRS)(WIRS)	.....	1	350 8493	
(T-464)(Right)(WRS)(WIRS)	.....	1	350 8492	
(T-465)(Left)(WFS)(WNRS)	.....	1	350 8509	
(T-465)(Right)(WFS)(WNRS)	.....	1	350 8508	
(T-465)(Left)(WRS)(WIRS)	.....	1	350 8495	
(T-465)(Right)(WRS)(WIRS)	.....	1	350 8494	
(T-466)(Left)(WFS)(WNRS)	.....	1	350 8511	
(T-466)(Right)(WFS)(WNRS)	.....	1	350 8510	
(T-466)(Left)(WRS)(WIRS)	.....	1	350 8497	
(T-466)(Right)(WRS)(WIRS)	.....	1	350 8496	

Copyright 1963 American Motors Corp.

GROUP NO. — DESCRIPTION — YEAR and MODEL	PRIMARY GROUP NO.	PER CAR	PART NO.	CODE
(T-468)(Left)(WFS)(WNRS)	.....	1	350 8513	
(T-468)(Right)(WFS)(WNRS)	.....	1	350 8512	
(T-468)(Left)(WRS)(WIRS)	.....	1	350 8499	
(T-468)(Right)(WRS)(WIRS)	.....	1	350 8498	
(T-471)(Left)(WFS)(WNRS)	.....	1	351 9231	
(T-471)(Right)(WFS)(WNRS)	.....	1	351 9230	
(T-471)(Left)(WRS)(WIRS)	.....	1	351 9227	
(T-471)(Right)(WRS)(WIRS)	.....	1	351 9226	
(T-471)(Left)(WBS)	.....	1	351 9155	
(T-471)(Right)(WBS)	.....	1	351 9154	
(T-472)(Left)(WFS)(WNRS)	.....	1	351 9231	
(T-472)(Right)(WFS)(WNRS)	.....	1	351 9230	
(T-472)(Left)(WRS)(WIRS)	.....	1	351 9227	
(T-472)(Right)(WRS)(WIRS)	.....	1	351 9226	
(T-472)(Left)(WBS)	.....	1	351 9155	
(T-472)(Right)(WBS)	.....	1	351 9154	
(T-473)(Left)(WFS)(WNRS)	.....	1	351 9231	
(T-473)(Right)(WFS)(WNRS)	.....	1	351 9230	
(T-473)(Left)(WRS)(WIRS)	.....	1	351 9227	
(T-473)(Right)(WRS)(WIRS)	.....	1	351 9226	
(T-473)(Left)(WBS)	.....	1	351 9155	
(T-473)(Right)(WBS)	.....	1	351 9154	
(T-474)(Left)(WFS)(WNRS)	.....	1	351 9231	
(T-474)(Right)(WFS)(WNRS)	.....	1	351 9230	
(T-474)(Left)(WRS)(WIRS)	.....	1	351 9227	
(T-474)(Right)(WRS)(WIRS)	.....	1	351 9226	
(T-474)(Left)(WBS)	.....	1	351 9155	
(T-474)(Right)(WBS)	.....	1	351 9154	
(T-475)(Left)(WFS)(WNRS)	.....	1	351 9231	
(T-475)(Right)(WFS)(WNRS)	.....	1	351 9230	
(T-475)(Left)(WRS)(WIRS)	.....	1	351 9227	
(T-475)(Right)(WRS)(WIRS)	.....	1	351 9226	
(T-475)(Left)(WBS)	.....	1	351 9155	
(T-475)(Right)(WBS)	.....	1	351 9154	
(T-476)(Left)(WFS)(WNRS)	.....	1	351 9231	
(T-476)(Right)(WFS)(WNRS)	.....	1	351 9230	
(T-476)(Left)(WRS)(WIRS)	.....	1	351 9227	
(T-476)(Right)(WRS)(WIRS)	.....	1	351 9226	
(T-476)(Left)(WBS)	.....	1	351 9155	
(T-476)(Right)(WBS)	.....	1	351 9154	
(T-477)(Left)(WFS)(WNRS)	.....	1	351 9231	
(T-477)(Right)(WFS)(WNRS)	.....	1	351 9230	
(T-477)(Left)(WRS)(WIRS)	.....	1	351 9227	
(T-477)(Right)(WRS)(WIRS)	.....	1	351 9226	
(T-477)(Left)(WBS)	.....	1	351 9155	
(T-477)(Right)(WBS)	.....	1	351 9154	
(T-478)(Left)(WFS)(WNRS)	.....	1	351 9231	
(T-478)(Right)(WFS)(WNRS)	.....	1	351 9230	
(T-478)(Left)(WRS)(WIRS)	.....	1	351 9227	
(T-478)(Right)(WRS)(WIRS)	.....	1	351 9226	
(T-478)(Left)(WBS)	.....	1	351 9155	
(T-478)(Right)(WBS)	.....	1	351 9194	
(T-491)(Left)(WNRS)	.....	1	351 9231	
(T-491)(Right)(WNRS)	.....	1	351 9230	
(T-491)(Left)(WIRS)	.....	1	351 9227	
(T-491)(Right)(WIRS)	.....	1	351 9226	
(T-491)(Left)(WBS)	.....	1	351 9155	
(T-491)(Right)(WBS)	.....	1	351 9154	
(T-492)(Left)(WNRS)	.....	1	351 9231	
(T-492)(Right)(WNRS)	.....	1	351 9230	
(T-492)(Left)(WIRS)	.....	1	351 9227	
(T-492)(Right)(WIRS)	.....	1	351 9226	
(T-492)(Left)(WBS)	.....	1	351 9155	
(T-492)(Right)(WBS)	.....	1	351 9154	
(T-493)(Left)(WNRS)	.....	1	351 9231	
(T-493)(Right)(WNRS)	.....	1	351 9230	

Copyright 1963 American Motors Corp.

GROUP NO. — DESCRIPTION — YEAR and MODEL	PRIMARY GROUP NO.	PER CAR	PART NO.	CODE
(T-493)(Left)(WIRS)	.....	1	351 9227	
(T-493)(Right)(WIRS)	.....	1	351 9226	
(T-493)(Left)(WBS)	.....	1	351 9155	
(T-493)(Right)(WBS)	.....	1	351 9154	
(T-494)(Left)(WNRS)	.....	1	351 9231	
(T-494)(Right)(WNRS)	.....	1	351 9230	
(T-494)(Left)(WIRS)	.....	1	351 9227	
(T-494)(Right)(WIRS)	.....	1	351 9226	#
(T-494)(Left)(WBS)	.....	1	351 9155	
(T-494)(Right)(WBS)	.....	1	351 9154	
(T-495)(Left)(WNRS)	.....	1	351 9231	
(T-495)(Right)(WNRS)	.....	1	351 9230	
(T-495)(Left)(WIRS)	.....	1	351 9227	
(T-495)(Right)(WIRS)	.....	1	351 9226	
(T-495)(Left)(WBS)	.....	1	351 9155	
(T-495)(Right)(WBS)	.....	1	351 9154	
(T-496)(Left)(WNRS)	.....	1	351 9231	
(T-496)(Right)(WNRS)	.....	1	351 9230	
(T-496)(Left)(WIRS)	.....	1	351 9227	
(T-496)(Right)(WIRS)	.....	1	351 9226	
(T-496)(Left)(WBS)	.....	1	351 9155	
(T-496)(Right)(WBS)	.....	1	351 9154	
(T-497)(Left)(WNRS)	.....	1	351 9231	
(T-497)(Right)(WNRS)	.....	1	351 9230	
(T-497)(Left)(WIRS)	.....	1	351 9227	
(T-497)(Right)(WIRS)	.....	1	351 9226	
(T-497)(Left)(WBS)	.....	1	351 9155	
(T-497)(Right)(WBS)	.....	1	351 9154	
(T-498)(Left)(WNRS)	.....	1	351 9231	
(T-498)(Right)(WNRS)	.....	1	351 9230	
(T-498)(Left)(WIRS)	.....	1	351 9227	
(T-498)(Right)(WIRS)	.....	1	351 9226	
(T-498)(Left)(WBS)	.....	1	351 9155	
(T-498)(Right)(WBS)	.....	1	351 9154	
(T-522)(Left)(WFS)(WNRS)	.....	1	353 2743	
(T-522)(Right)(WFS)(WNRS)	.....	1	353 2742	
(T-522)(Left)(WRS)(WIRS)	.....	1	351 8783	
(T-522)(Right)(WRS)(WIRS)	.....	1	351 8782	
(T-532)(Left)(WFS)(WNRS)	.....	1	353 2745	
(T-532)(Right)(WFS)(WNRS)	.....	1	353 2744	
(T-532)(Left)(WRS)(WIRS)	.....	1	351 8783	
(T-532)(Right)(WRS)(WIRS)	.....	1	351 8782	
(T-533)(Left)(WFS)(WNRS)	.....	1	353 2747	
(T-533)(Right)(WFS)(WNRS)	.....	1	353 2746	
(T-533)(Left)(WRS)(WIRS)	.....	1	351 8785	
(T-533)(Right)(WRS)(WIRS)	.....	1	351 8784	
(T-534)(Left)(WFS)(WNRS)	.....	1	353 2749	
(T-534)(Right)(WFS)(WNRS)	.....	1	353 2748	
(T-534)(Left)(WRS)(WIRS)	.....	1	351 8787	
(T-534)(Right)(WRS)(WIRS)	.....	1	351 8786	
(T-535)(Left)(WFS)(WNRS)	.....	1	353 2751	
(T-535)(Right)(WFS)(WNRS)	.....	1	353 2750	
(T-535)(Left)(WRS)(WIRS)	.....	1	351 8789	
(T-535)(Right)(WRS)(WIRS)	.....	1	351 8788	
(T-536)(Left)(WFS)(WNRS)	.....	1	353 2753	
(T-536)(Right)(WFS)(WNRS)	.....	1	353 2752	
(T-536)(Left)(WRS)(WIRS)	.....	1	351 8791	
(T-536)(Right)(WRS)(WIRS)	.....	1	351 8790	
(T-537)(Left)(WNRS)	.....	1	353 2755	
(T-537)(Right)(WFS)(WNRS)	.....	1	353 2754	
(T-537)(Left)(WRS)(WIRS)	.....	1	351 8793	
(T-537)(Right)(WRS)(WIRS)	.....	1	351 8792	
(T-541)(Chrome)(Left)(WFS)(WNRS)	.....	1	353 2119	#
(T-541)(Black)(Left) 65 07-09 (WNRS)	.....	1	353 2743	#

Copyright 1963 American Motors Corp.

GROUP NO. — DESCRIPTION — YEAR and MODEL	PRIMARY GROUP NO.	PER CAR	PART NO.	CODE
(T-541)(Chrome)(Right)(WFS)(WNRS)	.....	1	353 2118	#
(T-541)(Black)(Right) 65 07-09 (WNRS)	.....	1	353 2742	#
(T-541)(Left)(WRS)(WIRS)(WBS)	.....	1	351 8813	
(T-541)(Right)(WRS)(WIRS)(WBS)	.....	1	351 8812	
(T-543)(Chrome)(Left)(WFS)(WNRS)	.....	1	353 2119	#
(T-543)(Blue)(Left) 65 07-09 (WNRS)	.....	1	353 2747	#
(T-543)(Chrome)(Right)(WFS)(WNRS)	.....	1	353 2118	#
(T-543)(Blue)(Right) 65 07-09 (WNRS)	.....	1	353 2746	#
(T-543)(Left)(WRS)(WIRS)(WBS)	.....	1	351 8813	
(T-543)(Right)(WRS)(WIRS)(WBS)	.....	1	351 8812	
(T-544)(Chrome)(Left)(WFS)(WNRS)	.....	1	353 2119	#
(T-544)(Green)(Left) 65 07-09 (WNRS)	.....	1	353 2749	#
(T-544)(Chrome)(Right)(WFS)(WNRS)	.....	1	353 2118	#
(T-544)(Green)(Right) 65 07-09 (WNRS)	.....	1	353 2748	#
(T-544)(Left)(WRS)(WIRS)(WBS)	.....	1	351 8813	
(T-544)(Right)(WRS)(WIRS)(WBS)	.....	1	351 8812	
(T-545)(Chrome)(Left)(WNRS)	.....	1	353 2119	#
(T-545)(Red)(Left) 65 07-09 (WNRS)	.....	1	353 2751	#
(T-545)(Chrome)(Right)(WFS)(WNRS)	.....	1	353 2118	#
(T-545)(Red)(Right) 65 07-09 (WNRS)	.....	1	353 2750	#
(T-545)(Left)(WRS)(WIRS)(WBS)	.....	1	351 8813	
(T-545)(Right)(WRS)(WIRS)(WBS)	.....	1	351 8812	
(T-546)(Chrome)(Left)(WFS)(WNRS)	.....	1	353 2119	#
(T-546)(Taupe)(Left) 65 07-09 (WNRS)	.....	1	353 2753	#
(T-546)(Chrome)(Right)(WFS)(WNRS)	.....	1	353 2118	#
(T-546)(Taupe)(Right) 65 07-09 (WNRS)	.....	1	353 2752	#
(T-546)(Left)(WRS)(WIRS)(WBS)	.....	1	351 8813	
(T-546)(Right)(WRS)(WIRS)(WBS)	.....	1	351 8812	
(T-547)(Chrome)(Left)(WFS)(WNRS)	.....	1	353 2119	#
(T-547)(Aqua)(Left) 65 07-09 (WNRS)	.....	1	353 2755	#
(T-547)(Chrome)(Right)(WNRS)	.....	1	353 2118	#
(T-547)(Aqua)(Right) 65 07-09 (WNRS)	.....	1	353 2754	#
(T-547)(Left)(WRS)(WIRS)(WBS)	.....	1	351 8813	
(T-547)(Right)(WRS)(WIRS)(WBS)	.....	1	351 8812	
(T-548)(Chrome)(Left)(WFS)(WNRS)	.....	1	353 2119	#
(T-548)(White)(Left) 65 07-09 (WNRS)	.....	1	353 2745	#
(T-548)(Chrome)(Right)(WFS)(WNRS)	.....	1	353 2118	#
(T-548)(White)(Right) 65 07-09 (WNRS)	.....	1	353 2744	#
(T-548)(Left)(WRS)(WIRS)(WBS)	.....	1	351 8813	
(T-548)(Right)(WRS)(WIRS)(WBS)	.....	1	351 8812	
(T-552)(Left)(WFS)(WNRS)	.....	1	353 2745	
(T-552)(Right)(WFS)(WNRS)	.....	1	353 2744	
(T-552)(Left)(WRS)(WIRS)	.....	1	351 8783	
(T-552)(Right)(WRS)(WIRS)	.....	1	351 8782	
(T-553)(Left)(WFS)(WNRS)	.....	1	353 2747	
(T-553)(Right)(WFS)(WNRS)	.....	1	353 2746	
(T-553)(Left)(WRS)(WIRS)	.....	1	351 8785	
(T-553)(Right)(WRS)(WIRS)	.....	1	351 8784	
(T-557)(Left)(WFS)(WNRS)	.....	1	353 2755	
(T-557)(Right)(WFS)(WNRS)	.....	1	353 2754	
(T-557)(Left)(WRS)(WIRS)	.....	1	351 8793	
(T-557)(Right)(WRS)(WIRS)	.....	1	351 8792	
(T-562)(Left)(WFS)(WNRS)	.....	1	353 2745	
(T-562)(Right)(WFS)(WNRS)	.....	1	353 2744	
(T-562)(Left)(WRS)(WIRS)	.....	1	351 8797	
(T-562)(Right)(WRS)(WIRS)	.....	1	351 8796	
(T-563)(Left)(WFS)(WNRS)	.....	1	353 2747	
(T-563)(Right)(WFS)(WNRS)	.....	1	353 2746	
(T-563)(Left)(WRS)(WIRS)	.....	1	351 8799	
(T-563)(Right)(WRS)(WIRS)	.....	1	351 8798	
(T-564)(Left)(WFS)(WNRS)	.....	1	353 2749	
(T-564)(Right)(WFS)(WNRS)	.....	1	353 2748	
(T-564)(Left)(WRS)(WIRS)	.....	1	351 8801	
(T-564)(Right)(WRS)(WIRS)	.....	1	351 8800	
(T-565)(Left)(WFS)(WNRS)	.....	1	353 2751	
(T-565)(Right)(WFS)(WNRS)	.....	1	353 2750	

Copyright 1963 American Motors Corp.

GROUP NO. — DESCRIPTION — YEAR and MODEL	PRIMARY GROUP NO.	PER CAR	PART NO.	CODE
(T-565)(Left)(WRS)(WIRS)	.....	1	351 8803	
(T-565)(Right)(WRS)(WIRS)	.....	1	351 8802	
(T-566)(Left)(WFS)(WNRS)	.....	1	353 2753	
(T-566)(Right)(WFS)(WNRS)	.....	1	353 2752	
(T-566)(Left)(WRS)(WIRS)	.....	1	351 8805	
(T-566)(Right)(WRS)(WIRS)	.....	1	351 8804	
(T-567)(Left)(WFS)(WNRS)	.....	1	353 2755	
(T-567)(Right)(WFS)(WNRS)	.....	1	353 2754	
(T-567)(Left)(WRS)(WNRS)	.....	1	351 8807	
(T-567)(Right)(WRS)(WNRS)	.....	1	351 8806	
(T-571)(Left)(WFS)(WNRS)	.....	1	353 2119	
(T-571)(Right)(WFS)(WNRS)	.....	1	353 2118	
(T-571)(Left)(WRS)(WIRS)	.....	1	351 8825	
(T-571)(Right)(WRS)(WIRS)	.....	1	351 8824	
(T-571)(Left)(WBS)	.....	1	351 8813	
(T-571)(Right)(WBS)	.....	1	351 8812	
(T-573)(Left)(WFS)(WNRS)	.....	1	353 2119	
(T-573)(Right)(WFS)(WNRS)	.....	1	353 2118	
(T-573)(Left)(WRS)(WIRS)	.....	1	351 8825	
(T-571)(Right)(WRS)(WIRS)	.....	1	351 8824	
(T-573)(Left)(WBS)	.....	1	351 8813	
(T-573)(Right)(WBS)	.....	1	351 8812	
(T-574)(Left)(WFS)(WNRS)	.....	1	353 2119	
(T-574)(Right)(WFS)(WNRS)	.....	1	353 2118	
(T-574)(Left)(WRS)(WIRS)	.....	1	351 8825	
(T-574)(Right)(WRS)(WIRS)	.....	1	351 8824	
(T-574)(Left)(WBS)	.....	1	351 8813	
(T-574)(Right)(WBS)	.....	1	351 8812	
(T-575)(Left)(WFS)(WNRS)	.....	1	353 2119	
(T-575)(Right)(WFS)(WNRS)	.....	1	353 2118	
(T-575)(Left)(WRS)(WIRS)	.....	1	351 8825	
(T-575)(Right)(WRS)(WIRS)	.....	1	351 8824	
(T-575)(Left)(WBS)	.....	1	351 8813	
(T-575)(Right)(WBS)	.....	1	351 8812	
(T-576)(Left)(WFS)(WNRS)	.....	1	353 2119	
(T-576)(Right)(WFS)(WNRS)	.....	1	353 2118	
(T-576)(Left)(WRS)(WIRS)	.....	1	351 8825	
(T-576)(Right)(WBS)(WIRS)	.....	1	351 8824	
(T-576)(Left)(WBS)	.....	1	351 8813	
(T-576)(Right)(WBS)	.....	1	351 8812	
(T-577)(Left)(WFS)(WNRS)	.....	1	353 2119	
(T-577)(Right)(WFS)(WNRS)	.....	1	353 2118	
(T-577)(Left)(WRS)(WIRS)	.....	1	351 8825	
(T-577)(Right)(WRS)(WIRS)	.....	1	351 8824	
(T-577)(Left)(WBS)	.....	1	351 8813	
(T-577)(Right)((WBS)	.....	1	351 8812	
(T-578)(Left)(WFS)(WNRS)	.....	1	353 2119	
(T-578)(Right)(WFS)(WNRS)	.....	1	353 2118	
(T-578)(Left)(WRS)(WIRS)	.....	1	351 8825	#
(T-578)(Right)(WRS)(WIRS)	.....	1	351 8824	
(T-578)(Left)(WBS)	.....	1	351 8813	
(T-578)(Right)(WBS)	.....	1	351 8812	
(T-582)(Left)(WFS)(WNRS)	.....	1	353 2745	
(T-582)(Right)(WFS)(WNRS)	.....	1	353 2744	
(T-582)(Left)(WRS)(WIRS)	.....	1	351 8797	
(T-582)(Right)(WRS)(WIRS)	.....	1	351 8996	
(T-583)(Left)(WFS)(WNRS)	.....	1	353 2747	
(T-583)(Right)(WFS)(WNRS)	.....	1	353 2746	

Copyright 1963 American Motors Corp.

GROUP NO. — DESCRIPTION — YEAR and MODEL	PRIMARY GROUP NO.	PER CAR	PART NO.	CODE
(T-565)(Left)(WRS)(WIRS)	.....	1	351 8803	
(T-565)(Right)(WRS)(WIRS)	.....	1	351 8802	
(T-566)(Left)(WFS)(WNRS)	.....	1	353 2753	
(T-566)(Right)(WFS)(WNRS)	.....	1	353 2752	
(T-566)(Left)(WRS)(WIRS)	.....	1	351 8805	
(T-566)(Right)(WRS)(WIRS)	.....	1	351 8804	
(T-567)(Left)(WFS)(WNRS)	.....	1	353 2755	
(T-567)(Right)(WFS)(WNRS)	.....	1	353 2754	
(T-567)(Left)(WRS)(WNRS)	.....	1	351 8807	
(T-567)(Right)(WRS)(WNRS)	.....	1	351 8806	
(T-571)(Left)(WFS)(WNRS)	.....	1	353 2119	
(T-571)(Right)(WFS)(WNRS)	.....	1	353 2118	
(T-571)(Left)(WRS)(WIRS)	.....	1	351 8825	
(T-571)(Right)(WRS)(WIRS)	.....	1	351 8824	
(T-571)(Left)(WBS)	.....	1	351 8813	
(T-571)(Right)(WBS)	.....	1	351 8812	
(T-573)(Left)(WFS)(WNRS)	.....	1	353 2119	
(T-573)(Right)(WFS)(WNRS)	.....	1	353 2118	
(T-573)(Left)(WRS)(WIRS)	.....	1	351 8825	
(T-571)(Right)(WRS)(WIRS)	.....	1	351 8824	
(T-573)(Left)(WBS)	.....	1	351 8813	
(T-573)(Right)(WBS)	.....	1	351 8812	
(T-574)(Left)(WFS)(WNRS)	.....	1	353 2119	
(T-574)(Right)(WFS)(WNRS)	.....	1	353 2118	
(T-574)(Left)(WRS)(WIRS)	.....	1	351 8825	
(T-574)(Right)(WRS)(WIRS)	.....	1	351 8824	
(T-574)(Left)(WBS)	.....	1	351 8813	
(T-574)(Right)(WBS)	.....	1	351 8812	
(T-575)(Left)(WFS)(WNRS)	.....	1	353 2119	
(T-575)(Right)(WFS)(WNRS)	.....	1	353 2118	
(T-575)(Left)(WRS)(WIRS)	.....	1	351 8825	
(T-575)(Right)(WRS)(WIRS)	.....	1	351 8824	
(T-575)(Left)(WBS)	.....	1	351 8813	
(T-575)(Right)(WBS)	.....	1	351 8812	
(T-576)(Left)(WFS)(WNRS)	.....	1	353 2119	
(T-576)(Right)(WFS)(WNRS)	.....	1	353 2118	
(T-576)(Left)(WRS)(WIRS)	.....	1	351 8825	
(T-576)(Right)(WBS)(WIRS)	.....	1	351 8824	
(T-576)(Left)(WBS)	.....	1	351 8813	
(T-576)(Right)(WBS)	.....	1	351 8812	
(T-577)(Left)(WFS)(WNRS)	.....	1	353 2119	
(T-577)(Right)(WFS)(WNRS)	.....	1	353 2118	
(T-577)(Left)(WRS)(WIRS)	.....	1	351 8825	
(T-577)(Right)(WRS)(WIRS)	.....	1	351 8824	
(T-577)(Left)(WBS)	.....	1	351 8813	
(T-577)(Right)((WBS)	.....	1	351 8812	
(T-578)(Left)(WFS)(WNRS)	.....	1	353 2119	
(T-578)(Right)(WFS)(WNRS)	.....	1	353 2118	
(T-578)(Left)(WRS)(WIRS)	.....	1	351 8825	#
(T-578)(Right)(WRS)(WIRS)	.....	1	351 8824	
(T-578)(Left)(WBS)	.....	1	351 8813	
(T-578)(Right)(WBS)	.....	1	351 8812	
(T-582)(Left)(WFS)(WNRS)	.....	1	353 2745	
(T-582)(Right)(WFS)(WNRS)	.....	1	353 2744	
(T-582)(Left)(WRS)(WIRS)	.....	1	351 8797	
(T-582)(Right)(WRS)(WIRS)	.....	1	351 8996	
(T-583)(Left)(WFS)(WNRS)	.....	1	353 2747	
(T-583)(Right)(WFS)(WNRS)	.....	1	353 2746	

Copyright 1963 American Motors Corp.

GROUP NO. — DESCRIPTION — YEAR and MODEL	PRIMARY GROUP NO.	PER CAR	PART NO.	CODE
(T-583)(Left)(WRS)(WIRS)	.....	1	351 8799	
(T-583)(Right)(WRS)(WIRS)	.....	1	351 8798	
(T-584)(Left)(WFS)(WNRS)	.....	1	353 2749	
(T-584)(Right)(WFS)(WNRS)	.....	1	353 2748	
(T-584) (Left)(WRS)(WIRS)	.....	1	351 8801	
(T-584)(Right)(WRS)(WIRS)	.....	1	351 8800	
(T-585)(Left)(WFS)(WNRS)	.....	1	353 2751	
(T-585)(Right)(WFS)(WNRS)	.....	1	353 2750	
(T-585)(Left)(WRS)(WIRS)	.....	1	351 8803	
(T-585)(Right)(WRS)(WIRS)	.....	1	351 8802	
(T-586)(Left)(WFS)(WNRS)	.....	1	353 2753	
(T-586)(Right)(WFS)(WNRS)	.....	1	353 2752	
(T-586)(Left)(WRS)(WIRS)	.....	1	351 8805	
(T-586)(Right)(WRS)(WIRS)	.....	1	351 8804	
(T-587)(Left)(WFS)(WNRS)	.....	1	353 2755	
(T-587)(Right)(WFS)(WNRS)	.....	1	353 2754	
(T-587)(Left)(WRS)(WIRS)	.....	1	351 8807	
(T-587)(Right)(WRS)(WIRS)	.....	1	351 8806	
(T-591)(Left)(WNRS)	.....	1	353 2119	
(T-591)(Right)(WNRS)	.....	1	353 2118	
(T-591)(Left)(WIRS)	.....	1	351 8825	
(T-591)(Right)(WIRS)	.....	1	351 8824	
(T-591)(Left)(WBS)	.....	1	351 8813	
(T-591)(Right)(WBS)	.....	1	351 8812	
(T-593)(Left)(WNRS)	.....	1	353 2119	
(T-593)(Right)(WNRS)	.....	1	353 2118	
(T-593)(Left)(WIRS)	.....	1	351 8825	
(T-593)(Right)(WIRS)	.....	1	351 8824	
(T-593)(Left)(WBS)	.....	1	351 8813	
(T-593)(Right)(WBS)	.....	1	351 8812	
(T-594)(Left)(WNRS)	.....	1	353 2119	
(T-594)(Right)(WNRS)	.....	1	353 2118	
(T-594)(Left)(WIRS)	.....	1	351 8825	
(T-594)(Right)(WIRS)	.....	1	351 8824	
(T-594)(Left)(WBS)	.....	1	351 8813	
(T-594)(Right)(WBS)	.....	1	351 8812	
(T-595)(Left)(WNRS)	.....	1	353 2119	
(T-595)(Right)(WNRS)	.....	1	353 2118	
(T-595)(Left)(WIRS)	.....	1	351 8825	
(T-595)(Right)(WIRS)	.....	1	351 8824	
(T-595)(Left)(WBS)	.....	1	351 8813	
(T-595)(Right)(WBS)	.....	1	351 8812	
(T-596)(Left)(WNRS)	.....	1	353 2119	
(T-596)(Right)(WNRS)	.....	1	353 2118	
(T-596)(Left)(WIRS)	.....	1	351 8825	
(T-596)(Right)(WIRS)	.....	1	351 8824	
(T-596)(Left)(WBS)	.....	1	351 8813	
(T-596)(Right)(WBS)	.....	1	351 8812	
(T-597)(Left)(WNRS)	.....	1	353 2119	
(T-597)(Right)(WNRS)	.....	1	353 2118	
(T-597)(Left)(WIRS)	.....	1	351 8825	
(T-597)(Right)(WIRS)	.....	1	351 8824	
(T-597)(Left)(WBS)	.....	1	351 8813	
(T-597)(Right)(WBS)	.....	1	351 8812	
(T-598)(Left)(WNRS)	.....	1	353 2119	
(T-598)(Right)(WNRS)	.....	1	353 2118	
(T-598)(Left)(WIRS)	.....	1	351 8825	
(T-598)(Right)(WIRS)	.....	1	351 8824	

Copyright 1963 American Motors Corp.

GROUP NO. — DESCRIPTION — YEAR and MODEL	PRIMARY GROUP NO.	PER CAR	PART NO.	CODE
(T-598)(Left)(WBS)	.....	1	351 8813	
(T-598)(Right)(WBS)	.....	1	351 8812	
(Left-Chrome) ***163 10-80 (Can-WBS)*** ***(Replaces 348 7503)***	.....	1	348 5385	
(Right-Chrome) ***163 10-80 (Can-WBS)*** ***(Replaces 348 7502)***	.....	1	348 5384	
(Left-Gold) ***163 01-10-80 (Can-WFS)(Can-WNRS)***	.....	1	349 0941	
(Right-Gold) ***163 01-10-80 (Can-WFS)(Can-WNRS)***	.....	1	349 0940	
(Left-Gold) ***163 01-10-80 (Can-WRS)(Can-WIRS)***	.....	1	349 0937	
(Right-Gold) ***163 01-10-80 (Can-WRS)(Can-WIRS)***	.....	1	349 0936	
ATTACHING PARTS				
Panel To Frame				
SCREW, Tapping..... 60 01 (WRS): 61 01 (10-24): 60 10-20-80 (10-24 x 3/8" Long)	.....	2	343 9928	
SCREW, Tapping..... 62 01-10-80 (Front): 63 10-80 (Front-5/8" Long): 65 01-80 (Front-10-12 x 5/8" Long)	17.660	4	G161902	
SCREW, Tapping..... 63 01-10-80 (Front-1/2" Long)	17.660	4	G161895	NA
SCREW, Tapping..... 62-63 01-10-80 (Rear-1/2" Long)	.....	4	400 0491	
SCREW, Tapping..... 64 01: 63 01-10-80 (Rear-3/8" Long)	.....	4	400 0583	
SCREW, Tapping..... 62-63 01-10-80: 64 01 (WFS-220)(WIRS-220) (WRS-220): 65 01 (220)(330): 65 10-80 (550-WFS) (550-WNRS)(660-WFS)(660-WNRS)(880-WFS) (880-WNRS) ***(Replaces 400 0491)***	.....	6	400 0575	
SCREW, Tapping..... 65 01-10-80 (WRS-32 Thread)(WIRS-32 Thread) (WBS-32 Thread)	.....	4	400 1510	
SCREW, Tapping..... 65 01-10-80 (WRS-24 Thread)(WIRS-24 Thread) (WBS-24 Thread)	.....	4	400 1463	
SCREW, Tapping..... 61 10-20-80 (5/8" Long): 63 10-80 (Rear-5/8" Long)	.....	4	345 8574	
SCREW, Tapping..... 64 01 (WIRS)(330): 64 10-80 (4 Req.): 65 10-80 (10-24 x 5/8" Long)(2 Req.)	.....	AR	400 0575	
SPACER..... 64-65 01-10-80	29.105	4	351 9016	
SPACER..... 65 01-10-80 (WRS)(WIRS)	.....	2	351 8498	
SPACER..... 60 10-20-80 (WFS)	.....	2	341 6661	
CAP, Pushnut..... 64 10 (WFS)(WNRS): 65 01-10 (WFS)(WNRS)	.....	2	400 1529	
BUTTON, Front Seat Sidewing Panel Plug				
(Gray) 61 01 (WNRS)	.....	2	346 0643	
(Silver) 61 01 (WNRS)	.....	2	347 4520	
(Blue) 61 01 (WNRS)	.....	2	346 0644	
(Green) 61 01 (WNRS) ***(Discontinued)***	.....	2	346 0645	
(Tan) 61 01 (WNRS)	.....	2	346 0646	
29.127 STOP, Front Seat Back End (Note 29.100-1)				
60 01 (WNRS) ***(Replaces 343 2080)***	.....	4	320 2806	
ATTACHING PARTS				
Stop To Bottom Frame				
SCREW, Tapping..... 60 01 (WNRS)	17.666	4	G161631	NA
29.129 EXTENSION KIT, Front Seat Slide Adjuster (Note 29.100-1)				
64-65 01: 63 Thru 65 10-80 (WFS-1 Req.)(WNRS-1 Req.)(WRS-1 Req.) (WIRS-2 Req.)(WBS-2 Req.)	.....	AR	448 0916	

Copyright 1963 American Motors Corp.

GROUP NO. — DESCRIPTION — YEAR and MODEL	PRIMARY GROUP NO.	PER CAR	PART NO.	CODE
BRACKET, Front Seat Slide Adjuster Extension (Note 29. 100-1)				
64-65 01: 63 Thru 65 10-80 (WFS-2 Req.)(WNRS-2 Req.)(WRS-1 Req.) (WIRS-4 Req.)(WBS-4 Req.)	.....	AR	448 0917	
ATTACHING PARTS Seat Adjuster To Extension Bracket				
SCREW, Machine..... 64 01: 63-64 10-80 (WFS-4 Req.)(WNRS-4 Req.) (WRS-4 Req.)(WIRS-8 Req.)(WBS-8 Req.)	23. 008	AR	400 0033	
29. 130 SPACER KIT, Front Seat Slide Adjuster (Note 29. 100-1)				
60 Thru 62 10-20-80 (WFS-1 Req.)(WNRS-1 Req.)(WRS-1 Req.)(WIRS-1 Req.) (WBS-2 Req.)	.....	AR	447 8081	
SPACER, Front Seat Slide Adjuster (Note 29. 100-1)				
(Front) 60 Thru 62 10-20-80 (WFS-2 Req.)(WNRS-2 Req.)(WRS-2 Req.)(WIRS-4 Req.)(WBS-4 Req.)	.....	AR	447 8082	
(Rear) 60 Thru 62 10-20-80 (WFS-2 Req.)(WNRS-2 Req.)(WRS-2 Req.)(WIRS-4 Req.)(WBS-4 Req.)	.....	AR	447 8083	
SUPPORT, Front Seat Adjuster (Note 29. 100-1)				
(Front) 62 01 (WFS-2 Req.)(WNRS-2 Req.)(WRS-2 Req.)(WIRS-4 Req.)(WBS-4 Req.)	20. 020	AR	342 1566	
29. 131 SLIDE, Front Seat Adjusting (Note 29. 100-1)				
(Left) 60 01 (Note 29. 103-1)	.....	1	342 9085	
(Left) 60 01 (Note 29. 103-2)	.....	1	344 6241	
(Left) ***61 01 (RHD-WNRS)(RHD-WRS)***	.....	1	345 8693	
(Left-Outer) 61 01 (WIRS)(WBS)	.....	1	345 8691	
(Left-Inner) 61 01 (WIRS)(WBS)	.....	1	346 3974	
(Left) ***62-63 01 (RHD-WFS)(RHD-WNRS)(RHD-WRS)***	.....	1	345 8693	
(Left-Outer) 62 01 (WIRS)(WBS)	.....	1	346 2821	
(Left-Inner) 62-63 01 (WIRS)(WBS)	.....	1	346 3974	
(Left) 61 Thru 63 01 (LHD-WFS)(LHD-WNRS)(LHD-WRS)(WIRS)(WBS) .....***(Replaces 346 2821)***	.....	1	350 5034	
(Left) ***163 01 (CAN-LHD-WFS)(CAN-LHD-WNRS)(CAN-LHD-WRS):*** 63 10-80 (LHD-WFS)(LHD-WNRS)(LHD-WRS)	.....	1	348 3393	
(Left) ***163 01 (CAN-RHD-WFS)(CAN-RHD-WNRS)(CAN-RHD-WRS): 63 10-80 (RHD-WFS)(RHD-WNRS)(RHD-WRS)***	.....	1	348 3395	
(Left-Inner) ***163 01 (CAN-WIRS)(CAN-WBS)***	.....	1	348 3394	
(Left-Outer) 63 01 (WIRS)(WBS)	.....	1	350 5034	
(Left-Outer) ***163 01 (CAN-WIRS)(CAN-WBS):*** 63 10-80 (WIRS)(WBS)	.....	1	348 3393	
(Left) ***64 01 (RHD-WFS)(RHD-WNRS)(RHD-WRS)***	.....	1	349 7977	
(Left) 64-65 01 (LHD-WFS-Note 29. 131-1 Type 1)(LHD-WNRS-Note 29. 131-1 Type 1)(LHD-WRS-Note 29. 131-1 Type 1)	.....	1	350 2411	
(Left) 65 01-10-80 (LHD-WFS-Note 29. 131-1 Type 2)(LHD-WNRS-Note 29. 131-1 Type 2)(LHD-WRS-Note 29. 131-1 Type 2)	.....	1	353 5053	

NOTE 29. 131-1: Two Types of Adjusting Slides were used on the 65 01-10-80 Models. They can be identified as follows:

Type 1: The Latch Handle is round, is riveted to the Latch on the Adjusting Slide and was used prior to Sequence No.

Type 2: The Latch Handle is flat, is stamped as part of the Latch and was used after Sequence No.

Copyright 1963 American Motors Corp.

GROUP NO. — DESCRIPTION — YEAR and MODEL	PRIMARY GROUP NO.	PER CAR	PART NO.	CODE
(Left-Inner) 64-65 01-10-80 (WIRS-Note 29.131-1 Type 1)(WBS-Note 29.131-1 Type 1): 63 10-80 (WRS)(WBS)	.....	1	349 7976	
(Left-Inner) 65 01-10-80 (WIRS-Note 29.131-1 Type 2)(WBS-Note 29.131-1 Type 2)	.....	1	353 5054	
(Left-Outer) 64 01 (WIRS)(WBS)	.....	1	350 2411	
(Left-Outer) 65 01 (WIRS-Note 29.131-1 Type 1)(WBS-Note 29.131-1 Type 1)	.....	1	353 1567	
(Left-Outer) 65 01-10-80 (WIRS-Note 29.131-1 Type 2)(WBS-Note 29.131-1 Type 2)	.....	1	353 5051	
(Left) ***65 01-10-80 (RHD-WFS-Note 29.131-1 Type 1)(RHD-WNRS-Note 29.131-1 Type 1)(RHD-WRS-Note 29.131-1 Type 1)***	.....	1	349 7977	
(Left) ***65 01-10-80 (RHD-WFS-Note 29.131-1 Type 2)(RHD-WNRS-Note 29.131-1 Type 2)(RHD-WRS-Note 29.131-1 Type 2)***	.....	1	353 5055	
(Left) 60 10-20-80 (LHD-WFS)(LHD-WNRS)(LHD-WRS)	.....	1	344 6185	
(Left) ***60-61 10-80 (RHD-WFS)(RHD-WNRS)(RHD-WRS)***	.....	1	346 5317	
(Left-Outer) 60 10-20-80 (WIRS)	.....	1	344 6185	
(Left-Inner) 60 10-20-80 (WIRS)	.....	1	344 6184	
(Left) 61 10-20-80 (LHD-WFS)(LHD-WNRS)(LHD-WRS)	.....	1	345 8681	
(Left-Outer) 61 10-20-80 (WIRS)(WBS)	.....	1	345 8681	
(Left-Inner) 61 10-20-80 (WIRS)(WBS)	.....	1	346 5316	
(Left) 62 10-20-80 (LHD-WFS)(LHD-WNRS)(LHD-WRS)	.....	1	346 2831	
(Left) ***62 10-80 (RHD-WFS)(RHD-WNRS)(RHD-WRS)***	.....	1	346 2833	
(Left-Outer) 62 10-80 (WIRS)(WBS)	.....	1	346 2831	
(Left-Inner) 62 10-80 (WIRS)(WBS)	.....	1	346 2834	
(Left) 64-65 10-80 (LHD-WFS-Note 29.131-1 Type 1)(LHD-WNRS-Note 29.131-1 Type 1)(LHD-WRS-Note 29.131-1 Type 1)	.....	1	352 0693	
(Left-Outer) 64 10-80 (WIRS)(WBS)	.....	1	352 0693	
(Left-Outer) 65 10-80 (WIRS-Note 29.131-1 Type 1)(WBS-Note 29.131-1 Type 1)	.....	1	353 1569	
(Right) 60 01: 61 Thru 63 01 (LHD-WFS)(LHD-WNRS) (LHD-WRS) ***(Replaces 344 6240)***	.....	1	346 3974	
(Right) ***61 01 (RHD-WNRS)(RHD-WRS)***	.....	1	345 8692	
(Right-Outer) 61 01 (WIRS)(WBS)	.....	1	345 8692	
(Right-Inner) 61 Thru 63 01 (WIRS)(WBS)	.....	1	345 8693	
(Right) ***62 01 (RHD-WFS)(RHD-WNRS)(RHD-WRS):*** 62-63 01 (WIRS) (WBS) ***(Replaces 346 2826)***	.....	1	346 2822	
(Right) ***163 01 (CAN-LHD-WFS)(CAN-LHD-WNRS)(CAN-LHD-WRS):*** 63-64 10-80 (LHD-WFS)(LHD-WNRS)(LHD-WRS)	.....	1	348 3394	
(Right) ***63 01 (RHD-WFS)(RHD-WNRS)(RHD-WRS)***	.....	1	346 2826	
(Right) ***163 01 (CAN-RHD-WFS)(CAN-RHD-WNRS)(CAN-RHD-WRS): 63 10-80 (RHD-WFS)(RHD-WNRS)(RHD-WRS)***	.....	1	348 3392	
(Right-Inner) ***163 01 (Can-WIRS)(Can-WBS):*** 64-65 01-10-80 (WIRS-Note 29.131-1 Type 1)(WBS-Note 29.131-1 Type 1): 63 10-80 (WIRS)(WBS)	.....	1	349 7977	
(Right-Inner) 65 01-10-80 (WIRS-Note 29.131-1 Type 2)(WBS-Note 29.131-1 Type 2)	.....	1	353 5055	
(Right-Outer) ***163 01 (CAN-WIRS)(CAN-WBS):*** 63 10-80 (WIRS)(WBS)	.....	1	348 3392	
(Right) 64 01 (LHD-WFS)(LHD-WNRS)(LHD-WRS)	.....	1	349 7976	
(Right-Outer) 64 01 (WIRS)(WBS)	.....	1	350 2410	
(Right) ***64-65 01 (RHD-WFS-Note 29.131-1 Type 1)(RHD-WNRS-Note 29.131-1) (RHD-WRS-Note 29.131-1 Type 1)***	.....	1	350 2410	
(Right) ***65 01-10-80 (RHD-WFS-Note 29.131-1 Type 2)(RHD-WNRS-Note 29.131-1 Type 2)(RHD-WRS-Note 29.131-1 Type 2)***	.....	1	353 5052	
(Right) 65 01-10-80 (LHD-WFS-Note 29.131-1 Type 1)(LHD-WNRS-Note 29.131-1 Type 1)(LHD-WRS-Note 29.131-1 Type 1)	.....	1	349 7976	
(Right) 65 01-10-80 (LHD-WFS-Note 29.131-1 Type 2)(LHD-WNRS-Note 29.131-1 Type 2)(LHD-WRS-Note 29.131-1 Type 2)	.....	1	353 5054	
(Right-Outer) 65 01 (WIRS-Note 29.131-1 Type 1)(WBS-Note 29.131-1 Type 1)	.....	1	353 1566	
(Right-Outer) 65 01-10-80 (WIRS-Note 29.131-1 Type 2)(WBS-Note 29.131-1 Type 2)	.....	1	353 5050	
(Right) 60 10-20-80 (LHD-WFS)(LHD-WNRS)(LHD-WRS)	.....	1	344 6184	
(Right) ***60 10-80 (RHD-WFS)(RHD-WNRS)(RHD-WRS)***	.....	1	344 6194	
(Right-Outer) 60 10-20-80 (WIRS)	.....	1	344 6187	
(Right-Inner) 60 10-20-80 (WIRS)	.....	1	344 6184	
(Right) 61 10-20-80 (LHD-WFS)(LHD-WNRS)(LHD-WRS)	.....	1	346 5316	

Copyright 1963 American Motors Corp.

GROUP NO. — DESCRIPTION — YEAR and MODEL	PRIMARY GROUP NO.	PER CAR	PART NO.	CODE
(Left-Inner) 64-65 01-10-80 (WIRS-Note 29.131-1 Type 1)(WBS-Note 29.131-1 Type 1): 63 10-80 (WRS)(WBS)	.....	1	349 7976	
(Left-Inner) 65 01-10-80 (WIRS-Note 29.131-1 Type 2)(WBS-Note 29.131-1 Type 2)	.....	1	353 5054	
(Left-Outer) 64 01 (WIRS)(WBS)	.....	1	350 2411	
(Left-Outer) 65 01 (WIRS-Note 29.131-1 Type 1)(WBS-Note 29.131-1 Type 1)	.....	1	353 1567	
(Left-Outer) 65 01-10-80 (WIRS-Note 29.131-1 Type 2)(WBS-Note 29.131-1 Type 2)	.....	1	353 5051	
(Left) ***65 01-10-80 (RHD-WFS-Note 29.131-1 Type 1)(RHD-WNRS-Note 29.131-1 Type 1)(RHD-WRS-Note 29.131-1 Type 1)***	.....	1	349 7977	
(Left) ***65 01-10-80 (RHD-WFS-Note 29.131-1 Type 2)(RHD-WNRS-Note 29.131-1 Type 2)(RHD-WRS-Note 29.131-1 Type 2)***	.....	1	353 5055	
(Left) 60 10-20-80 (LHD-WFS)(LHD-WNRS)(LHD-WRS)	.....	1	344 6185	
(Left) ***60-61 10-80 (RHD-WFS)(RHD-WNRS)(RHD-WRS)***	.....	1	346 5317	
(Left-Outer) 60 10-20-80 (WIRS)	.....	1	344 6185	
(Left-Inner) 60 10-20-80 (WIRS)	.....	1	344 6184	
(Left) 61 10-20-80 (LHD-WFS)(LHD-WNRS)(LHD-WRS)	.....	1	345 8681	
(Left-Outer) 61 10-20-80 (WIRS)(WBS)	.....	1	345 8681	
(Left-Inner) 61 10-20-80 (WIRS)(WBS)	.....	1	346 5316	
(Left) 62 10-20-80 (LHD-WFS)(LHD-WNRS)(LHD-WRS)	.....	1	346 2831	
(Left) ***62 10-80 (RHD-WFS)(RHD-WNRS)(RHD-WRS)***	.....	1	346 2833	
(Left-Outer) 62 10-80 (WIRS)(WBS)	.....	1	346 2831	
(Left-Inner) 62 10-80 (WIRS)(WBS)	.....	1	346 2834	
(Left) 64-65 10-80 (LHD-WFS-Note 29.131-1 Type 1)(LHD-WNRS-Note 29.131-1 Type 1)(LHD-WRS-Note 29.131-1 Type 1)	.....	1	352 0693	
(Left-Outer) 64 10-80 (WIRS)(WBS)	.....	1	352 0693	
(Left-Outer) 65 10-80 (WIRS-Note 29.131-1 Type 1)(WBS-Note 29.131-1 Type 1)	.....	1	353 1569	
(Right) 60 01: 61 Thru 63 01 (LHD-WFS)(LHD-WNRS)(LHD-WRS) ***(Replaces 344 6240)***	.....	1	346 3974	
(Right) ***61 01 (RHD-WNRS)(RHD-WRS)***	.....	1	345 8692	
(Right-Outer) 61 01 (WIRS)(WBS)	.....	1	345 8692	
(Right-Inner) 61 Thru 63 01 (WIRS)(WBS)	.....	1	345 8693	
(Right) ***62 01 (RHD-WFS)(RHD-WNRS)(RHD-WRS):*** 62-63 01 (WIRS)(WBS) ***(Replaces 346 2826)***	.....	1	346 2822	
(Right) ***163 01 (CAN-LHD-WFS)(CAN-LHD-WNRS)(CAN-LHD-WRS):*** 63-64 10-80 (LHD-WFS)(LHD-WNRS)(LHD-WRS)	.....	1	348 3394	
(Right) ***63 01 (RHD-WFS)(RHD-WNRS)(RHD-WRS)***	.....	1	346 2826	
(Right) ***163 01 (CAN-RHD-WFS)(CAN-RHD-WNRS)(CAN-RHD-WRS): 63 10-80 (RHD-WFS)(RHD-WNRS)(RHD-WRS)***	.....	1	348 3392	
(Right-Inner) ***163 01 (Can-WIRS)(Can-WBS):*** 64-65 01-10-80 (WIRS-Note 29.131-1 Type 1)(WBS-Note 29.131-1 Type 1): 63 10-80 (WIRS)(WBS)	.....	1	349 7977	
(Right-Inner) 65 01-10-80 (WIRS-Note 29.131-1 Type 2)(WBS-Note 29.131-1 Type 2)	.....	1	353 5055	
(Right-Outer) ***163 01 (CAN-WIRS)(CAN-WBS):*** 63 10-80 (WIRS)(WBS)	.....	1	348 3392	
(Right) 64 01 (LHD-WFS)(LHD-WNRS)(LHD-WRS)	.....	1	349 7976	
(Right-Outer) 64 01 (WIRS)(WBS)	.....	1	350 2410	
(Right) ***64-65 01 (RHD-WFS-Note 29.131-1 Type 1)(RHD-WNRS-Note 29.131-1)(RHD-WRS-Note 29.131-1 Type 1)***	.....	1	350 2410	
(Right) ***65 01-10-80 (RHD-WFS-Note 29.131-1 Type 2)(RHD-WNRS-Note 29.131-1 Type 2)(RHD-WRS-Note 29.131-1 Type 2)***	.....	1	353 5052	
(Right) 65 01-10-80 (LHD-WFS-Note 29.131-1 Type 1)(LHD-WNRS-Note 29.131-1 Type 1)(LHD-WRS-Note 29.131-1 Type 1)	.....	1	349 7976	
(Right) 65 01-10-80 (LHD-WFS-Note 29.131-1 Type 2)(LHD-WNRS-Note 29.131-1 Type 2)(LHD-WRS-Note 29.131-1 Type 2)	.....	1	353 5054	
(Right-Outer) 65 01 (WIRS-Note 29.131-1 Type 1)(WBS-Note 29.131-1 Type 1)	.....	1	353 1566	
(Right-Outer) 65 01-10-80 (WIRS-Note 29.131-1 Type 2)(WBS-Note 29.131-1 Type 2)	.....	1	353 5050	
(Right) 60 10-20-80 (LHD-WFS)(LHD-WNRS)(LHD-WRS)	.....	1	344 6184	
(Right) ***60 10-80 (RHD-WFS)(RHD-WNRS)(RHD-WRS)***	.....	1	344 6194	
(Right-Outer) 60 10-20-80 (WIRS)	.....	1	344 6187	
(Right-Inner) 60 10-20-80 (WIRS)	.....	1	344 6184	
(Right) 61 10-20-80 (LHD-WFS)(LHD-WNRS)(LHD-WRS)	.....	1	346 5316	

Copyright 1963 American Motors Corp.

GROUP NO. — DESCRIPTION — YEAR and MODEL	PRIMARY GROUP NO.	PER CAR	PART NO.	CODE
(Right) ***61 10-80 (RHD-WFS)(RHD-WNRS)(RHD-WRS)***	.....	1	345 8682	
(Right-Outer) 61 10-20-80 (WIRS)(WBS)	.....	1	345 8682	
(Right-Inner) 61 10-20-80 (WIRS)(WBS)	.....	1	346 5317	
(Right) 62 10-80 (LHD-WFS)(LHD-WNRS)(LHD-WRS)	.....	1	346 2834	
(Right) 62 10-80 (LHD-WIRS)(LHD-WBS): ***62 10-80 (RHD) ..(Replaces 348 2832)***	.....	1	346 2836	
(Right-Inner) 62 10-80 (WIRS)(WBS)	.....	1	346 2833	
(Right-Outer) 64 10-80 (WIRS)(WBS)	.....	1	352 0692	
(Right) ***64-65 10-80 (RHD-WFS-Note 29.131-1 Type 1)(RHD-WNRS-Note 29.131-1 Type 1)(RHD-WRS-Note 29.131-1 Type 1).***	.....	1	352 0692	
(Right-Outer) 65 10-80 (WIRS-Note 29.131-1 Type 1)(WBS-Note 29.131-1 Type 1)	.....	1	353 1568	
ATTACHING PARTS				
Seat Adjuster To Floor				
BOLT, Machine..... 60 01 (7/8" Long-Note 29.103-1)	17.038	4	G181596	NA
SCREW, Tapping..... 61 01-10-20-80 (WBS): 62-63 01 (WIRS-1-21/32" Long)(WBS-1-21/32" Long)	.....	2	400 0233	
SCREW, Tapping..... 62-63 01 (WFS-4 Req.)(WNRS-4 Req.)(WRS-4 Req.)(WIRS-5/8" Long-6 Req.)(WBS-5/8" Long-6 Req.)	.....	AR	346 4494	
SCREW, Tapping..... ***163 01 (CAN-WNRS)(CAN-WFS)(CAN-WRS):*** 60-61 01: 64-65 01-10-80 (WFS)(WNRS)(WRS): 60 Thru 63 10-20-80 (WFS)(WNRS)(WRS) ***.....(Replaces 345 2825)***	22.056	4	400 0032	#
SCREW, Tapping..... ***163 01 (CAN-WIRS)(CAN-WBS):*** 64-65 01-10-80 (WIRS)(WBS): 60 Thru 63 10-20-80 (WIRS): 61 Thru 63 10-20-80 (WBS).....***(Replaces 345 2825)***	22.056	8	400 0032	#
SCREW, Machine..... 64 01 (WIRS)(WBS): 65 01-10-80 (WIRS)(WBS).....	23.006	1	400 0593	
Seat Adjuster To Bottom Frame				
WASHER, Cup..... 60 Thru 62 01-10-20-80 (WFS-4 Req.)(WNRS-4 Req.)(WRS-4 Req.)(WIRS-8 Req.)(WBS-8 Req.): 63 01 (WFS-4 Req.)(WNRS-4 Req.)(WRS-4 Req.)(WIRS-8 Req.)(WBS-8 Req.)	.....	AR	343 8648	
WASHER, Lock..... 60 Thru 65 01-10-20-80 (WFS-4 Req.)(WNRS-4 Req.)(WRS-4 Req.)(WIRS-8 Req.)(WBS-8 Req.).....	17.820	AR	G120214	NA
SPACER ..... 61-62 (WIRS-1-1/32" Long)(WBS-1-1/32" Long)....	.....	2	346 1027	
SPACER ..... 62-63 01 (WIRS-25/32" Long)(WBS-25/32" Long)...	.....	2	348 9848	
NUT, Hexagon..... 60 01-10-20-80 (WFS-4 Req.)(WNRS-4 Req.)(WRS-4 Req.)(WIRS-8 Req.).....	17.406	AR	G120376	NA
NUT, Hexagon..... 61 Thru 65 01-10-20-80 (WFS-4 Req.)(WNRS-4 Req.)(WRS-4 Req.)(WIRS-8 Req.)(WBS-8 Req.).....	17.406	AR	G120368	
NUT, Hexagon..... 63 Thru 65 01-10-80 (WFS)(WNRS)(WRS).....	17.412	4	G271187	NA
NUT, Hexagon..... 63 Thru 65 01-10-80 (WIRS)(WBS)	17.412	8	G271187	NA
SPRING, Front Seat Slide Adjuster Latch Locking (Note 29.100-1)				
60 Thru 65 01-10-20-80 (WFS-2 Req.)(WNRS-2 Req.)(WRS-2 Req.)(WIRS-4 Req.)(WBS-4 Req.)	.....	AR	447 8806	
29.133 WIRE, Front Seat Adjusting Slide Latch (Note 29.100-1)				
60 Thru 62 01-10-20-80 (LHD-WFS)(LHD-WNRS)(LHD-WRS): 63 01 (LHD-WFS)(LHD-WNRS)(LHD-WRS)	.....	1	344 6190	
60 Thru 65 01-10-20-80 (WIRS-Note 29.131-1 Type 1)(WBS-Note 29.131-1 Type 1)	.....	2	344 6191	
65 01-10-80 (WIRS-Note 29.131-1 Type 2)(WBS-Note 29.131-1 Type 2).....	.....	2	353 5056	
62-63 01 (RHD-WFS)(RHD-WNRS)(RHD-WRS): 60 Thru 62 10-20-80 (RHD-WFS)(RHD-WNRS)(RHD-WRS)	.....	1	344 6218	
163 01 (CAN-LHD-WFS)(CAN-LHD-WNRS)(CAN-LHD-WRS): 64-65 01 (WFS)(WNRS)(WRS): 63 Thru 65 10-80 (WFS-Note 29.131-1 Type 1)(WNRS-Note 29.131-1 Type 1)(WRS-Note 29.131-1 Type 1)	.....	1	348 3534	
65 01-10-80 (WFS-Note 29.131-1 Type 2)(WNRS-Note 29.131-1 Type 2)(WRS-Note 29.131-1 Type 2)	.....	1	353 5057	

Copyright 1963 American Motors Corp.

GROUP NO. — DESCRIPTION — YEAR and MODEL	PRIMARY GROUP NO.	PER CAR	PART NO.	CODE
SPRING, Front Seat Adjusting Slide Latch Wire Tension (Note 29.100-1)				
60 Thru 63 01-10-20-80 (WFS)(WNRS)(WRS)	.....	2	343 8620	
CLIP, Front Seat Adjusting Slide Latch Wire Guide				
64 01-10-80	.....	1	348 3579	
KNOB, Front Seat Adjusting Slide Handle (Note 29.100-1)				
(Chrome) 60 01-10-20-80 (WFS-1 Req.)(WNRS-1 Req.)(WRS-1 Req.)(WIRS-2 Req.)	.....	AR	315 5840	
(Gray) 60 01-10-20-80 (WFS-1 Req.)(WNRS-1 Req.)(WRS-1 Req.)(WIRS-2 Req.)	.....	AR	344 6219	
(Chrome) 61 Thru 63 01-10-20-80 (WFS-1 Req.)(WNRS-1 Req.)(WRS-1 Req.)(WIRS-2 Req.)(WBS-2 Req.)	.....	AR	345 8639	
(Black) 63 Thru 65 01-10-20-80 (WFS-1 Req. -Note 29.131-1 Type 1)(WNRS-1Req. -Note 29.131-1 Type 1)(WRS-1 Req. -Note 29.131-1 Type 1)(WIRS-2 Req. -Note 29.131-1 Type 1)(WBS-2 Req. -Note 29.131-1 Type 1)	.....	AR	350 2412	
(Black) 65 01-10-80 (WFS-1 Req. -Note 29.131-1 Type 2)(WNRS-1 Req. -Note 29.131-1 Type 2)(WRS-1 Req. -Note 29.131-1 Type 2)(WIRS-2 Req. -Note 29.131-1 Type 2)(WBS-2 Req. -Note 29.131-1 Type 2)	.....	AR	353 5058	
ATTACHING PARTS Knob To Handle Shaft				
PIN, Spring ..... 61 Thru 65 01-10-20-80 (WFS-1 Req.)(WNRS-1 Req.)(WRS-1 Req.)(WIRS-2 Req.)(WBS-2 Req.)	17.472	AR	G273337	NA
29.138 SPRING, Front Seat Adjusting Slide (Note 29.100-1)				
60 01 (1 Req.): 61 01 (WNRS-1 Req.)(WRS-1 Req.)(WIRS-2 Req.)(WBS-2 Req.): 62 Thru 65 01-10-20-80 (2 Req.): 60-61 10-20-80 (2 Req.) ..... *(Replaces 345 2161)*	.....	AR	342 2358	
ATTACHING PARTS Spring To Floor Pan				
CLIP, Spring 60 01	.....	1	344 6193	
29.140 ACTUATOR ASSEMBLY, Front Seat Cushion Lounge Tilt (Note 29.100-1)				
62 01-10-80	.....	1	347 1253	
(Left) 63 01-10-80	.....	1	349 5549	
(Right) 63 01-10-80	.....	1	349 5548	
ATTACHING PARTS Actuator To Bottom Frame				
CLAMP 62 01-10-80	.....	1	347 1277	
CLAMP (Left) ..... 63 01: 63 10-80 (WIRS-WTS)	.....	1	348 5675	
CLAMP (Right) ..... 63 01: 63 10-80 (WIRS-WTS)	.....	1	348 5674	
SCREW, Machine..... 62 01-10-80 (2 Req.): 63 01-10-80 (4 Req.)	23.008	AR	400 0033	
PIN, Locking..... 62-63 01-10-80	.....	2	400 0406	
RIVET, Solid..... 62 01-10-80 (2 Req.): 63 01-10-80 (4 Req.)	17.540	AR	G447148	NA
NUT, Speed..... 62 01-10-80 (2 Req.): 63 01-10-80 (4 Req.)	13.155	AR	400 0369	
CYLINDER ASSEMBLY, Front Seat Cushion Lounge Tilt				
62 01-10-80 (1 Req.): 63 01-10-80 (2 Req.)...(Incl. Shaft)	.....	AR	447 9730	
SHAFT, Front Seat Cushion Lounge Tilt Actuator Drive				
62 01-10-80	.....	1	347 1263	
(Left) 63 01-10-80	.....	1	349 0901	
(Right) 63 01-10-80	.....	1	349 0900	
KNOB, Actuator Drive Shaft (Handle)				
62 01-10-80 (1 Req.): 63 01-10-80 (2 Req.)	7.030	AR	316 2297	

Copyright 1963 American Motors Corp.

GROUP NO. — DESCRIPTION — YEAR and MODEL	PRIMARY GROUP NO.	PER CAR	PART NO.	CODE
SPRING, Front Seat Cushion Lounge Tilt Actuator				
62 01-10-80 (1 Req.): 63 01-10-80 (2 Req.)	.....	AR	347 1261	
SPRING, Front Seat Cushion Lounge Tilt Actuator Release				
62 01-10-80 (1 Req.): 63 01-10-80 (2 Req.)	.....	AR	347 1262	
PLATE, Front Seat Cushion Lounge Tilt Actuator Lock				
62 01-10-80 (1 Req.): 63 01-10-80 (2 Req.)	.....	AR	347 1260	
BRACKET, Front Seat Cushion Lounge Tilt Actuator				
62 01-10-80 (1 Req.): 63 01-10-80 (2 Req.)	.....	AR	347 1254	
SEAL KIT, Front Seat Cushion Lounge Tilt Actuator Cylinder				
62 01-10-80 (1 Req.): 63 01-10-80 (2 Req.)	.....	AR	447 9785	
RING, Front Seat Cushion Lounge Tilt Actuator Piston Retaining				
62 01-10-80 (2 Req.): 63 01-10-80 (4 Req.)	.....	AR	447 9734	
PIN, Front Seat Cushion Lounge Tilt Actuator Drive Shaft Groove				
62 01-10-80 (2 Req.): 63 01-10-80 (4 Req.)	.....	AR	447 9735	
CAP, Front Seat Cushion Lounge Tilt Actuator Cylinder				
62 01-10-80 (2 Req.): 63 01-10-80 (4 Req.)	.....	AR	347 1256	
WASHER, Front Seat Cushion Lounge Tilt Actuator Piston Pressure				
62 01-10-80 (1 Req.): 63 01-10-80 (2 Req.)	.....	AR	347 1264	
PISTON, Front Seat Cushion Lounge Tilt Acutator Cylinder				
62 02-20-80 (1 Req.): 63 01-10-80 (2 Req.)	.....	AR	347 1255	
PLATE, Front Seat Cushion Lounge Tilt Actuator Driver				
62 01-10-80 (1 Req.): 63 01-10-80 (2 Req.)	.....	AR	347 1259	
SHAFT, Front Seat Cushion Lounge Tilt Actuator Cylinder				
62 01-10-80 (1 Req.): 63 01-10-80 (2 Req.)	.....	AR	347 1258	
CYLINDER, Front Seat Cushion Lounge Tilt Actuator				
62 01-10-80 (1 Req.): 63 01-10-80 (2 Req.)	.....	AR	347 1257	
PIN, Front Seat Cushion Lounge Tilt Actuator Bracket Roll				
62 01-10-80 (5 Req.): 63 01-10-80 (19 Req.)	.....	AR	447 9731	
29.141 ARMREST ASSEMBLY, Trimmed Front Seat Back Center (Order Component Parts)				

Copyright 1963 American Motors Corp.

GROUP NO. — DESCRIPTION — YEAR and MODEL	PRIMARY GROUP NO.	PER CAR	PART NO.	CODE
29.142 FRAME ASSEMBLY, Front Seat Back Center Armrest				
65 50 (Marlin-WBS): 64-65 (WBS)		1	352 0490	#
ATTACHING PARTS Armrest To Support				
PIN, Pivot ..... 65 50 (Marlin-WBS): 64-65 80 (WBS)		2	400 1402	#
BRACKET, Front Seat Back Center Armrest				
65 50 (Marlin-WBS): 64-65 80 (WBS)		1	352 0493	#
BAR, Front Seat Back Center Armrest Lock				
65 50 (Marlin-WBS): 64-65 80 (WBS)		1	352 0495	#
RETAINER, Front Seat Back Center Armrest Hook				
65 50 (Marlin-WBS): 64-65 80 (WBS)		1	352 0496	#
WASHER, Front Seat Back Center Armrest Lock				
65 50 (Marlin-WBS): 64-65 80 (WBS)		1	352 0497	#
STUD, Front Seat Back Center Armrest Weld				
65 50 (Marlin-WBS): 64-65 80 (WBS)		1	400 0865	#
NUT, Front Seat Back Center Armrest Jam				
65 50 (Marlin-WBS): 64-65 80 (WBS)	17.412	1	G114503	#
29.143 SUPPORT, Front Seat Back Armrest Hinge				
(Left) 65 50 (Marlin-WBS): 64-65 80 (WBS-WFC)		1	350 9681	#
(Right) 65 50 (Marlin-WBS): 64-65 80 (WBS-WFC)		1	350 9680	#
ATTACHING PARTS Support To Floor Pan				
STUD, Shoulder ..... 65 50 (Marlin-WBS): 64-65 80 (WBS-WFC)	27.250	2	400 0874	#
NUT, Stamped ..... 65 50 (Marlin-WBS): 64-65 80 (WBS-WFC)	17.426	2	G441262	NA#
SCREW, Machine ..... 65 50 (Marlin-WBS): 64-65 80 (WBS-WFC)	17.592	6	G157402	NA#
NUT ..... 65 50 (Marlin-WBS): 64-65 80 (WBS-WFC)	17.412	6	G271171	NA#
29.150 CUSHION ASSEMBLY, Trimmed Front Seat (Order Component Parts) (Note 29.100-1)				
29.151 CUSHION ASSEMBLY, Trimmed Front Seat Center (Order Component Parts)				
29.154 SUPPORT, Front Seat Cushion (Note 29.100-1)				
61-62 01-10-20-80 (WRS-2 Req.) (WIRS-4 Req.) (WBS-4 Req.): 63 01 (WRS-2 Req.)		AR	345 8423	
(Inner) 63 01 (WIRS) (WBS)		2	345 8423	
(Left-Outer) 63 01 (WIRS) (WBS)		1	350 5094	
(Right-Outer) 63 01 (WIRS) (WBS)		1	345 8423	
SILENCER, Front Seat Cushion Support				
61-62 01-10-20-80 (WRS-2 Req.) (WIRS-4 Req.) (WBS-4 Req.): 63 01 (WRS-2 Req.) (WIRS-4 Req.) (WBS-4 Req.)		AR	346 4461	

Copyright 1963 American Motors Corp.

GROUP NO. — DESCRIPTION — YEAR and MODEL	PRIMARY GROUP NO.	PER CAR	PART NO.	CODE
29. 156 PROTECTOR, Front Seat Cushion Side Facing				
(T-201)	.....	2	348 4298	#
(T-202)	.....	2	347 1291	#
(T-212)	.....	2	347 1291	#
(T-213)	.....	2	347 1292	#
(T-214)	.....	2	347 1293	#
(T-215)	.....	2	347 1297	#
(T-216)	.....	2	347 1294	#
(T-222)	.....	2	347 1291	#
(T-223)	.....	2	347 1292	#
(T-224)	.....	2	347 1293	#
(T-225)	.....	2	347 1297	#
(T-226)	.....	2	347 1294	#
(T-228)	.....	2	347 1295	#
(T-229)	.....	2	347 1296	#
(T-232)	.....	2	347 1291	#
(T-233)	.....	2	347 1292	#
(T-234)	.....	2	347 1293	#
(T-235)	.....	2	347 1297	#
(T-236)	.....	2	347 1294	#
(T-238)	.....	2	347 1295	#
(T-239)	.....	2	347 1296	#
(T-242)	.....	2	347 1291	#
(T-243)	.....	2	347 1292	#
(T-244)	.....	2	347 1293	#
(T-245)	.....	2	347 1297	#
(T-246)	.....	2	347 1294	#
(T-248)	.....	2	347 1295	#
(T-249)	.....	2	347 1296	#
(T-251)	.....	2	348 4298	#
(T-252)	.....	2	347 1291	#
(T-262)	.....	2	347 1291	#
(T-263)	.....	2	347 1292	#
(T-264)	.....	2	347 1293	#
(T-265)	.....	2	347 1297	#
(T-266)	.....	2	347 1294	#
(T-272)	.....	2	347 1291	#
(T-273)	.....	2	347 1292	#
(T-274)	.....	2	347 1293	#
(T-275)	.....	2	347 1297	#
(T-276)	.....	2	347 1294	#
(T-278)	.....	2	347 1295	#
(T-279)	.....	2	347 1296	#
(T-282)	.....	2	347 1291	#
(T-283)	.....	2	347 1292	#
(T-284)	.....	2	347 1293	#
(T-285)	.....	2	347 1297	#
(T-286)	.....	2	347 1294	#
(T-292)	.....	2	347 1291	#
(T-293)	.....	2	347 1292	#
(T-294)	.....	2	347 1293	#
(T-295)	.....	2	347 1297	#
(T-296)	.....	2	347 1294	#
(T-298)	.....	2	347 1295	#
(T-299)	.....	2	347 1296	#
(T-301)	.....	2	349 8557	#
(T-302)	.....	2	349 8557	#

Copyright 1963 American Motors Corp.

GROUP NO. — DESCRIPTION — YEAR and MODEL	PRIMARY GROUP NO.	PER CAR	PART NO.	CODE
(T-312)	.....	2	349 8557	#
(T-313)	.....	2	349 8558	#
(T-314)	.....	2	349 8559	#
(T-315)	.....	2	347 1297	#
(T-316)	.....	2	347 1296	#
(T-322)	.....	2	349 8557	#
(T-323)	.....	2	349 8558	#
(T-324)	.....	2	349 8559	#
(T-325)	.....	2	347 1297	#
(T-326)	.....	2	347 1296	#
(T-327)	.....	2	349 8561	#
(T-332)	.....	2	349 8557	#
(T-333)	.....	2	349 8558	#
(T-334)	.....	2	349 8559	#
(T-335)	.....	2	347 1297	#
(T-336)	.....	2	347 1296	#
(T-337)	.....	2	349 8561	#
(T-342)	.....	2	349 8557	#
(T-343)	.....	2	349 8558	#
(T-344)	.....	2	349 8559	#
(T-345)	.....	2	347 1297	
(T-346)	.....	2	347 1296	#
(T-347)	.....	2	349 8561	#
(T-351)	.....	2	349 8557	#
(T-352)	.....	2	349 8557	#
(T-353)	.....	2	349 8558	#
(T-354)	.....	2	349 8559	#
(T-362)	.....	2	349 8557	#
(T-363)	.....	2	349 8558	#
(T-364)	.....	2	349 8559	#
(T-365)	.....	2	347 1297	#
(T-366)	.....	2	347 1296	#
(T-372)	.....	2	349 8557	#
(T-373)	.....	2	349 8558	#
(T-374)	.....	2	349 8559	#
(T-375)	.....	2	347 1297	#
(T-376)	.....	2	347 1296	#
(T-377)	.....	2	349 8561	#
(T-382)	.....	2	349 8557	#
(T-383)	.....	2	349 8558	#
(T-384)	.....	2	349 8559	#
(T-385)	.....	2	347 1297	#
(T-386)	.....	2	347 1296	#
(T-392)	.....	2	349 8557	#
(T-393)	.....	2	349 8558	#
(T-394)	.....	2	349 8559	#
(T-395)	.....	2	347 1297	#
(T-396)	.....	2	347 1296	#
(T-397)	.....	2	349 8561	#
(T-422)	.....	2	350 8008	#
(T-432)	.....	2	349 8557	#
(T-433)	.....	2	350 8009	#
(T-434)	.....	2	350 8013	#
(T-435)	.....	2	350 8011	#
(T-436)	.....	2	350 8014	#
(T-438)	.....	2	350 8013	#
(T-441)	.....	2	350 8008	#
(T-442)	.....	2	349 8557	#

Copyright 1963 American Motors Corp.

GROUP NO. — DESCRIPTION — YEAR and MODEL	PRIMARY GROUP NO.	PER CAR	PART NO.	CODE
(T-443)	.....	2	350 8009	#
(T-444)	.....	2	350 8013	#
(T-445)	.....	2	350 8011	#
(T-446)	.....	2	350 8014	#
(T-447)	.....	2	350 8015	
(T-448)	.....	2	350 8013	#
(T-452)(Black)	.....	2	350 8008	#
(T-452)(Silver)	.....	2	349 8557	#
(T-453)	.....	2	350 8009	#
(T-454)	.....	2	350 8010	#
(T-462)	.....	2	349 8557	#
(T-463)	.....	2	350 8009	#
(T-464)	.....	2	350 8010	#
(T-465)	.....	2	350 8011	#
(T-466)	.....	2	350 8014	#
(T-471)	.....	2	350 8008	#
(T-472)	.....	2	349 8557	#
(T-473)	.....	2	350 8009	#
(T-474)	.....	2	350 8010	#
(T-475)	.....	2	350 8011	#
(T-476)	.....	2	350 8014	#
(T-477)	.....	2	350 8015	#
(T-478)	.....	2	350 8013	#
(T-491)	.....	2	350 8008	#
(T-492)	.....	2	349 8557	#
(T-493)	.....	2	350 8009	#
(T-494)	.....	2	350 8010	#
(T-495)	.....	2	350 8011	#
(T-496)	.....	2	350 8014	#
(T-497)	.....	2	350 8015	#
(T-498)	.....	2	350 8013	#
ATTACHING PARTS				
Protector To Frame				
FASTENER..... 63 02-04-06-07-09 (WNRS)	.....	2	400 0292	
29. 157 FRAME, Front Seat Center Cushion (Incl. Spring)				
65 50 (Marlin-WBS-WCC): 64-65 80 (WBS-WCC)	.....	1	352 0528	#
29. 158 BRACKET, Front Seat Center Cushion Mounting				
(Front) 65 50 (Marlin-WBS-WCC): 64-65 80 (WBS-WCC)	.....	1	352 0806	#
(Rear) 65 50 (Marlin-WBS-WCC): 64-65 80 (WBS-WCC)	.....	1	352 0808	#
ATTACHING PARTS				
Bracket To Floor Pan				
SCREW, Machine..... 65 50 (Marlin-WBS-WCC): 64-65 80 (WBS-WCC)	17. 598	2	G455711	NA#
29. 162 SPRING, Front Seat Cushion (Note 29. 100-1) (Note 29. 162-1)				
60 01	.....	1	344 6200	
60 01 (Heavy Duty)	.....	1	447 8657	
61 01 (WNRS) (WRS)	.....	1	345 8890	
61 01 (WNRS-Heavy Duty) (WRS-Heavy Duty)	.....	1	447 8826	
62-63 01 (WFS-Heavy Duty) (WNRS-Heavy Duty) (WRS-Heavy Duty): 62 10-80 (WFS-Heavy Duty) (WNRS-Heavy Duty) (WRS-Heavy Duty)	.....	1	447 9823	
62-63 01 (WFS)(WNRS)(WRS): 62 10-80 (WFS) (WNRS)(WRS)	.....	1	346 2459	

NOTE 29. 162-1: The Front Seat Cushion Springs on the 63-64 01-10-80 (WFS)(WNRS)(WRS) Models are only Available as a part of the Front Seat Bottom Frame found in Group 29. 103.

Copyright 1963 American Motors Corp.

GROUP NO. — DESCRIPTION — YEAR and MODEL	PRIMARY GROUP NO.	PER CAR	PART NO.	CODE
64 05-07-10-80 (WBS-WFC): 63 10-80 (WBS-LTS-WFC); 64 80 (WBS-WCC)	.....	2	348 3818	
64 09 (WBS-WFC)	.....	2	351 9760	
60 10-20-80 (WFS) (WNRS) (WRS)	.....	1	343 5699	
60 10-20-80 (WFS-Heavy Duty) (WNRS-Heavy Duty) (WRS-Heavy Duty)	.....	1	447 8459	
61 10-20-80 (WFS)(WNRS)(WRS) ***(Discontinued)***	.....	1	345 8667	#
61 10-20-80 (WFS-Heavy Duty)(WNRS-Heavy Duty)(WRS-Heavy Duty)(Discontinued)	.....	1	447 8833	#
(Left) 61 01 (WIRS)	.....	1	345 8889	
(Left) ***61 01 (WIRS-Heavy Duty)*** ***(Discontinued)***	.....	1	447 8825	
(Left) 61 01-10-20-80 (WBS)	.....	1	346 0737	
(Left) 62 01-10-80 (WIRS): 63 01 (WIRS-LTS)	.....	1	346 2457	
(Left) ***62 01-10-80 (WIRS-Heavy Duty): 63 01 (WIRS-LTS-Heavy Duty)***	.....	1	447 9827	
(Left) 62 01-10-80 (WBS)	.....	1	347 1231	
(Left) 63 01 (WIRS-WTS)	.....	1	349 0567	
(Left) ***163 01 (CAN-WIRS-LTS):*** 63 10-80 (WIRS-LTS)	.....	1	348 3691	
(Left) ***163 01 (CAN-WIRS-LTS-Heavy Duty): 63 10-80 (WIRS-LTS-Heavy Duty)***	.....	1	448 0741	
(Left) ***163 01 (CAN-WIRS-WTS):*** 63 10-80 (WIRS-WTS)	.....	1	348 3831	
(Left) 63 01 (WBS-LTS)	.....	1	348 3491	
(Left) 63 01 (WBS-WTS)	.....	1	348 3993	
(Left) 64 02-05-06-07-08 (WIRS)	.....	1	350 1971	
(Left) ***64 01 (WIRS-Heavy Duty)***	.....	1	448 2095	
(Left) 64 09 (WIRS)	.....	1	351 9757	
(Left) 64 01-15-16-18 (WBS-LFC)	.....	1	351 9371	
(Left) 64 09-19 (WBS-LFC) ***(Use 351 9371)***	.....	1	351 9759	
(Left) 60 10-20-80 (WIRS)	.....	1	343 5754	
(Left) ***60 10-20-80 (WIRS-Heavy Duty)***	.....	1	447 8460	
(Left) 61 10-20-80 (WIRS)	.....	1	346 0375	
(Left) ***61 10-20-80 (WIRS-Heavy Duty)*** ***(Discontinued)***	.....	1	447 8835	
(Left) 64 15-16-18 (WIRS)	.....	1	350 8461	
(Left) 64 19 (WIRS)	.....	1	351 9753	
(Left) ***64 10 (WIRS-Heavy Duty)***	.....	1	448 2097	
(Left) 64 85-88 (WIRS)	.....	1	351 9411	
(Left) 64 89 (WIRS)	.....	1	351 9797	
(Right) 61 01 (WIRS)	.....	1	345 8888	
(Right) ***61 01 (WIRS-Heavy Duty)*** ***(Discontinued)***	.....	1	447 8824	
(Right) 61 01-10-20-80 (WBS)	.....	1	346 0736	
(Right) 62 01-10-80 (WIRS-LTS): 63 01 (WIRS-LTS)	.....	1	346 2456	
(Right) ***62 01-10-80 (WIRS-LTS-Heavy Duty): 63 01 (WIRS-LTS-Heavy Duty)***	.....	1	447 9826	
(Right) 62 01-10-80 (WBS-LTS)	.....	1	347 1230	
(Right) 62 01-10-80 (WIRS-WTS): 63 01 (WIRS-WTS)	.....	1	347 1252	
(Right) 62 01-10-80 (WBS-WTS)	.....	1	347 1210	
(Right) ***163 01 (CAN-WIRS-LTS):*** 63 10-80 (WIRS-LTS)	.....	1	348 3690	
(Right) ***163 01 (CAN-WIRS-LTS-Heavy Duty): 63 10-80 (WIRS-LTS-Heavy Duty)***	.....	1	448 0740	
(Right) ***163 01 (CAN-WIRS-WTS):*** 63 10-80 (WIRS-WTS)	.....	1	348 3830	
(Right) 63 01 (WBS-LTS)	.....	1	348 3490	
(Right) 63 01 (WBS-WTS)	.....	1	348 3992	
(Right) 64 02-05-06-07-08 (WIRS)	.....	1	350 1970	
(Right) 64 09 (WIRS)	.....	1	351 9756	
(Right) ***64 01 (WIRS-Heavy Duty)***	.....	1	448 2094	
(Right) 64 01-10-16-18 (WBS-LFC)	.....	1	351 9370	
(Right) 64 09-19 (WBS-LFC) ***(Use 351 9370)***	.....	1	351 9758	
(Right) 63 10-80 (WBS-WTS)	.....	1	348 3820	
(Right) 60-10-80 (WIRS)	.....	1	343 5755	
(Right) 61 10-20-80 (WIRS)	.....	1	346 0374	
(Right) ***61 10-20-80 (WIRS-Heavy Duty)*** ***(Discontinued)***	.....	1	447 8834	
(Right) 64 15-16-18 (WIRS)	.....	1	350 8460	
(Right) 64 19 (WIRS)	.....	1	351 9752	
(Right) ***64 10 (WIRS-Heavy Duty)***	.....	1	448 2096	

Copyright 1963 American Motors Corp.

GROUP NO. — DESCRIPTION — YEAR and MODEL	PRIMARY GROUP NO.	PER CAR	PART NO.	CODE
64 05-07-10-80 (WBS-WFC): 63 10-80 (WBS-LTS-WFC): 64 80 (WBS-WCC)	.....	2	348 3818	
64 09 (WBS-WFC)	.....	2	351 9760	
60 10-20-80 (WFS) (WNRS) (WRS)	.....	1	343 5699	
60 10-20-80 (WFS-Heavy Duty) (WNRS-Heavy Duty) (WRS-Heavy Duty)	.....	1	447 8459	
61 10-20-80 (WFS) (WNRS) (WRS) ***(Discontinued)***	.....	1	345 8667	#
61 10-20-80 (WFS-Heavy Duty) (WNRS-Heavy Duty) (WRS-Heavy Duty) (Discontinued)	.....	1	447 8833	#
(Left) 61 01 (WIRS)	.....	1	345 8889	
(Left) ***61 01 (WIRS-Heavy Duty)*** ***(Discontinued)***	.....	1	447 8825	
(Left) 61 01-10-20-80 (WBS)	.....	1	346 0737	
(Left) 62 01-10-80 (WIRS): 63 01 (WIRS-LTS)	.....	1	346 2457	
(Left) ***62 01-10-80 (WIRS-Heavy Duty): 63 01 (WIRS-LTS-Heavy Duty)***	.....	1	447 9827	
(Left) 62 01-10-80 (WBS)	.....	1	347 1231	
(Left) 63 01 (WIRS-WTS)	.....	1	349 0567	
(Left) ***163 01 (CAN-WIRS-LTS):*** 63 10-80 (WIRS-LTS)	.....	1	348 3691	
(Left) ***163 01 (CAN-WIRS-LTS-Heavy Duty): 63 10-80 (WIRS-LTS-Heavy Duty)***	.....	1	448 0741	
(Left) ***163 01 (CAN-WIRS-WTS):*** 63 10-80 (WIRS-WTS)	.....	1	348 3831	
(Left) 63 01 (WBS-LTS)	.....	1	348 3491	
(Left) 63 01 (WBS-WTS)	.....	1	348 3993	
(Left) 64 02-05-06-07-08 (WIRS)	.....	1	350 1971	
(Left) ***64 01 (WIRS-Heavy Duty)***	.....	1	448 2095	
(Left) 64 09 (WIRS)	.....	1	351 9757	
(Left) 64 01-15-16-18 (WBS-LFC)	.....	1	351 9371	
(Left) 64 09-19 (WBS-LFC) ***(Use 351 9371)***	.....	1	351 9759	
(Left) 60 10-20-80 (WIRS)	.....	1	343 5754	
(Left) ***60 10-20-80 (WIRS-Heavy Duty)***	.....	1	447 8460	
(Left) 61 10-20-80 (WIRS)	.....	1	346 0375	
(Left) ***61 10-20-80 (WIRS-Heavy Duty)*** ***(Discontinued)***	.....	1	447 8835	
(Left) 64 15-16-18 (WIRS)	.....	1	350 8461	
(Left) 64 19 (WIRS)	.....	1	351 9753	
(Left) ***64 10 (WIRS-Heavy Duty)***	.....	1	448 2097	
(Left) 64 85-88 (WIRS)	.....	1	351 9411	
(Left) 64 89 (WIRS)	.....	1	351 9797	
(Right) 61 01 (WIRS)	.....	1	345 8888	
(Right) ***61 01 (WIRS-Heavy Duty)*** ***(Discontinued)***	.....	1	447 8824	
(Right) 61 01-10-20-80 (WBS)	.....	1	346 0736	
(Right) 62 01-10-80 (WIRS-LTS): 63 01 (WIRS-LTS)	.....	1	346 2456	
(Right) ***62 01-10-80 (WIRS-LTS-Heavy Duty): 63 01 (WIRS-LTS-Heavy Duty)***	.....	1	447 9826	
(Right) 62 01-10-80 (WBS-LTS)	.....	1	347 1230	
(Right) 62 01-10-80 (WIRS-WTS): 63 01 (WIRS-WTS)	.....	1	347 1252	
(Right) 62 01-10-80 (WBS-WTS)	.....	1	347 1210	
(Right) ***163 01 (CAN-WIRS-LTS):*** 63 10-80 (WIRS-LTS)	.....	1	348 3690	
(Right) ***163 01 (CAN-WIRS-LTS-Heavy Duty): 63 10-80 (WIRS-LTS-Heavy Duty)***	.....	1	448 0740	
(Right) ***163 01 (CAN-WIRS-WTS):*** 63 10-80 (WIRS-WTS)	.....	1	348 3830	
(Right) 63 01 (WBS-LTS)	.....	1	348 3490	
(Right) 63 01 (WBS-WTS)	.....	1	348 3992	
(Right) 64 02-05-06-07-08 (WIRS)	.....	1	350 1970	
(Right) 64 09 (WIRS)	.....	1	351 9756	
(Right) ***64 01 (WIRS-Heavy Duty)***	.....	1	448 2094	
(Right) 64 01-10-16-18 (WBS-LFC)	.....	1	351 9370	
(Right) 64 09-19 (WBS-LFC) ***(Use 351 9370)***	.....	1	351 9758	
(Right) 63 10-80 (WBS-WTS)	.....	1	348 3820	
(Right) 60-10-80 (WIRS)	.....	1	343 5755	
(Right) 61 10-20-80 (WIRS)	.....	1	346 0374	
(Right) ***61 10-20-80 (WIRS-Heavy Duty)*** ***(Discontinued)***	.....	1	447 8834	
(Right) 64 15-16-18 (WIRS)	.....	1	350 8460	
(Right) 64 19 (WIRS)	.....	1	351 9752	
(Right) ***64 10 (WIRS-Heavy Duty)***	.....	1	448 2096	

Copyright 1963 American Motors Corp.

GROUP NO. — DESCRIPTION — YEAR and MODEL	PRIMARY GROUP NO.	PER CAR	PART NO.	CODE
(Right) 64 85-88 (WIRS)	.....	1	351 9410	
(Right) 64 89 (WIRS)	.....	1	351 9796	
ATTACHING PARTS				
Cushion Spring To Bottom Frame Tilt Mechanism				
PIN, Clevis..... 62 01-10-80 (WIRS-WTS-2 Req.)(WBS-WTS-2 Req.): 63-64 01-10-80 (WIRS-WTS-4 Req.)(WBS-WTS-4 Req.)	.....	AR	400 0408	
PIN, Self-Locking..... 62 01-10-80 (WIRS-WTS-2 Req.)(WBS-WTS-2 Req.): 63-64 01-10-80 (WIRS-WTS-4 Req.)(WBS-WTS-4 Req.)	....	AR	400 0407	
WASHER, Plain..... 62 01-10-80 (WIRS-WTS-2 Req.)(WRS-WTS-2 Req.): 63 01-10-80 (WIRS-WTS-4 Req.)(WBS-WTS-4 Req.)	17.814	AR	G120393	NA
CLIP, Front Seat Cushion Spring Reinforcement				
"C" 60 Thru 65 01-10-20-80 ***(Replaces 434 5051)***	29.106	AR	348 8056	
"U" 60 Thru 65 01-10-20-80	29.106	AR	447 8809	
29.180 CUSHION ASSEMBLY, Trimmed Rear Seat (Order Component Parts)				
29.192 SPRING, Rear Seat Cushion				
60 04-06	.....	1	344 1608	
60 05 ***(Discontinued)***	.....	1	344 1607	
61-62 04-06 (Note 29.192-1 Type 1)	.....	1	344 8128	
61 05-08: 62 04-05-06-08 (Note 29.192-1 Type 2)	.....	1	344 8129	
61-62 04-06 (Note 29.192-1 Type 1-Heavy Duty)	.....	1	447 8828	
61 05-08: 62 04-05-06-08 (Note 29.192-1 Type 2-Heavy Duty)	.....	1	447 8829	
61-62 07	.....	1	345 8920	
63 04-05-06-08: 63 09 (440)	.....	1	348 3814	
63 04-05-06-08 (Heavy Duty): 63 09 (440-Heavy Duty)	.....	1	448 0742	
63 07	.....	1	348 3813	
63 09 (440-H)	.....	1	350 5343	
64-65 05-06-08	.....	1	350 2122	
64 05-06-08 (Heavy Duty)	.....	1	448 2098	
64-65 07	.....	1	350 2124	
64 09	....	1	350 2123	
65 09	.....	1	351 8192	
60 10-20-80	.....	1	342 2398	
60 10-20-80 (Heavy Duty)	.....	1	447 8382	
60 10-20-80 (Taxi) ***(Discontinued)***	.....	1	342 2362	
61-62 10-20-80	.....	1	345 8686	
61-62 10-20-80 (Heavy Duty)	.....	1	447 8837	
61-62 10-20-80 (Taxi)	.....	1	345 8914	
61-62 10-20-80 (Taxi-Heavy Duty)	.....	1	447 8838	
63 10-80	.....	1	348 3834	
63 10-80 (Police And Taxi)	.....	1	348 3146	
64 15-16-18	.....	1	350 2683	
64 15-16-18 (Heavy Duty)	.....	1	350 2689	
64 19	.....	1	350 2695	
65 15-16-18-85-86-88 (LBS)	.....	1	351 8922	
65 15-16-18 (Heavy Duty)	.....	1	353 3513	
65 17: 65 87 (LBS)	.....	1	351 8590	
65 19 : 65 59 (Marlin-LBS): 65 89 (LBS)	.....	1	351 8924	

NOTE 29.192-1: Two Types of Rear Seat Cushions were used on the 62 04-06 Models. They can be identified as follows:
Type 1: Rear Seat Cushion front corners are square with approximately 1" Radius.
Type 2: Rear Seat Cushion front corners are rounded with approximately 6" Radius.

Copyright 1963 American Motors Corp.

GROUP NO. — DESCRIPTION — YEAR and MODEL	PRIMARY GROUP NO.	PER CAR	PART NO.	CODE
65 59 (Marlin-WBS)	.....	1	351 8724	
64 85-88	.....	1	351 9416	
64 89 (990)	.....	1	351 9417	
64 89 (990H)	.....	1	352 0569	
65 85-88 (WBS)	.....	1	353 3514	
65 87 (WBS)	.....	1	351 8591	
65 89 (990-WBS)	.....	1	351 8925	
65 89 (990H)	.....	1	351 8926	
ATTACHING PARTS				
Spring To Seat Riser				
SCREW, Tapping..... *61-62 10-20-80 (Taxi)*	17.669	2	G457002	NA
CLIP, Rear Seat Cushion Spring Reinforcement				
"C" 60 Thru 65 01-10-20-80 *(Replaces 434 5051)*	29.106	AR	348 8056	
"U" 60 Thru 65 01-10-20-80	29.106	AR	447 8809	
BRACE, Seat Cushion Diagonal Wire				
65 01-10-50-80	.....	AR	448 3308	
29.199 PROTECTOR, Rear Seat Cushion Front Facing				
64-65 07	.....	2	350 7473	
29.210 BACK ASSEMBLY, Trimmed Rear Seat (Order Component Parts)				
29.217 LOOP, Rear Seat Back Latch Retainer (On Rear Wheelhouse)				
(Left) 63 04-08	.....	1	348 3175	
(Left) 64-65 08	.....	1	350 2547	
(Left) 63 Thru 65 18-88	.....	1	349 0563	
(Right) 63 04-08	.....	1	348 3174	
(Right) 64-65 08	.....	1	350 2546	
(Right) 63 Thru 65 18-88	.....	1	349 0562	
ATTACHING PARTS				
Loop To Wheelhouse Panel				
SCREW, Tapping..... 63 04-08	17.670	4	G172431	NA
SCREW, Tapping..... 65 08	.....	4	G163309	
SCREW, Tapping..... 63 Thru 65 18-88	17.671	4	G455702	NA#
WASHER, Plain..... 63 04-08	17.814	4	G120392	NA
WASHER, Plain..... 63 18-88	17.814	4	G9414920	NA
29.219 BRACKET, Rear Seat Back Guide (On Rear Seat Back)				
60 Thru 62 04-08-18-28-83-88: *60 Thru 62 18-28-88 (Ambulance)*	.....	2	342 5719	
ATTACHING PARTS				
Bracket To Rear Seat Back				
SCREW, Tapping..... 60 Thru 62 04-08-18-28-83-88	17.654	6	G162517	NA
SCREW, Tapping..... *60-62 18-28-88 (Ambulance).....(Replaces 343 8502)*	.....	6	400 0470	
RETAINER, Rear Seat Back Guide Bracket (On Rear Wheelhouse)				
60 Thru 62 04-08-18-28-83-88: *60 Thru 62 18-28-88 (Ambulance)*	.....	2	342 5715	

NOTE 29.219-1: Two Types of Latch Retainers were used on the left side on the 63 18-88 Model. They can be identified as follows:
Type 1: A Spring Tension Latch Retainer.
Type 2: A Trip Latch Retainer.

Copyright 1963 American Motors Corp.

GROUP NO. — DESCRIPTION — YEAR and MODEL	PRIMARY GROUP NO.	PER CAR	PART NO.	CODE
COVER, Rear Seat Back Guide Bracket Retainer (All Station Wagon Models)				
(T-001) ..... *(Ref. Pr. List)*	.....	2	344 2036	
(T-002) ..... *(Ref. Pr. List)*	.....	2	344 2036	
(T-003)	.....	2	344 2037	
(T-004)	.....	2	344 2038	
(T-005) ..... *(Ref. Pr. List)*	.....	2	344 2036	
(T-010) ..... *(Ref. Pr. List)*	.....	2	344 2036	
(T-011) ..... *(Ref. Pr. List)*	.....	2	344 2036	
(T-012) ..... *(Ref. Pr. List)*	.....	2	344 2036	
(T-013)	.....	2	344 2037	
(T-014)	.....	2	344 2038	
(T-015) ..... *(Ref. Pr. List)*	.....	2	344 2036	
(T-021) ..... *(Ref. Pr. List)*	.....	2	344 2036	
(T-022) ..... *(Ref. Pr. List)*	.....	2	344 2036	
(T-023)	.....	2	344 2037	
(T-024)	.....	2	344 2038	
(T-025) ..... *(Ref. Pr. List)*	.....	2	344 2036	
(T-027) ..... *(Ref. Pr. List)*	.....	2	344 2036	
(T-028) ..... *(Ref. Pr. List)*	.....	2	344 2036	
(T-029) ..... *(Ref. Pr. List)*	.....	2	344 2036	
(T-030) ..... *(Ref. Pr. List)*	.....	2	344 2036	
(T-031) ..... *(Ref. Pr. List)*	.....	2	344 2036	
(T-032) ..... *(Ref. Pr. List)*	.....	2	344 2036	
(T-033)	.....	2	344 2037	
(T-034)	.....	2	344 2038	
(T-035) ..... *(Ref. Pr. List)*	.....	2	344 2036	
(T-037) ..... *(Ref. Pr. List)*	.....	2	344 2036	
(T-038) ..... *(Ref. Pr. List)*	.....	2	344 2036	
(T-039) ..... *(Ref. Pr. List)*	.....	2	344 2036	
(T-041) ..... *(Replaces 344 2039)*	.....	2	345 4277	
(T-042) ..... *(Ref. Pr. List)*	.....	2	344 2036	
(T-043)	.....	2	344 2037	
(T-044)	.....	2	344 2038	
(T-045) ..... *(Ref. Pr. List)*	.....	2	344 2036	
(T-046) ..... *(Ref. Pr. List)*	.....	2	344 2036	
(T-047) ..... *(Ref. Pr. List)*	.....	2	344 2036	
(T-048) ..... *(Ref. Pr. List)*	.....	2	344 2036	
(T-049) ..... *(Ref. Pr. List)*	.....	2	344 2036	
(T-051) ..... *(Replaces 344 2039)*	.....	2	345 4277	
(T-052) ..... *(Ref. Pr. List)*	.....	2	344 2036	
(T-053)	.....	2	344 2037	
(T-054)	.....	2	344 2038	
(T-055) ..... *(Ref. Pr. List)*	.....	2	344 2036	
(T-056) ..... *(Ref. Pr. List)*	.....	2	344 2036	
(T-057) ..... *(Ref. Pr. List)*	.....	2	344 2036	
(T-058) ..... *(Ref. Pr. List)*	.....	2	344 2036	
(T-059) ..... *(Ref. Pr. List)*	.....	2	344 2036	
(T-062) ..... *(Ref. Pr. List)*	.....	2	344 2036	
(T-063)	.....	2	344 2037	
(T-064)	.....	2	344 2038	
(T-065) ..... *(Ref. Pr. List)*	.....	2	344 2036	
(T-067) ..... *(Ref. Pr. List)*	.....	2	344 2036	
(T-068) ..... *(Ref. Pr. List)*	.....	2	344 2036	
(T-069) ..... *(Ref. Pr. List)*	.....	2	344 2036	
(T-072) ..... *(Ref. Pr. List)*	.....	2	344 2036	
(T-073)	.....	2	344 2037	
(T-074)	.....	2	344 2038	

Copyright 1963 American Motors Corp.

GROUP NO. — DESCRIPTION — YEAR and MODEL	PRIMARY GROUP NO.	PER CAR	PART NO.	CODE
(T-075) ..... *(Ref. Pr. List)*	.....	2	344 2036	#
(T-077) ..... *(Ref. Pr. List)*	.....	2	344 2036	#
(T-078) ..... *(Ref. Pr. List)*	.....	2	344 2036	#
(T-079) ..... *(Ref. Pr. List)*	.....	2	344 2036	#
(T-081) ..... *(Replaces 344 2039)*	.....	2	345 4277	#
(T-082) ..... *(Ref. Pr. List)*	.....	2	344 2036	#
(T-083)	.....	2	344 2037	#
(T-084)	.....	2	344 2038	#
(T-085) ..... *(Ref. Pr. List)*	.....	2	344 2036	#
(T-086) ..... *(Ref. Pr. List)*	.....	2	344 2036	#
(T-087) ..... *(Ref. Pr. List)*	.....	2	344 2036	#
(T-088) ..... *(Ref. Pr. List)*	.....	2	344 2036	#
(T-089) ..... *(Ref. Pr. List)*	.....	2	344 2036	#
(T-091) ..... *(Replaces 344 2039)*	.....	2	345 4277	#
(T-092) ..... *(Ref. Pr. List)*	.....	2	344 2036	#
(T-093)	.....	2	344 2037	#
(T-094)	.....	2	344 2038	#
(T-095) ..... *(Ref. Pr. List)*	.....	2	344 2036	#
(T-096) ..... *(Ref. Pr. List)*	.....	2	344 2036	#
(T-097) ..... *(Ref. Pr. List)*	.....	2	344 2036	#
(T-098) ..... *(Ref. Pr. List)*	.....	2	344 2036	#
(T-099) ..... *(Ref. Pr. List)*	.....	2	344 2036	#
(T-101)	.....	2	345 4274	#
(T-102)	.....	2	345 4274	#
(T-1022)	.....	2	345 4274	#
(T-103)	.....	2	345 4275	#
(T-104)	.....	2	345 4276	#
(T-105)	.....	2	345 4274	#
(T-1052)	.....	2	345 4274	#
(T-106)	.....	2	345 4277	#
(T-107)	.....	2	345 4276	#
(T-108)	.....	2	345 4276	#
(T-109)	.....	2	345 4276	#
(T-110)	.....	2	345 4274	#
(T-111)	.....	2	345 4274	#
(T-112)	.....	2	345 4274	#
(T-1122)	.....	2	345 4274	#
(T-113)	.....	2	345 4275	#
(T-114))	.....	2	345 4276	#
(T-115)	.....	2	345 4274	#
(T-1152)	.....	2	345 4274	#
(T-116)	.....	2	345 4277	#
(T-117)	.....	2	345 4274	#
(T-118)	.....	2	345 4274	#
(T-119)	.....	2	345 4274	#
(T-120)	.....	2	345 4274	#
(T-121)	.....	2	345 4274	#
(T-1212)	.....	2	345 4274	#
(T-122)	.....	2	345 4274	#
(T-1222)	.....	2	345 4274	#
(T-123)	.....	2	345 4275	#
(T-124)	.....	2	345 4276	#
(T-125)	.....	2	345 4274	#
(T-1252)	.....	2	345 4274	#
(T-126)	.....	2	345 4277	#
(T-128)	.....	2	345 4274	#
(T-1282)	.....	2	347 5097	#
(T-129)	.....	2	345 4274	#
(T-1292)	.....	2	347 5097	#

Copyright 1963 American Motors Corp.

GROUP NO. — DESCRIPTION — YEAR and MODEL	PRIMARY GROUP NO.	PER CAR	PART NO.	CODE
(T-130)	.....	2	345 4274	#
(T-131)	.....	2	345 4274	#
(T-132)	.....	2	345 4274	#
(T-133)	.....	2	345 4275	#
(T-134)	.....	2	345 4276	#
(T-135)	.....	2	345 4274	#
(T-136)	.....	2	345 4277	#
(T-138)	.....	2	345 4274	#
(T-1382)	.....	2	347 5097	#
(T-139)	.....	2	345 4274	#
(T-1392)	.....	2	347 5097	#
(T-141)	.....	2	345 4277	#
(T-142)	.....	2	345 4274	#
(T-1422)	.....	2	347 5097	#
(T-143)	.....	2	345 4275	#
(T-144)	.....	2	345 4276	#
(T-145)	.....	2	345 4274	#
(T-1452)	.....	2	347 5097	#
(T-146)	.....	2	345 4274	#
(T-1462)	.....	2	347 5097	#
(T-149)	.....	2	345 4274	#
(T-1492)	.....	2	347 5097	#
(T-151)	.....	2	345 4277	#
(T-152)	.....	2	345 4274	#
(T-1522)	.....	2	347 5097	#
(T-153)	.....	2	345 4275	#
(T-154)	.....	2	345 4276	#
(T-155)	.....	2	345 4274	#
(T-1552)	.....	2	347 5097	#
(T-156)	.....	2	345 4274	#
(T-1562)	.....	2	347 5097	#
(T-159)	.....	2	345 4274	#
(T-1592)	.....	2	347 5097	#
(T-161)	.....	2	345 4275	#
(T-162)	.....	2	345 4274	#
(T-1622)	.....	2	345 4274	#
(T-163)	.....	2	345 4275	#
(T-164)	.....	2	345 4276	#
(T-165)	.....	2	345 4274	#
(T-1652)	.....	2	347 5097	#
(T-166)	.....	2	345 4277	#
(T-167)	.....	2	345 4275	#
(T-168)	.....	2	345 4274	#
(T-1682)	.....	2	347 5097	#
(T-1683)	.....	2	347 5097	#
(T-169)	.....	2	345 4274	#
(T-1692)	.....	2	347 5097	#
(T-1693)	.....	2	347 5097	#
(T-170)	.....	2	345 4274	#
(T-171)	.....	2	345 4274	#
(T-172)	.....	2	345 4274	#
(T-173)	.....	2	345 4275	#
(T-174)	.....	2	345 4276	#
(T-175)	.....	2	345 4274	#
(T-176)	.....	2	345 4277	#
(T-177)	.....	2	345 4274	#
(T-178)	.....	2	345 4274	#

Copyright 1963 American Motors Corp.

GROUP NO. — DESCRIPTION — YEAR and MODEL	PRIMARY GROUP NO.	PER CAR	PART NO.	CODE
(T-1783)	.....	2	347 5097	#
(T-179)	.....	2	345 4274	#
(T-1793)	.....	2	347 5097	#
(T-181)	.....	2	345 4277	#
(T-182)	.....	2	345 4274	#
(T-1822)	.....	2	347 5097	#
(T-1823)	.....	2	347 5097	#
(T-183)	.....	2	345 4275	#
(T-184)	.....	2	345 4276	#
(T-185)	.....	2	345 4274	#
(T-1852)	.....	2	347 5097	#
(T-1853)	.....	2	347 5097	#
(T-186)	.....	2	345 4274	#
(T-1862)	.....	2	347 5097	#
(T-1863)	.....	2	347 5097	#
(T-187)	.....	2	345 4274	#
(T-189)	.....	2	345 4274	#
(T-1892)	.....	2	347 5097	#
(T-1893)	.....	2	347 5097	#
(T-191)	.....	2	345 4277	#
(T-192)	.....	2	345 4274	#
(T-1923)	.....	2	347 5097	#
(T-193)	.....	2	345 4275	#
(T-194)	.....	2	345 4276	#
(T-195)	.....	2	345 4274	#
(T-1953)	.....	2	347 5097	#
(T-196)	.....	2	345 4274	#
(T-1963)	.....	2	347 5097	#
(T-199)	.....	2	345 4274	#
(T-1933)	.....	2	347 5097	#
(T-201)	.....	2	345 4274	#
(T-202)	.....	2	347 0546	#
(T-212)	.....	2	347 0546	#
(T-213)	.....	2	347 0547	#
(T-214)	.....	2	347 0548	#
(T-215)	.....	2	347 0549	#
(T-216)	.....	2	347 0550	#
(T-222)	.....	2	347 0551	#
(T-223)	.....	2	347 0552	#
(T-224)	.....	2	347 0553	#
(T-225)	.....	2	347 0549	#
(T-226)	.....	2	347 0554	#
(T-228)	.....	2	347 0557	#
(T-229)	.....	2	347 0556	#
(T-242)	.....	2	347 0551	#
(T-243)	.....	2	347 0552	#
(T-244)	.....	2	347 0553	#
(T-245)	.....	2	347 0549	#
(T-246)	.....	2	347 0554	#
(T-248)	.....	2	347 0557	#
(T-249)	.....	2	347 0556	#
(T-251)	.....	2	345 4274	#
(T-252)	.....	2	347 0546	#
(T-262)	.....	2	347 0546	#
(T-263)	.....	2	347 0547	#
(T-264)	.....	2	347 0548	#
(T-265)	.....	2	347 0549	#
(T-266)	.....	2	347 0550	#

Copyright 1963 American Motors Corp.

GROUP NO. — DESCRIPTION — YEAR and MODEL	PRIMARY GROUP NO.	PER CAR	PART NO.	CODE
(T-272)	.....	2	347 0551	#
(T-273)	.....	2	347 0547	#
(T-274)	.....	2	347 0553	#
(T-275)	.....	2	347 0549	#
(T-276)	.....	2	347 0554	#
(T-278)	.....	2	347 0557	#
(T-279)	.....	2	347 0556	#
(T-282)	.....	2	347 0551	#
(T-283)	.....	2	347 0552	#
(T-284)	.....	2	347 0553	#
(T-285)	.....	2	347 0549	#
(T-286)	.....	2	347 0554	#
(T-292)	.....	2	347 0551	#
(T-293)	.....	2	347 0552	#
(T-294)	.....	2	347 0553	#
(T-295)	.....	2	347 0549	#
(T-296)	.....	2	347 0554	#
(T-298)	.....	2	347 0557	#
(T-299)	.....	2	347 0556	#
ATTACHING PARTS				
Cover To Rear Wheelhouse				
SCREW, Tapping..... 60 04: 62 04-08	17.670	4	G172431	NA
SCREW, Tapping..... 61 04-08: 60-61 18-28-83-88: ***60-61 18-28-88 (Ambulance)***	17.671	4	G455702	NA
SCREW, Tapping..... 62 18-88: ***62 18-88 (Ambulance)***	17.671	4	G9411541	NA
WASHER, Plain..... 60 04-18-28-83-88: 62 04-08: ***60 18-28-88 (Ambulance)***	17.814	4	G120392	NA
WASHER, Plain..... 61 04-08: 61-62 18-28-88: ***61-62 18-28-88 (Ambulance)*****.....*****(Replaces 800 0451)***	17.814	4	400 0486	
RETAINER, Rear Seat Back Latch (On Rear Seat Back)				
(Left) 63 04-08-18-88 (Note 29.219-1 Type 1): 64 08	.....	1	348 3053	
(Left) 65 08: 63 18-88 (Note 29.219-1 Type 2): 64-65 18-88	.....	1	348 8841	
(Right) 63 04-08: 64 08	.....	1	348 3052	
(Right) 65 08: 63 Thru 65 18-88	.....	1	348 8840	
ATTACHING PARTS				
Latch Retainer To Back				
REINFORCEMENT..... 63 04-08-18-88: 64-65 08-18-88	.....	2	348 3251	
SCREW, Machine..... 63 04-08-18-88: 64-65 08-18-88	17.616	4	G155363	NA
BUMPER, Rear Seat Back Footman Loop Stop				
63 Thru 65 04-08-18-88	.....	2	347 1768	
29.220 FRAME ASSEMBLY, Rear Seat Back (Incl. Plates)				
60 Thru 62 04-08	.....	1	343 5764	
63 04-08	.....	1	346 2143	
64-65 08	.....	1	350 2530	
60 18-28-83-88	.....	1	344 2096	
61-62 18-28-88 ***(Replaces 345 7630)***	.....	1	347 9377	
63 Thru 65 18-88	.....	1	349 0572	
(Left) ***60 18-28-88 (Ambulance)***	.....	1	342 8963	
(Left) ***61 18-28-88 (Ambulance)*****.....*****(Discontinued)***	.....	1	345 7635	
(Left) ***62 18-88 (Ambulance)***	.....	1	347 9375	

Copyright 1963 American Motors Corp.

GROUP NO. — DESCRIPTION — YEAR and MODEL	PRIMARY GROUP NO.	PER CAR	PART NO.	CODE
(Left) *63 Thru 65 18-88 (Ambulance)*	.....	1	349 0773	
(Right) *60 18-28-88 (Ambulance)* ..... *(Discontinued)*	.....	1	342 8964	
(Right) *61 18-28-88 (Ambulance)* ..... *(Discontinued)*	.....	1	345 7634	
(Right) *63 Thru 65 18-88 (Ambulance)*	.....	1	349 0772	
PLATE, Rear Seat Back Hinge Fastening				
60 Thru 65 04-08-18-28-83-88 (2 Req.): *63 Thru 65 18-88 (Ambulance-4 Req.)*	.....	AR	343 9346	
ATTACHING PARTS Hinge Plate To Frame				
NAIL, Countersunk..... 60 Thru 65 04-08-18-28-83-88 (4 Req.): *63 Thru 65 18-88 (Ambulance-8 Req.)*	17.374	AR	G116330	NA#
PLATE, Rear Seat Back Guide Bracket And Robe Rail Fastening				
60 Thru 62 04-08	.....	2	343 1958	
60 Thru 62 18-28-83-88	.....	2	343 9283	
ATTACHING PARTS Guide Bracket And Robe Rail Plate To Frame				
NAIL, Countersunk..... 60 Thru 62 04-08 (4 Req.): 60 Thru 62 18-28-83-88 (6 Req.)	17.374	AR	G116630	NA
PLATE, Rear Seat Back Robe Rail Fastening				
63 Thru 65 18-88	.....	2	347 1734	#
ATTACHING PARTS Robe Rail Plate To Frame				
NAIL, Countersunk..... 63 Thru 65 18-88	17.374	4	G116630	NA#
NUT, Rear Seat Back Frame Tee				
60 Thru 62 18-28-88 (Ambulance)	17.438	22	G143711	
ATTACHING PARTS Tee Nut To Frame				
NAIL, Countersunk..... *60 Thru 62 18-28-88 (Ambulance)*	17.374	66	G116630	NA
SUPPORT, Rear Seat Back Frame				
63 Thru 65 18-88 (Ambulance)	.....	2	349 0750	
(Left) *60 Thru 62 18-28-88 (Ambulance)*	.....	1	342 3363	
(Right) *60 Thru 62 18-28-88 (Ambulance)*	.....	1	342 3364	
BRACKET, Rear Seat Back Support Fastening				
60 Thru 65 18-28-88 (Ambulance)	.....	4	342 3365	
ATTACHING PARTS Support Bracket To Frame				
SCREW, Machine..... *60 Thru 65 18-28-88 (Ambulance)*	17.616	8	G187804	NA

Copyright 1963 American Motors Corp.

GROUP NO. — DESCRIPTION — YEAR and MODEL	PRIMARY GROUP NO.	PER CAR	PART NO.	CODE
STRAP, Rear Seat Back				
60 Thru 62 04-08	.....	2	343 5759	
63 04-08	.....	1	349 9260	
60 Thru 62 18-28-83-88 (2 Req.): ***60 Thru 62 18-28-88 (Ambulance-4 Req.)***	.....	AR	343 1161	
STUD, Rear Seat Back Strap Fastening				
60-63 04-08: 62 18-88: ***60-62 18-28-88 (Ambulance)*** ***(Replaces 343 1239)***	.....	4	400 0431	
ATTACHING PARTS				
Stud To Seat Riser				
SCREW, Tapping — 60 Thru 62 04-08	17.648	4	G161375	NA
SCREW, Tapping — 63 04-08	17.648	2	G161377	NA
SCREW, Tapping — 60 18-28-88: ***60 18-28-88 (Ambulance)***	17.648	4	G161400	NA
SCREW, Tapping — 61 18-28-88: 62 18-88 (Deluxe And Custom): ***61-62 18-28-88 (Ambulance)***	17.654	4	G443824	NA
SCREW, Tapping — 62 18-88 (400)	17.648	4	G161400	NA
Stud To Back Frame				
SCREW, Tapping — 63 04-08	17.648	1	G161377	NA
29.221 HINGE, Rear Seat Back				
60 Thru 63 04-08	.....	2	343 5770	
64-65 08	.....	2	350 1169	
(Outer) 60 Thru 62 18-28-83-88: ***60 Thru 62 18-28-88 (Ambulance)***	.....	2	343 7666	
(Outer) ***63 Thru 65 18-88 (Ambulance):*** 63 Thru 65 18-88	.....	2	348 2047	#
(Center) ***60 18-28-88 (Ambulance-4-13/32" Height)*** ***(Discontinued)***	.....	1	343 0831	
(Center) ***60 18-28-88 (Ambulance-4-1/8" Height): 61-62 18-28-88 (Ambulance)***	.....	1	342 3368	
(Center) ***63 18-88 (Ambulance): 64-65 18 (Ambulance)***	.....	1	347 2813	
ATTACHING PARTS				
Back Hinge To Body Hinge				
RIVET, Tubular — 60-61 18-28-83-88 (2 Req.): ***60-61 18-28-88 (Ambulance-4 Req.)***	17.558	AR	G137312	NA
RIVET, Tubular — 62 Thru 65 08-18-88 (2 Req.): ***62 Thru 65 18-88 (Ambulance-3 Req.)***	.....	AR	400 0432	
WASHER, Plain — 64-65 08 (2 Req.): 62 Thru 65 18-88 (2 Req.): ***62-63 18-88 (Ambulance-3 Req.)***	17.814	AR	G446152	NA #
WASHER, Plain — 60-61 18-28-83-88 (2 Req.): ***60-61 18-28-88 (Ambulance-4 Req.)***	17.814	AR	311 8321	
Hinge To Back Frame				
SCREW, Tapping — 60 Thru 63 04-08-18-28-83-88: 64-65 08-18-88	17.660	4	G16002	NA #
SCREW, Machine — ***60 Thru 63 18-28-88 (Ambulance)***	17.616	8	G187804	NA
29.222 SPRING, Rear Seat Back				
60 04: 61 04 (Note 29.222-1 Type 1)	.....	1	343 5767	
60 05-06	.....	1	344 1609	
60 05-06 (Heavy Duty) ***(Discontinued)***	.....	1	447 8658	

NOTE 29.222-1: Two Types of Rear Seat Back Springs were used on the 61 04-08 Models. They can be identified as follows:
Type 1: The Top Wire on the Spring is 18" high.
Type 2: The Top Wire on the Spring is 19" high.

Copyright 1963 American Motors Corp.

GROUP NO. — DESCRIPTION — YEAR and MODEL	PRIMARY GROUP NO.	PER CAR	PART NO.	CODE
61-62 04-08 (Note 29.222-1 Type 2)		1	346 4829	
61-62 05-06		1	344 8127	
61-62 05-06 (Heavy Duty)		1	447 8827	
61-62 07		1	345 8921	
63 04-08		1	348 3816	
63 04-08 (Heavy Duty)		1	448 0743	
63 05-06: 63 09 (440)		1	349 9973	
63 05-06 (Heavy Duty): 63 09 (440-Heavy Duty)		1	448 0744	
63 07		1	348 3817	
63 09 (440-H)		1	348 3815	
64-65 05-06		1	350 2125	
64 05-06 (Heavy Duty)		1	448 2099	
64-65 07		1	350 2128	
64-65 08		1	350 2127	
64-65 08 (Heavy Duty)		1	448 2102	
64-65 09 ***(Use 351 8193)***		1	350 2126	
60 15-19-25-29-85-89		1	344 3016	
60 Thru 62 18-28-83-88		1	342 2379	
61-62 15-16-25-85-86		1	345 8685	
61-62 15-16-25-85-86 (Heavy Duty)		1	447 8836	
63 15-16-85-86		1	348 3277	
63 15-16-86 (Police And Taxi-Heavy Duty)		1	349 1423	
63 18-88		1	348 3276	
63 18-88 (Heavy Duty)		1	448 0745	
64 15-16		1	350 2681	
64 15-16 (Heavy Duty)		1	350 2688	
64-65 18: 65 88 (LBS)		1	350 2682	
64 18 (Heavy Duty): 65 18 (Heavy Duty): 65 88 (880-Heavy Duty)		1	350 2949	
64 19 ***(Replaces 350 2696)***		1	448 1421	
65 15-16: 65 85-86 (880): 65 85 (990-LBS)		1	351 8928	
65 15-16 (Heavy Duty)		1	351 8927	
65 17: 65 87 (WNRS)(WRS)(WIRS)		1	351 8595	
65 19: (Except Marlin): 65 89 (990-LBS)		1	351 8932	
65 59 (Marlin-WIRS)		1	351 7810	
64 85		1	351 9418	
64 88		1	351 9419	
64 89 (990)		1	351 9420	
65 85 (990-WBS)		1	351 8929	
65 87 (WBS)		1	351 8596	
65 88 (WBS)		1	351 8931	
65 89 (990-WBS)		1	351 8933	
65 89 (990-H)		1	351 8934	
(Left) ***60 Thru 62 18-28-88 (Ambulance)***		1	342 8967	
(Left) ***63 18-88 (Ambulance)***		1	349 0771	
(Left) ***63 18-88 (Ambulance-Heavy Duty)***		1	448 0751	
(Left) ***64-65 18 (Ambulance)***		1	350 2691	
(Left) ***64-65 18 (Ambulance-Heavy Duty)***		1	448 2101	
(Left) 65 59 (Marlin-WBS)		1	351 8723	
(Left) 64 89 (990H)		1	350 2107	
(Left) 65 89 (990H)		1	351 8935	
(Right) ***60 Thru 62 18-28-88 (Ambulance)***		1	342 8968	
(Right) ***63 18-88 (Ambulance)***		1	349 0770	
(Right) ***63 18-88 (Ambulance-Heavy Duty)***		1	448 0750	
(Right) ***64-65 18 (Ambulance)***		1	350 2690	
(Right) ***64-65 18 (Ambulance-Heavy Duty)***		1	448 2100	
(Right) 65 59 (Marlin-WBS)		1	351 8722	
(Right) 64 89 (990H)		1	350 2106	
(Right) 65 89 (990H)		1	351 8934	

Copyright 1963 American Motors Corp.

GROUP NO. — DESCRIPTION — YEAR and MODEL	PRIMARY GROUP NO.	PER CAR	PART NO.	CODE
ATTACHING PARTS				
Rear Back To Shelf Panel				
SCREW, Tapping..... 60 Thru 63 05-06-07	17.660	2	G161860	NA
SCREW, Tapping..... 65 59 (Marlin-WIRS-2 Req.)(Marlin-WBS-4 Req.)	.....	AR	400 1582	
SCREW, Machine..... 61 Thru 63 07	17.598	2	G454542	NA
SCREW, Machine..... 64-65 07	17.598	2	G455344	NA
SCREW, Machine..... 60 15-16-19-29-85-86-89 ***.....(Replaces 438 6577)***	22.027	2	400 0071	
STUD..... 60 Thru 65 05-06-09-15-17-19-25-29-85-86-87-89 (Except Marlin)	.....	3	434 7962	
WASHER, Lock..... 60 Thru 63 05-06	17.826	3	G454763	NA
WASHER, Lock..... 64-65 05-06-09: 60 Thru 65 15-16-19-25-85-86-89 (Except Marlin)	17.826	3	G173124	NA
NUT, Hexagon..... 60 Thru 65 05-06-09-15-16-19-25-85-86-89 (Except Marlin)	17.406	3	G120375	NA #
NUT, Hexagon..... 65 15-16-17-19-85-86-87-89 (Except Marlin).....	.....	4	400 1458	#
29.230 ARMREST ASSEMBLY, Trimmed Rear Seat Back Center (Order Component Parts)				
29.232 ARM, Rear Seat Back Center Armrest (Incl. Plate)				
65 59 (Marlin-WBS): 64-65 89 (990H)	.....	1	350 8254	
ATTACHING PARTS				
Arm To Center Armrest Frame Support				
BOLT, Shoulder..... 65 59 (Marlin-WBS): 64-65 89 (990H)	.....	4	437 8665	
WASHER, Spring..... 65 59 (Marlin-WBS): 64-65 89 (990H)	.....	4	400 0324	
NUT, Stamped..... 65 59 (Marlin-WBS): 64-65 89 (990H)	17.428	4	G273295	NA
Arm Plate To Armrest Frame Tee Nut				
SCREW, Machine..... 65 59 (Marlin-WBS): 64-65 89 (990H)	17.629	3	G9411968	NA
29.233 SUPPORT, Rear Seat Back Center Armrest				
65 59 (Marlin-WBS)	.....	1	353 0327	
64-65 89	.....	2	352 0995	
29.234 FRAME ASSEMBLY, Rear Seat Back Center Armrest				
65 59 (Marlin-WBS)	.....	1	353 1409	
64-65 89 (990H)	.....	1	350 2924	
NUT, Rear Seat Back Center Armrest Frame Tee				
65 59 (Marlin-WBS): 64-65 89 (990H)	17.438	3	G453824	
29.236 SPRING, Rear Seat Back Center Armrest				
65 59 (Marlin-WBS)	.....	1	353 1405	
64-65 89 (990H)	.....	1	352 0379	
29.248 MEDALLION, Rear Seat Back				
64-65 89 (990H)	.....	1	352 0551	
ATTACHING PARTS				
Medallion To Rear Shelf Panel				
SCREW, Tapping..... 64-65 89 (990H)	17.660	4	G161860	NA
29. 249 MOULDING, Rear Seat Back Medallion				
64-65 89 (990H)	.....	1	352 0032	

Copyright 1963 American Motors Corp.

GROUP NO. — DESCRIPTION — YEAR and MODEL	PRIMARY GROUP NO.	PER CAR	PART NO.	CODE
ATTACHING PARTS *Moulding To Rear Shelf Panel*				
NUT, Stamped 64-65 89 (990H)	17.428	2	G9415250	
29.250 BACK ASSEMBLY, Trimmed Third Seat (Order Component Parts)				
29.254 SPRING, Third Seat Back				
60 Thru 62 18-28-88	.....	1	344 4004	
29.258 FRAME ASSEMBLY, Third Seat Back (Incl. Plates)				
60 18-28-88	.....	1	344 2154	
61 18-28-88 *(Discontinued)*	.....	1	345 4109	
62 18-88	.....	1	347 9379	
63 Thru 65 18-88	.....	1	349 0776	
NUT, Third Seat Back Frame Tee				
60-61 18-28-88 (Type C-3 Hole Base)	17.438	12	G143711	
60-61 18-28-88 (Type B-2 Hole Base-12-24)	17.438	8	G149526	NA
60-61 18-28-88: 64-65 18-88 (Type B-2 Hole Base-8-32)	17.438	6	G442494	NA
ATTACHING PARTS *Tee Nut To Frame*				
NAIL, Countersunk 60-61 18-28-88	17.374	48	G116630	NA
PLATE, Third Seat Back Hinge Fastening				
61 Thru 63 18-28-88: 64-65 18-88	.....	2	345 1907	
ATTACHING PARTS *Hinge Plate To Frame*				
NAIL, Countersunk ..... 61 Thru 65 18-28-88	17.374	4	G116630	NA
PLATE, Third Seat Back Stop Bracket Fastening				
61-62 18-28-88	.....	2	345 1910	
ATTACHING PARTS *Stop Bracket Plate To Frame*				
NAIL, Countersunk ..... 61 Thru 62 18-28-88	17.374	4	G116630	NA
PLATE, Third Seat Back Moulding Fastening				
61-62 18-28-88	.....	3	345 1908	
(Top) 63 Thru 65 18-88	.....	3	349 0766	
(Side) 63 Thru 65 18-88	.....	2	348 3762	
ATTACHING PARTS *Moulding Plate To Frame*				
NAIL, Countersunk ..... 61 Thru 65 18-28-88	17.374	10	G116630	NA
PLATE, Third Seat Back Support Fastening				
63 Thru 65 18-88	.....	2	348 3145	
ATTACHING PARTS *Support Plate To Frame*				
NAIL, Countersunk ..... 63 Thru 65 18-88	17.374	4	G116630	NA

Copyright 1963 American Motors Corp.

GROUP NO. — DESCRIPTION — YEAR and MODEL	PRIMARY GROUP NO.	PER CAR	PART NO.	CODE
29.260 HINGE, Third Seat Back				
60 Thru 62 18-28-88	.....	2	344 4009	
63 Thru 65 18-88	.....	2	349 0661	
ATTACHING PARTS				
Hinge To Frame				
SCREW, Machine..... 60 18-28-88	17.616	4	G187804	NA
SCREW, Machine..... 61 Thru 65 18-88	17.660	4	G162022	NA
29.261 SUPPORT, Third Seat Back				
(Left) 63 Thru 65 18-88	.....	1	349 0815	
(Right) 63 Thru 65 18-88	.....	1	349 0814	
ATTACHING PARTS				
Support To Frame				
SCREW, Machine..... 63 18-88	17.598	4	G160364	NA
SCREW, Machine..... 64-65 18-88	17.616	4	G187804	NA#
WASHER, Plain..... 63 18-88	17.814	2	G446178	NA
Support To Body				
SCREW, Machine..... 63 Thru 65 18-88	.....	2	400 0170	
29.262 BRACKET, Third Seat Back Stop				
60 Thru 62 18-28-88	.....	2	344 4008	
ATTACHING PARTS				
Stop Bracket To Frame				
SCREW, Machine..... 60 Thru 62 18-28-88	17.616	4	G187804	NA
RETAINER, Third Seat Back Stop Bracket				
60 Thru 62 18-28-88	.....	2	344 4023	
ATTACHING PARTS				
Retainer To Wheelhouse Panel				
SCREW, Tapping..... 60 Thru 62 18-28-88	17.671	4	G189117	NA
PLATE, Third Seat Back Stop Bracket Retainer Scuff				
60 Thru 62 18-28-88	.....	2	344 4020	
PAD, Third Seat Back Stop Bracket Retainer				
60 Thru 62 18-28-88	.....	2	344 4021	
29.264 HANDLE, Third Seat Back				
60 Thru 65 18-28-88	.....	1	344 9685	
ATTACHING PARTS				
Handle To Back Retainer				
SCREW, Machine..... 60-61 18-28-88	17.592	2	G156780	NA
SCREW, Machine..... 62 Thru 65 18-88	17.592	2	G157070	NA
RETAINER, Third Seat Back Handle				
60 Thru 65 18-28-88	.....	1	344 4014	

Copyright 1963 American Motors Corp.

GROUP NO. — DESCRIPTION — YEAR and MODEL	PRIMARY GROUP NO.	PER CAR	PART NO.	CODE
ATTACHING PARTS Retainer To Back Frame				
SCREW, Wood..... 60 Thru 65 18-28-88.....	17.692	2	G101984	NA
29.266 MOULDING, Third Seat Back				
60 Thru 62 18-28-88.....	.....	1	344 4018	
(Top) 63 Thru 65 18-88	.....	1	349 0765	
(Side) 63 Thru 65 18-88.....	.....	2	349 0818	
ATTACHING PARTS Moulding To Back Frame				
SCREW, Machine..... 60 18-28-88.....	17.592	6	G156780	NA
SCREW, Tapping..... 62 18-88.....	17.655	6	G145419	NA
SCREW, Tapping..... 61 18-28-88: 63 Thru 65 18-88 ***(Replaces 432 3649)***	26.001	10	400 0026	
29.270 CUSHION ASSEMBLY, Trimmed Third Seat (Order Component Parts)				
29.274 SPRING, Third Seat Cushion				
60 Thru 62 18-28-88.....	.....	1	344 4005	
CLIP, Third Seat Cushion Spring Reinforcement				
"C" 60 Thru 62 18-28-88 ..... ***(Replaces 434 5051)***	23.060	AR	400 0393	
"U" 60 Thru 62 18-28-88.....	29.106	AR	447 8809	
29.278 FRAME ASSEMBLY, Third Seat Cushion				
60 18-28-88.....	.....	1	344 2155	
61-62 18-28-88.....	.....	1	345 4110	
63 Thru 65 18-88.....	.....	1	349 0778	
NUT, Third Seat Cushion Tee				
60 18-28-88 (Type C-3 Hole Base).....	17.438	4	G143711	
60 18-28-88 (Type B-2 Hole Base).....	17.438	4	G149526	NA
ATTACHING PARTS Tee Nut To Cushion Frame				
NAIL, Countersunk..... 60 18-28-88.....	17.374	4	G116630	NA
PLATE, Third Seat Cushion Hinge Fastening				
61-62 18-28-88.....	.....	2	345 1906	
63 Thru 65 18-88	29.258	2	345 1907	
ATTACHING PARTS Hinge Plate To Cushion Frame				
NAIL, Countersunk..... 61 Thru 65 18-28-88.....	17.374	4	G116630	NA
PLATE, Third Seat Cushion Moulding Fastening				
63 Thru 65 18-88.....	29.258	3	349 0766	
ATTACHING PARTS Moulding Plate To Cushion Frame				
NAIL, Countersunk..... 63 Thru 65 18-88.....	17.374	6	G116630	NA

Copyright 1963 American Motors Corp.

GROUP NO. — DESCRIPTION — YEAR and MODEL	PRIMARY GROUP NO.	PER CAR	PART NO.	CODE
29.279 MOULDING, Third Seat Cushion Support				
63 18-88	.....	1	349 0817	
64-65 18-88...(Incl. Pull Strap)	.....	1	350 2403	
ATTACHING PARTS Moulding To Cushion Frame				
SCREW, Tapping..... 63 Thru 65 18-88	26.001	6	400 0026	
STRAP, Third Seat Cushion Pull				
64-65 18-88	.....	1	350 9937	
ATTACHING PARTS Strap To Moulding				
WASHER, Plain..... 64-65 18-88	17.814	2	G131014	NA
RIVET, Tubular 64-65 18-88	17.558	2	G135725	NA
BUMPER, Third Seat Cushion Moulding				
63 Thru 65 18-88	20.450	4	400 0313	
29.280 HINGE, Third Seat Cushion				
60 Thru 62 18-28-88	.....	2	344 4011	
63 Thru 65 18-88	.....	2	348 3862	
ATTACHING PARTS Hinge To Cushion Frame				
SCREW, Machine..... 60 18-28-88	17.616	4	G187804	NA
SCREW, Machine..... 61 Thru 65 18-28-88	17.660	4	G162022	NA#
CAP, Screw..... 63 Thru 65 18-88	29.105	2	400 0155	
29.282 HANDLE, Third Seat Cushion				
60 Thru 62 18-28-88	29.264	1	344 9685	
ATTACHING PARTS Handle To Retainer				
SCREW, Machine..... 60 Thru 62 18-28-88	17.592	2	G157070	NA
RETAINER, Third Seat Cushion Handle				
60 Thru 62 18-28-88	.....	1	344 4014	
ATTACHING PARTS Retainer To Cushion Frame				
SCREW, Wood..... 60 Thru 62 18-28-88	17.692	2	G101984	NA
29.424 MOULDING, Rear Floor Well Carpet				
63 Thru 65 18-88	.....	1	348 7948	
ATTACHING PARTS Moulding To Floor Pan				
SCREW, Tapping..... 63 Thru 65 18-88	17.660	8	G161901	NA

Copyright 1963 American Motors Corp.

GROUP NO. — DESCRIPTION — YEAR and MODEL	PRIMARY GROUP NO.	PER CAR	PART NO.	CODE
30.020 CEMENT				
All Models (Ec. 226-5 Oz. Tube)	.....	AR	499 0086	
All Models (Windshield Sealer)	.....	AR	320 0686	
All Models (Formed Headlining)(One Pint)	.....	AR	448 2998	
65 09-19-89 (Vinyl Roof Covering)(One Qt.)	.....	AR	448 3394	#
CAULK, Auto				
All Models (1-1/2 Lb. Spool)	.....	AR	447 5645	
30.025 RING, Hog				
All Models (1/2")(7/16" Opening)	.....	AR	400 0251	
All Models (5/8") ***(Replaces 436 5780)***	.....	AR	433 5988	
All Models (3/4")	.....	AR	436 3256	
30.026 SEALER				
All Models (Metal Joint-Quart)	.....	AR	499 0282	
65 09-19-89 (Vinyl Roof Covering)(12 Oz. Tube)	.....	AR	448 3395	#
30.030 DI-NOC, Front Fender				
60 83-88	.....	2	344 5916	
(Left) 60 18-28	.....	1	344 5899	
(Right) 60 18-28	.....	1	344 5898	
DI-NOC, Front Door				
60 18-28	.....	2	344 5900	
60 83-88	.....	2	344 5917	
DI-NOC, Center Pillar				
60 18-28	.....	2	344 5911	
DI-NOC, Rear Door				
60 18-28	.....	2	344 5901	
(Lower) 60 83-88	.....	2	344 5918	
(Upper-Left) 60 83-88	.....	1	344 5905	
(Upper-Right) 60 83-88	.....	1	344 5904	
DI-NOC, Rear Pillar				
(Left) 60 18-28	.....	1	344 5913	
(Right) 60 18-28	.....	1	344 5912	
DI-NOC, Rear Fender				
60 83-88	.....	2	344 5881	
(Left) 60 18-28	.....	1	344 5903	
(Left-Rear) 60 83-88	.....	1	344 5907	
(Right) 60 18-28	.....	1	344 5902	
(Right-Rear) 60 83-88	.....	1	344 5906	

Copyright 1963 American Motors Corp.

GROUP NO. — DESCRIPTION — YEAR and MODEL	PRIMARY GROUP NO.	PER CAR	PART NO.	CODE
DI-NOC, Rear Quarter Pillar				
(Left) 60 18-28		1	344 5915	
(Left-Upper) 60 83-88		1	344 5909	
(Right) 60 18-28		1	344 5914	
(Right-Upper) 60 83-88		1	344 5908	
DI-NOC, Rear Roof Header				
60 18-28		1	345 0745	
DI-NOC, Tailgate				
60 83-88		1	344 5910	
ENAMEL, Di-Noc Finish Coat				
60 18-28-83-88 (Clear-Air Dry-Paint)		AR	311 4689	
30.035 LUBRIPLATE				
All Models (2 Oz. Tube)	15.260	AR	899 0685	
All Models (1 Lb. Can) ***(Replaces 48 304)***	15.260	AR	899 1231	

Copyright 1963 American Motors Corp.