American Motors



Parts Catalog F-14072 R3

ISSUED JUNE, 1972

1967 thru 1972

This is not to be duplicated beyond purchased copy

American Motors Corp. Parts and Distribution Services Division
3280 S. Clement Ave. Milwaukee, Wisconsin 53207

Printed in U.

GENERAL INFORMATION AND INSTRUCTIONS

INTRODUCTION . . .

This Master Parts Catalog F-14072 contains replacement parts information for model years 1967 thru 1972.

Before ordering replacement parts, you must first identify the vehicle by its model year and series. Information to assist you is located on pages Ge - 12, Ge - 13 and Ge - 14.

For your convenience, this parts catalog has been issued in two sections. Section one consists of text copy, specific illustrations listing part numbers, Body Miscellaneous and Paks. Section two, the Illustrations Supplement, consists of general illustrations and is under separate cover. It has been assigned form number F-15072.

The two sections have been further subdivided into subsections called groups. These groups list replacement parts for particular areas of the car. An explanation of the make-up of these catalog groups is as follows:

Main units of the car are identified by the number preceding the decimal in any group number. Example:

1. .... ENGINE
2. .... COOLING - GRILLE
3. .... ELECTRICAL - INSTRUMENTS
4. .... FUEL - EXHAUST
5. .... CLUTCH
6. .... STANDARD, OVERDRIVE AND FOURSPEED TRANSMISSION
7. .... SHIFTING
8. .... BRAKES - WHEELS
9. .... REAR AXLE - PROPELLER SHAFT
10. .... FRONT SUSPENSION - POWER STEERING - STEERING GEAR
11. .... ROAD SPRINGS - SHOCKS - REAR SUSPENSION
12. .... HOOD - FENDERS - BUMPERS
13. .... HEATER - AIR CONDITIONING
14. .... CHASSIS MISCELLANEOUS
15. .... ACCESSORIES
16. .... AUTOMATIC TRANSMISSION
17. .... STANDARD PARTS
19. .... HIGH PERFORMANCE EQUIPMENT
20. .... BODY SHEET METAL
22. .... WINDSHIELD WIPER - COWL VENTILATOR - INSTRUMENT PANEL
23. .... DOORS - HARDWARE
24. .... REAR QUARTER HARDWARE
25. .... GLASS - CHANNELS
26. .... BODY MOULDINGS
27. .... BODY HARDWARE
28. .... CONVERTIBLE TOP - SUN ROOF
29. .... SEATS - SOFT TRIM
30. .... BODY MISCELLANEOUS

Individual parts are assigned a group number. The first number identifies the main unit it is affiliated with. Following the decimal is the sub-group number under which all parts of the same name and function are listed. Example: Group 1.059 HEAD, Cylinder..."1." indicates that it is an engine part, ".059" is the sub-group number where part numbers of cylinder heads can be located.

The suffix (example: "-10") should not be interpreted as being part of the group number. It merely serves as a reference number to tie in the Illustrations Supplement callouts with the Text section group numbers.

Although, due to their nature and use, many parts may appear in more than one group in this catalog, each part is assigned an identifying primary group number. This is the number under which the part is priced in the American Motors Parts and Distribution Services Division Price List, listed in the Dealer Parts Order Pad, listed on Parts Storage Location Labels and stored in American Motors Parts and Distribution Services Division Warehouses and Dealerships. Parts should always be ordered by their identifying primary group number, part number and noun name.

The driver's side on Left Hand Drive is the left hand side of the vehicle; on Right Hand Drive it is the right-hand side of the vehicle. This is the governing factor in determining whether a part is left or right hand.

Printed in U.S.A.

LOCATING PART NUMBERS . . .

GROUP 19 - High Performance ... Same procedure as Group 26.

GROUP 26 - Body Mouldings (Production installed) ... Refer to the Special Information and Illustrations Index by the year at the start of Group 26. Select the illustration title which would most logically include the part you require. Turn to the page indicated by the index and visually locate the part in question. The part number you seek will be found adjacent to the part.

- Body Mouldings (Special Dealer Treatment) ... Ornamentation changes, by dealers, to satisfy individual owner requests have not been cataloged. The dealer assumes the responsibility for correctness of replacement parts.

BALANCE OF GROUPS ... First locate the group number of the part required. Any one of the following three methods can be used:

Method 1: Refer to the Illustrations Index located at the start of Illustrations Supplement F-15072. Select the illustration title which would most logically include the part you require. Turn to the page indicated by the index and visually locate the part in question. The group number you seek will be found adjacent to the part. Locate that group number in the Text section.

Method 2: If the "Noun" name of the part you seek is known, refer to the Alphabetical Index located in the front of the Text section. The group number you seek will be found adjacent to the parts noun name. Locate that group number in the Text section.

Method 3: If the group number of the part you seek is already known, locate that group number in the Text section.

Next, interpret the information listed under the group number as follows:

Year ... This column will indicate the first and last model years to which the part applies (for the application indicated) separated by a slash (/). When a single model year is shown without a slash, it indicates the part was used for that model year only. When a single model year is shown with a slash, it indicates that the part was first used for the model year shown and is continuing to be used during the current model year. For example:

67/68 ... Indicates the part was used for 67 and 68 model years only.
71 ... Indicates the part was used for 71 model year only.
70/ ... Indicates the part was used for 70 thru 72 model years.

On occasion, instead of the above information, the year column will carry the trim number applicable to the part. (For the location of the plate bearing the vehicle's applicable trim number, refer to Vehicle Identification located on page Ge - 11.

Model ... This column carries pertinent information relative to the specific model, series, option, size, type, etc. applicable to the part listed. Abbreviations used can be clarified by referring to the Abbreviations and Codes Index. The absence of a listing in this column indicates the part is applicable to every car, so equipped, built for the model years shown in the "Year" column. Of special importance are those listings which include an asterisk, i.e. (* 11-1). This is meant to refer the reader to the notes appearing on the first page of that respective group. These notes usually pertain to a running change which may have occurred in the parts used to manufacture a given model. This first or "Special Information" page of each group carries special, pertinent information relative to selecting correct parts from those listed within the group.

Paks ... If the part in question happens to be a Package, Assembly, Kit or Set, you will, in many instances, find an illustration reference number in this column. Locate that typical illustration in the Paks section found near the rear of the catalog, and you can visually interpret the content of the part number.

Primary Group Number ... If a part has a primary group number which is different from the one shown in the heading of that group, its correct primary group number will be shown in this column. This is done as a service to those Dealers who bin their parts by the primary group number.

Per Car ... This column will list the number of pieces of a part required for the specific application listed, not the total number of this part which may be used on the entire car.

Part Number ... The number listed in this column is the number by which the part you require must be ordered. Since certain automotive parts are readily available locally, A. M. does not offer them for service replacement. The presence of an NA adjacent to the part number indicates that it is not available from A. M.

ABBREVIATIONS INDEX . . .

The Abbreviations Index is located after the Alphabetical Index. Definitions to descriptive information abbreviated in the catalog, are defined in the index. For Example: WAT..... With Automatic Transmission

ACCESSORIES . . .

Refer to separate Accessories Catalog and Price List.

ALPHABETICAL INDEX . . .

Alphabetical listings followed by a double digit group number indicate that the part may be located in the Illustrated Text section of the group indicated. For Example:

MOULDING, Rear Window Finish 26

Alphabetical listings followed by a group number indicate that the part may be located in the Text copy section of the group indicated. For example:

PUMP ASSEMBLY, Water 2.080-1

GLASS . . .

Glass should be ordered from your American Motors Parts and Distribution Services Division Warehouse.

ILLUSTRATIONS INDEX . . .

The Illustrations Index is located at the front of Illustrations Supplement F-15072. This index has been subdivided into subsections called groups and alphabetized within each group. To use this index, select the illustration title which would most logically describe the part you require. Turn to the page indicated by the index and visually locate the part in question. The group number will be found adjacent to the part. Locate this group number in the text section of the catalog.

"L" CODE . . .

If the ONLY ILLUSTRATION of a part is in a major group, other than that which the part number was located in the Parts Catalog, a visual identification of that part may be obtained by the following method. Refer to the major group number listed after the "L" suffix. Parts illustrated in this manner are identified by the letter "L" in the code column. This group number indicates the major group in the Illustrations Supplement where a visual identification of the part may be found. Select the illustration, within that group, which would most logically include the part required.

MR - MODIFICATION OF PARTS . . .

At various times one service part number is supplied which, when modified by the dealer by cutting, drilling, bending, etc., serves as a replacement for similar parts. Parts supplied in this manner are identified by the letters MR in the code column or in the group heading.

NC - PART SUPPLIED IN NEUTRAL COLOR . . .

At various times one service part number is supplied in a neutral color which, when painted to match by the dealer, serves as a replacement for similar parts. Parts supplied in this manner are identified by the letters NC in the code column or in the group heading.

PARTS NOT LISTED IN THIS CATALOG . . .

Parts not listed in this catalog (except for those listed in another American Motors catalog) are to be considered as not supplied for service by American Motors.

PRICES . . .

Suggested prices for all parts listed in this catalog can be found in separate American Motors Price List F-94064.

Printed in U.S.A.

PRIME PAINTING . . .

Service replacement sheet metal parts are always serviced in prime and certain other categories of parts are serviced in one color only. They are not available from American Motors in finished colors, therefore, dealer must repaint to color desired.

STANDARD PARTS . . .

Standard Parts, Group 17, lists Standard Parts for American Motors Parts and Distribution Services Division Catalogs. Since American Motors does not service all Standard Parts, its purpose is to aid you in locating dimensions so that you may obtain that part locally.

SUBSTITUTED PARTS . . .

If a part has been substituted, the Price List will indicate the replacing part numbers or replacing parts, if available, will be supplied when the original part number is ordered even though the Price List does not indicate the change. Furthermore, as an ordering aid, if substitution information was available for inclusion in the parts catalog for publication date, it has also been listed adjacent to the original part number. However, if it was deemed that it would be more feasible for an individual to obtain particulars from the Price List, the words (Ref. Pr. List) has been printed in place of substituting part numbers.

TRIM NUMBER . . .

Trim items are available by part number. By choosing the applicable description, color or trim number and reading across to the specific model column you will obtain the part number of the required item. Trim numbers having an additional letter suffix such as B, C, D, etc., are used only when the part is peculiar to a particular trim number.

Trim numbers listed without a letter suffix indicate the part applies to all models having a part number entered in its specific model column.

Cloth and vinyl materials used in fabricating trim assemblies, not part of a dielectric insert, are available in bulk form. When ordering, please specify the exact size desired since these materials sold only by the running yard vary in widths of approximately 54 inches to 64 inches.

Printed in U.S.A.

VEHICLE IDENTIFICATION . . .

When attempting to locate replacement parts for an American Motors automobile it is always good practice to first determine the following vehicle identification information:

1967 VEHICLE IDENTIFICATION NUMBER – This 13 digit number can be found stamped on a plate attached to the top of the right front wheelhouse panel . . .

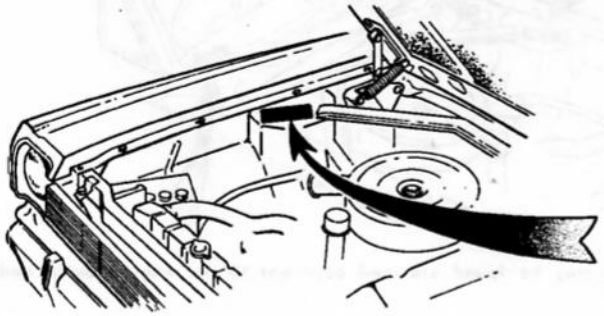

A7KS52B100001

(except in certain export territories where it may be found stamped adjacent to the engine build code) and is decoded as follows:

FIRST DIGIT / Make / 'A' for American Motors

SECOND DIGIT / Year / '7' for 1967

THIRD DIGIT / Plant of Manufacture / 'B' for Brampton
'K' for Kenosha

FOURTH DIGIT / Transmission Type / 'S' for Standard Column Shift (3 Speed)
'O' for Overdrive Column Shift (3 Speed)
'A' for Automatic Column Shift (3 Speed)
'C' for Automatic Floor Shift (3 Speed)
'F' for Four Speed Floor Shift W/Console
'M' for Four Speed Floor Shift Floor Mounted

FIFTH DIGIT / Body Type / '5' for 4 Door Sedan
'6' for 2 Door Sedan
'7' for 2 Door Soft Top Convertible
'8' for 4 Door Station Wagon
'9' for 2 Door Hard Top

SIXTH DIGIT / Class of Body / '0' for 220, 550
'2' for 880
'5' for 440, 770, 990
'7' for Rogue, SST, DPL, Marlin

SEVENTH DIGIT / Series and Engine /

AMERICAN (01 Series)

'A' for 199 OHV SIX Single Bbl. Carb.
'B' for 232 OHV SIX Two Bbl. Carb.
'C' for 290 V8 Two Bbl. Carb.
'D' for 290 V8 Four Bbl. Carb.
'E' for 232 OHV SIX Single Bbl. Carb.
'X' for 343 V8 Four Bbl. Carb.

AMBASSADOR (80 Series)

'M' for 232 OHV SIX Two Bbl. Carb.
'N' for 290 V8 Two Bbl. Carb.
'P' for 232 OHV SIX Single Bbl. Carb.
'Q' for 343 V8 Four Bbl. Carb.
'R' for 343 V8 Two Bbl. Carb.

REBEL (10 Series)

'F' for 232 OHV SIX Single Bbl. Carb.
'G' for 232 OHV SIX Two Bbl. Carb.
'H' for 290 V8 Two Bbl. Carb.
'J' for 343 V8 Two Bbl. Carb.
'K' for 343 V8 Four Bbl. Carb.

MARLIN (50 Series)

'S' for 232 OHV SIX Single Bbl. Carb.
'T' for 232 OHV SIX Two Bbl. Carb.
'U' for 290 V8 Two Bbl. Carb.
'V' for 343 V8 Two Bbl. Carb.
'W' for 343 V8 Four Bbl. Carb.

EIGHTH thru THIRTEENTH DIGIT - Sequential Serial Number / Starting with 100001 for each Domestic Series, 700001 for each Canadian Series and 10001 for each Export Series Plant of manufacture.

Printed in U.S.A.

1968 VEHICLE IDENTIFICATION NUMBER – This 13 digit number can be found stamped on a plate attached to the top of the right front wheelhouse panel or to the instrument panel . . .

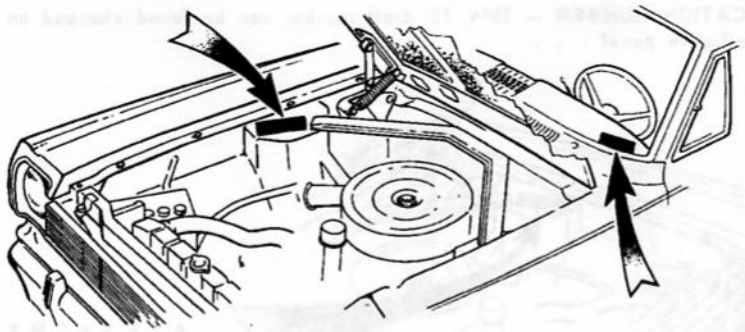

(except in certain export territories where it may be found stamped adjacent to the engine build code) and is decoded as follows:

FIRST DIGIT / Make / 'A' for American Motors

SECOND DIGIT / Year / '8' for 1968

THIRD DIGIT / Transmission Type / 'S' for Standard Column Shift (3 Speed)
'O' for Overdrive Column Shift (3 Speed)
'A' for Automatic Column Shift (3 Speed)
'C' for Automatic Floor Shift (3 Speed)
'F' for Four Speed Floor Shift W/Console
'M' for Four Speed Floor Shift Floor Mounted

FOURTH DIGIT / Series / '0' American
'1' Rebel
'3' AMX
'7' Javelin
'8' Ambassador

FIFTH DIGIT / Body Type / '5' for 4 Door Sedan
'6' for 2 Door Sedan
'7' for 2 Door Soft Top Convertible
'8' for 4 Door Station Wagon
'9' for 2 Door Hardtop

SIXTH DIGIT / Class of Body / '0' for American, 550
'2' for Ambassador
'5' for 440, 770, DPL
'7' for AMX, Rogue, SST

SEVENTH DIGIT / Engine Type /

'A' for 199 OHV SIX Single Bbl. Carb.
'B' for 232 OHV SIX Single Bbl. Carb.
'C' for 232 OHV SIX Two Bbl. Carb.
'M' for 290 V8 Two Bbl. Carb.
'N' for 290 V8 Four Bbl. Carb.
'S' for 343 V8 Two Bbl. Carb.
'T' for 343 V8 Four Bbl. Carb.
'W' for 390 V8 Two Bbl. Carb.
'X' for 390 V8 Four Bbl. Carb.

EIGHTH thru THIRTEENTH DIGIT - Sequential Serial Number / Starting with 100001 for each Domestic Series, 700001 for each Canadian Series, and K10001 for each Export Series of manufacture.

1969 VEHICLE IDENTIFICATION NUMBER – This 13 digit number can be found stamped on a plate attached to the top of the right front wheelhouse panel and/or to the instrument panel . . .

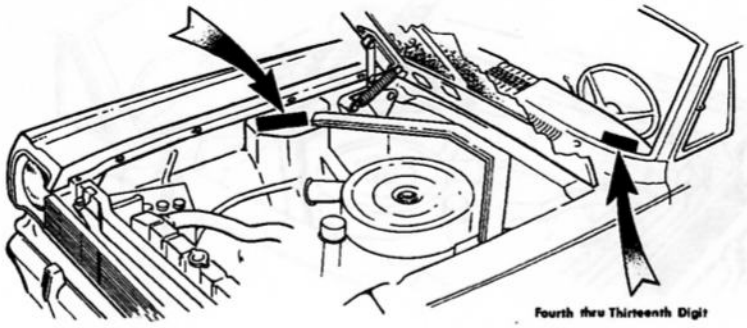

(except in certain export territories where it may be found stamped adjacent to the engine build code) and is decoded as follows:

FIRST DIGIT / Make / 'A' for American Motors

SECOND DIGIT / Year / '9' for 1969

THIRD DIGIT / Transmission Type / 'S' for Standard Column Shift (3 Speed) and 3 Speed Floor Shift Floor Mounted-70
'O' for Overdrive Column Shift (3 Speed)
'A' for Automatic Column Shift (3 Speed)
'C' for Shift Command W/Console
'M' for Four Speed Floor Shift Floor Mounted

FOURTH DIGIT / Series / '0' Rambler
'1' Rebel
'3' AMX
'7' Javelin
'8' Ambassador

FIFTH DIGIT / Body Type / '5' for 4 Door Sedan
'6' for 2 Door Sedan
'8' for 4 Door Station Wagon
'9' for 2 Door Hardtop

SIXTH DIGIT / Class of Body / '0' for Rambler, Rebel
'2' for Ambassador
'5' for 440, Javelin, DPL
'7' for AMX, Rogue, SST

SEVENTH DIGIT / Engine Type /

'A' for 199 OHV SIX Single Bbl. Carb.
'B' for 232 OHV SIX Single Bbl. Carb.
'C' for 232 OHV SIX Two Bbl. Carb.
'M' for 290 V8 Two Bbl. Carb.
'N' for 290 V8 Four Bbl. Carb.
'S' for 343 V8 Two Bbl. Carb.
'T' for 343 V8 Four Bbl. Carb.
'W' for 390 V8 Two Bbl. Carb.
'X' for 390 V8 Four Bbl. Carb.

EIGHTH thru THIRTEENTH DIGIT - Sequential Serial Number / Starting with 100001 for each Domestic Series, 700001 for each Canadian Series, and K10001 for each Export Series of manufacture.

Printed in U.S.A.

1970 VEHICLE IDENTIFICATION NUMBER – This 13 digit number can be found stamped on a plate attached to the instrument panel in the upper left corner . . .

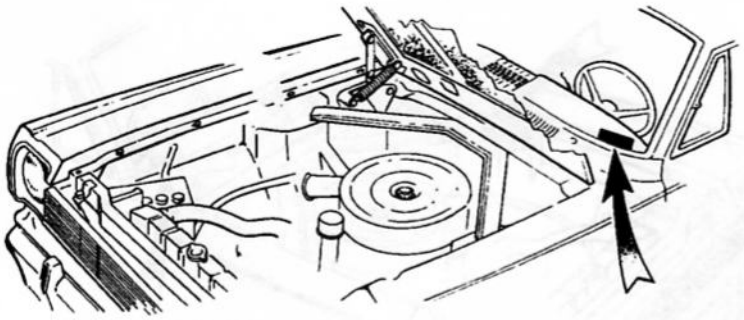

(except in certain export territories where it may be found stamped adjacent to the engine build code) and is decoded as follows:

FIRST DIGIT / Make / 'A' for American Motors

SECOND DIGIT / Year / '0' for 1970

THIRD DIGIT / Transmission Type / 'S' for Standard Column Shift (3 Speed) and 3 Speed Floor Shift Floor Mounted
'A' for Automatic Column Shift (3 Speed)
'C' for Shift Command W/Console
'M' for Four Speed Floor Shift Floor Mounted

FOURTH DIGIT / Series / '0' Hornet
'1' Rebel
'3' AMX
'4' Gremlin
'7' Javelin
'8' Ambassador

FIFTH DIGIT / Body Type / '5' for 4 Door Sedan
'6' for 2 Door Sedan
'8' for 4 Door Station Wagon
'9' for 2 Door Hardtop

SIXTH DIGIT / Class of Body / '0' for Hornet, Rebel, Gremlin
'2' for Ambassador
'5' for Javelin, DPL
'7' for AMX, SST

SEVENTH DIGIT / Engine Type /
'A' for 199 OHV SIX Single Bbl. Carb.
'B' for 199 OHV SIX Single Bbl. Carb. (Low Compression)
'E' for 232 OHV SIX Single Bbl. Carb.
'F' for 232 OHV SIX Single Bbl. Carb. (Low Compression)
'G' for 232 OHV SIX Two Bbl. Carb.
'Q' for 232 OHV SIX Two Bbl. Carb. (Low Compression)
'H' for 304 V8 Two Bbl. Carb.
'I' for 304 V8 Two Bbl. Carb. (Low Compression)
'M' for 304 V8 Four Bbl. Carb.
'N' for 360 V8 Two Bbl. Carb.
'P' for 360 V8 Four Bbl. Carb.
'S' for 390 V8 Four Bbl. Carb.
'X' for 390 V8 Four Bbl. Carb.

EIGHTH thru THIRTEENTH DIGIT - Sequential Serial Number / Starting with 100001 for each Domestic Series, 700001 for each Canadian Series, and K10001 for each Export Series of manufacture.

1971 VEHICLE IDENTIFICATION NUMBER – This 13 digit number can be found stamped on a plate attached to the instrument panel in the upper left corner . . .

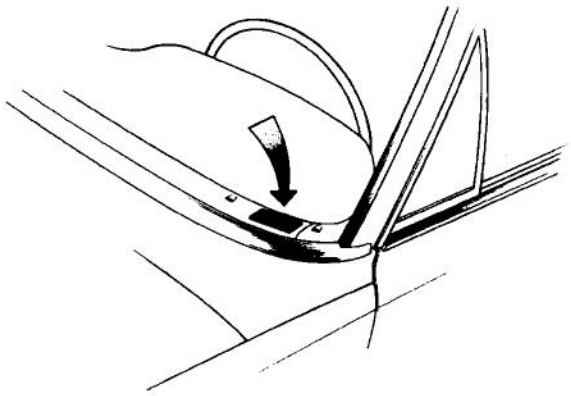

(except in certain export territories where it may be found stamped adjacent to the engine build code) and is decoded as follows:

FIRST DIGIT / Make / 'A' for American Motors

SECOND DIGIT / Year / '1' for 1971

THIRD DIGIT / Transmission Type / 'S' for Standard Column Shift (3 Speed)
'F' for Three Speed Floor Shift Floor Mounted
'A' for Automatic Column Shift (3 Speed)
'C' for Automatic Floor - Console
'M' for Four Speed Floor Shift Floor Mounted

FOURTH DIGIT / Series / '0' Hornet
'1' Matador
'4' Gremlin
'7' Javelin
'8' Ambassador

FIFTH DIGIT / Body Type / '5' for 4 Door Sedan
'6' for 2 Door Sedan
'8' for 4 Door Station Wagon
'9' for 2 Door Hardtop

SIXTH DIGIT / Class of Body / '0' for Hornet, Gremlin
'1' for SC-360
'2' for Ambassador DPL
'5' for Gremlin, Javelin, Ambassador SST
'7' for Hornet SST, Hornet Sportabout, Matador, Javelin SST, Ambassador Brougham
'8' for Javelin "AMX"

SEVENTH DIGIT / Engine Type /

'A' for 258 SIX Single Bbl. Carb.	'I' for 304 V8 Two Bbl. Carb (L/C)
'B' for 258 SIX Single Bbl. Carb. (L/C)	'M' for 304 V8 Four Bbl. Carb.
'E' for 232 SIX Single Bbl. Carb.	'N' for 360 V8 Two Bbl. Carb.
'F' for 232 SIX Single Bbl. Carb. (L/C)	'P' for 360 V8 Four Bbl. Carb.
'H' for 304 V8 Two Bbl. Carb.	'Z' for 401 V8 Four Bbl. Carb.

EIGHTH thru THIRTEENTH DIGIT - Sequential Serial Number / Starting with 100001 for each Domestic Series, 700001 for each Canadian Series, and K10001 for each Export Series of manufacture.

1972 VEHICLE IDENTIFICATION NUMBER – This 13 digit number can be found stamped on a plate riveted to the instrument panel in the upper left corner visible through the windshield . . .

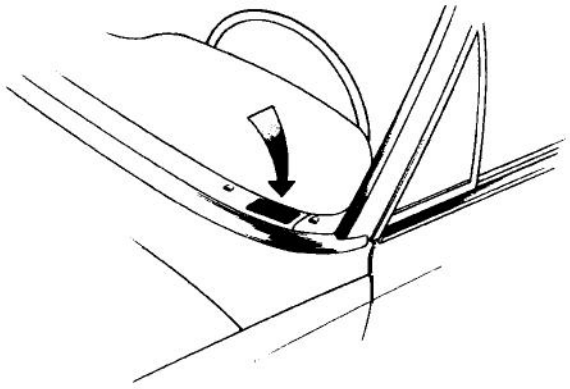

(except in certain export territories where it may be found stamped adjacent to the engine build code) and is decoded as follows:

FIRST DIGIT / Make / 'A' for American Motors

SECOND DIGIT / Year / '2' for 1972

THIRD DIGIT / Transmission Type / 'S' for Standard Column Shift (3 Speed)
'F' for Three Speed Floor Shift Floor Mounted (2-3 Synchromesh)
'A' for Automatic Column Shift (3 Speed)
'C' for Automatic Floor Shift
'M' for Four Speed Floor Shift Floor Mounted
'E' for Three Speed Floor Shift Floor Mounted (Full Synchromesh)

FOURTH DIGIT / Series / '0' Hornet
'1' Matador
'4' Gremlin
'7' Javelin
'8' Ambassador

FIFTH DIGIT / Body Type / '5' for 4 Door Sedan
'6' for 2 Door Sedan
'8' for 4 Door Station Wagon
'9' for 2 Door Hardtop

SIXTH DIGIT / Class of Body / '5' for Gremlin, Ambassador SST
'7' for Hornet SST, Hornet Sportabout, Matador, Javelin SST, Ambassador Brougham
'8' for Javelin "AMX"

SEVENTH DIGIT / Engine Type /

'A' for 258 SIX Single Bbl. Carb.
'B' for 258 SIX Single Bbl. Carb. (L/C)
'E' for 232 SIX Single Bbl. Carb. (L/C)
'F' for 232 SIX Single Bbl. Carb. (L/C)
'H' for 304 V8 Two Bbl. Carb.
'M' for 304 V8 Two Bbl. Carb. (L/C)
'N' for 360 V8 Two Bbl. Carb.
'P' for 360 V8 Four Bbl. Carb. (L/C)
'Z' for 401 V8 Four Bbl. Carb.

EIGHTH thru THIRTEENTH DIGIT - Sequential Serial Number / Starting with 100001 for each Domestic Series, 700001 for each Canadian Series, and K10001 for each Export Series of manufacture.

ENGINE BUILD CODE – This letter can be found located as follows:

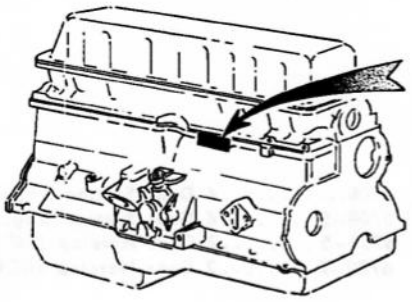

SIX

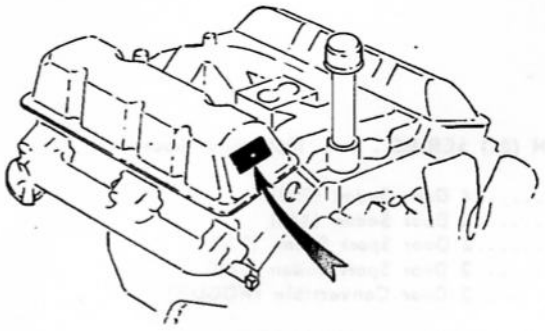

V8

For 1967 thru 1969, the alphabetical cubic inch displacement designation is interpreted as follows:

J – 199 Cu. In. SIX
P – 199 Cu. In. SIX (L/C)
L – 232 Cu. In. SIX
M – 232 Cu. In. SIX (L/C)
H – 290 Cu. In. V8 (L/C)
N – 290 Cu. In. V8
S – 343 Cu. In. V8 (L/C)
Z – 343 Cu. In. V8
W – 390 Cu. In. V8

For 1970 thru 1972, the alphabetical cubic inch displacement can be interpreted in the following chart. However, the 199 and 258 cubic inch displacement engine carries the same alphabetical designation and it's specific year usage is noted.

(1970) A – 199 Cu. In. SIX Single Bbl.
(1971-72) A – 258 Cu. In. SIX Single Bbl.
(1970) B – 199 Cu. In. SIX Single Bbl. (L/C)
(1971-72) B – 258 Cu. In. SIX Single Bbl. (L/C)
E – 232 Cu. In. SIX Single Bbl.
F – 232 Cu. In. SIX Single Bbl. (L/C)
G – 232 Cu. In. SIX Two Bbl.
Q – 232 Cu. In. SIX Two Bbl. (L/C)
H – 304 Cu. In. V8 Two Bbl.
I – 304 Cu. In. V8 Two Bbl. (L/C)
N – 360 Cu. In. V8 Two Bbl.
P – 360 Cu. In. V8 Four Bbl.
X – 390 Cu. In. V8 Four Bbl.
Y – 390 Cu. In. V8 Four Bbl. (Machine Package)
Z – 401 Cu. In. V8 Four Bbl.

UNIT BODY PLATE – This plate is riveted to the left front door below the door lock . . .



and contains the following information: **BODY NUMBER, MODEL NUMBER, TRIM NUMBER, PAINT CODE and CAR BUILDING SEQUENCE NUMBER.**

Printed in U.S.A.

MODELS . . .

1967 . . .

AMERICAN (01) SERIES . . . 106" Wheelbase

6705.....4 Door Sedan (220)
6705–5 .....4 Door Sedan (440)
6706.....2 Door Sport Sedan (220)
6706–5 .....2 Door Sport Sedan (440)
6707–7 .....2 Door Convertible (ROGUE)
6708.....4 Door Station Wagon (220)
6708–5 .....4 Door Station Wagon (440)
6709–5 .....2 Door Hardtop (440)
6709–7 .....2 Door Hardtop (ROGUE)

REBEL (10) SERIES . . . 114" Wheelbase

6715.....4 Door Sedan (550)
6715–5 .....4 Door Sedan (770)
6716.....2 Door Sport Sedan (550)
6717–7 .....2 Door Convertible (SST)
6718.....4 Door Station Wagon (550)
6718–5 .....4 Door Station Wagon (770)
6719–5 .....2 Door Hardtop (770)
6719–7 .....2 Door Hardtop (SST)

MARLIN (50) SERIES . . . 118" Wheelbase

6759–7 .....2 Door Hardtop

AMBASSADOR (80) SERIES . . . 118" Wheelbase

6785–2 .....4 Door Sedan (880)
6785–5 .....4 Door Sedan (990)
6786–2 .....2 Door Sport Sedan (880)
6787–7 .....2 Door Convertible (DPL)
6788–2 .....4 Door Station Wagon (880)
6788–5 .....4 Door Station Wagon (990)
6789–5 .....2 Door Hardtop (990)
6789–7 .....2 Door Hardtop (DPL)

1968 . . .

AMERICAN (01) SERIES . . . 106" Wheelbase

6805.....4 Door Sedan (220)
6805–5 .....4 Door Sedan (440)
6806.....2 Door Sedan (220)
6808–5 .....4 Door Station Wagon (440)
6809–7 .....2 Door Hardtop (ROGUE)

REBEL (10) SERIES . . . 114" Wheelbase

6815.....4 Door Sedan (550)
6815–5 .....4 Door Sedan (770)
6817.....2 Door Convertible (550)
6817–7 .....2 Door Convertible (SST)
6818.....4 Door Station Wagon (550)
6818–5 .....4 Door Station Wagon (770)
6819.....2 Door Hardtop (550)
6819–5 .....2 Door Hardtop (770)
6819–7 .....2 Door Hardtop (SST)

AMX (30) SERIES . . . 97" Wheelbase

6839–7 .....2 Door Hardtop

JAVELIN (70) SERIES . . . 109" Wheelbase

6879–5 .....2 Door Hardtop
6879–7 .....2 Door Hardtop (SST)

AMBASSADOR (80) SERIES . . . 118" Wheelbase

6885–2 .....4 Door Sedan
6885–5 .....4 Door Sedan (DPL)
6885–7 .....4 Door Sedan (SST)
6888–5 .....4 Door Station Wagon (DPL)
6889–2 .....2 Door Hardtop
6889–5 .....2 Door Hardtop (DPL)
6889–7 .....2 Door Hardtop (SST)

1969 . . .

RAMBLER (01) SERIES . . . 106" Wheelbase

6905.....4 Door Sedan (220)
6905–5 .....4 Door Sedan (440)
6906.....2 Door Sedan (220)
6908–5 .....4 Door Station Wagon (440)
6909–7 .....2 Door Hardtop (ROGUE)

REBEL (10) SERIES . . . 114" Wheelbase

6915.....4 Door Sedan
6915–7 .....4 Door Sedan (SST)
6918.....4 Door Station Wagon
6918–7 .....4 Door Station Wagon (SST)
6919.....2 Door Hardtop
6919–7 .....2 Door Hardtop (SST)

AMX (30) SERIES . . . 97" Wheelbase

6939–7 .....2 Door Hardtop

JAVELIN (70) SERIES . . . 109" Wheelbase

6979–5 .....2 Door Hardtop
6979–7 .....2 Door Hardtop (SST)

AMBASSADOR (80) SERIES . . . 122" Wheelbase

6985–2 .....4 Door Sedan
6985–5 .....4 Door Sedan (DPL)
6985–7 .....4 Door Sedan (SST)
6988–5 .....4 Door Station Wagon (DPL)
6988–7 .....4 Door Station Wagon (SST)
6989–5 .....2 Door Hardtop (DPL)
6989–7 .....2 Door Hardtop (SST)

1970 . . .

HORNET (01) SERIES . . . 108" Wheelbase

7005.....4 Door Sedan
7005–7 .....4 Door Sedan (SST)
7006.....2 Door Sedan
7006–7 .....2 Door Sedan (SST)

REBEL (10) SERIES . . . 114" Wheelbase

7015.....4 Door Sedan
7015–7 .....4 Door Sedan (SST)
7018.....4 Door Station Wagon
7018–7 .....4 Door Station Wagon (SST)
7019.....2 Door Hardtop
7019–7 .....2 Door Hardtop (SST)

AMX (30) SERIES . . . 97" Wheelbase

7039–7 .....2 Door Hardtop

GREMLIN (40) SERIES . . . 96" Wheelbase

7046–0 .....2 Door Sedan, 2 Passenger Version (Less Rear Seat And Liftgate)
7046–5 .....2 Door Sedan, 4 Passenger Version (With Rear Seat And Liftgate)

JAVELIN (70) SERIES . . . 109" Wheelbase

7079–5 .....2 Door Hardtop
7079–7 .....2 Door Hardtop (SST)

AMBASSADOR (80) SERIES . . . 122" Wheelbase

7085–2 .....4 Door Sedan
7085–5 .....4 Door Sedan (DPL)
7085–7 .....4 Door Sedan (SST)
7088–5 .....4 Door Station Wagon (DPL)
7088–7 .....4 Door Station Wagon (SST)
7089–5 .....2 Door Hardtop (DPL)
7089–7 .....2 Door Hardtop (SST)

1971 . . .

HORNET (01) SERIES . . . 108" Wheelbase

7105–0 . . . . . 4 Door Sedan
7105–7 . . . . . 4 Door Sedan (SST)
7106–0 . . . . . 2 Door Sedan
7106–1 . . . . . 2 Door Sedan (SC-360)
7106–7 . . . . . 2 Door Sedan (SST)
7108–7 . . . . . 4 Door Station Wagon (Sportabout)

MATADOR (10) SERIES . . . 118" Wheelbase

7115–7 . . . . . 4 Door Sedan
7118–7 . . . . . 4 Door Station Wagon
7119–7 . . . . . 2 Door Hardtop

GREMLIN (40) SERIES . . . 96" Wheelbase

7146–0 . . . . . 2 Door Sedan, 2 Passenger Version (Less Rear Seat And Liftgate)
7146–5 . . . . . 2 Door Sedan, 4 Passenger Version (With Rear Seat And Liftgate)

JAVELIN (70) SERIES . . . 110" Wheelbase

7179–5 . . . . . 2 Door Hardtop
7179–7 . . . . . 2 Door Hardtop (SST)
7179–8 . . . . . 2 Door Hardtop (AMX)

AMBASSADOR (80) SERIES . . . 122" Wheelbase

7185–2 . . . . . 4 Door Sedan (DPL)
7185–5 . . . . . 4 Door Sedan (SST)
7185–7 . . . . . 4 Door Sedan (Brougham)
7188–5 . . . . . 4 Door Station Wagon (SST)
7188–7 . . . . . 4 Door Station Wagon (Brougham)
7189–5 . . . . . 2 Door Hardtop (SST)
7189–7 . . . . . 2 Door Hardtop (Brougham)

1972 . . .

HORNET (01) SERIES . . . 108" Wheelbase

7205–7 . . . . . 4 Door Sedan (SST)
7206–7 . . . . . 2 Door Sedan (SST)
7208–7 . . . . . 4 Door Station Wagon (Sportabout)

MATADOR (10) SERIES . . . 118" Wheelbase

7215–7 . . . . . 4 Door Sedan
7218–7 . . . . . 4 Door Station Wagon
7219–7 . . . . . 2 Door Hardtop

GREMLIN (40) SERIES . . . 96" Wheelbase

7246–5 . . . . . 2 Door Sedan, 4 Passenger Version

JAVELIN (70) SERIES . . . 110" Wheelbase

7279–7 . . . . . 2 Door Hardtop (SST)
7279–8 . . . . . 2 Door Hardtop (AMX)

AMBASSADOR (80) SERIES . . . 122" Wheelbase

7285–5 . . . . . 4 Door Sedan (SST)
7285–7 . . . . . 4 Door Sedan (Brougham)
7288–5 . . . . . 4 Door Station Wagon (SST)
7288–7 . . . . . 4 Door Station Wagon (Brougham)
7289–5 . . . . . 2 Door Hardtop (SST)
7289–7 . . . . . 2 Door Hardtop (Brougham)

Printed in U.S.A.

PAINT . . .

American Motors factory matched touch up paint is available in both Spray Can and Brush Top containers. When larger quantities are required, it is suggested that they be obtained from either of two sources of supply: Ditzler Automotive Finish Division of Pittsburgh Plate Glass Industries or Automotive Finishes Division of E. I. DuPont DeNemours and Co. Both of these companies have distributors or dealers in most principle cities.

When ordering Touch up paint from American Motors please specify the part number. When ordering from your local DuPont or Ditzler dealer, please furnish them with their paint number, color name and specify Enamel, Acrylic Lacquer or Semi-Gloss Lacquer.

Exterior colors can be determined by referring to the Paint Code stamped on the Unit Body Plate. Interior colors vary, they are keyed to the color and type of interior trim upholstery used and can only be identified by color.

MISCELLANEOUS PAINTS . . .

Trunk Spatter Finish (Ditzler)	DX1768
Engine Blue (Ditzler)	DQE13730
Stripe Color - White (Ditzler)	DQE8616
Stripe Color - Black (Ditzler)	DQE9000

1967 EXTERIOR COLORS . . .

PAINT CODE NO.	COLOR NAME	A/C SPRAY CAN NO.	A/C BRUSH TOP NO.	DITZLER AIR DRY ENAMEL NO.	DUPONT AIR DRY ENAMEL DULUX* NO.	DITZLER DURACRYL ACRYLIC LACQUER NO.	DUPONT LUCITE* ACRYLIC LACQUER NO.
All	Introductory Assortment	899 1875	899 1892	.....	.....	.....	.....
	Primer	899 0451	... .	.....	.....	.....	.....
	Leveler	899 0452	... .	.....	.....	.....	.....
	Aluminum	899 0453	... .	.....	.....	.....	.....
P-1A	Classic Black	899 0636	899 0757	DQE9000	93-005	DDL9300	88
P-8A	Marina Medium Aqua Metallic	899 1493	899 1513	DQE12986	4852D	DDL12986	4852
P-18A	Granada	... .	... .	.....	.....	.....	.....
	Medium Green Metallic	899 1686	899 1704	DQE43489	181-97792	DDL43489	4749L
P-25A	Apollo Yellow	899 1693	899 1711	DQE81525	93-97799	DDL81525	4756L
P-31A	Strato Light Blue Metallic	899 1876	899 1893	DQE13283	4776D	DDL13283	4776L
P-32A	Barbados Medium Blue Metallic	899 1877	899 1894	DQE13284	4777D	DDL13284	4777L
P-33A	Royale Dark Blue Metallic	899 1878	899 1895	DQE13285	4778D	DDL13285	4778L
P-34A	Alameda Light Aqua	899 1879	899 1896	DQE13286	4779D	DDL13286	4779L
P-36A	Yuma Light Tan Metallic	899 1880	899 1897	DQE22765	4781D	DDL22765	4781L
P-37A	Sungold Medium Metallic	899 1881	899 1898	DQE22781	181-98318H	DDL22781	4782LH
P-38A	Stallion Dark Brown Metallic	899 1882	899 1899	DQE22767	4783D	DDL22767	4783L
P-39A	Matador Red	899 1883	899 1900	DQE71561	4784D	DDL71561	4784L
P-40A	Flamingo Light Burgundy Metallic	899 1884	899 1901	DQE50738	4785D	DDL50738	4785L
P-41A	Rajah Dark Burgundy Metallic	899 1885	899 1902	DQE50739	4786D	DDL50739	4786L
P-42A	Satin Chrome	899 1886	899 1903	DQEDX8551	9430D	DDLDX8551	9430L
P-58A	Hialeah Yellow	899 2219	899 2220	DQE81606	4933D	DDL81606	4933L
P-59A	Pale Green Metallic	899 2221	899 2222	DQE43746	4934D	DDL43746	4934L
P-72A	Frost White	899 0653	899 0765	DQE8616	93-97471	DDL8616	4662L

* "DUPONT TRADEMARK"

Printed in U.S.A.

1967 INTERIOR COLORS . . .

COLOR NAME	A/C SPRAY CAN NO.	SEMI GLOSS DITZLER DITZLAC NO.	LACQUER DUPONT LUCITE NO.
Dark Aqua Metallic (Metal Touch-up)	899 1890	DIA13328	9365L
Satin Black (Metal Touch-up)	899 1123	DIA9312	88
Dark Blue Metallic (Metal Touch-up)	899 1887	DIA13303	9361L
Dark Burgundy Metallic (Metal Touch-up)	899 1889	DIA50741	9363L
Dark Green Metallic (Metal Touch-up)	899 1695	DIA43504	9248LH
Red (Metal Touch-up)	899 1888	DIA71577	9362L
Dark Tan Metallic (Metal Touch-up)	899 1891	DIA22778	9364L
Black (Vinyl)	899 2263	.....	.....
Dark Blue (Vinyl)	899 2264	.....	.....
Dark Green (Vinyl)	899 2265	.....	.....
Red (Vinyl)	899 2266	.....	.....
Dark Aqua (Vinyl)	899 2267	.....	.....
Dark Tan (Vinyl)	899 2268	.....	.....
Dark Burgundy (Vinyl)	899 2269	.....	.....

1968 EXTERIOR COLORS . . .

PAINT CODE NO.	COLOR NAME	A/C SPRAY CAN NO.	A/C BRUSH TOP NO.	DITZLER AIR DRY ENAMEL NO.	DUPONT AIR DRY ENAMEL DULUX* NO.	DITZLER DURACRYL ACRYLIC LACQUER NO.	DUPONT LUCITE* ACRYLIC LACQUER NO.
All	Introductory Assortment	899 2223	899 2239	.....	.....	.....	.....
	Primer	899 0451	... .	.....	.....	.....	.....
	Leveler	899 0452	... .	.....	.....	.....	.....
	Aluminum	899 0453	... .	.....	.....	.....	.....
P-1A	Classic Black	899 0636	899 0757	DQE9000	93-005	DDL9300	88
P-39A	Matador Red	899 1883	899 1900	DQE71561	4784D	DDL71561	4784LM
P-43A	Saturn Light Blue Metallic	899 2224	899 2240	DQE13415	4935D	DDL13415	4935L
P-44A	Caravelle Medium Blue Metallic	899 2225	899 2241	DQE13416	4936DH	DDL13416	4936LH
P-45A	Blazer Dark Blue Metallic	899 2226	899 2242	DQE13417	4937DH	DDL13417	4937LH
P-46A	Laurel Light Green Metallic	899 2227	899 2243	DQE43706	4938DH	DDL43738	4938L
P-47A	Rally Dark Green Metallic	899 2228	899 2244	DQE43707	4939DH	DDL43707	4939L
P-48A	Tahiti Medium Turquoise Metallic	899 2229	899 2245	DQE43705	4940D	DDL43705	4940L
P-49A	Laredo Light Tan Metallic	899 2230	899 2246	DQE22877	4941D	DDL22877	4941L
P-50A	Calcutta Dark Russet Metallic	899 2231	899 2247	DQE71599	4942DM	DDL71599	4942LH
P-52A	Scarab Gold Metallic	899 2233	899 2249	DQE22878	4944DH	DDL22878	4944L
P-54A	Turbo Light Silver Metallic	899 2234	899 2250	DQE32611	4945D	DDL8593	4945L
P-58A	Hialeah Yellow	899 2219	899 2220	DQE81606	4933D	DDL81606	4933L
P-72A	Frost White	899 0653	899 0765	DQE8616	93-97471	DDL8616	4662L

* "DUPONT TRADEMARK"

1968 INTERIOR COLORS . . .

COLOR NAME	A/C SPRAY CAN NO.	SEMI GLOSS DITZLER DITZLAC NO.	LACQUER DUPONT LUCITE NO.
Satin Black	899 2343	DIA9351	9515L
Dark Blue Metallic	899 2338	DIA13482	9516LH
Dark Green Metallic	899 2339	DIA43744	9517LH
Red	899 2344	DIA71621	9518LH
Dark Russet	899 2340	DIA50763	9519LH
Medium Gold Metallic	899 2341	DIA22915	9520L
Medium Tan Metallic	899 2342	DIA22013	9521L
Gray 68 30-70 (68R14)	899 2372	.....	.....
Red 68 30-70 (68R15)	899 2373	.....	.....
Tan 68 30-70 (68R16)	899 2374	.....	.....

1969 EXTERIOR COLORS . . .

PAINT CODE NO.	COLOR NAME	A/C SPRAY CAN NO.	A/C BRUSH TOP NO.	DITZLER AIR DRY ENAMEL NO.	DUPONT AIR DRY ENAMEL DULUX* NO.	DITZLER DURACRYL ACRYLIC LACQUER NO.	DUPONT LUCITE* ACRYLIC LACQUER NO.
All	Introductory Assortment	899 2381	899 2382	.....	.....	.....	.....
	Primer	899 0451	... .	.....	.....	.....	.....
	Leveler	899 0452	... .	.....	.....	.....	.....
	Aluminum	899 0453	... .	.....	.....	.....	.....
	Flattening Blend	... .	... .	.....	.....	.....	4528S
P-2	Big Bad Blue	899 2477	899 2480	DQE13834	5079D	DDL13834	5079L
P-3	Big Bad Orange	899 2478	899 2481	DQE60552	5080D	DDL60552	5080L
P-4	Big Bad Green	899 2479	899 2482	DQE44033	5081D	DDL44033	5081L
P-7	Flat Black	... .	... .	.....	.....	DDL9378	88L
P-9	Bright Red	... .	... .	.....	.....	DDL71816	93-95616
P-10	Bright Blue	... .	... .	.....	.....	DDL13936	93-58740
P-39A	Matador Red	899 1883	899 1900	DQE71561	4784D	DDL71561	4784LM
P-62	Ascot Gray	899 2383	899 2396	DQE2001	4999D	DDL2001	4999L
P-63	Castillian Gray Metallic	899 2384	899 2397	DQE2002	4957D	DDL2002	4957L
P-64	Beale St. Blue Metallic	899 2385	899 2398	DQE2003	5000D	DDL2003	5000L
P-65	Regatta Blue Metallic	899 2386	899 2399	DQE2004	5001D	DDL2004	5001LH
P-68	Alamosa Aqua Metallic	899 2387	899 2400	DQE2005	5061D	DDL2005	5061L
P-70	Surf Green Metallic	899 2388	899 2401	DQE2006	5002D	DDL2006	5002L
P-71	Hunter Green Metallic	899 2389	899 2402	DQE2007	5003D	DDL2007	5003L
P-72A	Frost White	899 0653	899 0765	DQE8616	93-97471	DDL8616	4662L
P-75	Willow Green Metallic	899 2390	899 2403	DQE2008	5004D	DDL2008	5004L
P-76	Pompeii Yellow	899 2391	899 2404	DQE2009	5005D	DDL2009	5005L
P-77	Butternut Beige Metallic	899 2392	899 2405	DQE2010	5006D	DDL2010	5006L
P-78	Cordoba Brown Metallic	899 2393	899 2406	DQE2011	5007DH	DDL2011	5007LH
P-79	Bittersweet Orange Metallic	899 2394	899 2407	DQE2012	5008DH	DDL2012	5008LH
P-80	Black Mink Metallic	899 2395	899 2408	DQE2013	5062D	DDL2013	5062L
P-88	Bright White	... .	... .	.....	.....	DDL8810	93-21667

* "DUPONT TRADEMARK"

1969 INTERIOR COLORS . . .

COLOR NAME	A/C SPRAY CAN NO.
Charcoal Metallic (69R91)	899 2422
Blue Metallic (69R93)	899 2423
Medium Green Metallic (69R94)	899 2424
Red (69R95)	899 2425
Brown Metallic (69R96)	899 2426
Medium Avocado Metallic (69R97)	899 2427

1970 EXTERIOR COLORS . . .

PAINT CODE NO.	COLOR NAME	A/C SPRAY CAN NO.	A/C BRUSH TOP NO.	DITZLER AIR DRY ENAMEL NO.	DUPONT AIR DRY ENAMEL DULUX* NO.	DITZLER DURACRYL ACRYLIC LACQUER NO.	DUPONT LUCITE* ACRYLIC LACQUER NO.
All	Introductory Assortment	899 2493	899 2543	.....	.....	.....	.....
	Primer	899 0451	... .	.....	.....	.....	.....
	Leveler	899 0452	... .	.....	.....	.....	.....
	Aluminum	899 0453	... .	.....	.....	.....	.....
B-6	Electric Blue Poly (Machine)	... .	... .	DQE2244	5083D	DDL2244	5083LH
P-1	Classic Black	899 0636	899 0757	DQE9000	93-005	DDL9300	99L
P-2	Big Bad Blue	899 2477	899 2480	DQE2111	5079D	DDL2111	5079L
P-3	Big Bad Orange	899 2478	899 2481	DQE2114	5080D	DDL2114	5080L
P-4	Big Bad Green	899 2479	899 2482	DQE2115	5081D	DDL2115	5081L
P-8	Shadow Black (Hood Scoops)	... .	... .	DQE9372	.....	DDL9372	.....
P-39	Matador Red	899 1883	899 1900	DQE71561	4784DH	DDL71561	4784LM
P-58	Hialeah Yellow	899 2219	899 2220	DQE81606	5189D	DDL81606	5189L
P-72	Frost White	899 0653	899 0765	DQE8616	4662D	DDL8616	4662L
P-79	Bittersweet Orange Metallic	899 2394	899 2407	DQE2012	5008DH	DDL2012	5008LH
P-81	Gray	... .	... .	DQE32353	.....	DDL32353	.....
P-82	Bayshore Blue Mettallic	899 2494	899 2544	DQE2118	5162D	DDL2118	5162L
P-84	Commodore Blue Metallic	899 2539	899 2549	DQE2119	5163D	DDL2119	5163LH
P-85	Sea Foam Aqua Metallic	899 2495	899 2545	DQE2120	5164D	DDL2120	5164L
P-86	Mosport Green Metallic	899 2496	899 2546	DQE2121	5165D	DDL2121	5165L
P-87	Glen Green Metallic	899 2540	899 2550	DQE2122	5166D	DDL2122	5166L
P-90	Golden Lime Metallic	899 2541	899 2551	DQE2123	5167D	DDL2123	5167L
P-91	Tijuana Tan Metallic	899 2537	899 2547	DQE2124	5168D	DDL2124	5168L
P-94	Moroccan Brown Metallic	899 2542	899 2552	DQE2125	5169D	DDL2125	5169L
P-95	Sonic Silver Metallic	899 2538	899 2548	DQE2126	5170D	DDL2126	5170L

* "DUPONT TRADEMARK"

1970 INTERIOR COLORS . . .

COLOR NAME	A/C SPRAY CAN NO.	DUPONT "LOW GLOSS"	DITZLER CODE DIA
Black (70R21)*	... .	9765L	9371
(70R22)**	899 2570	.....	.....
Blue Metallic (70R3)*	... .	9693LH	13814
(70R13)**	899 2571	.....	.....
Green Metallic (70R4)*	... .	9694LH	44114
(70R14)**	899 2572	.....	.....
Red (69R5)*	... .	9598LM	71694
(69R95)**	899 2425	.....	.....
Brown Metallic (70R6)*	... .	9695LH	23184
(70R16)**	899 2573	.....	.....

* Bulk No. For Metal Parts Only.
** For Plastic Or Metal Parts.

Printed in U.S.A.

1971 EXTERIOR COLORS . . .

PAINT CODE NO.	COLOR NAME	A/C SPRAY CAN NO.	A/C BRUSH TOP NO.	DITZLER AIR DRY ENAMEL NO.	DUPONT AIR DRY ENAMEL DULUX* NO.	DITZLER DURACRYL ACRYLIC LACQUER NO.	DUPONT LUCITE* ACRYLIC LACQUER NO.
All	Introductory Assortment	899 2674	899 2692	.....	.....	.....	.....
	Primer	899 0451	... .	.....	.....	.....	.....
	Leveler	899 0452	... .	.....	.....	.....	.....
	Aluminum	899 0453	... .	.....	.....	.....	.....
A-1	Snow White	899 2675	899 2693	DQE2265	5213D	DDL2265	5213L
A-2	Canary Yellow	899 2676	899 2694	DQE2266	5214D	DDL2266	5214LH
A-4	Skyline Blue	899 2678	899 2696	DQE2268	5216D	DDL2268	5216L
A-5	Midway Blue Metallic	899 2679	899 2697	DQE2269	5217D	DDL2269	5217L
A-6	Midnight Blue Metallic	899 2680	899 2698	DQE2270	5218D	DDL2270	5218LH
A-7	Limelight Green Metallic	899 2681	899 2699	DQE2271	5219D	DDL2271	5219L
A-8	Meadow Green Metallic	899 2682	899 2700	DQE2272	5220D	DDL2272	5220L
A-9	Raven Green Metallic	899 2683	899 2701	DQE2273	5221D	DDL2273	5221L
B-2	Burnish Brown Metallic	899 2685	899 2703	DQE2274	5223D	DDL2274	5223LH
B-3	Quick Silver Metallic	899 2686	899 2704	DQE2275	5224D	DDL2275	5224L
B-4	Charcoal Gray Metallic	899 2687	899 2705	DQE2276	5225D	DDL2276	5225L
B-5	Deep Maroon Metallic	899 2688	899 2706	DQE2277	5226D	DDL2277	5226LM
B-6	Electric Blue Metallic	899 2689	899 2707	DQE2244	5083D	DDL2244	5083LH
B-7	Brilliant Green Metallic	899 2690	899 2708	DQE2278	5227DH	DDL2278	5227LH
B-8	Mustard Yellow	899 2691	899 2709	DQE2279	5228D	DDL2279	5228L
B-9	Matador Red	899 1883	899 1900	DQE71561	4784DH	DDL71561	4784LM
C-1	Golden Lime Metallic	899 2541	899 2551	DQE2123	5167D	DDL2123	5167L
C-6	Surfside Turquoise	899 2781	899 2796	DQE2394	5397AH	DDL2394	5397LH
D-3	Baja Bronze	899 2786	899 2801	DQE2398	5403AH	DDL2398	5403LH
D-9	Wild Plum	899 2790	899 2805	DQE2402	5407AH	DDL2402	5407LH
P-1	Classic Black	899 0636	899 0757	DQE9000	93-005	DDL9300	99L
P-81	Gray	... .	... .	DQE32353	.....	DDL32353	.....

* "DUPONT TRADEMARK"

1971 INTERIOR COLORS . . .

COLOR NAME	A/C SPRAY CAN NO.	DUPONT "LOW GLOSS"	DITZLER CODE DIA
Black (70R21)*	... .	9765L	9371
(70R22)**	899 2570	.....	.....
Blue (71R4)*	... .	9829L	14095
(71R14)**	899 2655	.....	.....
Green (71R5)*	... .	9830L	44295
(71R15)**	899 2656	.....	.....
Red (71R8)*	... .	9831LH	71869
(71R18)**	899 2657	.....	.....

* Bulk No. For Metal Parts Only.
** For Plastic Or Metal Parts.

1972 EXTERIOR COLORS . . .

PAINT CODE NO.	COLOR NAME	A/C SPRAY CAN NO.	A/C BRUSH TOP NO.	DITZLER AIR DRY ENAMEL NO.	DUPONT AIR DRY ENAMEL DULUX* NO.	DITZLER DURACRYL ACRILYC LACQUER NO.	DUPONT LUCITE* ACRILYC LACQUER NO.
All	Introductory Assortment	899 2776	899 2791	.....	.....	.....	.....
	Primer	899 0451	... .	.....	.....	.....	.....
	Leveler	899 0452	... .	.....	.....	.....	.....
	Aluminum	899 0453	... .	.....	.....	.....	.....
A-1	Snow White	899 2675	899 2693	DQE2265	5213D	DDL2265	5213L
A-2	Canary Yellow	899 2676	899 2694	DQE2266	5214D	DDL2266	5214L
B-4	Charcoal Gray Metallic	899 2687	899 2705	DQE2276	5225D	DDL2276	5225L
C-2	Stardust Silver Metallic	899 2777	899 2792	DQE2390	5393D	DDL2390	5393L
C-3	Skyway Blue	899 2778	899 2793	DQE2391	5394D	DDL2391	5394L
C-4	Jetset Blue Metallic	899 2779	899 2794	DQE2392	5395D	DDL2392	5395L
C-5	Admiral Blue Metallic	899 2780	899 2795	DQE2393	5396D	DDL2393	5396L
C-6	Surfside Turquoise	899 2781	899 2796	DQE2394	5397D	DDL2394	5397L
C-8	Grasshopper Green Metallic	899 2783	899 2798	DQE2395	5399D	DDL2395	5399L
C-9	Hunter Green Metallic	899 2389	899 2402	DQE2007	5401D	DDL2007	5401L
D-1	Jolly Green Metallic	899 2784	899 2799	DQE2396	5402D	DDL2396	5402L
D-2	Yuca Tan Metallic	899 2785	899 2800	DQE2397	5404D	DDL2397	5404L
D-3	Baja Bronze Metallic	899 2786	899 2801	DQE2398	5403D	DDL2398	5403L
D-4	Cordoba Brown Metallic	899 2393	899 2406	DQE2011	5405D	DDL2011	5405L
D-5	Butterscotch Gold	899 2787	899 2802	DQE2399	5406D	DDL2399	5406L
D-7	Trans-Am Red	899 2788	899 2803	DQE2400	5408D	DDL2400	5408L
D-8	Sparkling Burgundy	899 2789	899 2804	DQE2401	5409D	DDL2401	5409L
D-9	Wild Plum Metallic	899 2790	899 2805	DQE2402	5407D	DDL2402	5407L
P-1	Classic Black	899 0636	899 0757	DQE9000	93-005	DDL9300	99L

* "DUPONT TRADEMARK"

1972 EXTERIOR PAINT STRIPE COLOR . . .

	DITZLER NO.
Solid Gold (72R35)	DDL23681
Green (72R36)	DDL44560
Dark Brown (72R37)	DDL23682
Gray (Silver) (72R38)	DDL32962
Blue (72R58)	DDL14331
Black (Carry Over)	DQE9000
White (Carry Over)	DQE8616

1972 INTERIOR COLORS . . .

COLOR NAME	A/C SPRAY CAN NO.	DUPONT "LOW GLOSS"	DITZLER CODE DIA
Black (72R30)*	... .	9930L	9390
(72R31)**	899 2772	.....	.....
Blue (72R1)*	... .	9927L	14264
(72R4)**	899 2773	.....	.....
Green (72R2)*	... .	9928L	44463
(72R5)**	899 2774	.....	.....
Tan (72R23)*	... .	9929L	23595
(72R24)**	899 2775	.....	.....

* Bulk No. For Metal Parts Only.
** For Plastic Or Metal Parts.

Printed in U.S.A.

TELEGRAPHIC CODES . . .

ORDERING PARTS – There is a decided cost advantage in using code words for common phrases covering shipping instructions. Established code words are as follows:

TYEAL.....Ship by Truck C. O. D.
TYEAN.....Ship by Truck
YAM.....Ship by Parcel Post
YAMS.....Ship by Parcel Post Special Delivery
YAMX.....Ship by Parcel Post Special Delivery C. O. D.
YANK.....Ship by Parcel Post C. O. D.
YANKL.....Emergency order car tied up
YAP.....Ship by Air Parcel Post
YAPL.....Ship by Air Mail
YAPLS.....Ship by Air Parcel Post C. O. D.
YAPS.....Ship by Air Parcel Post Special Delivery
YAPSL.....Ship by Air Parcel Post Special Delivery C. O. D.
YAPSO.....Ship by Air Express
YAT.....Ship by Air Cargo
YATS.....Ship by Air Cargo C. O. D.
YEAN.....Ship by Express
YEARN.....Ship by Express C. O. D.
YOLD.....Ship by Freight
YOLK.....Ship by Freight C. O. D.
YOPSX.....Ship by Air Express C. O. D.
YORE.....Ship by Freight with carload

EXAMPLE: YAMS BOULEVARD CHICAGO ONE EACH 311 4850 312 9543 313 2723

Decoded reads:

SHIP BY PARCEL POST SPECIAL DELIVERY TO BOULEVARD RAMBLER INC. CHICAGO ONE EACH PART NUMBERS 311 4850 312 9543 313 2723

PARTS INQUIRIES – There is a decided cost advantage in using code words for common phrases covering inquiries concerning parts orders, inventories and transfers. It is always good practice to use the following code words whenever possible:

JAY.....Advise need for quantity of ----------
JEP.....Unable to locate. Duplicating in order to avoid further delay via ------
YEA.....Refer your or our order number ----------
YEB.....Our records indicate open account - order specifies C. O. D. - Advise
YEC.....Our records indicate C. O. D. - order specifies open account - Advise
YED.....Advise model, trim and serial number
YEE.....Advise - Right or Left, Front or Rear required
YEF.....Advise - Part number, group number and description do not agree
YEG.....Advise - Part number and price do not agree
YEH.....Cancelling. No record of part number, suggest re check and re order. (Form wire)
YEJ.....Cancelling. Fill from zone stock. (Form wire)
YEK.....Advise - Right hand drive part
YEM.....Cancelled - Refer Parts and Accessories Letter ----------
YEMS.....Cancelled - Refer Service Letter ----------
YEN.....Cancelled as requested
YENS.....Refer parts release and change notice ------ Dated ------
YEO.....Unable to cancel as requested - Shipped
YEP.....Incorrect material received - Check stock
YEQ.....Cancelling. Purchase locally. Refer to Mr. A. J. Peterson's letter of 1-17-68 subject "Replacement Glass" for further details. (Form wire)
YER.....Verify stock depletion
YES.....Unable to locate in our attempt to cancel as requested. Suggest you advise dealer accordingly
YET.....Unable to locate in our attempt to cancel. Try to intercept at zone level in consolidated
YEU.....Believe dealer ordering incorrectly due to extremely limited production of this first type panel. Re check and re order including car sequence code number. Cancelling. (Form wire)

YEV.....Advise present inventory
YEW.....Advise by wire shipping information on order ----------
YEX.....Advise date on which following invoices were received and screened against back order file
YEY.....Return at once on Z-269 cheapest way prepaid (Quantity), (Part number). Mail 1 and 2 copies Z-269 attention writer, reference this wire. Advise
YEYS.....Return at once on Z-269 cheapest way prepaid (Quantity), (Part number). Mail 1 and 2 copies Z-269 attention writer, reference this wire. Advise. Freight charges will be allowed
YEZ.....Ship at once via (Carrier), (Quantity), (Part number) to (Destination) Advise
YOA.....Suggest use part ---------- and fill from zone stock. Cancelling. (Form wire)

When making inquiries by wire regarding a dealer order, be sure to mention the dealers name, city and state, as well as the order and invoice numbers if available.

EXAMPLE: YEW BOULEVARD CHICAGO 195670

Decoded reads:

ADVISE BY WIRE SHIPPING INFORMATION OF ORDER 195670 FOR BOULEVARD RAMBLER INC., CHICAGO

ALPHABETICAL INDEX

DESCRIPTION	GROUP NO.
– A –	
ABSORBER KIT, Rear Axle Dynamic	9.002
ACTUATOR, Directional Signal Switch	3.321-7
ACTUATOR, Electric Windshield Wiper Drive Link	22.034-3
ACTUATOR, Ignition Switch	3.131
ACTUATOR, Steering Wheel	10.830-1
ADAPTER, Automatic Speed Control Vacuum Line Hose	4.370-3
ADAPTER, Automatic Transmission Case Rear	16.100-1
ADAPTER, Automatic Transmission Rear	16.176-1
ADAPTER, Automatic Transmission Speedometer Drive Pinion (Single Position)	3.591-1
ADAPTER, Automatic Transmission Speedometer Drive Pinion (Single Position)	16.250-1
ADAPTER, Automatic Transmission Speedometer Drive Pinion (Three Position)	3.591-2
ADAPTER, Automatic Transmission Speedometer Drive Pinion (Three Position)	16.250-2
ADAPTER, Automotive Pipe	17.006
ADAPTER, Carburetor Air	4.092-1
ADAPTER, Crankshaft To Transmission	1.043-3
ADAPTER, Fourspeed Transmission To Reverse Gear Housing	6.031-5
ADAPTER, Gear Shift Mechanism To Transmission	7.002-3
ADAPTER, Heater-Defroster Air Duct To Damper Housing	13.118-8
ADAPTER, Heater-Defroster Air Duct Tube	13.118-9
ADAPTER, Low Fuel Warning Lamp Socket	3.615-14
ADAPTER, Manifold To Hood Air Scoop	12.001-21c
ADAPTER, Master Cylinder To Brake Tube	8.110-5
ADAPTER, Oil Filter	1.208-1
ADAPTER, Oil Pressure Sending Unit	3.605-10
ADAPTER, Open Door Warning Lamp At Fuse Panel	3.655-3
ADAPTER, Overdrive Case To Propeller Shaft	6.290-1
ADAPTER, Overdrive Housing	6.265-1
ADAPTER, Overdrive Rear Oil Seal	6.286-2
ADAPTER, Road Wheel Cap Mounting	8.270-4
ADAPTER, Steering Gear Shaft Lower Bearing	10.772
ADAPTER, Tee To Valve Hose	1.069-5
ADAPTER ASSEMBLY, Automatic Speed Control Regulator	4.355
ADAPTER KIT, Power Steering	10.360-2
ADJUSTER, Clutch Wear	5.187-7
ADJUSTER, Steering Gear Worm Ball Bearing	10.326-1
ADJUSTER ASSEMBLY, Power Steering Gear Upper Thrust Bearing	10.635
ADJUSTER KIT, Steering Gear Shaft Lower Bearing	10.767
AIR INLET, Carburetor Air Cleaner	4.015-6
AIR SCOOP, Air Cleaner To Hood	4.090
ALTERNATOR (A.M.)(Incl. Pulley)	3.005-1
ALTERNATOR (A.M.)(Less Pulley)	3.005-2
ALTERNATOR (Motorola)	3.016
AMMETER	3.005-5a
AMMETER, Alternator	3.600-1
A - Cont.	
ANCHOR, Automatic Transmission Kickdown Band	16.348-6
ANCHOR, Brake Shoe Hold Down Spring	8.008-8
ANCHOR, Clutch Throwout Lever Spring	5.190-2
ANCHOR, Clutch Throwout Lever Spring (In Clutch)	5.132-2
ANCHOR, Throttle Control Cable	4.024-9
ANTENNA, Radio Front Fender	15.030-1
ANTI-SQUAWK KIT, Clutch	5.045
ANTI-SQUEAK, Cowl Top Panel	20.150-5
ANTI-SQUEAK, Tailgate Hinge Torque Bar	23.006-25
ANTI-SQUEAK, Windshield Side Finish Moulding	26
ARM, Bottom Frame Outer Hinge Adjusting	29.103-4
ARM, Front Suspension Lower Control	10.045
ARM, Front Suspension Upper Control	10.066-1
ARM, Rear Seat Back Center Armrest	29.232-1
ARM, Rear Seat Back Side	29.226-1
ARM, Rear Suspension Lower Control	11.420-1
ARM, Rear Suspension Upper Control	11.410-1
ARM, Steering Knuckle	10.035
ARM, Steering Linkage Idler	10.108-1
ARM, Steering Linkage Pitman	10.104-19
ARM, Valve Rocker	1.097-1
ARM, Windshield Wiper	22.044
ARMATURE, Electric Windshield Wiper Motor	22.028-2
ARMREST, Door	29.075-1
ARMREST, Rear Quarter Side	29.056-1
ARMREST ASSEMBLY, Trimmed Front Seat Back Center	29.141
ARMREST ASSEMBLY, Trimmed Rear Seat Back Center	29.230
AXLE, Conventional Differential Rear	9.001-1
AXLE, Locking Differential Rear	9.001-2
– B –	
BACK ASSEMBLY, Trimmed Front Seat	29.101
BACK ASSEMBLY, Trimmed Rear Seat	29.210
BACK ASSEMBLY, Trimmed Third Seat	29.250
BACKBOARD ASSEMBLY, Trimmed Rear Cargo Platform	29.470-1
BAFFLE, Automatic Transmission Case Rear Adapter Breather	16.100-3
BAFFLE, Automatic Transmission Oil Pump Housing	16.380-6
BAFFLE, Evaporator Core Air	13.475-4
BAFFLE, Hood Air Scoop	12.001-11b
BAFFLE, Instrument Panel Ash Receiver	22.092-11
BAFFLE, Intake Manifold	1.067-17
BAFFLE, Muffler	20.035-6
BAFFLE, Overdrive Housing Adapter Oil	6.265-2
BAFFLE, Power Steering Pump Oil Reservoir	10.465-10
BAFFLE, Radiator Air (Lower)	2.062-1
BAFFLE, Radiator Air (Upper)	2.062-6
BAG, Air Lifts Cylinder (Sedan)	15.245-1
BAG, Air Lifts Cylinder (Wagon)	15.245-2
BALL, Automatic Transmission Governor	16.085-7

Printed in U.S.A.

ALPHABETICAL INDEX

DESCRIPTION	GROUP NO.
B - Cont.	
BALL, Automatic Transmission Lower Valve Body Check Valve Spring	16.215-8
BALL, Automatic Transmission Lower Valve Body Converter Check	16.215-7
BALL, Automatic Transmission Manual Valve Detent Lever Steel	16.225-12
BALL, Automatic Transmission Manual Valve Detent Spring	16.225-8
BALL, Automatic Transmission Speedometer Drive Gear Steel	16.248-3
BALL, Automatic Transmission Valve Body 2-3 Circuit Check	16.215-16
BALL, Automatic Transmission Valve Body 1-2 Directional Check	16.215-17
BALL, Automatic Transmission Valve Body Rear Servo Release Check	16.215-18
BALL, Console Ash Receiver	27.285-4
BALL, Instrument Panel Ash Receiver	22.092-2
BALL, Sleeve	17.030
BALL, Speedometer Drive Gear	6.240-3
BALL, Steel	17.018
BALL, Throwout Lever Pivot	5.130-4
BALL, Valve Rocker Arm	1.099
BALL JOINT	17.028
BALL JOINT KIT, Front Suspension Lower Control Arm	10.048-1
BALL JOINT KIT, Front Suspension Upper Control Arm	10.067-1
BALL KIT, Power Steering Gear Rack-Piston	10.572
BAND, Automatic Transmission Front Brake	16.130-1
BAND, Automatic Transmission Kickdown	16.348-1
BAND, Automatic Transmission Rear Brake	16.155-1
BAND, Automatic Transmission Reverse	16.430-1
BAND, Door Locking Control Rod Anti-Rattle	23.057-14d
BAR, Electric Operated Window Regulator Control Master Switch Bus	23.330-13
BAR, Front Bumper Back (Inner)	12.175-1
BAR, Front Bumper Back (Outer)	12.175-2
BAR, Front Bumper Outer Back (Extension)	12.175-7
BAR, Front Seat Back Center Armrest Lock	29.142-4
BAR, Radiator Grille	2.050-7c
BAR, Radiator Grille Center	2.050-7b
BAR, Rear Bumper Back (Auxiliary)	12.178-3
BAR, Rear Bumper Back (Inner)	12.178-1
BAR, Rear Bumper Back (Outer)	12.178-2
BAR, Tailgate Hinge Torque	23.006-21
BAR, Vertical (Front)	12.184-1
BAR, Vertical (Rear)	12.184-5
BASE, Cargo Area Lamp	3.670-1
BASE, Domelamp	3.346-1
BASE, Front Door Outside Handle	23.074-10
BASE, Jack	14.140
BASE, Quarter Window Handle To Glass	24.020-5
BASE, Rear Door Outside Handle	23.074-11
BASE, Rear Quarter Interior Lamp	3.675-1
BASE, Tachometer Head	3.700-10
BASEBOARD ASSEMBLY, Trimmed Rear Cargo Platform	29.478-1
BATTERY	3.080

DESCRIPTION	GROUP NO.
B - Cont.	
BEARING, Air Conditioning Intermediate Pulley	13.430-3
BEARING, Automatic Transmission Output Shaft	16.460-3
BEARING, Automatic Transmission Planetary To Output Shaft Needle Thrust	16.152-1
BEARING, Automatic Transmission Rear Clutch Drum Needle	16.125-2
BEARING, Automatic Transmission Rear Servo Lever Needle	16.070-11
BEARING, Automatic Transmission Sun Gear Needle	16.145-1
BEARING, Carburetor Control Shaft (Six)	4.070-8
BEARING, Carburetor Control Shaft (V8)	4.065-9
BEARING, Connecting Rod	1.138
BEARING, Directional Signal Switch Actuator Spring Retainer Ring	3.321-11
BEARING, Front Suspension Upper Control Arm Trunnion Needle	10.042-3
BEARING, Front Wheel	8.292
BEARING, Gear Shift Bellcrank To Strut Rod Bracket	7.110-4
BEARING, Gear Shift Bellcrank To Transmission Arm	7.110-5
BEARING, Gear Shift Upper Lever Housing	7.020-7
BEARING, Main	1.023
BEARING, Overdrive Front Ball	6.275-1
BEARING, Overdrive Rear Ball	6.282
BEARING, Power Steering Gear Pitman Shaft Needle	10.595
BEARING, Power Steering Gear Upper Thrust Bearing Adjuster Needle	10.640
BEARING, Rear Axle Differential Side	9.041
BEARING, Rear Axle Pinion (Front)	9.052-1
BEARING, Rear Axle Pinion (Rear)	9.052-2
BEARING, Rear Wheel	8.300
BEARING, Steering Gear Jacket Tube Upper	10.344-1
BEARING, Steering Gear Shaft Lower (Ball)	10.765
BEARING, Steering Gear Shaft Lower (Roller)	10.827-2
BEARING, Steering Gear Shaft Upper	10.827-1
BEARING, Steering Gear Upper Shaft To Lower Shaft Coupling	10.722
BEARING, Steering Gear Worm	10.322
BEARING, Steering Gear Worm Ball	10.316-1
BEARING, Tailgate Electric Operated Window Regulator Pinion Shaft End	23.308-8
BEARING, Transmission Front Ball	6.040-1
BEARING, Transmission Rear Ball	6.052
BEARING KIT, Power Steering Gear Lower Thrust	10.565
BEARING KIT, Power Steering Gear Upper Thrust	10.630
BEARING KIT, Steering Knuckle Pin Thrust	10.023-1
BEARING SET, Camshaft	1.041-1
BELLCRANK, Accelerator Pedal Rod	4.050-1
BELLCRANK, Air Conditioning Evaporator Or High Level Ventilation Air Discharge Duct	13.515-23c
BELLCRANK, Automatic Transmission Throttle Valve Control	16.517-1

ALPHABETICAL INDEX

DESCRIPTION	GROUP NO.
B - Cont.	
BELLCRANK, Clutch Release Idler Outer	5.168-1
BELLCRANK, Column Gear Shift	7.110-1
BELLCRANK, Front Door Locking Control Handle	23.057-1
BELLCRANK, Hood Lock Release	12.060-5i
BELLCRANK, Liftgate Latch	23.411-1
BELLCRANK, Parking Brake	8.187-1
BELLCRANK, Power Brake Operating	8.430-1
BELLCRANK, Rear Door Locking Push Button	23.057-6
BELLCRANK, Reverse Lock-Up	7.131-1
BELLCRANK, Tailgate (Left Side)	23.039-14a
BELLCRANK, Tailgate (Right Side)	23.039-13a
BELLOWS, Automatic Speed Control Vacuum Servo	4.380-1
BELT, Air Conditioning Compressor	13.425-1 Thru 13.425-8
BELT, Alternator Fan	3.008-1
BELT, Crankshaft To Air Pump To Compressor	4.620
BELT, Crankshaft To Exhaust Emission Air Pump	4.612
BELT, Front, Rear And Third Seat	27.290-3
BELT, Front, Rear And Third Seat Tip End	27.290-4
BELT, Front Seat (Auto-Lock)	27.290-7
BELT, Front Seat (Non Auto-Lock)	27.290-5
BELT, Front Seat (Tip End Only)	27.290-8
BELT, Front Seat Inner	27.290-2
BELT, Front Seat Outer	27.290-1
BELT, Front Seat Tip End	27.290-6
BELT, Idler To Air Pump And Compressor	4.617
BELT, Power Steering Pump	10.455-4
BELT, Power Steering Pump To Exhaust Emission Air Pump	4.615
BELT, Radiator Fan And Alternator	2.016-1
BELT, Rear And Third Seat (Incl. Chrome Buckle)	27.290-13
BELT, Rear And Third Seat (Painted Buckle)	27.290-12
BELT, Rear And Third Seat Tip End	27.290-14
BELT, Shoulder	27.292-1
BELT SET, Alternator	3.008-2
BELT SET, Radiator Fan And Alternator	2.016-2
BEZEL, Air Conditioning Air Discharge	13.515-1
BEZEL, Air Conditioning Air Discharge Inner	13.515-3a
BEZEL, Air Conditioning Air Discharge Outer	13.515-3b
BEZEL, Air Conditioning Evaporator Or High Level Ventilation Air Discharge	13.515-2
BEZEL, Air Conditioning Or High Level Ventilation Air Discharge	13.515-33
BEZEL, Air Conditioning Thermostat Control	13.477-8a
BEZEL, Door Armrest	29.075-2b
BEZEL, Electric Operated Window Regulator Control Switch Housing	23.330-16
BEZEL, Front Fender Radio Antenna	15.030-5
BEZEL, Front Fender Side Lamp	3.720-3
BEZEL, Front Fender Side Reflector	12.078-2
BEZEL, Gear Selector Pointer Dial	7.537-4

DESCRIPTION	GROUP NO.
B - Cont.	
BEZEL, Gear Shift Lever	7.014-1
BEZEL, Glove Box	22.076-1
BEZEL, Glove Box Opening	22.100-69
BEZEL, Heater And Defroster Air Duct	13.118-10
BEZEL, Heater And Defroster Control	13.017-12
BEZEL, Horn Blowing Cover	3.401-2
BEZEL, Instrument Cluster	3.510-1
BEZEL, Instrument Panel Steering Column Opening	22.056-12
BEZEL, Instrument Rally Pak	3.510-2
BEZEL, Parking And Front Directional Signal Lamp	3.292-15
BEZEL, Rear Quarter Electric Operated Window Regulator Control Switch Housing	24.220-6
BEZEL, Rear Quarter Panel Side Lamp	3.740-3
BEZEL, Rear Quarter Panel Side Reflector	12.125-16
BEZEL, Rear Speaker Control Assembly	15.320-33a
BEZEL, Rear Window Defogger Switch	13.615-3
BEZEL, Tail, Stop And Rear Directional Signal Lamp	3.303-6
BLADE, Windshield Wiper	22.043-1
BLADE, Windshield Wiper (Right)	22.043-2
BLADES, Fan	2.002-1
BLOCK, Brake Shoe Anchor Pin Guide	8.022-2
BLOCK, Handle And Latch Mounting	28.129
BLOCK, Junction	3.213-1
BLOCK, Rear Axle Differential Pinion Shaft Thrust (LLD)	9.039-1
BLOCK, Rear Axle Differential Pinion Shaft Thrust (WLD)	9.039-2
BLOCK, Tachometer Junction	3.700-13
BLOCK ASSEMBLY, Engine Cylinder	1.020-1
BLOCKER, Reverse Release	7.006-3
BLOWER ASSEMBLY, Rear Window Defogger	13.590
BOARD, Front Seat Center Cushion	29.157-2
BOARD, Printed Circuit	3.520-1
BODY, Air Conditioning Receiver Check Valve	13.455-4
BODY, Automatic Transmission Front Servo	16.060-1
BODY, Automatic Transmission Governor	16.385-4
BODY, Headlamp	3.248-1
BODY, Headlamp (Inner)	3.248-2
BODY, Headlamp (Outer)	3.248-3
BODY, Power Steering Pump	10.430-14
BODY, Transmission Rear Servo	16.070-1
BODY, Windshield Wiper Pivot Shaft	22.047-1
BOLT, Automatic Transmission Governor Body	16.385-6
BOLT, Automatic Transmission Reaction Shaft Support	16.380-13
BOLT, Brake Master Cylinder Filler Cover	8.038-3
BOLT, Brake Master Cylinder Piston Stop	8.050-1
BOLT, Brake Pedal	8.156-1
BOLT, Cylinder Head To Block	1.063
BOLT, Door Window Spanner	25.014-2
BOLT, Front Suspension Lower Control Arm Pivot	10.050-2
BOLT, Hexagon Head	17.038
BOLT, Hexagon Head Flanged	17.039
BOLT, Hexagon Head Self-Locking	17.042
BOLT, Hexagon Head Slotted	17.040

Printed in U.S.A.

DESCRIPTION	GROUP NO.
B - Cont.	
BOLT, Pivot To Cylinder Head	1.101-2
BOLT, Power Brake Master Cylinder Piston Stop	8.515-2
BOLT, Rear Quarter Window Guide	25.034-7
BOLT, Round Head Square Neck	17.046
BOLT, Seat Back Lock	29.105-7
BOLT, Square Head	17.044
BOLT, Steering Column Locking	10.337-2
BOLT KIT, Front Suspension Lower Control Arm Pivot Eccentric	10.050-1
BOLT KIT, Front Suspension Upper Control Arm Pivot Eccentric	10.069-1
BOLT KIT, Rear Leaf Spring Center	11.116
BOOM DESENSITIZER KIT, Body Vibration	11.103
BOOT, Accelerator Control Rod	4.055-4
BOOT, Brake Master Cylinder	8.052
BOOT, Clutch Pivot To Lever (Inner)	5.168-6
BOOT, Clutch Pivot To Lever (Outer)	5.168-5
BOOT, Clutch Throwout Lever	5.125
BOOT, Distributor To Ignition Coil	3.228-2
BOOT, Gear Shift Lever (WAT)	7.017-5a
BOOT, Gear Shift Lever (WST)(W4ST)	7.013-2
BOOT, Overdrive Governor	6.329-5
BOOT, Seat Belt And Retractor	27.290-18
BOOT, Shoulder Belt	27.292-5
BOWL, Fuel Pump Filter	4.110-4
BOWL, Gasoline Filter Glass	15.190-1
BOX, Battery	3.082-1
BOX, Glove	22.058-1
BOX, Rear Auxiliary Floor Side Compartment	20.439-1
BRACE, Air Conditioning Compressor Mounting Bracket	13.410-5
BRACE, Air Conditioning Compressor To Cylinder Head	13.400-6
BRACE, Air Conditioning Intermediate Pulley Adjusting	13.430-18
BRACE, Air Conditioning Intermediate Pulley Adjusting Lower Bracket	13.430-12b
BRACE, Belt Rail To Floor	20.350-6
BRACE, Belt Rail To Rear Quarter Outer Panel	20.345-2
BRACE, Compressor Mounting Bracket To Manifold	13.410-13
BRACE, Cowl Top To Uniside	20.150-3
BRACE, Cowl Top To Wheelhouse Panel	20.093-1
BRACE, Exhaust Emission Air Pump Reinforcement	4.525-1
BRACE, Exhaust Emission Air Pump Support	4.515-1
BRACE, Exhaust Pipe	4.195-1
BRACE, Foot Operated Parking Brake Lever	8.180-10a
BRACE, Front Side Sill To Dash Panel	20.070-3
BRACE, Front Side Sill To Rear Side Sill	20.070-4
BRACE, Front Suspension Crossmember To Strut Rod Bracket	10.002-3
BRACE, Front Wheelhouse Upper	20.085-3b
BRACE, Grille Panel To Grille Support	2.050-21
BRACE, Hand Operated Parking Brake Lever	8.180-11
BRACE, Inner Uniside Panel To Dash And Side Sill	20.170-5
BRACE, Inner Uniside Panel To Side Sill At Front Pillar	20.170-6

DESCRIPTION	GROUP NO.
B - Cont.	
BRACE, Instrument Panel Assist Handle To Cowl Panel	22.100-65
BRACE, Lower Center Panel To Floor	20.335-1
BRACE, Pillar To Floor Pan	20.205-3
BRACE, Pillar To Side Sill	20.205-2
BRACE, Power Steering Pump Adjusting Plate To Cylinder Block	10.455-11
BRACE, Power Steering Pump To Water Pump	10.450-4
BRACE, Radiator Side Baffle To Grille Support	2.050-14
BRACE, Rear Bumper Rail To Deck Panel	12.169-4
BRACE, Rear Quarter Panel Center	12.125-14
BRACE, Rear Window Opening Reinforcement	20.397-4
BRACE, Wheelhouse To Radiator Upper Baffle	20.093-4
BRACE KIT, Air Conditioning Intermediate Pulley Adjusting Lower Bracket	13.430-12a
BRACE KIT, Compressor Mounting Bracket To Manifold	13.410-12
BRACE KIT, Power Steering Pump Adjusting Plate To Cylinder Block	10.455-10
BRACKET, Accelerator Control Cable	4.057-10
BRACKET, Accelerator Pedal Pivot	4.040-7
BRACKET, Air Conditioning Compressor Mounting	13.410-1
BRACKET, Air Conditioning Compressor To Condenser Hose Clip	13.440-15
BRACKET, Air Conditioning Controls Mounting	13.480-4
BRACKET, Air Conditioning Drive Belt Back Idler Pulley	13.435-4
BRACKET, Air Conditioning Evaporator To Receiver Hose Clip (At Manifold)	13.440-11
BRACKET, Air Conditioning Evaporator To Receiver Hose Clip (At Pump)	13.440-13
BRACKET, Air Conditioning Intermediate Pulley Adjusting (Lower)	13.430-10
BRACKET, Air Conditioning Intermediate Pulley Adjusting (Upper)	13.430-7
BRACKET, Air Conditioning Intermediate Pulley Mounting	13.430-4
BRACKET, Air Conditioning Thermostat Control	13.477-4
BRACKET, Air Conditioning Thermostat Control Lamp	13.477-11
BRACKET, Alternator	3.018-1
BRACKET, Alternator Mounting	3.014-4
BRACKET, Ammeter Mounting	3.600-4
BRACKET, Ash Receiver Housing To Stereo Player	22.100-11
BRACKET, Automatic Speed Control Brake Pedal Release Switch	4.328-1
BRACKET, Automatic Speed Control Lamp And Switch Mounting	4.325
BRACKET, Automatic Speed Control Regulator Mounting	4.364-1
BRACKET, Automatic Speed Control Switch	4.306-1
BRACKET, Automatic Speed Control Vacuum Servo Bellows Mounting	4.385-1

Printed in U.S.A.

ALPHABETICAL INDEX

DESCRIPTION	GROUP NO.
B - Cont.	
BRACKET, Automatic Transmission Auxiliary Oil Cooler Mounting Bracket	16.231-4
BRACKET, Automatic Transmission Gear Selector Lever Stop	16.225-13
BRACKET, Automatic Transmission Kickdown Switch To Carburetor	16.245-6
BRACKET, Automatic Transmission Oil Cooler Tubes Retaining	16.230-9
BRACKET, Automatic Transmission Oil Filler Tube	16.020-3
BRACKET, Automatic Transmission Throttle Valve Control Rod Pivot	16.515-1
BRACKET, Back-Up Lamp Housing Assembly To Bumper Rail	3.316-3
BRACKET, Battery Cable Clip To Valve Cover	3.200-9
BRACKET, Bottom Frame Outer Hinge Back Stop	29.103-7
BRACKET, Brake And Gas Tube Support	8.101-3
BRACKET, Brake Hose Support	20.085-7
BRACKET, Cable To Bracket To Instrument Panel	12.061-5
BRACKET, Carburetor Control Shaft	4.070-5
BRACKET, Carburetor Control Shaft (Left)	4.065-5
BRACKET, Carburetor Control Shaft (Right)	4.065-7
BRACKET, Carburetor Pullback Spring Anchor	4.080-2
BRACKET, Cargo Area Lamp	3.670-3
BRACKET, Clock To Housing	3.360-5a
BRACKET, Clutch Beam Support	5.178-2
BRACKET, Clutch Release Cable Actuating Spring Anchor	5.161-7
BRACKET, Clutch Release Idler Pivot	5.168-11
BRACKET, Clutch Release Main Lever	5.169-2
BRACKET, Console Housing Mounting	27.251-1
BRACKET, Courtesy Lamp To Instrument Panel	3.349-4
BRACKET, Distributor Vacuum Control Solenoid	3.051-9
BRACKET, Domelamp	3.346-7
BRACKET, Duct To Instrument Panel	13.515-26
BRACKET, Electric Windshield Wiper Motor Lead Wire	22.037
BRACKET, Emergency Signal System Mounting	3.690-4
BRACKET, Engine Front Support Mounting	1.004-2
BRACKET, Exhaust Emission Air Pump Mounting	4.520-1
BRACKET, Exhaust Emission Back-Fire Valve To Tee Hose Clip	4.592-1
BRACKET, Foot Operated Parking Brake Cable	8.192-8
BRACKET, Fresh Air Intake Cable To Instrument Panel	22.020-5
BRACKET, Front Body Pillar Weatherseal Retainer Mounting	23.012-17
BRACKET, Front Brake Hose	8.116-4
BRACKET, Front Bumper Inner Back Bar Extension	12.175-5
BRACKET, Front Door Glass Bottom Channel Stop	25.054-6

DESCRIPTION	GROUP NO.
B - Cont.	
BRACKET, Front Door Glass Retaining	25.030-16
BRACKET, Front Door Glass Retaining Outer	25.030-13
BRACKET, Front Door Speaker	15.320-49a
BRACKET, Front Door Ventilator	23.110-7
BRACKET, Front Door Window Guide Channel (Lower)	25.052-14
BRACKET, Front Door Window Guide Channel (Upper)	25.052-13
BRACKET, Front Door Window Guide Tube	25.052-2b
BRACKET, Front Fender To Baffle	12.076-1
BRACKET, Front Fender To Grille	12.076-4
BRACKET, Front License Plate	14.098-1
BRACKET, Front Seat Back Center Armrest	29.142-3
BRACKET, Front Seat Back Forward Tilt Lock	29.105-10a
BRACKET, Front Seat Center Cushion Mounting Front	29.158-1
BRACKET, Front Seat Center Cushion Mounting Rear	29.158-2
BRACKET, Front Seat Slide Adjuster Extension	29.129-2
BRACKET, Front Shock Absorber Mounting	11.201-1
BRACKET, Front Suspension Lower Control Arm Jounce Bumper	10.046-1
BRACKET, Front Suspension Lower Control Arm Strut Rod To Side Sill	10.055-4
BRACKET, Front Suspension Mounting	20.095-1
BRACKET, Front Suspension Sway Stabilizer To Lower Control Arm	10.260-9
BRACKET, Front Suspension Sway Stabilizer To Side Sill	10.260-5
BRACKET, Front Wheel Disc Brake Caliper Mounting	8.835
BRACKET, Front Wheel Disc Brake Inlet Hose	8.860
BRACKET, Front Wheelhouse Panel Front Extension	20.085-4c
BRACKET, Fuel Vapor Canister Mounting	4.144-2
BRACKET, Fuse Panel	3.155-3
BRACKET, Gear Selector Bellcrank Support	7.110-6a
BRACKET, Gear Selector Bezel	7.539
BRACKET, Gear Selector Cable At Side Sill	7.240-10
BRACKET, Gear Selector Cable To Converter Housing	7.240-1
BRACKET, Gear Selector Cable To Dash Panel	7.240-8
BRACKET, Gear Selector Cable To Steering Column	7.240-6
BRACKET, Gear Selector Cable To Strut Rod	7.240-5
BRACKET, Gear Shift Bellcrank To Converter Housing	7.110-6
BRACKET, Gear Shift Bellcrank To Exhaust Pipe Mounting	7.110-12
BRACKET, Gear Shift Lever Mounting	7.003-1
BRACKET, Gear Shift Lever Mounting Bracket Support	7.017-6
BRACKET, Gear Shift Rod Guide	7.125-20
BRACKET, Hand Operated Parking Brake Cable	8.192-17

ALPHABETICAL INDEX

DESCRIPTION	GROUP NO.
B - Cont.	
BRACKET, Headlamp Mounting	3.245-9
BRACKET, Heated Rear Window Control Switch	3.770-4
BRACKET, Heater Core To Water Pump Tube Support	13.050-16
BRACKET, Heater Water Valve Bracket To Engine	13.035-10
BRACKET, Heater Water Valve Mounting	13.035-5
BRACKET, Hood Air Scoop Rear Duct Mounting Reinforcement	12.001-18a
BRACKET, Hood Bumper	2.062-7
BRACKET, Hood Bumper Mounting	12.001-7
BRACKET, Hood Lock Bellcrank Mounting	12.060-5l
BRACKET, Hood Lock Operating Rod And Handle	12.060-5n
BRACKET, Ignition Coil	3.060-1
BRACKET, Ignition Switch Mounting	3.130-2
BRACKET, Ignition Wire Separator Mounting	3.232-2
BRACKET, Inside Rear View Mirror	27.084-3
BRACKET, Instrument Control Dial Lamp	3.635-4a
BRACKET, Instrument Panel Defroster Opening Bezel	22.100-56
BRACKET, Instrument Panel To Dash	22.056-27
BRACKET, Instrument Panel To Unlside	22.056-6
BRACKET, License Lamp Mounting	3.336
BRACKET, Liftgate Support To Body	23.406-1
BRACKET, Liftgate Support To Glass	23.407-1
BRACKET, Lower Control Arm Mounting	20.070-5
BRACKET, Oil Level Indicator Tube Support	1.187-4
BRACKET, Outside Rear View Remote Control Cable Mounting	15.270-6
BRACKET, Overdrive Control Cable Clip	6.350-5
BRACKET, Overdrive Control Cable To Instrument Panel	6.357-1
BRACKET, Overdrive Kickdown Switch	6.370-1
BRACKET, Parking And Front Directional Signal Lamp Mounting	3.292-19
BRACKET, Parking Brake Cable Bellcrank	8.189-1
BRACKET, Parking Brake Cable To Floor Pan	8.192-18
BRACKET, Parking Brake Rear Cable Guide	8.224-1
BRACKET, Pillar Brace To Trim Panel Support	20.205-4
BRACKET, Power Brake Unit Mounting	8.410-1
BRACKET, Power Steering Pump	10.448-1
BRACKET, Power Steering Pump Adjusting Plate Mounting	10.450-1
BRACKET, Power Steering Pump Bracket To Cylinder Head Support	10.449-1
BRACKET, Power Steering Pump Hose Clip	10.470-15
BRACKET, Power Steering Pump Pivot	10.431
BRACKET, Power Steering Pump Reservoir To Mounting Bracket Support	10.430-7
BRACKET, Radiator Grille Mounting (Inner)	2.050-23
BRACKET, Radiator Grille Mounting (Outer)	2.050-26
BRACKET, Radiator Grille Outer Support	2.050-13a
BRACKET, Radiator Grille To Hood Lock Support	2.050-29
BRACKET, Radiator Side Baffle To Front Fender	2.023-4

DESCRIPTION	GROUP NO.
B - Cont.	
BRACKET, Radio And Ash Receiver Housing To Dash Panel	22.100-9
BRACKET, Radio Rear Speaker Control	15.320-35
BRACKET, Radio Speaker To Instrument Panel	15.320-17
BRACKET, Rear Auxiliary Floor	20.452-12
BRACKET, Rear Axle Torque Link To Side Sill	11.178-1
BRACKET, Rear Brake Hose To Floor Pan	8.116-5
BRACKET, Rear Brake Tube	8.112-1
BRACKET, Rear Bumper Rail Back Bar Mounting	12.169-1
BRACKET, Rear Cargo Platform Floor Riser	29.488-3
BRACKET, Rear Deck Hinge Support To Wheelhouse	20.387
BRACKET, Rear Deck Spoiler	23.009-7
BRACKET, Rear Deck Upper Panel To Wheelhouse Support	20.367-3
BRACKET, Rear Door Glass Retaining	25.038-1
BRACKET, Rear Door Glass Stop	25.054-16
BRACKET, Rear Leaf Spring Bumper	11.112
BRACKET, Rear Leaf Spring Front Mounting	20.043-1
BRACKET, Rear Leaf Spring Front Mounting (Welded To Underbody)	11.033-1
BRACKET, Rear Motor Support Crossmember Mounting	20.074
BRACKET, Rear Muffler Support Hanger	20.070-8
BRACKET, Rear Quarter Armrest Attachment	29.056-6
BRACKET, Rear Quarter Glass Channel Guide	25.029-5
BRACKET, Rear Quarter Lowering Glass Slide Channel Mounting	25.040-8
BRACKET, Rear Quarter Panel Side Lamp To Panel	3.740-2a
BRACKET, Rear Quarter Window Up-Stop Mounting	25.054-27a
BRACKET, Rear Seat Back Hinge	20.275
BRACKET, Rear Seat Back Latch Retainer	29.219-1b
BRACKET, Rear Seat Back Latch Rod Mounting	29.219-2a
BRACKET, Rear Seat Back Locking Rod Mounting	29.214-5
BRACKET, Rear Seat Back Lower	29.220-10
BRACKET, Rear Seat Back Pivot	29.214-1c
BRACKET, Rear Seat Back Pivot Pin	29.217-3
BRACKET, Rear Seat Back Side Arm	29.226-1a
BRACKET, Rear Seat Back Side Arm Lower	29.225-2
BRACKET, Rear Seat Back Side Arm Upper	29.225-1
BRACKET, Rear Seat Belt Anchor Mounting	20.035-7
BRACKET, Rear Shock Upper Mounting	11.224-1
BRACKET, Rear Spring Retainer	20.037-1
BRACKET, Rear Spring Shackle Mounting	11.171-1
BRACKET, Rear Window Defogger Switch	13.615-4
BRACKET, Recirculating Air Damper Vacuum Motor	13.020-2b
BRACKET, Regulator Panel To Lock Pillar Support	20.280-4

DESCRIPTION	GROUP NO.
B - Cont.	
BRACKET, Reverse Lock-Up Bellcrank	7.132-1
BRACKET, Roof Panel Side Support	28.106
BRACKET, Shock Absorber Mounting	20.085-5
BRACKET, Spare Tire	20.035-8
BRACKET, Spare Tire Support	20.272-3
BRACKET, Spare Tire Support And Jack Mounting	20.035-9
BRACKET, Speedometer Mounting	3.550-6
BRACKET, Steering Gear Jacket Tube To Instrument Panel	10.339-1
BRACKET, Steering Linkage Idler Arm	10.114-1
BRACKET, Stereo Player To Dash Panel	22.100-10
BRACKET, Stop And Tail Lamp Switch	3.333-2
BRACKET, Sun Visor	29.003-3
BRACKET, Support To Side Sill	20.282-2
BRACKET, Tail, Stop And Rear Directional Signal Lamp Sealing	3.303-1c
BRACKET, Tailgate Electric Operated Window Regulator Control	23.330-8a
BRACKET, Tailgate Electric Operated Window Control Switch Mounting	23.330-22
BRACKET, Tailgate Hinge Torque Bar Center	23.006-27
BRACKET, Tailgate Hinge Torque Rod Mounting	20.040-2
BRACKET, Tailgate Latch Striker Mounting Bracket	23.039-19
BRACKET, Tailpipe Support	4.234-1
BRACKET, Tailpipe Support (Front)	4.234-4
BRACKET, Tailpipe Support Insulator	4.234-10
BRACKET, Throttle Control	4.024-7
BRACKET, Throttle Solenoid	4.002-2
BRACKET, Top Operating Motor Mounting	20.035-10
BRACKET, Torque Link To Rear Axle	11.180-1
BRACKET, Torque Link To Side Sill	11.178-1
BRACKET, Transmission Lever Pivot	7.130-10
BRACKET, Turning Radius Stop	10.010-2
BRACKET, Upper Control Arm Mounting	20.037-2
BRACKET, Vertical Bar To Rail	12.184-3
BRACKET, Windshield Wiper And Washer Control	22.038-9
BRACKET AND LINKS, Rear Deck Door Hinge	23.028-5
BRACKET, Windshield Wiper Motor Mounting	22.027-4
BRACKET ASSEMBLY, Left Front Seat Back Hinge	29.105-9
BRACKET ASSEMBLY, Right Front Seat Back Hinge	29.105-10
BRACKET KIT, Front Door Ventilator Lock Handle Mounting	23.121-6
BRACKET KIT, Gear Shift Lever Stop	7.080-8
BRAD, Wire	17.064
BRAKE ASSEMBLY, Front Wheel Disc	19.880-1
BRAKE ASSEMBLY, Rear Wheel Disc	19.880-2
BREAKER, Circuit	3.154-1
BREAKER, Electric Operated Window Regulator Circuit	23.325-1
BREATHER, Automatic Transmission Case	16.010-7
BREATHER, Gasoline Tank Air Vent Hose	4.141-18
BREATHER, Rear Axle	9.001-3
BREATHER, Transmission Case	6.005-3
BRUSH, Horn Blowing Ring Contact	3.406-13
BRUSH, Horn Button Contact	3.400-15
BRUSH SET, Electric Windshield Wiper Motor	22.028-5
BULB	3.215
BULB, Air Conditioning Thermostat Control Lamp	13.477-14
BULB, Automatic Speed Control Lamp	4.320
BULB, Back-Up Lamp	3.318-5
BULB, Cargo Area Lamp	3.670-7
BULB, Clock	3.369-6
BULB, Console Light	27.286-3
BULB, Courtesy Lamp Assembly	3.349-10
BULB, Domelamp	3.346-9
BULB, Emergency Signal System	3.690-8
BULB, Front Fender Side Lamp	3.720-7
BULB, Gear Selector Dial	7.535-4
BULB, Glove Box Lamp	3.378-3
BULB, Headlamp	3.280
BULB, Heater And Air Conditioning Control Light	13.017-33
BULB, Instrument Cluster Illumination	3.635-2
BULB, Instrument Cluster Indicator	3.531-4
BULB, Instrument Control Dial Lamp	3.635-6
BULB, Instrument Panel Ash Receiver Lamp	22.092-9
BULB, License Plate Lamp	3.341-3
BULB, Low Fuel Warning Lamp	3.615-15
BULB, Map Lamp	3.350-3
BULB, Open Door Warning Lamp	3.655-2
BULB, Parking And Front Directional Signal Lamp	3.292-13
BULB, Parking Brake Warning Lamp	3.650-8
BULB, Parking Lamp	3.292-14
BULB, Radio Dial	15.320-2a
BULB, Rear Directional Signal Lamp	3.312-3
BULB, Rear Quarter Interior Lamp	3.675-7
BULB, Rear Quarter Side Lamp	3.740-6
BULB, Tachometer	3.700-16
BULB, Tail, Stop And Rear Directional Signal Lamp	3.312-2
BULB, Trunk Lamp Assembly	3.660-4
BUMPER, Center Housing Anti-Rattle	22.057-5
BUMPER, Console Compartment Door	27.263-1
BUMPER, Door	23.019-1
BUMPER, Door Edge Guard	23.001-13
BUMPER, Door Glass Upper	23.074-11a
BUMPER, Door Outside Handle	23.074-18
BUMPER, Front Coil Spring Seat	11.075-5
BUMPER, Front Door Glass Anti-Rattle	25.054-2a
BUMPER, Front Door Glass Down-Stop Bottom	25.054-2
BUMPER, Front Door Glass Stop Bottom	25.054-1
BUMPER, Front Door Glass Stop Upper	25.054-3
BUMPER, Front Door Glass Up-Stop	25.054-4
BUMPER, Front License Plate	14.108-2
BUMPER, Front Suspension Lower Control Arm Jounce	10.046-3

ALPHABETICAL INDEX

DESCRIPTION	GROUP NO.
B - Cont.	
BUMPER, Gasoline Tank Filler Neck Housing Door	4.141-24
BUMPER, Gear Shift Lever Mounting Bracket	7.003-5
BUMPER, Glove Box Door	22.072-1
BUMPER, Glove Box Door (Lower)	22.072-3
BUMPER, Glove Box Door (Upper)	22.072-2
BUMPER, Hood	12.001-4
BUMPER, Hood Adjustable	12.001-5
BUMPER, Hood Lock Handle	12.060-5h
BUMPER, Rear Auxiliary Floor Side Compartment Door	20.437-4
BUMPER, Rear Auxiliary Floor Storage Compartment Cover Moulding	20.452-7b
BUMPER, Rear Axle	9.086-1
BUMPER, Rear Axle Housing	9.004-1
BUMPER, Rear Compartment Door Panel	20.451-3
BUMPER, Rear Deck Door	23.009-4
BUMPER, Rear Door Glass Stop	25.054-28
BUMPER, Rear Leaf Spring	11.110
BUMPER, Rear License Plate	14.108-3
BUMPER, Rear Quarter Panel Gasoline Filler Door	12.125-11
BUMPER, Rear Quarter Window	25.054-26
BUMPER, Rear Quarter Window Anti-Rattle	25.029-12
BUMPER, Rear Seat Back Footman Loop Stop	29.219-3
BUMPER, Rear Seat Back Retainer Latch	29.214-7
BUMPER, Spare Tire Cover Panel	20.450-4
BUMPER, Steering Wheel Actuator	10.830-2
BUMPER, Tailgate	23.006-31
BUMPER, Tailgate Support	23.036-4
BUMPER, Tailgate Window Regulator	23.040-5
BUMPER, Tailgate Window Regulator Handle Crank	23.078-6
BUMPER, Third Seat Cushion Moulding	29.279-7
BUSHING, Automatic Speed Control Vacuum Line Hose	4.370-5
BUSHING, Automatic Transmission Case	16.010-4
BUSHING, Automatic Transmission Front Clutch Retainer	16.415-12
BUSHING, Automatic Transmission Front Oil Pump	16.080-4
BUSHING, Automatic Transmission Front Oil Pump (Rear)	16.080-13
BUSHING, Automatic Transmission Input	16.405-4
BUSHING, Automatic Transmission Oil Pump Housing	16.380-2
BUSHING, Automatic Transmission Output Shaft	16.160-2
BUSHING, Automatic Transmission Reaction Shaft	16.380-8
BUSHING, Automatic Transmission Rear Adapter	16.176-2
BUSHING, Automatic Transmission Rear Bearing Retainer	16.175-4
BUSHING, Automatic Transmission Rear Bearing Retainer	16.475-3
BUSHING, Automatic Transmission Throttle Valve Control Rod	16.501
BUSHING, Automatic Transmission Throttle Valve Control Rod Pivot	16.515-2a

DESCRIPTION	GROUP NO.
B - Cont.	
BUSHING, Automotive Reducing Pipe	17.088
BUSHING, Bottom Frame Inner Hinge	29.103-9
BUSHING, Brake Light Switch	3.333-6
BUSHING, Brake Pedal	8.140-2
BUSHING, Brake Pedal To Link	8.156-3
BUSHING, Center Horn Button Receiver	3.400-10
BUSHING, Clutch Pedal	5.135-3
BUSHING, Clutch Pedal To Bellcrank Rod Seal	5.162-5
BUSHING, Clutch Release Idler Pivot (Inner)	5.168-16
BUSHING, Clutch Release Idler Pivot (Outer)	5.168-17
BUSHING, Crankshaft Pilot	1.043-1
BUSHING, Door Lock Cylinder Lever	23.081-6
BUSHING, Door Lock Cylinder Link To Latch	23.055-12
BUSHING, Door Window Spanner Bolt	25.014-3
BUSHING, Electric Windshield Wiper Drive Crank Eccentric	22.034-4
BUSHING, Front Door Locking Control Rod Retainer	23.057-15
BUSHING, Front Door Lower Hinge Pin	23.016-5
BUSHING, Front Door Upper Hinge Pin	23.015-6
BUSHING, Front Door Ventilator Upper Pivot	23.118-4
BUSHING, Front Shock Absorber	11.209
BUSHING, Front Suspension Lower Control Arm Strut Rod	10.055-6
BUSHING, Front Suspension Upper Control Arm Trunnion	10.042-4
BUSHING, Front Wheel Disc Brake Caliper	8.810-5
BUSHING, Gear Shift Bellcrank To Side Sill	7.110-9
BUSHING, Gear Shift Lever Rod	7.004-4
BUSHING, Gear Shift Rods	7.125-18
BUSHING, Gear Shift Selector	7.080-9
BUSHING, Gear Shift Upper Lever Housing	7.020-11
BUSHING, Heater Control Lever	13.017-16
BUSHING, Heater-Defroster Or Air Conditioner Switch Lever	13.078-4
BUSHING, Instrument Panel Wire Harness Connector	3.218-14
BUSHING, Intake Manifold Vacuum	1.067-21
BUSHING, Liftgate Latch Striker Mounting	23.416-2
BUSHING, Liftgate Support Bracket To Glass	23.407-3
BUSHING, Oil Pressure Gauge Reducing	3.605-2
BUSHING, Overdrive Case To Propeller Shaft Adapter	6.290-4
BUSHING, Overdrive Control Cable	6.350-6
BUSHING, Power Brake Bellcrank Pivot Pin	8.430-3
BUSHING, Quarter Window Glass Retaining	24.020-7
BUSHING, Rear Door Lower Hinge Pin	23.018-5
BUSHING, Rear Door Upper Hinge Pin	23.017-4
BUSHING, Rear Leaf Spring Front Eye	11.033-2
BUSHING, Rear Leaf Spring Shackle	11.170-2a
BUSHING, Rear Leaf Spring Shackle Lower	11.170-4
BUSHING, Rear Leaf Spring Shackle Upper	11.170-3
BUSHING, Rear Quarter Window Guide Roller	25.034-9
BUSHING, Rear Suspension Upper Control Arm To Rear Axle Housing	11.418
BUSHING, Reducing Pipe	17.086
BUSHING, Reverse Lockout Finger Grip	7.001-8
BUSHING, Reverse Lock-Up Bellcrank	7.131-2
BUSHING, Steering Gear Housing Cross Shaft	10.307
BUSHING, Steering Gear Jacket Tube Lower	10.346-1

Printed in U.S.A.

DESCRIPTION	GROUP NO.
B - Cont.	
BUSHING, Steering Linkage Idler Arm	10.110
BUSHING, Sun Visor Pivot Arm	29.003-6
BUSHING, Tailgate Hinge Pin	23.006-17
BUSHING, Transmission Lever To Pivot Bracket	7.130-9
BUSHING, Transmission Rear Bearing Cap	6.028-4
BUSHING, Transmission Reverse Gear Housing	6.031-3
BUSHING KIT, Front Suspension Upper Control Arm Pivot	10.068
BUTTON, Center Horn	3.400-1
BUTTON, Door Outside Handle	23.074-5
BUTTON, Forward Tilt Lock Release	29.105-23
BUTTON, Front Door Glass To Outer Retaining Bracket	25.030-15
BUTTON, Front Door Lock Push	23.054-1
BUTTON, Front Door Ventilator Lock Handle	23.121-4
BUTTON, Front Door Ventilator Lock Handle Release	23.121-5
BUTTON, Gear Shift Lever Control Knob	7.004-2
BUTTON, Gear Shift Lever Handle	7.004-2a
BUTTON, Instrument Panel Ash Receiver Tray	22.092-3
BUTTON, Plug	27.038
BUTTON, Quarter Window Handle	24.020-6
BUTTON, Rear Door Lock Push	23.054-2
BUTTON, Rear Quarter Support Trim Panel Courtesy Light Hole	29.054-3
BUTTON, Seat Upholstery	29.367-2
BUTTON, Side Panel Trim	29.367-1
BUTTON, Spoke Horn	3.400-20
BUZZER, Headlamp Warning	3.145-6
BUZZER, Headlamp Warning And Key Alarm	3.140-1
BUZZER, Seat Belt Warning	3.786-1
- C -	
CABLE, Accelerator	4.057-1
CABLE, Air Conditioning Thermostat Control	13.477-8c
CABLE, Automatic Speed Control Speedometer	3.570-9
CABLE, Battery Ground	3.196-1
CABLE, Battery Ground Jumper To Crossmember	3.196-3
CABLE, Battery To Starting Motor	3.200-1
CABLE, Battery To Starting Motor Relay	3.200-2
CABLE, Brake Shoe Automatic Adjusting Link	8.010
CABLE, Clutch Release	5.161-1
CABLE, Defroster Damper Control	13.122-1
CABLE, Foot Operated Parking Brake Lever To Equalizer	8.192-1
CABLE, Fresh Air Intake	22.020-4
CABLE, Front Speaker Extension	15.320-19a
CABLE, Gear Selector	7.230-1
CABLE, Glove Box Door Check	22.066-3
CABLE, Hand Operated Parking Brake Lever To Equalizer	8.192-10
CABLE, Heater Air Damper Control	13.017-22
CABLE, Heater Water Valve Control	13.017-25
C - Cont.	
CABLE, Outside Air Damper	13.017-24a
CABLE, Parking Brake To Rear Wheels	8.220-1
CABLE, Rear Compartment Radio Speaker	15.320-58
CABLE, Recirculating Air Damper	13.013-1
CABLE, Speedometer (Quick Disconnect)	3.570-1a
CABLE, Speedometer (Threaded)	3.570-1
CABLE, Starting Motor To Relay	3.020-5
CABLE, Tailgate Right Lower Hinge To Latch	23.006-11a
CABLE, Throttle Control	4.024-1
CABLE, Windshield Wiper Control	22.038-11
CABLE ASSEMBLY, Hood Inside Release	12.061-1
CABLE ASSEMBLY, Reverse Release	7.001-11
CABLE HARNESS, Front Door Speaker	15.320-50
CALIPER ASSEMBLY, Front Wheel Disc Brake	8.810-1
CAM, Directional Signal Switch Canceling	3.321-7a
CAM, Rear Auxiliary Floor Side Compartment Door Lock	20.438-5
CAM, Tailgate Electric Operated Window Regulator Switch Cylinder	23.081-7
CAM ASSEMBLY, Overdrive Free Wheeling	6.330-1
CAMSHAFT	1.040
CAMSHAFT, Hi-Perf	19
CAMSHAFT KIT, Hi-Perf	19
CANISTER, Fuel Vapor Storage	4.144-1
CAP, Air Conditioning Compressor Suction And Discharge Valve Stem	13.405-3
CAP, Bottom Frame Center Post Cover	29.103-15
CAP, Carburetor Air Cleaner Top	4.088-5
CAP, Carburetor Insulator Vacuum Outlet	4.004-5
CAP, Distributor	3.032
CAP, Electric Windshield Washer Reservoir	22.052-5
CAP, Engine Oil Pump Release Valve Spring	1.178-1
CAP, Escutcheon Door Assist Handle	23.217-25
CAP, Exhaust Manifold Heat Shroud End	4.015-12
CAP, Front Door Trim Panel Moulding Connecting	23.198-11
CAP, Front Wheel Grease Retainer Outer	8.296-2
CAP, High Level Ventilation Outlet	13.012-2b
CAP, Lock Pillar Stormstrip Top Cover	29.358-4
CAP, Non-Locking Gasoline Tank Filler	4.138-1
CAP, Oil Filler	1.022-1
CAP, Pipe	17.098
CAP, Power Steering Pump Oil Reservoir Filler	10.465-3
CAP, Radiator Core	2.032
CAP, Rambler Brand Battery Vent Filler	15.072
CAP, Rear Deck Luggage Rack Rail	23.009-17
CAP, Rear Door Pull Strap	29.076-2
CAP, Rear Quarter Side Lamp Socket Protector	3.740-5a
CAP, Rear Quarter Trim Panel Moulding Connecting	24.065-9
CAP, Rear Window Finish Moulding End	26
CAP, Road Wheel	8.270-2
CAP, Sun Visor End Retaining Rod	29.004-2
CAP, Tee Nipple	1.117-11
CAP, Thermostat Housing	2.102-5
CAP, Transmission Front Bearing	6.017-1

Printed In U.S.A.

DESCRIPTION	GROUP NO.
C - Cont.	
CAP, Transmission Rear Bearing	6.028-1
CAP, Water Pump Body	2.080-7
CAP, Wheel Hub	8.274-1
CAP, Windshield Washer Reservoir	22.052-5
CAP ASSEMBLY, Windshield Washer Check Valve	22.055-4
CAPACITOR, Radio Interference Suppression (At Alternator)	15.320-63
CAPACITOR, Radio Interference Suppression (At Ignition Coil)	15.320-65
CAPACITOR, Radio Interference Suppression (At Ignition Switch)	15.320-61
CAPACITOR, Radio Interference Suppression (At Regulator)	15.320-66
CARBURETOR	4.001-1
CARBURETOR, Hi-Perf	19
CARGO NET	29.460-9
CARPET, Console Compartment Bottom	29.296
CARPET, Door	29.072
CARPET, Front Floor	29.294-3
CARPET, Front Floor Tunnel	29.294-8
CARPET, Rear Auxiliary Floor	29.420-2
CARPET, Rear Auxiliary Side Panel Top	29.464-1
CARPET, Rear Floor (One-Piece)	29.302-3
CARPET, Rear Floor (Two-Piece)	29.302-4
CARPET, Rear Floor Extension	29.302-7a
CARPET, Rear Floor Side Sill	29.302-6
CARPET, Rear Floor Well And Axle Housing	29.423-1
CARPET, Rear Quarter Side Trim Panel	29.053-1
CARPET, Rear Seat Back Extension Frame	29.426-2
CARPET, Rear Seat Back Frame	29.425-2
CARPET, Tailgate	29.465-1
CARPET, Third Seat Back Frame	29.427
CARPET, Third Seat Cushion Frame	29.432
CARPET, Wheelhouse	29.435-1
CARRIER, Automatic Transmission Planetary	16.150-1
CARRIER, Automatic Transmission Planetary (Front)	16.450-1
CARRIER, Automatic Transmission Planetary (Rear)	16.450-3
CARRIER KIT, Power Steering Pump	10.435-1
CASE, Automatic Transmission	16.010-1
CASE, Automatic Transmission	16.310-1
CASE, Console Compartment Door Lock	27.280-5
CASE, Glove Box Lock	22.073-6
CASE, Ignition Cylinder	3.135-5
CASE, Instrument Cluster	3.505-1
CASE, Overdrive	6.260-1
CASE, Rear Auxiliary Floor Side Compartment Door Lock	20.438-4
CASE, Rear Axle Differential (LLD)	9.024-1
CASE, Rear Axle Differential (WLD)	9.024-2
CASE, Rear Deck Lock Cylinder	23.081-10
CASE, Tailgate Electric Operated Window Regulator Lock Cylinder	23.081-8
CASE, Transmission	6.005-1
CASE ASSEMBLY, Rear Axle Differential (LLD)	9.021-1

DESCRIPTION	GROUP NO.
C - Cont.	
CASE ASSEMBLY, Rear Axle Differential (WLD)	9.021-2
CASING, Front Seat Back Headrest	29.173-1
CATCH, Air Conditioning Evaporator Air Discharge Single Duct Door	13.515-12
CATCH, Console Door Magnetic	27.282-4
CATCH, Front Seat Back Headrest Post Friction	29.174-2
CATCH, Hood Lock Safety	12.060-7a
CAULK, Auto	30.020-2
CEMENT	30.020-1
CEMENT, Rear Deck Door Vinyl Cover	23.009-3
CEMENT, Vinyl Roof Cover To Roof	20.422-6
CHAIN, Automatic Speed Control Bellows To Shaft	4.390-1
CHAIN, Timing	1.130
CHANNEL, Floor Reinforcement	20.072-1
CHANNEL, Front Door Division Channel Glass Slide	23.125-1
CHANNEL, Front Door Glass And Ventilator Division	23.124
CHANNEL, Front Door Lowering Glass Bottom	25.030-1
CHANNEL, Front Door Lowering Glass Slide	25.036-1
CHANNEL, Front Door Ventilator	23.118-1
CHANNEL, Quarter Window Glass (Pivoting Type Window)	24.018-1
CHANNEL, Quarter Window Glass (Stationary Type Window)	24.018-2
CHANNEL, Rear Door Glass And Ventilator Division	23.165-1
CHANNEL, Rear Door Lowering Glass Bottom	25.032-1
CHANNEL, Rear Door Lowering Glass Slide	25.038
CHANNEL, Rear Door Window Stationary Glass	25.043
CHANNEL, Rear Quarter Lowering Glass Bottom	25.034-1
CHANNEL, Rear Quarter Lowering Glass Slide	25.040-1
CHANNEL, Rear Quarter Window Stationary Glass	25.042
CHANNEL, Rear Window Glass	25.044-1
CHANNEL, Sun Roof Slide	28.114-2
CHANNEL, Tailgate Glass Bottom	25.033-3
CHANNEL, Tailgate Glass Slide Lower	25.039-1
CHANNEL, Tailgate Glass Slide Upper Center	25.039-2
CHANNEL, Tailgate Glass Slide Upper Side	25.039-3
CHANNEL, Windshield Glass	25.002-1
CHANNEL ASSEMBLY, Rear Door Window Guide	25.052-11a
CHECK VALVE KIT, Power Steering Gear Pressure	10.524
CHOKE, Radio Interference Suppression	15.320-60
CLAMP, Air Conditioning Expansion Valve	13.470-3
CLAMP, Automatic Transmission Oil Cooler Tubes Hose	16.230-5

Printed in U.S.A.

DESCRIPTION	GROUP NO.
C - Cont.	
CLAMP, Automatic Transmission Speedometer Drive Pinion Adapter	3.591-5
CLAMP, Automatic Transmission Speedometer Drive Pinion Adapter	16.250-5
CLAMP, Battery Hold-Down	3.084-1
CLAMP, Carburetor Insulator To Ventilation Valve Hose	1.117-2
CLAMP, Carburetor To Tee Hose	1.117-6
CLAMP, Carburetor To Ventilation Valve Hose	1.117-4
CLAMP, Check Valve To Engine Vent Tube Hose	4.142-6
CLAMP, Cylinder Head Cover To Carburetor Air Cleaner Hose	1.116-6
CLAMP, Distributor	3.039-1
CLAMP, Exhaust Emission Air Filter Coupling To Pump Hose	4.549-2
CLAMP, Exhaust Emission Air Injection Manifold To Tee Hose	4.589
CLAMP, Exhaust Emission Air Pump To Back-Fire Valve Hose	4.586
CLAMP, Exhaust Emission Air Pump To Tee Hose	4.574
CLAMP, Exhaust Emission Back-Fire Valve (Air Tee)	4.566-1
CLAMP, Exhaust Emission Back-Fire Valve (At Valve)	4.566-2
CLAMP, Exhaust Emission Back-Fire Valve Hose To Fitting	4.581-1
CLAMP, Exhaust Emission Back-Fire Valve To Injection Manifold Hose (Left-Bank)	4.600-2
CLAMP, Exhaust Emission Back-Fire Valve To Injection Manifold Hose (Right-Bank)	4.600-4
CLAMP, Front Door Speaker Cable Hose	15.320-51
CLAMP, Front Suspension Sway Stabilizer To Bracket	10.260-7
CLAMP, Fuel Pump In-Line Filter Hose	4.110-10
CLAMP, Fuel Pump To Carburetor Filter Hose	4.177-2
CLAMP, Gasoline Hose	4.160-6
CLAMP, Gasoline Tank Air Vent Hose	4.141-17
CLAMP, Gasoline Tank Filler Neck Connector	4.141-5
CLAMP, Gasoline Tank Filler Neck Overflow Drain Tube Hose	4.141-28
CLAMP, Gasoline Tank Filler Neck To Tank Return Hose	4.141-14
CLAMP, Gasoline Tank Filler Neck Vent Tube Hose	4.141-11
CLAMP, Gasoline Tank Lower Vent Tube Hose Connecting	4.141-38
CLAMP, Gasoline Tank To Check Valve Hose	4.142-5
CLAMP, Heater Hose	13.086
CLAMP, Hose	17.108
CLAMP, Ignition Coil	3.056-6
CLAMP, Jack Hold-Down	14.138-3
CLAMP, Oil Filler Cap To Air Cleaner Hose	1.116-8

DESCRIPTION	GROUP NO.
C - Cont.	
CLAMP, Overdrive Control Cable Lower	6.358-1
CLAMP, Power Brake Vacuum Check Valve To Nipple Hose	8.460-7
CLAMP, Power Steering Gear Worm Ball Bearing Return Guide	10.577-1
CLAMP, Power Steering Pump To Steering Gear Return Hose	10.470-7
CLAMP, Radiator Hose To Radiator Core	2.039-1
CLAMP, Radiator Hose To Thermostat Housing	2.039-2
CLAMP, Radiator Hose To Water Pump	2.039-3
CLAMP, Radio Cable Conduit	3.680-3
CLAMP, Space Saver Tire Inflator Hold-Down	8.335-2
CLAMP, Steering Gear Upper Shaft To Lower Shaft Coupling	10.705-1
CLAMP, Steering Linkage Tie Rod Adjusting Tube	10.224-1
CLAMP, Tailpipe	4.234-12a
CLAMP, Tee To Ventilation Valve Hose	1.117-9
CLAMP, Thermostat Housing To Intake Manifold Hose (At Intake Manifold)	1.064-10
CLAMP, Thermostat Housing To Intake Manifold Hose (At Thermostat Housing)	1.064-9
CLAMP, Tube To Intake Manifold	1.064-7
CLAMP, Water Pump To Intake Manifold Tube (At Tube)	1.064-3
CLAMP, Water Pump To Intake Manifold Tube (At Water Pump)	1.064-2
CLAMP ASSEMBLY, Exhaust Pipe To Bracket	4.195-4
CLAMP ASSEMBLY, Front Exhaust Pipe To Rear Exhaust Pipe	4.178-4
CLAMP ASSEMBLY, Muffler To Tailpipe	4.230-1
CLAMP ASSEMBLY, Rear Exhaust Pipe To Muffler	4.205-1
CLAMP KIT, Steering Gear Shaft Lower Bearing	10.768-1
CLEANER, Carburetor Air	4.088-1
CLEVIS, Adjustable Rod End	17.120
CLIP, Accelerator Cable	4.057-9
CLIP, Accelerator Control Cable	4.057-7
CLIP, Air Conditioning Compressor Drive Clutch Extension Wire	13.415-8 Thru 13.415-10
CLIP, Air Conditioning Compressor Drive Clutch Wire To Compressor	13.415-12
CLIP, Air Conditioning Compressor Drive Clutch Wire To Heater Hose	13.415-11
CLIP, Air Conditioning Drive Clutch Wire To Hose	13.415-14
CLIP, Air Conditioning Hose	13.440-17
CLIP, Air Conditioning Hoses To Radiator Grille Panel	13.440-20
CLIP, Air Conditioning Thermostat Capillary Tube To Cowl Chamber	13.477-16
CLIP, Alarm Switch Retaining	3.140-4
CLIP, Alternator Wire	3.005-7

Printed in U.S.A.

ALPHABETICAL INDEX

DESCRIPTION	GROUP NO.
C - Cont.	
CLIP, Automatic Transmission Kickdown Switch To Solenoid Wire	16.245-5
CLIP, Automatic Transmission Oil Cooler Tubes Retaining	16.230-8
CLIP, Automatic Transmission Oil Cooler Tubes To Bracket	16.230-11
CLIP, Automatic Transmission Vaccuum Tube Retaining	16.240-3
CLIP, Automatic Transmission Wiring	16.390-8
CLIP, Back-Up Lamp Wire	3.318-4
CLIP, Battery And Starting Motor Cables	3.200-7
CLIP, Brake Shoe Hold-Down	8.008-5
CLIP, Brake Tube	8.101-1
CLIP, Brake Tube Fastening	8.116-3
CLIP, Brake Tube To Brake Tube	8.101-5
CLIP, Buzzer Switch Retaining	3.140-4
CLIP, Closed	17.134
CLIP, Clutch Release Idler Bellcrank Retaining Spring	5.168-15a
CLIP, Directional Signal Flasher	3.330-2
CLIP, Door Electric Operated Window Regulator Control Switch Retaining	23.330-4
CLIP, Door Lock Cylinder Lever	23.081-6a
CLIP, Door Locking Control Cable Fastening	23.057-9
CLIP, Electric Windshield Washer Nozzle Hose To Wire Harness	22.054-4
CLIP, Engine Heater Cord Retaining	15.145-3
CLIP, Exhaust Emission Back-Fire Valve To Injection Manifold Hose	4.621
CLIP, Exhaust Emission Back-Fire Valve To Tee Hose	4.590-1
CLIP, Fastener	17.130
CLIP, Flasher Unit	3.505-4
CLIP, Front Door Locking Control Rod	23.057-16
CLIP, Front Door Outside Handle To Door Latch Release Link Retaining	23.055-8
CLIP, Front Seat Adjusting Slide Latch Wire Guide	29.133-5
CLIP, Front Seat Back Headrest Post Friction	29.174-3
CLIP, Front Wheel Disc Brake Hose Fastening	8.855-2
CLIP, Gasoline Gauge Wire	3.615-9 Thru 3.615-11b
CLIP, Gear Selector Cable To Converter Housing	7.240-3
CLIP, Handle To Selector Lever	7.032-3
CLIP, Hazard Warning Lamp Flasher	3.690-14
CLIP, Heater Hose	13.050-15
CLIP, Horn Blowing Ring Insulator Retainer	3.406-14
CLIP, Horn Button Insulator Retainer	3.400-16
CLIP, Interior Lamp Wire	3.675-5
CLIP, Open	17.132
CLIP, Outside Rear View Remote Control Cable	15.270-11
CLIP, Overdrive Cam Retainer	6.330-2
CLIP, Overdrive Cam To Pinion Case Retainer	6.330-3
CLIP, Overdrive Harness To Clutch Housing	3.210-6
CLIP, Overdrive Harness To Dash Panel	3.210-3
C - Cont.	
CLIP, Overdrive Harness To Main Wire Harness	3.210-5
CLIP, Overdrive Harness To Transmission Housing	3.210-7
CLIP, Overdrive Solenoid Wire	6.328-4
CLIP, Parking And Front Directional Signal Wire	3.292-22
CLIP, Parking Brake Warning Lamp Wire To Main Harness	3.650-6
CLIP, Power Steering Pump Hose	10.470-10
CLIP, Power Steering Pump Pressure Hose	10.470-13
CLIP, Power Steering Pump Return Hose	10.470-12
CLIP, Pump To Windshield Wiper Tube	22.050-3
CLIP, Radio Rear Shelf Speaker Grille	15.320-32
CLIP, Radio Rear Speaker Cable	15.320-44
CLIP, Rear Deck Door Hinge Torque Rod	23.028-9
CLIP, Rear Door Lock Release Link Retaining	23.055-18
CLIP, Rear Door Push Button Locking Link Anti-Rattle	23.057-13
CLIP, Rear Seat Cushion Spring Reinforcement	29.192-5
CLIP, Retainer To Pivot Retaining	5.168-8
CLIP, Seat Belt Warning Harness	3.785-3
CLIP, Seat Cushion Spring Reinforcement	29.103-13
CLIP, Shoulder Belt Retaining	27.292-3
CLIP, Shoulder Belt Retaining (Accessory)	15.365-2
CLIP, Starting Motor And Battery Cable	3.020-6
CLIP, Steering Gear Jacket Tube Lower Bushing To Jacket Tube	10.348
CLIP, Switch To Bracket	3.333-3
CLIP, Tachometer Wire To Chassis Wire Harness	3.700-9
CLIP, Trunk Lamp Assembly Wire	3.660-5
CLIP, Ventshade	15.420
CLIP, Water Pump To Intake Manifold Tube	1.064-5
CLIP, Water Temperature Indicator Wire	3.610-4
CLIP, Windshield Washer Hose	22.053-2
CLIP, Windshield Washer Pump Wire To Plate	22.038-6
CLIP, Windshield Washer Reservoir Mounting	22.052-6
CLIP, Wire To Instrument Panel Lower Reinforcement	22.038-6a
CLIP AND BUSHING, Front Door Outside Handle To Latch	23.057-16a
CLIP AND BUSHING, Rear Door Outside Handle To Latch	23.055-20
CLIP KIT, Air Conditioning Expansion Valve Capillary Tube	13.470-2
CLIP KIT, Rear Adjustable Air Shock Tube	11.236
CLIP KIT, Rear Leaf Spring	11.086
CLOCK	3.360-1
CLOCK KIT	3.361
CLUTCH, Air Conditioning Compressor Drive	13.415-1
CLUTCH, Automatic Transmission Planetary Carrier One Way	16.150-2
CLUTCH ASSEMBLY, Fourspeed Transmission Synchronizer Low And Second	6.080-4
CLUTCH ASSEMBLY, Fourspeed Transmission Synchronizer Third And Fourth	6.080-3

Printed in U.S.A.

ALPHABETICAL INDEX

DESCRIPTION	GROUP NO.
C - Cont.	
CLUTCH ASSEMBLY, Transmission Synchronizer Low And Reverse	6.080-2
CLUTCH ASSEMBLY, Transmission Synchronizer Second And High	6.080-1
COIL, Air Conditioning Compressor Drive Pulley	13.415-3
COIL, Electric Windshield Wiper Motor Field	22.028-1
COIL, Ignition	3.056-1
COLUMN ASSEMBLY, Steering	10.337-1
COMPRESSOR, Air Conditioning	13.400-1
CONDENSER, Distributor	3.033
CONDUCTOR, Instrument Cluster	3.520-1
CONDUCTOR, Instrument Panel Identification Lens	22.100-30
CONNECTOR, Air Conditioning Evaporator Housing To Duct	13.488-5
CONNECTOR, Air Conditioning Evaporator Housing To Duct (Dual)	13.488-7
CONNECTOR, Air Conditioning Evaporator Housing To Duct (Single)	13.488-6
CONNECTOR, Air Conditioning Evaporator Or High Leve Ventilation Housing To Center Duct	13.515-21c
CONNECTOR, Air Conditioning Evaporator Or High Level Ventilation Housing To Center Upper Duct	13.515-23a
CONNECTOR, Air Conditioning Evaporator Or High Level Ventilation Housing To Right Outlet Tube	13.510-26a
CONNECTOR, Automatic Transmission Vacuum Tube To Manifold	16.240-6
CONNECTOR, Back-Up Lamp	3.318-8
CONNECTOR, Chassis Harness To Headlight Dimmer Switch	3.218-10
CONNECTOR, Chassis Wire Harness To Body Wire Harness	3.218-5
CONNECTOR, Chassis Wire Harness To Directional Signal Flasher	3.218-9
CONNECTOR, Chassis Wire Harness To Heater Switch	3.218-6
CONNECTOR, Chassis Wire Harness To Ignition Switch	3.218-8
CONNECTOR, Chassis Wire Harness To Steering Column	3.218-7
CONNECTOR, Duct To Evaporator Housing	13.510-16
CONNECTOR, Duct To Evaporator Or High Level Ventilation Housing	13.510-19
CONNECTOR, Emergency Signal System Splice	3.690-10a
CONNECTOR, Engine Compartment Wire Harness	3.218-12
CONNECTOR, Flared Tube	17.158
CONNECTOR, Front Fender Side Lamp	3.218-11
CONNECTOR, Front Fender Side Lamp (Incl. Wires)	3.720-5
CONNECTOR, Gasoline Tank Filler Neck To Tank	4.141-4
CONNECTOR, Headlamp Double Terminal	3.218-1
CONNECTOR, Headlamp Triple Terminal	3.218-2
CONNECTOR, Ignition Switch Capacitor	15.320-61a

DESCRIPTION	GROUP NO.
C - Cont.	
CONNECTOR, Instrument Cluster	3.520-3
CONNECTOR, Instrument Panel Wire Harness	3.218-13
CONNECTOR, Inverted Flared Tube	17.160
CONNECTOR, Light Switch	3.218-4
CONNECTOR, Oil Filter By-Pass	1.223
CONNECTOR, Parking And Front Directional Signal Lamp	3.293
CONNECTOR, Printed Circuit	3.218-3
CONNECTOR, Splice	3.780-4
CONNECTOR, Tail, Stop And Rear Directional Signal Lamp	3.312-4
CONNECTOR, Vacuum Switch To Vacuum Motors	13.020-8
CONNECTOR, Vacuum Tube	22.050-10
CONNECTOR, Windshield Washer Hose	22.053-3
CONNECTOR, Wire	3.690-10
CONTACT, Horn Blowing Ring	3.406-2
CONTACT, Horn Button	3.400-19
CONTACT, Spoke Horn Blowing	3.400-21
CONTACT KIT, Ignition	3.002
CONTACT SET, Ignition	3.031
CONTROL, Air Conditioning Recirculated Air	13.013-3
CONTROL, Cowl Trim Panel Door	29.010-9
CONTROL, Distributor Vacuum	3.046
CONTROL, Front Door Lock Remote	23.056-1
CONTROL, Heater And Defroster	13.017-35
CONTROL, Heater Water Valve	13.017-18
CONTROL, Hood Air Scoop Damper	12.001-18
CONTROL, Hood Air Scoop Damper (Vacuum Motor)	4.091
CONTROL, Radio Rear Speaker (Duo-Coustic)	15.320-33
CONTROL, Radio Rear Speaker (Vibra-Tone)	15.320-34
CONTROL, Rear Door Lock Remote	23.056-3
CONTROL, Windshield Washer	22.152-1
CONTROL, Windshield Wiper	22.038-1
CONTROL ASSEMBLY, Heater	13.017-1
CONTROL ASSEMBLY, Overdrive Cable	6.350-1
CONVERTER, Automatic Transmission	16.030
COOLANT RECOVERY SYSTEM KIT	15.040
COOLER, Automatic Transmission Auxiliary Oil	16.231-1
CORD, Engine Heater	15.145-1
CORE, Air Conditioning Condenser	13.450-1
CORE, Air Conditioning Evaporator	13.475-1
CORE, Heater	13.028-1
CORE, Radiator	2.020-1
CORE, Speedometer Cable (Quick-Disconnect Cable)	3.575-1
CORE, Speedometer Cable (Threaded Coupling Cable)	3.575
COUNTERSHAFT, Transmission	6.159
COUPLING, Air Conditioning Hose Disconnect (Female Half)	13.440-4
COUPLING, Air Conditioning Hose Disconnect (Male Half)	13.440-5
COUPLING, Door Electric Operated Window Regulator Drive Unit	23.308-12

Printed in U.S.A.

DESCRIPTION	GROUP NO.
C - Cont.	
COUPLING, Exhaust Emission Air Filter To Pump	4.546
COUPLING, Pipe	17.174
COUPLING, Rear Quarter Electric Operated Window Regulator Drive Unit	24.203-2
COUPLING, Steering Gear Upper Shaft To Lower Shaft	10.720
COUPLING, Tailgate Electric Operated Window Regulator Worm	23.308-13
COVER, Air Conditioning Evaporator Or High Level Ventilation Housing Upper	13.488-3
COVER, Automatic Transmission Converter Housing Spacer	16.042-4
COVER, Automatic Transmission Output Shaft Bearing	16.460-10
COVER, Automatic Transmission Rear Bearing Retainer Inspection	16.175-7
COVER, Bottom Frame Center Post	29.103-14
COVER, Brake Adjusting Hole	8.030
COVER, Brake Master Cylinder Filler	8.038-1
COVER, Brake Pedal Pad Rubber	8.148-1
COVER, Bumper Rail Directional Light Hole	12.168-5
COVER, Clutch Housing	5.054-6
COVER, Clutch Pedal Pad	5.144-1
COVER, Cylinder Head	1.068-1
COVER, Deck Opening Lower Panel Vinyl	20.422-2
COVER, Directional Signal Switch Wire Harness	3.321-15
COVER, Drip Moulding Joint	20.395-4
COVER, Drip Moulding Snap On	26
COVER, Engine Oil Pump	1.164-1
COVER, Exhaust Emission Air Pump	4.510-1
COVER, Floor Pan Torque Link Access Hole	20.005-7
COVER, Foot Operated Parking Brake Lever Rubber	8.180-7
COVER, Front Pillar	29.017-3
COVER, Front Seat Adjusting Slide Handle	29.133-4
COVER, Front Seat Back Headrest Casing Plate	29.173-4
COVER, Front Seat Bottom Frame Inner Hinge Bracket	29.103-16
COVER, Front Seat Bottom Frame Outer Hinge Bracket	29.103-19
COVER, Front Seat Bottom Frame Outer Hinge Bracket Edge	29.103-18
COVER, Front Seat Center Armrest Support Bracket	29.145
COVER, Front Seat Center Cushion Bracket	29.160
COVER, Front Suspension Lower Control Arm Ball Joint Dust	10.048-4
COVER, Front Suspension Mounting Bracket To Side Sill Reinforcement	20.095-2
COVER, Front Suspension Upper Control Arm Ball Joint Dust	10.067-3
COVER, Gasoline Tank Filler Cap	4.138-4
COVER, Gasoline Tank Vent Tube Protective	4.143
COVER, Gear Selector Pointer Dial	7.537-5

DESCRIPTION	GROUP NO.
C - Cont.	
COVER, Gear Shift Lever	7.013-1
COVER, Glove Box Opening	22.100-68
COVER, Headlining Side Retainer Moulding Joint	29.014-5
COVER, Heater And Defroster Housing	13.113-6
COVER, Heater Control Lamp	13.017-34
COVER, Hood Air Scoop Damper	12.001-12c
COVER, Hood Latch Assembly (Left)	12.060-3c
COVER, Horn Blowing	3.401-1
COVER, Inner Uniside Panel Hinge Access Hole	20.170-7
COVER, Inside Rear View Mirror Bracket	27.085-1
COVER, Instrument Cluster Bezel Duct Opening	3.510-14
COVER, Instrument Cluster Bezel Duct Opening (Left)	3.510-16
COVER, Instrument Panel Air Outlet Opening	22.100-56a
COVER, Instrument Panel Clock Or Tachometer Opening	22.100-46
COVER, Instrument Panel Crash Pad Joint	22.100-5
COVER, Instrument Panel Defroster Duct Opening	22.100-52
COVER, Instrument Panel End	22.100-33a
COVER, Instrument Panel Heater And Air Conditioning Controls Opening	22.100-57
COVER, Instrument Panel Heater And Defroster Controls	22.100-59
COVER, Instrument Panel Radio Opening	22.100-49
COVER, Lower Center Panel Brace	20.335-2
COVER, Map Light Opening	22.100-51
COVER, Power Brake Master Cylinder Filler	8.510-2
COVER, Power Steering Gear Pitman Shaft	10.610-1
COVER, Power Steering Pump Body	10.445-1
COVER, Power Steering Pump Oil Reservoir	10.465-7
COVER, Quarter Window Handle Assembly	24.020-10
COVER, Radio Opening	3.600-8
COVER, Radio Rear Shelf Amplifier	15.320-29
COVER, Rear Auxiliary Floor Center Storage Compartment (Front)	20.452-1
COVER, Rear Auxiliary Floor Center Storage Compartment (Rear)	20.452-2
COVER, Rear Auxiliary Floor Storage Compartment Cover Metal (Front)	20.452-4
COVER, Rear Auxiliary Floor Storage Compartment Cover Metal (Rear)	20.452-5
COVER, Rear Cargo Platform Backboard	29.474
COVER, Rear Cargo Platform Baseboard	29.482
COVER, Rear Cargo Platform Wheelhouse	29.494
COVER, Rear Deck Door Hinge	23.028-3
COVER, Rear Deck Door Vinyl	23.009-2
COVER, Rear Door Ash Receiver Outside	23.182-5
COVER, Rear Door Upper Vinyl	20.422-2a
COVER, Rear Quarter Panel Side Lamp Access Hole	12.125-7a
COVER, Rear Quarter Side Ash Receiver Outside	24.052-1a
COVER, Rear Quarter Window Reveal	26

Printed in U.S.A.

ALPHABETICAL INDEX

DESCRIPTION	GROUP NO.
C - Cont.	
COVER, Rear Seat Back Center Armrest Strainer	29.216
COVER, Rear Seat Back Locking Rod	29.214-4
COVER, Rear Seat Back Pivot	29.214-2
COVER, Rear Window Defogger Outlet	13.630
COVER, Rear Window Finish Moulding	26
COVER, Rear Window Reveal	26
COVER, Regulator Panel Access Hole	20.280-5
COVER, Rocker Panel Snap On	20.175-1
COVER, Roof Top Vinyl	20.422-1
COVER, Shock Absorber Access Hole	20.035-11
COVER, Spare Wheel Trim	29.461-1
COVER, Steering Gear Housing Cross Shaft	10.300-1
COVER, Steering Gear Housing Worm	10.296-1
COVER, Steering Gear Jacket Tube	10.338-3
COVER, Steering Gear Jacket Tube Mesh	10.338-11
COVER, Steering Gear Jacket Tube To Toeboard	10.351-1
COVER, Steering Gear Jacket Tube To Toeboard Lower	10.351-3
COVER, Steering Gear Jacket Tube To Toeboard Upper	10.351-2
COVER, Steering Gear Shaft Lock	10.702-1
COVER, Steering Linkage Tie Rod End Dust	10.232
COVER, Steering Wheel	10.280-3
COVER, Steering Wheel Actuator And Directional Signal Switch	10.805-1
COVER, Tailgate Inner Panel Access Hole	23.006-3
COVER, Transmission Case	6.009-1
COVER, Underbody Access Hole	20.005-6
COVER, Wheel Hub (One-Piece)	8.274-2
COVER, Wheel Hub (Two-Piece)	8.274-2a
COVER, Wheelhouse (Less Rear Seat)	29.435-3
COVER, Wheelhouse (With Rear Seat)	29.435-2
COVER, Windshield Finish Lower Moulding	26
COVER, Windshield Finish Upper Joint Moulding	26
COVER ASSEMBLY, Automatic Speed Control Regulator	4.357-1
COVER ASSEMBLY, Clutch	5.001
COVER ASSEMBLY, Rear Auxiliary Floor Storage Compartment (Front)	20.452-1
COVER ASSEMBLY, Rear Auxiliary Floor Storage Compartment (Rear)	20.452-2
COVER ASSEMBLY, Timing Case	1.120-1
CRADLE, Power Steering Pump Hose	10.470-8
CRANK, Brake Shoe Automatic Adjusting Link	8.009-3
CRANK, Electric Windshield Wiper Drive	22.033-1
CRANK, Tailgate Window Regulator Handle	23.078-3
CRANKSHAFT	1.042
CRANKSHAFT, Forged Hi-Perf	19
CROSSMEMBER, Engine Front Support	1.004-1
CROSSMEMBER, Engine Rear Support	1.010-1
CROSSMEMBER, Front Suspension	10.002-1
CROSSMEMBER, Rear Seat	20.025
CROSSMEMBER, Rear Suspension	11.400-1
CROSSMEMBER, Side Sill To Side Sill	20.073

DESCRIPTION	GROUP NO.
C - Cont.	
CROSSMEMBER, Wheelhouse Panel To Wheelhouse Panel (Lower)	20.115-2
CROSSMEMBER, Wheelhouse Panel To Wheelhouse Panel (Upper)	20.115-1
CROSSMEMBER ASSEMBLY, Rear Shock Absorber Mounting Bracket	20.038-1
CUP, Armrest Retainer	29.075-14
CUP, Front Suspension Spring Retainer	20.095-1a
CUP, Front Wheel Bearing	8.294
CUP, Overdrive Shift Rail Assembly "C" Washer	6.295-5
CUP, Rear Axle Differential Side Bearing	9.043
CUP, Rear Axle Pinion Bearing (Front)	9.055-1
CUP, Rear Axle Pinion Bearing (Rear)	9.055-2
CUP, Rear Wheel Bearing	8.302
CUP, Steering Column Housing Thrust	10.336-3
CUP, Steering Worm Bearing	10.324-1
CUP, Steering Worm Bearing Lower	10.324-3
CUP, Steering Worm Bearing Upper	10.324-2
CUP ASSEMBLY, Automatic Speed Control Regulator Actuator	4.347
CUSHION, Bumper Back Bar To Rear Quarter Panel	12.125-20
CUSHION, Clutch Pedal Stop	5.164-1
CUSHION, Engine Front Support	1.009-1
CUSHION, Engine Rear Support	1.013-1
CUSHION, Front Coil Spring	11.075-7
CUSHION, Front Door Inner To Outer Panel Support	23.001-5
CUSHION, Front Suspension Sway Stabilizer	10.260-1b
CUSHION, Gear Selector Pointer Dial	7.537-8
CUSHION, Gear Shift Lever	7.001-6
CUSHION, Horn Blowing Ring To Contact Plate	3.406-10
CUSHION, Horn Button Upper Seat To Contact Plate	3.400-14
CUSHION, Parking Lamp Housing To Bumper	3.292-6
CUSHION, Rear Coil Spring Lower	11.126-2
CUSHION, Rear Coil Spring Upper	11.126-1
CUSHION ASSEMBLY, Trimmed Front Seat	29.150
CUSHION ASSEMBLY, Trimmed Front Seat Center	29.151
CUSHION ASSEMBLY, Trimmed Rear Seat	29.180
CUSHION ASSEMBLY, Trimmed Third Seat	29.270
CYLINDER, Automatic Front Clutch	16.115-1
CYLINDER, Console Compartment Door Lock (Incl. Keys)	27.280-2
CYLINDER, Console Compartment Door Lock	27.280-2a
CYLINDER, Glove Box Lock (Regular)	22.073-4
CYLINDER, Glove Box Lock (Special)	22.073-5
CYLINDER, Ignition Switch Lock (Key No.)	3.135-2
CYLINDER, Ignition Switch Lock (Regular)	3.135-1
CYLINDER, Ignition Switch Lock (Uncoded)	3.135-2a
CYLINDER, Rear Auxiliary Floor Side Compartment Door Lock	20.438-3
CYLINDER, Rear Auxiliary Floor Storage Compartment Lock	20.453-3
CYLINDER ASSEMBLY, Brake Master	8.035-1
CYLINDER ASSEMBLY, Brake Wheel Front	8.068-1

Printed in U.S.A.

ALPHABETICAL INDEX

DESCRIPTION	GROUP NO.
C - Cont.	
CYLINDER ASSEMBLY, Brake Wheel Rear	8.068-2
CYLINDER ASSEMBLY, Door Lock	23.081-1
CYLINDER ASSEMBLY, Liftgate Lock	23.415-1
CYLINDER ASSEMBLY, Power Brake Master	8.510-1
CYLINDER ASSEMBLY, Rear Auxiliary Floor Side Compartment Door Lock	20.438-2
CYLINDER ASSEMBLY, Rear Auxiliary Floor Storage Compartment Lock	20.453-2
CYLINDER ASSEMBLY, Rear Deck Handle Lock	23.081-14
CYLINDER ASSEMBLY, Rear Deck Lock	23.081-9
CYLINDER ASSEMBLY, Tailgate Lock (Less Electric)	23.081-2
CYLINDER ASSEMBLY, Tailgate Lock (With Electric)	23.081-3
- D -	
DAMPER, Crankshaft Vibration	1.045-1
DAMPER, Exhaust Manifold	1.067-12
DAMPER, Front Door Flo-Thru Vent	29.075-9
DAMPER, Hood Air Scoop	12.001-12b
DAMPER, Hood Air Scoop Rear Duct	12.001-16
DAMPER KIT, Exhaust Manifold	1.067-11
DASH ASSEMBLY	20.120-1
DECAL	26.000
DECAL, Glove Box Door	22.060-5a
DECAL, Heater And Defroster Control	13.017-15
DECAL, Look Before Backing	14.145-8
DECAL, Rally Stripe	26
DECAL, Rear Deck Spoiler	23.009-9
DECAL, Rear Quarter Panel Post Office Rear	12.125-19
DECAL, Space Saver Tire	14.145-10
DECAL, Steering Wheel Cover	10.280-5
DECAL, Tire Pressure	14.145-9
DECEL VALVE, Distributor Vacuum	3.049-1
DEFLECTOR, Air Conditioning Or High Level Ventilation Air Discharge	13.515-8a
DEFLECTOR, Brake Master Cylinder Water (Less Power Brakes)	8.035-5
DEFLECTOR, Brake Master Cylinder Water (With Power Brakes)	8.510-7
DEFLECTOR, Exhaust Valve Stem Oil	1.078-6
DEFLECTOR, Intake Valve Stem Oil	1.077-6
DEFLECTOR, Rear Quarter Belt Water	20.282-3
DEFLECTOR, Rear Quarter Window Water	25.029-18
DEFLECTOR, Rear Window Air	20.425-1
DEFLECTOR, Valve Rocker Arm Shaft Oil	1.102-1
DELAY SWITCH, Headlamp Turn-Off	3.147-1
DEPRESSANT, Radiator Foam	2.020-1a
DIAL, Gear Selector Pointer	7.537-1
DIAPHRAGM, Power Brake Valve Body	8.485-1
DIFFUSER, Instrument Cluster Lamp	3.635-3
DISC, Electric Windshield Wiper Motor Adjusting	22.032-2
DISC, Rear Axle Differential Clutch Friction	9.035-2
DISC ASSEMBLY, Automatic Transmission Front Clutch	16.415-10
DISC ASSEMBLY, Automatic Transmission Rear Clutch	16.425-10
D - Cont.	
DISC ASSEMBLY, Front Wheel Disc Brake	8.805-1
DISC KIT, Power Brake Master Cylinder Piston Reaction	8.505-2
DISC KIT, Rear Axle Differential Clutch Friction	9.035-1
DISTRIBUTOR	3.030
DOOR, Air Conditioning Air Discharge Lower	13.515-18
DOOR, Air Conditioning And High Level Ventilation Air Discharge	13.515-29
DOOR, Air Conditioning Evaporator Air Discharge Single Outlet	13.515-10
DOOR, Air Conditioning Floor Cooling	13.488-10
DOOR, Armrest Flo-Thru Vent Shut-Off	29.075-6
DOOR, Console Compartment	27.270-1
DOOR, Cowl Trim Panel Air Intake	29.010-4
DOOR, Front	23.001-1
DOOR, Glove Box	22.060-1
DOOR, Headlamp	3.252-1
DOOR, Instrument Panel Ash Receiver	22.094-1
DOOR, Rear	23.002-1
DOOR, Rear Auxiliary Floor Side Compartment	20.437-1
DOOR, Rear Deck	23.009-1
DOOR, Rear Quarter Panel Gasoline Filler	12.125-8
DOWEL, Clutch Housing	5.054-10
DOWEL, Cylinder Block To Clutch Housing Or Converter Housing Dowel	1.020-2
DOWEL, Cylinder Head To Block Dowel	1.059-3
DOWEL, Cylinder Head To Manifold Dowel	1.059-2
DRAIN COCK	17.146
DRAIN COCK, Radiator Core	2.036
DRIVE UNIT, Door Electric Operated Window Regulator	23.308-1
DRIVE UNIT, Rear Quarter Electric Operated Window Regulator	24.203-1
DRUM, Automatic Transmission Rear Clutch	16.125-1
DRUM, Automatic Transmission Reverse	16.459
DRUM, Rear Brake	19.824
DRUM ASSEMBLY, Front Brake	8.240-1
DRUM ASSEMBLY, Rear Brake (Incl. Hub And Drum)	8.240-2
DRUM ASSEMBLY, Rear Brake (Less Hub)	8.245-1
DRUM ASSEMBLY KIT, Front Seat Reclining	29.107-1
DUCT, Air Conditioning Air Distribution Housing	13.520-2
DUCT, Air Conditioning Evaporator Air Discharge	13.510-2
DUCT, Air Conditioning Evaporator Air Discharge (Single-Lower)	13.510-3
DUCT, Air Conditioning Evaporator Air Discharge (Single-Upper)	13.510-2
DUCT, Air Conditioning Evaporator Or High Level Ventilation Air Discharge (Dual)	13.510-4
DUCT, Air Conditioning Evaporator Or High Level Ventilation Air Discharge (Center-Upper)	13.515-22
DUCT, Air Conditioning Evaporator Or High Level Ventilation Air Discharge (Left-Single)	13.515-30

Printed in U.S.A.

DESCRIPTION	GROUP NO.
D - Cont.	
DUCT, Air Conditioning Evaporator Or High Level Ventilation Air Discharge (Right)	13.515-24
DUCT, Carburetor Air Cleaner Hot Air	4.015-1
DUCT, Exhaust Manifold Hot Air	4.015-3
DUCT, Heater And Defroster Air	13.118-1
DUCT, Hood Air Scoop Front	12.001-12
DUCT, Hood Air Scoop Rear	12.001-14
DUCT ASSEMBLY, Air Conditioning Evaporator Or High Level Ventilation Air Discharge	13.515-21a
DUCT ASSEMBLY, Air Conditioning Evaporator Or High Level Ventilation Housing Discharge	13.515-27
DUCT ASSEMBLY, Air Conditioning Single Outlet	13.515-9
DUCT ASSEMBLY, Fresh Air Intake	22.020-1
- E -	
ECCENTRIC, Fuel Pump	1.134-4
ECCENTRIC, Fuel Pump Camshaft	4.118-1
ELBOW, Automatic Speed Control Vacuum Line Hose	4.370-1
ELBOW, Automatic Transmission Oil Cooler Tube	16.230-13
ELBOW, Automatic Transmission Oil Cooler Tubes	16.230-7
ELBOW, Automatic Transmission Oil Cooler Tubes Hose	16.230-6
ELBOW, Automatic Transmission Vacuum Tube To Manifold	16.240-5
ELBOW, Automotive Pipe Street 45 Degree Type "Extruded"	17.238
ELBOW, Automotive Pipe Street 45 Degree Type "Forged"	17.239
ELBOW, Automotive Pipe Street 90 Degree Type "Extruded"	17.240
ELBOW, Ball Sleeve Tube 90 Degree	17.220
ELBOW, Decel Valve Hose To Intake Manifold	3.049-6
ELBOW, Flared Tube 90 Degree	17.214
ELBOW, Fuel Pump Filter To Carburetor	4.124-3
ELBOW, Fuel Pump To Gas Line (Inlet)	4.124-1
ELBOW, Fuel Pump To Gas Line (Outlet)	4.124-2
ELBOW, Intake Manifold To Valve Hose	1.069-3
ELBOW, Inverted Flared Tube 45 Degree	17.216
ELBOW, Inverted Flared Tube 90 Degree	17.218
ELBOW, Manifold To Pump	22.050-8
ELBOW, Oil Filter Inlet Hose	1.198-2
ELBOW, Oil Filter Outlet Hose	1.198-3
ELBOW, Oil Pressure Gauge	3.605-3
ELBOW, Pipe 45 Degree	17.224
ELBOW, Pipe 90 Degree	17.226
ELBOW, Pipe Street 90 Degree	17.232
ELBOW, Solenoid Control Switch	16.226-2
ELBOW, Stop And Tail Lamp Switch	3.333-5
ELBOW, Vacuum Tube	22.050-9
E - Cont.	
ELEMENT, Carburetor Air Cleaner	4.088-4
ELEMENT, Cigar Lighter Assembly	3.352-2
ELEMENT, Fuel Pump Filter Bowl	4.110-7
ELEMENT, Gasoline Filter Bronze	15.190-4
ELEMENT, Oil Filter	1.206-1
ELEMENT, Windshield Wiper Blade	22.043-3
ELEMENT, Windshield Wiper Blade (Right)	22.043-4
EMBLEM, Wheel Cover Ornament	8.274-5
END ASSEMBLY, Steering Linkage Tie Rod	10.126-1
ENGINE ASSEMBLY	1.002
EQUALIZER, Parking Brake	8.214-1
"E" RING, Automatic Transmission Parking Sprag Rod	16.390-7
ESCUTCHEON, Air Conditioning Thermostat Control	13.477-8
ESCUTCHEON, Automatic Speed Control	4.300
ESCUTCHEON, Glove Box Door Lock	22.073-9
ESCUTCHEON, Headlamp Switch	3.145-3
ESCUTCHEON, Heated Rear Window Control Switch	3.770-3
ESCUTCHEON, Outside Rear View Remote Control Cable	15.270-8
ESCUTCHEON, Panel Lights Switch	3.146-3
ESCUTCHEON, Radio (Manual)	15.320-23
ESCUTCHEON, Radio (Push Button)	15.320-24
ESCUTCHEON, Starter And Ignition Switch	3.130-3
ESCUTCHEON, Sun Roof Latch Handle	28.137
ESCUTCHEON, Tailgate Electric Operated Window Switch	23.330-18
ESCUTCHEON, Windshield Washer Control Knob	22.052-3
ESCUTCHEON, Windshield Wiper Control	22.038-4
ESCUTCHEON ASSEMBLY, Door Assist Handle	23.217-2a
EXTENSION, Air Conditioning Intermediate Pulley Adjusting Brace	13.430-21
EXTENSION, Antenna Lead	15.030-1a
EXTENSION, Cowl Trim Panel	29.010-3a
EXTENSION, Floor Reinforcement Channel	20.072-2
EXTENSION, Front Fender Headlamp Housing	12.075-7
EXTENSION, Front Wheelhouse Panel Front	20.085-4
EXTENSION, Inner Belt Rail Rear	20.350-3
EXTENSION, Lower Deck Center Panel	20.325-3
EXTENSION, Lower Rear Inner Panel	20.330-5
EXTENSION, Lower Rear Panel	20.330-6a
EXTENSION, Outside Rear View Remote Control Mirror	15.270-9
EXTENSION, Radiator Core Overflow Hose	2.020-5
EXTENSION, Radiator Grille Upper Baffle	2.064-1
EXTENSION, Radiator Upper Baffle	2.062-8
EXTENSION, Rear Body Pillar	20.240-2
EXTENSION, Rear Body Pillar Reinforcement	20.245-2
EXTENSION, Rear Compartment Radio Speaker Cable	15.320-59

Printed in U.S.A.

DESCRIPTION	GROUP NO.
E - Cont.	
EXTENSION, Rear Compartment Side Trim Panel	29.460-7
EXTENSION, Rear Corner Roof	20.412
EXTENSION, Rear Cross Sill	20.330-6
EXTENSION, Rear Floor Pan	20.035-2
EXTENSION, Rear Quarter Panel Front	12.125-3
EXTENSION, Rear Quarter Panel Rear	12.125-4
EXTENSION, Rear Quarter Panel Rear Lower	12.125-4b
EXTENSION, Rear Quarter Panel Rear Upper	12.125-4a
EXTENSION, Rear Quarter Panel Tail Lamp Mounting	12.125-5
EXTENSION, Rear Shelf Panel Support Gusset	20.380-4a
EXTENSION, Side Drip Moulding To Cowl Side	20.395-3
EXTENSION, Side Roof Rail Rear	20.255-6
EXTENSION, Speedometer Cable	3.570-14
EXTENSION, Tailpipe	4.227-2
EXTENSION, Tire Valve	8.274-7
EXTENSION, Uniside Inner Panel Front Pillar	20.190-2
EXTENSION, Upper Air Baffle	2.062-12
EXTENSION, Upper Hinge Mounting	20.220-2
EXTENSION ASSEMBLY, Rear Auxiliary Floor	20.452-11
EXTENSION KIT, Front Seat Slide Adjuster	29.129-1
EYELET	17.260
EYELET, Back-Up Lamp Lens	3.317-4
EYELET, Glove Box Door Check Cable	22.066-8
EYELET, Horn Blowing Contact	3.407-4
EYELET, Instrument Panel To Cowl Vent Air Chamber	22.056-7
EYELET, Parking And Front Directional Signal Lamp Lens	3.292-11
EYELET, Rear Directional Signal Lamp Lens	3.306-6
EYELET, Speedometer To Instrument Cluster Case	3.550-5
- F -	
FAN, Alternator (Less Pulley)	3.010-3
FAN, Alternator (Motorola)	3.017-1
FAN, Exhaust Emission Air Pump Filter	4.510-4
FASTENER, Automatic Speed Control Vacuum Hose	4.367-2
FASTENER, Curtain	17.270
FASTENER, Front Door Regulator	25.030-9
FASTENER, Gasoline Tank Filler Neck Overflow Drain Tube	4.141-30
FENDER, Front	12.075-1
FERRULE, Front Door Speaker Cable	15.320-53
FERRULE, Front Door Wiring Harness	23.320-11
FERRULE, Rear Door Wiring Harness	23.320-13
FILLER, Armrest To Door	29.075-4
FILLER, Cowl Top Panel	20.150-4
FILLER, Cowl Trim Panel Door Handle Opening	29.010-7
FILLER, Front Door Glass Weatherstrip	25.058-2
FILLER, Front Fender Front	12.075-9a
FILLER, Front Fender To Radiator Grille	12.075-13
FILLER, Front Seat Back Side	29.108-6
F - Cont.	
FILLER, Front Seat Center Cushion	29.159-4
FILLER, Front Side Sill To Rear Side Sill	20.070-7
FILLER, Inside Rear View Mirror	27.084-6
FILLER, Instrument Panel To Uniside (Left)	22.056-8
FILLER, Instrument Panel To Uniside (Right)	22.056-9
FILLER, Radiator Side Baffle	2.062-14
FILLER, Rear Floor Pan	20.035-3a
FILLER, Rear Quarter Panel Front Extension To Wheelhouse	20.245-1a
FILLER, Rear Quarter Window Front (Pivot Type Window)	24.021-1
FILLER, Rear Wheelhouse To Floor Plan	20.272-4
FILLER, Rocker Panel	20.175-2
FILLER, Roof Panel Support	20.420-4
FILLER, Steering Gear Jacket Tube Cover To Steering Column	10.338-6
FILLER, Tail Lamp Lens To Housing	3.306-5
FILLER, Uniside To Cowl Side Panel	20.155-3
FILLER, Uniside To Drip Moulding Rear	20.170-9
FILTER, Air Conditioning Thermostat Control Lamp	13.477-15
FILTER, Automatic Speed Control Lamp Bulb	4.315
FILTER, Automatic Speed Control Regulator	4.360
FILTER, Automatic Transmission Oil	16.345-1
FILTER, Carburetor Air Cleaner Positive Crankcase Ventilation	4.088-7
FILTER, Cylinder Head Cover To Carburetor Air Cleaner	1.116-3
FILTER, Exhaust Emission Air	4.545-1
FILTER, Fuel Vapor Storage Canister	4.144-8
FILTER, Gasoline Tank (On Sending Unit)	3.615-8
FILTER, Gasoline Tank	4.134
FILTER, Gear Selector Dial Lamp Hood	7.535-6
FILTER, Instrument Control Dial Lamp	3.510-11
FILTER, Instrument Control Dial Lamp	3.635-7
FILTER, Instrument Panel Ash Receiver Lamp	22.092-10
FILTER, Power Brake Air	8.450-1
FILTER KIT, Fuel Pump In-Line	4.110-8
FILTER SERVICE KIT, Windshield Washer	22.051-1a
FITTING, Brake Master Cylinder Outlet	8.040
FITTING, Exhaust Emission Back-Fire Valve Hose To Intake Manifold	4.580
FITTING, Front Brake Tube	8.102
FITTING, Gasoline Filter (Angle)	15.190-10
FITTING, Gasoline Filter (Straight)	15.190-9
FITTING, Intake Maninfold To Valve Hose	1.069-3
FITTING, Lubrication	17.290
FITTING, Power Brake Vacuum	8.460-4a
FITTING, Power Steering Pump Pressure Hose	10.470-3
FRAME, Radiator Grille	2.050-7e
FITTING, Rally Pack Manifold Vacuum	15.300-2
FITTING, Rear Adjustable Air Shock Tube	11.230
FLANGE, Exhaust Pipe To Manifold	4.186-2
FLANGE, Steering Gear Intermediate Shaft To Flange On Lower Shaft	10.713-1
FLANGE, Steering Gear Lower Shaft Flange To Flange On Intermediate Shaft	10.714-1

DESCRIPTION	GROUP NO.
F - Cont.	
FLANGE, Steering Gear Lower Shaft To Flange On Steering Gear	10.711-1
FLANGE, Steering Gear To Shaft	10.710-1
FLANGE, Steering Gear Upper Shaft To Lower Shaft	10.712-1
FLAP, Rear Seat Back Center Armrest	29.245-1
FLASHER, Directional Signal	3.330-1
FLASHER, Emergency Signal System	3.690-7
FLASHER, Hazard Warning Lamp	3.690-13
FLYWHEEL ASSEMBLY, Crankshaft	1.056-1
FORK, Fourspeed Transmission Shifter	6.198-3 Thru 6.198-5
FORK, Overdrive Shift	6.295-2
FORK, Transmission Shifter (Low And Reverse)	6.198-1
FORK, Transmission Shifter (Second And High)	6.198-2
FRAME, Front Door Lowering Glass	25.050-1
FRAME, Front Door Ventilator	23.114
FRAME, Front Door Window	23.008-1
FRAME, Front Seat Center Cushion	29.157-1
FRAME, Radiator Grille	2.050-7e
FRAME, Rear Door Window	23.008-3
FRAME, Rear Quarter Window	24.010-1
FRAME, Rear Quarter Window Glass Lower Rear	25.048-3
FRAME, Rear Quarter Window Glass Upper	25.048-1
FRAME, Rear Quarter Window Glass Upper Front	25.048-2
FRAME, Rear Seat Back Extension	29.227-1
FRAME, Rear Window	20.397-1
FRAME ASSEMBLY, Front Door Ventilator	23.112
FRAME ASSEMBLY, Front Seat Back Center Armrest	29.142-1
FRAME ASSEMBLY, Front Seat Bottom	29.103-1
FRAME ASSEMBLY, Non-Reclining Front Seat Back	29.105-1
FRAME ASSEMBLY, Rear Seat Back	29.220-1
FRAME ASSEMBLY, Rear Seat Back Center Armrest	29.234-1
FRAME ASSEMBLY, Reclining Front Seat Back	29.105-2
FRAME ASSEMBLY, Third Seat Back	29.258-1
FRAME ASSEMBLY, Third Seat Cushion	29.278-1
FUSE	3.155-4
FUSE	17.300
FUSIBLE LINK, Chassis Wire Harness To Horn Relay	3.167-1
FUSIBLE LINK, Ignition Switch To Chassis Wire Harness (Accessory)	3.167-5
FUSIBLE LINK, Ignition Switch To Chassis Wire Harness (Ignition)	3.167-4
FUSIBLE LINK, Starter Relay To Air Conditioning Harness	3.167-3
FUSIBLE LINK, Starter Relay To Chassis Wire Harness	3.167-2
FUSIBLE LINK, Starter Relay To Heated Rear Window Harness	3.167-3a

DESCRIPTION	GROUP NO.
- G -	
GASKET, Accelerator Cable	4.057-8
GASKET, Accelerator Pedal Rod Bellcrank	4.050-3
GASKET, Adapter To Overdrive Case	6.290-3
GASKET, Air Conditioning Evaporator Housing Cover To Air Outlet	13.488-4b
GASKET, Air Conditioning Evaporator Housing To Dash Panel	13.488-16
GASKET, Air Conditioning Evaporator Housing To Defroster Duct	13.488-16a
GASKET, Air Conditioning Receiver Pressure Relief Valve	13.455-7
GASKET, Annular	17.310
GASKET, Automatic Transmission Front Oil Pump	16.080-7
GASKET, Automatic Transmission Oil Screen	16.045-3
GASKET, Automatic Transmission Oil Filler Tube	16.020-4
GASKET, Automatic Transmission Oil Pan	16.015-3
GASKET, Automatic Transmission Oil Pan	16.315-3
GASKET, Automatic Transmission Oil Pump Housing	16.380-10
GASKET, Automatic Transmission Output Shaft Bearing Cover	16.460-9
GASKET, Automatic Transmission Rear Adapter To Case	16.176-3
GASKET, Automatic Transmission Rear Bearing Retainer	16.175-6
GASKET, Automatic Transmission Rear Bearing Retainer Inspection Cover	16.175-9
GASKET, Automatic Transmission Rear Bearing Retainer To Case	16.476-1
GASKET, Back-Up Lamp Housing To Bumper	3.316-4
GASKET, Back-Up Lamp Housing To Lower Deck Center Panel	3.316-5
GASKET, Back-Up Lamp Lens	3.317-3
GASKET, Brake Master Cylinder Filler Cover	8.038-2
GASKET, Brake Master Cylinder Filler Cover Bolt	8.038-4
GASKET, Brake Tube Hose	8.116-2
GASKET, Carburetor	4.004-1
GASKET, Carburetor Air Cleaner To Carburetor	4.088-6
GASKET, Carburetor Choke Heater Tube	4.020-6
GASKET, Clock Lens	3.369-3
GASKET, Clutch Housing Cover Lower	5.054-9
GASKET, Clutch Housing Cover Upper	5.054-8
GASKET, Cowl Trim Panel Door	29.010-5
GASKET, Cowl Vent Air Chamber Cover Plate	20.120-10
GASKET, Cylinder Head	1.061
GASKET, Cylinder Head Cover	1.072
GASKET, Deck Door Lock Cylinder	23.086-4
GASKET, Electric Windshield Wiper Motor Switch Plate	22.029-3
GASKET, Engine Oil Pan Drain Plug	1.151-4
GASKET, Engine Oil Pump Cover	1.165
GASKET, Engine Oil Pump Release Valve Spring Cap	1.178-2

Printed in U.S.A.

ALPHABETICAL INDEX

DESCRIPTION	GROUP NO.
G - Cont.	
GASKET, Engine Oil Pump To Cylinder Block	1.155
GASKET, Exhaust Emission Air Injection Manifold	4.539-1
GASKET, Exhaust Manifold Damper	1.067-13
GASKET, Filler Cap Gasoline	4.138-6
GASKET, Fourspeed Transmission Reverse Gear Housing Adapter To Housing	6.031-8
GASKET, Fourspeed Transmission Reverse Gear Housing Adapter To Transmission	6.031-7
GASKET, Front Fender Headlamp Housing Extension	12.075-9
GASKET, Front Fender Side Lamp Lens	3.725
GASKET, Front Fender Side Reflector	12.078-4
GASKET, Fuel Pump	4.116
GASKET, Fuel Pump Filter Bowl	4.110-5
GASKET, Gasoline Filter Element	15.190-3
GASKET, Gasoline Filter Glass Bowl	15.190-2
GASKET, Gasoline Tank Drain Plug	4.148-2
GASKET, Gasoline Tank Filler Neck Flange	4.141-6
GASKET, Gasoline Tank Filler Neck Housing Door	4.141-23
GASKET, Headlamp Door	3.252-8
GASKET, Heat Blocker Manifold Hi-Perf.	19
GASKET, Heater And Defroster Housing To Defroster Duct	13.113-4
GASKET, Heater And Defroster Housing To Heater Housing	13.113-5
GASKET, Heater Core	13.028-3 Thru 13.028-6
GASKET, Heater Core And Blower Housing	13.012-11 Thru 13.012-13
GASKET, Heater Core And Blower Housing To Dash	13.012-14
GASKET, Heater Core Housing	13.012-7 Thru 13.012-10
GASKET, Heater Core To Plenum Chamber	13.028-7a
GASKET, Heater Core To Plenum Chamber Filler	13.028-7
GASKET, Heater-Defroster-Air Conditioner And High Level Ventilation Blower Housing	13.072-10
GASKET, Heater-Defroster Motor Mounting Panel To Dash	13.072-14
GASKET, Heater Motor Opening Cover Plate	20.120-6
GASKET, Heater To Cover Plate	13.028-8
GASKET, Heater Valve Plate	20.120-9
GASKET, Heater Water Valve To Housing	13.035-9
GASKET, Intake Manifold To Cylinder Head	1.067-5
GASKET, Intake Manifold To Exhaust Manifold	1.067-4
GASKET, License Plate Lamp Lens	3.339-2
GASKET, Liftgate Anti-Rattle Dowel Pin Guide	23.417-3
GASKET, Liftgate Hinge	23.402-1
GASKET, Liftgate Latch Striker To Glass	23.416-3
GASKET, Liftgate Support Bracket To Glass	23.407-2
GASKET, Oil Filter Adapter	1.208-3
GASKET, Oil Filter Element	1.206-2
GASKET, Outside Rear View Mirror Mounting	15.270-2
GASKET, Outside Rear View Mirror Mounting (Remote Control)	15.270-4
GASKET, Outside Rear View Remote Control Mirror Trim Nut	15.270-5
GASKET, Overdrive Housing Adapter	6.270
GASKET, Overdrive Transmission To Overdrive Adapter	6.260-3
GASKET, Parking And Front Directional Signal Lamp Bezel (Lower)	3.292-18
GASKET, Parking And Front Directional Signal Lamp Bezel (Upper)	3.292-17
GASKET, Parking And Front Directional Signal Lamp Housing To Bumper	3.292-5
GASKET, Parking And Front Directional Signal Lamp Lens	3.292-12
GASKET, Parking Lamp Housing To Bumper	3.292-5a
GASKET, Power Brake Master Cylinder Filler Cover	8.510-4
GASKET, Power Steering Gear Pitman Shaft Cover	10.612
GASKET, Power Steering Pump Body To Cover	10.430-15
GASKET, Power Steering Pump Oil Reservoir Cover	10.465-9
GASKET, Power Steering Pump Oil Reservoir To Pump Stud Or Bolt	10.465-4
GASKET, Power Steering Pump Pressure Relief Valve	10.430-10
GASKET, Radio Cable Conduit	3.680-5
GASKET, Rear Axle Filler Plug	9.005-2
GASKET, Rear Axle Housing Cover	9.007-4
GASKET, Rear Deck Spoiler Lock Cylinder	23.009-10
GASKET, Rear Directional Signal Lamp Housing To Bumper Rail	3.305-3
GASKET, Rear Directional Signal Lamp Lens	3.305-4
GASKET, Rear Quarter Panel Side Reflector	12.125-18
GASKET, Rear Quarter Panel Tail Lamp Mounting Extension	12.125-7
GASKET, Rear Quarter Side Lamp Housing	3.745-2
GASKET, Rear Quarter Side Lamp Lens	3.745-1
GASKET, Rear Shock Opening Cover	20.035-12
GASKET, Rear Window Defogger Blower Motor	13.605-4
GASKET, Rear Window Defogger Blower Motor Housing	13.600-3
GASKET, Spark Plug	3.001-2
GASKET, Speedometer Cable	3.580
GASKET, Speedometer To Instrument Cluster Case	3.550-4
GASKET, Steering Gear Housing Cross Shaft Cover	10.302
GASKET, Tachometer Housing To Bezel	3.700-6
GASKET, Tachometer To Hood Scoop	3.700-6a
GASKET, Tail, Stop And Rear Directional Signal Lamp Lens	3.305-2
GASKET, Tail, Stop And Rear Directional Signal Lamp To Lower Deck Panel	3.305-1a
GASKET, Tail, Stop And Rear Directional Signal Lamp To Rear Quarter Panel	3.305-1

DESCRIPTION	GROUP NO.
G - Cont.	
GASKET, Tailgate Inner Panel Access Hole Cover	23.006-5
GASKET, Thermostat Housing	2.102-4
GASKET, Timing Case Cover	1.121
GASKET, Transmission Case Cover	6.009-3
GASKET, Transmission Front Bearing Cap	6.017-3
GASKET, Transmission Front Bearing Cap Screw	6.017-4
GASKET, Transmission Rear Bearing Cap	6.028-3
GASKET, Water Pump	2.098
GASKET, Wheel Cover Ornament	8.274-6
GASKET AND SEAL SET, Automatic Transmission Overhaul	16.005
GASKET AND SEAL SET, Automatic Transmission Overhaul	16.305
GASKET KIT, Air Conditioning Compressor	13.400-5
GASKET SET, Air Conditioning Compressor Suction And Discharge Valve	13.405-2
GASKET SET, Engine (Overhaul)	1.060-2
GASKET SET, Engine (Valve Grind)	1.060-1
GASKET SET, Engine Oil Pan	1.152-1
GASKET SET, Intake Manifold	1.067-5a
GASKET SET, Transmission Overhaul	6.002
GATE, Steering Column Locking	10.337-3
GAUGE, Automatic Transmission Oil Level	16.020-2
GAUGE, Bearing	1.031
GAUGE, Gasoline (In Gasoline Tank)	3.615-3
GAUGE, Gasoline (In Instrument Cluster)	3.615-1
GAUGE, Oil Level	1.187-1
GAUGE, Oil Pressure	3.605-1
GAUGE, Rally Pak Vacuum	15.300-1
GAUGE, Water Temperature (In Cylinder Block)	3.610-3a
GAUGE, Water Temperature (In Instrument Cluster)	3.610-1
GAUGE ASSEMBLY, Ammeter And Oil Pressure	3.605-4
GEAR, Automatic Transmission Annulus Front	16.458-1
GEAR, Automatic Transmission Annulus Rear	16.458-6
GEAR, Automatic Transmission Output Shaft Ring	16.160-3
GEAR, Automatic Transmission Sun	16.140-1
GEAR, Automatic Transmission Sun	16.440-1
GEAR, Distributor (On Camshaft)	3.042-2
GEAR, Distributor (On Distributor)	3.042-1
GEAR, Electric Windshield Wiper Motor	22.031-1
GEAR, Engine Oil Pump Idler	1.157-1
GEAR, Flywheel Ring	1.056-3
GEAR, Fourspeed Transmission Low	6.144-4
GEAR, Fourspeed Transmission Reverse	6.144-5
GEAR, Fourspeed Transmission Third Speed	6.130
GEAR, Overdrive Governor	6.329-2
GEAR, Overdrive Governor Drive	6.329-3
GEAR, Overdrive Ring	6.307-1
GEAR, Rear Axle Differential Pinion	9.031
GEAR, Rear Axle Differential Side	9.027-3
GEAR, Speedometer Drive	16.248-1
GEAR, Speedometer Drive (Refer Charts)	6.240-1
G - Cont.	
GEAR, Speedometer Driven	3.590-1
GEAR, Tailgate Electric Operated Window Regulator Pinion	23.308-10
GEAR, Transmission Countershaft	6.164
GEAR, Transmission Low	6.144-2
GEAR, Transmission Low And Reverse	6.144-1
GEAR, Transmission Reverse	6.144-3
GEAR, Transmission Reverse Idler	6.170-1
GEAR, Transmission Reverse Idler Gear	6.170-2
GEAR, Transmission Second Speed	6.120
GEAR ASSEMBLY, Overdrive Sun	6.299
GEAR ASSEMBLY, Steering	10.290-1
GEAR SET, Rear Axle Differential Side (LLD)	9.027-1
GEAR SET, Rear Axle Differential Side (WLD)	9.027-2
GEAR SET, Rear Axle Hi-Perf	19
GEAR SET, Rear Axle Ring	9.050-1
GLASS, Front Door Lowering	25.018
GLASS, Front Door Ventilator	25.016
GLASS, Mirror Visor	15.270-12
GLASS, Rear Door Lowering	25.020
GLASS, Rear Door Stationary Window	25.023
GLASS, Rear Quarter Lowering	25.024
GLASS, Rear Quarter Stationary	25.026-1
GLASS, Rear Quarter Window	25.022-1
GLASS, Rear Window	25.028-1
GLASS, Tailgate	25.028-3
GLASS, Windshield	25.001
GLASS ASSEMBLY, Front Door Lowering	25.014-1
GLASS ASSEMBLY, Rear Door Lowering	25.015
GLASS ASSEMBLY, Rear Quarter Window Lowering	25.029-1
GLIDE, Front Door Lowering Glass	25.052-9
GOVERNOR, Automatic Speed Control Regulator	4.344
GOVERNOR, Automatic Transmission	16.085-1
GOVERNOR, Overdrive	6.329-1
GRILLE, Cowl Trim Panel	29.010-8
GRILLE, Front Door Speaker	15.320-48
GRILLE, Instrument Panel Radio Speaker Opening	22.077-6
GRILLE, Radiator	2.050-1
GRILLE, Radiator (Outer)	2.050-31
GRILLE, Radio Rear Shelf Speaker	15.320-31
GRILLE, Rear Compartment Radio Speaker	15.320-57
GRILLE, Rear Window Defogger	29.034-5
GRILLE, Rear Window Defogger Outlet	13.625-1
GRIP, Reverse Lockout Finger	7.001-7
GROMMET, Air Conditioning Hose	13.440-7
GROMMET, Air Conditioning Thermostat Control Capillary Tube	13.477-19
GROMMET, Ammeter Wire	3.600-9
GROMMET, Automatic Speed Control Bellows Chain	4.390-3
GROMMET, Automatic Transmission Throttle Valve Control Shift Linkage Bellcrank	16.515-2
GROMMET, Back-Up Lamp Switch	3.319-5
GROMMET, Back-Up Lamp Wire	3.318-6
GROMMET, Back-Up Lamp Wire Harness	3.318-7

Printed in U.S.A.

ALPHABETICAL INDEX

DESCRIPTION	GROUP NO.
G - Cont.	
GROMMET, Brake Tubes	8.106-4
GROMMET, Cable To Dash	12.061-8
GROMMET, Clock Housing	3.360-8
GROMMET, Column Gear Shift Upper Lever	7.020-5
GROMMET, Cylinder Block Ventilation Valve To Cylinder Head Cover	1.119-2
GROMMET, Cylinder Block Ventilation Valve To Intake Manifold	1.119-3
GROMMET, Cylinder Head Cover To Carburetor Air Cleaner Tube	1.116-4
GROMMET, Door Electric Operated Window Regulator Wiring Harness	23.320-10
GROMMET, Electric Windshield Wiper Motor Wire Lead	22.036-2
GROMMET, Exhaust Pipe Brace	4.195-6
GROMMET, Front Door Lock Push Button	23.054-3
GROMMET, Front Door Speaker Cable	15.320-52
GROMMET, Front Fender Radio Antenna Lead Cable	15.030-9
GROMMET, Front Fender Radio Antenna	15.030-10
GROMMET, Front Shock Lower	11.208-2
GROMMET, Front Shock Upper	11.208-1
GROMMET, Gasoline Front Fuel Line	4.160-7
GROMMET, Gasoline Gauge Wire	3.615-5
GROMMET, Gasoline Tank Air Vent Hose	4.141-19
GROMMET, Gasoline Tank Filler Neck	4.141-25
GROMMET, Gasoline Tank Filler Neck Overflow Drain Tube	4.141-29
GROMMET, Gasoline Tank Upper Vent Tube	4.141-35
GROMMET, Gear Selector Bellcrank Bracket	7.110-5a
GROMMET, Gear Shift Operating Shaft Lever	7.088
GROMMET, Hand Operated Parking Brake Lever	8.180-10
GROMMET, Heater Water Valve Control Cable	13.017-28
GROMMET, License Plate Lamp Wire	3.341-2
GROMMET, Neutral Safety Switch	3.022-7
GROMMET, Parking Brake Release Rod	8.182-3
GROMMET, Power Brake Vacuum Check Valve	8.460-3
GROMMET, Rear Door Lock Push Button	23.054-4
GROMMET, Rear Quarter Side Lamp Wire	3.740-7
GROMMET, Rear Shock Lower	11.228-2
GROMMET, Rear Shock Upper	11.228-1
GROMMET, Reverse Lock-Up Rod Column Lever	7.134-6
GROMMET, Rubber	17.322
GROMMET, Speedometer Cable	3.570-15
GROMMET, Tachometer Wire	3.700-8
GROMMET, Throttle Control Cable	4.024-6
GROMMET, Trunk Lamp Assembly	3.660-6
GROMMET, Valve To Hose	22.055-3
GROMMET, Windshield Wiper Control Cable	22.038-3
GROMMET, Wiring	3.166-1
GROMMET, Wiring (In Rear Wheelhouse)	3.166-4
GROMMET KIT, Shock To Rear Suspension Crossmember	11.220-1a
GUARD, Power Brake Bellcrank To Brake Pedal Link	8.420-3
GUARD, Power Brake Valve Push Rod	8.480-2
G - Cont.	
GUARD, Rear Quarter Panel Wood Grain Overlay	12.125-12
GUARD ASSEMBLY, Front Fender Lower Splash	12.075-11
GUARD ASSEMBLY, Front Fender Lower Splash Upper Extension	12.075-11a
GUARD ASSEMBLY, Front Fender Upper Splash	12.075-11b
GUIDE, Air Conditioning Receiver Check Valve	13.455-5
GUIDE, Air Conditioning Thermostat Capillary Tube	13.477-17
GUIDE, Automatic Transmission Kickdown Servo	16.350-11
GUIDE, Brake Shoe Automatic Adjusting Cable	8.011
GUIDE, Console Ash Receiver	27.285-5
GUIDE, Forward Tilt Lock Release	29.105-25
GUIDE, Front Door Glass Channel	25.052-1
GUIDE, Front Door Glass Channel Front	25.052-2
GUIDE, Front Door Glass Channel Rear	25.052-3
GUIDE, Front Door Lowering Glass Bottom Channel (Front)	25.030-4
GUIDE, Front Door Lowering Glass Bottom Channel (Rear)	25.030-5
GUIDE, Front Door Window Regulator Arm (AMX And Javelin)	23.098-3
GUIDE, Front Door Window Regulator Arm (Hornet And Gremlin)	25.030-11
GUIDE, Front Seat Back Headrest Post	29.173-5
GUIDE, Instrument Panel Ash Receiver	22.096-3
GUIDE, Liftgate Anti-Rattle Dowel Pin	23.417-2
GUIDE, Power Steering Gear Worm Ball Bearing Return	10.575
GUIDE, Rear Door Glass Channel	25.052-11
GUIDE, Rear Quarter Glass Channel	25.029-2
GUIDE, Rear Quarter Lowering Glass Bottom Channel	25.034-3
GUIDE, Rear Quarter Window (At Belt Rail)	25.029-7
GUIDE, Rear Quarter Window (At Roof Rail)	25.029-10
GUIDE, Rear Quarter Window Regulator Idler Arm	24.001-6
GUIDE, Steering Wheel Tilt Spring	10.857
GUIDE, Tailgate Positioning	23.045-1
GUIDE AND CLAMP KIT, Steering Gear Worm Ball Bearing Return	10.316-3
GUIDE ASSEMBLY, Door Window Lower	25.052-2e
GUIDE KIT, Liftgate Anti-Rattle	23.417-5
GUSSET, Frame To Uniside	20.397-2
GUSSET, Frame To Wheelhouse	20.397-3
GUSSET, Front Pillar To Wheelhouse	20.195-3
GUSSET, Front Wheelhouse To Cowl Top Panel	20.085-6
GUSSET, Front Wheelhouse To Dash Panel	20.085-6a
GUSSET, Roof Rail To Uniside	20.255-7
GUSSET, Shelf Panel To Uniside	20.380-4
GUSSET, Shelf Panel To Wheelhouse	20.385-1
GUSSET, Windshield Header Bar To Side Roof Rail	20.160-1

DESCRIPTION	GROUP NO.
– H –	
HANDLE, Assist	23.217-3
HANDLE, Door Assist	23.217-1
HANDLE, Door Outside	23.074-8
HANDLE, Door Window Regulator	23.100-1
HANDLE, Front Door Locking Control	23.061
HANDLE, Front Door Ventilator Lock	23.121-1
HANDLE, Front Seat Back Forward Tilt Release	29.105-21a
HANDLE, Gear Shift Lever (Stick Type)	7.030-1a
HANDLE, Gear Shift Lever (Two-Piece Type)	7.032-1
HANDLE, Hood Lock Operating Rod	12.060-5f
HANDLE, Instrument Panel Assist	22.100-63
HANDLE, Instrument Panel Headlamp Dimmer Switch	3.158-3
HANDLE, Jack	14.142
HANDLE, Liftgate (On Glass Frame)	23.414
HANDLE, Liftgate Latch Release	23.413-1
HANDLE, Parking Brake Release Rod	8.182-2
HANDLE, Rear Deck Door	23.078-8
HANDLE, Rear Door Assist	23.217-3
HANDLE, Rear Quarter Window Regulator	24.002-1
HANDLE, Remote Control	23.058-1
HANDLE, Seat Back Adjusting	29.105-20
HANDLE, Sun Roof Latch	28.126
HANDLE, Tailgate Latch Release	23.039-21
HANDLE, Tailgate Window Regulator	23.078-3
HANDLE, Third Seat Back	29.264-1
HANDLE ASSEMBLY, Door Outside	23.074-1
HANDLE ASSEMBLY, Front Door Outside	23.074-2
HANDLE ASSEMBLY, Rear Deck Door	23.077-3
HANDLE ASSEMBLY, Rear Door Outside	23.074-3
HANDLE ASSEMBLY, Rear Quarter Pivoting Glass	24.020-1
HANDLE ASSEMBLY, Tailgate	23.077-1
HANDLE ASSEMBLY, Tailgate Window Regulator	23.078-1
HANGER, Luggage Rack Strap	27.215-1
HARNESS, Air Conditioning Blower Motor Relay	13.075-3
HARNESS, Air Conditioning Resistor To Motor Relay To Compressor Clutch	13.415-6
HARNESS, Air Conditioning Thermostat To Switch And Clutch Wire	13.477-9
HARNESS, Alternator To Regulator Wire	3.005-8
HARNESS, Automatic Speed Control Wiring	4.330-1
HARNESS, Back-Up Lamp Wire	3.318-1
HARNESS, Body Wire	3.163-1
HARNESS, Cargo Area Lamp Wire	3.670-6
HARNESS, Center Domelamp Wire	3.346-4
HARNESS, Chassis Wire	3.165-1
HARNESS, Clock Lamp Wire	3.369-5a
HARNESS, Courtesy Lamp Wire	3.349-6
HARNESS, Door Electric Operated Window Regulator Wiring	23.320-1
HARNESS, Electric Windshield Wiper Motor Wire	22.036-1
HARNESS, Engine Compartment Wire	3.165-1b
HARNESS, FM Multiplex Radio Speaker Jumper	15.320-46a
HARNESS, Front And Center Domelamp Wire	3.346-5
HARNESS, Front Domelamp	3.346-4
HARNESS, Front Door Speaker Wire	15.320-50
HARNESS, Front End	3.164-1

DESCRIPTION	GROUP NO.
H - Cont.	
HARNESS, Front End Lighting	3.164-1
HARNESS, Gauge Lamp Wire	3.750-3
HARNESS, Headlamp Delay Switch Turn-Off Wire	3.147-3
HARNESS, Heated Rear Window Wire	3.772-2
HARNESS, High Level Ventilation	13.073-1
HARNESS, Instrument Panel Wire	3.165-1a
HARNESS, Low Fuel Warning Lamp Wire	3.615-16
HARNESS, Overdrive Wire	3.210-1
HARNESS, Radio Front Speaker	15.320-19b
HARNESS, Radio Rear Speaker (Front)	15.320-41
HARNESS, Radio Rear Speaker (Rear)	15.320-42
HARNESS, Radio Rear Speaker (Vibra-Tone)	15.320-40
HARNESS, Rear Quarter Electric Operated Window Regulator Wiring	24.215
HARNESS, Rear Speaker To Tape Player Or FM Multiplex Radio	15.320-43
HARNESS, Rear Window Defogger Wire	13.620-1
HARNESS, Seat Belt Buzzer Lock Out	3.785-5
HARNESS, Seat Belt Warning	3.785-2
HARNESS, Tachometer Lamp Wire	3.700-16a
HARNESS, Tachometer Wire	3.700-12
HARNESS, Tailgate Electric Operated Window Regulator Wiring	23.320-5
HARNESS, Tailgate Window Switch Exterior Wire	23.320-5e
HARNESS, Trailer Wiring (On Trailer)	3.780-1
HARNESS, Trailer Wiring (On Vehicle)	3.780-2
HARNESS, Transmission Controlled Spark Body Wire	3.051-2
HARNESS, Transmission Controlled Spark Engine Wire	3.051-3
HARNESS, Wire	3.750-1
HEAD, Electric Windshield Wiper Motor Commutator End	22.028-3
HEAD, Electric Windshield Wiper Motor Drive End	22.028-6
HEAD, Tachometer	3.700-1
HEAD ASSEMBLY, Cylinder	1.059-1
HEADER, Exhaust	19.167-1
HEADER, Rear Opening	20.390
HEADLAMP ASSEMBLY	3.245-1
HEADLAMP ASSEMBLY, Inner	3.245-2
HEADLAMP ASSEMBLY, Outer	3.245-3
HEADLINING	29.015-1
HEADREST ASSEMBLY, Front Seat Back	29.171
HEADREST ASSEMBLY, Front Seat Back (Less Upholstery)	29.170-1
HEATER	13.001-1
HEAT SHIELD, Fuel Line	4.160-25
HELI-COIL	17.790
HIGH PERFORMANCE	19
HINGE, Console Compartment Door	27.276-1
HINGE, Front Door Lower	23.016-1
HINGE, Front Door Upper	23.015-1
HINGE, Glove Box	22.060-2
HINGE, Hood	12.035-1
HINGE, Liftgate	23.400-1
HINGE, Rear Auxiliary Floor Side Compartment Door	20.437-2
HINGE, Rear Auxiliary Floor Storage Compartment Cover	20.452-3
HINGE, Rear Auxiliary Floor Storage Compartment Cover Side	20.452-6

Printed in U.S.A.

DESCRIPTION	GROUP NO.
H - Cont.	
HINGE, Rear Compartment Door Panel	20.451-2
HINGE, Rear Door Lower	23.018-1
HINGE, Rear Door Upper	23.017-1
HINGE, Rear Seat Back	29.221-1
HINGE, Rear Seat Back Frame Extension	29.229-1
HINGE, Third Seat Back	29.260-1
HINGE, Third Seat Cushion	29.280-1
HINGE ASSEMBLY, Tailgate	23.006-6
HINGE ASSEMBLY, Tailgate Lower	23.006-8
HINGE ASSEMBLY, Tailgate Upper	23.006-7
HOLD-DOWN KIT, Rear Brake Shoe	8.004-3
HOOD	12.001-1
HOOD, Gear Selector Dial Lamp	7.535-5
HOOD, Instrument Panel Ash Receiver Lamp	22.092-7
HOOK, Coat	27.130-1
HOOK, Jack Hold Down	14.138-5
HORN, Dual	3.105-1
HORN, Single	3.105-2
HOSE, Air Cleaner Sensor To Motor Or Tee	4.092-4
HOSE, Air Conditioning	13.440-1 Thru 13.440-3
HOSE, Air Conditioning Tube (Flex)	16.230-3
HOSE, Air Conditioning Air Damper Vacuum Switch To Check Valve	13.020-3
HOSE, Air Conditioning Evaporator Or High Level Ventilation Air Discharge To Left Single Outlet	13.510-24a
HOSE, Air Conditioning Evaporator To Single Outlet	13.510-24
HOSE, Air Damper Vacuum Switch To Vacuum Motor	13.020-4
HOSE, Air Lift Inflator	15.245-3
HOSE, Automatic Speed Control Vacuum	4.367-1
HOSE, Automatic Transmission Oil Cooler Tube (Flex)	16.230-3
HOSE, Automatic Transmission Oil Cooler Tube (Rubber-Clamp Type)	16.230-4
HOSE, Automatic Transmission Vacuum Tube To Modulator	16.240-2
HOSE, Brake Tube	8.116-1
HOSE, Breatner	9.001-4
HOSE, Carburetor Clean Air Tube	4.020-8
HOSE, Carburetor Insulator To Ventilation Valve	1.117-1
HOSE, Carburetor To Distributor Vacuum Advance	3.048-4a
HOSE, Carburetor To Tee	1.117-5
HOSE, Carburetor To Ventilation Valve	1.117-3
HOSE, Check Valve To Engine Vent Tube	4.142-4
HOSE, Connector To Foot Pump	22.053-7
HOSE, Connector To Nozzle	22.053-6
HOSE, Cylinder Head Cover To Carburetor Air Cleaner	1.116-2
HOSE, Cylinder Head Cover To Carburetor Air Cleaner (Bulk-Order In Feet)	1.116-5
HOSE, Decel Valve To Carburetor	3.049-3
HOSE, Decel Valve To Intake Manifold	3.049-5
HOSE, Decel Valve To Tube	3.049-4

DESCRIPTION	GROUP NO.
H - Cont.	
HOSE, Exhaust Emission Back-Fire Valve To Fitting	4.578
HOSE, Exhaust Emission Back-Fire Valve To Injection Manifold (Left-Bank)	4.600-1
HOSE, Exhaust Emission Back-Fire Valve To Injection Manifold (Right-Bank)	4.600-3
HOSE, Exhaust Emission Back-Fire Valve To Tee	4.565
HOSE, Exhaust Emission Back-Fire Valve Trigger To Carburetor Insulator	4.581-2
HOSE, Exhaust Emission Back-Fire Valve Trigger To Carburetor Vacuum Diaphragm	4.622
HOSE, Exhaust Emission Air Filter Coupling To Pump	4.549-1
HOSE, Exhaust Emission Air Injection Manifold To Tee	4.588
HOSE, Exhaust Emission Air Pump To Back-Fire Valve	4.585
HOSE, Exhaust Emission Air Pump To Tee	4.573
HOSE, Front Wheel Disc Brake	8.855-1
HOSE, Fuel Pump In-Line Filter To Tube	4.110-9
HOSE, Fuel Pump To Carburetor Filter Tube	4.177-1
HOSE, Gasoline	4.160-5
HOSE, Gasoline Tank Air Vent	4.141-16
HOSE, Gasoline Tank Filler Neck Housing Overflow Drain Tube	4.141-27
HOSE, Gasoline Tank Filler Neck To Tank Return	4.141-12
HOSE, Gasoline Tank Filler Neck To Vent Tube	4.141-10
HOSE, Gasoline Tank Lower Vent Tube Connecting	4.141-37
HOSE, Gasoline Tank To Check Valve	4.142-3
HOSE, Heater Core To Water Pump	13.050-2
HOSE, Heater Water	13.050-1
HOSE, Heater Water Valve To Core	13.050-8
HOSE, Heater Water Valve To Intake Manifold	13.050-9
HOSE, Heater Water Valve To Thermostat Housing	13.050-7
HOSE, Hood Air Scoop Damper Control To Manifold	12.001-21
HOSE, Hood Air Scoop Damper To Intake Manifold	4.092-3
HOSE, Intake Manifold To Vacuum Valve	1.069-2
HOSE, Manifold Tee To Air Scoop And Transmission Tee	1.069-6
HOSE, Oil Filler Cap To Air Cleaner	1.116-7
HOSE, Oil Filter	1.198-1
HOSE, Power Brake Vacuum Check Valve To Nipple	8.460-6
HOSE, Power Steering Pump Pressure	10.470-1
HOSE, Power Steering Pump Return	10.470-2
HOSE, Radiator Core Overflow	2.020-3
HOSE, Radiator Core To Water Pump	2.038-2
HOSE, Rally Pak Vacuum Gauge	15.300-3
HOSE, Solenoid To Distributor, Tube, Carburetor Or Tee	3.051-10
HOSE, Tank Vent To Canister	4.144-5

Printed in U.S.A.

DESCRIPTION	GROUP NO.
H - Cont.	
HOSE, Tee To Carburetor	3.050-7
HOSE, Tee To Carburetor, Solenoid And Canister	3.051-14
HOSE, Tee To Distributor	3.050-6
HOSE, Tee To Distributor Control, Carburetor And Canister	3.048-7
HOSE, Tee To Fuel Vapor Storage Canister	1.117-10
HOSE, Tee To Ventilation Valve	1.117-8
HOSE, Thermostat Housing To Intake Manifold	13.050-10
HOSE, Thermostat Housing To Intake Manifold (199-LWH)	1.064-8
HOSE, Thermostat Housing To Radiator Core	2.038-1
HOSE, Tube To Carburetor	3.048-4
HOSE, Tube To Distributor Vacuum Control (Bulk)	3.048-5
HOSE, Tube To Distributor Vacuum Control (WTCS)	3.051-12
HOSE, Tube To Intake Manifold	1.064-6
HOSE, Tube To Pump	22.050-7
HOSE, Vacuum Storage Tank To Manifold	13.020-7
HOSE, Vacuum Valve To Carburetor	3.050-2
HOSE, Vacuum Valve To Distributor Control	3.050-3
HOSE, Vacuum Valve To Tee	3.050-4
HOSE, Vent Tube To Engine	4.142-11
HOSE, Water Pump To Intake Manifold Tube	1.064-1
HOSE, Water Pump To Thermostat Housing By-Pass	2.080-4
HOSE, Water Pump To Tube	13.050-11
HOSE, Windshield Washer	22.053-1
HOUSING, Air Conditioning Air Distribution	13.520-1
HOUSING, Air Conditioning Evaporator Or High Level Ventilation	13.488-1
HOUSING, Air Conditioning Or High Level Ventilation Air Discharge Deflector	13.515-8c
HOUSING, Automatic Speed Control Regulator	4.338
HOUSING, Automatic Transmission Converter	16.040-1
HOUSING, Automatic Transmission Oil Pump	16.380-1
HOUSING, Cigar Lighter Assembly	3.352-4
HOUSING, Clock	3.360-5
HOUSING, Clutch	5.054-1
HOUSING, Console	27.250-1
HOUSING, Courtesy Lamp	3.349-2
HOUSING, Directional Signal Switch	3.321-5
HOUSING, Door Lock Striker	23.087-3
HOUSING, Door Remote Control	29.074
HOUSING, Electric Operated Window Regulator Control	23.330-9
HOUSING, Forward Tilt Lock Release Button	29.105-22
HOUSING, Gasoline Tank Filler Neck	4.141-20
HOUSING, Gear Shift Mechanism	7.017-2
HOUSING, Gear Shift Upper Lever	7.020-6
HOUSING, Heater Core	13.012-3
HOUSING, Heater Core And Blower	13.012-1
HOUSING, Heater-Defroster-Air Conditioner And High Level Ventilation Blower	13.072-7
HOUSING, Ignition Switch Mounting	3.130-6
HOUSING, Instrument Cluster	3.510-3
H - Cont.	
HOUSING, Instrument Panel Center	22.100-6a
HOUSING, Instrument Panel Center Lower	22.057-1
HOUSING, Power Brake Power Unit (Master Cylinder End)	8.500-1
HOUSING, Power Brake Power Unit (Mounting Bracket End)	8.500-2
HOUSING, Radio And Ash Receiver	22.100-7
HOUSING, Rear Axle	9.003-1
HOUSING, Rear Directional Signal Lamp	3.303-2
HOUSING, Rear Quarter Electric Operated Window Regulator Control Switch	24.220-2
HOUSING, Rear Quarter Panel Side	3.740-1
HOUSING, Rear Window Defogger Blower Motor Mounting	13.600-1
HOUSING, Steering Column	10.336-1
HOUSING, Tachometer	3.700-5
HOUSING, Tailgate Electric Operated Window Regulator Transmission	23.308-3
HOUSING, Thermostat	2.102-1
HOUSING, Transmission Reverse Gear	6.031-1
HOUSING, Warning Lamp	3.505-3
HOUSING ASSEMBLY, Back-Up Lamp	3.316-1
HOUSING ASSEMBLY, Heater And Defroster Damper	13.113-1
HOUSING ASSEMBLY, Parking And Front Directional Signal Lamp	3.292-1
HOUSING ASSEMBLY, Parking Lamp	3.292-2
HOUSING ASSEMBLY, Power Steering Gear	10.520
HOUSING ASSEMBLY, Steering Gear	10.292
HOUSING ASSEMBLY, Tail, Stop And Rear Directional Signal Lamp	3.303-1
HUB, Alternator	3.010-4
HUB, Automatic Transmission Front Clutch Cylinder	16.115-11
HUB ASSEMBLY, Rear Brake (Less Drum)	8.243-1
HUB ASSEMBLY, Overdrive Sun Gear	6.301
- I -	
IGNITION SYSTEM, Capacitor Discharge Hi-Perf	19
INDICATOR, Gear Selector Pointer	7.536-4
INFLATOR, Space Saver Tire	8.335-1
INHIBITOR, Steering Column Lock	10.337-8
INSERT, Accelerator Pedal	4.040-4
INSERT, Front Seat Back Kickpanel	29.117
INSERT, Gear Shift Mechanism To Adapter	7.002-5
INSERT, Gear Shift Upper Lever Positioning	7.020-12
INSERT, Heater Control Bezel Lens	13.017-14a
INSERT, Instrument Panel Glove Box Door	22.100-18a
INSERT, Liftgate Support Housing Cap	23.405-5
INSERT, Radio Knob	15.320-6
INSERT, Rear Leaf Spring	11.084-2
INSERT, Stereo Tape Knob	15.320-7
INSERT KIT, Rear Leaf Spring	11.084-1
INSULATION, Air Conditioning Evaporator Housing	13.488-14
INSULATION, Air Conditioning Evaporator Housing Cover	13.488-15

Printed in U.S.A.

ALPHABETICAL INDEX

DESCRIPTION	GROUP NO.
I - Cont.	
INSULATION, Air Conditioning Hose	13.440-10
INSULATION, Cowl Ventilator	29.309-6
INSULATION, Dash	29.309-1
INSULATION, Front Floor Pan Center	29.309-5
INSULATION, Front Floor Pan Front	29.309-4
INSULATION, Front Seat Back Spring	29.106-1
INSULATION, Heater Core And Blower Housing To Dash	13.012-15
INSULATION, Hood	12.001-2
INSULATION, Instrument Panel Support	29.309-6a
INSULATION, Panel Cowl Trim	29.010-1b
INSULATION, Rear Auxiliary Floor Pan Front	29.309-15
INSULATION, Rear Axle	29.309-14
INSULATION, Rear Compartment	29.336-1
INSULATION, Rear Floor Footwell	29.309-11
INSULATION, Rear Floor Pan	29.309-9
INSULATION, Rear Floor Tunnel	29.309-10
INSULATION, Rear Quarter Panel Belt	29.310
INSULATION, Rear Seat Back	29.335-1
INSULATION, Rear Shelf Panel	29.313-1
INSULATION, Rear Shelf Panel Front	29.313-2
INSULATION, Rear Wheelhouse Lower	29.309-13
INSULATION, Rear Wheelhouse Upper	29.309-12
INSULATION, Shelf Panel	20.370-2
INSULATION, Toeboard	29.309-3
INSULATION, Trunk Compartment Floor	29.309-16
INSULATION, Under Front Seat	29.309-7
INSULATION, Under Rear Seat Back	29.309-8
INSULATOR, Air Conditioning Evaporator Housing Sound	13.488-15a
INSULATOR, Automatic Speed Control Harness	4.330-3
INSULATOR, Automatic Transmission Manual Control Lever	16.225-4
INSULATOR, Carburetor	4.004-2
INSULATOR, Center Horn Button Receiver	3.400-9
INSULATOR, Cruise Command Switch Wire	3.325
INSULATOR, Front Fender Radio Antenna Sleeve	15.030-3
INSULATOR, Gasoline Tank To Body	4.130-2
INSULATOR, Gear Shift Lever	7.001-4
INSULATOR, Heater-Defroster-Air Conditioner And High Level Ventilation Blower Motor	13.072-17
INSULATOR, Horn Blowing Ring Brush	3.406-6
INSULATOR, Horn Button Retainer	3.400-13
INSULATOR, Muffler Support	4.219-1
INSULATOR, Rear Window Defogger Blower Motor	13.605-5
INSULATOR, Spoke Horn Button Contact	3.400-25
INSULATOR, Steering Gear Jacket Tube To Toeboard Support Plate	10.350-11
INSULATOR, Tailpipe Support (Hanger)	4.234-12
INSULATOR, Tailpipe Support (Rear)	4.234-7
INSULATOR, Wire Connector	3.690-12
INSULATOR KIT, Front Coil Spring	11.074
INTERLOCK, Reverse Control Lever	7.001-10
- J -	
JACK	14.138-1
JACKET, Steering Gear Jacket Tube	10.338-7
JACKET, Steering Gear Jacket Tube Lower	10.338-9
JACKET, Steering Gear Jacket Tube Upper	10.338-8
JUMPER HARNESS. Rear Window Defogger	13.620-2
- K -	
KEY, Automatic Transmission Governor	16.085-6
KEY, Camshaft Sprocket	1.134-3
KEY, Console Compartment Door Lock	27.280-4
KEY, Crankshaft Sprocket	1.132-2
KEY, Electric Windshield Wiper Motor Gear	22.031-3
KEY, Gate Gear Shift Selector	7.005-9
KEY, Glove Box Door Lock (Blank)	22.073-11
KEY, Glove Box Door Lock (Coded)	22.073-12
KEY, Ignition Switch Lock Cylinder (Blank)	3.135-3
KEY, Ignition Switch Lock Cylinder (Coded)	3.135-4
KEY, Liftgate Lock	23.415-2
KEY, Lock Cylinder (Door Ignition And Tailgate)	23.085-1
KEY, Lock Cylinder (Glove Box And Rear Deck)	23.085-2
KEY, Power Brake Valve Push Rod Stop	8.480-4
KEY, Power Steering Pump Drive Shaft	10.440-6
KEY, Power Steering Pump Pulley	10.455-3
KEY, Rear Auxiliary Floor Side Compartment Door Lock	20.438-9
KEY, Speedometer Drive Gear	6.240-2
KEY, Transmission Reverse Idler Shaft And Countershaft	6.172-2
KEY, Vibration Damper Hub	1.047
KEY, Woodruff	17.344
KIT, Automatic Transmission Overrunning Clutch	16.312-1
KIT, Automatic Transmission Overrunning Clutch Race	16.314-1
KIT, Gloss Installation	25.002-4
KIT, Glove Box	22.058-1a
KIT, Inside Rear View Mirror Mounting Support	27.084-1a
KIT, Rear Window Glass Installation	25.044-2
KNOB, Air Conditioning Air Discharge Lower	13.515-19
KNOB, Air Conditioning Recirculated Air Control	13.013-5
KNOB, Air Conditioning Thermostat Control	13.477-6
KNOB, Cigar Lighter Assembly	3.352-3
KNOB, Clock Reset	3.360-6
KNOB, Emergency Signal System	3.690-9
KNOB, Front Seat Adjusting Slide Handle	29.133-2
KNOB, Front Seat Back Headrest Casing Stop And Release Clip Button	28.173-1a
KNOB, Gear Shift Lever	7.030-1
KNOB, Hazard Warning Lamp	3.690-15
KNOB, Heater Air Damper Control	13.017-20
KNOB, Heater And Air Conditioning Controls	13.017-6
KNOB, Heater Controls	13.017-7 Thru 13.017-9
KNOB, Heater-Defroster Blower Switch	13.080-1
KNOB, Instrument Panel Ash Receiver Tray	22.095-1
KNOB, Instrument Panel Indicator Lamp	3.531-5
KNOB, Lighting Switch	3.150
KNOB, Outside Air Damper Cable	13.017-24c
KNOB, Radio Rear Speaker Control (Duo-Coustic)	15.320-38
KNOB, Radio Rear Speaker Control (Vibra-Tone)	15.320-39
KNOB, Radio Station Selector	15.320-5

DESCRIPTION	GROUP NO.
K - Cont.	
KNOB, Radio Tone	15.320-3
KNOB, Rear Deck Door	23.077-5
KNOB, Spare Wheel Cover	29.461-2
KNOB, Stereo Tape Tone	15.320-4
KNOB, Windshield Washer Control	22.052-2
KNOB, Windshield Wiper Control	22.039
KNOB ASSEMBLY, Air Control, Rear Window Defogger	13.618
- L -	
LACING, Cowl	12.022-1
LACING, Cowl Outer	12.022-3
LAMP, Automatic Speed Control	4.310-1
LAMP, Front Fender Side	3.720-1
LAMP, Glove Box	3.378-1
LAMP, Instrument Control Dial	3.510-13
LAMP, Instrument Control Dial (Incl. Bracket)	3.635-4
LAMP, Open Door Warning	3.655-1
LAMP, Parking Brake Warning	3.650-1
LAMP, Rear Quarter Interior	3.675
LAMP, Rear Quarter Panel Side	3.740-1a
LAMP, Seat Belt Warning	3.785-1
LAMP ASSEMBLY, Courtesy	3.349-1
LAMP ASSEMBLY, Instrument Panel Ash Receiver	22.092-4
LAMP ASSEMBLY, License	3.335-1
LAMP ASSEMBLY, Map	3.350-1
LAMP ASSEMBLY, Trunk	3.660-1
LAMPS, Air Conditioning Thermostat Control	13.477-10a
LATCH, Front Door	23.050-1
LATCH, Liftgate	23.410-1
LATCH, Rear Auxiliary Floor Storage Compartment	20.452-8
LATCH, Rear Door	23.051-1
LATCH, Tailgate	23.039-1
LATCH KIT, Sun Roof	28.130
LEAD, Wire Assembly Rear Window Defogger	13.620-3
LEAF, Rear Leaf Spring Main	11.104
LENS, Air Conditioning Thermostat Control	13.477-8b
LENS, Brake Failure Warning Lamp	3.510-11
LENS, Cargo Area Lamp	3.670-5
LENS, Clock	3.369-1
LENS, Console Housing	27.286-1
LENS, Courtesy Lamp	3.349-3
LENS, Domelamp	3.346-3
LENS, Heater Control Bezel	13.017-14
LENS, Hi-Beam	3.510-12
LENS, Instrument Cluster	3.515-1
LENS, Instrument Cluster (Alternator)	3.515-7
LENS, Instrument Cluster (Alternator And Parking)	3.515-8
LENS, Instrument Cluster (Oil)	3.515-6
LENS, Instrument Cluster (Oil And Brake)	3.515-9
LENS, Instrument Cluster Mask	3.515-4
LENS, Instrument Panel Controls Identification	22.100-28
LENS, Instrument Panel Identification	3.771-2
LENS, License Plate Lamp	3.339-1

DESCRIPTION	GROUP NO.
L - Cont.	
LENS, Open Door Warning Lamp	3.655-5
LENS, Parking And Front Directional Signal Lamp	3.292-8
LENS, Parking Brake Warning Lamp	3.650-4
LENS, Rear Quarter Interior Lamp	3.675-6
LENS, Rear Quarter Side Lamp	3.746-2
LENS KIT, Back-Up Lamp	3.317-1
LENS KIT, Front Side Lamp	3.726-1
LENS KIT, Parking And Front Directional Signal Lamp	3.292-7
LENS KIT, Parking Lamp	3.292-9
LENS KIT, Rear Directional Signal Lamp	3.306-2
LENS KIT, Rear Quarter Side Lamp	3.746-1
LENS KIT, Tail, Stop And Rear Directional Signal Lamp	3.306-1
LETTER, Rear Deck Name	26
LETTER, Tail Lamp Lens	3.308-1
LETTER, Tailgate Name	26
LETTERS, Door Trim Panel Overlay	23.200-6
LEVER, Air Discharge Duct Louvers Adjusting	13.515-7a
LEVER, Automatic Transmission Front Servo	16.060-6
LEVER, Automatic Transmission Kickdown Band	16.348-3
LEVER, Automatic Transmission Manual And Park	16.225-2
LEVER, Automatic Transmission Manual Control	16.225-1
LEVER, Automatic Transmission Manual Valve Detent	16.225-9
LEVER, Automatic Transmission Parking Brake Toggle	16.090-5
LEVER, Automatic Transmission Parking Brake Toggle Lift	16.090-12
LEVER, Automatic Transmission Parking Brake Torsion	16.090-14
LEVER, Automatic Transmission Rear Servo	16.070-3
LEVER, Automatic Transmission Reverse Band	16.430-2
LEVER, Automatic Transmission Reverse Band Short	16.430-3
LEVER, Automatic Transmission Throttle Valve Control	16.500-1
LEVER, Automatic Transmission Upper Valve Body Manual Valve	16.205-10
LEVER, Brake Shoe Automatic Adjusting	8.012-1
LEVER, Brake Shoe Parking Brake	8.024-1
LEVER, Carburetor Control Shaft	4.070-11
LEVER, Carburetor Control Shaft To Kickdown Switch	4.070-10
LEVER, Clutch Pedal To Rod	5.155-1
LEVER, Clutch Release Main	5.169-1
LEVER, Clutch Throwout	5.123-1
LEVER, Column Gear Shift Upper	7.020-1
LEVER, Directional Signal	3.324-1
LEVER, Door Lock Cylinder	23.081-4
LEVER, First And Second Floor Gear Shift Selector	7.080-3
LEVER, Floor Gear Shift	7.001-1
LEVER, Floor Gear Shift Selector	7.080-1

ALPHABETICAL INDEX

DESCRIPTION	GROUP NO.
L - Cont.	
LEVER, Gear Shift	7.130-1 Thru 7.130-5
LEVER, Hand Operated Parking Brake	8.180-4
LEVER, Heater Controls	13.017-3 Thru 13.017-5
LEVER, Liftgate Lock Cylinder	23.415-3
LEVER, Low And Reverse Gear Shift Operating Shaft	7.085-1
LEVER, Low And Reverse Gear Shift Operating Shaft Extension	7.085-4
LEVER, Neutral Safety And Back-Up Light Switch Actuating	7.004-7
LEVER, Rear Deck Lock Cylinder	23.081-12
LEVER, Reverse Floor Gear Shift Selector	7.080-2
LEVER, Steering Wheel Actuator Shoe Release	10.848
LEVER, Steering Wheel Release	10.801
LEVER, Tailgate Electric Operated Window Control Switch	23.330-28
LEVER, Third And Fourth Floor Gear Shift Selector	7.080-4
LEVER, Transmission Shifter Interlock (Low And Reverse)	6.198-6
LEVER, Transmission Shifter Interlock (Second And High)	6.198-7
LEVER ASSEMBLY, Foot Operated Parking Brake	8.180-1
LIFT, Jack	14.138-2
LIFTER, Gear Shift Lever	7.005-10
LIGHT ASSEMBLY, Heated Rear Window Indicator	3.771-1
LIGHTER ASSEMBLY, Cigar	3.352-1
LINK, Automatic Transmission Parking Brake Toggle	16.090-2
LINK, Automatic Transmission Reverse Band	16.455-1
LINK, Automatic Transmission Throttle Valve Control (Lower)	16.505-1
LINK, Automatic Transmission Throttle Valve Control Rod Adjusting	16.503-1
LINK, Brake Master Cylinder	8.054-1
LINK, Brake Shoe Adjusting Actuator	8.009-2
LINK, Brake Shoe Automatic Adjusting	8.009-1
LINK, Brake Shoe To Cylinder Operating	8.016
LINK, Clutch Actuating Spring	5.161-9
LINK, Electric Windshield Wiper Drive	22.035-1
LINK, Front Door Lock Cylinder To Door Latch	23.055-9
LINK, Front Door Outside Handle To Door Latch Release	23.055-6
LINK, Glove Box Door Check	22.066-1
LINK, Heater Air Damper Idler Lever	13.017-29
LINK, Liftgate Bellcrank To Locking Lever	23.412
LINK, Power Brake Bellcrank To Brake Pedal	8.420-1
LINK, Rear Axle Torque	11.175-1
LINK, Rear Door Outside Handle To Door Latch	23.055-16

DESCRIPTION	GROUP NO.
L - Cont.	
LINK, Rear Door Push Button Locking Bellcrank To Lock	23.057-10
LINK, Remote Control To Front Door Latch	23.055-1
LINK, Remote Control To Rear Door Latch	23.055-13
LINK, Steering Linkage Center Cross	10.240
LINK, Tailgate Electric Operated Window Window Control Switch To Lock	23.330-25
LINK, Tailgate Upper Hinge Stop	23.006-18
LINK, Vacuum Windshield Wiper Drive	22.047-6
LINKAGE ASSEMBLY, Steering	10.100
LINK KIT, Rear Axle Torque Hi-Perf	19
LITTER BAG, Front Door Trim Panel	29.070-3
LOCK, Automatic Transmission Governor Body Bolt	16.385-5
LOCK, Front Seat Back Forward Tilt	29.105-11
LOCK, Front Seat Back Spring Headrest Mounting Panel	29.173-6
LOCK, Gasoline Gauge	3.615-6
LOCK, Hood (Inside Release)	12.060-1a
LOCK, Hood (Outside Release)	12.060-1
LOCK, Rear Deck	23.070-1
LOCK, Steering Gear Shaft	10.703-1
LOCK, Tailgate Remote Control	23.039-3
LOCK, Valve Spring Retainer	1.085
LOCK ASSEMBLY, Console Compartment Door	27.280-1
LOCK ASSEMBLY, Glove Box (Keyless)	22.073-1
LOCK ASSEMBLY, Glove Box (Regular)	22.073-2
LOCK ASSEMBLY, Glove Box (Special)	22.073-3
LOCK ASSEMBLY, Rear Auxiliary Floor Side Compartment Door	20.438-1
LOCK ASSEMBLY, Rear Auxiliary Floor Storage Compartment	20.453-1
LOOP, Rear Seat Back Latch Retainer	29.217-1
LOUVERS, Air Conditioning Air Discharge Bezel	13.515-4
LOUVERS, Air Conditioning Air Discharge Bezel (Dual)	13.515-6
LOUVERS, Air Conditioning Air Discharge Bezel (Single)	13.515-5
LOUVERS, Air Conditioning Evaporator Or High Level Ventilation Air Discharge	13.515-6c
LOUVERS, Air Conditioning Evaporator Or High Level Ventilation Air Discharge Duct (Center-Upper)	13.515-6a
LOUVERS, Air Conditioning Evaporator Or High Level Ventilation Air Discharge Duct (Left)	13.515-6b
LOWER PLATE	3.400-24
LUBRIPLATE	30.035
- M -	
MAGNET, Automatic Transmission Oil Screen	16.045-4
MAGNET, Gasoline Filter	15.190-5
MAGNET, Seat Belt Buckle	27.290-21
MANIFOLD, Aluminum Hi-Perf	19
MANIFOLD, Cast Iron Hi-Perf	19

ALPHABETICAL INDEX

DESCRIPTION	GROUP NO.
M - Cont.	
MANIFOLD, Exhaust Emission Air Injection.	4.538
MANIFOLD, Intake	1.067-1
MANIFOLD ASSEMBLY, Exhaust	1.067-7
MASK, Instrument Cluster Lens	3.515-2
MASK, Instrument Panel Clock Opening	22.100-48
MASK, Instrument Panel Defroster Opening Bezel	22.100-54
MAST, Radio Front Fender Antenna	15.030-1b
MAT, Front Floor	29.294-1
MAT, Rear Auxiliary Floor	29.420-1
MAT, Rear Auxiliary Floor Storage Compartment	29.322-1
MAT, Rear Floor	29.302-1
MAT, Rear Seat Back Extension Frame	29.426-1
MAT, Rear Seat Back Frame	29.425-1
MAT, Rear Trunk Compartment Floor	29.319
MATERIAL, Embossed Vinyl	29.356-6
MATERIAL, Genuine Leather	29.355
MATERIAL, Plain Vinyl	29.356-1
MATERIAL, Pre-Lined Vinyl	29.356-3a
MATERIAL, Seat Cloth	29.350
MATERIAL, Seat Welt	29.365
MATERIAL, Side Panel Vinyl	29.356-7
MEDALLION, Back-Up Lamp Lens	3.317-5
MEDALLION, Door Trim Panel	23.200-3
MEDALLION, Front Fender	26
MEDALLION, Hood	26
MEDALLION, Rear Deck Door	26
MEDALLION, Rear Deck Lower Panel	26
MEDALLION, Rear Fender	26
MEDALLION, Rear Seat Back	29.248-1
MEDALLION, Tailgate	26
MEDALLION KIT, Radiator Grille	2.050-35
MIRROR, Inside Rear View	27.084-1
MIRROR, Outside Rear View	15.270-1
MODIFICATION KIT, Carburetor	4.001-1a
MODIFICATION KIT, Regulator	4.335-1a
MODULATOR, Automatic Transmission Vacuum Control	16.260-1
MOTOR, Air Cleaner Air Temperature Control Vacuum	4.088-10
MOTOR, Air Outlet Damper Vacuum	13.020-1
MOTOR, Defroster Air Damper	13.020-2g
MOTOR, Door Electric Operated Window Regulator	23.310-1
MOTOR, Heater Air Damper Vacuum	13.020-2e
MOTOR, Heater And Defroster	13.072-1
MOTOR, Heater-Defroster-Air Conditioner Or High Level Ventilation Blower	13.072-4
MOTOR, Rear Quarter Electric Operated Window Regulator	24.205
MOTOR, Rear Window Defogger Blower	13.605-1
MOTOR, Recirculating Air Damper Vacuum	13.020-2a
MOTOR, Starting	3.020-1
MOTOR, Tailgate Electric Operated Window Regulator	23.310-3
MOTOR, Windshield Wiper	22.027-1
MOULDING, Console Compartment Door Opening	27.271-1

DESCRIPTION	GROUP NO.
M - Cont.	
MOULDING, Door And Fender Protective	15.120-3
MOULDING, Door And Panel Protective	15.120-1
MOULDING, Door Armrest	23.215-1
MOULDING, Front Body Roof Rail Drip	20.395-2
MOULDING, Front Bumper Rail	12.168-8
MOULDING, Front Door	26
MOULDING, Front Door Trim Panel Center	23.198-2
MOULDING, Front Door Trim Panel Horizontal	23.198-4
MOULDING, Front Door Trim Panel Lower	23.198-3
MOULDING, Front Door Trim Panel "U" Shape	23.198-6
MOULDING, Front Door Trim Panel Upper	23.198-1
MOULDING, Front Door Trim Panel Vertical	23.198-5
MOULDING, Front Fender	26
MOULDING, Front Pillar Side	26
MOULDING, Front Seat Back	29.115-3
MOULDING, Front Seat Back Kickpanel	29.116
MOULDING, Front Seat Back Kickpanel Insert	29.118
MOULDING, Front Seat Sidewing Panel	29.120-3
MOULDING, Glove Box Door	22.060-7
MOULDING, Glove Box Door (Lower)	22.060-9
MOULDING, Glove Box Door (Upper)	22.060-8
MOULDING, Headlamp Door	3.252-4
MOULDING, Headlamp Door (Inner)	3.252-5
MOULDING, Headlamp Door (Outer)	3.252-6
MOULDING, Headlining Center Joint	29.013-1
MOULDING, Headlining Rear Side	29.014-3
MOULDING, Headlining Side Front Retainer	29.014-1b
MOULDING, Headlining Side Rear Retainer	29.014-1c
MOULDING, Headlining Side Retainer	29.014-1
MOULDING, Headlining Side Retainer (Metal)	29.014-1a
MOULDING, Hood	26
MOULDING, Instrument Cluster Bezel	3.510-6
MOULDING, Instrument Panel (Except 01-40)	22.100-32 Thru 22.100-39a
MOULDING, Instrument Panel Defroster Duct Opening	22.056-11a
MOULDING, Left Front Seat Back	29.115-1
MOULDING, Luggage Rack	27.200-1
MOULDING, Rear Auxiliary Storage Compartment Cover	20.452-5a
MOULDING, Rear Deck	26
MOULDING, Rear Door	26
MOULDING, Rear Door Trim Center	23.198-8
MOULDING, Rear Door Trim Lower	23.198-9
MOULDING, Rear Door Trim Panel Horizontal	23.198-10a
MOULDING, Rear Door Trim Panel Upper	23.198-7
MOULDING, Rear Fender	26
MOULDING, Rear Quarter Armrest	24.067-1
MOULDING, Rear Quarter Body Belt	26
MOULDING, Rear Quarter Side Trim Panel Center	24.065-2
MOULDING, Rear Quarter Side Trim Panel Upper	24.065-1

Printed in U.S.A.

DESCRIPTION	GROUP NO.
M - Cont.	
MOULDING, Rear Quarter Support Trim Panel Lower	24.065-7
MOULDING, Rear Quarter Support Trim Panel Upper	24.065-6
MOULDING, Rear Quarter Trim Panel Horizontal	24.065-4
MOULDING, Rear Quarter Trim Panel Lower	24.065-3
MOULDING, Rear Quarter Trim Panel Vertical	24.065-5
MOULDING, Rear Quarter Window Channel Retainer (Front)	24.019-1
MOULDING, Rear Quarter Window Channel Retainer (Upper And Rear)	24.019-2
MOULDING, Rear Quarter Window Finish	26
MOULDING, Rear Quarter Window Reveal	26
MOULDING, Rear Seat Back Frame Extension	29.228-1
MOULDING, Rear Seat Back Medallion	29.249-1
MOULDING, Rear Shelf Panel	29.248-3
MOULDING, Rear Shelf Panel (Vinyl)	29.034-3
MOULDING, Rear Shelf Panel Front	29.034-3a
MOULDING, Rear Storage Compartment	20.452-5a
MOULDING, Rear Window Finish	26
MOULDING, Rear Window Reveal	26
MOULDING, Right Front Seat Back	29.115-2
MOULDING, Rocker Panel	26
MOULDING, Roof Panel Front	26
MOULDING, Roof Rear Side	26
MOULDING, Roof Side Extension Panel	26
MOULDING, Side Roof Rail Drip	20.395-1
MOULDING, Sun Roof Interior Trim	28.117
MOULDING, Tailgate	26
MOULDING, Tailgate Carpet	23.230-2
MOULDING, Tailgate Window Reveal	26
MOULDING, Third Seat Back	29.266-2
MOULDING, Third Seat Back Top	29.266-1
MOULDING, Third Seat Cushion	29.279-5
MOULDING, Third Seat Cushion Support	29.279-1
MOULDING, Windshield Finish	26
MOULDING, Windshield Reveal	26
MOULDING ASSEMBLY, Radiator Grille Panel	26
MOULDING KIT, Instrument Panel Bulge Repair	22.056-22
MUFFLER	4.210
MUFFLER, Exhaust Emission Air Pump Relief Valve	4.507-2
- N -	
NAIL, Barrel	17.372
NAIL, Countersunk	17.374
NAIL, Screw	17.380
NAIL, Sinker	17.358
NAMEPLATE, Body Exterior	26
NAMEPLATE, Front Door Trim Panel	23.200-1
NAMEPLATE, Glove Box Door	22.060-5
NAMEPLATE, Instrument Panel	22.100-44
NAMEPLATE, Letter 'X', Glove Box Door	22.100-18b
NAMEPLATE, Rear Door Trim Panel	23.198-10c
NECK, Gasoline Tank Filler	4.141-1
NIPPLE, Automatic Speed Control Vacuum Line Hose	4.370-2
NIPPLE, Automotive Pipe	17.394
N - Cont.	
NIPPLE, Gasoline Tank Vent Tube To Rocker Arm Cover	4.142-14
NIPPLE, Heater Hose To Manifold	13.088-1
NIPPLE, Hood Air Scoop Damper Control Hose	12.001-21a
NIPPLE, Intake Manifold Vacuum	1.067-20
NIPPLE, Oil Filter Outlet Hose Elbow To Oil Pump Cover	1.198-4
NIPPLE, Oil Pressure Sending Unit	3.605-9
NIPPLE, Pipe	17.392
NIPPLE, Power Brake Vacuum	8.460-4
NOZZLE, Windshield Washer	22.054-1
NUT, Accelerator Control Rod Socket Adjusting	4.055-6
NUT, Automatic Speed Control Switch Lock	4.305-2
NUT, Automatic Transmission Front Servo Adjusting Screw	16.060-9
NUT, Automatic Transmission Kickdown Band Screw Adjusting Lock	16.348-8
NUT, Automatic Transmission Rear Servo Adjusting Screw	16.070-14
NUT, Automatic Transmission Reverse Band Adjusting Screw Lock	16.430-5
NUT, Ball Sleeve Tube	17.448
NUT, Barrel	17.434
NUT, Brake Shoe Adjusting Screw	8.014-3
NUT, Brake Tube For 3/16" Tube	8.130
NUT, Carburetor Air Cleaner Wing	4.088-3
NUT, Carburetor Choke Heater Tube	4.020-3
NUT, Carburetor Control Shaft Socket Adjusting	4.070-10
NUT, Clinch	17.440
NUT, Crown	17.430
NUT, Door Window Spanner Bolt Washer	25.014-5
NUT, Emergency Signal System Mounting Bracket Retaining	3.690-6
NUT, Emergency Signal System Switch To Bracket	3.690-3
NUT, Flared Tube	17.444
NUT, Flat	17.423
NUT, Front Fender Radio Antenna Dress	15.030-2
NUT, Front Seat Back Center Armrest Jam	29.142-8
NUT, Front Seat Back Forward Tilt Control	29.105-19a
NUT, Gear Shift Lever Knob	7.030-2
NUT, Rear Window Defogger Switch	13.615-5
NUT, Hexagon	17.406
NUT, Hexagon Jam	17.410
NUT, Hexagon Lock	17.416
NUT, Hexagon Machine Screw	17.412
NUT, Hexagon Slotted	17.408
NUT, Hood Tie Down Stud	12.001-25
NUT, Instrument Panel Headlamp Dimmer Switch	3.158-4
NUT, Inverted Flared Tube	17.446
NUT, Outside Rear View Remote Control Mirror Trim	15.270-10
NUT, Piloted Projection Weld	17.443
NUT, Power Steering Gear Pitman Shaft Adjusting Screw	10.600
NUT, Power Steering Gear Upper Thrust Bearing Adjuster Lock	10.637
NUT, Projection Weld "Regular"	17.442

Printed in U.S.A.

DESCRIPTION	GROUP NO.
N - Cont.	
NUT, Rear Axle Pinion	9.050-4
NUT, Rear Quarter Window Guide Roller	25.034-12
NUT, Rear Seat Back Center Armrest Frame Tee	29.234-2
NUT, Rear Seat Back Extension Frame Hinge Tee	29.220-7
NUT, Rear Seat Back Extension Frame Tee	29.227-2
NUT, Rear Seat Back Frame Side Arm Bracket Tee	29.220-8
NUT, Rear Seat Back Frame Tee	29.220-1a
NUT, Rear Speaker Control Assembly	15.320-33b
NUT, Serrated Hexagon Lock	17.417
NUT, Sleeve	17.436
NUT, Spring Flat	17.422
NUT, Spring "J" Shape	17.424
NUT, Spring Push-On	17.421
NUT, Spring "U" Shape	17.426
NUT, Square	17.413
NUT, Square Machine Screw	17.414
NUT, Stamped	17.428
NUT, Steering Gear Cross Shaft Adjusting Screw	10.308-2
NUT, Steering Gear Shaft Roller Bearing Lock	10.828
NUT, Steering Gear Worm Ball Bearing	10.316-2
NUT, Steering Gear Worm Ball Bearing Adjuster Lock	10.326-2
NUT, Tailgate Electric Operated Window Regulator Worm Set Screw	23.308-17
NUT, Tee	17.438
NUT, Third Seat Back Frame Tee	29.258-2
NUT, Vacuum Motor To Damper	13.020-2i
NUT, Valve Rocker Arm	1.100-2
NUT, Wheel To Stud	8.286
NUT, Windshield Washer Nozzle	22.054-5
NUT, Windshield Wiper Control Holding	22.041
NUT, Wing	17.432
- O -	
"O" RING, Air Conditioning Evaporator Hose	13.440
"O" RING, Automatic Transmission Front Clutch Cylinder	16.115-2
"O" RING, Automatic Transmission Front Clutch Cylinder Piston	16.115-4
"O" RING, Automatic Transmission Front Clutch Cylinder Spring Bearing	16.115-5
"O" RING, Automatic Transmission Front Oil Pump	16.080-6
"O" RING, Automatic Transmission Front Oil Pump Suction Tube	16.080-12
"O" RING, Automatic Transmission Front Servo Piston (Front)	16.060-15
"O" RING, Automatic Transmission Front Servo Piston (Rear)	16.060-14
"O" RING, Automatic Transmission Front Servo Release Piston	16.060-17
"O" RING, Automatic Transmission Front Servo Sleeve	16.060-16
"O" RING, Automatic Transmission Kickdown Solenoid	16.235-2
"O" RING, Automatic Transmission Kickdown Solenoid Terminal	16.235-4
O - Cont.	
"O" RING, Automatic Transmission Manual Control Lever	16.225-6
"O" RING, Automatic Transmission Oil Filler Tube	16.020-5
"O" RING, Automatic Transmission Output Shaft Oil Sealing	16.160-6
"O" RING, Automatic Transmission Parking Brake Lever Anchor Pin	16.090-8
"O" RING, Automatic Transmission Parking Brake Torsion Lever Pin	16.090-18
"O" RING, Automatic Transmission Rear Clutch Drum	16.125-3
"O" RING, Automatic Transmission Rear Clutch Drum Oil Sealing	16.125-13
"O" RING, Automatic Transmission Rear Clutch Drum Piston	16.125-5
"O" RING, Automatic Transmission Rear Servo Piston	16.070-10
"O" RING, Automatic Transmission Speedometer	3.591-6
"O" RING, Automatic Transmission Speedometer	16.250-6
"O" RING, Automatic Transmission Sun Gear Oil Sealing (Center)	16.140-3
"O" RING, Automatic Transmission Sun Gear Oil Sealing (Front)	16.140-2
"O" RING, Automatic Transmission Sun Gear Oil Sealing (Rear)	16.140-4
"O" RING, Automatic Transmission Vacuum Control Modulator Sealing	16.260-2
"O" RING, Brake Master Cylinder Piston Stop Bolt	8.050-2
"O" RING, Clutch Release Main Lever	5.169-5
"O" RING, Engine Heater	15.145-2
"O" RING, Expansion Valve To Evaporator Valve	13.470-1a
"O" RING, Front Wheel Grease Outer Cap	8.296-3
"O" RING, Gasoline Vent Nipple To Rocker Arm Cover	4.142-15
"O" RING, Liftgate Latch Striker Bracket Sealer	23.416-6
"O" RING, Power Steering Gear Housing End Plug Seal	10.537
"O" RING, Power Steering Gear Rack-Piston Back-Up Seal	10.582
"O" RING, Speedometer Cable	3.570-13
"O" RING, Steering Knuckle Pin Thrust Bearing Lower	10.023-4
"O" RING, Steering Knuckle Pin Thrust Bearing Upper	10.023-3
"O" RING KIT, Power Steering Gear	10.550
ORNAMENT, Back-Up Lamp Lens	3.308-2
ORNAMENT, Body Exterior	26
ORNAMENT, Wheel Cover	8.274-3
OVERDRIVE	6.250
OVERHAUL KIT, Standard Transmission Small Parts	6.003
OVERLAY, Accelerator Pedal	4.040-5
OVERLAY, Air Conditioning Control	13.480-3
OVERLAY, Brake Pedal Pad Cover	8.148-2
OVERLAY, Clutch Pedal Pad Cover	5.144-2

Printed in U.S.A.

DESCRIPTION	GROUP NO.
O - Cont.	
OVERLAY, Door Armrest	23.215-3
OVERLAY, Door Console	27.270-2
OVERLAY, Foot Operated Parking Brake Lever Cover	8.180-8
OVERLAY, Front Door Trim Panel	23.200-1b
OVERLAY, Front Door Trim Panel Nameplate	23.200-1a
OVERLAY, Front Seat Sidewing Panel	29.120-4
OVERLAY, Front Vertical Bar	12.184-7
OVERLAY, Instrument Cluster Housing	3.510-3b
OVERLAY, Instrument Cluster Opening	3.510-4
OVERLAY, Instrument Panel	22.100-14 Thru 22.100-20
OVERLAY, Instrument Panel Glove Box Door	22.100-18
OVERLAY, Instrument Panel Identification	22.100-22 Thru 22.100-25c
OVERLAY, Radio And Tape Player Dial	15.320-21
OVERLAY, Radio Dial	15.320-20
OVERLAY, Rear Door Trim Panel	23.198-10e
OVERLAY, Rear Door Trim Panel Nameplate	23.198-10b
OVERLAY, Rear Quarter Armrest	24.067-3
OVERLAY, Rear Quarter Trim Panel	23.198-10f
OVERLAY, Rear Vertical Bar	12.184-7a
OVERLAY, Wheel Cover	8.274-3a
- P -	
PAD, Assist Handle	23.217-5
PAD, Assist Strap	29.005-1a
PAD, Automatic Transmission Converter Housing Front Cover	16.040-6
PAD, Bumper Jack	14.138-7
PAD, Door Electric Operated Window Regulator Motor Anti-Rattle	23.310-5
PAD, Door Outside Handle Button	23.074-17
PAD, Front Bumper Rail To Back Bar	12.168-7
PAD, Front Door Remote Control Anti-Rattle	23.056-5
PAD, Front Fender Radio Antenna To Fender	15.030-7
PAD, Front Floor Carpet	29.294-6
PAD, Front Floor Carpet Center	29.294-7
PAD, Front Pillar Crash	29.017-1
PAD, Front Seat Back	29.108-1
PAD, Front Seat Back Frame Side Tube	29.109-1
PAD, Front Seat Back Headrest Front	29.176-1
PAD, Front Seat Back Headrest Rear	29.176-2
PAD, Front Seat Back Lower	29.108-3
PAD, Front Seat Back Upper	29.108-2
PAD, Front Seat Back Upper Crash	29.109-2
PAD, Front Seat Back Upper Extension	29.108-4
PAD, Front Seat Center Armrest	29.144
PAD, Front Seat Center Cushion	29.159-1
PAD, Front Seat Cushion (Foam Rubber)	29.168-1
PAD, Front Seat Cushion (Jute)	29.168-2
PAD, Gear Selector Pointer	7.536-3
PAD, Gear Selector Pointer Dial Shroud	7.537-10
PAD, Gear Shift Lever Bezel	7.014-4
PAD, Headlining Retainer Crash	29.012-1
PAD, Instrument Cluster Bezel Crash	22.100-3a
P - Cont.	
PAD, Instrument Panel Controls Safety	22.100-12
PAD, Instrument Panel Crash	22.100-1 Thru 22.100-3
PAD, Liftgate Latch Release Handle	23.413-3
PAD, Rear Deck Door Handle	23.078-10
PAD, Rear Door Assist Handle	23.217-5
PAD, Rear Door Remote Control Anti-Rattle	23.056-6
PAD, Rear Floor Carpet	29.302-8
PAD, Rear Floor Extension	29.302-7b
PAD, Rear Floor Mat	29.302-9
PAD, Rear Floor Well Carpet	29.423-3
PAD, Rear Quarter Window Lower Bracket	25.034-5
PAD, Rear Quarter Window Lower Guide Roller Spacer	25.034-11
PAD, Rear Seat Back	29.224-1
PAD, Rear Seat Back Center Armrest	29.237
PAD, Rear Seat Back Lower	29.224-3
PAD, Rear Seat Back Upper	29.224-2
PAD, Rear Seat Cushion Cotton	29.194
PAD, Rear Seat Cushion Foam	29.198-1
PAD, Rear Window Reveal Moulding	29.015-2
PAD, Tailgate Electric Operated Window Regulator Motor Anti-Rattle	23.310-6
PAD, Tailgate Electric Operated Window Switch Escutcheon	23.330-21
PAD, Tailgate Window Regulator Handle To Tailgate	23.078-7
PAD, Third Seat Back	29.256
PAD, Third Seat Cushion	29.276
PAN, Automatic Transmission Oil	16.015-1
PAN, Automatic Transmission Oil	16.315-1
PAN ASSEMBLY, Engine Oil	19.151
PAN ASSEMBLY, Engine Oil Pan	1.151-1
PAN ASSEMBLY, Front Floor	20.005-1
PAN ASSEMBLY, Rear Floor	20.035-1
PANEL, Air Conditioning Controls Mounting	13.480-1
PANEL, Center Pillar Trim	29.019-1
PANEL, Console Housing Front Overlay	27.258-1
PANEL, Console Housing Rear Overlay	27.266-1
PANEL, Cowl Side Inner	20.155-2
PANEL, Cowl Side Outer	20.155-1
PANEL, Cowl Top	20.150-1
PANEL, Cowl Trim	29.010-1 Thru 29.010-2
PANEL, Cowl Vent Air Chamber	20.150-1a
PANEL, Cowl Ventilator Intake Cover	22.016-1
PANEL, Defroster Duct Mounting	13.118-11
PANEL, Front Door Outer	23.001-2
PANEL, Front Door Trim	29.070-1
PANEL, Front Fender Front Extension	12.075-5i
PANEL, Front Seat Back Kickpad Trim	29.112-2
PANEL, Front Seat Sidewing Trim	29.120-1
PANEL, Front Wheelhouse Crossmember Lower Splash	20.115-3
PANEL, Front Wheelhouse Front	20.085-2
PANEL, Front Wheelhouse Rear	20.085-3
PANEL, Fuse	3.155-1
PANEL, Headlamp Mounting	12.075-6

Printed in U.S.A.

DESCRIPTION	GROUP NO.
P - Cont.	
PANEL, Heater And Defroster Control Mounting	13.017-37
PANEL, Instrument	22.056-1
PANEL, Instrument Panel Controls Identification	22.100-26
PANEL, Instrument Panel Finish (Lower)	22.056-17
PANEL, Instrument Panel Finish (Right)	22.056-20
PANEL, Instrument Panel Finish (Upper)	22.056-14
PANEL, Liftgate	23.390
PANEL, Liftgate Latch And Bellcrank Mounting	23.409-1
PANEL, Lock Pillar Trim	29.023-1
PANEL, Quarter Side Trim (Rear Center)	29.052-12
PANEL, Quarter Side Trim (Rear Corners)	29.052-10
PANEL, Radiator Grille	2.051-1
PANEL, Rear Auxiliary Floor	20.430-1
PANEL, Rear Auxiliary Floor Rear	20.435-3
PANEL, Rear Auxiliary Floor Side	20.435-1
PANEL, Rear Auxiliary Floor Well Side Trim	29.462-1
PANEL, Rear Center	20.325-1a
PANEL, Rear Compartment And Shelf Trim	29.466
PANEL, Rear Compartment Door	20.451-1
PANEL, Rear Compartment Side Trim	29.460-1
PANEL, Rear Deck Overlay	26
PANEL, Rear Deck Upper	20.367-1
PANEL, Rear Door Outer	23.002-2
PANEL, Rear Door Trim	29.071-1
PANEL, Rear Floor Pan Side Extension	20.035-3
PANEL, Rear Quarter Body Lock Pillar Finish	20.247
PANEL, Rear Quarter Inner	20.265
PANEL, Rear Quarter Inside Lower	20.285-1
PANEL, Rear Quarter Lower Trim	29.052-3
PANEL, Rear Quarter Outer	12.125-1
PANEL, Rear Quarter Roof Extension Trim	29.060-1
PANEL, Rear Quarter Roof Side Trim	29.062-1
PANEL, Rear Quarter Side Extension Trim	29.052-5
PANEL, Rear Quarter Side Trim	29.052-1
PANEL, Rear Quarter Support Trim	29.054-1
PANEL, Rear Quarter Upper	20.300
PANEL, Rear Quarter Window Regulator	20.280-1
PANEL, Rear Seat Back	29.214-1
PANEL, Rear Seat Back Upper Trim	29.215-1
PANEL, Rear Shelf Side Extension Trim	29.035-1
PANEL, Rear Shelf Trim	29.034-1
PANEL, Rear Side Quarter And Rear Trim (Lower)	29.052-8
PANEL, Rear Side Quarter And Rear Trim (Upper)	29.052-7
PANEL, Rear Wheelhouse (Inner)	20.272-2
PANEL, Rear Wheelhouse (Outer)	20.272-1
PANEL, Shelf	20.370-1
PANEL, Side Roof Extension	20.410
PANEL, Spare Tire Cover	20.450-1
PANEL, Spare Wheel Well	20.035-4
PANEL, Tailgate Inner Trim	23.225-1
PANEL, Uniside Inner	20.170-3
PANEL, Uniside Outer	20.170-2
PANEL, Windshield Header	20.150-2

DESCRIPTION	GROUP NO.
P - Cont.	
PANEL ASSEMBLY, Front Wheelhouse	20.085-1
PANEL ASSEMBLY, Lower Deck Center	20.325-1
PANEL ASSEMBLY, Lower Rear	20.330-1 Thru 20.330-3
PANEL ASSEMBLY, Roof	20.420-1
PAWL, Automatic Transmission Parking Brake	16.090-1
PAWL, Front Seat Back Forward Tilt Lock	29.105-17
PAWL, Overdrive Sun Gear Locking	6.305
PEDAL, Accelerator	4.040-1
PEDAL, Brake	8.140-1
PEDAL, Clutch	5.135-1
PELLET, Throttle Control Cable	4.024-11
PERFORMANCE KIT, Automatic Transmission Valve Body	16.195-3
PILLAR, Body Center	20.220-1
PILLAR, Body Front	20.195-1
PILLAR, Body Front Upper	20.195-2
PILLAR, Body Lock	20.205-1
PILLAR, Rear Body	20.240-1
PILLAR, Rear Quarter Body Lock	20.235
PILLAR, Tailgate Opening	20.315
PILLOW, Seat	29.148
PIN, Automatic Speed Control Chain Clevis	4.390-4
PIN, Automatic Transmission Case Front Brake Band Anchor	16.010-8
PIN, Automatic Transmission Front Servo Piston	16.060-13
PIN, Automatic Transmission Front Servo Pivot	16.060-7
PIN, Automatic Transmission Parking Brake Lever Anchor	16.090-7
PIN, Automatic Transmission Parking Brake Lever Anchor Pin Retaining	16.090-9
PIN, Automatic Transmission Parking Brake Pawl Anchor Dowel	16.090-11
PIN, Automatic Transmission Parking Brake Toggle Lever To Link	16.090-6
PIN, Automatic Transmission Parking Brake Toggle Link	16.090-3
PIN, Automatic Transmission Parking Brake Torsion Lever	16.090-17
PIN, Automatic Transmission Parking Brake Torsion Lever Taper	16.090-19
PIN, Automatic Transmission Rear Servo Lever Roll	16.070-5
PIN, Automatic Transmission Rear Servo Pivot	16.070-4
PIN, Automatic Transmission Throttle Control Rod Spring Lock	16.508-2
PIN, Brake Shoe Hold Down Spring On Clip Retaining	8.008-7
PIN, Center Horn Button Contact	3.400-6
PIN, Clevis	17.474
PIN, Column Gear Shift Upper Lever Pivot	7.020-3
PIN, Cotter	17.460
PIN, Directional Signal Switch Canceling	3.321-17
PIN, Disc Brake Caliper Positioner Locating	8.810-4
PIN, Distributor Gear	3.042-4

Printed in U.S.A.

DESCRIPTION	GROUP NO.
P - Cont.	
PIN, Door Hinge	23.023
PIN, Dowel	17.462
PIN, Engine Oil Pump Release Valve Spring Retainer Cotter	1.176-3
PIN, Escutcheon	17.476
PIN, Exhaust Manifold Damper Heat Valve Spring	1.067-15
PIN, Fourspeed Transmission Idler Gear Shaft Retaining	6.168-2
PIN, Fourspeed Transmission Reverse Shifter Fork Shaft Retaining	6.192-2
PIN, Front Seat Back Forward Tilt Lock Clevis	29.105-18
PIN, Front Seat Back Forward Tilt Lock Stop	29.105-15
PIN, Gear Shift Lever Control	7.004-3
PIN, Gear Shift Lever Pivot Shaft Yoke	7.005-6
PIN, Gear Shift Upper Lever Pressure	7.025-1
PIN, Glove Box Retainer	22.058-6
PIN, Groove	17.468
PIN, Hood Tie Down	12.001-23
PIN, Horn Blowing Contact (LHD)	3.401-5
PIN, Horn Blowing Contact (RHD)	3.406-7
PIN, Liftgate Anti-Rattle Dowel	23.417-1
PIN, Liftgate Hinge	23.401
PIN, Oil Pump To Cylinder Block Dowel	1.154-3
PIN, Overdrive Shift Guide	6.295-6
PIN, Parking Brake Bellcrank	8.187-2
PIN, Power Steering Pump Cam To Body Lock	10.435-6
PIN, Power Steering Pump Ring To Body Dowel	10.435-8
PIN, Power Steering Pump Rotor Lock	10.435-5
PIN, Quarter Window Glass Retaining	24.018-3
PIN, Quarter Window Handle Spring	24.020-2
PIN, Rear Axle Differential Shaft (LLD)	9.036-3
PIN, Rear Axle Differential Shaft (WLD)	9.036-4
PIN, Rear Brake Shoe Automatic Adjusting Lever Latch	8.012-5
PIN, Rear Leaf Spring Front Eye Bushing	11.033-3
PIN, Rear License Plate Hinge	14.115-5
PIN, Reverse Lockout Finger Grip Spring	7.001-9
PIN, Spoke Horn Blowing Contact	3.400-27
PIN, Spring	17.472
PIN, Standard And Overdrive Transmission Shifter Fork Retaining	6.192-1
PIN, Steering Knuckle	10.013
PIN, Steering Wheel Actuator Lock Shoe Retaining	10.845
PIN, Steering Wheel Actuator Pivot	10.832
PIN, Steering Wheel Actuator Shoe Release Lever	10.849
PIN, Straight Chamfered	17.464
PIN, Straight Square End	17.466
PIN, Tailgate Hinge	23.006-16
PIN, Tailgate Door Lower Hinge	23.006-8a
PIN, Tailgate Door Upper Hinge	23.006-7b
PIN, Taper	17.470
PIN, Timing Case Cover To Cylinder Block Dowel	1.120-3

DESCRIPTION	GROUP NO.
P - Cont.	
PIN, Transmission Shifter Fork Interlock Lever Pivot	6.190-6
PIN, Transmission Speed Finder Interlock	6.215-1
PIN, Valve Rocker Arm Shaft Plug	1.098-6
PINION, Overdrive	6.309
PINION, Tailgate Electric Operated Window Regulator	23.308-5
PIN SET, Piston	1.149
PIPE, Exhaust (Front)	4.178-1
PIPE, Exhaust (Rear)	4.178-2
PIPE, Oil Filler	1.022-2
PIPE, Tail	4.227-1
PISTON	1.143
PISTON, Automatic Transmission Accumulator	16.375-1
PISTON, Automatic Transmission Front Clutch	16.415-3
PISTON, Automatic Transmission Front Clutch Cylinder	16.115-3
PISTON, Automatic Transmission Front Servo	16.060-3
PISTON, Automatic Transmission Front Servo Release	16.060-19
PISTON, Automatic Transmission Kickdown Servo	16.350-1
PISTON, Automatic Transmission Kickdown Servo (Inner)	16.350-4
PISTON, Automatic Transmission Rear Clutch Drum	16.125-4
PISTON, Automatic Transmission Rear Servo	16.070-6
PISTON, Automatic Transmission Reverse Servo	16.370-1
PISTON, Brake Master Cylinder Secondary	8.044
PISTON, Power Brake Master Cylinder Secondary	8.515-1
PISTON ASSEMBLY, Automatic Transmission Rear Clutch	16.425-1
PISTON SET, Front Brake Wheel Cylinder	8.078-1
PISTON SET, Rear Brake Wheel Cylinder	8.078-2
PIVOT, Accelerator Pedal	4.040-6
PIVOT, Bellcrank To Throwout Lever Rod	5.187-4
PIVOT, Clutch Release Idler	5.168-13
PIVOT, Clutch Release Idler Outer Lever	5.168-3
PIVOT, Clutch Throwout Lever	5.130-3
PIVOT, Front Door Ventilator Upper	23.118-2
PIVOT, Spoke Horn Button Insulator	3.400-28
PIVOT, Valve Rocker Arm	1.101-1
PIVOT ASSEMBLY, Clutch Throwout Lever	5.130-1
PLATE, Air Conditioning Intermediate Pulley Bracket Adjusting	13.430-15
PLATE, Ammeter Mounting	3.600-5
PLATE, Ash Receiver Tray Mounting	22.096-5
PLATE, Automatic Transmission Annulus Rear Gear Thrust	16.458-9
PLATE, Automatic Transmission Converter Drive	16.035-1
PLATE, Automatic Transmission Converter Drive Reinforcement	16.035-4
PLATE, Automatic Transmission Front Clutch Cylinder Drive	16.115-9

Printed in U.S.A.

DESCRIPTION	GROUP NO.
P - Cont.	
PLATE, Automatic Transmission Front Clutch Cylinder Driven	16.115-10
PLATE, Automatic Transmission Front Clutch Cylinder Pressure	16.115-8
PLATE, Automatic Transmission Front Clutch Drive	16.415-9
PLATE, Automatic Transmission Front Clutch Pressure	16.415-8
PLATE, Automatic Transmission Front Self Adjusting Cam	16.060-10
PLATE, Automatic Transmission Planetary To Output Shaft Needle Bearing Thrust	16.152-2
PLATE, Automatic Transmission Rear Clutch	16.425-11
PLATE, Automatic Transmission Rear Clutch Drum Drive	16.125-10
PLATE, Automatic Transmission Rear Clutch Drum Driven	16.125-9
PLATE, Automatic Transmission Rear Clutch Drum Pressure	16.125-11
PLATE, Automatic Transmission Rear Clutch Pressure (Front)	16.425-9
PLATE, Automatic Transmission Rear Clutch Pressure (Rear)	16.425-12
PLATE, Automatic Transmission Sun Gear Driving Shell Thrust	16.440-3
PLATE, Automatic Transmission Upper Valve Body End	16.205-12
PLATE, Automatic Transmission Upper Valve Body End (Front)	16.205-8
PLATE, Automatic Transmission Upper Valve Body End Plate	16.205-2
PLATE, Automatic Transmission Upper Valve Body Oil Tube	16.205-16
PLATE, Automatic Transmission Valve Body Separating	16.215-9
PLATE, Body Exterior Name	26
PLATE, Boot Gear Shift Lever	7.017-5b
PLATE, Brake Master Cylinder Piston Stop	8.046-1
PLATE, Brake Shoe Anchor Pin Guide	8.022-1
PLATE, Center Horn Button Contact	3.400-4
PLATE, Clutch Pedal To Bellcrank Rod Seal Retainer	5.162-2
PLATE, Column Gear Shift Alignment	7.085-2
PLATE, Cowl Vent Air Chamber Cover	20.120-2
PLATE, Directional Signal Switch Canceling	3.321-13
PLATE, Directional Signal Switch Locking	3.321-12
PLATE, Door Armrest Mounting	29.075-11
PLATE, Door Lock Striker Tapping	23.087-8
PLATE, Electric Operated Window Regulator Control Switch Mounting	23.330-11
PLATE, Electric Windshield Wiper Motor Switch Contact	22.030
PLATE, Filler Plug Instruction	9.001-5
PLATE, Floor To Front Side Sill Reinforcement Cross Tie	20.017-2
PLATE, Fourspeed Transmission Synchronizer Clutch Shaft	6.100-3
PLATE, Front Brake Support	8.001
PLATE, Front Door Scuff	27.005-1

DESCRIPTION	GROUP NO.
P - Cont.	
PLATE, Front Door Trim Panel Medallion Backing	23.200-5
PLATE, Front Door Ventilator Friction Unit	23.123-1
PLATE, Front Door Window Regulator Crossarm Mounting	23.098-5
PLATE, Gear Shift Operating Shaft Stop	7.038-5
PLATE, Gear Shift Upper Lever Housing Lock	7.020-8
PLATE, Heater And Defroster Motor Mounting	13.072-11
PLATE, Heater Motor Opening Cover	20.120-4
PLATE, Heater Valve Opening	20.120-7
PLATE, Hood Tie Down	12.001-24
PLATE, Horn Blowing Ring Contact	3.406-8
PLATE, Horn Blowing Ring Index	3.406-11
PLATE, Horn Button Index	3.400-17
PLATE, Instrument Panel Lamp Mounting	3.531-1
PLATE, Instrument Panel To Cowl Vent Air Chamber	22.056-6a
PLATE, Outside Rear View Remote Control Actuator Mounting	15.270-14
PLATE, Overdrive Sun Gear Balk Snap Ring	6.302-3
PLATE, Plastic Adhesive Mounting	15.095
PLATE, Post Office Vehicle Name	14.145-7
PLATE, Power Brake Master Cylinder Piston Push Rod	8.505-3
PLATE, Power Brake Valve Body Diaphragm	8.485-2
PLATE, Power Steering Pump End	10.445-10
PLATE, Power Steering Pump Oil Reservoir Reinforcement	10.465-11
PLATE, Power Steering Pump Pressure	10.445-9
PLATE, Power Steering Pump Pulley Belt Adjusting	10.455-5
PLATE, Power Steering Pump Thrust	10.445-13
PLATE, Radiator Grille Name	2.050-33
PLATE, Radio Cable Conduit	3.680-1
PLATE, Radio Rear Shelf	15.320-28a
PLATE, Rear Auxiliary Cover Moulding Fastening	20.452-5c
PLATE, Rear Axle Lateral Stabilizer To Axle Housing	11.265-1
PLATE, Rear Axle Lateral Stabilizer To Crossmember	11.270-1
PLATE, Rear Axle Torque Link To Side Sill Bracket Mounting	11.182
PLATE, Rear Brake Support	8.002-1
PLATE, Rear Door Ash Receiver Mounting	23.182-6
PLATE, Rear Door Scuff	27.007-1
PLATE, Rear Quarter Ash Receiver Mounting	24.050-5
PLATE, Rear Quarter Electric Operated Window Regulator Control Switch	24.220-4
PLATE, Rear Seat Back Hinge Fastening	29.220-2
PLATE, Rear Seat Cushion Retainer	29.192-3
PLATE, Rear Window Defogger Mounting	20.370-3
PLATE, Seat Belt Mounting	20.038-3
PLATE, Shoulder Harness Anchor	20.220-3
PLATE, Spare Wheel Mounting Rod	8.330-3
PLATE, Steering Gear Jacket Tube Jacket Lock	10.338-7a
PLATE, Steering Gear Jacket Tube To Toeboard Support	10.350-1

Printed in U.S.A.

DESCRIPTION	GROUP NO.
P - Cont.	
PLATE, Steering Wheel And Directional Signal Actuator Support Lock	10.852
PLATE, Steering Wheel Spoke Trim	10.280-6
PLATE, Tachometer Mounting	3.700-11a
PLATE, Tail Lamp Mounting	20.325-2
PLATE, Tailgate Locking Instruction	23.006-19
PLATE, Tailgate Lower Left Hinge To Body Moulding	23.006-13a
PLATE, Tailgate Upper Left Hinge To Body Moulding	23.006-13b
PLATE, Third Seat Back Hinge Fastening	29.258-4
PLATE, Third Seat Back Moulding Fastening	29.258-6
PLATE, Third Seat Back Support Fastening	29.258-7
PLATE, Third Seat Cushion Hinge Fastenings	29.278-2
PLATE, Third Seat Cushion Moulding Fastening	29.278-4
PLATE, Torque Link To Side Sill	11.179
PLATE, Transmission Reverse Idler Shaft And Countershaft	6.172-1
PLATE, Transmission Synchronizer Clutch Shaft Low And Reverse	6.100-2
PLATE, Transmission Synchronizer Clutch Shaft Second And High	6.100-1
PLATE, Turning Radius Stop	10.010-1
PLATE AND SWITCH, Electric Windshield Wiper Motor	22.029-1
PLATE ASSEMBLY, Door Window Guide	25.052-2d
PLATE ASSEMBLY, Front Door Latch Remote Control Mounting	23.056-1a
PLATE ASSEMBLY, Name "RAMBLER"	26
PLATE ASSEMBLY, Rear Door Latch Remote Control Mounting	23.056-3a
PLATE ASSEMBLY, Rear Door Window Guide Roller Mounting	25.052-11b
PLATE ASSEMBLY, Rear Leaf Spring To Axle U-Bolt Tie	11.136
PLATE ASSEMBLY, Rear License Plate Mounting	14.115-1
PLATE KIT, Clutch Driven	5.040-1
PLATE TO JACKET	10.338-7b
PLUG, Automatic Transmission Case	16.010-5
PLUG, Automatic Transmission Case	16.310-2
PLUG, Automatic Transmission Case Pipe	16.010-6
PLUG, Automatic Transmission Governor Press Check	16.385-16
PLUG, Automatic Transmission Kickdown Shaft	16.348-5
PLUG, Automatic Transmission Oil Filler Tube Hole	16.020-6
PLUG, Automatic Transmission Parking Sprag Reaction	16.390-1
PLUG, Automatic Transmission Reverse Servo Piston	16.370-4
PLUG, Automotive Hexagon Head Pipe	17.514
PLUG, Automotive Hexagon Socket Drain	17.526
PLUG, Automotive Hexagon Socket Pipe	17.518
PLUG, Automotive Square Head Pipe	17.512
PLUG, Automotive Square Socket Pipe	17.516
PLUG, Brake Master Cylinder Piston Stop	8.515-4

DESCRIPTION	GROUP NO.
P - Cont.	
PLUG, Brake Master Cylinder Primary Piston Stop Hole	8.050-3
PLUG, Button	17.494
PLUG, Button Rear Inner Retainer	28.124
PLUG, Camshaft Rear Bearing	1.041-2
PLUG, Clutch Release Idler Outer Oiler Hole	5.168-2
PLUG, Console Housing Fastening Screw	27.250-5
PLUG, Cork	17.496
PLUG, Cowl Top Panel Drain	20.150-6
PLUG, Cylinder Block Core Hole	1.038-1
PLUG, Cylinder Block Drain	1.020-3
PLUG, Cylinder Block Oil Filter By-Pass	1.038-2
PLUG, Cylinder Head Core	1.059-5
PLUG, Door Armrest Screw Hole	29.075-3
PLUG, Exhaust Manifold Air Emission Pump Tube Holes	1.067-7a
PLUG, Expansion	17.500
PLUG, Fourspeed Transmission Idler Gear Shaft Pin Access	6.168-3
PLUG, Front Door Armrest Remote Control Handle Opening	29.075-5
PLUG, Front Suspension Lower Control Arm Ball Joint Lubrication Fitting Hole	10.048-5
PLUG, Front Suspension Upper Control Arm Ball Joint Lubrication Fitting Hole	10.067-5
PLUG, Front Suspension Upper Control Arm Trunnion Bushing Lubrication Fitting Hole	10.042-5
PLUG, Fuel Vent Canister Metering	4.144-7
PLUG, Gasoline Tank Air Vent Tube	4.143-3
PLUG, Gasoline Tank Breather Tube	4.143-4
PLUG, Gasoline Tank Drain	4.148-1
PLUG, Gasoline Tank Upper Vent Tube Grommet	4.141-35a
PLUG, Gear Shift Lever Adjusting Hole	7.017-8
PLUG, Heater And Blower Housing Capillary Tube	13.012-16
PLUG, Hexagon Head Pipe	17.488
PLUG, Hexagon Outside Head Drain	17.506
PLUG, Instrument Panel Cigar Lighter Hole	22.100-62
PLUG, Instrument Panel Glove Box Hole	22.100-62a
PLUG, Instrument Panel Glove Box Lamp Switch Hole	22.100-61
PLUG, Intake Manifold	1.067-19
PLUG, Oil Channel	1.185
PLUG, Overdrive Transmission Case Drain Magnetic	6.260-4
PLUG, Overdrive Transmission Case Drain Non-Magnetic	6.260-5
PLUG, Overdrive Transmission Case Filler	6.260-6
PLUG, Overdrive Transmission Case Oil Seal	6.260-7
PLUG, Power Brake Master Cylinder Piston Stop	8.515-4
PLUG, Power Brake Vacuum Nipple	8.460-5
PLUG, Power Steering Gear Housing End	10.535
PLUG, Power Steering Gear Rack-Piston End	10.585
PLUG, Power Steering Pump Control Valve Retaining	10.445-4
PLUG, Rear Axle Filler	9.005-1
PLUG, Rear Door Armrest	29.075-3a
PLUG, Rear Quarter Armrest Screw Hole	29.056-2

Printed in U.S.A.

ALPHABETICAL INDEX

DESCRIPTION	GROUP NO.
P - Cont.	
PLUG, Rear Quarter Upper Trim Panel Shoulder Harness Bolt Hole	29.060-3
PLUG, Slotted Headless Pipe	17.492
PLUG, Solenoid Control Switch	6.010-3
PLUG, Square Head Pipe	17.486
PLUG, Square Socket Pipe	17.490
PLUG, Steering Gear Housing Oil Filler Piper	10.294
PLUG, Steering Linkage Tie Rod End Lubrication Fitting Hole	10.126-2
PLUG, Steering Linkage Tie Rod Lubrication Fitting Hole	10.122-2
PLUG, Steering Upper Shaft To Lower Shaft Coupling Spacer	10.735
PLUG, Thermostat Housing	2.102-7
PLUG, Transmission Drain	6.005-6
PLUG, Transmission Expansion	6.005-5
PLUG, Transmission Filler Pipe	6.005-4
PLUG, Wood	17.498
PLUG KIT, Engine Oil Pan Drain	1.151-3
PLUNGER, Automatic Transmission Upper Valve Body 2-3 Shift	16.205-6
PLUNGER, Console Compartment Door Lift	27.262-1
PLUNGER, Engine Oil Pump Release Valve.	1.176-1
PLUNGER, Power Brake Valve Push Rod	8.480-6
PLUNGER, Solenoid Control Switch	6.010-2
POINTER, Gear Selector	7.536-1
POPPET, Power Brake Valve Push Rod	8.480-8
POPPET, Power Steering Gear Pressure Check Valve	10.530
POPPET, Transmission Speed Finder Interlock	6.215-3
POSITIONER, Front Wheel Disc Brake Caliper	8.810-6
POST, Luggage Rack Air Deflector Center	27.212-6
POST, Luggage Rack Front	27.208-1
POST, Luggage Rack Rear	27.212-1
POST, Luggage Rack Side	27.210-2a
POST, Luggage Rack Side (Inner Half)	27.210-1
POST, Luggage Rack Side (Outer Half)	27.210-2
POST, Rear Deck Luggage Rack	23.009-11
POST ASSEMBLY, Front Seat Back Headrest	29.174-1
POST KIT, Luggage Rack Air Deflector Center	27.212-5
POWER STEERING KIT	10.360-1
POWER UNIT, Power Brake	8.400-1
PROTECTOR, Automatic Speed Control Lever Wire	4.330-2
PROTECTOR, Brake Master Cylinder Piston Cup	8.046-4
PROTECTOR, Directional Signal Switch Wire Harness	3.321-16
PROTECTOR, Front Seat Armrest Upholstery	29.145-2
PROTECTOR, Front Seat Center Cushion Pad	29.159-3
PROTECTOR, Front Seat Cushion Edge	29.168-4
PROTECTOR, Gear Selector Lamp Wire	7.535-8
PROTECTOR, Lift-gate	25.028-4
PROTECTOR, Power Brake Master Cylinder Secondary Piston Cup	8.515-7
PROTECTOR, Rear Quarter Stationary Glass	25.026-2
PROTECTOR, Rear Seat Cushion Edge	29.198-3
PROTECTOR, Rear Seat Cushion Front Facing	29.199
PULLEY, Air Conditioning Compressor Drive	13.415-5
PULLEY, Air Conditioning Drive Belt Back Idler	13.435-2
PULLEY, Air Conditioning Intermediate	13.430-1
PULLEY, Alternator	3.010-1
PULLEY, Alternator (Motorola)	3.017-2
PULLEY, Exhaust Emission Air Pump	4.610-1
PULLEY, Fan	2.003
PULLEY, Power Steering Pump	10.455-1
PULLEY, Vibration Damper	1.046-1
PULLEY KIT, Air Conditioning Drive Belt Back Idler	13.435-1
PUMP, Automatic Transmission Front Oil	16.080-1
PUMP, Exhaust Emission Air	4.500-1
PUMP, Fuel	4.110-1
PUMP, Windshield Washer	22.151-1
PUMP ASSEMBLY, Engine Oil	1.154-1
PUMP ASSEMBLY, Power Steering	10.430-1
PUMP ASSEMBLY, Water	2.080-1
- R -	
RACE, Automatic Transmission Planetary Carrier One Way Clutch	16.150-3
RACE, Automatic Transmission Sun Gear Needle Bearing Thrust Bearing	16.145-3
RACE, Steering Gear Shaft Upper Bearing Inner	10.825
RACK, Steering Column Housing	10.335-1
RACK KIT, Luggage	27.190
RACK - PISTON - NUT ASSEMBLY, Power Steering Gear	10.555
RAGBOARD, Front Seat Back Kickpad Panel	29.112-1
RAGBOARD, Front Seat Back Upper Trim	29.111-1
RAIL, Bumper	12.168-3
RAIL, Bumper Front	12.168-1
RAIL, Inner Belt Front	20.345-1
RAIL, Inner Belt Rear	20.350-1
RAIL, Luggage Rack Rear	27.203-2
RAIL, Luggage Rack Side	27.203-1
RAIL, Luggage Rack Side (Front)	27.203-1a
RAIL, Luggage Rack Side (Rear)	27.203-1b
RAIL, Overdrive Shift	6.295-3
RAIL, Rear Quarter Side Roof	20.255-5
RAIL, Side Roof	20.255-1 Thru 20.255-4
RAIL ASSEMBLY, Overdrive Shift	6.295-1
RALLY STRIPE, Exterior Decal	26
RECEIVER, Air Conditioning	13.455-1
RECEIVER, Center Horn Button	3.400-8
RECEIVER ASSEMBLY, Console Ash	27.285-1
RECEIVER ASSEMBLY, Rear Compartment Spare Wheel Cover Ash	24.051-1
RECEIVER ASSEMBLY, Rear Door Ash	23.182-1
RECEIVER ASSEMBLY, Rear Quarter Ash	24.050-1
RECEPTACLE, Front Seat Belt	27.290-20a
RECEPTACLE, Front Seat Belt Buckle	27.290-19
RECLINING ASSEMBLY, Front Seat	29.107-1a
REFLECTOR, Front Fender Side	12.078-1
REFLECTOR, Rear Quarter Panel Side	12.125-15

Printed in U.S.A.

DESCRIPTION	GROUP NO.
R - Cont.	
REGULATOR, Alternator Voltage (A.M.)	3.012-1
REGULATOR, Alternator Voltage (Motorola)	3.019-1
REGULATOR, Automatic Speed Control	4.335-1
REGULATOR, Front Door Electric Operated Window	23.300-1
REGULATOR, Front Door Window	23.098-1
REGULATOR, Instrument Cluster Voltage	3.622
REGULATOR, Rear Door Electric Operated Window	23.305-1
REGULATOR, Rear Door Window	23.098-8
REGULATOR, Rear Quarter Electric Operated Window	24.200-1
REGULATOR, Rear Quarter Window	24.001-1
REGULATOR, Tailgate Electric Operated Window	23.306-1
REGULATOR, Tailgate Window	23.040-1
REINFORCEMENT, Air Conditioning Expansion Valve	13.470-5
REINFORCEMENT, Body Center Pillar	20.230
REINFORCEMENT, Body Lock And Rear Body Pillar	20.218
REINFORCEMENT, Body Lock Pillar	20.215
REINFORCEMENT, Floor To Front Side Sill	20.017-1
REINFORCEMENT, Front Body Pillar	20.200
REINFORCEMENT, Front Door Outer Panel Handle	23.001-6
REINFORCEMENT, Front Door Pillar Upper	20.190-1
REINFORCEMENT, Front Seat Belt Mounting	20.005-3
REINFORCEMENT, Front Seat Support	20.072-3
REINFORCEMENT, Front Wheelhouse	3.082-4
REINFORCEMENT, Front Wheelhouse To Floor Reinforcement Channel	20.085-3a
REINFORCEMENT, Front Wheelhouse Upper Brace	20.085-3c
REINFORCEMENT, Front Wheelhouse Upper Brace (Side)	20.085-3d
REINFORCEMENT, Glove Box Door Hinge	22.060-4a
REINFORCEMENT, Inner To Outer Uniside Panels	20.170-4
REINFORCEMENT, Instrument Panel Assist Handle	22.100-64
REINFORCEMENT, Instrument Panel Radio Speaker Opening	22.077-5
REINFORCEMENT, Liftgate Handle	23.413-4
REINFORCEMENT, Liftgate Hinge	23.403
REINFORCEMENT, Liftgate Support Bracket	23.406-3
REINFORCEMENT, Lower Rear Inner Panel	20.330-4
REINFORCEMENT, Lower Rear Panel	20.330-1a
REINFORCEMENT, Luggage Rack Rear Post	27.212-3
REINFORCEMENT, Moulding Kit To Instrument Panel	22.056-24
REINFORCEMENT, Radiator Grille	2.050-16
REINFORCEMENT, Rear Body Pillar	20.245-3
REINFORCEMENT, Rear Center Panel	20.325-1b
REINFORCEMENT, Rear Door Outer Panel Handle	23.002-3
REINFORCEMENT, Rear Leaf Spring Front Mounting Bracket	11.035
REINFORCEMENT, Rear Leaf Spring Front Mounting Bracket	20.043-2
REINFORCEMENT, Rear Quarter Body Lock Pillar	20.245-1
REINFORCEMENT, Rear Quarter Outer Panel To Uniside	12.125-2
R - Cont.	
REINFORCEMENT, Rear Quarter Window Front	20.273
REINFORCEMENT, Rear Seat Back Frame	29.220-4
REINFORCEMENT, Rear Seat Belt Mounting	20.005-5
REINFORCEMENT, Rear Shock Absorber Mounting	20.038-2
REINFORCEMENT, Rear Shock Upper Mounting Bracket	11.224-4
REINFORCEMENT, Rear Sill To Cross Sill Bumper Mount	20.070-6
REINFORCEMENT, Rear Spring Rear Mounting Bracket	20.070-5a
REINFORCEMENT, Rear Wheelhouse To Floor Pan	20.272-5
REINFORCEMENT, Rocker Panel	20.180-1
REINFORCEMENT, Side Roof Rail	20.260-1 Thru 20.260-4
REINFORCEMENT, Side Roof Rail To Rear Quarter Side Roof Rail	20.260-5
REINFORCEMENT, Steering Gear Shaft Flange	10.715
REINFORCEMENT, Tailgate Upper Hinge To Rear Quarter Panel Extension	23.006-12a
REINFORCEMENT KIT, Tailgate Upper Hinge To Rear Quarter Panel Extension	23.006-12
RELAY, Air Conditioning Blower Motor	13.075-1
RELAY, Heated Rear Window	3.773-1
RELAY, Horn	3.125-1
RELAY, Low Fuel Warning Light	3.615-12
RELAY, Seat Belt Warning	3.787-1
RELAY, Starting Motor	3.024-1
REPAIR KIT, Air Conditioning Receiver Check Valve	13.455-3
REPAIR KIT, Brake Failure Warning Switch	8.104-3
REPAIR KIT, Brake Master Cylinder	8.048
REPAIR KIT, Canister Purge Valve	4.144-9
REPAIR KIT, Directional Signal Switch	3.321-4
REPAIR KIT, Front Brake Wheel Cylinder	8.080-1
REPAIR KIT, Front Wheel Disc Brake Caliper	8.820
REPAIR KIT, Fuel Pump	4.110-11
REPAIR KIT, Power Brake Master Cylinder	8.512
REPAIR KIT, Power Brake Power Unit	8.405
REPAIR KIT, Rear Brake Wheel Cylinder	8.080-2
REPAIR KIT, Sun Roof Header Adhesive	28.100-2
REPAIR KIT, Sun Roof Slide Channel Water Leak	28.114-1
RESERVOIR, Power Steering Pump Oil	10.465-1
RESERVOIR, Windshield Washer	22.052-4
RESISTOR, Heater - Defroster - Air Conditioner - High Level Ventilation - Blower Motor	13.072-18
RETAINER, Accelerator Control Shaft Felt Washer	4.070-4
RETAINER, Air Conditioner Air Discharge Lower Door	13.515-21
RETAINER, Air Conditioning Air Discharge Grille Dual Outlet	13.510-18
RETAINER, Air Conditioning Evaporator Air Discharge Duct Single Outlet	13.510-15

Printed in U.S.A.

DESCRIPTION	GROUP NO.
R - Cont.	
RETAINER, Air Conditioning Evaporator Air Discharge Single Duct Louvers	13.515-16
RETAINER, Air Conditioning Expansion Valve	13.470-4
RETAINER, Air Conditioning Floor Cooling Door	13.488-13
RETAINER, Ash Receiver To Armrest To Rear Door	23.182-8
RETAINER, Automatic Transmission Front Clutch Cylinder Spring	16.415-7
RETAINER, Automatic Transmission Governor Spring	16.085-3
RETAINER, Automatic Transmission Kickdown Servo Inner Piston	16.350-6
RETAINER, Automatic Transmission Parking Brake Anchor Pin	16.090-10
RETAINER, Automatic Transmission Parking Brake Linkage Rod	16.090-21
RETAINER, Automatic Transmission Parking Brake Torsion Lever Pin Spring	16.090-16
RETAINER, Automatic Transmission Rear Bearing	16.175-1
RETAINER, Automatic Transmission Rear Bearing	16.475-1
RETAINER, Automatic Transmission Rear Bearing Retainer Oil	16.175-3
RETAINER, Automatic Transmission Rear Clutch	16.425-4
RETAINER, Automatic Transmission Rear Clutch And Piston	16.425-4b
RETAINER, Automatic Transmission Rear Clutch Drum Spring	16.125-7
RETAINER, Automatic Transmission Rear Clutch Piston	16.425-4a
RETAINER, Automatic Transmission Rear Servo Piston	16.070-8
RETAINER, Automatic Transmission Reverse Servo Piston Spring	16.370-7
RETAINER, Back-Up Lamp Switch	3.319-4
RETAINER, Brake Master Cylinder Cover	8.038-5
RETAINER, Brake Master Cylinder Piston Cup	8.046-3
RETAINER, Brake Shoe Hold-Down Spring	8.008-9
RETAINER, Brake Shoe Parking Brake Lever Strut	8.024-3
RETAINER, Carburetor Control Shaft Rod Lubricating Washer	4.065-4
RETAINER, Center Horn Blowing Contact Pin	3.400-7
RETAINER, Center Pillar Weatherstrip	23.012-18
RETAINER, Clutch Pedal To Bellcrank Rod Seal	5.162-3
RETAINER, Clutch Pivot To Lever Boot	5.168-7
RETAINER, Console Compartment Door Lock	27.280-3
RETAINER, Cowl Lacing	12.022-5
RETAINER, Directional Signal Switch Actuator Spring	3.321-9
RETAINER, Door Locking Control Rod	23.057-14b
RETAINER, Door Outside Handle Button	23.074-6
RETAINER, Door Scuff Plate Extension	27.006-1
RETAINER, Electric Windshield Wiper Drive Crank Eccentric	22.034-5
RETAINER, Front Body Pillar Weatherseal	23.012-15
RETAINER, Front Door Remote Control Link	23.055-4

DESCRIPTION	GROUP NO.
R - Cont.	
RETAINER, Front Remote Control Link	23.055-3
RETAINER, Front Seat Back Center Armrest Hook	29.142-5
RETAINER, Front Shock Grommet Inner	11.208-3
RETAINER, Front Shock Grommet Outer	11.208-4
RETAINER, Front Suspension Lower Control Arm Ball Joint Dust Cover	10.048-4a
RETAINER, Front Suspension Upper Control Arm Ball Joint Dust Cover	10.067-4
RETAINER, Front Wheel Grease	8.296-1
RETAINER, Gasoline Filter Bowl Wire	15.190-6
RETAINER, Gasoline Tank Filler Neck Housing	4.141-20a
RETAINER, Gasoline Tank Filler Neck To Housing	4.141-22
RETAINER, Gear Selector Dial Lamp Lens	7.535-9
RETAINER, Gear Selector Pointer Dial	7.537-11
RETAINER, Gear Shift Lever	7.001-5
RETAINER, Gear Shift Lever Mounting Bracket Bumper	7.003-6
RETAINER, Gear Shift Lever To Bracket	7.001-12
RETAINER, Gear Shift Selector Lever	7.080-6
RETAINER, Gear Shift Upper Lever Pressure Pin	7.025-3
RETAINER, Glove Box Lock	22.073-7
RETAINER, Grommet To Dash	3.166-2
RETAINER, Hood Air Scoop Rear Duct Door	12.001-17
RETAINER, Horn Blowing Contact	3.401-6
RETAINER, Horn Blowing Rim Contact	3.407-2
RETAINER, Horn Blowing Ring	3.406-5
RETAINER, Horn Button Seat	3.400-12
RETAINER, Ignition Cylinder Tumblers	3.135-9
RETAINER, Instrument Panel Ash Receiver	22.096-1
RETAINER, Liftgate Lock Cylinder And Housing	23.415-1a
RETAINER, Lock Cylinder	23.086-1 Thru 23.086-3
RETAINER, Lock To Panel	20.453-4
RETAINER, Lower Rear Panel Seal	20.330-8
RETAINER, Oil Filter By-Pass Valve	1.220
RETAINER, Parking Brake Bellcrank Pin	8.187-3
RETAINER, Power Brake Air Filter	8.450-2
RETAINER, Power Brake Master Cylinder Cover	8.510-6
RETAINER, Power Brake Master Cylinder Secondary Piston Cup	8.515-6
RETAINER, Power Brake Valve Body Diaphragm	8.485-7
RETAINER, Power Brake Valve Push Rod Guard	8.480-3
RETAINER, Power Brake Valve Push Rod Poppet	8.480-9
RETAINER, Radio Rear Speaker Cable	15.320-45
RETAINER, Rear Auxiliary Floor Side Compartment Door Lock	20.438-6
RETAINER, Rear Compartment Side Trim Panel Front	29.460-3
RETAINER, Rear Compartment Side Trim Panel Rear	29.460-4
RETAINER, Rear Compartment Spare Wheel Cover Ash Receiver	24.051-3
RETAINER, Rear Compartment Trim Panel	20.350-9

Printed in U.S.A.

ALPHABETICAL INDEX

DESCRIPTION	GROUP NO.
R - Cont.	
RETAINER, Rear Door Ash Receiver	23.182-5
RETAINER, Rear Door Locking Rod End	23.055-19
RETAINER, Rear Door Upper Vinyl Cover	20.422-2b
RETAINER, Rear Floor Mat And Carpet	29.302-10
RETAINER, Rear Quarter Lowering Glass Slide Channel Front	25.040-5
RETAINER, Rear Quarter Ash Receiver To Armrest	24.050-7
RETAINER, Rear Quarter Lowering Glass Slide Channel Rear	25.040-6
RETAINER, Rear Quarter Roof Extension Trim Panel	29.060-4
RETAINER, Rear Quarter Roof Side Trim	29.062-4
RETAINER, Rear Quarter Side Ash Receiver	24.052-1
RETAINER, Rear Quarter Window Glass Weatherstrip	25.048-6
RETAINER, Rear Seat Back Latch (On Rear Seat Back)	29.219-1
RETAINER, Rear Seat Back Latch (On Rear Wheelhouse)	29.219-1a
RETAINER, Rear Seat Cushion (Less Wagon)	20.005-4
RETAINER, Rear Seat Cushion (Wagon)	29.192-2
RETAINER, Rear Shock Grommet Inner	11.228-6
RETAINER, Rear Shock Grommet Lower	11.228-4
RETAINER, Rear Shock Grommet Outer	11.228-5
RETAINER, Rear Shock Grommet Upper	11.228-3
RETAINER, Rear Wheel Guide	8.310
RETAINER, Roof Rail Weatherseal Center	23.012-12a
RETAINER, Roof Rail Weatherseal Front	23.012-12
RETAINER, Roof Rail Weatherseal Rear	23.012-13
RETAINER, Roof Side Rail Weatherseal	23.012-11
RETAINER, Rear Door Remote Control Link	23.055-15
RETAINER, Shoulder Belt Wire	27.292-4a
RETAINER, Spare Wheel Cover	29.461-1b
RETAINER, Speedometer Driven Gear	3.590-2
RETAINER, Steering Gear Jacket Tube Lower Bearing	10.347
RETAINER, Steering Gear Jacket Tube To Toeboard Seal Inner	10.350-9
RETAINER, Steering Gear Jacket Tube To Toeboard Seal Outer	10.350-8
RETAINER, Steering Gear Shaft Lock Cover Screw	10.702-3
RETAINER, Steering Gear Worm Bearing	10.324-4
RETAINER, Steering Shaft Seal	10.331
RETAINER, Steering Wheel Tilt Spring	10.856
RETAINER, Sun Roof Front (Inner)	28.108
RETAINER, Sun Roof Front (Outer)	28.111
RETAINER, Sun Roof Rear	28.120-1
RETAINER, Tail, Stop And Rear Directional Signal Lamp Socket	3.312-1a
RETAINER, Tailgate Electric Operated Window Regulator Pinion Grease	23.308-9
RETAINER, Tailgate Electric Operated Window Regulator Worm Grease	23.308-14
RETAINER, Tailgate Glass Slide Channel Side	25.039-7
RETAINER, Tailgate Glass Slide Channel Upper	25.039-6

DESCRIPTION	GROUP NO.
R - Cont.	
RETAINER, Third Seat Back Handle	29.264-3
RETAINER, Universal Joint Bearing	9.118
RETAINER, Vacuum Hose	22.050-6
RETAINER, Valve Rocker Arm Shaft	1.102-2
RETAINER, Valve Spring	1.084
RETAINER, Valve Spring Hi-Perf	19
RETAINER, Wire Harness To Side Sill (Front)	3.165-16
RETAINER, Wire Harness To Side Sill (Rear)	3.165-17
RETAINER ASSEMBLY, Automatic Transmission Front Clutch	16.415-1
RETAINER KIT, Sun Roof Handle	28.138
RETRACTOR, Seat Belt	27.290-17
RHEOSTAT, Headlamp Switch	3.145-5
RIM, Horn Blowing	3.407-1
RING, Air Conditioning Hose Disconnect Coupling	13.440-6
RING, Automatic Output Shaft Snap	16.460-2
RING, Automatic Transmission Annulus Front Gear Snap	16.458-2
RING, Automatic Transmission Annulus Front Gear Support Snap	16.458-5
RING, Automatic Transmission Annulus Rear Gear Snap	16.458-8
RING, Automatic Transmission Front Clutch Cylinder Spring Snap	16.115-7
RING, Automatic Transmission Front Clutch Cylinder Spring Snap (Inner)	16.415-7a
RING, Automatic Transmission Front Clutch Plates Retaining Snap	16.115-15
RING, Automatic Transmission Front Clutch Pressure Snap	16.415-11
RING, Automatic Transmission Front Servo Piston Snap	16.060-18
RING, Automatic Transmission Governor Body Snap	16.385-7
RING, Automatic Transmission Governor Snap	16.085-5
RING, Automatic Transmission Governor Valve Shaft Snap	16.385-15
RING, Automatic Transmission Governor Weight Snap (Inner)	16.385-11
RING, Automatic Transmission Governor Weight Snap (Outer)	16.385-12
RING, Automatic Transmission Input Shaft Seal	16.405-2
RING, Automatic Transmission Input Shaft Snap	16.405-3
RING, Automatic Transmission Kickdown Servo Inner Piston Snap	16.350-7
RING, Automatic Transmission Kickdown Servo Snap	16.350-13
RING, Automatic Transmission Output Shaft Bearing Snap	16.460-4
RING, Automatic Transmission Output Shaft Bearing Snap (Outer)	16.460-8
RING, Automatic Transmission Output Shaft Ring Gear Snap	16.160-5
RING, Automatic Transmission Parking Snap	16.390-2

Printed in U.S.A.

DESCRIPTION	GROUP NO.
R - Cont.	
RING, Automatic Transmission Planetary Carrier One Way Clutch Snap	16.150-4
RING, Automatic Transmission Rear Clutch Drum Plates Retaining Snap	16.125-12
RING, Automatic Transmission Rear Clutch Drum Spring Retaining Snap	16.125-8
RING, Automatic Transmission Rear Clutch Retainer Snap	16.425-13
RING, Automatic Transmission Rear Servo Piston Retainer Snap	16.070-9
RING, Automatic Transmission Reverse Servo Piston Spring Retainer Snap	16.370-8
RING, Automatic Transmission Reverse Servo Plug	16.370-5
RING, Automatic Transmission Speedometer Drive Gear Snap	16.248-2
RING, Automatic Transmission Speedometer Seal Retainer	3.591-3
RING, Automatic Transmission Speedometer Seal Retainer	16.250-3
RING, Automatic Transmission Sun Gear Driving Shell Lock	16.440-5
RING, Clutch Pedal Shaft Retaining	5.135-4
RING, Clutch Release Main Lever Retainer	5.169-7
RING, Clutch Release Main Lever Snap	5.169-8
RING, Directional Signal Switch Actuator Spring Retainer	3.321-10
RING, Fourspeed Transmission Synchronizer Low And Second Snap	6.080-8
RING, Fourspeed Transmission Synchronizer Third And Fourth Snap	6.080-7
RING, Gear Shift Lever Handle Retaining	7.031
RING, Gear Shift Operating Shaft Retainer (Lower)	7.038-8
RING, Gear Shift Operating Shaft Retainer (Upper)	7.038-7
RING, Gear Shift Pivot Shaft Snap	7.005-3
RING, Gear Shift Selector Bushing Snap	7.080-10
RING, Headlamp Bulb Retaining	3.275-1
RING, Hog	30.025
RING, Horn Blowing	3.406-1
RING, Ignition Cylinder Anti-Theft	3.135-6
RING, Overdrive Front Ball Bearing Snap (Inner)	6.278-1
RING, Overdrive Front Ball Bearing Snap (Outer)	6.278-2
RING, Overdrive Governor Gear Retaining	6.329-4
RING, Overdrive Rear Ball Bearing Snap (Inner And Outer)	6.284-1
RING, Overdrive Rear Ball Bearing Snap (On Shaft)	6.284-2
RING, Overdrive Ring Gear Snap	6.307-2
RING, Overdrive Sun Gear Balk	6.302-1
RING, Overdrive Sun Gear Balk Snap	6.302-2
RING, Power Steering Gear Housing End Plug Retaining	10.540
R - Cont.	
RING, Power Steering Gear Rack-Piston	10.580
RING, Power Steering Gear Rack Spacing	10.556
RING, Power Steering Pump	10.435-7
RING, Power Steering Pump Drive Shaft Retainer Snap	10.440-5
RING, Power Steering Pump Drive Shaft Retaining	10.440-3
RING, Power Steering Pump End Plate Retaining	10.445-11
RING, Rear Auxiliary Floor Storage Compartment Cover Moulding Snap	20.452-5e
RING, Rear Axle Differential Pinion Shaft Snap	9.040
RING, Rear Axle Differential Side Gear	9.034
RING, Speedometer Drive Gear	6.240-4
RING, Steering Gear Cross Shaft Adjusting Screw Snap	10.306-3
RING, Steering Gear Jacket Tube Upper Bearing Retaining	10.344-2
RING, Steering Gear Shaft Lock Retaining	10.703-2
RING, Steering Gear Shaft Lower Bearing Retaining Ring	10.769
RING, Steering Gear Upper Shaft To Lower Shaft Coupling Seal Retainer	10.733
RING, Steering Wheel Actuator Drive Shaft Retaining	10.830-4
RING, Tailgate Door Lower Hinge Pin Snap	23.006-8b
RING, Tailgate Upper Hinge Pin Retaining	23.006-7e
RING, Transmission Front Ball Bearing Lock	6.048
RING, Transmission Front Ball Bearing Snap	6.044
RING, Transmission Rear Ball Bearing Lock (On Bearing)	6.056-1
RING, Transmission Rear Ball Bearing Lock (On Shaft)	6.056-2
RING, Transmission Rear Ball Bearing Spacer	6.055
RING, Transmission Reverse Idler Rear Snap	6.170-3
RING, Transmission Synchronizer Clutch Low And Reverse Snap	6.080-6
RING, Transmission Synchronizer Clutch Second And High Snap	6.080-5
RING, Valve Tappet Snap	1.088-2
RING, Wheel Trim	8.274-8
RING AND SEAL KIT, Power Steering Gear Valve	10.625
RING SET, Piston	1.146
RING SET, Transmission Overhaul Snap	6.004
RING SET, Transmission Synchronizer Clutch Friction	6.090
RISER, Rear Cargo Platform Floor	29.488-1
RIVET, Button Head Solid	17.536
RIVET, Countersunk Head Solid	17.542
RIVET, Flat Head Aluminum	17.572
RIVET, Flat Head Semi-Tubular	17.555
RIVET, Flat Head Solid	17.540

Printed in U.S.A.

DESCRIPTION	GROUP NO.
R - Cont.	
RIVET, Oval Head Split	17.554
RIVET, Oval Head Tubular	17.558
RIVET, Round Head Aluminum	17.566
RIVET, Truss Head Solid	17.544
RIVET, Truss Head Tubular	17.557
ROCKER ARM KIT, Valve	1.097-2
ROCKER ARM OILER KIT	1.096
ROD, Accelerator Control	4.055-1
ROD, Automatic Transmission Kickdown Servo Piston	16.350-8
ROD, Automatic Transmission Manual Control	16.225-5
ROD, Automatic Transmission Parking Brake Linkage	16.090-20
ROD, Automatic Transmission Parking Sprag	16.390-6
ROD, Automatic Transmission Throttle Valve Control (Lower)	16.505-2
ROD, Automatic Transmission Throttle Valve Control (Upper)	16.505-3
ROD, Automatic Transmission Vacuum Control Modulator Control Push	16.260-3
ROD, Battery Hold Down Clamp	3.095-1
ROD, Bellcrank To Clutch Pedal	5.160-1
ROD, Carburetor Control Shaft	4.065-1
ROD, Clutch Housing To Engine	5.054-4
ROD, Clutch Pedal	5.140-1
ROD, Column To Transmission Park-Lock	7.126-1
ROD, Connecting Hi-Perf	19
ROD, Control And Pivot Arm Front Seat Back Forward Tilt Lock	29.105-11b
ROD, Floor Gear Shift Lever Actuating	7.004-1
ROD, Front Door Locking Control	23.057-14
ROD, Front Suspension Lower Control Arm To Side Sill Strut	10.055-1
ROD, Gear Shift	7.125-1 Thru 7.125-6
ROD, Hood Lock Release	12.060-4
ROD, Hood Lock Release Operating	12.060-5a
ROD, Hood Lock Torque	12.060-12
ROD, Parking Brake Cable Adjusting	8.214-4
ROD, Parking Brake Release	8.182-1
ROD, Power Brake Master Cylinder Piston Push	8.505-1
ROD, Power Brake Valve Push	8.480-1
ROD, Power Steering Pump Reservoir To Engine Front Mounting Bracket Brace	10.430-4
ROD, Rear Deck Door Hinge Torque	23.028-8
ROD, Rear Door Push Button Locking Control	23.057-17
ROD, Rear Seat Back Locking	29.214-3
ROD, Reverse Lock-Up Column To Bellcrank	7.134-1
ROD, Reverse Lock-Up Transmission To Bellcrank	7.133-1
ROD, Spare Wheel Mounting	8.330-1
ROD, Steering Gear Jacket Tube Support	10.340-1
ROD, Sun Visor End Retaining	29.004-1
ROD, Tailgate Lock Control To Latch Control	23.039-11
ROD, Tailgate Lock Control To Left Side Bellcrank	23.039-10
ROD, Tailgate Lock To Latch	23.039-6
ROD, Tailgate Safety Release To Latch	23.039-12
ROD, Tailgate Vertical Latch To Right Side Bellcrank	23.039-9
ROD, Transmission Reverse Lock-Up	7.137-1
ROD, Valve Push	1.095
ROD, Valve Push Hi-Perf	19
ROD ASSEMBLY, Bellcrank To Throwout Lever	5.187-1
ROD ASSEMBLY, Connecting	1.136-1
ROD ASSEMBLY, Steering Linkage Tie	10.122-1
ROD KIT, Sun Roof Latch	28.135
ROLLER, Automatic Transmission Overrunning Clutch	16.312-3
ROLLER, Front Door Lowering Glass Bottom Channel	25.030-7
ROLLER, Overdrive Free Wheeling Set	6.332-1
ROLLER, Rear Quarter Glass Bottom Channel To Guide	25.029-23
ROLLER, Rear Quarter Window Guide	25.034-6
ROLLER, Tailgate Door Upper Hinge Pin	23.006-7d
ROLLER, Transmission Countershaft Gear Bearing	6.167-1
ROLLER, Transmission Reverse Idler Gear Bearing	6.170-4
ROLLER, Transmission Spline Shaft Pilot Bearing	6.076-1
ROTOR, Automatic Transmission Oil Pump	16.380-5
ROTOR, Distributor	3.035
ROTOR, Power Steering Pump	10.435-4
ROTOR - VANE - RING KIT, Power Steering Pump	10.435-3
- S -	
SCOOP, Front Bumper Rail Air	12.168-10
SCOOP, Hood Air	12.001-10
SCREEN, Automatic Transmission Oil	16.045-1
SCREEN, Cowl Ventilator	22.007-1
SCREEN, Hood Air Scoop Baffle	12.001-11d
SCREEN, Instrument Panel Radio Speaker	22.077-1
SCREEN, Radiator Grille	2.050-7j
SCREW, Automatic Transmission Front Servo Adjusting	16.060-8
SCREW, Automatic Transmission Kickdown Band Adjusting	16.348-7
SCREW, Automatic Transmission Oil Pump Housing	16.380-12
SCREW, Automatic Transmission Rear Servo Adjusting	16.070-13
SCREW, Automatic Transmission Reverse Band Adjusting	16.430-4
SCREW, Automatic Transmission Speedometer	3.591-7
SCREW, Automatic Transmission Speedometer	16.250-7
SCREW, Automatic Transmission Throttle Valve Control	16.510-3

Printed in U.S.A.

DESCRIPTION	GROUP NO.
S - Cont.	
SCREW, Binding Head Cross Recess Machine	17.622
SCREW, Binding Head Slotted Machine	17.620
SCREW, Brake Shoe Adjusting	8.014-1
SCREW, Brake Wheel Cylinder Bleeder	8.088
SCREW, Clutch Cover To Flywheel	5.050-1
SCREW, Clutch Throwout Lever Sleeve	5.109-2
SCREW, Electric Windshield Wiper Motor Adjusting	22.032-1
SCREW, Fillister Head Cross Recess Machine	17.604
SCREW, Fillister Head Cross Recess Tapping	17.680
SCREW, Fillister Head Slotted Machine	17.602
SCREW, Fillister Head Slotted Tapping	17.678
SCREW, Flat Head Cross Recess Machine	17.586
SCREW, Flat Head Cross Recess Tapping	17.648
SCREW, Flat Head Cross Recess Wood	17.686
SCREW, Flat Head Slotted Machine	17.584
SCREW, Flat Head Slotted Tapping	17.646
SCREW, Flat Head Slotted Wood	17.684
SCREW, Flat Trim Head Cross Recess Tapping	17.649
SCREW, Front Seat Back Forward Tilt Lock	29.105-16
SCREW, Front Wheel Disc Brake Caliper Bleed	8.830
SCREW, Gear Shift Detent	7.020-15
SCREW, Gear Shift Operating Shaft	7.038-9
SCREW, Headlamp Adjusting	3.268
SCREW, Headlamp Bulb Retaining Ring	3.275-2
SCREW, Headless Slotted	17.638
SCREW, Hexagon Head Machine	17.626
SCREW, Hexagon Head Slotted Machine	17.628
SCREW, Hexagon Head Slotted Tapping	17.672
SCREW, Hexagon Head Tapping	17.670
SCREW, Hexagon Serrated Washer Head Machine	17.629
SCREW, Hexagon Socket Head Cap	17.634
SCREW, Hexagon Socket Set	17.640
SCREW, Hexagon Washer Head Slotted Tapping	17.673
SCREW, Hexagon Washer Head Tapping	17.671
SCREW, Oval Head Cross Recess Machine	17.592
SCREW, Oval Head Cross Recess Tapping	17.654
SCREW, Oval Head Cross Recess Wood	17.690
SCREW, Oval Head Slotted Machine	17.590
SCREW, Oval Head Slotted Tapping	17.652
SCREW, Oval Trim Head Cross Recess Machine	17.593
SCREW, Oval Trim Head Cross Recess Tapping	17.655
SCREW, Pan Head Cross Recess Machine	17.598
SCREW, Pan Head Cross Recess Tapping	17.660
SCREW, Pan Head Slotted Machine	17.596
SCREW, Pan Head Slotted Tapping	17.658
SCREW, Projection Weld	17.702
SCREW, Rear Axle Differential Side Bearing Cap	9.018-1
SCREW, Round Head Blunt Point Metal Drive	17.696
SCREW, Round Head Cross Recess Machine	17.616

DESCRIPTION	GROUP NO.
S - Cont.	
SCREW, Round Head Cross Recess Tapping	17.666
SCREW, Round Head Slotted Machine	17.614
SCREW, Round Head Slotted Tapping	17.664
SCREW, Round Head Slotted Wood	17.692
SCREW, Square Head Set	17.644
SCREW, Steering Column Locking Bolt Spring To Actuator	10.337-7
SCREW, Steering Gear Cross Shaft Adjusting	10.308-1
SCREW, Steering Gear Shaft Lock Cover	10.702-2
SCREW, Tachometer Ground	3.700-7
SCREW, Tailgate Electric Operated Window Regulator Worm Set	23.308-16
SCREW, Truss Head Cross Recess Machine	17.610
SCREW, Truss Head Cross Recess Tapping	17.669
SCREW, Truss Head Slotted Machine	17.608
SEAL, Air Conditioning Air Discharge Bezel To Duct	13.515-8
SEAL, Air Conditioning Air Discharge Duct To Instrument Cluster	13.510-12
SEAL, Air Conditioning Evaporator Air Discharge Duct Single Outlet	13.510-13
SEAL, Air Conditioning Evaporator Air Discharge Single Duct Door	13.515-11
SEAL, Air Conditioning Evaporator Hose To Housing	13.440-14
SEAL, Air Conditioning Evaporator Housing To Heater Housing	13.488-21
SEAL, Air Conditioning Evaporator Or High Level Ventilation Housing Left Single Duct To Tube	15.515-32
SEAL, Air Conditioning Evaporator Or High Level Ventilation Housing To Blower Housing	13.488-19
SEAL, Air Conditioning Evaporator Outlet To Center Duct	13.488-20
SEAL, Air Conditioning Or High Level Ventilation Air Discharge Duct Dual To Connector	13.510-14
SEAL, Air Conditioning Or High Level Ventilation Housing Left Single Tube To Bezel	13.510-22c
SEAL, Air Conditioning Thermostat Control Lamp	13.477-15a
SEAL, Air Conditioning Upper Cover To Connector	13.488-17
SEAL, Automatic Transmission Accumulator Piston Ring (Large)	16.375-2
SEAL, Automatic Transmission Accumulator Piston Ring (Small)	16.375-3
SEAL, Automatic Transmission Case Oil	16.010-3
SEAL, Automatic Transmission Case Oil	16.310-3
SEAL, Automatic Transmission Front Clutch Piston (Inner)	16.415-4
SEAL, Automatic Transmission Front Clutch Piston (Outer)	16.415-5
SEAL, Automatic Transmission Front Oil Pump	16.080-5
SEAL, Automatic Transmission Governor Support Ring (Front)	16.385-2

Printed in U.S.A.

DESCRIPTION	GROUP NO.
S - Cont.	
SEAL, Automatic Transmission Governor Support Ring (Rear)	16.385-3
SEAL, Automatic Transmission Kickdown Servo Guide Ring	16.350-12
SEAL, Automatic Transmission Kickdown Servo Piston Ring (Large)	16.350-3
SEAL, Automatic Transmission Kickdown Servo Piston Ring (Small)	16.350-2
SEAL, Automatic Transmission Oil Pump Housing	16.380-4
SEAL, Automatic Transmission Oil Pump Impeller Hub	16.380-3
SEAL, Automatic Transmission Reaction Shaft Ring	16.380-9
SEAL, Automatic Transmission Rear Bearing Retainer Oil	16.175-5
SEAL, Automatic Transmission Rear Bearing Retainer Oil	16.475-4
SEAL, Automatic Transmission Rear Clutch Piston (Inner)	16.425-2
SEAL, Automatic Transmission Rear Clutch Piston (Outer)	16.425-3
SEAL, Automatic Transmission Reverse Band Lever	16.430-7
SEAL, Automatic Transmission Reverse Band Reaction	16.430-9
SEAL, Automatic Transmission Reverse Servo Piston	16.370-2
SEAL, Automatic Transmission Speedometer.	3.591-4
SEAL, Automatic Transmission Speedometer.	16.250-4
SEAL, Bellcrank To Throwout Lever Rod End	5.187-5
SEAL, Brake Master Cylinder To Dash	8.035-3
SEAL, Carburetor Air Adapter	4.092-2
SEAL, Clutch Pedal To Bellcrank Rod	5.162-1
SEAL, Clutch Release Main Lever	5.169-4
SEAL, Cowl Trim Panel Door	29.010-6
SEAL, Cowl Ventilator Air Intake Panel	22.016-4
SEAL, Defroster Air Duct To Instrument Panel	13.118-5b
SEAL, Distributor To Block	3.039-3
SEAL, Door Inner Panel Air	23.001-12
SEAL, Door Outside Handle	23.074-13
SEAL, Duct Assembly To Dash Panel	22.020-3
SEAL, Engine Oil Pan To Bearing Cap Oil	1.152-2
SEAL, Engine Oil Pan To Timing Case Cover	1.152-3
SEAL, Evaporator Core To Cover	13.475-3
SEAL, Evaporator Cover To Connector	13.488-4d
SEAL, Evaporator Cover To Duct	13.488-4c
SEAL, Exhaust Pipe To Manifold	4.186-1
SEAL, Exhaust Valve	1.078-3
SEAL, Front Door Flo-Thru Air Outlet	23.001-10
SEAL, Front Door Inner Panel Lower Drain Hole	23.001-8
SEAL, Front Fender Radio Antenna	15.030-8
SEAL, Front Fender To Cowl Panel	12.075-10
SEAL, Front Suspension Upper Control Arm Trunnion Dirt	10.042-6
SEAL, Front Wheelhouse Panel Front Extension (Lower)	20.085-4b
SEAL, Front Wheelhouse Panel Front Extension (Upper)	20.085-4a
SEAL, Gasoline Gauge Lock	3.615-7
S - Cont.	
SEAL, Gasoline Tank Air Vent Nipple	4.141-15
SEAL, Gasoline Tank Filler Tube	4.141-7
SEAL, Gasoline Tank Lower Vent Tube	4.141-39
SEAL, Gear Selector Dial To Jacket Tube	7.537-7
SEAL, Gear Shift Boot And Bezel	7.015
SEAL, Gear Shift Lever Mounting Bracket Support	7.017-5
SEAL, Gear Shift Lever Mounting Bracket Support To Floor Pan	7.017-3
SEAL, Gear Shift Operating Shaft	7.038-2
SEAL, Heated Rear Window Control Switch	3.770-5
SEAL, Heater And Blower Housing To Air Discharge Duct	13.012-17
SEAL, Heater And Defroster Air Duct To Housing	13.118-6
SEAL, Heater And Defroster Damper Housing To Blower Housing	13.113-3
SEAL, Heater Core And Blower Housing To Evaporator Housing	13.012-6
SEAL, Heater Core Tube	13.028-2
SEAL, Heater Water Valve Cable Slot	13.035-8
SEAL, Hood Inner Panel	12.001-8
SEAL, Indicator Light	3.771-3
SEAL, Instrument Panel Ash Receiver Lamp Light	22.092-8
SEAL, Instrument Panel Identification Lens	22.100-31
SEAL, Intake Manifold To Cylinder Block	1.067-6
SEAL, Intake Manifold Water Tube	1.065-3
SEAL, Intake Valve	1.077-3
SEAL, Locking Gas Cap	15.180
SEAL, Lower Air Baffle	2.062-2
SEAL, Lower Baffle To Bumper Rail	2.062-4
SEAL, Lower Rear Panel	20.330-7
SEAL, Luggage Rack Air Deflector Center Post	27.212-7
SEAL, Luggage Rack Front Post	27.208-3
SEAL, Luggage Rack Rear Post	27.212-4
SEAL, Luggage Rack Side Post	27.210-4
SEAL, Luggage Rack Strap Hanger	27.215-3
SEAL, Oil Level Gauge Tube	1.187-3
SEAL, Overdrive Rear Oil	6.286-1
SEAL, Overdrive Solenoid Pawl Operating Rod Oil	6.328-3
SEAL, Pillar Cap Lower	20.205-6
SEAL, Pillar Cap Upper	20.205-5
SEAL, Pillar Lower	20.205-7
SEAL, Pitman Arm Stud To Center Cross Link Dust	10.104-4
SEAL, Power Brake Master Cylinder Piston Push Rod	8.505-4
SEAL, Power Brake Master Cylinder Piston Stop "O" Ring	8.515-3
SEAL, Power Brake Vacuum Check Valve	8.460-2
SEAL, Power Brake Valve Body Diaphragm Plate To Diaphragm Plate	8.485-4
SEAL, Power Brake Valve Body Diaphragm Plate To Housing	8.485-3
SEAL, Power Steering Pump By-Pass	10.430-16
SEAL, Power Steering Pump Control Valve Retaining Plug	10.445-5
SEAL, Power Steering Pump Drive Shaft Oil	10.440-4

Printed in U.S.A.

DESCRIPTION	GROUP NO.
S - Cont.	
SEAL, Power Steering Pump End And Pressure Plate	10.445-12
SEAL, Power Steering Pump Mounting Stud	10.430-3
SEAL, Power Steering Pump Oil Reservoir To Pump	10.465-5
SEAL, Power Steering Pump Oil Reservoir To Pump Stud	10.465-6
SEAL, Power Steering Pump Pressure Hose Union Inner	10.470-4
SEAL, Power Steering Pump Pressure Hose Union Outer	10.470-5
SEAL, Radiator Support (Lower)	2.023-3
SEAL, Radiator Support (Upper)	2.023-2
SEAL, Radio Cable Conduit	3.680-7
SEAL, Radio Speaker Support	15.320-13
SEAL, Rear Axle Drive Shaft Inner Oil	9.072
SEAL, Rear Axle Pinion Oil	9.064-1
SEAL, Rear Axle Pinion Oil (Incl. Pinion Nut)	9.064-2
SEAL, Rear Body Pillar Lower	20.240-3
SEAL, Rear Deck Door Handle	23.078-12
SEAL, Rear Deck Luggage Rack Post	23.009-12
SEAL, Rear Door Inner Panel Lower Drain Hole	23.002-4
SEAL, Rear Quarter Glass Channel	24.018-1a
SEAL, Rear Quarter Window Belt	25.029-17
SEAL, Rear Quarter Window Lowering	25.029-15
SEAL, Rear Wheel Oil	8.312
SEAL, Rear Window Air Deflector Upper	20.425-3
SEAL, Shaft Assembly Oil	6.338-3
SEAL, Steering Gear Cross Shaft	10.310
SEAL, Steering Gear Jacket Tube To Toeboard	10.350-5
SEAL, Steering Gear Jacket Tube To Toeboard Inner	10.350-7
SEAL, Steering Gear Jacket Tube To Toeboard Outer	10.350-6
SEAL, Steering Gear Operating Shaft To Jacket	10.346-3
SEAL, Steering Gear Shaft Oil	10.320
SEAL, Steering Linkage Idler Arm Stud To Center Cross Link	10.108-4
SEAL, Steering Shaft	10.330
SEAL, Tailgate Electric Operated Window Regulator Control Switch	23.330-8c
SEAL, Tailgate Inner Panel Drain Hole	23.006-29
SEAL, Tailgate Opening To Drip Moulding	20.395-5
SEAL, Timing Case Cover	1.123
SEAL, Transmission Front Bearing Oil	6.021
SEAL, Transmission Rear Bearing Cap Oil	6.032
SEAL, Transmission Reverse Gear Housing	6.031-4
SEAL, Transmission Shifter Fork Shaft	6.194
SEAL, Upper Air Baffle	2.062-11
SEAL, Valve Hi-Perf	19
SEAL, Windshield Washer Nozzle	22.054-3
SEAL, Windshield Wiper Motor Mounting Bracket	22.027-6
SEAL AND RING KIT, Power Steering Gear	10.545
SEALER	30.026
SEALER, Center Pillar Retainer	23.012-23
SEALER, Door Outside Handle Button	23.074-16
S - Cont.	
SEALER, Front Body Pillar Weatherseal Retainer	23.012-24
SEALER, Front Door	23.012-1
SEALER, Front Door Lowering Glass Bottom Channel	25.030-2
SEALER, Gear Shift Mechanism Housing	7.017-2b
SEALER, Liftgate	23.013-5
SEALER, Rear Deck Door	23.014
SEALER, Rear Door	23.012-3
SEALER, Rear Door Lowering Glass Bottom Channel	25.032-2
SEALER, Rear Quarter Lowering Glass Bottom Channel	25.034-2
SEALER, Rear Quarter Window	25.022-2
SEALER, Rear Quarter Window Frame	24.010-3
SEALER, Roof Rail Weatherseal Retainer To Roof Rail	23.012-20
SEALER, Roof Rail Weatherseal Retainer To Roof Rail (Front)	23.012-21
SEALER, Roof Rail Weatherseal Retainer To Roof Rail (Rear)	23.012-22
SEALER, Sun Roof Rear To Roof Panel	28.120-2
SEALER, Tailgate (On Body)	23.013-1
SEALER, Tailgate (On Tailgate)	23.013-2
SEALER, Tailgate Glass Bottom Channel	25.033-4
SEALER, Vinyl Roof Cover To Drip Rail	20.422-7
SEAL KIT, Air Conditioning Compressor	13.400-3
SEAL KIT, Exhaust Valve	1.078-5
SEAL KIT, Intake Valve	1.077-5
SEAL KIT, Power Steering Gear Pitman Shaft	10.605
SEAL KIT, Power Steering Gear Upper Thrust Bearing Adjuster	10.645
SEAL KIT, Power Steering Pump	10.430-13
SEAL KIT, Rear Main Bearing Cap	1.032
SEAL KIT, Steering Gear Upper Shaft To Lower Shaft Coupling	10.725
SEAL RING, Automatic Transmission Rear Clutch Retainer	16.425-8
SEAL SET, Exhaust Valve	1.078-4
SEAL SET, Intake Valve	1.077-4
SEAT, Front Coil Spring Lower	11.075-3
SEAT, Front Coil Spring Upper	11.075-2
SEAT, Gear Shift Lever Ball	7.003-8
SEAT, Power Brake Master Cylinder	8.517-2
SEAT, Power Steering Gear Pressure Hose Connector	10.525
SEAT, Power Steering Gear Return Hose Connector	10.527
SEAT, Power Steering Pump Discharge	10.445-8
SEAT, Power Steering Pump Discharge Tube	10.430-11
SEAT, Reverse Release Spring	7.006-1
SEAT, Steering Gear Jacket Tube Upper Bearing Spring	10.344-8
SEAT, Steering Gear Shaft Upper Bearing Inner Race	10.826
SEAT ASSEMBLY, Trimmed Front	29.100
SECTOR, Ignition Switch Actuator	3.130-9
SENDING UNIT, Gasoline Gauge	3.615-3
SENDING UNIT, Oil Pressure Gauge	3.605-7
SENDING UNIT, Water Temperature Gauge	3.610-3
SENSOR KIT, Air Cleaner Temperature	4.088-9

Printed in U.S.A.

ALPHABETICAL INDEX

DESCRIPTION	GROUP NO.
S - Cont.	
SEPARATOR, Ignition Wire	3.230
SHACKLE KIT, Rear Leaf Spring	11.170-1
SHAFT, Automatic Transmission Governor Valve	16.385-14
SHAFT, Automatic Transmission Input (1971 And Prior)	16.105-1
SHAFT, Automatic Transmission Input (1972)	16.405-1
SHAFT, Automatic Transmission Kickdown Lever	16.348-4
SHAFT, Automatic Transmission Output (1971 And Prior)	16.160-1
SHAFT, Automatic Transmission Output (1972)	16.460-1
SHAFT, Automatic Transmission Parking Sprag	16.390-5
SHAFT, Automatic Transmission Reaction	16.380-7
SHAFT, Automatic Transmission Reverse Band Lever	16.430-6
SHAFT, Automatic Transmission Reverse Band Reaction	16.430-8
SHAFT, Brake Pedal	8.160-1
SHAFT, Carburetor Control	4.070-1
SHAFT, Clutch Pedal	5.148-1
SHAFT, Engine Oil Pump Drive	1.161
SHAFT, Engine Oil Pump Idler Gear	1.157-2
SHAFT, Fourspeed Transmission Shifter Fork	6.190-3 Thru 6.190-5
SHAFT, Fourspeed Transmission Spline	6.068-3
SHAFT, Gear Shift Lever Pivot	7.005-1
SHAFT, Gear Shift Operating	7.038-1
SHAFT, Overdrive Main	6.336
SHAFT, Overdrive Spline	6.255
SHAFT, Overdrive Transmission Spline	6.068-2
SHAFT, Power Steering Pump Drive	10.440-1
SHAFT, Rear Axle Differential (LLD)	9.036-1
SHAFT, Rear Axle Differential (WLD)	9.036-2
SHAFT, Rear Axle Drive	9.068
SHAFT, Rear Deck Lock Cylinder	23.081-11
SHAFT, Standard Transmission Spline	6.068-1
SHAFT, Steering Gear	10.700-1
SHAFT, Steering Gear (Incl. Worm)	10.314
SHAFT, Steering Gear Cross	10.306-1
SHAFT, Steering Gear Intermediate	10.700-4
SHAFT, Steering Gear Lower	10.700-3
SHAFT, Steering Gear Upper	10.700-2
SHAFT, Steering Wheel Actuator Drive	10.830-3
SHAFT, Transmission Clutch	6.060
SHAFT, Transmission Idler Gear	6.168-1
SHAFT, Transmission Shifter Fork (Low And Reverse)	6.190-1
SHAFT, Transmission Shifter Fork (Second And High)	6.190-2
SHAFT, Valve Rocker Arm	1.098-1
SHAFT ASSEMBLY, Overdrive Control	6.338-1
SHAFT ASSEMBLY, Power Steering Gear Pitman	10.590
SHAFT ASSEMBLY, Propeller	9.100-1
SHAFT KIT, Power Steering Pump Drive	10.440-2
SHAFT KIT, Steering Gear	10.701
SHEDDER, Crankshaft Sprocket Oil	1.132-3
SHELL, Automatic Transmission Sun Gear Driving	16.440-2
SHELL, Cigar Lighter Assembly	3.352-5
S - Cont.	
SHELL ASSEMBLY, Headlamp	3.265-1
SHELL ASSEMBLY, Headlamp (Inner)	3.265-3
SHELL ASSEMBLY, Headlamp (Outer)	3.265-2
SHIELD, Air Conditioning Thermostat Control Lamp	13.477-12
SHIELD, Armrest Ash Receiver	29.073
SHIELD, Automatic Transmission Throttle Valve Control Splash	16.510-1
SHIELD, Automatic Transmission Vent	16.380-11
SHIELD, Brake Master Cylinder Dust	8.035-4
SHIELD, Cigar Lighter Housing	3.352-6
SHIELD, Clutch Release Main Lever	5.169-9
SHIELD, Courtesy Lamp	3.349-9
SHIELD, Exhaust Emission Air Pump Inlet Hose Heat	4.625
SHIELD, Front Suspension Lower Control Arm Strut Rod Bushing Heat	10.055-7
SHIELD, Front Wheel Disc Brake Splash	8.845
SHIELD, Gasoline Tank Filler Tube	4.145-1
SHIELD, Gasoline Tank Stone Protector	4.130-4
SHIELD, Gear Selector Dial Lamp	7.535-3
SHIELD, Heat Check Valve	4.142-12
SHIELD, Hood Lock Mechanism	12.060-3a
SHIELD, Instrument Control Dial Light	3.635-8
SHIELD, Power Brake Master Cylinder Dust	8.510-5
SHIELD, Rear Rail To Body	12.245-1
SHIELD, Sparkplug Heat	3.001-3
SHIELD, Steering Wheel Release Lever	10.802
SHIFT MECHANISM, Gear	7.002-1
SHIM, Console Compartment Door Lock Striker	27.282-3
SHIM, Door Bumper	23.019-3
SHIM, Door Lock Striker	23.087-7
SHIM, Front Seat Back Forward Tilt Lock	29.105-13
SHIM, Front Wheel Disc Brake Caliper To Bracket	8.840
SHIM, Hood Hinge To Cowl Panel	12.035-6
SHIM, Hood Hinge To Hood	12.035-5
SHIM, Liftgate Latch	23.410-3
SHIM, Liftgate Latch Striker	23.416-4
SHIM, Rear Axle Differential Side Bearing	9.045-2
SHIM, Rear Axle Pinion Shaft Bearing (Front)	9.062-2
SHIM, Rear Axle Pinion Shaft Bearing (Rear)	9.057-2
SHIM, Rear Deck Door Bracket And Link Assembly	23.028-7
SHIM, Rear Suspension Crossmember To Side Sill	11.400-3
SHIM, Rear Wheel Bearing	8.315
SHIM, Steering Gear Housing Worm Cover	10.298
SHIM, Tailgate Latch Striker	23.039-23
SHIM, Tailgate To Body	23.006-13c
SHIM, Transmission Front Bearing Cap	6.024
SHIM KIT, Steering Gear Cross Shaft Adjusting Screw	10.309
SHIM SET, Rear Axle Differential Side Bearing	9.045-1
SHIM SET, Rear Axle Pinion Adjusting	9.057-1
SHIM SET, Rear Axle Pinion Shaft Bearing	9.062-1
SHIM STOCK, Front Door Lowering Glass Slide Channel Plastic	25.036-3
SHOCK, Load Leveler Replacement	15.245-4
SHOCK ASSEMBLY, Front	11.200-1
SHOCK ASSEMBLY, Rear	11.220-1
SHOCK KIT, Rear Adjustable Air	11.220-1b

Printed in U.S.A.

DESCRIPTION	GROUP NO.
S - Cont.	
SHOE, Steering Wheel Actuator Lock	10.843-1
SHOE KIT, Steering Wheel Actuator Lock	10.843-2
SHOE SET, Front Brake (Exchange)	8.003-1
SHOE SET, Front Brake (Warranty)	8.004-1
SHOE SET, Front Wheel Disc Brake	8.815
SHOE SET, Rear Brake (Exchange)	8.003-2
SHOE SET, Rear Brake (Warranty)	8.004-2
SHROUD, Exhaust Manifold Heat	4.015-11
SHROUD, Fan	2.013-1
SHROUD, Gear Selector Pointer Dial	7.537-9
SHROUD, Steering Column Bowl	10.338-13
SILENCER, Glove Box Door Check	22.066-7
SILENCER, Spare Tire Cover Panel Front Bracket	20.450-2
SILL, Front Side	20.070-1
SILL, Rear Cross	20.040-1
SILL, Rear Side	20.070-2
SKIRT, Steering Wheel	10.283-1
SLEEVE, Automatic Transmission Front Servo	16.060-5
SLEEVE, Automatic Transmission Governor	16.085-4
SLEEVE, Carburetor Choke Heater Tube	4.020-2
SLEEVE, Clutch Idler Outer Pivot	5.168-9
SLEEVE, Clutch Throwout Lever	5.109-1
SLEEVE, Front Door Locking Control Rod	23.057-14a
SLEEVE, Gear Shift Lever	7.001-3
SLEEVE, Liftgate Latch Striker	23.416-1b
SLEEVE, Rear Door Outside Handle To Latch	23.055-16a
SLEEVE, Rear Seat Back Locking Rod	29.214-3a
SLEEVE, Remote Control Rod	23.055-3a
SLEEVE, Steering Gear Jacket Tube Upper Bearing	10.344-6
SLEEVE, Tailgate Latch Rod	23.039-15
SLEEVE, Transmission Speed Finder Interlock	6.215-2
SLIDE, Air Conditioning Evaporator Air Discharge Single Duct Outlet Louvers	13.515-15
SLIDE, Front Door Lowering Glass Bottom Channel	25.030-3
SLIDE, Front Door Window Bottom	25.030-1a
SLIDE, Front Seat Adjusting	29.131-1
SLIDE, Rear Deck Door Torque Rod	23.028-10
SLIDE, Rear Quarter Window Stabilizer Arm	25.029-21
SLIDE, Tailgate Glass Bottom Channel	25.033-5
SLIDER KIT, Sun Roof Channel	28.116
SNAP RING SET, Automatic Transmission Overhaul	16.007
SNAP RING SET, Automatic Transmission Overhaul	16.307
SOCKET, Accelerator Control Rod	4.055-5
SOCKET, Air Conditioning Thermostat Control Lamp	13.477-13
SOCKET, Back-Up Lamp	3.318-3
SOCKET, Brake Shoe Adjusting Screw	8.014-2
SOCKET, Carburetor Control Shaft	4.070-9
SOCKET, Clock Lamp	3.369-5
SOCKET, Emergency Signal Switch Connector	3.690-11
SOCKET, Front Fender Side Lamp	3.720-6
SOCKET, Gear Selector Dial Lamp	7.535-1
S - Cont.	
SOCKET, Heater And Air Conditioning Control Light	13.017-32
SOCKET, Instrument Cluster Illuminating Lamp	3.635-1
SOCKET, Instrument Panel Ash Receiver Lamp	22.092-4a
SOCKET, Parking Brake Warning Lamp	3.650-5
SOCKET, Rear Quarter Side Lamp	3.740-5
SOCKET, Tail, Stop And Rear Directional Signal Lamp	3.312-1
SOCKET, Trunk Lamp	3.660-3
SOCKET ASSEMBLY, Open Door Warning Lamp	3.655-4
SOLENOID, Automatic Transmission Kickdown	16.235-1
SOLENOID, Carburetor Throttle Stop	4.002-1
SOLENOID, Distributor Vacuum Control	3.051-7
SOLENOID, Overdrive	6.328-1
SOLENOID, Starting Motor Relay	3.024-1
SPACER, Air Conditioning Center Lower Duct To Housing	13.515-29b
SPACER, Air Conditioning Intermediate Pulley Bracket Mounting	13.430-17
SPACER, Alternator Pulley	3.017-4
SPACER, Automatic Transmission Converter Housing To Engine	16.042-1
SPACER, Automatic Transmission Rear Clutch Spring	16.425-6
SPACER, Brake Pedal To Link	8.156-4
SPACER, Clutch Beam Or Support Bracket	5.178-5
SPACER, Clutch Housing To Engine	5.065-1
SPACER, Clutch Throwout Lever Pivot	5.130-5
SPACER, Column Gear Shift Operating Shaft Lever	7.085-6
SPACER, Column Gear Shift Upper Lever Anti-Rattle	7.020-4
SPACER, Door Armrest	29.075-13
SPACER, Door Lock Striker	23.087-5
SPACER, Door Window Regulator Handle	23.105
SPACER, Door Window Upper Guide	25.052-2f
SPACER, Engine Oil Pump Inlet Tube Screen To Oil Pan	1.167-2
SPACER, Fan Blade	2.002-3
SPACER, Front Coil Spring	11.075-4
SPACER, Front Door Window Regulator Handle	23.105
SPACER, Front Fender Radio Antenna Dress Nut	15.030-4
SPACER, Front Seat Back Headrest	29.173-3
SPACER, Front Wheel	8.270-5
SPACER, Fuel Pump Camshaft Eccentric	4.118-3
SPACER, Gear Shift Lever Mounting Bracket	7.003-4
SPACER, Glove Box Door Lock Escutcheon	22.073-10
SPACER, Glove Box Lamp Switch	3.378-4
SPACER, Handle To Body	24.020-9b
SPACER, Inside Rear View Mirror	27.084-5
SPACER, Instrument Cluster Bezel	3.510-1b
SPACER, Instrument Cluster Overlay Visor To Overlay	3.510-10
SPACER, Jack Hold Down Hook	14.138-6
Mounting	14.115-1
SPACER, Liftgate Hinge	23.402-2
SPACER, Overdrive Control	6.363

Printed in U.S.A.

DESCRIPTION	GROUP NO.
S - Cont.	
SPACER, Pan To Side Sill	20.005-2
SPACER, Power Brake Power Unit To Mounting Brackets	8.400-2
SPACER, Quarter Side Trim Panel	29.052-14
SPACER, Radio Rear Speaker Control	15.320-36
SPACER, Rear Axle Pinion Collapsible	9.050-6
SPACER, Rear Brake Drum	8.240-7
SPACER, Rear Deck Door Handle Shaft	23.078-11
SPACER, Rear Quarter Armrest	29.056-5
SPACER, Rear Quarter Stationary Glass	25.026-3
SPACER, Rear Quarter Window Guide Roller	25.034-10
SPACER, Rear Seat Back Frame Reinforcement	29.220-6
SPACER, Rear Suspension Sway Stabilizer To Lower Control Arm	11.450-3
SPACER, Rear Window Defogger Blower Motor Wheel	13.610-3
SPACER, Rear Window Glass	25.028-2
SPACER, Rear Window Glass	25.044-3
SPACER, Rubber	29.217-4
SPACER, Speedometer Bracket	3.550-8
SPACER, Speedometer Drive Gear	6.240-5
SPACER, Steering Gear Shaft Lower Bearing	10.766
SPACER, Steering Gear To Side Sill	10.354-1
SPACER, Steering Wheel Actuator Lock Shoe	10.844
SPACER, Tail, Stop And Rear Directional Signal Lamp Housing	3.303-1a
SPACER, Tailgate Electric Operated Window Regulator Worm End	23.308-15
SPACER, Tailgate Hinge Torque Bar Bracket	23.006-26
SPACER, Transmission Countershaft Gear Roller Bearing	6.167-2
SPACER, Transmission Spline Shaft Pilot Bearing Roller	6.076-2
SPACER, Valve Rocker Arm Shaft Center	1.098-5
SPACER, Valve Rocker Arm Shaft End	1.098-3
SPACER, Valve Rocker Arm Shaft Intermediate	1.098-4
SPACER, Vertical Guard To Bumper Rail	12.184-9
SPACER, Windshield Glass	25.002-2
SPACER, Windshield Washer Connector	22.053-5
SPACER, Windshield Wiper Pivot Shaft	22.047-9
SPACER KIT, Front Seat Bottom Frame	29.129-4
SPARK PLUG	3.001-1
SPEAKER, Front Door	15.320-47
SPEAKER, Radio Front	15.320-8
SPEAKER, Radio Rear Compartment	15.320-55
SPEAKER, Radio Rear Shelf (Less Tape Player)	15.320-25
SPEAKER, Radio Rear Shelf (With Tape Player)	15.320-26
SPEEDNUT, Gasoline Tank Lower Vent Tube Seal	4.141-40
SPEEDOMETER	3.550-1
SPHERE, Steering Gear Shaft Centering	10.840
SPHERE KIT, Steering Gear Shaft Centering	10.839
SPIDER ASSEMBLY, Universal Joint	9.107-1 Thru 9.107-3
SPINDLE, Steering Knuckle	10.004-1
SPOILER, Front Underbody	20.115-3a
SPOILER, Rear Deck Door	23.009-5
SPOILER, Roof Panel	20.420-5
SPRAG, Automatic Transmission Parking	16.390-3
SPRING, Accelerator Control Rod To Bracket	4.055-3
SPRING, Accelerator Pedal Hinge Safety	4.040-9
SPRING, Accelerator Pedal To Bellcrank	4.040-3
SPRING, Air Conditioning Evaporator Or High Level Ventilation Air Discharge Center Duct	13.515-23d
SPRING, Air Conditioning Evaporator Or High Level Ventilation Air Discharge Right Duct	13.515-26a
SPRING, Armrest Flo-Thru Vent Shut-Off	29.075-8
SPRING, Automatic Speed Control Chain Protective	4.390-2
SPRING, Automatic Speed Control Regulator Governor	4.350
SPRING, Automatic Transmission Accumulator	16.375-4
SPRING, Automatic Transmission Front Clutch Cylinder	16.115-6
SPRING, Automatic Transmission Front Clutch Piston	16.415-6
SPRING, Automatic Transmission Front Servo	16.060-4
SPRING, Automatic Transmission Front Servo Self Adjusting Screw	16.060-12
SPRING, Automatic Transmission Governor Weight	16.385-10
SPRING, Automatic Transmission Kickdown Servo Inner Piston	16.350-5
SPRING, Automatic Transmission Kickdown Servo Piston (Inner)	16.350-9
SPRING, Automatic Transmission Kickdown Servo Piston (Outer)	16.350-10
SPRING, Automatic Transmission Lower Valve Body 2-3 Circuit Check Ball	16.216-6
SPRING, Automatic Transmission Lower Valve Body Converter Out Check	16.215-5
SPRING, Automatic Transmission Lower Valve Body Down Shift Valve	16.215-1
SPRING, Automatic Transmission Lower Valve Body Modulator Valve	16.215-10
SPRING, Automatic Transmission Lower Valve Body Primary Regulator Valve (Inner)	16.215-12
SPRING, Automatic Transmission Lower Valve Body Primary Regulator Valve (Outer)	16.215-4
SPRING, Automatic Transmission Lower Valve Body Secondary Regulator Valve	16.215-3
SPRING, Automatic Transmission Lower Valve Body Servo Orifice Control	16.215-2
SPRING, Automatic Transmission Lower Valve Body Throttle Modulator Valve	16.215-13
SPRING, Automatic Transmission Manual Valve Detent	16.225-7

DESCRIPTION	GROUP NO.
S - Cont.	
SPRING, Automatic Transmission Overrunning Clutch	16.312-2
SPRING, Automatic Transmission Parking Brake Release	16.225-11
SPRING, Automatic Transmission Parking Brake Toggle Lift Lever	16.090-4
SPRING, Automatic Transmission Parking Sprag	16.090-13
SPRING, Automatic Transmission Rear Clutch Drum	16.390-4
SPRING, Automatic Transmission Rear Clutch Piston	16.125-6
SPRING, Automatic Transmission Rear Clutch Wave	16.425-5
SPRING, Automatic Transmission Rear Servo Piston	16.425-7
SPRING, Automatic Transmission Reverse Servo Cushion	16.070-7
SPRING, Automatic Transmission Reverse Servo Piston	16.370-3
SPRING, Automatic Transmission Throttle Control Rod	16.370-6
SPRING, Automatic Transmission Upper Valve Body Front Clutch Orifice Control Valve	16.508-1
SPRING, Automatic Transmission Upper Valve Body Orifice Control And Throttle Valve	16.205-15
SPRING, Automatic Transmission Upper Valve Body 1-2 Shift Valve	16.205-11
SPRING, Automatic Transmission Upper Valve Body Throttle Return Valve	16.205-7
SPRING, Automatic Transmission Upper Valve Body 2-3 Valve (Inner)	16.205-14
SPRING, Automatic Transmission Upper Valve Body 2-3 Valve (Outer)	16.205-4
SPRING, Automatic Transmission Upper Valve Range Control Valve	16.205-5
SPRING, Automatic Transmission Valve Body 2-3 Circuit Check Ball	16.205-1
SPRING, Automatic Transmission Valve Body Servo Regulator Valve (Inner)	16.215-15
SPRING, Automatic Transmission Valve Body Servo Regulator Valve (Outer)	16.215-14a
SPRING, Ball Stud Catch	16.215-14
SPRING, Bottom Frame Outer Hinge Adjusting Arm	29.461-5
SPRING, Brake Drum Anti-Squeak	29.103-6
SPRING, Brake Master Cylinder Check Valve	8.240-6
SPRING, Brake Master Cylinder Secondary Piston Return	8.042
SPRING, Brake Shoe Anti-Noise	8.046-2
SPRING, Brake Shoe Automatic Adjusting Lever	8.008-10
SPRING, Brake Shoe Hold Down	8.008-2
SPRING, Brake Shoe Return	8.008-4
SPRING, Carburetor Pullback	8.008-1
SPRING, Center Horn Button Contact	4.080-1
SPRING, Center Horn Button Receiver	3.400-3
	3.400-11

DESCRIPTION	GROUP NO.
S - Cont.	
SPRING, Clutch Anti-Chatter	5.042
SPRING, Clutch Pedal Over Center	5.155-3
SPRING, Clutch Release Cable Actuating	5.161-6
SPRING, Clutch Release Cable Tension	5.161-5
SPRING, Clutch Release Idler Bellcrank Retaining	5.168-15
SPRING, Clutch Throwout Lever	5.190-1
SPRING, Clutch Throwout Lever (In Clutch)	5.132-1
SPRING, Column Gear Shift Upper Lever Tension	7.020-2
SPRING, Directional Signal Canceling Cam	3.321-14
SPRING, Directional Signal Switch Actuator	3.321-8
SPRING, Door Outside Handle Push Button Return	23.074-14
SPRING, Door Outside Handle Return	23.074-15
SPRING, Electric Windshield Wiper Drive Crank Eccentric	22.034-2
SPRING, Engine Oil Pump Release Valve	1.176-2
SPRING, Exhaust Manifold Damper Heat Valve	1.067-14
SPRING, Exhaust Manifold Damper Heat Valve Anti-Flutter	1.067-16
SPRING, Foot Operated Parking Brake Return	8.180-9
SPRING, Forward Tilt Lock Release	29.105-24
SPRING, Fourspeed Transmission Speed Finder Interlock Poppet	6.215-5
SPRING, Front Brake Wheel Cylinder Piston Return	8.086-1
SPRING, Front Coil	11.072
SPRING, Front Door Lower Hinge Check	23.016-4
SPRING, Front Door Upper Hinge Check	23.015-5
SPRING, Front Door Ventilator Lock Handle Button	23.121-3
SPRING, Front Seat Adjusting Slide	29.138
SPRING, Front Seat Back Forward Tilt Lock Tension	29.105-14
SPRING, Front Seat Cushion Coil	29.103-12
SPRING, Front Seat Slide Adjuster Latch Locking	29.131-6
SPRING, Fuel Pump Filter Bowl	4.110-6
SPRING, Gasoline Filter Magnet	15.190-7
SPRING, Gasoline Filter Magnet And Filter	15.190-8
SPRING, Gear Selector Dial Retaining	7.538
SPRING, Gear Shift Lever Actuating	7.004-5
SPRING, Gear Shift Lever Pivot Shaft	7.005-7
SPRING, Gear Shift Lever Tension	7.001-14
SPRING, Gear Shift Operating Shaft Return	7.038-3
SPRING, Gear Shift Upper Lever Housing Detent	7.020-14
SPRING, Gear Shift Upper Lever Pressure Pin	7.025-2
SPRING, Gear Shift Upper Lever Pressure Pin Retainer	7.025-5
SPRING, Gear Shift Upper Lever Vibration Dampening	7.020-10
SPRING, Headlamp Adjusting	3.272
SPRING, Heater Air Damper Idler Lever Return	13.017-31
SPRING, Heater And Defroster Control	13.017-11

Printed in U.S.A.

ALPHABETICAL INDEX

DESCRIPTION	GROUP NO.
S - Cont.	
SPRING, Hood Hinge	12.048
SPRING, Hood Lock Lower (Latch)	12.060-7
SPRING, Hood Lock Lower (Safety)	12.060-6
SPRING, Horn Blowing Contact (LHD)	3.401-7
SPRING, Horn Blowing Contact (RHD)	3.406-4
SPRING, Horn Blowing Cover	3.401-4
SPRING, Horn Blowing Rim Contact	3.407-3
SPRING, Horn Blowing Ring	3.406-3
SPRING, Ignition Cylinder Tumblers	3.135-10
SPRING, Inner Handle	7.032-2
SPRING, Instrument Panel Ash Receiver Door	22.094-2
SPRING, Liftgate Latch Handle Release Lever Return	23.413-5
SPRING, Oil Filter By-Pass Valve	1.217
SPRING, Open Door Warning Lamp Lens	3.655-6
SPRING, Overdrive Roller Set Retaining	6.332-2
SPRING, Overdrive Shift Rail Retractor	6.295-8
SPRING, Overdrive Shift Rail Reverse Lockup	6.295-7
SPRING, Parking Brake Lever Strut	8.008-6
SPRING, Parking Brake Rear Cable Retaining	8.220-5
SPRING, Parking Brake Release Rod Return	8.182-4
SPRING, Parking Brake Right Rear Pullback	8.220-5a
SPRING, Parking Brake Warning Lamp	3.650-7
SPRING, Power Brake Master Cylinder Residual Valve	8.517-1
SPRING, Power Brake Master Cylinder Secondary Piston Return	8.515-5
SPRING, Power Brake Valve Body Diaphragm	8.485-6
SPRING, Power Brake Valve Push Rod	8.480-5
SPRING, Power Brake Valve Push Rod Plunger	8.480-7
SPRING, Power Steering Gear Pressure Check Valve Poppet	10.532
SPRING, Power Steering Gear Valve Spool	10.620
SPRING, Power Steering Pump Control Valve Relief Valve	10.445-6
SPRING, Power Steering Pump Flow Control Valve	10.445-7
SPRING, Power Steering Pump Pressure Plate	10.445-14
SPRING, Quarter Window Handle	24.020-8
SPRING, Rear Brake Shoe Automatic Adjusting Lever Latch	8.012-4
SPRING, Rear Brake Shoe Retaining	8.008-3
SPRING, Rear Brake Wheel Cylinder Piston Return	8.086-2
SPRING, Rear Coil	11.102
SPRING, Rear Compartment Spare Wheel Cover Ash Receiver	24.051-2
SPRING, Rear Deck Lock Lever Release	23.070-3
SPRING, Rear Deck Lock Pawl Return	23.070-4
SPRING, Rear Door Ash Receiver Cover	23.182-4
SPRING, Rear Door Lower Hinge Check	23.018-4
SPRING, Rear License Plate Mounting Plate	14.115-3
SPRING, Rear Quarter Ash Receiver Cover	24.050-4
SPRING, Rear Quarter Electric Operated Window Regulator Control Switch To Housing	24.220-9
S - Cont.	
SPRING, Rear Quarter Panel Gasoline Filler Door	12.125-10
SPRING, Rear Quarter Window Guide Front Roller	25.034-8
SPRING, Rear Seat Back	29.222-1
SPRING, Rear Seat Back Center Armrest	29.236
SPRING, Rear Seat Back Locking Rod Return	29.214-3b
SPRING, Rear Seat Back Side Arm To Rear Cushion Tension	29.226-4
SPRING, Rear Seat Cushion	29.192-1
SPRING, Recirculating Air Damper	13.012-5
SPRING, Retainer	17.710
SPRING, Reverse Release	7.006-2
SPRING, Steering Column Housing Rack Preload	10.335-2
SPRING, Steering Column Lock Inhibitor	10.337-9
SPRING, Steering Column Locking Bolt	10.337-6
SPRING, Steering Gear Jacket Tube Upper Bearing	10.344-7
SPRING, Steering Gear Shaft Lower Bearing	10.770
SPRING, Steering Gear Upper Shaft To Lower Shaft Coupling	10.727
SPRING, Steering Gear Upper Shaft To Lower Shaft Preload	10.837
SPRING, Steering Wheel Actuator Lock Shoe	10.847
SPRING, Steering Wheel Actuator Shoe Release Lever	10.846
SPRING, Steering Wheel Tilt	10.855
SPRING, Switch To Housing	3.321-2
SPRING, Tailgate Electric Operated Window Regulator Balance	23.306-3
SPRING, Tailgate Latch Link Retainer	23.039-24
SPRING, Tailgate Latch Release Lever	23.039-5
SPRING, Tailgate Window Regulator Handle Crank	23.078-5
SPRING, Tailgate Wiring Harness Retractor	23.320-5b
SPRING, Transmission Speed Finder Interlock Poppet	6.215-4
SPRING, Transmission Synchronizer Shaft Plate Retaining	6.100-4
SPRING, Valve	1.083
SPRING, Valve Hi-Perf	19
SPRING ASSEMBLY, Rear Leaf	11.100
SPRING KIT, Rear Axle Differential Preload	9.038
SPRING KIT, Sun Roof Latch Rod	28.139
SPRING KIT, Tailgate Wiring Harness Retactor	23.320-5a
SPRING SET, Electric Windshield Wiper Motor Brush	22.028-4
SPROCKET, Camshaft	1.134-1
SPROCKET, Crankshaft	1.132-1
STABILIZER, Front Suspension Sway	10.260-1
STABILIZER, Rear Axle Lateral	11.263-1
STABILIZER, Rear Suspension Sway	11.450-1
STABILIZER KIT, Front Suspension Sway	10.260-1a
STABILIZER KIT, Rear Axle Lateral	11.260
STANCHION, Rear Deck Luggage Rack	23.009-14
STICKER, Air Cleaner	14.145-3
STICKER, Compressor Valve Warning	14.145-11

DESCRIPTION	GROUP NO.
S - Cont.	
STICKER, Exhaust Emission Maintenance Instruction	14.145-6
STICKER, Information	14.145-1
STICKER, Jack Storage And Instruction	14.145-4
STICKER, Tire Air Pressure	14.145-5
STICKER, Valve Cover	14.145-2
STIFFENER, Rocker Panel	20.180-2
STIFFENER, Roof Panel Front	28.102
STIFFENER, Roof Panel Rear	28.103
STIFFENER, Roof Panel Side	28.105
STOP, Front Door Glass Front Guide Channel	25.054-9
STOP, Front Door Glass Rear Guide Channel	25.054-10
STOP, Front Door Glass Regulator	25.054-7
STOP, Front Door Lower Hinge	23.016-6
STOP, Front Door Upper Hinge	23.015-3
STOP, Front Seat Adjusting Slide	29.131-4
STOP, Rear Door Lower Hinge	23.018-6
STOP, Rear Door Upper Hinge	23.017-5
STOP, Rear License Plate Mounting Plate	14.115-4
STOP, Rear Quarter Glass Lower Front	25.054-20
STOP, Rear Quarter Glass Upper Front	25.054-18
STOP, Rear Quarter Glass Upper Rear	25.054-19
STOP, Rear Quarter Window Regulator	24.001-4
STOP, Steering Gear Lower Shaft Stabilizer	10.775-1
STOP, Tailgate Window Regulator Arm	23.040-3
STORMSTRIP, Door And Quarter Window	29.358-1
STORMSTRIP, Pillar And Quarter Window	29.358-2
STRAP, Air Conditioning Hose	13.440-16b
STRAP, Air Conditioning Intermediate Pulley Adjusting	13.430-13
STRAP, Alternator Adjusting	3.014-1
STRAP, Alternator Adjusting (Motorola)	3.018-11
STRAP, Assist	29.005-1
STRAP, Clock Ground	3.369-8
STRAP, Exhaust Emission Air Pump To Compressor	4.535-1
STRAP, Gasoline Filler Neck Ground	4.141-31
STRAP, Gasoline Tank Mounting	4.152-1
STRAP, Heater Control Panel To Instrument Cluster Ground	13.017-17
STRAP, Lighting Switch Ground To Wiper Switch	3.145-11
STRAP, Power Steering Pump Adjusting	10.450-7
STRAP, Radio Cable Conduit	3.680-6
STRAP, Rear Door Pull	29.076-1
STRAP, Tailgate Wiring Harness Retractor Spring	23.320-5c
STRAP, Third Seat Cushion Pull	29.279-3
STRAP, Trunk Lamp Assembly Wire	3.660-5a
STRAP, Windshield Wiper Control Ground	22.038-8
STRIKER, Bottom Frame	29.103-10
STRIKER, Console Compartment Door Lock	27.282-1
STRIKER, Door Lock	23.087-1
STRIKER, Glove Box Lock	22.075-1
STRIKER, Hood Lock	12.060-10
STRIKER, Hood Lock Safety Catch	12.060-7c
STRIKER, Liftgate Latch	23.416-1
STRIKER, Rear Auxiliary Floor Side Compartment Door Lock	20.438-8
STRIKER, Rear Auxiliary Floor Storage Compartment Latch	20.452-9

DESCRIPTION	GROUP NO.
S - Cont.	
STRIKER, Rear Deck Lock	23.073-1
STRIKER, Tailgate Latch	23.039-16
STRIP, Air Conditioning Evaporator Air Discharge Duct Single Duct Door Friction	13.515-14
STRIP, Remote Handle To Foundation Locking	29.074-2
STRIP, Rear Auxiliary Floor Carpet Skid	29.421
STRIP, Rim Blow Horn Switch	3.410
STRIP, Tailgate Carpet Skid	23.230-1
STRIPE, Exterior Decal Rally	26
STRUT, Automatic Transmission Front Brake Band	16.130-2
STRUT, Automatic Transmission Kickdown Band	16.348-2
STRUT, Automatic Transmission Rear Brake Band	16.155-2
STRUT, Automatic Transmission Reverse Band	16.455-2
STRUT, Brake Shoe Parking Brake Lever	8.024-2
STRUT ASSEMBLY, Transmission Front Brake Anchor	16.010-9
STUD	17.718
STUD, Carburetor Air Cleaner Retaining	4.088-2
STUD, Front Seat Back Center Armrest Weld.	29.142-7
STUD, Front Wheel Disc Brake Disc Assembly	8.805-2
STUD, Groove Drive	17.720
STUD, Hood Tie Down	12.001-22
STUD, Liftgate Latch Striker Mounting	23.416-5
STUD, Liftgate Support Bracket To Glass	23.407-4
STUD, Power Steering Pump Mounting	10.430-2
STUD, Power Steering Pump Pivot	10.432
STUD, Rear Quarter Window Handle Retaining	24.020-6a
STUD, Spare Wheel Cover Ball	29.461-3
STUD, Valve Rocker Arm	1.100-1
STUD, Valve Rocker Arm Hi-Perf	19
SUPPORT, Air Conditioning Air Distribution Right Duct	13.520-3
SUPPORT, Air Conditioning Compressor Mounting Bracket	13.410-8
SUPPORT, Alternator Bracket Lower	3.018-9
SUPPORT, Alternator Bracket Upper	3.018-7
SUPPORT, Automatic Transmission Annulus Front Gear	16.458-3
SUPPORT, Automatic Transmission Annulus Rear Gear	16.458-7
SUPPORT, Automatic Transmission Center	16.135-1
SUPPORT, Automatic Transmission Governor	16.385-1
SUPPORT, Automatic Transmission Output Shaft	16.460-5
SUPPORT, Belt Rail To Inner Wheelhouse	20.350-7
SUPPORT, Brake Pedal	8.164-1
SUPPORT, Clutch Idler Lever Or Beam Pivot	5.178-1
SUPPORT, Exhaust Emission Air Pump Mounting Bracket	4.530-1
SUPPORT, Exhaust Emission Air Pump To Filter Coupling Hose	4.555

Printed in U.S.A.

DESCRIPTION	GROUP NO.
S - Cont.	
SUPPORT, Exhaust Emission Back-Fire Valve	4.557-1
SUPPORT, Exhaust Pipe Rear	4.200-1
SUPPORT, Extension Auxiliary Floor	20.452-13
SUPPORT, Folding Top Pivot Bracket	20.282-1
SUPPORT, Front Coil Spring	11.075-1
SUPPORT, Front Fender Radio Antenna	15.030-6
SUPPORT, Front Fender To Grille Panel	12.075-5j
SUPPORT, Front Seat Back	29.110
SUPPORT, Front Seat Back Armrest Hinge	29.143-1
SUPPORT, Front Seat Back Pad	29.108-5
SUPPORT, Front Seat Center Cushion Pad	29.159-2
SUPPORT, Front Seat Cushion Pad	29.168-3
SUPPORT, Front Suspension Sway Stabilizer To Strut Rod Bracket	10.260-11
SUPPORT, Front Wheelhouse Crossmember Lower Splash Center	20.115-7
SUPPORT, Gear Shift Lever Mounting Bracket	7.017-1
SUPPORT, Glove Box	22.058-4
SUPPORT, Grille Panel To Lower Baffle	2.051-6
SUPPORT, Hood Lock	12.060-8
SUPPORT, Instrument Panel	22.056-30
SUPPORT, Instrument Panel Radio Speaker	22.077-4
SUPPORT, Liftgate	23.405-1
SUPPORT, Radiator	2.023-1
SUPPORT, Radiator Grille (Inner)	2.050-8
SUPPORT, Radiator Grille (Outer)	2.050-11
SUPPORT, Radiator Grille Panel To Grille	2.051-5
SUPPORT, Radiator Grille To Headlamp Panel Bracket	2.050-13d
SUPPORT, Radiator Grille To Hood Latch	2.050-37
SUPPORT, Radio Speaker	15.320-11
SUPPORT, Radio Speaker Mounting Plate	15.320-14
SUPPORT, Rear Auxiliary Floor Center	20.430-1c
SUPPORT, Rear Auxiliary Floor Side Panel To Floor	20.435-2
SUPPORT, Rear Auxiliary Floor Rear Panel	20.435-3d
SUPPORT, Rear Compartment Side Trim Panel	29.460-6
SUPPORT, Rear Compartment Trim Panel	20.350-10
SUPPORT, Rear Deck Door Hinge	23.028-1
SUPPORT, Rear Deck Upper Panel To Wheelhouse	20.367-2
SUPPORT, Rear Floor Pan Gas Tank Strap	20.035-5
SUPPORT, Rear Quarter Trim Panel	20.272-6
SUPPORT, Rear Quarter Window (Lower)	20.260-4e
SUPPORT, Rear Quarter Window (Upper)	20.260-4c
SUPPORT, Rear Quarter Window Upper (Front)	20.260-4b
SUPPORT, Rear Quarter Window Upper (Rear)	20.260-4a
SUPPORT, Rear Seat Back	20.378
SUPPORT, Rear Seat Back Center Armrest	29.233
SUPPORT, Rear Seat Back Pad	29.224-4
SUPPORT, Rear Seat Cushion Pad	29.198-1
SUPPORT, Rear Shelf Panel	20.380-1 Thru 20.380-3
SUPPORT, Roof Panel	20.420-2
SUPPORT, Side Roof Rail Rear Reinforcement To Wheelhouse	20.260-4g
SUPPORT, Spare Tire Cover Panel	29.461-7
SUPPORT, Spare Wheel	20.350-8
SUPPORT, Steering Wheel And Directional Signal Actuator	10.850-1
SUPPORT, Sun Visor Bracket	20.160-2
SUPPORT, Tailgate	23.036-1
SUPPORT, Tailgate Lower Hinge	23.006-14
SUPPORT, Third Seat Back	29.261-1
SUPPORT AND CUSHION SET, Front Door Inner To Outer Panel	23.001-3
SUPPORT ASSEMBLY, Extension Auxiliary Floor To Floor Pan	20.452-14
SUPPORT ASSEMBLY, Tailgate Electric Operated Window Regulator Pinion Shaft	23.308-6
SUPPORT BRACKET, Rear Auxiliary Storage Compartment Cover	20.452-5g
SUPPORT KIT, Inside Rear View Mirror Mounting	25.002-5
SWITCH, Air Conditioner Blower Control	13.078-3
SWITCH, Air Conditioning Temperature Override	13.420
SWITCH, Air Outlet Damper Vacuum	13.020-2j
SWITCH, Air Outlet Damper Vacuum Micro	13.020-2m
SWITCH, Automatic Speed Control (On Instrument Panel)	4.305-1
SWITCH, Automatic Speed Control (On Brake Support Bracket)	4.305-3
SWITCH, Automatic Transmission Neutral Safety And Back-Up Lamp	3.022-1
SWITCH, Automatic Transmission Solenoid Kickdown	16.245-1
SWITCH, Back-Up Lamp Standard Or 4 Speed Transmission	3.319-1
SWITCH, Cargo Area Lamp Door	3.670-8
SWITCH, Courtesy (Door Operated)	3.145-8
SWITCH, Courtesy (On Instrument Panel)	3.145-9
SWITCH, Directional Lever And Automatic Speed Control	4.305-1a
SWITCH, Directional Signal	3.321-1
SWITCH, Front Door Electric Operated Window Regular Control Safety	23.330-3
SWITCH, Front Door Electric Operated Window Regulator Control	23.330-1
SWITCH, Front Seat Belt Warning Sensor	3.788
SWITCH, Glove Box Lamp	3.378-2
SWITCH, Headlamp Dimmer	3.158-1
SWITCH, Heated Rear Window Control	3.770-1
SWITCH, Heater-Defroster-High Level Ventilation Blower Control	13.078-1
SWITCH, Ignition	3.130-1
SWITCH, Ignition Key Alarm	3.140-3
SWITCH, Instrument Panel Lights	3.146-1
SWITCH, Lighting	3.145-1
SWITCH, Overdrive Kickdown	6.367-1
SWITCH, Parking Brake Warning Lamp	3.650-2
SWITCH, Pressure Transmission Controlled Spark	3.051-1
SWITCH, Rear Door Electric Operated Window Regulator Control	23.330-2
SWITCH, Rear Quarter Electric Operated Window Regulator Control	24.220-1
SWITCH, Rear Window Defogger Blower Motor	13.615-1
SWITCH, Solenoid Control (WAT)	16.226-1

Printed in U.S.A.

DESCRIPTION	GROUP NO.
S - Cont.	
SWITCH, Solenoid Control (WST)	6.010-1
SWITCH, Stop And Tail Lamp	3.333-1
SWITCH, Tailgate Electric Operated Window Regulator Control	23.330-5
SWITCH, Tailgate Electric Operated Window Regulator Control Safety	23.335-1
SWITCH, Temperature Override	3.051-5
SWITCH, Warning Buzzer	3.140-2
SWITCH, Windshield Washer	22.150-6
SWITCH, Windshield Wiper	22.038-1
SWITCH ASSEMBLY, Emergency Signal System	3.690-1
SWITCH REPAIR KIT, Brake Failure Warning	8.104-3
- T -	
TACK, Lace	17.732
TACK, Trimmers	17.734
TACHOMETER	3.700-1
TAILGATE	23.006-1
TANK, Vacuum Storage	13.020-5
TANK ASSEMBLY, Gasoline	4.130-1
TAPE, Front Door Reflective	23.001-7
TAPE, Radiator Grille Insert	2.052
TAPE, Rear Deck Upper Panel	20.367-4
TAPE, Rear Door Reflecting	23.002-6
TAPE, Tailgate Reflective	23.006-2
TAPPET, Valve	1.088-1
TAPPET, Valve Hi-Perf	19
TEE, Air Scoop And Transmission Connector	1.069-7
TEE, Automatic Speed Control Vacuum Line Hose	4.370-4
TEE, Carburetor Insulator Hose To Ventilation Valve Hose	1.117-7
TEE, Decel Value Hose To Intake Manifold	3.049-9
TEE, Distributor Vacuum Control To Carburetor And Fuel Vapor Canister	3.048-6
TEE, Exhaust Emission Air Pump To Air Injection Manifold And Back-Fire Valve	4.562
TEE, Hood Air Scoop Damper Control	12.001-21b
TEE, Intake Manifold To Adapter And Valve Hose	1.069-4
TEE, Inverted Flared Tube Internal Pipe Thread Two-Way	17.758
TEE, Inverted Flared Tube Right Angle Two-Way	17.760
TEE, Inverted Flared Tube Three-Way	17.756
TEE, Inverted Flared Tube Two-Way	17.754
TEE, Manifold Vacuum	3.050-5
TEE, Manifold Vacuum To Solenoid And Fuel Vapor Storage Canister	3.051-13
TEE, Oil Pressure Sending Unit	3.605-8
TEE, Rear Brake Tube	8.122-1
TEE, Vacuum Connector	22.050-5
TERMINAL, Adapter	3.155-5
TERMINAL, Automatic Transmission Kickdown Solenoid Wire	16.235-3
TERMINAL, Electric Wire	17.782
TERMINAL, Headlamp Switch Ground	3.145-4
TERMINAL, Ignition Switch Ground	3.130-5
T - Cont.	
TERMINAL, Male Jumper	3.165-19
THERMOSTAT, Air Conditioning Temperature Control	13.477-1
THERMOSTAT KIT	2.100
THREAD INSERTS (Heli-Coil)	17.790
TOOL KIT	14.110
TOP ASSEMBLY, Sun Roof	28.100-1
TRANSMISSION, Automatic	16.001
TRANSMISSION, Fourspeed	6.001-3
TRANSMISSION, Overdrive	6.001-2
TRANSMISSION, Standard	6.001-1
TRAY, Convenience	27.245
TRAY ASSEMBLY, Instrument Panel Ash Receiver	22.092-1
TRAY ASSEMBLY, Package	22.081-1
TRUNNION, Column To Transmission Park-Lock Rod	7.126-4
TRUNNION, Front Suspension Upper Control Arm	10.042-2
TRUNNION, Gear Shift Rod	7.135-1
TRUNNION, Reverse Lock-Up Rod (At Column)	7.134-4
TRUNNION, Reverse Lock-Up Rod (At Steering Column)	7.137-3
TRUNNION KIT, Front Suspension Upper Control Arm	10.042-1
TUBE, Air Conditioning Condenser Core To Receiver	13.440-6a
TUBE, Air Conditioning Evaporator Drain	13.488-9
TUBE, Air Conditioning Evaporator Or High Level Ventilation	13.510-11
TUBE, Air Conditioning Evaporator Or High Level Ventilation Air Discharge To Right Outlet	13.510-25
TUBE, Air Conditioning Evaporator Or High Level Ventilation Housing To Left Single Outlet	13.510-22a
TUBE, Air Conditioning Evaporator To Single Outlet	13.510-22
TUBE, Air Conditioning Or High Level Ventilation Floor Cooling	13.488-12
TUBE, Automatic Transmission Auxiliary Oil Cooler	16.231-2
TUBE, Automatic Transmission Front Oil Pump Converter Inlet	16.080-9
TUBE, Automatic Transmission Front Oil Pump Converter Outlet	16.080-8
TUBE, Automatic Transmission Front Oil Pump Pressure	16.080-10
TUBE, Automatic Transmission Front Oil Pump Suction	16.080-11
TUBE, Automatic Transmission Front Servo Apply	16.060-22
TUBE, Automatic Transmission Front Servo Release	16.060-21
TUBE, Automatic Transmission Oil Cooler	16.230-1
TUBE, Automatic Transmission Oil Cooler Discharge To Sump	16.230-2
TUBE, Automatic Transmission Oil Filler	16.020-1

Printed in U.S.A.

DESCRIPTION	GROUP NO.
T - Cont.	
TUBE, Automatic Transmission Rear Clutch Drum	16.125-14
TUBE, Automatic Transmission Rear Servo	16.070-16
TUBE, Automatic Transmission Vacuum	16.240-1
TUBE, Blower Housing To Blower Motor	13.072-23
TUBE, Blower Motor Exhaust	13.072-24
TUBE, Brake Master Cylinder To Front Fitting	8.100-1
TUBE, Brake Master Cylinder To Pressure Differential Valve	8.100-6
TUBE, Brake Master Cylinder To Pressure Differential Valve Extension	8.100-10
TUBE, Brake Master Cylinder To Rear Axle	8.100-2
TUBE, Brake Master Cylinder To Union	8.100-3
TUBE, Brake Master Cylinder Union To Power Unit	8.100-5b
TUBE, Brake Pressure Differential Valve To Front Fitting	8.106-3
TUBE, Brake Pressure Differential Valve To Front Wheels	8.106-2
TUBE, Brake Pressure Differential Valve To Proportioning Valve	8.100-9
TUBE, Brake Pressure Differential Valve To Tee	8.100-7
TUBE, Brake Pressure Differential Valve To Union	8.100-8
TUBE, Brake Pressure Differential Valve To 3-Way Tee	8.100-13
TUBE, Carburetor Air Cleaner To Exhaust Manifold Shroud	4.015-8
TUBE, Carburetor Choke Heater (In Manifold)	4.020-4
TUBE, Carburetor Choke Heater (To Carburetor)	4.020-1
TUBE, Carburetor Clean Air	4.020-7
TUBE, Check Valve To Connector Hose	4.142-9
TUBE, Check Valve To Engine Vent Tube	4.142-7
TUBE, Combination Valve To Front Wheels	8.108-1
TUBE, Combination Valve To Master Cylinder (Front Port)	8.110-1
TUBE, Combination Valve To Master Cylinder (Rear Port)	8.110-2
TUBE, Combination Valve To Rear Axle Hose	8.124-1
TUBE, Combination Valve To Union	8.110-3
TUBE, Connector To Engine Vent	4.142-10
TUBE, Cylinder Head Cover To Carburetor Air Cleaner	1.116-1
TUBE, Cylinder Head Heater Outlet	1.059-4
TUBE, Decel Valve To Carburetor	3.049-7
TUBE, Decel Valve To Distributor	3.049-8
TUBE, Distributor Vacuum Control	3.048-1 Thru 3.048-1c
TUBE, Engine Oil Pump Inlet	1.167-1
TUBE, Exhaust Emission Air Injection Manifold	4.540
TUBE, Exhaust Emission Air Pump Exhaust	4.510-3
TUBE, Filter To Carburetor	4.176
TUBE, Front Brake Fitting To Front Wheels	8.106-1
TUBE, Front Door Window Guide	25.052-2a
T - Cont.	
TUBE, Front Wheel Disc Brake Caliper To Hose	8.850
TUBE, Fuel Pump To Carburetor	4.174
TUBE, Fuel Pump To Carburetor Filter	4.175
TUBE, Gasoline Tank Filler Neck Air Vent	4.141-8
TUBE, Gasoline Tank Filler Neck Housing Overflow Drain	4.141-26
TUBE, Gasoline Tank To Check Valve Vent	4.142-8
TUBE, Gasoline Tank To Fuel Pump	4.160-1 Thru 4.160-4
TUBE, Gasoline Tank Vent (Lower)	4.141-36
TUBE, Gasoline Tank Vent (Upper)	4.141-32
TUBE, Heater Core To Water Pump	13.050-12
TUBE, Heater-Defroster Air Duct To Damper Housing	13.118-7
TUBE, Intake Manifold Water	1.065-1
TUBE, Left Rear Brake	8.126-1
TUBE, Manifold To Pump	22.050-1
TUBE, Oil Level Gauge	1.187-2
TUBE, Power Steering Pump Return Hose To Steering Gear	10.470-6
TUBE, Proportioning Valve To Rear Axle Hose	8.100-11
TUBE, Pump To Tee	22.050-4
TUBE, Pump To Windshield Wiper	22.050-2
TUBE, Rear Adjustable Air Shock To Valve	11.235
TUBE, Right Rear Brake	8.126-2
TUBE, Solenoid To Distributor Vacuum Control	3.051-11
TUBE, Steering Gear Jacket	10.338-1
TUBE, Thermostat Housing To Intake Manifold	13.050-13
TUBE, Union To Rear Brake Hose	8.100-4
TUBE, Water Pump To Intake Manifold	1.064-4
TUBE ASSEMBLY, Steering Linkage Tie Rod Adjusting	10.222
TUBE KIT, Carburetor Choke Clean Air	4.020-9
TUMBLER, Ignition Cylinder	3.135-8
TUNE-UP KIT	3.003
- U -	
U-BOLT, Rear Leaf Spring To Axle	11.132-1
UNION, Brake Master Cylinder To Pressure Differential Valve Extension	8.100-12
UNION, Brake Master Cylinder To Rear Hose	8.100-5
UNION, Brake Master Cylinder To Tube	8.100-5a
UNION, Combination Valve Tube To Rear Axle Hose	8.110-4
UNION, Flared Tube	17.792
UNION, Inverted Flared Tube	17.796
UNISIDE ASSEMBLY	20.170-1
UPHOLSTERY, Front Seat Back	29.104
UPHOLSTERY, Front Seat Back Headrest	29.172-1
UPHOLSTERY, Front Seat Center Armrest	29.146
UPHOLSTERY, Front Seat Center Cushion	29.161
UPHOLSTERY, Front Seat Cushion	29.152
UPHOLSTERY, Rear Seat Back	29.212
UPHOLSTERY, Rear Seat Back Center Armrest	29.231

Printed in U.S.A.

DESCRIPTION	GROUP NO.
U - Cont.	
UPHOLSTERY, Rear Seat Cushion	29.182
UPHOLSTERY, Third Seat Back	29.252
UPHOLSTERY, Third Seat Cushion	29.272
UPPER PLATE, Spoke Horn Button Contact	3.400-23
- V -	
VALVE, Air Conditioning Compressor Suction And Discharge	13.405-1
VALVE, Air Conditioning Expansion	13.470-1
VALVE, Air Conditioning Receiver Pressure Relief	13.455-6
VALVE, Air Conditioning Vacuum Check	1.069-1
VALVE, Automatic Transmission Governor	16.385-13
VALVE, Automatic Transmission Lower Valve Body Manual	16.215-11
VALVE, Brake Pressure Differential	8.104-1
VALVE, Combination	8.118-1
VALVE, Cylinde- Block Ventilation	1.119-1
VALVE, Distributor Thermostatic Vacuum	3.050-1
VALVE, Exhaust	1.078-1
VALVE, Exhaust Emission Air Pump Relief	4.507-1
VALVE, Exhaust Emission Back-Fire	4.558
VALVE, Front Coil Spring Support Air Vent	11.075-8
VALVE, Gasoline Tank Fuel Vent Line Check	4.142-1
VALVE, Heater Water	13.035-1
VALVE, Intake	1.077-1
VALVE, Oil Filter By-Pass	1.215
VALVE, Power Brake Vacuum Check	8.460-1
VALVE, Power Steering Pump Control	10.445-3
VALVE, Power Steering Pump Pressure Relief	10.430-9
VALVE, Rear Brake Proportioning	8.120-1
VALVE, Relief	17.810
VALVE ASSEMBLY, Automatic Transmission Control	16.195-1
VALVE ASSEMBLY, Automatic Transmission Control	16.495
VALVE ASSEMBLY, Power Steering Gear	10.615
VALVE ASSEMBLY, Windshield Washer Check	22.055-1
VALVE BODY, Automatic Speed Control Regulator	4.340
VALVE KIT, Exhaust	1.078-2
VALVE KIT, Intake	1.077-2
VALVE KIT, Rear Adjustable Air Shock	11.233-1
VALVE PLATE KIT, Air Conditioning Compressor	13.400-4
VANE KIT, Power Steering Pump Rotor	10.435-2
VENTILATOR, Front Door	23.110-1
VENTURI, Power Steering Pump Flow Director	10.430-12
VISOR, Instrument Cluster Opening Overlay	3.510-8
VISOR, Sun	29.003-1
- W -	
WASHER, Automatic Transmission Annulus Gear Support Thrust	16.458-4
WASHER, Automatic Transmission Front Clutch Cylinder	16.115-14
WASHER, Automatic Transmission Front Clutch Cylinder Hub Thrust	16.115-12
WASHER, Automatic Transmission Front Clutch Cylinder Thrust	16.115-13
WASHER, Automatic Transmission Front Clutch Thrust	16.415-13
WASHER, Automatic Transmission Front Clutch Thrust (Front)	16.415-14
WASHER, Automatic Transmission Front Clutch Thrust (Rear)	16.415-15
WASHER, Automatic Transmission Input Shaft Thrust	16.105-2
WASHER, Automatic Transmission Output Shaft Thrust	16.160-4
WASHER, Automatic Transmission Output Shaft Thrust	16.460-5
WASHER, Automatic Transmission Parking Brake Torsion Lever Pin	16.090-15
WASHER, Automatic Transmission Pinion Carrier Thrust (Front)	16.450-2
WASHER, Automatic Transmission Pinion Carrier Thrust (Rear)	16.450-4
WASHER, Automatic Transmission Planetary Carrier Thrust	16.150-5
WASHER, Automatic Transmission Rear Servo Adjusting Screw Lock	16.070-15
WASHER, Automatic Transmission Rear Servo Lever	16.070-12
WASHER, Automatic Transmission Sun Gear Driving Shell Thrust	16.440-4
WASHER, Automatic Transmission Sun Gear Thrust	16.145-2
WASHER, Brake Shoe Parking Brake Lever Strut	8.024-4
WASHER, Clamp To Jack	14.138-3a
WASHER, Clutch Cover To Flywheel Screw	5.050-2
WASHER, Clutch Release Main Lever Thrust	5.169-6
WASHER, Countersunk External Tooth Lock	17.828
WASHER, Door Lock Striker	23.087-6
WASHER, Door Window Regulator Handle	23.104
WASHER, Door Window Spanner Bolt	25.014-4
WASHER, Electric Windshield Wiper Drive Crank Eccentric Spring	22.034-1
WASHER, Electric Windshield Wiper Drive Crank Thrust (Inner)	22.031-4
WASHER, Electric Windshield Wiper Drive Crank Thrust (Outer)	22.031-5
WASHER, External Tooth Lock	17.822
WASHER, Finish	17.816
WASHER, Fourspeed Transmission Idler Gear Shaft Thrust	6.166-4
WASHER, Front Seat Back Center Armrest Lock	29.142-6
WASHER, Front Wheel Disc Brake Hose	8.855-3
WASHER, Gear Shift Lever Pivot Shaft Spring (WAT)	7.005-8

Printed in U.S.A.

DESCRIPTION	GROUP NO.
W - Cont.	
WASHER, Gear Shift Lever Pivot Shaft Spring (W4ST)	7.005-2
WASHER, Gear Shift Lever Wave	7.005-4
WASHER, Gear Shift Operating Shaft Return Spring	7.038-4
WASHER, Gear Shift Upper Lever Housing	7.020-9
WASHER, Gear Shift Upper Lever Pressure Pin Retainer Spring	7.025-6
WASHER, Heavy Series Bearing Lock	17.823
WASHER, Ignition Cylinder Wave	3.135-7
WASHER, Internal	17.826
WASHER, Internal Tooth Lock	17.824
WASHER, Jack Hold-Down	14.138-4a
WASHER, Lever To Clutch Throwout Lever Pin	5.123-2
WASHER, Liftgate Handle Wave	23.413-6
WASHER, Overdrive Shift Rail Assembly "C"	6.295-4
WASHER, Plain	17.814
WASHER, Rear Axle Differential Pinion Thrust (LLD)	9.033-1
WASHER, Rear Axle Differential Pinion Thrust (WLD)	9.033-2
WASHER, Rear Axle Differential Side Gear Thrust	9.029
WASHER, Rear Axle Pinion	9.050-5
WASHER, Rear Axle Pinion Lock	9.050-7
WASHER, Rear Deck Luggage Rack Stanchion	23.009-15
WASHER, Rear Quarter Window Regulator	24.001-3
WASHER, Rear Quarter Window Regulator Handle	24.008
WASHER, Remote Control Handle To Control	23.058-3
WASHER, Spare Wheel Rod	8.330-3a
WASHER, Spring Lock	17.820
WASHER, Starter And Ignition Switch Mounting	3.130-4
WASHER, Steering Column Lock Inhibitor Wave	10.337-10
WASHER, Steering Column Locking Bolt Spring Thrust	10.337-5
WASHER, Steering Gear Cross Shaft Adjusting Screw Thrust	10.306-2
WASHER, Steering Gear Jacket Tube Jacket	10.338-7c
WASHER, Steering Gear Jacket Tube Upper Bearing "C"	10.344-4
WASHER, Steering Gear Jacket Tube Upper Bearing Thrust	10.344-3
WASHER, Steering Gear Jacket Tube Upper Bearing Wave	10.344-5
WASHER, Steering Gear Lower Shaft Stabilizer	10.773
WASHER, Steering Gear Shaft Centering Sphere Wave	10.841
WASHER, Steering Gear Shaft Lower Bearing Spring Thrust	10.771
WASHER, Steering Gear Upper Shaft To Lower Shaft Coupling Bearing Retainer	10.730
WASHER, Steering Knuckle Pin Thrust Bearing Upper	10.023-5
WASHER, Steering Shaft Seal Retainer	10.332
W - Cont.	
WASHER, Transmission Countershaft Gear Bearing Roller	6.167-3
WASHER, Transmission Countershaft Gear Thrust (Front)	6.166-1
WASHER, Transmission Countershaft Gear Thrust (Less Lip)	6.166-2
WASHER, Transmission Countershaft Gear Thrust (With Lip)	6.166-3
WASHER, Transmission Front Ball Bearing	6.040-2
WASHER, Transmission Rear Ball Bearing	6.054
WASHER, Transmission Reverse Idler Gear Bearing Roller	6.170-5
WASHER, Transmission Reverse Idler Gear Thrust	6.170-6
WASHER, Valve Rocker Arm Shaft Spring	1.098-7
WASHER, Windshield	22.150
WATERDAM, Electric Operated Window Regulator Control Switch	23.330-15
WATERDAM, Rear Quarter Electric Operated Window Regulator Control Switch	24.220-8
WATERDAM, Rear Quarter Window	25.029-20
WATERDAM, Regulator Panel To Rear Quarter Panel	20.280-3
WATERSHIELD, Rear Quarter Ash Receiver Retainer	24.052-2
WEATHERSEAL, Front Body Pillar	23.012-10
WEATHERSEAL, Front Door Window Frame	23.012-5
WEATHERSEAL, Rear Door Window Frame	23.012-6
WEATHERSEAL, Rear Quarter Window	23.012-9
WEATHERSEAL, Roof Rail	23.012-7
WEATHERSTRIP, Front Door Glass	25.055
WEATHERSTRIP, Front Door Glass	25.058-1
WEATHERSTRIP, Front Door Glass And Ventilator Division Channel	23.117-1
WEATHERSTRIP, Front Door Ventilator	23.116
WEATHERSTRIP, Rear Door Glass (Inner)	25.056
WEATHERSTRIP, Rear Door Glass (Outer)	25.059
WEATHERSTRIP, Rear Quarter Glass (Inner)	25.061-1
WEATHERSTRIP, Rear Quarter Glass (Outer)	25.062-1
WEATHERSTRIP, Rear Quarter Window	25.090-1a
WEATHERSTRIP, Rear Quarter Window Frame	25.090-1
WEATHERSTRIP, Tailgate Glass (Inner)	25.065
WEATHERSTRIP, Tailgate Glass (Outer)	25.066
WEATHERSTRIP, Tailgate Window Slide Upper-Inner	25.039-9
WEATHERSTRIP, Tailgate Window Slide Upper-Outer	25.039-10
WEDGE, Steering Gear Jacket Tube	10.338-12
WEDGE KIT, Rear Axle Spring Seat	9.003-2
WEIGHT, Automatic Transmission Governor (Inner)	16.385-9
WEIGHT, Automatic Transmission Governor (Outer)	16.385-8
WEIGHT, Wheel Balance	8.280
WHEEL, Heater-Defroster-Air Conditioner And High Level Ventilation Blower Motor	13.072-15
WHEEL, Rear Window Defogger Blower Motor	13.610-1
WHEEL, Road	8.270-1
WHEEL, Steering	10.280-1

Printed in U.S.A.

DESCRIPTION	GROUP NO.
W - Cont.	
WICK, Clutch Pedal Over Center Spring	5.155-5
WICK, Crankshaft Bushing Oil	1.043-2
WICK, Parking Lamp Lens	3.292-23
WING NUT, Clamp To Jack	14.138-4
WING NUT, Spare Tire Cover Panel Hold Down	20.450-3
WING NUT, Spare Wheel Mounting Rod	8.330-2
WINK LIGHT	3.307
WIPER, Electric Windshield	22.200
WIRE, Air Conditioner Blower Motor Extension	13.072-9a
WIRE, Air Conditioning Compressor Drive Clutch Extension	13.415-7
WIRE, Alternator Ground	3.005-4
WIRE, Alternator To Ammeter	3.005-6
WIRE, Alternator To Capacitor	3.005-5
WIRE, Ammeter	3.600-3
WIRE, Ammeter To Junction Block	3.600-7
WIRE, Ammeter To Starter Solenoid	3.600-6
WIRE, Automatic Transmission Solenoid Terminal To Kickdown Switch	16.245-4
WIRE, Capacitor To Alternator	15.320-63a
WIRE, Capacitor To Ignition Coil	15.320-65a
WIRE, Cargo Area Lamp	3.163-15
WIRE, Chassis Wire Harness To Horn Relay	3.165-22
WIRE, Clock Ground	3.369-7
WIRE, Clock To Air Conditioning Control Lamp	3.369-4a
WIRE, Clock To Fuse Panel	3.369-4
WIRE, Console Lamp	3.760-1
WIRE, Console Lamp Extension	3.760-2
WIRE, Distributor To Coil High Tension	3.232-1
WIRE, Distributor To Ignition	3.232-3
WIRE, Domelamp	3.163-14
WIRE, Door Electric Operated Window Regulator Jumper	23.320-8
WIRE, Door Switch To Body Harness	3.349-7
WIRE, Front And Rear Door Domelamp Switches	3.163-17
WIRE, Front Door Domelamp Switch	3.163-18
WIRE, Front Seat Adjusting Slide Latch	29.133-1
WIRE, Front Seat Back Forward Tilt Control	29.105-17a
WIRE, Front Seat Back Spring Bolster	29.105-5
WIRE, Front Seat Cushion Spring Bolster	29.103-2
WIRE, Fusable Link	3.750-4
WIRE, Gear Selector Dial Lamp	7.535-7
WIRE, Glove Box Lamp	3.378-5
WIRE, Headlamp Warning And Key Alarm Buzzer	3.140-5
WIRE, Horn To Engine Compartment Wire Harness	3.105-5
W - Cont.	
WIRE, Ignition Coil To Capacitor	3.056-5
WIRE, Ignition Coil To Voltage Regulator	3.056-4
WIRE, Ignition Switch To Circuit Breaker	3.130-10
WIRE, Ignition Switch To Circuit Breaker To Throttle	3.130-11
WIRE, License Plate Lamp	3.341-1
WIRE, Neutral Safety Switch Extension	3.022-6
WIRE, Neutral Safety Switch To Main Wire Harness	3.022-5
WIRE, Parking And Front Directional Signal Lamp	3.292-20
WIRE, Parking Lamp Ground	3.292-21
WIRE, Rear Quarter Interior Lamp	3.675-4
WIRE, Rear Quarter Lamp	3.163-8a
WIRE, Rear Seat Back Spring Bolster	29.222-3
WIRE, Rear Seat Cushion Bolster	29.192-6
WIRE, Resistor To Blower Motor	13.072-22a
WIRE, Seat Upholstery	29.114
WIRE, Starter Solenoid Ground	3.020-8
WIRE, Starter Solenoid To Heated Rear Window Harness	3.772-1
WIRE, Tachometer Ground	3.700-17
WIRE, Tailgate Electric Operated Window Regulator Circuit Breaker To Switch	23.320-9
WIRE, Temperature Sending Unit Extension	3.610-6
WIRE, Upholstery	29.113
WIRE, Voltage Regulator To Chassis Wire Harness	3.012-3
WIRE, Windshield Wiper Control To Windshield Washer Pump	22.038-5
WIRE ASSEMBLY, Carburetor Solenoid To Wire Harness	3.165-1c
WIRE ASSEMBLY, Instrument Panel Indicator Lamp	3.531-3
WIRE ASSEMBLY, Tail Lamp Connector To Body Harness	3.312-5
WIRE HARNESS, Transmission Controlled Spark Extension	3.051-3a
WIRE SET, Ignition	3.228-1
WORM, Tailgate Electric Operated Window Regulator	23.308-11
- Y -	
YOKE, Gear Shift Lever Pivot Shaft	7.005-5
YOKE, Universal Joint (Front)	9.104-1
YOKE, Universal Joint (Rear)	9.104-2

Printed in U.S.A.

ALPHABETICAL INDEX

DESCRIPTION	GROUP NO.	DESCRIPTION	GROUP NO.

ABBREVIATIONS AND CODES INDEX

☆ ..... Refer To Group Indicated
◆ .....Refer To Assemblies, Sets And Kits Section
* ..... Refer To Notes Preceding Group
* ..... Refer To Notes Preceding Group
† ..... Not Available As Illustrated
#..... Nominal Number Size

199..... SIX-199 Cubic Inch Displacement
232..... SIX-232 Cubic Inch Displacement
258..... SIX-258 Cubic Inch Displacement
290..... V8-290 Cubic Inch Displacement
304..... V8-304 Cubic Inch Displacement
343..... V8-343 Cubic Inch Displacement
360..... V8-360 Cubic Inch Displacement
390..... V8-390 Cubic Inch Displacement
401..... V8-401 Cubic Inch Displacement

A ..... When Used With Bolts Designates Maximum Brinell Hardness Of 241, S.A.E. Grade 2
A ..... When Used With Lubrication Fittings Designates Angle
AL ..... Aluminum
ALT ..... Alternator
AMP ..... Ampere
API ..... Necessary Attaching Parts Included
AR .....As Required
AS ..... Alloy Steel
ASSY ..... Assembly

B ..... When Used With Bolts Designates Maximum Brinell Hardness Of 285, S.A.E. Grade 5
Bbl. ..... Barrel
Beg .....Beginning
BLE..... Black Enamel
BLU.....Blued
BR .....Brass
BRA..... Brass
Brg.....Bearing
BRI ..... Bright

C ..... When Used With Bolts Designates Maximum Brinell Hardness Of 352, S.A.E. Grade 8
C .....When Used With Relief Valves Designates Capacity
CA ..... Cast Iron
CAD.....Cadmium
CAN.....Assembled By Canada
CC ..... Carbon Commercial
CF .....Chrome Finish
CHR..... Chrome
CO .....Copper
COA.....Coated
Comp. ..... Components
COP.....Copper
CP .....Complete
C.P. ..... Candle Power

Deg. .....Degree
Dia.....Diameter
Dim. .....Dimension
DUL.....Dull
D/S .....Directional Signal

#E ..... Indicates Screw Or Nut Is Equipped With External Tooth Lockwasher
E/ .....Except

F ..... Finish
Flex..... Flexible
Ft. ..... Serviced In Bulk Only; Therefore, Specify Length Required In Feet

G ..... Gauge
#G .....Grade
Gal.....Gallon
Gskt .....Gasket

#I ..... Indicates Screw Or Nut Is Equipped With Internal Tooth Lockwasher
I.D. .....Inside Diameter
Incl ..... Includes
Inter.....Intermediate
IR..... Iron

KEN.....Assembled By Kenosha

L ..... Left
"L" ..... Code Column For Illustration Suffix Of Group Where Part May Be Found
L/C ..... Low Compression
LAAS..... Less Adjustable Air Shock
LAB.....Less Self Adjusting Brakes
LAC.....Less Air Conditioning
LAF..... Less Automatic Fan
LASC..... Less Automatic Speed Control
LAT..... Less Automatic Transmission
LAW.....Less Adjusting Steering Wheel

LBG ..... Less Bumper Guards
LBS .....Less Bucket Seats
LCA.....Less Center Armrest
LCAI .....Less Cold Air Induction
LCC.....Less Center Cushion
LCFE ..... Less Controlled Fuel Evaporation (Evaporative Emission Control)
LCGS.....Less Column Gear Shift
LCV..... Less Convertible
LDB..... Less Disc Brakes
LDE.....Less Dual Exhaust

LDT.....Less Dual Throat Carburetor
LEEP .....Less Exhaust Emission Pump
LEOW ..Less Electrically Operated Windshield Washer
LER.....Less Electric Regulator
LFC.....Less Floor Console
LFFC ..... Less Filter Oil Filler Cap
LFGS.....Less Floor Gear Shift
LFRS.....Less Fold Down Rear Seat
LFS .....Less Full Seat
LHD.....Left Hand Drive

LHDC ..... Less Heavy Duty Cooling
LHLV .....Less High Level Ventilation
LHPG ..... Less Handling Package
LHR..... Less Horn Ring
LHTC ..... Less Hand Throttle Cable
LIRS .....Less Individual Reclining Seats
LLD..... Less Locking Differential
LLEC ..... Less Law Enforcement Cooling
LLL..... Less Load Leveler

Printed in U.S.A.

LOCT ..... Less Oil Cooler Tubes
LOD ..... Less Overdrive
LPB ..... Less Power Brake
LPS ..... Less Power Steering
LRC ..... Less Roof Cover
LRM ..... Less Remote Controlled Outside Mirror
LRP ..... Less Rally Pak
LRS ..... Less Reclining Seats
LSBW ..... Less Seat Belt Warning System
LSFC ..... Less Sealed Oil Filler Cap
LTAC .. Less Thermostatic Air Control In Air Cleaner
LTCS ..... Less Transmission Controlled Spark

LTS ..... Less Tilt Seat
LTT ..... Less Two-Tone Paint
LTTP ..... Less Trailer Towing Package
LVT ..... Less Vertical Hinged Tailgate
LWH ..... Less Weathereye Heater
LWO ..... Less Wood Overlay
L3S ..... Less Third Seat
L4ST ..... Less 4-Speed Transmission

M ..... Material
MI ..... Malleable Iron
MIP ...Optional Original Parts Possible; Must Identify By Number Affixed To Original Part
Mldg ..... Moulding
M. P. H. ..... Miles Per Hour
MR ..... Modification May Be Required

N ..... When Used With Stamped Nuts Designates Number Of Notches
NA ..... Not Available
NC ..... Neutral Color
NIC ..... Nickel
No ..... Number

OAC ..... Optional Air Conditioning
OEO ..... Optional Exterior Ornamentation
O. D. ..... Outside Diameter
OHV ..... Overhead Valve Engine
Ord. ..... Order
OSR ..... Optional Service Replacement
Oz. ..... Ounce

#P ..... Indicates Screw Or Nut Is Equipped With Plain Washer
PAR ..... Parkerize
PCV ..... Positive Crankcase Ventilation
PF ..... Prime Finish
PHO ..... Phosphate
PLA ..... Plain
PLN ..... Plain Annealed
PO ..... Indicates Part Of
Pr. ..... Price

Qt. ..... Quart

R ..... Right
Ref. ..... Refer
Reg ..... Regulator
Req ..... Required
RHD ..... Right Hand Drive

RUP ..... Rustproof
RWD ..... Rear Window Defogger

S ..... Service Status
#S ..... Indicates Screw Or Nut Is Equipped With Spring Lockwasher
SIX ..... Six Cylinder Engine
SL ..... Stainless Steel
SS ..... Supplied For Service
ST ..... Steel
STA ..... Stainless
STD ..... Standard

T ..... When Used With Fittings Designates Nominal Tube Size
Temp ..... Temperature
Therm ..... Thermostat
TIN ..... Tinned
Trans ..... Transmission

V ..... Volts
V8 ..... Eight Cylinder Overhead Valve Engine

W ..... When Used With Terminals Designates Gauge Of Wire
#W ..... Indicates Screw Or Nut Is Equipped With Internal-External Tooth Lockwasher
WAAS ..... With Adjustable Air Shock
WAB ..... With Self Adjusting Brakes
WAC ..... With Air Conditioning
WAF ..... With Automatic Fan
WASC ..... With Automatic Speed Control
WAT ..... With Automatic Transmission
WAW ..... With Adjusting Steering Wheel

WBG ..... With Bumper Guards
WBS ..... Reclining Or Non-Reclining Bucket Seat
WBW ..... With Briarcliff Wagon
WCAI ..... With Cold Air Induction
WCA ..... With Center Armrest
WCC ..... With Center Cushion
WCFE ..... With Controlled Fuel Evaporation (Evaporative Emission Control)
WCGS ..... With Column Gear Shift
WDB ..... With Disc Brakes
WDBD ..... With Dual Belt Drive
WDE ..... With Dual Exhaust

WDT ..... With Dual Throat Carburetor
WEEP ..... With Exhaust Emission Pump
WEOW ...With Electrically Operated Windshield Washer
WER ..... With Electric Regulator
WEW ..... With Electric Wiper
WFC ..... With Floor Console
WFFC ..... With Filter Oil Filler Cap
WFGS ..... With Floor Gear Shift
WFRS ..... With Fold Down Rear Seat
WFS ..... With Full Seat (1 Piece Cushion, 1 Piece Back)

WHDC ..... With Heavy Duty Cooling
WHLV ..... With High Level Ventilation
WHP ..... With High Performance

WHPG ..... With Handling Package
WHR ..... With Horn Ring
WHTC ..... With Hand Throttle Cable
WI ..... Wrought Iron
WIRS ..... With Individual Reclining Seat (2 Piece Cushion, 2 Piece Back)
WLD .... With Locking Differential (Applies To Powr - Lok And Twin Grip Differential)

WLEC ..... With Law Enforcement Cooling
WLL ..... With Load Leveler
WMO ..... With Metal Overlay (No Vinyl Covering)
WMW ..... With Mariner Wagon
WNBS ..... With Non-Reclining Bucket Seat
WNRS ..... With Non-Reclining Seat (1 Piece Cushion, 2 Piece Back)
WOCT ..... With Oil Cooler Tubes
WOD ..... With Overdrive
WPB ..... With Power Brakes
WPS ..... With Power Steering

WPT ..... With Power Top
WRBS ..... With Reclining Bucket Seat
WRP ..... With Rally Pak
WRC ..... With Roof Cover
WRM ..... With Remote Controlled Outside Mirror
WRS ..... With Reclining Seat (1 Piece Cushion, 2 Piece Back)
WSBD ..... With Single Belt Drive
WSBW ..... With Seat Belt Warning System

WSFC ..... With Sealed Oil Filler Cap
WST ..... With Standard Transmission
WTAC ... With Thermostatic Air Control In Air Cleaner
WTCS ..... With Transmission Controlled Spark
WTT ..... With Two-Tone Paint
WTTP ..... With Trailer Towing Package
WVT ..... With Vertical Hinged Tailgate
WVW ..... With Vacuum Wiper
WWH ..... With Weathereye Heater
WWO ..... With Wood Grained Vinyl Overlay
WWW ..... With Westerner Wagon

W3S ..... With Third Seat
W4B ..... With Four Barrel Carburetor
W4ST ..... With 4 Speed Transmission
W4BF ..... With Four Blade Fan
W5BF ..... With Five Blade Fan
W6BF ..... With Six Blade Fan
W7BF ..... With Seven Blade Fan

X ..... Light
XX ..... Medium Or Regular
XXX ..... Heavy
XXXX ..... Extra Heavy

ZCH ..... Zinc Chrome
ZID ..... Zinc Dichromate
ZIN ..... Zinc

Printed in U.S.A.

ILLUSTRATIONS INDEX

GROUP 1 ENGINE . . .

PAGE NO.

CRANKSHAFT AND CAMSHAFT V8 ..... Gr 1 - L 12
CYLINDER BLOCK V8 ..... Gr 1 - L 11
CYLINDER BLOCK, CRANKSHAFT AND CAMSHAFT SIX ..... Gr 1 - L 1
CYLINDER HEAD SIX (1967) ..... Gr 1 - L 2
CYLINDER HEAD SIX (1968/71)(1972-Type 1) ..... Gr 1 - L 3
CYLINDER HEAD SIX (1972-Type 2) ..... Gr 1 - L 4
CYLINDER HEAD V8 (1967/71)(1972-Type 1) ..... Gr 1 - L 13
CYLINDER HEAD V8 (1972-Type 2) ..... Gr 1 - L 14
MANIFOLDS 199 (1967) ..... Gr 1 - L 5
MANIFOLDS 199 (1968/), 232 (1967)(1968/69-E/09)(1970/), 258 (1971/) ..... Gr 1 - L 6
MANIFOLDS 232-09 (1968/69) ..... Gr 1 - L 7
MANIFOLDS V8 (1967/71) ..... Gr 1 - L 15
MANIFOLDS V8 (1972) ..... Gr 1 - L 16
MOUNTING 199 (1967/69), 232-01 (1967/69) ..... Gr 1 - L 9
MOUNTING 232-E/01 (1967/69), SIX (1970/) ..... Gr 1 - L 10
MOUNTING 290-01 (1967/69), 343-01 (1967/69) ..... Gr 1 - L 19
MOUNTING 290-E/01 (1967/69), 343-E/01 (1967/69), V8 (1970/) ..... Gr 1 - L 20
OIL PUMP, FILTER AND PAN SIX ..... Gr 1 - L 8
OIL PUMP, FILTER AND PAN V8 (LHD) ..... Gr 1 - L 17
OIL PUMP, FILTER AND PAN V8 (RHD) ..... Gr 1 - L 18

GROUP 2 COOLING - GRILLE . . .

ENGINE COOLING SYSTEM SIX ..... Gr 2 - L 1
ENGINE COOLING SYSTEM V8 ..... Gr 2 - L 1
GRILLE 1970/ (01) ..... Gr 2 - L 3
GRILLE 1971 (10) ..... Gr 2 - L 5
GRILLE 1972 (10) ..... Gr 2 - L 5
GRILLE 40 ..... Gr 2 - L 7
GRILLE 1970 (70) ..... Gr 2 - L 8
GRILLE 1971 (70), 1972 (79-8) ..... Gr 2 - L 9
GRILLE 1972 (79-7) ..... Gr 2 - L 9
GRILLE AND GRILLE PANEL 1967/69 (01) ..... Gr 2 - L 3
GRILLE AND GRILLE PANEL 1967 (10) ..... Gr 2 - L 4
GRILLE AND GRILLE PANEL 1968 (10) ..... Gr 2 - L 4
GRILLE AND GRILLE PANEL 1968/69 (30) ..... Gr 2 - L 6
GRILLE AND GRILLE PANEL 1970 (30) ..... Gr 2 - L 6
GRILLE AND GRILLE PANEL 1968/69 (70) ..... Gr 2 - L 8
GRILLE AND GRILLE PANEL 1970 (70) ..... Gr 2 - L 8
GRILLE AND GRILLE PANEL 1967 (50)(80) ..... Gr 2 - L 10
GRILLE AND GRILLE PANEL 1968 (80) ..... Gr 2 - L 10
GRILLE AND GRILLE PANEL 1969 (80) ..... Gr 2 - L 11
GRILLE AND GRILLE PANEL 1972 (80) ..... Gr 2 - L 12
RADIATOR AIR BAFFLES 1967/69 (01) ..... Gr 2 - L 2
RADIATOR AIR BAFFLES 1967/68 (10) ..... Gr 2 - L 2
RADIATOR AIR BAFFLES 1968/69 (30)(70) ..... Gr 2 - L 2
RADIATOR AIR BAFFLES 1967/68 (80) ..... Gr 2 - L 2

GROUP 3 ELECTRICAL - INSTRUMENTS . . .

ALTERNATOR COMPONENTS (REFER TO F-14072 PARTS CATALOG CHARTS) .....
ALTERNATOR FAN, PULLEY AND MOUNTING LHD-SIX (1967/71), (1972-Type 1) ..... Gr 3 - L 1
ALTERNATOR FAN, PULLEY AND MOUNTING LHD-SIX (1972-Type 2) ..... Gr 3 - L 1
ALTERNATOR FAN, PULLEY AND MOUNTING LHD-V8 35-37-40 AND 55 AMP.)
(60 AND 62 AMP. MOTOROLA) ..... Gr 3 - L 2
ALTERNATOR FAN, PULLEY AND MOUNTING (60 AND 65 AMP. LEECE-NEVILLE) ..... Gr 3 - L 3
BACK-UP LAMP 1967/69 (01) ..... Gr 3 - L 21
BATTERY TRAY AND ATTACHING PARTS 1970 (01)(30)(70), 1970 (10)(70)(80), 1971-LPS (01)(40) Gr 3 - L 4a
CARGO AREA LAMP 08, 18, 88 ..... Gr 3 - L 24
CIGAR LIGHTER ..... Gr 3 - L 22
CLOCK ASSEMBLY 10, 50, 80 ..... Gr 3 - L 22
CRANKING CIRCUIT 1967/69-01 (SIX-WCGS) ..... Gr 3 - L 4
DISTRIBUTOR COMPONENTS (REFER TO F-14072 PARTS CATALOG CHARTS) .....
DOME LAMP ..... Gr 3 - L 23
HEADLAMP ASSEMBLY 1967/69 (01)(30)(70) ..... Gr 3 - L 5
HEADLAMP ASSEMBLY 1967/68 (10) ..... Gr 3 - L 6
HEADLAMP ASSEMBLY 1967 (50)(80), 1968 (80) ..... Gr 3 - L 7

GROUP 3 ELECTRICAL - INSTRUMENTS (Continued) . . . **PAGE NO.**

HEADLAMP, PARKING, DIRECTIONAL AND SIDE MARKER LAMP 1970/ (01) ..... Gr 3 - L 10
HEADLAMP, PARKING, DIRECTIONAL AND SIDE MARKER LAMP 1971/ (10) ..... Gr 3 - L 10
HEADLAMP, PARKING, DIRECTIONAL AND SIDE MARKER LAMP 1970/ (40) ..... Gr 3 - L 11
HEADLAMP, PARKING, DIRECTIONAL AND SIDE MARKER LAMP 1971/ (70-E/AMX) ..... Gr 3 - L 11
HEADLAMP, PARKING, DIRECTIONAL AND SIDE MARKER LAMP 1971/ (80) ..... Gr 3 - L 12
IGNITION SWITCH LOCK CYLINDER 1970/ ..... Gr 3 - L 5
INSTRUMENT CLUSTER 1967/69 (01) ..... Gr 3 - L 28
INSTRUMENT CLUSTER 1970/ (01) ..... Gr 3 - L 29
INSTRUMENT CLUSTER 1967/68 (10) ..... Gr 3 - L 30
INSTRUMENT CLUSTER 1969/71 (10) ..... Gr 3 - L 31
INSTRUMENT CLUSTER 1971/ (70) ..... Gr 3 - L 33
INSTRUMENT CLUSTER 1967/71 (80) ..... Gr 3 - L 32
PARKING AND FRONT DIRECTIONAL SIGNAL LAMP 1967/69 (01) ..... Gr 3 - L 8
PARKING AND FRONT DIRECTIONAL SIGNAL LAMP 1967 (50)(80-DPL) ..... Gr 3 - L 8
PARKING, FRONT DIRECTIONAL AND FRONT FENDER SIDE LAMP 1968/69 (30)(70) ..... Gr 3 - L 9
PARKING, FRONT DIRECTIONAL AND FRONT FENDER SIDE LAMP 1969/70 (80) ..... Gr 3 - L 9
REAR LICENSE PLATE LAMP 1967/69 ..... Gr 3 - L 16
REAR QUARTER INTERIOR LAMP ..... Gr 3 - L 24
STARTING MOTOR COMPONENTS (REFER TO F-14072 PARTS CATALOG CHARTS) .....
STEERING WHEEL AND HORN BUTTON 1970/ (E/SPORT WHEEL) ..... Gr 3 - L 26
STEERING WHEEL AND HORN BUTTON 1971/ (WITH SPORT WHEEL) ..... Gr 3 - L 26a
STEERING WHEEL AND HORN RING 1967/69-RHD (01) ..... Gr 3 - L 22
STEERING WHEEL AND HORN RING 1967/69-RHD (10)(80) ..... Gr 3 - L 26
STEERING WHEEL AND RIM HORN 1970/71 ..... Gr 3 - L 27
STEERING WHEEL AND SPOKE HORN 1970/ ..... Gr 3 - L 27
STEERING WHEEL AND TRIPLE HORN BUTTON 1967/69-LHD (01)(10)(80) ..... Gr 3 - L 25
TAIL LAMP AND REAR QUARTER SIDE LAMP 1970/ (40) ..... Gr 3 - L 18
TACHOMETER 1967/68 (01)(10)(50)(80) ..... Gr 3 - L 34
TAIL, STOP AND REAR DIRECTIONAL SIGNAL LAMP 1967/69 (05)(06)(07)(09) ..... Gr 3 - L 13
TAIL, STOP AND REAR DIRECTIONAL SIGNAL LAMP 1967/69 (08) ..... Gr 3 - L 13
TAIL, STOP AND REAR DIRECTIONAL SIGNAL LAMP 1967 (15)(16)(17)(19) ..... Gr 3 - L 14
TAIL, STOP AND REAR DIRECTIONAL SIGNAL LAMP 1967 (18)(88) ..... Gr 3 - L 14
TAIL, STOP AND REAR DIRECTIONAL SIGNAL LAMP 1967 (59) ..... Gr 3 - L 15
TAIL, STOP AND REAR DIRECTIONAL SIGNAL LAMP 1967 (85)(86)(87)(89) ..... Gr 3 - L 15
TAIL, STOP AND REAR DIRECTIONAL SIGNAL LAMP 1968/69 (30)(70) ..... Gr 3 - L 16
TAIL, STOP AND REAR DIRECTIONAL SIGNAL LAMP 1969 (15)(19) ..... Gr 3 - L 17
TAIL, STOP AND REAR DIRECTIONAL SIGNAL LAMP 1969/ (18)(88) ..... Gr 3 - L 17
TAIL, STOP, DIRECTIONAL AND REAR QUARTER SIDE LAMP 1969 (85)(89) ..... Gr 3 - L 18
TAIL, STOP, DIRECTIONAL, BACK-UP AND SIDE MARKER LAMP 1970/ (01) ..... Gr 3 - L 18a
TAIL, STOP AND REAR DIRECTIONAL LAMP 1970/ (10)(85-2) ..... Gr 3 - L 19
TAIL, STOP AND REAR DIRECTIONAL LAMP 1970/ (85-5)(85-7)(89-5)(89-7) ..... Gr 3 - L 19
TAIL, STOP, DIRECTIONAL, BACK-UP AND REAR QUARTER SIDE LAMP 1970 (30)(70) ..... Gr 3 - L 20
TRANSMISSION CONTROLLED SPARK 1971 ..... Gr 3 - L 4a

GROUP 4 FUEL - EXHAUST . . .

ACCELERATOR LINKAGE SIX-LHD (1967-01)(1968-01) ..... Gr 4 - L 4
ACCELERATOR LINKAGE SIX-LHD (1967-E/01)(1968-E-01) ..... Gr 4 - L 6
ACCELERATOR LINKAGE V8-LHD (1967-01)(1968-01) ..... Gr 4 - L 5
ACCELERATOR LINKAGE V8-LHD (1967-E/01)(1968-E/01) ..... Gr 4 - L 7
ACCELERATOR LINKAGE SIX-RHD (1967)(1968) ..... Gr 4 - L 8
ACCELERATOR LINKAGE V8-RHD (1967)(1968) ..... Gr 4 - L 9
ACCELERATOR LINKAGE LHD (1969/71) ..... Gr 4 - L 10
ACCELERATOR LINKAGE LHD (1972) ..... Gr 4 - L 11
AUTOMATIC SPEED CONTROL ELECTRICAL SYSTEM 1967/69 ..... Gr 4 - L 49
AUTOMATIC SPEED CONTROL ELECTRICAL SYSTEM 1970/ V8 (10)(80) ..... Gr 4 - L 52b
AUTOMATIC SPEED CONTROL HOSES, CABLES AND BELLOWS 1967 (SIX) ..... Gr 4 - L 51
AUTOMATIC SPEED CONTROL HOSES, CABLES AND BELLOWS V8 (1967)(1968) ..... Gr 4 - L 52
AUTOMATIC SPEED CONTROL HOSES, CABLES, BELLOWS AND REGULATOR 1970/ V8 (10)(80) ..... Gr 4 - L 52a
AUTOMATIC SPEED CONTROL REGULATOR 1967, 1968 ..... Gr 4 - L 50
CARBURETOR AIR CLEANER 1967/69 (199) ..... Gr 4 - L 13
CARBURETOR AIR CLEANER CANADIAN FILTERS LTD. ..... Gr 4 - L 14
CARBURETOR AIR CLEANER CANADIAN FILTERS LTD. ..... Gr 4 - L 14
CARBURETOR AIR CLEANER UNITED ..... Gr 4 - L 13
CARBURETOR AIR CLEANER 1971 (SIX), 1972-SIX-WAT (10)(70)(80) ..... Gr 4 - L 12b
CARBURETOR AIR CLEANER 1972-SIX (01)(40), 1972-SIX-WST (10)(70)(80) ..... Gr 4 - L 14a

Printed in U.S.A.

GROUP 4 FUEL - EXHAUST (Continued) . . . **PAGE NO.**

CARBURETOR AIR CLEANER 1972 (V8-LCAI) ..... Gr 4 - L 14b
CARBURETOR AIR CLEANER 1972 (V8-WCAI) ..... Gr 4 - L 14c
CARBURETOR AIR CLEANER STICKERS 1967/70 ..... Gr 4 - L 12
CARBURETOR AIR CLEANER STICKERS 1971/ ..... Gr 4 - L 12a
CARBURETOR AIR CLEANER DUCT AND SHROUD 1969/70 (V8-Type 1) ..... Gr 4 - L 1
CARBURETOR AIR CLEANER DUCT AND SHROUD 1969/70 (V8-Type 2) ..... Gr 4 - L 1
CARBURETOR CHOKE HEATER TUBES SIX ..... Gr 4 - L 2
CARBURETOR CHOKE HEATER TUBES V8 (1967/71) ..... Gr 4 - L 3
CARBURETOR CHOKE HEATER TUBES V8 (1972) ..... Gr 4 - L 3
CARBURETOR COMPONENTS (REFER TO F-14072 PARTS CATALOG CHARTS) .....
EXHAUST EMISSION AIR PUMP 1967 ..... Gr 4 - L 53
EXHAUST EMISSION AIR PUMP 1968/ ..... Gr 4 - L 53
EXHAUST EMISSION SYSTEM SIX-LAC-LPS (1967-01) ..... Gr 4 - L 54
EXHAUST EMISSION SYSTEM SIX-LAC-WPS (1967-01) ..... Gr 4 - L 55
EXHAUST EMISSION SYSTEM SIX-WAC (1967-01) ..... Gr 4 - L 56
EXHAUST EMISSION SYSTEM V8-LPS (1967) ..... Gr 4 - L 57
EXHAUST EMISSION SYSTEM V8-WPS (1967) ..... Gr 4 - L 58
EXHAUST EMISSION SYSTEM V8-LPS (1968-Type 1) ..... Gr 4 - L 59
EXHAUST EMISSION SYSTEM V8-WPS (1968-Type 1) ..... Gr 4 - L 60
EXHAUST EMISSION SYSTEM V8-LPS (1968-Type 2)(1969/) ..... Gr 4 - L 61
EXHAUST EMISSION SYSTEM V8-WPS (1968-Type 2)(1969/71) ..... Gr 4 - L 62
EXHAUST EMISSION SYSTEM V8-WPS (1972) ..... Gr 4 - L 63
EXHAUST SYSTEM 1967/69 (SIX-01) ..... Gr 4 - L 40
EXHAUST SYSTEM 1967/71-SIX (10)(50)(80) ..... Gr 4 - L 41
EXHAUST SYSTEM 1972-SIX (10)(80) ..... Gr 4 - L 41a
EXHAUST SYSTEM 1968/71-SIX (70) ..... Gr 4 - L 41b
EXHAUST SYSTEM 1972-SIX (70) ..... Gr 4 - L 41c
EXHAUST SYSTEM 1967/69 (V8-01) ..... Gr 4 - L 42
EXHAUST SYSTEM 1970/71 (01)(40) ..... Gr 4 - L 41d
EXHAUST SYSTEM 1972 (01)(40) ..... Gr 4 - L 41e
EXHAUST SYSTEM 1967/71-V8-LDE (10)(50)(80) ..... Gr 4 - L 43
EXHAUST SYSTEM 1972-V8-LDE (10)(80) ..... Gr 4 - L 44
EXHAUST SYSTEM 1968/69-V8-LDE (70) ..... Gr 4 - L 45
EXHAUST SYSTEM 1970/ -V8-LDE (70) ..... Gr 4 - L 46
EXHAUST SYSTEM 1967/71-V8-WDE (15)(16)(17)(19)(85)(86)(87)(89) ..... Gr 4 - L 47
EXHAUST SYSTEM 1972-V8-WDE (15)(19)(85)(89) ..... Gr 4 - L 47a
EXHAUST SYSTEM 1967/71-V8-WDE (18)(88) ..... Gr 4 - L 47b
EXHAUST SYSTEM 1972-V8-WDE (18)(88) ..... Gr 4 - L 48
EXHAUST SYSTEM 1968/70-V8-WDE (30)(70) ..... Gr 4 - L 48a
EXHAUST SYSTEM 1971/ -V8-WDE (70) ..... Gr 4 - L 48b
FUEL PUMP WVW (1967/68) ..... Gr 4 - L 15
FUEL PUMP WVW (1969/71) ..... Gr 4 - L 17
FUEL PUMP SIX-WEW (1967)(1968) ..... Gr 4 - L 16
FUEL PUMP V8-WEW (1967)(1968) ..... Gr 4 - L 16
FUEL PUMP WEW (1969)(1970-Type 1) ..... Gr 4 - L 17
FUEL PUMP AND FUEL FILTER 1970/ ..... Gr 4 - L 39
FUEL PUMP TO CARBURETOR TUBE AND FILTER WVW (1969-Type 1), WEW (1969) ..... Gr 4 - L 39
FUEL VAPOR STORACE CANISTER AND HOSES 1971/ (V8-WAT) ..... Gr 4 - L 26
GASOLINE TANK 1967/69 (05)(06)(07)(09) ..... Gr 4 - L 18
GASOLINE TANK 1967/69 (08) ..... Gr 4 - L 19
GASOLINE TANK 1970/71 (01) ..... Gr 4 - L 19a
GASOLINE TANK 1972 (01) ..... Gr 4 - L 19b
GASOLINE TANK 1967/70-LCFE (15)(16)(19)(59)(85)(86)(89) ..... Gr 4 - L 20
GASOLINE TANK 1967/69 (17)(18)(87)(88) ..... Gr 4 - L 21
GASOLINE TANK 1968/70-LCFE (30)(70) ..... Gr 4 - L 22
GASOLINE TANK 1970-LCFE (18)(88) ..... Gr 4 - L 24
GASOLINE TANK 1970/ -WCFE (10)(80) ..... Gr 4 - L 25
GASOLINE TANK 1970/ -WCFE (30)(70) ..... Gr 4 - L 23
GASOLINE TANK TO CARBURETOR FUEL LINES 1967/69-LHD-SIX (05)(06)(08)(09) ..... Gr 4 - L 27
GASOLINE TANK TO CARBURETOR FUEL LINES LHD-SIX (07) ..... Gr 4 - L 28
GASOLINE TANK TO CARBURETOR FUEL LINES 1967/69-RHD-SIX (05)(06)(08)(09) ..... Gr 4 - L 29
GASOLINE TANK TO CARBURETOR FUEL LINES RHD-SIX (07) ..... Gr 4 - L 30
GASOLINE TANK TO CARBURETOR FUEL LINES SIX (10)(50)(80) ..... Gr 4 - L 31
GASOLINE TANK TO CARBURETOR FUEL LINES SIX (70) ..... Gr 4 - L 32
GASOLINE TANK TO CARBURETOR FUEL LINES 1967/69-V8 (05)(06)(08)(09) ..... Gr 4 - L 33
GASOLINE TANK TO CARBURETOR FUEL LINES V8 (07) ..... Gr 4 - L 34
GASOLINE TANK TO CARBURETOR FUEL LINES V8 (15)(16)(18)(19) ..... Gr 4 - L 35

Printed in U.S.A.

ILLUSTRATIONS INDEX

GROUP 4 FUEL - EXHAUST (Continued) . . . **PAGE NO.**

GASOLINE TANK TO CARBURETOR FUEL LINES V8 (17)(87) ..... Gr 4 - L 36
GASOLINE TANK TO CARBURETOR FUEL LINES V8 (30)(70) ..... Gr 4 - L 37
GASOLINE TANK TO CARBURETOR FUEL LINES V8 (50)(85)(86)(88)(89) ..... Gr 4 - L 38
HAND THROTTLE CONTROL SIX (1967/68), V8 (1967-Type 1) ..... Gr 4 - L 3a
HAND THROTTLE CONTROL V8 (1967-Type 2)(1968) ..... Gr 4 - L 3a
HAND THROTTLE CONTROL 1972 (10)(80) ..... Gr 4 - L 3b
MANIFOLD HEAT SHROUD 1972-V8 (01)(40) ..... Gr 4 - L 2

GROUP 5 CLUTCH . . .

CLUTCH PEDAL AND LINKAGE 1967/69 (199) ..... Gr 5 - L 2
CLUTCH PEDAL AND LINKAGE 1967/69 (01-V8) ..... Gr 5 - L 4
CLUTCH PEDAL AND LINKAGE 1967/69-V8 (10)(30)(50)(70)(80) ..... Gr 5 - L 5
CLUTCH PEDAL AND LINKAGE 1970 (199) ..... Gr 5 - L 3
CLUTCH PEDAL AND LINKAGE 1970/ (232)(258)(V8) ..... Gr 5 - L 6
SELF ADJUSTING CLUTCH 1967/68 ..... Gr 5 - L 1

GROUP 6 STANDARD, OVERDRIVE AND FOURSPEED TRANSMISSION . . .

FOURSPEED TRANSMISSION (Part 1 of 2) V8 ..... Gr 6 - L 13
FOURSPEED TRANSMISSION (Part 2 of 2) V8 ..... Gr 6 - L 14
OVERDRIVE ACTUATING SYSTEM AND CONTROLS ..... Gr 6 - L 15
OVERDRIVE TRANSMISSION (Part 1 of 2) 199, 232 (1967) ..... Gr 6 - L 5
OVERDRIVE TRANSMISSION (Part 2 of 2) 199, 232 (1967) ..... Gr 6 - L 6
OVERDRIVE TRANSMISSION (Part 1 of 2) V8 (1967) ..... Gr 6 - L 7
OVERDRIVE TRANSMISSION (Part 2 of 2) V8 (1967) ..... Gr 6 - L 8
OVERDRIVE TRANSMISSION (Part 1 of 2) 232 (1968/69) ..... Gr 6 - L 9
OVERDRIVE TRANSMISSION (Part 2 of 2) 232 (1968/69) ..... Gr 6 - L 10
OVERDRIVE TRANSMISSION (Part 1 of 2) V8 (1968) ..... Gr 6 - L 11
OVERDRIVE TRANSMISSION (Part 2 of 2) V8 (1968) ..... Gr 6 - L 12
STANDARD TRANSMISSION SIX-E/HEAVY DUTY (1967), 199-E/EXPORT (1968/70), 232-E/EXPORT-1970/ (01)(40) ..... Gr 6 - L 2
STANDARD TRANSMISSION SIX-HEAVY DUTY (1967), V8 (1967) ..... Gr 6 - L 1
STANDARD TRANSMISSION 199-EXPORT-RHD (1968/69), 232-E/HEAVY DUTY (1968/69), SIX-1970/ (10)(70)(80) ..... Gr 6 - L 3
STANDARD TRANSMISSION 232-HEAVY DUTY (1968/), V8 (1968/) ..... Gr 6 - L 4

GROUP 7 SHIFTING . . .

FLOOR GEAR SHIFT WST (01)(40)(70) ..... Gr 7 - L 3
FLOOR GEAR SHIFT 1967-01 (V8-WAT) ..... Gr 7 - L 1
FLOOR GEAR SHIFT (E/HURST) 1967/69-V8 (W4ST-LFC) ..... Gr 7 - L 2
FLOOR GEAR SHIFT (HURST) 1969/ -W4ST (01)(10)(30)(70) ..... Gr 7 - L 4
FLOOR GEAR SHIFT (WAT) 1967/69 (10)(80) ..... Gr 7 - L 5
FLOOR GEAR SHIFT (WAT) 1970, 1971 (10)(80) ..... Gr 7 - L 6
FLOOR GEAR SHIFT (WAT) 1971 (70) ..... Gr 7 - L 7
FLOOR GEAR SHIFT (WAT) 1972 (70) ..... Gr 7 - L 8
TRANSMISSION LOCK RODS 1970/71 (WFGS-WST) ..... Gr 7 - L 11
TRANSMISSION LOCK RODS 1970/71 (WFGS-W4ST) ..... Gr 7 - L 12
TRANSMISSION SHIFTING AND LOCK RODS 1970/71 (WCGS-WAT) ..... Gr 7 - L 10
TRANSMISSION SHIFTING AND LOCK RODS 1970/71 (WCGS-WST) ..... Gr 7 - L 9

GROUP 8 BRAKES - WHEELS . . .

BRAKE LINES, HOSES AND CLIPS LDB (10)(80) ..... Gr 8 - L 11
BRAKE LINES AND CLIPS WDB (10)(80) ..... Gr 8 - L 10b
BRAKE MASTER CYLINDER (WAGNER) 1967-01 (LHD-LPS) ..... Gr 8 - L 14
BRAKE MASTER CYLINDER 1967/69-LPB (10)(30)(50)(70)(80) ..... Gr 8 - L 14
BRAKE PEDAL AND SUPPORT ..... Gr 8 - L 10
CALIPER DISC FRONT BRAKE AND WHEEL 1967/70 (WDB) ..... Gr 8 - L 4
CALIPER DISC FRONT BRAKE 1971/ (WDB) ..... Gr 8 - L 5
FOOT OPERATED PARKING BRAKE LHD ..... Gr 8 - L 13
FRONT BRAKE AND WHEEL SIX (01)(40)(70), 1967/69-SIX-LDB-BENDIX-E/HEAVY DUTY (15)(16)(17)(19) ..... Gr 8 - L 1
FRONT BRAKE AND WHEEL 1967/69-SIX-LDB-WAGNER-E/HEAVY DUTY (15)(16)(17)(19) ..... Gr 8 - L 2
FRONT BRAKE AND WHEEL 1967/69-SIX/HEAVY DUTY (15)(16)(17)(19), 1967/69-SIX-LDB (18)(50)(80), 1970/ -SIX-LDB (10)(80), V8 (LDB) ..... Gr 8 - L 3
HAND OPERATED PARKING BRAKE 1967/69 (01) ..... Gr 8 - L 12

Printed in U.S.A.

GROUP 8 BRAKES - WHEELS (Continued) . . .

	PAGE NO.
POWER BRAKE MASTER CYLINDER 1967/69-Type 1 (LHD-LDB)(RHD-10-SIX)	Gr 8 - L 15
POWER BRAKE MASTER CYLINDER LHD-WDB (1967)(1968-Type 1)	Gr 8 - L 15
POWER BRAKE MASTER CYLINDER WDB (1968-Type 2)(1969), LDB (1969-Type 2), 1970/	Gr 8 - L 16
POWER BRAKE POWER UNIT LHD (01)(40), 1967/ -LHD-LDB (10)(30)(50)(70)(80)	Gr 8 - L 17
POWER BRAKE POWER UNIT WDB (10)(30)(50)(70)(80)	Gr 8 - L 18
REAR BRAKE AND WHEEL SIX (01)(40)(70), 1967/69-SIX-LDB-BENDIX-E/HEAVY DUTY (15)(16)(17)(19)	Gr 8 - L 6
REAR BRAKE AND WHEEL 1967/69-SIX-LDB-WAGNER-E/HEAVY DUTY (15)(16)(17)(19)	Gr 8 - L 7
REAR BRAKE AND WHEEL 1967/69-SIX-LDB-HEAVY DUTY (15)(16)(17)(19), 1967/69-SIX-LDB (18)(50)(80), 1970/ -SIX-LDB (10)(80), 1967/68-V8 (LDB)(30-WDB), 1969/ (V8)	Gr 8 - L 8
REAR BRAKE AND WHEEL 1967 (WDB), 1968-WDB (10)(80), 1969-RHD-WDB (10)(80)	Gr 8 - L 9
SPARE WHEEL MOUNTING 1967/69 (01), 10, 50, 80	Gr 8 - L 16
WHEEL CAPS AND COVERS 1972	Gr 8 - L 19
WHEEL CAPS AND TRIM RINGS 1972 (WITH STYLED WHEELS)	Gr 8 - L 20

GROUP 9 REAR AXLE - PROPELLER SHAFT . . .

PROPELLER SHAFT 1967-SIX (01-Type 1)	Gr 9 - L 9
PROPELLER SHAFT 1967-SIX (E/01-Type 1), 1967 (V8), 1968/	Gr 9 - L 9
REAR AXLE 1967/69-LLD-SIX (01)(70)	Gr 9 - L 1
REAR AXLE 1970/ -LLD-SIX (01)(40)(70)	Gr 9 - L 2
REAR AXLE LLD-V8 (01)(30)(70) LLD-V8 (01)(30)(40)(70)	Gr 9 - L 3
REAR AXLE LLD (10)(50)(80)	Gr 9 - L 4
REAR AXLE 1967/69-WLD-SIX (01)(70)	Gr 9 - L 5
REAR AXLE 1970/ -WLD-SIX (01)(40)(70)	Gr 9 - L 6
REAR AXLE WLD-V8 (01)(30)(70) WLD-V8 (01)(30)(40)(70)	Gr 9 - L 7
REAR AXLE WLD-V8 (10)(50)(80)	Gr 9 - L 8

GROUP 10 FRONT SUSPENSION - STEERING GEAR . . .

FRONT SUSPENSION 1967/69 (01)(30)(70)	Gr 10 - L 1
FRONT SUSPENSION 1967/69 (10)	Gr 10 - L 2
FRONT SUSPENSION 1967/69 (50)(80)	Gr 10 - L 3
FRONT SUSPENSION (LOWER) 1970/ (01)(10)(30)(40)(70)	Gr 10 - L 4
FRONT SUSPENSION (LOWER) 1970/ (80)	Gr 10 - L 5
FRONT SUSPENSION (UPPER) 1970/	Gr 10 - L 6
POWER STEERING PUMP, RESERVOIR AND HOSES LHD-SIX (1967)	Gr 10 - L 30
POWER STEERING PUMP, RESERVOIR AND HOSES LHD-SIX (1968/)	Gr 10 - L 31
POWER STEERING PUMP, RESERVOIR AND PULLEY V8 (1967/71) (1972-Type 1)	Gr 10 - L 32
POWER STEERING PUMP, RESERVOIR AND HOSES V8 (1972-Type 2)	Gr 10 - L 33
STEERING COLUMN LHD (1967/69-01)	Gr 10 - L 12
STEERING COLUMN LHD-WST-LAW (1967/69-10), LHD-WOD-LAW (1967/69-10)	Gr 10 - L 13
STEERING COLUMN LHD-WST-LAW (1967/69-80), LHD-WOD-LAW (1967/69-80)	Gr 10 - L 14
STEERING COLUMN LHD-WAT-LAW (1967/69-10)	Gr 10 - L 15
STEERING COLUMN LHD-WAT-WCGS-LAW (1967/69-80)	Gr 10 - L 16
STEERING COLUMN LHD-WFGS-LAW (1967/69-10)	Gr 10 - L 17
STEERING COLUMN LHD-WAT-WFGS-LAW (1967/69-80)	Gr 10 - L 18
STEERING COLUMN LHD-WAW (1967/69)	Gr 10 - L 19
STEERING COLUMN (LHD-WST-WCGS-LAW) 1970 (01)(10)(40), 1971/ (01)(40)	Gr 10 - L 20
STEERING COLUMN (LHD-WST-WCGS-LAW) 1970 (80), 1971/ (10)(80)	Gr 10 - L 21
STEERING COLUMN (LHD-WAT-WCGS-LAW) 1970 (01)(10)(40)(70), 1971/ (01)(10)(40)(70)	Gr 10 - L 22
STEERING COLUMN (LHD-WAT-WCGS-LAW) 1970 (80), 1971/ (10)(80)	Gr 10 - L 23
STEERING COLUMN (LHD-WFGS-LAW) 1970 (80), 1971-Type 1 (10)(80)	Gr 10 - L 25
STEERING COLUMN (LHD-WFGS-LAW) 1971-Type 2 (10)(80)	Gr 10 - L 25
STEERING COLUMN (LHD-WFGS-LAW) 1970 (01)(10)(30)(40)(70), 1971-Type 1 (01)(40)(70)	Gr 10 - L 24
STEERING COLUMN (LHD-WFGS-LAW) 1971-Type 2 (01)(40)(70), 1972 (01)(40)(70)	Gr 10 - L 24a
STEERING COLUMN (WAT-WCGS-WAW) 1970 (10), 1970/ (01)(40)(70)	Gr 10 - L 26
STEERING COLUMN (WAT-WCGS-WAW) 1970 (80), 1971/ (10)(80)	Gr 10 - L 27
STEERING COLUMN (WFGS-WAW) 1970 (10)(30)(70), 1971/ (70)	Gr 10 - L 28
STEERING COLUMN (WFGS-WAW) 1970 (80), 1971 (10)(80)	Gr 10 - L 29
STEERING GEAR LHD-LPS (1967-01-Type 2)(1968-01)(1969-01), RHD-LPS (1969-01-Type 2), (1970/)	Gr 10 - L 9
STEERING GEAR WPS	Gr 10 - L 10
STEERING GEAR SHAFT RHD (1967/69-01)	Gr 10 - L 11
STEERING LINKAGE	Gr 10 - L 7

Printed in U.S.A.

ILLUSTRATIONS INDEX

GROUP 11 ROAD SPRINGS - SHOCKS - REAR SUSPENSION . . . PAGE NO.

FRONT COIL SPRING 1967/69 (01)(30)(70) ..... Gr 11 - L 1
FRONT COIL SPRING 1967/69 (10)(50)(80) ..... Gr 11 - L 1
FRONT COIL SPRING AND SHOCK 1970/ ..... Gr 11 - L 3
FRONT SHOCK 1967/69 (01)(30)(70) ..... Gr 11 - L 2
FRONT SHOCK 1967/69 (10)(50)(80) ..... Gr 11 - L 2
REAR AXLE LATERAL STABILIZER 1967/68 (10)(50)(80) ..... Gr 11 - L 10
REAR AXLE TORQUE LINK 1968/70 (30), 1969 (09-SC/RAMBLER) ..... Gr 11 - L 10
REAR AXLE TORQUE LINK 1972-V8 (40) ..... Gr 11 - L 11
REAR LEAF SPRING AND SHOCK (4 LEAF) 1967/69 (01), 1968 (70) ..... Gr 11 - L 4
REAR LEAF SPRING AND SHOCK (5 LEAF) 1967/69 (01), 1968/ (30)(70) ..... Gr 11 - L 5
REAR LEAF SPRING AND SHOCK (6 LEAF) 1967/69 (01) ..... Gr 11 - L 6
REAR LEAF SPRING AND SHOCK 1970/ (01)(40) ..... Gr 11 - L 7
REAR SUSPENSION 10, 50, 80 ..... Gr 11 - L 9
REAR SUSPENSION SWAY STABILIZER 1970/ (10)(80) ..... Gr 11 - L 8
SUPER LIFT SHOCK ABSORBERS ..... Gr 11 - L 8

GROUP 12 HOOD - FENDERS - BUMPERS . . .

COLD AIR INDUCTION SYSTEM 1970 (30)(70) ..... Gr 12 - L 9
COLD AIR INDUCTION SYSTEM 1970-19 (MACHINE) ..... Gr 12 - L 9
FRONT BUMPER 1967 (01), 1968-Type 1 (01) ..... Gr 12 - L 15
FRONT BUMPER 1968-Type 2 (01), 1969 (01) ..... Gr 12 - L 16
FRONT BUMPER 1970/ (01)(40) ..... Gr 12 - L 17
FRONT BUMPER 1967/70 (10) ..... Gr 12 - L 18
FRONT BUMPER 1971/ (10) ..... Gr 12 - L 19
FRONT BUMPER 1968/69 (30)(70) ..... Gr 12 - L 20
FRONT BUMPER 1970 (30)(70) ..... Gr 12 - L 21
FRONT BUMPER 1971/ (70) ..... Gr 12 - L 22
FRONT BUMPER 50, 1967/68 (80) ..... Gr 12 - L 23
FRONT BUMPER 1969/ (80) ..... Gr 12 - L 24
HOOD AND FRONT FENDER 1967/69 (01) ..... Gr 12 - L 1
HOOD AND FRONT FENDER 1970/ (01)(40) ..... Gr 12 - L 2
HOOD AND FRONT FENDER 1967/70 (10) ..... Gr 12 - L 3
HOOD AND FRONT FENDER 1971/ (10) ..... Gr 12 - L 4
HOOD AND FRONT FENDER 1968/70 (30)(70) ..... Gr 12 - L 5
HOOD AND FRONT FENDER 1971/ (70) ..... Gr 12 - L 6
HOOD AND FRONT FENDER 1967/68 (50)(80) ..... Gr 12 - L 7
HOOD AND FRONT FENDER 1969/71 (80) ..... Gr 12 - L 8
HOOD AND FRONT FENDER 1972 (80) ..... Gr 12 - L 8a
REAR QUARTER OUTER PANEL 1967/69 (05)(06)(08) ..... Gr 12 - L 10
REAR QUARTER OUTER PANEL 1967/69 (07)(09) ..... Gr 12 - L 10
REAR QUARTER OUTER PANEL 1970/ (05) ..... Gr 12 - L 11
REAR QUARTER OUTER PANEL 1970/ (06) ..... Gr 12 - L 11
REAR QUARTER OUTER PANEL 1967/69 (15)(85) ..... Gr 12 - L 12
REAR QUARTER OUTER PANEL 1967/69 (16)(19)(86)(89) ..... Gr 12 - L 12
REAR QUARTER OUTER PANEL 17, 87 ..... Gr 12 - L 13
REAR QUARTER OUTER PANEL 18, 88 ..... Gr 12 - L 13
REAR QUARTER OUTER PANEL 1968/70 (30)(70) ..... Gr 12 - L 14
REAR QUARTER OUTER PANEL 50 ..... Gr 12 - L 14
REAR BUMPER 1967/69 (01) ..... Gr 12 - L 25
REAR BUMPER 1970/ (01)(40) ..... Gr 12 - L 26
REAR BUMPER 1967/69 (10-E/18)(80-E/88) ..... Gr 12 - L 27
REAR BUMPER 1970/ (15)(19)(85)(89) ..... Gr 12 - L 28
REAR BUMPER 18, 88 ..... Gr 12 - L 29
REAR BUMPER 30, 70 ..... Gr 12 - L 30
REAR BUMPER 50 ..... Gr 12 - L 31

GROUP 13 HEATER - AIR CONDITIONING . . .

AIR CONDITIONING BLOWER AND HEATER CORE HOUSING 1967/69 (01-WAC) ..... Gr 13 - L 5
AIR CONDITIONING COMPRESSOR ..... Gr 13 - L 25
AIR CONDITIONING COMPRESSOR MOUNTING 1967 (SIX-LPS) ..... Gr 13 - L 26
AIR CONDITIONING COMPRESSOR MOUNTING 1968/ (SIX-LPS) ..... Gr 13 - L 27
AIR CONDITIONING COMPRESSOR MOUNTING V8-1967/70 (LPS) ..... Gr 13 - L 28
AIR CONDITIONING COMPRESSOR MOUNTING 1970/ (V8-LPS) ..... Gr 13 - L 29
AIR CONDITIONING CONDENSER AND RECEIVER 1969/ ..... Gr 13 - L 24
AIR CONDITIONING DUCT 1967 (10)(50)(80), 1968 (10)(80) ..... Gr 13 - L 19

Printed in U.S.A.

GROUP 13 HEATER - AIR CONDITIONING (Continued) . . . **PAGE NO.**

AIR CONDITIONING EVAPORATOR HOUSING AND DUCTS 1970/ (01)(40) ..... Gr 13 - L 8
AIR CONDITIONING EVAPORATOR HOUSING AND DUCTS 1967/69 (01) ..... Gr 13 - L 7
AIR CONDITIONING EVAPORATOR HOUSING AND DUCTS 1967 (10)(50)(80), 1968 (10)(80) ..... Gr 13 - L 9
AIR CONDITIONING EVAPORATOR HOUSING AND DUCTS 1969/71 (10)(80) ..... Gr 13 - L 10
AIR CONDITIONING EVAPORATOR HOUSING AND DUCTS 1972 (10)(80) ..... Gr 13 - L 11
AIR CONDITIONING EVAPORATOR HOUSING DUCTS 1971/ (70) ..... Gr 13 - L 12
AIR DISCHARGE DUCTS 1970 (01)(40), 1971-Type 1 (01)(40) ..... Gr 13 - L 20
AIR DISCHARGE DUCTS 1969/71 (10)(80) ..... Gr 13 - L 21
AIR DISCHARGE DUCTS 1972 (10)(80) ..... Gr 13 - L 22
AIR DISCHARGE DUCTS 1971/ (70) ..... Gr 13 - L 23
BLOWER HOUSING 1967/71-WAC-WHLV (10)(50)(80) ..... Gr 13 - L 6
HEATER, AIR CONDITIONING AND HIGH LEVEL VENTILATION CONTROLS 1970/ (01)(40) .... Gr 13 - L 15
HEATER, AIR CONDITIONING AND HIGH LEVEL VENTILATION CONTROLS 1969/71 (10)(80) .... Gr 13 - L 17
HEATER, AIR CONDITIONING AND HIGH LEVEL VENTILATION CONTROLS 1972 (10)(80) ..... Gr 13 - L 18
HEATER AND AIR CONDITIONING CONTROLS 1971/ (70) ..... Gr 13 - L 16
HEATER AND BLOWER HOUSINGS 1967/69 (01-LAC) ..... Gr 13 - L 1
HEATER AND BLOWER HOUSING 1970/ -LAC (01)(40) ..... Gr 13 - L 2
HEATER AND BLOWER HOUSINGS 1967/71-LHD-LAC-LHLV (10)(50)(80) ..... Gr 13 - L 3
HEATER AND BLOWER HOUSING 1971 (70-LAC), 1972-Type 1 (70-LAC) ..... Gr 13 - L 2a
HEATER AND BLOWER HOUSING 1972-Type 2 (70-LAC) ..... Gr 13 - L 2b
HEATER CONTROLS 1967/71 (10)(50)(80) ..... Gr 13 - L 19
HEATER CORE HOUSING 1967/71-WAC (10)(50)(80) ..... Gr 13 - L 6
HIGH LEVEL VENTILATION HOUSING AND DUCTS 1969/71 (10)(80) ..... Gr 13 - L 13
HIGH LEVEL VENTILATION HOUSING AND DUCTS 1972 (80) ..... Gr 13 - L 14
REAR WINDOW DEFOGGER 1968/70 (10)(70)(80), 1971 (10)(80) ..... Gr 13 - L 30

GROUP 14 CHASSIS MISCELLANEOUS . . .

BUMPER JACK 1967/69 (01)(10)(50)(80) ..... Gr 14 - L 1

GROUP 15 ACCESSORIES . . .

ENGINE HEATER ..... Gr 15 - L 2
GASOLINE FILTER 1967/69 ..... Gr 15 - L 3
MANUAL ANTENNA ..... Gr 15 - L 1
REMOTE CONTROL MIRROR 1967/69 ..... Gr 15 - L 2

GROUP 16 AUTOMATIC TRANSMISSION . . .

CASE, RETAINER AND SERVOS 1972 (SIX-E/HEAVY DUTY) ..... Gr 16 - L 20
CASE, RETAINER AND SERVOS 1972 (SIX-HEAVY DUTY)(V8-360)(V8-401) ..... Gr 16 - L 22
CASE, RETAINER AND SERVOS 1972 (V8-304) ..... Gr 16 - L 21
CONVERTER HOUSING, CASE AND EXTENSION 1967/71 (SIX) ..... Gr 16 - L 1
CONVERTER HOUSING, CASE AND EXTENSION 1967/71 (290-E/30)(304) ..... Gr 16 - L 2
CONVERTER HOUSING, CASE AND EXTENSION 1967/71 (290-30)(343)(360)(390)(401) ..... Gr 16 - L 3
CONVERTER, PUMP AND CLUTCHES 1972 (SIX-E/HEAVY DUTY)(V8-304) ..... Gr 16 - L 18
CONVERTER, PUMP AND CLUTCHES 1972 (SIX-HEAVY DUTY)(V8-360)(V8-401) ..... Gr 16 - L 20
FRONT SERVO AND BAND (LESS SELF ADJUSTING) 1967/70 (199)(232)(290)(343) ..... Gr 16 - L 4
FRONT SERVO AND BAND (SELF ADJUSTING) 1967/71 (199)(232)(258)(290)(304)(360) ..... Gr 16 - L 4
FRONT SERVO AND BAND 1968/71 (390)(401) ..... Gr 16 - L 5
FRONT PUMP, CLUTCHES AND CARRIER 1967/71 (199)(232)(258)(290-E/30)(304) ..... Gr 16 - L 9
FRONT PUMP, CLUTCHES AND CARRIER 1967/71 (290-30)(343)(360)(390)(401) ..... Gr 16 - L 10
OIL COOLER TUBES 1967/71 (SIX) ..... Gr 16 - L 13
OIL COOLER TUBES 1967/71 (V8) ..... Gr 16 - L 14
PARKING LOCK AND MANUAL CONTROL 1967/71 (199)(232)(258)(290-E/30)(304) ..... Gr 16 - L 7
PARKING LOCK AND MANUAL CONTROL 1967/71 (290-30)(343)(360)(390)(401) ..... Gr 16 - L 8
REAR SERVO AND BAND 1967/71 (199)(232)(258)(290-E/30)(304) ..... Gr 16 - L 5
REAR SERVO AND BAND 1967/71 (290-30)(343)(360) ..... Gr 16 - L 6
REAR SERVO AND BAND 1968/71 (390)(401) ..... Gr 16 - L 6
VALVE ASSEMBLY 1967/71 (199)(232)(258)(290-E/30)(304) ..... Gr 16 - L 11
VALVE ASSEMBLY 1967/71 (290-30)(343)(360)(390)(401) ..... Gr 16 - L 12
THROTTLE CONTROL VACUUM TUBE 1967/71 ..... Gr 16 - L 15
THROTTLE VALVE LINKAGE AND OIL COOLING LINES 1972 (SIX) ..... Gr 16 - L 23
THROTTLE VALVE LINKAGE AND OIL COOLING LINES 1972 (V8) ..... Gr 16 - L 24
VALVE ASSEMBLY 1972 (SIX-E/HEAVY DUTY) ..... Gr 16 - L 16
VALVE ASSEMBLY 1972 (SIX-HEAVY DUTY)(V8) ..... Gr 16 - L 17

Printed in U.S.A.

GROUP 19 HIGH PERFORMANCE . . . (Refer to F-14072 Parts Catalog) **PAGE NO.**

GROUP 20 BODY SHEET METAL . . .

AUXILIARY FLOOR PANELS 1967/69 (08) ..... Gr 20 - L 27
AUXILIARY FLOOR PANELS 1971/ (08) ..... Gr 20 - L 27
AUXILIARY FLOOR PANELS 18 (L3S), 1967/68 (88-L3S) ..... Gr 20 - L 28
AUXILIARY FLOOR PANELS 18 (W3S), 1967/ (88-W3S) ..... Gr 20 - L 28
AUXILIARY FLOOR PANELS (L3S) 1969/ (88) ..... Gr 20 - L 29
DASH AND FRONT WHEELHOUSE PANEL 1967/69 (01) ..... Gr 20 - L 9b
DASH AND FRONT WHEELHOUSE PANEL 1970/ (01)(40) ..... Gr 20 - L 10
DASH AND FRONT WHEELHOUSE PANEL 10, 50, 80 ..... Gr 20 - L 11
DASH AND FRONT WHEELHOUSE PANEL 1970/ (10)(80) ..... Gr 20 - L 12
FLOOR PANS AND SIDE PANELS 1970/ (05) ..... Gr 20 - L 3
FLOOR PANS AND SIDE PANELS 1970/ (06) ..... Gr 20 - L 4
FLOOR PANS AND SIDE PANELS 1971/ (08) ..... Gr 20 - L 5
FLOOR PANS AND SIDE PANELS 1970/ (40) ..... Gr 20 - L 6
REAR WHEELHOUSE AND REAR DECK LOWER PANEL 1967/69 (10)(50)(80) ..... Gr 20 - L 26
REAR WHEELHOUSE AND REAR DECK UPPER PANEL 17, 87 ..... Gr 20 - L 26
ROOF PANEL AND REAR SHELF PANEL 1970/ (05)(06) ..... Gr 20 - L 22
ROOF PANEL AND SUPPORTS 1970/ (40) ..... Gr 20 - L 24
ROOF PANEL AND SUPPORTS 18, 88 ..... Gr 20 - L 25
ROOF PANEL, SUPPORTS AND REAR SHELF PANEL 1967/69 (05)(06) ..... Gr 20 - L 22
ROOF PANEL, SUPPORTS AND REAR SHELF PANEL 1967/69 (15)(85) ..... Gr 20 - L 23
ROOF PANEL, SUPPORTS AND REAR SHELF PANEL 16, 86, 1967/69 (19)(89) ..... Gr 20 - L 23
ROOF PANEL, SUPPORTS AND REAR SHELF PANEL 1967 (59) ..... Gr 20 - L 25
TAILGATE OPENINGS PANELS 18, 88 ..... Gr 20 - L 30
UNDERBODY PANELS 1967/69 (05)(06)(08)(09) ..... Gr 20 - L 1
UNDERBODY PANELS 07 ..... Gr 20 - L 2
UNDERBODY PANELS 15, 16, 18 (L3S), 19, 59, 85, 86, 88-L3S (1967/68), 89 ..... Gr 20 - L 7
UNDERBODY PANELS 17, 87 ..... Gr 20 - L 8
UNDERBODY PANELS 18 (W3S), 88 (W3S-1967/68)(1969/) ..... Gr 20 - L 9
UNDERBODY PANELS 1971/ (70) ..... Gr 20 - L 9a
UNISIDE 1967/69 (05) ..... Gr 20 - L 13
UNISIDE 1967/69 (06) ..... Gr 20 - L 14
UNISIDE 07 ..... Gr 20 - L 15
UNISIDE 1967/69 (09) ..... Gr 20 - L 16
UNISIDE 1967/69 (15)(85), 18, 88 ..... Gr 20 - L 17
UNISIDE 1970/ (15)(85) ..... Gr 20 - L 18a
UNISIDE 16, 86, 1967/69 (19)(89) ..... Gr 20 - L 18
UNISIDE 17, 87 ..... Gr 20 - L 19
UNISIDE 1970/ (19)(89) ..... Gr 20 - L 18b
UNISIDE 1968/70 (30)(70) ..... Gr 20 - L 20
UNISIDE 50 ..... Gr 20 - L 21
UNISIDE 1971/ (70) ..... Gr 20 - L 20a

GROUP 22 WINDSHIELD WIPER - COWL VENT - INSTRUMENT PANEL . . .

ELECTRIC OPERATED WINDSHIELD WASHER 1969/70 ..... Gr 22 - L 5
ELECTRIC OPERATED WINDSHIELD WASHER 1971 ..... Gr 22 - L 5
ELECTRIC WINDSHIELD WIPER ..... Gr 22 - L 4
INSTRUMENT PANEL, GLOVE BOX AND OVERLAYS 1967/69 (01) ..... Gr 22 - L 6
INSTRUMENT PANEL, GLOVE BOX AND OVERLAYS 1970/ (01)(40) ..... Gr 22 - L 7
INSTRUMENT PANEL, GLOVE BOX AND OVERLAYS 1968/69 (30)(70) ..... Gr 22 - L 8
INSTRUMENT PANEL, GLOVE BOX AND OVERLAYS 1970 (30)(70) ..... Gr 22 - L 9
INSTRUMENT PANEL, GLOVE BOX AND OVERLAYS 1967/68 (10)(50)(80) ..... Gr 22 - L 12
INSTRUMENT PANEL, GLOVE BOX AND OVERLAYS 1969/70 (10)(80) ..... Gr 22 - L 13
INSTRUMENT PANEL, GLOVE BOX AND OVERLAYS 1971 (10)(80) ..... Gr 22 - L 14
INSTRUMENT PANEL, GLOVE BOX AND OVERLAYS 1972 (10)(80) ..... Gr 22 - L 15
INSTRUMENT PANEL (UPPER) 1971/ (70) ..... Gr 22 - L 10
INSTRUMENT PANEL (LOWER) 1971 (70) ..... Gr 22 - L 11
VACUUM WINDSHIELD WIPER 1967/69 (01) ..... Gr 22 - L 1
VACUUM WINDSHIELD WIPER 1967/68 (10)(80), 1967 (50) ..... Gr 22 - L 2
VACUUM WINDSHIELD WIPERS AND WASHER 1970/71 (01)(40) ..... Gr 22 - L 3

GROUP 23 DOORS - HARDWARE . . .

ELECTRIC DOOR WINDOW HARNESS AND RELATED PARTS 1968/ (10)(80) ..... Gr 23 - L 40
FRONT DOOR GLASS AND CHANNELS 1967/69 (05)(06)(08) ..... Gr 23 - L 3

GROUP 23 DOORS - HARDWARE (Continued) . . . **PAGE NO.**

FRONT DOOR GLASS AND CHANNELS 1967 (07), 1967/69 (09) ..... Gr 23 - L 5
FRONT DOOR GLASS AND CHANNELS 1970/ (01)(40) ..... Gr 23 - L 5c
FRONT DOOR GLASS AND CHANNELS 15, 18, 85, 88 ..... Gr 23 - L 7
FRONT DOOR GLASS AND CHANNELS 17, 19, 59, 87, 89 ..... Gr 23 - L 9
FRONT DOOR GLASS AND CHANNELS 1968-Type 1 (30)(70) ..... Gr 23 - L 11
FRONT DOOR GLASS AND CHANNELS 1968-Type 2 (30)(70, 1969/70 (30)(70) ..... Gr 23 - L 12
FRONT DOOR GLASS AND CHANNELS 1971/ (70) ..... Gr 23 - L 13
FRONT DOOR, HARDWARE AND SEALERS 1967/69 (05)(08) ..... Gr 23 - L 1
FRONT DOOR, HARDWARE AND SEALERS 1967/69 (06) ..... Gr 23 - L 2
FRONT DOOR, HARDWARE AND SEALERS 1967 (07), 1967/69 (09) ..... Gr 23 - L 4
FRONT DOOR, HARDWARE AND SEALERS 1970 (01)(40) ..... Gr 23 - L 5a
FRONT DOOR HARDWARE AND SEALERS 1971/ (01)(40) ..... Gr 23 - L 5b
FRONT DOOR, HARDWARE AND SEALERS 1968/71 (15)(18)(85)(88) ..... Gr 23 - L 6
FRONT DOOR, HARDWARE AND SEALERS 1968 (17), 1968/71 (19)(89) ..... Gr 23 - L 8
FRONT DOOR, HARDWARE AND SEALERS 1968/70 (30)(70) ..... Gr 23 - L 10
FRONT DOOR HARDWARE AND SEALERS 1971/ (70) ..... Gr 23 - L 10a
INTERIOR TRIM PANEL MOULDINGS ..... Gr 23 - L 41
INTERIOR TRIM PANEL MOULDINGS ..... Gr 23 - L 42
INTERIOR TRIM PANEL MOULDINGS ..... Gr 23 - L 43
INTERIOR TRIM PANEL MOULDINGS ..... Gr 23 - L 44
INTERIOR TRIM PANEL MOULDINGS ..... Gr 23 - L 45
INTERIOR TRIM PANEL MOULDINGS ..... Gr 23 - L 46
INTERIOR TRIM PANEL MOULDINGS ..... Gr 23 - L 47
INTERIOR TRIM PANEL MOULDINGS ..... Gr 23 - L 48
LIFTGATE 1971/ (08) ..... Gr 23 - L 28
LIFTGATE 1970/ (40) ..... Gr 23 - L 29
REAR DECK DOOR AND HINGE 30, 70 ..... Gr 23 - L 38
REAR DECK DOOR AND HINGE 1969 (10)(80) ..... Gr 23 - L 39
REAR DECK DOOR, HINGE AND LOWER CENTER PANEL 1967/69 (05)(06)(07)(09) ..... Gr 23 - L 38
REAR DOOR GLASS AND CHANNELS 1967/69 (05)(08) ..... Gr 23 - L 18
REAR DOOR GLASS AND CHANNELS 1970/ (05)(08) ..... Gr 23 - L 15
REAR DOOR GLASS AND CHANNELS 1968/ (10)(80) ..... Gr 23 - L 17
REAR DOOR, HARDWARE AND SEALERS 1970/ (05)(08) ..... Gr 23 - L 14
REAR DOOR, HARDWARE AND SEALERS 1968/ (10)(80) ..... Gr 23 - L 16
REAR QUARTER LOWERING GLASS AND CHANNELS 1967/69 (06) ..... Gr 23 - L 19
REAR QUARTER LOWERING GLASS AND CHANNELS 07 ..... Gr 23 - L 20
REAR QUARTER LOWERING GLASS AND CHANNELS 1967/69 (09) ..... Gr 23 - L 21
REAR QUARTER LOWERING GLASS AND CHANNELS 1967/69 (16)(17)(19)(86)(87)(89) ..... Gr 23 - L 24
REAR QUARTER LOWERING GLASS AND CHANNELS 1970/ (19)(89) ..... Gr 23 - L 25
REAR QUARTER LOWERING GLASS AND CHANNELS 70 (Type 1) ..... Gr 23 - L 26
REAR QUARTER LOWERING GLASS AND CHANNELS 70 (Type 2) ..... Gr 23 - L 27
REAR QUARTER PIVOTING GLASS AND CHANNELS 1970-Type 1 (06) ..... Gr 23 - L 22
REAR QUARTER PIVOTING GLASS AND CHANNELS 1970-Type 2 (06), 1971 (06) ..... Gr 23 - L 23
REAR QUARTER PIVOTING GLASS AND CHANNELS 40 ..... Gr 23 - L 23
REAR QUARTER STATIONARY GLASS AND CHANNEL 1970/ (06) ..... Gr 23 - L 22
TAILGATE ELECTRIC WINDOW REGULATOR 1967-08 (WER) ..... Gr 23 - L 31
TAILGATE ELECTRIC WINDOW REGULATOR 18, 88 ..... Gr 23 - L 36
TAILGATE, GLASS AND CHANNELS 1967/69 (08) ..... Gr 23 - L 32
TAILGATE, GLASS AND CHANNELS 1967-Type 1 (18)(88) ..... Gr 23 - L 37
TAILGATE, GLASS AND CHANNELS 1967-Type 2 (18)(88), 1968/ (18)(88) ..... Gr 23 - L 37
TAILGATE, HARDWARE AND SEALERS 1967/69 (08-LER) ..... Gr 23 - L 30
TAILGATE, HARDWARE AND SEALERS 1967/68-LVT (18)(88) ..... Gr 23 - L 33
TAILGATE, HARDWARE AND SEALERS 1967/68-WVT (18)(88) ..... Gr 23 - L 34
TAILGATE, HARDWARE AND SEALERS 1969/ -LER (18)(88) ..... Gr 23 - L 35

GROUP 24 REAR QUARTER HARDWARE . . .

REFER TO GROUP 23 ILLUSTRATIONS

GROUP 25 GLASS - CHANNELS . . .

REFER TO GROUP 23 ILLUSTRATIONS

GROUP 26 BODY MOULDINGS . . . (Refer to F-14072 Parts Catalog)

GROUP 27 BODY HARDWARE . . .

	PAGE NO.
FLOOR CONSOLE 1967 (01)	Gr 27 - L 3
FRONT SEAT BELT 1967	Gr 27 - L 1
LUGGAGE RACK 1970/ (40)	Gr 27 - L 5
LUGGAGE RACK 1967/69 (18)(88)	Gr 27 - L 4
LUGGAGE RACK (EXTERNALLY MOUNTED) 1970/ (18)(88)	Gr 27 - L 4
SEAT BELTS 1972 (WSBW)	Gr 27 - L 2
SUN VISOR AND INSIDE MIRROR 1967 (10)(50)(80), 1968 (Type 1-E/01)	Gr 27 - L 1

GROUP 28 CONVERTIBLE TOP - SUN ROOF . . .

FOLDING TOP COVERING AND HEADER	Gr 28 - L 3
FOLDING TOP HYDRAULIC CYLINDER AND POWER UNIT	Gr 28 - L 2
FOLDING TOP RAILS, LINKS AND WEATHERSEALS	Gr 28 - L 1
SUN ROOF 1971/ (06)(40)	Gr 28 - L 4

GROUP 29 SEATS - SOFT TRIM . . .

FRONT SEAT 1967-01 (WRS)	Gr 29 - L 1
FRONT SEAT WIRS-1967/70 (01), WBS (1967/69), LBS-1967/71 (10)(80)	Gr 29 - L 2
FRONT SEAT 40	Gr 29 - L 5
FRONT SEAT WFS	Gr 29 - L 3
FRONT SEAT WNRS	Gr 29 - L 3
FRONT SEAT 1970/ (WNBS)	Gr 29 - L 4
FRONT SEAT CENTER CUSHION AND ARM REST WBS	Gr 29 - L 6
INTERIOR BODY TRIM (LESS REAR SEAT) 1967/69 (05)	Gr 29 - L 10
INTERIOR BODY TRIM (LESS REAR SEAT) 1967/69 (06)	Gr 29 - L 10
INTERIOR BODY TRIM (LESS REAR SEAT) 1967/ (15)(85)	Gr 29 - L 15
INTERIOR BODY TRIM (LESS REAR SEAT) 1967 (16)(86)	Gr 29 - L 15
INTERIOR BODY TRIM (LESS REAR SEAT) 1967/ (19)(89)	Gr 29 - L 17
INTERIOR BODY TRIM (WITH REAR SEAT) 1967/69 (05)	Gr 29 - L 10
INTERIOR BODY TRIM (WITH REAR SEAT) 1967/69 (06)	Gr 29 - L 11
INTERIOR BODY TRIM (WITH REAR SEAT) 1967/ (15)(85)	Gr 29 - L 15
INTERIOR BODY TRIM (WITH REAR SEAT) 1967 (16)(86)	Gr 29 - L 16
INTERIOR BODY TRIM (WITH REAR SEAT) 1967/ (19)(89)	Gr 29 - L 17
INTERIOR BODY TRIM 1967 (07)	Gr 29 - L 11
INTERIOR BODY TRIM 1967/69 (08)	Gr 29 - L 11
INTERIOR BODY TRIM 1967/69 (09)	Gr 29 - L 12
INTERIOR BODY TRIM 1970/ (05)	Gr 29 - L 12
INTERIOR BODY TRIM 1970/ (06)	Gr 29 - L 12
INTERIOR BODY TRIM 1971/ (08)	Gr 29 - L 13
INTERIOR BODY TRIM 1967 (17)(87), 1968 (17)	Gr 29 - L 16
INTERIOR BODY TRIM 1967/ (18-L3S)(88-L3S)	Gr 29 - L 16
INTERIOR BODY TRIM 1967/ (18-W3S)(88-W3S)	Gr 29 - L 17
INTERIOR BODY TRIM 1967 (50)	Gr 29 - L 18
INTERIOR BODY TRIM 1968/70 (30)	Gr 29 - L 14
INTERIOR BODY TRIM 1970/ (40)	Gr 29 - L 14
INTERIOR BODY TRIM 1968/70 (70)	Gr 29 - L 14
REAR SEAT BACK SIDE ARMS AND EXTENSION 1967/ (18)(88)	Gr 29 - L 8
REAR SEAT CENTER ARM REST 1967 (50)(80)	Gr 29 - L 7
REAR SEAT CUSHION AND BACK 1970/71 (40), 1971 (08)	Gr 29 - L 9
THIRD SEAT CUSHION AND BACK 1967/ (10)(80)	Gr 29 - L 9

SPECIAL INFORMATION

The Engine Build Code Number, Vehicle Identification Number and the information provided on the Unit Body Plate are often necessary when determining the proper replacement parts for your automobile. For their location refer to the General Information Section found at the front of this catalog.

When machining Blocks or Crankshafts it sometimes becomes necessary to machine the bores .010 oversize and/or the main and/or rod bearing surfaces .010 undersize. Engines so machined have an alphabetical code affixed as follows:

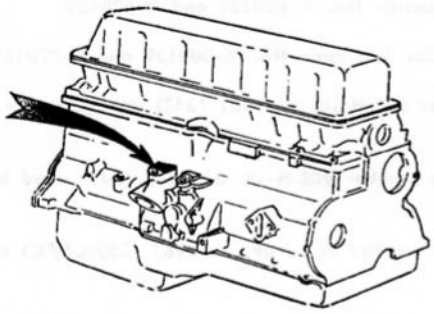

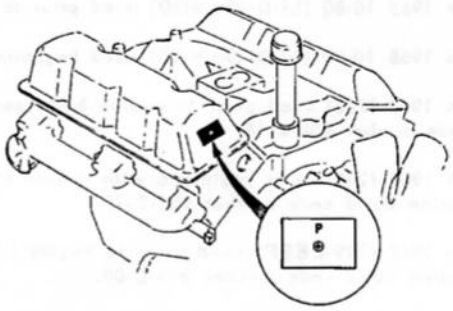

and which is interpreted as follows: P - Pins (Conn. Rod Brg. surfaces) undersize . . . M - Mains (Main Brg. surfaces) undersize . . . PM - Pins and Mains undersize . . . B - Bores oversize. CAUTION: All service Blocks and Crankshafts are standard. If your original equipment was not standard it may be necessary for you to order Pistons, Rings, Main Bearings and/or Connecting Rod Bearings to fit.

It may be necessary to determine whether a car is equipped with (LSFC) Less Sealed Oil Filler Cap,

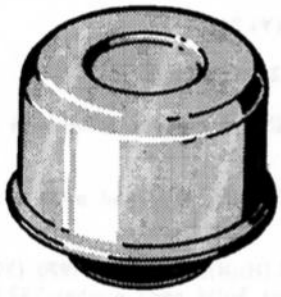

SIX (LSFC)

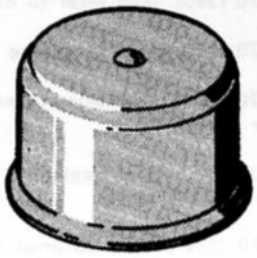

V8 (LSFC)

or (WSFC) with Sealed Oil Filler Cap.

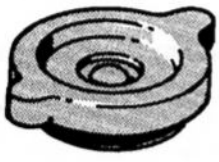

SIX (WSFC)

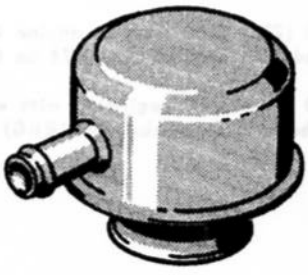

V8 (WSFC)

NOTES

1–1 ..... Has one groove cut in the upper shoulder.

1–2 ..... Has no groove cut in the upper shoulder.

1–3 ..... On 1968 10-80 (LHD-232-WOD) used prior to Car Sequence No. E-000139 and W-000189.

1–4 ..... On 1968 10-80 (LHD-232-WOD) used beginning with Car Sequence No. E-000139 and W-000189.

1–5 ..... On 1968 10-80 (LHD-290-WOD) used prior to Car Sequence No. E-000139 and W-000189.

1–6 ..... On 1968 10-80 (LHD-290-WOD) used beginning with Car Sequence No. E-000139 and W-000189.

1–7 ..... On 1967 (290) used prior to engine build code number 908-H-18; on 1967 (343) used prior to engine build code number 908-Z-18.

1–8 ..... On 1967 (290) used beginning with engine build code number 908-H-18; on 1967 (343) used beginning with engine build code number 908-Z-18.

1–9 ..... On 1967 (199-LEEP) used prior to engine build code number 905-J-09; on 1967 (232-LSFC) used prior to engine build code number 905-L-09.

1–10 .... On 1967 (199-LEEP) used beginning with engine build code number 905-J-09; on 1967 (232-LSFC) used beginning with engine build code number 905-L-09.

1–11 .... On 1968 (290-LEEP-WTAC) used prior to engine build code number 908-H-01; on 1968 (343-LEEP-WTAC) used prior to engine build code number 908-Z-01.

1–12 .... On 1968 (290-LEEP-WTAC) used beginning with engine build code number 908-H-01; on 1968 (343-LEEP-WTAC) used beginning with engine build code number 908-Z-01.

1–15 .... On 1968 (V8-W4B) used prior to car sequence no. E-43499 and W-047509.

1–16 .... On 1968 (V8-W4B) used beginning with car sequence no. E-43499 and W-047509.

1–17 .... On 1970 (390) used prior to engine build code number 209 (X)(Y) 26.

1–18 .... On 1970 (390) used beginning with engine build code number 209 (X)(Y) 26.

1–19 .... On 1970 (390) used prior to engine build code number 209 (X)(Y) 26 and beginning with engine build code number 303 (X)(Y) 18.

1–20 .... On 1970 (390) used beginning with engine build code number 209 (X)(Y) 26 and prior to engine build code number 303 (X)(Y) 18.

1–21 .... On 1970 (304-360) used prior to engine build code number 303 (H)(N)(P) 20. On 1970 (390) used beginning with engine build code number 209 (X)(Y) 26 and prior to engine build code number 303 (X)(Y) 18.

1–22 .... On 1970 (304-360) used beginning with engine build code number 303 (H)(N)(P) 20. On 1970 (390) used prior to engine build code number 209 (X)(Y) 26 and beginning with engine build code number 303 (X)(Y) 18.

1–25 .... On 1970 (360-390) used beginning with engine build code number 306 (N)(P)(X)(Y) 26.

1–26 .... On 1970 (360-390) used prior to engine build code number 306 (N)(P)(X)(Y) 26.

1–27 .... On 1970 (360-390) used beginning with engine build code number 306 (N)(P)(X)(Y) 26.

1–28 .... On 1970 (232) used prior to engine build code number 306 (E)(G) 25 on domestic built cars and engine build code number 306 (E)(G) 24 on Canadian built cars.

1–29 .... On 1970 (232) used beginning with engine build code number 306 (E)(G) 25 on domestic built cars and engine build code number 306 (E)(G) 24 on Canadian built cars.

Printed in U.S.A.

NOTES

1–32 .... On 1970 (232) used prior to engine build code number 307E20. (199 Engine not affected by this change).

1–33 .... On 1970 (232) used on Cars with engine build code number 307E20 or later. (199 Engine not affected by this change.

1–34 .... Seventh Digit of Vehicle Identification Number is either B or F.

1–35 .... On 1972 (Six) used prior to engine build code number 502 (A)(B)(E)(F) 07 and can be identified by having a Shaft running the length of the Cylinder Head retaining all Rocker Arms.

1–36 .... On 1972 (Six) used beginning with engine build code number 502 (A)(B)(E)(F) 07 and prior to engine build code number 506 (A)(B)(E)(F) 26 and can be identified by having each Intake and Exhaust Valve Rocker Arm attached to the Cylinder Head with a Pivot and 2 Bolts.

1–37 .... Refer to A. M. Technical Bulletin No.

1–38 .... To be used in conjunction with Push Rods 448 8412 on 1970/71 Models, and 319 6696 on 1969 Models. Refer to A. M. Technical Bulletin No.

1–39 .... Carburetor Pullback Spring Bracket is welded to Rocker Arm Cover.

1–40 .... Carburetor Pullback Spring Bracket is not part of Rocker Arm Cover but attaches to Intake and Exhaust Manifold Mounting Bolt.

1–41 .... On 1972 (Six) used prior to engine build code number 506 (A)(B)(E)(F) 26.

1–42 .... On 1972 (Six) used beginning with engine build code number 506 (A)(B)(E)(F) 26.

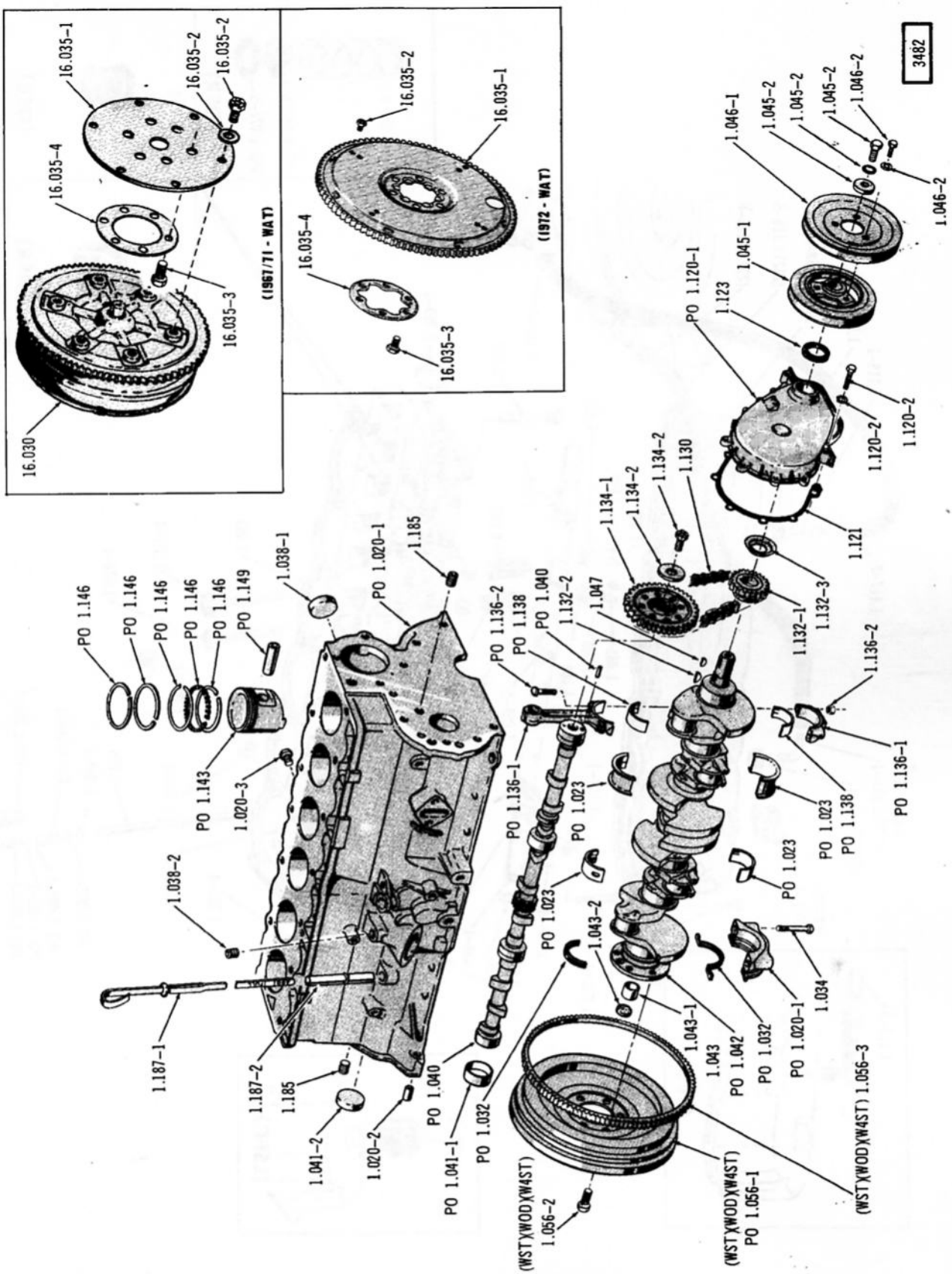

CYLINDER BLOCK, CRANKSHAFT AND CAMSHAFT ... SIX

Printed in U.S.A.

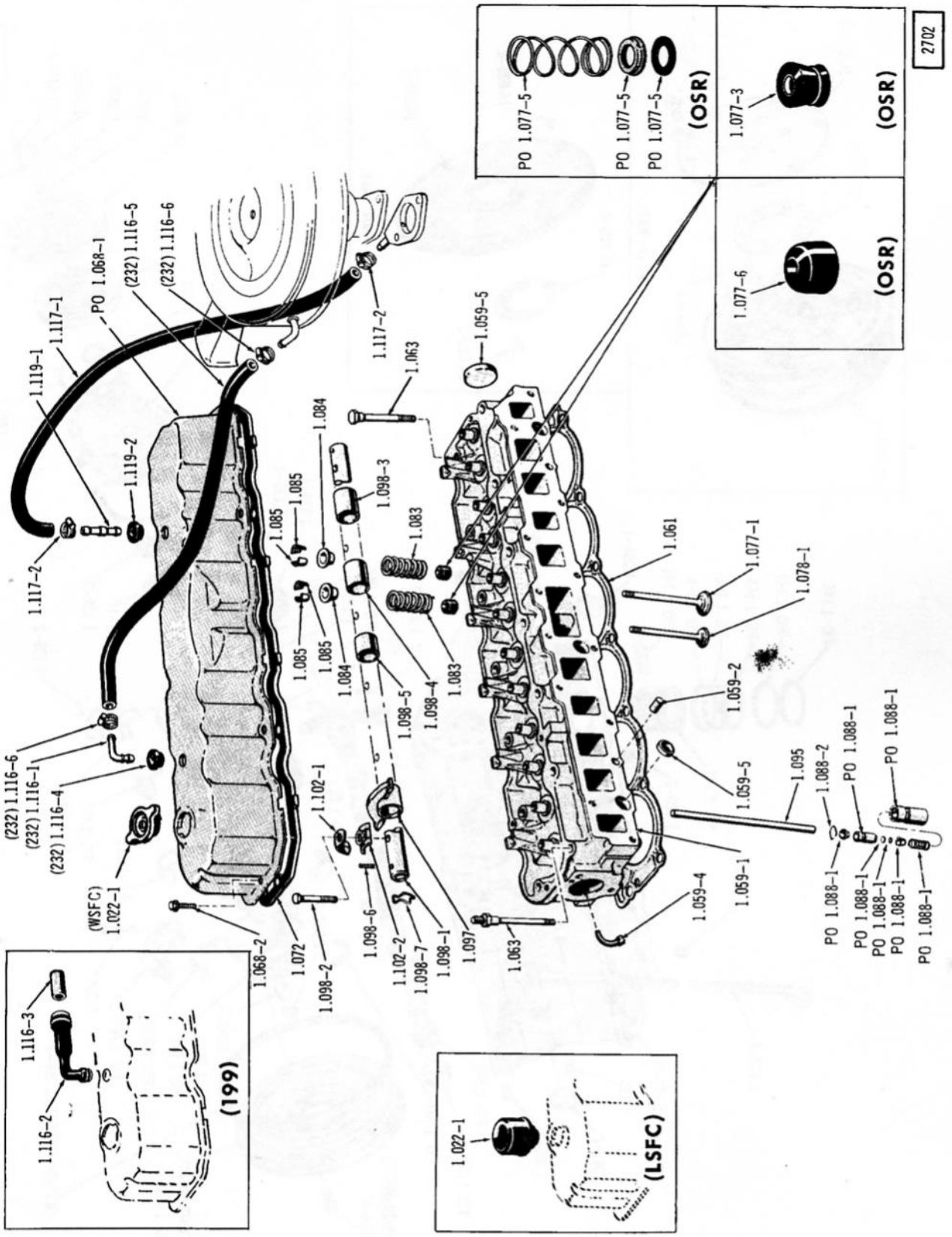

CYLINDER HEAD ... SIX (1967)

Printed in U.S.A.

3272

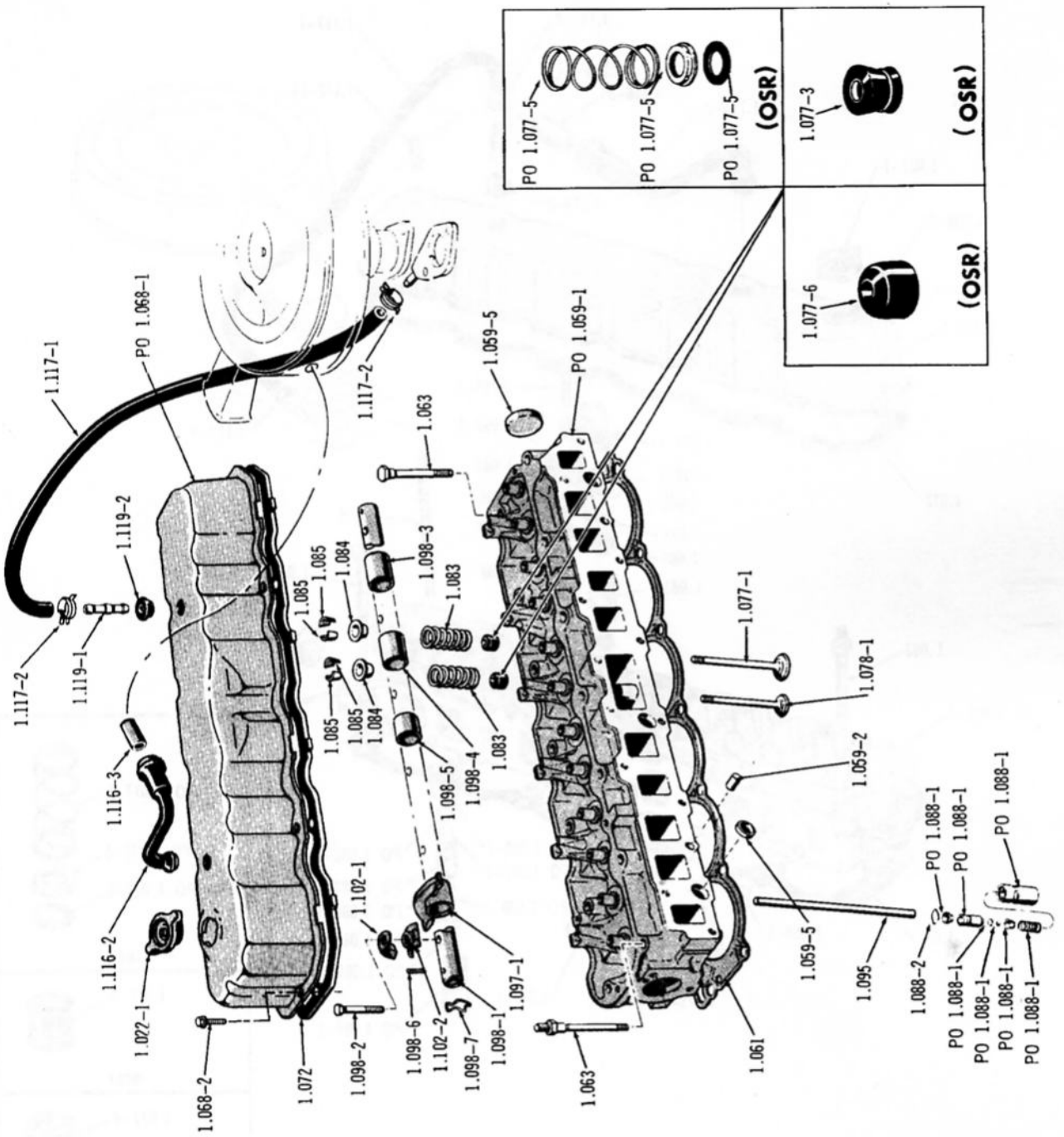

CYLINDER HEAD . . . SIX (1968/71)(1972 TYPE 1)

Printed in U.S.A.

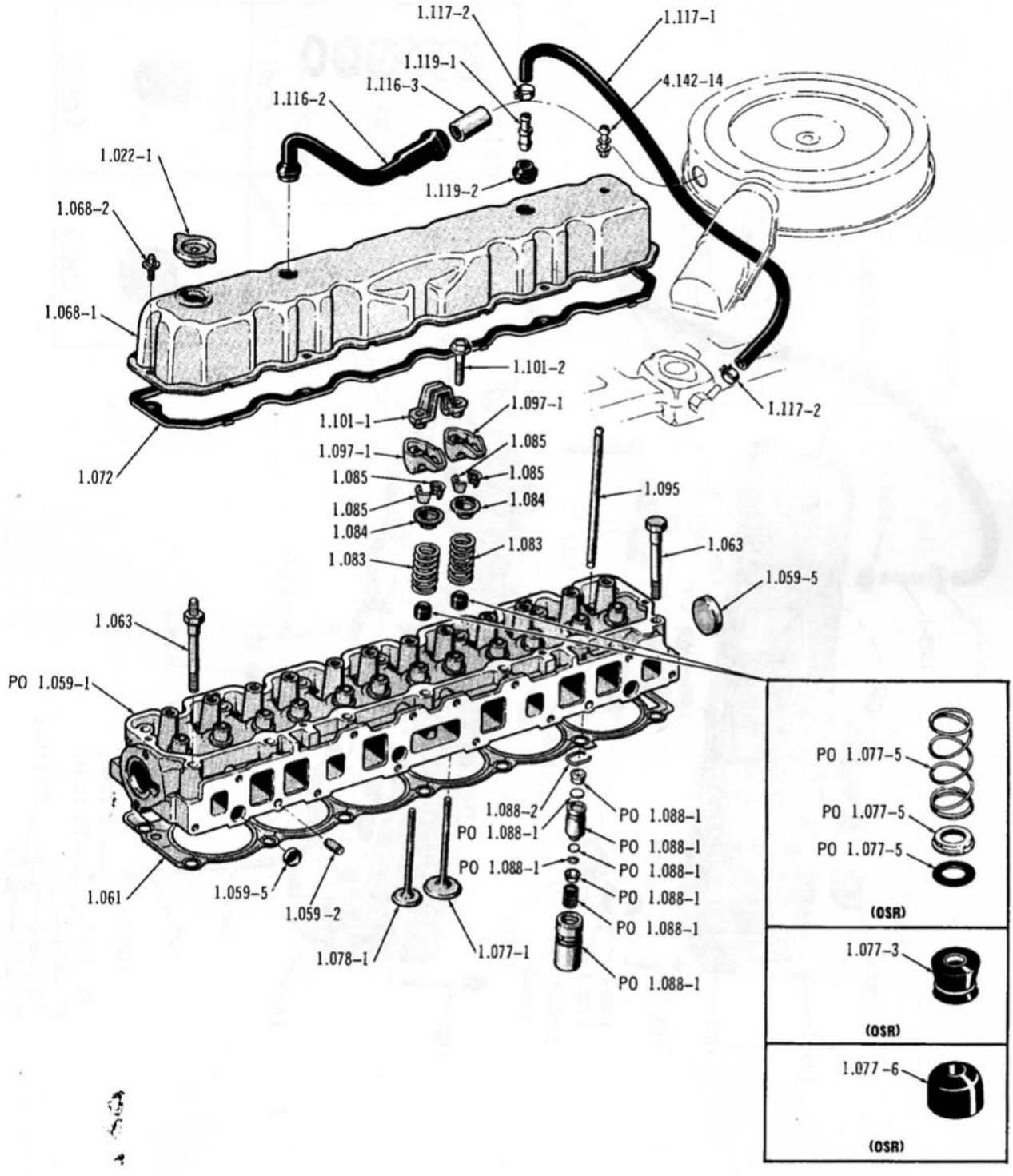

CYLINDER HEAD . . . SIX (1972 - TYPE 2)

Printed in U.S.A.

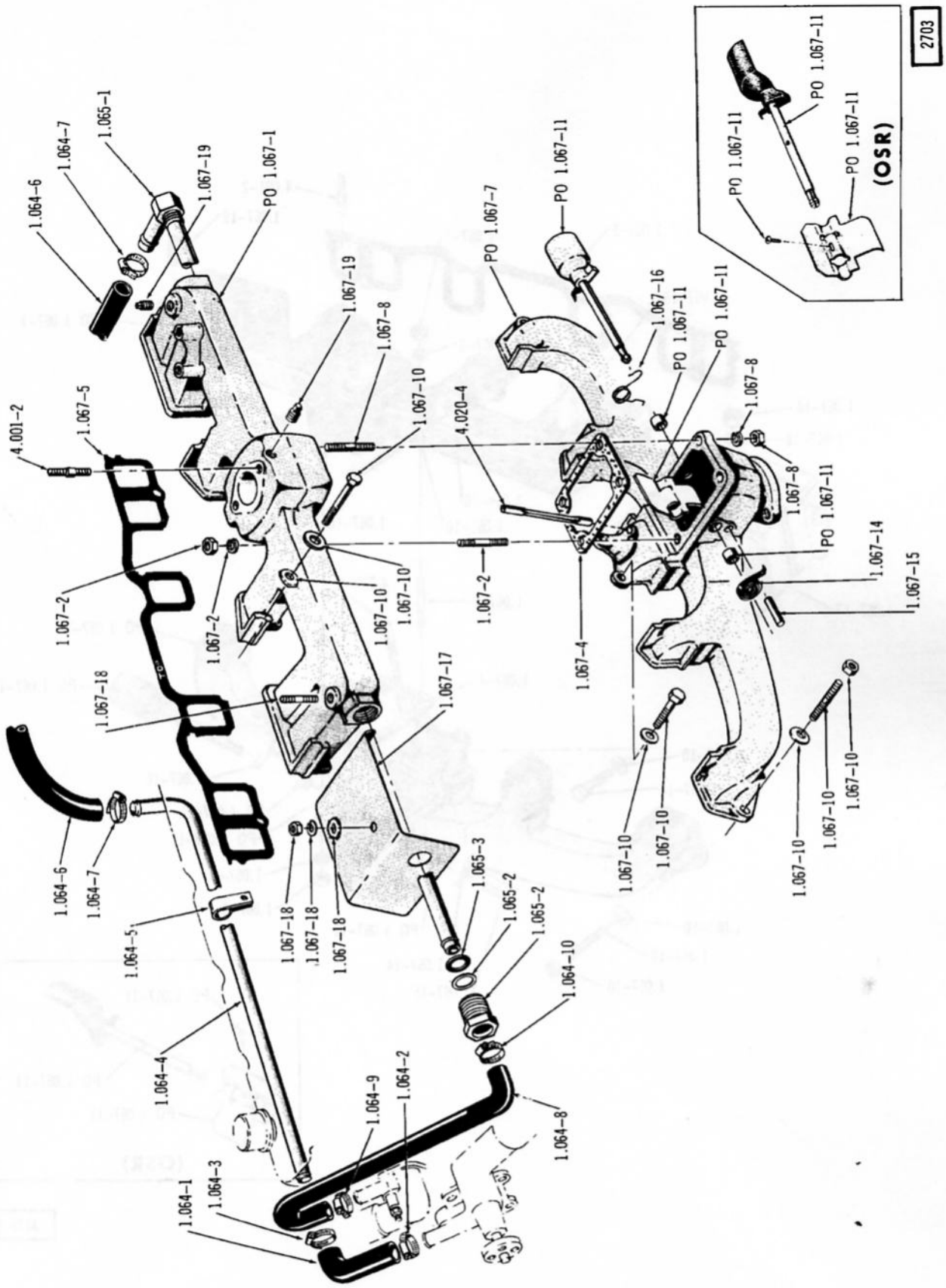

MANIFOLDS ... 199 (1967)

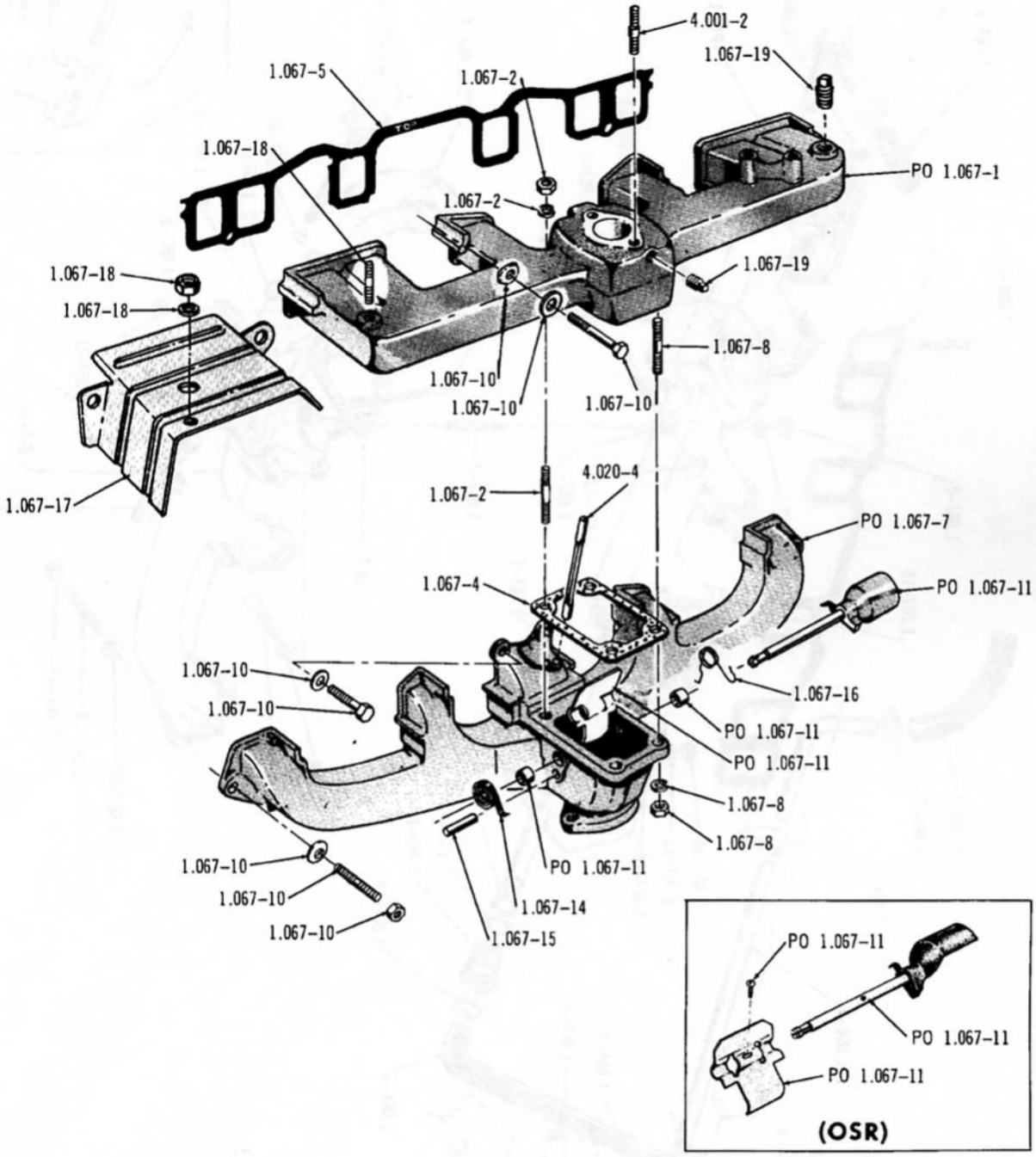

3275

MANIFOLDS ... 199 (1968/), 232 (1967)(1968/69-E/09)(1970/), 258 (1971/)

Printed in U.S.A.

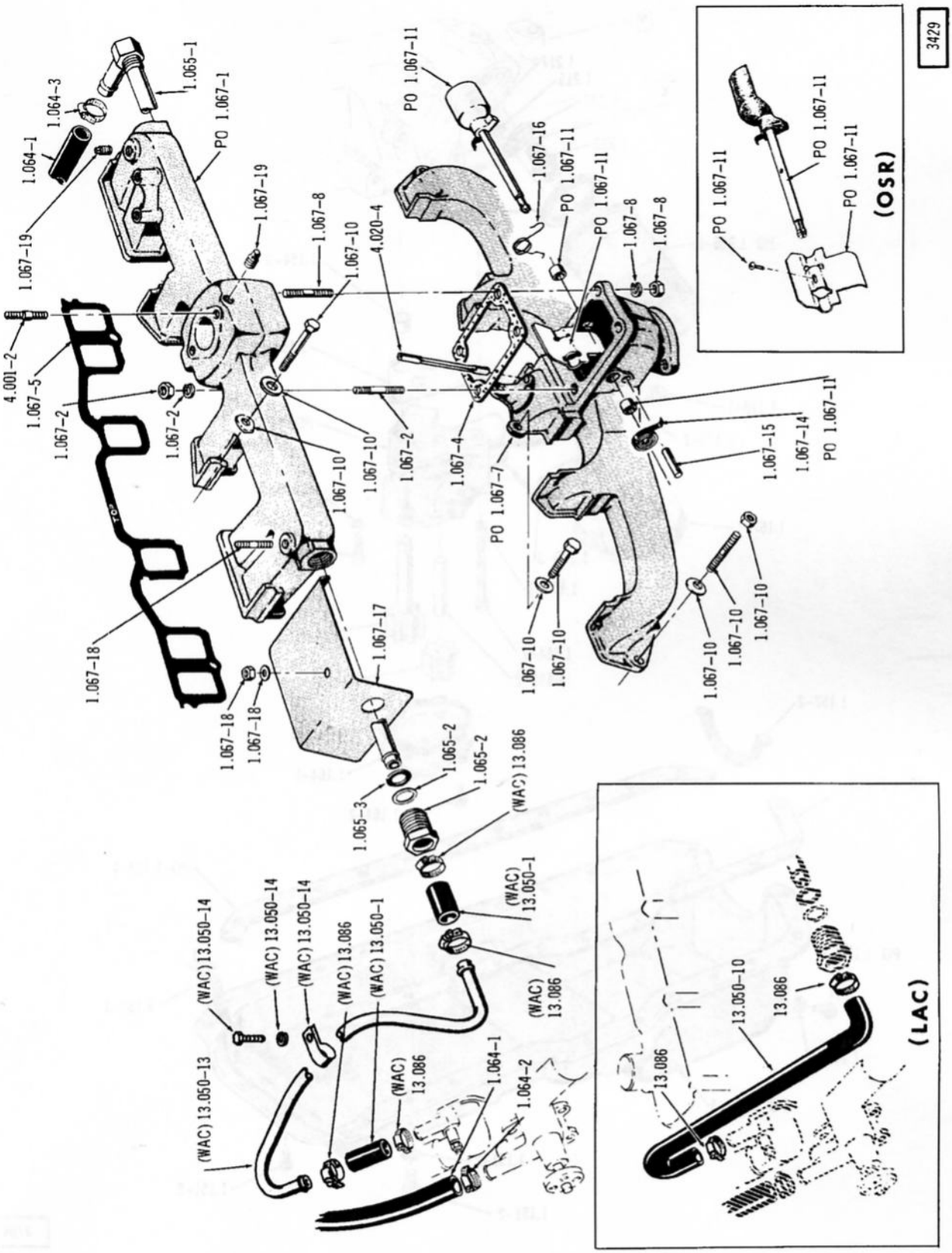

MANIFOLDS ... 232-09 (1968/69)

Printed in U.S.A.

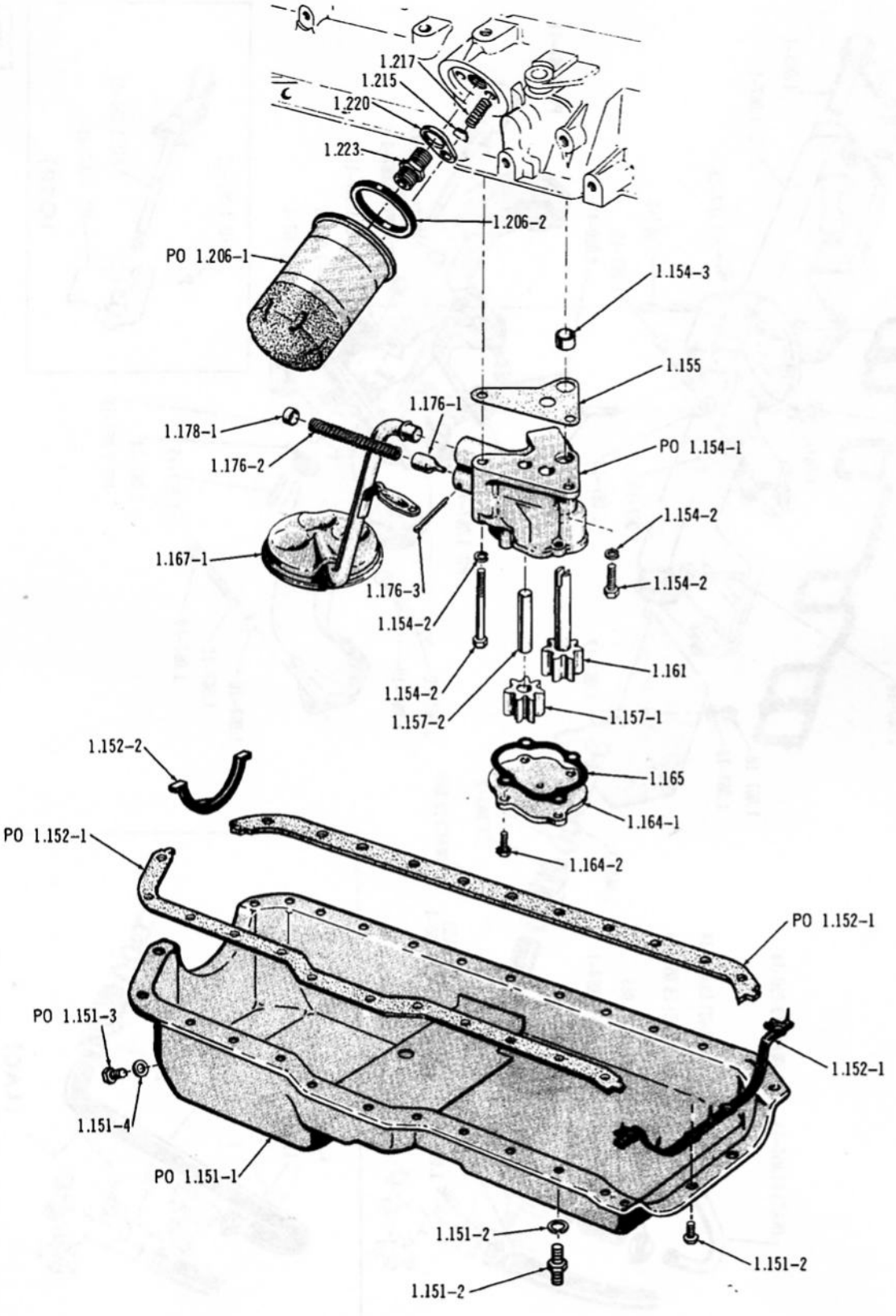

OIL PUMP, FILTER AND PAN ... SIX

2706

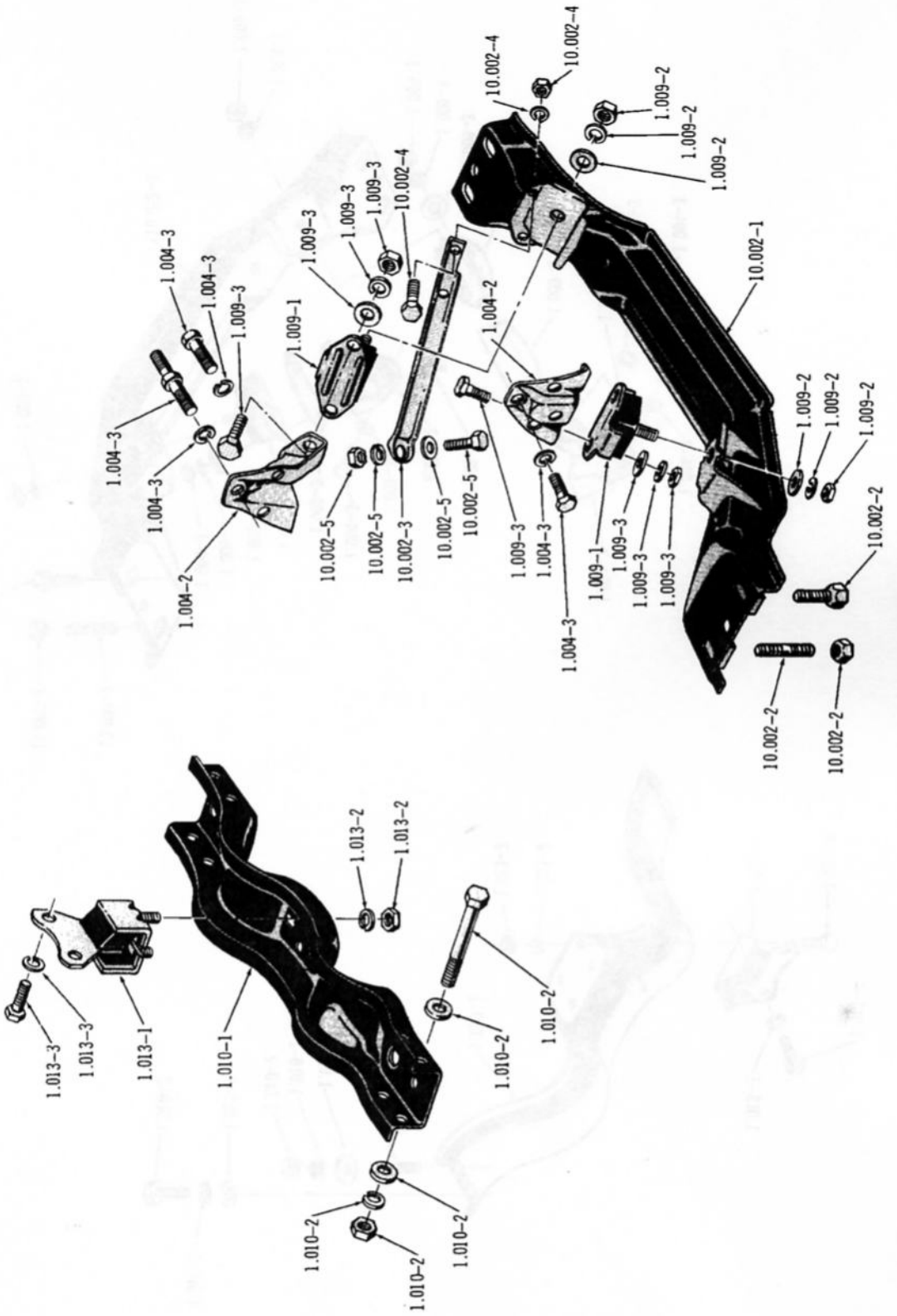

MOUNTING ... 199 (1967/69), 232-01 (1967/69)

Printed in U.S.A.

2705

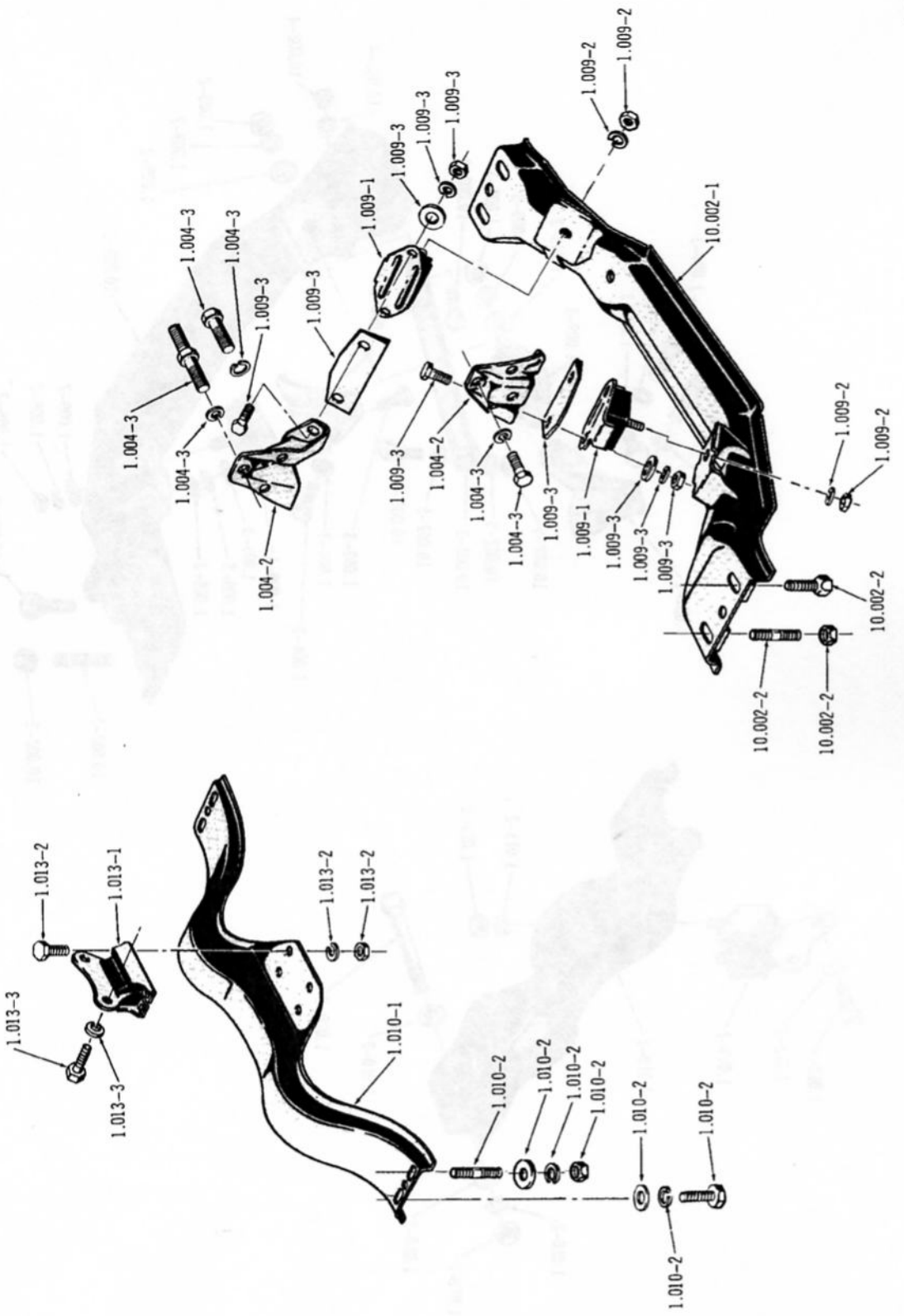

MOUNTING ... 232-E/01 (1967/69), SIX (1970)

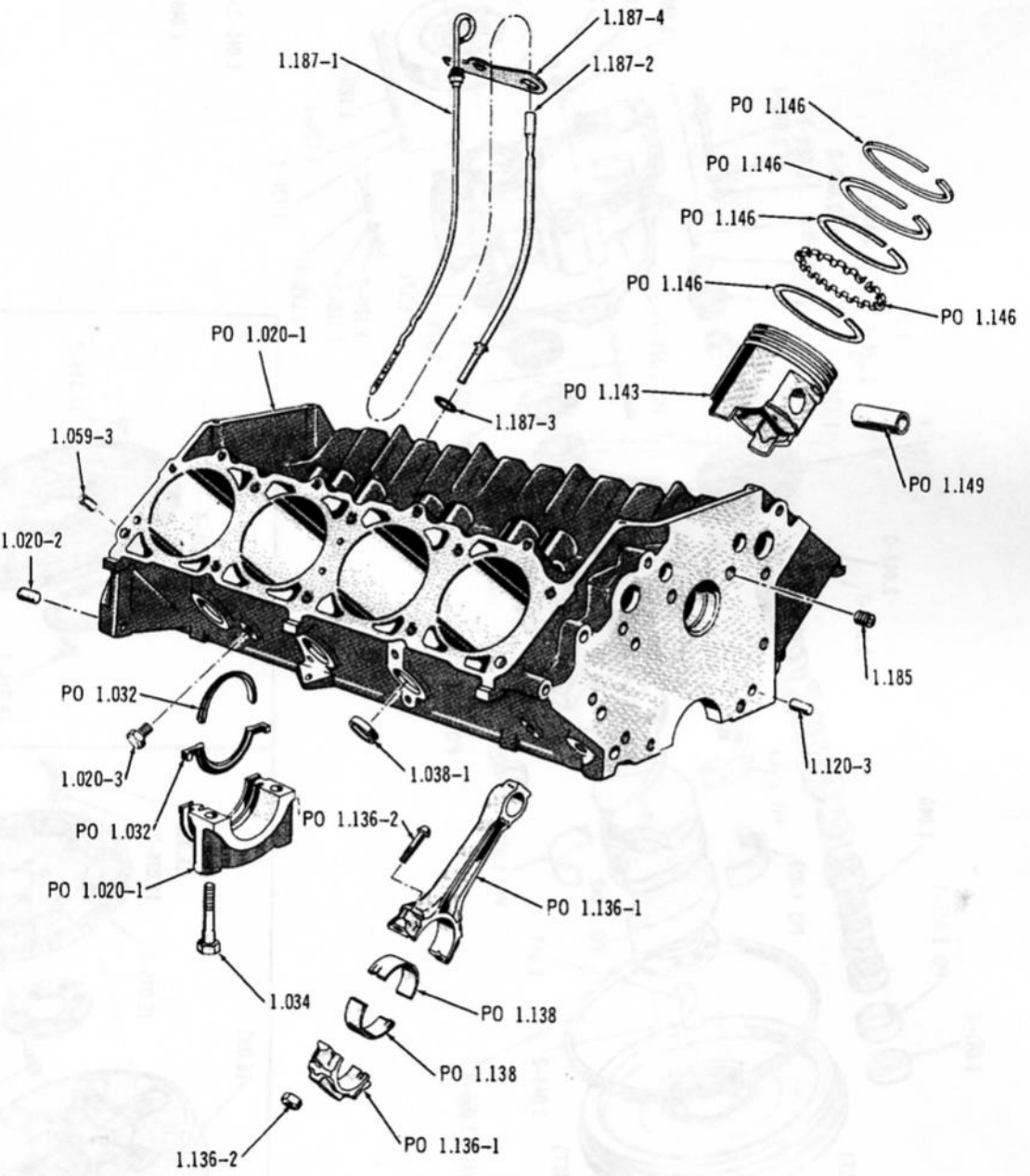

CYLINDER BLOCK ... V8

Printed in U.S.A.

2713

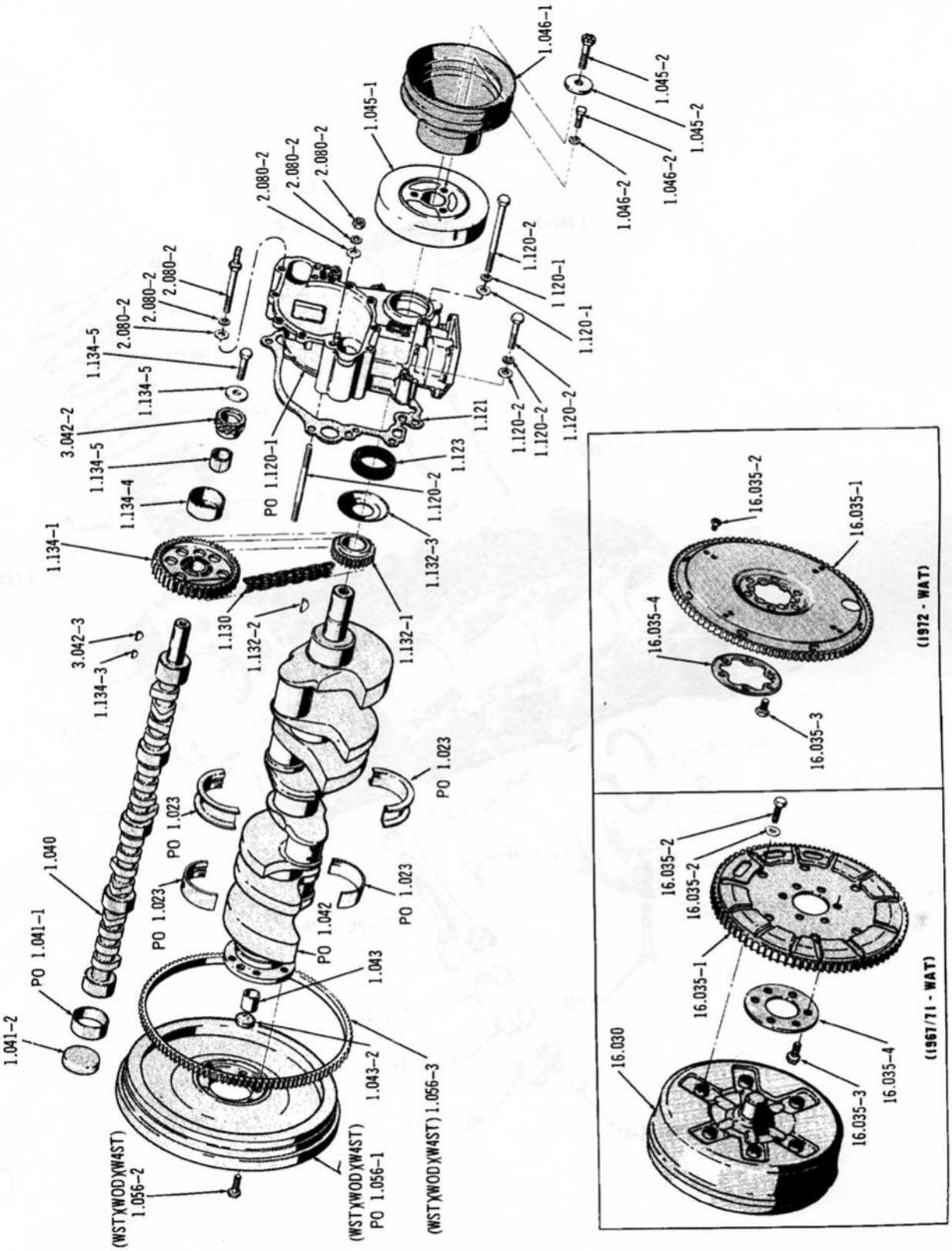

CRANKSHAFT AND CAMSHAFT ... V8

Printed in U.S.A.

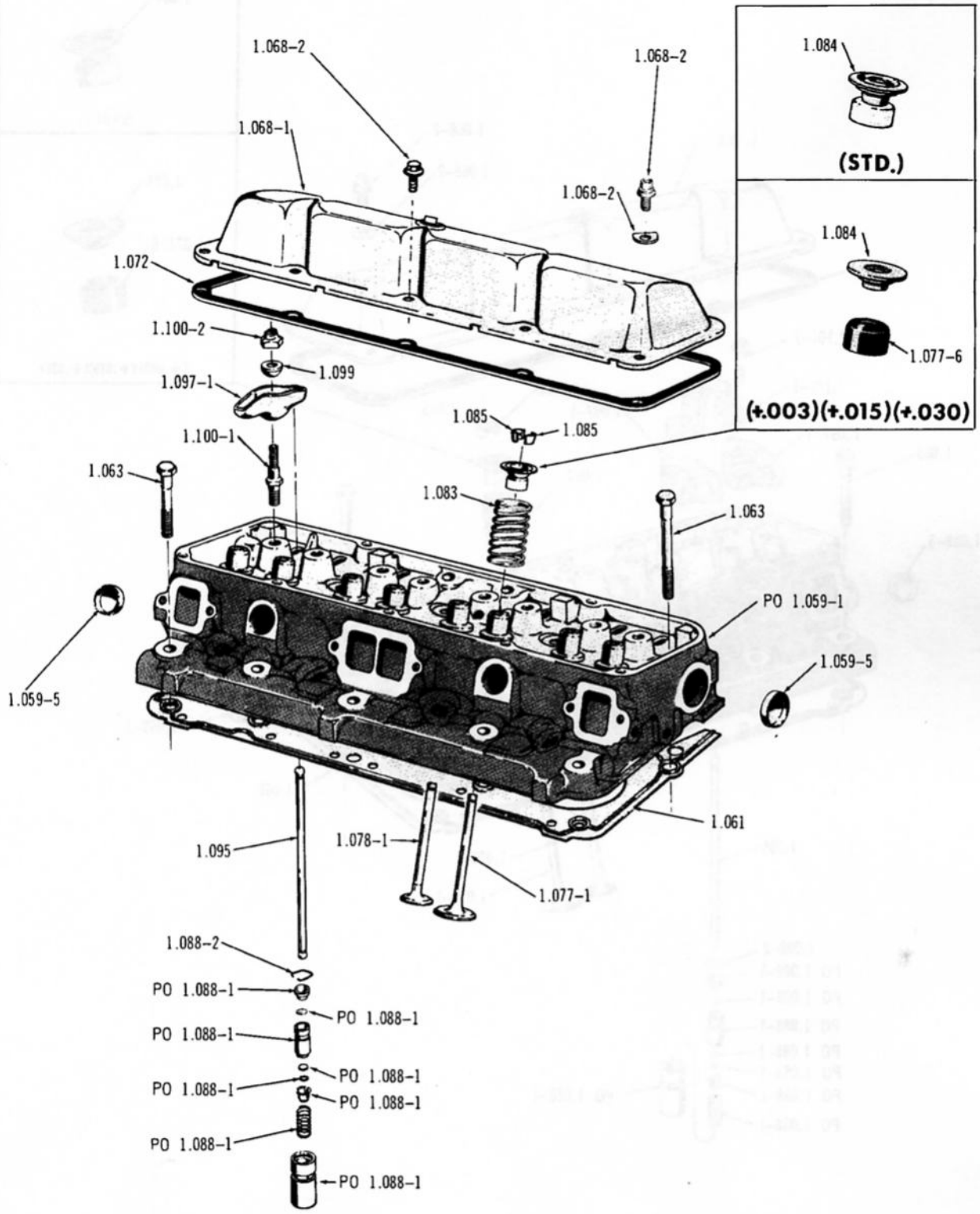

2714

CYLINDER HEAD . . . V8 (1967/71)(1972 TYPE 1)

Printed in U.S.A.

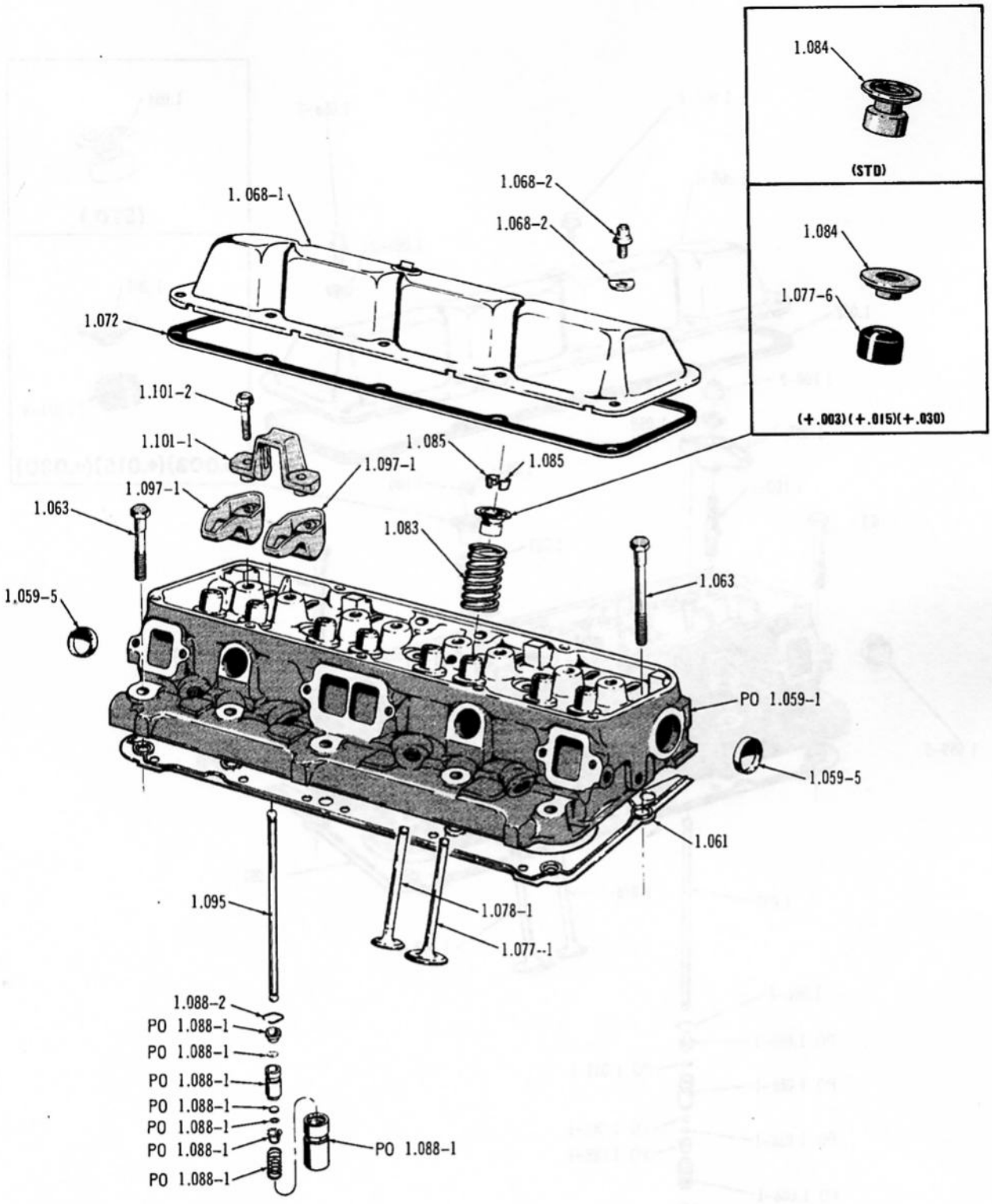

4167

CYLINDER HEAD . . . V8 (1972 - TYPE 2)

2715

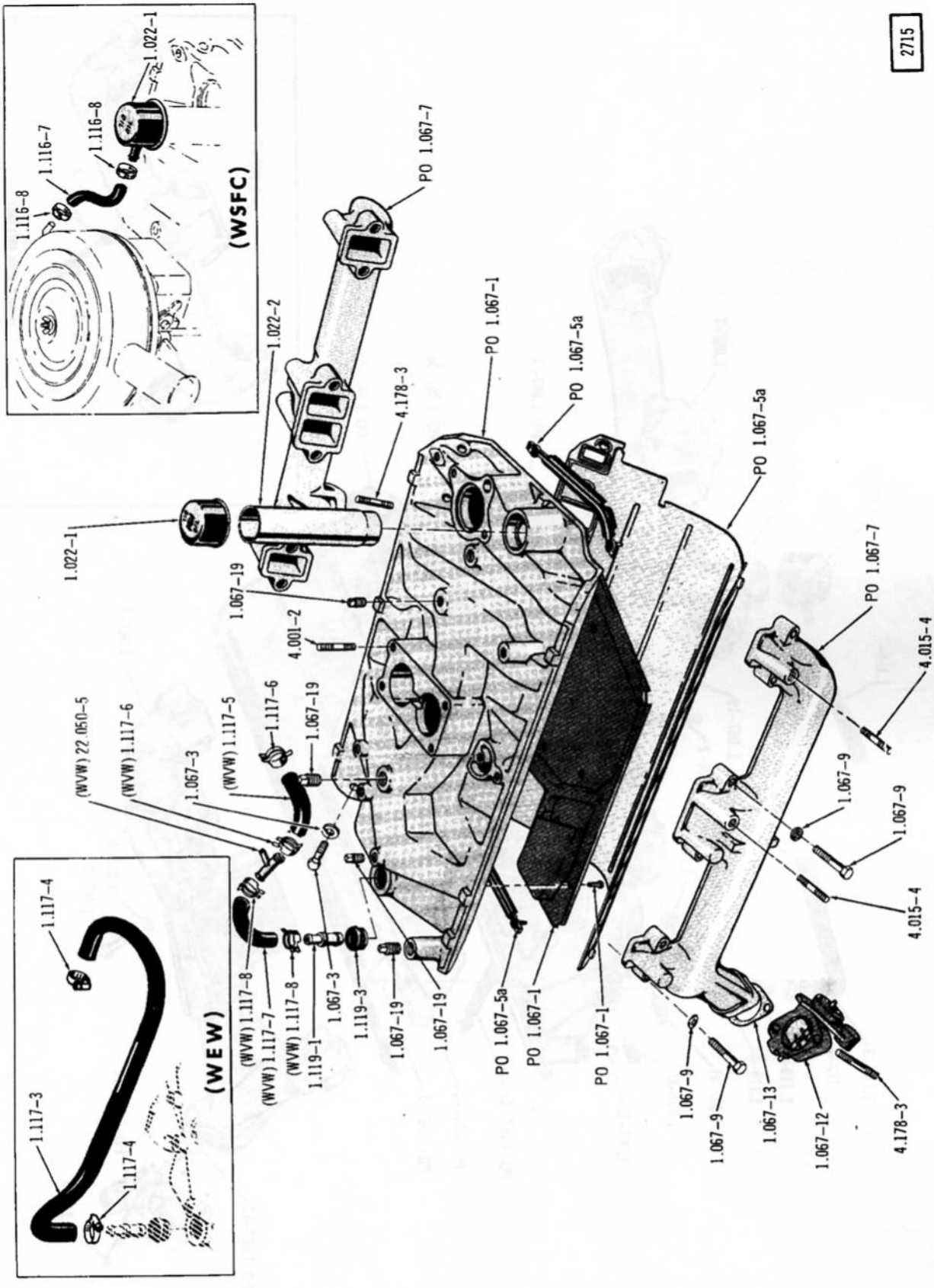

MANIFOLDS . . . V8 (1967/71)

Printed in U.S.A.

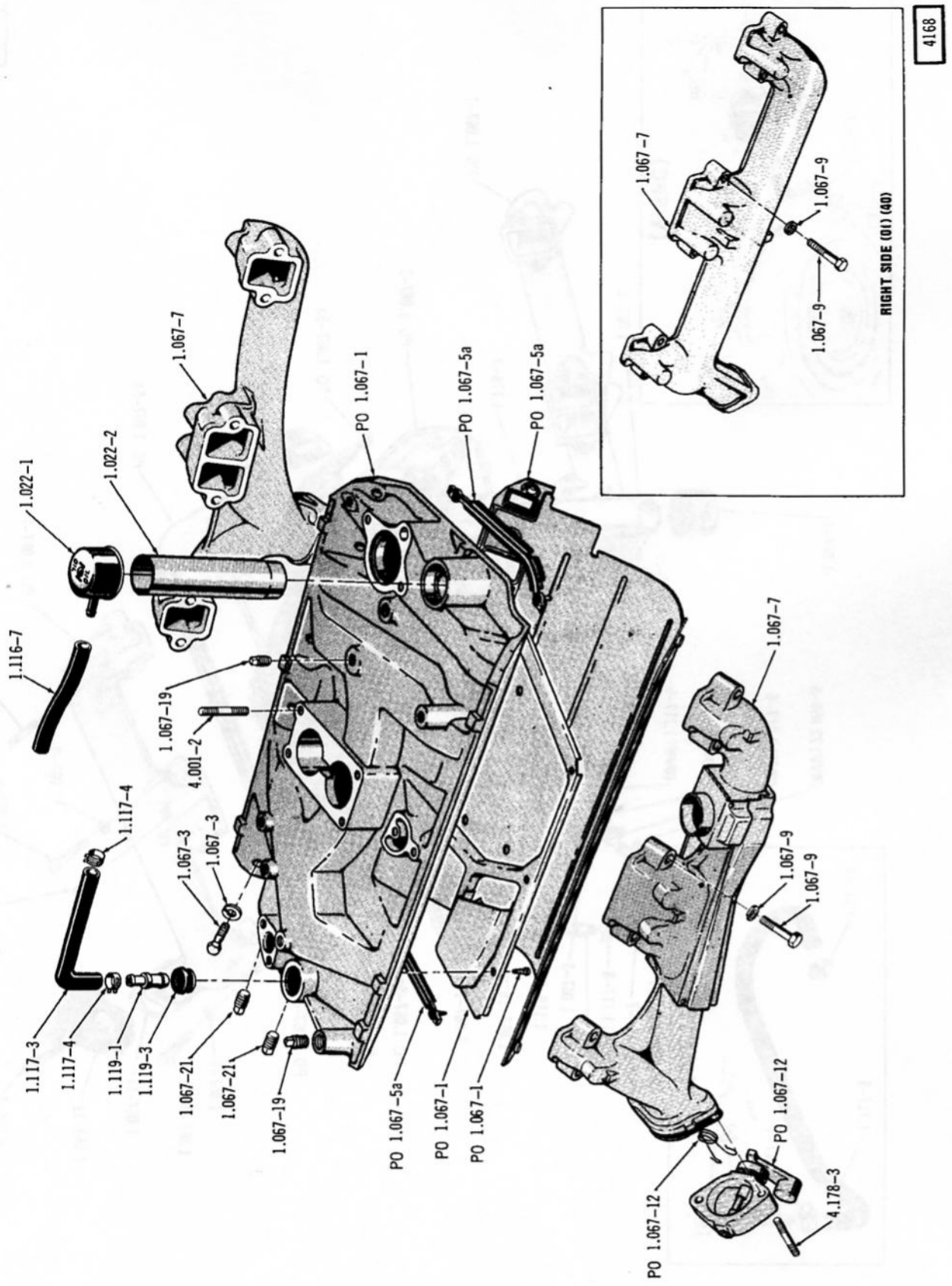

MANIFOLDS . . . V8

2716

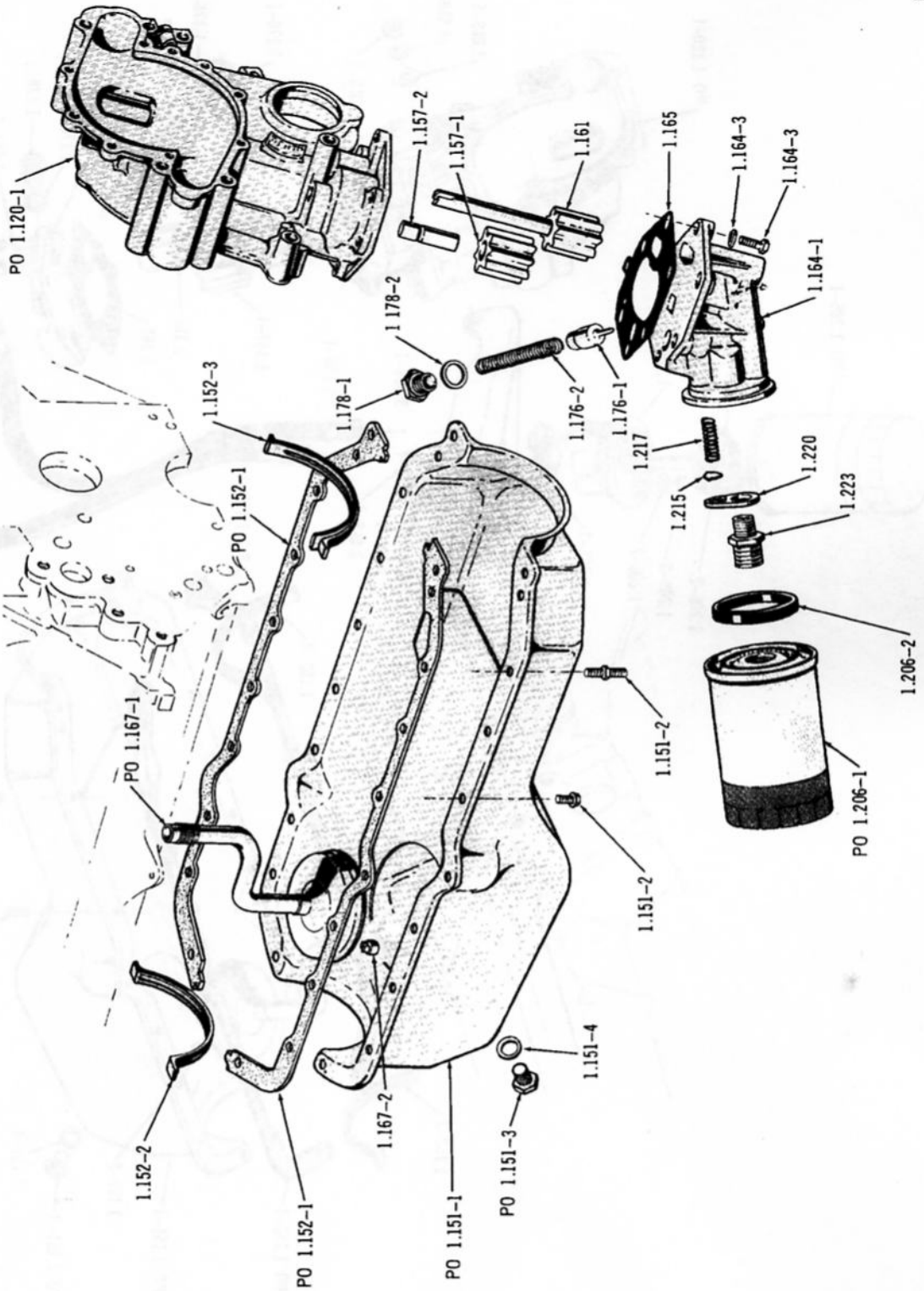

OIL PUMP, FILTER AND PAN ... V8 (LHD)

Printed in U.S.A.

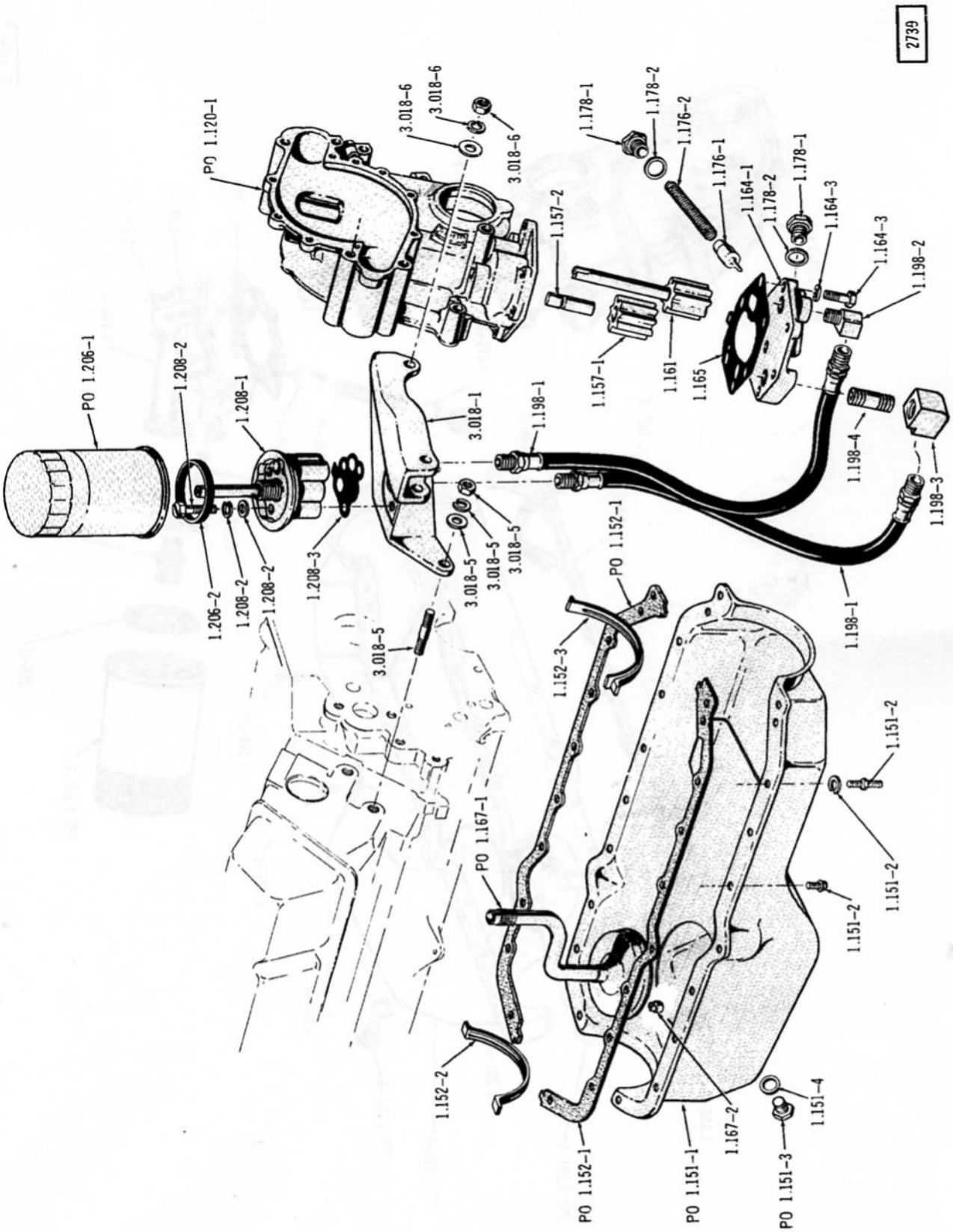

OIL PUMP, FILTER AND PAN ... V8 (RHD)

2717

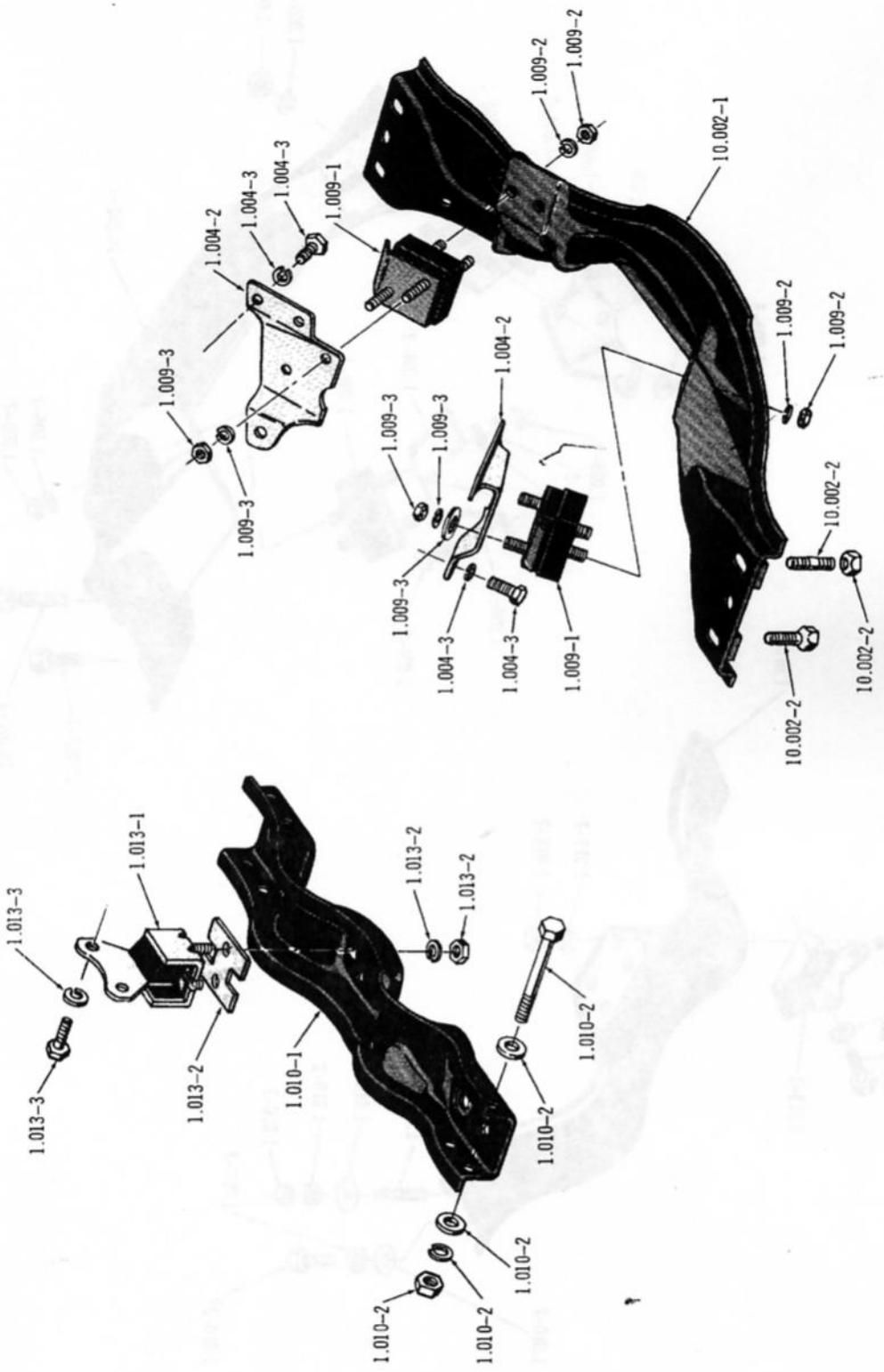

MOUNTING ... 290-01 (1967/69), 343-01 (1967/69)

Printed in U.S.A.

2718

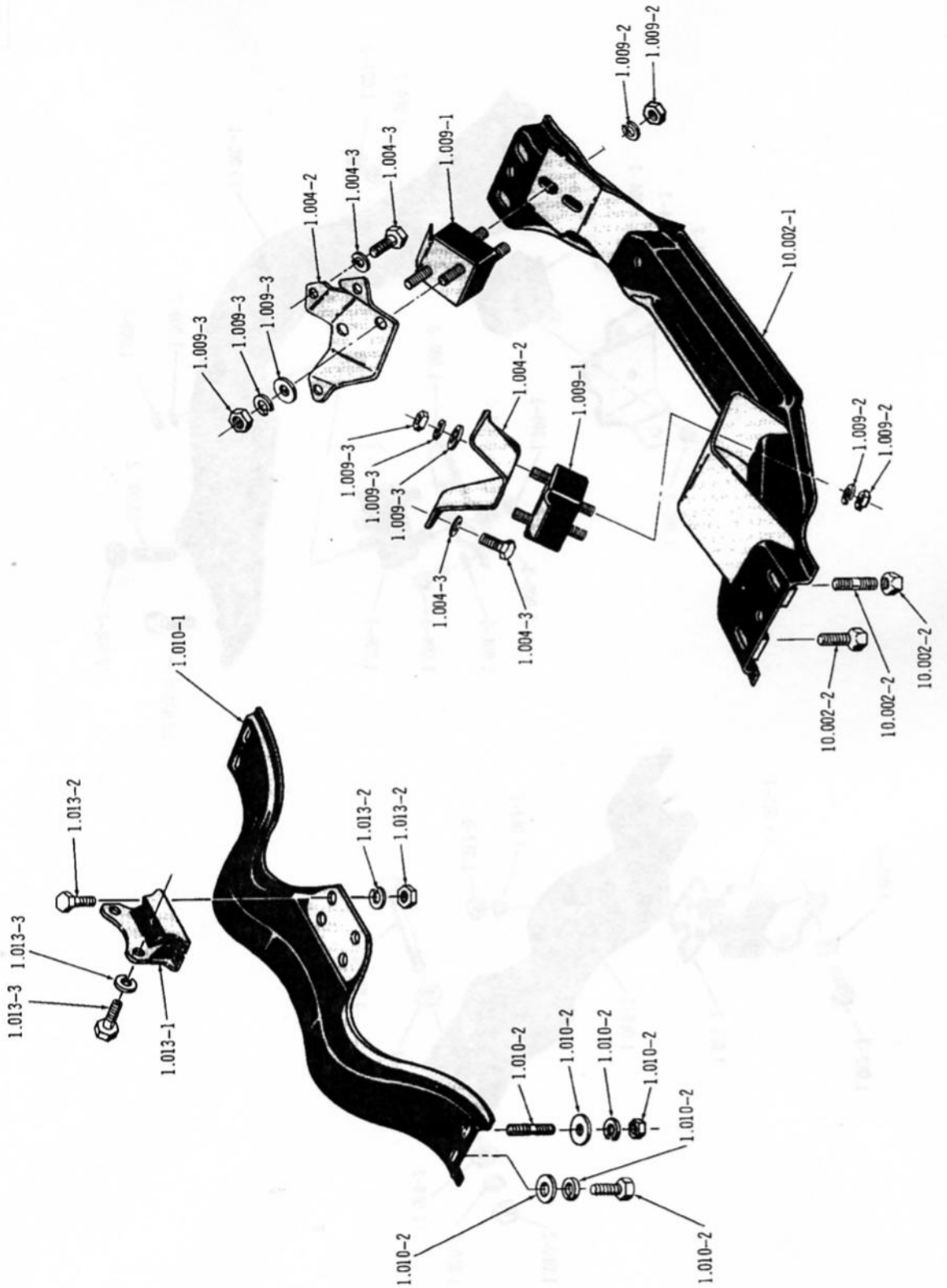

MOUNTING ... 290-E/01 (1967/69), 343-E/01 (1967/69), V8 (1970)

GROUP NO. — DESCRIPTION — YEAR and MODEL	"L" CODE	PAKS CODE	PRIMARY GROUP NO.	PER CAR	PART NO.	CODE
1.002 ENGINE ASSEMBLY, (Incl. Cylinder Block, Pistons, Pins, Rings, Connecting Rods, Main Bearings, Crankshaft, Camshaft, Camshaft Bearing, Timing Gears And Timing Chain)						
67 199 (WEEP)(LEEP-* 1-9)	1		.....	1	320 5583	
67 199 (LEEP-* 1-10)	1		.....	1	320 8930	
68/70 199	1		.....	1	320 8930	
67 232 (WSFC)(LSFC-* 1-9)	1		.....	1	320 5399	
67 232 (LSFC-* 1-10)	1		.....	1	320 8931	
68/69 232	1		.....	1	320 8931	
70 232 (* 1-32)	1		.....	1	320 8931	
70 232 (* 1-33)	1		.....	1	448 8557	
71 232	1		.....	1	448 8557	
72 232 (For Installation Except California-* 1-35)	1		.....	1	812 0534	
72 232 (For Installation Except California-* 1-36)	1		.....	1	812 1366	
72 232 (For Installation Except California-* 1-42)	1		.....	1	812 2311	
72 232 (For Installation In California-* 1-35)	1		.....	1	812 0537	
72 232 (For Installation In California-* 1-36)	1		.....	1	812 1369	
72 232 (For Installation In California-* 1-42)	1		.....	1	812 2308	
71 258	1		.....	1	448 8558	
72 258 (For Installation Except California-* 1-35)	1		.....	1	812 0543	
72 258 (For nstallation Except California-* 1-36)	1		.....	1	812 1375	
72 258 (For Installation Except California-* 1-42)	1		.....	1	812 2317	
72 258 (For Installation In California-* 1-35)	1		.....	1	812 0540	
72 258 (For Installation In California-* 1-36)	1		.....	1	812 1372	
72 258 (For Installation In California-* 1-42)	1		.....	1	812 2314	
67 290 (WDT-* 1-7)	*(Ord. 319 0847, 319 0848, 320 8936)*		.....	1	320 6545	
67 290 (WDT-* 1-8)	*(Ord. 319 0847, 319 0848, 448 6261)*		.....	1	320 8936	
68 290 (WDT)	*(Ord. 319 0847, 319 0848, 448 6261)*		.....	1	320 8936	
69 290 (WDT)	23		.....	1	448 6261	
67 290 (W4B-* 1-7)	23		.....	1	320 7620	
67 290 (W4B-* 1-8)	23		.....	1	320 8939	
68 290 (W4B)	23		.....	1	320 8939	
69 290 (W4B)	23		.....	1	448 6264	
70 304			.....	1	448 7222	
71 304	23		.....	1	448 9296	
72 304 (For Installation Except California)	23		.....	1	812 0549	
72 304 (For Installation In California)	23		.....	1	812 0546	
67 343 (WDT-* 1-7)	23		.....	1	320 8563	
67 343 (WDT-* 1-8)	23		.....	1	320 8942	
68 343 (WDT)	23		.....	1	320 8942	
69 343 (WDT)	23		.....	1	448 6267	
67 343 (W4B-* 1-7)	*(Ord. 319 0847, 319 0848, 320 8945)*		.....	1	320 7977	
67 343 (W4B-* 1-8)	*(Ord. 319 0847, 319 0848, 448 6270)*		.....	1	320 8945	
68 343 (W4B)	*(Ord. 319 0847, 319 0848, 448 6270)*		.....	1	320 8945	
69 343 (W4B)	23		.....	1	448 6270	
70 360 (WDT)			.....	1	448 7228	
70 360 (W4B)			.....	1	448 7231	
71 360	23		.....	1	448 9297	
72 360 (For Installation Except Califomia)	23		.....	1	812 0555	
72 360 (For Installation In California)	23		.....	1	812 0552	
68 390	23		.....	1	320 8948	
69 390	23		.....	1	448 6273	
70 390 (* 1-17)			.....	1	448 7234	
70 390 (* 1-18)			.....	1	448 8571	
71 401	23		.....	1	448 8564	
72 401	23		.....	1	812 0561	
1.004–1 CROSSMEMBER, Engine Front Support (Refer Group 10.002)						
1.004–2 BRACKET, Engine Front Support Mounting						
67/ (Left) 01-40 (Six)			.....	1	318 0556	
67/ (Left) 01-40 (V8)			.....	1	318 1860	
67/ (Left) 10-50-70-80 (Six)			.....	1	317 3589	
67/ (Left) 10-30-50-70-80 (V8)			.....	1	318 6274	
67/69 (Right) 01 (Six)			.....	1	318 0557	
70/ (Right) 01-40 (Six)			.....	1	319 8023	
67/ (Right) 01-40 (V8)			.....	1	318 1861	
67/ (Right) 10-50-70-80 (Six)			.....	1	317 3590	
67/ (Right) 10-30-50-70-80 (V8)			.....	1	318 6275	

ENGINE

1.004–3 ATTACHING PARTS, Bracket To Cylinder Block

STUD	67	01-10-50-80 (Six-WPS-WAC)	.....	1	318 7993	
BOLT, Hexagon	67	01 (Six-LPS-LAC)	17.038	6	G180120	NA
BOLT, Hexagon	67	01 (Six-WPS-WAC)	17.038	5	G180120	NA
BOLT, Hexagon	67/	V8	17.038	6	G180121	
BOLT, Hexagon	67	10-50-80 (Six-WST-WPS-WAC-1-1/8" Long)	17.038	1	G180123	NA
BOLT, Hexagon	67	10-50-80 (Six-WST-WPS-WAC-3/4" Long)	17.038	4	G180120	NA
BOLT, Hexagon	67	10-50-80 (Six-WST-LPS-LAC-3/4" Long)	17.038	5	G180120	NA
BOLT, Hexagon	67	10-50-80 (Six-WST-LPS-LAC-1-1/8" Long)	17.038	1	G180123	NA
BOLT, Hexagon	67	10-50-80 (Six-WOD-LPS-LAC)(Six-WAT-LPS-LAC)	17.038	6	G180120	NA
BOLT, Hexagon	67	10-50-80 (Six-WOD-WPS-WAC)(Six-WAT-WPS-WAC)	17.038	5	G180120	NA
BOLT, Hexagon	68/69	01-70 (Six)	17.038	6	G180120	NA
BOLT, Hexagon	68/70	10-80 (Six-WST-1-1/4" Long)	17.038	1	G180123	NA
BOLT, Hexagon	68/69	10-80 (Six-WST-3/4" Long)	17.038	5	G180120	NA
BOLT, Hexagon	68/69	10-80 (Six-WOD)(Six-WAT)	17.038	6	G180120	NA
BOLT, Hexagon	70	10-80 (Six-WAT-3/4" Long)	17.038	1	G180120	NA
BOLT, Hexagon	70/	SIX (3/4" Long)	17.038	1	G180120	NA
SCREW, Machine	70	SIX (3/4" Long)	17.630	5	G273773	NA
SCREW, Machine	71/	SIX (Except 10-WST)	17.630	5	G273773	NA
SCREW, Machine	71/	10 (Six-WST)	17.630	4	G273773	NA
SCREW, Machine	71/	10 (Six-WST)	17.630	1	G274195	
WASHER, Lock	67/	V8	17.820	6	G120382	
WASHER, Lock	70/	SIX	17.820	1	G120382	

1.009–1 CUSHION, Engine Front Support

67/70	SIX	.....	2	317 3681	
71/	01-40 (Six-WAC)	.....	2	321 3535	
67/68	01 (V8)	.....	2	318 1872	
69/70	01-80 (V8)	.....	2	319 3749	
71/	01-40-80 (V8)	.....	2	321 3533	
71/	10 (Six-LAC)	.....	2	321 3535	
67/70	10-30-50-70 (V8)	.....	2	318 6107	
71/	10-70 (V8)	.....	2	321 3534	
71/	70-80 (Six)	.....	2	321 3535	
67/68	80 (V8)	.....	2	318 6107	
71/	(Left) 01-40 (Six-LAC)	.....	1	321 3535	
71/	(Left) 10 (Six-WAC)	.....	1	321 3535	
71/	(Right) 01-40 (Six-LAC)	.....	1	317 3681	
71/	(Right) 10 (Six-WAC)	.....	1	317 3681	

1.009–2 ATTACHING PARTS, Cushion To Crossmember

WASHER, Plain	67/68	01 (Six)	17.814	2	400 1122	
WASHER, Plain	69/	SIX	17.814	2	400 1122	
WASHER, Lock	67/69	SIX	17.820	2	G131100	
WASHER, Lock	67/	V8	17.820	4	G120382	
NUT, Hexagon	67/	SIX	17.406	2	G120370	
NUT, Hexagon	67/	V8	17.406	4	G120369	NA

1.009–3 ATTACHING PARTS, Cushion To Front Mounting Bracket

BOLT, Hexagon	67/69	01 (Six-1" Long) ***(Use G448695)***	17.038	3	G181637	NA
BOLT, Hexagon	67/69	01 (Six-3/4" Long)	17.038	1	G181635	NA
BOLT, Hexagon	67/69	10-50-70-80 (Six) ***(Use G448695)***	17.038	4	G181637	NA
BOLT, Hexagon	70/	SIX (3/4" Long)	17.629	1	G273773	NA
BOLT, Hexagon	70/	SIX (1" Long)	17.629	3	G274195	
SPACER	67/69	10-50 (Six-WAC)	.....	2	317 6290	
WASHER, Plain	67/69	SIX ***(Use 400 3808)***	17.814	4	G120394	NA
WASHER, Plain	67/	01-40 (V8) ***(Use 400 3808)***	17.814	2	G120394	NA
WASHER, Plain	71/	10-70-80 (V8) ***(Use 400 3808)***	17.814	4	G120394	NA
WASHER, Plain	67/70	10-30-50-70-80 (V8)	17.814	4	400 1104	
WASHER, Lock	67/70	V8	17.820	4	G120382	
NUT, Hexagon	67/69	01 (Six)	17.406	3	G120369	NA
NUT, Hexagon	67/69	10-70-80 (Six)	17.406	4	G120369	NA
NUT, Hexagon	70/	01-40 (Six)	.....	3	400 3909	
NUT, Hexagon	70/	10-70-80 (Six)	.....	4	400 3909	
NUT, Hexagon	67/	V8	17.406	8	G120369	NA

Printed in U.S.A.

ENGINE

1.010–1 CROSSMEMBER, Engine Rear Support

72		.....	1	319	6954
67/69	01 (Except SC/RAMBLER)	.....	1	318	5096
69	09 (SC/RAMBLER)	.....	1	319	8022
70	01	.....	1	319	6954
71	01 (W4ST)	.....	1	321	0006
71	(Except 01-W4ST)	.....	1	319	6954
67	10-50-80 (LHD)	***(Use 319 0365)***	1	318	5680
68	10-80 (LHD-Six-WOD-* 1-3)	.....	1	319	0365
68	10-80 (LHD-Six-WOD-* 1-4)	.....	1	319	1338
69	10 (LHD-Six-WOD)	.....	1	319	1338
68/70	10-80 (LHD-Six-WST)(LHD-Six-WAT)	.....	1	319	0365
68	10-80 (LHD-290-WOD-* 1-5)	.....	1	319	0365
68	10-80 (LHD-290-WOD-* 1-6)	.....	1	319	1322
68	10-80 (LHD-V8-WST)(LHD-V8-WAT)	.....	1	319	0365
69	10-80 (LHD-V8)	.....	1	319	0365
70	10-80 (LHD-V8)	.....	1	319	6954
68/70	30-70	.....	1	319	6954
67/70	***10-80 (RHD)***	.....	1	318	7988

1.010–2 ATTACHING PARTS, Crossmember To Sill

STUD	67	10-50-80	.....	4	318	9457
STUD	68	10-80	.....	4	319	1450
STUD	69	10-80	.....	4	400	3917
STUD	68/69	30-70	.....	4	319	1450
STUD	70		.....	4	400	3917
STUD	71/		.....	4	400	4320
BOLT, Hexagon	67/69	01	17.038	4	G189330	NA
BOLT, Hexagon	67	10-50-80	17.038	4	G181636	NA
BOLT, Hexagon	68	10-30-70-80	17.038	AR	G181668	NA
BOLT, Hexagon	70/		17.038	AR	G181668	NA
SPACER	67/69	10-80	.....	4	319	1336
WASHER, Plain	67/68	01	17.814	8	400	1104
WASHER, Plain	67/69	10-50-80	17.814	4	400	1161
WASHER, Plain	68/69	30-70	17.814	4	400	1161
WASHER, Plain	70/		17.814	AR	400	1116
WASHER, Lock	67/69	01-30-70	17.820	4	G120382	
WASHER, Lock	67/69	10-50-80	17.820	4	G120382	
WASHER, Lock	70/		17.820	AR	G103328	NA
NUT, Hexagon	67/68	01	17.406	4	G120369	NA
NUT, Hexagon	67/69	10-50-80	17.406	4	G120369	NA
NUT, Hexagon	67/69	30-70	17.406	4	G120369	NA
NUT, Hexagon	70		10.339	4	400	1863
NUT, Hexagon	71/		.....	4	400	4322
NUT, Lock	68/69	01	.....	4	400	3869
NUT, Lock	68	30-70	.....	4	400	3869

1.013–1 CUSHION, Engine Rear Support

67/69	01 (Six)	.....	1	316	9736
67/69	01 (V8)	.....	1	318	0442
70	01	.....	1	318	3855
71	01 (Six)(304)	.....	1	318	3855
71	01 (360)	.....	1	321	5564
72	01-10-40-80 (WST)	.....	1	318	3855
72	01-40 (Six-WAT)	.....	1	321	5475
72	01-40 (304-WAT)	.....	1	321	5476
72	01 (360-WAT)	.....	1	321	5477

Printed in U.S.A.

67	10-50-80 (Six)	.....	1	318 3855	
68	10-50-80 (Six-WST)(Six-WAT)(Six-WOD-* 1-3)	.....	1	318 3855	
68	10-80 (Six-WOD-* 1-4)	.....	1	318 5847	
69	10 (Six-WOD)	.....	1	318 5847	
69/70	10-80 (Six-WST)(Six-WAT)	.....	1	318 3855	
67/68	10-50-80 (V8-WOD)	.....	1	318 5847	
67/71	10-30-50-70-80 (V8-WST)(V8-WAT)(V8-W4ST)	.....	1	318 3856	
71	10-40-70-80 (Six)	.....	1	318 3855	
72	10-70-80 (Six-WAT)	.....	1	321 5476	
72	10-70-80 (304-WAT)	.....	1	321 5563	
72	10-70-80 (360-WAT)(401-WAT)	.....	1	321 5474	
68/70	70 (Six)	.....	1	318 3855	
72	70 (Six-WST)	.....	1	318 3855	
72	70 (V8-WST)(V8-W4ST)	.....	1	318 3856	

1.013–2 ATTACHING PARTS, Cushion To Crossmember

BOLT, Hexagon	67/69	10-30-50-70-80	17.038	4	G180078	NA
BOLT, Hexagon	70/		17.038	4	G180078	NA
SPACER	67	01 (V8-W4ST)	.....	1	318 9200	
WASHER, Lock	67/69	01	17.820	2	G120214	
WASHER, Lock	67/69	10-30-50-70-80	17.820	4	G120214	
NUT, Hexagon	67/69	01	17.406	2	G120368	
NUT, Hexagon	67/69	10-30-50-70-80 ***(Use 400 2117)***	17.406	4	G120376	NA
NUT, Hexagon	70		3.303	4	400 1457	
NUT, Hexagon	71/	***(Use 400 1457)***	.....	4	400 4323	

1.013–3 ATTACHING PARTS, Cushion To Transmission

BOLT, Hexagon	67/69	10 (Six-WOD)	17.038	2	G180145	NA
BOLT, Hexagon	67/68	10-50-80 (V8-WOD)	17.038	2	G180145	NA
BOLT, Hexagon	67/		17.038	2	G180146	NA
BOLT, Hexagon	71	(2-1/2" Long) 40 (WST-WFGS)	17.038	2	G179868	
SPACER	71	(1-5/8" Long) 40 (WST-WFGS)	.....	2	321 3962	
SPACER	72	01 (WST-WFGS)	.....	2	400 1289	
SPACER	71/	70 (WST-WFGS)	.....	2	400 1289	
WASHER, Lock	67/69		17.820	2	G131100	NA
WASHER, Lock	70/		9.002	2	400 1898	

1.020–1 BLOCK ASSEMBLY, Engine Cylinder (Less Pistons, Rings And Bearings)

67	199 (WEEP)(LEEP-* 1-9) 2	.....	1	320 5432	
67	199 (LEEP-* 1-10) 2	.....	1	320 8949	
67	232 (WSFC)(LSFC-* 1-9) 2	.....	1	320 5432	
67	232 (LSFC-* 1-10) 2	.....	1	320 8949	
68/69	SIX 2	.....	1	320 8949	
70	SIX (* 1-32) 2	.....	1	320 8949	
70	SIX (* 1-33) 2	.....	1	448 8873	
71	SIX 2	.....	1	448 8873	
72	SIX (* 1-35) 2	.....	1	812 0533	
72	SIX (* 1-36) 2	.....	1	812 1378	
72	SIX (* 1-41) 2	.....	1	812 2363	
67	290 (* 1-7) 15	.....	1	320 7405	
67	290 (* 1-8) 15	.....	1	320 8950	
68	290 15	.....	1	320 8950	
69	290 15	.....	1	448 6278	
70/	304 15	.....	1	448 7211	
67	343 (* 1-7) 15	.....	1	320 7978	
67	343 (* 1-8) 15	.....	1	320 8951	
68	343 15	.....	1	320 8951	
69	343 15	.....	1	448 6279	
70/	360 15	.....	1	448 7212	
68	390 ***(Use 448 6280)***	.....	1	320 8952	
69	390 15	.....	1	448 6280	
70	390 15	.....	1	448 7213	
71/	401 15	.....	1	448 8874	

ENGINE

1.020–2 DOWEL, Cylinder Block To Clutch Housing Or Converter Housing Dowel (Pin)

67	199 (* 1-9)	5.054	2	314 5091
67	199 (* 1-10)	5.054	2	318 0313
67	232 (* 1-9)	5.054	2	314 5091
67	232 (* 1-10)	5.054	2	318 0313
68/70	SIX	5.054	2	318 0313
67/70	V8	5.054	2	318 0313
71/		5.054	2	321 2857

1.020–3 PLUG, Cylinder Block Drain

67/71	SIX	17.514	1	G444618 NA
72	SIX (* 1-40)	17.514	1	G444618
72	SIX (* 1-41)	.....	1	G103879
67/	V8	17.514	2	G444618 NA

1.022–1 CAP, Oil Filler

67/70	199	.....	1	317 4645
67	232 (LSFC)	.....	1	318 3900
67	232 (WSFC)	.....	1	317 4645
68/70	232	.....	1	317 4645
71/	SIX	.....	1	317 4645
67	V8 (LSFC)	.....	1	317 2621
67	V8 (WSFC)	.....	1	317 4215
68/69	290-343 (Painted)	.....	1	317 4215
70	304-360	.....	1	317 4215
68/70	390 (Chrome)	.....	1	319 2127
71/	V8	.....	1	317 4215

1.022–2 PIPE, Oil Filler

67/70	V8	.....	1	318 1774
71/	V8	.....	1	319 8950

1.023 BEARING, Main (Incl. Upper And Lower)

67/	(Std.) SIX (#1-2-4-5-6-7) 3	.....	6	320 7954
67/69	(Std.) 290-343 (#1-2-4-5) 3	.....	4	320 7824
70/	(Std.) 304-360 (#1-2-4-5)	.....	4	448 7123
68/69	(Std.) 390 (#1-2-4-5) 3	.....	4	320 9730
70/	(Std.) 390-401 (#1-2-4-5)	.....	4	448 8551
67/	(-.001) SIX (#1-2-4-5-6-7) 3	.....	6	320 7955
67/69	(-.001) 290-343 (#1-2-4-5) 3	.....	4	320 7825
70/	(-.001) 304-360 (#1-2-4-5)	.....	4	448 7124
68/69	(-.001) 390 (#1-2-4-5) 3	.....	4	320 9731
70/	(-.001) 390-401 (#1-2-4-5)	.....	4	448 8552
67/	(-.002) SIX (#1-2-4-5-6-7) 3	.....	6	320 7956
67/69	(-.002) 290-343 (#1-2-4-5) 3	.....	4	320 7826
70/	(-.002) 304-360 (#1-2-4-5-)	.....	4	448 7125
68/69	(-.002) 390 (#1-2-4-5) 3	.....	4	320 9732
70/	(-.002) 390-401 (#1-2-4-5)	.....	4	448 8553
67/	(-.010) SIX (#1-2-4-5-6-7) 3	.....	6	320 7957
67/69	(-.010) 290-343 (#1-2-4-5) 3	.....	4	320 7827
70/	(-.010) 304-360 (#1-2-4-5)	.....	4	448 7126
68/69	(-.010) 390 (#1-2-4-5) 3	.....	4	320 9733
70/	(-.010) 390-401 (#1-2-4-5)	.....	4	448 8554
67/	(-.012) SIX (#1-2-4-5-6-7) 3	.....	6	320 7958
67/69	(-.012) 290-343 (#1-2-4-5) 3	.....	4	320 7828
70/	(-.012) 304-360 (#1-2-4-5)	.....	4	448 7127
68/69	(-.012) 390 (#1-2-4-5) 3	.....	4	320 9734
70/	(-.012) 390-401 (#1-2-4-5)	.....	4	448 8555
67/	(Std.) SIX (#3) 26	.....	1	320 7959
67/69	(Std.) 290-343 (#3) 26	.....	1	320 7829
70/	(Std.) 304-360 (#3) 26	.....	1	320 7829
68/69	(Std.) 390 (#3) ***(Use 448 8559)***	.....	1	320 9735
70/71	(Std.) 390-401 (#3)	.....	1	448 8559
72	(Std.) 401 (#3)	.....	1	812 1442

ENGINE

67/	(-.001) SIX (#3)	26	.....	1	320 7960
67/69	(-.001) 290-343 (#3)	26	.....	1	320 7830
70/	(-.001) 304-360 (#3)	26	.....	1	320 7830
68/69	(-.001) 390 (#3)	26	.....	1	320 9736
70/71	(-.001) 390-401 (#3)		.....	1	448 8560
72	(-.001) 401 (#3)		.....	1	812 1443
67/	(-.002) SIX (#3)	26	.....	1	320 7961
67/69	(-.002) 290-343 (#3)	26	.....	1	320 7831
70/	(-.002) 304-360 (#3)	26	.....	1	320 7831
68/69	(-.002) 390 (#3)	26	.....	1	320 9737
70/71	(-.002) 390-401 (#3)		.....	1	448 8561
72	(-.002) 401 (#3)		.....	1	812 1444
67/	(-.010) SIX (#3)	26	.....	1	320 7962
67/69	(-.010) 290-343 (#3)	26	.....	1	320 7832
70/	(-.010) 304-360 (#3)	26	.....	1	320 7832
68/69	(-.010) 390 (#3)	26	.....	1	320 9738
70/71	(-.010) 390-401 (#3)		.....	1	448 8562
72	(-.010) 401 (#3)		.....	1	812 1445
67/	(-.012) SIX (#3)	26	.....	1	320 7963
67/69	(-.012) 290-343 (#3)	26	.....	1	320 7833
70/	(-.012) 304-360 (#3)	26	.....	1	320 7833
68/69	(-.012) 390 (#3)	26	.....	1	320 9739
70/71	(-.012) 390-401 (#3)		.....	1	448 8563
72	(-.012) 401 (#3)		.....	1	812 1446

1.031 GAUGE, Bearing (Contains 12 Sticks)

67/	(.001 To .003)		.....	AR	320 5410
67/	(.002 To .006)		.....	AR	311 2650

1.032 SEAL KIT, Rear Main Bearing Cap

67/	SIX	25	.....	1	320 5331
67/	V8	25	.....	1	320 6691

1.034 ATTACHING PARTS, Main Bearing Cap

BOLT, Hexagon	67/	SIX	.....	14	318 4438
BOLT, Hexagon	67/68	V8 (3-3/16" Long)	.....	10	318 4438
BOLT, Hexagon	68/	V8 (3-9/16" Long)	.....	10	319 0891

1.038-1 PLUG, Cylinder Block Core Hole

67/	SIX		.....	4	310 5394
67/	V8		.....	6	314 4641

1.038-2 PLUG, Cylinder Block Oil Filter By-Pass

67/69	SIX (Slotted Headless Pipe)		17.490	1	G444782 NA
69/	SIX (Automotive Square Socket)		17.516	1	G444660 NA

1.040 CAMSHAFT

1967 Thru 1971 (Six)(Incl. Pin)

67/69	SIX	22	.....	1	317 1242
70	SIX (* 1-32)		.....	1	448 5713
70	SIX (* 1-33)		.....	1	448 8879
71	SIX		.....	1	448 8879

1972 (Six - For Installation Except California)(Incl. Pin)

72	SIX (01-* 1-35)(40-* 1-35)(70-* 1-35)(80-* 1-35)		.....	1	448 5713
72	SIX (01-* 1-36)(40-* 1-36)(70-* 1-36)(80-* 1-36)		.....	1	812 0663
72	232 (10-* 1-35)		.....	1	448 5713
72	232 (10-* 1-36)		.....	1	812 0663
72	258 (15-* 1-35)(18-WAT-* 1-35)(19-* 1-35)		.....	1	448 5713
72	258 (15-* 1-36)(18-WAT-* 1-36)(19-* 1-36)		.....	1	812 0663
72	258 (18-WST-* 1-35)		.....	1	448 8879
72	258 (18-WST-* 1-36)		.....	1	812 0817

ENGINE

1972 (Six - For Installation In California)(Incl. Pin)

72	SIX (* 1-35)	.....	1	448 8879
72	SIX (* 1-36)	.....	1	812 0817

1967 Thru 1972 (V8)

67/68	V8 ***(Use 448 5717)***	.....	1	318 0259
69	V8	.....	1	448 6476
70	304-360	.....	1	448 6476
71	304-360 (WAT-For Installation Except California)	.....	1	448 6476
71	304-360 (WST-For Installation Except California)	.....	1	448 8880
71/	304-360 (For Installation In California)	.....	1	448 8880
72	304-360 (For Installation Except California)	.....	1	448 6476
70	390 (* 1-17)	.....	1	448 6476
70	390 (* 1-18)	.....	1	448 8140
71	401	.....	1	448 8140
72	401	.....	1	812 1156

1.041-1 BEARING SET, Camshaft

67/	(Std.) SIX	49	.....	1	320 5711
67/68	(Std.) V8	46	.....	1	320 6298
69/	(Std.) V8	46	.....	1	448 6286
67/	(.010) SIX	49	.....	1	320 8985
67/68	(.010) V8	46	.....	1	320 8986
69/	(.010) V8	46	.....	1	448 6890

1.041-2 PLUG, Camshaft Rear Bearing

67/	.....	.....	1	317 2313

1.042 CRANKSHAFT (Incl. Main And Connecting Rod Bearings)(Balanced)

67	199	37	.....	1	320 8626
68/70	199	37	.....	1	320 8793
67	232	37	.....	1	320 8627
68/71	232	37	.....	1	320 8794
72	232	37	.....	1	812 0507
71	258	37	.....	1	448 8665
72	258	37	.....	1	812 0508
67/68	290-343	38	.....	1	320 8628
69	290-343	38	.....	1	448 6162
70/71	304-360	38	.....	1	448 7237
72	304-360	38	.....	1	812 0509
68/69	390	38	.....	1	320 8795
70	390	38	.....	1	448 7238
71	401	38	.....	1	448 8664
72	401	38	.....	1	812 0510

1.043-1 BUSHING, Crankshaft Pilot (Bearing, Clutch Shaft Front)

67/71	.....	.....	1	317 4730
72	.....	.....	1	321 3751

1.043-2 WICK, Crankshaft Bushing Oil

70	WST (W4ST)	.....	1	321 2687
71/	WST (W4ST)	5.162	1	318 9314

1.043-3 ADAPTER, Crankshaft To Transmission

72	401 (WAT)	.....	1	321 6130

1.045-1 DAMPER, Crankshaft Vibration (Balanced)

67/69	SIX	.....	1	317 7345
70	SIX (* 1-32)	.....	1	317 7345
70	SIX (* 1-33)	.....	1	321 1894
71/	SIX	.....	1	321 1894

Printed in U.S.A.

ENGINE

67/69	290	.....	1	318 0477	
70/	304	.....	1	319 6924	
67/69	343	.....	1	318 1612	
70/	360	.....	1	319 6925	
68/69	390	.....	1	319 1689	
70	390	.....	1	319 6925	
71/	401	.....	1	321 1454	

1.045–2 ATTACHING PARTS, Damper To Crankshaft

BOLT, Hexagon	67/	SIX	17.038	1	G181429	NA
BOLT, Hexagon	67/	V8	17.038	1	G190823	NA
WASHER, Plain	67	SIX	.....	1	317 3075	
WASHER, Plain	68/	SIX	.....	1	318 0206	
WASHER, Plain	67/	V8	.....	1	318 0206	
WASHER, Lock	67/	SIX	17.824	1	G115551	NA

1.046–1 PULLEY, Vibration Damper

67	199 (WEEP-LPS-LAC)	.....	1	318 1227	
67	SIX (LHD-WAC)(LHD-WPS-LAC-LEEP)	.....	1	317 3097	
67	232 (60 Amp. Alt.)	.....	1	317 4696	
68/	SIX (LHD-WPS)(LHD-WAC)	.....	1	319 1002	
68/	SIX (65 Amp. Alt.)	.....	1	317 4696	
67/	V8	.....	1	448 7181	
68/70	***SIX (RHD-10-WPS-LAC)***	.....	1	317 3097	

1.046–2 ATTACHING PARTS, Pulley To Vibration Damper

BOLT, Hexagon	67/	SIX	17.038	3	G180073	NA
BOLT, Hexagon	67/	V8	17.038	3	G180077	NA
WASHER, Lock	67/	.....	17.820	3	G120214	NA

1.047 KEY, Vibration Damper Hub

67/	SIX	.....	1.132	1	310 7234

1.056–1 FLYWHEEL ASSEMBLY, Crankshaft (Incl. Ring Gear)(Balanced)(For Cars Equipped With Automatic Transmission Refer Groups 16.030 And 16.035)

67/71	SIX (WST)(WOD)	9	.....	1	317 2415	
72	SIX (WST)	9	.....	1	321 2623	
67/69	290 (WST)(WOD)(W4ST)	9	.....	1	317 9069	
70/71	304 (WST)	9	.....	1	319 6927	
72	304 (WST)	9	.....	1	321 2651	
67/69	343 (W4ST)	9	.....	1	318 1609	
70/71	360 (WST)(W4ST)	9	.....	1	319 6929	
72	360 (WST)(W4ST)	9	.....	1	321 2653	
68/69	390 (W4ST)	9	.....	1	319 1662	
70	390 (W4ST)	9	.....	1	319 6929	
71	401 (W4ST)	9	.....	1	321 0496	
72	401 (W4ST)	9	.....	1	321 2655	

1.056–2 ATTACHING PARTS, Flywheel To Crankshaft

BOLT, Hexagon	67/	(WST)(WOD)(W4ST)	1.057	6	317 0524

1.056–3 GEAR, Flywheel Ring

67/71	SIX (WST)(WOD)	.....	1	317 2419	
67/71	V8 (WST)(WOD)(W4ST)	.....	1	317 9741	
72	(WST)(W4ST)	.....	1	317 9741	

Printed in U.S.A.

ENGINE

1.059–1 HEAD ASSEMBLY, Cylinder

67	SIX...(Less Intake And Exhaust Valves)..... *(Ord. 320 8870, 320 9851)*	.....	1	320 7328
68/69	SIX...(Less Intake And Exhaust Valves)..... 64	.....	1	320 8870
70	SIX (* 1-32)...(Less Intake And Exhaust Valves)..... 64	.....	1	320 8870
70	SIX (* 1-33)...(Less Intake And Exhaust Valves)..... 64	.....	1	812 0136
71	SIX...(Less Intake And Exhaust Valves)..... 64	.....	1	812 0136
72	SIX...(Less Intake And Exhaust Valves-* 1-35)..... 64	.....	1	812 0136
72	SIX...(Less Intake And Exhaust Valves-* 1-36)..... 64	.....	1	812 0565
68/69	SIX...(Incl. Intake And Exhaust Valves)..... 64	.....	1	448 6668
70	SIX (* 1-32)...(Incl. Intake And Exhaust Valves)..... 64	.....	1	448 6668
70	SIX (* 1-33)...(Incl. Intake And Exhaust Valves)..... 64	.....	1	812 0137
71	SIX...(Incl. Intake And Exhaust Valves)..... 64	.....	1	812 0137
72	SIX...(Incl. Intake And Exhaust Valves-* 1-35)..... 64	.....	1	812 0137
72	SIX...(Incl. Intake And Exhaust Valves-* 1-36)..... 64	.....	1	812 1281
67/69	290...(Less Intake And Exhaust Valves)..... 52	.....	2	320 6989
70	304 (* 1-21)...(Less Intake And Exhaust Valves)..... 52	.....	2	448 7242
70	304 (* 1-22)...(Less Intake And Exhaust Valves)..... 52	.....	2	448 8894
71/	304...(Less Intake And Exhaust Valves)..... 52	.....	2	812 0125
67/69	343-390...(Less Intake And Exhaust Valves)..... 52	.....	2	320 8081
70	360-390 (* 1-21)...(Less Intake And Exhaust Valves) *(Ord. 448 8895, 318 5148)*	.....	2	448 7243
70	360-390 (* 1-22)...(Less Intake And Exhaust Valves)..... 52	.....	2	448 8895
70	360-390 (* 1-25)...(Less Intake And Exhaust Valves)..... 52	.....	2	448 8682
71/	360-401...(Less Intake And Exhaust Valves)..... 52	.....	2	812 0126

1.059–2 DOWEL, Cylinder Head To Manifold Dowel (Pin)

67/	SIX.....	.....	2	317 2318

1.059–3 DOWEL, Cylinder Head To Block Dowel (Pin)

67/69	V8.....	.....	4	318 0193
70/	V8.....	.....	4	319 7511

1.059–4 TUBE, Cylinder Head Heater Outlet (In Head)

67	SIX.....	.....	1	318 4331

1.059–5 PLUG, Cylinder Head Core

67/	SIX (7/8" Dia.).....	.....	3	317 2319
67/	SIX (2" Dia.).....	1.038	1	310 5394
67	343 (7/8" Dia.).....	.....	4	317 2319
67/	V8 (1" Dia.).....	.....	4	317 8449
67/	V8 (1-1/2" Dia.).....	1.038	4	314 4641

1.060–1 GASKET SET, Engine (Valve Grind)

67	199..... *(Use 320 8903)*	.....	1	320 7331
67	232 (LSFC)..... *(Use 320 8903)*	.....	1	320 7331
67	232 (WSFC)..... 33	.....	1	320 8163
68/69	SIX..... 33	.....	1	320 8903
70	SIX (* 1-32).....	.....	1	448 7251
70	SIX (* 1-33).....	.....	1	448 9229
71/	SIX.....	.....	1	448 9229

		40	.....	1	320 7440
67/69	290	4487252	.....	1	~~448 7253~~
70/	304	*(Use 448 7931)*	.....	1	~~320 7978~~
67/69	343		.....	1	448 7255
70/	360	40	.....	1	320 8911
68/69	390		.....	1	448 8893
70	390 (* 1-19)		.....	1	448 7257
70	390 (* 1-20)		.....	1	448 8893
71/	401				

1.060-2 GASKET SET, Engine (Overhaul)

		(Use 320 8902)	.....	1	320 7332
67	199	*(Use 320 8902)*	.....	1	320 7332
67	232 (LSFC)	65	.....	1	320 8164
67	232 (WSFC)	65	.....	1	320 8902
68/69	SIX		.....	1	448 7250
70	SIX (* 1-32)		.....	1	448 9228
70	SIX (* 1-33)		.....	1	448 9228
71/	SIX	39	.....	1	320 7439
67/69	290		.....	1	448 7252
70/	304	*(Use 448 7932)*	.....	1	320 7971
67/69	343		.....	1	448 7254
70/	360	39	.....	1	320 8910
68/69	390		.....	1	448 8892
70	390 (* 1-19)		.....	1	448 7256
70	390 (* 1-20)		.....	1	448 8892
71/	401				

1.061 GASKET, Cylinder Head

			.....	1	319 0345
67	199		.....	1	319 0345
67	232 (LSFC)		.....	1	318 7946
67	232 (WSFC)		.....	1	319 0345
68/	SIX		.....	1	317 9287
71/	***SIX (Export-Low Compression-* 1-34)***		.....	2	318 6528
67/69	290 (Metal Gasket)		.....	2	812 1400
69/71	290-304 (Laminated Gasket-.052" Thick-* 1-37)		.....	2	319 7636
70/	304 (Metal Gasket)	*(Use 319 2057)*	.....	2	318 9294
67/68	343		.....	2	319 2057
69	343 (.050 To .060 Thick)		.....	2	812 1278
69/71	343-360 (.075" Thick-* 1-38)		.....	2	319 7637
70/	360 (.050 To .060 Thick)		.....	2	319 1242
68/69	390 (.050 To .060 Thick)	*(Use 319 9911)*	.....	2	319 7638
70/71	390-401 (.045 To .055 Thick)		.....	2	812 1401
69/71	390-401 (.075" Thick-* 1-38)		.....	2	319 9911
72	401				

1.063 BOLT, Cylinder Head To Block

			.....	12	317 2330
67	SIX (4-7/16" Long)		.....	2	318 4092
67	SIX (5-9/16" Long)		.....	10	317 2330
68/69	SIX (WAC-4-7/16" Long)		.....	4	318 4092
68/69	SIX (WAC-5-9/16" Long)		.....	11	317 2330
68/69	SIX (LAC-4-7/16" Long)		.....	3	318 4092
68/69	SIX (LAC-5-9/16" Long)		.....	11	317 2330
70/71	SIX (4-7/16" Long)		.....	3	318 4092
70/71	SIX (5-9/16" Long)		.....	10	317 2330
72	SIX (4-7/16" Long-WAC)		.....	4	318 4092
72	SIX (5-9/16" Long-WAC)		.....	11	317 2330
72	SIX (4-7/16" Long-LAC)		.....	3	318 4092
72	SIX (5-9/16" Long-LAC)		.....	10	318 6287
67/69	V8 (2-23/64" Long)		.....	18	318 6288
67/69	V8 (3-51/64" Long)		.....	10	319 4682
70/	V8 (2-23/64" Long)		.....	18	319 4681
70/	V8 (3-51/64" Long)				

ENGINE

1.064–1 HOSE, Water Pump To Intake Manifold Tube

67	199 (LWH)	*(Use 318 8865)*	13.050	1	318 2538
68	232 (09–LWH–25Ft. Rolls)		13.050	AR	320 3739

1.064–2 CLAMP, Water Pump To Intake Manifold Tube (At Water Pump)

67	199 (LWH)		17.108	1	320 3077
68	232 (09–LWH)		17.108	1	320 3077

1.064–3 CLAMP, Water Pump To Intake Manifold Tube (At Tube)

67	199 (LWH)		17.108	1	320 3076
68	232 (09–LWH)		17.108	1	320 3076

1.064–4 TUBE, Water Pump To Intake Manifold

67	199 (LWH)		13.050	1	317 7666

1.064–5 CLIP, Water Pump To Intake Manifold Tube

67	199 (LWH)		13.050	1	317 8717

1.064–6 HOSE, Tube To Intake Manifold

67	199 (LWH–25 Ft. Rolls)		13.050	AR	320 3739

1.064–7 CLAMP, Tube To Intake Manifold

67	199 (LWH)		17.108	2	320 3076

1.064–8 HOSE, Thermostat Housing To Intake Manifold

67	199 (LWH)		13.050	1	318 2685

1.064–9 CLAMP, Thermostat Housing To Intake Manifold Hose (At Thermostat Housing)

67	199 (LWH)		17.108	1	320 3077

1.064–10 CLAMP, Thermostat Housing To Intake Manifold Hose (At Intake Manifold)

67	199 (LWH)		17.108	1	320 3076

1.065–1 TUBE, Intake Manifold Water

67	199		.....	1	318 2481
68/69	232 (09)		.....	1	318 2481

1.065–2 ATTACHING PARTS, Tube To Manifold

WASHER, Plain	67	199	.....	1	400 1906
WASHER, Plain	68/69	232 (09)	.....	1	400 1906
NUT, Hexagon	67	199	.....	1	318 1248
NUT, Hexagon	68/69	232 (09)	.....	1	318 1248

1.065–3 SEAL, Intake Manifold Water Tube ("O" Ring)

67	199		.....	1	400 1905
68/69	232 (09)		.....	1	400 1905

Printed in U.S.A.

ENGINE

1.067–1 MANIFOLD, Intake

67	199	58	.....	1	320 9752	
68/70	199	53	.....	1	319 0509	
67	232 (LDT)	53	.....	1	320 8098	
68/69	232 (LDT-Except/09)	53	.....	1	448 5939	
68/69	232 (LDT-09)	58	.....	1	320 9752	
70	232 (LDT)	53	.....	1	448 5939	
71	232 (LDT)		.....	1	812 0189	
72	232		.....	1	812 0582	
71/	258		.....	1	812 0189	
67	232 (WDT)	14	.....	1	318 7112	
68/70	232 (WDT)	14	.....	1	448 6258	
67	V8 (WDT)	36	.....	1	318 7744	
67/69	V8 (290-W4B)(343-W4B)	35	.....	1	318 7000	
68/69	V8 (WDT)	36	.....	1	319 2462	
70	304-360 (WDT)	36	.....	1	319 7075	
71/	304-360 (WDT)	36	.....	1	319 8953	
70	360 (W4B)	35	.....	1	319 7035	
71/	360 (W4B)	35	.....	1	321 3991	
68/69	390 (W4B)	35	.....	1	319 1737	
70	390 (W4B-E/MACHINE)	35	.....	1	319 7035	
70	390 (W4B-MACHINE)	35	.....	1	319 9763	
71/	401 (W4B)	35	.....	1	319 8954	

1.067–2 ATTACHING PARTS, Intake Manifold To Exhaust Manifold

STUD	67/	SIX ***(Use 319 1446)***	.....	2	317 3324	
WASHER, Lock	67/	SIX	17.820	2	G103321	NA
NUT, Hexagon	67/	SIX	.....	2	314 9892	

1.067–3 ATTACHING PARTS, Intake Manifold To Cylinder Head

BOLT, Hexagon	67/68	V8	.....	12	318 2489	
BOLT, Hexagon	69	V8 (1-1/8" Long)	.....	2	319 4822	
BOLT, Hexagon	69	V8 (1-1/4" Long)	.....	10	G186679	NA
BOLT, Hexagon	70/	V8	.....	12	G186679	NA
WASHER, Lock	67/68	V8	.....	10	400 3938	
WASHER, Lock	70/	V8	.....	12	400 3938	

1.067–4 GASKET, Intake Manifold To Exhaust Manifold

67/	SIX	.....	1	318 4277	

1.067–5 GASKET, Intake Manifold To Cylinder Head

67/	SIX	.....	1	318 3945	

1.067–5a GASKET SET, Intake Manifold (Incl. Seals)

67/69	V8 361	.....	1	448 8466	
70/	V8 361	.....	1	448 8467	

1.067–6 SEAL, Intake Manifold To Cylinder Block

67/69	(Front) V8	.....	1	318 0470	
70/	(Front) V8 ***(Use 448 8467)***	.....	1	319 6994	
67/69	(Rear) V8	.....	1	318 0471	
70/	(Rear) V8 ***(Use 448 8467)***	.....	1	319 6995	

ENGINE

1.067–7 MANIFOLD ASSEMBLY, Exhaust

67	199 (LEEP-* 1-9)	30	.....	1	318 8781
67	199 (LEEP-* 1-10)	30	.....	1	448 6525
67	199 (WEEP)	30	.....	1	320 9802
67	232 (LSFC-* 1-9)	30	.....	1	318 8781
67	232 (LSFC-* 1-10)	30	.....	1	448 6525
67	232 (WSFC-LEEP)	30	.....	1	318 8782
67	232 (WSFC-WEEP)	***(Use 320 9802)***	.....	1	319 1741
68/	SIX	30	.....	1	448 6525
67/69	(Left) V8 (LEEP)	28	.....	1	320 7864
70	(Left) V8 (LEEP-E/MACHINE)		.....	1	448 7378
70	(Left) V8 (MACHINE-LEEP)		.....	1	448 8355
71/	(Left) V8 (LEEP)		.....	1	448 8899
67	(Left) V8 (WEEP)	28	.....	1	320 7862
68/69	(Left) V8 (WEEP)	28	.....	1	320 9599
70	(Left) V8 (WEEP-E/MACHINE)		.....	1	448 7374
70	(Left) V8 (MACHINE-WEEP)		.....	1	448 8353
71/	(Left) V8 (WEEP)		.....	1	448 8902
67	(Right) V8 (LEEP)	72	.....	1	320 7865
68	(Right) V8 (LEEP-LTAC)	72	.....	1	320 7865
68	(Right) V8 (LEEP-WTAC-* 1-11)	***(Ref. Pr. List)***	.....	1	320 9751
68	(Right) V8 (LEEP-WTAC-* 1-12)	72	.....	1	320 7865
69	(Right) V8 (01-LEEP)(10-LEEP)(30-LEEP)(70-LEEP)	72	.....	1	320 7865
69	(Right) V8 (LHD-80-LEEP)	72	.....	1	320 7865
70	(Right) V8 (01-LEEP)(10-LEEP-E/MACHINE)		.....	1	448 7379
70	(Right) V8 (30-LEEP)(70-LEEP)		.....	1	448 7379
70	(Right) 390 (MACHINE-LEEP)		.....	1	448 8356
70	(Right) V8 (LHD-80-LEEP)		.....	1	448 7379
71/	(Right) 304-360 (01-LEEP)(40-LEEP)		.....	1	448 8898
71	(Right) V8 (10-LEEP)(70-LEEP)(80-LEEP)		.....	1	448 8900
72	(Right) V8 (10-LEEP)(70-LEEP)(80-LEEP)		.....	1	812 1271
69	***(Right) V8 (RHD-80-LEEP)***	72	.....	1	448 5958
70	***(Right) 360 (RHD-80-LEEP)***		.....	1	448 7529
67	(Right) V8 (WEEP)	72	.....	1	320 7863
68/69	(Right) V8 (WEEP)	72	.....	1	320 9600
70	(Right) V8 (WEEP-E/MACHINE)		.....	1	448 7375
70	(Right) V8 (MACHINE-WEEP)		.....	1	448 8354
71/	(Right) V8 (01-WEEP)(40-WEEP)		.....	1	448 8901
71	(Right) V8 (10-WEEP)(70-WEEP)		.....	1	448 8903
72	(Right) V8 (70-WEEP)		.....	1	812 1274

1.067–7a PLUG, Exhaust Manifold Air Emission Pump Tube Holes

72	SIX		.....	6	G139107
70	V8		.....	8	400 4117
70	V8 (Plug Gasket)		.....	8	44 042

1.067–8 ATTACHING PARTS, Exhaust Manifold To Intake Manifold

STUD	67/	SIX	***(Use 319 1446)***	.....	2	317 3324
WASHER, Lock	67/	SIX		17.820	2	G103321 NA
NUT, Hexagon	67/	SIX		.....	2	314 9892

1.067–9 ATTACHING PARTS, Exhaust Manifold To Cylinder Head

BOLT, Hexagon	67/71	V8 (3/8-16 x 1-5/8)	.....	12	812 1628
BOLT, Hexagon	72	V8	.....	12	400 4538
WASHER, Plain	67/	V8 (13/16" O.D.)	17.814	8	400 1166
WASHER, Plain	67/71	V8 (7/8" O.D.)	17.814	4	400 1104
WASHER, Plain	72	V8 (7/8" O.D.-WST)(7/8" O.D.-W4ST)	17.814	4	400 1104
WASHER, Plain	72	V8 (7/8" O.D.-WAT)	17.814	3	400 1104

ENGINE

1.067–10 ATTACHING PARTS, Intake And Exhaust Manifold To Cylinder Head

CLAMP	67/	SIX	***(Use 318 9219)***	.....	8	317 3187
STUD	67/68	SIX		.....	2	400 0794
STUD	69/	SIX		1.010	2	400 3917
BOLT, Hexagon	67/	SIX (2-9/16" Long)		.....	8	317 3326
BOLT, Hexagon	67/	SIX (1-3/16" Long)		.....	2	317 3064
WASHER, Plain	67/	SIX (13/16" O.D.)		.....	4	317 3077
WASHER, Plain	67/69	SIX (11/16" O.D.)		17.814	2	400 1101
NUT, Hexagon	67/	SIX		.....	2	314 9892

1.067–11 DAMPER KIT, Exhaust Manifold

67	199 (LEEP-* 1-9)	48	.....	1	320 9872
67	199 (LEEP-* 1-10)	***(Use 320 9872)***	.....	1	320 7293
67	199 (WEEP)	***(Use 320 9872)***	.....	1	320 7293
67	232 (LSFC-* 1-9)	48	.....	1	320 9872
67	232 (LSFC-* 1-10)	***(Use 320 9872)***	.....	1	320 7293
67	232 (WSFC-LEEP)	***(Use 320 9872)***	.....	1	320 7293
67	232 (WSFC-WEEP)	48	.....	1	320 9872
68/	SIX	48	.....	1	320 9872

1.067–12 DAMPER, Exhaust Manifold

67/69	V8	.....	1	318 5114
70/71	01 (V8)	.....	1	318 5114
72	01-40 (V8)	.....	1	318 5114
70	10 (V8-WDE-E/MACHINE)	.....	1	318 5114
70	10 (LHD-V8-LDE)	.....	1	318 5114
71	10 (V8)	.....	1	321 1465
71/	10-70-80 (V8)	.....	1	321 1465
70	30	.....	1	318 5114
70	70 (V8)	.....	1	318 5114
70	80 (LHD-V8)	.....	1	318 5114
70	***10 (RHD-V8-LDE)***	.....	1	318 5114
70	***80 (RHD-V8)***	.....	1	318 5114

1.067–13 GASKET, Exhaust Manifold Damper

67/69	V8	.....	1	318 2095
70/71	01 (V8)	.....	1	318 2095
72	01-40 (V8)	.....	1	318 2095
70	10 (V8-WDE-E/MACHINE)	.....	1	318 2095
70	10 (LHD-V8-LDE)	.....	1	318 2095
71/	10-70-80 (V8)	.....	1	321 1053
70	30	.....	1	318 2095
70	70 (V8)	.....	1	318 2095
70	80 (LHD-V8)	.....	1	318 2095
70	***10 (RHD-V8-LDE)***	.....	1	318 2095
70	***80 (RHD-V8)***	.....	1	318 2095

1.067–14 SPRING, Exhaust Manifold Damper Heat Valve

67	199 (LEEP)	.....	1	320 8035
67	199 (WEEP)	.....	1	317 2720
67	232 (LSFC-* 1-9)	.....	1	320 8035
67	232 (LSFC-* 1-10)	.....	1	317 2720
67	232 (WSFC)	.....	1	317 2720
68/	SIX	.....	1	320 8035

ENGINE

1.067–15 PIN, Exhaust Manifold Damper Heat Valve Spring

67/	SIX	.....	1	G443023

1.067–16 SPRING, Exhaust Manifold Damper Heat Valve Anti-Flutter

67/69	SIX	.....	1	318 2412

1.067–17 BAFFLE, Intake Manifold (Heat Deflector)

67	199	.....	1	318 4291
68	199	.....	1	317 4459
68/69	232 (09)	.....	1	318 4291

1.067–18 ATTACHING PARTS, Baffle To Manifold

STUD	67	199	17.718	1	G144532	NA
STUD	68	199	17.718	1	G113237	
STUD	68/69	232 (09)	17.718	1	G113237	
WASHER, Plain	67	199	17.814	1	G446188	NA
WASHER, Lock	67	199	17.820	1	G120380	NA
WASHER, Lock	68	199	17.820	1	G120382	
WASHER, Lock	68/69	232 (09)	17.820	1	G120382	
NUT, Hexagon	67	199	17.406	1	G120367	
NUT, Hexagon	68	199	17.406	1	G120369	NA
NUT, Hexagon	68/69	232 (09)	17.406	1	G120369	NA

1.067–19 PLUG, Intake Manifold (Refer To Group 8.460–4 For WPB)

72	.....	.....	1	G103877	NA
67/70	(1/8-27) LPB	17.486	AR	G103865	
67/70	(3/8-18) LPB	17.486	AR	G103867	
71	01-10-40-70 (Six-WST)	.....	1	G103877	NA
71	70 (Six-WST-LAC)	.....	1	G103877	NA
71	70 (360-W4ST-WCAI-LAC)(401-W4ST-WCAI-LAC)	.....	1	G103877	NA
71/	V8 (LPB)(LWH)	.....	1	G103879	NA
72	V8 (40-LTAC)	.....	1	G103877	NA

1.067–20 NIPPLE, Intake Manifold Vacuum

70	SIX (WVW-LPB-* 1-33)	8.460	1	317 5744	
70	SIX (WEW-LPB-* 1-33)	8.460	1	318 7777	
71	SIX (WVW-LPB)	8.460	1	317 5744	
71	SIX (WEW-LPB)	8.460	1	318 7777	
72	SIX (LPB)	.....	1	321 6513	
72	SIX (WPB)	.....	1	321 6514	
70/71	V8 (WEEP-LPB)	3.048	1	319 3014	
72	V8 (LPB)	.....	1	321 6515	
72	V8 (LAC)	.....	1	319 3014	
72	V8 (40-WTAC)	.....	1	319 3014	

1.067–21 BUSHING, Intake Manifold Vacuum

70/71	V8 (WEEP-LPB)	17.086	1	G119923

1.068–1 COVER, Cylinder Head

67/69	199 (WSFC) ...(Incl. Filler Cap) 7	.....	1	320 7119	
67/68	232 (_SFC) ...(Incl. Filler Cap) 8	.....	1	320 7120	
67/69	232 (WSFC) ...(Incl. Filler Cap) 7	.....	1	320 7119	
70	SIX (LCFE) ...(Incl. Filler Cap) 7	.....	1	320 7119	
70	SIX (WCFE)	.....	1	448 8425	
71	SIX ...(Incl. Filler Cap) 7	.....	1	320 7119	
72	SIX (* 1-39)	.....	1	321 5128	
72	SIX (* 1-40)	.....	1	812 1619	

Printed in U.S.A.

ENGINE

67	V8	.....	2	318 0147	
68/69	290-343 (Painted)	.....	2	319 0787	
68/69	390 (Chrome)	.....	2	319 2125	
70	304-360 (LCFE-Painted)	.....	2	319 0787	
70	390 (LCFE-Chrome)	.....	2	319 2125	
71/	V8 (WAT)	.....	2	319 0787	
70	(Left) 304-360 (WCFE-Painted)	.....	1	319 9646	
70	(Left) 390 (WCFE-Chrome)	.....	1	319 9648	
71/	(Left) V8 (WST) (W4ST)	.....	1	319 9646	
70	(Right) 304-360 (WCFE-Painted)	.....	1	319 0787	
70	(Right) 390 (WCFE-Chrome)	.....	1	319 2125	
71/	(Right) V8 (WST) (W4ST)	.....	1	319 0787	

1.068–2 ATTACHING PARTS, Cover To Head

BOLT, Hexagon	67/	SIX	.....	7	400 0765
BOLT, Hexagon	72	V8 (5/8" Long)	.....	10	400 0765
BOLT, Hexagon	72	V8 (9/16" Long)	.....	4	317 2721
BOLT, Hexagon	67/71	290-343-360 (Plain-9/16" Long)	.....	4	317 2721
BOLT, Hexagon	67/71	290-343-360 (Plain-5/8" Long)	.....	10	400 0765
BOLT, Hexagon	68/70	390 (Chrome-5/8" Long)	.....	10	319 2134
BOLT, Hexagon	68/70	390 (Chrome-9/16" Long)	.....	4	319 2135
BOLT, Hexagon	71	401 (Plain-5/8" Long)	.....	10	400 0765
BOLT, Hexagon	71	401 (Plain-9/16" Long)	.....	4	317 2721
WASHER, Plain	67/71	290-343-360 (Plain)	.....	10	318 2488
WASHER, Plain	68/70	390 (Chrome)	.....	10	319 2128
WASHER, Plain	71	401 (Plain)	.....	10	318 2488
WASHER, Plain	72	V8	.....	9	318 2488

1.069–1 VALVE, Air Conditioning Vacuum Check

72	10-80 (Used When Not Equipped With Vacuum Reservoir)	.....	1	321 5820	
71	70	.....	1	321 2231	
72	70	.....	1	321 5820	

1.069–2 HOSE, Intake Manifold To Vacuum Valve (Bulk–Order In Feet)

71/	70	4.141	AR	320 6752	
72	10-80 (Used When Not Equipped With Vacuum Reservoir)	4.141	AR	320 6752	

1.069–3 FITTING, Intake Manifold To Valve Hose

ELBOW	71	70 (Six-WST)(V8-WST-LCAI)(V8-W4ST-LCAI)	3.049	1	319 8347	
NIPPLE	72	10-70-80 (Six)	.....	1	321 5574	
FITTING	72	10-70-80 (V8)	.....	1	321 6516	

1.069–4 TEE, Intake Manifold To Adapter And Valve Hose

71	70 (Six-WAT)	17.764	1	G153482	
71	70 (V8-WAT-LCAI)	17.764	1	G178685	NA
71	70 (V8-WCAI)	12.001	1	319 8373	

1.069–5 ADAPTER, Tee To Valve Hose

71	70 (Six-WAT)(V8-WAT-LCAI)(V8-W4ST-WCAI)	12.001	1	319 8506	

1.069–6 HOSE, Manifold Tee To Air Scoop And Transmission Tee (Bulk–Order In Feet)

71/	70 (V8-WAT-WCAI)	5.260	1	320 3440	

ENGINE

1.069–7 TEE, Air Scoop And Transmission Connector

71	70 (V8-WAT-WCAI)	.....	1	321 2314
72	70 (V8-LAC-WCAI)	3.050	1	321 0891

1.072 GASKET, Cylinder Head Cover

67/	SIX	.....	1	317 9112
67/	V8	.....	2	318 1291

1.077–1 VALVE, Intake

67/	(Std.) SIX	.....	6	318 2583
67/	(Std.) 290-304	.....	8	318 2583
67/	(Std.) 343-360-390-401	.....	8	318 2585
67/	(.003) SIX	.....	6	320 7385
67/	(.015) SIX	.....	6	320 7386
67/	(.030) SIX	.....	6	320 7387

1.077–2 VALVE KIT, Intake (Incl. Valve And Valve Spring Retainer)

67/	(.003) 290-304 51	.....	8	320 8131
67/	(.003) 343-360-390-401 51	.....	8	320 8134
67/	(.015) 290-304 51	.....	8	320 8132
67/	(.015) 343-360-390-401 51	.....	8	320 8135
67/	(.030) 290-304 51	.....	8	320 8133
67/	(.030) 343-360-390-401 51	.....	8	320 8136

1.077–3 SEAL, Intake Valve (Perfect Circle)

67/	SIX	.....	6	320 5878

1.077–4 SEAL SET, Intake Valve (Skinner)

67/	SIX ...(Incl. 320 7537) 47	.....	1	320 7534

1.077–5 SEAL KIT, Intake Valve (Skinner)(For Complete Car Set Order 320 7534)

67/	SIX ...(Incl. Spring And Gasket) 6	.....	6	320 7537

1.077–6 DEFLECTOR, Intake Valve Stem Oil (Rubber)

67/	SIX ***(Use 319 6824)***	1.078	6	317 2320
67/	V8 (Used With (.003), (.015), (.030) Valves)	.....	8	320 8125
70	390 (Used With Std. Valves-* 1-20)	1.078	8	319 6824
72	***360-401 (Police)***	19.177	8	319 0398

1.078–1 VALVE, Exhaust

67/71	(Std.) SIX	.....	6	317 2328
72	(Std.) SIX (* 1-35)	.....	6	317 2328
72	(Std.) SIX (* 1-36)	.....	6	318 2584
67/	(Std.) 290-304	.....	8	318 2584
67/69	(Std.) 343	.....	8	318 7202
68/69	(Std.) 390	.....	8	319 5223
70	(Std.) 360-390 (* 1-26)	.....	8	319 5223
70	(Std.) 360-390 (* 1-27)	.....	8	321 1218
71/	(Std.) 360-401	.....	8	321 1218
67/71	(.003) SIX	.....	6	317 5123
72	(.003) SIX (* 1-35)	.....	6	317 5123
72	(.003) SIX (* 1-36)	.....	6	320 7388

Printed in U.S.A.

ENGINE

67/71	(.015) SIX		.....	6	320 5166
72	(.015) SIX (* 1-35)		.....	6	320 5166
72	(.015) SIX (* 1-36)		.....	6	320 7389
67/71	(.030) SIX		.....	6	320 5167
72	(.030) SIX (* 1-35)		.....	6	320 5167
72	(.030) SIX (* 1-36)		.....	6	320 7390

1.078–2 VALVE KIT, Exhaust (Incl. Valve And Valve Spring Retainer)

67/	(.003) 290-304	51	.....	8	320 8137
67/69	(.003) 343	51	.....	8	320 8140
68/69	(.003) 390	51	.....	8	448 6487
70	(.003) 360-390 (* 1-26)	51	.....	8	448 6487
70	(.003) 360-390 (* 1-27)		.....	8	448 9176
71/	(.003) 360-401		.....	8	448 9176
67/	(.015) 290-304	51	.....	8	320 8138
67/69	(.015) 343	51	.....	8	320 8141
68/69	(.015) 390	51	.....	8	448 6488
70	(.015) 360-390 (* 1-26)	51	.....	8	448 6488
70	(.015) 360-390 (* 1-27)		.....	8	448 9177
71/	(.015) 360-401		.....	8	448 9177
67/	(.030) 290-304	51	.....	8	320 8139
67/69	(.030) 343	51	.....	8	320 8142
68/69	(.030) 390	51	.....	8	448 6489
70	(.030) 360-390 (* 1-26)	51	.....	8	448 6489
70	(.030) 360-390 (* 1-27)		.....	8	448 9178
71/	(.030) 360-401		.....	8	448 9178

1.078–3 SEAL, Exhaust Valve (Perfect Circle)

67/	SIX		1.077	6	320 5878

1.078–4 SEAL SET, Exhaust Valve (Skinner)

67/	SIX...(Incl. 320 7537)	47	1.077	1	320 7534

1.078–5 SEAL KIT, Exhaust Valve (Skinner)(For Complete Set Order 320 7534)

67/	SIX...(Incl. Spring And Gasket)	6	1.077	6	320 7537

1.078–6 DEFLECTOR, Exhaust Valve Stem Oil (Rubber)

67/	SIX		.....	6	317 2320
67/	V8 (Used With (.003), (.015), (.030) Valves) ***(Use 319 6824)***		1.077	8	320 8125
70	390 (Used With Std. Valves-* 1-20)		.....	8	319 6824
72	***360-401 (Police)***		19.177	8	319 0398

1.083 SPRING, Valve

67/	SIX		.....	12	318 3979
67/69	V8		.....	16	318 0457
70	V8 ***(Use 321 3609)***		.....	16	319 9606
71	V8		.....	16	321 3609
72	V8 (Except Police)		.....	16	321 3609
72	***360-401 (Police)***		19.138	16	448 5511

1.084 RETAINER, Valve Spring

67	SIX ***(Use 318 3518)***		.....	12	317 3235
68/	SIX		.....	12	318 3518
67/69	V8 (Used With Std. Valves)...(Incl. Deflector)		.....	16	318 5148
67/	V8 (Used With (.003), (.015), (.030) Valves) ***(Use 320 8751)***		.....	16	320 8126

70	304-360 (Used With Std. Valves)...(Incl. Deflector)	.....	16	318 5148
70	390 (Used With Std. Valves-* 1-20) ***(Use 320 8751)***	.....	16	320 8126
70	390 (Used With Std. Valves-* 1-19)...(Incl. Deflector)	.....	16	318 5148
71/	V8 (Used With Std. Valves)...(Incl. Deflector)	.....	16	318 5148
72	***360-401 (Police)***	19.184	16	320 8751

1.085 LOCK, Valve Spring Retainer (Keepers)

67/	V8	.....	32	318 0458
67/71	(Intake) SIX	.....	12	318 0458
67/71	(Exhaust) SIX	.....	12	315 6157
72	(Intake) SIX (* 1-35)	.....	12	318 0458
72	(Exhaust) SIX (* 1-35)	.....	12	315 6157
72	SIX (* 1-36)	.....	24	318 0458
72	***360-401 (Police)***	19.185	16	320 8753

1.088-1 TAPPET, Valve (Incl. Snap Ring)

67	SIX ***(Use 319 0901)***	.....	12	316 0304
68/71	SIX 10	.....	12	319 0901
67/71	V8 32	.....	16	318 9883
72		.....	AR	319 0810

1.088-2 RING, Valve Tappet Snap

67/	SIX	.....	12	644 0614
67/	V8	.....	16	644 0614

1.095 ROD, Valve Push

67/69	SIX	.....	12	318 0073
70	SIX (* 1-32)	.....	12	318 0073
70	SIX (* 1-33)	.....	12	321 0203
71	SIX	.....	12	321 0203
72	SIX (* 1-35)	.....	12	321 0203
72	SIX (* 1-36)	.....	12	321 4013
72	***SIX (Export-Low Compression-* 1-35)***	.....	12	321 1453
72	***SIX (Export-Low Compression- 1-36)***	.....	12	321 4867
71	***SIX (Export-Low Compression-* 1-34)***	.....	12	321 1453
67/68	V8	.....	16	318 0416
69	290	.....	16	318 0416
69	343-390 (7.757 To 7.777" Long)	.....	16	318 0416
69	343-390 (7.810 To 7.830" Long-* 1-37)	.....	16	319 6696
70/71	304	.....	16	319 6696
70/71	360-390-401 (7.810 To 7.830" Long)	.....	16	319 6696
70/71	360-390-401 (7.847 To 7.867" Long-* 1-37)	.....	16	448 8412
72	V8	.....	16	319 6696

1.096 ROCKER ARM OILER KIT

67/71	SIX	.....	1	812 0298

1.097-1 ARM, Valve Rocker

67/71	SIX	.....	12	317 2302
72	SIX (* 1-35)	.....	12	317 2302
72	SIX (* 1-36)	.....	12	321 1698
67/	V8	.....	16	318 2452

1.097-2 ROCKER ARM KIT, Valve (Incl. Ball)

67/	V8	.....	16	812 0177

ENGINE

1.098–1 SHAFT, Valve Rocker Arm

67/71	SIX	.....	1	317 2301
72	SIX (* 1–35)	.....	1	317 2301

1.098–2 ATTACHING PARTS, Shaft To Cylinder Head

BOLT, Hexagon	67/71	SIX (1–7/8" Long)	17.038	5	G179846 NA
BOLT, Hexagon	67/71	SIX (2–3/4" Long)	17.038	1	G180137 NA
BOLT, Hexagon	72	SIX (1–7/8" Long)(* 1–35)	17.038	5	G179846 NA
BOLT, Hexagon	72	SIX (2–3/4" Long)(* 1–35)	17.038	1	G180137 NA

1.098–3 SPACER, Valve Rocker Arm Shaft End

67/71	SIX	.....	2	317 3081
72	SIX (* 1–35)	.....	2	317 3081

1.098–4 SPACER, Valve Rocker Arm Shaft Intermediate

67/71	SIX	.....	2	317 3080
72	SIX (* 1–35)	.....	2	317 3080

1.098–5 SPACER, Valve Rocker Arm Shaft Center

67/71	SIX	.....	1	317 3079
72	SIX (* 1–35)	.....	1	317 3079

1.098–6 PIN, Valve Rocker Arm Shaft Plug

67/71	SIX	17.472	2	G273937
72	SIX (* 1–35)	17.472	2	G273937

1.098–7 WASHER, Valve Rocker Arm Shaft Spring

67/71	SIX	.....	2	317 2311
72	SIX (* 1–35)	.....	2	317 2311

1.099 BALL, Valve Rocker Arm

67/	V8	.....	16	318 2476

1.100–1 STUD, Valve Rocker Arm

67	V8 (* 1–1)	.....	16	319 0082
67	V8 (* 1–2)	.....	16	318 2477
68	V8	.....	16	318 2477
69	V8 (* 1–1)	.....	16	319 0082
69	V8 (* 1–2)	.....	16	318 2477
70/	V8	.....	16	318 2477

1.100–2 NUT, Valve Rocker Arm

67/	V8	.....	16	318 2490

1.101–1 PIVOT, Valve Rocker Arm

72	SIX (* 1–36)	.....	6	321 0178

ENGINE

1.101–2 BOLT, Pivot To Cylinder Head

72	SIX (* 1–36)	17.039	12	812 0512

1.102–1 DEFLECTOR, Valve Rocker Arm Shaft Oil

67/71	SIX	.....	1	317 3392
72	SIX (* 1–35)	.....	1	317 3392

1.102–2 RETAINER, Valve Rocker Arm Shaft

67/71	SIX	.....	6	317 2310
72	SIX (* 1–35)	.....	6	317 2310

1.116–1 TUBE, Cylinder Head Cover To Carburetor Air Cleaner (On Cover)

67	232 (WSFC)	.....	1	317 5559

1.116–2 HOSE, Cylinder Head Cover To Carburetor Air Cleaner

67	199	.....	1	318 2693
68/	SIX	.....	1	319 0565

1.116–3 FILTER, Cylinder Head Cover To Carburetor Air Cleaner

67	199	.....	1	318 2487
68/	SIX	.....	1	318 2487

1.116–4 GROMMET, Cylinder Head Cover To Carburetor Air Cleaner Tube (In Cover)

67	232 (WSFC)	.....	1	317 8622

1.116–5 HOSE, Cylinder Head Cover To Carburetor Air Cleaner (Bulk–Order In Feet)

67	232 (WSFC)	.....	AR	320 4181

1.116–6 CLAMP, Cylinder Head Cover To Carburetor Air Cleaner Hose

67	232 (WSFC)	17.108	2	320 3076

1.116–7 HOSE, Oil Filler Cap To Air Cleaner (Bulk–Order In Feet)

67	V8 (WSFC)	.....	AR	320 4181
68/	V8	.....	AR	320 4181

1.116–8 CLAMP, Oil Filler Cap To Air Cleaner Hose

67	V8 (WSFC)	10.331	2	317 8454
68/69	V8	10.331	2	317 8454

1.117–1 HOSE, Carburetor Insulator To Ventilation Valve

67/	SIX	8.460	1	315 3670

1.117–2 CLAMP, Carburetor Insulator To Ventilation Valve Hose

67/	SIX	10.331	2	317 8454

ENGINE

1.117–3 HOSE, Carburetor To Ventilation Valve

67/70	V8 (WDT–WEW)	.....	1	318 4002
67	V8 (W4B–WEW)	.....	1	318 4002
68	V8 (W4B–WEW–* 1–15)	.....	1	318 4002
68	V8 (W4B–WEW–* 1–16)	.....	1	319 3275
69	V8 (W4B)	.....	1	319 3275
70	V8 (W4B)	.....	1	318 4002
72	01–40–70 (V8–WST)(V8–W4ST)	.....	1	318 4002

1.117–4 CLAMP, Carburetor To Ventilation Valve Hose

67/70	V8 (WDT–WEW)	10.331	2	317 8454
67/70	V8 (W4B–WEW)	10.331	2	317 8454
72	01–40 (V8–WST)(V8–W4ST)	.....	1	317 8454

1.117–5 HOSE, Carburetor To Tee

67/68	V8 (WDT–WVW)	.....	1	318 4002
68	V8 (W4B–WVW–* 1–15)	.....	1	319 3906
68	V8 (W4B–WVW–* 1–16)	8.460	1	315 3670
69	V8 (W4B)	.....	1	319 3275
69	V8 (WDT)	.....	1	318 4002
70	V8	.....	1	318 4002
71/	V8 (Bulk)	.....	AR	320 4181

1.117–6 CLAMP, Carburetor To Tee Hose

67/70	V8 (WVW)	10.331	2	317 8454
71/	V8	10.331	1	317 8454

1.117–7 TEE, Carburetor Insulator Hose To Ventilation Valve Hose

71	V8 (WEW)	.....	1	321 1498
71	V8 (WVW)	.....	1	321 1497
72	V8 (WAT–LASC)	.....	1	321 1498
72	10–80 (V8–WAT–WASC)	.....	1	321 1497

1.117–8 HOSE, Tee To Ventilation Valve

67/68	V8 (WVW)	.....	1	318 4002
69/70	V8 (WVW)	.....	1	318 7405
71	V8	.....	1	318 7405
72	V8 (WAT)	.....	1	318 7405

1.117–9 CLAMP, Tee To Ventilation Valve Hose

67/70	V8 (WVW)	10.331	2	317 8454
71/	V8	10.331	2	317 8454

1.117–10 HOSE, Tee To Fuel Vapor Storage Canister (Bulk–Order In Feet)

71/	V8 (WAT) ***(Use 320 6752)***	.....	AR	320 3865

1.117–11 CAP, Tee Nipple

71	V8 (WST)(W4ST)	.....	1	321 1419

ENGINE

1.119–1 VALVE, Cylinder Block Ventilation

67/70	199 (WSFC)	.....	1	318 2478
67	232	.....	1	318 3950
68/69	232 (09)	.....	1	318 2478
68/69	232 (Except 09)	.....	1	318 3950
70	232 (01-WST-* 1-32)	.....	1	318 3950
70	232 (01-WST-* 1-33)	.....	1	321 1538
70	232 (01-WAT-* 1-32)(40-* 1-32)	.....	1	318 2478
70	232 (01-WAT-* 1-33)(40-* 1-33)	.....	1	321 1538
70	232 (10)(70)(80)	.....	1	318 3950
71	232 (01-WAT)(40-WAT)	.....	1	318 2478
71	232 (01-WST)(40-WST)	.....	1	321 1538
71	232 (10)(70) (80)	.....	1	321 1538
72	232 (01)(40)	.....	1	318 2478
72	232 (10-WST)(70-WST)	.....	1	318 2478
72	232 (10-WAT)(70-WAT)	.....	1	321 1538
71	258	.....	1	321 1538
72	258 (WST)	.....	1	318 2478
72	258 (WAT)	.....	1	321 1538
67/69	V8	.....	1	318 3950
70/	V8	.....	1	321 1538

1.119–2 GROMMET, Cylinder Block Ventilation Valve To Cylinder Head Cover

67/	SIX (WSFC)	.....	1	317 8622

1.119–3 GROMMET, Cylinder Block Ventilation Valve To Intake Manifold

67/	V8	.....	1	318 1287

1.120–1 COVER ASSEMBLY, Timing Case

67/71	SIX...(Incl. Seal) 5	.....	1	320 5644
72	SIX (* 1-41)...(Incl. Seals)	.....	1	320 5644
72	SIX (* 1-42)...(Incl. Seals)	.....	1	812 2265
67/	V8...(Incl. Seal And Pump Shaft) ***(Use 448 9052)***	.....	1	317 9066

1.120–2 ATTACHING PARTS, Cover To Block

BOLT, Hexagon	67/71	SIX (3/4" Long)	17.038	7	G179795	NA
BOLT, Hexagon	72	SIX (3/4" Long-* 1-41)	.....	7	G179795	NA
BOLT, Hexagon	72	SIX (3/4" Long-* 1-42)	.....	6	G179795	NA
BOLT, Hexagon	67/71	SIX (1-1/8" Long)	17.038	2	G179799	NA
BOLT, Hexagon	72	SIX (1-1/8" Long-* 1-41)	.....	2	G178799	NA
BOLT, Hexagon	72	SIX (1-1/8" Long-* 1-42)	.....	1	G179799	NA
BOLT, Hexagon	72	SIX (2-3/4" Long-* 1-42)	.....	2	321 8624	
BOLT, Hexagon	67/70	V8 (LHD-4-7/8" Long)	17.038	1	G274101	
BOLT, Hexagon	67/	V8 (1-5/8" Long)	17.038	2	G179844	NA
BOLT, Hexagon	67/	V8 (2-1/8" Long)	17.038	1	G186276	NA
BOLT, Hexagon	67/	V8 (3-1/8" Long)	17.038	1	G186279	NA
BOLT, Hexagon	69/70	V8 (5-3/4" Long)	17.038	1	G215511	
***BOLT, Hexagon	67/***	***V8 (RHD-4-3/4" Long)***	17.038	1	G454497	
STUD	70/	V8 (6-1/4" Long)	.....	1	400 4069	
WASHER, Plain	67/	V8	17.814	AR	400 1102	
WASHER, Lock	67/71	SIX	17.820	9	G120380	NA
WASHER, Lock	72	SIX (* 1-41)	.....	9	G120380	NA
WASHER, Lock	72	SIX (* 1-42)	.....	7	G120380	NA
WASHER, Lock	72	SIX (* 1-42)	.....	2	400 3803	
WASHER, Lock	67/	V8	17.820	5	400 3803	
NUT, Hexagon	70/	V8	17.406	1	G120369	NA

1.120–3 PIN, Timing Case Cover To Cylinder Block Dowel

67/	V8	.....	2	318 8560

Printed in U.S.A.

ENGINE

1.121 GASKET, Timing Case Cover

67/71	SIX	.....	1	317 2847
72	SIX (* 1-41)	.....	1	317 2847
72	SIX (* 1-42)	.....	1	321 8621
67/	V8	.....	1	318 0216

1.123 SEAL, Timing Case Cover

67/68	SIX ..... *(Use 319 4827)*	.....	1	315 5002
69/	SIX	.....	1	319 4827
67/69	V8 ..... *(Use 319 3613)*	.....	1	318 0211
70/	V8	.....	1	319 3613

1.130 CHAIN, Timing

67/68	SIX	.....	1	317 2307
67/	V8	.....	1	318 5270

1.132-1 SPROCKET, Crankshaft

67/	SIX	.....	1	317 3205
67/	V8	.....	1	314 4448

1.132-2 KEY, Crankshaft Sprocket

67/	SIX	.....	1	310 7002
67/	V8	17.344	1	G144542

1.132-3 SHEDDER, Crankshaft Sprocket Oil

67/	SIX	.....	1	317 3076
67/	V8	.....	1	318 0205

1.134-1 SPROCKET, Camshaft

67/	SIX	.....	1	320 6693
67/68	V8	.....	1	318 0474
69	V8	.....	1	319 3989
70/	V8	.....	1	319 7138

1.134-2 ATTACHING PARTS, Sprocket To Camshaft

BOLT, Hexagon	67/	SIX	.....	1	317 2308
WASHER, Plain	67/	SIX	.....	1	317 3284

1.134-3 KEY, Camshaft Sprocket

67/	V8	17.344	1	G124546

1.134-4 ECCENTRIC, Fuel Pump

67/	V8	4.118	1	318 2492

1.134-5 ATTACHING PARTS, Eccentric To Camshaft

BOLT, Hexagon	67/	V8	.....	17.042	1	G192353
SPACER	67/	V8	.....	4.118	1	318 2491
WASHER, Plain	67	V8	.....	.....	1	318 0207
WASHER, Plain	68/	V8	.....	.....	1	318 9338

1.136-1 ROD ASSEMBLY, Connecting

67/70	199	27	.....	6	317 3210
67/69	232	27	.....	6	318 0444
70	232 (* 1-32)	27	.....	6	318 0444
70	232 (* 1-33)	27	.....	6	317 3210
71/	232	27	.....	6	317 3210
71/	258	27	.....	6	318 0444

67/69	290-343	27	.....	8	318	2749
70/	304-360	27	.....	8	319	6750
68/69	390	27	.....	8	319	1740
70/71	390-401	27	.....	8	319	7049
72	401	27	.....	8	321	5854

1.136-2 ATTACHING PARTS, Connecting Rod Bearing Cap To Rod

BOLT KIT	67/	SIX...(Incl. Nut)	***(Use 448 6626)***	.....	12	320 6253
BOLT KIT	67/	290-304-343-360...(Incl. Nut)	42	.....	16	448 6626
BOLT KIT	68/69	390...(Incl. Nut)	42	.....	16	320 8814
BOLT KIT	70/	390-401...(Incl. Nut)	42	.....	16	448 7594
NUT, Hexagon	67/	SIX	1.141	12	314	9556
NUT, Hexagon	67/	290-304-343-360	1.141	16	314	9556
NUT, Hexagon	68/	390-401	.....	16	319	0844

1.138 BEARING, Connecting Rod (Incl. Upper And Lower)

67/69	(Std.) SIX	***(Use 448 6992)***	.....	6	320 7834
70/	(Std.) SIX		.....	6	448 6992
67/69	(Std.) 290-343	***(Use 448 6992)***	.....	8	320 7834
70/	(Std.) 304-360		.....	8	448 6992
68/	(Std.) 390-401	12	.....	8	320 8890
67/69	(-.001) SIX	12	.....	6	320 7835
70/	(-.001) SIX		.....	6	448 6993
67/69	(-.001) 290-343	12	.....	8	320 7835
70/	(-.001) 304-360		.....	8	448 6993
68/	(-.001) 390-401	12	.....	8	320 8891
67/69	(-.002) SIX	12	.....	6	320 7836
70/	(-.002) SIX		.....	6	448 6994
67/69	(-.002) 290-343	12	.....	8	320 7836
70/	(-.002) 304-360		.....	8	448 6994
68/	(-.002) 390-401	12	.....	8	320 8892
67/69	(-.010) SIX	12	.....	6	320 7837
70/	(-.010) SIX		.....	6	448 6995
67/69	(-.010) 290-343	12	.....	8	320 7837
70/	(-.010) 304-360		.....	8	448 6995
68/	(-.010) 390-401	12	.....	8	320 8893
67/69	(-.012) SIX	12	.....	6	320 7838
70/	(-.012) SIX		.....	6	448 6996
67/69	(-.012) 290-343	12	.....	8	320 7838
70/	(-.012) 304-360		.....	8	448 6996
68/	(-.012) 390-401	12	.....	8	320 8894

1.143 PISTON (Incl. Pin)

67	(Std.) 199	***(Use 448 7150)***	.....	6	320 5445
68/70	(Std.) 199	4	.....	6	320 8797
67	(Std.) 232	4	.....	6	320 4957
68/69	(Std.) 232	4	.....	6	320 8802
70	(Std.) 232 (* 1-28)	4	.....	6	320 8802
70	(Std.) 232 (* 1-29)	4	.....	6	448 8672
71/	(Std.) 232-258	4	.....	6	448 8672
67	(Std.) 290 (WDT)	4	.....	8	320 6577
67	(Std.) 290 (W4B-W4ST)	4	.....	8	320 8662
67	(Std.) 290 (W4B-WST)(W4B-WOD)(W4B-WAT)	4	.....	8	320 7600
68/69	(Std.) 290 (WDT)	***(Use 448 5559)***	.....	8	320 8807
68/69	(Std.) 290 (W4B)	4	.....	8	320 8662
70/	(Std.) 304	4	.....	8	448 7564
67/69	(Std.) 343 (WDT)	4	.....	8	320 8573
67/69	(Std.) 343 (W4B)	4	.....	8	320 8074
70	(Std.) 360 (WDT)	4	.....	8	448 7567
70	(Std.) 360 (W4B)	4	.....	8	448 7546
71/	(Std.) 360	4	.....	8	448 7567
68/69	(Std.) 390	4	.....	8	320 8895
70	(Std.) 390	4	.....	8	448 7570
71	(Std.) 401	4	.....	8	448 8881
72	(Std.) 401	4	.....	8	812 0580

ENGINE

67	(.002) 199	4	.....	6	320 5446
68/70	(.002) 199	4	.....	6	320 8798
67	(.002) 232	4	.....	6	320 4958
68/69	(.002) 232	4	.....	6	320 8803
70	(.002) 232 (* 1-28)	4	.....	6	320 8803
67	(.002) 290 (WDT)	4	.....	8	320 6578
67	(.002) 290 (W4B-WST)(W4B-W4ST)(W4B-WOD)(W4B-WAT)	4	.....	8	320 8663
68/69	(.002) 290 (WDT)	4	.....	8	320 8808
68/69	(.002) 290 (W4B)	4	.....	8	320 8663
67/69	(.002) 343 (WDT)	4	.....	8	320 8574
67/69	(.002) 343 (W4B)	4	.....	8	320 8075
68/69	(.002) 390	***(Use 320 8898)***	.....	8	320 8896
67	(.005) 199	4	.....	6	320 5447
68/70	(.005) 199	4	.....	6	320 8799
67	(.005) 232	4	.....	6	320 4959
68/69	(.005) 232	4	.....	6	320 8804
70	(.005) 232 (* 1-28)	4	.....	6	320 8804
67	(.005) 290 (WDT)	4	.....	8	320 6579
67/69	(.005) 290 (W4B-WST)(W4B-W4ST)(W4B-WOD)(W4B-WAT)	***(Ord. 320 8665)***	.....	8	320 8664
68/69	(.005) 290 (WDT)	4	.....	8	320 8809
67/69	(.005) 343 (WDT)	4	.....	8	320 8575
67/69	(.005) 343 (W4B)	4	.....	8	320 8076
67	(.010) 199	4	.....	6	320 5448
68/70	(.010) 199	4	.....	6	320 8800
67	(.010) 232	4	.....	6	320 4960
68/69	(.010) 232	4	.....	6	320 8805
70	(.010) 232 (* 1-28)	4	.....	6	320 8805
70	(.010) 232 (* 1-29)	4	.....	6	448 8673
71/	(.010) 232-258	4	.....	6	448 8673
67	(.010) 290 (WDT)	4	.....	8	320 6580
67	(.010) 290 (W4B-WST)(W4B-W4ST)(W4B-WOD)(W4B-WAT)	4	.....	8	320 8665
68/69	(.010) 290 (WDT)	4	.....	8	320 8810
68/69	(.010) 290 (W4B)	4	.....	8	320 8665
70/	(.010) 304	4	.....	8	448 7565
67/69	(.010) 343 (WDT)	4	.....	8	320 8576
67/69	(.010) 343 (W4B)	4	.....	8	320 8077
70	(.010) 360 (WDT)	4	.....	8	448 7568
70	(.010) 360 (W4B)	4	.....	8	448 7547
71/	(.010) 360	4	.....	8	448 7568
68/69	(.010) 390	4	.....	8	320 8898
70	(.010) 390	4	.....	8	448 7571
71	(.010) 401	4	.....	8	448 8882
72	(.010) 401	4	.....	8	812 0581
67	(.020) 199	***(Use 448 6747)***	.....	6	320 5449
68/70	(.020) 199	***(Use 448 6747)***	.....	6	320 8801
67	(.020) 232	4	.....	6	320 4961
68/69	(.020) 232	4	.....	6	320 8806
70	(.020) 232 (* 1-28)	4	.....	6	320 8806
67	(.020) 290 (WDT)	4	.....	8	320 6581
67	(.020) 290 (W4B-W4ST)	4	.....	8	320 8666
67	(.020) 290 (W4B-WST)(W4B-WOD)(W4B-WAT)	***(Use 320 8666)***	.....	8	320 7604
68/69	(.020) 290 (WDT)	***(Use 448 5563)***	.....	8	320 8811
68/69	(.020) 290 (W4B)	4	.....	8	320 8666
70/	(.020) 304	4	.....	8	448 7566
67/69	(.020) 343 (WDT)	4	.....	8	320 8577
67/69	(.020) 343 (W4B)	4	.....	8	320 8078
70	(.020) 360 (WDT)	4	.....	8	448 7569
70	(.020) 360 (W4B)	4	.....	8	448 7548
71/	(.020) 360	4	.....	8	448 7569

1.146 RING SET, Piston

67/69	(Std.)(Sealed Power) SIX	13	.....	1	320 5939
70/	(Std.)(Sealed Power) SIX	13	.....	1	448 5507
67/	(Std.)(Sealed Power) 290-304	43	.....	1	320 7456
67/	(Std.)(Sealed Power) 343-360	43	.....	1	320 8065
68/	(Std.)(Sealed Power) 390-401	43	.....	1	320 8919
67/	(Std.)(Perfect Circle) SIX	13	.....	1	320 5943
67/	(Std.)(Perfect Circle) 290-304	43	.....	1	320 7514
67/	(Std.)(Perfect Circle) 343-360	43	.....	1	320 8066
68/	(Std.)(Perfect Circle) 390-401	43	.....	1	320 9698
67/	(Std.)(TRW) SIX		.....	1	812 1683
67/	(Std.)(TRW) 290-304		.....	1	812 1685
67/69	(.010)(Perfect Circle) SIX	***(Use 448 5502)***	.....	1	320 5973
70/	(.010)(Perfect Circle) SIX	13	.....	1	448 5502
67/	(.010)(Sealed Power) 290-304	43	.....	1	320 7823
67/	(.010)(Perfect Circle) 343-360	43	.....	1	320 8067
68/	(.010)(Perfect Circle) 390-401	43	.....	1	320 8900
67/	(.010)(TRW) SIX		.....	1	812 1684
67/	(.010)(TRW) 290-304		.....	1	812 1686
67/69	(.020)(Perfect Circle) SIX	13	.....	1	320 7597
70	(.020)(Perfect Circle) SIX	13	.....	1	448 5573
67/	(.020)(Perfect Circle) 290-304	43	.....	1	320 7969
67/	(.020)(Perfect Circle) 343-360	43	.....	1	320 8068

1.149 PIN SET, Piston

67/	(Std.) SIX	18	.....	1	320 7034
67/	(Std.) 290-304-343-360	16	.....	1	320 6582
68/	(Std.) 390-401	16	.....	1	320 8925
67/	(.003) SIX	18	.....	1	320 7035
67/	(.003) 290-304-343-360	16	.....	1	320 6583
68/	(.003) 390-401	16	.....	1	320 8926
67/	(.005) SIX	18	.....	1	320 7036
67/	(.005) 290-304-343-360	16	.....	1	320 6584
68/	(.005) 390-401	16	.....	1	320 8927

1.151–1 PAN ASSEMBLY, Engine Oil Pan (Incl. Drain Plug)

67/69	SIX	17	.....	1	318 5249
70	SIX (* 1-32)	17	.....	1	318 5249
70	SIX (* 1-33)	17	.....	1	319 9860
71	SIX	17	.....	1	319 9860
72	SIX	17	.....	1	321 3932
67	V8 (* 1-7)	***(Use 319 0850)***	.....	1	318 5193
67	V8 (* 1-8)	57	.....	1	319 0850
68/70	V8	57	.....	1	319 0850
71/	V8	57	.....	1	319 9522
72	***360-401 (Police)***		.....	1	321 7470

1.151–2 ATTACHING PARTS, Pan To Engine

STUD	67/	SIX (WPS)	10.470	2	317 6335	
STUD	67/68	V8 (WAT)	5.178	1	312 2698	
STUD	***67/70***	***290-304 (RHD-WPS)***	5.178	2	312 2698	
BOLT, Hexagon	67/	SIX (9/16" Long)	.....	22	317 2721	
BOLT, Hexagon	67/	V8 (9/16" Long)	.....	14	317 2721	
BOLT, Hexagon	67/	SIX (3/4" Long)	.....	4	316 2258	
BOLT, Hexagon	67/70	290-304 (LHD)	.....	6	316 2258	
BOLT, Hexagon	67/70	343-360-390	.....	6	316 2258	
BOLT, Hexagon	71/	V8	.....	6	316 2258	
BOLT, Hexagon	***67/70***	***290-304 (RHD-WPS)***	.....	4	316 2258	
NUT, Hexagon	67/	SIX (WPS)	17.406	2	G120367	
WASHER, Plain	67/70	SIX (WAT)	17.814	2	G120392	
WASHER, Lock	67/	SIX (WPS)	17.820	2	G120380	NA
WASHER, Lock	***67/70***	***290-304 (RHD-WPS)***	17.820	2	G120214	

ENGINE

1.151–3 PLUG KIT, Engine Oil Pan Drain (Incl. Gasket)

67/	(Non-Magnetic)	41	.....	1	316 5787
67/	(Magnetic)	41	.....	1	320 6696

1.151–4 GASKET, Engine Oil Pan Drain Plug

67/			.....	1	317 0271

1.152–1 GASKET SET, Engine Oil Pan

67/69	SIX	21	.....	1	320 4974
70	SIX (* 1–32)	21	.....	1	320 4974
70	SIX (* 1–33)	21	.....	1	448 8770
71/	SIX	21	.....	1	448 8770
67/	V8	31	.....	1	320 6690

1.152–2 SEAL, Engine Oil Pan To Bearing Cap Oil

67/	SIX	*(Use 317 7635)*	.....	1	317 2071
67/	V8		.....	1	317 7635

1.152–3 SEAL, Engine Oil Pan To Timing Case Cover

67/	SIX		.....	1	317 2848
67/	V8		.....	1	318 0414

1.154–1 PUMP ASSEMBLY, Engine Oil (Incl. Body, Shafts And Gears)

67/69	SIX	45	.....	1	317 3403
70	SIX	*(Use 321 5339)*	.....	1	448 8547
71/	SIX	45	.....	1	321 5339

1.154–2 ATTACHING PARTS, Pump To Cylinder Block

BOLT, Hexagon	67/69	SIX (7/8" Long)	17.038	1	G179817 NA
BOLT, Hexagon	70/	SIX (7/8" Long)	17.038	1	G180078 NA
BOLT, Hexagon	67/	SIX (2-1/2" Long)	17.038	1	G179828 NA
WASHER, Lock	67/69	SIX	17.820	2	G103320 NA
WASHER, Lock	70/	SIX	17.820	2	G120214

1.154–3 PIN, Oil Pump To Cylinder Block Dowel

67/	SIX		.....	1	317 3090

1.155 GASKET, Engine Oil Pump To Cylinder Block

67/	SIX		.....	1	317 2332

1.157–1 GEAR, Engine Oil Pump Idler

67/	SIX		.....	1	317 2333
67/	V8	*(Use 319 6842)*	.....	1	318 2914

1.157–2 SHAFT, Engine Oil Pump Idler Gear

67/	SIX		.....	1	317 1956
67/	V8		.....	1	318 0209

ENGINE

1.161 SHAFT, Engine Oil Pump Drive (Incl. Drive Gear)

67/	SIX	.....	1	317 2334	
67/	V8	.....	1	318 2698	

1.164–1 COVER, Engine Oil Pump

67/	SIX	.....	1	317 2336	
67/70	01–30–50–70–80 (V8)	.....	1	318 4086	
67	10 (LHD–290)(LHD–304)(343)(360)(390)	.....	1	318 4086	
71/	V8	.....	1	318 4086	
67/70	***10 (RHD-290)(RHD-304)***	.....	1	318 7222	

1.164–2 ATTACHING PARTS, Cover To Pump

BOLT, Hexagon	67/	SIX	.....	4	400 1730	

1.164–3 ATTACHING PARTS, Cover To Timing Case Cover

BOLT, Hexagon	67/70	01–30–50–70–80 (V8)	17.038	7	G179796	NA
BOLT, Hexagon	67/70	10 (LHD–290)(LHD–304)(343)(360)(390)	17.038	7	G179796	NA
BOLT, Hexagon	71/	V8	17.038	7	G179796	NA
***BOLT, Hexagon	***67/70***	***10 (RHD-290-7/8" Long)(RHD-304-7/8" Long)***	17.038	4	G179796	NA
***BOLT, Hexagon	***67/70***	***10 (RHD-290-1-1/2" Long)(RHD-304-1-1/2" Long)***	17.038	1	G180034	NA
***BOLT, Hexagon	***67/70***	***10 (RHD-290-1-1/4" Long)(RHD-304-1-1/4" Long)***	17.038	2	G180024	
WASHER, Lock	67/	V8	17.820	7	G120380	NA

1.165 GASKET, Engine Oil Pump Cover

67/	SIX	.....	1	317 2337	
67/	V8	.....	1	318 0448	

1.167–1 TUBE, Engine Oil Pump Inlet

67/70	SIX...(Incl. Screen And Retainer)	.....	1	317 7070	
71/	SIX...(Incl. Screen And Retainer)	.....	1	321 5338	
67/68	V8...(Incl. Screen, Retainer And Spacer) 11	.....	1	318 5210	
69/71	V8...(Incl. Screen, Retainer And Spacer)	.....	1	319 5254	
72	V8...(Incl. Screen Retainer And Spacer)	.....	1	321 6049	

1.167–2 SPACER, Engine Oil Pump Inlet Tube Screen To Oil Pan

67/	V8	.....	1	316 7541	

1.176–1 PLUNGER, Engine Oil Pump Release Valve

67/71	SIX ***(Use 318 8661)***	.....	1	317 1951	
67/71	V8 ***(Use 318 8661)***	.....	1	318 1712	
72		.....	1	318 8661	

1.176–2 SPRING, Engine Oil Pump Release Valve

67/69	SIX	.....	1	317 1954	
67/69	01–30–50–70–80 (V8)	.....	1	317 1954	
67/69	10 (LHD–290)(343)(390)	.....	1	317 1954	
71/		.....	1	321 1034	
70	***V8 (RHD-Except 10)***	.....	1	321 1034	
67/70	***10 (RHD-V8)***	.....	1	318 9068	

Printed in U.S.A.

ENGINE

1.176–3 PIN, Engine Oil Pump Release Valve Spring Retainer Cotter

67/	SIX	17.460	1	G108635 NA

1.178–1 CAP, Engine Oil Pump Release Valve Spring

67/	SIX	.....	1	317 1958
67/70	01-30-50-70-80 (V8)	.....	1	312 4735
67/70	10 (LHD-290) (LHD-304) (343) (360) (390)	.....	1	312 4735
71/	V8	.....	1	312 4735
67/70	***10 (RHD-290)(RHD-304)***	.....	2	312 4735

1.178–2 GASKET, Engine Oil Pump Release Valve Spring Cap

67/70	01-30-50-70-80 (V8)	.....	1	310 5561
67/70	10 (LHD-290) (LHD-304) (343) (360) (390)	.....	1	310 5561
71/	V8	.....	1	310 5561
67/70	***10 (RHD-290)(RHD-304)***	.....	2	310 5561

1.185 PLUG, Oil Channel

67/69	SIX	17.490	2	G444782 NA
70/	SIX	17.516	2	G444660 NA
67/	V8	17.516	6	G444660 NA

1.187–1 GAUGE, Oil Level (Dip Stick)

67/	SIX	.....	1	317 3366
67	V8 (* 1-7)	.....	1	318 0486
67	V8 (* 1-8)	.....	1	319 0847
68/	V8	.....	1	319 0847

1.187–2 TUBE, Oil Level Gauge

67/	SIX	.....	1	317 6846
67	V8 (* 1-7)	.....	1	318 2075
67	V8 (* 1-8)	.....	1	319 0848
68/	V8	.....	1	319 0848

1.187–3 SEAL, Oil Level Gauge Tube

67/71	V8	.....	1	318 6928

1.187–4 BRACKET, Oil Level Indicator Tube Support

71	V8 (Spark Plug Shield Type Support)	3.001	1	318 2479
71/	V8 (Rocker Arm Cover Hold-Down Type Support)	.....	1	321 5161

1.198–1 HOSE, Oil Filter

67/70	***RHD (290)(304)***	.....	2	318 7220

1.198–2 ELBOW, Oil Filter Inlet Hose

67/70	***RHD (290)(304)***	17.218	1	G137425

1.198–3 ELBOW, Oil Filter Outlet Hose

67/70	***RHD (290)(304)***	.....	1	318 9264

ENGINE

1.198–4 NIPPLE, Oil Filter Outlet Hose Elbow To Oil Pump Cover

67/70	*RHD (290)(304)*	17.392	1	G120285

1.206–1 ELEMENT, Oil Filter

67/	24	.....	1	899 1072

1.206–2 GASKET, Oil Filter Element

67/	(Used With Purolator Oil Filter Element)(2-5/8" O. D. x 3/8" Thick)	.....	1	320 6952
67/	(Used With Walker Oil Filter Element)(2-3/4" O. D. x 3/16" Thick)	.....	1	320 6276
67/	(Used With Fram Oil Filter Element)(2-3/4" O. D. x 13/16" Thick)	.....	1	320 8320

1.208–1 ADAPTER, Oil Filter

67/70	*10 (RHD-290)(RHD-304)*	.....	1	320 6137

1.208–2 ATTACHING PARTS, Adapter To Alternator Bracket

BOLT, Slotted	***67/70***	***RHD (290)(304)***	17.040	3	G175188 NA
WASHER, Plain	***67/70***	***RHD (290)(304)***	17.814	3	400 1091
WASHER, Lock	***67/70***	***RHD (290)(304)***	17.820	3	G120214

1.208–3 GASKET, Oil Filter Adapter

67/70	*RHD (290)(304)*	.....	1	316 0077

1.215 VALVE, Oil Filter By-Pass

67/	SIX	.....	1	317 3203
67/70	01-30-50-70-80 (V8)	.....	1	317 3203
67/70	10 (LHD-290) (LHD-304) (343) (360) (390)	.....	1	317 3203
71/	V8	.....	1	317 3203

1.217 SPRING, Oil Filter By-Pass Valve

67/	SIX	.....	1	317 3224
67/70	01-30-50-70-80 (V8)	.....	1	317 3224
67/70	10 (LHD-290) (LHD-304) (343) (360) (390)	.....	1	317 3224
71/	V8	.....	1	317 3224

1.220 RETAINER, Oil Filter By-Pass Valve

67/	SIX	.....	1	317 3225
67/70	01-30-50-70-80 (V8)	.....	1	317 3225
67/70	10 (LHD-290) (LHD-304) (343) (360) (390)	.....	1	317 3225
71/	V8	.....	1	317 3225

1.223 CONNECTOR, Oil Filter By-Pass

67/	SIX	.....	1	317 3226
67/70	01-30-50-70-80 (V8)	.....	1	317 3226
67/70	10 (LHD-290) (LHD-304) (343) (360) (390)	.....	1	317 3226
71/	V8	.....	1	317 3226

71	10 (Used With Body Paint-B-9)	.....	1	363	2983
71	10 (Used With Body Paint-C-1)	.....	1	365	0921
71	10 (Used With Body Paint-P-1)	.....	1	363	2981
72	10 (Used With Body Paint-P-1)	.....	3	364	6081
72	10 (Used With Body Paint-A-1)	.....	3	364	6081
72	10 (Used With Body Paint-B-4)	.....	3	364	6081
72	10 (Used With Body Paint-C-4)	.....	3	364	6084
72	10 (Used With Body Paint-C-5)	.....	3	364	6085
72	10 (Used With Body Paint-C-8)	.....	3	364	6086
72	10 (Used With Body Paint-C-9)	.....	3	364	6087
72	10 (Used With Body Paint-D-1)	.....	3	364	6081
72	10 (Used With Body Paint-D-2)	.....	3	364	6081
72	10 (Used With Body Paint-D-3)	.....	3	364	6090
72	10 (Used With Body Paint-D-4)	.....	3	364	6091
72	10 (Used With Body Paint-D-6)	.....	3	364	6081
72	10 (Used With Body Paint-D-7)	.....	3	364	6093
72	10 (Used With Body Paint-D-8)	.....	3	364	6094

2.062–1 BAFFLE, Radiator Air (Lower) (Refer Group 20.115–2)

2.062–2 SEAL, Lower Air Baffle

67/69	01 (WAC)	.....	1	356	2979
67/	10 (WAC)	.....	1	348	2431
68/	30-70 (WAC)	.....	1	348	2431
67/70	50-80 (WAC)	.....	1	318	5463
71/	80 (WAC)	.....	1	348	2430

2.062–3 ATTACHING PARTS, Seal To Lower Air Baffle

CLIP, Fastening	67/69	WAC	12.022	5	400	0085
CLIP, Fastening	68/	30-70 (WAC)	12.022	4	400	0085
CLIP, Fastening	70/	10-80 (WAC)	.....	5	400	3073

2.062–4 SEAL, Lower Baffle To Bumper Rail

67/69	01 (WAC)	.....	1	350	0197

2.062–5 ATTACHING PARTS, Seal To Bumper Rail

CLIP, Fastening	67/69	01 (WAC)	12.022	6	400	0085

2.062–6 BAFFLE, Radiator Air (Upper) (Refer Group 20.115–1)

2.062-8 EXTENSION, Radiator Upper Baffle

67/	01-40 (LAC)	.....	1	318 6383
67/70	10...(Incl. Seal) 60	.....	1	318 6411
71/	10...(Incl. Seal)	.....	1	321 1356
68/	30-70...(Incl. Seal) 60	.....	1	319 0426
67/68	50-80 (WAC)...(Incl. Seal) 70	.....	1	318 6412
69/	80...(Incl. Seal)	.....	1	361 4937

2.062-9 ATTACHING PARTS, Extension To Upper Baffle

SCREW, Tapping.....	67/70	01-40	12.060	4	400 0734
SCREW, Tapping.....	71/	01-40	15.320	4	400 2309
SCREW, Tapping.....	67/68	10 (WAC) ***(Use 318 9013)***	17.671	3	400 0478
SCREW, Tapping.....	69/70	10	2.050	5	400 2331
SCREW, Tapping.....	68	30-70 (WAC) ***(Use 318 9013)***	17.671	2	400 0478
SCREW, Tapping.....	69/70	30-70	2.050	4	400 2331
SCREW, Tapping.....	71	70	2.013	4	318 9013
SCREW, Tapping.....	67/68	50-80 (WAC)	17.671	5	400 2334
SCREW, Tapping.....	69/70	80	2.050	2	400 2331
SCREW, Tapping.....	71	10-80	2.013	6	318 9013
SCREW, Tapping.....	72	10-70-80	.....	AR	400 1042

2.062-10 ATTACHING PARTS, Extension To Radiator Support

SCREW, Tapping.....	67/68	10-30-50-70-80 (WAC) ***(Use 318 9013)***	17.671	2	400 0478
SCREW, Tapping.....	69/70	10-30-70-80 (WAC)	2.050	2	400 2331

2.062-11 SEAL, Upper Air Baffle

67/68	10-50 (WAC)	.....	1	318 5463
69/70	10 (WAC)	.....	1	318 5463
71	10-80 (WAC-Front)	.....	1	361 4934
71	10-80 (WAC-Rear)	.....	1	318 5463
68/	30-70 (WAC)	.....	1	318 5463
67/68	80 (WAC)	.....	1	318 5463
69/70	80 (WAC-Front)	.....	1	361 4934
69/70	80 (WAC-Rear)	.....	1	318 5463

2.062-14 FILLER, Radiator Side Baffle

/69	(Left) 01 (WAC)	.....	1	355 4475
69	(Right) 01 (WAC)	.....	1	355 4474

2.062-15 ATTACHING PARTS, Filler To Side Baffle

SCREW, Tapping.....	67/69	01 (WAC)	17.671	4	320 9585

2.062-16 ATTACHING PARTS, Filler To Panel

SCREW, Tapping.....	67/69	01 (WAC)	17.671	4	320 9585

2.064-1 EXTENSION, Radiator Grille Upper Bracket

	(Left) 10 (WAC)	.....	1	318 7579
	(Left) 10 (WAC)	.....	1	319 1031
	(Left) 10 (WAC)	.....	1	319 1031
	(Left) 50-80 (WAC)	.....	1	318 7577
	(Left) 80 (WAC)	.....	1	319 1033
	(Right) 10 (WAC)	.....	1	318 7580
	(Right) 10 (WAC)	.....	1	319 1032
	(Right) 10 (WAC)	.....	1	319 1032
	ght) 50-80 (WAC)	.....	1	
	ht) 80 (WAC)	.....		

COOLING - GRILLE

2.064–2 ATTACHING PARTS, Extension To Upper Baffle

SCREW, Tapping.....	67	10-50-80 (WAC).....	15.320	2	400 1701
SCREW, Tapping.....	67	10 (WAC)..... ***(Use 318 9013)***	17.671	2	400 0478
SCREW, Tapping.....	68	80 (WAC).....	17.671	2	400 2334

2.064–3 ATTACHING PARTS, Extension To Reinforcement

SCREW, Tapping.....	68	10 (WAC)..... ***(Use 318 9013)***	17.671	4	400 0478

2.064–4 ATTACHING PARTS, Extension To Inner Support

SCREW, Tapping.....	67/68	10-50-80 (WAC) ..... ***(Use 318 9013)***	17.671	2	400 0478

2.064–5 ATTACHING PARTS, Extension To Hood Lock Support

SCREW, Tapping.....	67/68	50-80 (WAC).....	17.671	2	320 9585

2.080–1 PUMP ASSEMBLY, Water

67	SIX..... ***(Use 320 9691)***	.....	1	~~320 7676~~
68/70	SIX..... 62	.....	1	320 9691
71	SIX (01-40-70-* 2-23)..... 62	.....	1	812 0129
71	SIX (01-40-70-* 2-24)..... 62	.....	1	812 0236
72	SIX (01-40-70)..... 62	.....	1	812 0236
71	SIX (10-80-Except 65 Amp. Alt. -* 2-23) 62	.....	1	812 0129
71	SIX (10-80-Except 65 Amp. Alt. -* 2-24)..... 62	.....	1	812 0236
72	SIX (10-80-Except 65 Amp. Alt.) 62	.....	1	812 0236
71/	SIX (10-80-65 Amp. Alt.) 62	.....	1	812 0129
67/68	V8 66	.....	1	**** 320969
69/70	V8 ..... ***(Use 812 0130)***	.....	1	448 5666
71/	V8 66	.....	1	812 0130

**** Measure the distance from the Water Pump Housing to the end of the shaft. If this distance is **1-1/2" LONG,** order Water Pump Assembly 448 5666. If this distance is **2-3/4" LONG,** order Water Pump Assembly 448 5666 **AND AN APPLICABLE ADAPTER KIT FROM THE LISTING BELOW:**

67/68	01 (LAC)(LHDC).....	448 5667
67/68	01 (WAC)(WHDC).....	448 5668
67/68	10-70.....	448 5669
67/68	80.....	448 5667

2.080–2 ATTACHING PARTS, Water Pump To Block

BOLT, Hexagon	67/69	01-70 (Six)	17.038	3	G180078 NA
BOLT, Hexagon	67/69	10-50-80 (Six-WSBD)	17.038	3	G180078 NA
BOLT, Hexagon	70/71	SIX.....	17.038	3	G180078 NA
BOLT, Hexagon	67/	(4-1/2" Long) V8 (LAC).....	17.038	2	G189295
BOLT, Hexagon	67/	(4-1/2" Long) V8 (WAC).....	17.038	1	G189295
BOLT, Hexagon	72	(7/8" Long) SIX	17.038	3	G180078 NA
BOLT, Hexagon	72	(1" Long) SIX	17.038	2	G180079 NA
BOLT, Hexagon	67/69	(4-7/8" Long) V8 (LHD).....	17.038	1	G274101
BOLT, Hexagon	70/	(4-7/8" Long) V8 (LHD-LAC).....	17.038	1	G274101
BOLT, Hexagon	67/	(4-3/4" Long) V8 (LAC)(LEEP)(LPS)	17.038	1	G454497
BOLT, Hexagon	67/	(6-3/8" Long) V8 (WAC)(WEEP)(WPS)	.....	1	318 5530
BOLT, Hexagon	69	(5-3/4" Long) V8 (LHD).....	17.038	1	G215511
BOLT, Hexagon	70/	(5-3/4" Long) V8 (LHD-WAC).....	17.038	1	G215511
***BOLT, Hexagon	67/70	(4-3/4" Long) V8 (RHD).....	17.038	1	G454497
STUD.....	67/	(5-13/16" Long) V8 (WAC).....	.....	1	400 1877
STUD.....	67/68	(5-1/2" Long) V8 (WAC).....	.....	1	400 1771
***STUD.....	67/68	(5-1/2" Long)(RHD).....	.....	1	400 1771

WASHER, Plain.....	67/	V8	17.814	1	400 1104	
WASHER, Plain.....	67/	V8 (WAC)(WEEP)(WPS).....	17.814	1	400 1161	
WASHER, Plain**.....**	***67/68***	***V8 (RHD-WAC)*****.....**	17.814	1	400 1102	
WASHER, Lock	67/69	01-70 (Six)	17.820	4	G120214	
WASHER, Lock	70/71	SIX	17.820	3	G120214	
WASHER, Lock	72	SIX	17.820	AR	G120214	
WASHER, Lock	67/69	10-50-80 (Six-WSBD)	17.820	3	G120214	
WASHER, Lock	67/69	V8	17.820	4	G120382	
WASHER, Lock.....	70/	V8	10.260	4	400 3803	
WASHER, Lock**.....**	***67/68***	***V8 (RHD-WAC)*****.....**	17.820	1	G120382	
NUT, Hexagon**.....**	***67/68***	***V8 (RHD-WAC)*****.....**	17.406	1	G120369	NA

2.080-3 ATTACHING PARTS, Water Pump To Engine Front Cover

BOLT, Hexagon	67/	(1-1/8" Long) V8.....	17.038	AR	G179798	NA
BOLT, Hexagon	67/	(2" Long) V8.....	17.038	1	G180044	
BOLT, Hexagon	67/	(2-1/4" long) V8.....	17.038	2	G180046	
STUD.....	69/	V8 (WAC)	.....	1	319 7013	
WASHER, Lock.....	67/	V8	17.820	7	G120380	NA

2.080-4 HOSE, Water Pump To Thermostat Housing By-Pass

67/	V8	.....	1	318 2494	

2.080-5 ATTACHING PARTS, Hose To Pump

CLAMP.....	67/	V8	17.108	1	320 3077	

2.080-6 ATTACHING PARTS, Hose To Thermostat Housing

CLAMP.....	67/	V8	17.108	1	320 3077	

2.080-7 CAP, Water Pump Body (Less Heater)

67/	.....	.....	1	316 0337	

2.080-8 ATTACHING PARTS, Body Cap To Water Pump (Less Heater)

CLAMP.....	67/	.....	17.108	1	320 3077	

2.098 GASKET, Water Pump

67/	SIX.....	.....	1	317 3204	
67/	V8	.....	1	318 1899	

2.100 THERMOSTAT KIT

67	(192-197 Deg.)...(Incl. Gasket)	.....	1	320 3275	
68/69	(192-197 Deg.) (Except Rogue)...(Incl. Gasket).....	.....	1	320 3275	
70	(192-197 Deg.) V8...(Incl. Gasket)	.....	1	320 3275	
71/	(195 Deg.) V8...(Incl. Gasket)	.....	1	448 8472	
68/69	(205 Deg.) (Rogue)...(Less Gasket)	.....	1	319 2166	
70	(205 Deg.) SIX...(Less Gasket).....	.....	1	319 2166	
71/	(205 Deg.) SIX...(Incl. Gasket).....	.....	1	448 8471	
67/69	***(150-155 Deg.) SIX (Heavy Duty)***...(Incl. Gasket).....	.....	1	320 3467	
70/	***(150-155 Deg.) SIX (Export)***...(Incl. Gasket)	.....	1	320 3467	
71/	***(170 Deg.) SIX (Export)***...(Incl. Gasket).....	.....	1	812 0502	

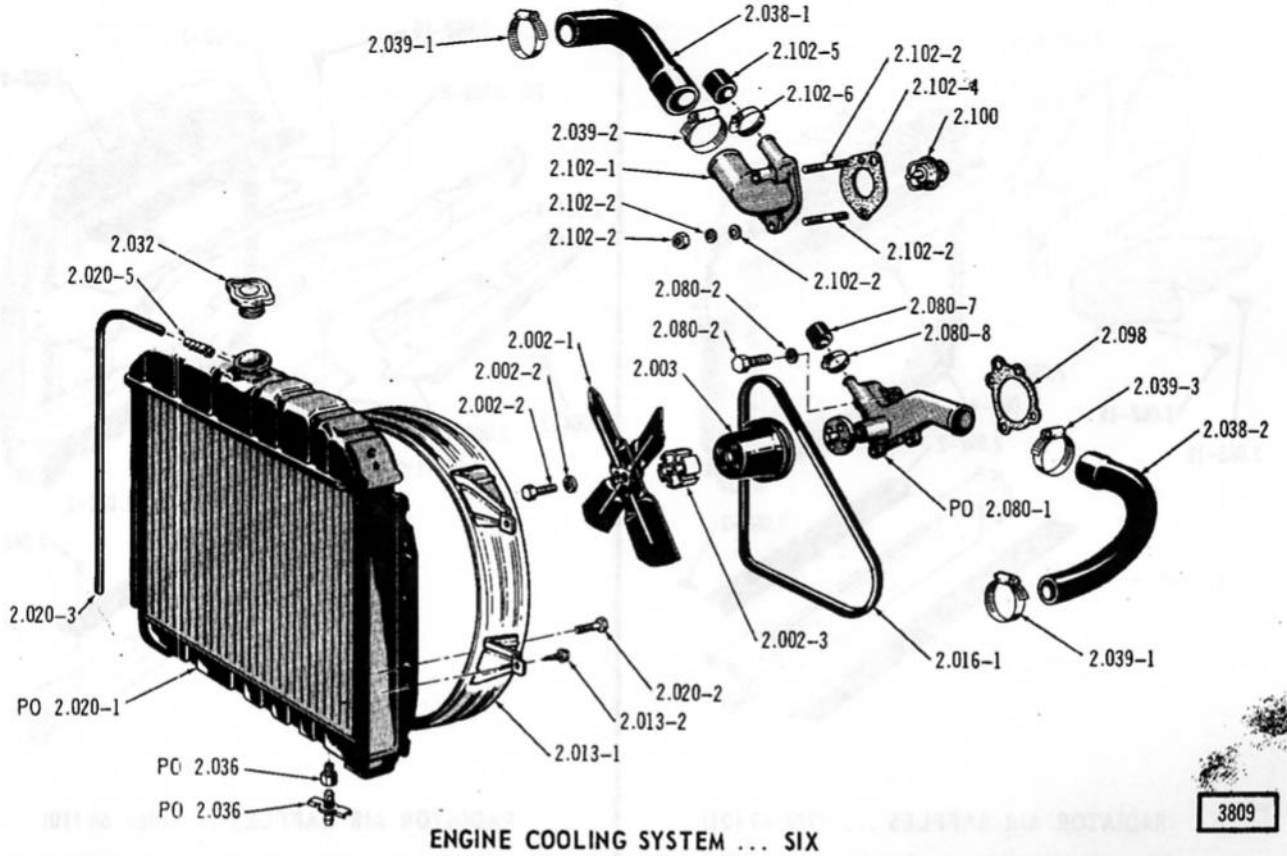

ENGINE COOLING SYSTEM ... SIX

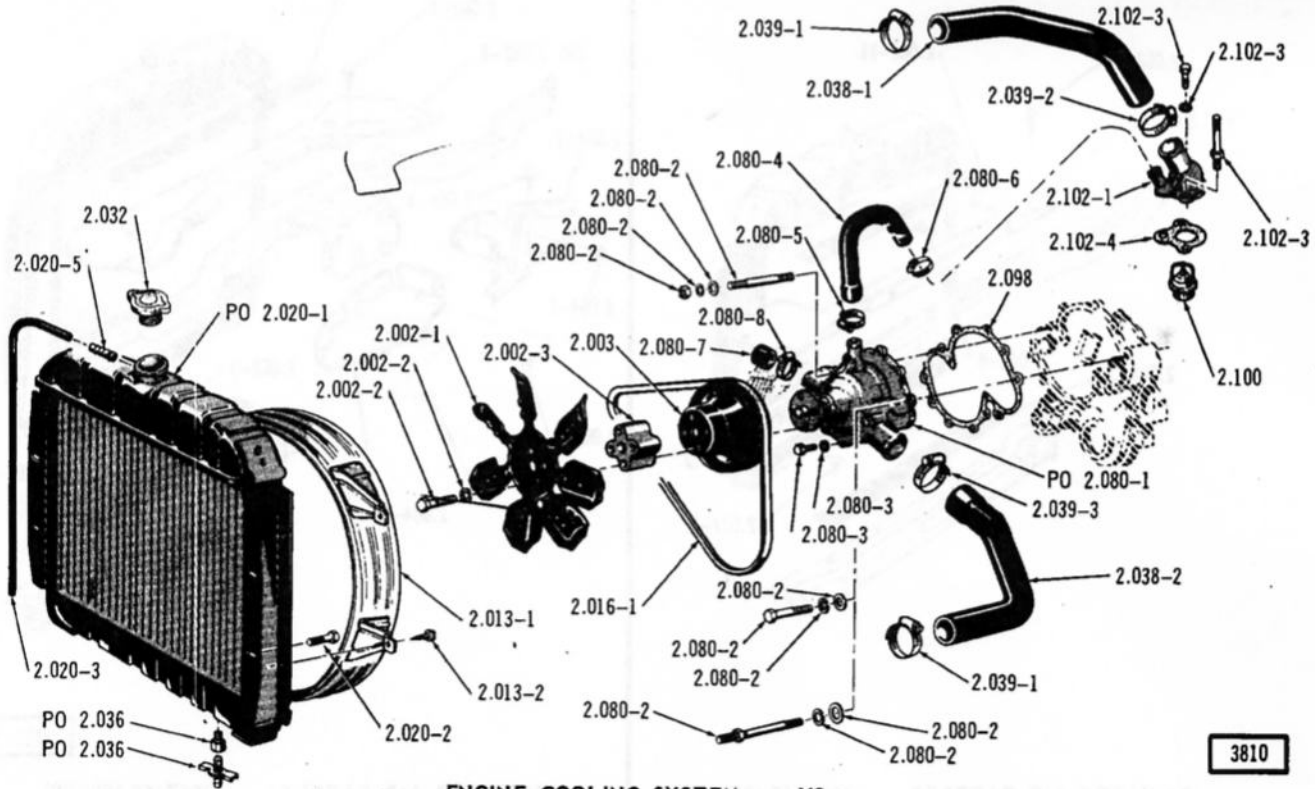

ENGINE COOLING SYSTEM ... V8

Printed in U.S.A.

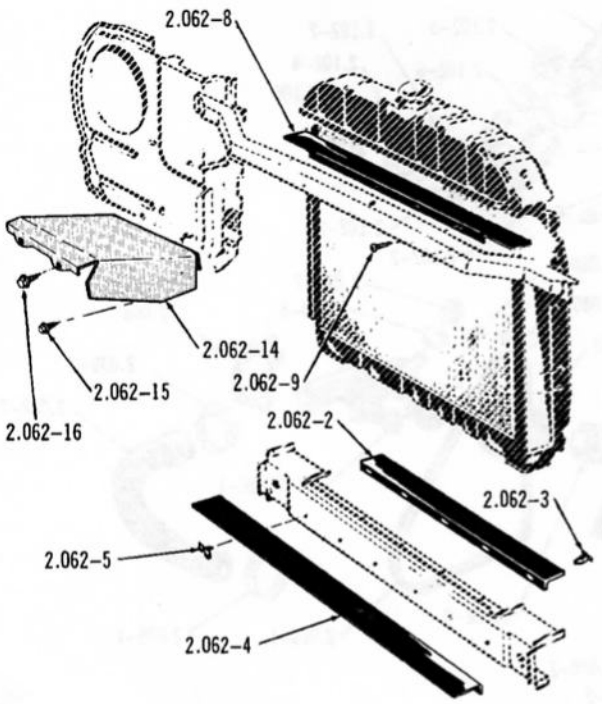

RADIATOR AIR BAFFLES ... 1967/69 (01)

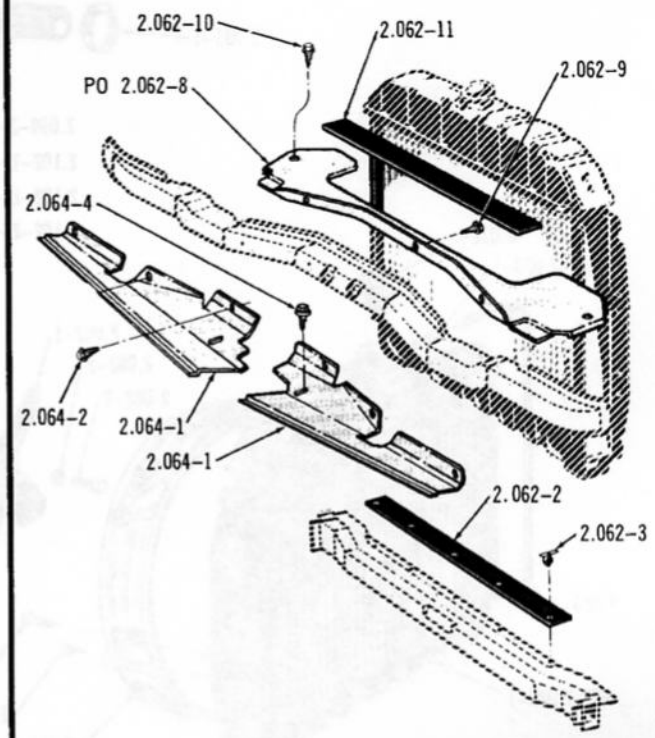

RADIATOR AIR BAFFLES ... 1967/68 (10)

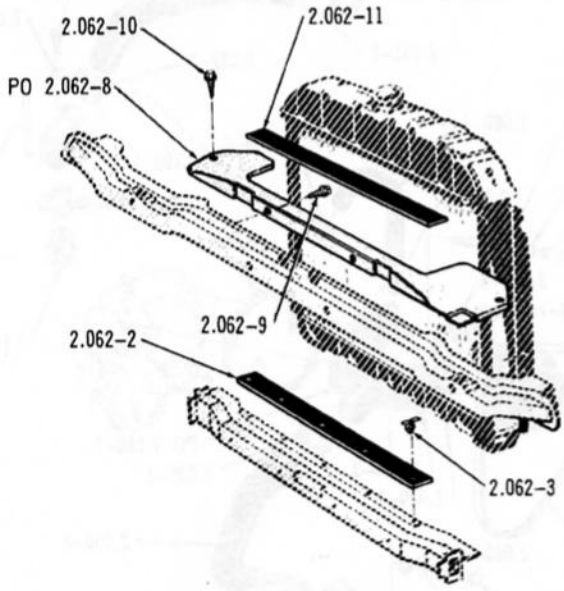

RADIATOR AIR BAFFLES ... 1968/69 (30) (70)

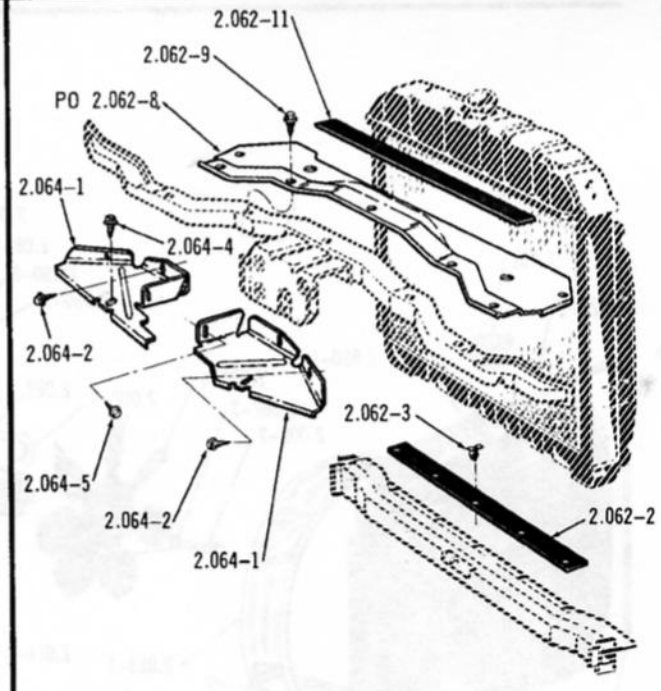

3811

RADIATOR AIR BAFFLES ... 1967/68 (50)(80)

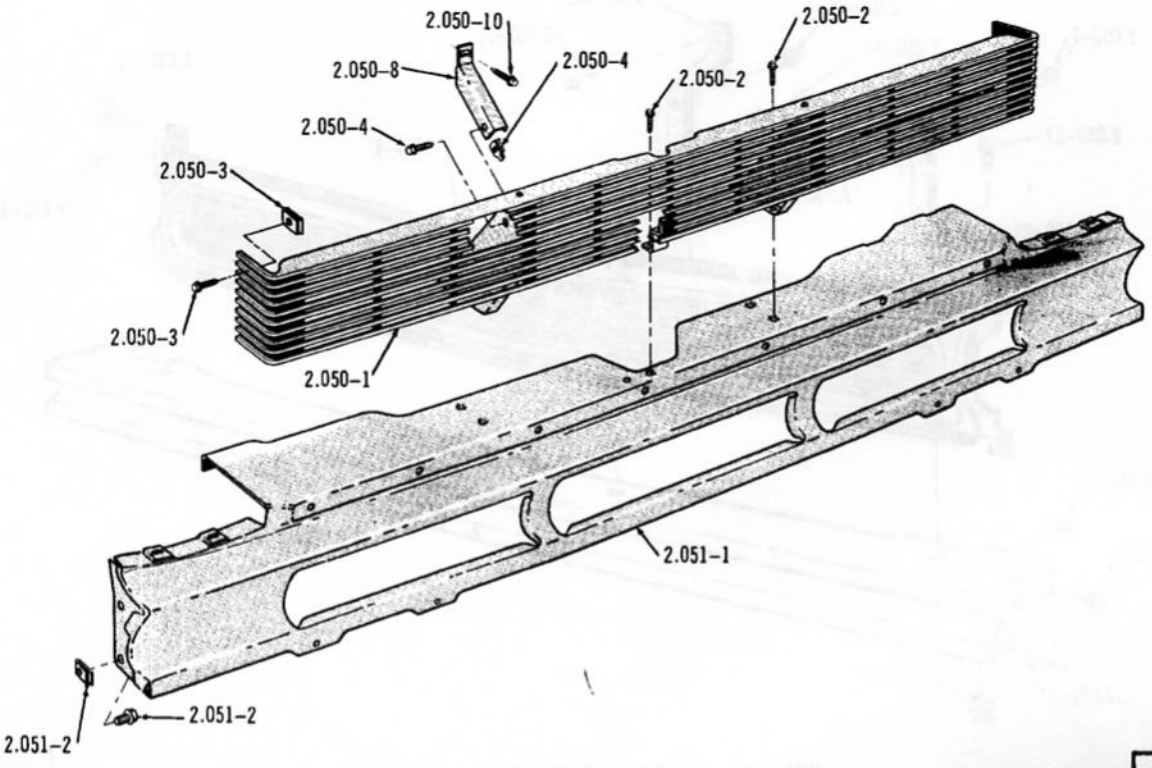

GRILLE AND GRILLE PANEL ... 1967/69 (01)

2855

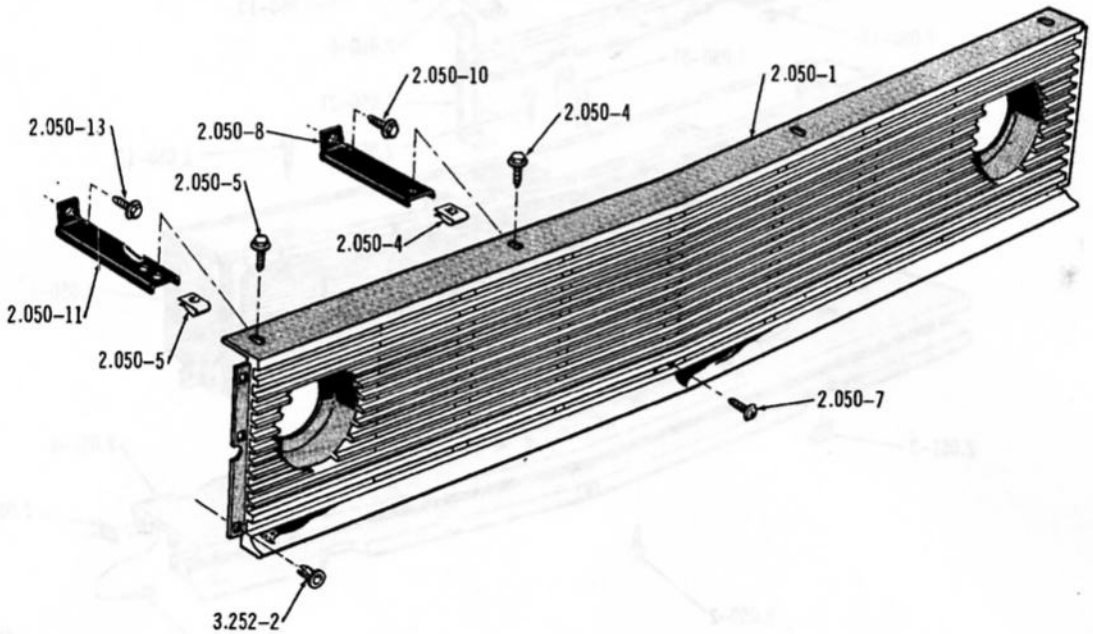

3807

GRILLE ... 1970/ (01)

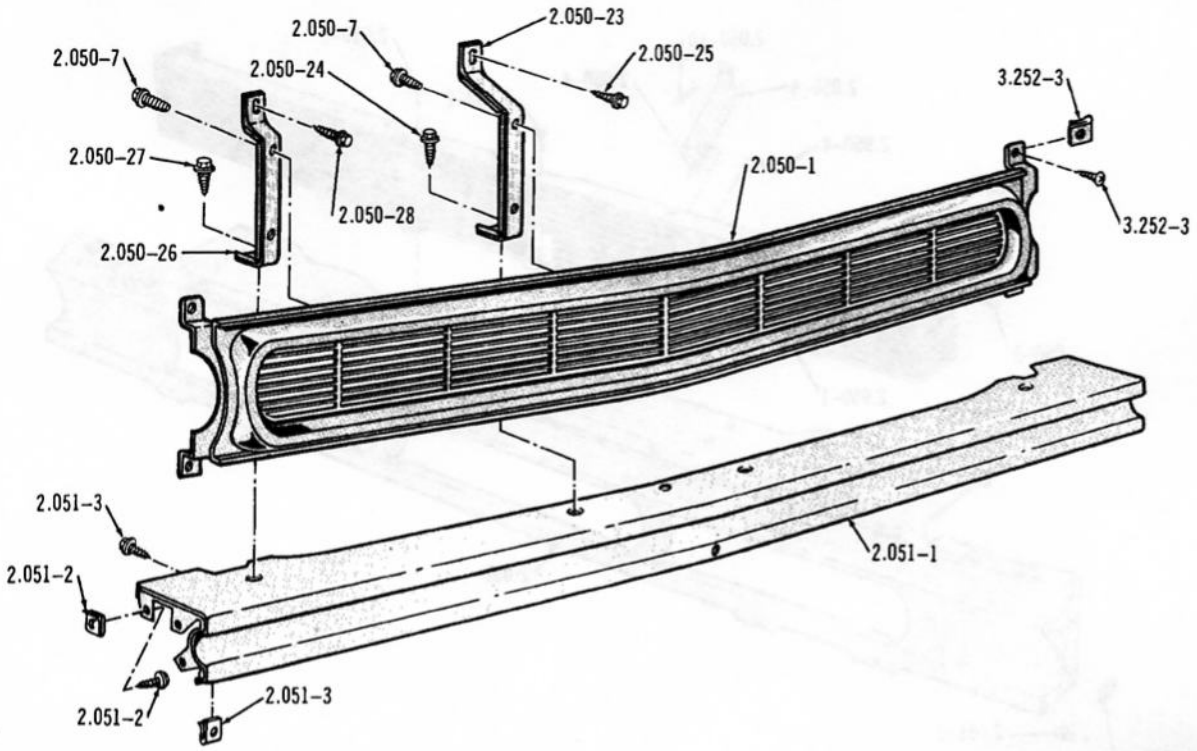

GRILLE AND GRILLE PANEL ... 1967 (10)

2856

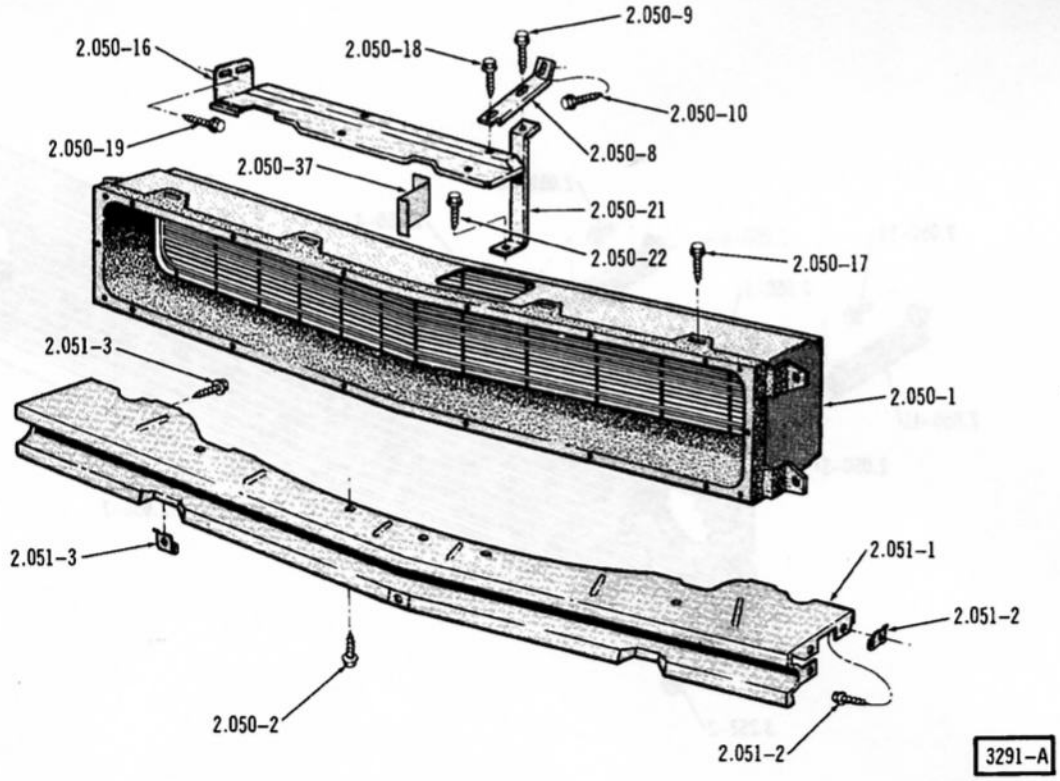

3291-A

GRILLE AND GRILLE PANEL ... 1968 (10)

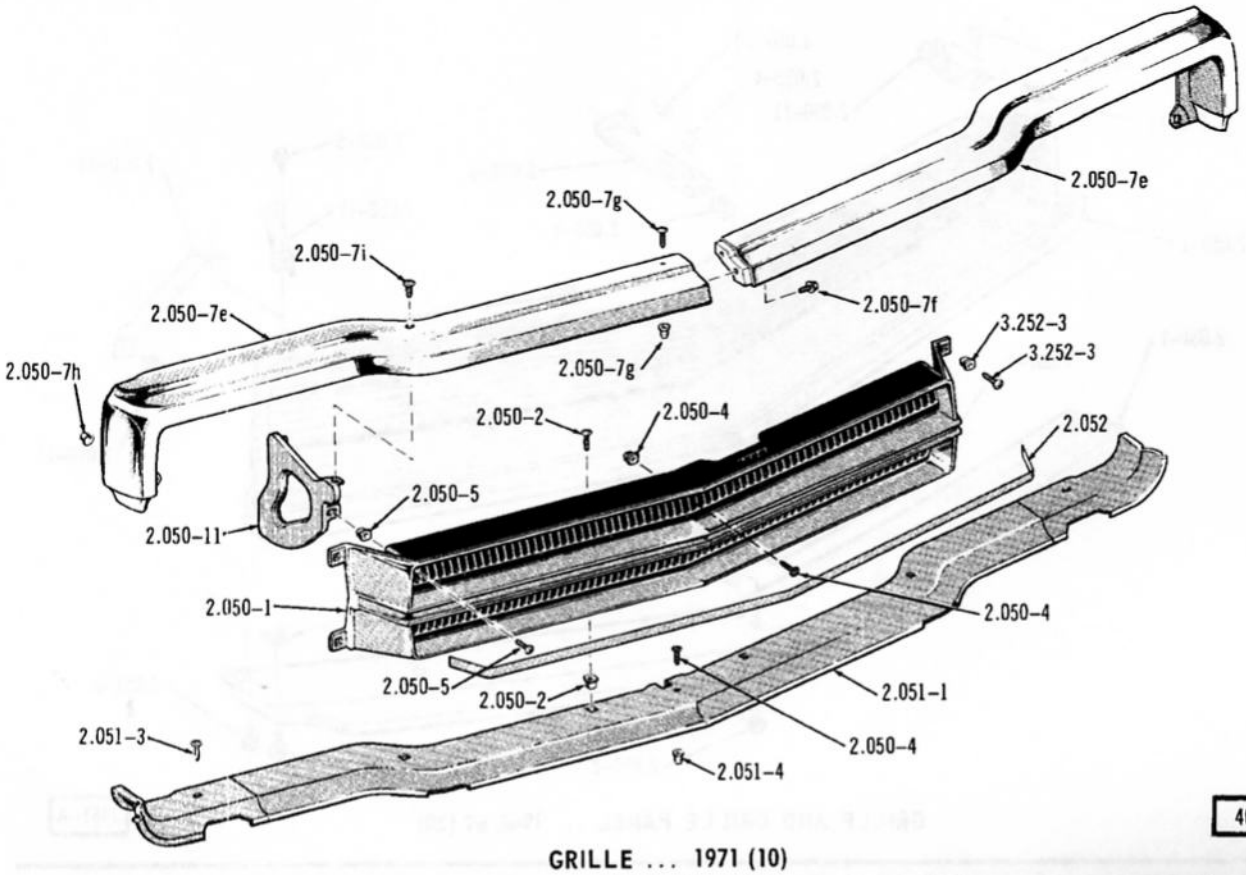

GRILLE ... 1971 (10)

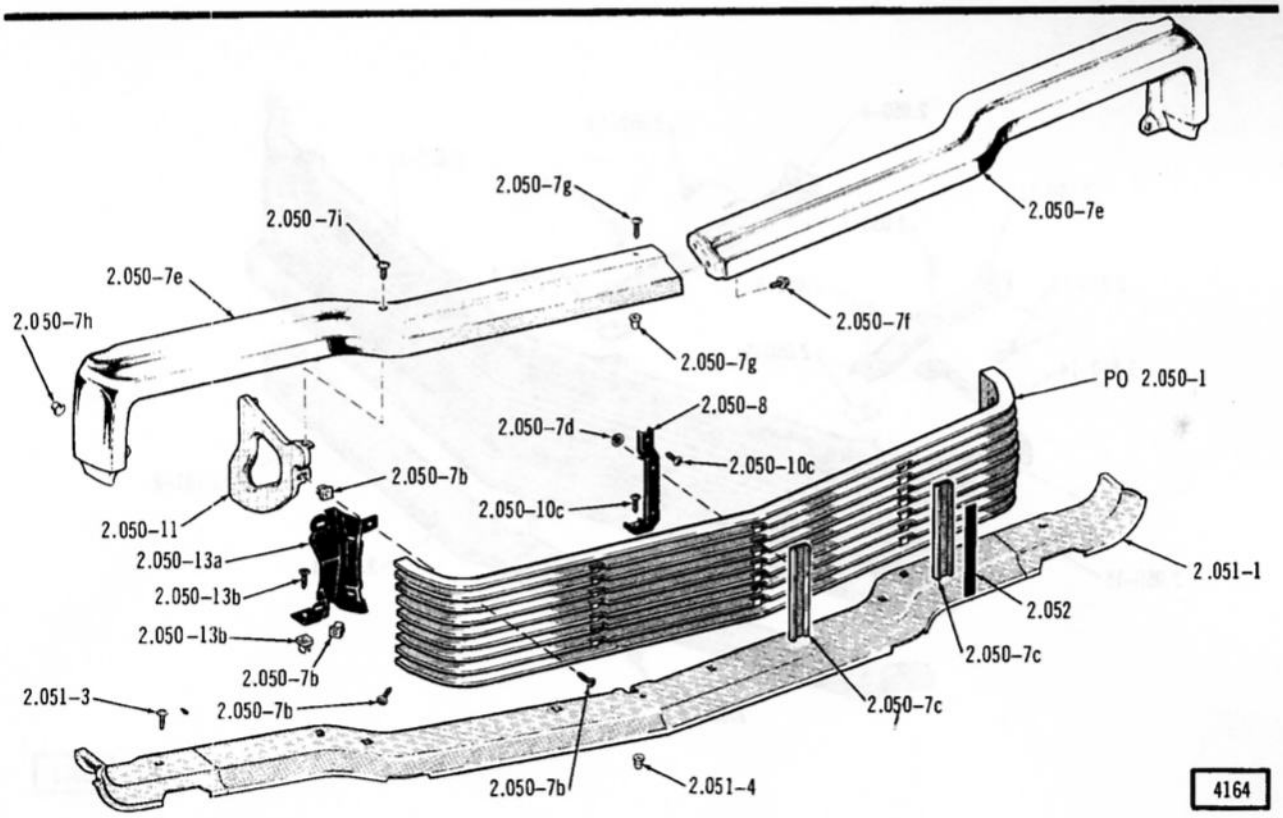

GRILLE . . . 1972 (10)

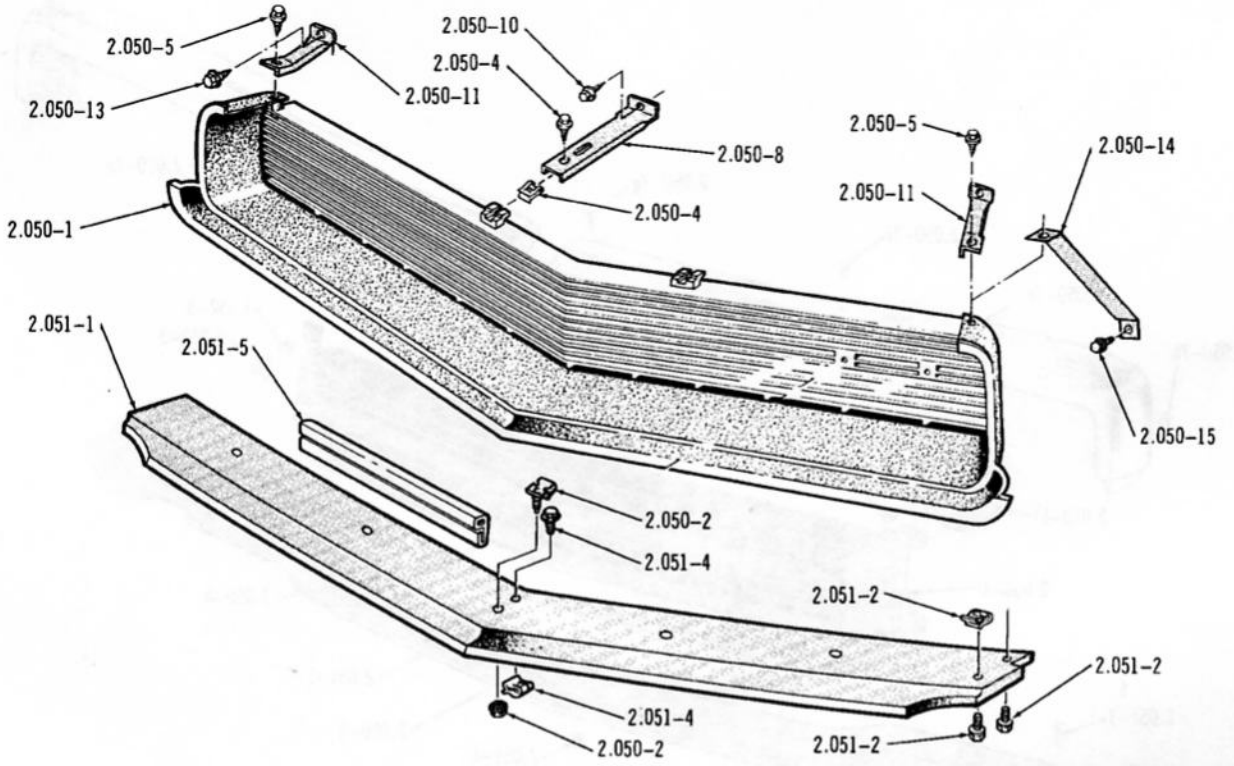

GRILLE AND GRILLE PANEL ... 1968/69 (30)

3461-A

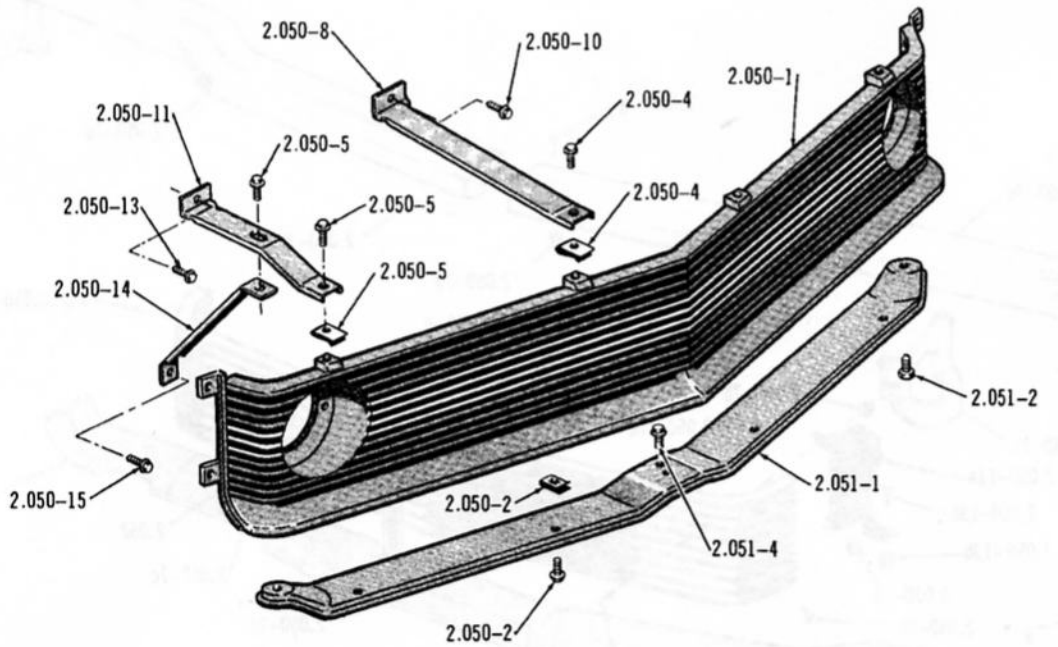

3813

GRILLE AND GRILLE PANEL ... 1970 (30)

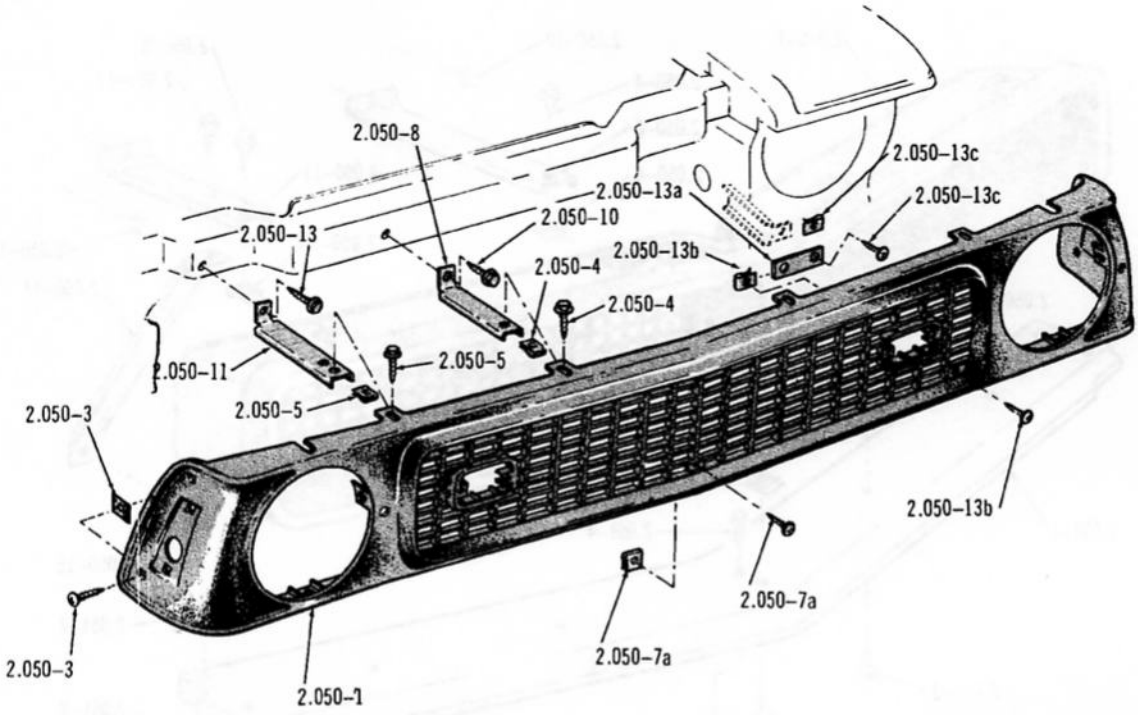

3937

GRILLE ... 40

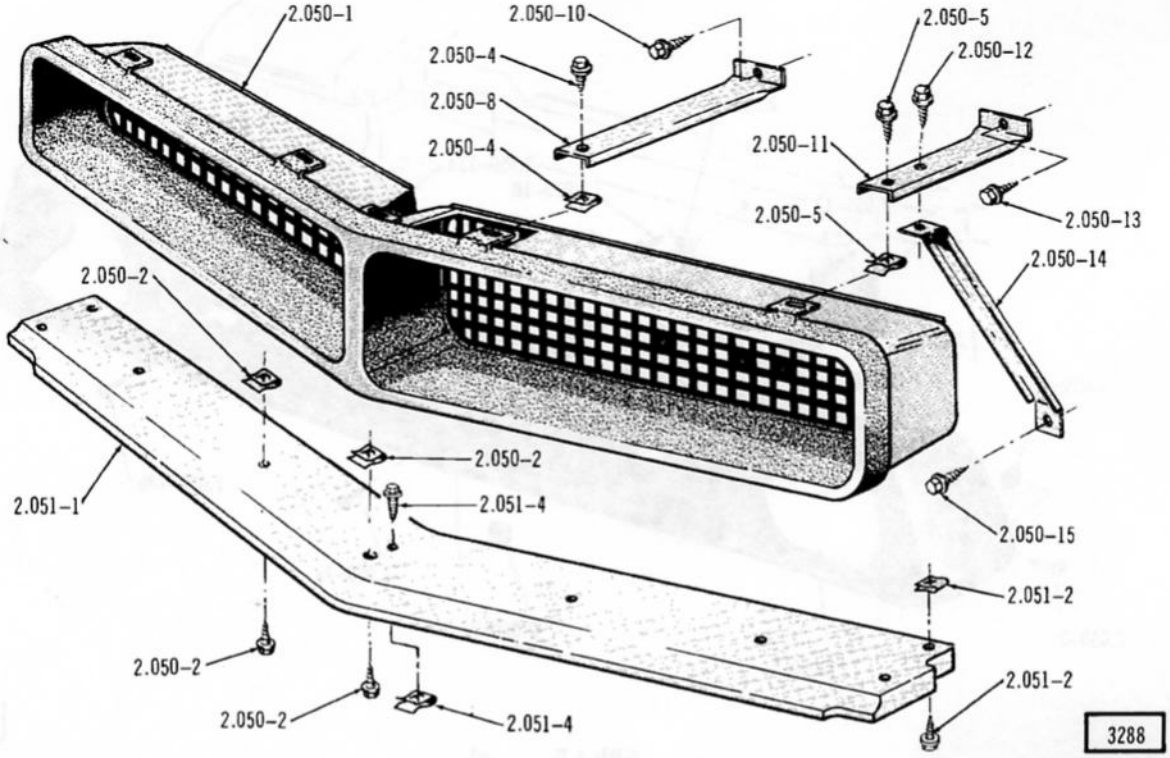

GRILLE AND GRILLE PANEL ... 1968/69 (70)

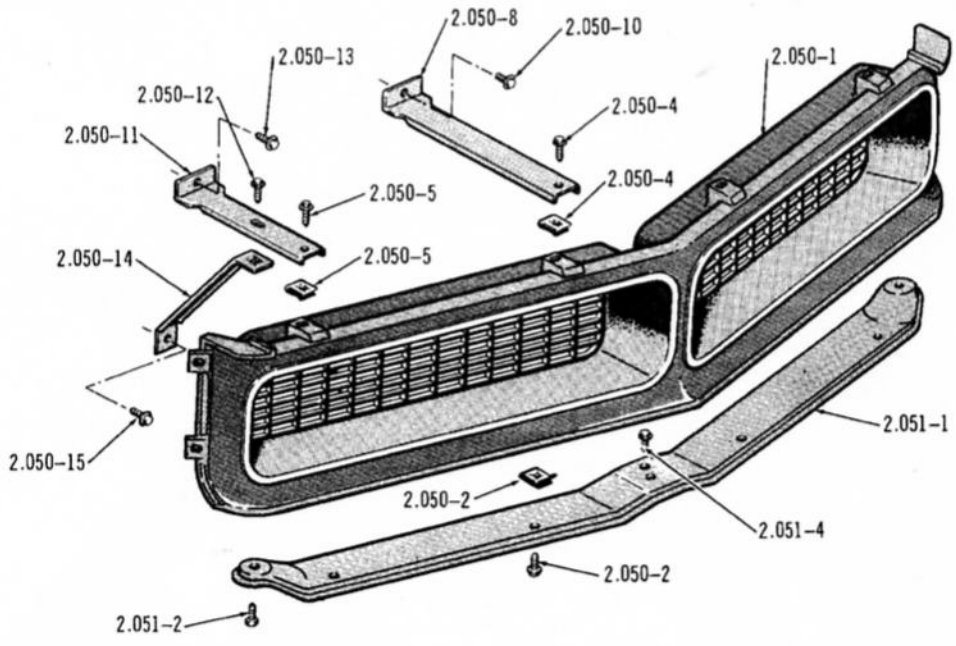

GRILLE AND GRILLE PANEL ... 1970 (70)

Printed in U.S.A.

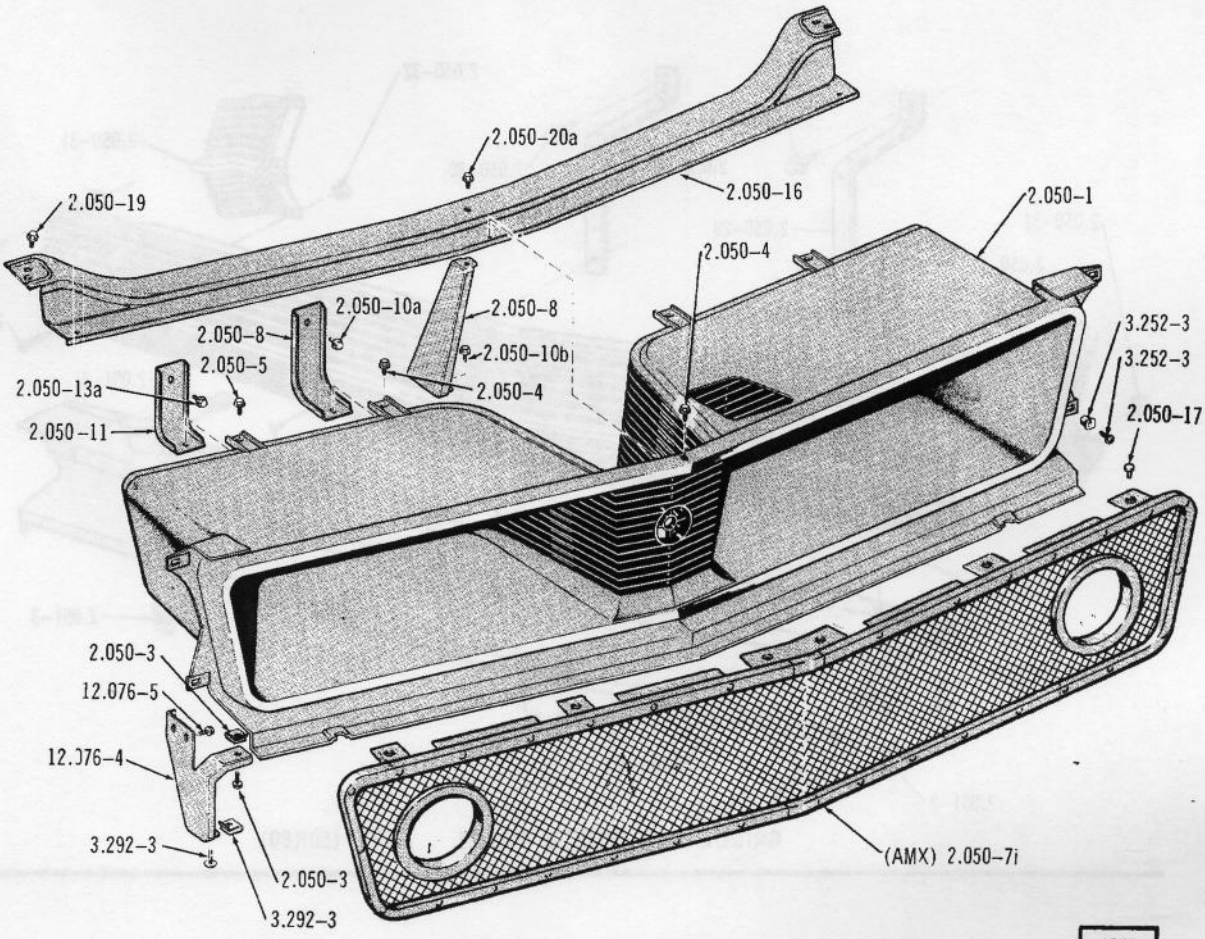

GRILLE . . . 1971 (70), 1972 (79-8)

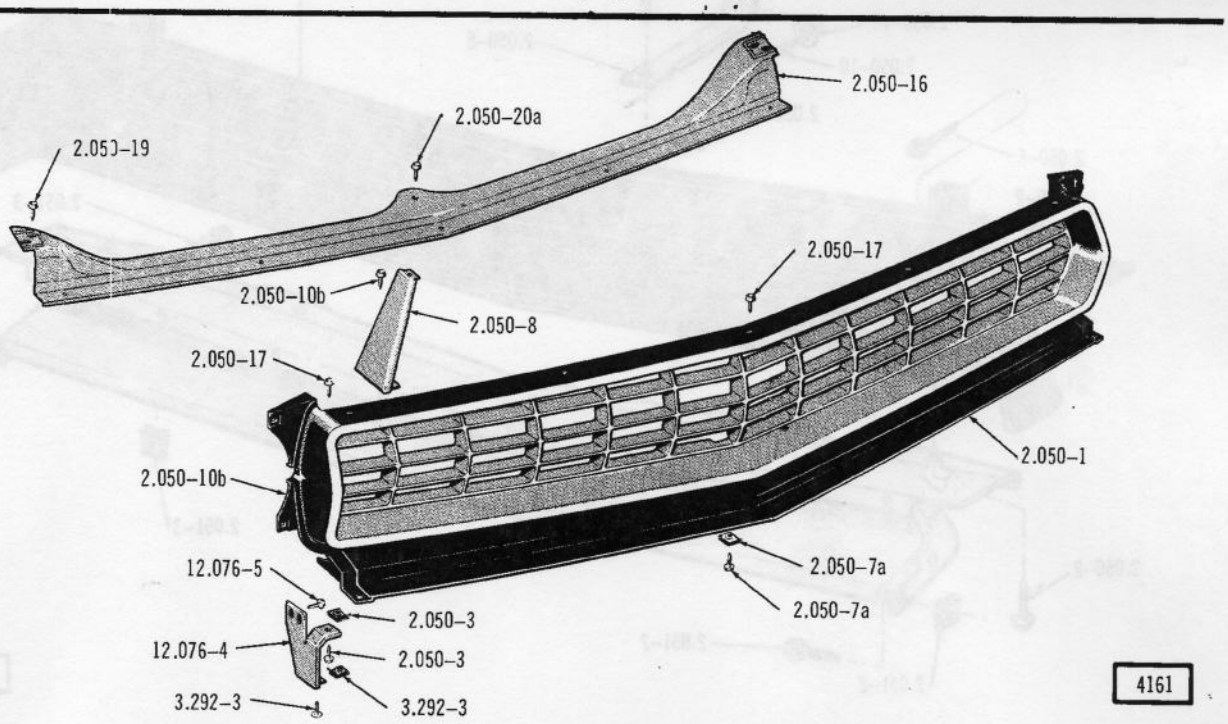

GRILLE . . . 1972 (79-7)

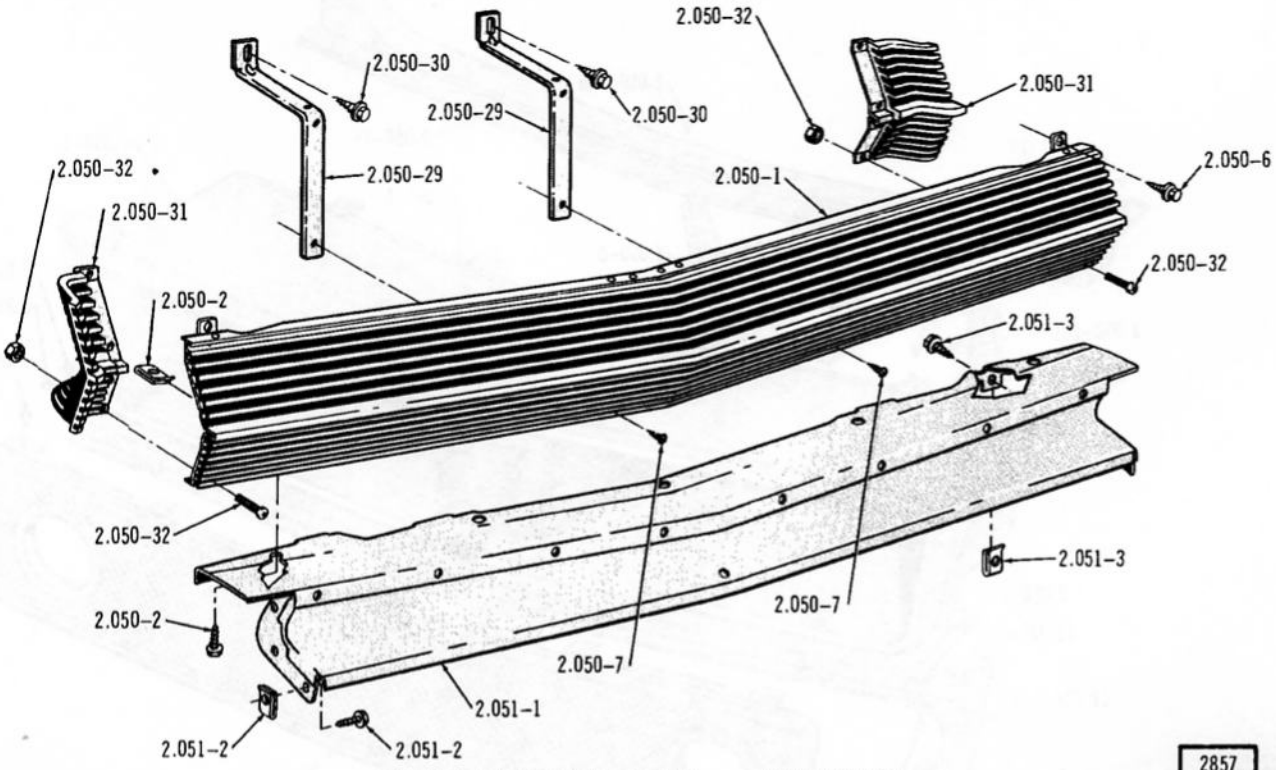

GRILLE AND GRILLE PANEL ... 1967 (50)(80)

2857

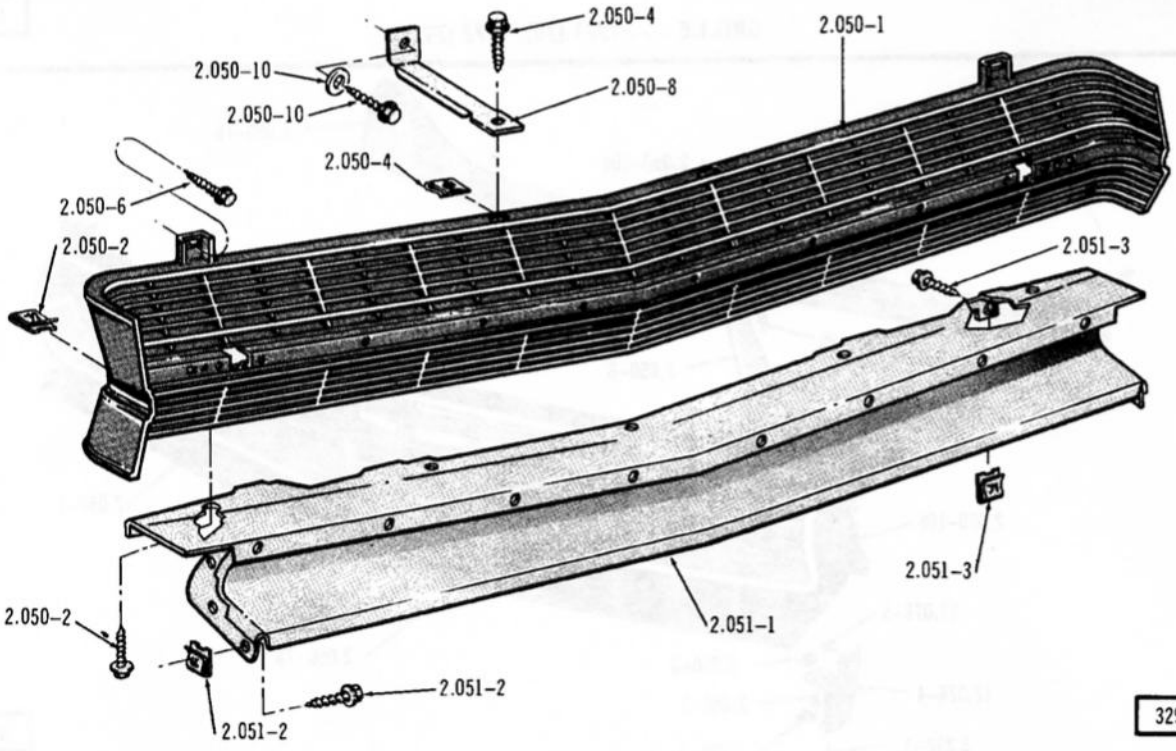

GRILLE AND GRILLE PANEL ... 1968 (80)

3292

Printed in U.S.A.

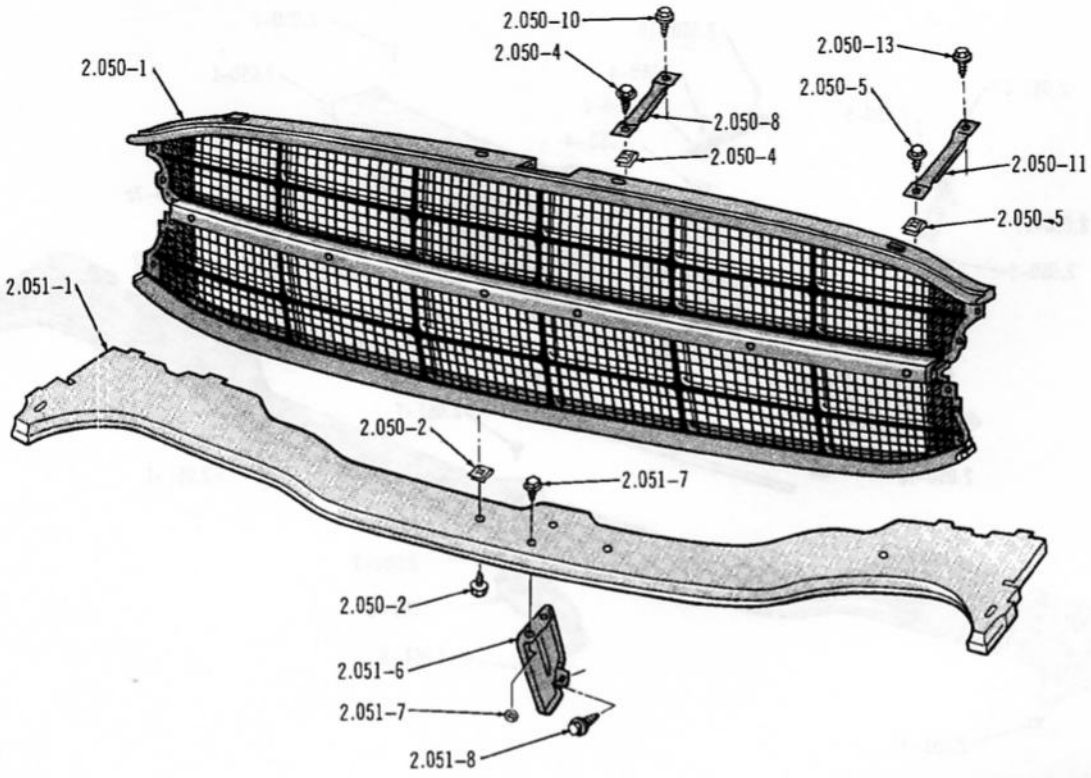

3527

GRILLE AND GRILLE PANEL ... 1969 (80)

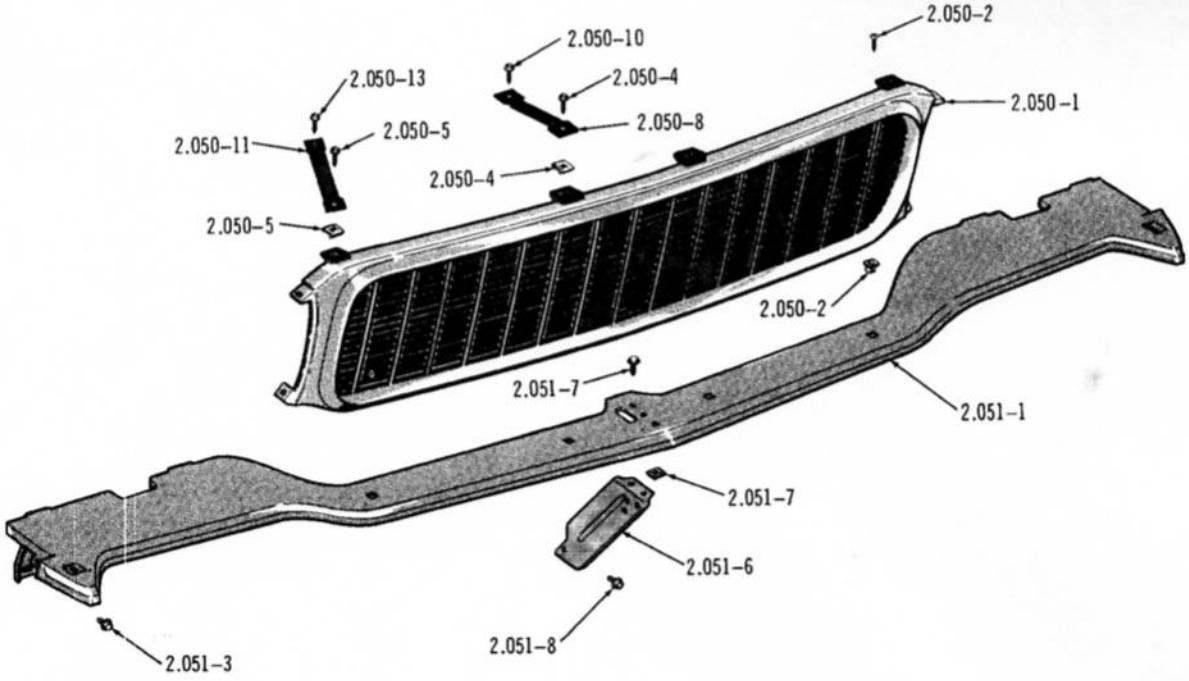

4160

GRILLE AND GRILLE PANEL . . . 1971 (80)

Printed in U.S.A.

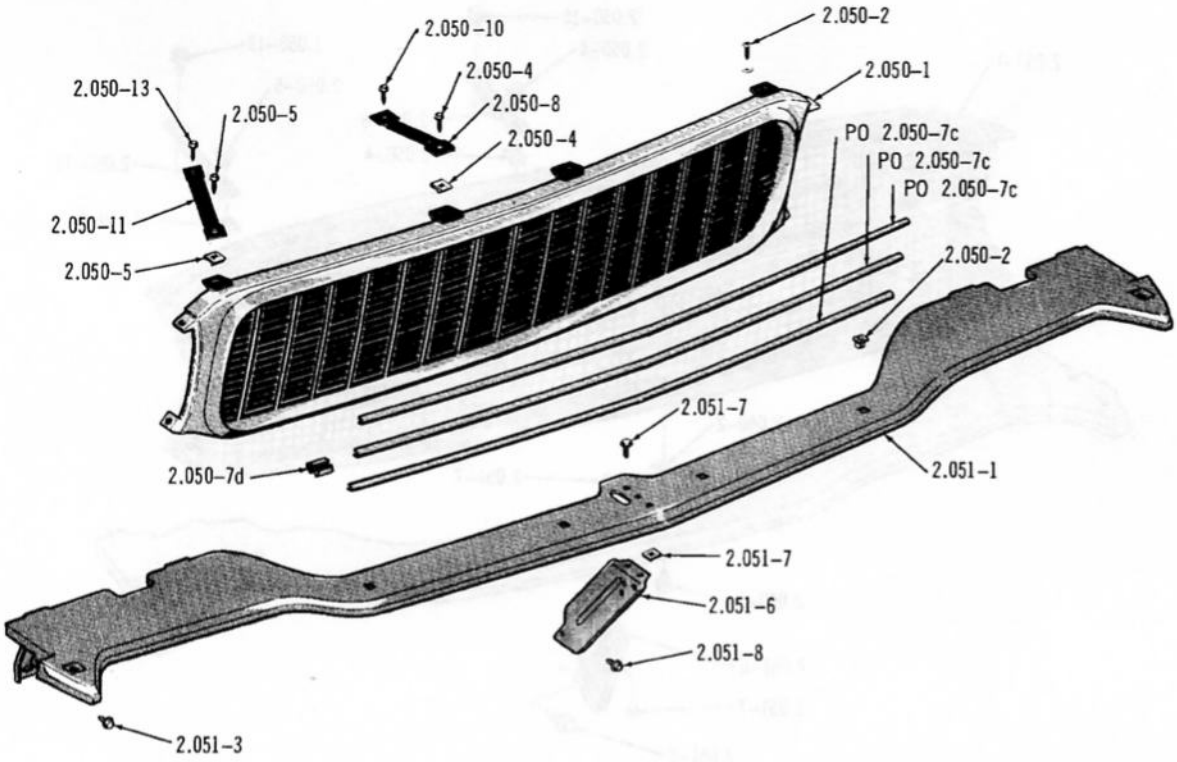

4163

GRILLE AND GRILLE PANEL . . . 1972 (80)

Printed in U.S.A.

SPECIAL INFORMATION

The Engine Build Code Number, Vehicle Identification Number and the information provided on the Unit Body Plate are often necessary when determining the proper replacement parts for your automobile. For their location refer to the General Information Section found at the front of this catalog.

NOTES

2–1 ..... Used on 67 10 (E/SST) Prior to Car Sequence No. WO25710 and E 018384 on Kenosha built cars and No. 702283 Brampton built cars.

2–2 ..... Used on 67 10 (SST) Prior to Car Sequence No. WO25101 and E 017711.

2–3 ..... Used on 67 10 (E/SST) Beginning with Car Sequence No. WO25710 and E 018384 on Kenosha built cars and No. 702283 Brampton built cars.

2–4 ..... Used on 67 10 (SST) Beginning with Car Sequence No. WO25101 and E 017711.

2–5 ..... Fan Spacer is 3/4" long and Fan Shroud (when used) is 3" wide.

2–6 ..... Fan Spacer is 1-1/2" long and Fan Shroud (when used) is 2" wide.

2–7 ..... On 68 10 (Six-WAC)(Six-WHDC) does not require use of a Fan Spacer.

2–8 ..... On 68 10 (Six-WAC)(Six-WHDC) requires use of a Fan Spacer.

2–9 ..... Fan Pulley is 3-1/2" wide. On 68 01 (V8) used prior to Car Sequence No. E-054597; on 68 10 (V8) prior to W-060595; on 68 30 used prior to Car Sequence No. E-049017; on 68 70 used prior to Car Sequence No. E-049017 and on 68 80 (V8) prior to W-061846.

2–10 .... Fan Pulley is 2-5/16" wide. On 68 01 (V8) used beginning with Car Sequence No. E-054597; on 68 10 (V8) used beginning with W-060595; on 68 30 used beginning with Car Sequence No. E-049017; on 68 70 used beginning with Car Sequence No. E-049017 and on 68 80 (V8) used beginning with W-061846.

2–11 .... Distance from Housing to End of Shaft is 2-3/4".

2–12 .... Distance from Housing to End of Shaft is 1-1/2".

2–13 .... Grille has approximately 3/4" Lower Center Mounting Tab. (Refer Grille Illustration).

2–14 .... Grille has approximately 1/2" Lower Center Mounting Tab. (Refer Grille Illustration).

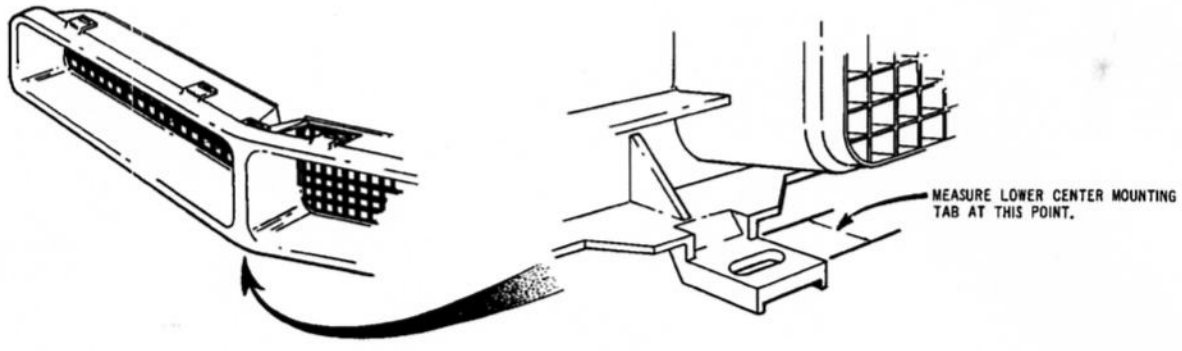

2–15 .... Used on Alternator with 2-3/4" Diameter Pulley.

2–16 .... Used on Alternator with 2-1/2" Diameter Pulley.

NOTES

2–17 .... Used where the Fan Blades are attached to the Arms with 3 rivets, and Blades measure 5-7/8".

2–18 .... Used where the Fan Blades are attached to the Arms with 3 rivets, and Blades measure 6-1/4".

2–19 .... Width of Cooling Fin Area is 24-3/8".

2–20 .... Width of Cooling Fin area is 18-11/16" on the Blackstone Core and 17-1/4" on the Modine Core.

2–21 .... Used prior to Car Sequence No. W-43173.

2–22 .... Used beginning with Car Sequence No. W-43173.

2–23 .... Distance from Housing to End of Shaft is 2-7/16".

2–24 .... Distance from Housing to End of Shaft is 2".

2–25 .... Used on Cars when Hood Lock Release Handle is located below Bumper Rail.

2–26 .... Used on Cars when Hood Lock Release Handle is located in Grille.

Printed in U.S.A.

GROUP NO. — DESCRIPTION — YEAR and MODEL	"L" CODE	PAKS CODE	PRIMARY GROUP NO.	PER CAR	PART NO.	CODE
2.002–1 BLADES, Fan (Radiator Fan)						
67/ (4 Blades) Six (LAC)(LHDC)			.....	1	317 4446	
71/ (4 Blades) 304 (LAC)(LHDC)			.....	1	321 2181	
67/68 (5 Blades) 50-80 (V8) ***(Use 318 5021)***			.....	1	318 7136	
70/ (5 Blades) SIX (WAC)(WHDC)(WLEC)(Flexible)			.....	1	321 0298	
70/ (5 Blades) V8 (WAC)(WHDC)(WLEC)(Flexible)			.....	1	321 2078	
67/70 (6 Blades) V8 (LAC)(LHDC)			.....	1	318 5021	
71/ (6 Blades) 360-401 (LAC)(LHDC)(LLEC)			.....	1	318 5021	
67 (7 Blades) SIX (WAC)(WHDC)(Flexible) ***(Use 319 2021)***			.....	1	318 6318	
68 (7 Blades) 01-50-70-80 (Six-WAC)(Six-WHDC)(Flexible) ***(Use 319 2021)***			.....	1	318 6318	
68 (7 Blades) 10 (Six-* 2-7)(Flexible) ***(Use 319 2021)***			.....	1	318 6318	
68 (7 Blades) 10 (Six-* 2-8)(Flexible)			.....	1	319 2021	
69 (7 Blades) SIX (WAC)(WHDC)(Flexible)			.....	1	319 2021	
67/68 (7 Blades) V8 (WAC)(WHDC)(WLEC)(Flexible) ***(Use 319 7749)***			.....	1	318 5020	
69 (7 Blades) V8 (WAC)(WHDC)(WLEC)(Flexible) ***(Use 319 7749)***			.....	1	319 5201	
70/ (7 Blades) V8 (WAC)(WHDC)(WLEC)(Flexible)			.....	1	319 7749	
2.002–2 ATTACHING PARTS, Blades To Pulley						
BOLT, Hexagon	67/	(7/8" Long) 01-40-10-70 (Six-LAC)(Six-LHDC) ...	17.038	4	G181596	NA
BOLT, Hexagon	67/71	(1-1/4" Long) 01-40-70 (Six-WAC)(Six-WHDC)	17.038	4	G181610	
BOLT, Hexagon	71/	(1-1/2" Long) 01-40 (Six-WAC)(Six-WHDC)	17.038	4	G181614	NA
BOLT, Hexagon	67/68	(2-3/4" Long) 01 (V8)	17.038	4	G181623	NA
BOLT, Hexagon	69	(3" Long) 01 (V8-WAC-* 2-17)(V8-WHDC-* 2-17)...	17.038	4	G181624	
BOLT, Hexagon	67	(7/8" Long) 01-10	17.038	4	G181596	NA
BOLT, Hexagon	67/68	(2-1/8" Long) V8	17.038	4	G180697	NA
BOLT, Hexagon	67/68	(2-1/2" Long) 01-50-80 (V8)	17.038	4	G181622	NA
BOLT, Hexagon	67/68	(1-5/8" Long) 01-50-80 (V8)	17.038	4	G181617	NA
BOLT, Hexagon	68/69	(3-3/4" Long) 01-80 (V8-LAC)(V8-LHDC)	17.038	4	G433095	NA
BOLT, Hexagon	69	(3-3/4" Long) 01 (V8-WAC-* 2-18) (V8-WHDC-* 2-18)	17.038	4	G433095	NA
BOLT, Hexagon	70	(4" Long) 01 (V8)	17.038	4	G189324	NA
BOLT, Hexagon	71/	(3-3/4" Long) 01 (V8-LAC)(V8-LHDC)(V8-LLEC) ..	17.038	4	G433095	NA
BOLT, Hexagon	71/	(4" Long) 01-40 (V8-WAC)(V8-WHDC)(V8-WLEC) ...	17.038	4	G189324	NA
BOLT, Hexagon	67/71	(1-5/8" Long) 10-70 (Six-WAC)(Six-WHDC)	17.038	4	G181617	NA
BOLT, Hexagon	69	(2-1/3" Long) 10-30-70 (V8-* 2-17)	17.038	4	G181622	NA
BOLT, Hexagon	69	(2-3/4" Long) 10-30-70 (V8-* 2-18)	17.038	4	G181623	NA
BOLT, Hexagon	70	(2-1/2" Long) 10-30-70 (V8)	17.038	4	G181622	NA
BOLT, Hexagon	71/	(2" Long) 10-70 (V8)	17.038	4	G181620	NA
BOLT, Hexagon	67/70	(2-1/2" Long) 50-80 (Six-LAC)(Six-LHDC) (Six-LLEC)	17.038	4	G181622	NA
BOLT, Hexagon	71/	(2" Long) 80 (Six-LAC)(Six-LHDC)(Six-LLEC)	17.038	4	G181620	NA
BOLT, Hexagon	70/	(2-3/4" Long) 10-30-70 (V8-WAC)(V8-WHDC) (V8-WLEC)	17.038	4	G181623	NA
BOLT, Hexagon	71	(2" Long) 10-70 (Six-WAC)(Six-WHDC)(Six-WLEC) ..	17.038	4	G181620	NA
BOLT, Hexagon	72	(1-1/2" Long) 10-70 (Six-WAC)(Six-WHDC)	17.038	4	G181614	NA
BOLT, Hexagon	67/70	(2-3/4" Long) 50-80 (Six-WAC)(Six-WHDC) (Six-WLEC)	17.038	4	G181623	NA
BOLT, Hexagon	67/68	(2-1/8" Long) 50-80 (Six).	17.038	4	G180697	NA
BOLT, Hexagon	71/	(3" Long) 80 (Six-WAC)(Six-WHDC)(Six-WLEC)	17.038	4	G181624	
BOLT, Hexagon	70/	(3-3/4" Long) 80 (V8)	17.038	4	G433095	NA
WASHER, Lock	67/	.....	17.820	4	G120214	

COOLING - GRILLE

2.002–3 SPACER, Fan Blade

SIX

67	(1-5/16" Long) 50-80 (LAC)(LHDC) ***(Use 319 3384)***	.....	1	317 5107
67	(1-1/2" Long) 50-80 (LAC-* 2-6)(LHDC-* 2-6)	.....	1	319 0510
67	(1-7/8" Long) 50-80 (WAC)(WHDC)(W7BF) ***(Use 319 5409)***	.....	1	318 7213
68	(1/4" Long) 01-70 (WAC)(WHDC)	.....	1	319 1806
68	(3/4" Long) 10-70 (WAC)(WHDC)	.....	1	318 7211
68	(1-1/2" Long) 80 (LAC-* 2-6)(LHDC-* 2-6)	.....	1	319 0510
68	(1-7/8" Long) 80 (WAC)(WHDC)(W7BF) ***(Use 319 5409)***	.....	1	318 7213
69	(1/4" Long) 01-70 (WAC)(WHDC)	.....	1	319 1806
69	(3/4" Long) 10-70 (WAC)(WHDC)	.....	1	318 7211
69	(1-1/2" Long) 80 (LAC-* 2-6)(LHDC-* 2-6)	.....	1	319 0510
69	(1-3/4" Long)(WAC)(WHDC)(W7BF)	.....	1	319 5409
69	(1-7/8" Long) 80 (WAC)(WHDC)(W7BF) ***(Use 319 5409)***	.....	1	318 7213
70	(1/4" Long) 01-40-70 (WAC)(WHDC)	.....	1	319 1806
70	(3/4" Long) 10-70 (WAC)(WHDC)	.....	1	318 7211
70	(1-1/2" Long) 80 (LAC-* 2-6)(LHDC-* 2-6)	.....	1	319 0510
70	(1-3/4" Long)(WAC)(WHDC)(W7BF)	.....	1	319 5409
71	(1/4" Long) 01-40-70 (WAC)(WHDC)	.....	1	319 1806
71/	(5/8" Long) 01-40 (WAC)(WHDC)	.....	1	321 3686
71	(3/4" Long) 10-70 (WAC)(WHDC)	.....	1	318 7211
71	(1" Long) 10-70 (WAC)(WHDC)	.....	1	321 3700
71/	(1" Long) 80 (LAC)(LHDC)(LLEC)	.....	1	321 3700
71/	(1" Long) 80 (65 Amp. Alt.)	.....	1	321 3700
71/	(1-7/32" Long) 80 (LAC)(LHDC)(LLEC)	.....	1	319 3384
71/	(1-7/32" Long) 80 (Except 65 Amp. Alt.)	.....	1	319 3384
71	(1-3/4" Long)(WAC)(WHDC)(W5BF)	.....	1	319 5409
71/	(2-1/8" Long)(WAC)(WHDC)(W5BF)	.....	1	319 4738
72	(5/8" Long) 10-70 (WAC)(WHDC)	.....	1	321 3686

V8

67	(3/4" Long) 01-50-80 (WAC-* 2-5)(WHDC-* 2-5)(WLEC-* 2-5)	.....	1	318 7211
67	(1-7/32" Long) 10-30-70	.....	1	319 3384
67	(1-5/16" Long) 01-50-80 (LAC)(LHDC) ***(Use 319 3384)***	.....	1	317 5107
67	(1-1/2" Long) 50-80 (* 2-6)	.....	1	319 0510
68	(3/4" Long) 01 (WAC-* 2-5))(WHDC-* 2-5)	.....	1	318 7211
68	(1-7/32" Long) 10-30-70	.....	1	319 3384
68	(1-5/16" Long) 01 (LAC)(LHDC) ***(Use 319 3384)***	.....	1	318 7212
68	(1-1/2" Long) 80 (* 2-61	.....	1	319 0510
68	(1-7/8" Long) 01 (WAC)(WHDC) ***(Use 319 5409)***	.....	1	318 7213
68	(2-3/4" Long) 01 (LAC)(LHDC)	.....	1	319 3385
68	(2-3/4" Long) 80	.....	1	319 3385
69	(1-7/32" Long) 10-30-70	.....	1	319 3384
69	(1-1/2" Long) 10-30-70 (* 2-17)	.....	1	319 0510
69	(1-3/4" Long) 10-30-70 (* 2-18)	.....	1	319 5409
69	(2-1/8" Long) 01 (WAC-* 2-17)(WHDC-* 2-17)	.....	1	319 4738
69	(2-3/4" Long) 01 (LAC)(LHDC)(WAC-* 2-18)(WHDC-* 2-18)	.....	1	319 3385
69	(2-3/4" Long) 80	.....	1	319 3385
70	(3" Long) 01	.....	1	319 5411
70	(1-1/2" Long) 10-30-70 (LAC)(LHDC)(LLEC)	.....	1	319 0510
70/	(1-3/4" Long) 10-30-70 (WAC)(WHDC)(WLEC)	.....	1	319 5409
70/	(2-3/4" Long) 80	.....	1	319 3385
71/	(2-3/4" Long) 01-40 (LAC)(LHDC)(LLEC)	.....	1	319 3385
71/	(1" Long) 10-70 (LAC)(WHDC)(LLEC)	.....	1	321 3700
71/	(3" Long) 01-40 (WAC)(WHDC)(WLEC)	.....	1	319 5411

COOLING - GRILLE

2.003 PULLEY, Fan

67/70	SIX (WSBD)	.....	1	317 3223
67/	SIX (WDBD-Inner)	.....	1	317 3223
67/	SIX (WDBD-Outer)	.....	1	317 4697
71	SIX (WSBD-* 2-23)	.....	1	317 3223
71	SIX (WSBD-* 2-24)	.....	1	321 3736
72	SIX (WSBD)	.....	1	321 3736
67	V8	.....	1	318 6331
68	V8 (* 2-9)	.....	1	318 6331
68	V8 (* 2-10)	.....	1	319 3354
69/	V8	.....	1	319 3354

2.013-1 SHROUD, Fan

67/	01-40-50-70-80 (Six-WAC)(Six-WHDC)	.....	1	318 6325
67	01-50-80 (V8-WAC-* 2-5)(V8-WHDC-* 2-5)(V8-WLEC-* 2-5)	.....	1	318 5182
67	01-50-80 (V8-WAC-* 2-6)(V8-WHDC-* 2-6)(V8-WLEC-* 2-6)	.....	1	318 5973
68	01-50-80 (V8-WAC)(V8-WHDC)(V8-WLEC)	.....	1	318 5973
69/	01-10-40-80 (V8-WHDC)(V8-WLEC)(V8-WTTP)	.....	1	318 5973
69/	01-10-40-80 (V8-WAC) 3216615	.....	1	~~319 4136~~
67	10 (Six-WAC)(Six-WHDC)	.....	1	318 6325
68	10 (Six-WAC-* 2-7)(Six-WHDC-* 2-7)	.....	1	318 6325
68	10 (Six-WAC-* 2-8)(Six-WHDC-* 2-8)	.....	1	319 1807
69/	10 (Six-WAC)(Six-WHDC)	.....	1	319 1807
67/68	10 (V8-WAC)(V8-WHDC)(V8-WLEC)	.....	1	318 5973
68/	30-70 (V8-WHDC)	.....	1	318 5973
68	30-70 (V8-WAC)	.....	1	318 5973
69/	30-70 (V8-WAC)	.....	1	319 4548

2.013-2 ATTACHING PARTS, Shroud To Core

SCREW, Tapping.....	67/71	.....	4	318 9013
SCREW, Tapping.....	72	.....	4	400 1042

2.016-1 BELT, Radiator Fan And Alternator (Single Belt Drive)

67/68	SIX ***(Use 319 6268)***	.....	1	318 5717
69/	01-40-70 (Six) ***(Use 319 6268)***	.....	1	318 5717
67/	01-30-40-70 (V8) ***(Use 319 6377)***	.....	1	318 5719
67/68	10-80 (LHD-V8-Except 65 Amp. Alt.) ***(Use 319 6377)***	.....	1	318 5719
69/71	10 (Six-WAC)(Six-WHLV) ***(Use 319 6268)***	.....	1	318 5717
69	10 (LHD-V8-WAC-55 Amp. Alt.)(LHD-V8-WHLV-55 Amp. Alt.) ...(Plain Type) ***(Use 319 6377)***	.....	1	318 5719
70/	10 (V8-55 Amp. Alt.) ***(Use 319 6377)***	.....	1	318 5719
69	10 (LHD-V8-WAC-55 Amp. Alt.)(LHD-V8-WHLV-55 Amp. Alt.)...(Coq Type)	.....	1	319 6377
69	10 (LHD-V8-LAC-35 Amp. Alt.-* 2-15)(LHD-V8-LHLV-35 Amp. Alt.-* 2-15) ...(Plain Type) ***(Use 319 6377)***	.....	1	318 5719
69	10 (LHD-V8-LAC-35 Amp. Alt.-* 2-16)(LHD-V8-LHLV-35 Amp. Alt.-* 2-16) ...(Coq Type)	.....	1	319 6377
69	10 (Six-LAC-35 Amp. Alt.-* 2-15)(Six-LHLV-35 Amp. Alt.-* 2-15) ...(Plain Type) ***(Use 319 6268)***	.....	1	318 5717
69/	10 (Six-55 Amp. Alt.)...(Plain Type) ***(Use 319 6268)***	.....	1	318 5717
69	10 (Six-LAC-35 Amp. Alt.-* 2-16)(Six-LHLV-35 Amp. Alt.-* 2-16) ...(Coq Type)	.....	1	319 6268
69	10 (Six-55 Amp. Alt.)...(Coq Type)	.....	1	319 6268
70/71	10 (Six-35 Amp. Alt.)	.....	1	319 6268
70/71	10 (LHD-V8-35 Amp. Alt.)	.....	1	319 6377
70	10 (V8-WAC)(V8-WHLV) ***(Use 319 6377)***	.....	1	318 5719
67	50 (LHD-V8) ***(Use 319 6268)***	.....	1	318 5717
69/	80 (Six-35 Or 55 Amp. Alt.) ***(Use 319 6268)***	.....	1	318 5717
69/	80 (V8-35 Or 55 Amp. Alt.) ***(Use 319 6377)***	.....	1	318 5719

Printed in U.S.A.

COOLING - GRILLE

72	*01-10-80 (Six-55 Amp. Alt.)*	.....		1	321 7329
72	*01-10-80 (V8-55 Amp. Alt.)(V8-62 Amp. Alt.)*	.....		1	321 7330
67/	*10-80 (LHD-V8-60 or 65 Amp. Alt.-Used With Leece Neville Alt.)*	.....		1	318 5860
67/71	*10-80 (RHD-V8)*	.....	*(Use 319 6377)*	1	318 7219
69	*18 (Six-Post Office-55 Amp. Alt.)...(Cog Type)*	.....		1	319 6268
69	*10 (Six-65 Amp. Alt.)*	.....	*(Use 319 6268)*	1	318 5717
70/71	*10-80 (LHD-V8-62 Amp. Alt.-Used With Motorola Alt.)*	.....		1	319 6377

2.016–2 BELT SET, Radiator Fan And Alternator (Dual Belt Drive)

67/	*10-80 (Six-60 Amp. Alt.)(Six-65 Amp. Alt.)*	56	.....	1	318 5859

2.020–1 CORE, Radiator

67/69	01 (Six)	50	.....	1	318 6055
70/71	01-40 (Six-* 2-19)	50	.....	1	318 6108
71	01-40-80 (Six-LAC-* 2-20)	50	.....	1	321 2141
71	01-40 (Six-WAC)(Six-WHDC)	50	.....	1	318 6108
72	01-40 (Six-LAC)(Six-LHDC)	50	.....	1	321 5752
72	01-40 (Six-WAC)(Six-WHDC)	50	.....	1	321 3840
67/68	01-10 (V8)	50	.....	1	318 6088
69	01-10 (V8)	50	.....	1	319 4331
70/71	01 (V8)	50	.....	1	319 6860
72	01-40 (304-LAC)(304-LHDC)	50	.....	1	321 3840
72	01-40 (304-WAC)(304-WHDC)	50	.....	1	321 3844
72	01 (360)	50	.....	1	321 3844
67	10 (Six)	50	.....	1	318 6055
68/70	10 (Six-LAC)(Six-LHDC)	50	.....	1	318 6055
68	10 (Six-WAC-* 2-7)(Six-WHDC-* 2-7)	*(Use 321 2146)*	.....	1	318 6055
68	10 (Six-WAC-* 2-8)(Six-WHDC-* 2-8)	*(Use 321 2146)*	.....	1	319 1805
69/70	10 (Six-WAC)(Six-WHDC)	50	.....	1	319 1805
71	10 (Six-LAC-* 2-19)(Six-LHDC-* 2-19)	50	.....	1	318 6055
71	10-70 (Six-LAC-* 2-20)	*(Use 321 2146)*	.....	1	321 2142
71	10 (Six-WAC)(Six-WHDC)	50	.....	1	321 2144
72	10 (Six-LAC)(Six-LHDC)	50	.....	1	321 3772
72	10 (Six-WAC)(Six-WHDC)	50	.....	1	321 3818
70	10 (V8)	50	.....	1	319 4331
71	10 (V8-* 2-21)	50	.....	1	319 4331
71	10 (V8-* 2-22)	50	.....	1	321 3711
72	10 (V8-LTTP)	50	.....	1	321 3854
72	10 (V8-WTTP)	50	.....	1	321 5607
68	30-70	*(Use 319 8049)*	.....	1	319 0479
69	30-70 (V8)	*(Use 319 8049)*	.....	1	319 4332
70	30-70	50	.....	1	319 4332
67/70	50-80 (Six)	50	.....	1	318 6066
67/70	50-80 (V8)	50	.....	1	318 6108
69	70 (Six-LAC)(Six-LHDC)	*(Use 319 8049)*	.....	1	318 6055
69	70 (Six-WAC)(Six-WHDC)	*(Use 319 8049)*	.....	1	319 4332
71	70 (Six-LAC-* 2-19)	50	.....	1	319 4332
71	70 (Six-WAC)(Six-WHDC)	50	.....	1	321 2148
72	70 (Six-LAC)(Six-LHDC)	50	.....	1	321 3772
72	70 (Six-WAC)(Six-WHDC)	50	.....	1	321 3832
71	70 (V8)	50	.....	1	319 8049
72	70 (304-WST)(304-WAT-WAC)(304-WAT-WHDC)	50	.....	1	321 5681
72	70 (304-WAT-LAC)(304-WAT-LHDC)	50	.....	1	321 3827
72	70 (360)(401)	*(Use 321 2152)*	.....	1	321 5681
71	80 (Six-WAC)(Six-WHDC)	50	.....	1	321 2150
71	80 (Six-LAC-* 2-19)	50	.....	1	318 6066
72	80 (Six)	50	.....	1	321 3820
71	80 (V8)	50	.....	1	319 6860
72	80 (V8-LTTP)	50	.....	1	321 3844
72	80 (V8-WTTP)	50	.....	1	321 5608
72	**10 (Heavy Duty)**	50	.....	1	321 8144

COOLING - GRILLE

2.020–1a DEPRESSANT, Radiator Foam

67/			.....	1	448 8031

2.020–2 ATTACHING PARTS, Core To Support

SCREW, Machine.....	67/68		13.017	4	400 0715
SCREW, Machine.....	69/70		.....	4	400 3847
SCREW, Machine.....	71/		17.629	4	G273573

2.020–3 HOSE, Radiator Core Overflow (Bulk-Order Per Foot)

67/			22.050	AR	320 2250

2.020–4 ATTACHING PARTS, Hose To Core

CLIP.....	67/	01-10-50-80 (V8)	.....	1	320 2648

2.020–5 EXTENSION, Radiator Core Overflow Hose

67/			.....	1	320 2647

2.023–1 SUPPORT, Radiator (Baffle, Radiator Air) (Refer GROUP 20.085–4)

2.023–2 SEAL, Radiator Support (Upper) (Refer GROUP 20.085–4a)

2.023–3 SEAL, Radiator Support (Lower) (Refer GROUP 20.085–4b)

2.023–4 BRACKET, Radiator Side Baffle To Front Fender (Refer GROUP 20.085–4c)

2.032 CAP, Radiator Core

67/			.....	1	318 7167

2.036 DRAIN COCK, Radiator Core

67/		67	.....	1	316 6547

2.038–1 HOSE, Thermostat Housing To Radiator Core

67	SIX	.....	1	318 6316
71/	V8	.....	1	321 5597
68/70	01-10-40-70 (Six)	.....	1	319 1019
71	01-10-40-70 (Six-LAC-* 2-19)(Six-LOCT-* 2-19)	.....	1	319 1019
71	01-10-40-70 (Six-LAC-* 2-20) (Six-LOCT-* 2-20)	.....	1	321 1691
72	01-10-40-70 (Six-LAC)(Six-LHDC)(Six-LOCT)	.....	1	321 1691
71/	01-10-40-70 (Six-WAC)(Six-WHDC)(Six-WOCT)	.....	1	319 1019
67	01 (V8)	.....	1	317 8640
68/70	01-80 (V8)	.....	1	318 5420
67/68	10 (V8)	.....	1	318 5423
69/70	10-30-70 (V8)	.....	1	319 2109
68	30-70 (V8)	.....	1	318 9475
67	50-80 (V8)	.....	1	318 5420
68/70	80 (Six)	.....	1	319 1015
71	80 (Six-LAC-* 2-19)(Six-LOCT-* 2-19)	.....	1	319 1015
71	80 (Six-LAC-* 2-20) (Six-LOCT-* 2-20)	.....	1	321 1692
72	80 (Six-LAC)(Six-LHDC)(Six-LOCT)	.....	1	319 1015
71/	80 (Six-WAC)(Six-WHDC)(Six-WOCT)	.....	1	319 1015

(Use 318 5420)

(Use 321 5597)

(Use 321 5597)

Printed in U.S.A.

COOLING - GRILLE

2.038–2 HOSE, Radiator Core To Water Pump

67/70	01-10-40-70 (Six)	.....	1	317 2688
71	01-10-40-70 (Six-LAC-* 2-19)(Six-LOCT-* 2-19)	.....	1	317 2688
71	01-10-40-70 (Six-LAC-* 2-20)(Six-LOCT-* 2-20)	.....	1	321 1700
72	01-10-40-70 (Six-LAC)(Six-LHDC)(Six-LOCT)	.....	1	321 1700
71/	01-10-40-70 (Six-WAC)(Six-WOCT)	.....	1	317 2688
67/68	01 (V8)	.....	1	317 8641
69/	01-40-80 (V8)	.....	1	319 3852
67/68	10-30-70 (V8)	.....	1	318 5422
69/	10-30-70 (V8)	.....	1	319 3851
67/69	50-80 (Six)	.....	1	317 5105
67/68	50-80 (V8)	.....	1	318 5421
70	80 (Six)	.....	1	317 5105
71	80 (Six-LAC-* 2-19)(Six-LOCT-* 2-19)	.....	1	317 5105
71	80 (Six-LAC-* 2-20)(Six-LOCT-* 2-20)	.....	1	321 1699
71	80 (Six-WAC)(Six-WOCT)	.....	1	317 5105
72	80 (Six)	.....	1	317 5105

2.039–1 CLAMP, Radiator Hose To Radiator Core

67/	.....	17.108	2	320 3078

2.039–2 CLAMP, Radiator Hose To Thermostat Housing

67/	.....	17.108	1	320 3078

2.039–3 CLAMP, Radiator Hose To Water Pump

67/	.....	17.108	1	320 3079

2.050–1 GRILLE, Radiator (Center Grille on Model 67 50-80)

67	01	.....	1	358 3861
68	01	.....	1	360 0965
69	01 (Except SC/RAMBLER)	.....	1	362 4968
69	09 (SC/RAMBLER)	.....	1	363 5628
70	01	.....	1	361 5721
71	01 8123015	USE	1	~~363 3015~~
72	01	.....	1	365 7120
67	10 (Except SST-* 2-3)	.....	1	359 2580
67	10 (Except SST-* 2-1)	.....	1	357 5510
67	10 (SST-* 2-2)	.....	1	357 5514
67	10 (SST-* 2-4)(WBW)(WMW)(WWW)	.....	1	359 2598
68	10 (Except SST)	.....	1	360 0830
68	10 (SST)	.....	1	360 0831
69	10 (Except SST)	.....	1	361 4250
69	10 (SST)	.....	1	361 4251
70	10 (E/MACHINE)	.....	1	319 7878
70	10 (MACHINE)	.....	1	363 6626
71	10	.....	1	363 2336
72	10	.....	1	~~364 6057~~
68/69	30	.....	1	360 2612
70	30	.....	1	361 6030
70	40	.....	1	~~363 6200~~
71	40 (Except Gremlin X-* 2-25)	.....	1	~~363 6200~~
71	40 (Except Gremlin X-* 2-26)	.....	1	364 6882
72	40 (Except Gremlin X)	.....	1	364 6882
71	40 (Gremlin X-* 2-25) ..... ***(Use 812 0487)***	.....	1	~~364 6830~~ NC
71	40 (Gremlin X-* 2-26)	.....	1	812 0489 NC
72	40 (Gremlin X)	.....	1	812 0489 NC

COOLING - GRILLE

67	50 54	.....	1	320	8334
68	70 (* 2-13) ..... *(Ref. Pr. List)*	.....	1	360	1640
68	70 (* 2-14)	.....	1	361	4701
69	70	.....	1	361	4701
70	70	.....	1	361	6031
71	70 (Except AMX)	.....	1	363	2910
72	70 (Except AMX)	.....	1	364	5470
71/	70 (AMX)	.....	1	364	6492
67	80 (Except DPL) 54	.....	1	320	8259
67	80 (DPL) 54	.....	1	320	8258
68	80	.....	1	360	0840
69	80	.....	1	361	4260
70	80	.....	1	363	1670
71/	80	.....	1	363	3400

2.050–2 ATTACHING PARTS, Grille To Grille Panel

BOLT (Incl. Clip)	68/69	30	.....	3	400	3525
SCREW, Tapping	67/69	01	12.060	5	400	0734
SCREW, Tapping	68/71	10	.....	4	400	2334
SCREW, Tapping	67	50-80 ..... *(Use 318 9013)*	17.671	5	400	0478
SCREW, Tapping	68/70	70	.....	5	400	2334
SCREW, Tapping	68	80	.....	5	400	2334
SCREW, Tapping	69/70	80	.....	4	400	2334
SCREW, Tapping	71	80	.....	4	400	2337
SCREW, Tapping	72	80	.....	4	400	2334
WASHER, Plain	71	80	17.814	4	400	0481
NUT, Hexagon	68/69	30	.....	3	439	0742
NUT, Spring	71	10	14.108	4	400	0141
NUT, Spring	70	30	.....	4	400	1999
NUT, Spring	67	50-80	17.424	5	G445357	
NUT, Spring	68/70	10-70	.....	4	400	1999
NUT, Spring	68	80	.....	5	400	1999
NUT, Spring	69/70	80	.....	4	400	1999
NUT, Spring	72	80	14.108	4	400	0141
NUT, Center Spring	68	70 (* 2-13)	.....	1	400	1999
NUT, Center Spring	68	70 (* 2-14)	.....	1	400	3856
NUT, Center Spring	69	70	.....	1	400	1999

2.050–3 ATTACHING PARTS, Grille To Fender Extension

SCREW, Tapping	67/70	01	12.060	4	400	0734
SCREW, Tapping	68/69	01	.....	4	400	1707
SCREW, Tapping	70/	40	12.168	4	400	2731
SCREW, Tapping	71/	70	.....	2	400	2334
NUT, Spring	68/69	01	17.426	4	G445435	
NUT, Spring	70	30-70	.....	4	400	1999
NUT, Spring	71/	70	.....	2	400	1999
NUT, Speed	70/	40	.....	4	400	1999

2.050–4 ATTACHING PARTS, Grille To Support (Inner)

SCREW, Tapping	70/	01-40	.....	2	400	2334
SCREW, Tapping	67/69	01	12.060	2	400	0734
SCREW, Tapping	71	10	3.252	1	400	3663
SCREW, Tapping	68/70	30-70	.....	2	400	2334
SCREW, Tapping	68	80	.....	2	400	3831
SCREW, Tapping	69/71	70-80	.....	2	400	2331
SCREW, Tapping	71	70	.....	3	400	2328
SCREW, Tapping	72	70 (AMX)	.....	2	400	2328
SCREW, Tapping	72	80	.....	2	400	2334

Printed in U.S.A.

NUT, Spring	67/	01	17.426	2	G445435
NUT, Spring	68/	30-70-80	.....	2	400 1999
NUT, Spring	70/	01-40	.....	2	400 1999
NUT, Stamp	72	10	17.428	2	448 7128

2.050-5 ATTACHING PARTS, Grille To Support (Outer)

SCREW, Tapping	70/	01-40	.....	2	400 2334
SCREW, Tapping	71	10	3.252	2	400 3663
SCREW, Tapping	68	30	.....	2	400 3831
SCREW, Tapping	69/70	30	.....	2	400 2334
SCREW, Tapping	68/70	70	.....	2	400 2334
SCREW, Tapping	69/	70-80	.....	2	400 2331
SCREW, Tapping	72	70 (AMX)	.....	2	400 2328
SCREW, Tapping	72	80	.....	2	400 2334
SCREW, Tapping	71	70	.....	2	400 2328
NUT, Spring	71	10	3.252	2	400 3748
NUT, Spring	70	30	.....	2	400 1999
NUT, Spring	68/	70	.....	2	400 1999
NUT, Spring	69/	80	.....	2	400 1999
NUT, Spring	70/	01-40	.....	2	400 1999

2.050-6 ATTACHING PARTS, Grille To Upper Baffle

SCREW, Tapping	67	50-80 ***(Use 318 9013)***	17.671	2	400 0478
SCREW, Tapping	68	80	.....	2	400 2334
NUT, Spring	70	01	17.426	4	G455435
NUT, Spring	70	80	.....	4	400 1999

2.050-7 ATTACHING PARTS, Grille To Mounting Bracket

SCREW, Tapping	67	10	3.303	8	400 1993
SCREW, Tapping	67	50-80	17.660	4	G164487

2.050-7a ATTACHING PARTS, Grille To Hood Lock Support

SCREW, Tapping	70	01-40	3.252	1	400 3663
SCREW, Tapping	71/	40	3.252	1	400 3663
SCREW, Tapping	71/	70	.....	1	400 2334
NUT, Speed	70	01-40	3.252	1	400 3929
NUT, Speed	71/	40	3.252	1	400 3929
NUT, Speed	71/	70	.....	1	400 1999
NUT, Spring	70	70	.....	1	400 1999

2.050-7b ATTACHING PARTS, Grille To Support Bracket

SCREW, Tapping	72	10	3.252	4	400 3663
NUT, Snap-in	72	10	3.252	4	400 3748

2.050-7c BAR, Radiator Grille

70	10 (Center)...(Incl. Attaching Parts)	.....	1	448 7335
72	10 (Vertical-Center)	.....	1	812 1262
72	10 (Vertical-Outer)	.....	2	812 1263
72	80 (Horizontal-Upper)...(Incl. Attaching Parts)	.....	1	812 0610
72	80 (Horizontal-Center)...(Incl. Attaching Parts)	.....	1	812 0610
72	80 (Horizontal-Lower)...(Incl. Attaching Parts)	.....	1	812 0612

2.050-7d ATTACHING PARTS, Bar To Grille

SCREW, Tapping	70	10	2.050	2	448 7338
NUT, Hexagon	72	10 (Center)	.....	2	400 4355
NUT, Hexagon	72	10 (Center)	23.074	2	400 3018
NUT, Hexagon	72	10 (Outer)	17.428	4	448 7128
CLIP (Plastic)	72	80	.....	18	400 4446

COOLING - GRILLE

2.050–7e FRAME, Radiator Grille

71/	(Left) 10	.....	1	363	2359
71/	(Right) 10	.....	1	363	2358

2.050–7f ATTACHING PARTS, Left Frame To Right Frame

SCREW, Hexagon	71/	10	29.131	2	G455380

2.050–7g ATTACHING PARTS, Frame To Support

SCREW, Tapping.....	71/	10	25.029	1	400	3814
NUT, Snap-In.....	71/	10	3.252	1	400	3748

2.050–7h ATTACHING PARTS, Frame To Grille Panel

NUT, Snap-In.....	71/	10	12.128	4	400	0392

2.050–7i ATTACHING PARTS, Frame To Outer Support

SCREW, Tapping.....	71/	10	25.029	2	400	3814

2.050–7j SCREEN, Radiator Grille

71/	70 (AMX)...(Incl. Mouldings And Parking Lamp Bezels)	.....	1	364	6495

2.050–8 SUPPORT, Radiator Grille (Inner)

67/69	01	.....	2	358	3224
70/	01-40	.....	2	361	6583
68	10	.....	2	360	2154
70	10	.....	2	360	2154
72	10 (Center)	.....	1	364	6072
68/69	30	.....	2	362	4425
70	30	.....	2	361	6016
68	70 (10-1/2" long-* 2-13)	.....	2	360	1643
68	70 (10-1/4" long-* 2-14)	.....	2	362	4424
69/70	70	.....	2	362	4424
71/	70 (Center)	.....	1	363	2894
71	70	.....	2	363	2914
72	70 (AMX)	.....	2	363	2914
68	80	.....	2	360	1850
69/	80 (Center)	.....	2	361	4864

2.050–9 ATTACHING PARTS, Inner Support To Brace

SCREW, Tapping.....	68	10	.....	2	400	2334

2.050–10 ATTACHING PARTS, Inner Support To Upper Baffle

SCREW, Tapping.....	67/69	01	.....	2	400	0734
SCREW, Tapping.....	70/	01-40	.....	2	400	2334
SCREW, Tapping.....	68	10-70	.....	2	400	2334
SCREW, Tapping.....	68	30-80	.....	2	400	3831
SCREW, Tapping.....	69/70	30	.....	2	400	2334
SCREW, Tapping.....	69	70	.....	2	400	3831
SCREW, Tapping.....	69	80	.....	2	400	2331
SCREW, Tapping.....	70/	80	.....	2	400	2334
WASHER, Plain.....	68	80	17.814	2	400	0481

Printed in U.S.A.

COOLING - GRILLE

2.050–10a ATTACHING PARTS. Center Inner Support To Upper Grille Reinforcement

SCREW, Tapping.....	71/	70.....	.....	1	400 2328

2.050–10b ATTACHING PARTS. Center Inner Support To Hood Lock Bracket

SCREW, Tapping.....	71/	70.....	.....	2	400 2328

2.050–11 SUPPORT. Radiator Grille (Outer)

70/	01-40.....	.....	2	361 6582
70	10.....	.....	2	360 2152
71/	10.....	.....	2	363 3382
70	30.....	.....	2	361 6018
68	70 (7-1/4" Long-* 2-13).....	.....	2	360 1642
68	70 (7" Long-* 2-14).....	.....	2	362 4425
69/70	70.....	.....	2	362 4425
71	70.....	.....	2	363 2912
72	70 (AMX).....	.....	2	363 2912
69/	80.....	.....	2	361 4862
68/69	(Left) 30	.....	1	360 2623
68/69	(Right) 30	.....	1	360 2622

2.050–12 ATTACHING PARTS. Outer Support To Brace

SCREW, Tapping.....	68/	70.....	.....	2	400 3831

2.050–12a ATTACHING PARTS. Outer Support To Side Baffle

SCREW, Tapping.....	71	10.....	23.015	4	400 2070
SCREW, Tapping.....	72	10.....	9.007	4	400 0722

2.050–13 ATTACHING PARTS. Outer Support To Upper Baffle

SCREW, Tapping.....	70/	01-40.....	.....	2	400 2334
SCREW, Tapping.....	68	30.....	.....	2	400 3831
SCREW, Tapping.....	69/70	30.....	.....	2	400 2334
SCREW, Tapping.....	68/69	70.....	.....	2	400 3831
SCREW, Tapping.....	71	70.....	.....	2	400 2328
SCREW, Tapping.....	72	70 (AMX).....	.....	2	400 2328
SCREW, Tapping.....	69	80	.....	2	400 2331
SCREW, Tapping.....	70/	80.....	.....	2	400 2334

2.050–13a BRACKET. Radiator Grille Outer Support

72	(Left) 10	.....	1	364 6075
72	(Right) 10	.....	1	364 6074

2.050–13b ATTACHING PARTS. Bracket To Grille Panel

SCREW, Tapping.....	72	10.....	2.050	2	400 2334
NUT, Snap-In.....	72	10.....	14.108	2	400 0141

2.050–13c ATTACHING PARTS. Bracket To Outer Support

SCREW, Tapping.....	72	10.....	2.050	2	400 2334
NUT, Snap-In.....	72	10.....	3.252	2	400 3748

Printed in U.S.A.

COOLING - GRILLE

2.050–13d SUPPORT, Radiator Grille To Headlamp Panel Bracket

70/	40			2	364 1999

2.050–13e ATTACHING PARTS, Support To Grille

SCREW, Tapping	70/	40	3.252	1	400 3663
NUT, Speed	70/	40	3.252	1	400 3929

2.050–13f ATTACHING PARTS, Support To Headlamp Panel Bracket

SCREW, Tapping	70/	40	3.252	1	400 3663
NUT, Speed	70/	40	3.252	1	400 3929

2.050–14 BRACE, Radiator Side Baffle To Grille Support

68/69	30			2	362 4532
68/69	70			2	360 1645
70	30–70			2	360 1645

2.050–15 ATTACHING PARTS, Brace To Side Baffle

SCREW, Tapping	68/69	30–70		2	400 2334
SCREW, Tapping	70	30	***(Use 318 9013)***	4	400 0478
SCREW, Tapping	70	70	17.671	4	400 2334

2.050–15a ATTACHING PARTS, Brace To Upper Baffle

SCREW, Tapping	68/69	30–70		4	400 2334

2.050–16 REINFORCEMENT, Radiator Grille (Upper)

68	(Left)	10		1	360 2151
69	(Left)	10		1	361 4859
70	(Left)	10		1	360 2151
68	(Right)	10		1	360 2150
69	(Right)	10		1	361 4858
70	(Right)	10		1	360 2150
71	70			1	363 2896
72	70 (Except AMX)			1	364 5758
72	70 (AMX)			1	363 2896

2.050–17 ATTACHING PARTS, Reinforcement To Radiator Grille

SCREW, Tapping	68/69	10		4	400 3831
SCREW, Tapping	70	10		4	400 2334
SCREW, Tapping	71/	70 (Except AMX)		5	400 2328
SCREW, Tapping	71/	70 (AMX)	17.671	5	812 0127

2.050–18 ATTACHING PARTS, Reinforcement To Supports

SCREW, Tapping	68	10		2	400 2334

2.050–19 ATTACHING PARTS, Reinforcement To Fender

SCREW, Tapping	68/69	10		4	400 3831
SCREW, Tapping	71/	70		2	400 2328

2.050–20 ATTACHING PARTS, Reinforcement To Upper Baffle

SCREW, Tapping	69	10		4	400 3831

Printed in U.S.A.

COOLING - GRILLE

2.050–20a ATTACHING PARTS, Reinforcement To Center Support

SCREW, Tapping.....	71/	70.....	.....	1	400 2328	

2.050–21 BRACE, Grille Panel To Grille Support

68		10.....	.....	2	360 2158	
70		10.....	.....	2	360 2158	

2.050–22 ATTACHING PARTS, Brace To Grille Panel

SCREW, Tapping.....	68	10.....	.....	2	400 2334	
SCREW, Tapping.....	70	10.....	.....	2	318 9013	

2.050–23 BRACKET, Radiator Grille Mounting (Inner)

67		10.....	.....	2	357 5513	

2.050–24 ATTACHING PARTS, Inner Bracket To Grille Panel

SCREW, Tapping.....	67	10..... ***(Use 318 9013)***	17.671	2	400 0478	

2.050–25 ATTACHING PARTS, Inner Bracket To Upper Baffle

SCREW, Tapping.....	67	10..... ***(Use 318 9013)***	17.671	2	400 0478	

2.050–26 BRACKET, Radiator Grille Mounting (Outer)

67		10.....	.....	2	357 5512	

2.050–27 ATTACHING PARTS, Outer Bracket To Grille Panel

SCREW, Tapping.....	67	10..... ***(Use 318 9013)***	17.671	2	400 0478	

2.050–28 ATTACHING PARTS, Outer Bracket To Upper Baffle

SCREW, Tapping.....	67	10..... ***(Use 318 9013)***	17.671	2	400 0478	

2.050–29 BRACKET, Radiator Grille To Hood Lock Support

67	(Left) 50-80.....	63	.....	1	320 8263	
67	(Right) 50-80.....	63	.....	1	320 8262	

2.050–30 ATTACHING PARTS, Bracket To Upper Baffle

SCREW, Tapping.....	67	50-80..... ***(Use 318 9013)***	17.671	2	400 0478	

2.050–31 GRILLE, Radiator (Outer)

67	(Left) 50 (API).....		.....	1	320 8332	
67	(Left) 80 (API).....		.....	1	320 8260	
67	(Right) 50 (API).....		.....	1	320 8333	
67	(Right) 80 (API).....		.....	1	320 8261	

2.050–32 ATTACHING PARTS, Outer Grille To Center Grille

SCREW, Machine.....	67	50-80.....	17.598	8	G159353	
NUT, Hexagon.....	67	50-80.....	17.412	8	G271482	NA

2.050–33 PLATE, Radiator Grille Name (Refer Group 26 Illustrations)

Printed in U.S.A.

COOLING - GRILLE

2.050–34 ATTACHING PARTS, Name Plate To Grille (Refer Group 26 Illustrations)

2.050–35 MEDALLION KIT, Radiator Grille (Refer Group 26 Illustrations)

2.050–36 ATTACHING PARTS, Medallion To Grille (Refer Group 26 Illustrations)

2.050–37 SUPPORT, Radiator Grille To Hood Latch

68	10	.....	1	360 8698

2.051–1 PANEL, Radiator Grille

67/69	01	.....	1	620 0026
67	10	***(Use 360 0546)***	1	357 4550
68/69	10	.....	1	360 0546
70	10	.....	1	360 8899
71/	10	.....	1	653 1319
68/69	30–70	.....	1	360 0296
70	30–70	.....	1	361 6000
67/68	50–80	.....	1	357 4553
69	80	.....	1	360 3856
70	80	.....	1	361 5620
71	80	.....	1	363 3365
72	80	.....	1	361 0086

2.051–2 ATTACHING PARTS, Panel To Fender

SCREW, Tapping	67/69	01–30–70	12.075	4	400 0424
SCREW, Tapping	67	10–50–80	17.671	6	400 1040
SCREW, Tapping	68/70	10	12.075	6	400 0424
SCREW, Tapping	70	30–70	12.075	4	400 1040
SCREW, Tapping	68	80	12.075	6	400 0424
NUT, Spring	67/69	01–30–70	17.426	4	G447026
NUT, Spring	67/69	10	.....	6	400 1321
NUT, Spring	67/68	50–80	.....	6	400 1321

2.051–3 ATTACHING PARTS, Panel To Side Baffle

SCREW, Tapping	69	01	12.075	4	400 0424
SCREW, Tapping	67/70	10	12.075	2	400 0424
SCREW, Tapping	71/	10	15.320	2	400 2309
SCREW, Tapping	67/	50–80	12.075	4	400 0424
NUT, Spring	67/69	10–50–80	.....	2	400 1321
NUT, Spring	70	10	.....	2	400 1321
NUT, Spring	69/	80	17.426	4	G447026

2.051–3a ATTACHING PARTS, Panel To Lower Baffle

SCREW, Tapping	69	80	12.075	2	400 0424
SCREW, Tapping	69/70	80	.....	1	400 3069
NUT, Hexagon	69	80	17.426	2	G447026

Printed in U.S.A.

COOLING - GRILLE

2.051–4 ATTACHING PARTS, Panel To Hood Lock Support

SCREW, Tapping.....	68/70	30-70 (5/8" Long)	.....	1	400 2334
SCREW, Tapping.....	68/69	01 (1/2" Long)	3.510	1	400 1398
SCREW, Tapping.....	70	10.....	12.075	2	400 0424
SCREW, Tapping.....	71	10.....	25.029	1	400 3814
SCREW, Tapping.....	72	10.....	17.671	1	G455380
NUT, Spring.....	68/70	01-30-70.....	.....	1	400 1999
NUT, Spring.....	70	10-30-70.....	.....	2	400 1321
NUT, Spring.....	71	10.....	.....	1	400 3748

2.051–5 SUPPORT, Radiator Grille Panel To Grille (Rubber)

68/69	30.....	.....	2	362 4575

2.051–6 SUPPORT, Grille Panel To Lower Baffle

69/	80.....	.....	1	360 3828

2.051–7 ATTACHING PARTS, Panel Support To Grille Panel

SCREW, Tapping.....	69	80.....	2.050	2	400 2359
SCREW, Tapping.....	70/	80.....	12.075	2	400 0424
NUT, Spring.....	69/70	80.....	17.426	2	G447026
NUT, Spring.....	71/	80.....	2.050	2	400 2002

2.051–8 ATTACHING PARTS, Panel Support To Lower Baffle

SCREW, Tapping	69	80.....	12.060	1	400 3556
SCREW, Tapping.....	70/	80.....	12.060	1	400 3069

2.051–9 MOULDING ASSEMBLY, Radiator Grille Panel (Refer Group 26 Illustrations)

2.052 TAPE, Radiator Grille Insert

70	80 (Used With Body Paint-P-39)	.....	1	363 1523
70	80 (Used With Body Paint-P-58)	.....	1	363 1525
70	80 (Used With Body Paint-P-72)	.....	1	363 1522
70	80 (Used With Body Paint-P-79)	.....	1	363 1524
70	80 (Used With Body Paint-P-80)	.....	1	363 1521
70	80 (Used With Body Paint-P-82)	.....	1	363 1526
70	80 (Used With Body Paint-P-84)	.....	1	363 1527
70	80 (Used With Body Paint-P-85)	.....	1	363 1528
70	80 (Used With Body Paint-P-86)	.....	1	363 1529
70	80 (Used With Body Paint-P-87)	.....	1	363 1530
70	80 (Used With Body Paint-P-90)	.....	1	363 1531
70	80 (Used With Body Paint-P-91)	.....	1	363 1532
70	80 (Used With Body Paint-P-94)	.....	1	363 1533
70	80 (Used With Body Paint-P-95)	.....	1	363 1534
71	10 (Used With Body Paint-A-1)	.....	1	363 2982
71	10 (Used With Body Paint-A-2)	.....	1	363 2984
71	10 (Used With Body Paint-A-5)	.....	1	363 2987
71	10 (Used With Body Paint-A-6)	.....	1	363 2988
71	10 (Used With Body Paint-A-7)	.....	1	363 2989
71	10 (Used With Body Paint-A-9)	.....	1	363 2990
71	10 (Used With Body Paint-B-2)	.....	1	363 2992
71	10 (Used With Body Paint-B-4)	.....	1	363 2993
71	10 (Used With Body Paint-B-5)	.....	1	363 2994
71	10 (Used With Body Paint-B-6)	.....	1	365 0553
71	10 (Used With Body Paint-B-7)	.....	1	365 0552

COOLING - GRILLE

2.102–1 HOUSING, Thermostat

67	SIX	.....	1	317 2305	
68/	SIX	.....	1	318 9718	
67/69	V8	.....	1	317 9073	
70	304	.....	1	317 9073	
70	360-390 ...(Less Tapped Hole For Distributor Thermostatic Vacuum Valve)	.....	1	317 9073	
70	360-390 ...(Incl. Tapped Hole For Distributor Thermostatic Vacuum Valve)	.....	1	321 0852	
71	V8	.....	1	317 9073	
72	V8	.....	1	321 0852	

2.102–2 ATTACHING PARTS, Thermostat Housing To Cylinder Head

STUD	67/69	(1-7/16" Long) SIX (WSBD)	.....	1	317 2315	
STUD	67	(2-5/8" Long) SIX ***(Use G103180)***	.....	1	317 2316	
STUD	68	(2-1/8" Long) SIX	17.718	1	G186895	
STUD	70/	SIX (Except 65 Amp. Alt.)	17.718	1	G148062	
BOLT, Hexagon	67/	SIX (WDBD)	17.038	1	G180079	NA
BOLT, Hexagon	68/	(1-1/2" Long) SIX	17.038	1	G180083	NA
WASHER, Plain	67/	SIX	17.814	2	G120393	NA
WASHER, Lock	67/	SIX (WSBD)	17.820	2	G120214	
WASHER, Lock	67/	SIX (WDBD)	17.822	1	G138485	NA
NUT, Hexagon	67/68	SIX (WSBD)	17.406	2	G120368	
NUT, Hexagon	69/	SIX (WSBD)	17.406	1	G120368	

2.102–3 ATTACHING PARTS, Thermostat Housing To Manifold

BOLT, Hexagon	67/	(1" Long) V8 (LEEP)	17.038	2	G180079	NA
BOLT, Hexagon	67/	(1" Long) V8 (WEEP)	17.038	1	G180079	NA
BOLT, Hexagon	67/	(1-3/4" Long) V8 (WEEP)	.....	1	318 4637	
WASHER, Plain	67/	V8	17.814	2	G120393	NA
WASHER, Lock	67/	V8	17.820	2	G120214	

2.102–4 GASKET, Thermostat Housing

67	SIX	.....	1	317 2314	
68/	SIX	.....	1	318 9874	
67/	V8	.....	1	318 7543	

2.102–5 CAP, Thermostat Housing (Less Heater)

67/	.....	2.080	1	316 0337	

2.102–6 ATTACHING PARTS, Housing Cap To Thermostat Housing

CLAMP	67/	SIX	17.108	1	320 3077	

2.102–7 PLUG, Thermostat Housing

72	V8 (01-WST)(40-WST)(70-WST)(70-W4ST)	.....	1	G103879	

SPECIAL INFORMATION

The Engine Build Code Number, Vehicle Identification Number and the information provided on the Unit Body Plate are often necessary when determining the proper replacement parts for your automobile. For their location refer to the General Information Section found at the front of this catalog.

NOTES

3–1 ..... The Shield is a single piece construction.

3–2 ..... The Shield is made of two pieces welded together.

3–3 ..... Used with Motorola or American Motors Alternator Equipment.

3–4 ..... Used with Leece-Neville Alternator Equipment (60 or 65 Amp. Alternator).

3–5 ..... Used on cars with an American Motors Part Number stamped on the Alternator.

3–6 ..... Has American Motors Part Number 318 2898 stamped on the Regulator face.

3–7 ..... Has the name Motorola stamped on its face.

3–8 ..... Used on Distributor with Delco-Remy #1111191 stamped on Distributor Housing.

3–9 ..... Used on Distributor with Delco-Remy #1111948 stamped on Distributor Housing.

3–10 .... Used when the Distributor Vacuum Control Tube is used with one hose and one fitting.

3–11 .... Used when the Distributor Vacuum Control Tube is used with two hoses (one on each end).

3–12 .... The Tone Adjusting Screw has seven serrations. Horn is made by Ford.

3–13. .... The Tone Adjusting Screw is cross recessed type. Horn is made by Spartone.

3–14 .... The Tone Adjusting Screw is Hex-Head type. Horn is made by Prestolite.

3–15 .... The Instrument Cluster has an Overlay across the Control Knob area.

3–16 .... The Instrument Cluster does not have an Overlay across the Control Knob area.

3–17 .... This Chassis Wire Harness is used with a Chassis Wire Harness Connector as illustrated for Type 1.

3–18 .... This Chassis Wire Harness is used with a Chassis Wire Harness Connector as illustrated for Type 2.

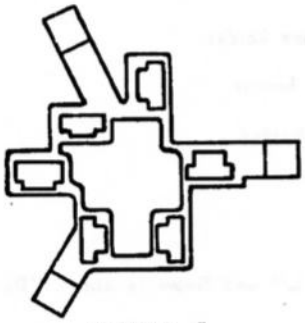

TYPE 1



TYPE 2

3–19 .... The Headlamp Beam is aimed "Down Right" for use in LHD Countries.

3–20 .... The Headlamp Beam is aimed "Down Left" for use in RHD Countries.

3–21 .... Used when the Headlamp Assembly is stamped "Hall Lamp" or "H L" or "C M L".

3–22 .... Used when the Headlamp Assembly is stamped "G L A".

Printed in U.S.A.

NOTES

3–23 .... Headlamp Door was used prior to Domestic Car Sequence No. E-017384 and W-025710 on the Rebel, W-025101 on the (SST) and 702283 on Canadian built Cars.

3–24 .... Headlamp Door was used beginning with Domestic Car Sequence No. E-017384 and W-025710 on the Rebel, W-025101 on the (SST) and 702283 on Canadian built Cars.

3–25 .... Bezel has Chrome over entire surface.

3–26 .... Bezel has Silver inner surface with Chrome edging.

3–27 .... Center Square of Lens has Silver Painted Border.

3–28 .... Lens has no Silver Paint.

3–29 .... The Back-Up Lamp Switch is fastened to the Steering Column by two Tapping Screws.

3–30 .... The Back-Up Lamp Switch is fastened to the Steering Column by a Retaining Strap and two Nuts.

3–31 .... The Hazard Warning Light Lever is located at the center of the Directional Signal Switch Housing for (LAW) and at the top of the Housing for (WAW).

3–32 .... The Hazard Warning Light Lever is located at the bottom of the Directional Signal Switch Housing for (LAW) and at the center of the Housing for (WAW).

3–33 .... Signal Lever and Attaching Screw are countersunk to match.

3–34 .... Signal Lever is not countersunk, uses Pan Head Screw to attach.

3–35 .... Courtesy Lamp is located under Instrument Panel.

3–36 .... Courtesy Lamp is located in the Rear Quarter Lower Trim Panel.

3–37 .... Used with Single Horn Button located at center of Steering Wheel.

3–38 .... Used with Triple Horn Button located on Spokes of Steering Wheel.

3–39 .... The Directional Signal Flasher Clip is mounted at bottom of Cluster.

3–40 .... The Directional Signal Flasher Clip is mounted at top of Cluster.

3–41 .... Overlay has a high gloss finish.

3–42 .... Overlay has a Non-Glare Finish.

3–43 .... Instrument Cluster Lens Mask has a dark grained Bezel with Chrome border.

3–44 .... Instrument Cluster Lens Mask has a Silver Gray Bezel with Black border.

3–45 .... Instrument Cluster Lens Mask has Silver Gray Bezel with Chrome border.

3–46 .... Speedometer has White markings on a Black background.

3–47 .... Speedometer has Black markings on a Silver background.

3–48 .... Headlamp Assembly is stamped "H L" or "Hall Lamp" or "C M L" and Beam is aimed "Down and Right" for use in LHD Countries.

3–49 .... Headlamp Assembly is stamped "H L" or "Hall Lamp" or "C M L" and Beam is aimed "Down and Left" for use in RHD Countries.

3–50 .... Headlamp Assembly is stamped "G L A" and Beam is aimed "Down and Right" for use in LHD Countries.

3–51 .... Headlamp Assembly is stamped "G L A" and Beam is aimed "Down and Left" for use in RHD Countries.

3–52 .... Used on Alternator with 2-7/8" Diameter Pulley.

3–53 .... Used on Alternator with 2-5/8" Diameter Pulley.

Printed in U.S.A.

NOTES

3–54 .... Switch has two 8" Wire Leads.

3–55 .... Switch has two Spade Terminals.

3–56 .... Used on Sedans equipped with Dome Lamp Wire routed through Front Pillar.

3–57 .... Used on Sedans equipped with Dome Lamp Wire routed through Rear Pillar.

3–58 .... Voltage Regulator is a Mechanical or Vibrating Type.

3–59 .... Voltage Regulator is a Transistorized Type.

3–60 .... Used on American Motors Alternator Equipment.

3–61 .... Gear has two Oil Lubrication Holes.

3–62 .... Gear has four Oil Lubrication Holes.

3–63 .... Lens was used prior to Domestic Body No. 49664 and Canadian Car Sequence No. 26396 on the 69 18 Series and Body No. 49650 on the 69 88 Series.

3–64 .... Lens was used beginning with Domestic Body No. 49664 and Canadian Car Sequence No. 26396 on the 69 18 Series and Body No. 49650 on the 69 88 Series.

3–65 .... Bezel has Black Painted Recessed Circular Wells for the Instruments and does not have a Visor over it.

3–66 .... Bezel has Bright Silver Finish Recessed Circular Wells for the Instruments and includes a Visor.

3–67 .... Gasket was used prior to Car Sequence No. 57205.

3–68 .... Gasket was used beginning with Car Sequence No. 57205.

3–69 .... Used on State of Wisconsin Motor Vehicle Department Cars.

3–70 .... Speedometer Medallion is ribbed, all chrome and mounted on Instrument Cluster Lens.

3–71 .... Speedometer Medallion has black center and is mounted on the Speedometer Needle Hub.

3–72 .... Used on early cars with Alternator End Plate Connectors as illustrated for Type 1.

3–73 .... Used on cars with Alternator End Plate Connectors as illustrated for Type 2.

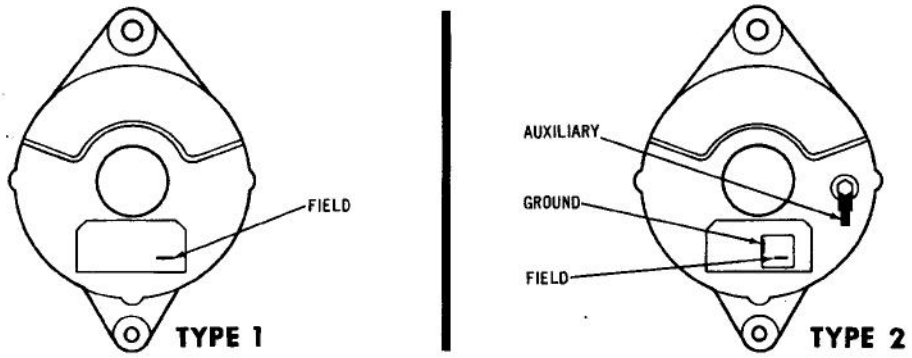

3–74 .... Used on cars which have "six" metal terminals at the Body Harness Connector.

3–75 .... Used on cars which have a two or three-piece Chassis Wire Harness with a disconnect at the dash panel.

NOTES

3–76 .... Used on cars which have "seven" terminals at the Body Harness Connector.

3–77 .... Used on cars with Automatic Transmission Kickdown Switch mounted on Accelerator Pedal Bracket.

3–78 .... Used on cars with Automatic Transmission Kickdown Switch attached to the Carburetor.

3–79 .... License Lamp has replaceable bulb and lens.

3–80 .... License Lamp is made as a single, sealed unit with non-replaceable bulb and lens.

3–81 .... Used on Cars with Parking Lamp having a length of wire with two "bullet-type" terminals.

3–82 .... Used on Cars with Parking Lamp having no wires and three terminals built into the lamp housing.

3–83 .... Used in early production with Metal type Domelamp or Rear Quarter Lamp having a length of wire attached.

3–84 .... Used with Nylon type Domelamp or Rear Quarter Lamp having no wires attached.

3–85 .... Bezel measures 8" from top to bottom on left side of Speedometer Opening and is used on Instrument Panel having an Upper Finish Panel and a Crash Pad.

3–86 .... Bezel measures 7-3/8" from top to bottom on left side of Speedometer Opening and is used on Instrument Panel having no Upper Finish Panel, but rather a large, one piece Crash Pad.

3–87 .... Car is equipped with Thermostat Housing having no Distributor Thermostatic Vacuum Valve.

3–88 .... Car is equipped with Thermostat Housing on which is mounted the Distributor Thermostatic Vacuum Valve.

3–89 .... Tail Lamp Housing Wire used has Connector which is inside the Grommet with no wire length showing inside the Trunk.

3–90 .... Tail Lamp Housing Wire used has Connector which is separated from the Grommet with a 7" length of wire showing inside the Trunk.

3–91 .... Used with the Type of Case as illustrated for Type 1.

3–92 .... Used with the Type of Case as illustrated for Type 2.

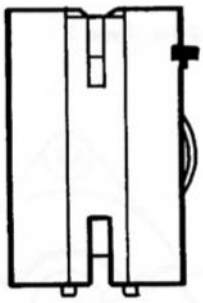

TYPE 1

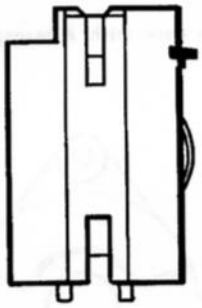

TYPE 2

3–93 .... The Trunnion to Lever Grommet has an I. D. of 33/64" and an O. D. of 49/64", also uses a Bushing (or Sleeve) between the Grommet and Trunnion.

3–94 .... The Trunnion to Lever Grommet has an I. D. of 25/64" and an O. D. of 5/8" and does not use a Bushing (or Sleeve).

3–95 .... The indicated Service Replacement Number may have a higher Amperage Rating than the Original Equipment.

3–96 .... Has a finger operated Lever Lock Inhibitor at Upper Column instead of an Anti-Theft Rod at Transmission and is used beginning with Car Sequence No.

Printed in U.S.A.

NOTES

3–97 .... Center portion of Knob painted Black.

3–98 .... Center portion of Knob Bright Chrome.

3–99 .... On 1970 (232) used prior to Engine Build Code Number 307E20.

3–100 ... On 1970 (232) used on Cars beginning with Engine Build Code Number 307E20.

3–101 ... Used on Cars with Back-Up Light Switch mounted on Transmission.

3–102 ... Used on Cars with Back-Up Light Switch mounted on Steering Column.

3–103 ... The Horn Button has an Insert that is plain or has "AM" stamped with a Red, White and Blue Border Stripe. The Wheel is rubber.

3–104 ... The Horn Button has an Insert with "AMERICAN MOTORS" stamped. The Wheel is plastic with a Stainless Steel Spoke.

3–105 ... Heater Motor Resistor has 4-prong type Terminal.

3–106 ... Heater Motor Resistor has 3-prong type Terminal. A Heater Motor Relay is also used.

3–107 ... Used prior to Body No. 45432.

3–108 ... Used beginning with Body No. 45432.

3–109 ... Copper Tubing used with Bulk Hose (Carburetor To Vacuum Tube and Distributor To Vacuum Tube).

3–110 ... All Bulk Hose between Distributor and Carburetor.

3–111 ... Lamp attaches with 2 Tapping Screws which are 3/4" long.

3–112 ... Lamp attaches with 2 Tapping Screws which are 1-1/2" long.

3–113 ... Stop Light Switch is mounted on Brake Pedal Support.

3–114 ... Stop Light Switch is mounted on Brake Master Cylinder Push Rod.

3–115 ... Used on Cars with Low Fuel Warning Lamp.

3–116 ... Used on Cars less Low Fuel Warning Lamp.

3–117 ... Tail Lamp Housing has a 11/64" Socket Index Slot.

3–118 ... Tail Lamp Housing has a 3/16" Socket Index Tab.

3–119 ... Two types of Speedometers and Masks are used on 1972 10. (Refer to Type 1 Illustration for correct part.)

3–120 ... Two types of Speedometers and Masks are used on 1972 10. (Refer to Type 2 Illustration for correct part.)

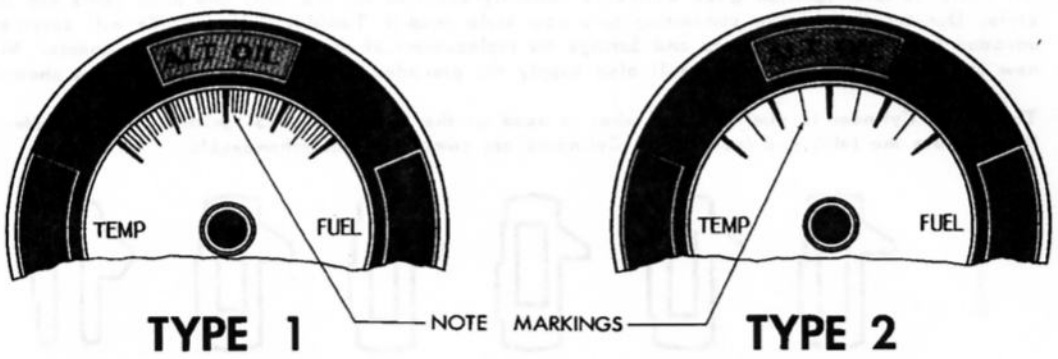

TYPE 1 **TYPE 2**

NOTES

3–121 ... Identification Panel has Escutcheons around Lens openings.

3–122 ... Two types of Lenses are used on the 1972 88. (Refer to Type 1 Illustration for correct part.)

3–123 ... Two types of Lenses are used on the 1972 88. (Refer to Type 2 Illustration for correct part.)



TYPE 1

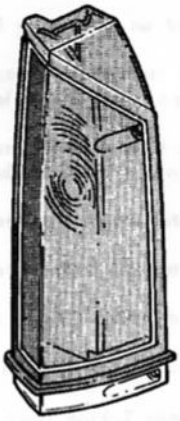

TYPE 2

3–124 ... Back-Up Switch has two Blade Terminals.

3–125 ... Back-Up Switch has four Blade Terminals.

3–126 ... G. E. Bulb 1157A is a Painted Amber Bulb.

3–127 ... G. E. Bulb 1157NA has Natural Amber Colored Glass.

3–128 ... Alternator adjusting Strap is not a part of the Mounting Bracket.

3–129 ... Alternator adjusting Strap and Front Mounting Support is one piece "U" shaped Bracket.

3–130 ... Switch is a Spring Clip Push-In type.

3–131 ... Switch has a threaded Fitting.

3–132 ... Speedometer Dial has "Police Certified Speedometer" painted on it.

3–133 ... Speedometer Dial has "Police" painted on it.

3–134 ... All Plate Tumbler Ignition Lock Cylinders currently supplied for the 1969 and prior years are the staked-in style. Our supplier is now converting to a new style snap-in Tumbler Cylinder. We will service an uncoded cylinder less Tumblers and Springs for replacement of the staked-in style cylinders. With the new snap-in Tumbler design we will also supply the precoded Tumblers and Retainers as shown below.

This Lock Cylinder is similar as to what is used on the 1970 thru 1973 Ignition Lock Cylinder. Please note the (old) and (new) style Cylinders are completely interchangeable.

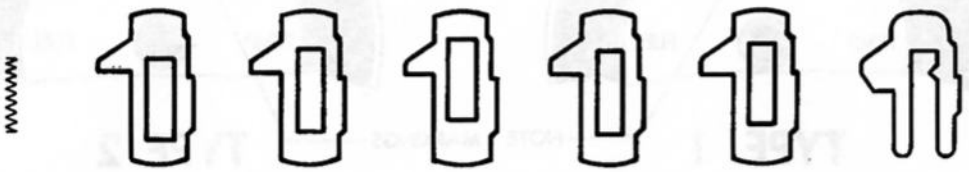

SPRING	BRASS	BLACK	BRASS	COPPER	ZINC	RETAINER
812 2881	812 2876	812 3183	812 3184	812 3185	812 3186	812 2875

ELECTRICAL CHART INDEX

ALTERNATOR .....

LEECE - NEVILLE NO.	PAGE NO.
2182A	Gr 3 - C 1

MOTOROLA NO.	PAGE NO.
A12NAM453S	Gr 3 - C 3
A12NAM455S	Gr 3 - C 5
A12NAM456S	Gr 3 - C 3
A12NAM457S	Gr 3 - C 5
A12NAM552S	Gr 3 - C 3
A12NAM553S	Gr 3 - C 5
A12NAM604S	Gr 3 - C 3
A12NAM605S	Gr 3 - C 5
8AL2004F	Gr 3 - C 11
8AL2005F	Gr 3 - C 11
8AL2006F	Gr 3 - C 11
8AL2007F	Gr 3 - C 11
8AL2008F	Gr 3 - C 13
8AL2009F	Gr 3 - C 13
8AL2011F	Gr 3 - C 15
8AL2012F	Gr 3 - C 15
8AL2013F	Gr 3 - C 15
8AL2014F	Gr 3 - C 15
8AL2015K	Gr 3 - C 18
8AL2016K	Gr 3 - C 18
8AL2020L	Gr 3 - C 13
8AL2021L	Gr 3 - C 18
8AL2025F	Gr 3 - C 18
8AL2026F	Gr 3 - C 18

AMERICAN MOTORS NO.	PAGE NO.
318 2888	Gr 3 - C 7
318 2889	Gr 3 - C 7
318 3643	Gr 3 - C 1
318 9458	Gr 3 - C 7
318 9459	Gr 3 - C 7
319 1060	Gr 3 - C 7
319 5534	Gr 3 - C 9
319 5535	Gr 3 - C 9
319 9804	Gr 3 - C 9
319 9805	Gr 3 - C 9
319 9806	Gr 3 - C 9
320 6964	Gr 3 - C 3
320 6965	Gr 3 - C 3
320 6966	Gr 3 - C 3
320 7739	Gr 3 - C 5
320 7740	Gr 3 - C 5
320 7741	Gr 3 - C 5
448 6761	Gr 3 - C 9
448 6762	Gr 3 - C 9
448 8287	Gr 3 - C 9
448 8288	Gr 3 - C 9

STARTING MOTOR .....

AMERICAN MOTORS NO.	PAGE NO.
318 2972	Gr 3 - C 33
318 2890	Gr 3 - C 35
318 4250	Gr 3 - C 31
318 8794	Gr 3 - C 31
319 1926	Gr 3 - C 35
319 3382	Gr 3 - C 33
320 8850	Gr 3 - C 31
321 2235	Gr 3 - C 33

DELCO - REMY NO.	PAGE NO.
1107331	Gr 3 - C 31
1107349	Gr 3 - C 31
1108325	Gr 3 - C 31
1108384	Gr 3 - C 31

NOTE: A Vendor - American Motors Cross - Reference may be found immediately following this index.

Printed in U.S.A.

ELECTRICAL CHART INDEX

DISTRIBUTOR .....

DELCO - REMY NO.	PAGE NO.
1110340	Gr 3 - C 19
1110366	Gr 3 - C 19
1110444	Gr 3 - C 19
1110481	Gr 3 - C 19
1110497	Gr 3 - C 19
1111106	Gr 3 - C 21
1111191	Gr 3 - C 21
1111198	Gr 3 - C 21
1111472	Gr 3 - C 21
1111473	Gr 3 - C 21
1111948	Gr 3 - C 27
1111987	Gr 3 - C 27
1111988	Gr 3 - C 27
1112018	Gr 3 - C 27
1112028	Gr 3 - C 27
1112111	Gr 3 - C 29
1112112	Gr 3 - C 29

AMERICAN MOTORS NO.	PAGE NO.
318 0070	Gr 3 - C 19
318 0286	Gr 3 - C 23
318 2701	Gr 3 - C 21
318 2702	Gr 3 - C 19
318 2862	Gr 3 - C 25
318 2863	Gr 3 - C 25
318 4797	Gr 3 - C 21
318 7537	Gr 3 - C 21
319 0890	Gr 3 - C 19
319 3144	Gr 3 - C 21
319 3199	Gr 3 - C 21
319 4669	Gr 3 - C 27
319 7232	Gr 3 - C 27
319 7233	Gr 3 - C 27
319 7332	Gr 3 - C 19
321 0193	Gr 3 - C 27

ELECTRICAL UNIT CROSS REFERENCE

PRESTOLITE	A.M.
A-943C	320 9035
ALA-19	320 9033
ALA-20	320 9182
ALA-20A	320 9181
ALA-20B	320 9158
ALA-20C	320 9030
ALA-20DS	320 8641
ALA-33	320 9037
ALB-37	320 9178
ALC-21D	320 9031
ALD-21	320 9046
ALE-4	320 9036
ALE-20B	320 9158
ALE-41	320 9143
ALE-44	320 9141
ALE-45	320 9142
ALE-48	320 9144
ALE-49	320 9150
ALE-54A	320 9177
ALE-54F	320 9696
ALE-55	320 8638
ALE-56	320 9156
ALE-70	320 8637
ALE-1002AS	320 9045
ALE-1002FS	320 9025
ALE-1003	320 9052
ALE-1003G	320 9015
ALE-1012CS	320 9034
ALE-1012KS	320 9161
ALE-1042A	320 9157
ALE-2006	320 9043
ALE-2006C	320 9020
ALE-2008	320 9044
ALE-2008C	320 9180
ALE-2008D	320 9022
ALE-2008M	320 8640
ALH-2046	320 9176
ALK-25	320 9140
ALK-1042RS	320 8643
ALK-1042TS	320 8644
ALK-1042VS	320 9695
ALK-2024	320 9146
ALK-6311	319 1060
GAR-171	320 9019
GBM-21B	311 2796
GE-107	320 9062
GE-108	320 2015
GE-128	320 9170
GGU-31	320 9154
GJC-27C	320 9017
GJC-42	320 1813
GJC-2012AS	320 1814
GJO-1005A	320 1815
GJO-1005B	320 4461
GJO-2006	320 3572
GJO-2006F	320 3592
GJO-2047	320 3590
GJP-1005B	320 1825
GJP-1039	320 2121
GJP-1039B	320 3591
GJP-2030	320 1817
GJP-2038	320 1816
GKJ-1005	320 1815
GR-32	320 9032
IAO-7A	311 8871
IAO-20	311 8872
IAT-81B	320 9054
IAT-81C	320 2010
IAT-81RA	320 2011
IAT-81RD	320 9164
IAT-87	320 1798
IAT-1033C	320 3937
IAT-1054LB	320 2008
IAT-1100LB	320 1807
IAT-2023LL	320 1808
IAT-2023LT	320 9061
IAT-2023RR	320 9168
IAT-2086LA	320 9060
IAT-3076DS	320 9088
IAU-1016A	320 3871
IAZ-30	320 2809
IAZ-1045L	320 2009
IAZ-2105	320 0197
IAZ-2107L	320 0407
IAZ-2108	320 2807
IAZ-2109	320 4202
IBB-2042SS	320 8629
IBB-2042SS-1	320 4585
IBK-1003A	320 1796
IBK-1003B	320 8613
IBK-1016	320 1799
IBP-1059R	320 8632
IBP-2004RH	320 8619
IBP-2023LC	320 1803
IBP-2023RJ	320 8623
IBP-2040L	320 1801
IBP-2040RA	320 8633
IBP-2209LH	320 1802
IBP-2209RN	320 8630
IBP-2209RP	320 8631
IBR-1003B	320 9053
IBR-1016	320 9056
IBT-1007S	320 8659
IDC-1002	320 9171
IDC-2001	320 8658
IDC-2004	320 9173
IG-579A	311 1952
IGB-308DS	320 1809
IGB-379FS	320 8617
IGB-401AS	320 2810
IGB-2023LC	320 1803
IGC-204BS	320 8616
IGC-219AS	320 9172
IGC-2168RS	320 8620
IGE-15	320 3204
IGE-29BS	320 9055
IGE-2935	320 9055
IGH-28	320 8660
IGS-1100LAN	320 3532
IGS-1100LAR	320 9057
IGS-1100LAU	320 9058
IGS-1100RBB	320 9167
IKB-1003C	320 2808
MCL-127	311 9053
MCL-129	311 9054
MDD-34	320 2485
MDL-1002	320 9052
MDL-2012CS	320 1791
MDL-2049	320 1787
MDL-2151	320 8655
MDT-41	320 9085
MDT-1002	320 1786
MDY-65L	320 9083
MDY-65R	320 9082
MDY-1005A	320 9050
MDY-1005AS	320 1785
MDY-1005SS	320 8648
MDY-6113	319 1926
MEC-20S	320 8652
MEC-27	320 5985
MEC-60	320 9084
MEC-1005AS	320 9064
MEC-1005S	320 1784
MEC-1058	320 5997
MU-54B	400 1091
MU-54L	400 0481
OE-1739	320 9162
OE-1740	320 9163
P10-264	320 8635
P35-493	320 8636
P90-29	320 8618
P90-263	320 8653
P90-325	320 8647
P90-327	320 8621
P90-328	320 8646
P90-442	320 8656
P90-447	320 8657
P90-474	320 8650
P90-745	320 8622
P90-818	320 8634
P90-885	320 8615
P90-874	320 8642
P90-886	320 8614
P90-887	320 8645
P90-949	320 9697
PS-1357	320 1792
PS-1357A	320 4108
PS-1358	320 1793
PS-1411	320 9065
PS-1411A	320 9079
PS-1422A	320 4108
PS-1446S	320 8649
PU-585	320 9013
PU-602	320 3644
PU-611	320 3645
PU-625	320 9014
PU-1152	320 3589
PU-1605	320 9014

Printed in U.S.A.

ELECTRICAL UNIT CROSS REFERENCE (Cont.)

PRESTOLITE	A.M.
PU-1653	320 3589
PU-1664	320 9174
SAJ-27	320 8654
SAJ-33	320 4054
SAJ-49	320 9086
SAJ-1021	320 9049
SAJ-1021C	320 8651
SAJ-1021D	320 4020
SAJ-4001	320 2429
SAJ-4003	320 2429
SAJ-4004	320 2863
SAJ-4005	320 9790
SAJ-4008	320 9081
SSX-1023	320 4053
SW-634	320 9038
VC-45	320 8624

PRESTOLITE	A.M.
VC-49	320 8625
X-260	G103905
X-261	320 3643
X-263	320 3683
X-295	311 3686
X-489	320 6011
X-943C	320 9035
X-3416	320 9016
X-3417	320 9028
X-3433	320 9148
X-3470	320 9021
X-3554	320 9023
XA-744AN	320 9155
XA-839	320 2016
XA-889	320 2016
XA-899	320 9169

PRESTOLITE	A.M.
XA-910	320 3204
XA-943F	320 8639
XA-944C	320 9024
XA-949	320 9183
XA-960	320 9203
8X-173	320 9027
8X-1063	320 9040
8X-3427	320 9018
8X-3550	320 9152
8X-3611	320 9145
12X-196	311 3686
12X-199	320 9039
12X-864	311 8777
13-900	320 9063
18-11	320 9087
90-2226	812 2050

DELCO - REMY	A.M.
1465	311 4595
113702	320 6211
124545	311 2794
125609	320 6210
200382	320 6209
273436	320 4205
274738	320 8354
274795	320 3414
443930	311 2687
453418	320 6665
453465	320 6640
453647	320 6655
454408	320 7997
454512	320 4213
455106	320 8353
456652	320 4233
801731	448 8081
801732	448 8082
801734	448 8083
801737	448 8084
801739	319 8787
801781	448 8085
804000	311 2797
807295	320 6667
809593	311 2693
809763	320 6080
809945	320 6207
809961	311 2692
810074	320 6642
810078	320 6643
811553	311 2705
811912	320 6659
812410	311 2711
812823	320 6208
813521	311 2707
816774	310 8453
816784	320 6645

DELCO - REMY	A.M.
818265	320 6099
819104	320 6213
820369	311 2693
820445	311 2718
823551	320 6215
824735	312 5328
826281	311 2699
826282	311 2700
954378	311 3686
1100326	320 2796
1110340	318 0070
1110366	318 2702
1100421	320 3564
1100696	320 4215
1100891	314 4841
1102049	314 6416
1102055	320 0237
1102096	320 2797
1102123	315 5796
1102312	320 3565
1103011	314 6133
1107119	313 4497
1107136	313 6793
1107201	316 1142
1107282	316 8961
1107317	317 3151
1107331	317 3236
1107348	316 8961
1107349	317 4483
1107647	314 5176
1107648	314 4695
1107704	315 4786
1107717	315 5612
1107731	315 6116
1107950	312 5401
1107959	312 7120

DELCO - REMY	A.M.
1108007	313 5288
1108029	313 8627
1108325	318 8794
1108384	320 8850
1110241	314 2037
1110242	314 5115
1110244	315 1621
1110246	315 4500
1110289	316 7666
1110299	316 7665
1110320	317 3220
1110340	318 0070
1110366	318 2702
1110444	319 0890
1110497	321 5824
1110884	315 0364
1110887	315 0365
1110923	315 4501
1111025	316 7667
1111106	318 2701
1111130	318 1865
1111191	318 4797
1111198	318 7537
1111472	319 3144
1111473	319 3199
1111948	319 4669
1112028	321 1821
1112111	321 5825
1112112	321 5826
1112179	321 7798
1112382	313 4371
1112409	314 1431
1112426	315 4198
1112435	316 4204
1114356	320 5022
1115033	317 3687

Printed in U.S.A.

ELECTRICAL UNIT CROSS REFERENCE (Cont.)

DELCO - REMY	A.M.
1115043	315 4627
1115066	316 1081
1115087	314 5641
1115105	315 1499
1115134	320 8343
1115193	317 3292
1115238	320 8861
1115355	812 0586
1115362	320 7411
1115363	320 8005
1115393	313 6732
1116044	311 2735
1116072	313 6033
1116092	313 6033
1116095	311 9564
1116099	311 9565
1116113	320 0291
1116117	320 0290
1116121	320 0289
1116174	315 7915
1116207	320 4211
1116212	320 4221
1116213	320 4204
1116214	320 4072
1116219	320 6110
1116225	320 4488
1116460	312 5417
1116652	350 0726
1116653	350 9174
1116665	320 7494
1116798	310 3463
1116903	315 5593
1116904	315 3884
1117070	316 1485
1118302	312 7202
1118828	313 9719
1119003	314 6142
1119122	314 5335
1119168	315 0427
1119515	316 7669
1119600	315 5799
1119760	311 9551
1119793	311 9550
1119910	320 0939
1119919	320 0939
1838568	311 2708
1839345	311 2903
1846818	812 0591
1847289	320 6639
1847643	320 6647
1852226	812 0590
1852233	812 0588
1852234	812 0589
1852722	812 2343
1852783	812 2344
1852935	812 1648
1855520	311 3418
1855720	311 3419
1867082	318 2700
1857502	311 8591
1858603	320 6067
1858749	320 7364
1858753	320 6097
1861591	320 6069
1863521	320 6712
1865978	311 2933
1866400	311 3975
1868328	311 3687
1869573	320 6669
1870732	812 2349
1871838	320 6638
1878077	311 6752
1878249	311 3715
1878510	311 2694
1879140	311 2724
1881371	320 6644
1881833	311 2701
1881838	311 2704
1882433	311 2690
1882569	311 2738
1882592	311 2795
1882908	311 2697
1882909	311 2698
1882956	320 7443
1883730	311 3984
1885339	448 8088
1885557	311 2731
1885558	311 2732
1885665	311 2717
1886967	311 9562
1887433	311 3984
1887743	320 6950
1900232	320 1923
1903101	311 9563
1906766	320 7327
1906945	320 2006
1906956	320 4346
1907038	311 5650
1908580	311 2702
1908680	320 6081
1908829	311 5591
1909003	311 2716
1909180	311 9222
1910404	311 9539
1910436	311 4705
1910529	812 2345
1911263	320 6075
1911456	311 2688
1911457	311 2689
1911484	311 2930
1911497	311 5662
1911499	311 2721
1911563	312 9158
1911763	311 2696
1911832	311 2769
1911833	311 2770
1911855	320 4217
1911896	311 2729
1911961	320 6066
1911978	311 3976
1912008	320 6077
1912073	320 6078
1912129	320 6643
1912654	311 3683
1912725	320 6066
1913100	320 6288
1913960	320 6096
1914144	320 6646
1914491	320 6079
1914579	320 6086
1914580	320 6091
1914916	320 6645
1915040	311 3983
1915056	311 3980
1915172	311 2796
1915231	311 8593
1915284	311 5293
1916636	311 3807
1917123	320 6656
1917247	311 9701
1917249	311 9556
1917653	311 5295
1917656	311 5296
1917664	311 5298
1917855	311 5889
1917887	311 4640
1918148	311 9561
1918357	311 7451
1920445	311 3981
1920914	311 5299
1921195	311 5648
1921196	311 5649
1921275	311 5291
1921356	311 6371
1921362	320 6073
1921979	311 9533
1922266	311 6751
1922382	311 5588
1922426	320 7994
1922429	311 8596
1922550	311 5480
1922701	311 9532
1923008	311 5654
1923016	311 5651
1923017	311 5653
1923018	311 5646
1923039	311 5652
1923040	311 5647
1923043	311 5655
1923056	320 6072
1923060	311 9534
1923083	311 6859
1923250	311 9554
1923251	311 9555
1923284	320 6071
1923295	320 2029
1923535	311 9530
1923907	311 9548
1924245	311 8583
1924369	320 6636
1924370	320 6635
1924371	320 6634
1924499	311 8589
1924571	311 8584
1924737	320 6653
1925378	320 6059
1925379	320 6060
1925574	812 2348
1925586	320 0242
1925939	311 6317

Printed in U.S.A.

ELECTRICAL UNIT CROSS REFERENCE (Cont.)

DELCO - REMY	A.M.
1925942	311 6318
1925960	311 6370
1926600	320 6010
1926605	320 6085
1926616	320 6012
1926617	320 6082
1926618	320 6083
1926622	311 9545
1926625	320 6212
1926626	311 9541
1926648	320 8355
1927131	320 6675
1927598	320 0186
1927700	311 9531
1927848	320 6088
1927849	320 6087
1927850	320 6092
1927853	320 6006
1927878	311 6750
1928015	320 6084
1928111	320 4584
1928231	311 6860
1928952	311 9528
1928966	311 9543
1928969	311 9542
1931050	311 8588
1931052	311 8586
1931054	311 8587
1931080	311 8594
1931082	311 8592
1931084	311 8590
1931115	311 9557
1931129	320 6012
1931258	320 6065
1931512	314 1430
1931585	320 0984
1931654	320 7295
1931748	320 0434
1931988	320 0197
1931997	320 6673
1931998	320 6671
1932002	320 6674
1932004	320 4585
1932015	320 4216
1932018	320 0192
1932023	320 6672
1932024	320 6677
1932028	320 0786
1932135	320 0193
1932197	320 6098
1932198	320 6005
1932205	320 6094
1932209	320 6086
1932292	311 9529
1932506	320 2029
1932616	320 4220
1932696	320 0983
1932900	320 0187
1933352	311 9527
1933363	311 9546
1933418	311 9537
1933421	311 9538
1933491	311 9560
1933493	311 9558
1933494	311 9567
1933496	311 9553
1933506	311 9547
1933524	311 9552
1933527	311 9559
1933529	320 0200
1933761	320 0936
1933765	320 6005
1933933	320 2798
1934298	320 0189
1934300	320 0190
1935128	320 1072
1935131	320 7258
1935621	320 0433
1935622	320 0196
1935779	320 6063
1935851	320 0935
1935853	320 0938
1936388	320 0188
1937434	320 0191
1937436	320 0195
1937440	320 0194
1937836	320 0202
1938058	320 8356
1938116	448 8093
1938193	320 6670
1938202	320 0218
1938203	320 0204
1938330	320 0407
1938340	320 0408
1938527	320 7200
1938587	320 6083
1938716	316 1486
1939837	320 6061
1939902	320 6064
1939970	320 6286
1939984	320 6057
1939990	315 5798
1940001	320 0185
1940477	320 6082
1940994	315 5797
1941111	320 7295
1941113	320 7458
1941839	320 0785
1941842	320 0782
1941843	320 0781
1941849	320 0784
1941978	320 4218
1942360	448 8092
1942431	320 0937
1942510	320 5386
1942518	320 4220
1942608	320 0946
1942610	320 0947
1942613	320 0945
1942615	320 0948
1944118	320 6652
1944373	320 6058
1944375	320 2807
1944437	320 4348
1945013	320 1283
1945548	320 7409
1945776	320 6668
1946238	320 6657
1947344	320 6070
1947350	320 6214
1947620	320 4230
1947660	448 8089
1948542	320 1921
1948544	320 1922
1948549	320 1924
1949084	320 7367
1949358	320 4347
1949653	320 8358
1949847	320 6665
1950283	320 6711
1950569	320 6650
1950575	320 7410
1951099	320 6666
1951512	311 9535
1951546	320 6283
1951567	320 6281
1952226	311 9648
1953041	320 4021
1954548	320 6654
1954557	320 4202
1954563	320 4206
1954564	320 6658
1954566	320 4198
1954569	320 4197
1954842	320 5021
1955193	320 5020
1955494	320 6076
1955937	320 5019
1956032	311 9662
1956213	320 5360
1957154	316 7752
1957329	320 3524
1957483	320 4210
1957527	320 3411
1957534	320 3412
1957536	320 3413
1957553	320 3409
1957555	320 3408
1957559	320 5999
1958213	448 8090
1958596	320 5385
1958679	320 6285
1958729	317 3293
1959711	320 6660
1959714	320 6661
1959717	320 4209
1959718	320 4208
1959991	320 6068

Printed in U.S.A.

ELECTRICAL UNIT CROSS REFERENCE (Cont.)

DELCO - REMY	A.M.
1961088	320 7366
1961358	320 6664
1961360	320 4222
1961361	320 6649
1961364	320 4199
1961365	320 4200
1961428	320 4201
1961654	320 0201
1961764	320 4219
1961825	320 6713
1961943	320 4343
1962141	320 6663
1962708	320 4499
1963507	812 0593
1963556	320 6903
1963636	320 5367
1963905	320 5387
1963926	320 5384
1963937	320 5390
1964718	320 5881
1965191	320 7995
1965784	320 7192
1965843	320 7196
1965888	320 6948
1965889	320 6949

DELCO - REMY	A.M.
1966362	320 7408
1966365	320 7406
1966391	320 7330
1966599	320 7199
1966601	320 7197
1966796	320 8003
1966811	318 1599
1966983	320 7194
1966986	320 7195
1967082	318 2700
1967256	320 7407
1967968	320 8352
1968039	320 8004
1968041	320 7998
1968255	320 7996
1968421	320 8351
1968670	812 0587
1969326	812 2351
1970263	320 6283
1970432	320 9693
1970434	320 9694
1971324	448 8091
1973419	812 0585
1973425	448 8072

DELCO - REMY	A.M.
1973426	448 8073
1973429	448 8327
1973450	812 2347
1990095	319 7599
1990096	319 7598
1993410	318 9799
1993597	317 2954
1996040	314 6489
1996044	312 9049
1996082	314 3978
1996084	314 6489
1996085	314 6490
1996087	315 4266
1996088	315 5793
1996478	312 5359
1997880	304524
1998099	313 9862
1998127	314 3998
1998128	314 3999
9000513	316 3947
9000514	316 3948
9000552	316 1395
9416183	320 7413
9418565	320 7414

FORD MOTOR	A.M.
68-10044	320 7429
27177-S8	G132934
34141-S8	G120611
73266-S	320 7435
358842-S2	G103319
372933-S	320 7435
374810-S	320 7435
375605-S	320 7436
2900756	320 7430
B-11059	320 7424
C0DF-11065-A	320 7433
C0DF-11067-B	320 7425
C0DF-11105-A	320 7428

FORD MOTOR	A.M.
C0DF-11106-A	320 7427
C0DF-11126-A	320 7434
C0DF-11448-A	320 7421
C0FL-11036-A	400 1147
C0FL-11036-B	400 1147
C1VF-11103-A	320 7426
C2AF-10120-A	320 7431
C2DF-11222-A	320 7418
C2DF-11223-A	320 7419
C2OF-11036-A	400 1147
C2OF-11082-B	320 7415
C3OF-11050-A	320 7423
C4DF-11222-A	320 7418

FORD MOTOR	A.M.
C5AF-11057-A	320 7524
C5AF-11060-A	320 7432
C5NF-11A104-A	320 7522
C5NF-11005-B	320 7416
C5OF-11134-A	320 7523
C6FF-11A101-A	320 7422
C6FF-11001	318 2972
C6FF-11130-B	320 7420
C6FF-11350-B	320 7417
C9FF-11001	319 3382
C9FF-11130-A	448 6602
C6VF-11082A	448 6600
C8PF-11A108-H	448 6601
D0AF-110520-A	812 1196

LEECE - NEVILLE	A.M.
A041054222	315 2718
39382	314 6065

LEECE - NEVILLE	A.M.
K172057966	315 3777
Z087002763	320 3643

LEECE - NEVILLE	A.M.
Z093001613	320 3642
Z098028464	320 3623

MOTOROLA	A.M.
1-1	320 5506
1-2	320 5507
1-5	320 4148
1-6	320 4149
1-7	320 4153
1-13	320 5024
1-30	448 9409
1-73	448 9406
1-74	448 9404
1-75	448 9405
3-1	320 4152
3-5	320 4145
7-5	320 4139
7-8	320 4140
10-123	812 0109
11-1	313 9988

MOTOROLA	A.M.
11-2	320 4146
11-3	320 4144
11-4	320 4150
12-1	320 4145
12-2	320 5054
12-28	448 9407
12-29	812 0172
13-1	320 4147
13-2	320 5114
13-3	320 5227
13-9	448 9408
13-22	812 1301
14-2	320 4151
14-4	320 4142
14-71	448 9403
15-1	320 4157
15-2	320 5055

MOTOROLA	A.M.
15-3	320 4158
15-7	448 9452
15-10	448 9451
15-26	448 9449
15-27	448 9448
15-28	448 9454
16-85	448 8549
16-86	448 8550
20-1	320 4155
20-2	320 5053
20-3	G120611
20-4	320 4160
20-5	G103325
20-6	320 4141
20-7	G103905
20-93	448 9453

Printed in U.S.A.

ELECTRICAL UNIT CROSS REFERENCE (Continued)

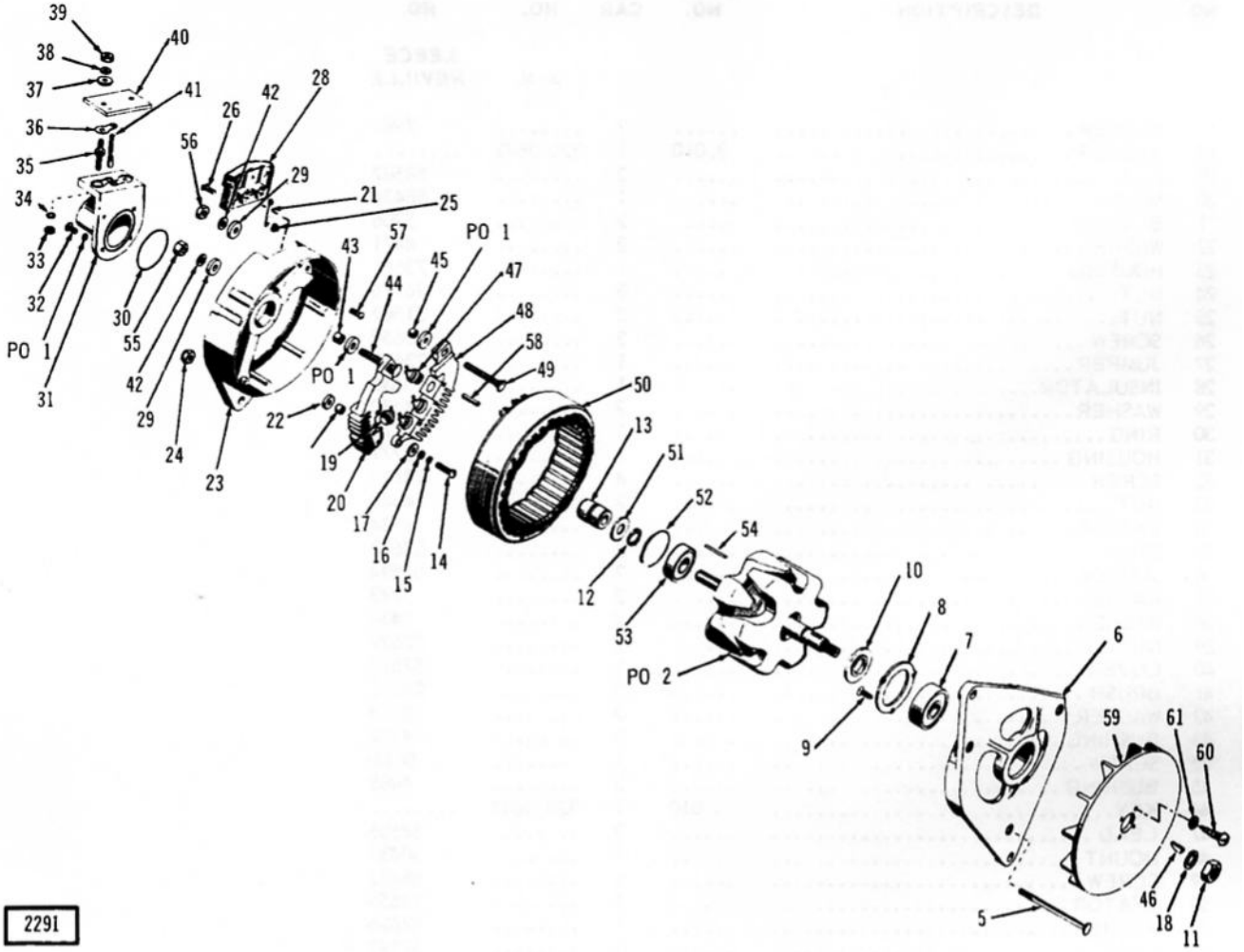

2291

ALTERNATOR

KEY NO.	DESCRIPTION	GROUP NO.	PER CAR	PART NO. A.M.	PART NO. LEECE-NEVILLE
1	ALTERNATOR	3.005	1	318 3643	2182A
2	ROTOR ASSY	.....	1	.....	57896
3	RECTIFIER ASSY (POS.)	.....	1	.....	58428
4	RECTIFIER ASSY (NEG.)	.....	1	.....	58429
5	SCREW	.....	3	.....	58439
6	HOUSING	.....	1	.....	58646
7	BEARING	.....	1	.....	57166
8	RETAINER	.....	1	.....	57898
9	SCREW	.....	3	.....	56418
10	SPACER	.....	1	.....	57895
11	NUT	3.010	1	320 3623	.....
12	RING	.....	1	.....	57470
13	RING	.....	1	.....	57462
14	SCREW	.....	2	.....	4491
15	WASHER	.....	2	.....	2434
16	WASHER	.....	2	.....	5413

Printed in U.S.A.

KEY NO.	DESCRIPTION	GROUP NO.	PER CAR	PART NO. A.M.	PART NO. LEECE NEVILLE
17	WASHER	.....	2	.....	7983
18	WASHER	3.010	1	320 3642	.....
19	LEAD	.....	3	.....	58587
20	MOUNT	.....	1	.....	58436
21	BUSHING	.....	2	.....	5706
22	WASHER	.....	2	.....	4471
23	HOUSING	.....	1	.....	73661
24	NUT	.....	3	.....	26175
25	NUT	.....	3	.....	31587
26	SCREW	.....	3	.....	73659
27	JUMPER	.....	1	.....	73657
28	INSULATOR	.....	1	.....	73635
29	WASHER	.....	2	.....	4470
30	RING	.....	1	.....	57611
31	HOUSING	.....	1	.....	58777
32	SCREW	.....	4	.....	13622
33	NUT	.....	2	.....	4340
34	WASHER	.....	2	.....	4534
35	STUD	.....	2	.....	57613
36	JUMPER	.....	2	.....	57594
37	WASHER	.....	2	.....	5293
38	WASHER	.....	2	.....	2434
39	NUT	.....	2	.....	32629
40	COVER	.....	1	.....	57615
41	BRUSH	.....	2	.....	28711
42	WASHER	.....	2	.....	8214
43	BUSHING	.....	3	.....	4472
44	SCREW	.....	1	.....	58431
45	BUSHING	.....	3	.....	4488
46	KEY	3.010	1	320 3643	.....
47	LEAD	.....	3	.....	58586
48	MOUNT	.....	1	.....	58437
49	SCREW	.....	1	.....	58432
50	STATOR	.....	1	.....	73655
51	WASHER	.....	1	.....	57626
52	RING	.....	1	.....	57597
53	BEARING	.....	1	.....	26853
54	WEDGE	.....	1	.....	30468
55	NUT	.....	1	.....	73009
56	NUT	.....	1	.....	59982
57	SCREW	.....	2	.....	5179
58	PIN	.....	3	.....	73114
59	FAN	3.010	1	315 2718	54222
60	SCREW	3.010	4	400 1790	.....
61	WASHER	3.010	4	400 1791	.....

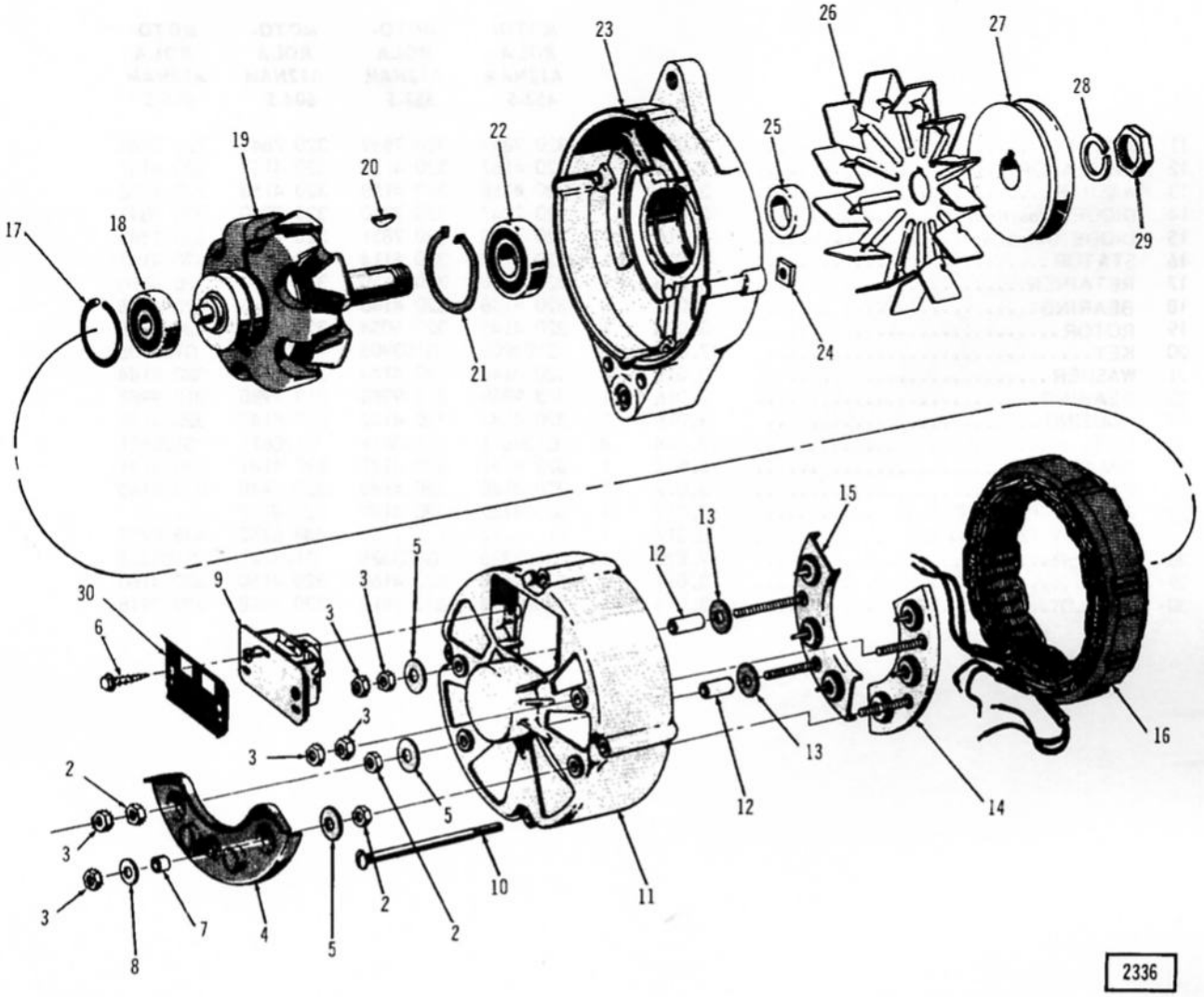

ALTERNATOR

KEY NO.	DESCRIPTION	GROUP NO.	PER CAR	PART NO.	PART NO.	PART NO.	PART NO.
				MOTO-ROLA A12NAM 453-S	*MOTO-ROLA A12NAM 552-S*	*MOTO-ROLA A12NAM 604-S*	*MOTO-ROLA A12NAM 456-S*
1	ALTERNATOR (Less Pulley)	3.016	1	320 6964	320 6965	448 8289	320 6964
2	NUT	17.412	2	G120361	G120361	G120361	G120361
3	NUT	17.412	6	G271166	G271166	G271166	G271166
4	DIODE (Isolation)	3.016	1	320 4153	320 5024	320 5024	320 4153
5	WASHER	3.016	3	320 4158	320 4158	320 4158	320 4158
6	SCREW	17.671	2	G456794	G456794	G456794	G456794
7	INSULATOR	3.016	1	.....	320 5055	320 5055	.....
8	WASHER	3.016	1	.....	320 4158	320 4158	.....
9	BRUSHES	3.016	1	320 4152	320 4152	320 4152	320 4152
10	BOLT	3.016	4	320 4155	320 5053	320 5053	320 4155

Printed in U.S.A.

KEY NO.	DESCRIPTION	GROUP NO.	PER CAR	PART NO.	PART NO.	PART NO.	PART NO.
				MOTO-ROLA A12NAM 453-S	*MOTO-ROLA A12NAM 552-S*	*MOTO-ROLA A12NAM 604-S*	*MOTO-ROLA A12NAM 456-S*
11	HOUSING	3.016	1	320 7849	320 7849	320 7849	320 7849
12	INSULATOR	3.016	2	320 4157	320 4157	320 4157	320 4157
13	WASHER	3.016	2	320 4158	320 4158	320 4158	320 4158
14	DIODE (Positive)	3.016	1	320 7847	320 7850	320 7850	320 7847
15	DIODE (Negative)	3.016	1	320 7848	320 7851	320 7851	320 7848
16	STATOR	3.016	1	320 4147	320 5114	320 5227	320 4147
17	RETAINER	3.016	1	320 4150	320 4150	320 4150	320 4150
18	BEARING	3.016	1	320 4146	320 4146	320 4146	320 4146
19	ROTOR	3.016	1	320 4145	320 5054	320 5054	320 4145
20	KEY	17.344	1	G103905	G103905	G103905	G103905
21	WASHER	3.016	1	320 4144	320 4144	320 4144	320 4144
22	BEARING	3.016	1	313 9988	313 9988	313 9988	313 9988
23	HOUSING	3.016	1	320 4142	320 4142	320 4142	320 4142
24	NUT	17.414	4	G120611	G120611	G120611	G120611
25	SPACER	3.017	1	320 4141	320 4141	320 4141	320 4141
26	FAN	3.017	1	320 4140	320 4140	320 4140	320 4140
27	PULLEY (2-7/8 O.D.)	3.017	1	320 4139	320 4139	320 4139	... .
	PULLEY (2-5/8 O.D.)	3.017	1	... .	... .	448 6752	448 6752
28	WASHER	17.820	1	G103325	G103325	G103325	G103325
29	NUT	3.017	1	320 4160	320 4160	320 4160	320 4160
30	SHIELD	3.016	1	320 7918	320 7918	320 7918	320 7918

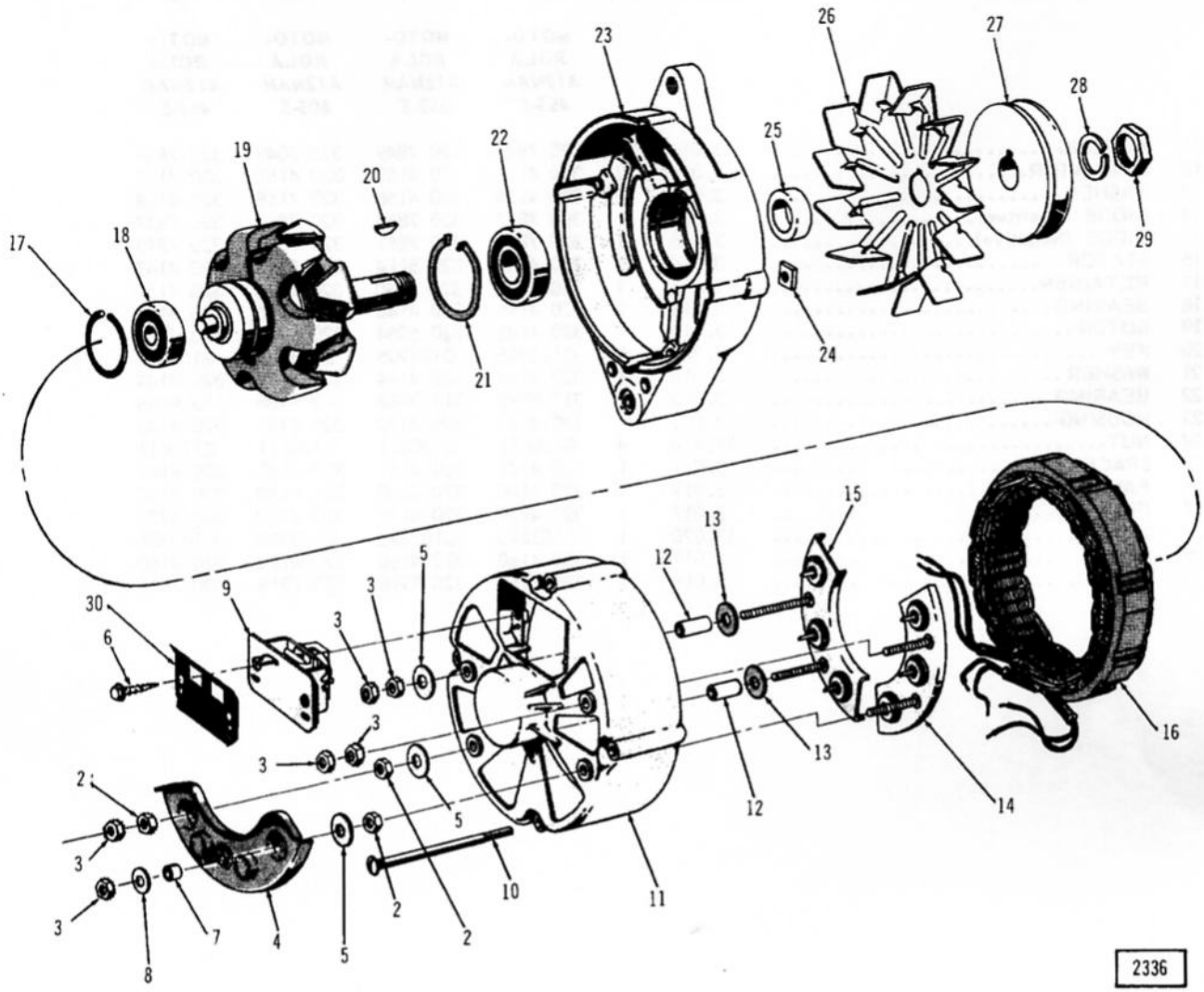

ALTERNATOR

KEY NO.	DESCRIPTION	GROUP NO.	PER CAR	PART NO. MOTO-ROLA A12NAM 455-S	PART NO. MOTO-ROLA A12NAM 553-S	PART NO. MOTO-ROLA A12NAM 605-S	PART NO. MOTO-ROLA A12NAM 457-S
1	ALTERNATOR (Less Pulley)	3.016	1	320 7739	320 7741	320 7741	320 7739
2	NUT	17.412	2	G120361	G120361	G120361	G120361
3	NUT	17.412	6	G271166	G271166	G271166	G271166
4	DIODE (Isolation)	3.016	1	320 4153	320 5024	320 5024	320 4153
5	WASHER	3.016	3	320 4158	320 4158	320 4158	320 4158
6	SCREW	17.671	2	G456794	G456794	G456794	G456794
7	INSULATOR	3.016	1	.....	320 5055	320 5055	.....
8	WASHER	3.016	1	.....	320 4158	320 4158	.....
9	BRUSHES	3.016	1	320 4152	320 4152	320 4152	320 4152
10	BOLT	3.016	4	320 4155	320 5053	320 5053	320 4155

KEY NO.	DESCRIPTION	GROUP NO.	PER CAR	PART NO.	PART NO.	PART NO.	PART NO.
				MOTO-ROLA A12NAM 455-S	*MOTO-ROLA A12NAM 553-S*	*MOTO-ROLA A12NAM 605-S*	*MOTO-ROLA A12NAM 457-S*
11	HOUSING	3.016	1	320 7849	320 7849	320 7849	320 7849
12	INSULATOR	3.016	2	320 4157	320 4157	320 4157	320 4157
13	WASHER	3.016	2	320 4158	320 4158	320 4158	320 4158
14	DIODE (Positive)	3.016	1	320 7847	320 7850	320 7850	320 7847
15	DIODE (Negative)	3.016	1	320 7848	320 7851	320 7851	320 7848
16	STATOR	3.016	1	320 4147	320 5114	320 5227	320 4147
17	RETAINER	3.016	1	320 4150	320 4150	320 4150	320 4150
18	BEARING	3.016	1	320 4146	320 4146	320 4146	320 4146
19	ROTOR	3.016	1	320 4145	320 5054	320 5054	320 4145
20	KEY	17.344	1	G103905	G103905	G103905	G103905
21	WASHER	3.016	1	320 4144	320 4144	320 4144	320 4144
22	BEARING	3.016	1	313 9988	313 9988	313 9988	313 9988
23	HOUSING	3.016	1	320 4142	320 4142	320 4142	320 4142
24	NUT	17.414	4	G120611	G120611	G120611	G120611
25	SPACER	3.017	1	320 4141	320 4141	320 4141	320 4141
26	FAN	3.017	1	320 4140	320 4140	320 4140	320 4140
27	PULLEY	3.017	1	320 4139	320 4139	320 4139	448 6752
28	WASHER	17.820	1	G103325	G103325	G103325	G103325
29	NUT	3.017	1	320 4160	320 4160	320 4160	320 4160
30	SHIELD	3.016	1	320 7918	320 7918	320 7918	320 7918

Printed in U.S.A.

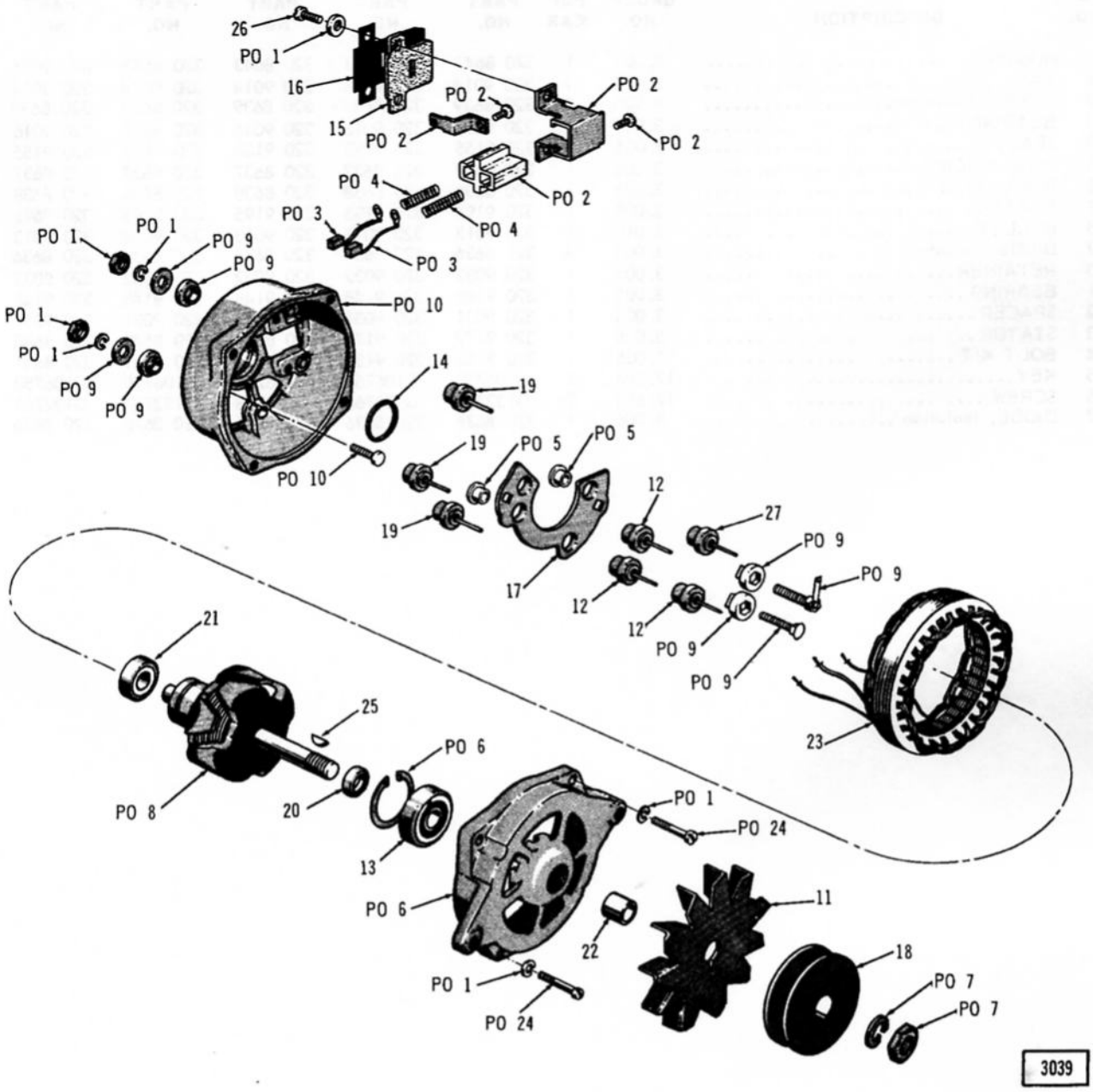

ALTERNATOR

KEY NO.	DESCRIPTION	GROUP NO.	PER CAR	PART NO.	PART NO.	PART NO.	PART NO.	PART NO.
1	ALTERNATOR	3.005	1	318 9458	318 9459	318 2889	448 6761	319 1060
2	BRUSH KIT	3.005	1	320 9281	320 9281	320 9281	320 9281	320 9281
3	BRUSH SET	3.005	1	320 9161	320 9161	320 9161	320 9161	320 9161
4	SPRING SET	3.005	1	320 9033	320 9033	320 9033	320 9033	320 9033
5	EYELET KIT	3.005	1	320 8634	320 8634	320 8634	320 8634	320 8634
6	HOUSING	3.005	1	320 9282	320 9282	320 9282	320 9282	320 9282
7	NUT KIT	3.005	1	320 9285	320 9285	320 9285	320 9285	320 9285
8	ROTOR ASSY	3.005	1	320 8635	320 8635	320 8635	320 8635	320 8635
9	PARTS KIT	3.005	1	320 8645	320 8645	320 8642	320 8642	320 9697

Printed in U.S.A.

ELECTRICAL - INSTRUMENTS

KEY NO.	DESCRIPTION	GROUP NO.	PER CAR	PART NO.	PART NO.	PART NO.	PART NO.	PART NO.
10	HOUSING	3.005	1	320 8643	320 8643	320 8643	320 8643	320 9695
11	FAN	3.010	1	320 9014	320 9014	320 9014	320 9014	320 9014
12	DIODE, Positive	3.005	3	320 8639	320 8639	320 8639	320 8639	320 8639
13	BEARING	3.005	1	320 9016	320 9016	320 9016	320 9016	320 9016
14	SEAL	3.005	1	320 9155	320 9155	320 9155	320 9155	320 9155
15	INSULATION	3.005	1	320 8637	320 8637	320 8637	320 8637	320 8637
16	INSULATION	3.005	1	320 8638	320 8638	320 8638	320 8638	320 8638
17	PLATE	3.005	1	320 9195	320 9195	320 9195	320 9195	320 9696
18	PULLEY	3.010	1	320 9013	320 9013	320 9013	320 9013	320 9013
19	DIODE, Negative	3.005	3	320 8636	320 8636	320 8636	320 8636	320 8636
20	RETAINER	3.005	1	320 9032	320 9032	320 9032	320 9032	320 9032
21	BEARING	3.005	1	320 9148	320 9148	320 9148	320 9148	320 9148
22	SPACER	3.005	1	320 9031	320 9031	320 9031	320 9031	320 9031
23	STATOR	3.005	1	320 9179	320 9179	320 8640	320 8640	320 8640
24	BOLT KIT	3.005	1	320 9158	320 9158	320 8641	320 8641	320 8641
25	KEY	17.344	1	G106750	G106750	G106750	G106750	G106750
26	SCREW	17.614	2	G132768	G132768	G132768	G132768	G132768
27	DIODE, Isolation	3.005	1	320 8636	320 8636	320 8636	320 8636	320 8636

Printed in U.S.A.

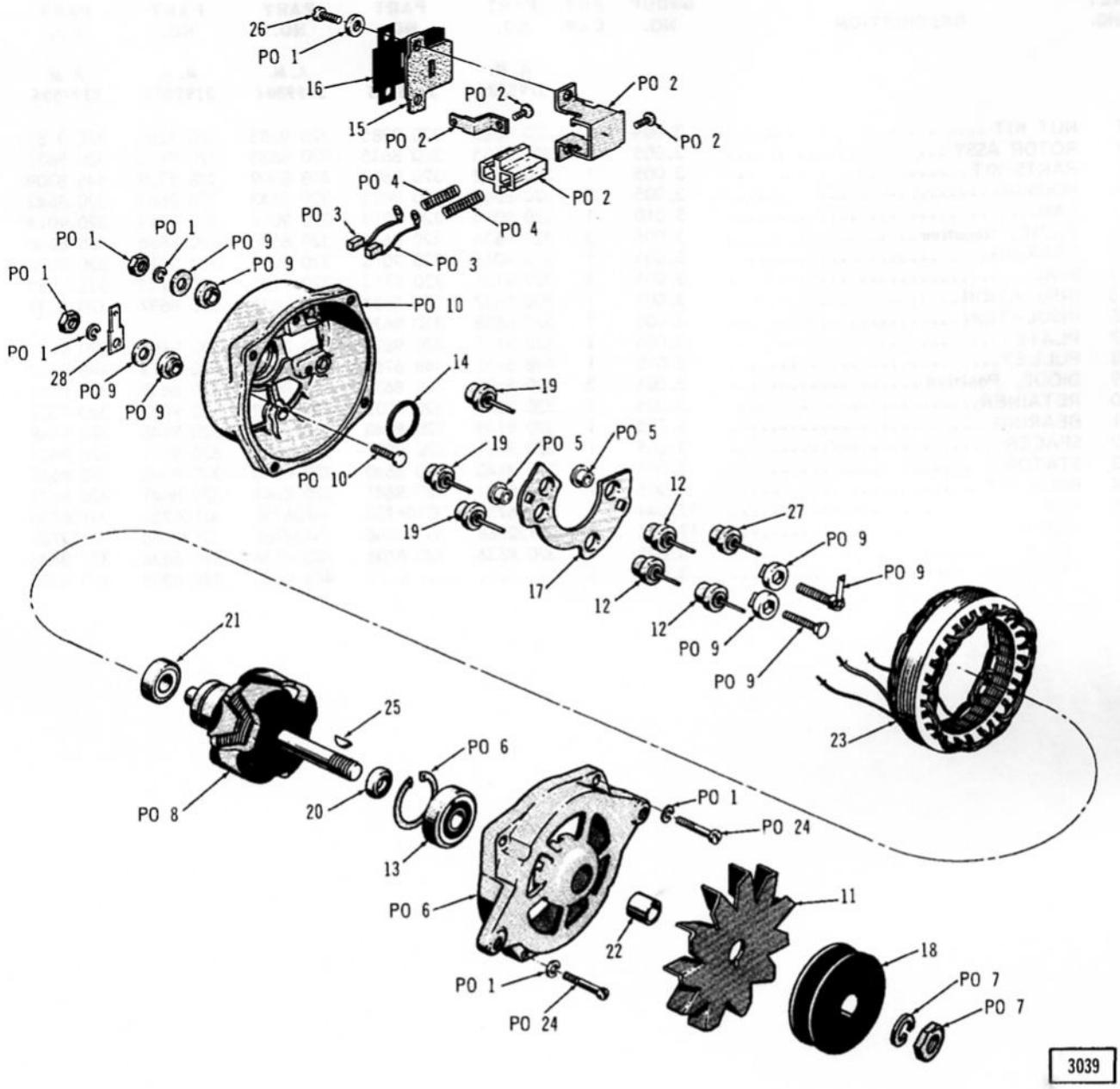

ALTERNATOR

KEY NO.	DESCRIPTION	GROUP NO.	PER CAR	PART NO. A.M. 3195534	PART NO. A.M. 3195535	PART NO. A.M. 3199804	PART NO. A.M. 3199805	PART NO. A.M. 3199806
1	ALTERNATOR	3.005	1	448 6761	448 6762	448 8288	448 8287	448 8287
2	BRUSH KIT	3.005	1	320 9281	320 9281	320 9281	320 9281	320 9281
3	BRUSH SET	3.005	1	320 9161	320 9161	320 9161	320 9161	320 9161
4	SPRING SET	3.005	1	320 9033	320 9033	320 9033	320 9033	320 9033
5	EYELET KIT	3.005	1	320 8634	320 8634	320 8634	320 8634	320 8634
6	HOUSING	3.005	1	320 9282	320 9282	320 9282	320 9282	320 9282

812142 4

KEY NO.	DESCRIPTION	GROUP NO.	PER CAR	PART NO.	PART NO.	PART NO.	PART NO.	PART NO.
				A. M. 3195534	A. M. 3195535	A. M. 3199804	A. M. 3199805	A. M. 3199806
7	NUT KIT	3.005	1	320 9285	320 9285	320 9285	320 9285	320 9285
8	ROTOR ASSY	3.005	1	320 8635	320 8635	320 8635	320 8635	320 8635
9	PARTS KIT	3.005	1	320 8642	320 9697	448 8309	448 8309	448 8309
10	HOUSING	3.005	1	320 8643	320 9695	320 8643	320 8643	320 8643
11	FAN	3.010	1	320 9014	320 9014	320 9014	320 9014	320 9014
12	DIODE, Negative	3.005	3	320 8636	320 8636	320 8636	320 8636	320 8636
13	BEARING	3.005	1	320 9016	320 9016	320 9016	320 9016	320 9016
14	SEAL	3.005	1	329 9155	320 9155	320 9155	320 9155	320 9155
15	INSULATION	3.005	1	320 8637	320 8637	320 8637	320 8637	320 8637
16	INSULATION	3.005	1	320 8638	320 8638	... .	... .	... .
17	PLATE	3.005	1	320 9195	320 9696	320 9195	320 9195	320 9195
18	PULLEY	3.010	1	448 6760	448 6760	448 6760	320 9013	448 6760
19	DIODE, Positive	3.005	3	320 8639	320 8639	320 8639	320 8639	320 8639
20	RETAINER	3.005	1	320 9032	320 9032	320 9032	320 9032	320 9032
21	BEARING	3.005	1	320 9148	320 9148	320 9148	320 9148	320 9148
22	SPACER	3.005	1	320 9031	320 9031	320 9031	320 9031	320 9031
23	STATOR	3.005	1	320 8640	320 8640	320 8640	320 8640	320 8640
24	BOLT KIT	3.005	1	320 8641	320 8641	320 8641	320 8641	320 8641
25	KEY	17.344	1	G106750	G106750	G106750	G106750	G106750
26	SCREW	17.614	2	G132768	G132768	G132768	G132768	G132768
27	DIODE, Isolation	3.005	1	320 8636	320 8636	320 8636	320 8636	320 8636
28	TERMINAL, Ground	3.005	1	... .	... .	448 8308	448 8308	448 8308

Printed in U.S.A.

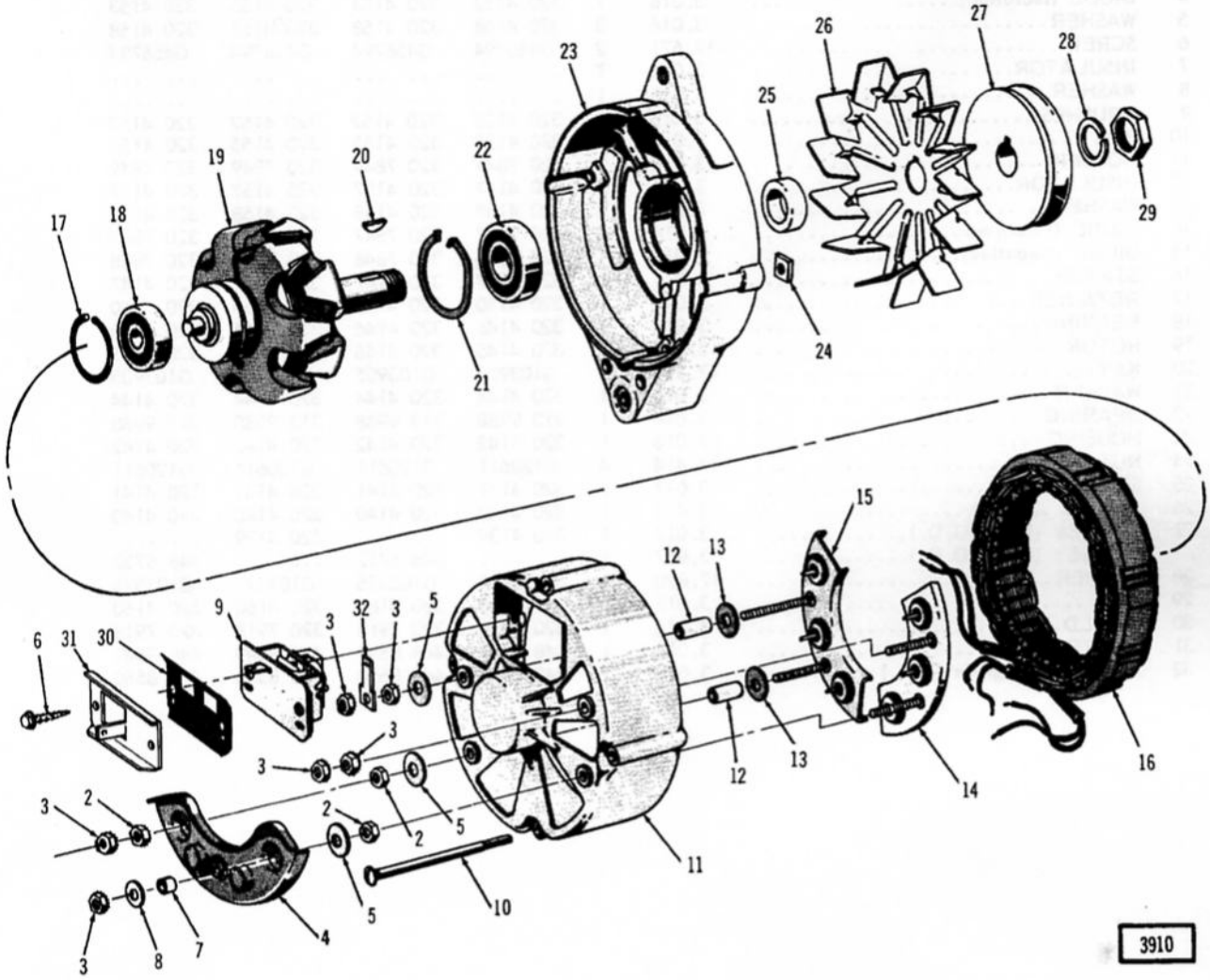

ALTERNATOR

Printed in U.S.A.

KEY NO.	DESCRIPTION	GROUP NO.	PER CAR	PART NO. MOTO-ROLA 8AL 2004F	PART NO. MOTO-ROLA 8AL 2005F	PART NO. MOTO-ROLA 8AL 2006F	PART NO. MOTO-ROLA 8AL 2007F
1	ALTERNATOR (Less Pulley)	3.016	1	448 8290	448 8290	448 8289	448 8289
2	NUT	17.412	2	G120361	G120361	G120361	G120361
3	NUT	17.412	6	G271166	G271166	G271166	G271166
4	DIODE (Isolation)	3.016	1	320 4153	320 4153	320 4153	320 4153
5	WASHER	3.016	3	320 4158	320 4158	320 4158	320 4158
6	SCREW	17.671	2	G456794	G456794	G456794	G456794
7	INSULATOR	3.016	1	... .	... .	... .	... .
8	WASHER	3.016	1	... .	... .	... .	... .
9	BRUSHES	3.016	1	320 4152	320 4152	320 4152	320 4152
10	BOLT	3.016	4	320 4155	320 4155	320 4155	320 4155
11	HOUSING	3.016	1	320 7849	320 7849	320 7849	320 7849
12	INSULATOR	3.016	2	320 4157	320 4157	320 4157	320 4157
13	WASHER	3.016	2	320 4158	320 4158	320 4158	320 4158
14	DIODE (Positive)	3.016	1	320 7847	320 7847	320 7847	320 7847
15	DIODE (Negative)	3.016	1	320 7848	320 7848	320 7848	320 7848
16	STATOR	3.016	1	320 4147	320 4147	320 4147	320 4147
17	RETAINER	3.016	1	320 4150	320 4150	320 4150	320 4150
18	BEARING	3.016	1	320 4146	320 4146	320 4146	320 4146
19	ROTOR	3.016	1	320 4145	320 4145	320 4145	320 4145
20	KEY	17.344	1	G103905	G103905	G103905	G103905
21	WASHER	3.016	1	320 4144	320 4144	320 4144	320 4144
22	BEARING	3.016	1	313 9988	313 9988	313 9988	313 9988
23	HOUSING	3.016	1	320 4142	320 4142	320 4142	320 4142
24	NUT	17.414	4	G120611	G120611	G120611	G120611
25	SPACER	3.017	1	320 4141	320 4141	320 4141	320 4141
26	FAN	3.017	1	320 4140	320 4140	320 4140	320 4140
27	PULLEY (2-7/8 O.D.)	3.017	1	320 4139	... .	320 4139	... .
	PULLEY (2-5/8 O.D.)	3.017	1	... .	448 6752	... .	448 6752
28	WASHER	17.820	1	G103325	G103325	G103325	G103325
29	NUT	3.017	1	320 4160	320 4160	320 4160	320 4160
30	SHIELD	3.016	1	320 7918	320 7918	320 7918	320 7918
31	PLATE, Ground	3.016	1	448 8549	448 8549	448 8549	448 8549
32	TERMINAL, Spade (Aux.)	3.016	1	448 8550	448 8550	448 8550	448 8550

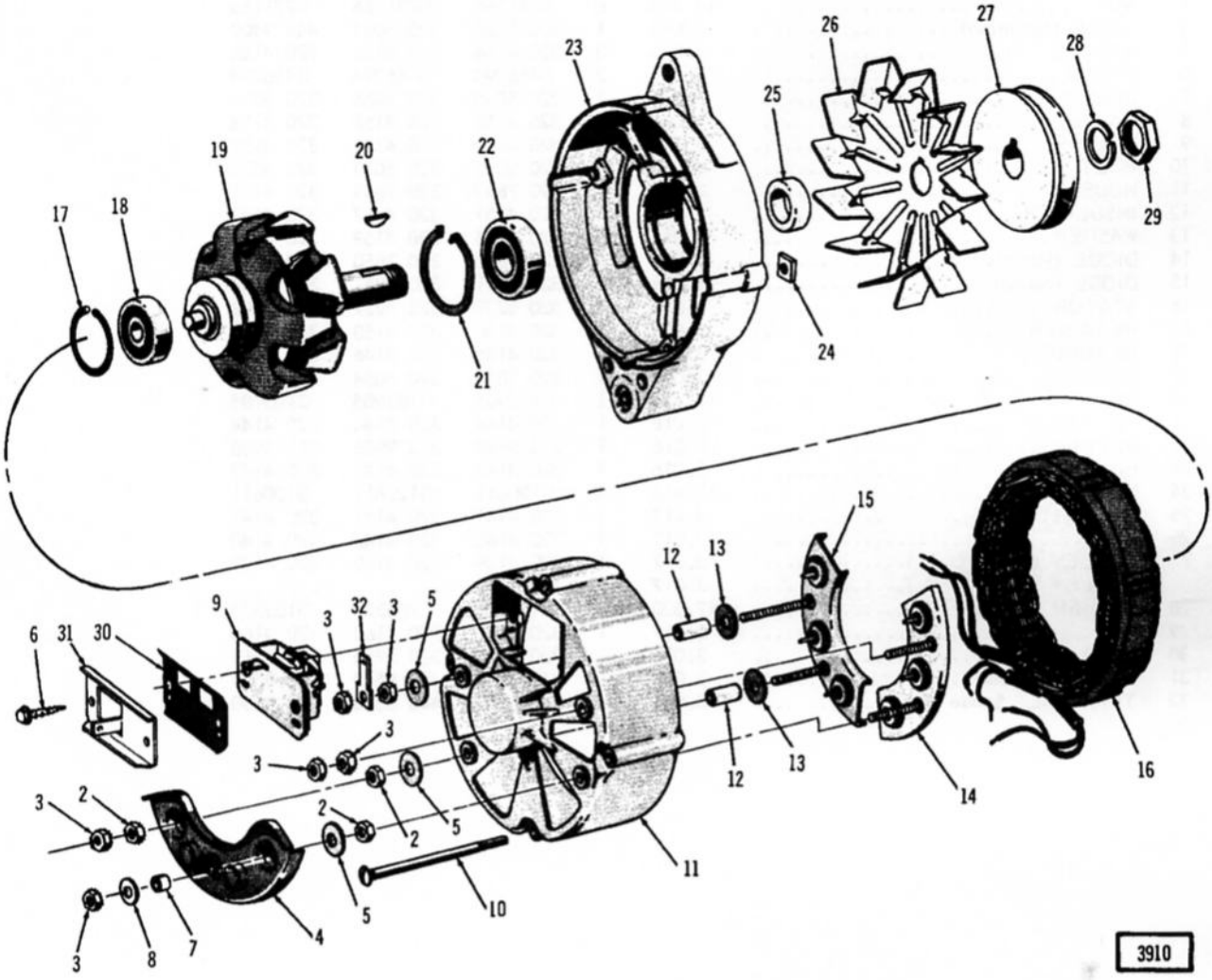
17
18
19
20
21
22
23
24
25
26
27
28
29
6
31
30
9
3
32
3
5
12
13
15
3
3
2
2
2
5
5
3
8
7
4
10
11
12
13
14
16
3910

ALTERNATOR

KEY NO.	DESCRIPTION	GROUP NO.	PER CAR	PART NO. MOTO-ROLA 8AL 2008K	PART NO. MOTO-ROLA 8AL 2009K	PART NO. MOTO-ROLA 8AL 2020L
1	ALTERNATOR (Less Pulley)	3.016	1	448 8289	448 8290	448 9411
2	NUT	17.412	2	G120361	G120361	G120361
3	NUT	17.412	6	G271166	G271166	G271166
4	DIODE (Isolation)	3.016	1	320 5024	320 5024	448 9409
5	WASHER	3.016	3	320 4158	320 4158	320 4158
6	SCREW	17.671	2	G456794	G456794	G456794
7	INSULATOR	3.016	1	320 5055	320 5055	320 5055
8	WASHER	3.016	1	320 4158	320 4158	320 4158
9	BRUSHES	3.016	1	320 4152	320 4152	320 4152
10	BOLT	3.016	4	320 5053	320 5053	320 5053
11	HOUSING	3.016	1	320 7849	320 7849	320 4151
12	INSULATOR	3.016	2	320 4157	320 4157	320 4157
13	WASHER	3.016	2	320 4158	320 4158	320 4158
14	DIODE (Positive)	3.016	1	320 7850	320 7850	320 7847
15	DIODE (Negative)	3.016	1	320 7851	320 7851	320 7848
16	STATOR	3.016	1	320 5227	320 5227	448 9408
17	RETAINER	3.016	1	320 4150	320 4150	320 4150
18	BEARING	3.016	1	320 4146	320 4146	320 4146
19	ROTOR	3.016	1	320 5054	320 5054	448 9407
20	KEY	17.344	1	G103905	G103905	G103905
21	RETAINER	3.016	1	320 4144	320 4144	320 4144
22	BEARING	3.016	1	313 9988	313 9988	313 9988
23	HOUSING	3.016	1	320 4142	320 4142	320 4142
24	NUT	17.414	4	G120611	G120611	G120611
25	SPACER	3.017	1	320 4141	320 4141	320 4141
26	FAN	3.017	1	320 4140	320 4140	320 4140
27	PULLEY (2-7/8 O.D.)	3.017	1	320 4139	320 4139	320 4139
	PULLEY (2-5/8 O.D.)	3.017	1	448 6752	... .	... .
28	WASHER	17.820	1	G103325	G103325	G103325
29	NUT	3.017	1	320 4160	320 4160	320 4160
30	SHIELD	3.016	1	320 7918	320 7918	320 7918
31	PLATE, Ground	3.016	1	448 8549	448 8549	448 8549
32	TERMINAL, Spade (Aux.)	3.016	1	448 8550	448 8550	448 8550

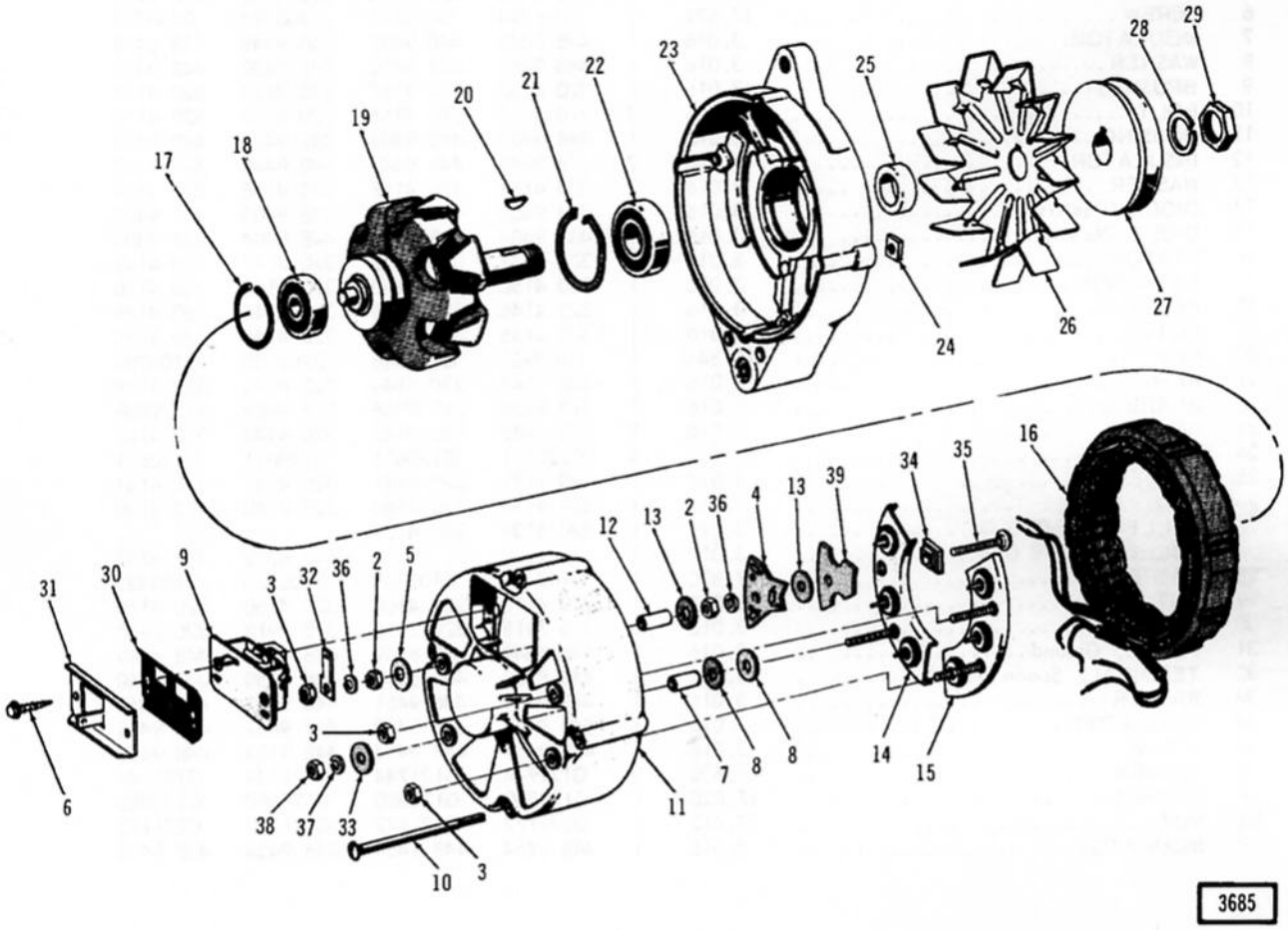

ALTERNATOR

Printed in U.S.A.

KEY NO.	DESCRIPTION	GROUP NO.	PER CAR	PART NO. MOTO-ROLA 8AL 2011F	PART NO. MOTO-ROLA 8AL 2012F	PART NO. MOTO-ROLA 8AL 2013F	PART NO. MOTO-ROLA 8AL 2014F
1	ALTERNATOR (Less Pulley)	3.016	1	448 9410	448 9410	448 9410	448 9410
2	NUT	17.412	2	G120361	G120361	G120361	G120361
3	NUT	17.412	6	G271166	G271166	G271166	G271166
4	TRIO ASSY., Diode	3.016	1	448 9406	448 9406	448 9406	448 9406
5	WASHER	3.016	3	320 4158	320 4158	320 4158	320 4158
6	SCREW	17.671	2	G456794	G456794	G456794	G456794
7	INSULATOR	3.016	1	448 9449	448 9449	448 9449	448 9449
8	WASHER	3.016	1	448 9450	448 9450	448 9450	448 9450
9	BRUSHES	3.016	1	320 4152	320 4152	320 4152	320 4152
10	BOLT	3.016	4	320 4155	320 4155	320 4155	320 4155
11	HOUSING	3.016	1	448 9403	448 9403	448 9403	448 9403
12	INSULATOR	3.016	2	448 9448	448 9448	448 9448	448 9448
13	WASHER	3.016	2	320 4158	320 4158	320 4158	320 4158
14	DIODE (Positive)	3.016	1	448 9405	448 9405	448 9405	448 9405
15	DIODE (Negative)	3.016	1	448 9404	448 9404	448 9404	448 9404
16	STATOR	3.016	1	320 4147	320 4147	320 4147	320 4147
17	RETAINER	3.016	1	320 4150	320 4150	320 4150	320 4150
18	BEARING	3.016	1	320 4146	320 4146	320 4146	320 4146
19	ROTOR	3.016	1	320 4145	320 4145	320 4145	320 4145
20	KEY	17.344	1	G103905	G103905	G103905	G103905
21	WASHER	3.016	1	320 4144	320 4144	320 4144	320 4144
22	BEARING	3.016	1	313 9988	313 9988	313 9988	313 9988
23	HOUSING	3.016	1	320 4142	320 4142	320 4142	320 4142
24	NUT	17.414	4	G120611	G120611	G120611	G120611
25	SPACER	3.017	1	320 4141	320 4141	320 4141	320 4141
26	FAN	3.017	1	320 4140	320 4140	320 4140	320 4140
27	PULLEY (2-7/8 O.D.)	3.017	1	320 4139	320 4139	... .	... .
	PULLEY (2-5/8 O.D.)	3.017	1	... .	... .	448 6752	448 6752
28	WASHER	17.820	1	G103325	G103325	G103325	G103325
29	NUT	3.017	1	320 4160	320 4160	320 4160	320 4160
30	SHIELD	3.016	1	320 7918	320 7918	320 7918	320 7918
31	PLATE, Ground	3.016	1	448 8549	448 8549	448 8549	448 8549
32	TERMINAL, Spade (Aux.)	3.016	1	448 8550	448 8550	448 8550	448 8550
33	WASHER	3.016	1	448 9451	448 9451	448 9451	448 9451
34	INSULATOR	3.016	1	448 9452	448 9452	448 9452	448 9452
35	SCREW	3.016	1	448 9453	448 9453	448 9453	448 9453
36	WASHER	17.820	2	G121744	G121744	G121744	G121744
37	WASHER	17.820	1	G120380	G120380	G120380	G120380
38	NUT	17.412	1	G271172	G271172	G271172	G271172
39	INSULATOR	3.016	1	448 9454	448 9454	448 9454	448 9454

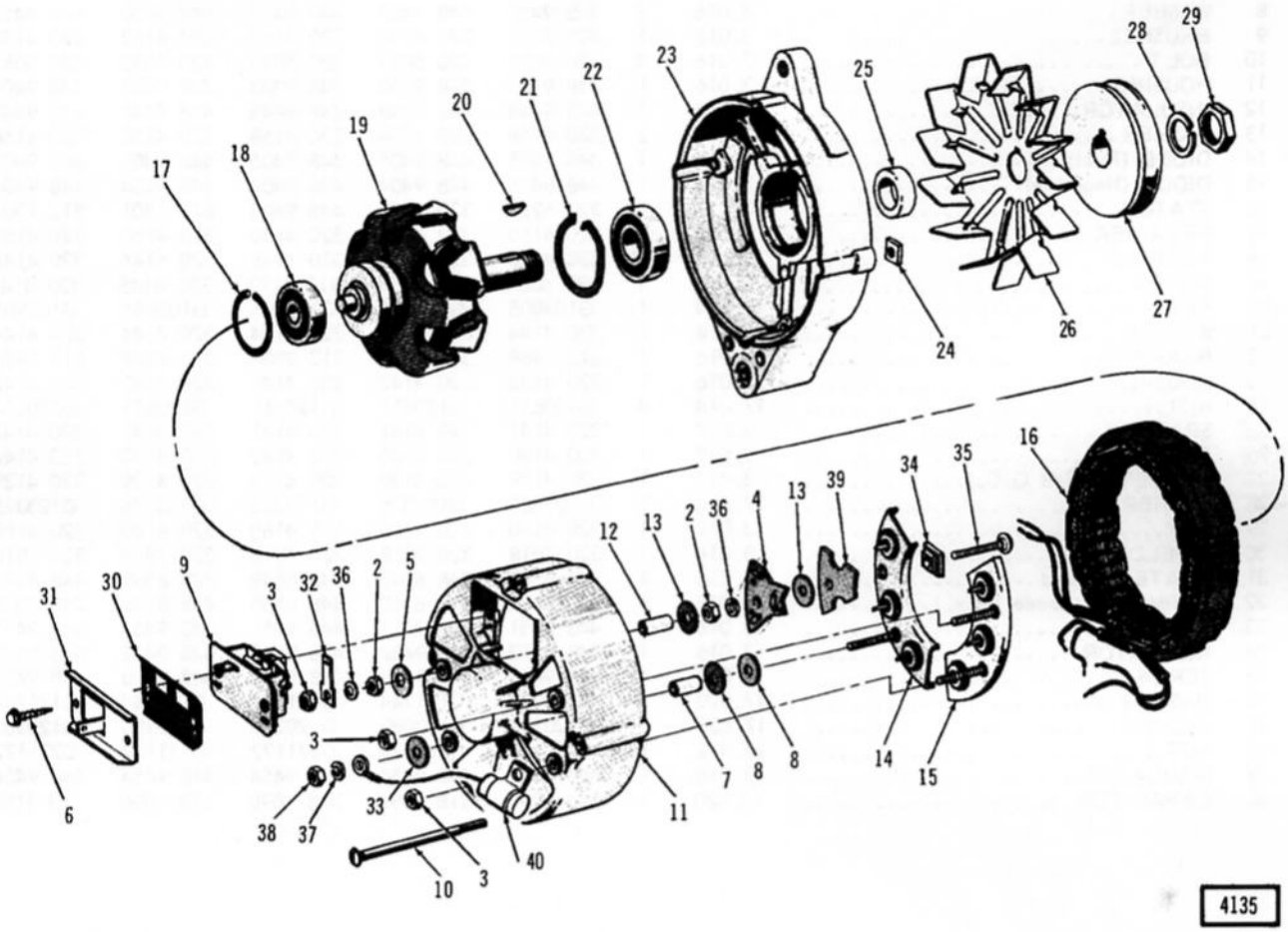

ALTERNATOR

Printed in U.S.A.

KEY NO.	DESCRIPTION	GROUP NO.	PER CAR	PART NO. MOTOROLA 8AL 2015K	PART NO. MOTOROLA 8AL 2016K	PART NO. MOTOROLA 8AL 2021L	PART NO. MOTOROLA 8AL 2025F	PART NO. MOTOROLA 8AL 2026F
1	ALTERNATOR (Less Pulley)	3.016	1	448 9410	448 9410	812 0109	448 9410	448 9410
2	NUT	17.412	2	G120361	G120361	G120361	G120361	G120361
3	NUT	17.412	3	G271166	G271166	G271166	G271166	G271166
4	TRIO ASSY., Diode	3.016	1	812 0830	812 0830	812 0830	812 0830	812 0830
5	WASHER	3.016	3	320 4158	320 4158	320 4158	320 4158	320 4158
6	SCREW	17.671	2	G456794	G456794	G456794	G456794	G456794
7	INSULATOR	3.016	1	448 9449	448 9449	448 9449	448 9449	448 9449
8	WASHER	3.016	2	448 9450	448 9450	448 9450	448 9450	448 9450
9	BRUSHES	3.016	1	320 4152	320 4152	320 4152	320 4152	320 4152
10	BOLT	3.016	4	320 5053	320 5053	320 5053	320 5053	320 5053
11	HOUSING	3.016	1	448 9403	448 9403	448 9403	448 9403	448 9403
12	INSULATOR	3.016	1	448 9448	448 9448	448 9448	448 9448	448 9448
13	WASHER	3.016	2	320 4158	320 4158	320 4158	320 4158	320 4158
14	DIODE (Positive)	3.016	1	448 9405	448 9405	448 9405	448 9405	448 9405
15	DIODE (Negative)	3.016	1	448 9404	448 9404	448 9404	448 9404	448 9404
16	STATOR	3.016	1	320 5227	320 5227	448 9408	812 1301	812 1301
17	RETAINER	3.016	1	320 4150	320 4150	320 4150	320 4150	320 4150
18	BEARING	3.016	1	320 4146	320 4146	320 4146	320 4146	320 4146
19	ROTOR	3.016	1	320 5054	320 5054	812 0172	320 4145	320 4145
20	KEY	17.344	1	G103905	G103905	G103905	G103905	G103905
21	WASHER	3.016	1	320 4144	320 4144	320 4144	320 4144	320 4144
22	BEARING	3.016	1	313 9988	313 9988	313 9988	313 9988	313 9988
23	HOUSING	3.016	1	320 4142	320 4142	320 4142	320 4142	320 4142
24	NUT	17.414	4	G120611	G120611	G120611	G120611	G120611
25	SPACER	3.017	1	320 4141	320 4141	320 4141	320 4141	320 4141
26	FAN	3.017	1	320 4140	320 4140	320 4140	320 4140	320 4140
27	PULLEY (2-7/8 O.D.)	3.017	1	320 4139	320 4139	320 4139	320 4139	320 4139
28	WASHER	17.820	1	G103325	G103325	G103325	G103325	G103325
29	NUT	3.017	1	320 4160	320 4160	320 4160	320 4160	320 4160
30	SHIELD	3.016	1	320 7918	320 7918	320 7918	320 7918	320 7918
31	PLATE, Ground	3.016	1	448 8549	448 8549	448 8549	448 8549	448 8549
32	TERMINAL, Spade (Aux.)	3.016	1	448 8550	448 8550	448 8550	448 8550	448 8550
33	WASHER	3.016	1	448 9451	448 9451	448 9451	448 9451	448 9451
34	INSULATOR	3.016	1	448 9452	448 9452	448 9452	448 9452	448 9452
35	SCREW	3.016	1	448 9453	448 9453	448 9453	448 9453	448 9453
36	WASHER	17.820	2	G121744	G121744	G121744	G121744	G121744
37	WASHER	17.820	1	G120380	G120380	G120380	G120380	G120380
38	NUT	17.412	1	G271172	G271172	G271172	G271172	G271172
39	INSULATOR	3.016	1	448 9454	448 9454	448 9454	448 9454	448 9454
40	CAPACITOR	15.320	1	318 1090	318 1090	318 1090	318 1090	318 1090

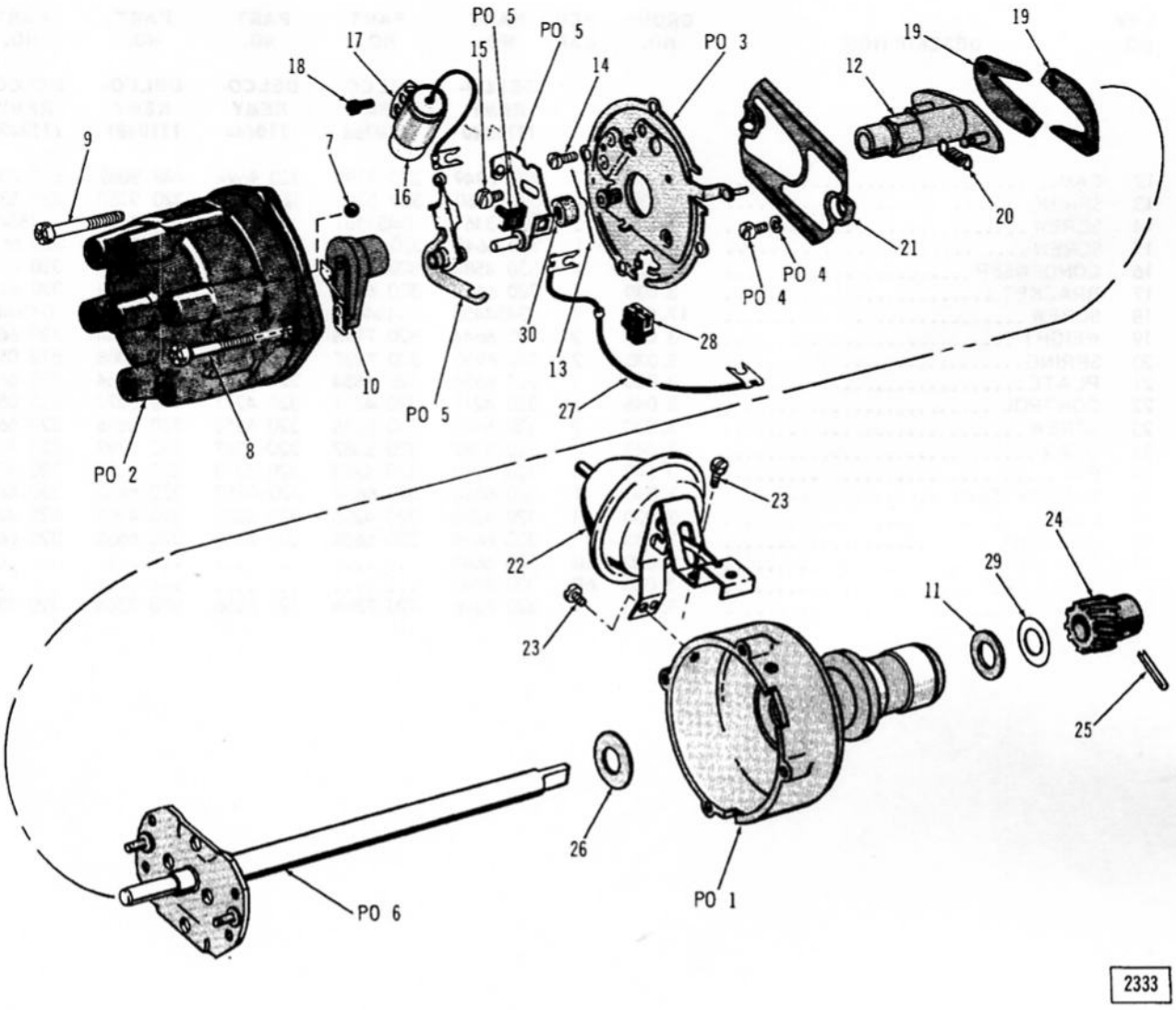

DISTRIBUTOR

KEY NO.	DESCRIPTION	GROUP NO.	PER CAR	PART NO.	PART NO.	PART NO.	PART NO.	PART NO.
				DELCO-REMY 1110340	*DELCO-REMY 1110366*	*DELCO-REMY 1110444*	*DELCO-REMY 1110481*	*DELCO-REMY 1110497*
1	DISTRIBUTOR	3.030	1	318 0070	318 2702	319 0890	319 7332	321 5824
2	CAP ASSY.	3.032	1	320 6903	320 6903	320 6903	448 8091	448 8091
3	PLATE ASSY	3.030	1	320 4201	320 4201	320 4201	320 4201	320 4201
4	SCREW ASSY.	3.030	2	320 6655	320 6655	320 6655	320 6655	320 6655
5	CONTACT SET	3.031	1	448 6720	448 6720	448 6720	448 6720	448 6720
6	SHAFT ASSY.	3.030	1	320 6948	320 7194	320 9693	448 8081	812 0587
7	BUTTON	3.030	1	320 6670	320 6670	320 6670	320 6670	320 6670
8	SCREW (#8-32)	17.592	1	G187871	G187871	G187871	G187871	G187871
9	SCREW (#10-32)	17.592	1	G157070	G157070	G157070	G157070	G157070
10	ROTOR	3.035	1	320 4198	320 4198	320 4198	448 8087	448 8087
11	WASHER	3.030	1	320 6659	320 7192	320 7192	320 7192	320 7192

KEY NO.	DESCRIPTION	GROUP NO.	PER CAR	PART NO.	PART NO.	PART NO.	PART NO.	PART NO.
				DELCO-REMY 1110340	*DELCO-REMY 1110366*	*DELCO-REMY 1110444*	*DELCO-REMY 1110481*	*DELCO-REMY 1110497*
12	CAM	3.030	1	320 6949	320 7195	320 9694	448 8082	812 0588
13	SPRING	3.030	1	320 5360	320 5360	320 5360	320 5360	320 5360
14	SCREW	17.596	2	G453461	G453461	G453461	G453461	G453461
15	SCREW	17.596	1	320 6645	320 6645	320 6645	320 6645	320 6645
16	CONDENSER	3.033	1	320 4584	320 4584	320 4584	320 4584	320 4584
17	BRACKET	3.030	1	320 6652	320 6652	320 6652	320 6652	320 6652
18	SCREW	17.596	1	G454458	G454458	G454458	G454458	G454458
19	WEIGHT	3.030	2	320 6644	320 7196	320 6644	320 6644	320 6644
20	SPRING	3.030	2	320 6950	320 7327	320 6950	448 8088	812 0589
21	PLATE	3.030	1	320 6654	320 6654	320 6654	320 6654	320 6654
22	CONTROL	3.046	1	320 4211	320 4211	320 4211	448 8072	812 0585
23	SCREW	3.030	2	320 6656	320 6656	320 6656	320 6656	320 6656
24	GEAR	3.042	1	320 5387	320 5387	320 5387	320 5387	320 5387
25	PIN	3.042	1	320 4213	320 4213	320 4213	320 4213	320 4213
26	WASHER (Seal)	3.030	1	320 6650	320 6650	320 6650	320 6650	320 6650
27	LEAD	3.030	1	320 4206	320 4206	320 4206	320 4206	320 4206
28	GROMMET	3.030	1	320 6658	320 6658	320 6658	320 6658	320 6658
29	SHIM (.010)	3.030	AR	320 6643	... .	... .	... .	... .
	SHIM (.005)	3.030	AR	320 6642	... .	... .	... .	... .
30	PAD	3.030	1	320 7366	320 7366	320 7366	320 7366	320 7366

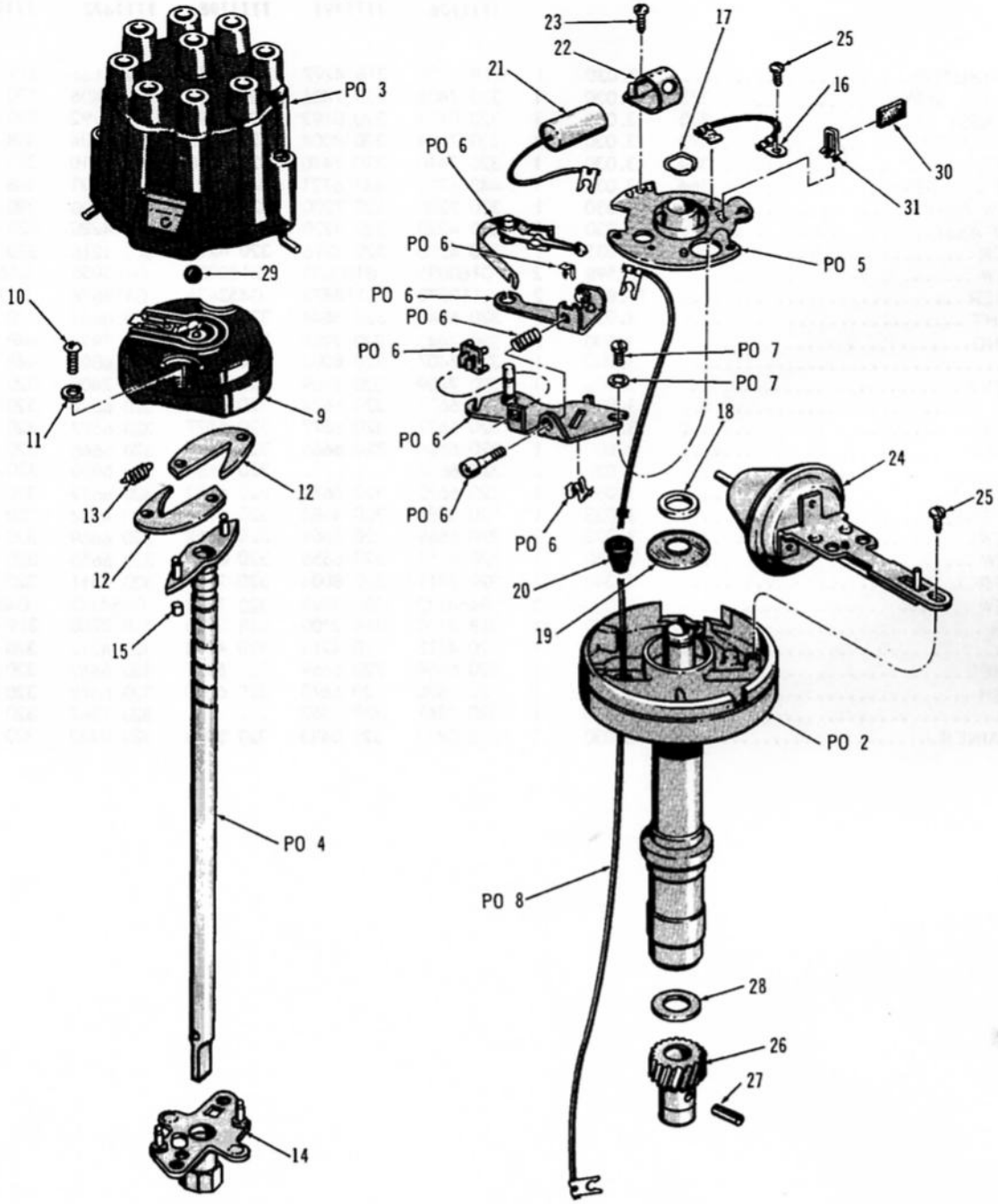

DISTRIBUTOR

Printed in U.S.A.

KEY NO.	DESCRIPTION	PAKS CODE	GROUP NO.	PER CAR	PART NO. DELCO-REMY 1111106	PART NO. DELCO-REMY 1111191	PART NO. DELCO-REMY 1111198	PART NO. DELCO-REMY 1111472	PART NO. DELCO-REMY 1111473
1	DISTRIBUTOR		3.030	1	318 2701	318 4797	318 7537	319 3144	319 3199
2	HOUSING ASSY.	373	3.030	1	320 7406	320 7406	320 7406	320 7406	320 7406
3	CAP ASSY.	370	3.032	1	320 0192	320 0192	320 0192	320 0192	320 0192
4	SHAFT ASSY.	372	3.030	1	320 7408	320 8004	320 7996	320 8004	448 5630
5	PLATE ASSY.	369	3.030	1	320 7410	320 7410	320 7410	320 7410	320 7410
6	CONTACT ASSY.	364	3.031	1	448 6721	448 6721	448 6721	448 6721	448 6721
7	SCREW ASSY		3.030	1	320 7200	320 7200	320 7200	320 7200	320 7200
8	LEAD ASSY		3.030	1	320 4220	320 4220	320 4220	320 4220	320 4220
9	ROTOR		3.035	1	320 4216	320 4216	320 4216	320 4216	320 4216
10	SCREW		17.598	2	G160035	G160035	G160035	G160035	G160035
11	WASHER		17.820	2	G118873	G118873	G453435	G118876	G118873
12	WEIGHT		3.030	2	320 6644	320 6644	320 6644	320 6644	320 6644
13	SPRING		3.030	2	320 7443	320 7998	320 7994	320 7998	448 5632
14	CAM		3.030	1	320 7407	320 8003	320 7995	320 8003	448 5631
15	SLEEVE		3.030	1	320 7409	320 7409	320 7409	320 7409	320 7409
16	LEAD		3.030	1	320 6674	320 6674	320 6674	320 6674	320 6674
17	SPRING		3.030	1	320 6677	320 6677	320 6677	320 6677	320 6677
18	WASHER		3.030	1	320 6666	320 6666	320 6666	320 6666	320 6666
19	SEAL		3.030	1	320 6650	....	320 6650	320 6650	320 6650
20	GROMMET		3.030	1	320 6672	320 6672	320 6672	320 6672	320 6672
21	CONDENSER		3.033	1	320 4584	320 4584	320 4584	320 4584	320 4584
22	BRACKET		3.030	1	320 6669	320 6669	320 6669	320 6669	320 6669
23	SCREW		3.030	1	320 6655	320 6655	320 6655	320 6655	320 6655
24	CONTROL		3.046	1	320 7411	320 8005	320 7411	320 7411	320 8005
25	SCREW		3.030	2	G454342	320 7997	320 7997	G454342	G454342
26	GEAR		3.042	1	318 2700	318 2700	318 2700	318 2700	319 8787
27	PIN		3.030	1	320 4213	320 4213	320 4213	320 4213	320 4213
28	WASHER		3.030	1	320 6659	320 6659	320 6659	320 6659	320 6659
29	BRUSH		3.030	1	320 6670	320 6670	320 6670	320 6670	320 6670
30	PAD		3.030	1	320 7367	320 7367	....	320 7367	320 7367
31	RETAINER		3.030	1	320 0433	320 0433	320 0433	320 0433	320 0433

Printed in U.S.A.

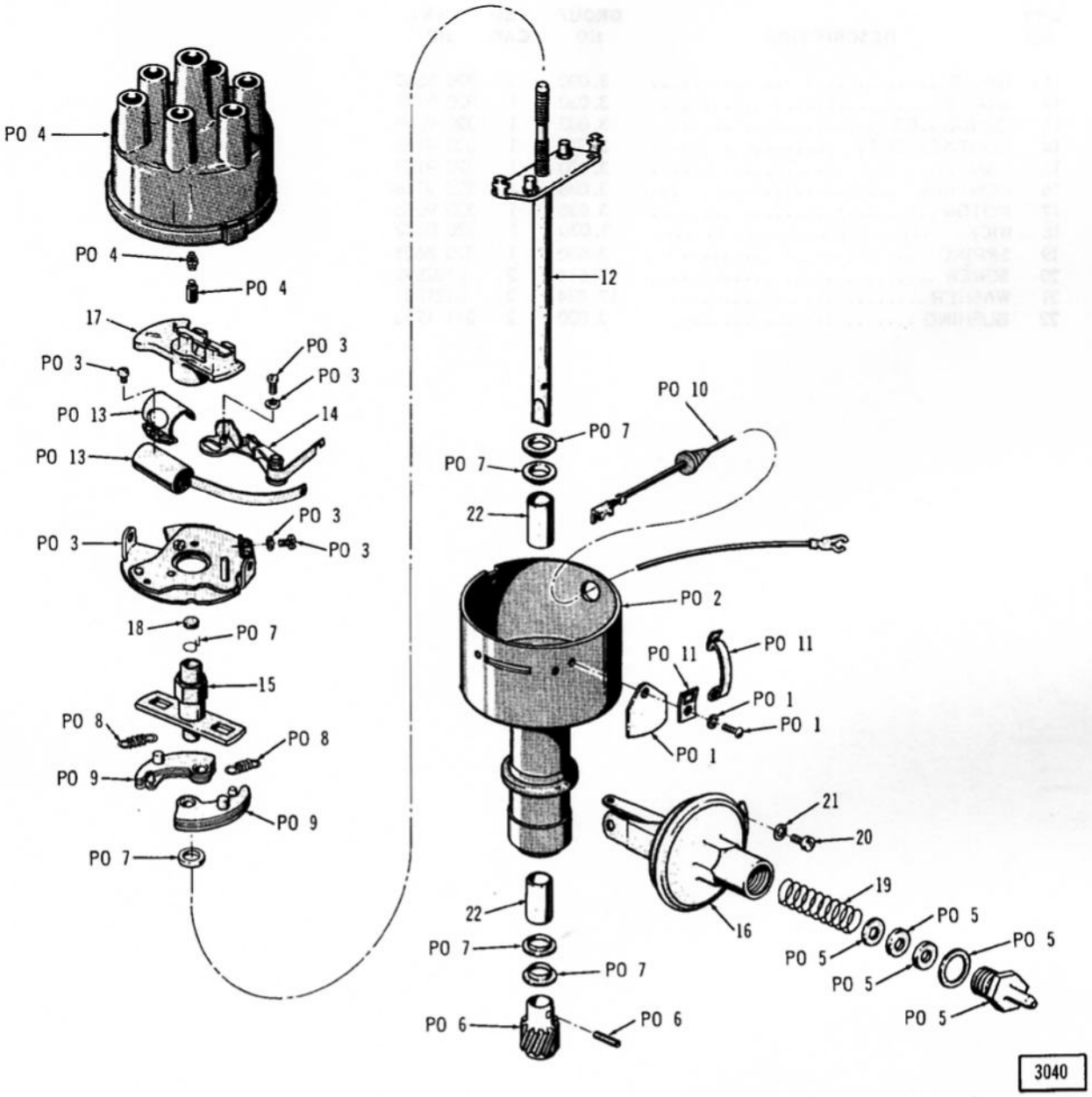

DISTRIBUTOR

KEY NO.	DESCRIPTION	GROUP NO.	PER CAR	PART NO.
1	DISTRIBUTOR	3.030	1	318 0286
2	BASE ASSY	3.030	1	320 8658
3	PLATE ASSY	3.031	1	320 9173
4	CAP ASSY	3.032	1	320 9053
5	CONTROL KIT	3.030	1	320 8621
6	GEAR KIT	3.030	1	320 8656
7	SHAFT KIT	3.030	1	320 8657
8	SPRING SET	3.030	1	320 9172
9	WEIGHT SET	3.030	1	320 8620
10	LEAD	3.030	1	320 9164

Printed in U.S.A.

KEY NO.	DESCRIPTION	GROUP NO.	PER CAR	PART NO.
11	HINGE	3.030	2	320 8659
12	SHAFT	3.030	1	320 9171
13	CONDENSER	3.033	1	320 9088
14	CONTACT SET	3.031	1	320 9165
15	CAM	3.030	1	320 9167
16	CONTROL	3.046	1	320 9168
17	ROTOR	3.035	1	320 9056
18	WICK	3.030	1	320 8622
19	SPRING	3.030	1	320 8625
20	SCREW	17.614	2	G132892
21	WASHER	17.824	2	G121801
22	BUSHING	3.030	2	311 1952

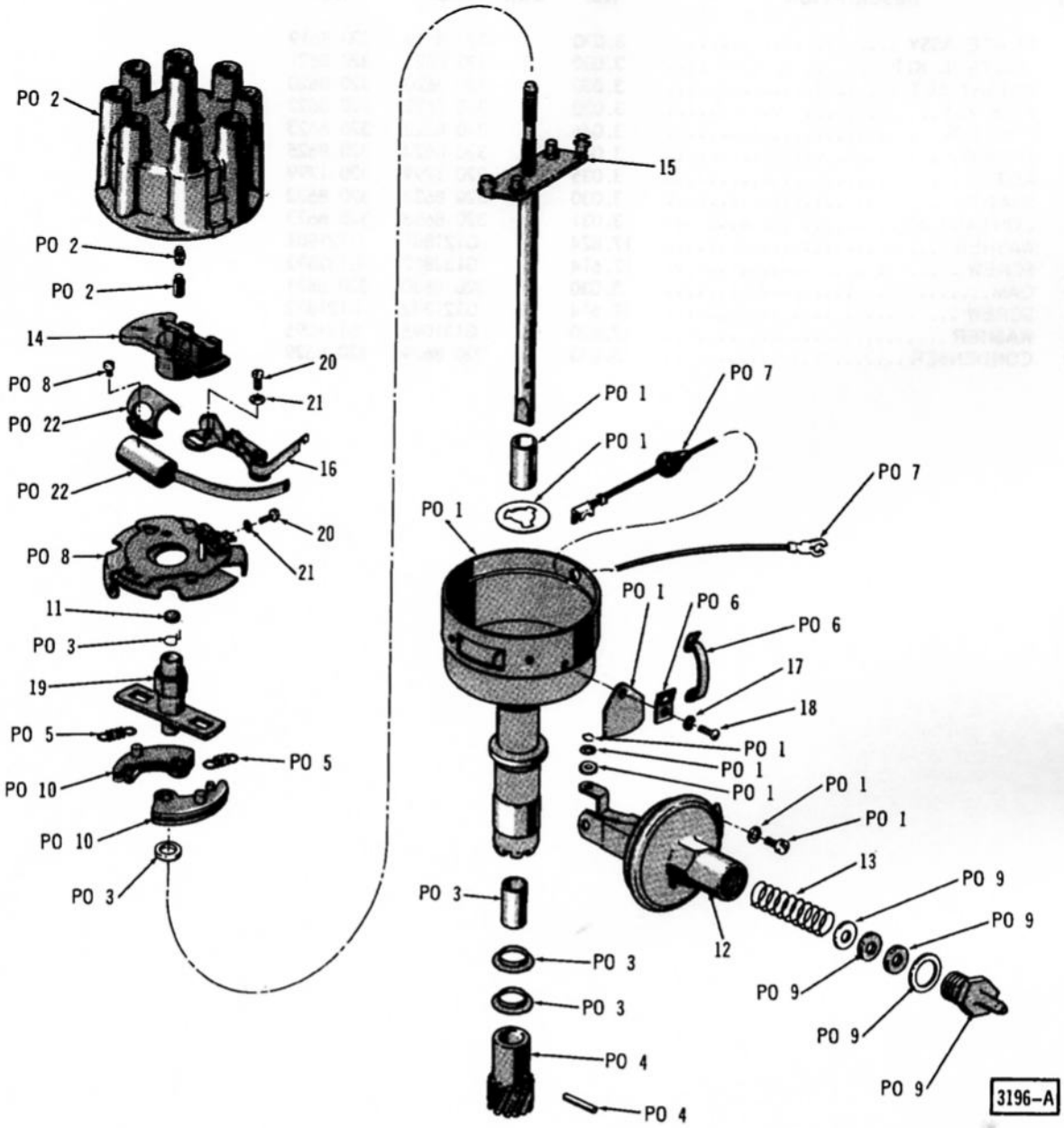

DISTRIBUTOR

KEY NO.	DESCRIPTION	GROUP NO.	PER CAR	PART NO.	PART NO.
1	DISTRIBUTOR	3.030	1	318 2862	318 2863
2	CAP ASSY	3.032	1	320 8613	320 8613
3	BEARING KIT	3.030	1	320 8614	320 8614
4	GEAR KIT	3.030	1	320 8615	320 8615
5	SPRING SET	3.030	1	320 8616	320 8617
6	CLAMP ASSY	3.030	1	320 8618	320 8618
7	LEAD ASSY	3.030	1	320 9054	320 9054

Printed in U.S.A.

KEY NO.	DESCRIPTION	GROUP NO.	PER CAR	PART NO.	PART NO.
8	PLATE ASSY	3.030	1	320 8619	320 8619
9	CONTROL KIT	3.030	1	320 8621	320 8621
10	WEIGHT SET	3.030	1	320 8620	320 8620
11	WICK KIT	3.030	1	320 8622	320 8622
12	CONTROL	3.046	1	320 8623	320 8623
13	SPRING	3.046	1	320 8624	320 8625
14	ROTOR	3.035	1	320 1799	320 1799
15	SHAFT	3.030	1	320 8632	320 8632
16	CONTACT SET	3.031	1	320 8633	320 8633
17	WASHER	17.824	2	G121801	G121801
18	SCREW	17.614	2	G132892	G132892
19	CAM	3.030	1	320 8630	320 8631
20	SCREW	17.614	2	G121832	G121832
21	WASHER	17.820	2	G131095	G131095
22	CONDENSER	3.033	1	320 8629	320 8629

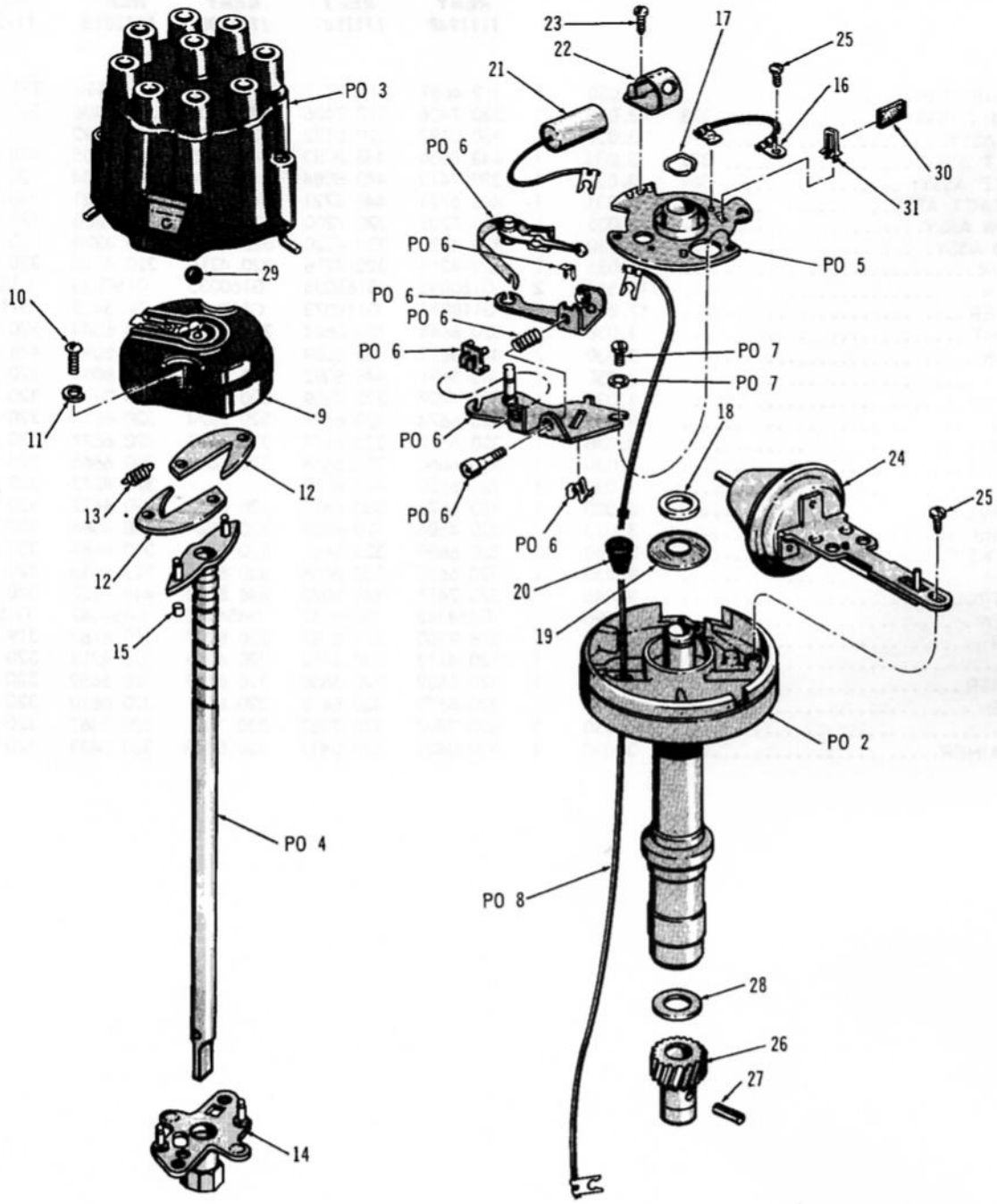

DISTRIBUTOR

Printed in U.S.A.

KEY NO.	DESCRIPTION	PAKS CODE	GROUP NO.	PER CAR	PART NO. DELCO-REMY 1111948	PART NO. DELCO-REMY 1111987	PART NO. DELCO-REMY 1111988	PART NO. DELCO-REMY 1112018	PART NO. DELCO-REMY 1112028
1	DISTRIBUTOR		3.030	1	319 4669	319 7233	319 7232	321 0193	321 1821
2	HOUSING ASSY.	373	3.030	1	320 7406	320 7406	320 7406	320 7406	320 7406
3	CAP ASSY.	370	3.032	1	320 0192	320 0192	320 0192	320 0192	320 0192
4	SHAFT ASSY.	372	3.030	1	448 5630	448 8083	448 8085	448 8085	448 8085
5	PLATE ASSY.	369	3.030	1	320 7410	448 8084	448 8084	448 8084	320 7410
6	CONTACT ASSY.	364	3.031	1	448 6721	448 6721	448 6721	448 6721	448 6721
7	SCREW ASSY		3.030	1	320 7200	320 7200	320 7200	320 7200	320 7200
8	LEAD ASSY		3.030	1	320 4220	320 4220	320 4220	320 4220	320 4220
9	ROTOR		3.035	1	320 4216	320 4216	320 4216	320 4216	320 4216
10	SCREW		17.598	2	G160035	G160035	G160035	G160035	G160035
11	WASHER		17.820	2	G118873	G118873	G118873	G453435	G118873
12	WEIGHT		3.030	2	320 6644	320 6644	320 6644	320 6644	320 6644
13	SPRING		3.030	2	448 5632	448 8089	448 8090	448 8090	448 9156
14	CAM		3.030	1	448 5631	448 8092	448 8093	448 8093	320 7995
15	SLEEVE		3.030	1	320 7409	320 7409	320 7409	320 7409	320 7409
16	LEAD		3.030	1	320 6674	320 6674	320 6674	320 6674	320 6674
17	SPRING		3.030	1	320 6677	320 6677	320 6677	320 6677	320 6677
18	WASHER		3.030	1	320 6666	320 6666	320 6666	320 6666	320 6666
19	SEAL		3.030	1	320 6650	320 6650	... .	320 4233	320 6650
20	GROMMET		3.030	1	320 6672	320 6672	320 6672	320 6672	320 6672
21	CONDENSER		3.033	1	320 4584	320 4584	320 4584	320 4584	320 4584
22	BRACKET		3.030	1	320 6669	320 6669	320 6669	320 6669	320 6669
23	SCREW		3.030	1	320 6655	320 6655	320 6655	320 6655	320 6655
24	CONTROL		3.046	1	320 7411	448 8073	448 8073	448 8327	320 7411
25	SCREW		17.596	2	G454342	G454342	G454342	G454342	G454342
26	GEAR		3.042	1	318 2700	319 8787	320 8787	319 8787	319 8787
27	PIN		3.030	1	320 4213	320 4213	320 4213	320 4213	320 4213
28	WASHER		3.030	1	320 6659	320 6659	320 6659	320 6659	320 6659
29	BRUSH		3.030	1	320 6670	320 6670	320 6670	320 6670	320 6670
30	PAD		3.030	1	320 7367	320 7367	320 7367	320 7367	320 7367
31	RETAINER		3.030	1	320 0433	320 0433	320 0433	320 0433	320 0433

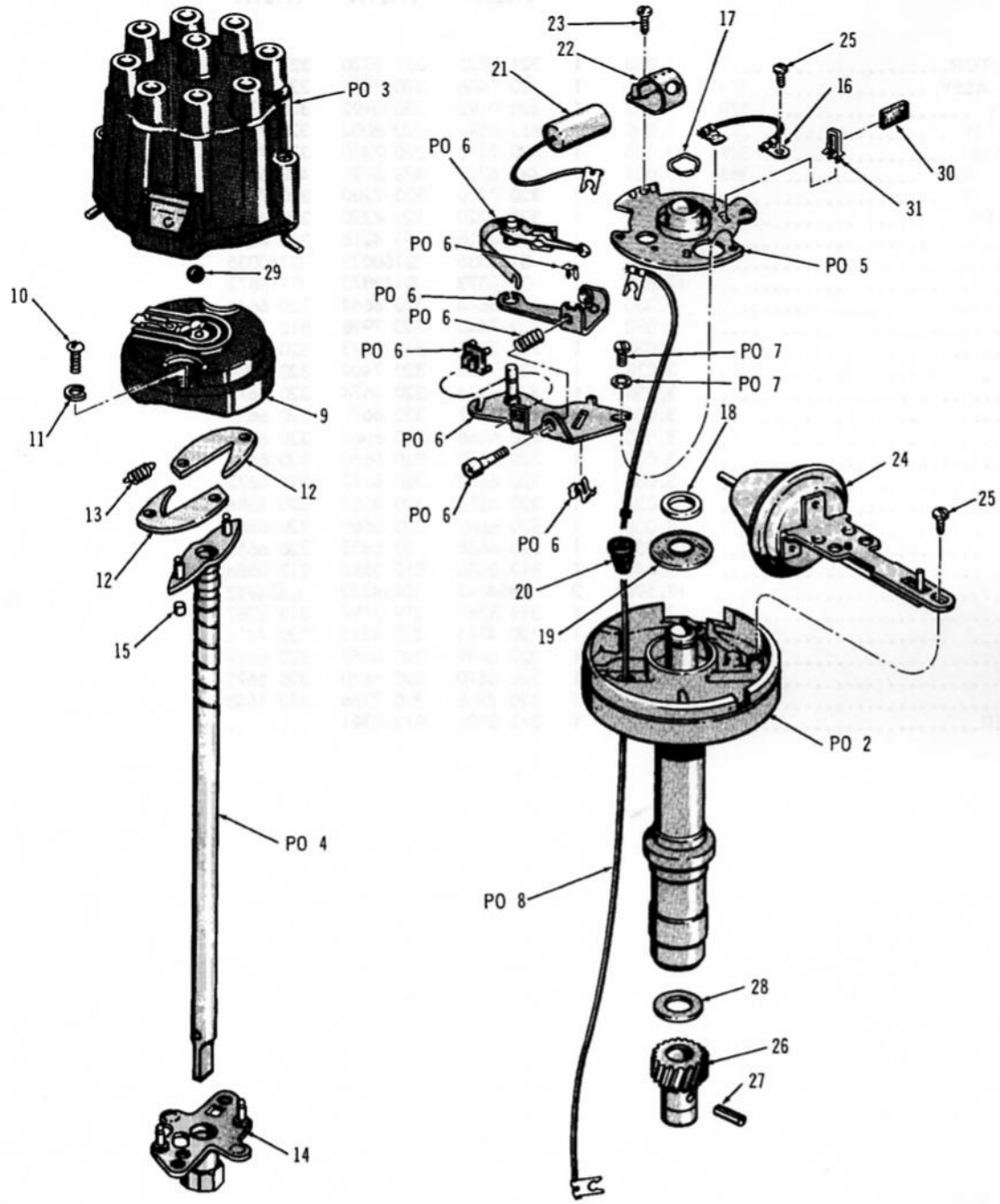

DISTRIBUTOR

Printed in U.S.A.

KEY NO.	DESCRIPTION	PAKS CODE	GROUP NO.	PER CAR	PART NO. DELCO REMY 1112111	PART NO. DELCO REMY 1112112	PART NO. DELCO REMY 1112179
1	DISTRIBUTOR		3.030	1	321 5825	321 5826	321 7798
2	HOUSING ASSY.	373	3.030	1	320 7406	320 7406	320 7406
3	CAP ASSY.	370	3.032	1	320 0192	320 0192	320 0192
4	SHAFT ASSY.	372	3.030	1	812 0590	320 8004	320 7408
5	PLATE ASSY.	369	3.030	1	320 7410	320 7410	320 7410
6	CONTACT ASSY.	364	3.031	1	448 6721	448 6721	448 6721
7	SCREW ASSY.		3.030	1	320 7200	320 7200	320 7200
8	LEAD ASSY.		3.030	1	320 4220	320 4220	320 4220
9	ROTOR		3.035	1	320 4216	320 4216	320 4216
10	SCREW		17.598	2	G160035	G160035	G160035
11	WASHER		17.820	2	G118873	G118873	G118873
12	WEIGHT		3.030	2	320 6644	320 6644	320 6644
13	SPRING		3.030	2	320 7443	320 7998	812 1722
14	CAM		3.030	1	320 7995	812 0593	320 7407
15	SLEEVE		3.030	1	320 7409	320 7409	320 7409
16	LEAD		3.030	1	320 6674	320 6674	320 6674
17	SPRING		3.030	1	320 6677	320 6677	320 6677
18	WASHER		3.030	1	320 6666	320 6666	320 6666
19	SEAL		3.030	1	320 6650	320 6650	320 6650
20	GROMMET		3.030	1	320 6672	320 6672	320 6672
21	CONDENSER		3.033	1	320 4584	320 4584	320 4584
22	BRACKET		3.030	1	320 6669	320 6669	320 6669
23	SCREW		3.030	1	320 6655	320 6655	320 6655
24	CONTROL		3.046	1	812 0586	812 0586	812 0586
25	SCREW		17.596	2	G454342	G454342	G454342
26	GEAR		3.042	1	319 8787	319 8787	319 8787
27	PIN		3.030	1	320 4213	320 4213	320 4213
28	WASHER		3.030	1	320 6659	320 6659	320 6659
29	BRUSH		3.030	1	320 6670	320 6670	320 6670
30	PAD		3.030	1	320 7366	320 7366	812 1648
31	RETAINER		3.030	1	812 0591	812 0591	... .

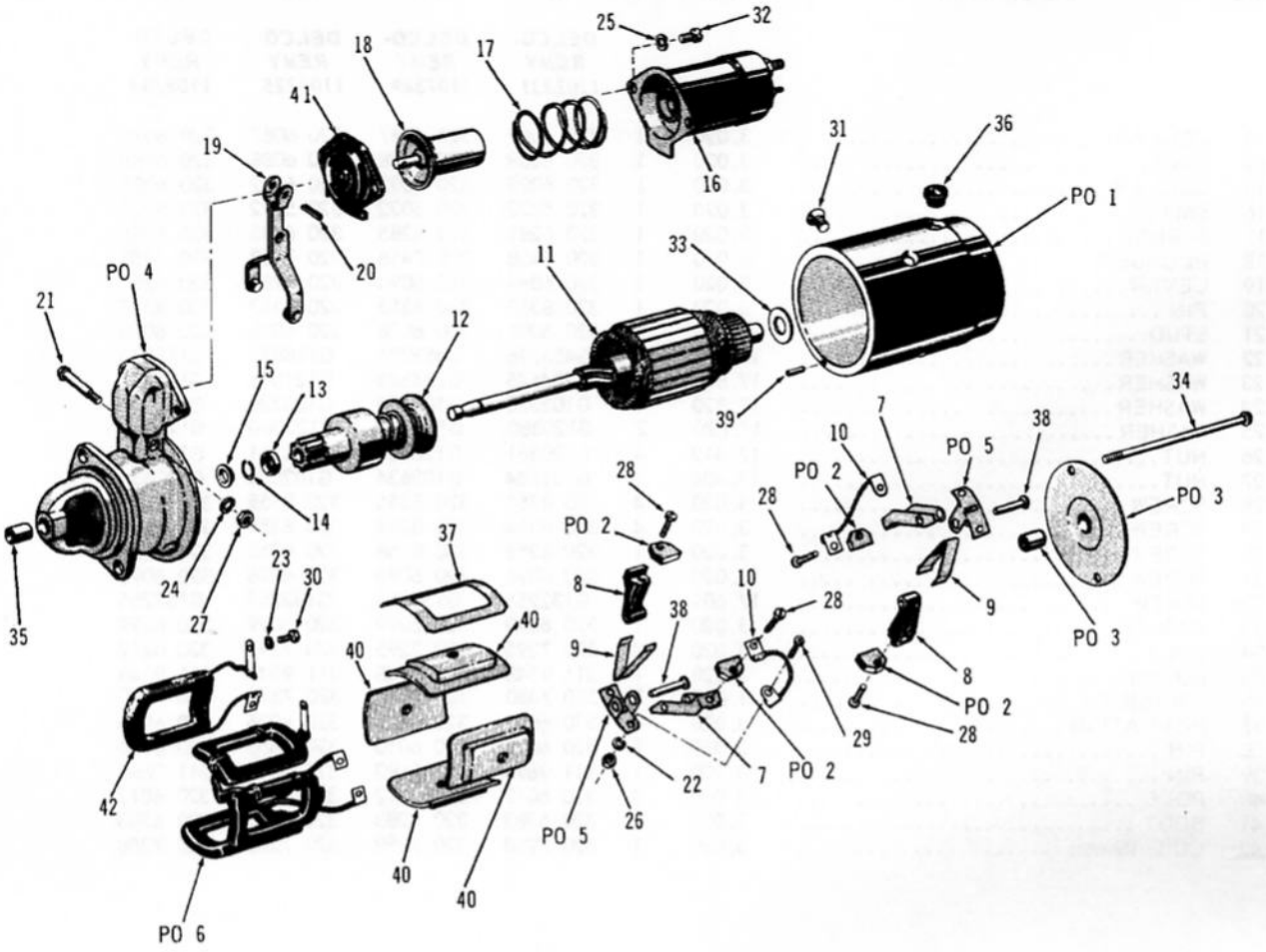

2332

STARTING MOTOR

KEY NO.	DESCRIPTION	GROUP NO.	PER CAR	PART NO.	PART NO.	PART NO.	PART NO.
				DELCO-REMY 1107331	*DELCO-REMY 1107349*	*DELCO-REMY 1108325*	*DELCO-REMY 1108384*
1	STARTING MOTOR	3.020	1	318 4250	318 4250	320 8850	320 8850
2	BRUSH SET	3.020	1	320 2006	320 2006	320 2006	320 2006
3	END, Commutator	3.020	1	311 9543	311 9543	311 9543	311 9543
4	END, Drive	3.020	1	320 8351	320 8351	320 8351	320 8351
5	SUPPORT ASSY.	3.020	2	320 6084	320 6084	320 6084	320 6084
6	COIL SET	3.020	1	320 1072	320 8352	320 8352	320 8352
7	HOLDER (Ground)	3.020	2	320 6082	320 6082	320 6082	320 6082
8	HOLDER (Insulated)	3.020	2	320 6083	320 6083	320 8357	320 8357
9	SPRING	3.020	2	311 9545	311 9545	311 9545	311 9545
10	LEAD	3.020	2	320 6085	320 6085	320 6085	320 6085
11	ARMATURE	3.020	1	320 5019	320 5019	320 5019	320 5019
12	DRIVE	3.020	1	320 5021	320 5021	320 5021	320 5021

Printed in U.S.A.

KEY NO.	DESCRIPTION	GROUP NO.	PER CAR	PART NO.	PART NO.	PART NO.	PART NO.
				DELCO-REMY 1107331	*DELCO-REMY 1107349*	*DELCO-REMY 1108325*	*DELCO-REMY 1108384*
13	COLLAR	3.020	1	320 6087	320 6087	320 6087	320 6087
14	RING	3.020	1	320 6088	320 6088	320 6088	320 6088
15	COLLAR	3.020	1	320 6092	320 6092	320 6092	320 6092
16	SWITCH	3.020	1	320 5022	320 5022	320 5022	320 5022
17	SPRING	3.020	1	320 6285	320 6285	320 6285	320 6285
18	PLUNGER	3.020	1	320 7458	320 7458	320 7458	320 7458
19	LEVER	3.020	1	320 6094	320 6094	320 6281	320 6281
20	PIN	3.020	1	320 8353	320 8353	320 8353	320 8353
21	STUD	3.020	1	320 6098	320 6098	320 6098	320 6098
22	WASHER	17.820	4	G453296	G453296	G118873	G118873
23	WASHER	17.824	1	G274545	G274545	G121801	G121801
24	WASHER	17.820	1	G103320	G103320	G103320	G103320
25	WASHER	17.820	2	G120380	G120380	G120380	G120380
26	NUT	17.412	4	G120361	G120361	G120361	G120361
27	NUT	17.406	1	G102634	G102634	G102634	G102634
28	SCREW	3.020	4	320 8355	320 8355	320 8355	320 8355
29	SCREW	3.020	4	320 8354	320 8354	320 8354	320 8354
30	SCREW	3.020	1	320 8358	320 8358	320 8358	320 8358
31	SCREW	3.020	4	320 6096	320 6096	320 6096	320 6096
32	SCREW	17.602	2	G132255	G132255	G132255	G132255
33	WASHER	3.020	1	320 6099	320 6099	320 6099	320 6099
34	BOLT	3.020	2	320 7295	320 7295	320 7295	320 6212
35	BUSHING	3.020	1	311 9548	311 9548	311 9548	311 9548
36	GROMMET	3.020	1	320 7330	320 7330	320 7330	320 7330
37	INSULATION	3.020	4	320 6006	320 6006	320 6006	320 6006
38	PIN	3.020	2	320 6010	320 6010	320 8356	320 8356
39	PIN	3.020	1	311 2693	311 2693	311 2693	311 2693
40	POLE	3.020	4	320 6012	320 6012	320 6012	320 6012
41	BOOT	3.020	1	320 6283	320 6283	320 6283	320 6283
42	COIL (Shunt)	3.020	1	320 7258	320 7258	320 7258	320 7258

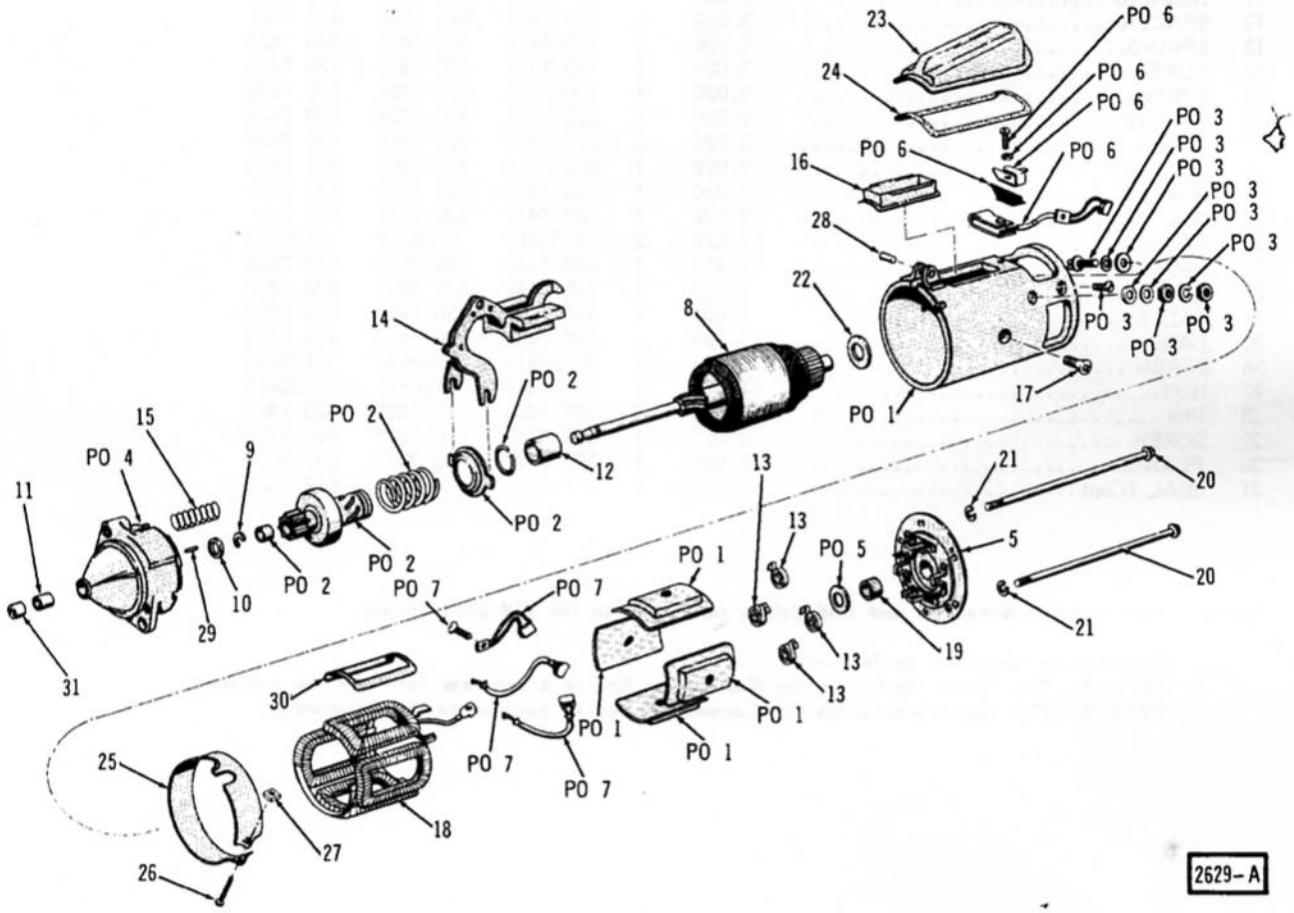

STARTING MOTOR

Printed in U.S.A.

KEY NO.	DESCRIPTION	GROUP NO.	PER CAR	PART NO.	PART NO.	PART NO.
1	STARTING MOTOR	3.020	1	318 2972	319 3382	321 2235
2	DRIVE ASSY.	3.020	1	812 0193	448 6601	812 0193
3	TERMINAL KIT	3.020	1	320 7522	320 7522	320 7522
4	END, Drive	3.020	1	320 7420	... .	448 9353
	END, Drive (See Type 1 Below)	3.020	1	... .	448 6602	... .
	END, Drive (See Type 2 Below)	3.020	1	... .	812 0348	... .
5	END, Commutator	3.020	1	320 7423	320 7423	320 7423
6	POINT KIT	3.020	1	320 7523	320 7523	320 7523
7	BRUSH KIT	3.020	1	320 7524	320 7524	320 7524
8	ARMATURE	3.020	1	320 7416	... .	812 0028
	ARMATURE (See Type 1 Below)	3.020	1	... .	320 7416	... .
	ARMATURE (See Type 2 Below)	3.020	1	... .	812 0028	... .
9	RING	3.020	1	320 7418	320 7418	320 7418
10	RETAINER	3.020	1	320 7419	320 7419	320 7419
11	BUSHING	3.020	1	320 7421	320 7421	812 0030
12	SPACER	3.020	1	320 7422	812 1196	812 1196
13	SPRING	3.020	4	320 7424	320 7424	320 7424
14	YOKE	3.020	1	320 7425	320 7425	320 7425
15	SPRING	3.020	1	320 7426	320 7426	320 7426
16	SLEEVE	3.020	1	320 7428	320 7428	320 7428
17	SCREW	3.020	3	320 7429	320 7429	320 7429
18	COIL SET	3.020	1	320 7415	448 6600	320 7415
19	BUSHING	3.020	1	320 7430	320 7430	320 7430
20	BOLT	3.020	2	320 7431	320 7431	320 7431
21	WASHER	17.820	2	G103319	G103319	G103319
22	WASHER	17.814	1	448 7328	448 7328	448 7328
23	COVER	3.020	1	320 7432	320 7432	320 7432
24	GASKET	3.020	1	320 7433	320 7433	320 7433
25	BAND	3.020	1	320 7434	320 7434	320 7434
26	SCREW	17.614	1	G132934	G132934	G132934
27	NUT	17.414	1	G120611	G120611	G120611
28	PIN	3.020	1	320 7435	320 7435	320 7435
29	SCREW	3.020	1	320 7436	320 7436	320 7436
30	FLANGE	3.020	1	320 7427	320 7427	320 7427
31	SEAL (Cup)	3.020	1	... .	... .	812 0029

NOTE: **Two types of Armatures and End Drives were used in the 319 3382 Starter.**

They can be identified as follows:
TYPE 1: **The Thrust Washer on the Commutator End is a separate part from the Armature.**
TYPE 2: **The Thrust Washer on the Commutator End is moulded to the Commutator.**

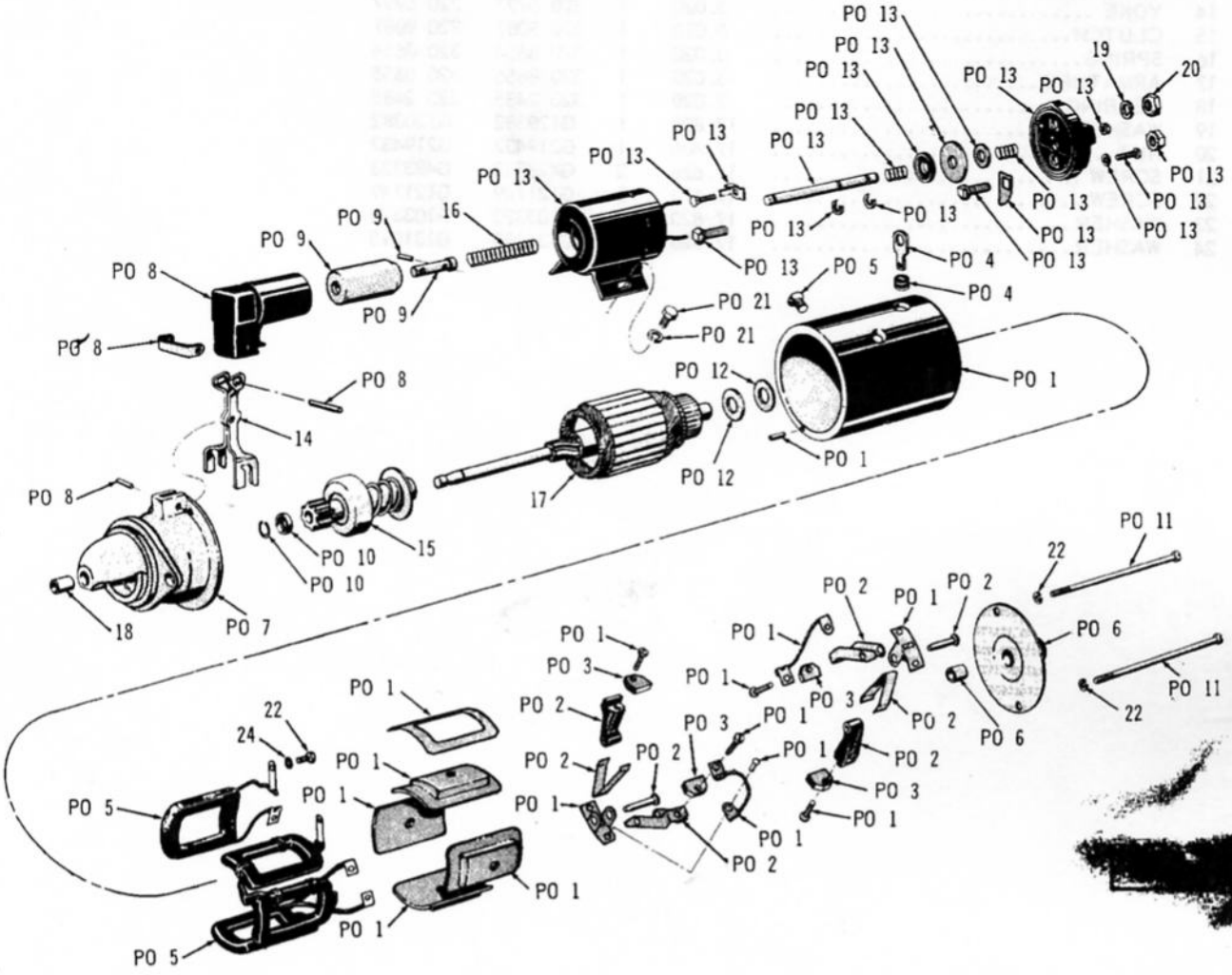

STARTING MOTOR

KEY NO.	DESCRIPTION	GROUP NO.	PER CAR	PART NO.	PART NO.
1	STARTING MOTOR	3.020	1	318 2890	319 1926
2	HOLDER KIT	3.020	1	320 8646	320 8646
3	BRUSH KIT	3.020	1	320 9063	320 9063
4	CONNECTOR KIT	3.020	1	320 8647	320 8647
5	COIL SET	3.020	1	320 8648	320 8648
6	COMMUTATOR HEAD	3.020	1	320 9052	320 9052
7	DRIVE HEAD	3.020	1	320 8649	320 8649
8	PIN KIT	3.020	1	320 8650	320 8650
9	PLUNGER ASSY	3.020	1	320 8651	320 8651
10	RING KIT	3.020	1	320 9292	320 9292
11	BOLT KIT	3.020	1	320 8652	320 8652

Printed in U.S.A.

KEY NO.	DESCRIPTION	GROUP NO.	PER CAR	PART NO.	PART NO.
12	WASHER KIT	3.020	1	320 8653	320 8653
13	SOLENOID	3.020	1	320 9081	320 9790
14	YOKE	3.020	1	320 5997	320 5997
15	CLUTCH	3.020	1	320 9087	320 9087
16	SPRING	3.020	1	320 8654	320 8654
17	ARMATURE	3.020	1	320 8655	320 8655
18	BEARING	3.020	1	320 2485	320 2485
19	WASHER	17.820	1	G120382	G120382
20	NUT	17.406	1	G219432	G219432
21	SCREW KIT	17.626	2	G423333	G423333
22	SCREW	17.614	2	G121749	G121749
23	WASHER	17.820	4	G103320	G103320
24	WASHER	17.820	2	G131095	G131095

ILLUSTRATION SUPPLEMENT - SPECIAL INFORMATION

ALTERNATOR COMPONENTS .... Refer to F-14072 Parts Catalog Charts.

DISTRIBUTOR COMPONENTS .... Refer to F-14072 Parts Catalog Charts.

STARTING MOTOR COMPONENTS .... Refer to F-14072 Parts Catalog Charts.

ILLUSTRATION SUPPLEMENT - SPECIAL INFORMATION

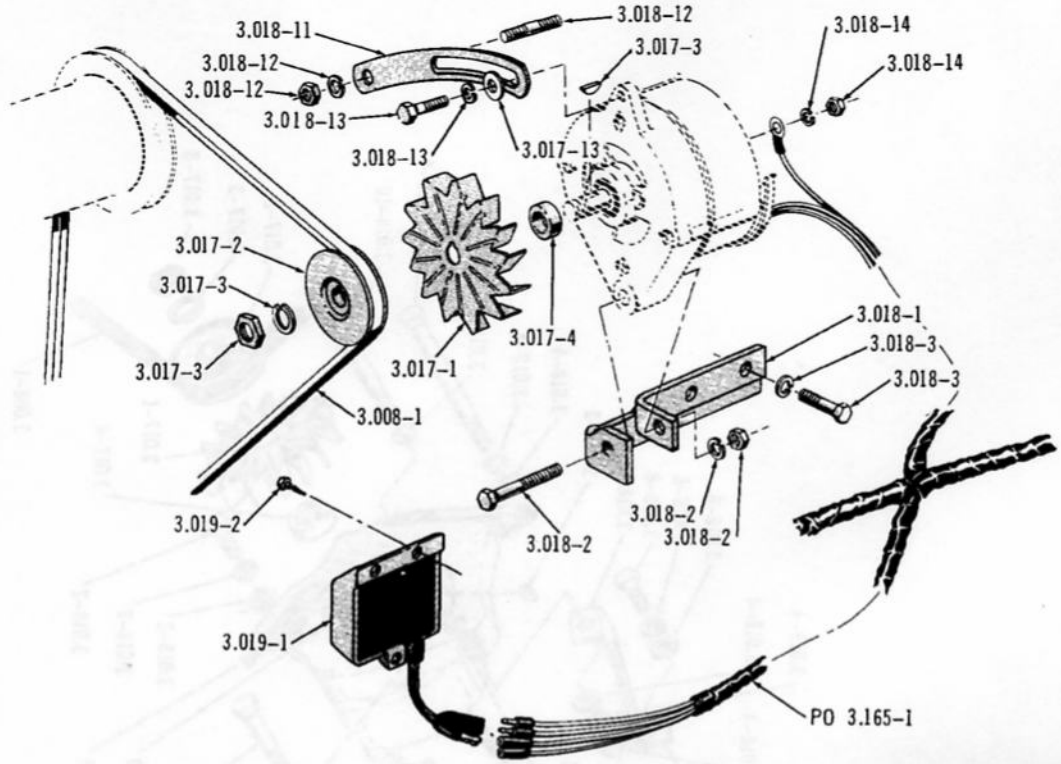

2546

ALTERNATOR FAN, PULLEY AND MOUNTING . . . LHD-SIX (1967/71) (1972-TYPE 1)

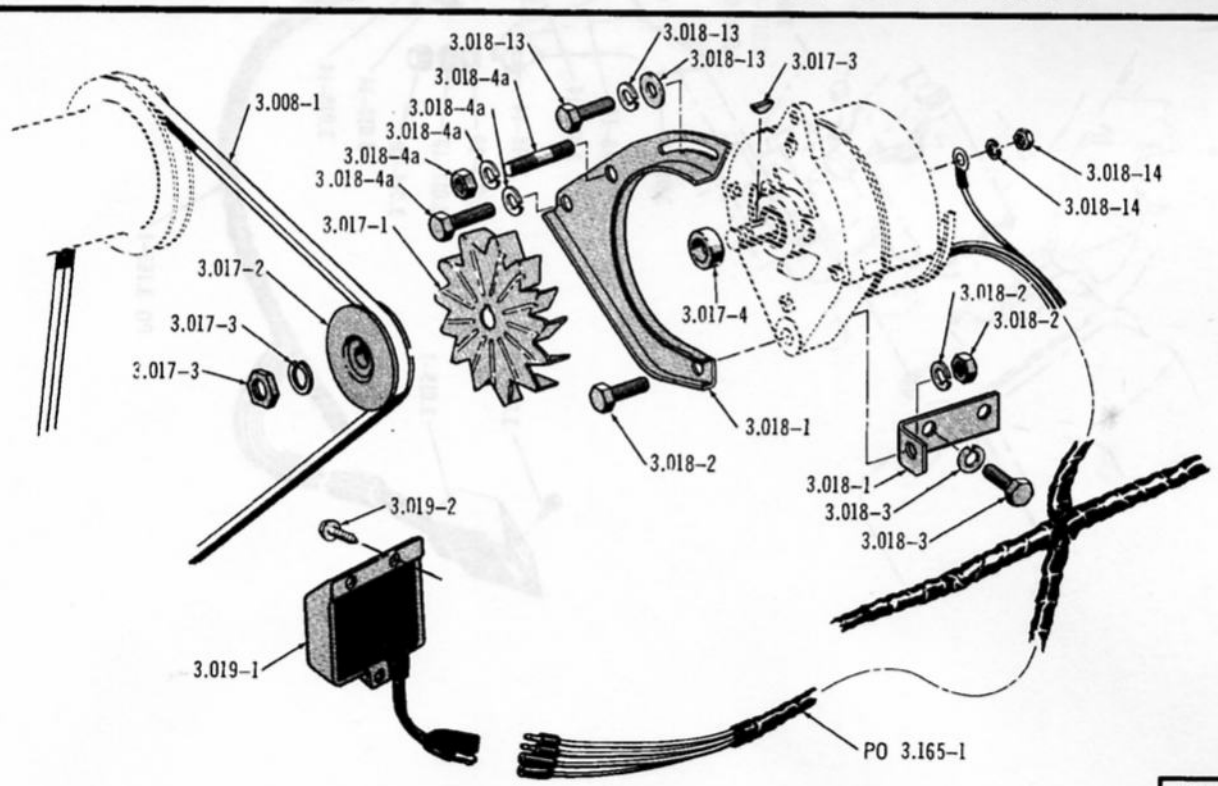

4078

ALTERNATOR FAN, PULLEY AND MOUNTING . . . LHD-SIX (1972-Type 2)

Printed in U.S.A.

2633

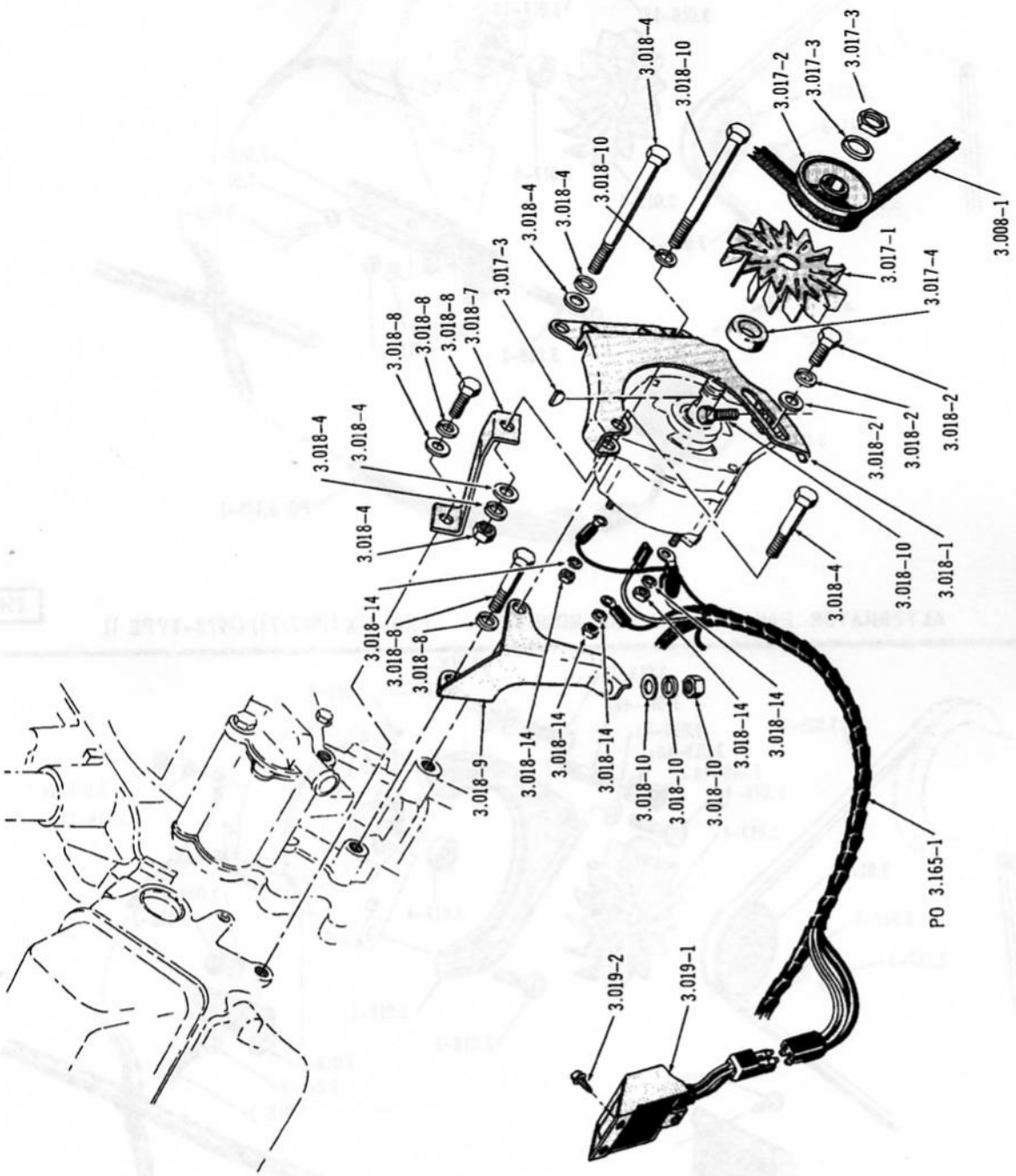

ALTERNATOR FAN, PULLEY AND MOUNTING . . . LHD-V8 (35,37,40 AND 55 AMP.) (60 AND 62 AMP. MOTOROLA)

Printed in U.S.A.

2940

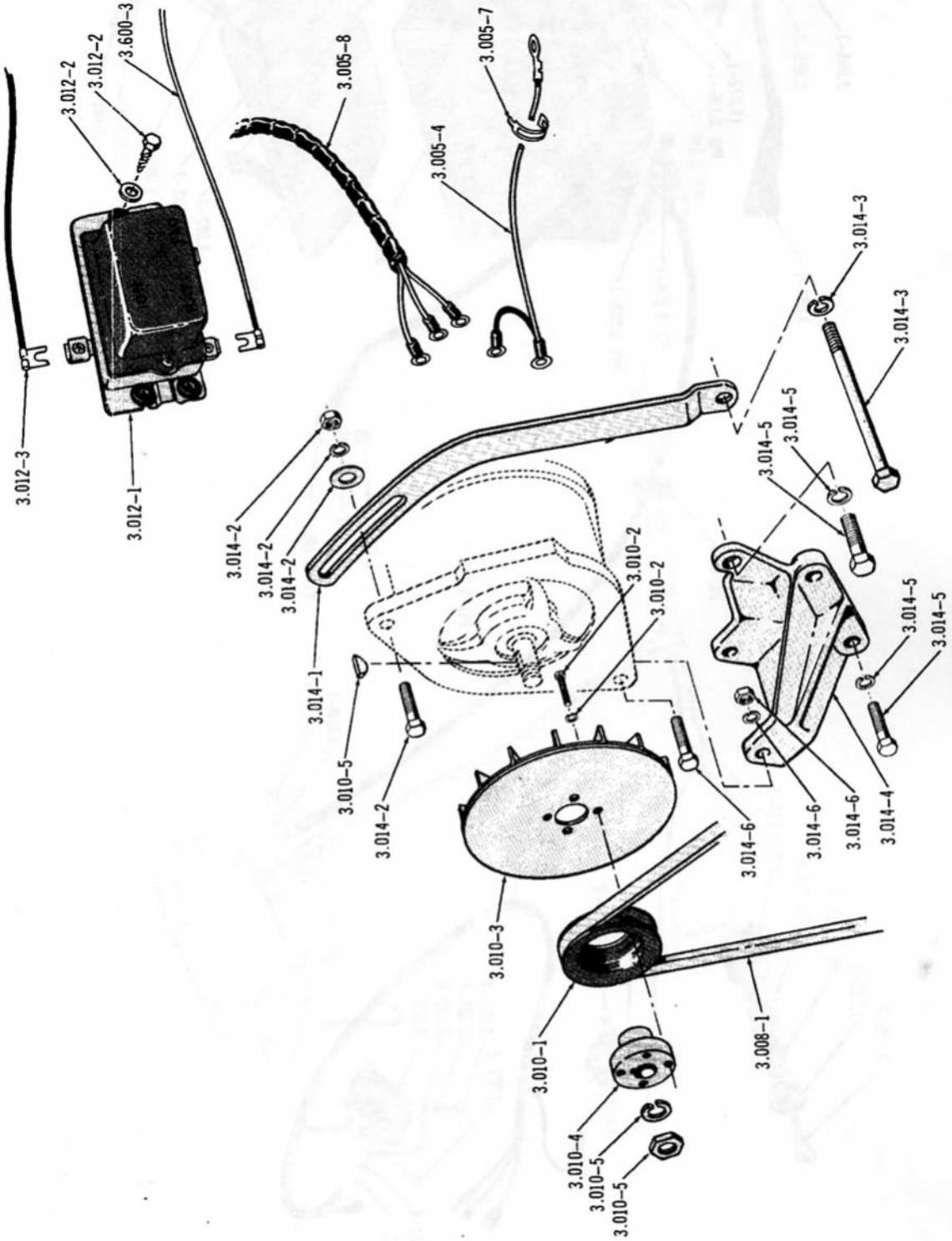

ALTERNATOR FAN, PULLEY AND MOUNTING ... LHD-V8 (60 AND 65 AMP.- LEECE NEVILLE)

2278

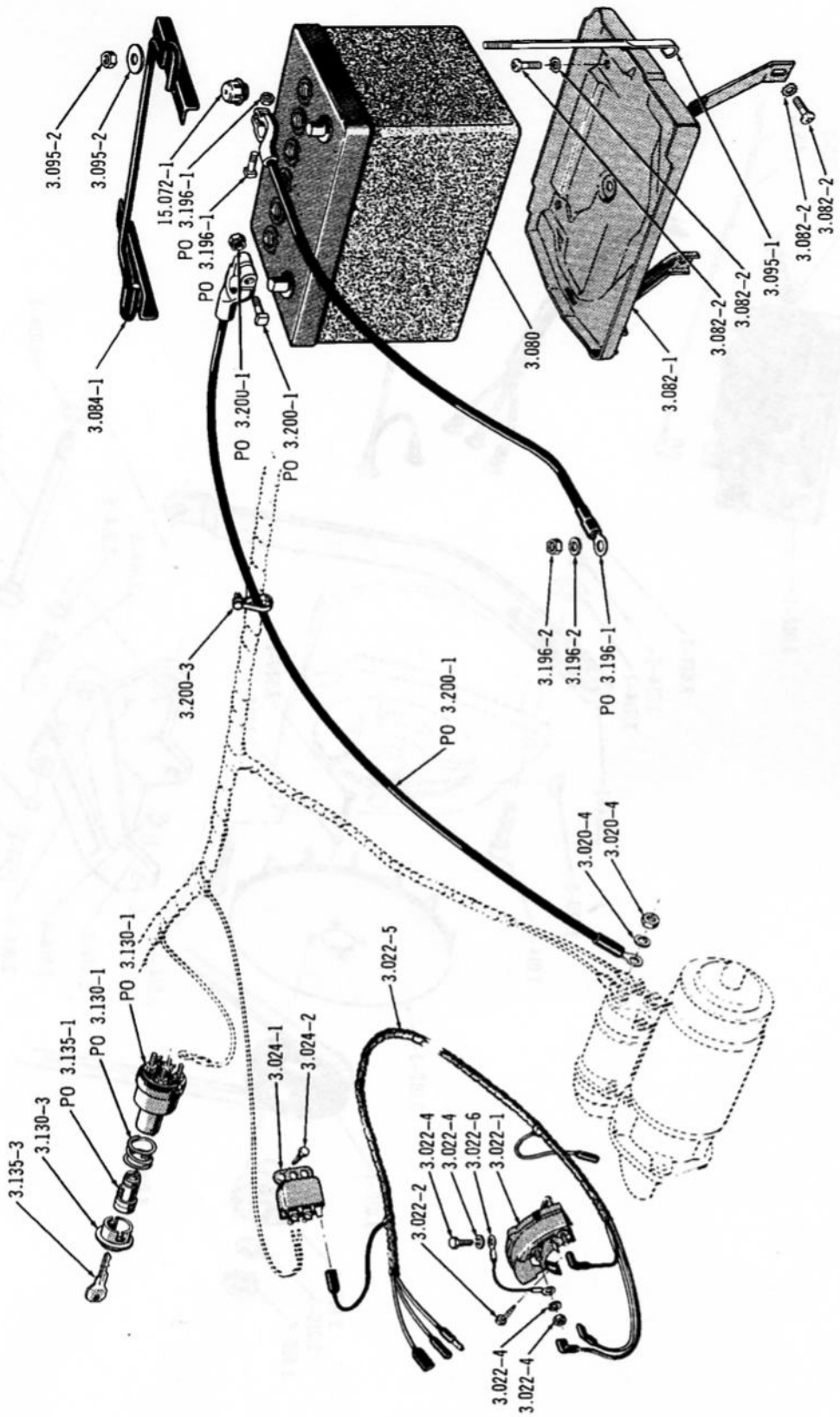

CRANKING CIRCUIT ... 1967/69-01 (SIX-WCGS)

Printed in U.S.A.

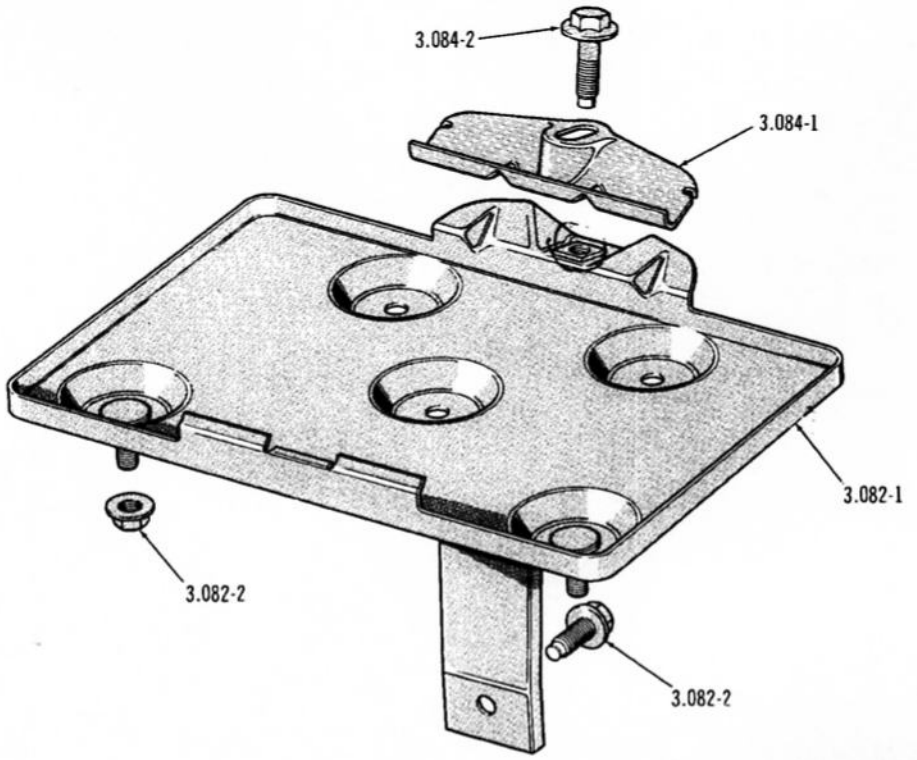

BATTERY TRAY AND ATTACHING PARTS . . . 1970 (01)(30)(70), 1970/ (10)(70)(80), 1971-LPS (01)(40)

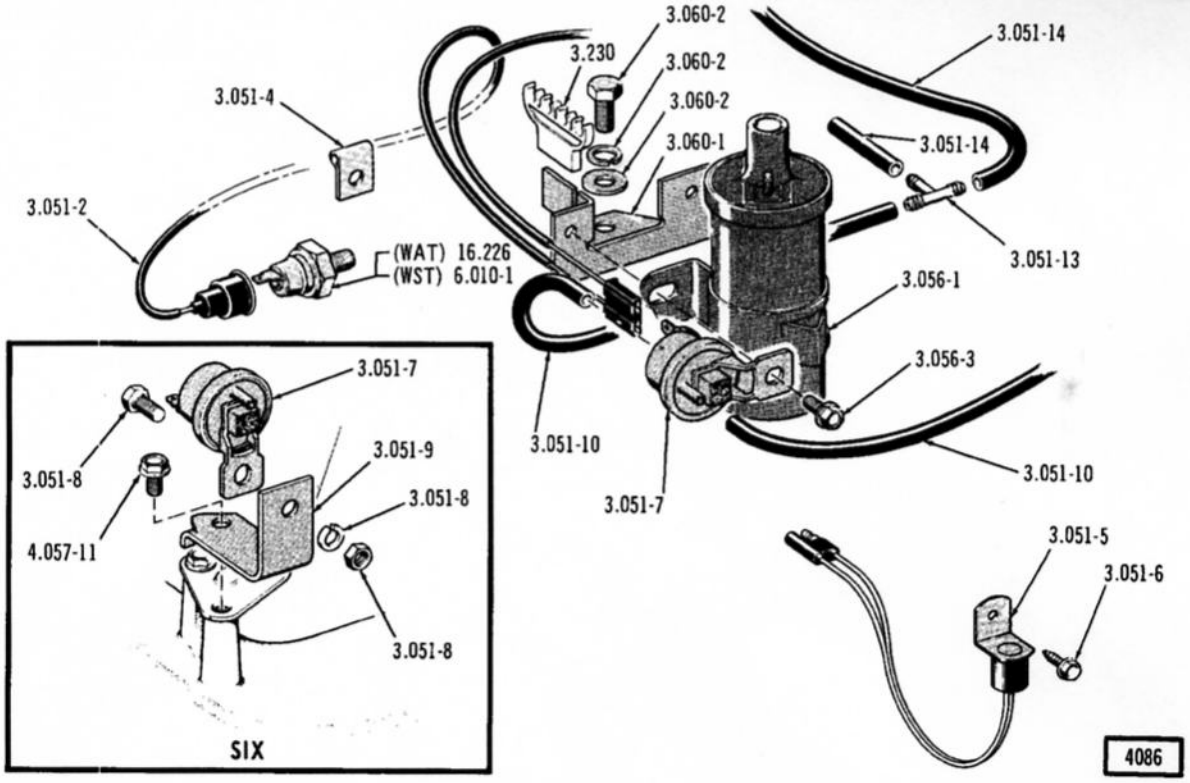

TRANSMISSION CONTROLLED SPARK ... 1971

Printed in U.S.A.

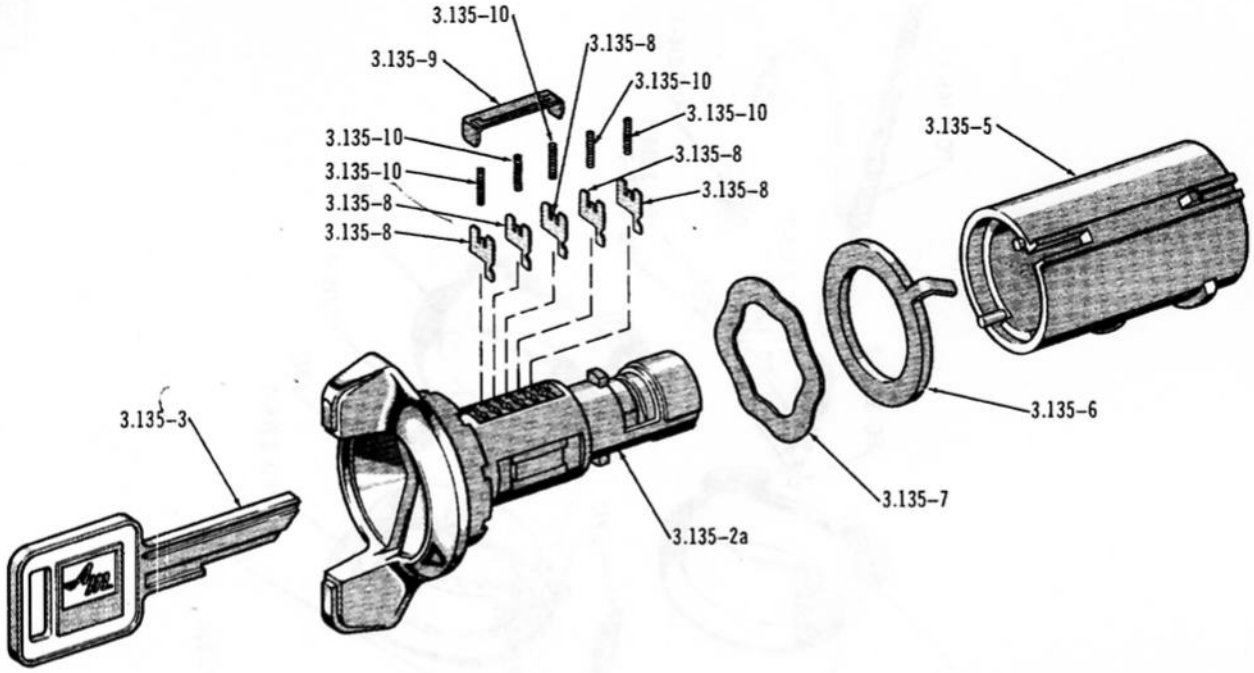

3848

IGNITION SWITCH LOCK CYLINDER ... 1970/

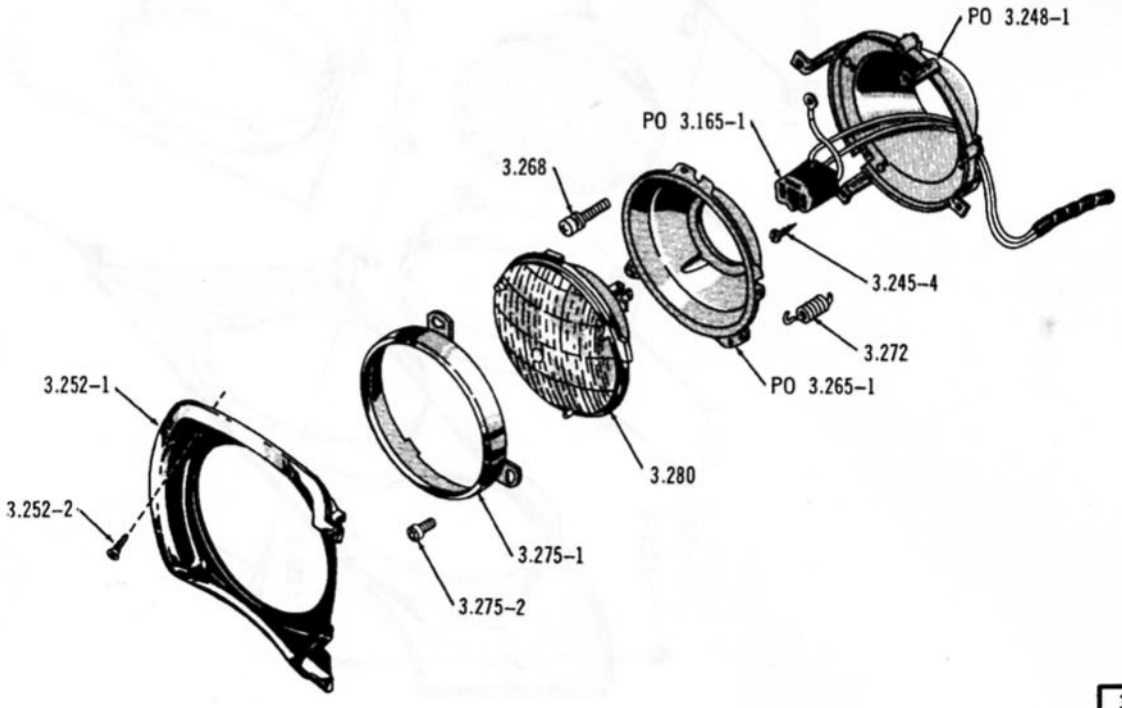

3474

HEADLAMP ASSEMBLY ... 1967/69 (01)(30)(70)

2831

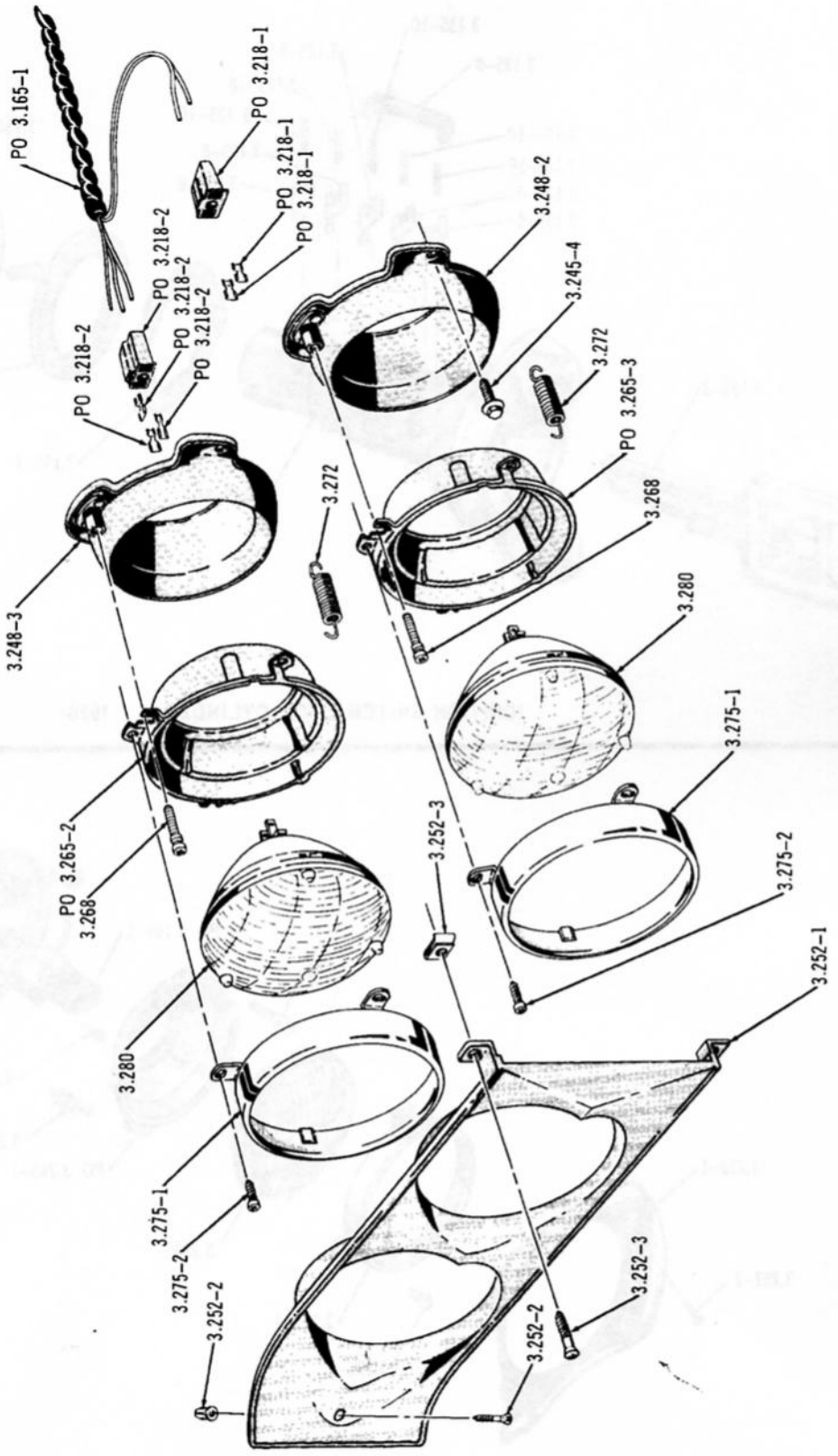

HEADLAMP ASSEMBLY ... 1967/68 (10)

2812

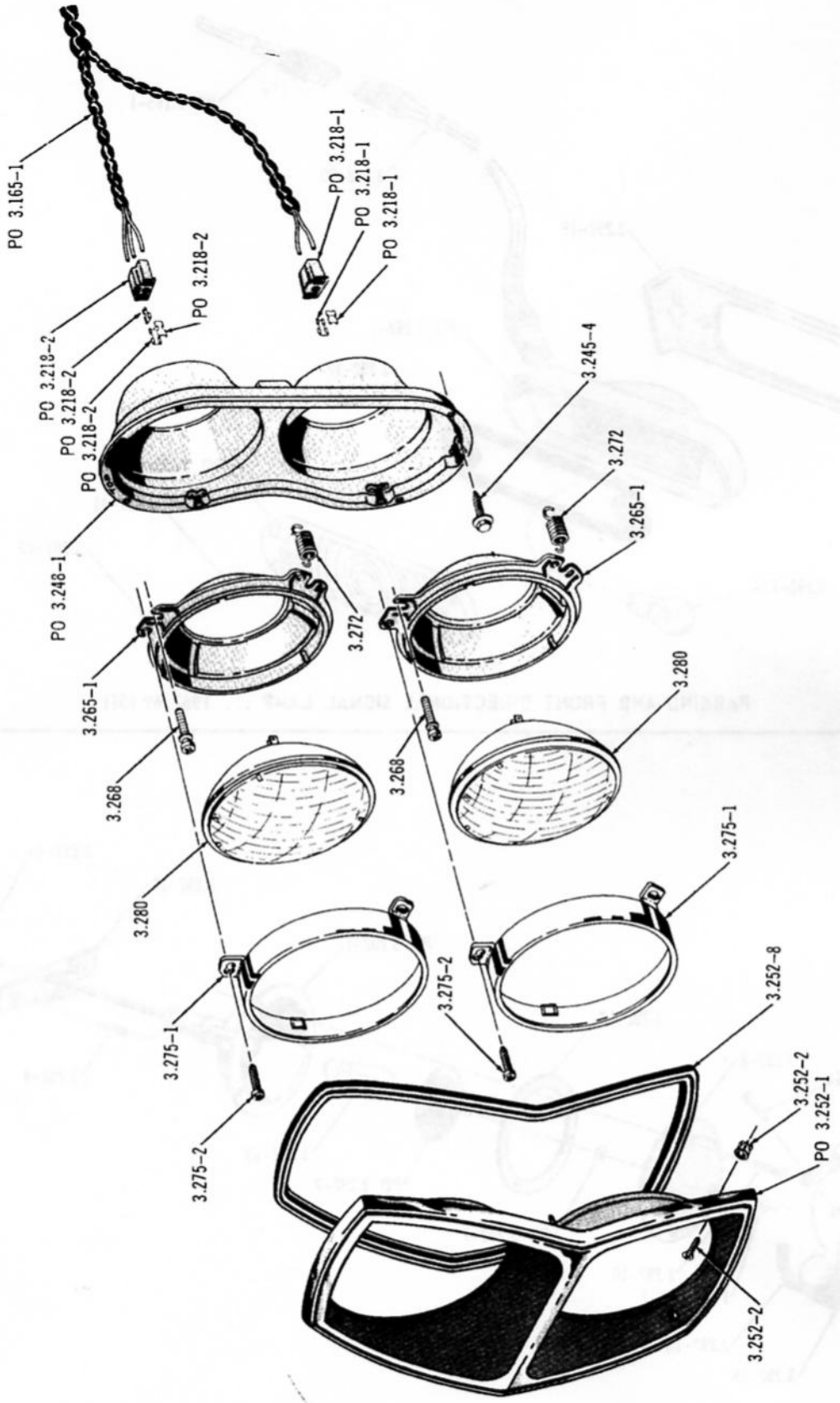

HEADLAMP ASSEMBLY ... 1967 (50)(80), 1968 (80)

Printed in U.S.A.

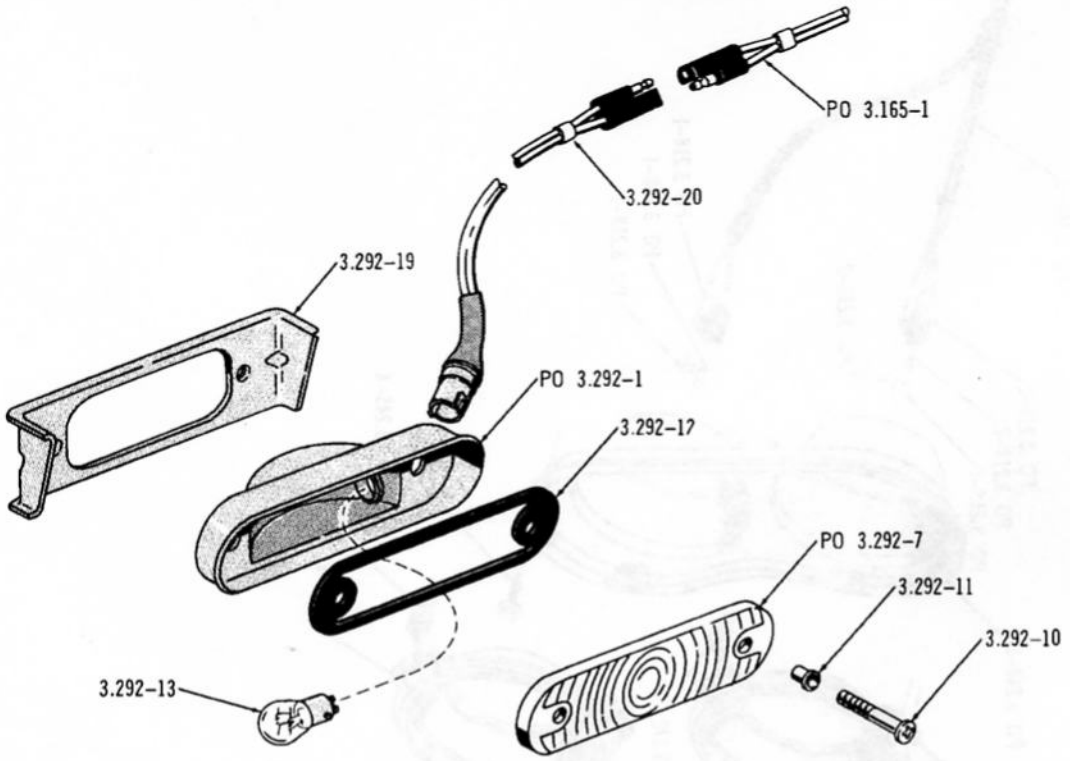

1933

PARKING AND FRONT DIRECTIONAL SIGNAL LAMP ... 1967/69 (01)

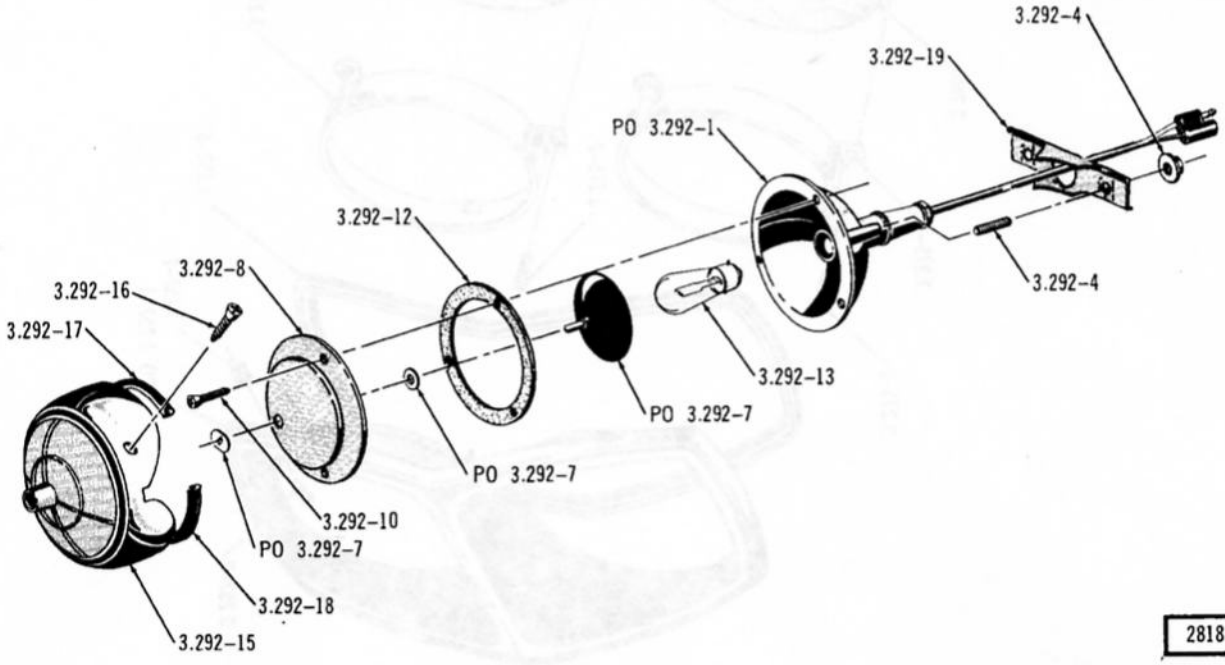

2818

PARKING AND FRONT DIRECTIONAL SIGNAL LAMP ... 1967 (50)(80-DPL)

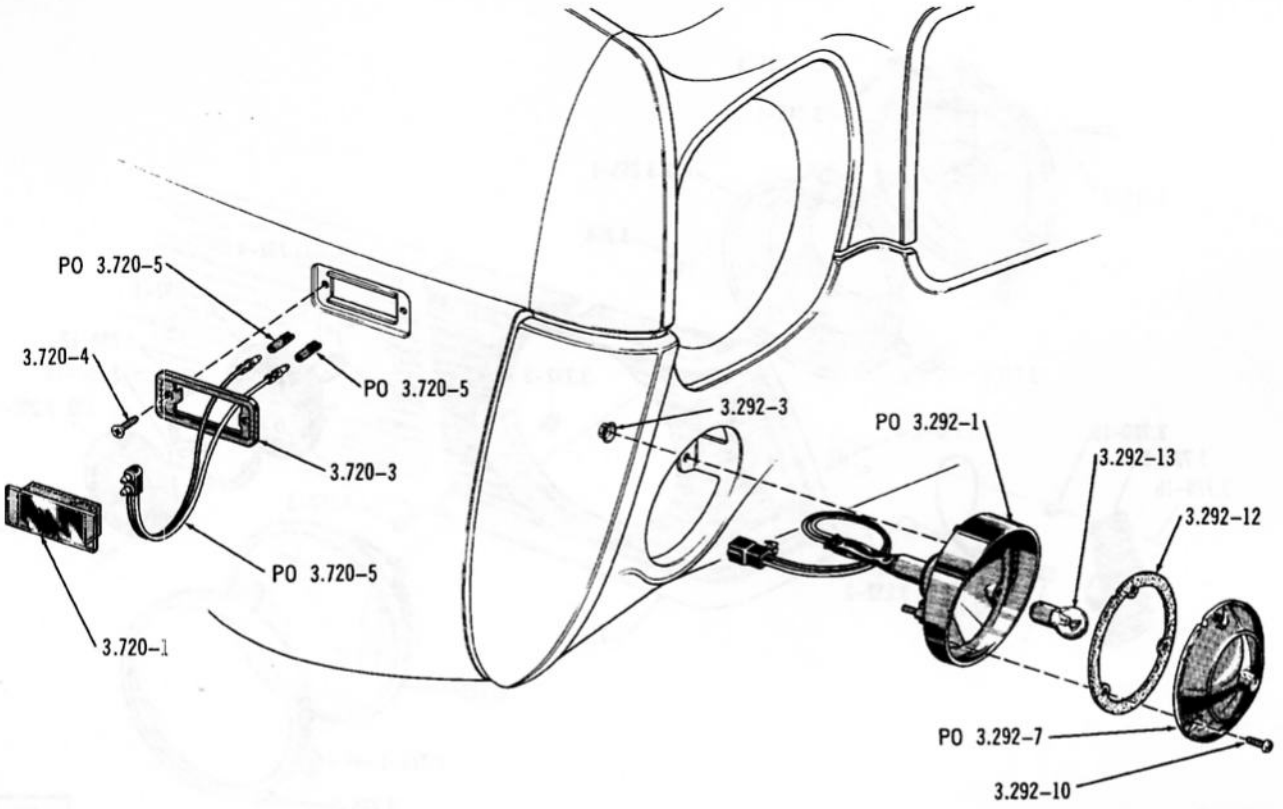

3550

PARKING, FRONT DIRECTIONAL AND FRONT FENDER SIDE LAMP ... 1968/69 (30)(70)

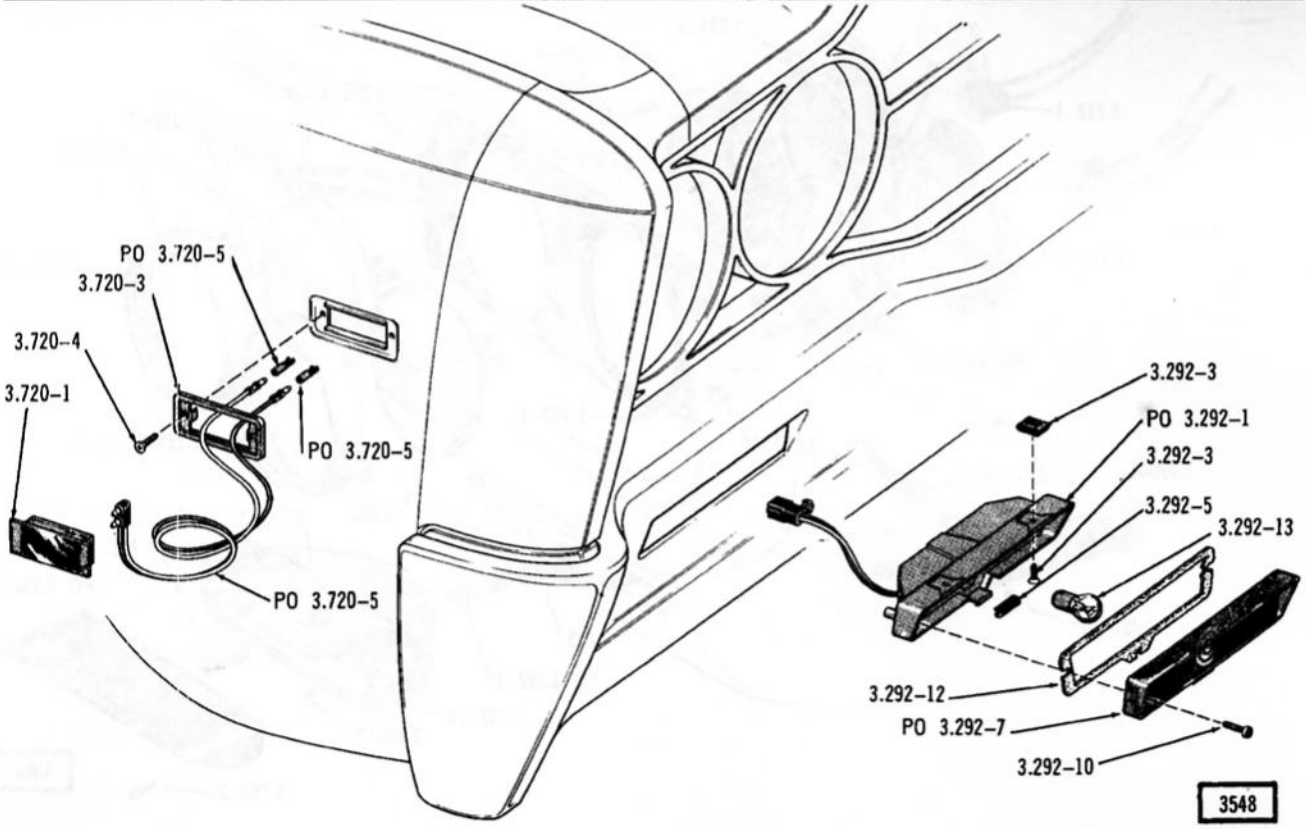

3548

PARKING, FRONT DIRECTIONAL AND FRONT FENDER SIDE LAMP ... 1969/70 (80)

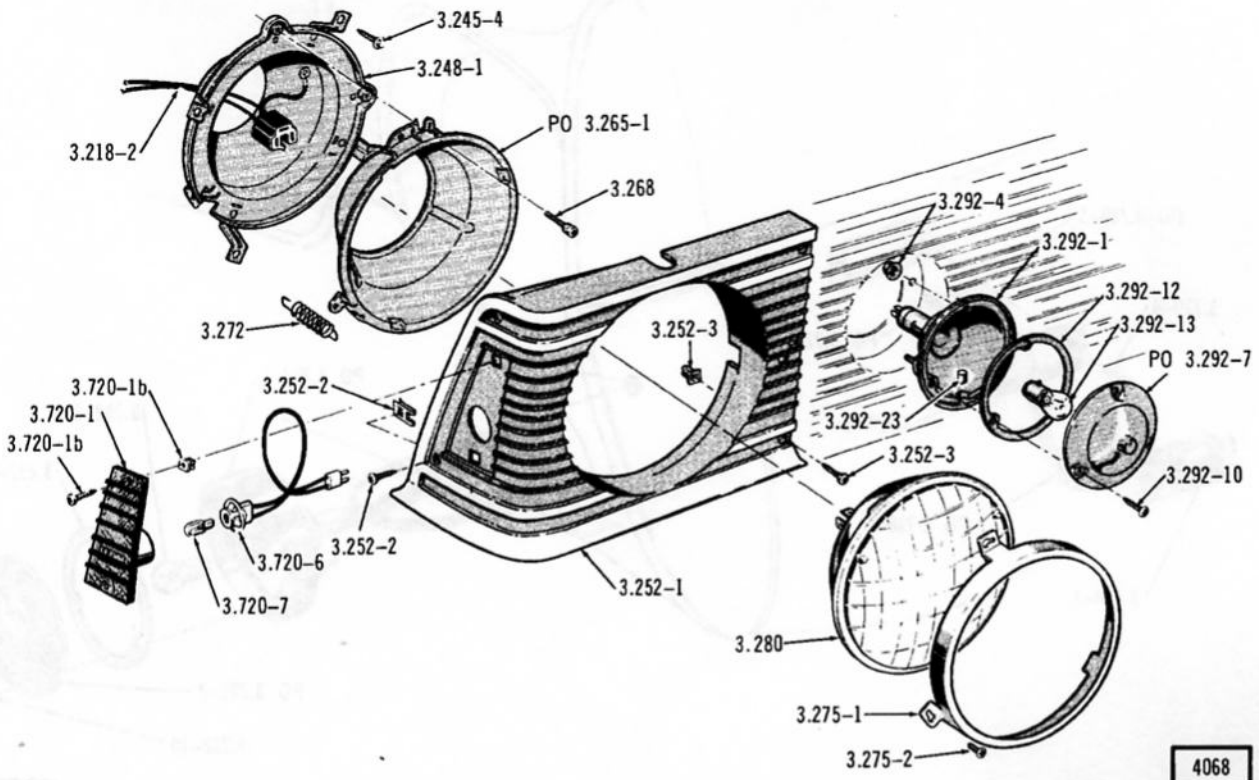

HEADLAMP, PARKING, DIRECTIONAL AND SIDE MARKER LAMP ... 1970/ (01)

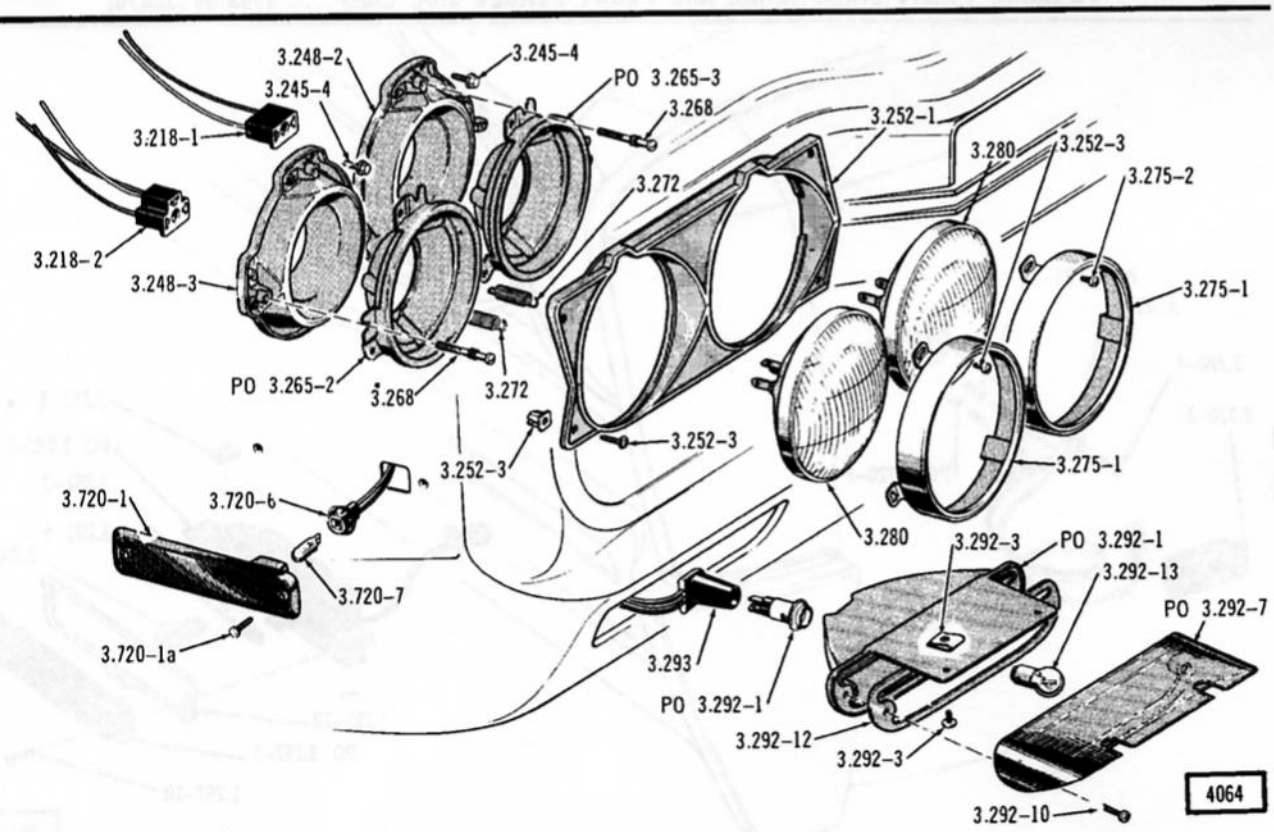

HEADLAMP, PARKING, DIRECTIONAL AND SIDE MARKER LAMP ... 1971/ (10)

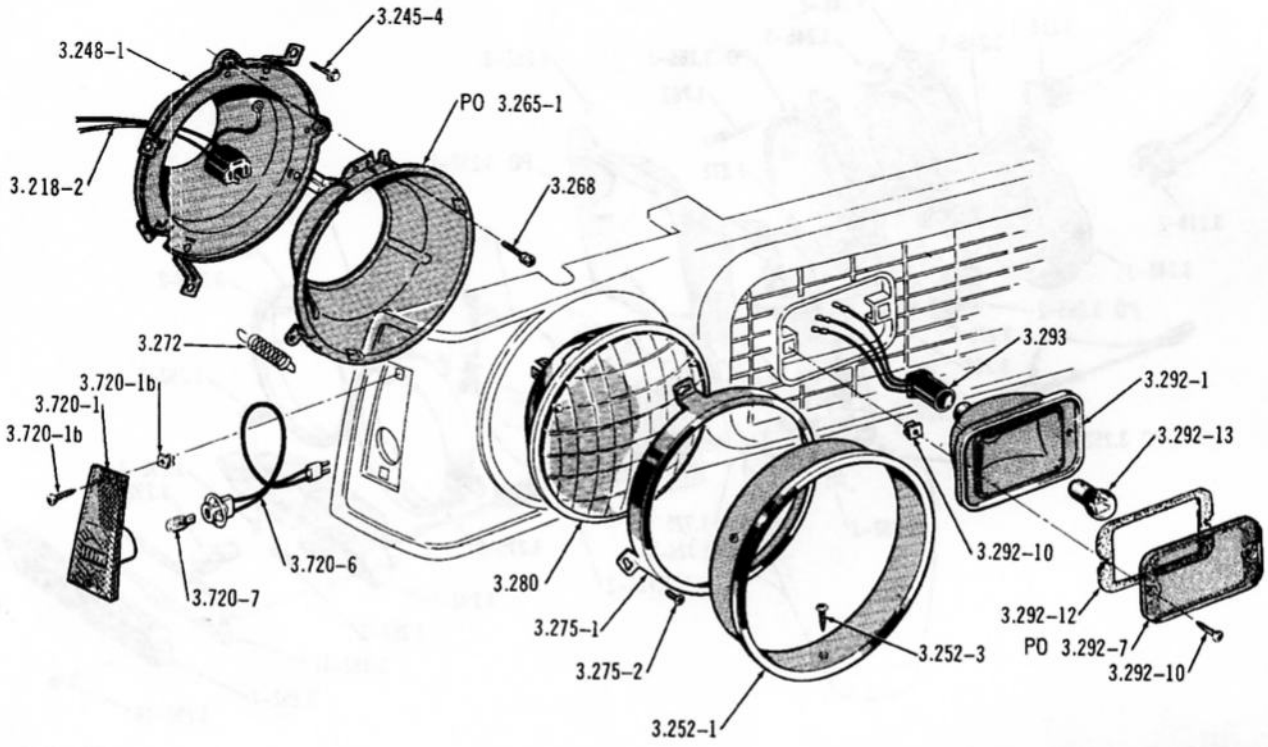

HEADLAMP, PARKING DIRECTIONAL AND SIDE MARKER LAMP ... 1970/ (40)

3936

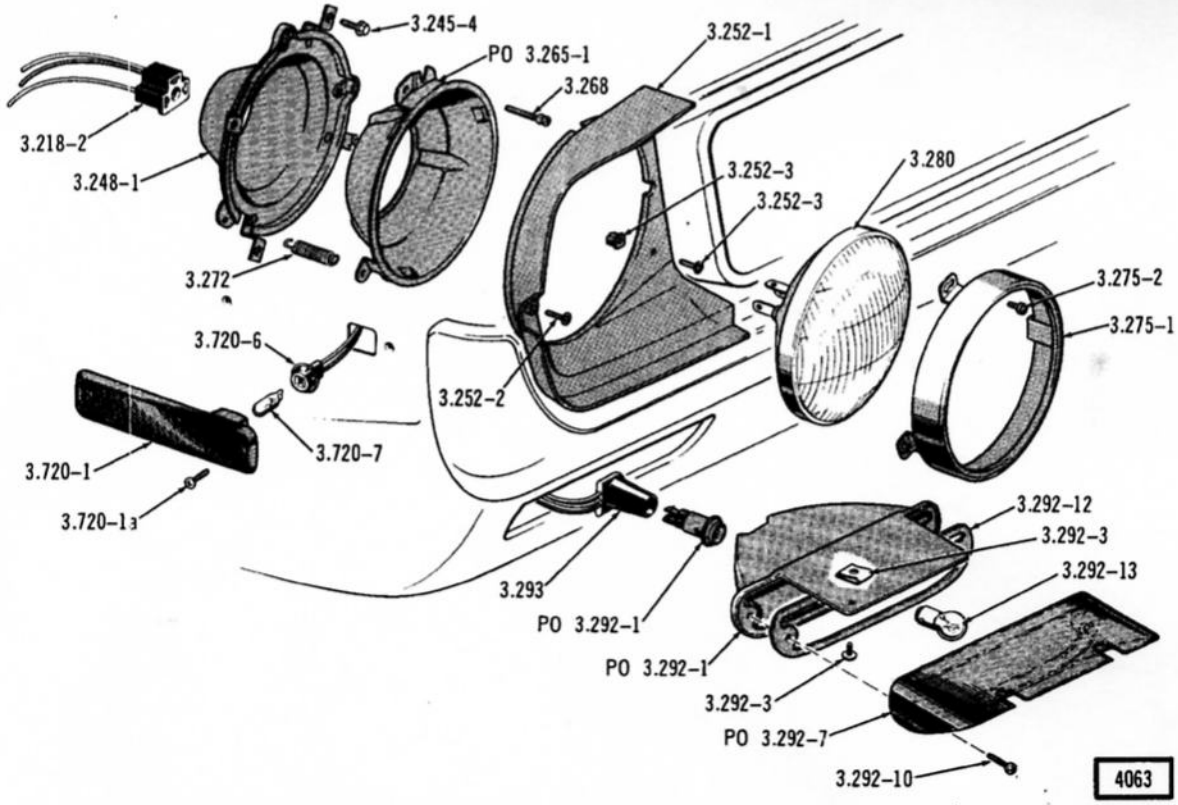

HEADLAMP, PARKING, DIRECTIONAL AND SIDE MARKER LAMP ... 1971/ (70-E/AMX)

4063

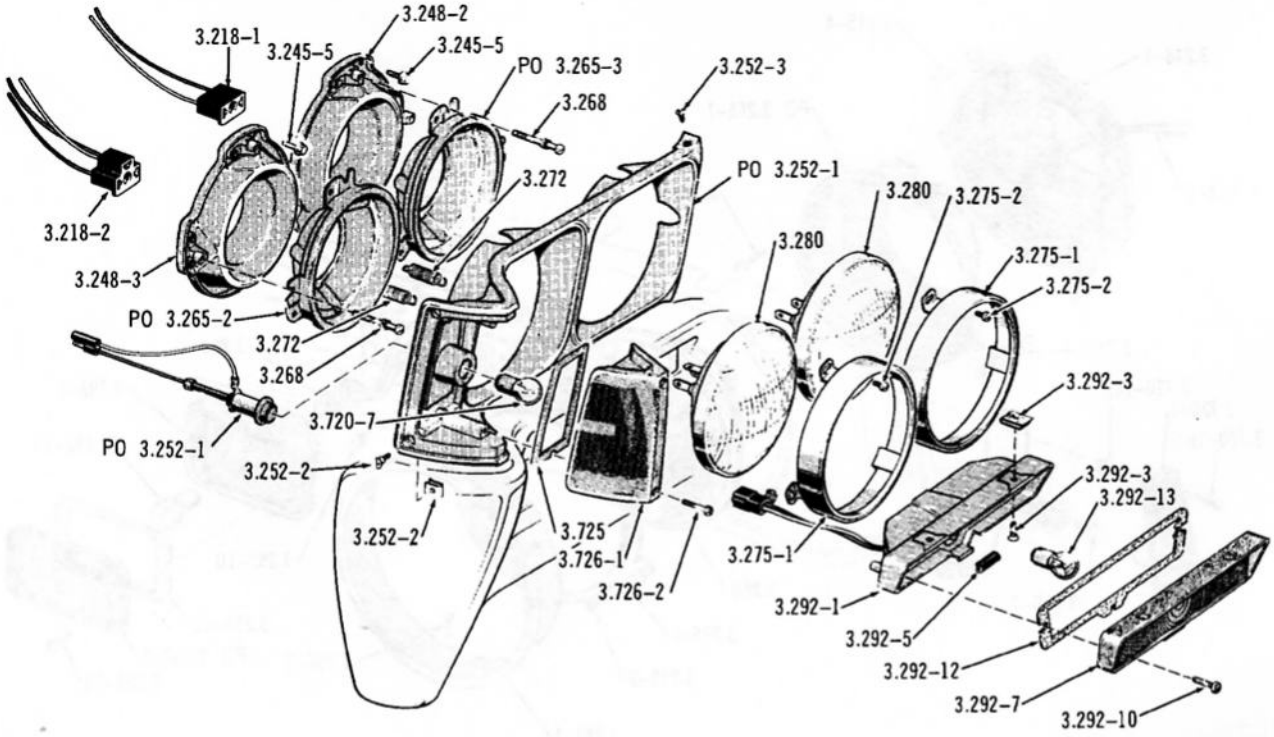

4059

HEADLAMP, PARKING, DIRECTIONAL AND SIDE MARKER LAMP ... 1971/ (80)

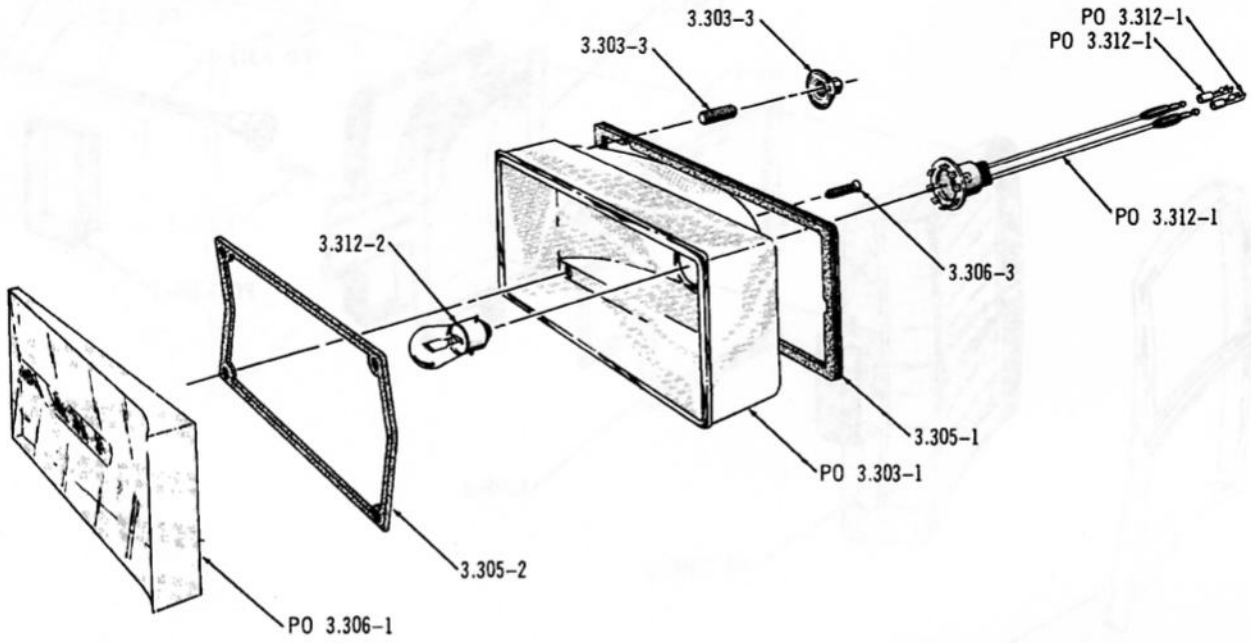

2833

TAIL, STOP AND REAR DIRECTIONAL SIGNAL LAMP ... 1967/69 (05)(06)(07)(09)

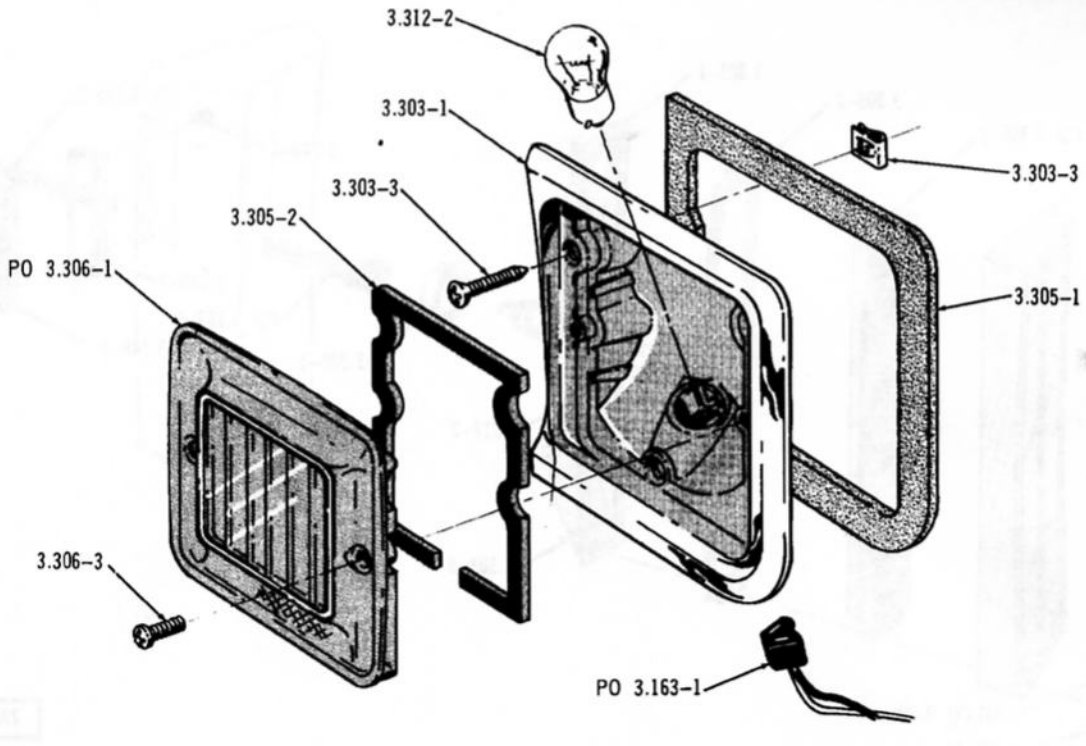

2347

TAIL, STOP AND REAR DIRECTIONAL SIGNAL LAMP ... 1967/69 (08)

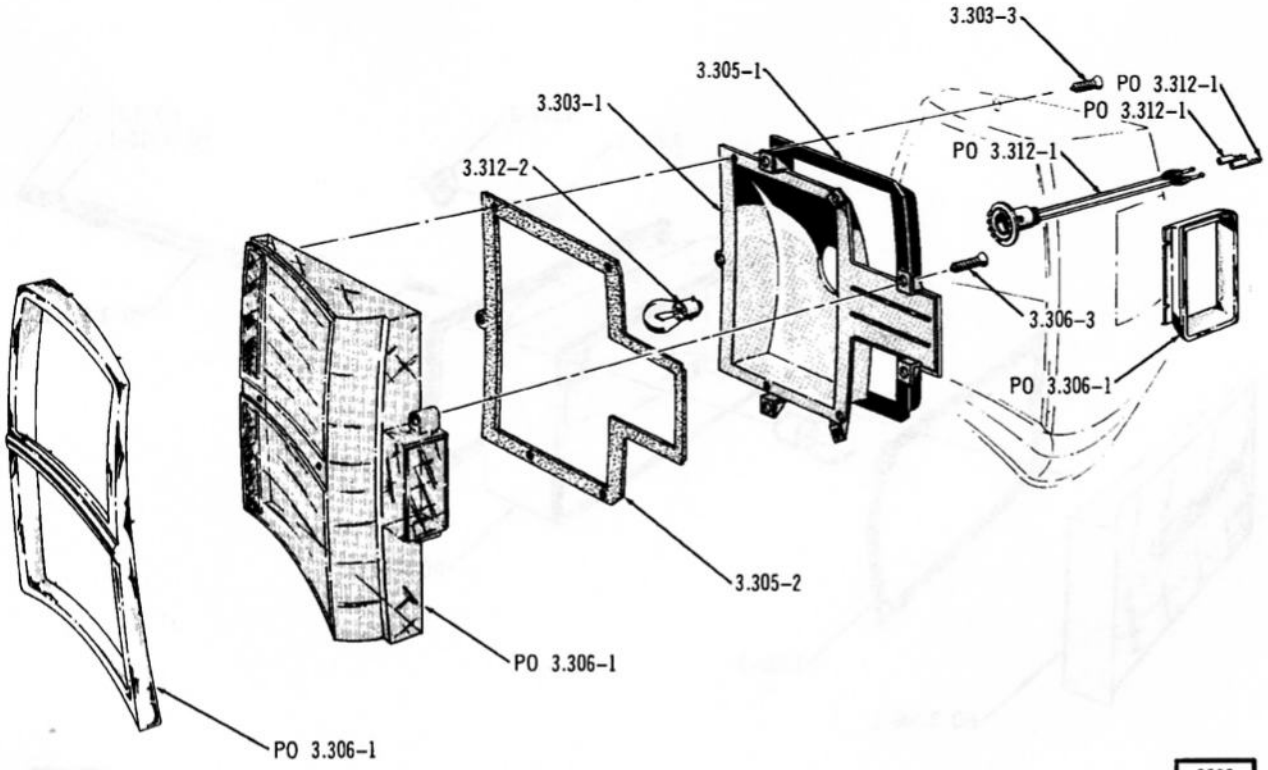

2839

TAIL, STOP AND REAR DIRECTIONAL SIGNAL LAMP ... 1967 (15)(16)(17)(19)

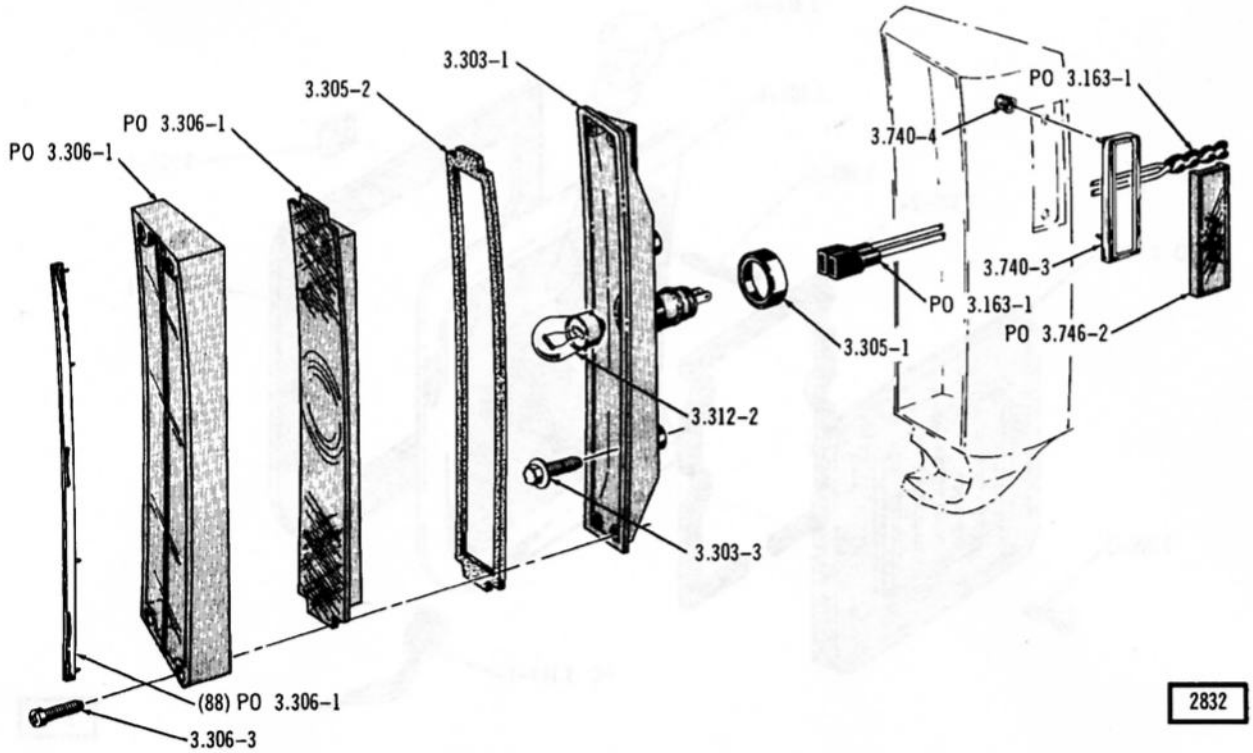

2832

TAIL, STOP AND REAR DIRECTIONAL SIGNAL LAMP ... 1967 (18)(88)

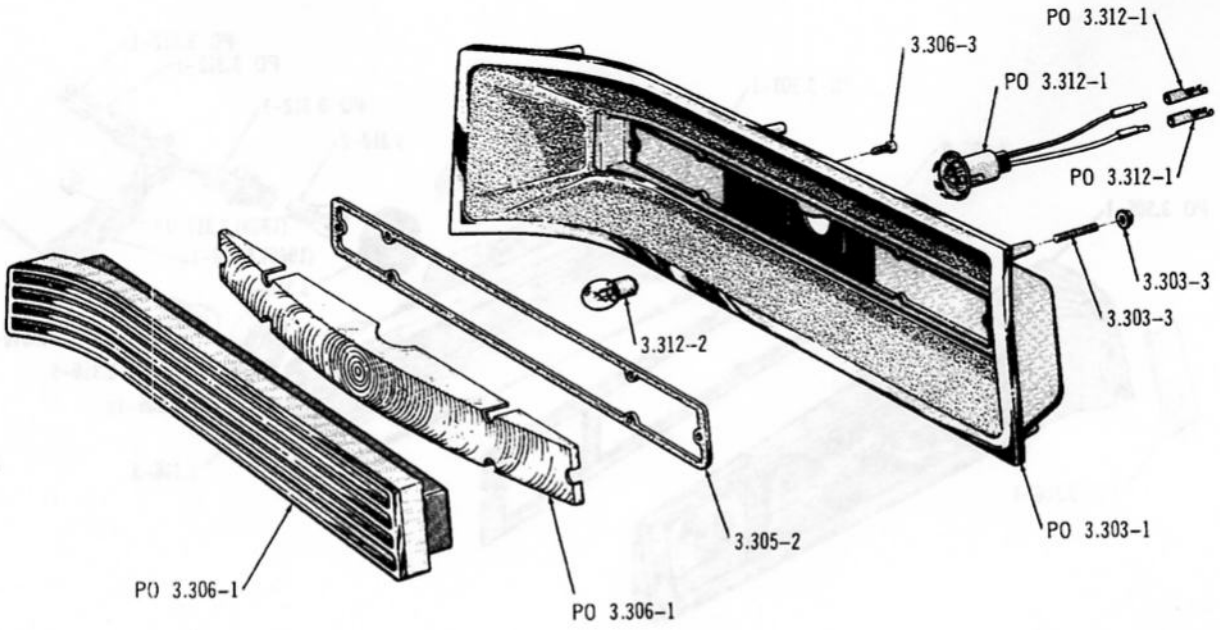

3101

TAIL, STOP AND REAR DIRECTIONAL SIGNAL LAMP ... 1967 (59)

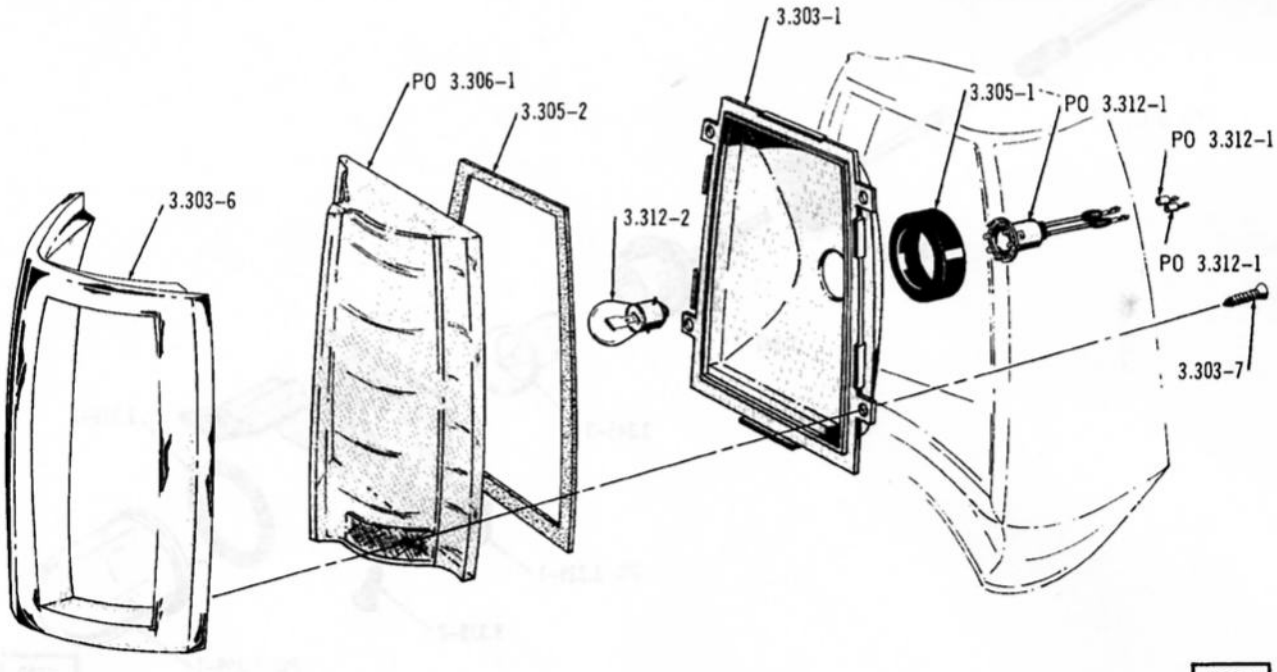

2838

TAIL, STOP AND REAR DIRECTIONAL SIGNAL LAMP ... 1967 (85)(86)(87)(89)

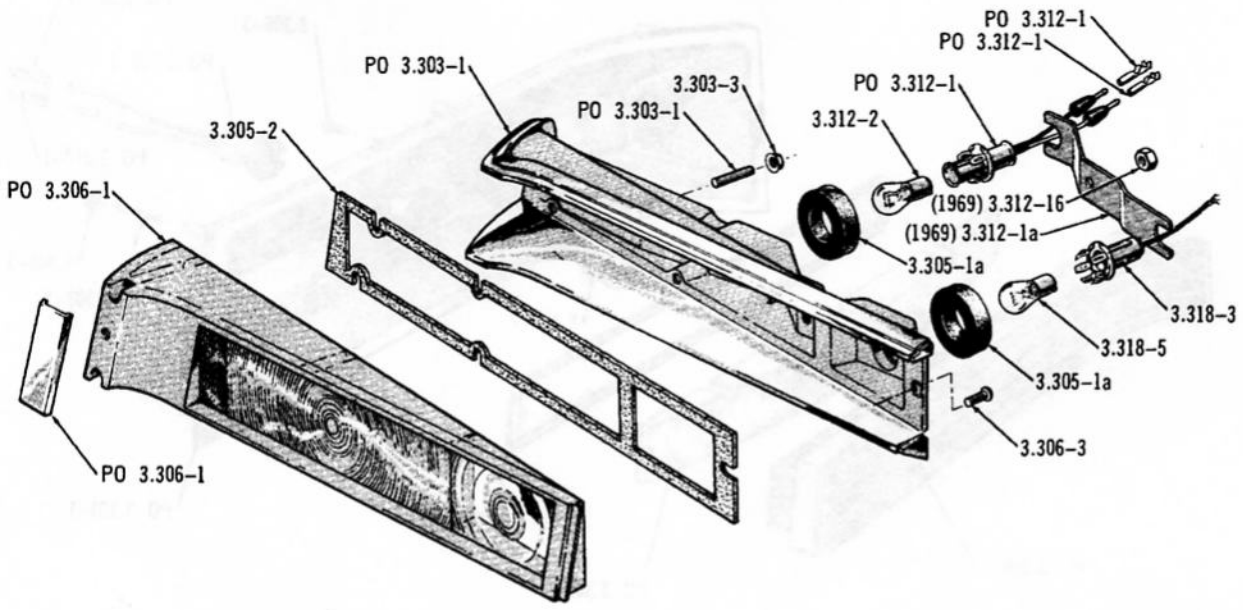

3448

TAIL, STOP AND REAR DIRECTIONAL SIGNAL LAMP ... 1968/69 (30)(70)

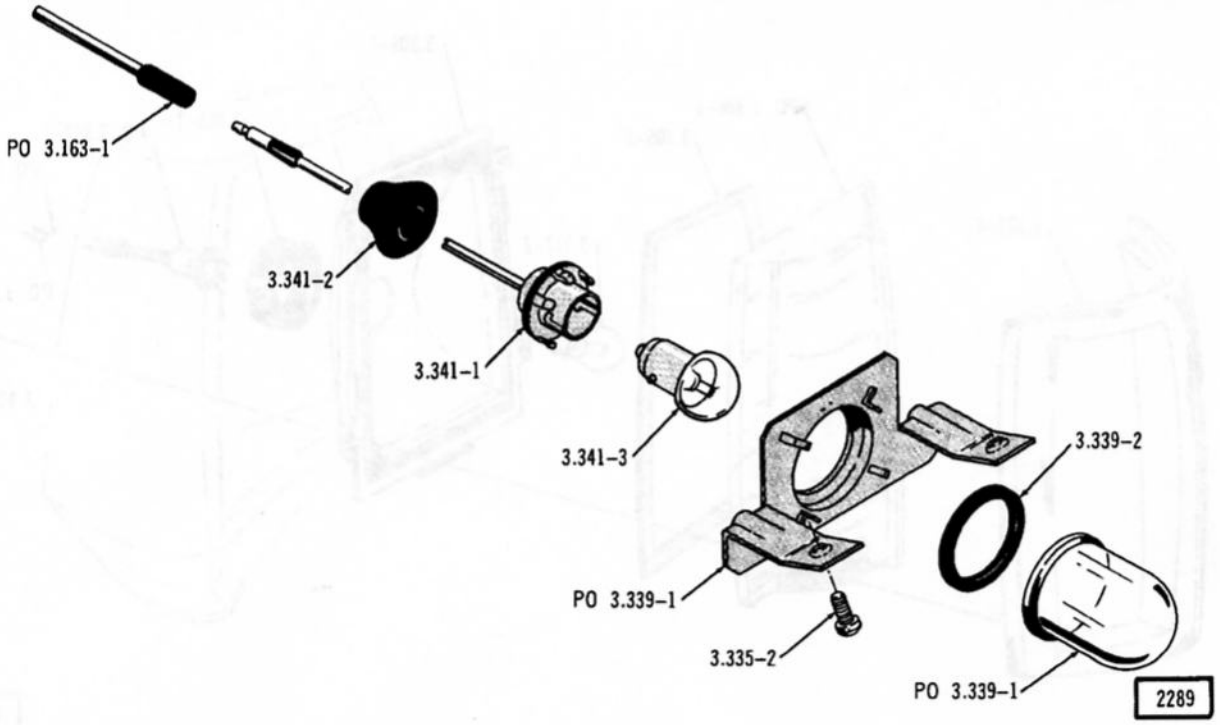

2289

REAR LICENSE PLATE LAMP ... 1967/69

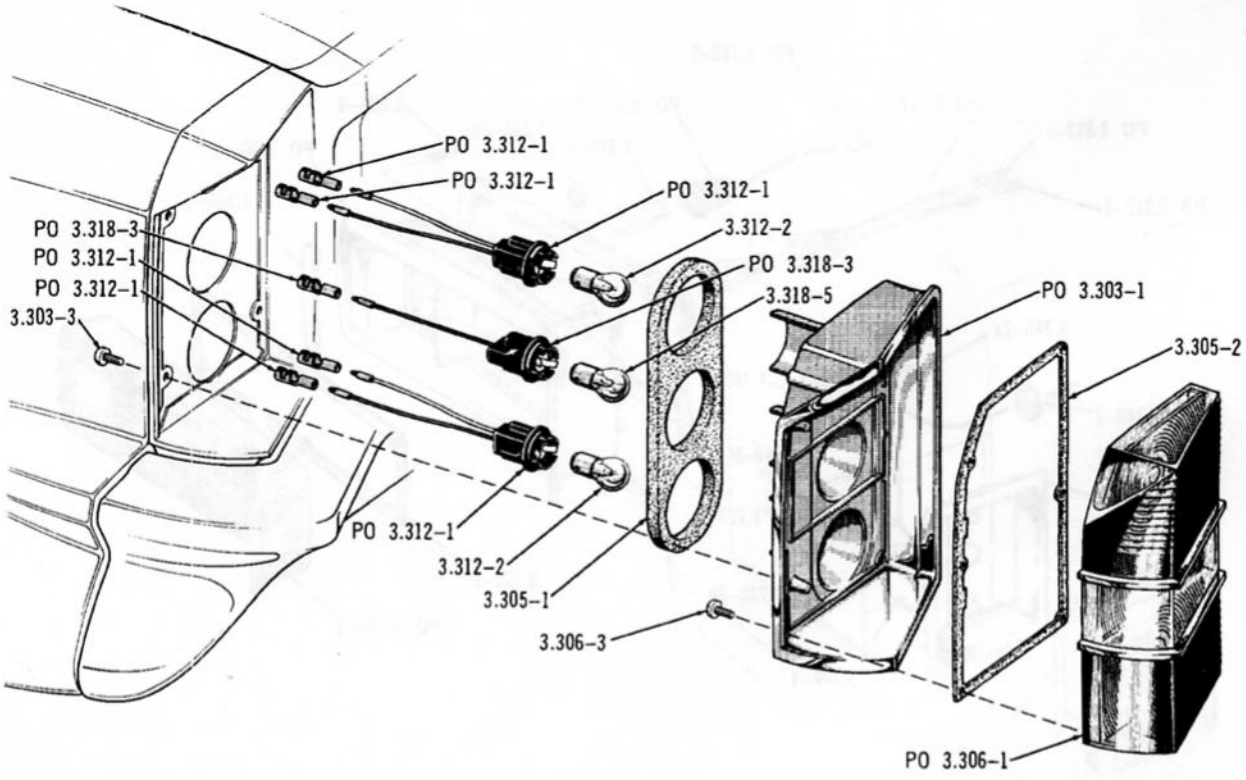

TAIL, STOP AND REAR DIRECTIONAL SIGNAL LAMP ... 1969 (15)(19)

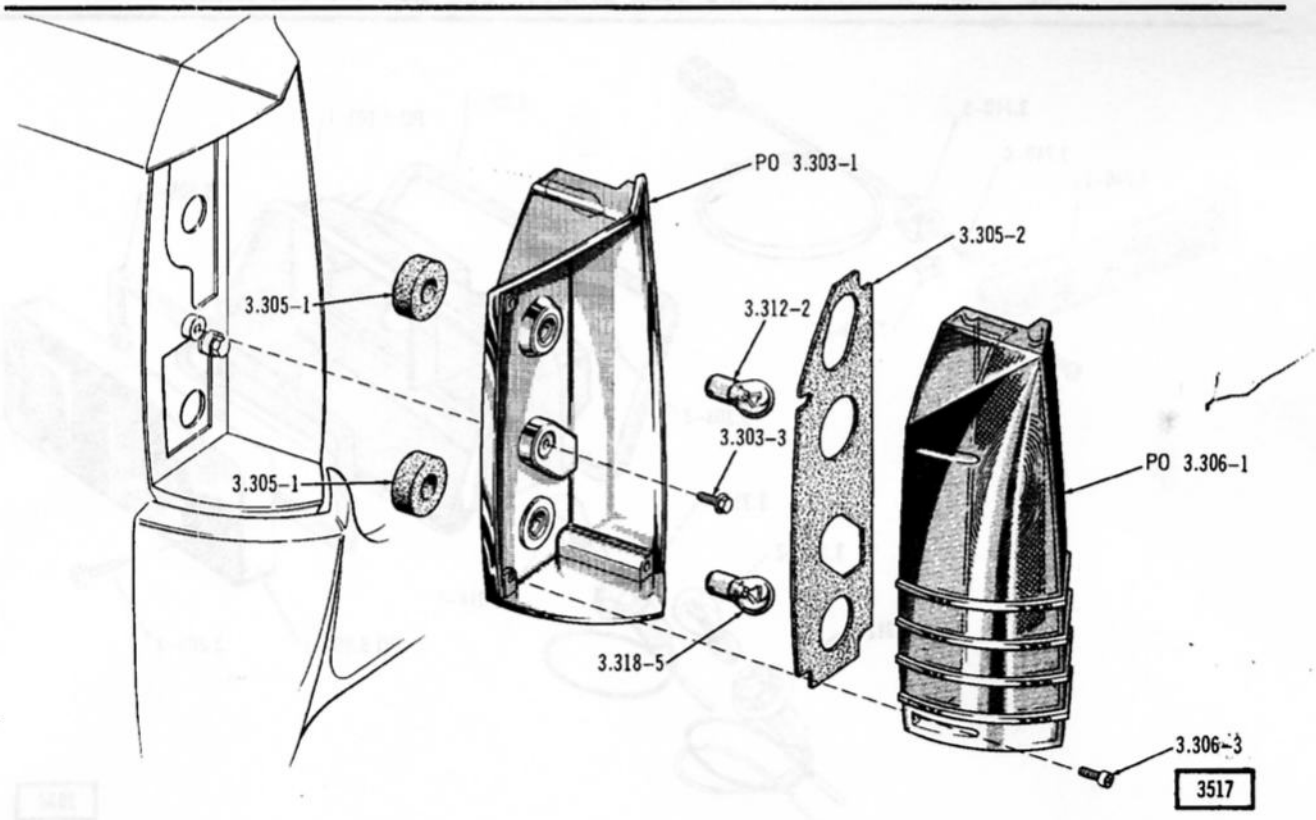

TAIL, STOP AND REAR DIRECTIONAL SIGNAL LAMP ... 1969/ (18)(88)

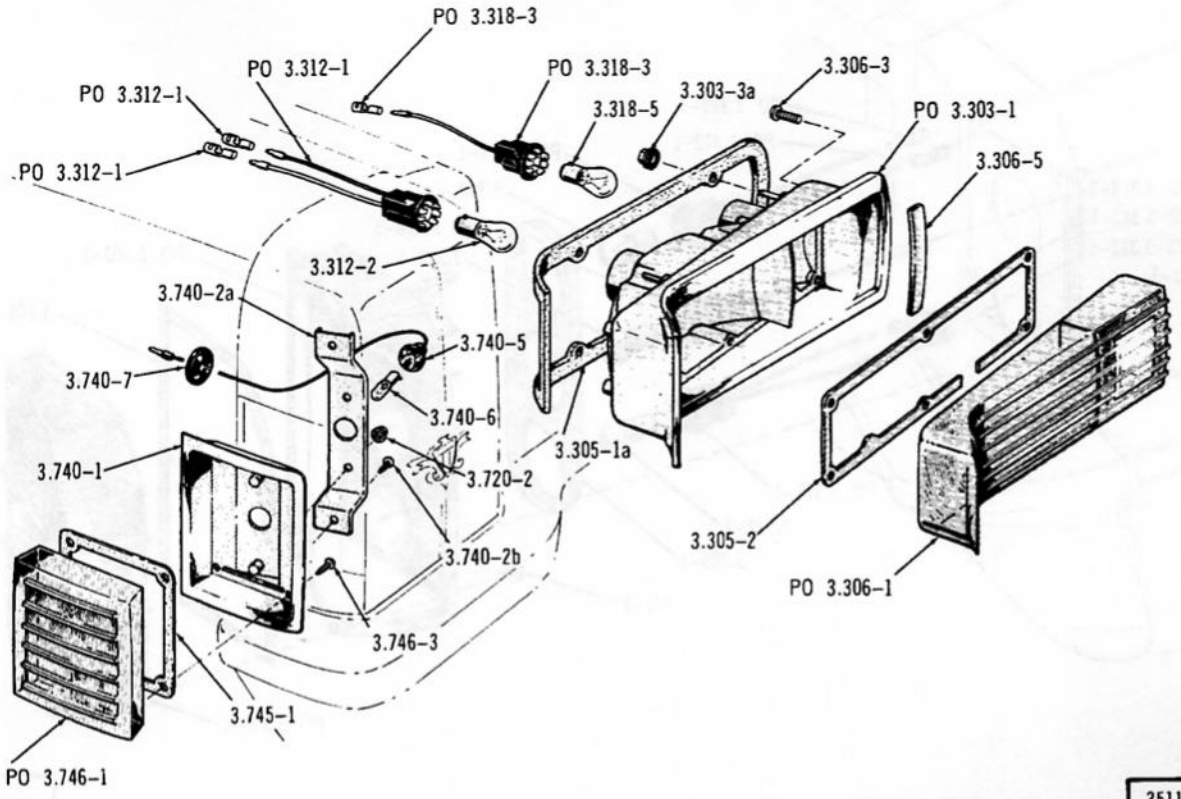

3511

TAIL, STOP, DIRECTIONAL AND REAR QUARTER SIDE LAMP ... 1969 (85)(89)

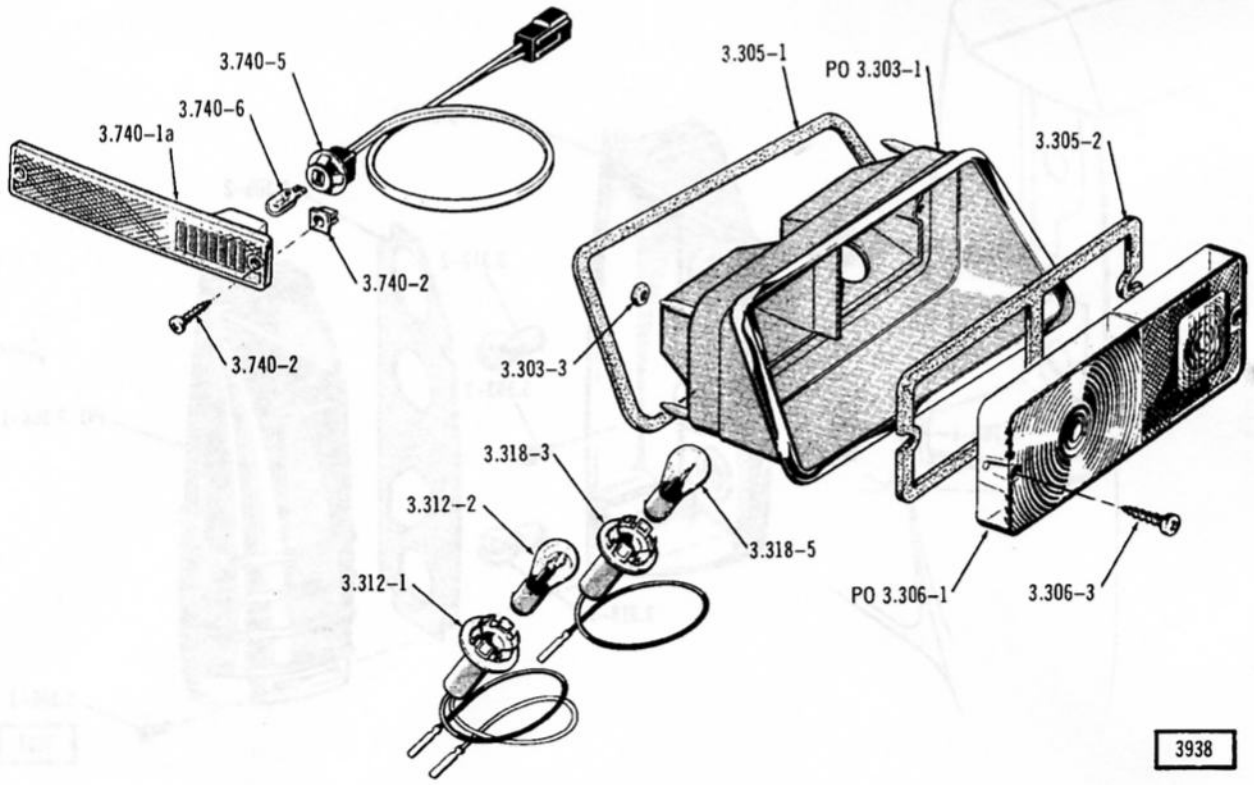

3938

TAIL LAMP AND REAR QUARTER SIDE LAMP ... 1970/ (40)

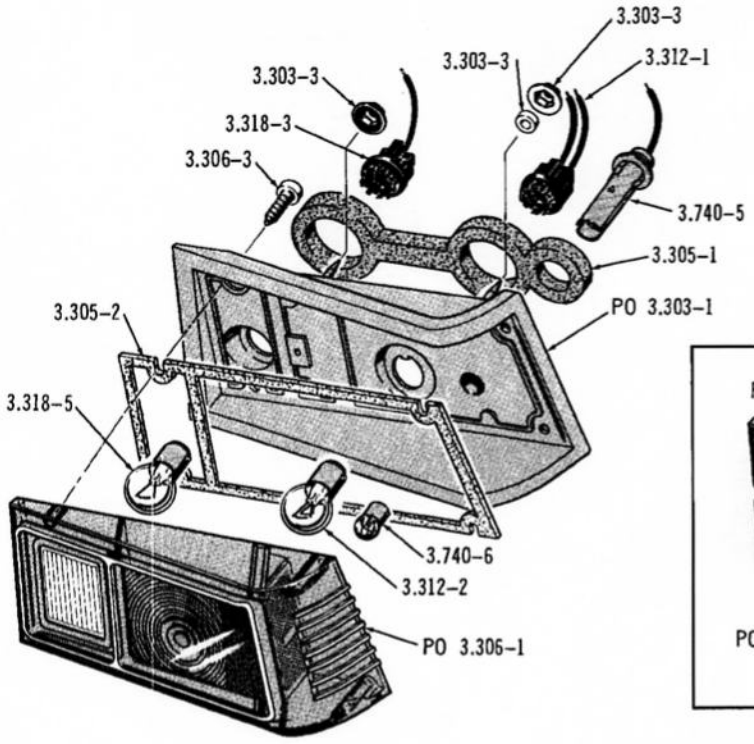

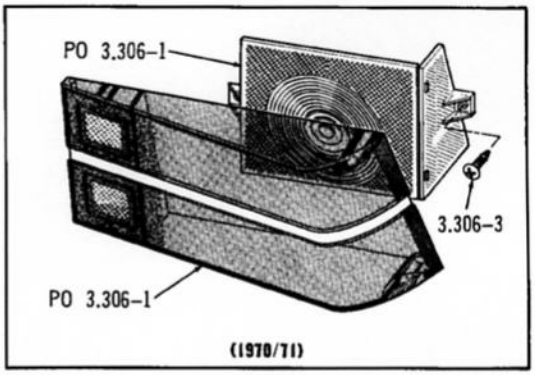

4175

TAIL, STOP, DIRECTIONAL, BACKUP AND SIDE MARKER LAMP . . . 1970/ (01)

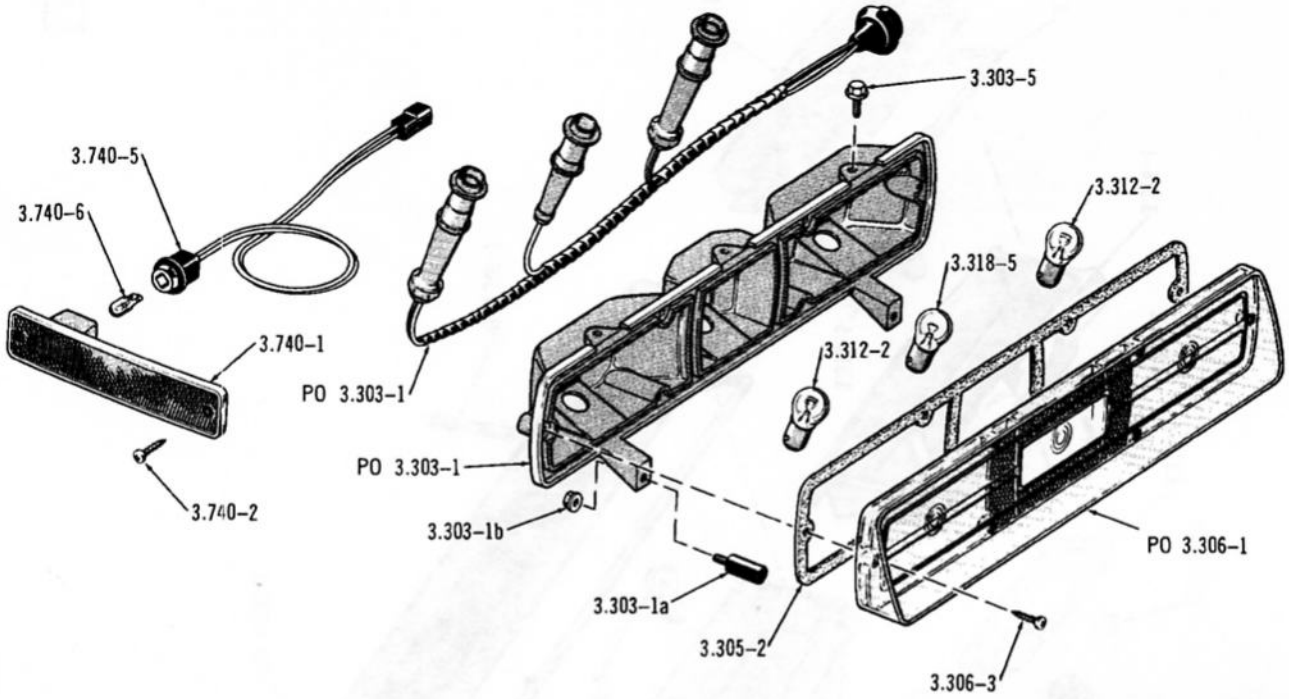

3814

TAIL, STOP AND REAR DIRECTIONAL LAMP ... 1970/ (10)(85-2)

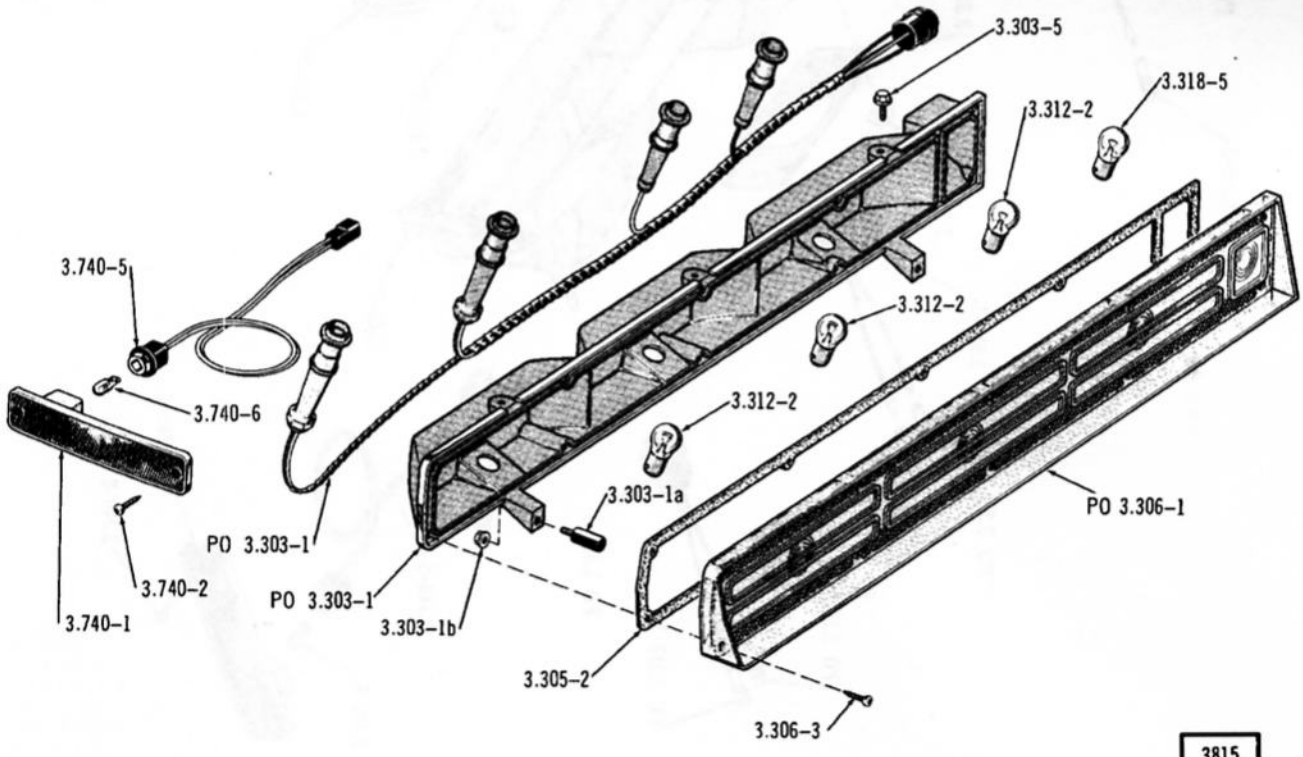

3815

TAIL, STOP AND REAR DIRECTIONAL LAMP ... 1970/ (85-5)(85-7)(89-5)(89-7)

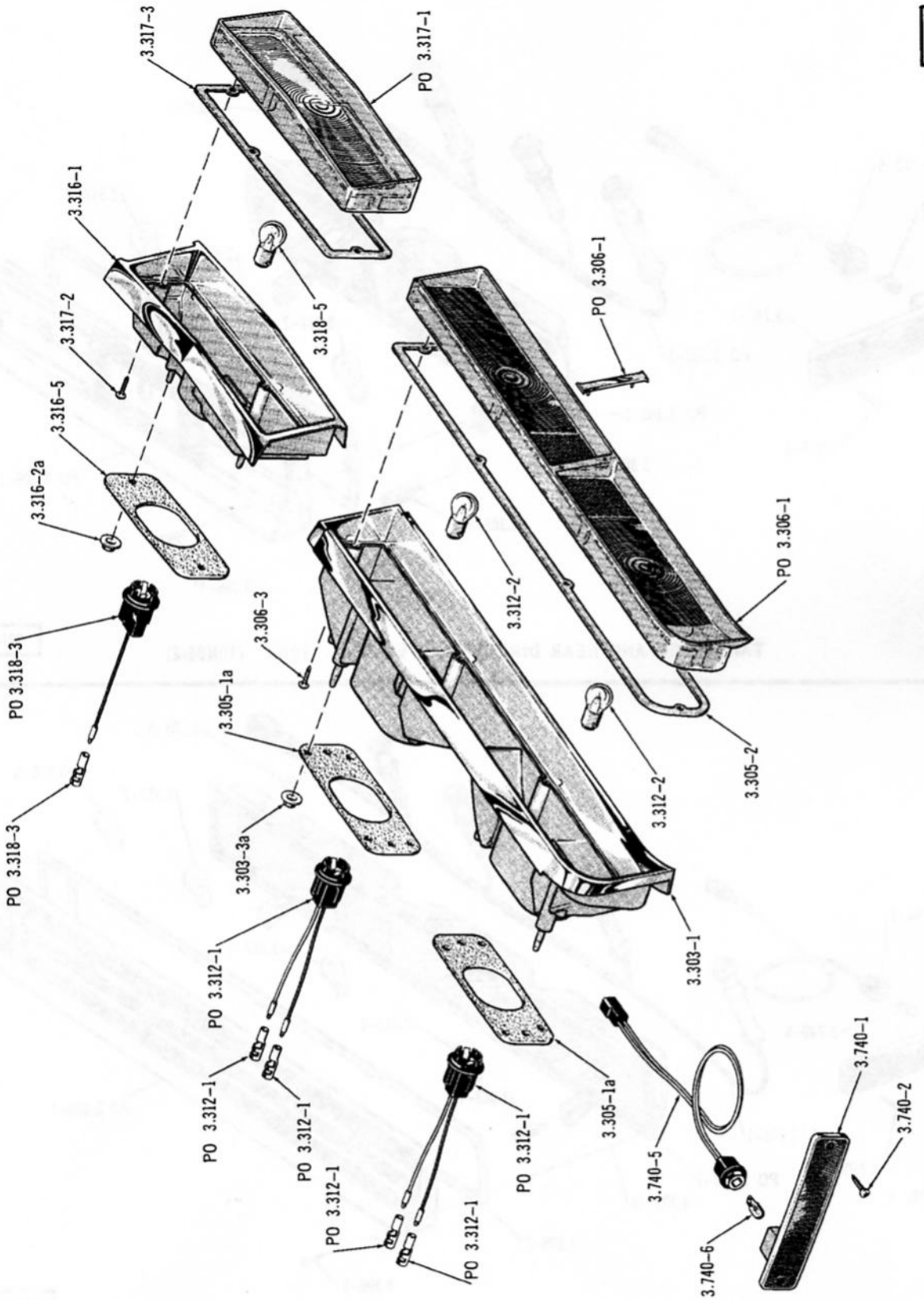

TAIL, STOP, DIRECTIONAL, BACK-UP AND REAR QUARTER SIDE LAMP ... 1970 (30)(70)

1881

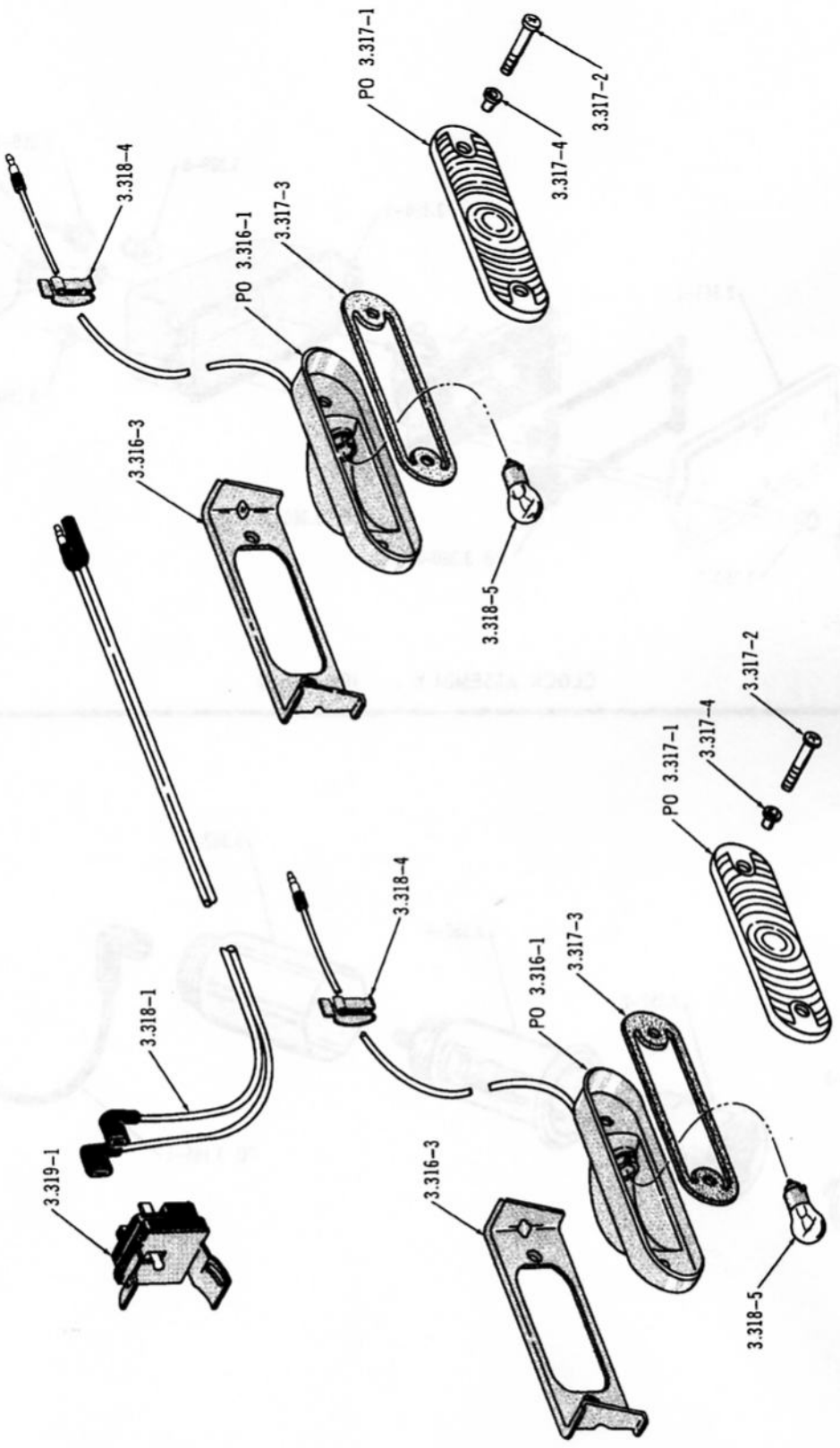

BACK-UP LAMP ... 1967/69 (01)

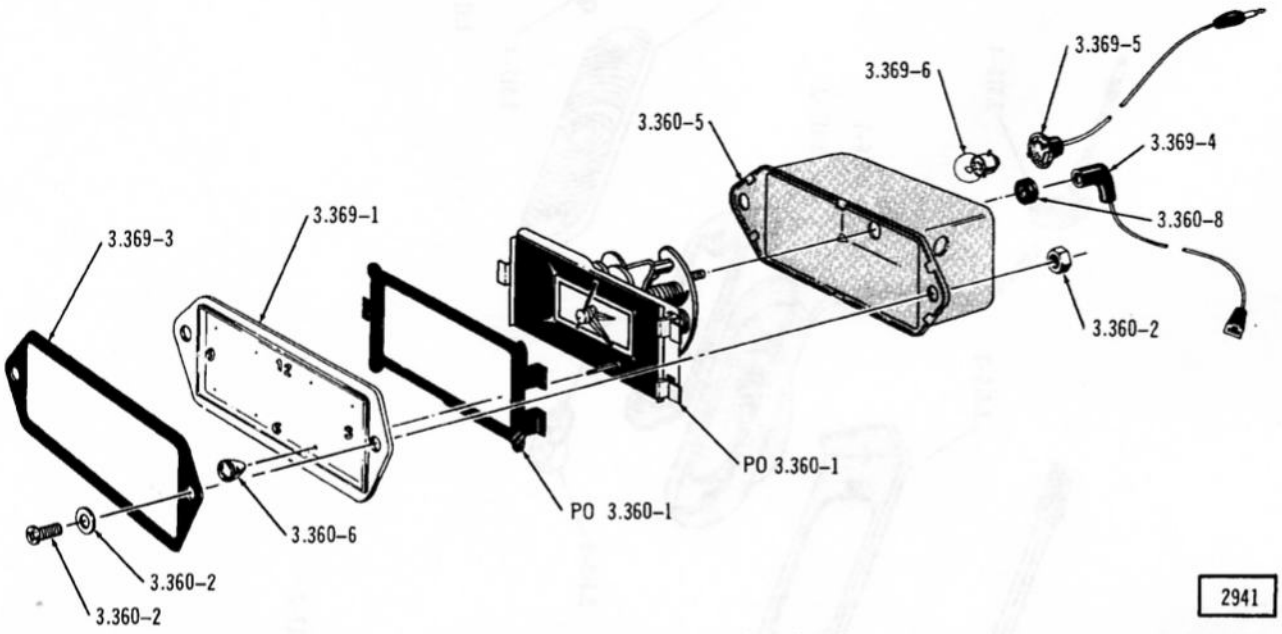

2941

CLOCK ASSEMBLY ... 10, 50, 80

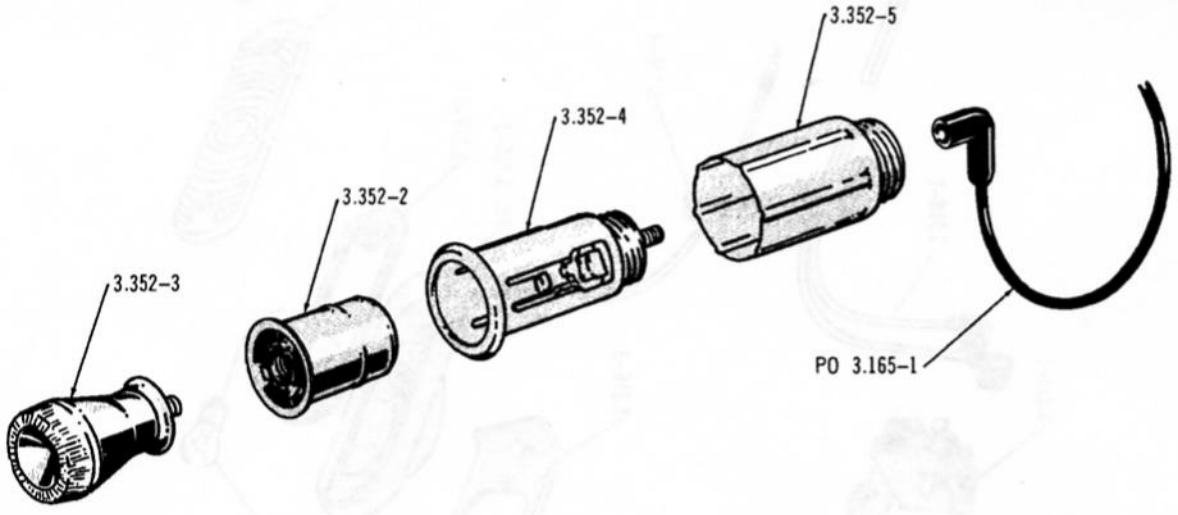

2861

CIGAR LIGHTER

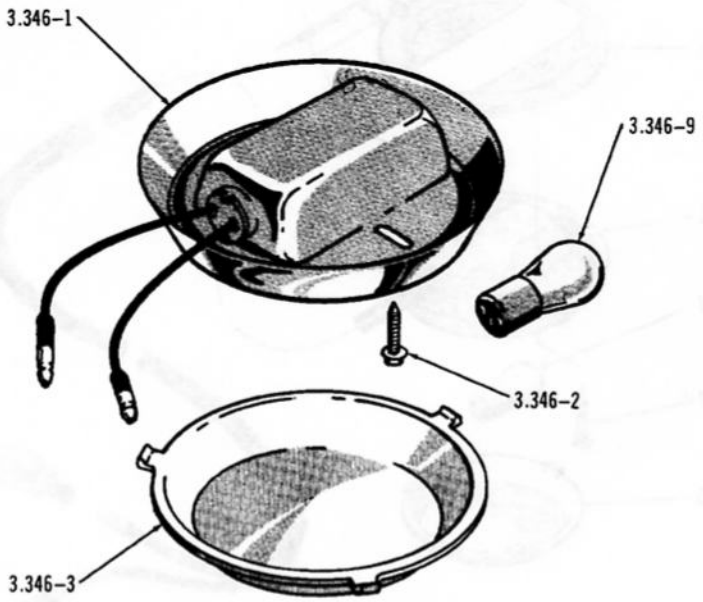

2144

DOME LAMP

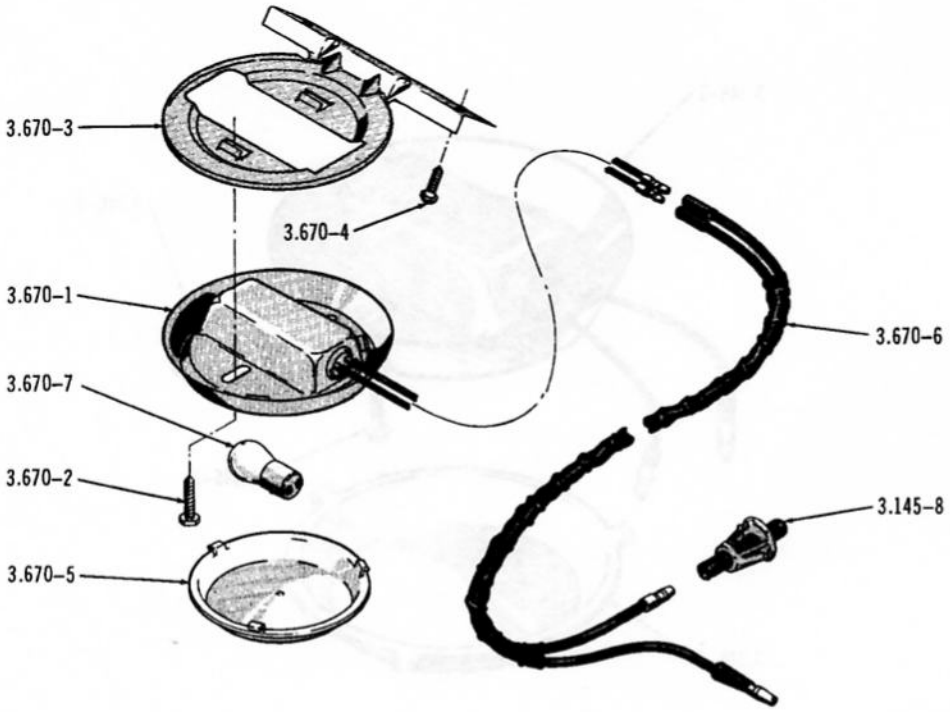

2219

CARGO AREA LAMP ... 08, 18, 88

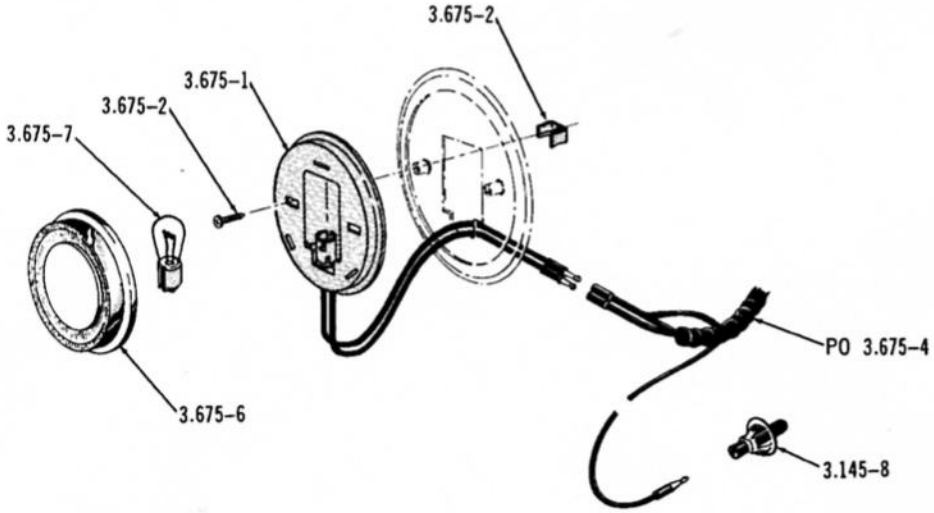

2528

REAR QUARTER INTERIOR LAMP

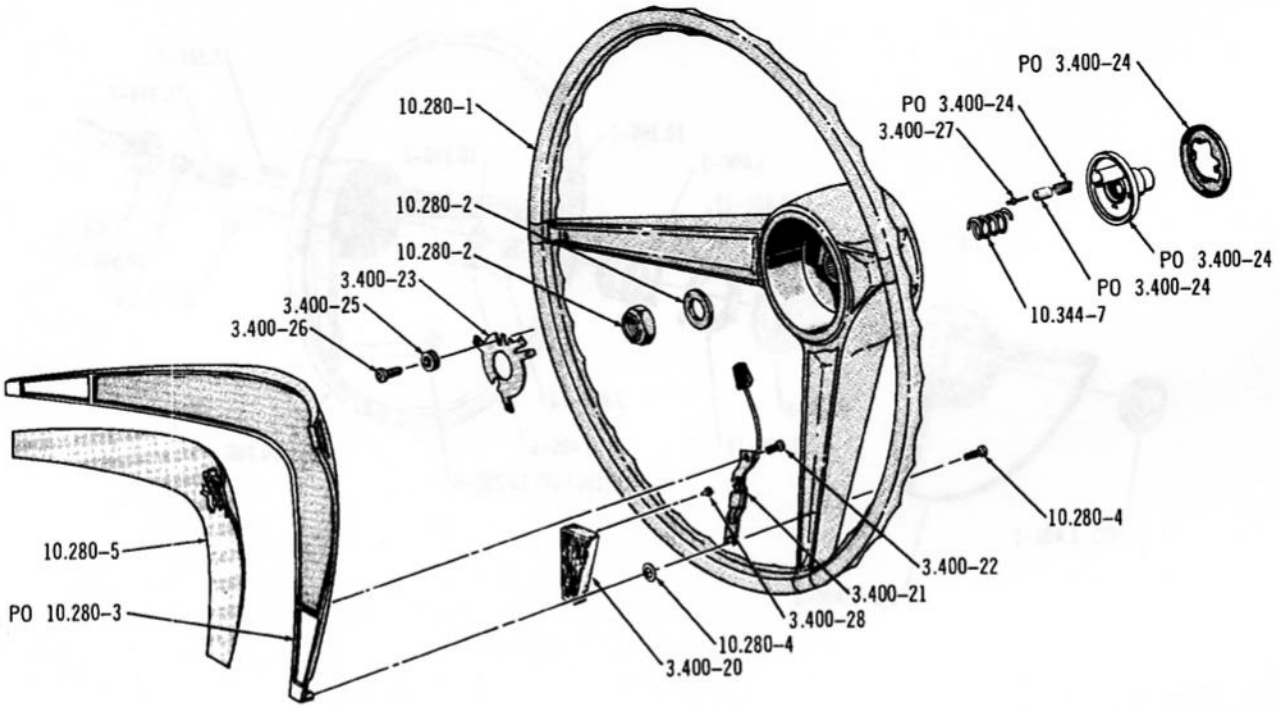

2879

STEERING WHEEL AND TRIPLE HORN BUTTON ... 1967/69-LHD (01)(10)(80)

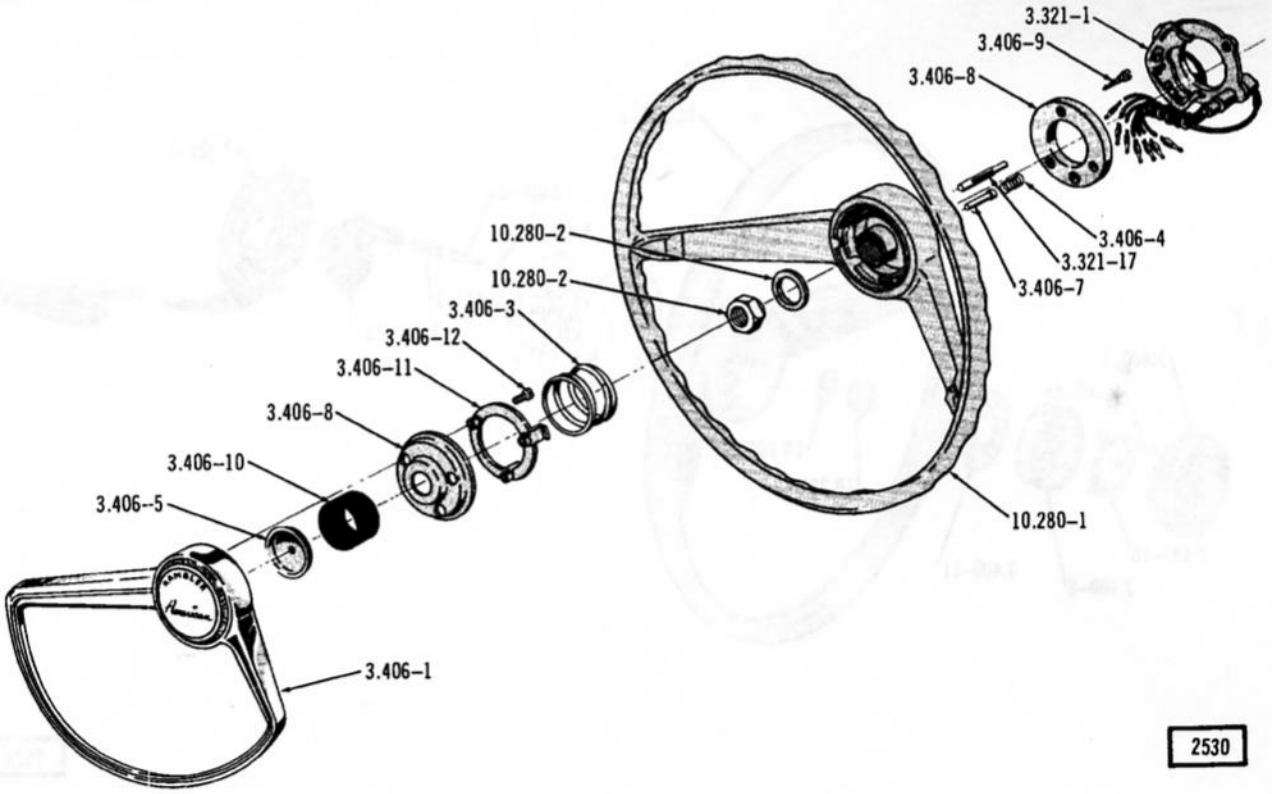

2530

STEERING WHEEL AND HORN RING ... 1967/69-RHD (01)

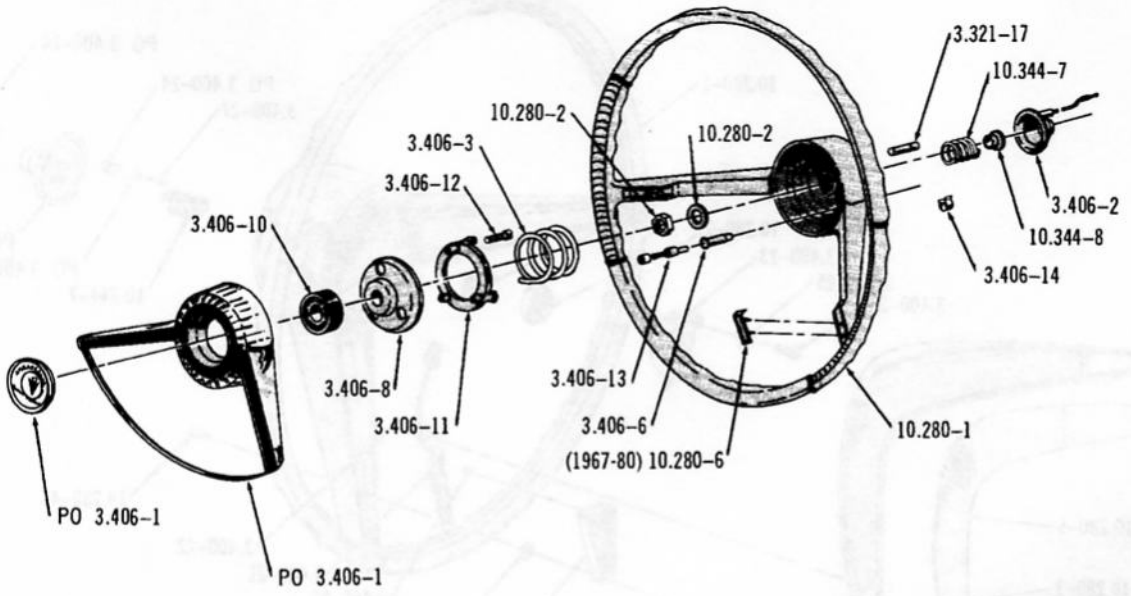

STEERING WHEEL AND HORN RING ... 1967/69-RHD (10)(80)

2534

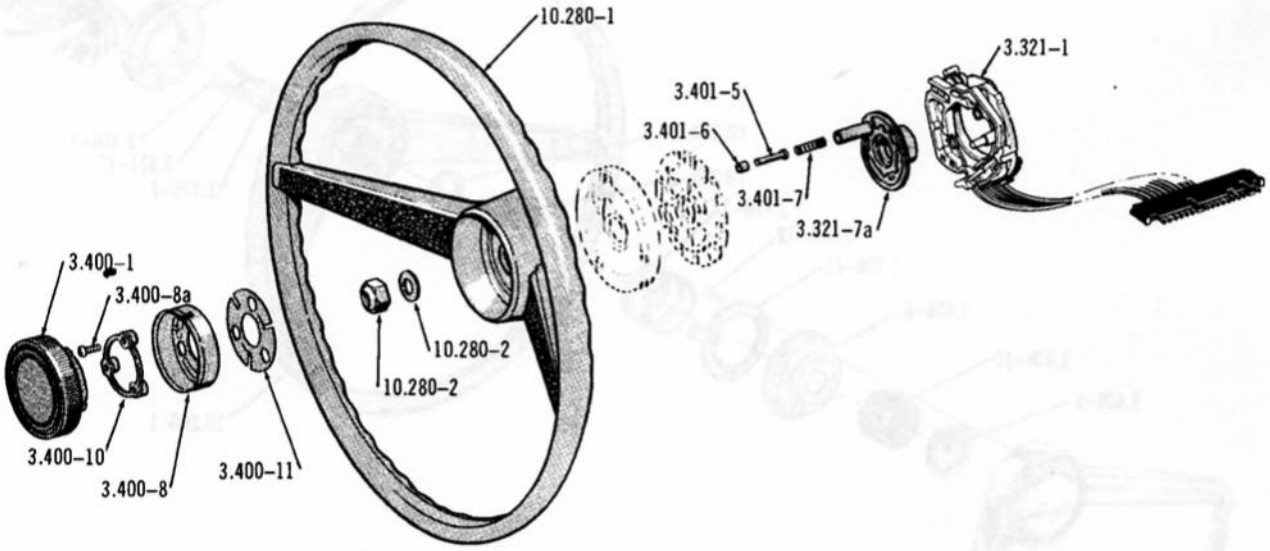

3928

STEERING WHEEL AND HORN BUTTON ... 1970/ (E/SPORT WHEEL)

Printed in U.S.A.

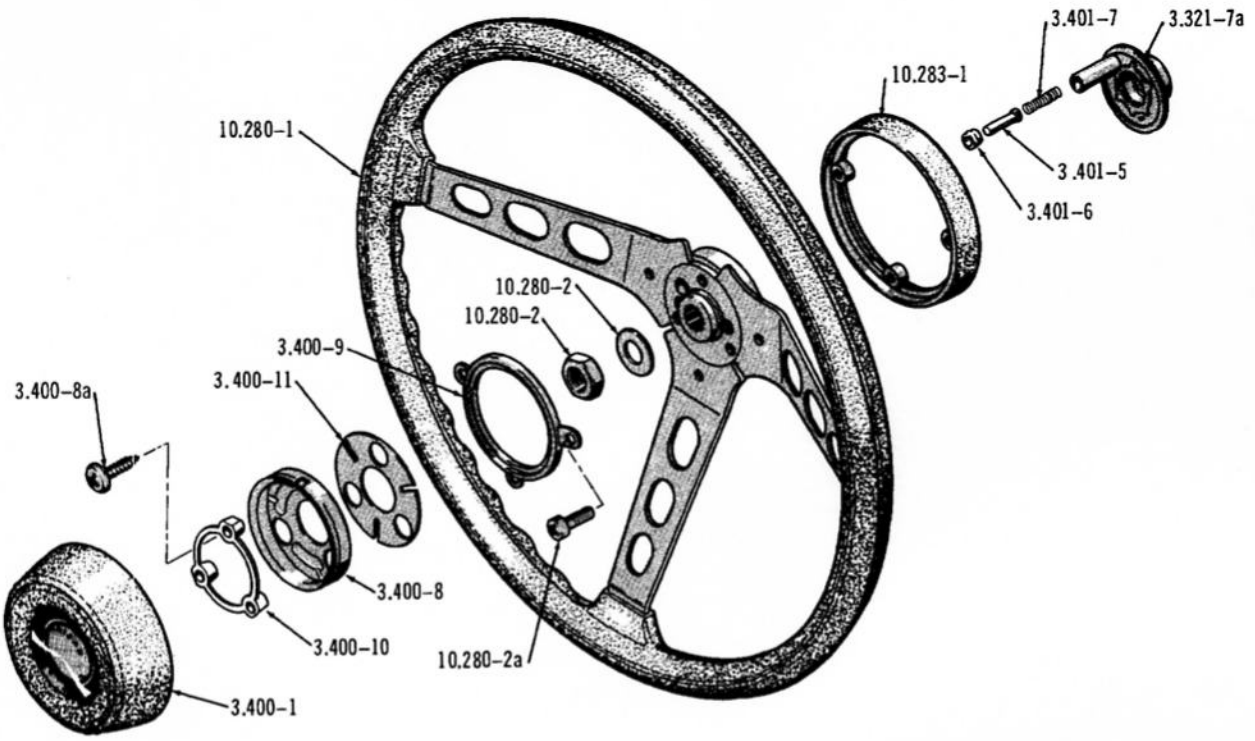

4178

STEERING WHEEL AND HORN BUTTON . . . 1971/ (WITH SPORT WHEEL)

Printed in U.S.A.

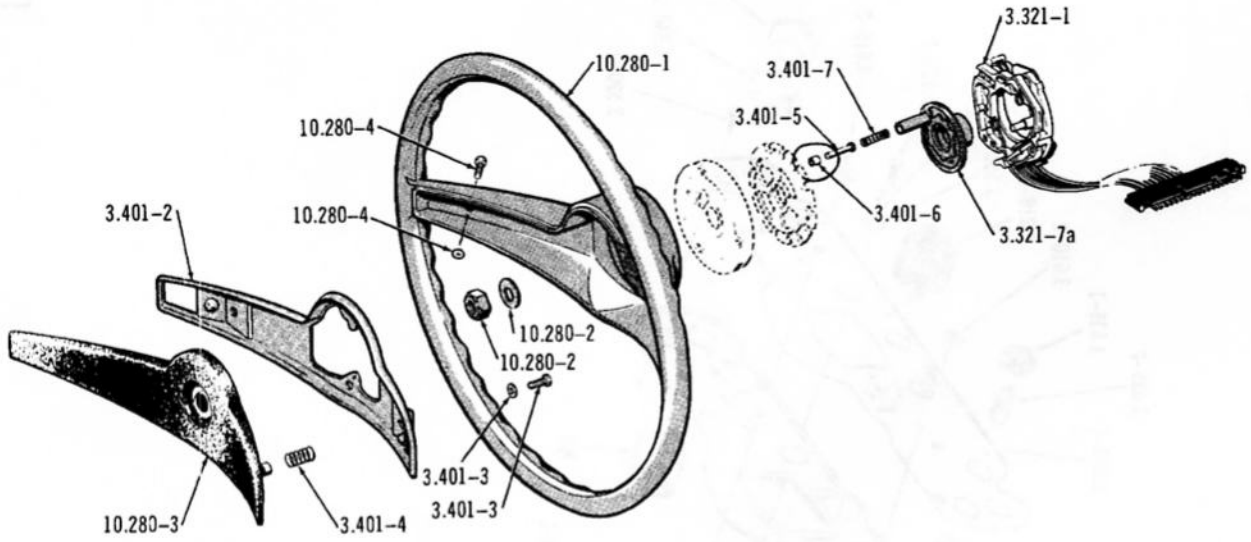

3929

STEERING WHEEL AND SPOKE HORN ... 1970/

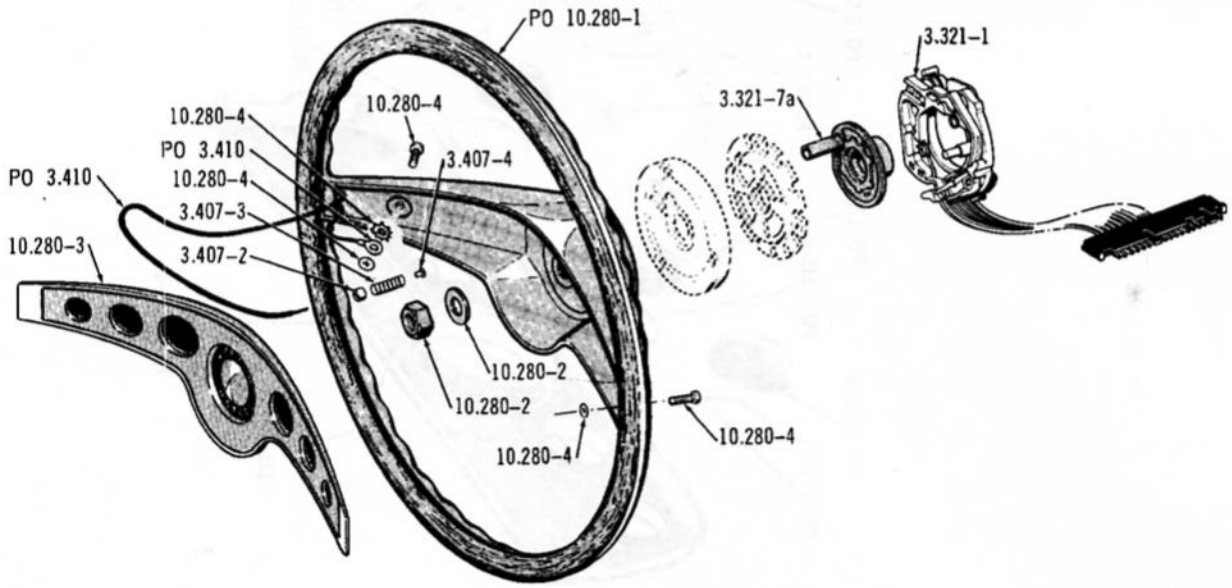

3930

STEERING WHEEL AND RIM HORN ... 1970/71

Printed in U.S.A.

3506

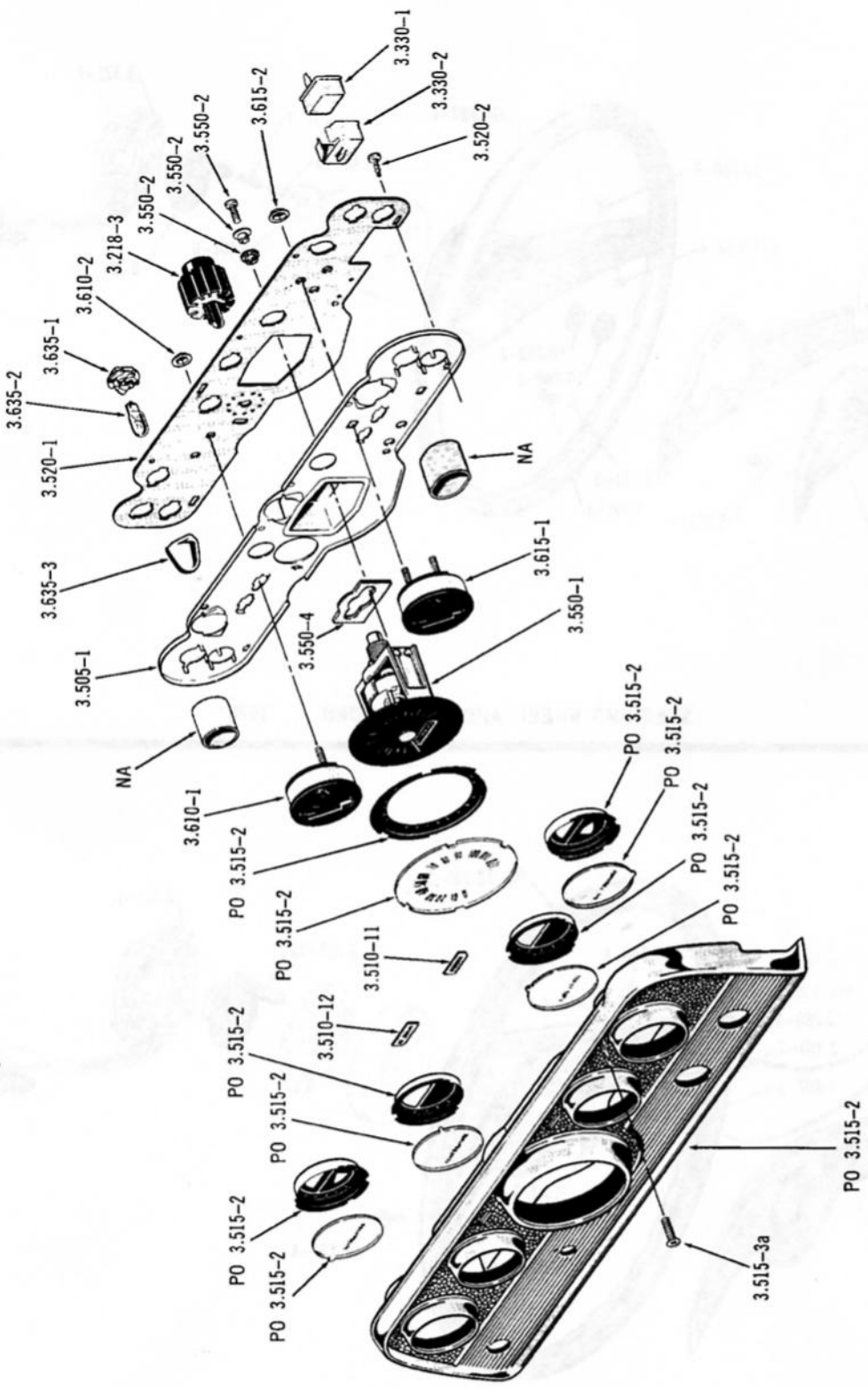

INSTRUMENT CLUSTER ... 1967/69 (01)

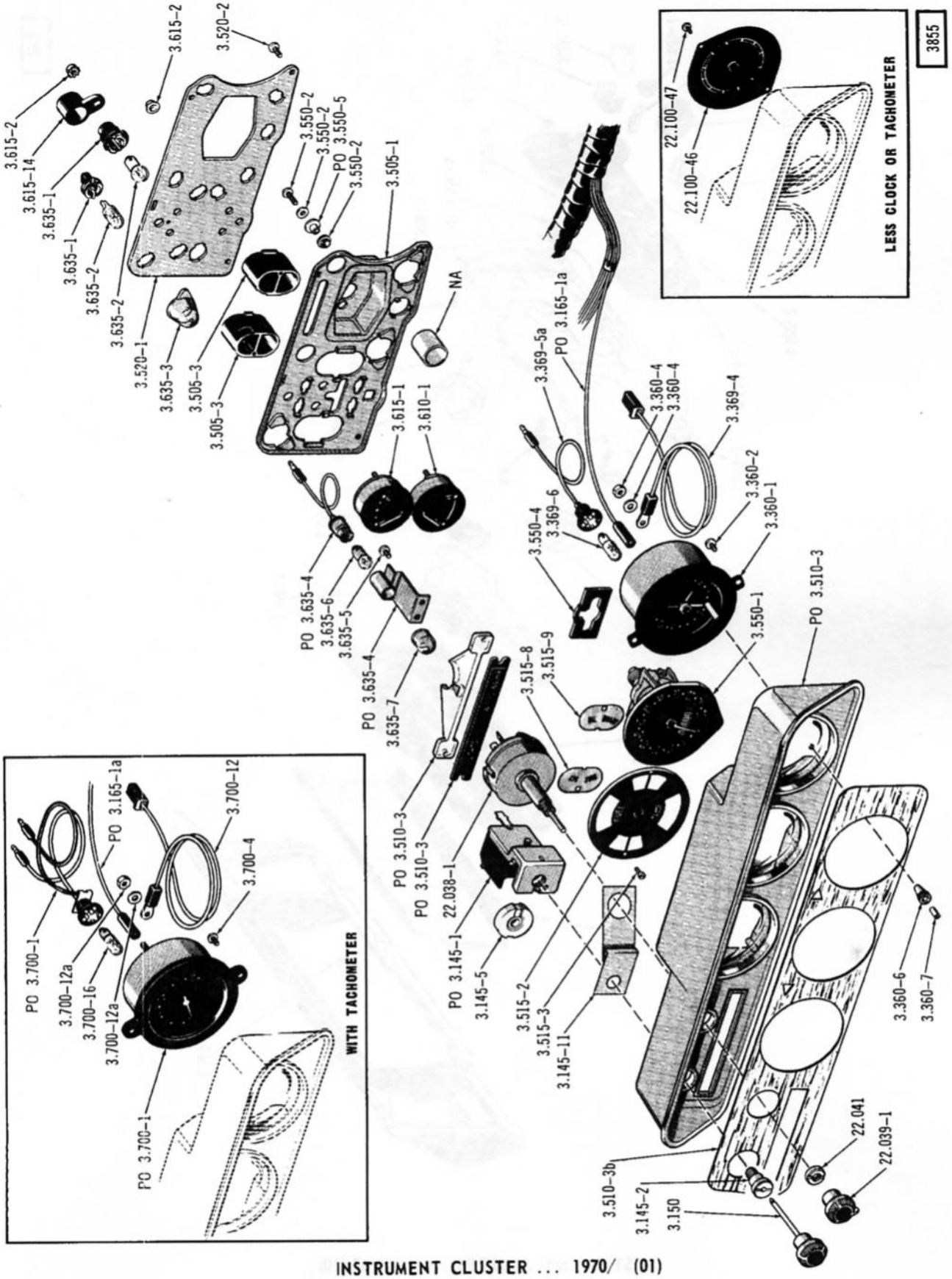

INSTRUMENT CLUSTER ... 1970/ (01)

3505

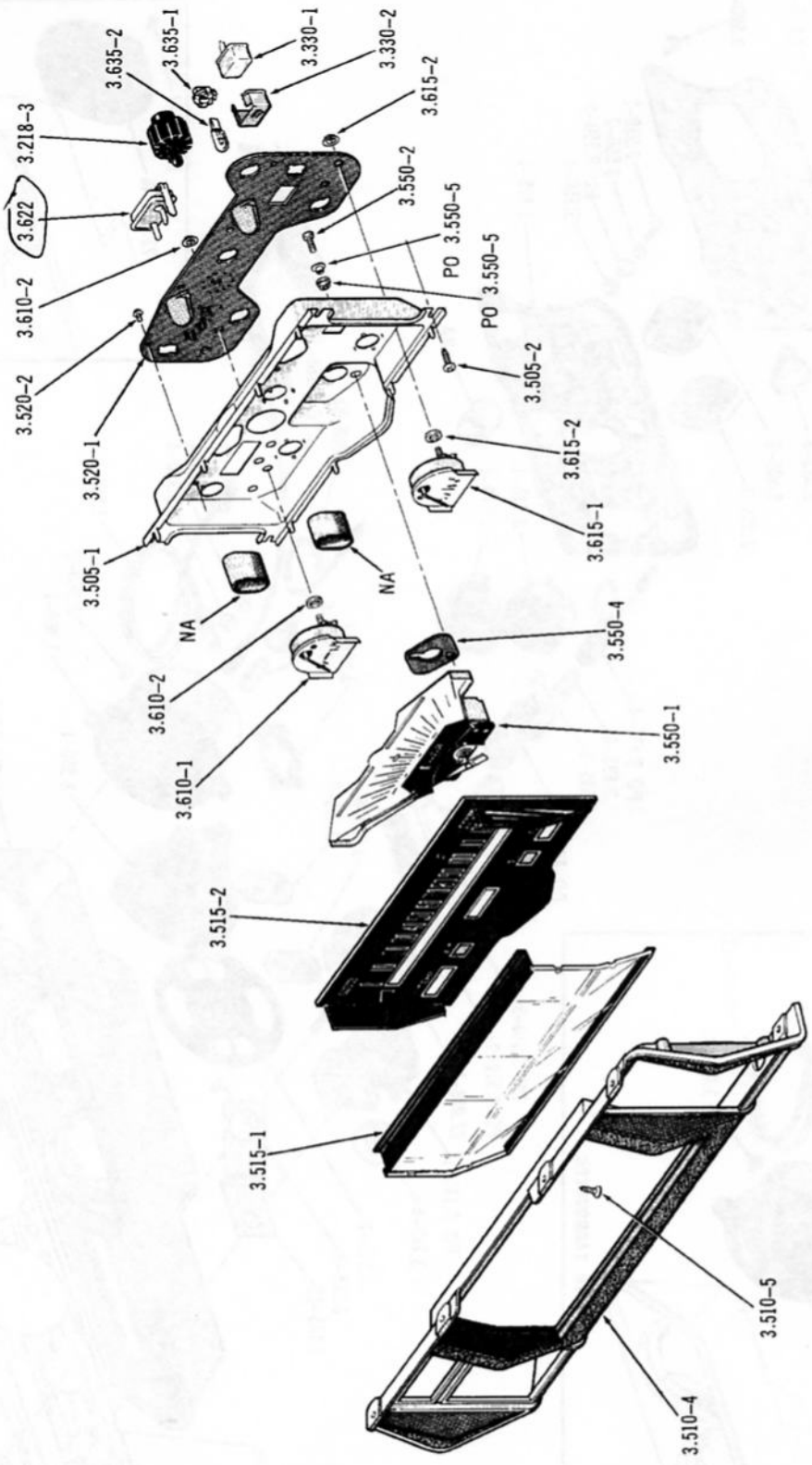

INSTRUMENT CLUSTER ... 1967/68 (10)

3508

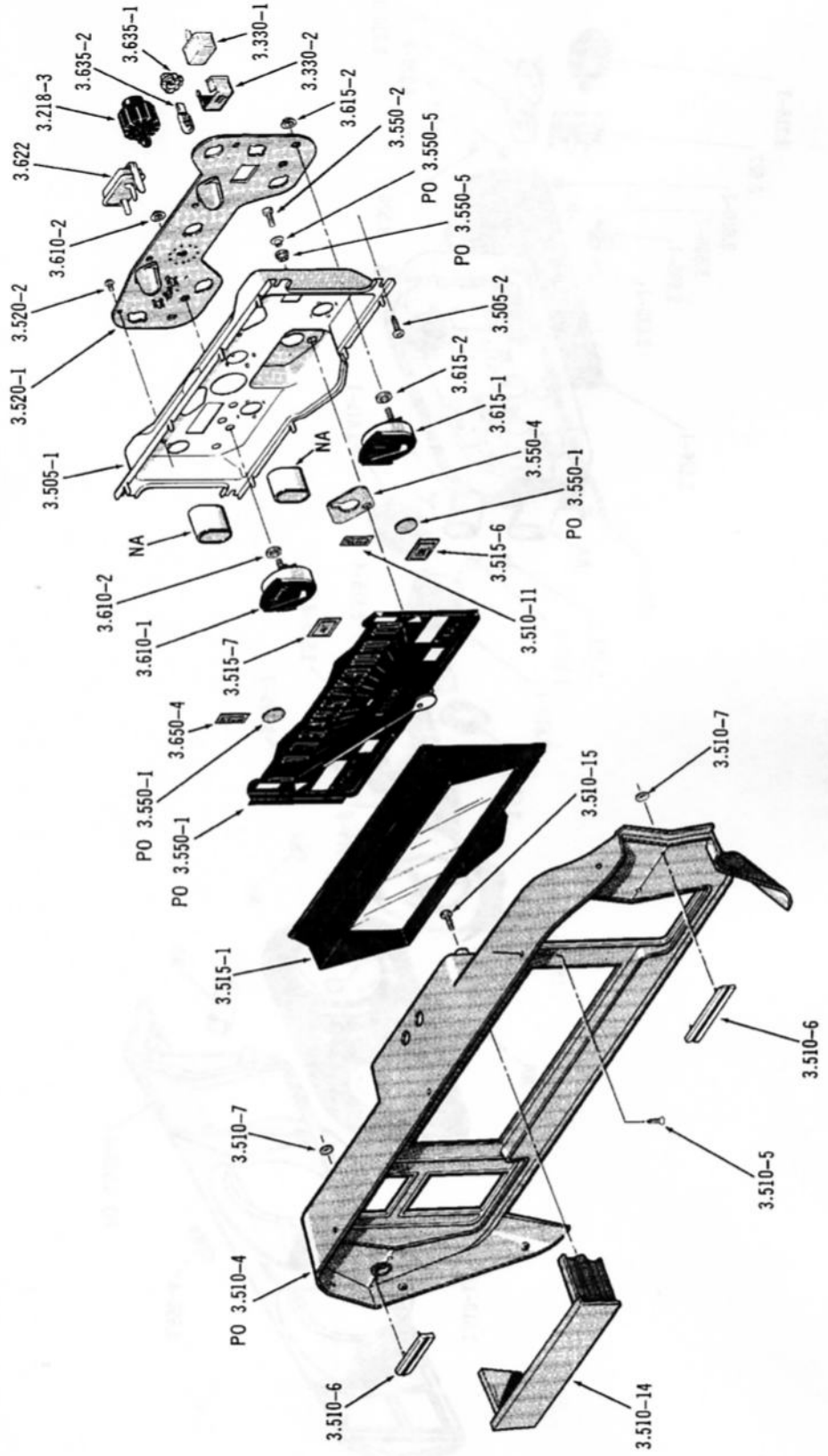

INSTRUMENT CLUSTER ... 1969/71 (10)

Printed in U.S.A.

3100-A

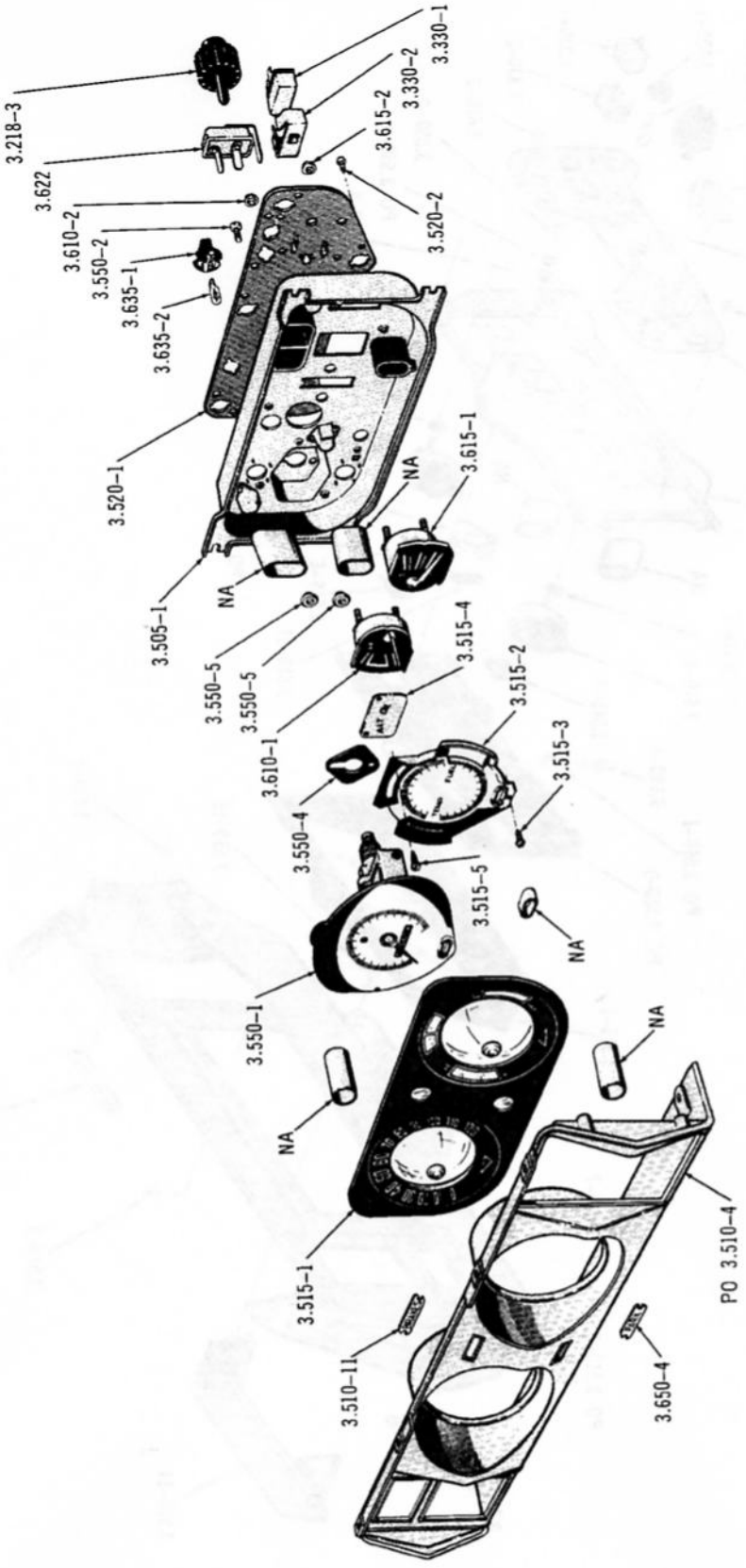

INSTRUMENT CLUSTER ... 1967/71 (80)

4069

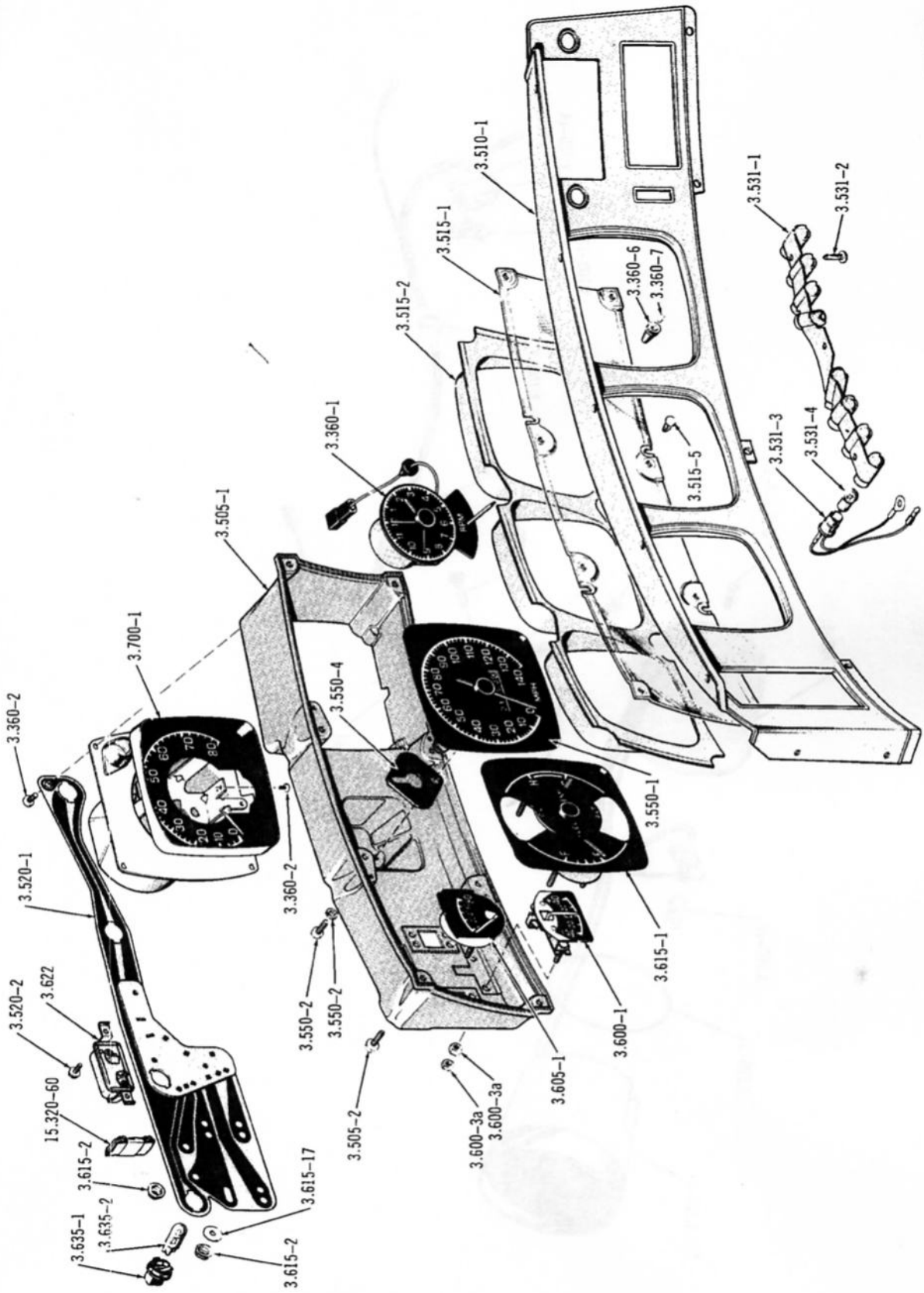

INSTRUMENT CLUSTER ... 1971/ (70)

Printed in U.S.A.

2537

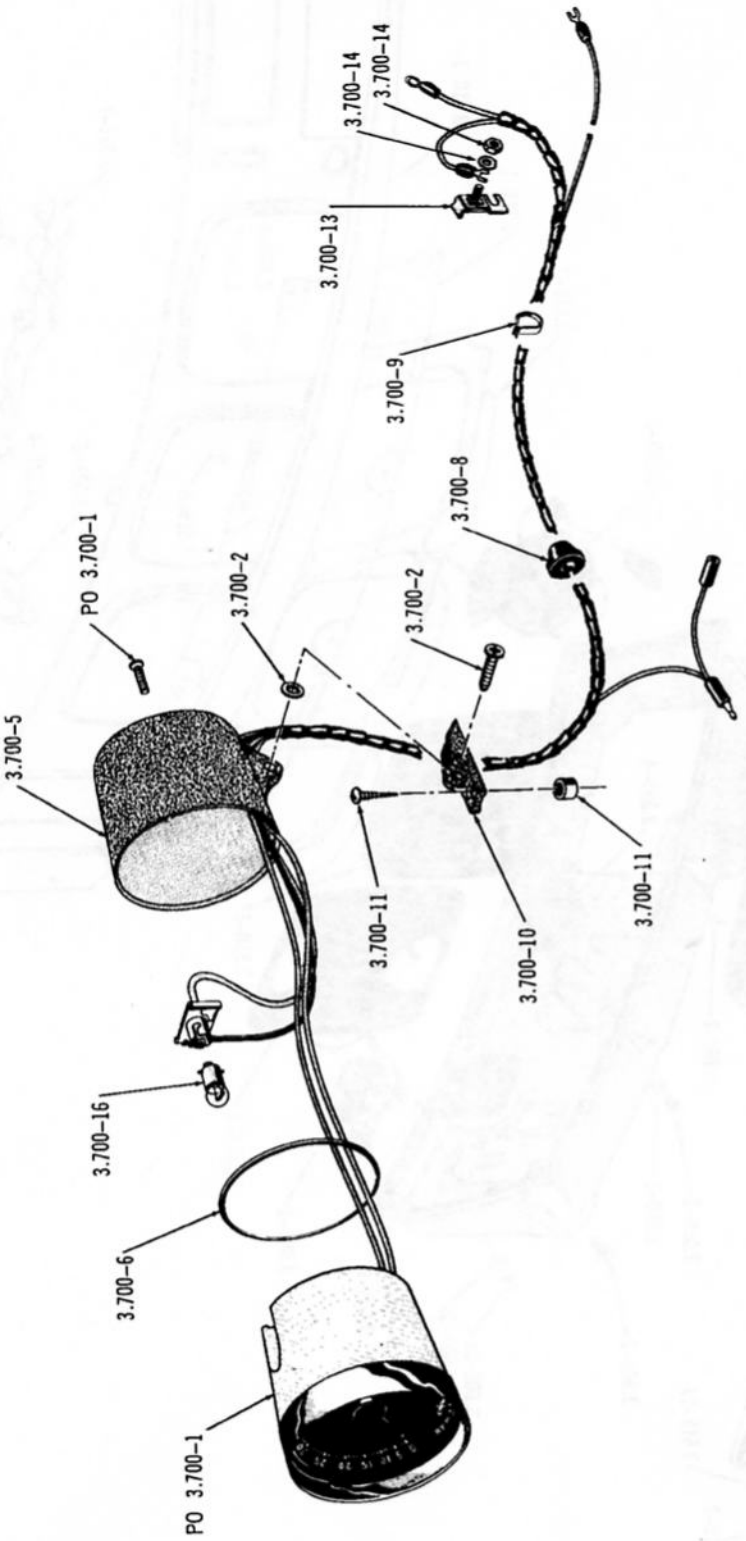

TACHOMETER ... 1967/68 (01)(10)(50)(80)

GROUP NO. — DESCRIPTION — YEAR and MODEL	PAKS CODE	PRIMARY GROUP NO.	PER CAR	PART NO.	CODE
3.001--1 SPARK PLUG					
67/70 (Champion N-14Y) SIX		.....	6	317 2329	
67/70 (Champion XN-14Y) SIX		.....	6	318 0257	
71/ (Champion N-12Y) SIX		.....	6	318 9066	
71 (Champion XN-14Y) SIX		.....	6	318 0257	
67 (Champion XN-9Y) V8 (01-W4B)(10-W4B)(80-W4B)		.....	8	318 6378	
67 (Champion XN-14Y) V8 (WDT)		.....	8	318 0257	
67/69 (Champion N-12Y) V8		.....	8	318 9066	
67/70 (Champion XN-12Y) V8		.....	8	318 9507	
68 (Champion UN-12Y) V8		.....	8	320 0462	
70 (Champion N-12Y) V8 (E/MACHINE)		.....	8	318 9066	
70 (Champion N-10Y) V8 (MACHINE)		.....	8	321 0892	
71/ (Champion N-12Y) V8		.....	8	318 9066	
72 (Champ on XN-12Y)		.....	AR	318 9507	
OMC (Champion UF-11Y) OTHER MAKE CARS (Replaces F-11Y)		.....	AR	320 3069	
OMC (Champion UF-14Y) OTHER MAKE CARS (Replaces F-14Y)		.....	AR	320 3070	
OMC (Champ on J-14Y) OTHER MAKE CARS		.....	AR	320 8707	
OMC (Champion UJ-12Y) OTHER MAKE CARS (Replaces J-12Y)		.....	AR	320 3068	
3.001-2 GASKET, Spark Plug					
67/		.....	AR	44 042	
3.001-3 SHIELD, Spark Plug Heat					
67/70 V8 (LHD-LTAC)		.....	4	318 2479	
68/70 V8 (LHD-WTAC-* 3-1)		.....	AR	318 2479	
68/70 V8 (LHD-WTAC-* 3-2)		.....	1	319 2316	
71 V8 (Oil Gauge Tube Support-Spark Plug Shield Type)		.....	1	318 2479	
71/ V8 (Oil Gauge Tube Support-Rocker Arm Cover Hold-Down Type)		1.187	1	321 5161	
67/69 10 (RHD-290-W4B-LEEP)		.....	1	318 7943	
67/69 (2-1/2" High) 80 (RHD-V8)		.....	1	318 7943	
67/69 (2-3/4" High) 80 (RHD-V8)		.....	2	318 2479	
70 (2-1/2" High) 10-80 (RHD-V8)		.....	1	318 7943	
70 (2-3/4" High) 10-80 (RHD-V8)		.....	1	318 2419	
3.002 CONTACT KIT, Ignition (Contains Contact Set And Condenser)					
67/ SIX		.....	1	448 8760	
67/ V8		.....	1	448 8780	
3.003 TUNE-UP KIT (Contains Spark Plugs, Contact Set And Condenser)					
67/70 SIX		.....	1	320 5376	
71/ SIX		.....	1	448 9455	
67/69 V8		.....	1	320 8325	
70 V8 (E/MACHINE)		.....	1	320 8325	
70 V8 (MACHINE)		.....	1	448 8455	
71/ V8		.....	1	320 8325	
3.005-1 ALTERNATOR (A.M.)(Incl. Pulley)(For Components Refer To Chart Index Page Cr 3 - C 1) (For Motorola Alternator Refer To Group 3.016)					
67/68 (35 Amp. -American Motors 318 2888) SIX ***(Use 448 6761)***		.....	1	318 2888	
69 (35 Amp. -American Motors 318 2888) SIX (01-* 3-52)(70-* 3-52). ***(Use 448 6761)***		.....	1	318 2888	
67 (35 Amp. -American Motors 318 2889) V8 ***(Use 319 1060)***		.....	1	318 2889	
67/68 (35 Amp. -American Motors 319 1060) V8		.....	1	319 1060	
69 (35 Amp. -American Motors 319 1060) V8 (01-* 3-52)(30-* 3-52)(70-* 3-52)		.....	1	319 1060	
67 (40 Amp. -American Motors 318 9458) SIX		.....	1	318 9458	
67 (40 Amp. -American Motors 318 9459) V8		.....	1	318 9459	

Printed in U.S.A.

ELECTRICAL - INSTRUMENTS

3.005–2 ALTERNATOR (A.M.)(Less Pulley)(For Components Refer To Chart Index Page Cr 3 - C 1)
(For Motorola Alternator Refer To Group 3.016)

67/	*(60 or 65 Amp. -Leece-Neville 2182A) 10-80*	.....	1	318 3643	
69	(35 Amp. -American Motors 319 5534) SIX (10-* 3-53)	.....	1	448 6761	
69	(35 Amp. -American Motors 319 5535) V8 (10-* 3-53)	.....	1	448 6762	
70	(35 Amp. -American Motors 318 2888) SIX (01)(70)	.....	1	448 6761	
70	(35 Amp. -American Motors 319 9805) SIX (01)(70)	.....	1	448 8287	
70	(35 Amp. -American Motors 319 5534) SIX (10)	.....	1	448 6761	MR
70	(35 Amp. -American Motors 319 9806) SIX (10)	.....	1	448 8287	MR
70	(35 Amp. -American Motors 319 1060) V8 (01)(30)(70)	.....	1	448 6762	
70	(35 Amp. -American Motors 319 9805) V8 (01)(30)(70)	.....	1	448 8287	
70	(35 Amp. -American Motors 319 5535) V8 (10)	.....	1	448 6762	MR
70	(35 Amp. -American Motors 319 9804) V8 (10)	.....	1	448 8288	

3.005–4 WIRE, Alternator Ground

67/68	*10-80 (* 3-4)*	.....	1	318 6863
69/	*10-80 (* 3-4)*	.....	1	319 4855

3.005–5 WIRE, Alternator To Capacitor (With Suppression Kit)

67/		.....	1	318 5784

3.005–5a AMMETER (Refer To Group 3.600 For Ammeter And Associated Wires)

3.005–6 WIRE, Alternator To Ammeter

67/68	*10-80 (* 3-4)*	.....	1	318 6865
69	*10 (Six-* 3-4)*	.....	1	319 4853
69	*80 (Six-* 3-4)*	.....	1	319 4854
69	*V8 (* 3-4)*	.....	1	319 4856
70/71	*10-80 (Six-* 3-4)*	.....	1	319 4854
70/	*10-80 (V8-* 3-4)*	.....	1	319 8333

3.005–7 CLIP, Alternator Wire

67/69	*(2-1/4" Long) 10-80 (Six-* 3-4)*	3.210	8	63 045
67/69	*(3-7/8" Long) 10-80 (Six-* 3-4)*	3.212	1	79 394
67/69	*V8 (* 3-4)*	3.212	9	79 394
70/	*(3-7/8" Long) 10 (* 3-4)*	3.312	9	79 394
70/	*(3-7/8" Long) 80 (* 3-4)*	3.312	10	79 394
70/	*(2-1/4" Long) 10-80 (* 3-4)*	3.210	2	63 045

3.005–8 HARNESS, Alternator To Regulator Wire

67/68	*10-80 (* 3-4)*	.....	1	318 6862
69	*10-80 (* 3-4)*	.....	1	319 4861
70/	*10-80 (* 3-4)*	.....	1	319 8332

3.008–1 BELT, Alternator Fan (Single Belt Drive)

67/68	SIX ***(Use 319 6268)***	2.016	1	318 5717
69/	01-40-70 (Six) ***(Use 319 6268)***	2.016	1	318 5717
69	10 (Six-LAC-35 Amp. Alt. -* 3-52)(Six-LHLV-35 Amp. Alt. -* 3-52) ...(Plain Type) ***(Use 319 6268)***	2.016	1	318 5717
72	10 (Six-37 Amp. Alt.)(Six-55 Amp. Alt.) ***(Use 319 6268)***	2.016	1	318 5717
69/	10 (Six-WAC)(Six-WHLV) ***(Use 319 6268)***	2.016	1	318 5717
69/	80 (LHD-Six-Except 65 Amp. Alt.) ***(Use 319 6268)***	2.016	1	318 5717
69/71	10 (Six-LAC-35 Amp. Alt. -* 3-53)(Six-LHLV-35 Amp. Alt. -* 3-53) ...(Cog Type)	2.016	1	319 6268

67/	01-30-40-70 (V8)	2.016	1	318	5719
67/68	10-80 (LHD-V8-Except 65 Amp. Alt.-* 3-3)	2.016	1	318	5719
67	50 (LHD-V8) ***(Use 319 6268)***	2.016	1	318	5717
69/70	10 (LHD-V8-LAC-35 Amp. Alt.-* 3-52)(LHD-V8-LHLV-35 Amp. Alt.-* 3-52) ...(Plain Type)	2.016	1	318	5719
71	10 (LHD-V8-35 Amp. Alt.) ...(Plain Type)	.....	1	319	6377
72	10 (V8-37 Amp. Alt.)(V8-55 Amp. Alt.)	2.016	1	318	5719
69	10 (LHD-V8-LAC-35 Amp. Alt.-* 3-53)(LHD-V8-LHLV-35 Amp. Alt.-* 3-53) ...(Cog Type)	2.016	1	319	6377
69/	10 (LHD-V8-WAC-55 Amp. Alt.)(LHD-V8-WHLV-55 Amp. Alt.)	2.016	1	318	5719
69/	80 (LHD-V8-Except 65 Amp. Alt.)	2.016	1	318	5719
67/	***10-80 (LHD-V8-60 or 65 Amp. Alt.)***	2.016	1	318	5860
70/71	***10-80 (LHD-Six-Fleet)...(Cog Type & Light Type)***	2.016	1	319	6268
72	***10-80 (Six-Fleet-65 Amp. Alt.)***	.....	1	318	5860
72	***01-10-80 (Six-55 Amp. Alt.)***	.....	1	321	7329
72	***01-10-80 (V8-55 Amp. Alt.)(V8-62 Amp. Alt.)***	.....	1	321	7330
67/70	***10-80 (RHD-V8)***	2.016	1	318	7219

3.008–2 BELT SET, Alternator (Dual Belt Drive)

67/	***10-80 (Six-60 or 65 Amp. Alt.)***	2.016	1	318	5859

3.010–1 PULLEY, Alternator (Less Fan)(For Motorola Pulley Equipment Refer To Group 3.017)

67/70	(2-3/4" Diameter-* 3-5)	.....	1	320	9013
69/70	(2-1/2" Diameter-* 3-5)	.....	1	448	6760
67/	***10-80 (Six-* 3-4)***	.....	1	317	4689
67/	***10-80 (V8-Single Belt Drive-* 3-4)***	.....	1	316	3772

3.010–2 ATTACHING PARTS, Pulley To Fan

SCREW, Button	67/	10-80 (WSBD)	.....	4	400	1790
WASHER, Lock	67/	10-80 (WSBD)	.....	4	400	1791

3.010–3 FAN, Alternator (Less Pulley)(For Motorola Fan Equipment Refer To Group 3.017)

67/70	(* 3-5)	.....	1	320	9014
67/	***10-80 (* 3-4)***	.....	1	315	2718

3.010–4 HUB, Alternator

67/	***10-80 (V8-Single Belt Drive-* 3-4)***	.....	1	316	3771

3.010–5 ATTACHING PARTS, Hub To Alternator

KEY, Woodruff 67/	***10-80 (* 3-4)***	.....	1	320	3643
WASHER, Lock 67/	***10-80 (* 3-4)***	.....	1	320	3642
NUT, Hexagon 67/	***10-80 (* 3-4)***	.....	1	320	3623

3.012–1 REGULATOR, Alternator Voltage (A.M.)(For Motorola Regulator Equipment Refer To Group 3.019)

67/68	(A.M. #318 2898 Is Stamped On Case)	.....	1	318	2898
69/70	(A.M. #319 5003 Is Stamped On Case)	.....	1	319	5003
67/	***10-80 (Leece-Neville #ROO13703RA Is Stamped On Case-* 3-4 And * 3-58)***	.....	1	317	3374
69/	***10-80 (Leece-Neville #ROO15003RB Is Stamped On Case-* 3-4 And * 3-59)***	.....	1	319	6938

3.012–2 ATTACHING PARTS, Voltage Regulator To Wheelhouse

SCREW, Tapping	68/70	(* 3-6)	2.013	3	318	9013
SCREW, Tapping 68/		***(* 3-4)***	17.671	3	G455702	NA

ELECTRICAL - INSTRUMENTS

3.012–3 WIRE, Voltage Regulator To Chassis Wire Harness

67/68	10-80 (V8-* 3-4)	.....	1	318 1018	
69	10-80 (V8-* 3-4)	.....	1	319 4859	
69	10-80 (Six-* 3-4)	.....	1	319 4860	
70	10 (V8-* 3-4)	.....	1	319 8339	
71	10 (V8-* 3-4)	.....	1	319 8340	
70/71	80 (V8-* 3-4)	.....	1	319 8340	
70/71	10-80 (Six-* 3-4)	.....	1	319 8338	
72	10-80 (V8-* 3-4)	.....	1	321 5931	
72	10-80 (Six-* 3-4)	.....	1	321 5930	

3.014–1 STRAP, Alternator Adjusting (For American Motors And Leece-Neville Equipment) (For Motorola Alternator Strap Equipment Refer To Group 3.018)

67/70	SIX (* 3-60)	3.018	1	317 7715	
67/	10-80 (Six-* 3-4)	.....	1	317 7716	
67/	10-80 (V8-* 3-4)	.....	1	318 7293	
67/70	10 (RHD-V8-290-* 3-60)	3.018	1	318 7218	
67/70	80 (RHD-V8-* 3-60)	3.018	1	318 7218	

3.014–2 ATTACHING PARTS, Strap To Alternator

BOLT, Hexagon	67/70	(* 3-60)	17.038	1	G180078	NA
BOLT, Hexagon	67/	10-80 (Six-* 3-4)	17.038	1	G180126	NA
BOLT, Hexagon	67/	10-80 (V8-* 3-4)	17.038	1	G180125	NA
WASHER, Lock	67/70	(* 3-60)	17.820	1	G120214	
WASHER, Lock	67/69	10-80 (* 3-4)	17.820	1	G120382	
WASHER, Lock	70/	10-80 (* 3-4)	10.260	1	400 3803	
WASHER, Plain.....	67/70	(* 3-60)	17.814	1	400 1095	
WASHER, Plain.....	67/	10-80 (* 3-4)	17.814	1	400 1104	
NUT, Hexagon.....	67/	10-80 (* 3-4)	17.406	1	G120377	NA

3.014–3 ATTACHING PARTS, Strap To Block

BOLT, Hexagon	67/	10-80 (Six-* 3-4)	17.038	1	G180122	NA
BOLT, Hexagon	67/70	10-80 (V8-* 3-4)	17.038	1	G454497	
BOLT, Hexagon	71/	10-80 (V8-* 3-4)	17.038	1	G450517	NA
WASHER, Lock	67/69	10-80 (Six-* 3-4)	17.820	1	G120382	
WASHER, Lock	70/	10-80 (* 3-4)	10.260	1	400 3803	

3.014–4 BRACKET, Alternator Mounting (For American Motors And Leece-Neville Equipment) (For Motorola Alternator Bracket Equipment Refer To Group 3.018)

67/69	SIX (* 3-60) (Use 448 7149)	3.018	1	317 3493	
70/	SIX (* 3-60)	.....	1	319 8230	
67/70	V8 (LHD-* 3-60)	3.018	1	318 9733	
67/70	10-80 (Six-* 3-4)	.....	1	317 4694	
71/	10-80 (Six-* 3-4)	.....	1	321 0975	
67/	10-80 (V8-* 3-4)	.....	1	318 7292	
67/70	10 (RHD-V8-290-* 3-60)	3.018	1	318 7217	
67/70	80 (RHD-* 3-60)	3.018	1	318 7217	

3.014–5 ATTACHING PARTS, Bracket To Block

STUD.....	67/70	10-80 (RHD-V8-* 3-60)	20.080	1	400 1877	
BOLT, Hexagon	67/70	(1-1/8" Long) SIX (* 3-60)	17.038	2	G180123	
BOLT, Hexagon	68/70	(1-3/8" Long) SIX (WAC-* 3-60)	17.038	1	G180125	
BOLT, Hexagon	67/	10-80 (Six-1" Long-* 3-4)	17.038	2	G180122	NA
BOLT, Hexagon	67/	SIX (1-1/8" Long-* 3-4)	17.038	1	G180123	NA
BOLT, Hexagon	67/69	10-80 (V8-1" Long-* 3-4)	17.038	1	G180145	NA
BOLT, Hexagon	70/	10-80 (V8-1" Long-* 3-4)	12.168	1	400 1763	
BOLT, Hexagon	67/	10-80 (V8-1-1/8" Long-* 3-4)	17.038	2	G180146	NA

WASHER, Plain	68/70	SIX (WAC-* 3-60)	17.814	1	400 1102	
WASHER, Plain	***67/70***	***10-80 (RHD-V8-* 3-60)***	17.814	1	400 1102	
WASHER, Lock	67/70	SIX (* 3-60)	10.260	2	400 3803	
WASHER, Lock	***67/***	***10-80 (Six-* 3-4)***	10.260	3	400 3803	
WASHER, Lock	***67/***	***10-80 (V8-* 3-4)***	9.002	3	400 1898	
WASHER, Lock	***67/70***	***10-80 (RHD-V8-* 3-60)***	10.260	1	400 3803	
NUT, Hexagon	***67/70***	***10-80 (RHD-V8-* 3-60)***	17.406	1	G120369	NA

3.014–6 ATTACHING PARTS, Bracket To Alternator

BOLT, Hexagon	67/70	SIX (LHD-V8-* 3-60)	17.038	1	G180132	NA
BOLT, Hexagon	***67***	***10-80 (Six-* 3-4)***	17.038	2	G181639	NA
BOLT, Hexagon	***67***	***10-80 (V8-* 3-4)***	17.038	2	G180125	NA
BOLT, Hexagon	***68/***	***10-80 (* 3-4)***	17.038	2	G180125	NA
BOLT, Hexagon	***67/68***	***10-80 (RHD-V8-* 3-60)***	17.038	1	G186278	NA
BOLT, Hexagon	***69/70***	***10-80 (RHD-V8-* 3-60)***	17.038	1	G180134	NA
WASHER, Lock	67/70	SIX (LHD-V8-* 3-60)	10.260	1	400 3803	
WASHER, Lock	***67/***	***10-80 (* 3-4)***	10.260	2	400 3803	
WASHER, Lock	***67/70***	***10-80 (RHD-V8-* 3-60)***	10.260	1	400 3803	
NUT, Hexagon	67/70	SIX (LHD-V8-* 3-60)	17.406	1	G120377	NA
NUT, Hexagon	***67***	***10-80 (Six-* 3-4)***	17.406	2	G120369	NA
NUT, Hexagon	***67***	***10-80 (V8-* 3-4)***	17.406	2	G120377	NA
NUT, Hexagon	***67/70***	***10-80 (RHD-V8-* 3-60)***	17.406	1	G120377	NA
NUT, Hexagon	***68/***	***10-80 (* 3-4)***	17.406	2	G120377	NA

3.014–7 ATTACHING PARTS, Bracket And Upper Support To Alternator

BOLT, Hexagon	67/70	V8 (* 3-60)	17.038	1	G180132	NA
WASHER, Lock	67/70	V8 (* 3-60)	10.260	2	400 3803	
WASHER, Plain	67/70	V8 (* 3-60)	17.814	~~1~~	~~400 1104~~	
NUT, Hexagon	67/70	V8 (* 3-60)	17.406	2	G120377	

3.014–8 ATTACHING PARTS, Bracket To Cylinder Head

STUD	***67/70***	***10-80 (RHD-V8-* 3-60)(1-3/4" Long)***	17.718	2	320 9581	
STUD	***70***	***10-80 (RHD-V8-* 3-60)(1-9/16" Long)***	1.010	1	400 3917	
WASHER, Lock	***67/70***	***10-80 (RHD-V8-* 3-60)(51/64" O.D.)***	9.002	2	400 1898	
WASHER, Lock	***70***	***10-80 (RHD-V8-* 3-60)(11/16" O.D.)***	17.820	1	G120382	
WASHER, Plain	***67/70***	***10-80 (RHD-V8-* 3-60)***	17.814	2	400 1116	
NUT, Hexagon	***67/70***	***10-80 (RHD-V8-* 3-60)(7/16-20)***	17.406	2	G120370	
NUT, Hexagon	***70***	***10-80 (RHD-V8-* 3-60)(3/8-24)***	17.406	1	G120369	NA

3.014–9 SUPPORT, Alternator Bracket Upper (For American Motors And Leece-Neville Equipment) (For Motorola Alternator Support Equipment Refer To Group 3.018)

67	V8 (LHD-* 3-60) ***(Use 319 1837)***	3.018	1	318 7971	
68	V8 (LHD-4 Holes-* 3-60) ***(Use 319 1837)***	3.018	1	318 7971	
68/70	V8 (LHD-5 Holes-* 3-60)	3.018	1	319 1837	

3.014–10 ATTACHING PARTS, Support To Cylinder Head

STUD	68/70	V8 (LHD-WAC-* 3-60)	.....	1	400 3895	
BOLT, Hexagon	67	V8 (LHD-* 3-60)	17.038	1	G180144	NA
BOLT, Hexagon	68/70	V8 (LHD-LAC-* 3-60)	17.038	1	G180144	NA
BOLT, Hexagon	68/70	V8 (LHD-WAC-* 3-60)	12.175	1	400 1793	
WASHER, Lock	67/70	V8 (LHD-* 3-60)	9.002	1	400 1898	
WASHER, Plain	67/70	V8 (LHD-* 3-60)	17.814	1	400 1116	
NUT, Hexagon	68/70	V8 (LHD-WAC-* 3-60)	17.406	1	G120370	

3.014–11 SUPPORT, Alternator Bracket Lower (For American Motors And Leece-Neville Equipment) (For Motorola Alternator Support Equipment Refer To Group 3.018)

67/70	V8 (LHD-* 3-60)	.....	1	318 5546	

ELECTRICAL - INSTRUMENTS

3.014–12 ATTACHING PARTS, Lower Support To Alternator Bracket

BOLT, Hexagon	67/70	V8 (LHD-* 3-60).....	17.038	1	G180078 NA
WASHER, Lock.....	67/70	V8 (LHD-* 3-60).....	17.820	1	G120214
WASHER, Plain.....	67/70	V8 (LHD-* 3-60).....	17.814	1	G120393 NA
NUT, Hexagon.....	67/70	V8 (* 3-60)..... ***(Use 400 2117)***	17.406	1	G120376

3.014–13 ATTACHING PARTS, Strap To Water Pump

STUD.....	67/70	SIX (* 3-60).....	17.718	1	G191991 NA
WASHER, Lock	67/70	SIX (* 3-60).....	17.820	1	G120214
NUT, Hexagon.....	67/70	SIX (* 3-60).....	17.406	1	G120368

3.014–14 ATTACHING PARTS, Alternator Wire Harness To Terminals

WASHER, Lock	67/69	(23/64" O. D. -* 3-60).....	17.820	2	G131096 NA
WASHER, Lock	67/70	(1/2" O. D. -* 3-60).....	17.820	1	G120380 NA
NUT, Hexagon.....	67/69	(1/8" Thick-* 3-60).....	17.412	2	G120361 NA
NUT, Hexagon.....	67/70	(7/32" Thick-* 3-60).....	17.406	1	G120375

3.016 ALTERNATOR (Less Pulley And Fan)(Motorola)(For Components Refer To Chart Index Page Cr 3 - C 1) (For Leece-Neville Or American Motors Alternator Refer To Group 3.005)

67/68	(35 Amp. -Motorola A12NAM453) SIX (LAC).....	.....	1	320 6964	
69	(35 Amp. -Motorola A12NAM453) 01-70 (Six-LAC)(Six-LHLV).....	.....	1	320 6964	
69	(35 Amp. -Motorola A12NAM456) 10 (Six-LAC)(Six-LHLV).....	.....	1	320 6964	MR
70	(35 Amp. -Motorola A12NAM453) 01-70 (Six).....	.....	1	320 6964	
70	(35 Amp. -Motorola 8AL2006F) 01-70 (Six-* 3-95).....	.....	1	448 8289	MR
70	(35 Amp. -Motorola A12NAM456) 10 (Six).....	.....	1	320 6964	MR
70	(35 Amp. -Motorola 8AL2007F) 10 (Six-* 3-95).....	.....	1	448 8289	MR
67/68	(35 Amp. -Motorola A12NAM455) V8 (LAC).....	.....	1	320 7739	
69	(35 Amp. -Motorola A12NAM455) 01-30-70 (V8-LAC)(V8-LHLV).....	.....	1	320 7739	
69	(35 Amp. -Motorola A12NAM457) 10 (V8-LAC)(V8-LHLV).....	.....	1	320 7739	
70	(35 Amp. -Motorola A12NAM455) 01-30-70 (V8).....	.....	1	320 7739	
70	(35 Amp. -Motorola 8AL2004F) 01-30-70 (V8-* 3-95).....	.....	1	448 8290	MR
70	(35 Amp. -Motorola A12NAM457) 10 (V8).....	.....	1	320 7739	
70	(35 Amp. -Motorola 8AL2005F) 10 (V8-* 3-95).....	.....	1	448 8290	MR
67/69	(40 Amp. -Motorola A12NAM552) SIX.....	.....	1	320 6965	
67/69	(40 Amp. -Motorola A12NAM553) V8..... ***(Use 320 7741)***	.....	1	320 7740	
67/70	(55 Amp. -Motorola A12NAM604) SIX..... ***(Use 448 8289)***	.....	1	320 6966	
70	(55 Amp. -Motorola 8AL2008K) SIX.....	.....	1	448 8289	
67/70	(55 Amp. -Motorola A12NAM605) V8.....	.....	1	320 7741	
70	(55 Amp. -Motorola 8AL2009K) V8.....	.....	1	448 8290	
71	(35 Amp. -Motorola 8AL2011F)(* 3-95).....	.....	1	448 9410	MR
71	(35 Amp. -Motorola 8AL2012F)(* 3-95).....	.....	1	448 9410	MR
71	(35 Amp. -Motorola 8AL2013F)(* 3-95).....	.....	1	448 9410	MR
71	(35 Amp. -Motorola 8AL2014F)(* 3-95).....	.....	1	448 9410	MR
72	(37 Amp. -Motorola 8AL2025F)(* 3-95).....	.....	1	448 9410	MR
72	(37 Amp. -Motorola 8AL2026F)(* 3-95)..... 8.1.2.2.4.9.	.....	1	448 9410	MR
71/	(55 Amp. -Motorola 8AL2015K).....	.....	1	448 9410	
71/	(55 Amp. -Motorola 8AL2016K).....	.....	1	448 9410	MR
69/70	***(55 Amp. -Motorola A12NAM606) Fleet***..... ***(Use 448 8289)***	.....	1	320 6966	MR
70	***(60 Amp. -Motorola 8AL2020L) Fleet***.....	.....	1	448 9411	
71/	***(62 Amp. -Motorola 8AL2021L) Fleet***.....	.....	1	812 0109	

3.017–1 FAN, Alternator (Less Pulley)(Motorola)(For Leece-Neville Or American Motors Alternator Fan Equipment Refer To Group 3.010)

67/	.....	.....	1	320 4140	

3.017–2 PULLEY, Alternator (Less Fan)(Motorola)(For Leece-Neville Or American Motors Alternator Pulley Equipment Refer To Group 3.010)

67/68	.....	.....	1	320 4139	
69/	(2-7/8" Diameter)	.....	1	320 4139	
69/	(2-5/8" Diameter)	.....	1	448 6752	

3.017–3 ATTACHING PARTS, Fan And Pulley To Alternator

KEY, Woodruff	67/	.....	17.344	1	G103905	
WASHER, Lock	67/	.....	17.820	1	G103325	
NUT, Hexagon	67/	.....	3.017	1	320 4160	

3.017–4 SPACER, Alternator Pulley (Motorola)

67/	.....	.....	1	320 4141	

3.018–1 BRACKET, Alternator (Motorola)(For Leece-Neville Bracket Equipment Refer To Group 3.014)

67/69	SIX ..... *(Use 448 7149)*	.....	1	317 3493	
70/	SIX (* 3-128)	.....	1	319 8230	
72	(Front-* 3-129)	.....	1	321 7213	
72	(Rear-* 3-129)	.....	1	321 7214	
67/	V8 (LHD)	.....	1	318 9733	
67/70	***10 (RHD-V8)***	.....	1	318 7217	
67/70	***80 (RHD)***	.....	1	318 7217	

3.018–2 ATTACHING PARTS, Bracket To Alternator

BOLT, Hexagon	67/	(2-1/4" Long)	17.038	1	G180132	NA
***BOLT, Hexagon	67/68***	***RHD (V8)***	17.038	1	G186278	NA
***BOLT, Hexagon	69/70***	***RHD (V8)***	17.038	1	G180134	NA
WASHER, Lock	67/	.....	10.260	1	400 3803	
WASHER, Plain	71/	.....	.....	1	400 1104	
NUT, Hexagon	67/	.....	17.406	1	G120377	NA

3.018–3 ATTACHING PARTS, Bracket To Cylinder Block

BOLT, Hexagon	67/	(1-1/8" Long) SIX (* 3-128)	17.038	2	G180123	NA
BOLT, Hexagon	72	(7/8" Long) SIX (LAC)	17.038	2	G180121	
BOLT, Hexagon	68/	(1-3/8" Long) SIX (WAC)	17.038	1	G180125	NA
WASHER, Lock	67/	SIX	10.260	2	400 3803	
WASHER, Plain	68/	SIX (WAC)	17.814	1	400 1102	

3.018–4 ATTACHING PARTS, Bracket And Upper Support To Alternator

BOLT, Hexagon	67/	V8	17.038	1	G180132	NA
WASHER, Lock	67/	V8	10.260	2	400 3803	
WASHER, Plain	67/	V8	17.814	1	400 1104	
NUT, Hexagon	67/	V8	17.406	2	G120377	NA

3.018–4a ATTACHING PARTS, Alternator Front Mounting Bracket Through Water Pump To Cylinder Block

BOLT, Hexagon	72	SIX (* 3-129)	17.038	1	G180079
NUT, Hexagon	72	SIX (* 3-129)	17.406	1	G120368
STUD	72	SIX (* 3-129)	17.718	1	G191991
WASHER, Lock	72	SIX (* 3-129)	17.820	2	G120214

3.018–5 ATTACHING PARTS, Bracket To Cylinder Head

***STUD	67/70***	***10-80 (RHD-V8)(1-3/4" Long)***	17.718	2	320 9581	
***STUD	70***	***10-80 (RHD-V8-* 3-60)(1-9/16" Long)***	1.010	1	400 3917	
***WASHER, Lock	67/70***	***10-80 (RHD-V8)(51/64" O. D.)***	9.002	2	400 1898	
***WASHER, Lock	70***	***10-80 (RHD-V8-* 3-60)(11/16" O. D.)***	17.820	1	G120382	
***WASHER, Plain	67/70***	***10-80 (RHD-V8)***	17.814	2	400 1116	
***NUT, Hexagon	67/70***	***10-80 (RHD-V8)(7/16-20)***	17.406	2	G120370	
***NUT, Hexagon	70***	***10-80 (RHD-V8-* 3-60)(3/8-24)***	17.406	1	G120369	NA

ELECTRICAL - INSTRUMENTS

3.018–6 ATTACHING PARTS, Bracket To Engine Block

STUD	***67/70***	***10-80 (RHD-V8)***	2.080	1	400 1771	
WASHER, Lock	***67/70***	***10-80 (RHD-V8)***	10.260	1	400 3803	
WASHER, Plain	***67/70***	***10-80 (RHD-V8)***	17.814	1	400 1102	
NUT, Hexagon	***67/70***	***10-80 (RHD-V8)***	17.406	1	G120369	NA

3.018–7 SUPPORT, Alternator Bracket Upper

67	V8 (LHD)	***(Use 319 1837)***	.....	1	318 7971
68	V8 (LHD–4 Holes)	***(Use 319 1837)***	.....	1	318 7971
68	V8 (LHD–5 Holes)		.....	1	319 1837
69/	V8 (LHD)		.....	1	319 1837

3.018–8 ATTACHING PARTS, Support To Cylinder Head

STUD	68/69	V8 (LHD–WAC)	.....	1	400 3895	
BOLT, Hexagon	67	V8 (LHD)	17.038	1	G180144	NA
BOLT, Hexagon	68/	V8 (LHD-LAC)	17.038	1	G180144	NA
BOLT, Hexagon	68/	V8 (LHD–WAC)	12.175	1	400 1793	
WASHER, Lock	67/	V8 (LHD)	9.002	1	400 1898	
WASHER, Plain	67/	V8 (LHD)	17.814	1	400 1116	
NUT, Hexagon	68/69	V8 (LHD–WAC)	17.406	1	G120370	

3.018–9 SUPPORT, Alternator Bracket Lower

67/	V8 (LHD)	.....	1	318 5546	

3.018–10 ATTACHING PARTS, Lower Support To Alternator Bracket

BOLT, Hexagon	67/	V8	17.038	1	G180078	NA
WASHER, Lock	67/	V8	17.820	1	G120214	
WASHER, Plain	67/	V8	17.814	1	G120393	NA
NUT, Hexagon	67/	V8 ***(Use 400 2117)***	17.406	1	G120376	

3.018–11 STRAP, Alternator Adjusting (Motorola)(For Leece-Neville Strap Equipment Refer To Group 3.014)

67/	SIX (* 3-128)	.....	1	317 7715	
67/70	***10 (RHD-V8)***	.....	1	318 7218	
67/70	***80 (RHD-V8)***	.....	1	318 7218	

3.018–12 ATTACHING PARTS, Strap To Water Pump

STUD	67/	SIX	17.718	1	G191991	NA
WASHER, Lock	67/	SIX	17.820	1	G120214	
NUT, Hexagon	67/	SIX	17.406	1	G120368	

3.018–13 ATTACHING PARTS, Strap To Alternator

BOLT, Hexagon	67/		17.038	1	G180078	NA
WASHER, Lock	67/		17.820	1	G120214	
WASHER, Plain	67/		17.814	1	400 1095	

3.018–14 ATTACHING PARTS, Alternator Wire Harness To Terminals

WASHER, Lock	67/69	(23/64" O. D.)	17.820	2	G131096	NA
WASHER, Lock	67/	(1/2" O. D.)	17.820	1	G120380	NA
NUT, Hexagon	67/69	(1/8" Thick)	17.412	2	G120361	NA
NUT, Hexagon	67/	(7/32" Thick)	17.406	1	G120375	

3.019–1 REGULATOR, Alternator Voltage (Motorola)(For Leece-Neville Or American Motors Alternator Regulator Equipment Refer To Group 3.012)

67/68	***(Use 319 4527)***	.....	1	318 1695
69/70	321952 321269 4	.....	1	~~319 5001~~
71/	321 935 7	.....	1	~~321 0300~~
70	***(Fleet-Used With 60 Amp. Alt.)***	.....	1	321 1952
71/	***(Fleet-Used With 62 Amp. Alt.)***	.....	1	321 0300

ELECTRICAL - INSTRUMENTS

3.019–2 ATTACHING PARTS, Voltage Regulator To Wheelhouse

SCREW, Tapping	67		28.015	3	400 0216
SCREW, Tapping	68		17.671	3	400 0478
SCREW, Tapping	69		2.013	3	318 9013
SCREW, Tapping	72		15.320	3	400 1701
SCREW, Hexagon	70/71		17.671	3	400 1042

3.020–1 MOTOR, Starting (For Components Refer To Chart Index Page Cr 3-1)

68	(American Motors 319 1926) SIX	.....	1	319 1926
69/71	(American Motors 319 3382) SIX	.....	1	319 3382
72	(American Motors 321 2235) SIX	.....	1	321 2235
67/69	(American Motors 318 2972) V8	.....	1	318 2972
70	(American Motors 318 2972) V8 (Drive Housing Stamped C6FF-11131-B)	.....	1	318 2972
70	(American Motors 321 2235) V8 (Drive Housing Stamped D0FF-11131-B)	.....	1	321 2235
71/	(American Motors 321 2235) V8	.....	1	321 2235
67	***(American Motors 318 2890) SIX (Canada)***	.....	1	318 2890
67	(Delco Remy 1107331) SIX	.....	1	318 4250
67	(Delco Remy 1107349) SIX	.....	1	318 4250
67	(Delco Remy 1108325) SIX ***(Use 320 8850)***	.....	1	318 8794
68	(Delco Remy 1108384) SIX	.....	1	320 8850

3.020–2 ATTACHING PARTS, Starting Motor To Housing

BOLT, Hexagon	67/71	SIX	.....	2	315 8193
BOLT, Hexagon	67/71	V8	17.038	2	G180124
BOLT, Hexagon	72		17.038	2	G180124 NA
WASHER, Lock	67/71	(11/16" O.D.) SIX	17.820	1	G103321 NA
WASHER, Lock	67/71	(3/4" O.D.) SIX	17.822	1	G114607 NA
WASHER, Lock	67/71	V8	17.820	2	G120382
WASHER, Lock	72		17.820	2	G120382
WASHER, Plain	68/69	(7/8" O.D.) SIX (WAT)	17.814	1	400 1116
WASHER, Plain	67/71	V8	17.814	2	400 1102
WASHER, Plain	72		17.814	2	400 1102
NUT, Hexagon	67/71	SIX	17.406	1	G219422 NA

3.020–3 ATTACHING PARTS, Starting Motor To Clutch Housing

BOLT, Hexagon	67/68	SIX (WST)(WOD)	17.038	1	G181377 NA
WASHER, Lock	67/68	SIX (WST)(WOD)	17.820	2	G103321 NA
NUT, Hexagon	67/68	SIX (WST)(WOD)	17.406	1	G103026 NA

3.020–4 ATTACHING PARTS, Starting Motor Terminal To Wire

WASHER, Lock	67/68	SIX (11/16" O.D.)	17.820	1	G120382
WASHER, Lock	67/71	SIX (23/64" O.D.)	17.820	1	G131096 NA
WASHER, Lock	67	V8	17.820	1	G120214
NUT, Jam	67/68	SIX	17.410	1	G124829 NA
NUT, Hexagon	72		17.412	1	G271187 NA
NUT, Hexagon	67/68	SIX (8-32 x 1/8")	17.412	1	G120622 NA
NUT, Hexagon	68/71	01-10-80 (Six-10-32 x 1/8")	17.412	1	G120614 NA
NUT, Hexagon	67	10-50-80 (V8-10-32 x 1/8")	17.412	1	G120614 NA
NUT, Hexagon	67/68	V8 (5/16-24)	17.406	1	G120368

3.020–5 CABLE, Starting Motor To Relay

67	01-10-50-80 (V8)	.....	1	318 6884
68	30-70 (V8)	.....	1	319 0609
69	01 (Six)	.....	1	319 4630
69	01-10 (V8)	.....	1	318 6884
69	10-70 (Six)	.....	1	319 4631
69	30-70 (V8)	.....	1	319 0609

Printed in U.S.A.

69	80 (Six)	.....	1	319 4632	
69	80 (V8)	.....	1	319 4633	
70/71	SIX	.....	1	319 7989	
70/	01 (V8)	.....	1	319 7990	
70/	10-30-70-80 (V8)	.....	1	319 7991	
72	01-40 (Six)	.....	1	319 4632	
72	10-70-80 (Six)	.....	1	321 5510	
72	40 (V8)	.....	1	319 7990	

3.020–6 CLIP, Starting Motor And Battery Cable

67	10-50-80 (Six)	13.440	1	400 0443	

3.020–7 ATTACHING PARTS, Clip To Bracket

WASHER, Lock	67	10-50-80 (Six)	17.820	1	G120380	NA
NUT, Hexagon	67	10-50-80 (Six)	17.412	1	G271172	

3.020–8 WIRE, Starter Solenoid Ground

72	01-40 (WAT-* 3-119)	.....	1	321 5537	

3.022–1 SWITCH, Automatic Transmission Neutral Safety And Back-Up Lamp

67/70	WFGS	.....	1	317 3329	
71	10-80 (WFGS)	.....	1	317 3329	
71	70 (WFGS)	.....	1	321 1603	
67/69	LHD (WCGS)	.....	1	318 9799	
70/71	LHD (WCGS)	.....	1	319 5319	
72	LHD (WAT)	.....	1	812 1146	
67/70	***RHD (WCGS)***	.....	1	320 3293	

3.022–2 ATTACHING PARTS, Switch To Steering Column

SCREW, Tapping	67/69	LHD (WCGS)	3.319	2	400 1805	
***SCREW, Tapping	***67/70***	***RHD (WCGS)***	17.671	2	G274105	NA
SCREW, Hexagon	70	LHD (WCGS)(Used With Nylon Grommet)	.....	1	400 3989	
SCREW, Hexagon	70/	LHD (WCGS)(Used With Metal Grommet)	3.319	2	400 4064	
NUT, Hexagon	67	LHD (WCGS)	3.319	2	400 1821	
WASHER	72	LHD (WCGS)	.....	1	812 1142	

3.022–3 ATTACHING PARTS, Switch To Bracket

BOLT, Hexagon	67/	WFGS (V8)	17.038	2	G181561	NA
SCREW, Tapping.....	71	70 (WFGS-V8)	17.671	2	G274105	NA

3.022–4 ATTACHING PARTS, Switch To Extension Wire

***WASHER, Lock	***67/70***	***RHD***	17.820	2	G131096	NA
***NUT, Hexagon	***67/70***	***RHD***	17.412	2	G120614	NA

3.022–4a ATTACHING PARTS, Switch To Actuating Lever

NUT, Speed	71	70 (WFGS-V8)	7.215	1	400 0459	

3.022–5 WIRE, Neutral Safety Switch To Main Wire Harness

67/68	LHD (WAT-WFGS)	.....	1	318 6835
69	LHD (WAT-WFGS)	.....	1	319 4642
70/71	10-80 (LHD-WAT-WFGS)	.....	1	319 7978
70	10-80 (LHD-WAT-WCGS)	.....	1	319 7993
70/71	30-70 (WFGS)	.....	1	319 8698
72	SIX	.....	1	321 5526
72	304-360	.....	1	321 5527
72	401 (LTCS)	.....	1	321 5526
72	401 (WTCS)	.....	1	321 5527
67/70	***10-80 (RHD-WFGS)***	.....	1	318 6836

ELECTRICAL - INSTRUMENTS

3.022–5a ATTACHING PARTS. Wire To Toeboard

CLIP	71	10-80 (WFGS) *(Use 400 1802)*	4.160	1	15 708
SCREW, Tapping	71	10-80 (WFGS)	15.320	1	400 1801

3.022–5b ATTACHING PARTS. Wire To Transmission Housing

CLIP	72			AR	321 5714

3.022–5c ATTACHING PARTS. Wire To Cylinder Head

CLIP	72	V8	3.610	1	400 0785
BOLT	72	V8	17.038	1	G180118 NA
WASHER, Lock	72	V8	17.820	1	G120382

3.022–6 WIRE, Neutral Safety Switch Extension

67/70	*RHD (WCGS)*			1	318 6861

3.022–6a ATTACHING PARTS, Wire To Terminal

NUT, Hexagon	67/70	RHD (WCGS)	17.412	2	G120614 NA
WASHER, Lock	67/70	RHD (WCGS)	17.820	2	G131096 NA

3.022–7 GROMMET, Neutral Safety Switch (Refer To Group 3.319–5)

3.024–1 RELAY, Starting Motor (Solenoid)(On Wheelhouse)

67/71	V8		1	318 0465
69/71	SIX		1	318 0465
72	LAT		1	318 0465
72	WAT		1	321 5394

3.024–2 ATTACHING PARTS, Relay To Wheelhouse

SCREW, Tapping	67/	V8	17.671	2	G9414012 NA
SCREW, Tapping	69/	SIX	17.671	2	G9414012 NA
WASHER, Lock	67/		17.820	2	G120214
NUT, Hexagon	67/		17.406	2	G120368

3.030 DISTRIBUTOR (For Components Refer To Chart Index Page Gr 3 - 1)

67	(Delco Remy 1110340) SIX (199-LEEP)(232-LSFC)		1	318 0070
67	(Delco Remy 1110366) SIX (WEEP)(232-WSFC)		1	318 2702
68/69	(Delco Remy 1110444) SIX		1	319 0890
70	(Delco Remy 1110481) 199 (01-40)		1	319 7332
70	(Delco Remy 1110444) 232 (01-LDT-WAT-* 3-99)(40-* 3-99)		1	319 0890
70	(Delco Remy 1110481) 232 (01-WDT-* 3-99)(01-LDT-WST-* 3-99)		1	319 7332
70	(Delco Remy 1110481) 232 (10-70-80-* 3-99)		1	319 7332
70	(Delco Remy 1110340) 232 (* 3-100)		1	318 0070
71	(Delco Remy 1110340) SIX		1	318 0070
72	(Delco Remy 1110497) SIX		1	321 5824
67	(Delco Remy 1111106) V8 (WDT)		1	318 2701
68/69	(Delco Remy 1111106) 290 (WDT)		1	318 2701
67/69	(Delco Remy 1111198) 01-30-70 (290-W4B)		1	318 7537
70	(Delco Remy 1112018) 304 (WAT)		1	321 0193
70	(Delco Remy 1111988) 304 (WST)(W4ST)		1	319 7232
71	(Delco Remy 1112028) 304		1	321 1821
72	(Delco Remy 1112111) 304		1	321 5825
72	(Delco Remy 1112179) 304		1	321 7798
68/69	(Delco Remy 1111472) 343 (WDT)		1	319 3144
67	(Delco Remy 1111191) 343 (W4B)		1	318 4797
68	(Delco Remy 1111191) 343 (W4B-* 3-8)		1	318 4797
68	(Delco Remy 1111948) 343 (W4B-* 3-9)		1	319 4669

69	(Delco Remy 1111948) 343 (W4B)	.....	1	319 4669
70	(Delco Remy 1111988) 360 (WDT)	.....	1	319 7232
70	(Delco Remy 1111987) 360 (W4B)	.....	1	319 7233
71	(Delco Remy 1111948) 360	.....	1	319 4669
72	(Delco Remy 1112111) 360	.....	1	321 5825
68/69	(Delco Remy 1111473) 390	.....	1	319 3199
70	(Delco Remy 1111987) 390 (Dual Diaphragm Type)	.....	1	319 7233
70	(Delco Remy 1111948) 390 (Single Diaphgram Type)	.....	1	319 4669
71	(Delco Remy 1111948) 401	.....	1	319 4669
72	(Delco Remy 1112112) 401	.....	1	321 5826
67	***(Delco Remy 1111198) RHD (290-W4B-WAT-LEEP)***	.....	1	318 7537
67	***(American Motors 318 0286) SIX (Canada)***	.....	1	318 0286
67	***(American Motors 318 2862) 290 (Canada)***	.....	1	318 2862
67	***(American Motors 318 2863) 343 (Canada)***	.....	1	318 2863

3.031 CONTACT SET, Ignition

67	SIX (American Motors-Except Canada-Optional With 448 6720)	.....	1	320 4202
67	SIX (Delco-Remy-Except Canada-Optional With 320 4202)	.....	1	448 6720
68/	SIX (American Motors-Optional With 448 6720)	.....	1	320 4202
68/	SIX (Delco-Remy-Optional With 320 4202)	.....	1	448 6720
67	V8 (American Motors-Except Canada-Optional With 448 6721)	.....	1	320 0197
67	V8 (Delco-Remy-Except Canada-Optional With 320 0197)	.....	1	448 6721
68/	V8 (Delco-Remy-Optional With 320 0197)	.....	1	448 6721
68/	V8 (American Motors-Optional With 448 6721)	.....	1	320 0197
67	***SIX (Canada)***	.....	1	320 9165
67	***V8 (Canada)***	.....	1	320 8633

3.032 CAP, Distributor

67	SIX (Except Canada)	.....	1	320 6903
68/69	SIX	.....	1	320 6903
70	SIX (199)	.....	1	448 8091
70	SIX (Except 01-LDT-232-WAT-* 3-99)	.....	1	448 8091
70	SIX (Except 01-LDT-232-WAT-* 3-100)	.....	1	320 6903
70	SIX (01-LDT-232-WAT)	.....	1	320 6903
71	SIX	.....	1	320 6903
72	SIX	.....	1	448 8091
68/	V8	.....	1	320 0192
67	V8 (Except Canada)	.....	1	320 0192
67	***SIX (Canada)***	.....	1	320 9053
67	***V8 (Canada)***	.....	1	320 8613

3.033 CONDENSER, Distributor

67	(Except Canada)	.....	1	320 4584
68/		.....	1	320 4584
67	***SIX (Canada)***	.....	1	320 9088
67	***V8 (Canada)***	.....	1	320 8629

3.035 ROTOR, Distributor

67	SIX (Except Canada)	.....	1	320 4198
68/69	SIX	.....	1	320 4198
70	SIX (199)	.....	1	448 8087
70	SIX (Except 01-LDT-232-WAT-* 3-99)	.....	1	448 8087
70	SIX (Except 01-LDT-232-WAT-* 3-100)	.....	1	320 4198
70	SIX (01-LDT-232-WAT)	.....	1	320 4198
71	SIX	.....	1	320 4198
72	SIX	.....	1	448 8087
68/	V8	.....	1	320 4216
67	V8 (Except Canada)	.....	1	320 4216
67	***SIX (Canada)***	.....	1	320 9056
67	***V8 (Canada)***	.....	1	320 1799

3.039–1 CLAMP, Distributor

67/	SIX	.....	1	317 3227
67/	V8	.....	1	318 0929

3.039–2 ATTACHING PARTS, Clamp To Block

BOLT, Hexagon	67/	SIX	17.038	1	G180079 NA
BOLT, Hexagon	67/	V8	17.038	1	G180123 NA
WASHER, Lock	67/	SIX	17.820	1	G120214
WASHER, Lock	67/69	V8	17.820	1	G120382
WASHER, Lock	70/	V8	10.260	1	400 3803

3.039–3 SEAL, Distributor To Block

67/69	SIX (1-5/8" O.D.)	3.030	1	314 5118
69/	SIX (1-11/32" O.D.)	.....	1	318 1288
67/	V8	.....	1	318 1288

3.042–1 GEAR, Distributor (On Distributor)

67/	SIX	.....	1	320 5387
67/69	V8	.....	1	318 ~~2700~~
70/	V8	.....	1	319 8787

3.042–2 GEAR, Distributor (On Camshaft)

67/68	V8 ***(Use 448 6635)***	.....	1	318 0467
69	V8 (* 3-61) ***(Use 448 6635)***	.....	1	318 0467
69	V8 (* 3-62) ***(Use 448 6635)***	.....	1	319 4007
70/	V8	.....	1	448 6635

3.042–3 ATTACHING PARTS, Gear To Camshaft

KEY, Woodruff	67/	V8	17.344	1	G124546

3.042–4 PIN, Distributor Gear

67/	.....	.....	1	320 4213

3.046 CONTROL, Distributor Vacuum

67	SIX (Except Canada)	.....	1	320 4211
68/69	SIX	.....	1	320 4211
70	SIX (199)	.....	1	448 8072
70	SIX (Except 01-LDT-232-WAT-* 3-99)	.....	1	448 8072
70	SIX (Except -01-LDT-232-WAT-* 3-100)	.....	1	320 4211
70	SIX (01-LDT-232-WAT)	.....	1	320 4211
71	SIX	.....	1	320 4211
72	SIX	.....	1	812 0585
67	290 (Except Canada)	.....	1	320 7411
68/69	290	.....	1	320 7411
70	304 (WST)	.....	1	448 8073
70	304 (WAT)	.....	1	448 8327
67	343 (W4B-Except Canada)	.....	1	320 8005
67	343 (WDT-Except Canada)	.....	1	320 7411
68	343 (W4B-* 3-8)	.....	1	320 8005
68	343 (WDT)(W4B-* 3-9)	.....	1	320 7411
69	343	.....	1	320 7411
70	360	.....	1	448 8073
68/69	390	.....	1	320 8005

70	390 (On Delco 1111948 Distributor)	.....	1	320 7411
70	390 (On Delco 1111987 Distributor)	.....	1	448 8073
71	V8	.....	1	320 7411
72	V8	.....	1	812 0586
67	***SIX (Canada)***	.....	1	320 9168
67	***V8 (Canada)***	.....	1	320 8623

3.048–1 TUBE, Distributor Vacuum Control (Distributor To Carburetor)(Advance)

67	SIX (LDT)	.....	1	317 4331
68	SIX (LDT-* 3-11)	.....	1	319 2470
68	SIX (LDT-WST-* 3-10)(LDT-WOD-* 3-10)	.....	1	319 1523
68	SIX (LDT-WAT-* 3-10)	.....	1	319 1521
69	SIX (LDT)	.....	1	319 4801
70	01-10-70 (Six-LDT)	.....	1	319 8190
68	SIX(WDT)	.....	1	319 1519
69	SIX (WDT)...***(Use 319 5405)***	.....	1	319 4795
70	01-10-80 (Six-WDT-WAT)	.....	1	319 8195
71	SIX (LTCS-* 3-109)	.....	1	319 8190
71/	SIX (LTCS-* 3-110)	.....	AR	320 3440
67	V8 (WDT)	.....	1	318 7414
68	V8 (WDT)...***(Use 319 4153)***	.....	1	319 1934
69	V8 (WDT)	.....	1	319 4153
70	304-360 (WDT)	.....	1	319 4153
67/68	V8 (W4B)	.....	1	318 7413
69	V8 (W4B)	.....	1	319 4133
70	360 (W4B-* 3-87)	.....	1	319 8137
70	390 (* 3-87)	.....	1	319 8137
70	390 (W4ST) ...(Less Cold Air Induction Package)	.....	1	319 8505
71/	V8 (WDT-WST-LTCS)	.....	1	319 4153
71	V8 (W4B-WST-LTCS)	.....	1	319 8137
71/	V8 (W4B-W4ST-LTCS)	.....	1	319 8137

3.048–1a TUBE, Distributor Vacuum Control (Distributor To Carburetor)(Retard)

70	SIX	.....	1	319 8207
70	V8 (WDT)	.....	1	319 8108
70	V8 (W4B)	.....	1	319 8109

3.048–1b TUBE, Distributor Vacuum Control (Distributor To Decel Valve)(Refer To Group 3.049)

3.048–1c TUBE, Distributor Vacuum Control (Distributor To Solenoid-WTCS)(Refer To Group 3.051)

3.048–2 ATTACHING PARTS, Tube To Gasoline Tube

CLIP, "C" Shaped	67/	.....	.....	AR	313 7319
CLIP, "S" Shaped	67/	SIX	23.028	AR	400 0021

3.048–3 ATTACHING PARTS, Tube To Carburetor

CONNECTOR	67	343	17.160	1	G137404
CONNECTOR	70	SIX	17.160	1	G137404
ELBOW	67	SIX (232-45 Deg. Angle)	17.216	1	G127829
ELBOW	67	SIX (90 Deg. Angle)	17.218	1	G137420
ELBOW	68	SIX (232-45 Deg. Angle-* 3-10)	17.216	1	G127829
ELBOW	68	SIX (90 Deg. Angle-* 3-10)	17.218	1	G137420
NIPPLE	68	SIX (LDT-* 3-11)	.....	1	319 3014
NIPPLE	69	SIX	.....	1	319 3014
NIPPLE	70	232 (WDT-WAT)	.....	1	319 3014

3.048–3a ATTACHING PARTS, Tube To Rocker Cover

CLIP, Closed	70	304-360 (WDT)	.....	1	319 8113
CLIP, Open "J"	70	304-360 (WDT)	.....	1	400 4078
CLIP, Closed	70	304-360 (WDT)	.....	1	400 1802

3.048–3b ATTACHING PARTS, Tube To Coil Bracket

CLIP, Closed	70	(360-W4B)(390)	17.134	1	G427026 NA

3.048–4 HOSE, Tube To Carburetor (Bulk - Order Per Foot)

67/		5.260	AR	320 3440

3.048–4a HOSE, Carburetor To Distributor Vacuum Advance (Bulk - Order Per Foot)

72	SIX	5.260	AR	320 3440

3.048–5 HOSE, Tube To Distributor Vacuum Control (Bulk - Order Per Foot)

67/		5.260	AR	320 3440

3.048–6 TEE, Distributor Vacuum Control To Carburetor And Fuel Vapor Canister

71/	V8 (WAT-LTCS)	3.049	1	321 0891

3.048–7 HOSE, Tee To Distributor Control, Carburetor And Canister (Bulk - Order Per Foot)

71/	V8 (WAT-LTCS)	5.260	AR	320 3440

3.049–1 VALVE, Distributor Vacuum Decel

70	SIX (WST)	.....	1	319 8319
70	390 (W4ST)	.....	1	319 8515

3.049–3 HOSE, Decel Valve To Carburetor

70	(5/32" I.D.)	5.260	AR	320 3440

3.049–4 HOSE, Decel Valve To Tube

70	(5/32" I.D.)	5.260	AR	320 3440

3.049–5 HOSE, Decel Valve To Intake Manifold

70	(7/32" I.D.) ***(Use 320 6752)***	5.260	AR	320 3865

3.049–6 ELBOW, Decel Valve Hose To Intake Manifold

70	SIX (WST)	.....	1	319 8347
70	390 (W4ST) ...(Less Cold Air Induction Package)	.....	1	319 8347

3.049–7 TUBE, Decel Valve To Carburetor

70	80 (Six-WDT-WST)	.....	1	319 8316
70	390 (W4ST)	.....	1	319 8504

3.049–8 TUBE, Decel Valve To Distributor (Advance)

70	SIX (WST)	.....	1	319 8201

3.051–4 ATTACHING PARTS, Harness To Clutch Housing (WTCS)

CLIP	71	WST	3.610	3	400 0785

3.051–4a ATTACHING PARTS, Harness To Converter Housing (WTCS)

CLIP	71	WAT	3.610	1	400 0785

3.051–4b ATTACHING PARTS, Harness To Transmission Filler Tube (WTCS)

CLIP	71	WAT	3.312	1	79 394

3.051–4c ATTACHING PARTS, Harness To Transmission Case (Rear)(WTCS)

CLIP	71	WAT	.....	1	318 6497
CLIP	72	(WST–WTCS)	.....	1	400 4407

3.051–4d ATTACHING PARTS, Harness To Transmission Cooler Tubes (WTCS)

CLIP	71	WAT	.....	1	63 045

3.051–5 SWITCH, Temperature Override (WTCS)

71	WTCS		.....	1	321 1701
72	WTCS		.....	1	321 5536

3.051–6 ATTACHING PARTS, Switch To Radiator Baffle (WTCS)

SCREW, Tapping	71	01–40 (304–WTCS)	17.671	1	G9421073 NA
SCREW, Tapping	71	10–70–80 (304–WTCS) ***(Use 812 0054)***	17.671	1	G274773
SCREW, Tapping	72	WTCS	17.671	1	G9421073

3.051–7 SOLENOID, Distributor Vacuum Control (Valve)(WTCS)

71/	WTCS		.....	1	321 1667

3.051–8 ATTACHING PARTS, Solenoid To Bracket (WTCS)

BOLT, Hexagon	71/	SIX (WTS)	17.038	1	G180077 NA
WASHER, Lock	71/	SIX (WTCS)	17.406	1	G120214
NUT, Hexagon	71/	SIX (WTCS) ***(Use 400 2117)***	17.820	1	G120376 NA
SCREW, Machine	72	SIX (WTS)	17.629	1	G273867

3.051–9 BRACKET, Distributor Vacuum Control Solenoid (WTCS)

71/	SIX (WTCS)		.....	1	321 1426

3.051–10 HOSE, Solenoid To Distributor, Tube, Carburetor Or Tee (WTCS)

72	SIX (WTCS)		5.260	AR	320 3440
71/	304 (WTCS)		5.260	AR	320 3440

3.051–11 TUBE, Solenoid To Distributor Vacuum Control (WTCS)

71	SIX (WTCS)		.....	1	321 1615

3.051–12 HOSE, Tube To Distributor Vacuum Control (WTCS)

71/	SIX (WTCS)		5.260	AR	320 3440

Printed in U.S.A.

ELECTRICAL - INSTRUMENTS

3.051–13 TEE, Manifold Vacuum To Solenoid And Fuel Vapor Storage Canister (WTCS)

71/	V8 (WAT-WTCS)	3.049	1	321 0891	

3.051–14 HOSE, Tee To Carburetor, Solenoid And Canister (WTCS)

71/	V8 (WAT-WTCS)	5.260	AR	320 3440	

3.056–1 COIL, Ignition

67	(Stamped American Motors) SIX...(Less Clamp) ***(Use 320 8862)***	.....	1	320 9077	
68/	(Stamped American Motors) SIX...(Less Clamp) ***(Use 320 8863)***	.....	1	320 2197	
67/	(Stamped American Motors) V8...(Less Bracket And Clamp) ***(Use 320 8863)***	.....	1	320 2197	
67	(Stamped Delco-Remy) SIX...(Incl. Clamp) ***(Use 320 8860)***	.....	1	317 0249	
68/	(Stamped Delco-Remy) SIX...(Less Clamp)	.....	1	320 8861	
67/	(Stamped Delco-Remy) V8...(Less Bracket And Clamp) ***(Use 320 8861)***	.....	1	320 8343	

3.056–2 ATTACHING PARTS, Ignition Coil Clamp To Cylinder Head

SCREW, Machine	67/69	SIX	17.629	2	G273890	NA
BOLT, Hexagon	70	SIX	2.020	2	400 3847	
BOLT, Hexagon	71/	SIX	17.629	2	G273867	

3.056–3 ATTACHING PARTS, Ignition Coil Clamp To Bracket

SCREW, Machine	67/68	V8	17.629	2	G274893	NA
SCREW, Hexagon	70/	V8	17.671	2	G271444	NA
BOLT, Hexagon	69/70	V8	2.020	2	400 3847	
WASHER, Lock	67/70	V8	17.820	2	G120214	
NUT, Hexagon	67/68	V8	17.406	2	G120368	
NUT, Hexagon	69/70	V8 ***(Use 400 2117)***	17.406	2	G120376	

3.056–4 WIRE, Ignition Coil To Voltage Regulator

67/68	***10-80 (Six-* 3-4)***	.....	1	318 1019	

3.056–5 WIRE, Ignition Coil To Capacitor (With Suppression Kit)

68/70	30–70	.....	1	318 5783	
71/		.....	1	318 5783	
67/70	**01-10-80 (* 3-69)**	.....	1	318 5783	

3.056–6 CLAMP, Ignition Coil (Fits Around Coil)

67/		.....	1	320 2198	

3.060–1 BRACKET, Ignition Coil

67/70	V8 (Bolts Fasten Clamp)...(Incl. Ignition Wire Separator)	.....	1	318 7836	
70/	V8 (Screws Fasten Clamp)...(Incl. Ignition Wire Separator)	.....	1	321 0425	

3.060–2 ATTACHING PARTS, Bracket To Manifold

BOLT, Hexagon	67/	V8	17.038	1	G180120	NA
WASHER, Lock	67/	V8	10.260	1	400 3803	
WASHER, Plain	67/	V8	10.260	1	400 3808	

3.080 BATTERY (Refer To Accessory Price List)

3.082–1 BOX, Battery (Tray)

67	01 (Six)	.....	1	316 9953
67	01 (V8)	.....	1	317 9305
68	01 (Six-LAC)	.....	1	316 9953
68	01 (Six-WAC)(V8) ***(Use 319 4127)***	.....	1	317 9305
69	01 (Six-LAC)	.....	1	319 4128
69	01 (Six-WAC)(V8)	.....	1	319 4127
70/71	01-40	.....	1	319 8782
72	01-40 (Six-LPS)	.....	1	319 8782
72	01-40 (V8)	.....	1	319 8782
72	01-40 (Six-WPS)	.....	1	321 3643
67	10-50-30 (Six)	.....	1	316 6354
67	10-50-80 (V8)	.....	1	318 5170
68	10-80 (Six-LAC)	.....	1	316 6354
68	10-80 (Six-WAC)(V8)	.....	1	318 5170
69	10 (Six-LAC)	.....	1	319 4130
69	10 (Six-WAC)(V8)	.....	1	319 4129
70	10 (Six)	.....	1	319 5382
70	10 (V8)	.....	1	319 5381
71	10 (Six)	.....	1	319 5379
72	10 (Six-LPS)	.....	1	319 5378
72	10 (Six-WPS)	.....	1	321 3879
71/	10 (V8)	.....	1	319 5378
68	30-70 (Six-WAC)(V8) ***(Use 319 4123)***	.....	1	318 9503
69	30-70 (Six-WAC)(V8)	.....	1	319 4123
70/71	30-70 (V8)	.....	1	319 5420
68	70 (Six-LAC)	.....	1	318 9782
69	70 (Six-LAC)	.....	1	319 4125
70/71	70 (Six)	.....	1	319 5421
72	70	.....	1	319 5420
69	80 (Six)	.....	1	319 4126
70/71	80 (Six)	.....	1	319 5379
69	80 (V8)	.....	1	319 4124
70/71	80 (V8)	.....	1	319 5378
72	80	.....	1	319 5378

3.082–2 ATTACHING PARTS, Battery Box To Wheelhouse

BOLT, Hexagon	69		2.020	4	400 3069
SCREW, Hexagon	69	01-30-70	12.060	4	400 3872
SCREW, Hexagon	70/	10-80	12.060	AR	400 3872
SCREW, Machine	67/68		23.020	4	400 0608
SCREW, Machine	71	01-70	17.629	4	G273573
SCREW, Machine	***69***	***10 (Canada)***	23.020	4	400 0608
NUT, Grip	69/		.....	AR	400 3041
NUT, Speed	67/68		.....	AR	400 3812
NUT, Speed	***69***	***10 (Canada)***	.....	4	400 3812
NUT, Hexagon	70		3.303	3	400 1457
NUT, Hexagon	71/	01-10-80 ***(Use 400 1457)***	11.201	3	400 3954

3.082–3 ATTACHING PARTS, Battery Box To Radiator Baffle

NUT, Grip	69	(Six-WAC)(V8)	.....	4	400 3041

3.082–4 REINFORCEMENT, Front Wheelhouse (Battery Tray Mounting)

70/	01-30	.....	1	319 8744
70	10 (Six)	.....	1	319 8741
70	10 (V8)	.....	1	319 8762
71/	10-80	.....	1	319 8742
72	40-70	.....	1	319 8744
70/71	70 (Six)	.....	1	319 8750
70/71	70 (V8)	.....	1	319 8744
70	80	.....	1	319 8743

ELECTRICAL - INSTRUMENTS

3.084–1 CLAMP, Battery Hold Down

67/68		.....		1	316 3463
69	(For 50 Amp. Battery)	.....		1	319 5104
69	(For 60 Or 70 Amp. Battery)	.....		1	319 5105
70/71		.....		1	319 2325
72	01–40 (Six–LPS)	.....		1	319 2325
72	01–40 (Six–WPS)	.....		1	321 3639
72	01–40 (V8)	.....		1	319 2325
72	10–70–80	.....		1	319 2325

3.084–2 ATTACHING PARTS, Clamp To Battery Box

BOLT, Hexagon	70/71	.....	10.260	1	400 3930
BOLT, Hexagon	72	01–40 (Six–LPS)	10.260	1	400 3930
BOLT, Hexagon	72	01–40 (V8)	10.260	1	400 3930
BOLT, Hexagon	72	10–70–80	10.260	1	400 3930

3.095–1 ROD, Battery Hold Down Clamp

67/68		.....	.....	2	316 3434
69		.....	.....	2	319 4087
72	01–40 (Six–WPS–4–3/8")	.....	4.152	1	316 6804
72	01–40 (Six–WPS–8–3/16")	.....	4.152	1	319 8330

3.095–2 ATTACHING PARTS, Rod To Battery Box

NUT, Hexagon	67/68	.....	2[illegible]38	2	400 1930
NUT, Hexagon	69	01–30–70–80	2[illegible]38	2	400 1930
NUT, Hexagon	69	10 (Six–WAC–Front)	[illegible]	1	319 6699
NUT, Hexagon	69	10 (V8–Front)	[illegible]	1	319 6699
NUT, Hexagon	69	10 (Rear)	28.[illegible]8	1	400 1930
NUT, Hexagon	72	01–40 (Six–WPS)	17.[illegible]7	2	G9415152 NA
WASHER, Lock	69	10 (Six–WAC–Front)	17.8[illegible]2	1	G138485 NA
WASHER, Lock	69	10 (V8–Front)	17.8[illegible]2	1	G138485 NA
WASHER, Plain	67/69	.....	17.8[illegible]4	2	400 1093

3.105–1 HORN, Dual

67/69	(Low Tone) 01 (* 3–12)	.....	.....	1	318 6598
70	(Low Tone) 01–40 (Mounted Behind Grille–Left Side)	.....	***(Use 319 6279)***	1	319 6278
70	(Low Tone) 01–40 (Mounted Behind Bumper Bar–Left Side)	.....	***(Use 321 0157)***	1	321 0182
71/	(Low Tone) 01–40	.....	.....	1	321 0157
67/70	(Low Tone) 10–30–50–70–80 (* 3–13)	.....	.....	1	318 8773
67/70	(Low Tone) 10–30–50–70–80 (* 3–14)	.....	.....	1	318 2899
71/	(Low Tone) 10–70–80	.....	.....	1	318 8773
67/69	(High Tone) 01 (* 3–12)	.....	.....	1	318 6597
70	(High Tone) 01–40 (Mounted Behind Grille–Right Side)	.....	***(Use 319 6281)***	1	319 6280
70	(High Tone) 01–40 (Mounted Behind Bumper Bar–Right Side)	.....	***(Use 321 0158)***	1	321 0181
71/	(High Tone) 01–40	.....	.....	1	321 0158
70	(High Tone) 10 (* 3–12)	.....	***(Use 319 6281)***	1	319 6280
67/70	(High Tone) 10–30–50–70–80 (* 3–13)	.....	.....	1	318 8771
67/70	(High Tone) 10–30–50–70–80 (* 3–14)	.....	***(Use 448 9420)***	1	318 2900
71/	(High Tone) 10–70–80	.....	.....	1	318 8771

3.105–2 HORN, Single (Low Tone)

67/70	01 (Mounted Behind Grille–Left Side)	.....	.....	1	318 6598
70	01–40 (Mounted Behind Bumper Bar–Left Side)	.....	.....	1	321 0157
71/	01–40	.....	.....	1	321 0157
67/70	10 (* 3–13)	.....	.....	1	318 8773
67/70	10 (* 3–14)	.....	.....	1	318 2899

ELECTRICAL - INSTRUMENTS

3.105–3 ATTACHING PARTS, Horn To Body

SCREW, Tapping	67/70	(5/16-24 x 3/4)	22.056	AR	400 0032
SCREW, Hexagon	69/70	(5/16-18 x 3/4)	.....	AR	400 3875
SCREW, Hexagon	71/	10-70-80 (5/16-18 x 3/4)	.....	2	400 3875
WASHER, Plain	67/68	01-10-80	17.814	AR	400 1093

3.105–4 ATTACHING PARTS, Horn To Bumper Bar

SCREW, Machine	70/	01-40	17.598	AR	G160679 NA

3.105–5 WIRE, Horn To Engine Compartment Wire Harness

70	01-40 (Horn Mounted Behind Bumper)	.....	AR	321 0204
71/	01-40 (Used With Dual Horns)	.....	1	321 1909

3.105–6 ATTACHING PARTS, Wire To Baffle

CLIP	70/	01-40	3.615	AR	310 8634

3.125–1 RELAY, Horn

67/		.....	1	318 6899

3.125–2 ATTACHING PARTS, Relay To Panel

SCREW, Tapping	67/		17.671	2	400 1042

3.130–1 SWITCH, Ignition

67	01 (LHD)	*(Use 448 5720)*	.....	1	~~357 6968~~
67	10-50-80	*(Use 448 5720)*	.....	1	~~357 6968~~
68	(* 3-17)	*(Use 448 5720)*	.....	1	~~357 6968~~
68	(* 3-18)	*(Use 448 5720)*	.....	1	~~362 3164~~
69	01-30-70		.....	1	448 5720
69	10-80		.....	1	361 6830
70/	LHD (LAW)		.....	1	319 7599
70/	LHD (WAW)		.....	1	319 7598
67	***01 (RHD)***		.....	1	358 4264
70	***10-80 (RHD)***		.....	1	448 5720

3.130–2 BRACKET, Ignition Switch Mounting

67/68	10-50-80	.....	1	357 6967
68/69	30-70	.....	1	360 1623
69/70	***10-80 (RHD)***	....	1	357 6967

3.130–3 ESCUTCHEON, Starter And Ignition Switch

67	01	.....	1	353 0329
68/69	01 (LHD)	.....	1	359 8543
67/68	10-30-50-70-80	.....	1	351 6585
69	10-80 (LHD)	.....	1	361 4465
69	30-70	.....	1	351 6585
68/69	***01 (RHD)***	.....	1	353 0329
69/70	***10-80 (RHD)***	.....	1	351 6585

3.130–4 WASHER, Starter And Ignition Switch Mounting

69	10-80	.....	1	361 4467

Printed in U.S.A.

ELECTRICAL - INSTRUMENTS

3.130–5 TERMINAL, Ignition Switch Ground

67/70	*10-80 (RHD)*	.....	1	318	6887

3.130–6 HOUSING, Ignition Switch Mounting

69	10-80 (LHD)	.....	1	361	4911

3.130–7 ATTACHING PARTS, Ignition Switch To Housing

SCREW, Hexagon	69	10-80 (8-18 x 5/8)	15.320	4	400	2309
SCREW, Machine	69	10-80 (10-16 x 5/8)	2.050	4	400	2334

3.130–8 ATTACHING PARTS, Ignition Switch To Column

70/	LHD	.....	2	448	7772

3.130–9 SECTOR, Ignition Switch Actuator

70	LHD (LAW) ..... *(Use 812 0097)*	.....	1	448	7771
70/	LHD (WAW)	.....	1	448	7826
71	LHD (LAW-* 3-94)	.....	1	448	9035
71	LHD (LAW-* 3-93) ..... *(Use 812 0097)*	.....	1	448	7771
72	LHD (LAW)	.....	1	812	0097

3.130–10 WIRE, Ignition Switch To Circuit Breaker (With Electric Tailgate Window)

71/	18-88 (LER)	.....	1	321	5580
71/	10-80 (WER)	.....	1	321	5581

3.130–11 WIRE, Ignition Switch To Circuit Breaker Throttle Solenoid

71/	10-80 (360-WDT-WER)	.....	1	321	5582
71	01-40-70 (WFGS-LAW-* 3-96)	.....	1	812	0183

3.131 ACTUATOR, Ignition Switch (Rod)

70/	LHD (WAT-WCGS-LAW)	.....	1	448	7782
70	LHD (WAW) ..... *(Use 448 8352)*	.....	1	448	7802
71/	LHD (WAW)	.....	1	448	8352
71	01-10-80 (LHD-LAW-WFGS-* 3-96)	.....	1	812	0183
72	01-40-70 (LHD-LAW-WFGS)	.....	1	812	0183

3.135–1 CYLINDER, Ignition Switch Lock (Incl. Keys)(Regular)

67/68	.....	.....	1	448	4695
69	01-30-70	.....	1	448	4695
69	10-80	.....	1	448	6840

3.135–2 CYLINDER, Ignition Switch Lock (Specify Key No.)

67/68	...(Incl. Coded Keys)	.....	1	448	4735
69	01-30-70 ...(Incl. Coded Keys)	.....	1	448	4735
69	10-80 ...(Less Keys)	.....	1	448	6841

3.135–2a CYLINDER, Ignition Switch Lock (Uncoded)(Less Tumblers, Springs And Retainer)

70	LHD (* 3-91)	.....	1	448	7658
70	LHD (* 3-92) ...(Incl. Case, Ring And Washer)	.....	1	448	9225
71/	LHD ...(Incl. Case, Ring And Washer)	.....	1	812	0081
70	*10-80 (RHD)*	.....	1	448	4735

3.135–3 KEY, Ignition Switch Lock Cylinder (Blank)

67/69		23.085	2	344 5763
70	LHD	23.038	2	363 6394
71/	LHD	23.085	2	364 1914
70	***10-80 (RHD)***	23.085	1	344 5763

3.135–4 KEY, Ignition Switch Lock Cylinder (Coded)(Specify Key No.)

67/69		23.085	2	447 8592
70/	LHD	23.038	2	448 7667
70	***10-80 (RHD)***	23.085	2	447 8592

3.135–5 CASE, Ignition Cylinder

70	LHD (* 3-91)	.....	1	448 7657
70	LHD (* 3-92)...(Incl. Cylinder, Ring And Washer) ***(Use 812 0081)***	.....	1	448 9225
71/	LHD...(Incl. Cylinder, Ring And Washer)	.....	1	812 0081

3.135–6 RING, Ignition Cylinder Anti-Theft

70/	LHD	.....	1	448 7659

3.135–7 WASHER, Ignition Cylinder Wave

70/	LHD	.....	1	448 7660

3.135–8 TUMBLER, Ignition Cylinder

67/69	(No. 1:* 3-134)	.....	AR	812 2876
70/	(No. 1) LHD	.....	AR	448 7670
67/69	(No. 2:* 3-134)	.....	AR	812 3183
70/	(No. 2) LHD	.....	AR	448 7671
67/69	(No. 3:* 3-134)	.....	AR	812 3184
70/	(No. 3) LHD	.....	AR	448 7672
67/69	(No. 4:* 3-134)	.....	AR	812 3185
70/	(No. 4) LHD	.....	AR	448 7673
67/69	(No. 5:* 3-134)	.....	AR	812 3186
70/	(No. 5) LHD	.....	AR	448 7674

3.135–9 RETAINER, Ignition Cylinder Tumblers

67/69	(* 3-134)	.....	1	812 2875
70/	LHD	.....	1	448 7675

3.135–10 SPRING, Ignition Cylinder Tumblers

67/69	(* 3-134)	.....	5	812 2881
70/	LHD	.....	5	448 7676

3.140–1 BUZZER, Headlamp Warning and Ignition Key Alarm

70	LHD (4 Wires) ***(Ord. 321 1142)***	.....	1	319 8385
70	LHD (3 Wires)	.....	1	321 1142
71/	LHD	.....	1	321 1142

3.140–2 ATTACHING PARTS, Buzzer To Instrument Panel

SCREW, Tapping 70/		17.660	1	G9414723 NA
NUT, Spring 70		23.055	1	400 1932

3.140–3 SWITCH, Ignition Key Alarm

70	LHD (LAW-* 3-91)	.....	1	319 7623
70/71	LHD (LAW-* 3-92)	.....	1	321 1423
72	LHD (LAW)	.....	1	321 1423
70	LHD (WAW-* 3-91)	.....	1	319 7622
70/71	LHD (WAW-* 3-92)	.....	1	321 1424
72	LHD (WAW)	.....	1	321 1424

ELECTRICAL - INSTRUMENTS

3.140–4 CLIP, Alarm Switch Retaining

70/	LHD (LAW)	.....	1	448 7713
70/	LHD (WAW)	.....	1	448 7853

3.140–5 WIRE, Headlamp Warning And Key Alarm Buzzer

70	LHD (Brown And White Wires)	3.145	1	319 8604
70/	LHD (Single Brown Wire)	.....	1	321 1141

3.140–6 TERMINAL, Adapter (Refer To Group 3.155–5)

3.145–1 SWITCH, Lighting (Headlamps And Instruments)

67/69	01–10–50–80...(Incl. Reostat)	***(Use 360 1624)***	.....	1	354 2698
70/	01–40...(Incl. Reostat)	.....	1	360 1624
70/	10–80...(Incl. Reostat)	***(Use 360 1624)***	.....	1	354 2698
68/70	30–70...(Incl. Reostat)	.....	1	360 1624
71/	70	.....	1	363 2640

3.145–2 ATTACHING PARTS, Switch To Shaft

NUT, Sleeve	67	01	.....	1	350 0725
NUT, Sleeve	68	01 (LHD–* 3–15)	.....	1	359 8542
NUT, Sleeve	68	01 (LHD–* 3–16)	.....	1	350 0725
NUT, Sleeve	69	01	.....	1	350 0725
NUT, Sleeve	70	01–40	***(Use 364 6554)***	.....	1	363 5731
NUT, Sleeve	71	01–40 (Chrome Finish)	***(Use 364 6554)***	.....	1	363 5731
NUT, Sleeve	71/	01–40 (Black Finish)	.....	1	364 6554
NUT, Sleeve	70/	10–80	.....	1	357 6973
NUT, Sleeve	67/69	10–30–50–70–80	.....	1	357 6973
NUT, Sleeve	70	30–70	.....	1	363 1191
NUT, Sleeve	***68/69***	***01 (RHD)***	.....	1	350 0725

3.145–2a ATTACHING PARTS, Switch To Instrument Panel

SCREW, Tapping	71/	70	22.066	2	400 2305

3.145–3 ESCUTCHEON, Headlamp Switch (Also Refer To Group 22.100 Lens Or Overlay)

67/69	01	.....	1	350 9537
68/69	30–70	.....	1	360 1627
71	(Black) 70	.....	1	363 3875
71	(Blue) 70	.....	1	363 3876
71	(Green) 70	.....	1	363 3877
71	(Red) 70	.....	1	363 3878
72	(Black) 70 (* 3–121)	.....	1	365 1200
72	(Blue) 70 (* 3–121)	.....	1	365 1201
72	(Green) 70 (* 3–121)	.....	1	365 1202
72	(Tan) 70 (* 3–121)	.....	1	365 1204
67/70	***10–80 (RHD)***	.....	1	357 6507

3.145–4 TERMINAL, Headlamp Switch Ground

67/70	***10–80 (RHD)***	.....	1	318 6885

3.145–5 RHEOSTAT, Headlamp Switch

67/	01–40	.....	1	320 7923
68/70	30–70	.....	1	320 7923
67/	10–50–80 (White Ceramic)	.....	1	320 7923
69/	10–80 (Grey Ceramic)	.....	1	812 0161

3.145–6 BUZZER, Headlamp Warning (For 1970 Models Refer To Group 3.140–1)

68/69	LHD	.....	1	319 1584

3.145–7 ATTACHING PARTS, Headlamp Warning Buzzer

SCREW, Tapping.....	68/69 LHD	17.660	1	G161895

3.145–8 SWITCH, Courtesy (Door Operated)

67/69		.....	2	320 9716
70/	(Left-Front) LHD	.....	1	363 1896
70	***(Left) RHD***	.....	1	320 9716
70/	(Right-Front-* 3-130)	.....	1	320 9716
72	(Right-Front-* 3-131)	.....	1	366 2814
70/	(Rear Doors-* 3-130)	.....	AR	320 9716
72	(Rear Doors-* 3-131)	.....	AR	366 2814

3.145–9 SWITCH, Courtesy (On Instrument Panel)

67/68		.....	1	358 4894

3.145–10 ATTACHING PARTS, Courtesy Lamp Switch To Instrument Panel

NUT, Hexagon.....	67/68	.....	1	400 1797

3.145–11 STRAP, Lighting Switch Ground To Wiper Switch

68/69	30-70 (WEW)	22.038	1	362 3156
70/	01-40 (WEW)	22.038	1	363 5419
70	30-70	.....	1	364 1172

3.146–1 SWITCH, Instrument Panel Lights

71/	70	.....	1	363 3941

3.146–2 ATTACHING PARTS, Switch To Instrument Panel

SCREW, Tapping.....	71/ 70	22.066	2	400 2305

3.146–3 ESCUTCHEON, Panel Lights Switch

71	(Black) 70	.....	1	363 3880
71	(Blue) 70	.....	1	363 3881
71	(Green) 70	.....	1	363 3882
71	(Red) 70	.....	1	363 3883
72	(Black) 70 (* 3-121)	.....	1	365 1205
72	(Blue) 70 (* 3-121)	.....	1	365 1206
72	(Green) 70 (* 3-121)	.....	1	365 1207
72	(Tan) 70 (* 3-121)	.....	1	365 1209

3.147–1 DELAY SWITCH, Headlamp Turn-off

71/	10-70-80	.....	1	321 2234

3.147–2 ATTACHING PARTS, Delay Switch To Panel

SCREW, Tapping.....	71/ 10-70-80	17.660	2	G163158 NA

3.147–3 HARNESS, Headlamp Delay Switch Turn-off Wire

71/	10-70-80	.....	1	321 1571

ELECTRICAL – INSTRUMENTS

3.150 KNOB, Lighting Switch (Includes Shaft)

67	01	.....	1	350 9449
68	01 (Chrome)	.....	1	360 0150
68	01 (Black-* 3-15)	.....	1	359 9968
68	01 (Black-* 3-16)	.....	1	362 3949
69	01	.....	1	362 3949
70	01-40	.....	1	361 6464
71	01-40 (* 3-97)	.....	1	361 6464
71/	01-40 (* 3-98)	.....	1	364 6760
67	10-50-80	.....	1	357 6965
68/71	10-80	.....	1	360 8546
72	10-80	.....	1	364 5902
68	30-70 (Black)	.....	1	360 1626
68/69	30-70 (Chrome)	.....	1	360 2975
70	30-70	.....	1	361 6273
71	70 ..(Less Shaft)	.....	1	363 2660
72	70	.....	1	364 6912

3.154–1 BREAKER, Circuit

67/	(20 Amp.) 10-50-80 (WER)(1 Req. For Side Window)(2 Req. For Tailgate)	.....	AR	318 6892
67	(25 Amp.) 08	23.325	2	318 1126
67/68	(30 Amp.) 07-17-87 (LHD-WPT)	23.325	1	318 1127

3.154–2 ATTACHING PARTS, Circuit Breaker To Panel

SCREW, Machine	69/	10-80 (WER)(1 Req. For Side Window)(2 Req. For Tailgate)	17.598	AR	G453048 NA
WASHER, Lock	69/	10-80 (WER)(1 Req. For Side Window)(2 Req. For Tailgate)	17.820	AR	G131096 NA
NUT Hexagon	69/	10-80 (WER)(1 Req. For Side Window)(2 Req. For Tailgate)	17.412	AR	G120614 NA

3.155–1 PANEL, Fuse (Less Fuses)

67/68	.....	.....	1	318 6900
69	.....	.....	1	319 4650
70/71	.....	.....	1	319 7999
72	.....	.....	1	321 5529

3.155–2 ATTACHING PARTS, Fuse Panel To Dash Panel

SCREW, Tapping	67/	17.671	2	400 0478

3.155–3 BRACKET, Fuse Panel

67/	01-30-50-70	.....	1	356 2547
67/	10-80 (LHD)	.....	1	356 2547
69/70	***10-80 (RHD)***	.....	1	356 2547

3.155–4 FUSE

67/	(4 Amp.)	17.300	1	G147682
67/68	(9 Amp.)	17.300	4	G147684
69	(9 Amp.)	17.300	2	G147684
70/	(9 Amp.)	17.300	1	G147684
69	(14 Amp.)	17.300	2	G147685
70/	(14 Amp.)	17.300	1	G147685
67/69	(20 Amp.)	17.300	1	G106653
70/	(20 Amp.)	17.300	3	G106653
67/70	(30 Amp.)	17.300	1	G120114

ELECTRICAL – INSTRUMENTS

3.155–5 TERMINAL, Adapter

70	10-30-70-80	3.550	1	315 9556	
71/	10-80	3.550	1	315 9556	

3.158–1 SWITCH, Headlamp Dimmer

67/68	LHD	.....	1	316 0926
69/		.....	1	316 0926
67/68	*RHD*	.....	1	359 8001

3.158–2 ATTACHING PARTS, Switch To Toeboard

SCREW, Tapping	67/70	01-30-40-70	17.660	2	G161901
SCREW, Tapping	71/	01-40-70	17.660	2	G9414723 NA
SCREW, Tapping	67/70	10-50-80	17.660	2	G443946 NA
SCREW, Tapping	71/	10-80	17.660	2	G9421151 NA

3.158–3 HANDLE, Instrument Panel Headlamp Dimmer Switch

67/68	*RHD*	.....	1	359 8002

3.158–4 NUT, Instrument Panel Headlamp Dimmer Switch

67/68	*(Round) RHD*	.....	1	320 8096
67/68	*(Hexagon) RHD*	.....	1	320 8097

3.163–1 HARNESS, Body Wire (Refer To Group 3.165 For Chassis Main Wire Harness And Group 3.218 For Connectors And Blocks)

67/69	05-06	.....	1	318 6813
70	05-06	.....	1	319 7964
71	05-06	.....	1	321 1562
72	05-06 (* 3-117)	.....	1	321 3638
72	05-06 (* 3-118)	.....	1	321 7226
67	07	.....	1	318 6815
67	08 (WER)	.....	1	318 6817
67/69	08 (LER)	.....	1	318 6816
71	08	.....	1	321 1563
72	08 (* 3-117)	.....	1	321 3637
72	08 (* 3-118)	.....	1	321 7227
67/69	09	.....	1	318 6814
67	15-85	.....	1	318 6818
68	15 (* 3-56)	.....	1	319 1635
68	15 (* 3-57)	.....	1	319 1636
69	15-19	.....	1	319 4614
70	15-19 (* 3-89)	.....	1	319 7968
70	15-19 (* 3-90)	.....	1	321 0924
71/	15-19	.....	1	321 1566
67	16-19-86-89	.....	1	318 6819
67	17-87	.....	1	318 6820
68	17	.....	1	319 1637
67	18-88 (LER)	.....	1	318 6821
67	18-88 (WER)	.....	1	318 6822
68	18-88 (LER)	.....	1	319 0646
68	18-88 (WER)	.....	1	319 0647
69	18-88 (LER)	.....	1	319 4616
69	18-88 (WER)	.....	1	319 4617
70	18-88 (LER)	.....	1	319 7969
70	18-88 (WER)	.....	1	319 7970
71/	18-88 (LER)	.....	1	321 1567
71	18-88 (WER)	.....	1	321 1568
72	18-88 (WER)	.....	1	321 5540
68	19	.....	1	319 1636

68/69	30	.....	1	319 0633	
70	30	.....	1	319 7966	
70	40	.....	1	319 7965	
71	40	.....	1	321 1564	
72	40	.....	1	321 3636	
67	50	.....	1	318 6823	
68/69	70	.....	1	319 0634	
70	70	.....	1	319 9609	
71	70	.....	1	321 1565	
72	70	.....	1	321 6476	
68	85 (* 3-56)	.....	1	319 0635	
68	85 (* 3-57)	.....	1	319 0636	
69	85-89	.....	1	319 4615	
70	85-89 (* 3-89)	.....	1	319 7968	
70	85-89 (* 3-90)	.....	1	321 0924	
71/	85-89	.....	1	321 1566	
68	89	.....	1	319 0636	

3.163–2 ATTACHING PARTS, Harness To Rear Shelf

CLIP (Metal)	67/	09-30-70	15.320	AR	400 1598
CLIP (Plastic).....	70	30-70	.....	1	400 0306

3.163–3 ATTACHING PARTS, Harness To Rear Shelf Gusset

CLIP, Metal.....	67/	05-06-09-30-70	15.320	AR	400 1598
CLIP (Metal)	69	15-85	15.320	1	400 1598
CLIP (Plastic).....	70/	01-30-70 (Left Side).....	.....	1	400 0306

3.163–4 ATTACHING PARTS, Harness At The Tailgate

SCREW, Tapping.....	70/	18-88	17.660	1	G161895 NA
CLIP (Plastic).....	67/	18-88	3.166	AR	400 0713
CLIP (Metal)	69/	18-88	4.141	1	400 0786

3.163–6 ATTACHING PARTS, Harness To Body

CLIP	67	50	15.320	3	400 1598

3.163–7 ATTACHING PARTS, Harness To Lower Rear Center Panel

CLIP.....	69/	15-19.....	15.320	2	400 1598
FASTENER	69/	85-89.....	29.056	2	400 2076

3.163–8 ATTACHING PARTS, Harness To Taillamp Brackets

CLIP	71/	40	15.320	2	400 1598

3.163–9 ATTACHING PARTS, Harness To Deck Door Striker

SCREW, Tapping.....	71/	70	17.671	1	G9421073 NA

3.163–10 ATTACHING PARTS, Harness To Rear Quarter Window Regulator

CLIP	67/	16-17-86-87-89 (LHD)	.....	2	400 1801

3.163–11 ATTACHING PARTS, Harness To Tailgate Regulator Bracket

CLIP (Plastic).....	67	18-88 (WER).....	.....	2	400 0306

3.163–12 ATTACHING PARTS, Harness To Rear Seat Area

CLIP	67	07	.....	7	400 0553
CLIP	70/	01	.....	2	400 0553
SCREW, Tapping	67	07	17.671	7	400 1031
SCREW, Tapping	70/	01	17.671	2	400 1042
CLIP	67	50	3.166	3	400 0713
CLIP	67/68	17-87	3.166	5	400 0713

3.163–13 ATTACHING PARTS, Harness To Body Ground

SCREW, Tapping	70/	01-10-80	17.671	1	G274773

3.163–14 WIRE, Domelamp (Center And Front)(Refer To Group 3.346 HARNESS)

3.163–15 WIRE, Cargo Area Lamp (Refer To Group 3.670 HARNESS)

3.163–16 WIRE, Rear Quarter Interior Lamp (Refer To Group 3.675 WIRE)

3.163–17 WIRE, Front And Rear Door Domelamp Switches

67/69	10-80	.....	1	318 6829
70/	10-80	.....	1	319 7972

3.163–18 WIRE, Front Door Domelamp Switch

67/69		.....	1	318 6828
70/		.....	1	319 7971

3.164–1 HARNESS, Front End Lighting

72	10	.....	1	321 5532
72	70	.....	1	321 5531
72	80 (LSBW)	.....	1	321 5533
72	80 (WSBW)	.....	1	321 7462

3.165–1 HARNESS, Chassis Wire (Main)(Refer To Group 3.163 For Body Wire Harness And Group 3.218 For Connectors And Blocks)

67	01 (LHD-Six)	.....	1	318 6801
67	01 (LHD-V8)	.....	1	318 6805
68	01 (LHD-Six-* 3-17)	.....	1	319 0620
68	01 (LHD-Six-* 3-18)	.....	1	319 3156
68	01 (LHD-V8-* 3-17)	.....	1	319 0621
68	01 (LHD-V8-* 3-18)	.....	1	319 3157
69	01 (LHD-Six)	.....	1	319 4601
69	01 (LHD-V8)	.....	1	319 4602
67	10 (LHD-Six)	.....	1	318 6802
67	10 (LHD-V8)	.....	1	318 6806
68	10 (LHD-Six-* 3-17)	.....	1	319 0624
68	10 (LHD-Six-* 3-18)	.....	1	319 3160
68	10 (LHD-V8-* 3-17)	.....	1	319 0625
68	10 (LHD-V8-* 3-18)	.....	1	319 3161
69	10 (LHD-Six)	.....	1	319 4605
69	10 (LHD-V8)	.....	1	319 4606
70	10 (LHD-Six)	.....	1	319 9652
70	10 (LHD-V8)	.....	1	319 9653
71	10 (Six-* 3-107)	.....	1	321 1553
71	10 (Six-* 3-108)	.....	1	321 5586
71	10 (V8-* 3-107)	.....	1	321 1554
71	10 (V8-* 3-108)	.....	1	321 5585

Printed in U.S.A.

68	30-70 (V8-* 3-17)	.....	1	319 0623
68	30-70 (V8-* 3-18)	.....	1	319 3159
69	30-70 (V8)	.....	1	319 4604
70	30-70 (V8-* 3-72 And * 3-74)	.....	1	319 7951
70	30-70 (V8-* 3-73 And * 3-74)	.....	1	448 8422
70	30-70 (V8-* 3-76 And * 3-81)	.....	1	319 9651
70	30-70 (V8-* 3-76 And * 3-82)	.....	1	321 0222
67	50-80 (LHD-Six)	.....	1	318 6804
67	50-80 (LHD-V8)	.....	1	318 6808
68	70 (Six-* 3-17)	.....	1	319 0622
68	70 (Six-* 3-18)	.....	1	319 3158
69	70 (Six)	.....	1	319 4603
70	70 (Six-* 3-74)	.....	1	448 8421
70	70 (Six-* 3-76 And * 3-81)	.....	1	319 9650
70	70 (Six-* 3-76 And * 3-82)	.....	1	321 0221
71	70 (Six)	.....	1	321 1550
71	70 (V8-Used With 120 M. P. H. Speedometer)	.....	1	321 1551
71	70 (V8-Used With 140 M. P. H. Speedometer)	.....	1	321 1552
68	80 (LHD-Six-* 3-17)	.....	1	319 0626
68	80 (LHD-Six-* 3-18)	.....	1	319 3162
68	80 (LHD-V8-* 3-17)	.....	1	319 0627
68	80 (LHD-V8-* 3-18)	.....	1	319 3163
69	80 (LHD-Six)	.....	1	319 4607
69	80 (LHD-V8)	.....	1	319 4608
70	80 (LHD-Six)	.....	1	319 9654
70	80 (LHD-V8)	.....	1	319 9655
71	80 (Six-* 3-105)	.....	1	321 1555
71	80 (Six-* 3-106 And * 3-107)	.....	1	321 3741
71	80 (V8-* 3-106 And * 3-108)	.....	1	321 5583
71	80 (V8-* 3-105)	.....	1	321 1556
71	80 (V8-* 3-106 And * 3-107)	.....	1	321 3742
71	80 (Six-* 3-106 And * 3-108)	.....	1	321 5584
67	***01 (RHD-Six)***	.....	1	318 6809
68	***01 (RHD-Six-* 3-17)***	.....	1	319 0628
68	***01 (RHD-Six-* 3-18)***	.....	1	319 3164
69	***01 (RHD-Six)***	.....	1	319 4609
67	***10 (RHD-Six)***	.....	1	318 6810
67	***10 (RHD-V8)***	.....	1	318 6811
68	***10 (RHD-Six-* 3-17)***	.....	1	319 0629
68	***10 (RHD-Six-* 3-18)***	.....	1	319 3165
68	***10 (RHD-V8-* 3-17)***	.....	1	319 0630
68	***10 (RHD-V8-* 3-18)***	.....	1	319 3166
69	***10 (RHD-Six)***	.....	1	319 4610
70	***10 (RHD-Six)***	.....	1	319 9657
69	***10 (RHD-V8)***	.....	1	319 4611
70	***10 (RHD-V8)***	.....	1	319 9658
67	***80 (Post Office)***	.....	1	319 2017
67	***80 (RHD-V8)***	.....	1	318 6812
68	***80 (RHD-V8-* 3-17)***	.....	1	319 0631
68	***80 (RHD-V8-* 3-18)***	.....	1	319 3167
69	***80 (RHD-V8)***	.....	1	319 4612
70	***80 (RHD-V8)***	.....	1	319 9659

3.165–1a HARNESS, Instrument Panel Wire

70	01 (Six-WST)(Six-WAT-* 3-78)	.....	1	319 9714
70	01 (V8-WST)(V8-WAT-* 3-78)	.....	1	319 9670
70	01 (WAT-* 3-77)	.....	1	321 1544
71	01-40	.....	1	321 1558
72	01-40 (* 3-113)	.....	1	321 5511
72	01-40 (* 3-114)	.....	1	321 6184
72	01-40 (WSBW)	.....	1	321 7455
72	10 (LSBW-* 3-113)	.....	1	321 5514
72	10 (LSBW-* 3-114)	.....	1	321 6187
72	10 (WSBW)	.....	1	321 7460
70	40 (* 3-78)	.....	1	319 9714
70	40 (* 3-77)	.....	1	321 1544
72	70 (V8-LSBW-Used With 120 M. P. H. Speedometer-* 3-113)	.....	1	321 5512
72	70 (LSBW-Used With 120 M. P. H. Speedometer-* 3-114)	.....	1	321 6185
72	70 (WSBW-Used With 120 M. P. H. Speedometer)	.....	1	321 7446

72	70 (V8-LSBW-Used With 140 M. P. H. Speedometer-* 3-113)	.....	1	321	5513
72	70 (V8-LSBW-Used With 140 M. P. H. Speedometer-* 3-114)	.....	1	321	6186
72	70 (V8-WSBW-Used With 140 M. P. H. Speedometer)	.....	1	321	7447
72	80 (LSBW-* 3-113)	.....	1	321	5515
72	80 (LSBW-* 3-114)	.....	1	321	6188
72	80 (WSBW)	.....	1	321	7461

3.165–1b HARNESS, Engine Compartment Wire

70	01 (LHD-V8-* 3-81)	.....	1	319	9672
70	01 (LHD-V8-* 3-82)	.....	1	321	0038
71	01 (V8)	.....	1	321	1561
72	01-40 (Six-LSBW)	.....	1	321	5516
72	01-40 (Six-WSBW)	.....	1	321	7454
72	01-40 (V8-LSBW)	.....	1	321	5517
72	01-40 (V8-WSBW)	.....	1	321	7453
72	10 (Six-LSBW)	.....	1	321	5521
72	10 (Six-WSBW)	.....	1	321	7456
72	10 (V8-LSBW)	.....	1	321	5522
72	10 (V8-WSBW)	.....	1	321	7457
72	70 (Six-LSBW)	.....	1	321	5518
72	70 (Six-WSBW)	.....	1	321	7450
72	70 (V8-LSBW-Used With 120 M. P. H. Speedometer)	.....	1	321	5519
72	70 (V8-WSBW-Used With 120 M. P. H. Speedometer)	.....	1	321	7451
72	70 (V8-LSBW-Used With 140 M. P. H. Speedometer)	.....	1	321	5520
72	70 (V8-WSBW-Used With 140 M. P. H. Speedometer)	.....	1	321	7452
72	80 (Six-LSBW)	.....	1	321	5523
72	80 (Six-WSBW)	.....	1	321	7458
72	80 (V8-LSBW)	.....	1	321	5524
72	80 (V8-WSBW)	.....	1	321	7459
70	(Left) 01 (Six-* 3-81)	.....	1	319	9671
70	(Left) 01 (Six-* 3-82)	.....	1	321	0036
70	(Left) 40	.....	1	321	0036
71	(Left) 01-40 (Six)	.....	1	321	1559
70	(Right) 01 (Six-WST)(Six-WAT-* 3-77)	.....	1	319	7962
70	(Right) 01 (Six-WAT-* 3-78)	.....	1	319	9846
70	(Right) 40	.....	1	319	9846
71	(Right) 01-40 (Six)	.....	1	321	1560

3.165–1c WIRE ASSEMBLY, Carburetor Solenoid To Wire Harness

71/	01 (360-WAT)	.....	1	321	4000
71/	10-80 (360-WAT)	.....	1	321	3998
71/	70 (360-WAT)	.....	1	321	3999

3.165–1d ATTACHING PARTS, Instrument Panel Harness To Engine Compartment Harness

SCREW, Tapping	70/	01-40	17.660	1	G9414727	NA

3.165–2 ATTACHING PARTS, Harness To Dash

CLIP	67/	01 (LHD-V8-Insulated-1 Mounting Hole)	.....	1	400 1704	
CLIP	67/	LHD (1 Mounting Hole-Insulated)	13.446	AR	400 0443	
CLIP	68	WFGS (Plain Steel-1 Mounting Hole)	.....	1	316 9685	
"EZ" CLIP	72	01-40	.....	2	400 3838	
CLIP	***67/69***	***01 (RHD)***	13.440	2	400 0443	
SCREW, Tapping	67/	01-40 (LHD)	17.671	4	400 1042	
SCREW, Tapping	67/	10-50-80	17.660	3	G9421151	NA
SCREW, Tapping	68/	30-70	17.671	4	400 1042	
SCREW, Tapping	***67/69***	***01 (RHD)***	17.671	2	400 1042	

3.165–3 ATTACHING PARTS, Harness To Instrument Panel

CLIP	67/	(Black-Nylon)	4.141	3	400 1712
CLIP	68/	30-70 (Insulated-2 Hole)	13.440	2	400 0443
CLIP	***67/69***	***01 (RHD-Six)***	13.440	3	400 0443
CLIP	***67/70***	***10-80 (RHD)***	.....	2	400 1704

Printed in U.S.A.

SCREW, Tapping	68/	01 (LHD)	17.671	2	400 1031
SCREW, Tapping	68/	30-70	17.660	2	G161895 NA
SCREW, Tapping	***67/69***	***01 (RHD)***	17.671	2	400 1031
BOLT	***67/70***	***10-80 (RHD)***	15.320	2	400 2228
WASHER, Lock	***67/70***	***10-80 (RHD)***	17.820	2	G131096 NA
NUT, Hexagon	***67/70***	***10-80 (RHD)***	17.412	2	G120361 NA

3.165-4 ATTACHING PARTS, Harness To Right Front Wheelhouse

CLIP (Plastic)	67/	01	.....	3	400 0306
CLIP (Plastic)	67/	10-50-80 (2-3/4" Long)	.....	6	400 0306
CLIP (Plastic)	68/	30-70 (2-3/4" Long)	.....	4	400 0306
CLIP (Plastic)	70/	(3-3/4" Long)	4.141	AR	400 1712

3.165-5 ATTACHING PARTS, Harness To Left Front Wheelhouse

CLIP (Plastic)	67/	01-40 (Six-WAC)(V8)	.....	4	400 0306
CLIP (Plastic)	67/	10-50-80 (2-3/4" Long)	.....	AR	400 0306
CLIP (Plastic)	68/	30-70 (2-3/4" Long)	.....	2	400 0306
CLIP (Plastic)	70/	(3-3/4" Long)	4.141	AR	400 1712

3.165-6 ATTACHING PARTS, Harness To Radiator Baffle

CLIP (Plastic)	67/	01-30-40-70	.....	4	400 0306

3.165-7 ATTACHING PARTS, Harness To Heater Housing Or Air Conditioning Housing

CLIP	67/70	01 (WFGS)	.....	1	316 9685
CLIP, Straight	71/	70	3.210	1	63 045
CLIP, "S" Shaped	71/	70	3.615	1	310 8634

3.165-8 ATTACHING PARTS, Harness To Fuse Panel

CLIP	***67/69***	***01 (RHD)***	.....	1	400 1704

3.165-9 ATTACHING PARTS, Harness To Cowl Vent Air Chamber

CLIP	67	17-87 (LAC)	.....	AR	400 1801
CLIP	67	18 (WER)	.....	AR	400 1801
CLIP (Plastic)	70/	01-40 (2-3/4" Long)	.....	1	400 0306
CLIP (Metal)	70/	01-40	13.440	4	400 0443
CLIP	67/	10-80	.....	AR	400 1704
SCREW, Tapping	67/	10-80	20.280	AR	400 1724
SCREW, Tapping	70/	01-40	17.671	4	400 1042

3.165-10 ATTACHING PARTS, Harness To Fresh Air Door Cable

CLIP	71/	70	2.050	1	63 045

3.165-11 ATTACHING PARTS, Harness To Roof Side Rail Reinforcement

CLIP, Plastic	71/	70	.....	1	400 0306

3.165-12 ATTACHING PARTS, Harness To Brake Pedal Adapter

CLIP	67/	70	4.141	1	400 1712

3.165-13 ATTACHING PARTS, Harness To Dash Ground

CLIP	***67/69***	***01 (RHD-Six)***	13.440	1	400 0443
SCREW, Tapping	70/		17.671	1	G9426241 NA
SCREW, Tapping	69	10-30-70-80	2.051	1	400 2358

3.165–14 ATTACHING PARTS, Harness To Body Ground

SCREW, Tapping	67/69	10-50-80	17.670	1	G172327	NA
SCREW, Tapping	70/	01-10-80	17.671	1	G274773	
WASHER, Lock	67/69	10-50-80 (23/64" O. D.)	17.820	1	G131096	NA
WASHER, Lock	67/69	10-50-80 (3/4" O. D.)	17.826	1	G178388	NA
WASHER, Plain	67/69	10-50-80	17.814	1	400 1081	

3.165–14a ATTACHING PARTS, Harness To Deck Door Striker Ground

SCREW, Tapping	71/	70	17.671	1	G9421073	NA

3.165–15 ATTACHING PARTS, Harness To Front Suspension Bracket

CLIP	69/	10-80	4.141	1	400 1712	

3.165–16 RETAINER, Wire Harness To Side Sill (Front)

67/	15-18-85-88 (24-1/2" Long)	.....	1	357 6881	
67/	16-17-19-50-86-87-89 (36-1/2" Long)	15.320	1	357 6882	
70/	05-06-08 (32-1/2" Long)	.....	2	363 1551	

3.165–17 RETAINER, Wire Harness To Side Sill (Rear)

67/	15-18-85-88 (18-1/2" Long)	.....	1	357 6883	
67/	16-17-19-50-86-87-89 (24-1/2" Long)	.....	1	357 6881	
70/	05-08 (32-1/2" Long)	.....	2	363 1551	

3.165–18 ATTACHING PARTS, Retainer To Sill

SCREW, Tapping	67/	10-50-80	17.669	7	G457002	NA

3.165–19 TERMINAL, Male Jumper (Insulated)

67/	V8 (W4ST)(WST)	.....	1	318 6890	
67/70	***SIX (RHD-10-WST)***	.....	1	318 6890	

3.166–1 GROMMET, Wiring (In Clutch And Brake Pedal Bracket)

67/	LHD	.....	1	400 0346	

3.166–2 RETAINER, Grommet To Dash

67/70	01 (LHD-LAC)	.....	1	356 2500	
67/70	01 (LHD-WAC-LOD)(LAC-WOD)	.....	1	356 2875	
69	01 (WAC-WOD)	.....	1	319 6497	
67/	10-50-80 (LHD)	.....	1	318 6668	MR
69/70	30-70	.....	1	318 9067	
71/	70	.....	1	321 1580	
67/69	***01 (RHD)***	.....	1	356 2500	
67/70	***10-80 (RHD)***	.....	1	356 2875	

3.166–3 ATTACHING PARTS, Retainer To Body

SCREW, Tapping	67/	.....	17.671	AR	400 1042	

3.166–4 GROMMET, Wiring (In Rear Wheelhouse)

70/	10-30-70-80	22.038	4	318 1121		

Printed in U.S.A.

ELECTRICAL - INSTRUMENTS

3.167–1 FUSIBLE LINK, Chassis Wire Harness To Horn Relay

67/68		3.165	1	320 9755
69/		.....	1	448 6938

3.167–2 FUSIBLE LINK, Starter Relay To Chassis Wire Harness

69/71		.....	1	448 6936
72	01-10-40-70	.....	1	448 6936
72	80 (Six)	.....	1	448 6936
72	80 (V8)	.....	1	812 1320

3.167–3 FUSIBLE LINK, Starter Relay To Air Conditioning Harness

69/	10-80 (LHD-Six-WAC)	.....	1	448 6936
69/	10-80 (LHD-V8-WAC)	.....	1	448 6937
71	70 (WAC)	.....	1	448 6936

3.167–3a FUSIBLE LINK, Starter Relay To Heated Rear Window Harness

70/	10-70-80 (With Heated Rear Window)	.....	1	448 6936

3.167–4 FUSIBLE LINK, Ignition Switch To Chassis Wire Harness (Ign.)

69		.....	1	448 6940
70	(* 3-74)	.....	1	448 6940

3.167–5 FUSIBLE LINK, Ignition Switch To Chassis Wire Harness (Acc.)

69/		.....	1	448 6939

3.196–1 CABLE, Battery Ground (Negative)

67	SIX	.....	1	314 7396
67/68	01-10 (V8)	.....	1	318 1076
67/68	30-50-70-80 (V8)	.....	1	318 9076
68	01-10-70 (Six-LAC)	.....	1	314 7396
68	80 (LHD)(Six-LAC)	.....	1	319 0619
68	SIX (WAC)	.....	1	319 0639
69	01-10-70 (Six-LAC)	.....	1	319 4625
69	01-10-70 (Six-WAC-With 50 Amp. Battery)	.....	1	319 5666
69	01-10-30-70 (290-Used With 50 Amp. Battery)	.....	1	319 4628
69	01-10-70 (Six-WAC-Used With 70 Amp. Battery)	.....	1	319 4626
69	01-10-30-70 (290-Used With 70 Amp. Battery)	.....	1	319 4629
69	10-30-70 (343)(390)	.....	1	319 4629
69	80 (Six)	.....	1	319 4627
69	80 (V8-Used With 60 Amp. Battery)(Used With 70 Amp. Battery)	.....	1	319 4629
70/71	01-40 (Six-LAC)	.....	1	319 7985
70/71	01-40 (Six-WAC)	.....	1	319 7984
70/71	10-70-80 (Six)	.....	1	319 7984
70/71	01-10-70 (304-Used With 50 Amp. Battery)	.....	1	319 7985
70/71	V8 (Used With 60 Amp. Battery)(Used With 70 Amp. Battery)	.....	1	319 7986
72	SIX (Except 50 Amp. Battery)	.....	1	319 0639
72	SIX (Used With 50 Amp. Battery)	.....	1	319 5666
72	01-40-70 (V8-Except 50 Amp. Battery)	.....	1	319 7986
72	10-80 (V8-Except 50 Amp. Battery)	.....	1	318 9076
72	V8 (Used With 50 Amp. Battery)	.....	1	319 7985
67/68	***80 (RHD-Six)***	.....	1	319 0619

3.196–2 ATTACHING PARTS, Cable To Cylinder Head Stud

BOLT	72	(LPS)(LAC)	17.038	1	G180118 NA
WASHER, Lock	67/71	SIX	9.002	1	400 1898
WASHER, Lock	72	(LPS)(LAC)	17.820	1	G120382
NUT, Hexagon	67/71	SIX	17.406	1	G120370 NA

3.196–3 CABLE, Battery Ground Jumper To Crossmember

67/	.....	1	318 6850

3.196–4 ATTACHING PARTS, Cable To Crossmember

BOLT, Hexagon	67/	.....	17.038	1	G181635 NA
WASHER, Lock	67/	.....	17.820	1	G120382 NA
NUT, Hexagon	67/	.....	17.406	1	G120369 NA

3.200–1 CABLE, Battery To Starting Motor (Positive)

67	01 (Six)	.....	1	317 1148
67/68	01 (V8)	.....	1	318 6881
68	01 (Six-LAC)	.....	1	319 0632
68	SIX (WAC)	.....	1	319 0638
67	10-50-80 (LHD-Six)	.....	1	318 5727
68	10-70 (Six-LAC)	.....	1	319 0605
68	80 (LHD-Six-LAC)	.....	1	319 0618
67	***10 (RHD-Six)***	.....	1	317 1148
67/68	***80 (RHD-Six)***	.....	1	319 0618

3.200–2 CABLE, Battery To Starting Motor Relay (Positive)

67/68	10-50-80 (V8)	.....	1	318 6882
68	30-70 (V8)	.....	1	319 0607
69	01-10-70 (Six-LAC)	.....	1	319 4620
69	01-10-70 (Six-WAC)	.....	1	319 4621
69	01-10 (V8)	.....	1	318 6881
69	30-70 (V8)	.....	1	319 4623
69	80 (Six)	.....	1	319 4622
69	80 (V8)	.....	1	319 4624
70/71	01-10-40-80 (Six)	.....	1	319 7980
70/71	01-30-70 (V8)	.....	1	319 4623
70	10 (V8)	.....	1	319 4623
71	10 (V8)	.....	1	319 7981
70/71	70 (Six)	.....	1	319 4622
70/	80 (V8)	.....	1	319 7981
72	V8 (Used With 50 Amp. Battery)	.....	1	319 7985
72	01-40 (Used With 50 Amp. Battery)	.....	1	321 5501
72	01-40 (Except 50 Amp. Battery)	.....	1	319 7981
72	10 (Six-WPS-Used With 50 Amp. Battery)	.....	1	321 5501
72	10 (Six-LPS)(V8)	.....	1	319 7981
72	70	.....	1	319 7981

3.200–2a CABLE, Relay To Starting Motor (Refer To Group 3.020–5)

3.200–3 ATTACHING PARTS, Cable To Wheelhouse

CLIP	67/69	01-30-70 (V8)(1/2" I.D.)	3.165	2	400 0553
CLIP	67/69	10-50-80	3.165	1	400 0306
CLIP	69	30-70 (13/16" I.D.)	13.440	1	400 0443
CLIP	70/	V8	13.440	1	400 0443
SCREW, Tapping	67/69	01-30-70 (V8)	17.671	1	400 1042
SCREW, Tapping	70/	V8	17.671	1	400 1042

Printed in U.S.A.

ELECTRICAL - INSTRUMENTS

3.200–4 ATTACHING PARTS, Cable To Starting Motor Wire

CLIP	67/68	SIX	3.210	1	63 045

3.200–5 ATTACHING PARTS, Cable To Air Conditioning Hose

STRAP	69	01-10-70 (Six-WAC)	.....	2	318 1008

3.200–6 ATTACHING PARTS, Cable To Front Suspension Brackets

CLIP	69	10-80	3.165	1	400 0306

3.200–7 CLIP, Battery And Starting Motor Cables

67	10-50-80 (Six)		13.440	1	400 0443
68	SIX (WAC)		3.165	1	400 0553

3.200–8 ATTACHING PARTS, Clip To Bracket

SCREW, Tapping	68	SIX (WAC)	17.671	1	G274773
WASHER, Lock	67	10-50-80 (Six)	17.820	1	G120380 NA
NUT, Hexagon	67	10-50-80 (Six)	17.412	1	G271172

3.200–9 BRACKET, Battery Cable Clip To Valve Cover

68	SIX (WAC)		.....	1	319 1927

3.200–10 ATTACHING PARTS, Bracket To Valve Cover

SCREW, Tapping	68	SIX (WAC)	17.671	2	G274773

3.210–1 HARNESS, Overdrive Wire

67/68	SIX		.....	1	318 6859
67/68	V8		.....	1	318 6860
69	SIX		.....	1	319 4613

3.210–2 ATTACHING PARTS, Harness To Governor

SCREW, Machine	67/69		17.626	2	G451695 NA

3.210–3 CLIP, Overdrive Harness To Dash Panel

67/69	SIX		29.294	1	316 9685

3.210–4 ATTACHING PARTS, Clip To Dash Panel

SCREW, Tapping	67/69	SIX	17.660	1	G443946 NA

3.210–5 CLIP, Overdrive Harness To Main Wire Harness

67/69	SIX		.....	1	63 045

3.210–6 CLIP, Overdrive Harness To Clutch Housing

67/69			3.610	1	400 0785

3.210–7 CLIP, Overdrive Harness To Transmission Housing

67/69			.....	1	400 0787

Printed in U.S.A.

ELECTRICAL - INSTRUMENTS

3.213–1 BLOCK, Junction

68/70	30–70 (WRP–With Tachometer)	.....	1	319 4158	
69/	***10-80 (65 Amp. Alt.-* 3-4)***	.....	1	319 4158	

3.213–2 ATTACHING PARTS, Junction Block To Wheelhouse Panel

SCREW, Tapping	68/70	30–70 (WRP–With Tachometer)	17.671	2	400 1042	
SCREW, Tapping 69		***10-80 (65 Amp. Alt.-* 3-4)***	17.671	2	400 1040	
SCREW, Tapping 70/		***10-80 (65 Amp. Alt.-* 3-4)***	17.671	2	G9414012	NA

3.213–3 ATTACHING PARTS, Wire Terminals To Junction Block

NUT, Hexagon	68/70	30–70 (WRP–17/64" Thick)	17.406	1	G120376	NA
NUT, Hexagon	68/70	30–70 (WRP–1/8" Thick)	17.412	1	G120614	NA
NUT, Hexagon 69/		***10-80 (17/64" Thick-* 3-4)***	17.406	1	G120376	NA
NUT, Hexagon 69/		***10-80 (1/8" Thick-* 3-4)***	17.412	1	G120614	NA
WASHER, Lock	68/70	30–70 (WRP–19/32" Width)	17.820	1	G120214	NA
WASHER, Lock	68/70	30–70 (WRP–23/64" Width)	17.820	1	G131096	NA
WASHER, Lock 69/		***10-80 (19/32" Width-* 3-4)***	17.820	1	G120214	NA
WASHER, Lock 69/		***10-80 (23/64" Width-* 3-4)***	17.820	1	G131096	NA

3.215 BULB

67/70	(GE 53)(12–16V)(1 C. P.)(Miniature Bayonet Type)	.....	AR	G131282
71	(GE 53R)(12–16V)(1 C. P.)(Miniature Bayonet Type)	.....	AR	G274130
67/	(GE 57)(12–16V)(2 C. P.)(Miniature Bayonet Type) 10–30–50–70–80	.....	AR	G127934
67/70	(GE 67)(12–16V)(2 C. P.)(Miniature Bayonet Type) 01–10–50–80	.....	AR	G142450
67/	(GE 89)(12–16V)(6 C. P.)(Single Contact Bayonet Type)	.....	AR	G142452
67/70	(GE 94)(12–16V)(15 C. P.)(Double Contact Bayonet Type)	.....	AR	G142455
71	(GE 97)(12–16V)(4 C. P.)(Single Contact Bayonet Type)	.....	2	448 9123
67/	(GE 158)(12–16V)(2 C. P.)(Wedge Base) 01 (LHD)	.....	AR	320 9541
67	***(GE 161)(12-16V)(1 C. P.)(Wedge Base) 80 (RHD-Six-Post Office)***	.....	AR	320 8730
70	(GE 168)(12–16V)(3 C. P.)(Wedge Base) 10 (MACHINE)	.....	2	448 8426
70/	(GE 194)(12–16V)(2 C. P.)(Wedge Base)	.....	AR	448 7367
67/70	(GE 211)(12–16V)(12 C. P.)(Cap Adapter Type) 01–30–50–70–80	.....	AR	320 9536
67/	(GE 256)(12–16V)(Flasher Type) 10–80	.....	AR	320 4467
67/	(GE 257)(12–16V)(Flasher Type)	.....	AR	320 9534
70/	(GE 561)(12–16V)(12 C. P.)(Double Wedge Type)	.....	AR	400 3086
70/	(GE 562)(12–16V)(6 C. P.)(Double Wedge Type)	.....	1	448 8457
70/	(GE 563)(12–16V)(4 C. P.)(Double Wedge Type)	.....	1	448 8029
67/70	(GE 1004)(12–16V)(15 C. P.)(Double Contact Bayonet Type)	.....	AR	G455136
67/70	(GE 1034)(12–16V)(4–32 C. P.)(Double Contact Bayonet Type)(Clear) 01	.....	AR	G454645
70/	(GE 1095)(12–16V)(4 C. P.)(Single Contact Bayonet Type)	.....	AR	448 8311
67/	(GE 1156)(12–16V)(32 C. P.)(Single Contact Bayonet Type)	.....	AR	320 9543
67/	(GE 1157)(12–16V)(32 C. P.)(Double Contact Index Type)(Clear)	.....	AR	320 9544
67/	(GE 1157–A)(12–16V)(32 C. P.)(Double Contact Index Type)(Amber) 30–50–70–80	.....	AR	320 7689
70/	(GE 1157–NA)(12–16V)(32 C. P.)(Double Contact Index Type)(Natural Amber) ...	.....	2	812 2110
67/70	(GE 1445)(12–16V)(3/4 C. P.)(Single Contact Bayonet Type)	.....	AR	320 4552
70	(GE 1815)(12–16V)(1–1/2 C. P.)(Miniature Bayonet Type)(Incl. Green Shield) ...	.....	1	320 9598
67/	(GE 1816)(12–16V)(3 C. P.)(Miniature Bayonet Type) 01–30–70	.....	AR	G454626
67/70	(GE 1881)(12–16V)(1 C. P.)(Miniature Bayonet Type) 10–50–80	.....	AR	320 7674
70/	(GE 1891)(12–16V)(2 C. P.)(Miniature Bayonet Type)	.....	1	G456985
67/	(GE 1893)(12–16V)(2 C. P.)(Miniature Bayonet Type)	.....	AR	345 1933
68/70	(GE 1895)(12–16V)(2 C. P.)(Miniature Bayonet Type)	.....	AR	448 6758
71/	(GE 4000–S)(12–16V)(Dual Headlamp)(High And Low Beam)(Clear) 10–80 (* 3–19)	.....	AR	812 0032
67/70	(GE 4001)(12–16V)(Dual Headlamp)(High Beam)(Clear) 10–50–80	.....	AR	320 0160
67/	***(GE 4001-A)(12-16V)(Dual Headlamp)(High Beam)(Amber) 10-50-80 (Export)***	.....	AR	320 6877
67/68	(GE 4002)(12–16V)(Dual Headlamp)(High And Low Beam)(Clear) 10–50–80 (* 3–19)	.....	AR	320 0159
69/70	(GE 4002–S)(12–16V)(Dual Headlamp)(High And Low Beam)(Clear) 10–80 (* 3–19)	.....	AR	448 6753

Printed in U.S.A.

ELECTRICAL - INSTRUMENTS

67/68	***(GE 4002-A)(12-16V)(Dual Headlamp)(High And Low Beam)(Amber) 10-50-80 (Export)***	.....	AR	320 6878
69/	***(GE 4002-A-S)(12-16V)(Dual Headlamp)(High And Low Beam)(Amber) 10-80 (Export)***	.....	AR	448 6757
67/68	***(GE 4003)(12-16V)(Dual Headlamp)(High And Low Beam)(Clear) 10-50-80 (Export)***	.....	AR	320 0414
69/	***(GE 4003-S)(12-16V)(Dual Headlamp)(High And Low Beam)(Clear) 10-80 (Export) (Use 320 0414)***	.....	AR	448 6755
67/	(GE 4405)(12-16V)(Spotlight) 01-10-80	.....	AR	311 9856
67/	***(GE 5402)(12-16V)(Single Headlamp)(Clear) 01 (Export-* 3-20)***	.....	AR	320 4788
67/68	(GE 6012)(12-16V)(Single Headlamp)(Clear) 01-30-70 (* 3-19)	.....	AR	320 2092
69/70	(GE 6012-S)(12-16V)(Single Headlamp)(Clear) 01-30-40-70 (* 3-19)	.....	AR	448 6754
67/68	***(GE 6012-A)(12-16V)(Single Headlamp)(Amber) 01-30-40-70 (Export)***	.....	AR	320 5966
69/	***(GE 6012-A-S)(12-16V)(Single Headlamp)(Amber) 01-30-70 (Export)***	.....	AR	448 6756
71/	(GE 6014-S)(12-16V)(Single Headlamp)(Clear) 01-40-70 (* 3-19)	.....	AR	448 9458
71/	(Tung-Sol 5001)(12-16V)(Dual Headlamp)(High Beam)(Clear) 10-80	.....	AR	812 0031

3.218-1 CONNECTOR, Headlamp Double Terminal (Block Including Wires)

67/	10-50-80	.....	2	320 8309

3.218-2 CONNECTOR, Headlamp Triple Terminal (Block Including Wires)

67/		.....	2	320 8310

3.218-3 CONNECTOR, Printed Circuit

67/69		.....	1	320 4867
70/	01-40 (5 Terminals)	.....	1	448 8002
70/	01-40 (8 Terminals)	.....	1	448 8003
70/	10-80	.....	1	320 4867
70	30-70	.....	1	320 4867
71	70	.....	1	448 8003

3.218-3a ATTACHING PARTS, Connector To Printed Circuit Board

STRAP (Nylon) 70	01-40	.....	1	400 3891

3.218-4 CONNECTOR, Light Switch

67/70		.....	1	320 5596
71	01-10-40-80	.....	1	320 5596
71	70	.....	1	812 0093

3.218-5 CONNECTOR, Chassis Wire Harness To Body Wire Harness

67/68	01-30-70	.....	1	320 8448
70/		.....	1	448 8004

3.218-6 CONNECTOR, Chassis Wire Harness To Heater Switch

67/	01-10-30-40-70-80	.....	1	320 8450

3.218-7 CONNECTOR, Chassis Wire Harness To Steering Column

67/69	LHD	.....	1	320 8451
70/	LHD	.....	1	448 8005

3.218-8 CONNECTOR, Chassis Wire Harness To Ignition Switch

67		.....	1	320 8452
68	(* 3-17)	.....	1	320 8452
68	(* 3-18)	.....	1	448 5719
69	01-30-70	.....	1	448 5719
69	10-80 (LHD)	.....	1	448 7180
69	***10-80 (RHD)***	.....	1	448 5719
70/	(4 Terminals)	.....	1	448 8007
70/	(5 Terminals)	.....	1	448 8006

ELECTRICAL - INSTRUMENTS

3.218–9 CONNECTOR, Chassis Wire Harness To Directional Signal Flasher

67/		.....	1	320 8453

3.218–10 CONNECTOR, Chassis Harness To Headlight Dimmer Switch

67/	LHD	.....	1	320 9961

3.218–11 CONNECTOR, Front Fender Side Lamp (Refer To Group 3.720)

3.218–12 CONNECTOR, Engine Compartment Wire Harness

70/	(Left) 01–40	3.165	1	319 7996
70/	(Right) 01–40	3.165	1	319 7997

3.218–13 CONNECTOR, Instrument Panel Wire Harness (On Dash Panel)

70/71	01–40 (LHD)	3.165	1	319 7995
72		.....	1	319 7995

3.218–14 BUSHING, Instrument Panel Wire Harness Connector (Nylon)

70/	01–40 (LHD)	3.165	1	319 7998

3.228–1 WIRE SET, Ignition

67/69	SIX	.....	1	320 5368
70/	SIX	.....	1	320 7030
67	V8 (LEEP)	.....	1	320 8327
67	V8 (WEEP)	.....	1	320 8328
68/	V8	.....	1	320 9617

3.228–2 BOOT, Distributor To Ignition Coil (Coil End)

67/		3.232	AR	313 1513

3.230 SEPARATOR, Ignition Wire

67/71	SIX (WAC)	.....	1	314 6685
67/	V8 (1–19/32" Long)	.....	AR	318 0107
67/	V8 (2–5/32" Long)	.....	1	314 6685
67/	V8 (2–23/32" Long)	.....	1	318 6116

3.232–1 WIRE, Distributor To Coil High Tension

67/	SIX	.....	1	317 4260
67/	V8	.....	1	318 6875

3.232–2 BRACKET, Ignition Wire Separator Mounting

67/68	V8 (WEEP-2-9/16" Long)	.....	1	318 7636
67/68	V8 (WEEP-3-1/8" Long)	.....	1	318 7816

3.232–3 WIRE, Distributor To Ignition

67/	(#1) SIX	.....	1	317 4261
67	(#1) V8 (LEEP-26-3/4" Long)	.....	1	318 9208
67	(#1) V8 (LEEP-28-3/4" Long)	.....	1	317 3501
67	(#1) V8 (WEEP)	.....	1	318 6876
68/	(#1) V8	.....	1	319 0602
67/	(#2) SIX	.....	1	317 3507
67	(#2) V8 (LEEP-33" Long)	.....	1	318 9209
67	(#2) V8 (LEEP-34" Long)	.....	1	318 0614
67	(#2) V8 (WEEP)	.....	1	318 6877
68/	(#2) V8	.....	1	319 0604

Printed in U.S.A.

67/	(#3) SIX	.....	1	317 4262
67	(#3) V8 (LEEP-24-1/2" Long)	.....	1	318 9210
67	(#3) V8 (LEEP-25-1/2" Long)	.....	1	317 3502
67	(#3) V8 (WEEP)	.....	1	318 6876
68/	(#3) V8	.....	1	319 0602
67/	(#4) SIX	.....	1	317 4262
67	(#4) V8 (LEEP-29-1/4" Long)	.....	1	318 9211
67	(#4) V8 (LEEP-29-3/4" Long)	.....	1	318 0616
67	(#4) V8 (WEEP)	.....	1	318 6878
68/	(#4) V8	.....	1	319 0603
67/	(#5) SIX	.....	1	317 3507
67	(#5) V8 (LEEP-21" Long)	.....	1	318 9212
67	(#5) V8 (LEEP-24-3/4" Long)	.....	1	318 0613
67	(#5) V8 (WEEP)	.....	1	318 6879
68/	(#5) V8	.....	1	319 0602
67/	(#6) SIX	.....	1	317 4261
67	(#6) V8 (LEEP-29-1/4" Long)	.....	1	318 9211
67	(#6) V8 (LEEP-29-3/4" Long)	.....	1	318 0616
67	(#6) V8 (WEEP)	.....	1	318 6878
68/	(#6) V8	.....	1	319 0603
67	(#7) V8 (LEEP-24-1/2" Long)	.....	1	318 9210
67	(#7) V8 (LEEP-25-1/2" Long)	.....	1	317 3502
67	(#7) V8 (WEEP)	.....	1	318 6876
68/	(#7) V8	.....	1	319 0602
67	(#8) V8 (LEEP-33" Long)	.....	1	318 9209
67	(#8) V8 (LEEP-34" Long)	.....	1	318 0614
67	(#8) V8 (WEEP)	.....	1	318 6877
68/	(#8) V8	.....	1	319 0604

3.245–1 HEADLAMP ASSEMBLY (Except Rebel, Matador And '69 Ambassador)

67	01 (Except Export) ***(Use 319 3965)***	.....	2	355 2328
68	01-70 (Except Export-* 3-48) ***(Use 319 3965)***	.....	2	355 2328
68	01-30-70 (Except Export-* 3-50) ***(Use 319 3864)***	.....	2	360 1974
69/70	01-30-40-70 (Except Export-* 3-48) ***(Use 319 5487)***	.....	2	319 5486
69/70	01-30-40-70 (Except Export-* 3-50)	.....	2	319 5487
71/	01-40-70 (Except Export)	.....	2	321 2459
67	50-80 (Except Export)	.....	2	357 6712
68	80 (Except Export)	.....	2	360 1812
67/68	***01 (Export-Clear-* 3-48)*** ***(Use 319 3965)***	.....	2	355 2328
67/69	***01 (Export-Amber-* 3-48)***	.....	2	355 2329
67/69	***01 (Export-Clear-* 3-49)***	.....	2	355 2327
69/70	***01-30-40-70 (Export-Clear-* 3-48)*** ***(Use 319 5487)***	.....	2	319 5486
69/	***01-30-40-70 (Export-Clear-* 3-51)***	.....	2	319 5495
69/	***01-30-40-70 (Export-Amber-* 3-50)***	.....	2	319 5496
71/	***01-40-70 (Export-Clear-* 3-19)***	.....	2	321 2459
68	***30-70 (Export-Clear-* 3-51)***	.....	2	360 1976
68	***30-70 (Export-Amber)***	.....	2	360 1975
67	***50-80 (Export-Clear-* 3-19)***	.....	2	357 6712
67	***50-80 (Export-Clear-* 3-20)***	.....	2	318 7541
67	***50-80 (Export-Amber)***	.....	2	357 6713
68	***80 (Export-Clear-* 3-19)***	.....	2	360 1812
68	***80 (Export-Clear-* 3-20)***	.....	2	318 9898
68	***80 (Export-Amber)***	.....	2	360 1813

3.245–2 HEADLAMP ASSEMBLY, Inner (Rebel, Matador And '69 Ambassador)

67/70	(Left) 10 (Except Export)	.....	1	318 7521
69/70	(Left) 80 (Except Export)	.....	1	319 5511
71/	(Left) 10–80 (Except Export)	.....	1	321 2786

67/68	***(Left) 10 (Renault-Six)*** ...(Less Sealed Beam)	1		318 8563
67/70	***(Left) 10 (Export-Clear-* 3-19)***	1		318 7521
69/70	***(Left) 80 (Export-Clear-* 3-19)***	1		319 5511
67/70	***(Left) 10 (Export-Amber-* 3-19)***	1		318 6653
69/70	***(Left) 80 (Export-Amber-* 3-19)***	1		319 5519
71/	***(Left) 10-80 (Export-Amber-* 3-19)***	1		321 0669
71/	***(Left) 10-80 (Export-Clear-* 3-19)***	1		321 2786
67/70	(Right) 10 (Except Export)	1		357 6710
69/70	(Right) 80 (Except Export)	1		319 5510
71/	(Right) 10-80 (Except Export)	1		321 2787
67/68	***(Right) 10 (Renault-Six)*** ...(Less Sealed Beam)	1		318 5706
67/70	***(Right) 10 (Export-Clear-* 3-19)***	1		357 6710
69/70	***(Right) 80 (Export-Clear-* 3-19)***	1		319 5510
67/70	***(Right) 10 (Export-Amber-* 3-19)***	1		357 6714
69/70	***(Right) 80 (Export-Amber-* 3-19)***	1		319 5520
71/	***(Right) 10-80 (Export-Clear-* 3-19)***	1		321 2787
71/	***(Right) 10-80 (Export-Amber-* 3-19)***	1		321 0668

3.245–3 HEADLAMP ASSEMBLY, Outer (Rebel, Matador And '69 Ambassador)

67/68	(Left) 10 (Except Export)	1		357 6707
69	(Left) 10 (Except Export)	1		319 5484
70	(Left) 10 (Except Export)	1		319 5485
69/70	(Left) 80 (Except Export)	1		319 5509
71/	(Left) 10-80 (Except Export)	1		321 2783
67/68	***(Left) 10 (Renault-Six)*** ...(Less Sealed Beam)	1		318 8562
67/68	***(Left) 10 (Export-Clear-* 3-19)***	1		357 6707
67/68	***(Left) 10 (Export-Clear-* 3-20)***	1		318 5681
67/68	***(Left) 10 (Export-Amber-* 3-19)***	1		357 6709
69/70	***(Left) 10 (Export-Clear-* 3-19)***	1		319 5485
69/70	***(Left) 10 (Export-Clear-* 3-20)***	1		319 5490
69/70	***(Left) 10 (Export-Amber-* 3-19)***	1		319 5512
69/70	***(Left) 80 (Export-Clear-* 3-19)***	1		319 5509
69/70	***(Left) 80 (Export-Clear-* 3-20)***	1		319 5515
69/70	***(Left) 80 (Export-Amber-* 3-19)***	1		319 5514
71/	***(Left) 10-80 (Export-Clear-* 3-19)***	1		321 2783
71/	***(Left) 10-80 (Export-Clear-* 3-20)***	1		321 0676
71/	***(Left) 10-80 (Export-Amber-* 3-19)***	1		321 0673
67/68	(Right) 10 (Except Export)	1		318 7522
69	(Right) 10 (Except Export)	1		319 5485
70	(Right) 10 (Except Export)	1		319 5484
69/70	(Right) 80 (Except Export)	1		319 5508
71/	(Right) 10-80 (Except Export)	1		321 2782
67/68	***(Right) 10 (Renault-Six)*** ...(Less Sealed Beam)	1		318 5704
67/68	***(Right) 10 (Export-Clear-* 3-19)***	1		318 7522
67/68	***(Right) 10 (Export-Clear-* 3-20)***	1		318 7524
67/68	***(Right) 10 (Export-Amber-* 3-19)***	1		318 7523
69/70	***(Right) 10 (Export-Clear-* 3-19)***	1		319 5484
69/70	***(Right) 10 (Export-Clear-* 3-20)***	1		319 5491
69/70	***(Right) 10 (Export-Amber-* 3-19)***	1		319 5494
69/70	***(Right) 80 (Export-Clear-* 3-19)***	1		319 5508
69/70	***(Right) 80 (Export-Clear-* 3-20)***	1		319 5516
69/70	***(Right) 80 (Export-Amber-* 3-19)***	1		319 5513
71/	***(Right) 10-80 (Export-Clear-* 3-19)***	1		321 2782
71/	***(Right) 10-80 (Export-Clear-* 3-20)***	1		321 0677
71/	***(Right) 10-80 (Export-Amber-* 3-19)***	1		321 0672

3.245–4 ATTACHING PARTS, Headlamp To Fender

SCREW, Tapping	67/68		17.671	AR	400 0478
SCREW, Tapping	67	50-80	17.660	8	G161901
SCREW, Tapping	69/70		2.050	AR	400 3831
SCREW, Tapping	71/		17.671	AR	400 1042
NUT, Speed	67/69	50-80 (J-Shaped)	17.424	8	G445357
NUT, Speed	68	80 (U-Shaped)	3.505	4	400 0895
SEALER, Weatherstrip	67/70	10-80	23.012	1	400 0138

Printed in U.S.A.

3.245–5 ATTACHING PARTS, Headlamp To Radiator Grille Panel

SCREW, Tapping	67	01	12.060	4	400 0734
NUT, Spring	67	01	17.426	4	G445435

3.245–6 ATTACHING PARTS, Headlamp To Ground

WASHER, Lock	67	01 (LHD)	17.820	1	G131096 NA
NUT, Hexagon	67	01 (LHD)	17.412	1	G120361 NA

3.245–7 ATTACHING PARTS, Headlamp To Radiator Side Baffle

SCREW, Tapping	67/68	50-80	17.671	4	400 1040

3.245–8 ATTACHING PARTS, Headlamp To Dash Weld Nut

SCREW, Tapping	*67/69*	*01 (RHD)*	17.670	1	G172327 NA
WASHER, Lock	*67/69*	*01 (RHD-23/64" O.D.)*	17.820	1	G131096 NA
WASHER, Lock	*67/69*	*01 (RHD-3/4" O.D.)*	17.826	1	G178388 NA
WASHER, Plain	*67/69*	*01 (RHD)*	17.814	1	400 1081

3.245–9 BRACKET, Headlamp Mounting (On Left Side)

67	10	.....	1	358 6818

3.248–1 BODY, Headlamp (Except Rebel, Matador And '69-'70-'71 Ambassador)

67	01	.....	2	320 6747
68	01-30-70 (* 3-21)	.....	2	320 6747
68	01-30-70 (* 3-22)	.....	2	448 5891
69/70	01-30-40-70 (* 3-21)	.....	2	448 6164
69/70	01-30-40-70 (* 3-22)	.....	2	448 6163
71/	01-40-70	.....	2	448 6163
67	50-80	.....	2	320 8183
68	80 (Except Export)	.....	2	448 5477

3.248–2 BODY, Headlamp (Inner)(Rebel And '69-'70-'71 Ambassador)

67/70	(Left) 10 (* 3-21)	.....	1	320 8186
67/70	(Left) 10 (* 3-22)	.....	1	320 8755
71/	(Left) 10-80	.....	1	812 0166
69/70	(Left) 80 (* 3-21)	.....	1	320 8186
69/70	(Left) 80 (* 3-22)	.....	1	320 8755
67/70	(Right) 10 (* 3-21)	.....	1	320 4306
67/70	(Right) 10 (* 3-22)	.....	1	320 8755
71/	(Right) 10-80	.....	1	812 0166
69/70	(Right) 80 (* 3-21)	.....	1	320 4306
69/70	(Right) 80 (* 3-22)	.....	1	320 8755

3.248–3 BODY, Headlamp (Outer)(Rebel, Matador And '69-'70-'71 Ambassador)

67/70	(Left) 10 (* 3-21)	.....	1	320 8186
67/70	(Left) 10 (* 3-22)	.....	1	320 8755
71/	(Left) 10-80	.....	1	812 0166
69/70	(Left) 80 (* 3-21)	.....	1	320 4306
69/70	(Left) 80 (* 3-22)	.....	1	320 8755
67/70	(Right) 10 (* 3-21)	.....	1	320 8186
67/70	(Right) 10 (* 3-22)	.....	1	320 8755
69/70	(Right) 80 (* 3-21)	.....	1	320 4306
69/70	(Right) 80 (* 3-22)	.....	1	320 8755
71/	(Right) 10-80	.....	1	812 0166

ELECTRICAL - INSTRUMENTS

3.252–1 DOOR, Headlamp

67	10 (* 3–23)	.....	2	357 6400
67	10 (* 3–24)	.....	2	359 2699
67	50–80 . . .(Incl. Gasket)	.....	2	357 6403
68	80	.....	2	360 0824
67/69	(Left) 01	.....	1	358 3889
70	(Left) 01	.....	1	361 5723
71	(Left) 01	.....	1	363 3017
72	(Left) 01	.....	1	365 7113
68	(Left) 10 . . .(Incl. Moulding)	.....	1	319 1059
69	(Left) 10 (Except SST) . . .(Incl. Moulding)	.....	1	319 3825
69	(Left) 10 (SST) . . .(Incl. Moulding)	.....	1	319 3827
70	(Left) 10 (E/MACHINE)	.....	1	361 5901
70	(Left) 10 (MACHINE)	.....	1	363 6625
71/	(Left) 10	.....	1	363 2349
68/69	(Left) 30–70 . . .(Incl. Moulding)	.....	1	360 1979
70	(Left) 30–70. . .(Incl. Moulding)	.....	1	361 6699
70/	(Left) 40	.....	1	363 6207
71	(Left) 70	.....	1	363 2891
72	(Left) 70 (Except AMX)	.....	1	364 5459
72	(Left) 70 (AMX)	.....	1	363 2891
69	(Left) 80	.....	1	361 4675
70	(Left) 80	.....	1	361 5929
71/	(Left) 80	.....	1	812 0071
67/69	(Right) 01	.....	1	358 3888
70	(Right) 01	.....	1	361 5722
71	(Right) 01	.....	1	363 3016
72	(Right) 01	.....	1	365 7112
68	(Right) 10 . . .(Incl. Moulding)	.....	1	319 1058
69	(Right) 10 (Except SST) . . .(Incl. Moulding)	.....	1	319 3824
69	(Right) 10 (SST) . . .(Incl. Moulding)	.....	1	319 3826
70	(Right) 10 (E/MACHINE)	.....	1	361 5900
70	(Right) 10 (MACHINE)	.....	1	363 6624
71/	(Right) 10	.....	1	363 2348
68/69	(Right) 30–70 . . .(Incl. Moulding)	.....	1	360 1978
70	(Right) 30–70. . .(Incl. Moulding)	.....	1	361 6698
70/	(Right) 40	.....	1	363 6206
71	(Right) 70	.....	1	363 2890
72	(Right) 70 (Except AMX)	.....	1	364 5458
72	(Right) 70 (AMX)	.....	1	363 2890
69	(Right) 80	.....	1	361 4674
70	(Right) 80	.....	1	361 5928
71/	(Right) 80	.....	1	812 0070

3.252–2 ATTACHING PARTS, Headlamp Door To Fender

SCREW, Tapping	67/69	01	.....	8	400 1603
SCREW, Tapping	70	01 (#10–16)	.....	4	400 2730
SCREW, Tapping	70/	01 (#8–18)	.....	4	400 2816
SCREW, Tapping	67	10 (Black)	.....	2	400 1603
SCREW, Tapping	67	10 (Chrome)	.....	2	400 1604
SCREW, Tapping	68	10	.....	8	400 2812
SCREW, Tapping	69/	10	.....	4	400 2816
SCREW, Tapping	70/	40	12.168	6	400 2731
SCREW, Tapping	67	50–80	.....	8	400 1603
SCREW, Tapping	68	80	17.655	8	320 9830
SCREW, Tapping	69	80	.....	4	400 3921
SCREW, Tapping	70	80	.....	4	400 4089
SCREW, Tapping	71/	80	.....	4	400 3744

NUT (Plastic)	67/69	01-10-50-80	14.108	AR	400 0141	
NUT (Plastic)	70/	01	14.108	4	400 0141	
NUT, Speed	70	01 (#10-16)	2.050	4	400 1999	
NUT. Speed	70/	01 (#8-18)	.....	4	400 3841	
NUT. Speed	70/	40	12.168	6	400 3609	
NUT. Speed	68/69	10	.....	4	400 3841	
NUT. Speed	71/	80	13.072	4	400 0383	
NUT, Spring	69/70	80	.....	4	400 3929	

3.252–2a ATTACHING PARTS. Door To Fender Extension

SCREW, Tapping	68/69	30-70	.....	4	400 3830	
SCREW, Tapping	70	30-70 (5/8" Long)	.....	2	400 2654	
SCREW, Tapping	70	30-70 (1" Long)	.....	6	400 2816	
SCREW, Pan Head	70	30-70 (1/2" Long)	17.660	2	G163216	NA
NUT. Speed	70	30-70 (7/16" Wide)	17.426	2	400 1556	
NUT, Speed	70	30-70 (5/8" Wide)	.....	2	400 1996	
BOLT, Hexagon	70	30-70	2.050	2	400 2334	

3.252–3 ATTACHING PARTS. Headlamp Door To Grille

SCREW, Tapping	70/	01	.....	6	400 3663	
SCREW, Tapping	67	10	.....	4	400 1603	
SCREW, Tapping	69	10 (8-18 x 3/4")	.....	4	400 2812	
SCREW, Tapping	69/70	10 (8-18 x 1")	.....	4	400 2816	
SCREW, Tapping	71/	10 (8-18 x 3/4")	.....	8	400 3663	
SCREW, Tapping	70	30-70	.....	4	400 2654	
SCREW, Tapping	72	70 (8-18 x 3/4")	2.050	2	400 2334	
SCREW, Tapping	72	70 (8-18 x 1")	.....	4	400 4614	
SCREW, Tapping	69/70	80	.....	6	400 2725	
SCREW, Tapping	71	80 (Black)	.....	4	400 2730	
SCREW, Tapping	71/	80 (Chrome)	12.168	4	400 2731	
SCREW, Tapping	71/	70	.....	6	400 3663	
NUT. Speed	70	01	.....	2	400 3929	
NUT, Spring	67	10	13.072	4	400 0383	
NUT. Speed	69/	10 (Metal)	22.100	4	400 3841	
NUT (Nylon)	71	10	.....	8	400 3748	
NUT. Speed	70	30-70	2.050	4	400 3605	
NUT. Spring	72	70 (10-16 x 5/8")	2.050	2	400 1999	
NUT. Speed	71/	70	.....	4	400 0141	
NUT, Spring	69	80	.....	6	400 3547	
NUT. Speed	70	80	2.050	4	400 1999	
NUT, Speed	71/	80	.....	4	400 3547	

3.252–4 MOULDING. Headlamp Door (Except '69 Rebel)

68	(Left) 10	.....	1	360 1811	
68	(Right) 10	.....	1	360 1810	
68	(Upper) 80	.....	2	360 1680	
68	(Lower) 80	.....	2	360 1682	

3.252–5 MOULDING. Headlamp Door (Inner)('69 Rebel)

69	(Left) 10	.....	1	448 5915	
69	(Right) 10	.....	1	448 5914	

3.252–6 MOULDING. Headlamp Door (Outer)('69 Rebel)

69	(Left) 10	.....	1	448 5917	
69	(Right) 10	.....	1	448 5916	

3.252–7 ATTACHING PARTS. Moulding To Door

SCREW, Tapping	69	10	.....	8	448 5913	
NUT, Speed	68	10	26.095	14	400 1560	

3.252–8 GASKET, Headlamp Door

67/68	50–80	.....	2	357 6404

3.265–1 SHELL ASSEMBLY, Headlamp (Includes Shell, Retaining Ring And Retaining Ring Screws)(Except Rebel, Matador And '69-'70-'71 Ambassador)

67	01 . . .(Incl. Adjusting Screws)	.....	2	320 6749
68	01–70 (* 3–21) . . .(Incl. Adjusting Screws)	.....	2	320 6749
68	01–70 (* 3–22)	.....	2	448 5893
69/70	01–30–40–70 (* 3–21)	.....	2	320 6749
69/70	01–30–40–70 (* 3–22)	.....	2	448 5893
71/	01–40–70	.....	2	448 5893
67/68	(Upper) 50–80	.....	2	320 8191
67/68	(Lower) 50–80	.....	2	320 8192

3.265–2 SHELL ASSEMBLY, Headlamp (Outer)(Rebel, Matador And '69-'70-'71 Ambassador)

67/69	(Left) 10 (* 3–21)	.....	1	320 2705
70	(Left) 10 (* 3–21)	.....	1	320 7788
67/70	(Left) 10 (* 3–22)	.....	1	320 8761
71/	(Left) 10–80	.....	1	812 0165
69/70	(Left) 80 (* 3–21)	.....	1	320 7788
69/70	(Left) 80 (* 3–22)	.....	1	320 8761
67/69	(Right) 10 (* 3–21)	.....	1	320 7788
70	(Right) 10 (* 3–21)	.....	1	320 2705
67/70	(Right) 10 (* 3–22)	.....	1	320 8757
71/	(Right) 10–80	.....	1	812 0164
69/70	(Right) 80 (* 3–21)	.....	1	320 2705
69/70	(Right) 80 (* 3–22)	.....	1	320 8757

3.265–3 SHELL ASSEMBLY, Headlamp (Inner)(Rebel, Matador And '69-'70-'71 Ambassador)

67/70	(Left) 10 (* 3–21)	.....	1	320 2708
67/70	(Left) 10 (* 3–22)	.....	1	320 8759
71/	(Left) 10–80	.....	1	812 0163
69/70	(Left) 80 (* 3–21)	.....	1	320 2708
69/70	(Left) 80 (* 3–22)	.....	1	320 8759
67/70	(Right) 10 (* 3–21)	.....	1	320 7790
67/70	(Right) 10 (* 3–22)	.....	1	320 8763
71/	(Right) 10–80	.....	1	812 0162
69/70	(Right) 80 (* 3–21)	.....	1	320 7790
69/70	(Right) 80 (* 3–22)	.....	1	320 8763

3.268 SCREW, Headlamp Adjusting

67/	01–30–40–70	.....	AR	311 8667
67/70	10	.....	AR	311 8667
71/	10–80	.....	AR	320 2758
67	50–80 . . .(Incl. Lug And Nut)	.....	8	320 8184
68/70	80	.....	AR	311 8667

3.272 SPRING, Headlamp Adjusting

67/70	01–30–40–70 (* 3–21)	.....	2	320 5364
68/70	01–30–40–70 (* 3–22)	.....	2	320 2756
71/	01–40–70	.....	2	320 2756
67/70	10 (* 3–21)	.....	4	320 2703
67/70	10 (* 3–22)	.....	4	320 2756
71/	10–80	.....	4	320 2756
67/68	50–80	.....	4	320 8193
69/70	80 (* 3–21)	.....	4	320 2703
69/70	80 (* 3–22)	.....	4	320 2756

ELECTRICAL - INSTRUMENTS

3.275–1 RING, Headlamp Bulb Retaining

67/70	01–30–40–70 (* 3–21)	.....	2	320 5361
67/70	01–30–40–70 (* 3–22)	.....	2	448 5892
71/	01–40–70	.....	2	448 5892
67/70	10 (* 3–21)	.....	4	320 2704
67/70	10 (* 3–22)	.....	4	320 2716
71/	10–80	.....	4	320 2716
67/68	50–80	.....	4	320 1156
69/70	80 (* 3–21)	.....	4	320 2704
69/70	80 (* 3–22)	.....	4	320 2716

3.275–2 SCREW, Headlamp Bulb Retaining Ring

67/70	01–30–40–70 (* 3–21)	.....	6	320 0748
67/70	01–30–40–70 (* 3–22)	.....	6	320 2761
71/	01–40–70	.....	6	320 2761
67/70	10 (* 3–21)	.....	12	320 0748
67/70	10 (* 3–22)	.....	12	320 2761
71/	10–80	.....	12	320 2761
67/68	50–80	.....	12	320 0748
69/70	80 (* 3–21)	.....	12	320 0748
69/70	80 (* 3–22)	.....	12	320 2761

3.280 BULB, Headlamp

67/68	01–30–70 (Except Export)	3.215	2	320 2092
69/70	01–30–70 (Except Export)	3.215	2	448 6754
71/	01–40–70 (Except Export)	3.215	2	448 9458
67/	***01-30-70 (Export-Clear-* 3-19)***	3.215	2	320 2092
67/	***01-30-70 (Export-Clear-* 3-20)***	3.215	2	320 4788
67/	***01-30-70 (Export-Amber-* 3-19)***	3.215	2	320 5966
67/68	(Outer) 10 (Except Export)	3.215	2	320 0159
69/70	(Outer) 10 (Except Export)	3.215	2	448 6753
69/70	(Outer) 80 (Except Export)	3.215	2	448 6753
71/	(Outer) 10–80 (Except Export)	3.215	2	812 0032
67/	***(Outer) 10 (Export-Clear-* 3-21)***	3.215	2	320 0159
67/	***(Outer) 10 (Export-Clear-* 3-22)***	3.215	2	320 0414
67/	***(Outer) 10 (Export-Amber)***	3.215	2	320 6878
69/	***(Outer) 80 (Export-Clear-* 3-21)***	3.215	2	320 0159
69/	***(Outer) 80 (Export-Clear-* 3-22)***	3.215	2	320 0414
69/	***(Outer) 80 (Export-Amber)***	3.215	2	320 6878
67/	(Inner) 10 (Except Export)	3.215	2	320 0160
69/	(Inner) 80 (Except Export)	3.215	2	320 0160
71/	(Inner) 10–80 (Except Export)	3.215	2	812 0031
67/	***(Inner) 10 (Export-Clear-* 3-21)***	3.215	2	320 0160
67/	***(Inner) 10 (Export-Amber-* 3-21)***	3.215	2	320 6877
69/	***(Inner) 80 (Export-Clear-* 3-21)***	3.215	2	320 0160
69/	***(Inner) 80 (Export-Amber-* 3-21)***	3.215	2	320 6877
67/68	(Upper) 50–80 (Clear)	3.215	2	320 0159
67/68	(Upper) 50–80 (Amber)	3.215	2	320 6878
67/68	(Lower) 50–80 (Clear)	3.215	2	320 0160
67/68	(Lower) 50–80 (Amber)	3.215	2	320 6877

3.292–1 HOUSING ASSEMBLY, Parking And Front Directional Signal Lamp

67/68	01 (LHD)	.....	2	320 7449
69	01...(Incl. Lens Gasket)	.....	2	448 6165
70	01–30 (* 3–81)	.....	2	361 5515
70	01–30 (* 3–82)	.....	2	321 0071
71/	01	.....	2	321 1870
67/69	***01 (RHD-Except England)***	.....	2	320 7449

67/68	10 (LHD)	.....	2	320 7853	
69	10...(Incl. Bulb And Gaskets)	.....	2	448 6166	
70	10...(Incl. Bulb And Gasket)	.....	2	448 8454	
67/68	***10 (RHD-Except England)***	.....	2	320 7853	
68	30-70	.....	2	448 5483	
69	30-70...(Incl. Lens Gasket) 342	.....	2	319 4813	
70/	40	.....	2	363 6403	
67	50	.....	2	320 7855	
71/	70 (AMX-Painted)	.....	2	321 0071	
72	70 (AMX-Chrome)	.....	2	321 1870	
67	80 (LHD-880)(LHD-990)	.....	2	320 7853	
67	80 (LHD-DPL)	.....	2	320 7855	
68	80 (DPL)	.....	2	320 7853	
68	80 (SST)	.....	2	448 5777	
67/68	***80 (RHD-880-Except England)(RHD-990-Except England)***	.....	2	320 7853	
67/68	***80 (RHD-DPL-Except England)***	.....	2	320 7855	
71/	(Left) 10	.....	1	363 3095	
70	(Left) 70 (* 3-81)	.....	1	361 6695	
70	(Left) 70 (* 3-82)	.....	1	321 0166	
71/	(Left) 70 (Except AMX)	.....	1	363 3095	
69	(Left) 80 ...(Incl. Lens Gasket) 339	.....	1	448 5993	
70	(Left) 80 ...(Incl. Lens Gasket)	.....	1	448 8013	
71/	(Left) 80	.....	1	448 9133	
71/	(Right) 10	.....	1	363 3094	
70	(Right) 70 (* 3-81)	.....	1	361 6694	
70	(Right) 70 (* 3-82)	.....	1	321 0165	
71/	(Right) 70 (Except AMX)	.....	1	363 3094	
69	(Right) 80 ...(Incl. Lens Gasket)	.....	1	448 5992	
70	(Right) 80 ...(Incl. Lens Gasket)	.....	1	448 8012	
71/	(Right) 80	.....	1	448 9132	

3.292-2 HOUSING ASSEMBLY, Parking Lamp (Incl. Socket And Wire)

67/69	***01 (RHD-England)***	.....	3.316	2	320 7451
67/69	***10-80 (RHD-England)***	.....	3.316	2	320 7854

3.292-3 ATTACHING PARTS, Housing To Bumper Rail

SCREW, Tapping	67/70	10	17.648	4	G161439 NA
SCREW, Tapping	71/	10-70	17.669	6	G9416643 NA
SCREW, Tapping	69/	80	17.648	4	G161439 NA
SCREW, Machine	70	70	12.168	4	400 2731
NUT, Hexagon	68/69	30-70	25.052	4	439 0742
NUT, Hexagon	71/	70 (AMX)	23.074	4	400 3018
NUT, Speed	71/	10-70 (Upper-Except AMX)	2.050	4	400 1999
NUT, Speed	71/	10-70 (Lower-Except AMX)	.....	2	400 4140
NUT, Speed	71/	80	23.055	4	400 1932
NUT, Speed	***67/69***	***01 (England)***	.....	4	400 0152
NUT, Spring	67/70	10	3.316	4	448 7158
NUT, Spring	70	70	12.168	4	400 3609
NUT, Spring	67	80 (Except DPL)	3.316	4	448 7158
NUT, Spring	68	80 (Except SST)	3.316	4	448 7158
NUT, Spring	69/70	80	3.316	4	448 7158
NUT, Spring	***67/69***	***10-80 (England)***	3.316	4	448 7158

3.292-4 ATTACHING PARTS, Housing To Grille

STUD	67	50	.....	4	314 7217
STUD	67	80 (DPL-Except England)	.....	4	314 7217
STUD	68	80 (SST)	.....	4	314 7217
STUD	68	80 (SST)	.....	4	400 3854
NUT, Hexagon	70/	01-30	23.074	4	400 3018
NUT, Speed	67	50	25.052	4	439 0742
NUT, Speed	67	80 (DPL-Except England)	25.052	4	439 0742
NUT, Speed	68	80 (SST)	25.052	4	439 0742

ELECTRICAL - INSTRUMENTS

3.292–4a ATTACHING PARTS, Housing To Grille And Lens (Refer Group 3.292–10a)

3.292–5 GASKET, Parking And Front Directional Signal Lamp Housing To Bumper

67/70	10			2	357 6741
67	50–80 (880–Except England)(990–Except England)			2	357 6741
68	80 (DPL)			2	357 6741
69/	80			2	357 6741

3.292–5a GASKET, Parking Lamp Housing To Bumper

67/69	***10-80 (RHD-England)***			2	357 6741

3.292–6 CUSHION, Parking Lamp Housing To Bumper (Rubber)

70	70			2	363 6380

3.292–7 LENS KIT, Parking And Front Directional Lamp (Incl. Lens, Gasket And Attaching Parts)

67/69	01 (LHD)			2	320 5332
70	01 (Clear)			2	448 7551
71/	01 (Amber)			2	448 9095
67/69	10 (LHD)			2	320 7636
70	10 (LHD)			2	448 8417
71/	10			2	448 9128
68/69	30	341		2	448 5513
70	30			2	448 7550
70/	40			2	448 8599
67	50...(Incl. Bezel)			2	320 7679
68/69	70 (Amber Lens–Except Export)	341		2	320 8825
70	70			2	448 7558
71/	70 (Except AMX)			2	448 9128
71/	70 (AMX–Clear)			2	448 7550
72	70 (AMX–Amber)			2	448 9095
67	80 (Except DPL)			2	320 7636
67	80 (LHD–DPL)...(Incl. Bezel)			2	320 7679
68	80 (Except SST)			2	320 7636
68	80 (LHD–SST)			2	320 8871
67/69	***01 (RHD-Except England)***			2	320 5332
71/72	***01 (Export-Clear)***			2	448 7551
67/69	***10 (RHD-Except England)***			2	320 7636
70	***10 (Export-Clear)***			2	812 0345
71/	***10-70 (Export-Clear-Except AMX)***			2	812 0329
70/	***40 (Export-Clear)***			2	812 0319
68/69	***70 (Export-Clear)***			2	448 5513
70	***70 (Export-Clear)***			2	812 0314
71/	***70 (Export-AMX-Clear)***			2	448 7550
67	***80 (RHD-880-Except England)(RHD-990-Except England)***			2	320 7636
67	***80 (RHD-DPL-Except England)***			2	320 7679
68	***80 (RHD-Except England)***			2	320 7636
68	***80 (RHD-SST)***			2	320 7679
69	(Left) 80 (Smooth)	340		1	448 5995
69/	(Left) 80 (7 Horizontal Ribs)			1	448 8297
69/	***(Left) 80 (Export-Clear)***			1	448 6637
69	(Right) 80 (Smooth)			1	448 5994
69/	(Right) 80 (7 Horizontal Ribs)			1	448 8296
69/	***(Right) 80 (Export-Clear)***			1	448 6636

3.292–8 LENS, Parking And Front Directional Signal Lamp (Less Bezel)

67	50			2	357 6767
67	80 (LHD–DPL)			2	357 6767

Printed in U.S.A.

3.292–9 LENS KIT, Parking Lamp (Incl. Lens, Lens Gasket And Attaching Parts)

67/69	***01 (RHD-England)***	***3.317***	***2***	***320 5353***
67/69	***10-80 (RHD-England)***	***3.317***	***2***	***320 7639***

3.292–10 ATTACHING PARTS, Lens To Housing

SCREW, Machine	67/69	01 (LHD)	.....	4	320 4248
SCREW, Machine	***67/69***	***01 (RHD-Except England)***	.....	4	320 4248
SCREW, Machine	***67/69***	***01 (RHD-England)***	.....	4	320 4705
SCREW, Tapping	70/	01 (1/2" Long)	17.660	6	448 7552
SCREW, Tapping	67/70	10	17.660	4	320 9574
SCREW, Tapping	71/	10	.....	4	448 9129
SCREW, Tapping	68/69	30–70	.....	6	G449615
SCREW, Tapping	70	30–70 (1/2" Long)	17.660	6	448 7552
SCREW, Tapping	67	50	.....	6	320 9578
SCREW, Tapping	71/	70 (Except AMX)	.....	4	448 9129
SCREW, Tapping	71/	70 (AMX)	.....	6	448 7552
SCREW, Tapping	67	80 (880)(990)(7/8" Long)	17.660	4	320 9574
SCREW, Tapping	67	80 (LHD-DPL)(1/2" Long)	.....	6	320 9578
SCREW, Tapping	68	80 (Except SST)(7/8" Long)	17.660	4	320 9574
SCREW, Tapping	68	80 (SST)(1/2" Long)	.....	6	320 9578
SCREW, Tapping	69/	80 (7/8" Long)	17.660	4	320 9574
SCREW, Tapping	***-67/69***	***80 (RHD-DPL-Except England)***	.....	6	320 9578
SCREW, Tapping	***67/69***	***80 (RHD-England)***	17.660	4	320 9574

3.292–10a ATTACHING PARTS, Lens To Housing Grille

SCREW, Tapping	70/	40	.....	4	448 8612
NUT (Plastic)	70/	40	14.108	4	400 0141

3.292–11 EYELET, Parking And Front Directional Signal Lamp Lens

67/69	01	.....	4	320 4247

3.292–12 GASKET, Parking And Front Directional Signal Lamp Lens

67/69	01	.....	2	320 4246
70/	01–30	.....	2	360 2265
67/70	10	.....	2	357 6735
71/	10	.....	2	363 3098
70/	40	.....	2	361 6406
68/69	30–70	.....	2	360 2265
67	50	.....	2	357 6768
70	70	.....	2	361 6697
71/	70 (Except AMX)	.....	2	363 3098
71/	70 (AMX)	.....	2	360 2265
67	80 (Except DPL)	.....	2	357 6735
67	80 (LHD-DPL)	.....	2	357 6768
68	80 (Except SST)	.....	2	357 6735
68	80 (SST)	.....	2	357 6768
69/	80	.....	2	361 4648
67/68	***80 (RHD-DPL-Except England)***	.....	2	357 6768
67/68	***80 (RHD-DPL-England)***	.....	2	357 6735

3.292–13 BULB, Parking And Front Directional Signal Lamp

67/69	01 (LHD)	3.215	2	G454645
70	01	3.215	2	320 7689
71/	01	3.215	2	320 9544
67/	10 (LHD)	3.215	2	320 9544

Printed in U.S.A.

68/70	30		3.215	2	320 7689
70/	40		3.215	2	320 9544
67	50		3.215	2	320 7689
68/70	70		3.215	2	320 9544
71/	70 (Except AMX)		3.215	2	320 9544
71/	70 (AMX-* 3-126)		3.215	2	320 7689
71/	70 (AMX-* 3-127)		3.215	2	812 2110
67	80 (Except DPL)		3.215	2	320 9544
67	80 (LHD-DPL)		3.215	2	320 7689
68	80 (Except SST)		3.215	2	320 9544
68	80 (SST)		3.215	2	320 7689
69/	80		3.215	2	320 9544
67/69	***01 (RHD-Except England)***		3.215	2	G454645
67/69	***10 (RHD-Except England)***		3.215	2	320 9544
67/68	***80 (RHD-DPL-Except England)***		3.215	2	320 7689
71/	***(Clear)***		3.215	2	320 9544

3.292–14 BULB, Parking Lamp

67/69	***01-10-80 (RHD-England)***		3.215	2	G142450

3.292–15 BEZEL, Parking And Front Directional Signal Lamp

67	50		.....	2	357 6764
67	80 (LHD-DPL)		.....	2	357 6764
68	80 (LHD-SST)		.....	2	360 1964
67	***80 (RHD-Except England)***		.....	2	357 6764

3.292–16 ATTACHING PARTS, Bezel To Housing

SCREW, Tapping	67	50	.....	4	400 2055
SCREW, Tapping	67	80 (DPL-Except England)	.....	4	400 2055
SCREW, Tapping	67	80 (SST)	.....	4	400 2055

3.292–17 GASKET, Parking And Front Directional Signal Lamp Bezel (Upper)

67	50		.....	2	359 8058
67	80 (DPL-Except England)		.....	2	359 8058

3.292–18 GASKET, Parking And Front Directional Signal Lamp Bezel (Lower)

67	50		.....	2	359 8059
67	80 (DPL-Except England)		.....	2	359 8059

3.292–19 BRACKET, Parking And Front Directional Signal Lamp Mounting

67/69	01		.....	2	351 7228
71/	70 (AMX)		.....	2	364 6504
67	(Left) 50		.....	1	359 1063
67	(Left) 80 (DPL-Except England)		.....	1	359 1063
67	(Right) 50		.....	1	359 1062
67	(Right) 80 (DPL-Except England)		.....	1	359 1062

3.292–19a ATTACHING PARTS, Bracket To Grille

SCREW, Tapping	71	70 (AMX)	.....	6	400 2331
SCREW, Tapping	72	70 (AMX)	17.671	6	812 0054
NUT, Speed	71/	70 (AMX)	17.426	6	400 0557

3.292–20 WIRE, Parking And Front Directional Signal Lamp (Incl. Socket)(Less Bulb)

67	01 (Except England)	.....	2	320 4245

3.292–21 WIRE, Parking Lamp Ground

68	80 (SST)	.....	1	319 1577
70	30	.....	2	319 8601

3.292–22 CLIP, Parking And Front Directional Signal Lamp Wire

67/69	10-80 (LHD)	3.166	2	400 0713
67/69	***10-80 (RHD-Except England)***	3.166	2	400 0713
71	***10***	4.141	2	318 0752

3.292–23 WICK, Parking Lamp Lens

70	01	.....	2	361 6373
70	30-70	.....	2	361 6373
71/	70 (AMX)	.....	2	361 6373

3.293 CONNECTOR, Parking And Front Directional Signal Lamp

70	01-30-40-70 (* 3-82)	.....	2	448 8988
71/		.....	2	448 8988

3.303–1 HOUSING ASSEMBLY, Tail, Stop And Rear Directional Signal Lamp

67	85-86-87-89 ...(Less Socket)	.....	2	357 6692
67/69	(Left) 05-06-07-09 (Except SC/RAMBLER) ...(Less Socket)	.....	1	320 7781
67/69	(Left) 08 ...(Incl. Socket)	.....	1	320 6739
69	(Left) 09 (SC/RAMBLER) ...(Incl. Gasket)	.....	1	363 5631
70/71	(Left) 05-06-08 ...(Less Socket)	.....	1	361 6595
72	(Left) 01...(Incl. Gaskets-* 3-117) 371	.....	1	812 1625
72	(Left) 01...(Incl. Gaskets-* 3-118) 371	.....	1	364 6043
67	(Left) 15-16-17-19 ...(Less Socket)	.....	1	357 6653
68	(Left) 15-17-19 ...(Less Socket)	.....	1	360 0763
69	(Left) 15-19...(Less Sockets)...(Incl. Gaskets) 336	.....	1	361 4535
70	(Left) 15-19...(Incl. Sockets And Gasket-* 3-89)	.....	1	361 5855
70	(Left) 15-19...(Incl. Sockets And Gasket-* 3-90)	.....	1	448 8723
71/	(Left) 15-19 ...(Incl. Sockets And Gasket)	.....	1	448 8723
67/68	(Left) 18-88 ...(Incl. Socket)	.....	1	320 7785
69/	(Left) 18-88...(Incl. Bulbs And Gaskets) 338	.....	1	361 4597
68/69	(Left) 30-70 ...(Less Socket)	.....	1	448 5547
70	(Left) 30-70	.....	1	361 6765
70/	(Left) 40	.....	1	363 6195
67	(Left) 50	.....	1	357 7433
71/	(Left) 70	.....	1	363 2877
68	(Left) 85-89 ...(Less Socket)	.....	1	360 0783
69	(Left) 85-89 (Except SST)...(Less Sockets) 321	.....	1	361 4569
69	(Left) 85-89 (SST)...(Less Sockets) 324	.....	1	361 4555
70	(Left) 85 (Except DPL And SST)...(Incl. Sockets-* 3-89)	.....	1	361 5855
70	(Left) 85 (Except DPL And SST)...(Incl. Sockets-* 3-90)	.....	1	448 8723
71/	(Left) 85 (DPL)...(Incl. Sockets)	.....	1	448 8723
70	(Left) 85-89 (DPL)(SST)...(Incl. Sockets-* 3-89)	.....	1	361 5875
70	(Left) 85-89 (DPL)(SST)...(Incl. Sockets-* 3-90)	.....	1	448 8725
71/	(Left) 85-89 (SST)(Brougham)...(Incl. Sockets)	.....	1	363 3035
67/69	(Right) 05-06-07-09 (Except SC/RAMBLER)...(Less Socket)	.....	1	320 7780
69	(Right) 09 (SC/RAMBLER) ...(Incl. Gasket)	.....	1	363 5630
67/69	(Right) 08 ...(Incl. Socket)	.....	1	320 6738
70/71	(Right) 05-06-08 ...(Less Socket)	.....	1	361 6594
72	(Right) 01...(Incl. Gaskets-* 3-117) 371	.....	1	812 1624
72	(Right) 01...(Incl. Gaskets-* 3-118) 371	.....	1	364 6042

Printed in U.S.A.

67	(Right) 15-16-17-19 ...(Less Socket)	.....	1	357 6652	
68	(Right) 15-17-19 ...(Less Socket)	.....	1	360 0762	
69	(Right) 15-19...(Less Sockets)...(Incl. Gaskets)	.....	1	361 4534	
70	(Right) 15-19...(Incl. Sockets And Gasket-* 3-89)	.....	1	361 5854	
70	(Right) 15-19...(Incl. Sockets And Gasket-* 3-90)	.....	1	448 8722	
71/	(Right) 15-19 ...(Incl. Socket And Gasket)	.....	1	448 8722	
67/68	(Right) 18-88 ...(Incl. Socket)	.....	1	320 7784	
69/	(Right) 18-88 ... (Incl. Bulbs And Gaskets)	.....	1	361 4596	
68/69	(Right) 30-70 ...(Less Socket)	.....	1	448 5548	
70	(Right) 30-70	.....	1	361 6764	
70/	(Right) 40	.....	1	363 6194	
67	(Right) 50	.....	1	357 7432	
71/	(Right) 70	.....	1	363 2876	
68	(Right) 85-89 ...(Less Socket)	.....	1	360 0782	
69	(Right) 85-89 (Except SST)...(Less Sockets) 321	.....	1	361 4568	
69	(Right) 85-89 (SST)...(Less Sockets) 324	.....	1	361 4554	
70	(Right) 85 (Except DPL And SST)...(Incl. Sockets-* 3-89)	.....	1	361 5854	
70	(Right) 85 (Except DPL And SST)...(Incl. Sockets-* 3-90)	.....	1	448 8722	
71/	(Right) 85 (DPL)...(Incl. Sockets)	.....	1	448 8722	
70	(Right) 85-89 (DPL)(SST)...(Incl. Sockets-* 3-89)	.....	1	361 5874	
70	(Right) 85-89 (DPL)(SST)...(Incl. Sockets-* 3-90)	.....	1	448 8724	
71/	(Right) 85-89 (SST)(Brougham)...(Incl. Sockets)	.....	1	363 3034	

3.303-1a SPACER, Tail, Stop And Rear Directional Signal Lamp Housing (Rubber)

70/	15-19-85-89	.....	4	363 6382	

3.303-1b ATTACHING PARTS, Lamp Housing Spacer To Housing

NUT, Speed	70/ 15-19-85-89	.....	4	400 4065	

3.303-1c BRACKET, Tail, Stop And Rear Directional Signal Lamp Sealing

71/	70	.....	2	365 0521	

3.303-1d ATTACHING PARTS, Bracket To Lamp Housing

NUT, Stamped	71/ 70	17.428	8	448 8312	

3.303-2 HOUSING, Rear Directional Signal Lamp

67/69	***05-06-07-09 (RHD-England)***	3.316	2	320 6951	
67/69	***08 (RHD-England)***	3.316	2	320 7451	
67/69	***10-80 (RHD-England)***	3.316	2	320 7854	

3.303-3 ATTACHING PARTS, Housing To Rear Quarter Panel

SCREW, Tapping	67/69	08	17.648	6	G161447	NA
SCREW, Tapping	67	15-16-17-19 (8-32 x 1/2)	.....	8	400 1629	
SCREW, Tapping	67	15-16-17-19 (10-24 x 1/2)	.....	8	400 2218	
SCREW, Tapping	68	15-17-19	28.018	8	400 2011	
SCREW, Tapping	69	15-19	17.660	8	G449623	NA
SCREW, Tapping	68	85-89	17.660	8	G449611	NA
STUD	67/69	05-06-07-09	12.078	6	341 1519	
STUD	67	50	3.292	12	314 7217	
WASHER, Seal	70/	01-40	.....	2	400 4066	
NUT, Acorn	67	50	.....	8	400 1632	
NUT, Hexagon	67/69	05-06-07-09	26.039	6	400 3018	
NUT, Hexagon	70	01 (Outer-Upper)	17.417	2	448 7145	
NUT, Hexagon	71/	01-40 (Outer-Upper)	17.417	2	448 8312	
NUT, Hexagon	67	50	25.052	12	439 0742	

NUT, Sealed	70/	01	.....	6	400 1982
NUT, Sealed	67/68	15-16-17-19	.....	8	400 1982
NUT, Sealed	67/68	59-85-86-87-89	.....	8	400 1982
NUT, Speed	67/69	08	3.292	6	400 0113
NUT, Stamped	70/	40	17.428	8	G9420262 NA

3.303–3a ATTACHING PARTS, Housing To Rear Deck Lower Panel

NUT, Hexagon	70/	15-19	17.412	4	G271166 NA
NUT, Lock	68/69	30-70	17.416	4	G273801 NA
NUT, Sealed	69	85-89	.....	8	400 1982
NUT, Stamped	70	30-70	17.428	8	448 8312
SCREW, Hexagon	67/	18-88	.....	4	400 1993
SCREW, Hexagon	70/	30-70	.....	8	400 3740
SCREW, Tapping	70/	15-19-85-89	.....	12	448 7649

3.303–4 ATTACHING PARTS, Housing To Bezel

SCREW, Tapping	67	85-86-87-89	.....	8	400 1629

3.303–5 ATTACHING PARTS, Housing To Bumper Rail

SCREW, Tapping	70/	15-19-85-89	25.054	6	400 3734
SCREW, Tapping	***67/69***	***10-80 (RHD-England)***	17.648	4	G161439
NUT, Spring	***67/69***	***10-80 (RHD-England)***	23.055	4	400 1932

3.303–6 BEZEL, Tail, Stop And Rear Directional Signal Lamp

67	85-86-87-89	.....	2	357 6688
68	85-89 (* 3-25)	.....	2	360 0786
68	85-89 (* 3-26)	.....	2	448 5974

3.303–7 ATTACHING PARTS, Bezel To Rear Quarter Panel

SCREW, Tapping	67	85-86-87-89	.....	8	400 1629

3.305–1 GASKET, Tail, Stop And Rear Directional Signal Lamp To Rear Quarter Panel

67/69	05-06-07-09	.....	2	359 2421
68	15-17-19	.....	2	360 0770
69	15-19	.....	2	361 4542
67/	18-88	.....	2	357 6682
70/	40	.....	2	363 6188
67/68	85-86-87-89	.....	2	357 6697
67/69	(Left) 08	.....	1	355 2561
70/	(Left) 01	.....	1	361 6589
67	(Left) 15-16-17-19	.....	1	357 6661
67/69	(Right) 08	.....	1	355 2560
70/	(Right) 01	.....	1	361 6588
67	(Right) 15-16-17-19	.....	1	357 6660

3.305–1a GASKET, Tail, Stop And Rear Directional Signal Lamp To Lower Deck Panel

69	85-89 (* 3-67)	.....	2	361 4558
69	85-89 (* 3-68)	.....	2	360 9336
68/69	30-70	.....	4	360 1992
70	30-70	.....	4	361 6770
71/	(Left) 70	.....	1	363 2883
71/	(Right) 70	.....	1	363 2882

ELECTRICAL - INSTRUMENTS

3.305–2 GASKET. Tail. Stop And Rear Directional Signal Lamp Lens

67/69	05–06–07–09	.....	2	359 2348
70/	01	.....	2	361 6598
67	15–16–17–19	.....	2	357 6658
68	15–17–19	.....	2	360 0768
69	15–19	.....	2	361 4540
70/	15–19	.....	2	361 5856
69/	18–88	.....	2	361 4598
68/69	30–70	.....	2	360 1990
70	30–70	.....	2	361 6768
70/	40	.....	2	363 6198
71/	70	.....	2	363 2880
67	85–86–87–89	.....	2	357 6696
68	85–89	.....	2	360 0812
69	85–89	.....	2	361 4556
70	85 (Except DPL And SST)	.....	2	361 5856
70	85–89 (DPL)(SST)	.....	2	361 5876
71/	85 (DPL)	.....	2	361 5856
71/	85–89 (SST)(Brougham)	.....	2	363 3042
67/69	(Left) 08	.....	1	355 2559
67/68	(Left) 18–88	.....	1	357 6679
67	(Left) 50	.....	1	357 7437
67/69	(Right) 08	.....	1	355 2558
67/68	(Right) 18–88	.....	1	357 6678
67	(Right) 50	.....	1	357 7436

3.305–3 GASKET. Rear Directional Signal Lamp Housing To Bumper Rail

67/69	***10-80 (RHD-England)***	3.316	2	357 6741

3.305–4 GASKET. Rear Directional Signal Lamp Lens (On Bumper Rail)

67/69	***01 (RHD-England)***	3.292	2	320 4246
67/69	***10-80 (RHD-England)***	3.292	2	357 6735

3.306–1 LENS KIT. Tail. Stop And Rear Directional Signal Lamp (Incl. Lens, Lens Gasket And Attaching Parts)

67/69	05–06–07–09	.....	2	320 7775
67	85–86–87–89 ...(Incl. Bezel)	.....	2	320 7556
67	85–86–87–89 ...(Less Bezel)	.....	2	320 9719
68	85–89	.....	2	320 8819
71	(Left) 01	375	1	448 8927
72	(Left) 01	374	1	812 0599
70	(Left) 05–06...(Incl. Chrome Strip)	.....	1	448 7341
70	(Left) 05–06...(Incl. Painted Strip)	.....	1	448 8927
67	(Left) 08	.....	1	320 6733
68	(Left) 08 (* 3–27)	.....	1	320 6733
68	(Left) 08 (* 3–28)	.....	1	448 5605
69	(Left) 08	.....	1	448 5605
67	(Left) 15–16–17–19 ...(Incl. Bezel)	.....	1	320 7549
68	(Left) 15–17–19 ...(Incl. Wink Light Lens)	.....	1	320 8817
69	(Left) 15–19...(Incl. Back-Up Lens)	385	1	448 6275
70	(Left) 15–19	.....	1	448 7561
71	(Left) 15–19	.....	1	448 9141
72	(Left) 15–19	.....	1	812 0606
67	(Left) 18	.....	1	320 7553
68	(Left) 18	.....	1	320 8821
69	(Left) 18...(Incl. Back-Up Lamp Lens–* 3–63)	337	1	448 6283
69	(Left) 18...(Incl. Back-Up Lens–* 3–64)	337	1	448 7183
70/	(Left) 18	.....	1	448 7369

68/69	(Left) 30-70		.....	1	320 8827
70	(Left) 30-70		.....	1	448 7345
70/	(Left) 40		.....	1	448 8661
67	(Left) 50 ...(Incl. Bezel)		.....	1	320 7861
71	(Left) 70		.....	1	448 9005
72	(Left) 70		.....	1	812 1201
72	(Left) 85-89 (SST And Brougham)		.....	1	812 1295
69	(Left) 85-89...(Incl. Back-Up Lamp Lens)	320	.....	1	448 6289
70	(Left) 85 (Except DPL And SST)		.....	1	448 7559
70	(Left) 85-89 (DPL)(SST)		.....	1	448 7563
71/	(Left) 85 (DPL)		.....	1	448 7559
71	(Left) 85-89 (SST)(Brougham)(Order Letters And Ornament Separately-Refer Group 3.308)		.....	1	448 9143
67	(Left) 88 ...(Incl. Bezel)		.....	1	320 7555
68	(Left) 88 ...(Incl. Bezel)		.....	1	320 8823
69	(Left) 88...(Incl. Back-Up Lamp Lens-* 3-63)	337	.....	1	448 6285
69	(Left) 88...(Incl. Back-Up Lamp Lens-* 3-64)	337	.....	1	448 7185
70/	(Left) 88 (* 3-122)		.....	1	448 7373
72	(Left) 88 (* 3-123)		.....	1	448 7369
70	(Right) 05-06...(Incl. Chrome Strip)		.....	1	448 7340
70	(Right) 05-06...(Incl. Painted Strip)		.....	1	448 8926
71	(Right) 01	375	.....	1	448 8926
72	(Right) 01 3445504	374	.....	1	812 0598
67	(Right) 08		.....	1	320 6732
68	(Right) 08 (* 3-27)		.....	1	320 6732
68	(Right) 08 (* 3-28)		.....	1	448 5604
69	(Right) 08		.....	1	448 5604
67	(Right) 15-16-17-19 ...(Incl. Bezel)		.....	1	320 7550
68	(Right) 15-17-19 ...(Incl. Wink Light Lens)		.....	1	320 8816
69	(Right) 15-19...(Incl. Back-Up Lamp Lens)		.....	1	448 6274
70	(Right) 15-19		.....	1	448 7560
71	(Right) 15-19		.....	1	448 9140
72	(Right) 15-19		.....	1	812 0605
67	(Right) 18		.....	1	320 7552
68	(Right) 18		.....	1	320 8820
69	(Right) 18...(Incl. Back-Up Lamp Lens-* 3-63)		.....	1	448 6282
69	(Right) 18...(Incl. Back-Up Lamp Lens-* 3-64)		.....	1	448 7182
70/	(Right) 18 3615894		.....	1	448 7368
68/69	(Right) 30-70		.....	1	320 8826
70	(Right) 30-70		.....	1	448 7344
70/	(Right) 40		.....	1	448 8660
67	(Right) 50 ...(Incl. Bezel)		.....	1	320 7860
71	(Right) 70		.....	1	448 9004
72	(Right) 70		.....	1	812 1200
69	(Right) 85-89...(Incl. Back-Up Lamp Lens)	320	.....	1	448 6288
70	(Right) 85 (Except DPL And SST)		.....	1	448 7555
70	(Right) 85-89 (DPL)(SST)		.....	1	448 7562
71/	(Right) 85 (DPL)		.....	1	448 7555
71	(Right) 85-89 (SST)(Brougham)(Order Letters And Ornament Separately-Refer Group 3.308)		.....	1	448 9142
72	(Right) 85-89 (SST And Brougham)		.....	1	812 1294
67	(Right) 88 ...(Incl. Bezel)		.....	1	320 7554
68	(Right) 88 ...(Incl. Bezel)		.....	1	320 8822
69	(Right) 88...(Incl. Back-Up Lamp Lens-* 3-63)	337	.....	1	448 6284
69	(Right) 88...(Incl. Back-Up Lamp Lens-* 3-64)	337	.....	1	448 7184
70/	(Right) 88 (* 3-122)		.....	1	448 7372
72	(Right) 88 (* 3-123)		.....	1	448 7368

3.306-2 LENS KIT, Rear Directional Signal Lamp (Incl. Lens, Lens Gasket And Attaching Parts)

67/69	*01 (RHD-England)*		3.292	2	320 5332
67/70	*10-80 (RHD-England)*		3.292	2	320 7636

3.306–3 ATTACHING PARTS, Lens To Tail, Stop And Rear Directional Signal Lamp

SCREW, Tapping	67/69	05-06-07-09	17.660	8	G449615
SCREW, Tapping	70/	01 (8-32 × 5/8")	.....	4	448 7505
SCREW, Tapping	70/	01 (8-18 × 5/8")	.....	4	812 0277
SCREW. Tapping	67/69	08	.....	4	400 1607
SCREW, Tapping	67/68	15-16-17-19	17.648	10	G449015
SCREW, Tapping	69	15-19	17.660	12	G449613
SCREW, Tapping	70/	15-19	.....	12	448 7649
SCREW, Tapping	67/69	18-88	.....	8	400 1558
SCREW, Tapping	70/	18-88 (1")	.....	2	400 3631
SCREW, Tapping	70/	18-88 (1/2")	.....	6	400 1558
SCREW, Tapping	68/69	30-70	.....	10	400 3857
SCREW, Tapping	70	30-70	17.671	12	G455380
SCREW, Tapping	70/	40	.....	4	448 8662
SCREW, Tapping	67	50	17.660	12	320 9579
SCREW, Tapping	71/	70	.....	12	448 8943
SCREW, Tapping	69	85-89	17.660	12	320 9579
SCREW, Tapping	70	85 (Except DPL And SST)	.....	12	448 7649
SCREW, Tapping	70	85-89 (DPL)(SST)	.....	20	448 7649
SCREW, Tapping	71/	85 (DPL)	.....	12	448 7649
SCREW, Tapping	71/	85-89 (SST)(Brougham)	.....	20	448 7649

3.306–4 ATTACHING PARTS, Lens To Housing

SCREW, Machine	***67/69***	***01 (RHD-England)***	3.292	4	320 4248
SCREW, Tapping	***67/70***	***10-80 (RHD-England)***	17.660	4	320 9574

3.306–5 FILLER, Tail Lamp Lens To Housing

69	(Left) 85-89 (Except SST)	.....	1	361 4563
69	(Right) 85-89 (Except SST)	.....	1	361 4562

3.306–6 EYELET, Rear Directional Signal Lamp Lens

67/69	***01 (RHD-England)***	3.292	4	320 4247

3.307 WINK LIGHT (Refer To Groups 3.740, 3.745, And 3.746)

3.308–1 LETTER, Tail Lamp Lens (Incl. Clips)

71	("A") 85-89 (SST)(Brougham)	.....	2	448 9161
71	("B") 85-89 (SST)(Brougham)	.....	1	448 9162
71	("D") 85-89 (SST)(Brougham)	.....	1	448 9163
71	("M") 85-89 (SST)(Brougham)	.....	1	448 9164
71	("O") 85-89 (SST)(Brougham)	.....	1	448 9165
71	("R") 85-89 (SST)(Brougham)	.....	1	448 9166
71	("S") 85-89 (SST)(Brougham)	.....	2	448 9167

3.308–2 ORNAMENT, Back-Up Lamp Lens (Incl. Clips)

71	(Left) 85-89 (SST)(Brougham)	.....	1	448 9159
72	(Left) 80	.....	1	448 9159
71	(Right) 85-89 (SST)(Brougham)	.....	1	448 9158
72	(Right) 80	.....	1	448 9158

3.308–3 ATTACHING PARTS, Letters And Ornament To Lens

CLIP	71	85-89 (SST)(Brougham)	.....	AR	400 4124

3.312–1 SOCKET, Tail, Stop And Rear Directional Signal Lamp

70/	01 (* 3-118)	323	.....	2	448 6948
72	01 (* 3-117)		.....	2	812 0231
67/69	05-06-07-09		.....	2	320 8167
67/68	15-16-17-19		.....	2	320 8165
69	15-19-85-89	323	.....	2	448 6948
68/69	30-70		.....	2	320 8165
70	30-70	323	.....	4	448 6948
70/	40		.....	2	448 8908
67	50		.....	2	320 8609
71	70		.....	4	812 0231
72	70		.....	4	812 1357
67	85-86-87-89		.....	2	320 8165
68	85-87-89		.....	2	448 5912

3.312–1a RETAINER, Tail, Stop And Rear Directional Signal Lamp Socket

69	30-70		.....	2	361 4112

3.312–1b ATTACHING PARTS, Retainer To Tail Lamp

NUT, Lock.....	69	30-70	17.416	2	G273801 NA

3.312–2 BULB, Tail, Stop And Rear Directional Signal Lamp

67/69			3.215	2	320 9544
70/	01-15-19-39-46-79-85-89 (GE 1157)		3.215	AR	320 9544
70	85-89 (GE 1095)(DPL)(SST)		3.215	2	448 8311
70/	18-88 (GE 1157)		3.215	2	320 9544

3.312–3 BULB, Rear Directional Signal Lamp

67/69	***05-06-07-09-10-80 (RHD-England)***		3.215	2	320 9543
67/69	***08 (RHD-England)***		3.215	2	G454646

3.312–4 CONNECTOR, Tail, Stop And Rear Directional Signal Lamp

69/	18-88		.....	4	448 6950

3.312–5 WIRE ASSEMBLY, Tail Lamp Connector To Body Harness (Adapter)

70	15-19-85-89 (Male-* 3-90)		.....	2	321 2402
70	15-19-85-89 (Female-* 3-89)		.....	2	321 2469

3.316–1 HOUSING ASSEMBLY, Back-Up Lamp (Incl. Socket And Wire)

67/69	05-06-07-09		.....	2	320 6951
67/69	08		.....	2	320 7451
67/68	10-50-80		.....	2	320 7854
70	30-70		.....	1	361 6775
71/	70		.....	1	363 2885
69	***01 (RHD-England)***		.....	2	320 7451

3.316–2 ATTACHING PARTS, Housing To Bumper Rail

SCREW, Tapping.....	67/68	10-50-80	17.648	4	G161439
NUT, Spring.....	67/68	10-50-80	.....	4	400 1932

3.316–2a ATTACHING PARTS, Housing To Lower Deck Center Panel

NUT, Stamped	70/	30-70	17.428	4	448 8312

Printed in U.S.A.

3.316–3 BRACKET, Back-Up Lamp Housing Assembly To Bumper Rail

67/69	01	3.292	2	351 7228	

3.316–4 GASKET, Back-Up Lamp Housing To Bumper

67/69	08	3.292	2	320 4246	
67/68	10-50-80	.....	2	357 6741	

3.316–5 GASKET, Back-Up Lamp Housing To Lower Deck Center Panel

70	30-70	.....	1	361 6770	
71/	70 (Upper)	.....	1	363 3059	
71/	70 (Lower)	.....	1	363 3061	

3.317–1 LENS KIT, Back-Up Lamp (Incl. Lens Gasket And Attaching Parts)

67/69	01	.....	2	320 5353	
67/68	10-50-80	.....	2	320 7639	
70	30	.....	1	448 7339	
70	70	.....	1	448 7342	
71	70...(Incl. Medallion)	.....	1	448 9006	
72	70...(Incl. Medallion)	.....	1	812 1203	

3.317–2 ATTACHING PARTS, Lens To Base

SCREW, Machine	67/69	01	3.292	4	320 4248	
SCREW, Tapping	67/68	10-50-80	17.660	4	320 9574	
SCREW, Tapping	70	30-70	17.671	4	G455380	NA
SCREW, Tapping	71/	70	.....	4	448 8943	

3.317–3 GASKET, Back-Up Lamp Lens

67/69	01	3.292	2	320 4246	
67/68	10-50-80	3.292	2	357 6735	
70	30-70	.....	1	361 6777	
71/	70	.....	1	363 2888	

3.317–4 EYELET, Back-Up Lamp Lens

67/69	08	3.292	2	320 4247	

3.317–5 MEDALLION, Back-Up Lamp Lens

71	70	2.050	1	448 8694	

3.317–6 ATTACHING PARTS, Medallion To Lens

NUT, Spring	71	70	2.050	1	400 2083	

3.318–1 HARNESS, Back-Up Lamp Wire

67/68	LHD (W4ST)	.....	1	318 6837	
69	LHD (W4ST)	.....	1	319 4643	
69	70 (WST-WFGS)	.....	1	319 5525	
70	LHD (WST-WCGS)	.....	1	319 7992	
70	LHD (WAT-WCGS)	.....	1	319 7993	
70	01-30-70 (W4ST)	.....	1	319 5525	
70	10 (W4ST)	.....	1	319 7977	

71	01-40 (WST-WFGS)(W4ST)	.....	1	319	5525
71	10 (W4ST-* 3-101)	.....	1	319	7977
71	10 (W4ST-* 3-102)	.....	1	321	1581
71	10-80 (WST-WCGS)	.....	1	321	1581
71	10-80 (WAT-WCGS)	.....	1	321	1582
71	70 (WST-WFGS-* 3-101)(W4ST-* 3-101)	.....	1	319	5525
72	(WST-WCGS-* 3-124)	.....	1	321	5534
72	(WST-WFGS-LSBW)(W4ST-WFGS-LSBW)	.....	1	321	5535
72	01-40 (WST-WCGS-* 3-125)	.....	1	321	7585
72	10 (WST-WCGS-* 3-125)	.....	1	321	7586

3.318–2 ATTACHING PARTS, Harness To Toeboard

SCREW	69/70	30-70 (WFGS)	15.320	1	400	1701
SCREW	70/	01 (WFGS)	15.320	1	400	1701
CLIP	69/70	30-70 (WFGS)	4.160	1	15	708
CLIP	70/	01 (WFGS)	3.165	1	400	1801
CLIP	71	10-80 (WFGS)	4.160	4	15	708

3.318–2a ATTACHING PARTS, Harness To Transmission Housing

CLIP	72	(WST-WFGS)(W4ST-WFGS)	3.051	1	400	4407
CLIP	72	(WST-WFGS)(W4ST-WFGS)	3.022	AR	321	5714
SCREW	72	(WST-WFGS)(W4ST-WFGS)	17.671	1	G271444	NA

3.318–3 SOCKET, Back-Up Lamp (Incl. Wire)

67/69	05-06-07-09	.....	2	320	6953
67/69	08	.....	2	320	7452
70/	05-06-08 322	.....	2	448	6949
68/69	30-70	.....	2	448	5783
70	30-70 322	.....	2	448	6949
69	15-19-85-89 322	.....	2	448	6949
70/	18-88	.....	2	448	6951
70/	40	.....	2	448	8909
71/	70	.....	1	448	9412

3.318–4 CLIP, Back-Up Lamp Wire (At Bumper Rail)

67/69	08	3.615	2	310	8634

3.318–5 BULB, Back-Up Lamp

67/	(GE 1156)	3.215	2	320	9543

3.318–6 GROMMET, Back-Up Lamp Wire

67/69	10-50-80	.....	2	400	1837

3.318–7 GROMMET, Back-Up Lamp Wire Harness

67/69	01-30-70 (WFGS-3/4" I.D.)	22.018	1	438	8864
67/69	10-50-80 (W4ST)	22.018	1	438	8864
69	30-70 (WFGS-3/8" I.D.)	27.038	1	400	0329

3.318–8 CONNECTOR, Back-Up Lamp (Incl. Wire)

69/	18-88	.....	2	448	6951

Printed in U.S.A.

ELECTRICAL - INSTRUMENTS

3.319–1 SWITCH, Back-Up Lamp Standard Or 4 Speed Transmission

67	LHD (WST-* 3-29)(WOD-* 3-29) ..... ***(Use 318 9128)***	.....	1	318 7434
67	LHD (WST-* 3-30)(WOD-* 3-30)	.....	1	318 9128
68/69	LHD (WST)(WOD)	.....	1	318 9128
70/71	LHD (WST-WCGS)	.....	1	319 7027
72	LHD (WST-WCGS-LSBW)	.....	1	319 7027
67/68	W4ST	.....	1	318 4456
70	(WST-WFGS)(W4ST)	.....	1	319 5458
72	(WST-WFGS)(W4ST-WFGS)	.....	1	319 5458
69	01 (W4ST-Except SC/RAMBLER): 10 (W4ST)	.....	1	318 4456
69	09 (SC/RAMBLER)	.....	1	319 5458
71	01-40 (WST-WFGS)(W4ST)	.....	1	319 5458
67/69	***01 (RHD-Six-WST)***	.....	1	316 7977
71	10-70 (WST-WFGS-* 3-101)(W4ST-* 3-101)	.....	1	319 5458
71	10-70 (WST-WFGS-* 3-102)(W4ST-* 3-102)	.....	1	319 7027
69	30-70 (W4ST-* 3-54)	.....	1	318 4456
69	30-70 (W4ST-* 3-55)	.....	1	319 5458
69	70 (WST)	.....	1	319 5458

3.319–2 ATTACHING PARTS, Switch To Bracket

BOLT, Hexagon	67/	WAT (WFGS)	17.038	2	G181561 NA
SCREW, Machine	67/68	W4ST	25.039	2	400 0648
SCREW, Machine	69	01-10 (W4ST)	25.039	2	400 0648
SCREW, Machine	69	30-70 (W4ST-* 3-54)	25.039	2	400 0648

3.319–3 ATTACHING PARTS, Switch To Steering Column

SCREW, Tapping	67/69	LHD (WCGS)	.....	2	400 1805
***SCREW, Tapping	***67/69***	***01-10 (RHD-Six-WST)***	17.671	2	G451658 NA
***SCREW, Tapping	***67/70***	***01-10-80 (RHD-WAT-WCGS)***	17.671	2	G274105 NA
SCREW, Hexagon	70	LHD (WCGS)(Used With Nylon Grommet)	3.022	2	400 3989
SCREW, Hexagon	70	LHD (WCGS)(Used With Metal Grommet)	.....	2	400 4064
SCREW, Hexagon	71/	LHD (WCGS)	.....	2	400 4064
SCREW, Hexagon	71/	10-70 (* 3-102)	.....	2	400 4064
STRAP	67	01 (LHD-V8-WST-WCGS)	.....	1	320 8402
NUT, Hexagon	67	01-10-50-80 (LHD-WCGS)	.....	2	400 1821
NUT, Stamped	69	70 (WST)	17.428	2	G107823 NA

3.319–4 RETAINER, Back-Up Lamp Switch

70	(WST-WFGS)(W4ST)	.....	1	319 5457
71/	01-40 (WST-WFGS)(W4ST)	.....	1	319 5457
69	09 (SC/RAMBLER)	.....	1	319 5457
71	10 (W4ST-* 3-101)	.....	1	319 5457
69	30-70 (V8-WFGS-* 3-55)	.....	1	319 5457
69	70 (WST-WFGS)	.....	1	319 5457
71/	70 (WST-WFGS-* 3-101)(W4ST-* 3-101)	.....	1	319 5457

3.319–5 GROMMET, Back-Up Lamp Switch

71/	10-70 (* 3-102)	.....	2	321 0208
70	LHD (Nylon)	.....	2	319 7568
70	LHD (Metal)	.....	2	321 0208

Printed in U.S.A.

ELECTRICAL - INSTRUMENTS

3.321–1 SWITCH, Directional Signal (Incl. Wire Harness)

67/68	LHD (WAT-WCGS-LAW)	.....	1	320 8676	
69	LHD (WAT-WCGS-LAW)	.....	1	448 6735	
67/68	LHD (WAT-WCGS-WAW)	.....	1	320 8679	
69	LHD (WAT-WCGS-WAW)	.....	1	448 6715	
67/68	LHD (WST-LAW-* 3-31)(WOD-LAW-* 3-31)(WFGS-* 3-31)	.....	1	320 8677	
67/68	LHD (WST-LAW-* 3-32)(WOD-LAW-* 3-32)(WFGS-* 3-32) ***(Use 319 6952)***	.....	1	320 8678	
69	LHD (WST-LAW)(WOD-LAW)(WFGS)	.....	1	319 6952	
70/	812.1438	..	1	~~319 7000~~	
67/69	***01 (RHD)***	.....	1	320 5643	
67/70	***10-80 (RHD)***	.....	1	320 8367	

3.321–2 SPRING, Switch To Housing

67/69	LHD (LAW)	.....	3	320 8021	

3.321–3 ATTACHING PARTS, Switch To Housing

SCREW, Tapping	67/69	LAW (LHD)	.....	2	320 8023	
SCREW, Tapping	70/	LAW (LHD)	.....	3	448 7763	
SCREW, Tapping	67/69	WAW (1/2" Long)	.....	1	320 8472	
SCREW, Tapping	67/69	WAW (7/8" Long)	.....	2	320 8202	
SCREW, Tapping	68/69	WAW (7/8" Long)	.....	2	320 8471	
SCREW, Tapping	70/	WAW	.....	3	448 8301	
SCREW, Self-Threading .	***67/69***	***01 (RHD)***	.....	3	320 4969	
SCREW, Machine	***67/70***	***10-80 (RHD)***	17.598	2	G273876	NA
BOLT, Square	***67/70***	***01-10-80 (RHD)***	.....	2	400 1318	
NUT, Hexagon	***67/70***	***01-10-80 (RHD)***	.....	2	400 1319	

3.321–4 REPAIR KIT, Directional Signal Switch

67/68	LHD (WAT-WCGS)(WST-* 3-31)(WOD-* 3-31)	.....	1	448 5943	

3.321–5 HOUSING, Directional Signal Switch (For '70-'71 LHD-Refer Group 10 Illustrations)

67/68	LHD (WST-* 3-31)(WOD-* 3-31)(WFGS-LAW-* 3-31)	.....	1	320 8010	
67/68	LHD (WST-* 3-32)(WOD-* 3-32)(WFGS-LAW-* 3-32)	.....	1	320 8027	
69	LHD (WST)(WOD)(WFGS-LAW)	.....	1	320 8027	
67/68	LHD (WFGS-WAW-* 3-31)	.....	1	320 8092	
67/68	LHD (WFGS-WAW-* 3-32)	.....	1	320 8376	
69	LHD (WFGS-WAW)	.....	1	320 8376	
67/68	LHD (WAT-WCGS-LAW)	.....	1	320 8024	
69	LHD (WAT-WCGS-LAW)	.....	1	448 6736	
67/68	LHD (WAT-WCGS-WAW-* 3-31)	.....	1	320 8093	
67/68	LHD (WAT-WCGS-WAW-* 3-32) ***(Use 320 8093)***	.....	1	320 8375	
69	LHD (WAT-WCGS-WAW)	.....	1	448 6714	
67/69	***01 (RHD-WST)***	.....	1	320 5155	
67/69	***01 (RHD-WAT)***	.....	1	320 5209	
67/70	***10-80 (RHD-WST)(RHD-WFGS)***	.....	1	320 5232	
67/70	***10-80 (RHD-WAT-WCGS)***	.....	1	320 5231	

3.321–6 ATTACHING PARTS, Housing To Gear Shift Lever Upper Housing

SCREW, Tapping 69/70	***10-80 (RHD)***	.....	2	320 6756	

3.321–7 ACTUATOR, Directional Signal Switch

67/69	LHD (WST-WCGS-LAW)(WOD-WCGS-LAW)	.....	1	320 8015	
67/69	LHD (WAT-WCGS-LAW)(WFGS-LAW)	.....	1	320 8025	

3.321–7a CAM, Directional Signal Switch Canceling

70/	LAW	.....	1	448 7711
70/	WAW	.....	1	448 7816

3.321–8 SPRING, Directional Signal Switch Actuator

67/69	LHD (WST-LAW)(WOD-LAW)	.....	1	320 8297
67	LHD (WAT-WCGS-LAW)(WFGS-LAW)	.....	1	320 8276
68/69	LHD (WAT-WCGS-LAW)(WFGS-LAW)	.....	1	448 5684

3.321–9 RETAINER, Directional Signal Switch Actuator Spring

67/69	LHD (LAW)	.....	1	320 8277

3.321–10 RING, Directional Signal Switch Actuator Spring Retainer

67/69	LHD (LAW)	.....	1	320 8278

3.321–11 BEARING, Directional Signal Switch Actuator Spring Retainer Ring

67/69	LHD (WST-LAW)(WOD-LAW)	.....	1	320 8300

3.321–12 PLATE, Directional Signal Switch Locking

67/69	LHD (WST-LAW)(WOD-LAW)(WFGS-LAW)	.....	1	320 8020
67	LHD (WAT-WCGS-LAW)	.....	1	318 9065
68/69	LHD (WAT-WCGS-LAW)	.....	1	319 1076
67	LHD (WAT-WCGS-WAW)	7.038	1	318 6508
67/69	LHD (WAW)	.....	1	320 8155

3.321–13 PLATE, Directional Signal Switch Canceling (Lower)(Incl. Horn Contact Plate)(For 1970-71 Canceling Plate, Refer To Group 3.321–7a CAM)

67/68	LHD (LAW-* 3-37) ***(Use 319 4346)***	.....	1	318 7258
67/68	LHD (LAW-* 3-38) ***(Use 319 4347)***	.....	1	318 7259
69	01-10 (LHD-LAW-* 3-37)	.....	1	319 4346
69	01-10 (LHD-LAW-* 3-38)	.....	1	319 4347
67/68	10 (LHD-550-WAW)	.....	1	318 7855
67/68	10 (LHD-770-WAW)(LHD-SST-WAW)	.....	1	318 7854
69	10 (LHD-WAW-Except SST)	.....	1	319 4349
69	10 (LHD-SST-WAW)	.....	1	319 4350
67/68	30-50-70 (LHD-WAW)	.....	1	318 7854
69	30-70-80 (LHD-LAW)	.....	1	319 4347
69	30-70-80 (LHD-WAW)	.....	1	319 4350
67/68	80 (LHD-880-WAW)	.....	1	318 7855
67	80 (LHD-990-WAW)(LHD-DPL-WAW)	.....	1	318 7854
68	80 (LHD-DPL-WAW)(LHD-SST-WAW)	.....	1	318 7854

3.321–14 SPRING, Directional Signal Canceling Cam

68/69	LHD (LAW)	.....	1	318 7266
67/69	LHD (WAW)	.....	1	318 7591
70	LHD (WAW)	.....	1	448 7870
71	LHD (WAW-* 3-93)	.....	1	448 7870
71	LHD (WAW-* 3-94)	.....	1	448 9062
72	LHD (WAW)	.....	1	448 9062

3.321–15 COVER, Directional Signal Switch Wire Harness

67/68	LHD (LAW)	.....	1	320 8084
67/69	LHD (WAW)	.....	1	320 8275
69	01-10 (LHD-LAW)	.....	1	448 6733
69	80 (LHD-LAW) ***(Use 448 6733)***	.....	1	448 7143

3.321–16 PROTECTOR, Directional Signal Switch Wire Harness

67/69	LHD	.....	1	320 8085
70/	LHD (LAW)	.....	1	448 7741
70/	LHD (WAW)	.....	1	448 7861

3.321–17 PIN, Directional Signal Switch Canceling (In Steering Wheel)

67/69	***01 (RHD)***	.....	1	317 0335
67/70	***10 (RHD)***	.....	1	316 8867
67	***80 (RHD-WAT)***	.....	1	316 8867
68/70	***80 (RHD)***	.....	1	316 8867

3.324–1 LEVER, Directional Signal

67	01 (LHD)	.....	1	318 6512
68	01 (LHD-* 3-33)	.....	1	319 0433
68	01 (LHD-* 3-34)	.....	1	319 2162
67	10-50-80 (LAW)	.....	1	318 6511
67	10-50-80 (WAW) ***(Ord. 319 2160, 448 5706)***	.....	1	318 6514
68	10-30-70-80 (LHD-* 3-33) ***(Ord. 319 2160, 448 5706)***	.....	1	318 6514
68	10-30-70-80 (LHD-* 3-34)	.....	1	319 2160
69	LHD	.....	1	319 2160
70/71	LHD (LASC)	.....	1	319 5299
72	LHD (LASC)	.....	1	321 6458
70/	LHD (WASC) ...(Incl. WASC Switch)	.....	1	319 8013
67/69	***01 (RHD-Six)***	.....	1	317 1813
67/70	***10-80 (RHD)***	.....	1	317 2911

3.324–2 ATTACHING PARTS, Lever To Switch

SCREW, Tapping	67	LHD	.....	1	400 1832
SCREW, Tapping	68	LHD (* 3-33)	.....	1	400 1832
SCREW, Tapping	68	LHD (* 3-34)	17.660	1	448 5706
SCREW, Tapping	69	LHD	17.660	1	448 5706
SCREW, Tapping	70/	LHD	17.660	1	448 8318
***SCREW, Machine	***67/70***	***10-80 (RHD)***	3.321	1	316 9148
***WASHER, Lock	***67/70***	***10-80 (RHD)***	17.820	1	G131095 NA

3.325 INSULATOR, Cruise Command Switch Wire (On Directional Lever)

70/	10-80 (WASC)	.....	1	319 8786

3.330–1 FLASHER, Directional Signal

67/68		.....	1	317 2700
69	01-30-70-80	.....	1	317 2700
69	15-19	.....	1	319 4877
69	18	.....	1	317 2700
70	01-18-88	.....	1	317 2700
70	15-19-30-70-85-89	.....	1	319 4877 •
70/	WTTP	3.690	1	318 6895
71/	01-18-40-88	.....	1	321 2068 •
71/	15-19-70-85-89	.....	1	321 2067 •

3.330–2 CLIP, Directional Signal Flasher

67/70	01 (LHD)	.....	1	320 8232
68/		3.690	1	318 6896

Printed in U.S.A.

ELECTRICAL - INSTRUMENTS

3.333–1 SWITCH, Stop And Tail Lamp

67		.....	1	314 5198
68	01-30-70 (LHD-WST)(WOD)(LHD-W4ST)	.....	1	318 9147
68	01-30-70 (LHD-WAT) ***(Use 448 8306)***	.....	1	319 1294
68	10-80 (LHD) ***(Use 448 8306)***	.....	1	319 1294
69/71	LHD	.....	1	319 4569
72	(WPB)	.....	1	321 5938
72	(LPB)	.....	1	321 5939
68/70	***01-10-80 (RHD)***	.....	1	314 5198

3.333–2 BRACKET, Stop And Tail Lamp Switch

69	01-30-70 (LHD-WST)(WOD)(LHD-W4ST)	.....	1	319 4571
69	10-80 (LHD-WST)(WOD)(LHD-W4ST)	.....	1	319 4570
69	LHD (WAT)	.....	1	319 4570
70/	01-40 (WAT)	.....	1	319 6550
70/	01-40 (WST)(W4ST)	.....	1	319 6551
70/	30-70 (WST)(W4ST)	.....	1	319 8995
70/	10-80 (LHD-WST)(LHD-W4ST)	.....	1	319 8995
70/	10-30-70-80 (LHD-WAT-LASC)	.....	1	319 6550
72	10-80 (WASC)	.....	1	321 6298

3.333–3 CLIP, Switch To Bracket

69/	LHD	.....	1	319 4572

3.333–4 ATTACHING PARTS, Switch Bracket To Support

SCREW, Machine.....	68/	LHD (1/4"-20 × 5/8")	23.110	2	400 2203
SCREW, Machine.....	70/	(5/16"-24 × 1-16")	10.340	1	400 1896
BOLT, Hexagon	70/	(5/16"-24 × 5/8")	17.038	2	G181593 NA
WASHER, Lock	70/	.....	17.820	2	G120214

3.333–5 ELBOW, Stop And Tail Lamp Switch

67/70	***10-80 (RHD-LPB)***	17.240	1	320 9531

3.333–6 BUSHING, Brake Light Switch

72	.....	.....	1	321 5928

3.335–1 LAMP ASSEMBLY, License

67/68	05-06-07-09-15-16-17-19-85-86-87-89 ***(Ord. 448 8886)***	.....	1	318 6898
67/68	08	.....	1	350 1390
69	05-09-15-19-85-89 (* 3-79) ***(Ord. 448 8886)***	.....	1	318 6898
69	08 (* 3-79)	.....	1	350 1390
69	01-15-19-85-89 (* 3-80) ***(Use 319 8678)***	.....	1	319 8099
67/69	18-88	.....	1	357 6750
67/69	30-50-70	.....	1	357 6750
70.	.....	.....	1	319 8678
71	01-40 (* 3-111)	.....	1	319 8678
71	01-40 (* 3-112)	.....	1	321 5797
71	15-19-85-89 (* 3-111)	.....	1	319 8678
71	15-19-85-89 (* 3-112)	.....	1	321 5797
71	18-70-88	.....	1	319 8678
72	01-15-19-40-85-89	.....	1	321 5797
72	18-70-88	.....	1	319 8678

3.335–2 ATTACHING PARTS, Lamp Assembly To Bumper Rail

SCREW, Tapping	67/69	01-15-16-17-19-85-86-87-89 (* 3-79)	17.660	2	G161895
SCREW, Tapping	69	01-15-19-85-89 (* 3-80)	17.660	2	G161901
SCREW, Tapping	67/69	18-88 (1/2" Long)	3.303	2	400 1629
SCREW, Tapping	67/69	30-50-70 (1/2" Long)	3.303	2	400 1629
SCREW, Tapping	70	(5/8" Long)	17.660	2	G161901
SCREW, Tapping	71/	(1-1/4" Long)	17.660	2	812 0059 NA
SCREW, Tapping	70/	(3/4" Long)	17.660	2	G161903
WASHER, Lock	69	30-70 (Used With Painted Bumper)	17.822	2	G121752

3.336 BRACKET, License Lamp Mounting

71/	70	.....	1	321 1765

3.339–1 LENS, License Plate Lamp

67/68	01-15-16-17-19-85-86-87-89...(Incl. Bracket And Gasket) ***(Use 350 1390)***	.....	1	320 5326
67/69	01-15-16-17-19-85-86-87-89...(Incl. Bracket And Gasket) ***(Use 448 8886)***	.....	1	320 5326
67/69	30-50-70	.....	1	357 6751

3.339–2 GASKET, License Plate Lamp Lens

67/69	18-88	.....	1	357 6754
67/69	30-50-70	.....	1	357 6754

3.341–1 WIRE, License Plate Lamp (Incl. Socket And Grommet)

67/68	05-06-07-09-15-16-17-19-85-86-87-89	.....	1	320 8237
69	05-09-15-19-85-89 (* 3-79)	.....	1	320 8237
69	05-09-15-19-85-89 (* 3-80)	.....	1	319 8098
67/68	08	.....	1	320 5328
69	08 (* 3-79)	.....	1	320 5328
69	08 (* 3-80)	.....	1	319 8097
67/69	18-88	.....	1	357 6755
67/69	30-50-70	.....	1	357 6755

3.341–2 GROMMET, License Plate Lamp Wire

67/69	18-88	3.318	3	400 1837

3.341–3 BULB, License Plate Lamp

67/69	(GE 67)	3.215	1	G142450

3.346–1 BASE, Domelamp (Incl. Socket)(Rear Domelamp-Refer Cargo Area Lamp-Group 3.670)

67/69	(Front) 05-06-08-15-16-18-85-86-88-89 (Metal) ***(Use 448 5672)***	.....	1	355 4280
70/	(Front) 01-15-18-40-70-85-88-89 (Nylon)	.....	1	363 1699
67/69	(Center) 05-06-08-15-16-18-85-88-89 (Metal) ***(Use 448 5672)***	.....	1	355 4280
70/	(Center) 01-15-18-40-70-85-88-89 (Nylon)	.....	1	363 1699

3.346–2 ATTACHING PARTS, Domelamp Base To Bracket

SCREW, Tapping	67/70	01-10-40-80	17.660	2	G161901
SCREW, Tapping	71/	01-40-70	22.100	2	400 2530
SCREW, Tapping	71/	10-80	17.660	2	G161901

3.346–3 LENS, Domelamp

67	01–10–80	.....	1	355 4281
68/69		.....	1	360 2216
70/		.....	1	363 6814

3.346–4 HARNESS, Center Domelamp Wire

67/69	05–06–08–15–16–18–85–86–88–89	3.163	1	318 6824
70/	05–06	3.163	1	319 9560
71/	08	.....	1	321 1585
71/	15–18–85–88–89	.....	1	319 9561
70/	40	.....	1	319 9561
71/	70	.....	1	321 1569
70	15–18–85–88–89 (* 3–83)	3.163	1	318 6824
70	15–18–85–88–89 (* 3–84)	.....	1	319 9561

3.346–5 HARNESS, Front And Center Domelamp Wire

67/69	***05–06–08–15–16–18–85–86–88 (Fleet)***	3.163	1	318 6825
70/	***01 (Fleet)***	.....	1	321 1109
70/	***15–18–85–88 (Fleet)***	.....	1	319 9608

3.346–6 ATTACHING PARTS, Harness To Rear Shelf

CLIP	67/	15–85	15.320	1	400 1598
CLIP	70/	01–40	15.320	1	400 1598
FASTENER	70	01–40	3.166	2	400 0713

3.346–6a ATTACHING PARTS, Harness To Roof Rail

FASTENER	71	70	3.166	1	400 0713

3.346–7 BRACKET, Domelamp

67/69	(Front) 05–06–08	.....	1	352 1028
70/	***(Front) 05–06 (Fleet)***	.....	1	347 2294
67/	***(Front) 15–85 (Police–Used With Fiberglass Headlining)***	.....	1	346 5397
70/	***(Front) 15–85 (Police–Used With Foam Headlining)***	.....	1	360 9070

3.346–8 ATTACHING PARTS, Bracket To Domelamp

SCREW, Tapping	67/70	01	17.660	2	G161895
SCREW, Tapping	71/	01	22.100	2	400 2530
SCREW, Tapping	67/	10–80	17.660	2	G9414723 NA

3.346–9 BULB, Domelamp

67/69	(GE 1004)	3.215	1	G455136
70/	(GE 561)	3.215	1	400 3086

3.349–1 LAMP ASSEMBLY, Courtesy

67/68	01–10–80 (* 3–35)	.....	2	359 1106
67/68	01–10–80 (* 3–36)	.....	2	350 5463
67/68	30–50–70	.....	2	359 1106
69		.....	2	319 5000
70	01–10–80 (Metal Type)	.....	2	319 5000
70	01–10–40–80 (Nylon Type)	.....	2	363 6430
71/		.....	2	363 6430

ELECTRICAL - INSTRUMENTS

3.349–1a ATTACHING PARTS, Courtesy Lamp To Instrument Panel

SCREW, Tapping.....	67/69	01.....*(Use 812 0054)*	17.671	1	G274773
SCREW, Tapping.....	68/69	30-70.....	17.660	2	G161901
SCREW, Tapping.....	70	01-10-80 (Pan Head-Black).....	.....	2	400 2526
SCREW, Tapping.....	70	01-10-80 (Pan Head-Chrome).....	.....	2	400 2527
SCREW, Tapping.....	71	01-40.....*(Use 812 0054)*	.....	2	400 2527
SCREW, Tapping.....	71	10-80.....	17.671	2	G274773
SCREW, Tapping.....	71/	70.....	.....	2	400 2526
SCREW, Tapping.....	72	01-10-40-80 (10-16 x 1/2).....	17.671	2	812 0054
SCREW, Tapping.....	72	01-40 (10-16 x 5/8).....	17.660	2	G9414723 NA
SCREW, Hexagon.....	70	01-10-40-80.....*(Use 812 0054)*	17.671	2	G274773
SCREW, Hexagon.....	67/69	10-50-80.....	17.671	2	320 9537

3.349–2 HOUSING, Courtesy Lamp

70	(Left) 30-70.....	.....	1	363 1201
70	(Right) 30-70.....	.....	1	363 1200

3.349–2a ATTACHING PARTS, Housing To Instrument Panel

SCREW, Tapping.....	70	30-70.....	17.660	6	G161860

3.349–3 LENS, Courtesy Lamp

67/68	07-17-87 (* 3-36).....	.....	2	320 4508
70	30-70.....	.....	2	363 1211

3.349–3a ATTACHING PARTS, Lens To Instrument Panel

SCREW, Tapping.....	70	30-70.....	3.346	4	400 2648

3.349–4 BRACKET, Courtesy Lamp To Instrument Panel

67/69	01 (LHD).....	.....	1	350 6921
68	30-70.....	.....	1	360 1636

3.349–5 ATTACHING PARTS, Bracket To Instrument Panel

SCREW, Pan Head.....	67/69	01.....	20.280	2	400 1724
SCREW, Tapping.....	68	30-70.....*(Use 812 0054)*	17.671	1	G274773
SCREW, Tapping.....	71	70.....	15.320	4	400 2309

3.349–6 HARNESS, Courtesy Lamp Wire

67	01 (LHD).....	.....	1	318 6830
68	01-30-70 (LHD).....	.....	1	319 0642
69	01 (LHD).....	.....	1	319 4977
70	01 (LHD-Used With Metal Type Lamp).....	.....	1	319 8344
70	01 (LHD-Used With Nylon Type Lamp).....	.....	1	321 0556
71/	01 (LHD).....	.....	1	321 0556
67	10-50-80 (LHD).....	.....	1	318 6831
68	10-80 (LHD).....	.....	1	319 0643
69/70	10-80 (LHD-Used With Metal Type Lamp).....	.....	1	319 4978
70	10-80 (LHD-Used With Nylon Type Lamp).....	.....	1	321 0558
71/	10-80.....	.....	1	321 0558
69	30-70.....	.....	1	319 4928
70	30-70.....	.....	1	319 8345
70/	40.....	.....	1	321 0556
71/	70.....	.....	1	321 1570

67	*01 (RHD)*	.....	1	318 6832
68	*01 (RHD)*	.....	1	319 0644
69	*01 (RHD)*	.....	1	319 4979
67	*10-80 (RHD)*	.....	1	318 6833
68	*10-80 (RHD)*	.....	1	319 0645
69/70	*10-80 (RHD-Used With Metal Type Lamp)*	.....	1	319 4980
70	*10-80 (RHD-Used With Nylon Type Lamp)*	.....	1	321 0557

3.349–7 WIRE, Door Switch To Body Harness

67/69		3.163	1	318 6828
70/		3.163	1	319 7971

3.349–8 ATTACHING PARTS, Harness To Instrument Panel

CLIP	68/	30-70	15.320	4	400 0461
CLIP	70/	10-80 (LHD)	3.312	1	79 394

3.349–9 SHIELD, Courtesy Lamp (On Left Side)

67/70	10-50-80	.....	1	360 8043

3.349–10 BULB, Courtesy Lamp Assembly

67/69	(GE 94)	3.215	2	G142455
69	(GE 1004)	3.215	2	G455136
70	(GE 211) 30-70	3.215	2	320 9536
70	(GE 94) 01-10-80 (Used On Metal Type Lamp)	3.215	2	G142455
70	(GE 561) 01-10-40-80 (Used On Nylon Type Lamp)	3.215	2	400 3086
71/	(GE 561)	3.215	2	400 3086

3.350–1 LAMP ASSEMBLY, Map

70/	30-70	.....	1	363 1220

3.350–2 ATTACHING PARTS, Lamp To Crash Pad

SCREW, Pancake Head	70	30-70 (10-16 x 3/4)	22.060	2	400 4033
SCREW, Tapping	70	30-70 (8-18 x 3/4)	3.510	2	400 2658
NUT, Spring	70	30-70	3.505	2	400 3841

3.350–2a ATTACHING PARTS, Lamp To Center Housing

SCREW, Tapping	71/	70	.....	2	400 2653
NUT, Spring	71/	70	3.505	2	400 3841

3.350–3 BULB, Map Lamp

70/	30-70 (GE 563)	3.215	1	448 8029

3.352–1 LIGHTER ASSEMBLY, Cigar (Knob And Element Only)

67	01	356	.....	1	350 9448
68	01 (LHD)(Chrome)	356	.....	1	360 8552
68/69	01 (LHD)(Black)	356	.....	1	359 9966
70	01-40	356	.....	1	361 6643
71	01-40 (* 3-97)	356	.....	1	361 6643
71	01-40 (* 3-98)	356	.....	1	364 6763
72	01-10-40-80	356	.....	1	364 6763

Printed in U.S.A.

67	10-50-80 ***(Use 360 8552)***	356	.....	1	357 6966
68/71	10-80	356	.....	1	360 8552
68/69	30-70	356	.....	1	360 1514
70/	30-70	356	.....	1	350 9549
68	***01 (RHD)***	356	.....	1	350 9448
69	***01 (RHD)***	356	.....	1	359 9966

3.352–2 ELEMENT, Cigar Lighter Assembly

67/			.....	1	320 4304

3.352–3 KNOB, Cigar Lighter Assembly

67	01		.....	1	320 5330
68	01 (LHD)(Chrome)		.....	1	320 7792
68/69	01 (LHD)(Black)		.....	1	448 5654
70	01-40		.....	1	448 7574
71	01-40 (* 3-97)		.....	1	448 7574
71	01-40 (* 3-98)		.....	1	812 0228
72	01-10-40-80		.....	1	320 5481
67/71	10-50-80		.....	1	320 7792
68/69	30-70		.....	1	320 9622
70/	30-70		.....	1	320 5481
68/69	***01 (RHD)***		.....	1	320 5330

3.352–4 HOUSING, Cigar Lighter Assembly

67/			.....	1	345 3270

3.352–5 SHELL, Cigar Lighter Assembly

67	01 (LHD)		.....	1	358 3198
68	01 (LHD-* 3-15) ***(Use 358 3198)***		.....	1	359 8541
68	01 (LHD-* 3-16)		.....	1	312 2721
69	01 (LHD)		.....	1	312 2721
70/	01-40		.....	1	357 6049
67/	10-50-80 (LHD)		.....	1	312 2721
68/	30-70		.....	1	357 6049
67/69	***01 (RHD-Six)***		.....	1	312 2721
67/70	***10-80 (RHD)***		.....	1	357 6049

3.352–6 SHIELD, Cigar Lighter Housing

71/	70		.....	1	363 2565

3.352–7 ATTACHING PARTS, Shield To Housing

SCREW, Tapping	71/	70	.....	2	400 2653
NUT, Acorn	71/	70 (Screw Protector Cap)	3.740	2	400 3098

3.360–1 CLOCK

70/	01		.....	1	363 1668
67/68	10-50-80		.....	1	357 6544
69	10-80 ***(Use 361 4582)***		.....	1	361 4432
70/	10-80		.....	1	361 4582
68/70	30-70		.....	1	360 1486
71/	70 (Used With 120 M. P. H. Speedometer)		.....	1	363 2605
71/	70 (Used With 140 M. P. H. Speedometer)		.....	1	363 2709

ELECTRICAL - INSTRUMENTS

3.360–2 ATTACHING PARTS, Clock To Instrument Panel

SCREW, Tapping	67/71	10-50-80 (WWH)(WAC)	3.303	2	400 1629
SCREW, Tapping	68	30-70 (LRP)	17.660	2	G161860
SCREW, Tapping	70	01-30-70	17.660	2	G161901
SCREW, Tapping	71	70	17.660	4	G449611 NA
SCREW, Tapping	71/	01	17.660	2	G9414721 NA
SCREW, Tapping	72	10-80	17.660	2	812 0052 NA
SCREW, Machine	67/71	10-50-80 (LWH)(LAC)	17.593	2	G168641
WASHER, Plain	67/71	10-50-80 (LWH)(LAC)	17.814	2	G446180 NA
NUT, Hexagon	67/71	10-50-80 (LWH)(LAC)	17.412	4	G453996 NA
NUT, Speed	70	30-70	22.100	2	400 3841

3.360–3 ATTACHING PARTS, Clock To Bezel

SCREW, Tapping	68	30-70 (WRP)	17.660	2	G163162 NA

3.360–4 ATTACHING PARTS, Wire To Clock

NUT, Hexagon	68/70	30-70	17.412	1	G271482 NA
NUT, Hexagon	70/	01	17.412	1	G271482 NA
WASHER, Plain	68/70	30-70	17.814	1	G131014 NA
WASHER, Plain	70/	01	17.814	1	G131014 NA

3.360–5 HOUSING, Clock (Incl. Grommet)

67/68	10-50-80	.....	1	320 7812
69/	10-80	.....	1	448 6943

3.360–5a BRACKET, Clock To Housing

72	10-80	.....	1	364 5950

3.360–5b ATTACHING PARTS, Bracket To Housing

SCREW, Tapping	72	10-80	17.660	2	812 0052 NA

3.360–6 KNOB, Clock Reset

70/	01	.....	1	363 1669
67/	10-50-80	.....	1	320 4240
68/70	30-70 ..(Incl. Flexible Shaft)	.....	1	360 1487
71/	70	.....	1	363 1669

3.360–7 ATTACHING PARTS, Knob To Instrument Panel

NUT, Round	68/70	30-70	22.041	1	400 0057
NUT, Round	70/	01	.....	1	363 1656
NUT, Round	71/	70	.....	1	363 1656

3.360–8 GROMMET, Clock Housing

67/	10-50-80 ***(Use 320 7509)***	.....	1	320 7813

3.361 CLOCK KIT

70/	01	.....	1	448 7458
67/68	10-80	.....	1	320 8444
69/	10-80	.....	1	448 6251
68/70	30-70	15.300	1	899 2316

3.369–1 LENS, Clock

67/68	10–50–80	.....	1	320 7811
69/	10–80	.....	1	448 6947
70/	01	3.515	1	448 8570 MR

3.369–2 ATTACHING PARTS, Lens To Instrument Panel

SCREW, Tapping 67/	10–50–80 (WWH)(WAC)	3.303	2	400 1629

3.369–3 GASKET, Clock Lens

67/	10–50–80	.....	1	320 7810

3.369–4 WIRE, Clock To Fuse Panel

67/	10–50–80	.....	1	318 6834
68/70	30–70	.....	1	319 0614
71/	70 (Used With 120 M. P. H. Speedometer)	.....	1	321 1573
70/	01 (E/SC–360)	.....	1	319 8602

3.369–4a WIRE, Clock To Air Conditioning Control Lamp

70/	10–80 (LHD–WAC–Used With Clock)	4.330	1	318 1088

3.369–5 SOCKET, Clock Lamp (Incl. Wire)

67/		.....	1	318 6880
71/	70	.....	1	350 9575

3.369–5a HARNESS, Clock Lamp Wire

71/	01	.....	1	321 1584

3.369–6 BULB, Clock

67/	(GE 57) 10–50–80	3.215	2	G127934
71/	(GE 158) 70	3.215	1	320 9541
68/70	(GE 1816) 30–70	3.215	1	G454626
70/	(GE 1816) 01	3.215	1	G454626

3.369–7 WIRE, Clock Ground

67/	10–50–80 (LAC)(LWH)	.....	1	318 9178

3.369–8 STRAP, Clock Ground

68/70	30–70	.....	1	359 8906

3.378–1 LAMP, Glove Box

67/69	01–50 . . .(Incl. Switch)	.....	1	352 2321
70/	01–40 . . .(Incl. Switch)	.....	1	363 1986
67/69	10–80 (LHD) . . .(Incl. Switch)	.....	1	352 2321
70/	10–80 (LHD) . . .(Incl. Switch)	.....	1	360 9638
68/69	30–70	.....	1	360 1443
70	30–70 . . .(Incl. Switch–3/8" Plunger)	.....	1	363 1986
70	30–70 . . .(Incl. Switch–1/2" Plunger)	.....	1	364 1768
71/	70 . . .(Incl. Switch)	.....	1	363 1986
67/69	*10–80 (RHD)* . . .(Incl. Switch)	.....	1	357 6413

ELECTRICAL - INSTRUMENTS

3.378–2 SWITCH, Glove Box Lamp

68/69	30–70	.....	1	360 1442

3.378–3 BULB, Glove Box Lamp

67/69	(GE 57)	3.215	1	G127934
70	(GE 57) 01	3.215	1	G127934
70/	(GE 1891)	3.215	1	G456985

3.378–4 SPACER, Glove Box Lamp Switch (Teflon Ring)

70	30–70	16.140	1	317 6130

3.378–5 WIRE, Glove Box Lamp

72	40 (Less Courtesy Lamp)	.....	1	321 4868

3.400–1 BUTTON, Center Horn (* 3–37)

67	01 (LHD)	.....	1	318 6974
68	01 (LHD)	.....	1	319 1616
67	10 (LHD) ***(Use 319 1617)***	.....	1	318 6970
68	10 (LHD)	.....	1	319 1617
70	40	.....	1	319 6487
67	80 (LHD)	.....	1	318 6972
67/69	***01 (RHD)***	.....	1	319 9516
67/70	***10 (RHD)***	.....	1	316 7678
(T-923)		.....	1	319 5673
(T-928)		.....	1	319 5672
(T-951)		.....	1	319 5672
(T-953)		.....	1	319 5673
(T-956)		.....	1	319 5674
(T-957)		.....	1	319 5675
(T-021)		.....	1	319 6487
(T-023)		.....	1	319 7171
(T-024)		.....	1	319 7172
(T-025)		.....	1	319 7173
(T-051)		.....	1	319 6487
(T-053)		.....	1	319 7171
(T-054)		.....	1	319 7172
(T-056)		.....	1	319 9516
(T-101)(* 3-103)		.....	1	319 6487
(T-101)(* 3-104)		.....	1	321 3917
(T-103)(* 3-103)		.....	1	321 1250
(T-103)(* 3-104)		.....	1	321 3918
(T-108)(* 3-103)		.....	1	319 6487
(T-108)(* 3-104)		.....	1	321 3917
(T-111)(* 3-103)		.....	1	319 6487
(T-111)(* 3-104)		.....	1	321 3917
(T-113)(* 3-103)		.....	1	321 1250
(T-113)(* 3-104)		.....	1	321 3918
(T-114)(* 3-104)		.....	1	321 3919
(T-115)(* 3-104)		.....	1	321 3920
(T-121)		.....	1	319 6487
(T-123)		.....	1	321 1250
(T-124)		.....	1	321 1251
(T-128)(* 3-103)		.....	1	319 6487
(T-141)(* 3-104)		.....	1	321 3917
(T-143)(* 3-104)		.....	1	321 3918
(T-144)(* 3-104)		.....	1	321 3919
(T-145)(* 3-104)		.....	1	321 3920

ELECTRICAL - INSTRUMENTS

(T-151)	.....	1	319 6487
(T-153)	.....	1	321 1250
(T-154)	.....	1	321 1251
(T-161)(* 3-104)	.....	1	321 3917
(T-163)(* 3-104)	.....	1	321 3918
(T-164)(* 3-104)	.....	1	321 3919
(T-165)(* 3-104)	.....	1	321 3920
(T-168)(* 3-104)	.....	1	321 3917
(T-171)(* 3-103)	.....	1	319 6487
(T-171)(* 3-104)	.....	1	321 3917
(T-173)(* 3-103)	.....	1	321 1250
(T-173)(* 3-104)	.....	1	321 3918
(T-174)(* 3-103)	.....	1	321 1251
(T-174)(* 3-104)	.....	1	321 3919
(T-175)(* 3-103)	.....	1	319 6487
(T-175)(* 3-104)	.....	1	321 3920
(T-176)(* 3-103)	.....	1	319 6487
(T-176)(* 3-104)	.....	1	321 3917
(T-181)(* 3-104)	.....	1	321 3917
(T-183)(* 3-104)	.....	1	321 3918
(T-184)(* 3-104)	.....	1	321 3919
(T-186)(* 3-104)	.....	1	321 3917
(T-191)(* 3-104)	.....	1	321 3917
(T-193)(* 3-104)	.....	1	321 3918
(T-194)(* 3-104)	.....	1	321 3919
(T-195)(* 3-104)	.....	1	321 3920
(T-196)(* 3-104)	.....	1	321 3917
(T-201)(* 3-103)	.....	1	321 5404
(T-201)(* 3-104)	.....	1	321 3917
(T-203)(* 3-103)	.....	1	321 5405
(T-203)(* 3-104)	.....	1	321 5412
(T-206)(* 3-103)	.....	1	321 5407
(T-206)(* 3-104)	.....	1	321 5415
(T-208)(* 3-103)	.....	1	321 5404
(T-208)(* 3-104)	.....	1	321 3917
(T-211)(* 3-103)	.....	1	321 5404
(T-211)(* 3-104)	.....	1	321 3917
(T-213)(* 3-103)	.....	1	321 5405
(T-213)(* 3-104)	.....	1	321 5412
(T-215)	.....	1	321 3917
(T-216)(* 3-103)	.....	1	321 5407
(T-216)(* 3-104)	.....	1	321 5415
(T-218)	.....	1	321 3917
(T-221)	.....	1	321 5404
(T-241)(* 3-103)	.....	1	321 5404
(T-241)(* 3-104)	.....	1	321 3917
(T-243)	.....	1	321 5412
(T-244)	.....	1	321 5413
(T-245)	.....	1	321 3917
(T-246)	.....	1	321 5415
(T-248)	.....	1	321 3917
(T-261)	.....	1	321 3917
(T-263)	.....	1	321 5412
(T-264)	.....	1	321 5413
(T-265)	.....	1	321 3917
(T-266)	.....	1	321 5415
(T-268)	.....	1	321 3917
(T-271)	.....	1	321 3917
(T-271-B)	.....	1	319 6487
(T-273)	.....	1	321 5412
(T-273-B)	.....	1	319 6487
(T-274)	.....	1	321 5413
(T-274-B)	.....	1	319 6487
(T-276)	.....	1	321 5415
(T-276-B)	.....	1	319 6487
(T-281)	.....	1	321 3917
(T-281-B)	.....	1	319 6487
(T-283)	.....	1	321 5412
(T-283-B)	.....	1	319 6487
(T-284)	.....	1	321 5413
(T-284-B)	.....	1	319 6487

Printed in U.S.A.

(T-291)	.....	1	321 3917	
(T-291-B)	.....	1	319 6487	
(T-293)	.....	1	321 5412	
(T-293-B)	.....	1	319 6487	
(T-294)	.....	1	321 5413	
(T-294-B)	.....	1	319 6487	
(T-296)	.....	1	321 5415	

3.400-3 SPRING, Center Horn Button Contact (* 3-37)

67/	01-10-40-50 (LHD)	.....	1	318 7255
67/69	***80 (RHD)***	.....	1	316 9537
67/70	***10 (RHD)***	.....	1	316 9537
67/69	***(Upper) 01 (RHD)***	.....	1	316 9537
67/69	***(Lower) 01 (RHD)***	3.406	1	317 0332

3.400-4 PLATE, Center Horn Button Contact (* 3-37)

67/68	01-10 (LHD)...(Incl. D/S Canceling Plate) ...***(Use 319 4346)***	3.321	1	318 7258
69	01 (LHD)...(Incl. D/S Canceling Plate)	3.321	1	319 4346
69	10 (LHD-LAW-Except SST)	3.321	1	319 4346
69	10 (LHD-WAW-Except SST)	3.321	1	319 4349
67	50-80...(Incl. D/S Canceling Plate) ...***(Use 319 4346)***	3.321	1	318 7258
67/70	***10 (RHD)***	.....	1	316 8003
67/69	***(Upper) 01 (RHD)***	.....	1	317 0341
67/69	***(Lower) 01 (RHD)***	3.406	1	317 0331

3.400-5 ATTACHING PARTS, Plate To Wheel (* 3-37)

SCREW, Tapping ..... 67/69 01 (RHD)	17.666	3	G161631 NA	

3.400-6 PIN, Center Horn Button Contact (* 3-37)

67/69	01-10-80 (LHD)	.....	1	318 7256
70/	LHD	.....	1	318 7249
67/69	***01 (RHD)***	3.406	1	317 0333

3.400-7 RETAINER, Center Horn Blowing Contact Pin (* 3-37)

67/	01-10-40-80 (LHD)	.....	1	318 7257
71/	70 (LHD)	.....	1	318 7257

3.400-8 RECEIVER, Center Horn Button (* 3-37)

67/	01-10-40-80 (LHD)	.....	1	318 6967
71/	70 (LHD)	.....	1	318 6967

3.400-8a ATTACHING PARTS, Receiver To Wheel (* 3-37)

SCREW, Machine	67/70	01-10-40-80 (LHD)	.....	3	400 2069
SCREW, Tapping	71/	01-10-40-70-80	.....	3	400 4167

3.400-9 INSULATOR, Center Horn Button Receiver

71/	LHD (* 3-104)	.....	1	321 3915

3.400-10 BUSHING, Center Horn Button Receiver (* 3-37)

67/	01-10-40-80 (LHD)	.....	1	318 6964
71/	70 (LHD)	.....	1	318 6964

ELECTRICAL - INSTRUMENTS

3.400–11 SPRING, Center Horn Button Receiver (* 3-37)

67/	01-10-40-80 (LHD)	.....	1	318 6965
71/	70 (LHD)	.....	1	318 6965

3.400–12 RETAINER, Horn Button Seat

67/69	*01 (RHD)*	3.406	1	317 0485

3.400–13 INSULATOR, Horn Button Retainer

67/70	*10-80 (RHD)*	3.406	1	316 7356

3.400–14 CUSHION, Horn Button Upper Seat To Contact Plate

67/70	*01-10-80 (RHD)*	3.406	1	316 8004

3.400–15 BRUSH, Horn Button Contact

67/70	*10-80 (RHD)*	3.406	1	316 7357

3.400–16 CLIP, Horn Button Insulator Retainer

67/70	*10-80 (RHD)*	3.406	1	316 9375

3.400–17 PLATE, Horn Button Index

67/69	*01-80 (RHD)*	.....	1	316 7099
67/70	*10 (RHD)*	.....	1	316 7099

3.400–18 ATTACHING PARTS, Plate To Plate

SCREW, Tapping 67/69	*01-80 (RHD)*	17.680	3	320 7023
SCREW, Tapping 67/70	*10 (RHD)*	17.680	3	320 7023

3.400–19 CONTACT, Horn Button

67	*10 (RHD)*	3.406	1	320 4049

3.400–20 BUTTON, Spoke Horn (* 3–38)

67/69	01 (LHD)(4 Grooves-Black)	.....	3	318 7273
67/69	01 (LHD)(Serrated-Chrome)	.....	3	319 1634
67	10-50-80 (LHD)	.....	3	318 7272
68/69	10-30-70-80 (LHD)	.....	3	319 1634

3.400–21 CONTACT, Spoke Horn Blowing (* 3–38)

67/69	LHD	.....	3	318 7265

3.400–22 ATTACHING PARTS, Contact To Wheel Cover (* 3-38)

SCREW, Tapping 67/69	LHD	.....	3	400 2068

3.400–23 UPPER PLATE, Spoke Horn Button Contact (* 3–38)

67/69	LHD	.....	1	318 7267

3.400–24 LOWER PLATE (Refer To Group 3.321 PLATE, Directional Signal Switch Cancelling)

3.400–25 INSULATOR, Spoke Horn Button Contact (* 3–38)

67/69	LHD	.....	2	318 7247

Printed in U.S.A.

ELECTRICAL - INSTRUMENTS

3.400–26 ATTACHING PARTS, Plate To Wheel Cover (* 3-38)

SCREW, Tapping	67/69	LHD	.....	2	400 2068

3.400–27 PIN, Spoke Horn Blowing Contact (* 3–38)

67/69	LHD		.....	1	318 7249

3.400–28 PIVOT, Spoke Horn Button Insulator (* 3–38)

67/69	LHD		.....	6	318 7248

3.401–1 COVER, Horn Blowing (Refer Gr 10.280–3)

3.401–2 BEZEL, Horn Blowing Cover

70/	01–10–40–70–80		.....	1	319 6877

3.401–3 ATTACHING PARTS, Horn Blowing Cover To Bezel

SCREW, Tapping	70/	01–10–40–70–80	17.660	4	G190066 NA
WASHER, Plain	70/	01–10–40–70–80	29.461	4	400 1287

3.401–4 SPRING, Horn Blowing Cover

70/	01–10–40–70–80		.....	4	319 6916

3.401–5 PIN, Horn Blowing Contact

70	LHD		3.400	1	318 7249
71/	LHD (* 3–104)		3.400	1	318 7249

3.401–6 RETAINER, Horn Blowing Contact

70	LHD		3.400	1	318 7257
71/	LHD (* 3–104)		3.400	1	318 7257

3.401–7 SPRING, Horn Blowing Contact

70	LHD		3.400	1	318 7255
71/	LHD (* 3–104)		3.400	1	318 7255

3.406–1 RING, Horn Blowing

67/69	***01 (RHD)***		.....	1	317 9261
67	***10 (RHD-LPS)***		.....	1	317 5406
67/70	***10-80 (RHD-WPS)***		.....	1	317 5407
67/69	***80 (RHD-LPS)***		.....	1	317 5406

3.406–2 CONTACT, Horn Blowing Ring (Incl. Wire)

67	10–50–80 (LHD–LAW)		.....	1	317 5548
67/70	***10-80 (RHD)***		.....	1	320 4049

3.406–3 SPRING, Horn Blowing Ring

67/70	***01-10-80 (RHD)***		.....	1	316 9434

3.406–4 SPRING, Horn Blowing Contact

67/69	***01 (RHD)***		.....	1	317 0332

3.406–5 RETAINER, Horn Blowing Ring

67/69	*01 (RHD)*	.....	1	317 0485

3.406–6 INSULATOR, Horn Blowing Ring Brush

67/70	*10-80 (RHD)*	.....	1	316 7356

3.406–7 PIN, Horn Blowing Contact

67/69	*01 (RHD)*	.....	1	317 0333

3.406–8 PLATE, Horn Blowing Ring Contact

67/70	*10-80 (RHD)*	3.400	1	316 8003
67/69	*(Upper) 01 (RHD)*	3.400	1	317 0341
67/69	*(Lower) 01 (RHD)*	.....	1	317 0331

3.406–9 ATTACHING PARTS, Contact Plate To Steering Wheel

SCREW, Tapping 67/69	*01 (RHD)*	17.666	3	G161631 NA

3.406–10 CUSHION, Horn Blowing Ring To Contact Plate

67/69	*01 (RHD)*	.....	1	316 8004
67/70	*10-80 (RHD)*	.....	1	316 8004

3.406–11 PLATE, Horn Blowing Ring Index

67/69	*01 (RHD)*	3.400	1	316 7099
67/70	*10-80 (RHD)*	3.400	1	316 7099

3.406–12 ATTACHING PARTS, Horn Blowing Ring Index Plate To Ring

SCREW, Tapping 67/69	*01 (RHD)*	17.680	3	320 7023
SCREW, Tapping 67/70	*10-80 (RHD)*	17.680	3	320 7023

3.406–13 BRUSH, Horn Blowing Ring Contact

67/70	*10-80 (RHD)*	.....	1	316 7357

3.406–14 CLIP, Horn Blowing Ring Insulator Retainer

67/70	*10-80 (RHD)*	.....	1	316 9375

3.407–1 RIM, Horn Blowing (Part Of Steering Wheel Assy. - Refer Gr 10.280)

3.407–2 RETAINER, Horn Blowing Rim Contact

70	LHD	3.400	1	318 7257
71	LHD (* 3-103)	3.400	1	318 7257

3.407–3 SPRING, Horn Blowing Rim Contact

70	LHD	3.400	1	319 7267
71	LHD (* 3-103)	3.400	1	319 7267

3.407–4 EYELET, Horn Blowing Contact

70	LHD	17.260	1	G188549 NA

Printed In U. S. A.

ELECTRICAL - INSTRUMENTS

3.410 STRIP, Rim Blow Horn Switch (Incl. Rubber Insulator)

70/71	01-10-30-70-80	7177452	.....	1	812 0212
71	40		.....	1	812 0212

3.505-1 CASE, Instrument Cluster

67/69	01 (LHD)	.....	1	320 8228
70/	01-40 (LHD)	.....	1	448 7971
67/71	10 (LHD)	.....	1	320 7894
72	10	.....	1	448 5475
68	30	.....	1	448 5475
69/70	30	.....	1	448 6313
67	50-80 ***(Ord. 448 5474, 448 5475)***	.....	1	320 7891
68	70-80 (* 3-39) ***(Ord. 448 5474, 448 5475)***	.....	1	320 7891
68	70-80 (* 3-40)	.....	1	448 5475
69/70	70 (Used Less Tachometer)	.....	1	448 5475
69/70	70 (Used With Tachometer)	.....	1	448 6313
71/	70 (Used Less Tachometer)	.....	1	448 9368
71/	70 (Used With Tachometer)	.....	1	448 9369
69/71	80	.....	1	448 5475
72	80	.....	1	320 7894
67/69	***01 (RHD)***	.....	1	448 6547
67/68	***10 (RHD)***...(Incl. Diffusers) ***(Ord. 448 5474, 448 5475)***	.....	1	320 7891
69/70	***10-80 (RHD)***...(Incl. Diffusers)	.....	1	448 5475

3.505-2 ATTACHING PARTS, Instrument Cluster To Instrument Panel

SCREW, Tapping.....	67/69	01 (LHD)	.....	2	400 1742
SCREW, Tapping.....	67/68	10-50-80 (LHD)	17.660	4	G161901
SCREW, Tapping.....	68/69	30-70 (3/4" Long)	15.321	4	400 2464
SCREW, Tapping.....	68/70	30-70 (5/8" Long)	17.660	4	G161901
SCREW, Tapping.....	69/71	10-80 (LHD)	15.320	4	400 2522
SCREW, Tapping.....	72	10-80	17.671	4	812 0052
***SCREW, Tapping.....	***67/69***	***01 (RHD)***	17.665	2	G168590 NA
***SCREW, Tapping.....	***67/70***	***10-80 (RHD)***	29.120	4	400 0575
NUT, Speed	67/69	01 (LHD)	.....	2	400 1748
NUT, Speed	68/70	30-70	22.100	4	400 3841
***NUT, Speed	***67/69***	***01 (RHD-Six)***	.....	2	400 0895
NUT, Spring	67/71	10-50-80	.....	8	400 1948

3.505-3 HOUSING, Warning Lamp

70/	01-40 (LHD)	.....	2	448 7986

3.505-4 CLIP, Flasher Unit (Refer Group 3.330)

3.510-1 BEZEL, Instrument Cluster (For 67-68-69 10-80 RHD Refer Gr 22.100 PAD, Instrument Panel Crash)

(T-031)(LAC)(LHLV)...(Incl. Overlay)	.....	1	363 1780
(T-031)(WAC)(WHLV)...(Incl. Overlay) ***(Use 899 2598)***	.....	1	363 1781
(T-033)(LAC)(LHLV)...(Incl. Overlay)	.....	1	363 1782
(T-033)(WAC)(WHLV)...(Incl. Overlay)	.....	1	363 1783
(T-035)(LAC)(LHLV)...(Incl. Overlay)	.....	1	363 1784
(T-035)(WAC)(WHLV)...(Incl. Overlay)	.....	1	363 1785
(T-036)(LAC)(LHLV)...(Incl. Overlay)	.....	1	363 1786
(T-036)(WAC)(WHLV)...(Incl. Overlay)	.....	1	363 1787
(T-061)(LAC-Except SST)(LHLV-Except SST)...(Incl. Overlay)	.....	1	363 1760
(T-061)(SST-LAC)(SST-LHLV)...(Incl. Overlay)	.....	1	363 1770
(T-061)(WAC-Except SST)(WHLV-Except SST)...(Incl. Overlay) ***(Use 899 2596)***	.....	1	363 1761
(T-061)(SST-WAC)(SST-WHLV)...(Incl. Overlay) ***(Use 899 2597)***	.....	1	363 1771

ELECTRICAL - INSTRUMENTS

	(T-063)(LAC-Except SST)(LHLV-Except SST)...(Incl. Overlay)	.....	1	363 1762
	(T-063)(SST-LAC)(SST-LHLV)...(Incl. Overlay)	.....	1	363 1772
	(T-063)(WAC-Except SST)(WHLV-Except SST)...(Incl. Overlay)	.....	1	363 1763
	(T-063)(SST-WAC)(SST-WHLV)...(Incl. Overlay)	.....	1	363 1773
	(T-064)(LAC-Except SST)(LHLV-Except SST)...(Incl. Overlay)	.....	1	363 1764
	(T-064)(SST-LAC)(SST-LHLV)...(Incl. Overlay)	.....	1	363 1774
	(T-064)(WAC-Except SST)(WHLV-Except SST)...(Incl. Overlay)	.....	1	363 1765
	(T-064)(SST-WAC)(SST-WHLV)...(Incl. Overlay)	.....	1	363 1775
	(T-065)(LAC-Except SST)(LHLV-Except SST)...(Incl. Overlay)	.....	1	363 1766
	(T-065)(SST-LAC)(SST-LHLV)...(Incl. Overlay)	.....	1	363 1776
	(T-065)(WAC-Except SST)(WHLV-Except SST)...(Incl. Overlay)	.....	1	363 1767
	(T-065)(SST-WAC)(SST-WHLV)...(Incl. Overlay)	.....	1	363 1777
	(T-066)(LAC-Except SST)(LHLV-Except SST)...(Incl. Overlay)	.....	1	363 1768
	(T-066)(SST-LAC)(SST-LHLV)...(Incl. Overlay)	.....	1	363 1778
	(T-066)(WAC-Except SST)(WHLV-Except SST)...(Incl. Overlay)	.....	1	363 1769
	(T-066)(SST-WAC)(SST-WHLV)...(Incl. Overlay)	.....	1	363 1779
69	10 (LHD-LAC-Except SST)(LHLV-Except SST)	.....	1	448 6553
69	10 (LHD-SST-LAC)(LHD-SST-LHLV) ...(Incl. Grey Grained Overlay)	.....	1	448 6552
69	10 (LHD-WAC)(LHD-WHLV) ...(Incl. Grey Grained Overlay)	.....	1	448 9459
69	80 (LHD-WAC-Except SST)(LHD-WHLV-Except SST)	.....	1	448 6555
69	80 (LHD-SST-WAC)(LHD-SST-WHLV) ...(Incl. Overlay)	.....	1	448 6554
70	10 (LHD-LAC-Except SST-* 3-85)(LHD-LHLV-Except SST-* 3-85)	.....	1	448 7683
70	10 (LHD-LAC-Except SST-* 3-86)(LHD-LHLV-Except SST-* 3-86)	.....	1	363 6338
70	10 (LHD-SST-LAC-* 3-85)(LHD-SST-LHLV-* 3-85)...(Incl. Overlay)	.....	1	448 7684
70	10 (LHD-SST-LAC-* 3-86)(LHD-SST-LHLV-* 3-86)...(Incl. Overlay)	.....	1	363 6341
70	10 (LHD-WAC-* 3-85)...(Incl. Overlay)	.....	1	448 7686
70	10 (LHD-WAC-* 3-86)...(Incl. Overlay)	.....	1	448 8506
70	10 (LHD-WHLV-* 3-85)...(Incl. Overlay)	.....	1	448 7685
70	10 (LHD-WHLV-* 3-86)...(Incl. Overlay)	.....	1	448 8505
70	80 (LHD-WAC-Except DPL-* 3-85)(LHD-WAC-Except SST-* 3-85)	.....	1	448 7680
70	80 (LHD-WAC-Except DPL-* 3-86)(LHD-WAC-Except SST-* 3-86)	.....	1	448 8502
70	80 (LHD-DPL-WAC-* 3-85)...(Incl. Overlay)	.....	1	448 7681
70	80 (LHD-DPL-WAC-* 3-86)...(Incl. Overlay)	.....	1	448 8503
70	80 (LHD-SST-WAC-* 3-85)...(Incl. Overlay)	.....	1	448 7682
70	80 (LHD-SST-WAC-* 3-86)...(Incl. Overlay)	.....	1	448 8504
70	80 (LHD-LAC-Except DPL-* 3-85)(LHD-LAC-Except SST-* 3-85) ...(Incl. Overlay)	.....	1	448 7677
70	80 (LHD-LAC-Except DPL-* 3-86)(LHD-LAC-Except SST-* 3-86) ...(Incl. Overlay)	.....	1	448 8507
70	80 (LHD-DPL-LAC-* 3-85)...(Incl. Overlay)	.....	1	448 7678
70	80 (LHD-DPL-LAC-* 3-86)...(Incl. Overlay)	.....	1	448 8508
70	80 (LHD-SST-LAC-* 3-85)...(Incl. Overlay)	.....	1	448 7679
70	80 (LHD-SST-LAC-* 3-86)...(Incl. Overlay)	.....	1	448 8509
71	10 (Black-LAC)	.....	1	360 9596
71	10 (Black-WAC)	.....	1	360 9597
71	10 (Blue-LAC)	.....	1	360 9951
71	10 (Blue-WAC)	.....	1	360 9954
71	10 (Green-LAC)	.....	1	360 9952
71	10 (Green-WAC)	.....	1	360 9955
71	10 (Red-LAC)	.....	1	360 9953
71	10 (Red-WAC)	.....	1	360 9956
71	70 (LAC-Except SST)(LAC-Except AMX)	.....	1	363 6932
71	70 (WAC-Except SST)(WAC-Except AMX)	.....	1	363 6933
71/	70 (SST-LAC)	.....	1	363 2586
71/	70 (SST-WAC)	.....	1	363 2587
71/	70 (AMX-LAC)	.....	1	363 2584
71/	70 (AMX-WAC)	.....	1	363 2585
71	80 (DPL-WAC)(DPL-WHLV)	.....	1	448 9301
71	80 (SST-WAC)(DPL-WHLV)	.....	1	448 9302

Printed in U. S. A.

ELECTRICAL - INSTRUMENTS

71	80 (Brougham-WHLV-Black)	.....	1	448	9303
71	80 (Brougham-WHLV-Blue)	.....	1	448	9304
71	80 (Brougham-WHLV-Green)	.....	1	448	9305
71	80 (Brougham-WHLV-Red)	.....	1	448	9306
71	80 (Brougham-WAC-Black)	.....	1	812	0293
71	80 (Brougham-WAC-Blue)	.....	1	812	0294
71	80 (Brougham-WAC-Green)	.....	1	812	0295
71	80 (Brougham-WAC-Red)	.....	1	812	0296
72	10 (Black-LAC)	.....	1	364	6174
72	10 (Black-WAC)	.....	1	364	6456
72	10 (Blue-LAC)	.....	1	364	6175
72	10 (Blue-WAC)	.....	1	364	6457
72	10 (Green-LAC)	.....	1	364	6176
72	10 (Green-WAC)	.....	1	364	6458
72	10 (Tan-LAC)	.....	1	364	6177
72	10 (Tan-WAC)	.....	1	364	6459
72	80 (SST-Black)	.....	1	812	0674
72	80 (SST-Blue)	.....	1	812	0675
72	80 (SST-Green)	.....	1	812	0676
72	80 (SST-Tan)	.....	1	812	0677
72	80 (Brougham-Black)	.....	1	812	0678
72	80 (Brougham-Blue)	.....	1	812	0679
72	80 (Brougham-Green)	.....	1	812	0680
72	80 (Brougham-Tan)	.....	1	812	0681

3.510–1a ATTACHING PARTS, Bezel To Instrument Panel

SCREW, Tapping	69/	10-80 (LHD-5/8" Long)	22.056	9	400	2652
SCREW, Tapping	70/	10-80 (LHD-1/2" Long)	22.056	11	400	3590
SCREW, Tapping	70	30-70 (3/4" Long)	15.320	14	400	2810
SCREW, Tapping	70	30-70 (1/2" Long)	25.029	3	400	3814
SCREW, Tapping	71/	70 (Front)	7.014	8	400	2809
SCREW, Tapping	71/	70 (Left Side)	.....	2	400	2799
NUT, Spring	70	10-80 (LHD)	3.505	2	400	1948
NUT (Nylon)	70/71	10-80 (LHD)	.....	2	400	4160
NUT, "U" Shaped	71/	70 (Front)	22.100	8	400	3841
NUT, Speed	71/	70 (Left Side)	22.058	2	400	0267

3.510–1b SPACER, Instrument Cluster Bezel

70	30-70	.....	2	363 6396

3.510–2 BEZEL, Instrument Rally Pak

68/69	30-70 (WRP)	.....	1	448 5866

3.510–2a ATTACHING PARTS, Bezel To Instrument Panel

SCREW, Tapping	68/69	30-70 (WRP) ***(Use G161860)***	17.671	3	448 5889
NUT, Spring	68/69	30-70 (WRP)	22.100	3	400 3841

3.510–2b ATTACHING PARTS, Bezel To Instrument Cluster

SCREW, Tapping	71/	70	17.671	8	448 9486
NUT, On-Sert	71/	70	24.050	8	400 3625

3.510–3 HOUSING, Instrument Cluster

70	01 (Black)	.....	1	361 6346
70	01 (Blue)	.....	1	361 6347
70	01 (Green)	.....	1	363 5947
70	01 (Red)	.....	1	363 5948
70	01 (Satin Chrome)	.....	1	361 6350
71	01 (Black)	.....	1	361 6346
71	01 (Blue)	.....	1	364 1746
71	01 (Green)	.....	1	364 1747
71	01 (Red)	.....	1	364 1748
71	01 (Satin Chrome)	.....	1	361 6350
72	01 (Black-LSBW)	.....	1	365 1254
72	01 (Black-WSBW)	.....	1	365 7663
72	01 (Blue-LSBW)	.....	1	365 1255
72	01 (Blue-WSBW)	.....	1	365 7664
72	01 (Green-LSBW)	.....	1	365 1256
72	01 (Green-WSBW)	.....	1	365 7665
72	01 (Tan-LSBW)	.....	1	366 1361
72	01 (Tan-WSBW)	.....	1	365 7666
72	01 (Satin Chrome-LSBW)	.....	1	361 6350
72	01 (Satin Chrome-WSBW)	.....	1	366 2337
70	40 (Black)	.....	1	363 6153
70	40 (Blue)	.....	1	363 6155
70	40 (Green)	.....	1	364 1201
70	40 (Red)	.....	1	363 6156
71	40 (Black)	.....	1	363 6153
71	40 (Blue)	.....	1	364 1922
71	40 (Green)	.....	1	364 1923
71	40 (Red)	.....	1	364 1924
72	40 (Black-LSBW)	.....	1	365 1373
72	40 (Black-WSBW)	.....	1	365 7669
72	40 (Blue-LSBW)	.....	1	365 1374
72	40 (Blue-WSBW)	.....	1	365 7670
72	40 (Tan-LSBW)	.....	1	365 1376
72	40 (Tan-WSBW)	.....	1	365 7672

3.510–3a ATTACHING PARTS, Housing To Instrument Panel

SCREW, Tapping	70	01-40 (LHD)	.....	5	400 2652
SCREW, Tapping	71/	01-40 (Upper)	22.100	5	400 2657
SCREW, Tapping	71/	01-40 (Side)	.....	4	400 4112
NUT, Clip	70	01-40 (LHD)	13.072	5	400 0383
NUT, Stamped	71/	01-40	24.050	2	400 3625

3.510–3b OVERLAY, Instrument Cluster Housing (Di-Noc)

71	08 (D/L)	.....	1	364 6754
72	(Left) 40 (X-WSBW)	.....	1	365 7656
71/	(Left) 40 (X-LSBW)	.....	1	364 6757
71/	(Right) 40	.....	1	364 6756

3.510–4 OVERLAY, Instrument Cluster Opening (For 69-70-71 10-80 LHD Refer To Group 3.510–1 BEZEL)

67/68	07-09	.....	1	358 4790
67/68	10 (LHD)	.....	1	357 6540
67	***10 (RHD-* 3-41)*** ...(Incl. Lens)	.....	1	357 6543
67	***10 (RHD-* 3-42)*** ...(Incl. Lens)	.....	1	360 8165
68	***10 (RHD)*** ...(Incl. Lens)	.....	1	357 6543
69/70	***10-80 (RHD)*** ...(Incl. Lens)	.....	1	357 6549
67	50 ...(Incl. Lens)	.....	1	357 6549
67	80 (* 3-41) ...(Incl. Lens)	.....	1	357 6543
67	80 (* 3-42) ...(Incl. Lens)	.....	1	360 8165
68	80 ...(Incl. Lens)	.....	1	357 6549
(T-831)		.....	1	360 1492
(T-832)		.....	1	360 1498
(T-835)		.....	1	360 1495
(T-838)		.....	1	360 1492
(T-931)(* 3-65)		.....	1	362 3472
(T-931)(* 3-66)		.....	1	361 4033

(T-932)(* 3-65)			.....	1	362 3472
(T-932)(* 3-66)			.....	1	361 4033
(T-935)(* 3-65)			.....	1	362 3474
(T-935)(* 3-66)			.....	1	361 4035
(T-936)(* 3-65)			.....	1	362 3475
(T-936)(* 3-66)			.....	1	361 4036
(T-961)(* 3-65)			.....	1	362 3472
(T-961)(* 3-66)			.....	1	361 4033
(T-962)(* 3-65)			.....	1	362 3472
(T-962)(* 3-66)			.....	1	361 4033
(T-963)(* 3-65)			.....	1	362 3473
(T-963)(* 3-66)			.....	1	361 4034
(T-965)(* 3-65)			.....	1	362 3474
(T-965)(* 3-66)			.....	1	361 4035
(T-966)(* 3-65)			.....	1	362 3475
(T-966)(* 3-66)			.....	1	361 4036
(T-968)(* 3-65)			.....	1	362 3472
(T-968)(* 3-66)			.....	1	361 4033

3.510–5 ATTACHING PARTS, Overlay To Instrument Panel

SCREW, Tapping	67/68	10-50-80	17.654	8	G162400 NA
SCREW, Tapping	68/70	30-70	15.321	3	400 2464
SCREW, Tapping	***69/70***	***10-80 (RHD)***	17.654	8	G162400 NA
NUT, Speed	68/70	30-70	22.100	3	400 3841
NUT, Speed	***69/70***	***10-80 (RHD)***	3.505	4	400 1948

3.510–5a ATTACHING PARTS, Overlay To Upper Finish Panel

SCREW, Tapping	67/68	10-80 (LHD)	.....	5	400 2652
NUT, Spring	67/68	10-80 (LHD)	22.056	5	400 3710

3.510–6 MOULDING, Instrument Cluster Bezel

69	(Inner) 10 (LHD-WAC)(LHD-WHLV)	.....	1	361 4905
69/70	(Inner) 10 (LHD-LAC)(LHD-LHLV)	.....	1	361 4901
69/70	(Inner) 80 (LHD-WAC-Except SST)(LHD-WHLV-Except SST)	.....	1	361 4905
71	(Inner) 80 (WAC-SST)(WHLV-SST)	.....	1	363 3651
72	(Inner) 10	.....	1	361 4901
69/70	(Outer) 10 (LHD-LAC)(LHD-LHLV)	.....	1	361 4899
69	(Outer) 10 (LHD-WHLV)	.....	1	361 4899
72	(Outer) 10	.....	1	361 4899
69/70	(Outer) 80 (LHD-WHLV-Except SST)	.....	1	361 4899

3.510–7 ATTACHING PARTS, Moulding To Bezel

NUT, Self-Threading	69/71	10-80 (LHD-Except SST)	.....	2	320 9552
NUT, Self-Threading	72	10	.....	2	320 9552

3.510–8 VISOR, Instrument Cluster Opening Overlay (* 3-66)

(T-931)	.....	1	361 4033
(T-932)	.....	1	361 4033
(T-935)	.....	1	361 4035
(T-936)	.....	1	361 4036
(T-961)	.....	1	361 4033
(T-962)	.....	1	361 4033
(T-963)	.....	1	361 4034
(T-965)	.....	1	361 4035
(T-966)	.....	1	361 4036
(T-968)	.....	1	361 4033

3.510–9 ATTACHING PARTS, Visor To Overlay

CLIP	69	30-70 (* 3-66)	.....	5	400 3716

ELECTRICAL - INSTRUMENTS

3.510–10 SPACER, Instrument Cluster Overlay Visor To Overlay

69	30–70 (* 3–66)	.....	3	361	4016

3.510–11 LENS, Brake Failure Warning Lamp (Also Refer Group 22.100–28 LENS)

67/69	01	.....	1	448	6999
70/	01–40 . . . (Incl. "Oil" Lens)	3.515	1	448	7974
69/71	10 (LHD)	.....	1	448	7110
72	10	.....	1	361	4854
68/69	30–70	.....	1	360	2359
70	30–70 . . . (Incl. "Park" Lens)	.....	1	363	1739
67/68	50–80	.....	1	357	6547
69/71	80 (LHD)	.....	1	361	4854
72	80	.....	1	448	7110
69/70	***10-80 (RHD)***	.....	1	357	6547

3.510–12 LENS, Hi-Beam

67/69	01	.....	1	448	7100

3.510–13 LAMP, Instrument Control Dial (Refer To Group 3.635)

3.510–14 COVER, Instrument Cluster Bezel Duct Opening (Upper-Center)

69/71	10–80 (LHD–LAC)(LHD–LHLV)	.....	1	361	4310

3.510–15 ATTACHING PARTS, Cover To Bezel

SCREW, Tapping.....	69/	10–80 (LHD–LAC)(LHD–LHLV)	13.510	2	400	2457
SCREW, Tapping.....	72	10–80	17.660	2	448	9487

3.510–16 COVER, Instrument Cluster Bezel Duct Opening (Left)

72	10 (LAC)	.....	1	364	6277

3.510–17 ATTACHING PARTS, Cover To Bezel

SCREW, Tapping.....	72	10 (LAC)	17.660	2	G163158	NA

3.515–1 LENS, Instrument Cluster (Speedometer)

70/	01–40 (LHD)	.....	3	448	8570
67/68	10 (LHD)	.....	1	320	7898
69/71	10 (LHD)	.....	1	448	6281
71/	70	.....	1	448	9372
72	80	.....	1	448	6281
72	(Miles) 10	.....	1	320	9645
68	(Miles) 30–70	.....	1	320	9645
69/70	(Miles) 30	.....	1	448	6287
69/70	(Miles) 70 (Used Less Tachometer)	.....	1	320	9645
69/70	(Miles) 70 (Used With Tachometer)	.....	1	448	6287
67/68	(Miles) 50–80	.....	1	320	7945
69/71	(Miles) 80 (LHD)	.....	1	448	6322
67/68	***(Miles) 10 (RHD)***	.....	1	320	7945
69	***(Miles) 10-80 (RHD-* 3-70)***	.....	1	320	7945
69	***(Miles) 10-80 (RHD-* 3-71)***	.....	1	448	6322
70	***(Miles) 10-80 (RHD)***	.....	1	448	6322
72	(Kilos) 10	.....	1	320	9647
68/70	(Kilos) 30–70	.....	1	320	9647

67/68	(Kilos) 50–80	.....	1	320 7946
69/	(Kilos) 80 (LHD)	.....	1	448 6323
67/68	***(Kilos) 10 (RHD)***	.....	1	320 7946
69	***(Kilos) 10-80 (RHD-* 3-70)***	.....	1	320 7946
69	***(Kilos) 10-80 (RHD-* 3-71)***	.....	1	448 6323
70	***(Kilos) 10-80 (RHD)***	.....	1	448 6323
67/69	***01 (RHD)***	.....	1	320 6866

3.515–2 MASK, Instrument Cluster Lens

70/	01 (LHD)	.....	1	448 7984
72	10 (* 3–119)	.....	1	812 0643
72	10 (* 3–120)	.....	1	812 1439
68	30	.....	1	320 9642
69	30	.....	1	448 6248
70/	40 (Miles)	.....	1	448 8657
70/	40 (Kilos)	.....	1	448 7984
67/68	50–80	.....	1	320 7943
68	70 (* 3–46)	.....	1	320 9642
68	70 (* 3–47)	.....	1	448 6248
69	70	.....	1	448 6248
70	70 (Used Less Tachometer)	.....	1	320 9642
71/	70	.....	1	448 9371
69/71	80 (LHD)	.....	1	488 6319
67/69	***01 (RHD)***	.....	1	320 6865
67/68	***10 (RHD)***	.....	1	320 7943
69	***10-80 (RHD-* 3-70)***	.....	1	320 7943
69	***10-80 (RHD-* 3-71)***	.....	1	448 6319
70	***10-80 (RHD)***	.....	1	448 6319
67	(Miles) 01 (LHD)	.....	1	320 8226
68	(Miles) 01 (LHD–* 3–43)	.....	1	320 8226
68	(Miles) 01 (LHD–* 3–44)	.....	1	448 5693
68	(Miles) 01 (LHD–* 3–45) 334	.....	1	448 5989
69	(Miles) 01 (LHD) 334	.....	1	448 5989
67/68	(Miles) 10 (LHD)	.....	1	320 8104
67	(Kilos) 01 (LHD) ***(Use 448 5694)***	.....	1	320 8227
68	(Kilos) 01 (LHD–* 3–43) ***(Use 448 5694)***	.....	1	320 8227
68	(Kilos) 01 (LHD–* 3–44)	.....	1	448 5694
68	(Kilos) 01 (LHD–* 3–45) ***(Use 448 5694)***	.....	1	448 5990
69	(Kilos) 01 (LHD) ***(Use 448 5694)***	.....	1	448 5990
67/68	(Kilos) 10 (LHD)	.....	1	320 8105

3.515–3 ATTACHING PARTS, Mask To Cluster

SCREW, Tapping	67/69	30–50–70–80	.....	1	320 7942
SCREW, Tapping	70/	01 (LHD)	22.100	2	320 6024

3.515–3a ATTACHING PARTS, Mask To Instrument Panel

SCREW, Tapping	67/69	01 (LHD)	.....	2	400 1742
SCREW, Tapping	70/	01–40 (LHD)	22.100	2	320 6024

3.515–4 LENS, Instrument Cluster Mask (Alternator And Oil)(Also Refer Group 22.100–28 LENS)

72	10	.....	1	320 7941
68/70	30–70	.....	1	320 9643
67/71	50–80	.....	1	320 7941
67/70	***10-80 (RHD)***	.....	1	320 7941

3.515–5 ATTACHING PARTS, Lens To Mask

SCREW, Tapping	67/70	30–50–70–80	.....	3	320	7942
SCREW, Tapping	71	80	.....	3	320	7942
SCREW, Tapping	***67/70***	***10-80 (RHD)***	.....	3	320	7942
CLIP	71/	70	.....	4	448	9373

3.515–6 LENS, Instrument Cluster (Oil)

69/71	10 (LHD)	.....	1	448	7108
72	80	.....	1	448	7108

3.515–7 LENS, Instrument Cluster (Alt.)

69/71	10 (LHD)	.....	1	448	7107
72	80	.....	1	448	7107

3.515–8 LENS, Instrument Cluster (Alt. And Park)

70/	01–40 (LHD)	.....	1	448	7973

3.515–9 LENS, Instrument Cluster (Oil And Brake)

70/	01–40 (LHD)	.....	1	448	7974

3.520–1 CONDUCTOR, Instrument Cluster (Printed Circuit Board)

67/69	01 (LHD) ***(Use 448 5485)***	.....	1	320	8229
70/	01 (LHD)	.....	1	448	7975
67/69	10 (LHD)	.....	1	320	7895
70/71	10 (LHD)	.....	1	448	7964
72	10	.....	1	448	5474
68	30	.....	1	448	5474
69	(Miles) 30	.....	1	448	6316
70	30	.....	1	448	7962
70/	40	.....	1	448	8656
67	50–80	.....	1	320	7892
68	70–80 (* 3–39)	.....	1	320	7892
68	70–80 (* 3–40)	.....	1	448	5474
69	70 (Used Less Tachometer)	.....	1	448	5474
70	70 (Used Less Tachometer)	.....	1	448	7963
69	70 (Used With Tachometer)	.....	1	448	6316
70	70 (Used With Tachometer)	.....	1	448	7962
71/	70	.....	1	448	9374
69	80	.....	1	448	5474
70/71	80 (LHD)	.....	1	448	7963
72	80	.....	1	320	7895
69	(Kilos) 30	.....	1	448	5474
67/69	***01 (RHD)***	.....	1	320	6864
67/68	***10 (RHD)***	.....	1	320	7892
69	***10 (RHD)***	.....	1	448	5474
70	***10-80 (RHD)***	.....	1	448	7963

3.520–2 ATTACHING PARTS, Conductor To Housing

SCREW, Tapping	67/69	01 (LHD)	.....	8	320	8230
SCREW, Tapping	70/	01–40 (LHD)	.....	4	448	7972
SCREW, Tapping	67/	10–30–50–70–80	.....	5	320	6867
SCREW, Tapping	***67/69***	***01 (RHD)***	.....	4	320	6867
SCREW, Tapping	***70***	***10-80 (RHD)***	.....	4	320	6867

ELECTRICAL - INSTRUMENTS

3.520-3 CONNECTOR, Instrument Cluster

67/	(Used Less Radio)	.....	1	358 5869

3.531-1 PLATE, Instrument Panel Lamp Mounting

71/	70 (LSBW)	.....	1	363 2665
72	70 (WSBW)	.....	1	365 7697

3.531-2 ATTACHING PARTS, Plate To Instrument Panel

SCREW, Tapping 71/	70	17.660	2	G9414714 NA

3.531-3 WIRE ASSEMBLY, Instrument Panel Indicator Lamp (Incl. Bulbs)

71/	70 (LSBW-Left Turn, High Beam And Brake Warning Lights)	.....	1	448 9290
71/	70 (LSBW-Right Turn, Oil And Alternator Warning Lights-Used With 120 M. P. H. Speedometer)	.....	1	448 9291
71/	70 (LSBW-Right Turn-Used With 140 M. P. H. Speedometer)	.....	1	448 9292
72	70 (WSBW-Fasten And Belt Lights)	.....	2	366 1745
72	70 (WSBW-Alternator And Oil Warning Lights-Used With 120 M. P. H. Speedometer)	.....	1	366 1743
72	70 (WSBW-Brake Warning Light)	.....	1	366 1741
72	70 (WSBW-High Beam Light)	.....	1	366 1739
72	70 (WSBW-Left And Right Turn Lights)	.....	2	366 1738
71	70 (Low Fuel Warning)	.....	1	448 9293
71/	70 (Lights) ***(Use 359 0887)***	3.635	1	320 7881
71	70 (WVW)(Wipers-Washer) ***(Use 359 0887)***	3.635	1	320 7881
71/	70 (WEW)(Wipers-Washer)	.....	1	363 3816

3.531-4 BULB, Instrument Cluster Indicator

71/	(GE 53) 70 (Left And Right Turns)	3.215	2	G131282
71/	(GE 53) 70 (High Beam)	3.215	1	G131282
71/	(GE 257) 70 (Low Fuel)	3.215	1	320 9534
71/	(GE 1815) 70 (Alternator)	3.215	1	320 9598
71/	(GE 1815) 70 (Brakes)	3.215	1	320 9598
71/	(GE 1815) 70 (Oil)	3.215	1	320 9598
71/	(GE 1445) 70 (Lights)	3.215	1	320 4552
71/	(GE 1445) 70 (Wipers)	3.215	1	320 4552

3.531-5 KNOB, Instrument Panel Indicator Lamp

71	70	.....	1	363 2660
72	70	.....	1	364 6914

3.550-1 SPEEDOMETER

67/69	(Miles) 01 (LHD)	.....	1	320 8217
70/	(Miles) 01 (LHD)	.....	1	448 7967
67/68	(Miles) 10 (LHD)	.....	1	320 7896
69	(Miles) 10 (LHD) 333	.....	1	448 6308
70	(Miles) 10 (LHD)	.....	1	448 8337
71	(Miles) 10	.....	1	812 0066
72	(Miles) 10 (* 3-119)	.....	1	812 0646
72	(Miles) 10 (* 3-120)	.....	1	812 1440
68	(Miles) 30	.....	1	448 6249
69	(Miles) 30	.....	1	448 6312
70	(Miles) 30	.....	1	448 7957
70/	(Miles) 40	.....	1	448 8653
67/68	(Miles) 50-80	.....	1	320 7948
68	(Miles) 70 (* 3-46)	.....	1	320 9644
68	(Miles) 70 (* 3-47)	.....	1	448 6249
69	(120 Miles) 70 (Used Less Tachometer)	.....	1	448 6249
69	(140 Miles) 70 (Used With Tachometer)	.....	1	448 6312
70	(120 Miles) 70 (Used Less Tachometer)	.....	1	448 8333
70	(140 Miles) 70 (Used With Tachometer)	.....	1	448 7957
71/	(120 Miles) 70 (Used Less Tachometer) MAR-ENTLER 9.41 4.9.8.0		1	448 9375
71/	(140 Miles) 70 (Used With Tachometer)	.....	1	448 9377

Printed in U.S.A.

Gr 3 - T 86

69	(Miles) 80 (LHD)	.....	1	448	6320
70/71	(Miles) 80 (LHD)	.....	1	448	8338
72	(Miles) 80	.....	1	812	0640
67/69	***(Miles) 01 (RHD)***	.....	1	320	6861
67/68	***(Miles) 10 (RHD)***	.....	1	320	7948
69	***(Miles) 10-80 (RHD-* 3-70)***	.....	1	320	7948
69	***(Miles) 10-80 (RHD-* 3-71)***	.....	1	448	6320
70	***(Miles) 10-80 (RHD)***	.....	1	448	8338
67/69	(Kilos) 01 (LHD)	.....	1	320	8218
70/	(Kilos) 01-40 (LHD)	.....	1	448	7968
67/68	(Kilos) 10 (LHD)	.....	1	320	7899
69/71	(Kilos) 10 (LHD)	.....	1	448	6309
72	(Kilos) 10 (* 3-119)	.....	1	812	0647
72	(Kilos) 10 (* 3-120)	.....	1	812	1626
69	(Kilos) 30-70	.....	1	448	6250
67/68	(Kilos) 50-80	.....	1	320	7949
68	(Kilos) 70 (* 3-46)	.....	1	320	9646
68	(Kilos) 70 (* 3-47)	.....	1	448	6250
70	(Kilos) 70	.....	1	320	9646
71/	(Kilos) 70	.....	1	448	9376
69/71	(Kilos) 80 (LHD)	.....	1	448	6321
72	(Kilos) 80	.....	1	812	0641
67/69	***(Kilos) 01 (RHD)***	.....	1	320	6862
67/68	***(Kilos) 10 (RHD)***	.....	1	320	7949
69	***(Kilos) 10-80 (RHD-* 3-70)***	.....	1	320	7949
69/70	***(Kilos) 10-80 (RHD-* 3-71)***	.....	1	448	6321
67	***(On Instrument Panel) 10-80 (Police)***	.....	1	317	2295
67/68	***(In Instrument Cluster) 10 (Police-LHD)***	.....	1	320	8607
67/68	***(In Instrument Cluster) 80 (Police)***	.....	1	320	8608
69	***(In Instrument Cluster) 10 (Police-LHD)***	.....	1	448	6934
70/	***(120 Miles-In Instrument Cluster) 10 (Police-LHD)***	.....	1	448	8336
72	***(140 Miles-In Instrument Cluster) 10 (Police-* 3-132)***	.....	1	812	2228
72	***(140 Miles-In Instrument Cluster) 10 (Police-* 3-133)***	.....	1	812	2229
69	***(In Instrument Cluster) 80 (Police)***	.....	1	448	6935
70/	***(120 Miles-In Instrument Cluster) 80 (Police)***	.....	1	448	8334
72	***(140 Miles-In Instrument Cluster) 80 (Police-* 3-132)***	.....	1	812	2230
72	***(140 Miles-In Instrument Cluster) 80 (Police-* 3-133)***	.....	1	812	2231

3.550–2 ATTACHING PARTS, Speedometer To Instrument Cluster Case

BUSHING	67/	01-40 (LHD)	.....	2	320	8223
GROMMET	67/	01-40 (LHD)	.....	2	320	8224
SCREW, Tapping	67/	01-40 (LHD)	.....	2	320	8222
SCREW, Tapping	67/	10-30-50-70-80	.....	2	320	6868
***SCREW, Tapping	***67/69***	***01 (RHD)***	.....	2	320	6868
***SCREW, Tapping	***70***	***10-80 (RHD)***	.....	1	320	6868

3.550–3 ATTACHING PARTS, Speedometer To Bracket

***SCREW, Machine	***67***	***10-80 (Police)***	17.671	2	400	1011

3.550–4 GASKET, Speedometer To Instrument Cluster Case

67/	01-40 (LHD)(Spacer)	.....	1	320	8225
67/	10-30-50-70-80	.....	1	320	6956
67/69	***01 (RHD)***	.....	1	320	6956

3.550–5 EYELET, Speedometer To Instrument Cluster Case

67/	10-30-50-70-80 . . .(Incl. Grommet)	.....	2	320	6955
67/69	***01 (RHD)*** . . .(Incl. Grommet)	.....	2	320	6955

3.550–6 BRACKET, Speedometer Mounting

67	***10-80 (Police)***	.....	1	319	2050

ELECTRICAL - INSTRUMENTS

3.550–7 ATTACHING PARTS, Bracket To Instrument Panel

SCREW, Machine	***67***	***10-80 (Police)***	17.610	3	400 0971
WASHER, Plain	***67***	***10-80 (Police)***	17.814	3	400 1093
NUT, Hexagon	***67***	***10-80 (Police)***	17.406	3	G120368

3.550–8 SPACER, Speedometer Bracket

67	***10-80 (Police)***		10.455	2	314 1080

3.570–1 CABLE, Speedometer (Threaded Connector To Speedometer)(Incl. Core)

67/70	01-40 (LHD-Six-WST)		.....	1	318 8639
67/69	01 (LHD-WAT)(LHD-V8-WST)(LHD-Six-WOD)		.....	1	318 7983
70	01-40 (WAT)		.....	1	318 7909
67/69	01 (LHD-V8-W4ST)	***(Use 317 7229)***	.....	1	317 7234
70/71	01 (V8-W4ST)		.....	1	318 7910
70	01 (V8-WST)		.....	1	318 8639
71	01-40 (WST)(WAT)		.....	1	318 7909
72	01-40 (WST)		.....	1	321 6336
72	01-40 (Six-WAT-LTCS)		.....	1	321 6342
72	01-40 (Six-WAT-WTCS)(V8-WAT)		.....	1	321 6341
67	10-50-80 (LHD-WST-Except Heavy Duty)		.....	1	318 7982
67	10-50-80 (LHD-WOD)		.....	1	318 7909
67/68	10 (WAT-WASC)	***(Use 318 8640)***	.....	1	318 8641
67/70	10-50 (LHD-WAT-LASC)		.....	1	318 7909
71	10 (Six-WAT)		.....	1	318 7982
71	10 (V8-WAT-LASC)		.....	1	318 7982
71	10 (V8-WAT-WASC)		.....	1	319 4739
69	10 (LHD-Six-WST)		.....	1	318 7983
69/70	10 (WAT-WASC)		.....	1	319 0355
68	10-70-80 (LHD-WST)		.....	1	318 7983
68/69	10-80 (LHD-Six-WOD)		.....	1	318 8639
70	10 (LHD-WST-Six)		.....	1	318 7983
71	10 (Six-WST)		.....	1	319 4732
68	10-80 (V8-WOD)		.....	1	319 2218
67/70	10-30-50-70-80 (LHD-W4ST)		.....	1	318 7910
71	10-80 (W4ST)		.....	1	318 8639
68/70	30-70 (LHD-WAT)		.....	1	318 7909
67/68	50-80 (WAT-WASC)		.....	1	318 8640
69/70	70 (LHD-WST)		.....	1	318 7983
69/71	80 (LHD-Six-WST)		.....	1	319 4732
67/68	80 (LHD-WAT-LASC)		.....	1	318 7909
69/70	80 (LHD-Six-WAT-LASC)		.....	1	318 7983
71	80 (Six-WAT-LASC)		.....	1	318 7982
69/71	80 (LHD-V8-WAT-LASC)		.....	1	318 7982
69/71	80 (WAT-WASC)		.....	1	319 4739
67/70	***01-10 (RHD-Six-WST)***		.....	1	318 1740
67/70	***01-10-80 (RHD-WAT)***		.....	1	318 1740
67/70	***10-80 (Heavy Duty-LHD-Six-WST)***		.....	1	318 7909
72	***10-80 (Police-Six-WST)***		.....	1	321 6362
72	***10-80 (Police-Six-WAT)***		.....	1	321 6364
72	***10-80 (Police-V8-WAT-LASC)***		.....	1	321 6363
72	***10-80 (Police-V8-WAT-WASC)***		.....	1	321 6365
72	10-80 (Kilos-Six-WST)		.....	1	321 6362
72	10-80 (Kilos-Six-WAT)		.....	1	321 6364
72	10-80 (Kilos-V8-WAT-LASC)		.....	1	321 6363
72	10-80 (Kilos-V8-WAT-WASC)		.....	1	321 6365

3.570–1a CABLE, Speedometer (Quick Disconnect Connector To Speedometer)(Incl. Core)

72	10-80 (WST)		.....	1	321 6340
72	10-80 (Six-WAT)		.....	1	321 6348
72	10-80 (V8-WAT-LASC)		.....	1	321 6347
72	10-80 (V8-WAT-WASC)		.....	1	321 6349
71	70 (WST-LAC)(WAT-LAC)		.....	1	321 2094
71	70 (WST-WAC)(WAT-WAC)		.....	1	321 2095
71	70 (W4ST)		.....	1	321 2096

72	70 (Six-WST-LAC)(304-WST-LAC)	.....	1	321 6337
72	70 (Six-WST-WAC)(304-WST-WAC)	.....	1	321 6338
72	70 (Six-WAT-LAC)	.....	1	321 6345
72	70 (Six-WAT-WAC)	.....	1	321 6346
72	70 (304-WAT-LAC)(360-WAT-LAC)	.....	1	321 6344
72	70 (304-WAT-WAC)(360-WAT-WAC)	.....	1	321 6345
72	70 (401-WAT-WTCS-LAC)	.....	1	321 6344
72	70 (401-WAT-LTCS-LAC)(401-WAT-WTCS-WAC)	.....	1	321 6345
72	70 (401-WAT-LTCS-WAC)	.....	1	321 6346
72	70 (W4ST)	.....	1	321 6339

3.570–2 ATTACHING PARTS, Cable To Transmission

BOLT, Hexagon	67/	.....	17.038	1	G180016 NA

3.570–3 ATTACHING PARTS, Cable To Dash

SCREW, Tapping	***67/70***	***RHD***	17.671	2	400 1042
CLIP	***67/69***	***RHD*** ..... ***(Use 400 1802)***	4.160	2	15 708
CLIP	***70***	***RHD***	8.220	1	400 1802

3.570–4 ATTACHING PARTS, Cable To Brake And Clutch Pedal Support

CLIP	68/	10–80 (Six)	29.294	1	316 9685

3.570–5 ATTACHING PARTS, Cable To Front Sill

SCREW, Tapping	68/	.....	17.671	1	400 1042
CLIP	68/69	..... ***(Use 400 1802)***	4.160	1	15 708
CLIP	70/71	.....	8.220	1	400 1802
CLIP	72	01–40	.....	1	321 5870
CLIP	72	10–70–80	8.220	1	400 1802

3.570–5a ATTACHING PARTS, Cable To Front Floor Channel

CLIP	72	.....	.....	1	321 5861
SCREW, Tapping	72	.....	17.671	1	400 1042

3.570–6 ATTACHING PARTS, Cable To Rear Crossmember

SCREW, Tapping	67/69	01 (W4ST)	17.671	1	400 1042
SCREW, Tapping	71/	70 (W4ST)	17.671	1	400 1042
CLIP	67/69	01 (W4ST)	3.165	1	400 0553
CLIP	71/	70 (W4ST)	13.050	1	319 7896

3.570–7 ATTACHING PARTS, Cable To Clutch Rod Seal Screw

CLIP	67/69	01 (V8-WST) ..... ***(Use 400 1802)***	4.160	1	15 708

3.570–8 ATTACHING PARTS, Cable To Front Wheelhouse Panel

CLIP	67/	10–50–80	3.165	1	400 0306
CLIP	71/	70 (W4ST-WAC)	13.440	1	400 0443
SCREW, Tapping	71/	70 (W4ST-WAC)	17.671	1	400 1042

3.570–9 CABLE, Automatic Speed Control Speedometer (Regulator To Transmission)(Incl. Core)

69/71	10–80 (WAT-WASC)	.....	1	319 7786
67	10 (Six-WAT-WASC)	.....	1	318 7983
67/68	10 (V8-WAT-WASC)	.....	1	318 7909
72	10 (V8-WAT-WASC)	.....	1	321 5871
67	50–80 (Six-WAT-WASC)	.....	1	318 7909
67/68	50–80 (V8-WAT-WASC)	.....	1	318 8639
72	80 (V8-WAT-WASC)	.....	1	321 5872

ELECTRICAL - INSTRUMENTS

3.570–10 ATTACHING PARTS, Cable To Front Sill

SCREW, Tapping	67	10-50-80 (Six)	17.671	1	400 1042
SCREW, Tapping	67/68	10-50-80 (V8)	15.320	1	400 1701
SCREW, Tapping	69/	10-80 (V8)	17.671	1	400 1042
CLIP	67	10-50-80	8.330	1	313 5224
CLIP	69	10-80 (V8) ***(Use 400 1802)***	4.160	1	15 708
CLIP	70/71	10-80 (V8)	8.330	2	313 5224
CLIP	72	10-80 (V8)	8.330	1	313 5224

3.570–11 ATTACHING PARTS, Cable To Front Suspension Bracket

CLIP	67/	10-50-80	3.165	1	400 0306
CLIP	70/	10	8.330	1	313 5224
SCREW, Tapping	70/	10-80	17.671	AR	400 1042

3.570–12 ATTACHING PARTS, Cable To Hose

CLIP	69	10-80 (V8)	3.210	1	63 045

3.570–13 RING, Speedometer Cable "O"

67/			.....	1	316 8191

3.570–14 EXTENSION, Speedometer Cable

67	***10-80 (Police)***		.....	1	319 2064

3.570–15 GROMMET, Speedometer Cable (At Dash Panel)

72			.....	1	321 3963

3.575 CORE, Speedometer Cable (Threaded Coupling Cable)

67/70			.....	1	320 1620
71	01-10-40-80		.....	1	320 1620
72	01-40 (WST)		.....	1	812 1313
72	01-40 (Six-WAT-WTCS)(V8-WAT)		.....	1	812 1219
72	01-40 (Six-WAT-LTCS)		.....	1	812 1220
72	10-80 (Kilos-Six-WST)		.....	1	812 1312
72	10-80 (Kilos-Six-WST)		.....	1	812 1319
72	10-80 (Kilos-V8-WAT-LASC)		.....	1	812 1311
67	***10-80 (Police)***		.....	1	320 6703
72	***10-80 (Police-Six-WAT)***		.....	1	812 1312
72	***10-80 (Police-V8-WAT-LASC)***		.....	1	812 1311
72	***10-80 (Police-V8-WAT-WASC)***		.....	1	812 1221
72	***10-80 (Police-Six-WST)***		.....	1	812 1319

3.575–1 CORE, Speedometer Cable (Quick-Disconnect Cable)

72	10-80 (WST)	.....	1	812 1310
72	10-80 (Six-WAT)	.....	1	812 1317
72	10-80 (V8-WAT-LASC)	.....	1	812 1316
72	10-80 (V8-WAT-WASC)	.....	1	812 1318
71	70 (WST-LAC)(WAT-LAC)	.....	1	812 0077
71	70 (WST-WAC)(WAT-WAC)	.....	1	812 0078
71	70 (W4ST)	.....	1	812 0079
72	70 (Six-WST-LAC)(304-WST-LAC)	.....	1	812 1307
72	70 (Six-WST-WAC)(304-WST-WAC)	.....	1	812 1308
72	70 (Six-WAT-LAC)(304-WAT-WAC)(360-WAT-WAC)(401-WAT-LTCS-LAC) (401-WAT-WTCS-WAC)	.....	1	812 1315
72	70 (304-WAT-LAC)(360-WAT-LAC)(401-WAT-WTCS-LAC)	.....	1	812 1314
72	70 (W4ST)	.....	1	812 1309
72	***10-80 (Police-Six-WAT)***	.....	1	812 1317
72	***10-80 (Police-V8-WAT-LASC)***	.....	1	812 1316
72	***10-80 (Police-V8-WAT-WASC)***	.....	1	812 1318
72	***10-80 (Police-WST)***	.....	1	812 1310

Printed in U.S.A.

ELECTRICAL - INSTRUMENTS

3.580 GASKET, Speedometer Cable

67/71		3.570	1	316 8191
72	WAT	.....	1	321 6576

3.590–1 GEAR, Speedometer Driven

MODEL	GEAR RATIO	TIRE SIZE	TEETH	VENDOR NO.	PART NO.
67 01	11/39	7.35 × 14	22	92	316 7392
67 01	11/39	6.95 × 14	23	93	316 7393
67 01 (Blue)	12/43	6.85 × 15: 6.95 × 14	20	90	316 7390
67 01 (Red)	12/43	6.85 × 15: 6.95 × 14	20	98	316 7398
67 01 (Tan)	12/43	6.45 × 14	21	91	316 7391
67 01 (Black)	12/43	6.45 × 14	21	99	316 7399
67 01	13/40	6.85 × 15: 6.95 × 14	17	95	316 7395
67 01	13/40	6.45 × 14	18	96	316 7396
67 01 (Blue)	13/40	6.45 × 14: 6.85 × 15: 6.95 × 14	20	90	316 7390
67 01 (Red)	13/40	6.45 × 14: 6.85 × 15: 6.95 × 14	20	98	316 7398
67 01	13/41	6.95 × 14: 7.35 × 14	20	90	316 7390
67 01	13/41	7.35 × 14	22	92	316 7392
67 01	13/41	6.95 × 14	23	93	316 7393
67 01	13/43	6.45 × 14: 6.85 × 15: 6.95 × 14	19	97	316 7397
67 01 (Tan)	13/43	6.85 × 15: 6.95 × 14	21	91	316 7391
67 01 (Black)	13/43	6.85 × 15: 6.95 × 14	21	99	316 7399
67 01	13/43	6.45 × 14	22	92	316 7392
67 01	15/41	6.45 × 14: 6.95 × 14	18	96	316 7396
67 01	15/43	7.35 × 14	20	90	316 7390
67 01	15/43	6.95 × 14	21	91	316 7391
67 10	11/30	7.75 × 15	19	89	316 7389
67 10 (Green)	11/39	7.35 × 15: 7.75 × 14	19	89	316 7389
67 10 (Brown)	11/39	7.35 × 15: 7.75 × 14: 7.75 × 15	19	97	316 7397
67 10	11/39	6.95 × 14	20	90	316 7390
67 10	11/39	7.75 × 15: 8.25 × 14	21	91	316 7391
67 10	11/39	7.35 × 14: 7.35 × 15: 7.75 × 14	22	92	316 7392
67 10	13/41	7.35 × 15	17	95	316 7395
67 10 (Green)	13/41	7.75 × 15: 7.75 × 14: 8.25 × 14	19	89	316 7389
67 10 (Brown)	13/41	7.75 × 14: 7.75 × 15: 8.25 × 14	19	97	316 7397
67 10	13/41	6.95 × 14: 7.35 × 14: 7.35 × 15	20	90	316 7390
67 10	13/41	7.75 × 15: 8.25 × 14	21	91	316 7391
67 10	13/41	7.35 × 14: 7.35 × 15: 7.75 × 14	22	92	316 7392
67 10	15/43	7.75 × 15: 8.25 × 14	17	95	316 7395
67 10	15/43	7.75 × 15: 8.25 × 14	19	89	316 7389
67 10	15/43	7.35 × 14: 7.35 × 15: 7.75 × 14	20	90	316 7390
67 50 (Green)	11/39	7.75 × 14	19	89	316 7389
67 50 (Brown)	11/39	7.75 × 14	19	97	316 7397
67 50	11/39	8.25 × 14	21	91	316 7391
67 50	11/39	7.35 × 14: 7.75 × 14	22	92	316 7392
67 50 (Green)	13/41	7.75 × 14: 8.25 × 14	19	89	316 7389
67 50 (Brown)	13/41	7.75 × 14: 8.25 × 14	19	97	316 7397
67 50 (Blue)	13/41	7.35 × 14	20	90	316 7390
67 50 (Red)	13/41	7.35 × 14	20	98	316 7398
67 50	13/41	8.25 × 14	21	91	316 7391
67 50	13/41	7.75 × 14	22	92	316 7392
67 50	15/43	8.25 × 14	17	95	316 7395
67 50	15/43	7.35 × 14	18	96	316 7396
67 50	15/43	7.75 × 14	20	90	316 7390

ELECTRICAL - INSTRUMENTS

MODEL	GEAR RATIO	TIRE SIZE	TEETH	VENDOR NO.	PART NO.
67 80 (Green)	11/39	7.35 × 15: 7.75 × 14	19	89	316 7389
67 80 (Brown)	11/39	7.35 × 15: 7.75 × 14 7.75 × 15	19	97	316 7397
67 80	11/39	7.75 × 15: 8.25 × 14	21	91	316 7391
67 80	11/39	7.35 × 14: 7.35 × 15: 7.75 × 14	22	92	316 7392
67 80	13/41	7.35 × 15	17	95	316 7395
67 80 (Green)	13/41	7.75 × 14: 7.75 × 15: 8.25 × 14	19	89	316 7389
67 80 (Brown)	13/41	7.75 × 14: 7.75 × 15: 8.25 × 14	19	97	316 7397
67 80	13/41	7.35 × 14: 7.35 × 15	20	90	316 7390
67 80	13/41	7.75 × 15: 8.25 × 14	21	91	316 7391
67 80	13/41	7.75 × 14	22	92	316 7392
67 80	15/43	7.75 × 15: 8.25 × 14	17	95	316 7395
67 80	15/43	7.75 × 15: 8.25 × 14	19	89	316 7389
67 80	15/43	7.75 × 14	20	90	316 7390
68 01	12/43	6.45 × 14	21	99	316 7399
68 01	12/43	6.85 × 15: 6.95 × 14	20	98	316 7398
68 01	13/40	6.45 × 14	18	96	316 7396
68 01	13/40	6.85 × 15: 6.95 × 14	17	95	316 7395
68 01	13/40	6.45 × 14: 6.85 × 15 6.95 × 14	20	98	316 7398
68 01	13/43	6.45 × 14: 6.85 × 15 6.95 × 14	19	97	316 7397
68 01	13/43	6.45 × 14	22	92	316 7392
68 01	13/43	6.85 × 15: 6.95 × 14	21	99	316 7399
68 01	15/41	6.45 × 14: 6.85 × 15 6.95 × 14	18	96	316 7396
68 01	19/45	6.45 × 14	18	96	316 7396
68 01	19/45	6.85 × 15: 6.85 × 14	17	95	316 7395
68 01	11/39	6.95 × 14	23	93	316 7393
68 01	11/39	7.35 × 14	22	92	316 7392
68 01	13/41	6.95 × 14	23	93	316 7393
68 01	13/41	7.35 × 14	22	92	316 7392
68 01	13/41	6.95 × 14: 7.35 × 14	20	90	316 7390
68 01	15/43	6.95 × 14	21	91	316 7391
68 01	15/43	7.35 × 14	20	90	316 7390
68 10	11/39	7.35 × 14: 7.35 × 15 7.75 × 14	20	92	316 7392
68 10	11/39	7.75 × 15: 8.25 × 14	21	91	316 7391
68 10 (Blue)	13/41	7.35 × 14: 7.35 × 15	20	90	316 7390
68 10 (Green)	13/41	7.75 × 14: 7.75 × 15 8.25 × 14	19	89	316 7389
68 10 (Red)	13/41	7.35 × 14: 7.75 × 14	20	98	316 7398
68 10 (Brown)	13/41	7.75 × 14: 7.75 × 15 8.25 × 14	19	97	316 7397
68 10 (Pink)	13/41	7.35 × 14: 7.35 × 15 7.75 × 14	22	92	316 7392
68 10 (Tan)	13/41	7.75 × 15: 8.25 × 14	21	91	316 7391
68 10	15/43	7.35 × 14: 7.35 × 15 7.75 × 14	20	90	316 7390
68 10	15/43	7.75 × 15: 8.25 × 14	19	89	316 7389
68 30	11/39	E-70 × 14	23	93	316 7393
68 30	13/41	E-70 × 14	23	93	316 7393
68 70	12/43	6.45 × 14	21	99	316 7399
68 70 (Red)	12/43	6.95 × 14: 7.35 × 14	20	98	316 7398
68 70 (Brown)	13/40	7.35 × 14	19	97	316 7397
68 70 (Red)	13/40	6.95 × 14	20	98	316 7398
68 70 (Green)	13/40	6.95 × 14: 7.35 × 14	17	95	316 7395
68 70 (Black)	13/43	6.95 × 14: 7.35 × 14	21	99	316 7399
68 70 (Blue)	13/43	7.35 × 14	18	96	316 7396

ELECTRICAL - INSTRUMENTS

MODEL	GEAR RATIO	TIRE SIZE	TEETH	VENDOR NO.	PART NO.
68 70 (Brown)	13/43	6.95 x 14	19	97	316 7397
68 70	15/41	7.35 x 14	17	95	316 7395
68 70	15/41	6.95 x 14	18	96	316 7396
68 70	11/39	6.95 x 14: E-70 x 14	23	93	316 7393
68 70	11/39	7.35 x 14	22	92	316 7392
68 70	13/41	6.95 x 14: E-70 x 14	23	93	316 7393
68 70	13/41	7.35 x 14	22	92	316 7392
68 70	13/41	6.95 x 14: 7.35 x 14	20	90	316 7390
68 70	15/43	6.95 x 14	21	91	316 7391
68 70	15/43	7.35 x 14	20	90	316 7390
68 80	11/39	7.35 x 14: 7.35 x 15 7.75 x 14	22	92	316 7392
68 80	11/39	7.75 x 15: 8.25 x 14	21	91	316 7391
68 80 (Blue)	13/41	7.35 x 14: 7.35 x 15	20	90	316 7390
68 80 (Green)	13/41	7.75 x 14: 7.75 x 15 8.25 x 14	19	89	316 7389
68 80 (Red)	13/41	7.35 x 14: 7.35 x 15	20	98	316 7398
68 80 (Brown)	13/41	7.75 x 14: 7.75 x 15 8.25 x 14	19	97	316 7397
68 80 (Pink)	13/41	7.35 x 14: 7.35 x 15 7.75 x 14	22	92	316 7392
68 80 (Tan)	13/41	7.75 x 15: 8.25 x 14	21	91	316 7391
68 80	15/43	7.35 x 14: 7.35 x 15 7.75 x 14	20	90	316 7390
68 80	15/43	7.75 x 15: 8.25 x 14	19	89	316 7389
69 01	11/39	6.95 x 14: D-70	23	93	316 7393
69 01 (Pink)	11/39	7.35 x 14: E-70	22	92	316 7392
69 01 (White)	12/43	6.45 x 14: 6.85 x 15 6.95 x 14	23	93	316 7393
69 01 (Blue)	13/40	6.45 x 14: 6.85 x 15 6.95 x 14	20	90	316 7390
69 01 (Red)	13/40	6.45 x 14: 6.85 x 15 6.95 x 14	20	98	316 7398
69 01 (Blue)	13/41	6.95 x 14: 7.35 x 14 D-70	20	90	316 7390
69 01 (White)	13/41	6.95 x 14: D-70	23	93	316 7393
69 01 (Pink)	13/41	7.35 x 14	22	92	316 7392
69 01	13/43	6.45 x 14	22	92	316 7392
69 01 (Tan)	13/43	6.95 x 14: 6.85 x 15	21	91	316 7391
69 01 (Black)	13/43	6.95 x 14: 6.85 x 15	21	99	316 7399
69 01	15/41	6.45 x 14: 6.85 x 15 6.95 x 14	18	96	316 7396
69 01	15/43	6.95 x 14: D-70	21	91	316 7391
69 01	15/43	7.35 x 14	20	90	316 7390
69 01	19/45	6.45 x 14	18	96	316 7396
69 01	19/45	6.95 x 14: 6.85 x 15	17	95	316 7395
69 10	11/39	7.35 x 14: 7.35 x 15 7.75 x 14: F-70	22	92	316 7392
69 10	11/39	7.75 x 15: 8.25 x 14	21	91	316 7391
69 10 (Blue)	13/41	7.35 x 14: 7.35 x 15	20	90	316 7390
69 10 (Green)	13/41	7.75 x 14: 7.75 x 15 8.25 x 14: F-70	19	89	316 7389
69 10 (Red)	13/41	7.35 x 14: 7.35 x 15	20	98	316 7398
69 10 (Brown)	13/41	7.75 x 14: 7.75 x 15 8.25 x 14	19	97	316 7397
69 10 (Pink)	13/41	7.35 x 14: 7.75 x 14 F-78	22	92	316 7392
69 10 (Tan)	13/41	8.15 x 15: 7.75 x 15 8.25 x 14	21	91	316 7391

ELECTRICAL - INSTRUMENTS

MODEL	GEAR RATIO	TIRE SIZE	TEETH	VENDOR NO.	PART NO.
69 10	15/43	7.35 x 14: 7.35 x 15 7.75 x 14: F-78	20	90	316 7390
69 10	15/43	7.35 x 15: 8.25 x 14	19	89	316 7389
69 30	11/39	E-70	23	93	316 7393
69 30	13/41	E-70	20	90	316 7390
69 30	13/41	E-70	23	93	316 7393
69 30	15/43	E-70	20	90	316 7390
69 70	11/39	7.35 x 14: E-70	22	92	316 7392
69 70	12/43	6.95 x 14	23	93	316 7393
69 70	12/43	7.35 x 14	22	92	316 7392
69 70 (Blue)	13/40	6.95 x 14	20	90	316 7390
69 70 (Green)	13/40	7.35 x 14	19	89	316 7389
69 70 (Red)	13/40	6.95 x 14	20	98	316 7398
69 70 (Brown)	13/40	7.35 x 14	19	97	316 7397
69 70 (Blue)	13/41	7.35 x 14: E-70	20	90	316 7390
69 70 (Pink)	13/41	7.35 x 14: 7.35 x 15 E-70	22	92	316 7392
69 70 (Tan)	13/43	6.95 x 14: 7.35 x 14	21	91	316 7391
69 70 (Black)	13/43	6.95 x 14: 7.35 x 14	21	99	316 7399
69 70	15/41	6.95 x 14	18	96	316 7396
69 70	15/41	7.35 x 14	17	95	316 7395
69 70	15/43	7.35 x 14: E-70	20	90	316 7390
69 80	11/39	7.75 x 14	22	92	316 7392
69 80	11/39	7.75 x 15: 8.25 x 14	21	91	316 7391
69 80 (Green)	13/41	7.75 x 14: 7.75 x 15 8.25 x 14	19	89	316 7389
69 80 (Brown)	13/41	7.75 x 14: 7.75 x 15 8.25 x 14	19	97	316 7397
69 80	13/41	7.75 x 14: F-78	22	92	316 7392
69 80	13/41	8.25 x 14: 7.75 x 15 8.15 x 15	21	91	316 7391
69 80	15/43	7.75 x 14: F-78	20	90	316 7390
69 80	15/43	7.75 x 15: 8.25 x 14	19	89	316 7389
70 01	11/39	C-78 x 14: D-78 x 14: D-70 x 14	23	93	316 7393
70 01	11/43	D-70 x 14	22	92	316 7392
70 01	12/43	B-78 x 14: C-78 x 14: 6.45 x 14: 6.95 x 14: 6.85 x 15	23	93	316 7393
70 01 (Red)	13/40	B-78 x 14: C-78 x 14: 6.45 x 14: 6.95 x 14: 6.85 x 15	20	98	316 7398
70 01 (Blue)	13/40	B-78 x 14: C-78 x 14: 6.45 x 14: 6.95 x 14: 6.85 x 15	20	90	316 7390
70 01 (White)	13/41	C-78 x 14: D-78 x 14: D-70 x 14: 6.95 x 14	23	93	316 7393
70 01	13/41	7.35 x 14	22	92	316 7392
70 01 (Red)	13/41	6.95 x 14: 6.85 x 15	20	98	316 7398
70 01	13/41	C-78 x 14: D-78 x 14: D-70 x 14: 6.95 x 14: 7.35 x 14	20	90	316 7390
70 01	13/43	C-78 x 14: 6.95 x 14: 6.85 x 15	21	99	316 7399
70 01	13/43	B-78 x 14: 6.45 x 14	22	92	316 7392
70 01	13/43	C-78 x 14: 6.95 x 14: 6.85 x 15	21	91	316 7391
70 01	15/41	B-78 x 14: C-78 x 14: 6.45 x 14: 6.95 x 14: 6.85 x 15	18	96	316 7396

ELECTRICAL - INSTRUMENTS

MODEL	GEAR RATIO	TIRE SIZE	TEETH	VENDOR NO.	PART NO.
70 01 (Tan)	15/43	C-78 x 14: D-78 x 14: D-70 x 14: 6.95 x 14.	21	91	316 7391
70 01 (Blue)	15/43	7.35 x 14	20	90	316 7390
70 01	19/45	B-78 x 14: 6.45 x 14	18	96	316 7396
70 01	19/45	C-78 x 14: 6.95 x 14: 6.85 x 15	17	95	316 7395
70 10 (Pink)	11/39	E-78 x 14: F-78 x 14: 7.35 x 14: 7.75 x 14: 7.35 x 15	22	92	316 7392
70 10	11/39	G-78 x 14: H-78 x 14: 8.25 x 14: 7.75 x 15: 8.25 x 15	21	91	316 7391
70 10	11/39	E-60 x 15	23	93	316 7393
70 10	11/43	E-60 x 15	22	92	316 7392
70 10	13/41	E-78 x 14: F-78 x 14: 7.35 x 14: 7.75 x 14: 7.35 x 15	22	92	316 7392
70 10 (Tan)	13/41	C-78 x 14: H-78 x 14: 8.25 x 14: 7.75 x 15: 8.25 x 15	21	91	316 7391
70 10 (Brown)	13/41	G-78 x 14: H-78 x 14: 7.75 x 14: 8.25 x 14: 7.75 x 15: 8.25 x 15.	19	97	316 7397
70 10 (Red)	13/41	E-78 x 14: F-78 x 14: 7.35 x 14: 7.35 x 15.	20	98	316 7398
70 10 (Blue)	13/41	E-78 x 14: F-78 x 14: 7.35 x 14: 7.35 x 15.	20	90	316 7390
70 10 (Green)	13/41	G-78 x 14: H-78 x 14: 7.75 x 14: 7.75 x 15: 8.25 x 14: 8.25 x 15.	19	89	316 7389
70 10	15/43	E-78 x 14: F-78 x 14: G-78 x 14: 7.35 x 14: 7.75 x 14: 7.35 x 15.	20	90	316 7390
70 10	15/43	H-78 x 14: 8.25 x 14: 7.75 x 15: 8.25 x 15.	19	89	316 7389
70 30	11/39	E-70 x 14: E-60 x 15	23	93	316 7393
70 30	11/39	E-78 x 14: F-70 x 14: 7.35 x 14	22	92	316 7392
70 30	11/43	F-70 x 14	21	91	316 7391
70 30	11/43	E-70 x 14: E-60 x 15	22	92	316 7392
70 30	13/41	E-78 x 14: 7.35 x 14: F-70 x 14	22	92	316 7392
70 30 (White)	13/41	E-70 x 14: E-60 x 15	23	93	316 7393
70 30 (Blue)	13/41	E-70 x 14: E-60 x 15: E-78 x 14: 7.35 x 14: F-70 x 14	20	90	316 7390
70 30	15/43	E-70 x 14: E-60 x 15	21	91	316 7391
70 30	15/43	E-78 x 14: 7.35 x 14: F-70 x 14	20	90	316 7390
70 40	13/40	6.45 x 14: 6.95 X 14: B-78 x 14	20	98	316 7398
70 40	13/40	6.00 x 13: 6.95 x 14	21	91	316 7391
70 40	13/40	B-78 x 14: 6.45 x 14: 6.95 x 14	20	90	316 7390
70 40	13/40	6.00 x 13	21	99	316 7399
70 40	13/43	6.45 x 14: B-78 x 14	22	92	316 7392
70 40	13/43	6.00 x 13	23	93	316 7393
70 40	13/43	6.95 x 14	21	99	316 7399
70 40	15/41	B-78 x 14: 6.45 x 14: 6.95 x 14	18	96	316 7396

ELECTRICAL - INSTRUMENTS

MODEL	GEAR RATIO	TIRE SIZE	TEETH	VENDOR NO.	PART NO.
70 40	15/41	6.00 x 13	19	97	316 7397
70 40	19/45	6.00 x 13: B-78 x 14: 6.45 x 14: 6.95 x 14	18	96	316 7396
70 40	12/43	B-78 x 14: 6.45 x 14: 6.95 x 14	23	93	316 7393
70 70	11/39	D-78 x 14: E-70 x 14: 6.95 x 14: E-60 x 15	23	93	316 7393
70 70	11/39	7.35 x 14: F-70 x 14	22	92	316 7392
70 70	11/43	F-70 x 14	21	91	316 7391
70 70	11/43	E-70 x 14	22	92	316 7392
70 70	12/43	C-78 x 14: 6.95 x 14: D-78 x 14: E-70 x 14: E-78 x 14	23	93	316 7393
70 70	12/43	7.35 x 14	22	92	316 7392
70 70 (Brown)	13/40	7.35 x 14	19	97	316 7397
70 70 (Red)	13/40	C-78 x 14: 6.95 x 14: D-78 x 14: E-70 x 14	20	98	316 7398
70 70 (Green)	13/40	7.35 x 14: E-78 x 14	19	89	316 7389
70 70 (Blue)	13/40	C-78 x 14: 6.95 x 14: D-78 x 14: E-70 x 14	20	90	316 7390
70 70	13/41	D-78 x 14: E-70 x 14: E-60 x 15	23	93	316 7393
70 70 (Pink)	13/41	7.35 x 14: F-70 x 14	22	92	316 7392
70 70 (Red)	13/41	6.95 x 14: 7.35 x 14	20	98	316 7398
70 70 (Blue)	13/41	D-78 x 14: 6.95 x 14: 7.35 x 14: E-70 x 14: E-60 x 15: F-70 x 14: E-78 x 14	20	90	316 7390
70 70 (Black)	13/43	6.95 x 14: 7.35 x 14: C-78 x 14: D-78 x 14: E-70 x 14	21	99	316 7399
70 70 (Tan)	13/43	6.95 x 14: 7.35 x 14: C-78 x 14: D-78 x 14	21	91	316 7391
70 70 (Brown)	13/43	E-78 x 14	19	97	316 7397
70 70	15/43	D-78 x 14: E-70 x 14: E-60 x 15	21	91	316 7391
70 70	15/43	7.35 x 14: F-70 x 14: E-78 x 14	20	90	316 7390
70 80	11/39	7.35 x 14: F-78 x 14	22	92	316 7392
70 80	11/39	G-78 x 14: H-78 x 14: 8.25 x 14: 7.75 x 15: 8.25 x 15	21	91	316 7391
70 80	13/41	F-78 x 14: 7.75 x 14	22	92	316 7392
70 80	13/41	G-78 x 14: H-78 x 14: 8.25 x 14: 7.75 x 15: 8.25 x 15	21	91	316 7391
70 80	13/41	G-78 x 14: H-78 x 14: 7.75 x 14: 8.25 x 14: 7.75 x 15: 8.25 x 15	19	97	316 7397
70 80 (Scarlet)	13/41	F-78 x 14	20	98	316 7398
70 80	13/41	G-78 x 14	20	90	316 7390
70 80 (Green)	13/41	G-78 x 14: H-78 x 14: 7.75 x 14: 8.25 x 14: 7.75 x 15: 8.25 x 15	19	89	316 7389
70 80	15/43	F-78 x 14: G-78 x 14: 7.75 x 14	20	90	316 7390
70 80	15/43	H-78 x 14: 7.75 x 14: 8.25 x 14: 8.25 x 15	19	89	316 7389

ELECTRICAL - INSTRUMENTS

MODEL	GEAR RATIO	TIRE SIZE	TEETH	VENDOR NO.	PART NO.
71 01	11/39	B-78 × 14; C-78 × 14; D-78 × 14; D-70 × 14; 6.45 × 14; 6.95 × 14.	23	93	316 7393
71 01	11/43	D-70 × 14	22	92	316 7392
71 01	12/43	B-78 × 14; C-78 × 14; D-78 × 14; 6.45 × 14; 6.95 × 14	23	93	316 7393
71 01	13/40	B-78 × 14; C-78 × 14; D-78 × 14; 6.95 × 14; 6.45 × 14	20	98	316 7398
71 01	13/40	B-78 × 14; C-78 × 14; D-78 × 14; 6.45 × 14; 6.95 × 14	20	90	316 7390
71 01 (Tan)	13/40	D-70 × 14; 6.45 × 14	21	91	316 7391
71 01 (Black)	13/41	6.45 × 14	21	99	316 7399
71 01	13/41	B-78 × 14; 6.45 × 14	21	91	316 7391
71 01 (White)	13/41	C-78 × 14; D-78 × 14; D-70 × 14; E-78 × 14; 6.95 × 14	23	93	316 7393
71 01	13/41	C-78 × 14; D-78 × 14; D-70 × 14; 6.95 × 14.	20	90	316 7390
71 01 (Tan)	13/41	6.95 × 14	21	91	316 7391
71 01	13/43	B-78 × 14; 6.45 × 14	22	92	316 7392
71 01	13/43	C-78 × 14; D-78 × 14; 6.95 × 14	21	91	316 7391
71 01	13/43	C-78 × 14; D-78 × 14; 6.95 × 14	21	99	316 7399
71 01	15/41	B-78 × 14; C-78 × 14; D-78 × 14; 6.45 × 14; 6.95 × 14	20	98	316 7398
71 01 (Black)	15/41	6.45 × 14	21	99	316 7399
71 01 (Tan)	15/43	C-78 × 14; D-78 × 14; D-70 × 14; 6.95 × 14.	21	91	316 7391
71 01	19/45	B-78 × 14; 6.45 × 14	18	96	316 7396
71 01	19/45	C-78 × 14; D-78 × 14; 6.95 × 14	17	95	316 7395
71 10 (Pink)	11/39	E-78 × 14; F-78 × 14	22	92	316 7392
71 10 (Pink)	11/39	G-78 × 14	22	92	316 7392
71 10 (White)	11/39	E-78 × 14	23	93	316 7393
71 10	11/39	G-78 × 14; H-78 × 14; F-78 × 15; G-78 × 15; H-78 × 15	21	91	316 7391
71 10	11/39	E-60 × 15	23	93	316 7393
71 10	11/43	E-60 × 15	22	92	316 7392
71 10	13/41	E-78 × 14; F-78 × 14; 7.35 × 15	22	92	316 7392
71 10	13/41	G-78 × 14; H-78 × 14; F-78 × 15; G-78 × 15; H-78 × 15	21	91	316 7391
71 10	13/41	E-60 × 15	23	93	316 7393
71 10 (Blue)	13/41	E-78 × 14; F-78 × 14	20	90	316 7390
71 10 (Green)	13/41	G-78 × 14; H-78 × 14; F-78 × 15; G-78 × 15; H-78 × 15	19	89	316 7389
71 10	15/43	E-78 × 14; F-78 × 14; G-78 × 14; 7.35 × 15.	20	90	316 7390
71 10	15/43	H-78 × 14; F-78 × 15; G-78 × 15; H-78 × 15	19	89	316 7389
71 10 (Tan)	15/43	E-78 × 14	21	91	316 7391

ELECTRICAL - INSTRUMENTS

MODEL	GEAR RATIO	TIRE SIZE	TEETH	VENDOR NO.	PART NO.
71 40	12/43	B-78 x 14: 6.45 x 14	23	93	316 7393
71 40	13/40	B-78 x 14: 6.45 x 14	20	90	316 7390
71 40	13/40	6.00 x 13	21	91	316 7391
71 40	15/41	B-78 x 14: 6.45 x 14	20	98	316 7398
71 40	15/41	6.00 x 13	21	99	316 7399
71 40	15/41	B-78 x 14: 6.45 x 14	18	96	316 7396
71 40	15/41	6.00 x 13	19	97	316 7397
71 40 (Pink)	15/41	6.00 x 13	22	92	316 7392
71 40	19/45	B-78 x 14: 6.00 x 14: 6.45 x 14: 6.00 x 13	18	96	316 7396
71 40 (Dr. Brown)	19/45	6.00 x 13	19	97	316 7397
71 70	11/39	D-78 x 14: E-70 x 14: E-60 x 15	23	93	316 7393
71 70	11/39	E-78 x 14: F-70 x 14	22	92	316 7392
71 70	11/43	E-70 x 14: E-60 x 15	22	92	316 7392
71 70	12/43	C-78 x 14: D-78 x 14: E-78 x 14: E-70 x 14	23	93	316 7393
71 70 (Green)	13/40	E-78 x 14	19	89	316 7389
71 70 (Blue)	13/40	C-78 x 14: D-78 x 14: E-70 x 14	20	90	316 7390
71 70	13/41	D-78 x 14: E-70 x 14: E-60 x 15	23	93	316 7393
71 70 (Pink)	13/41	E-78 x 14	22	92	316 7392
71 70 (Blue)	13/41	D-78 x 14: E-78 x 14: E-70 x 14: E-60 x 15	20	90	316 7390
71 70 (Tan)	13/41	E-70 x 14	21	91	316 7391
71 70 (Tan)	13/43	C-78 x 14: D-78 x 14: E-78 x 14: E-70 x 14	21	91	316 7391
71 70	15/43	D-78 x 14: E-70 x 14: E-60 x 15	21	91	316 7391
71 70	15/43	E-78 x 14	20	90	316 7390
71 80	11/39	E-78 x 14	22	92	316 7392
71 80	11/39	G-78 x 14: H-78 x 14: F-78 x 15: G-78 x 15: H-78 x 15	21	91	316 7391
71 80	13/41	E-78 x 14: F-78 x 14	22	92	316 7392
71 80	13/41	G-78 x 14: H-78 x 14: F-78 x 15: G-78 x 15: H-78 x 15	21	91	316 7391
71 80	13/41	E-78 x 14: F-78 x 14	20	90	316 7390
71 80 (Green)	13/41	G-78 x 14: H-78 x 14: F-78 x 15: G-78 x 15: H-78 x 15	19	89	316 7389
71 80	15/43	H-78 x 14: F-78 x 15: G-78 x 15: H-78 x 15	19	89	316 7389
71 80	15/43	E-78 x 14: F-78 x 14: G-78 x 14	20	90	316 7390
71 80 (Tan)	15/43	E-78 x 14	21	91	316 7391
1972 - WST					
72 01	13/40	6.95 x 14: C-78 x 14: D-70 x 14: D-78 x 14	20	98	316 7398
72 01	13/40	6.95 x 14: B-78 x 14	18	96	316 7396
72 01	13/41	6.95 x 14: C-78 x 14: D-70 x 14: D-78 x 14	18	96	316 7396
72 01	13/43	6.45 x 14: 6.95 x 14: B-78 x 14: C-78 x 14: D-70 x 14: D-78 x 14	19	97	316 7397

ELECTRICAL - INSTRUMENTS

MODEL	GEAR RATIO	TIRE SIZE	TEETH	VENDOR NO.	PART NO.
1972 - WST (Continued)					
72 01	11/39	6.95 x 14: C-78 x 14: D-70 x 14: D-78 x 14	20	98	316 7398
72 01	12/43	C-78 x 14: D-78 x 14	20	98	316 7398
72 01	12/43	6.45 x 14: B-78 x 14	21	99	316 7399
72 01	12/43	6.95 x 14: D-70 x 14	23	93	316 7393
72 10	13/41	H-78 x 15	18	96	316 7396
72 10	13/41	G-78 x 14: F-78 x 15: G-78 x 15: H-78 x 15	19	97	316 7397
72 10	13/41	E-78 x 14	20	98	316 7398
72 10	13/41	F-78 x 14	17	95	316 7395
72 10	11/39	H-78 x 15	18	96	316 7396
72 10	11/39	G-78 x 14: F-78 x 15	19	97	316 7397
72 10	11/39	E-78 x 14	20	98	316 7398
72 10	11/39	H-78 x 14: G-78 x 15	21	99	316 7399
72 10	11/39	F-78 x 14	22	92	316 7392
72 40	15/41	6.95 x 14: B-78 x 14: D-78 x 14	18	96	316 7396
72 40	15/41	6.00 x 13	19	97	316 7397
72 40	13/40	D-70 x 14	20	98	316 7398
72 40	13/40	6.45 x 14: B-78 x 14	18	96	316 7396
72 40	13/40	6.00 x 13	19	97	316 7397
72 40	13/41	6.95 x 14: C-78 x 14: D-70 x 14: D-78 x 14	18	96	316 7396
72 40	13/43	6.95 x 14: D-70 x 14: D-78 x 14	19	97	316 7397
72 40	13/43	6.00 x 13	20	98	316 7398
72 40	11/39	6.95 x 14: C-78 x 14: D-70 x 14: D-78 x 14	20	98	316 7398
72 40	12/43	6.45 x 14: B-78 x 14	21	99	316 7399
72 40	12/43	6.00 x 13	22	92	316 7392
72 40	12/43	D-70 x 14	23	93	316 7393
72 70	13/40	C-78 x 14: D-78 x 14: E-70 x 14	20	98	316 7398
72 70	13/40	E-78 x 14	17	95	316 7395
72 80	11/39	H-78 x 15	18	96	316 7396
72 80	11/39	G-78 x 14: H-78 x 15	19	97	316 7397
72 80	11/39	E-78 x 14	20	98	316 7398
72 80	11/39	H-78 x 14: G-78 x 15	21	99	316 7399
72 80	11/39	F-78 x 14	22	92	316 7392
72 80	13/41	H-78 x 15	18	96	316 7396
72 80	13/41	G-78 x 14: H-78 x 14: F-78 x 15: G-78 x 15	19	97	316 7397
72 80	13/41	E-78 x 14	20	98	316 7398
72 80	13/41	F-78 x 14	17	95	316 7395
1972 - WAT					
72 01	19/45	6.45 x 14: B-78 x 14:	26	26	321 2726
72 01	19/45	6.95 x 14: C-78 x 14: D-70 x 14: D-78 x 14	25	25	321 2726
72 01	13/40	6.45 x 14: B-78 x 14: D-70 x 14	33	33	321 2733
72 01	13/40	6.95 x 14: C-78 x 14: D-78 x 14	32	32	321 2732
72 01	15/41	6.45 x 14: B-78 x 14	30	30	321 2730
72 01	15/41	6.95 x 14: C-78 x 14: D-70 x 14: D-78 x 14	29	29	321 2729
72 01	13/43	6.45 x 14: B-78 x 14	36	36	321 2736
72 01	13/43	6.95 x 14: C-78 x 14: D-70 x 14: D-78 x 14	35	35	321 2735

ELECTRICAL - INSTRUMENTS

MODEL	GEAR RATIO	TIRE SIZE	TEETH	VENDOR NO.	PART NO.
1972 - WAT (Continued)					
72 01	13/41	6.95 × 14	33	33	321 2735
72 01	15/43	6.95 × 14: C-78 × 14: D-70 × 14: D-78 × 14	30	30	321 2730
72 01	11/39	D-70 × 14	38	38	321 2738
72 10	13/41	E-78 × 14: E-60 × 15	33	33	321 2733
72 10	13/41	F-78 × 14	32	32	321 2732
72 10	13/41	G-78 × 14: H-78 × 14: F-78 × 15: G-78 × 15	31	31	321 2731
72 10	13/41	H-78 × 15	30	30	321 2730
72 10	11/39	E-78 × 14: E-60 × 15	37	37	321 2737
72 10	11/39	F-78 × 14	36	36	321 2736
72 10	11/39	G-78 × 14: F-78 × 15	35	35	321 2735
72 10	11/39	H-78 × 14: G-78 × 15	34	34	321 2734
72 10	11/39	H-78 × 15	33	33	321 2733
72 10	15/43	E-78 × 14: E-60 × 15	30	30	321 2730
72 10	15/43	F-78 × 14	29	29	321 2729
72 10	15/43	G-78 × 14: H-78 × 14: F-78 × 15: G-78 × 15	28	28	321 2728
72 10	15/43	H-78 × 15	27	27	321 2727
72 40	19/45	6.00 × 13	27	27	321 2727
72 40	19/45	6.45 × 14: B-78 × 14	26	26	321 2726
72 40	19/45	D-70 × 14	25	25	321 2725
72 40	15/41	6.00 × 13	31	31	321 2731
72 40	15/41	6.45 × 14: B-78 × 14	30	30	321 2730
72 40	15/41	D-70 × 14	29	29	321 2729
72 40	13/40	6.00 × 13	35	35	321 2735
72 40	13/40	6.45 × 14: B-78 × 14: D-70 × 14	33	33	321 2733
72 40	13/43	6.00 × 13	37	37	321 2737
72 40	13/43	6.45 × 14: B-78 × 14	36	36	321 2736
72 40	13/43	D-70 × 14	35	35	321 2735
72 40	15/43	6.95 × 14: C-78 × 14: D-70 × 14: D-78 × 14	30	30	321 2730
72 40	13/41	6.95 × 14: C-78 × 14: D-70 × 14: D-78 × 14	33	33	321 2733
72 70	13/40	C-78 × 14: D-78 × 14: E-70 × 14: E-78 × 14	32	32	321 2732
72 70	13/43	C-78 × 14: D-78 × 14: E-70 × 14	35	35	321 2735
72 70	13/43	E-78 × 14	34	34	321 2734
72 70	15/43	D-78 × 14: E-70 × 14: E-78 × 14: E-60 × 15	30	30	321 2730
72 70	13/41	D-78 × 14: E-70 × 14: E-78 × 14: E-60 × 15	33	33	321 2733
72 70	11/39	D-78 × 14: E-70 × 14: E-78 × 14: E-60 × 15	37	37	321 2737
72 80	11/39	E-78 × 14	37	37	321 2737
72 80	11/39	F-78 × 14	36	36	321 2736
72 80	11/39	G-78 × 14: F-78 × 15	35	35	321 2735
72 80	11/39	H-78 × 14: G-78 × 15	34	34	321 2734
72 80	11/39	H-78 × 15	33	33	321 2733
72 80	13/41	E-78 × 14	33	33	321 2733
72 80	13/41	F-78 × 14	32	32	321 2732
72 80	13/41	G-78 × 14: H-78 × 14: F-78 × 15: G-78 × 15	31	31	321 2731
72 80	13/41	H-78 × 15	30	30	321 2731
72 80	15/43	E-78 × 14	30	30	321 2730
72 80	15/43	F-78 × 14	29	29	321 2729
72 80	15/43	G-78 × 14: H-78 × 14: F-78 × 15: G-78 × 15	28	28	321 2728
72 80	15/43	H-78 × 15	27	27	321 2727

ELECTRICAL - INSTRUMENTS

MODEL	GEAR RATIO	TIRE SIZE	TEETH	VENDOR NO.	PART NO.
1972 - W4ST					
72 70	13/41	E-78 x 14	20	98	316 7398
72 70	13/41	C-78 x 14: D-78 x 14: E-70 x 14	18	96	316 7396
72 70	13/41	E-60 x 15	20	98	316 7398
72 70	13/43	E-78 x 14	21	99	316 7399
72 70	13/43	C-78 x 14: D-78 x 14: E-70 x 14	19	97	316 7399
72 70	11/39	C-78 x 14: D-78 x 14: E-70 x 14: E-78 x 14: E-60 x 15	20	98	316 7398
72 70	12/43	C-78 x 14: D-78 x 14: E-70 x 14: E-78 x 14	20	98	316 7398
72 70	11/43	E-60 x 15: E-70 x 14: D-78 x 14: E-78 x 14	22	92	316 7392

3.590-2 RETAINER, Speedometer Driven Gear

67/	.....	1	316 7039	

3.591-1 ADAPTER, Automatic Transmission Speedometer Drive Pinion (Single Position)

72	01-70 (232)	1	321 2707	

3.591-2 ADAPTER, Automatic Transmission Speedometer Drive Pinion (Three Position)

72	.....	1	321 2893	

3.591-3 RING, Automatic Transmission Speedometer Seal Retainer

72	.....	1	321 2846	

3.591-4 SEAL, Automatic Transmission Speedometer

72	.....	1	321 2847	

3.591-5 CLAMP, Automatic Transmission Speedometer Drive Pinion Adapter

72	.....	1	321 2844	

3.591-6 "O" RING, Automatic Transmission Speedometer

72	.....	1	321 2845	

3.591-7 SCREW, Automatic Transmission Speedometer

72	.....	1	812 1298	

3.600-1 AMMETER, Alternator

71/	70 (Used With 140 M. P. H. Speedometer)	1	448 9378	
67/	*10-80 (* 3-4)*	1	314 9228	

3.600-2 ATTACHING PARTS, Ammeter To Instrument Panel

SCREW, Tapping 67/70	*10-80 (* 3-4)*	17.660	2	G161901	
SCREW, Tapping 71/	*10-80 (* 3-4)*	17.660	2	G9414723	NA

3.600-3 WIRE, Ammeter

67/68	*10-80 (* 3-4)*	1	318 6864	

ELECTRICAL - INSTRUMENTS

3.600–3a ATTACHING PARTS, Wire To Ammeter

WASHER, Lock	71/	70 (Used With 140 M. P. H. Speedometer)	17.820	2	G131096 NA
NUT, Hexagon	71/	70 (Used With 140 M. P. H. Speedometer)	17.412	2	G120614 NA

3.600–4 BRACKET, Ammeter Mounting (Used With Radio)

67/	*10-80 (* 3-4)*	.....	1	315 9377

3.600–5 PLATE, Ammeter Mounting (Used Less Radio)

67/68	*10-80 (* 3-4)*	.....	1	318 6889
69/71	*10 (* 3-4)*	22.100	1	361 4832 MR
69/71	*80 (* 3-4)*	22.100	1	361 4831 MR

3.600–6 WIRE, Ammeter To Starter Solenoid

67/68	*10-80 (Six-* 3-4)*	.....	1	318 6866
67/68	*10-80 (V8-* 3-4)*	.....	1	318 6867
69/	*10-80 (* 3-4)(Fusible Link)*	3.750	1	319 4157

3.600–7 WIRE, Ammeter To Junction Block

69	*10-80 (Six-On Large Terminal-* 3-4)*	.....	1	319 4851
70/	*10-80 (Six-On Large Terminal-* 3-4)*	.....	1	319 8334
69	*10-80 (Six-On Small Terminal-* 3-4)*	.....	1	319 4852
70/	*10-80 (Six-On Small Terminal-* 3-4)*	.....	1	319 8336
69	*10-80 (V8-On Large Terminal-* 3-4)*	.....	1	319 4858
70/	*10-80 (V8-On Large Terminal-* 3-4)*	.....	1	319 8335
69	*10-80 (V8-On Small Terminal-* 3-4)*	.....	1	319 4857
70/	*10-80 (V8-On Small Terminal-* 3-4)*	.....	1	319 8337

3.600–8 COVER, Radio Opening (Used Less Radio)

69/	*10 (* 3-4)*	22.100	1	361 4832
69/	*80 (* 3-4)*	22.100	1	361 4831

3.600–9 GROMMET, Ammeter Wire (In Dash)

67/	*10-80 (* 3-4)*	27.038	1	400 0329

3.605–1 GAUGE, Oil Pressure (For Sending Unit Refer To Group 3.605–7)

71/	70 (Used With 140 M. P. H. Speedometer)	.....	1	448 9379

3.605–2 BUSHING, Oil Pressure Gauge Reducing

67	V8	17.086	1	G119923

3.605–3 ELBOW, Oil Pressure Gauge

67/70	V8	17.240	1	318 7538
71/	V8	.....	1	321 2002

3.605–4 GAUGE ASSEMBLY, Ammeter And Oil Pressure

68/70	30–70 (WRP)	.....	1	448 5863

3.605–5 ATTACHING PARTS, Gauge Assembly To Bezel

SCREW, Tapping	68/69	30–70 (WRP)	17.660	2	G163162	NA
SCREW, Tapping	70	30–70 (WRP)	17.660	4	G161895	NA

3.605–6 ATTACHING PARTS, Wire To Ammeter Terminals

NUT, Lock	69/70	30–70 (WRP)	17.412	2	G271169

3.605–7 SENDING UNIT, Oil Pressure Gauge (On Engine)

67/70		.....	1	314 2826
71/	01–10–40–80	.....	1	314 2826
68/70	30–70 (WRP)	.....	1	448 5864
71/	70 (Used With 120 M. P. H. Speedometer)	.....	1	314 2826
71/	70 (Used With 140 M. P. H. Speedometer)	.....	1	321 2004

3.605–8 TEE, Oil Pressure Sending Unit

68/70	30–70 (WRP)	.....	1	448 5871

3.605–9 NIPPLE, Oil Pressure Sending Unit

68/70	30–70 (WRP)	.....	1	448 5882

3.605–10 ADAPTER, Oil Pressure Sending Unit

71/	70 (Used With 140 M. P. H. Speedometer)	.....	1	321 2003

3.610–1 GAUGE, Water Temperature (In Instrument Cluster)

67/69	01 (LHD)	.....	1	320 8220
70/	01 (LHD)	.....	1	448 7970
67/68	10 (LHD)	.....	1	320 7893
69/71	10 (LHD)	.....	1	448 6307
72	10	.....	1	320 9641
68	30–70	.....	1	320 9641
69/70	30	.....	1	448 6315
70/	40 (With Miles)	.....	1	448 8655
70/	40 (With Kilos)	.....	1	448 7970
67/68	50–80	.....	1	320 7890
69/70	70 (Used Less Tachometer)	.....	1	320 9641
69/70	70 (Used With Tachometer)	.....	1	448 6315
71/	70 (Used Less Tachometer) ...(Incl. Gasoline Gauge)	3.615	1	448 9380
71/	70 (Used With Tachometer) ...(Incl. Gasoline Gauge)	3.615	1	448 9381
69/71	80 (LHD)	.....	1	448 6318
72	80	.....	1	448 6307
68/69	***01 (RHD)***	.....	1	320 6860
67/68	***10 (RHD)***	.....	1	320 7890
69	***10-80 (RHD-* 3-70)***	.....	1	320 7890
69	***10-80 (RHD-* 3-71)***	.....	1	448 6318
70	***10-80 (RHD)***	.....	1	448 6318

3.610–2 ATTACHING PARTS, Water Temperature Gauge To Instrument Cluster

SPACER	67/68	10 (LHD)	.....	2	320 7952
NUT, Stamped	67/	01–40 (LHD)	.....	2	320 8221
NUT, Stamped	67/	10–30–50–70–80	.....	2	320 7900

3.610–3 SENDING UNIT, Water Temperature Gauge

67/		.....	1	317 7594

3.610–3a GAUGE, Water Temperature (In Cylinder Block)(Refer Sending Unit–3.610–3)

3.610–4 CLIP, Water Temperature Indicator Wire

67/	SIX	.....	1	400 0785

Printed in U.S.A.

3.610–5 ATTACHING PARTS, Clip To Body

BOLT, Hexagon	67/71	SIX	17.038	1	G180118 NA
WASHER, Lock	67/71	SIX	17.820	1	G120382
WASHER, Plain	67/71	SIX	17.814	1	400 1102

3.610–6 WIRE, Temperature Sending Unit Extension

72	01-40 (304-WFGS)	.....	1	321 7799
72	70 (V8-WST)(V8-W4ST)	.....	1	321 7799

3.615–1 GAUGE, Gasoline (In Instrument Cluster)

67/69	01 (LHD)	.....	1	320 8219
70/	01 (LHD-* 3-115)	.....	1	448 7969
72	01 (LHD-* 3-116)	.....	1	812 1714
67/68	10 (LHD)	.....	1	320 7897
69	10 (LHD)	.....	1	448 6306
70/71	10 (LHD)	.....	1	448 7961
72	10	.....	1	320 9640
68	30-70	.....	1	320 9640
69	30	.....	1	448 6314
70	30	.....	1	448 7958
70/	40 (With Miles-* 3-115)	.....	1	448 8654
72	40 (With Miles-* 3-116)	.....	1	812 1713
70/	40 (With Kilos-* 3-115)	.....	1	448 7969
72	40 (With Kilos-* 3-116)	.....	1	812 1714
67/68	50-80	.....	1	320 7889
69	70 (Used Less Tachometer)	.....	1	320 9640
69	70 (Used With Tachometer)	.....	1	448 6314
70	70 (Used Less Tachometer)	.....	1	448 7959
70	70 (Used With Tachometer)	.....	1	448 7958
71/	70 (Used Less Tachometer)...(Incl. Temperature Gauge)	.....	1	448 9380
71/	70 (Used With Tachometer) ...(Incl. Temperature Gauge)	.....	1	448 9381
69	80 (LHD)	.....	1	448 6317
70/71	80 (LHD)	.....	1	448 7960
72	80	.....	1	448 6306
67/69	***01 (RHD)***	.....	1	320 6859
67/68	***10 (RHD)***	.....	1	320 7889
69	***10-80 (RHD-* 3-70)***	.....	1	320 7889
69	***10-80 (RHD-* 3-71)***	.....	1	448 6317
70	***10-80 (RHD)***	.....	1	448 7960

3.615–2 ATTACHING PARTS, Gasoline Gauge To Instrument Cluster

SPACER	67/68	10	3.610	2	320 7952
NUT, Stamped	67/	01-40 (LHD)	3.610	3	320 8221
NUT, Stamped	67/	10-30-50-70-80	.....	2	320 7900

3.615–3 GAUGE, Gasoline (Sending Unit In Gasoline Tank)(Incl. Outlet Tube)

67/69	01	.....	1	318 6478
70	01 (LCFE)...(Incl. Filter And Seal)	.....	1	448 8279
70	01 (WCFE)...(Incl. Filter And Seal)	.....	1	448 8280
71/	01...(Incl. Filter And Seal)	.....	1	448 8280
69	10-80 (L3S)	.....	1	319 1048
70	15-18-19-85-89 (L3S-LCFE)...(Incl. Filter And Seal)	.....	1	448 8277
70	15-18-19-85-89 (L3S-WCFE)...(Incl. Filter And Seal)	.....	1	448 8281
71/	15-18-19-85-89 (L3S)...(Incl. Filter And Seal)	.....	1	448 8281
67	10-50-80 (L3S) ***(Use 319 1048)***	.....	1	318 5850
67	18-88 (W3S) ***(Use 319 1046)***	.....	1	318 6300
68	10-80 (L3S)	.....	1	319 1048
68	18-88 (W3S)	.....	1	319 1046
69	18-88 (W3S)	.....	1	319 1046
70	18-88 (W3S-LCFE) ...(Incl. Filter And Seal)	.....	1	448 8276
70	18-88 (W3S-WCFE) ...(Incl. Filter And Seal)	.....	1	448 8389
71	18-88 (W3S) ...(Incl. Filter And Seal)	.....	1	448 8389
72	18 (W3S) ...(Incl. Filter And Seal)	.....	1	812 0518

68/69	30-70	.....	1	318 9205
70	30-70 (LCFE)...(Incl. Filter And Seal)	.....	1	448 8275
70	30-70 (WCFE)...(Incl. Filter And Seal)	.....	1	448 8282
70/	40...(Incl. Filter And Seal)	.....	1	448 8298
71/	70...(Incl. Filter And Seal)	.....	1	448 8280
70	88 (L3S-LCFE)...(Incl. Filter And Seal)	.....	1	448 8276
70	88 (L3S-WCFE)...(Incl. Filter And Seal)	.....	1	448 8389
71	88 (L3S)...(Incl. Filter And Seal)	.....	1	448 8389
72	88...(Incl. Filter And Seal)	.....	1	812 0518

3.615–4 ATTACHING PARTS, Gauge Wire To Ground

SCREW, Tapping.....	67/70 ..... *(Use 812 0054)*	17.671	1	G274773
SCREW, Tapping.....	71/	.....	1	812 0054

3.615–5 GROMMET, Gasoline Gauge Wire

67	.....	.....	1	400 1795
68/	(2-1/8" O.D.)	.....	1	400 2173
68/	(1-13/32" O.D.) 18-88 (W3S)	3.165	1	400 0346

3.615–6 LOCK, Gasoline Gauge

67/	.....	.....	1	315 7857

3.615–7 SEAL, Gasoline Gauge Lock

67/	.....	.....	1	315 7863

3.615–8 FILTER, Gasoline Tank (On Sending Unit)

67/69	01	4.134	1	316 3974
67/69	10-30-50-70-80	4.134	1	318 4620
70/	.....	4.134	1	318 4620

3.615–9 CLIP, Gasoline Gauge Wire (On Tank Flange)

67/	L3S	.....	2	310 8634
69/	15-19-85-89	.....	2	310 8634

3.615–9a CLIP, Gasoline Gauge Wire (On Rear Quarter Brace)

71/	08	3.166	1	400 0713

3.615–10 CLIP, Gasoline Gauge Wire (On Crossmember)

67/	18-88 (W3S)	3.166	2	400 0713

3.615–11 CLIP, Gasoline Gauge Wire (On Wheelhouse)

69	.....	3.166	3	400 0713

3.615–11a CLIP, Gasoline Gauge Wire (On Rear Shelf Gusset)

70/	10-80	15.320	1	400 0461

3.615–11b CLIP, Gasoline Gauge Wire (To Gasoline Tube)

70	30-70	23.028	1	400 0021

3.615–12 RELAY, Low Fuel Warning Light

70/71	.....	.....	1	363 6391

Printed in U.S.A.

ELECTRICAL - INSTRUMENTS

3.615–13 ATTACHING PARTS, Relay To Instrument Panel

SCREW, Pan Head	70	17.660	1	G161901
SCREW, Hexagon	70/71	17.660	1	G9414722 NA

3.615–14 ADAPTER, Low Fuel Warning Lamp Socket

70/71		.....	1	363 6390

3.615–15 BULB, Low Fuel Warning Lamp

70/71	01-30-40-70 (GE 257)	3.215	1	320 9534
70/71	10-80 (GE 256)	3.215	1	320 4467

3.615–16 HARNESS, Low Fuel Warning Lamp Wire

70		.....	1	319 8346
71	70	.....	1	321 1575
71	01-10-40-80	.....	1	321 1574

3.615–17 ATTACHING PARTS, Low Fuel Harness To Instrument Cluster

NUT, Hexagon	70	17.412	1	G120614 NA
WASHER, Lock	70	17.820	1	G131096 NA
WASHER, Insulating	71	70	1	400 4144

3.622 REGULATOR, Instrument Cluster Voltage

67/70	10-30-50-70-80	.....	1	320 5695
71/	10-80	.....	1	320 5695
71/	70	.....	1	320 3982
67/69	***01 (RHD)***	.....	1	320 5695

3.635–1 SOCKET, Instrument Cluster Illuminating Lamp

67/69	01 (LHD-Used With Bulb #158)	.....	9	350 9575
70/	01-40 (LHD-Used With Bulb #158)	.....	9	448 7985
67/	01-40 (LHD-Used With Bulb #1445) ...(Incl. Bulb)	.....	1	320 7588
67/69	10 (LHD)	.....	7	350 9575
70/	10 (LHD)	.....	8	350 9575
67/	30-50-70-80 (LHD)	.....	9	350 9575
68/69	***01 (RHD)***	.....	7	350 9575
70	***10 (RHD)***	.....	8	350 9575
67/70	***10-80 (RHD)***	.....	9	350 9575

3.635–2 BULB, Instrument Cluster Illumination

67/	(GE 158)	3.215	AR	320 9541
67/	(GE 1445) 01-40 (LHD)	3.215	1	320 4552

3.635–3 DIFFUSER, Instrument Cluster Lamp

67/	01-40 (LHD)	.....	3	320 8231

3.635–4 LAMP, Instrument Control Dial (Incl. Bracket)

70/	01-40 (LHD)	3.510	1	363 1039
67/68	10-50-80	.....	1	357 6978
69	10-80 (LHD)	4.310	2	361 4865
70	30-70 (Light Switch)	3.510	1	363 1199
70	30-70 (Wiper-Washer Switch)	3.510	1	363 1196
70/	(Left) 10-80 (LHD)	.....	1	357 6978
70/71	(Right) 10-80 (LHD)	4.310	1	361 4865
69/70	***10-80 (RHD)***	.....	2	357 6978

3.635–4a BRACKET, Instrument Control Dial Lamp

71	70 (Lights, Wiper-Washer)	.....	2	363 2746	

3.635–5 ATTACHING PARTS, Lamp And Bracket To Instrument Panel

SCREW, Tapping	70/	01-40 (LHD)	17.660	2	G163158	NA
SCREW, Tapping	67/68	10-50-80	17.660	2	G161869	
SCREW, Tapping	69/70	10-80 (LHD)	13.510	2	400 2457	
SCREW, Tapping	71	10-80. ***(Use 812 0054)***	17.671	2	G274773	
SCREW, Tapping	72	10-80.	17.671	2	812 0054	
SCREW, Tapping	70	30-70	17.660	1	G161895	NA
SCREW, Tapping	71/	70	13.510	2	400 2457	
SCREW, Tapping	***69/70***	***10-80 (RHD)***	17.660	2	G161869	
NUT, Speed	70/	01-40 (LHD)	24.050	2	400 3625	

3.635–6 BULB, Instrument Control Dial Lamp

67/69	10-30-50-70-80 (GE 1881)	3.215	1	320 7674
70/	(GE 1445)	3.215	1	320 4552

3.635–7 FILTER, Instrument Control Dial Lamp

67/69	10-30-50-70-80	3.510	1	352 0871
70/		3.510	1	352 0871

3.635–8 SHIELD, Instrument Control Dial Light

70/	01-40 (LHD)	.....	1	357 7568	
69	(Left) 10-80 (LHD)	22.056	1	361 4939	
70/	(Left) 10-80 (LHD)	22.056	1	361 6675	
69	(Right) 10-80 (LHD) ***(Use 812 0054)***	22.056	1	361 4938	
70/	(Right) 10-80 (LHD)	22.056	1	361 6674	
72	70	.....	1	365 0933	

3.635–9 ATTACHING PARTS, Shield To Instrument Panel

SCREW, Tapping	69/70	10-80 (LHD)	29.070	4	400 0273
SCREW, Tapping	72	10-80.	17.671	1	812 0054
SCREW, Hexagon	70/71	10-80 (LHD)	17.671	2	G274773
CLIP	69/70	10-80 (LHD)	22.056	2	400 3594

3.650–1 LAMP, Parking Brake Warning (Refer To Accessory Price List)

3.650–2 SWITCH, Parking Brake Warning Lamp

67/69	01	.....	1	318 8769
70/	01-40 (LHD)	.....	1	317 6985
67/	10-30-50-70-80	.....	1	317 6985

3.650–3 ATTACHING PARTS, Switch To Panel

SCREW, Tapping	67/	10-30-50-70-80	17.671	2	812 0054
SCREW, Tapping	70/	01-40 (LHD)	17.671	1	400 1042

3.650–4 LENS, Parking Brake Warning Lamp

67/69	01	.....	1	320 5392
70/	01-40 (LHD) ...(Incl. Alternator Lens)	3.515	1	448 7973
69/70	10 (LHD)	.....	1	448 7109
71	10	3.510	1	448 7110
68/69	30-70	.....	1	360 2358

Printed in U.S.A.

67/68	50-80	.....	1	357 6546
69/70	80 (LHD)	.....	1	361 4855
71	80	3.510	1	361 4854
72	80	.....	1	448 7110
69/70	***10-80 (RHD)***	.....	1	357 6546

3.650–5 SOCKET, Parking Brake Warning Lamp (Incl. Wire)

67	01	.....	1	320 7928
68/69	01 ...(Incl. Lens)	.....	1	319 1703
67	10-50-80	.....	1	318 6886
68/69	10-30-70-80	.....	1	319 1704
70		.....	1	318 6886

3.650–6 CLIP, Parking Brake Warning Lamp Wire To Main Harness

67/70	10-50-80	3.312	1	79 394

3.650–7 SPRING, Parking Brake Warning Lamp (Under Lens Bezel)

67/69	01-30-70	.....	1	320 7927

3.650–8 BULB, Parking Brake Warning Lamp

67/69	01 (GE 57)	3.215	1	G127934
70/	01-40 (GE 257)	3.215	1	320 9534
67/	10-30-50-70-80 (GE 257)	3.215	1	320 9534

3.655–1 LAMP, Open Door Warning

67/	***10 (Taxi-LHD-LASC)***	.....	1	318 1007

3.655–2 BULB, Open Door Warning Lamp

67/	***10 (Taxi-LHD-LASC)***	3.215	1	320 9534

3.655–3 ADAPTER, Open Door Warning Lamp At Fuse Panel

67/	***10 (Taxi-LHD-LASC)***	3.550	1	315 9556

3.655–4 SOCKET ASSEMBLY, Open Door Warning Lamp (Incl. Wire)

67/	***10 (Taxi-LHD-LASC)***	.....	1	320 7180

3.655–5 LENS, Open Door Warning Lamp

67/	***10 (Taxi-LHD-LASC)***	.....	1	320 7079

3.655–6 SPRING, Open Door Warning Lamp Lens

67/	***10 (Taxi-LHD-LASC)***	.....	1	320 7177

3.660–1 LAMP ASSEMBLY, Trunk (Refer To Accessory Catalog And Price List)

3.660–2 ATTACHING PARTS, Trunk Lamp Assembly To Deck Cover

SCREW, Tapping..... 67/	.....	17.660	1	G457002 NA

ELECTRICAL - INSTRUMENTS

3.660–3 SOCKET, Trunk Lamp (Incl. Bracket And Wire)

67/69	05-06-07-09	.....	1	351 5479
67/69	15-16-17-19-59-85-86-87-89	.....	1	358 6637
68	30-70	.....	1	358 6637
69	30-70	.....	1	899 2169
70	01-30-70	.....	1	363 5660
71/	01-70	.....	1	360 9828
70/	10-80	.....	1	351 5479

3.660–4 BULB, Trunk Lamp Assembly

67/	(GE 89)	3.215	1	G142452

3.660–5 CLIP, Trunk Lamp Assembly Wire

67/69		15.320	AR	400 0461
70/	10-80	15.320	AR	400 0461
70/	30-70	3.510	1	310 8634

3.660–5a STRAP, Trunk Lamp Assembly Wire

70	01-30-70	.....	AR	318 1008

3.660–6 GROMMET, Trunk Lamp Assembly

67/		.....	2	400 1799

3.670–1 BASE, Cargo Area Lamp (Incl. Socket)

67/69	08-18-88 (Metal) ***(Use 448 5672)***	3.346	1	355 4280
69/	08-18-88 (Nylon)	.....	1	363 1699

3.670–2 ATTACHING PARTS, Cargo Area Lamp Base To Bracket

SCREW, Tapping	67/69	08	17.660	2	G161871
SCREW, Tapping	67/	18-88	17.660	2	G161901

3.670–3 BRACKET, Cargo Area Lamp

67/	08-18-88	.....	1	347 2294

3.670–4 ATTACHING PARTS, Cargo Area Lamp Bracket To Roof Panel

SCREW, Tapping	67/	08-18-88	17.660	2	G161895 NA

3.670–5 LENS, Cargo Area Lamp

67	08-18-88	3.346	1	355 4281
68/69	08-18-88	3.346	1	360 2216
70/	18-88	3.346	1	363 6814

3.670–6 HARNESS, Cargo Area Lamp Wire

67/69	08-18-88	.....	1	318 6827
70	18-88 (* 3-83)	.....	1	318 6827
70	18-88 (* 3-84)	.....	1	319 9562
71/	18-88	.....	1	319 9562

Printed in U.S.A.

3.670–7 BULB, Cargo Area Lamp

67/69	(GE 1004) 08-18-88	3.215	1	G455136
70	(GE 562) 18-88	3.215	1	448 8457
70/	(GE 561) 18-88	3.215	1	400 3086

3.670–8 SWITCH, Cargo Area Lamp Door

67/	08-18-88	3.145	1	354 2978

3.675–1 BASE, Rear Quarter Interior Lamp

67/69	19-89...(Incl. Socket) ***(Use 448 5672)***	3.346	2	355 4280
70/	19-89 (Insert)	.....	2	360 9476
67	50	.....	1	353 0838
68/69	79...(Incl. Socket)(Metal)	.....	2	359 9202
70	79...(Incl. Socket)(Nylon)	3.346	2	363 1699

3.675–2 ATTACHING PARTS, Interior Lamp Base To Roof Extension Panel

SCREW, Tapping	67/	19-79-89		17.660	4	G161869
NUT, Speed	67/	19-79-89 ***(Use 400 0453)***		22.058	4	400 0370

3.675–3 ATTACHING PARTS, Interior Lamp Base To Shelf Panel

SCREW, Tapping	67	50	17.660	4	G161869
NUT, Speed	67	50	17.420	2	400 1556

3.675–4 WIRE, Rear Quarter Interior Lamp

67	09	.....	2	320 8583
67/69	19-89	.....	1	318 6826
70/	19-89	.....	1	319 9564

3.675–5 CLIP, Interior Lamp Wire (At Rear Shelf)

67/	19-59-89	15.320	5	400 1598

3.675–6 LENS, Rear Quarter Interior Lamp

67/69	09	.....	2	349 0038
67	19-89	3.346	2	355 4281
68/69	19-79-89	3.346	2	360 2216
70/	19-89	.....	2	362 6340
67	50	.....	1	353 0839
70	79	.....	2	363 6814

3.675–7 BULB, Rear Quarter Interior Lamp

67/69	09-59 (GE 211)(Miniature Cap Type)	3.215	2	320 9536
67/69	19-79-89 (GE 1004)	3.215	2	G455136
70/	19-79-89 (GE 562)(6 C. P.)	3.215	2	448 8457
70/	19-79-89 (GE 561)(12 C. P.)	3.215	2	400 3086

3.680–1 PLATE, Radio Cable Conduit (With 1-1/2" Hole)

67/69	***05-06 (Police)***	.....	3	348 8918
67/70	***15-85 (Police)***	.....	AR	348 8918

3.680–2 ATTACHING PARTS, Radio Cable Conduit Plate To Wheelhouse Panel

SCREW, Tapping	67/69	05-06 (Police)	(Use 812 0054)	17.671	7	G274773 NA
SCREW, Tapping	67/	15-85 (Police)	(Use 812 0054)	17.671	AR	G274773 NA

3.680–3 CLAMP, Radio Cable Conduit

67/	15-85 (Police)		10.260	1	316 3127

3.680–4 ATTACHING PARTS, Clamp To Cable

BOLT, Hexagon	69/	15-85 (Police)	17.038	2	G180020 NA
NUT, Hexagon	69/	15-85 (Police)	17.406	2	G120375
WASHER, Lock	69/	15-85 (Police)	17.820	2	G120380 NA
WASHER, Plain	69/	15-85 (Police)	17.814	2	G147579 NA

3.680–5 GASKET, Radio Cable Conduit

68/69	05-06 (Police)		20.035	1	314 9882
67/	15-85 (Police)		20.035	1	314 9882

3.680–6 STRAP, Radio Cable Conduit

67/69	05-06 (Police)		.....	1	351 0445
67/68	15-85 (Police)		.....	1	351 0445
69/70	15-85 (Police)		13.050	1	318 5027

3.680–7 SEAL, Radio Cable Conduit (Uniside To Rear Quarter Trim Panel)

70	15-85 (Police)		23.001	1	360 1066 MR

3.690–1 SWITCH ASSEMBLY, Emergency Signal System (Incl. Flasher)

67/69	01-10-80 (Special Equipment)(Alternating)		.....	1	318 6897
70/	01-10-40-80 (Special Equipment)(Alternating)		.....	1	319 8746
70/	01-10-80 (Special Equipment)(Alternating)		15.320	1	319 8746
67	80 (RHD-Six-Post Office)(Simultaneous)	(Use 319 5662)	.....	1	319 2123

3.690–2 ATTACHING PARTS, Switch To Bracket

SCREW, Machine	69/	10-80 (Special Equipment)	17.598	2	G159582 NA
WASHER, Lock	69/	10-80 (Special Equipment)	17.820	2	G131095 NA
NUT, Hexagon	69/	10-80 (Special Equipment)	17.412	2	G120622 NA

3.690–3 NUT, Emergency Signal System Switch To Bracket

67/	01-10-80 (Special Equipment)(Alternating)		.....	1	320 8103
67	80 (RHD-Six-Post Office)(Simultaneous)		.....	1	320 8733

3.690–4 BRACKET, Emergency Signal System Mounting

67	01-10-80 (Special Equipment)(Alternating)		.....	1	320 7575
68	01-10-80 (Special Equipment)(Alternating)		.....	1	319 1503
69/	10-80 (Special Equipment)(Alternating)		.....	1	319 4906
67	80 (RHD-Six-Post Office)(Simultaneous)		.....	1	320 8732

3.690–5 ATTACHING PARTS, Bracket To Instrument Panel

SCREW, Tapping	67/70	(Special Equipment)(Alternating)		17.660	2	G161901
SCREW, Tapping	71	(Special Equipment)(Alternating)(10-12 x 5/8)		17.660	2	G161901
SCREW, Tapping	71/	(Special Equipment)(Alternating)(10-16 x 5/8)		17.660	2	G9414723 NA
SCREW, Tapping	67	80 (RHD-Six-Post Office)		.....	2	G161869

Printed in U.S.A.

ELECTRICAL - INSTRUMENTS

3.690–6 NUT, Emergency Signal System Mounting Bracket Retaining (Alternating)

67/	*01-10-80 (Special Equipment)*	.....	1	320 8102

3.690–7 FLASHER, Emergency Signal System (Alternating)

67/	*01-10-80 (Special Equipment)*	.....	1	320 7574

3.690–8 BULB, Emergency Signal System (Alternating)

67/	*01-10-80 (Special Equipment)(GE 53)*	3.215	1	G131282

3.690–9 KNOB, Emergency Signal System (Alternating)

67/	*01-10-80 (Special Equipment)*	.....	1	320 7577

3.690–10 CONNECTOR, Wire

67	01	3.341	4	346 5210

3.690–10a CONNECTOR, Emergency Signal System Splice

67/	*01-10-80 (Special Equipment)*	15.320	1	318 6888

3.690–11 SOCKET, Emergency Signal Switch Connector

67	*80 (RHD-Six-Post Office)* ..... *(Ord. 320 8840, 320 8232)*	.....	1	448 5625

3.690–12 INSULATOR, Wire Connector

67	*80 (RHD-Six-Post Office)*	.....	1	319 2176

3.690–13 FLASHER, Hazard Warning Lamp (Simultaneous)

67/71	LHD	.....	1	318 6895
72	LHD	.....	1	321 7282
67	*80 (RHD-Six-Post Office)*	.....	1	318 6895

3.690–14 CLIP, Hazard Warning Lamp Flasher (At Fuse Panel)

67/70	LHD	.....	1	318 6896
70/	01-40	.....	1	319 8343
71/	10-70-80	.....	1	318 6896

3.690–15 KNOB, Hazard Warning Lamp (Simultaneous)

67/68	LHD ..... *(Use 319 5225)*	.....	1	318 7879
69/71		.....	1	319 5225
72		.....	1	321 7216
67	*80 (RHD-Six-Post Office)* ...(Incl. Lens)	.....	1	320 8731

3.690–16 ATTACHING PARTS, Knob To Column

SCREW, Tapping	67/68 (LHD)	17.648	1	G163693

3.700–1 TACHOMETER (Head)

67	SIX ...(Incl. Base)	.....	1	318 7336
67/68	01-10-50-80 (V8) ...(Incl. Base) ..... *(Use 360 2835)*	.....	1	318 7335
69	09 (SC/RAMBLER)	.....	1	319 8694
71	01 (SC-360)	.....	1	363 1556
70	19 (MACHINE)	.....	1	363 6586

68	30-70 (V8)	.....	1	360 1511	
69	30-70 (V8)	.....	1	448 6744	
70	30-70 (V8)	.....	1	448 7965	
71/	70 (Used With 140 M. P. H. Speedometer)	.....	1	363 2621	

3.700–2 ATTACHING PARTS, Tachometer To Base

SCREW, Tapping	67/68	01-10-50-80	.....	1	400 1743	
WASHER, Lock	67/68	01-10-50-80	17.822	1	G138481	NA

3.700–3 ATTACHING PARTS, Tachometer To Ground

SCREW, Machine	67/68	10-50-80	17.598	1	G453048	NA
WASHER, Lock	67/68	10-50-80	17.820	1	G131096	NA
NUT, Hexagon	67/68	10-50-80	17.412	1	G120614	NA

3.700–4 ATTACHING PARTS, Tachometer To Instrument Cluster

SCREW, Tapping	71	01 (SC-360)	17.660	2	G9414723	NA
SCREW, Tapping	69	30-70	3.520	3	320 6867	
SCREW, Tapping	70	30-70	.....	3	448 7966	

3.700–4a ATTACHING PARTS, Tachometer To Mounting Plate

NUT, Hexagon	70	19 (MACHINE)	23.074	2	400 3018	

3.700–5 HOUSING, Tachometer

67/68	10-50-80	.....	1	320 7608		

3.700–6 GASKET, Tachometer Housing To Bezel

67/68	10-50-80	.....	1	320 7609		

3.700–6a GASKET, Tachometer To Hood Scoop

70	19 (MACHINE)	.....	1	363 6589		

3.700–7 SCREW, Tachometer Ground

67/68	01	10.338	1	400 1782		

3.700–8 GROMMET, Tachometer Wire

67/68	01-10-50-80	27.038	1	400 0329		

3.700–9 CLIP, Tachometer Wire To Chassis Wire Harness

67	01-10-50-80 (Six)	3.210	3	63 045		
67/68	01-10-50-80 (V8)	3.212	8	79 394		

3.700–10 BASE, Tachometer Head

67/68	01-10-50-80	.....	1	358 3386		
69	09 (SC/RAMBLER)	.....	1	319 8695		

3.700–11 ATTACHING PARTS, Base To Instrument Panel

SCREW, Tapping	67/68	01-10-50-80 (LHD)	.....	2	400 2081	
SCREW (Nylon)	68	01-10-80 (LHD)	.....	2	400 3541	
SPACER	67/68	01 (LHD-7/8" Long)	.....	1	400 2146	
SPACER	67/68	01 (LHD-31/32" Long)	.....	1	400 2144	
SPACER	67/68	10-50-80 (LHD)	.....	2	400 2144	
NUT, Spring	67/68	01	17.422	2	G445110	NA
NUT, Spring	67/68	10-50-80 (LHD)	17.422	2	G445109	NA

ELECTRICAL - INSTRUMENTS

3.700–11a PLATE, Tachometer Mounting

70	19 (MACHINE)	.....	1	363 6587	

3.700–11b ATTACHING PARTS, Plate To Hood Scoop

NUT, Hexagon.....	70	19 (MACHINE).....	23.074	3	400 3018	

3.700–12 HARNESS, Tachometer Wire

68	30-70.....	.....	1	319 2213
69	09 (SC/RAMBLER).....	.....	1	319 8697
69	30-70.....	.....	1	319 5143
71	01 (SC-360).....	.....	1	319 9829
70	19 (MACHINE).....	.....	1	363 6588
70	30-70.....	.....	1	319 5143
71/	70.....	.....	1	321 1572

3.700–12a ATTACHING PARTS, Harness To Tachometer

NUT, Hexagon.....	71	01 (SC-360).....	17.412	1	G271482 NA
WASHER, Plain.....	71	01 (SC-360).....	17.814	1	G131014 NA

3.700–12b ATTACHING PARTS, Tachometer Wire To Starter Solenoid

WASHER, Lock.....	69/	06-30-70.....	17.820	2	G131096 NA
NUT, Hexagon.....	69/	06-30-70.....	17.412	2	G120614 NA

3.700–12c ATTACHING PARTS, Harness To Coil Bracket

CLIP.....	70	19 (MACHINE).....	3.210	2	63 045

3.700–12d ATTACHING PARTS, Harness To Hood

CLIP.....	70	19 (MACHINE).....	.....	1	363 6729

3.700–13 BLOCK, Tachometer Junction

67	.....	3.213	1	313 0664

3.700–14 ATTACHING PARTS, Block Terminals To Wire

WASHER, Lock.....	67	.....	17.820	1	G131096 NA
NUT, Hexagon.....	67	.....	17.412	1	G120614 NA

3.700–15 ATTACHING PARTS, Block To Dash

SCREW, Tapping.....	67	..... ***(Use 812 0054)***	17.671	3	G274773

3.700–16 BULB, Tachometer

67/68	01-10-50-80 (GE 1893).....	3.215	1	345 1933
68	30-70 (GE 1895).....	3.215	1	448 6758
69	09 (SC/RAMBLER)(GE 158).....	3.215	1	320 9541
69/	30-70 (GE 158).....	3.215	1	320 9541
71	01 (SC-360)(GE 1895).....	3.215	1	448 6758
70	19 (MACHINE)(GE 168).....	3.215	2	448 8426

3.700–16a HARNESS, Tachometer Lamp Wire

71	01.....	3.369	1	321 1584

Printed in U.S.A.

3.700–17 WIRE, Tachometer Ground

68/70	30-70		3.369	1	359 8906

3.720–1 LAMP, Front Fender Side (For 71 80 Refer To Group 3.726–1 LENS KIT)

68/69	10-30-70...(Incl. Gasket)	.....	2	360 2352
70	10-30-70-80	.....	2	448 7459
71/	10-70 ***(Use 812 0226)***	.....	~~2~~	~~448 8695~~
68	80...(Incl. Gasket)	.....	2	360 2350
69	80...(Incl. Gasket)	.....	2	360 2352
70	(Left) 01	.....	1	448 7453
70	(Right) 01	.....	1	448 7452
71/	(Left) 01	.....	1	448 9135
71/	(Right) 01	.....	1	448 9134
70/	(Left) 40	.....	1	448 8631
70/	(Right) 40	.....	1	448 8630

3.720–1a ATTACHING PARTS, Lamp To Fender

SCREW, Tapping.....	70	10-30-70-80	3.740	4	400 3096
SCREW, Tapping.....	71	10-70	.....	4	400 3096

3.720–1b ATTACHING PARTS, Lamp To Door

NUT (Nylon).....	70/	01-40	14.106	4	400 0141
SCREW, Tapping.....	70/	01-40	17.680	4	448 7528

3.720–2 ATTACHING PARTS, Wire To Radiator Side Baffle

CLIP.....	68/	10-80	3.166	2	400 0713
SCREW, Tapping.....	70	39-79	3.740	4	400 3096
NUT, Acorn.....	70	39-79	3.740	4	400 3098

3.720–3 BEZEL, Front Fender Side Lamp

68/69	10-30-70	.....	2	360 2353
68	80	.....	2	360 2351
69	80	.....	2	360 2353

3.720–4 ATTACHING PARTS, Bezel To Fender

SCREW, Tapping.....	68/69	10-30-70-80	17.649	4	G455632 NA

3.720–5 CONNECTOR, Front Fender Side Lamp (Incl. Wires)

68/69	10-30-70-80	.....	2	448 7131

3.720–6 SOCKET, Front Fender Side Lamp (Incl. Wire)

70	01-30-40-70	.....	2	363 5668
71/	01-10-40-70	.....	2	448 9395
70	10-80	.....	2	360 9455

3.720–7 BULB, Front Fender Side Lamp

70	(GE 194)	3.215	2	448 7367
71/	01-10-40-70 (GE 194)	3.215	2	448 7367
71/	80 (GE 97)	3.215	2	448 9123

3.725 GASKET, Front Fender Side Lamp Lens

71/	80	.....	2	363 3398

ELECTRICAL - INSTRUMENTS

3.726–1 LENS KIT, Front Side Lamp (Incl. Gasket And Attaching Parts)

71/	(Left) 80	.....	1	448 9125
71/	***(Left) 80 (Export-Clear)***	.....	1	812 0312
71/	(Right) 80	.....	1	448 9124
71/	***(Right) 80 (Export-Clear)***	.....	1	812 0311

3.726–2 ATTACHING PARTS, Lens To Head Lamp Bezel

SCREW, Tapping	71/	80	.....	4	448 9126

3.740–1 HOUSING, Rear Quarter Panel Side Lamp

69	(Left) 85–89	.....	1	361 4575
69	(Right) 85–89	.....	1	361 4574

3.740–1a LAMP, Rear Quarter Panel Side

70	15–19–39–46–79–85–89 ...(Incl. Bezel And Gasket)	.....	2	448 7460
71/	15–19–70–85–89...(Incl. Bezel And Gasket) ***(Use 812 0227)***	.....	2	448 8696
71	40...(Incl. Chrome Bezel And Gasket) ***(Use 812 0227)***	.....	2	448 8696
71/	40...(Incl. Aluminum Bezel And Gasket)	.....	2	366 1200
68	(Left) 18–88...(Incl. Gasket)	.....	1	360 2354
68	(Right) 18–88...(Incl. Gasket)	.....	1	360 2355

3.740–2 ATTACHING PARTS, Side Lamp To Rear Quarter

SCREW, Tapping	70	15–19–85–89	23.215	4	400 3642
SCREW, Round Head ...	70/	30–40–70	.....	4	400 3096
SCREW, Round Head ...	71	15–19–85–89	.....	4	400 3096
NUT, Acorn	70/	30–40–70	.....	2	400 3098
NUT, Acorn	71/	15–19–85–89	.....	4	400 3098
NUT, Speed	70/	10–30–40–70–80	.....	2	400 3099
NUT, Lock	69	85–89	23.074	4	400 3018

3.740–2a BRACKET, Rear Quarter Panel Side Lamp To Panel

69	85–89	.....	2	361 5132

3.740–2b ATTACHING PARTS, Bracket To Panel

SCREW, Tapping	69	85–89	26.032	4	400 1638

3.740–3 BEZEL, Rear Quarter Panel Side Lamp

67	(Left) 18–88...(Incl. Lens)	3.307	1	357 4909
68	(Left) 18–88	.....	1	360 2357
68	(Left) 85–89	3.307	1	360 0817
67	(Right) 18–88...(Incl. Lens)	3.307	1	357 4908
68	(Right) 18–88	.....	1	360 2356
68	(Right) 85–89	3.307	1	360 0816

3.740–4 ATTACHING PARTS, Bezel To Rear Quarter Panel

CLIP	67	18–88	2.050	4	316 2376
NUT, Speed	67	18–88	3.307	4	400 3007
SCREW, Tapping	68	18–88	17.648	4	320 9580

3.740–5 SOCKET, Rear Quarter Side Lamp (Incl. Wires)

70/	01	.....	2	448 7949
68	15–17–19	3.369	2	318 6880
70	15–19–39–46–79–85–89	3.720	2	361 5689
71/	15–19–46–79–85–89	3.720	2	448 9395
69	85–89	3.369	2	318 6880

ELECTRICAL - INSTRUMENTS

3.740–5a CAP, Rear Quarter Side Lamp Socket Protector

70/	10-30-40-70-80			2	360 9547

3.740–5b ATTACHING PARTS, Protector Cap To Rear Quarter

NUT, Speed	70	40		2	400 3099

3.740–6 BULB, Rear Quarter Side Lamp

70/	01-40 (GE 1895)	3.215	2	448 7366
68	15-17-19	3.215	2	345 1933
70/	15-19-39-46-79-85-89 (GE 194)	3.215	2	448 7367
69	85-89	3.215	2	G127934

3.740–7 GROMMET, Rear Quarter Side Lamp Wire

69	85-89		2	400 3624

3.745–1 GASKET, Rear Quarter Side Lamp Lens

68	15-17-19		2	448 5478
69	85-89		2	361 4576
68	(Left) 85-89 ***(Use 360 0818)***	3.307	1	360 0819
68	(Right) 85-89	3.307	1	360 0818

3.745–2 GASKET, Rear Quarter Side Lamp Housing

69	85-89		2	361 4578

3.746–1 LENS KIT, Rear Quarter Side Lamp

69	(Left) 85-89 319		1	448 6291
69	(Right) 85-89 319		1	448 6290

3.746–2 LENS, Rear Quarter Side Lamp

67	(Left) 18-88	3.307	1	357 4912
68	(Left) 85-89	3.307	1	360 0815
67	(Right) 18-88	3.307	1	357 4913
68	(Right) 85-89	3.307	1	360 0814

3.746–3 ATTACHING PARTS, Lens To Rear Quarter Side Lamp

SCREW, Machine	69	85-89	3.708	6	448 6911

3.750–1 HARNESS, Wire (With Rally Pak)

68	30-70 (WRP)		1	319 4155
69	30-70 (WRP)		1	319 6653
70	30-70 (WRP)		1	319 9527

3.750–2 ATTACHING PARTS, Rally Pak Harness To Main Harness

CLIP	68	30-70 (WRP)	3.212	8	79 394

3.750–3 HARNESS, Gauge Lamp Wire

68/70	30-70 (WRP)		1	319 4156

ELECTRICAL - INSTRUMENTS

3.750–4 FUSABLE LINK, Rally Pak

68/70	30-70 (WRP)		1	319 4157

3.760–1 WIRE, Console Lamp

69	30-70 (WFC)		1	319 4930
70	30-70 (WFC)		1	319 8341

3.760–2 WIRE, Console Lamp Extension

69	30-70 (WFC) ...(Less Courtesy Lamp)		1	319 4929

3.770–1 SWITCH, Heated Rear Window Control

70/	15-19-85-89		1	363 6642
70/	39-79		1	363 6639

3.770–2 ATTACHING PARTS, Switch To Instrument Panel

SCREW, Tapping.....	70/71	15-19-85-89..... ***(Use 812 0054)***	17.671	2	G274773
NUT, Round.....	70/	39-79.....	28.054	1	345 8273

3.770–2a ATTACHING PARTS, Switch To Bracket

SCREW, Tapping.....	72	15-19-85-89.....	17.660	2	812 0054

3.770–3 ESCUTCHEON, Heated Rear Window Control Switch

71/	70		1	363 2850

3.770–4 BRACKET, Heated Rear Window Control Switch

72	15-19-85-89		1	364 5814

3.770–4a ATTACHING PARTS, Bracket To Instrument Panel

SCREW, Tapping.....	72	15-19-85-89.....	17.660	2	448 9487

3.770–5 SEAL, Heated Rear Window Control Switch

72	15-19-85-89		1	364 5815

3.771–1 LIGHT ASSEMBLY, Heated Rear Window Indicator

70/	39-79		1	363 6640

3.771–2 LENS, Instrument Panel Identification (Refer To Group 22.100–26)

3.771–3 SEAL, Indicator Light (Refer To Group 22.100–31)

3.772–1 WIRE, Starter Solenoid To Heated Rear Window Harness

70/71	15-19-79-85-89 (Six)		1	321 0989
70/71	15-19-39-79-85-89 (V8)		1	321 0988
72	15-19-85-89		1	321 0989
72	70		1	321 0988

3.772–2 · HARNESS, Heated Rear Window Wire (Switch To Relay)

70/71	15-19-85-89	.....	1	321	0987
72	15-19-85-89	.....	1	321	5542
70	39-79	.....	1	321	0986
71	79	.....	1	321	2190
72	70	.....	1	321	5541

3.772–3 ATTACHING PARTS, Harness To Cowl Air Chamber

CLIP	70/	15-19-39-79-85-89	3.165	1	400	1801
SCREW, Tapping	70/	15-19-39-79-85-89	20.280	1	400	1724

3.772–4 ATTACHING PARTS, Harness To Wheelhouse

RETAINER	70/	15-19-39-79-85-89	22.038	1	318	1121

3.773–1 RELAY, Heated Rear Window

70/	15-19-39-79-85-89	.....	1	363	6641	

3.773–2 ATTACHING PARTS, Relay To Cowl Air Chamber

SCREW, Tapping	70/	15-19-39-79-85-89	15.320	2	400	1701
SCREW, Tapping	71	70	17.660	1	G9414722	NA
NUT, Spring	71	70	2.050	1	400	1999

3.773–3 ATTACHING PARTS, Glass Ground Wire To Body Ground

SCREW, Tapping	70/	15-19-39-85-89	.....	1	400	4093
SCREW, Tapping	71	70	17.660	1	G9414722	NA
SCREW, Tapping	70	70	.....	1	400	4093

3.780–1 HARNESS, Trailer Wiring (On Trailer)

70/	WTTP	.....	1	321	0402

3.780–2 HARNESS, Trailer Wiring (On Vehicle)

70/	WTTP	.....	1	321	0403

3.780–3 ATTACHING PARTS, Trailer Harness To Body Ground

SCREW, Tapping	70/	***(Use 318 9013)***	17.671	1	400	0478
WASHER, Lock	70/		17.826	1	G178388	NA

3.780–4 CONNECTOR, Splice

70/	WTTP	.....	15.320	3	318	6888

3.785–1 LAMP, Seat Belt Warning

72	01-10-40-80 (WSBW)	.....	1	365	7707	

3.785–2 HARNESS, Seat Belt Warning (To Seat Sensor Switch)

72	WSBW	.....	1	321	7584	

3.785–3 CLIP, Seat Belt Warning Harness

72	10-80 (WSBW)	.....	1	400	4557	

3.785–4 ATTACHING PARTS, Clip To Floor Pan

SCREW, Tapping	72	10-80	17.671	5	400	1042

ELECTRICAL - INSTRUMENTS

3.785–5 HARNESS, Seat Belt Buzzer Lock Out (Parking Brake To Seat Belt Relay)

72	01-40-70 (WST)(W4ST)	.....	1	321 7587
72	10-80 (WST)	.....	1	321 8825

3.786–1 BUZZER, Seat Belt Warning

72	WSBW	.....	1	365 7763

3.786–2 ATTACHING PARTS, Buzzer To Instrument Panel

SCREW, Tapping.....	72	WSBW	.....	1	400 1701

3.787–1 RELAY, Seat Belt Warning

72	WSBW	.....	1	366 2737

3.787–2 ATTACHING PARTS, Relay To Instrument Panel

SCREW, Tapping.....	72	WSBW	17.671	1	G274773

3.788 SWITCH, Front Seat Belt Warning Sensor

72	WSBW (WFS-Heavy Duty Spring)	3.787	1	365 7760
72	WSBW (WFS-Except Heavy Duty Spring)	3.787	1	365 7759
72	WSBW (WNRS)(WIRS)	3.787	1	365 7760
72	WSBW (WBS)	3.787	1	365 7759

Printed in U.S.A.

SPECIAL INFORMATION

The Engine Build Code Number, Vehicle Identification Number and the information provided on the Unit Body Plate are often necessary when determining the proper replacement parts for your automobile. For their location refer to the General Information Section found at the front of this catalog.

.....

It is often necessary to identify both the make and the model of your Carburetor to assure obtaining the proper components for it. This information is usually stamped either on the Carburetor itself or on a metal tag attached to it. In some cases Carburetor Identification Tags have nine (9) digits, be guided only by the first four (4) digits as to identification of your Carburetor.

.....

American Motors offers many replacement parts which will fit other manufacturers automobiles. To allow you to select American Motors Carburetors and Carburetor components corresponding to Vendors part numbers we have supplied, at the end of this section of pages, a Vendor to American Motors Cross Reference List.

.....

It may be necessary to determine whether a car is equipped with (LSFC) Less Sealed Oil Filler Cap,

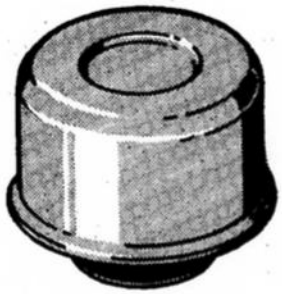

SIX (LSFC)



V8 (LSFC)

or (WSFC) with Sealed Oil Filler Cap.

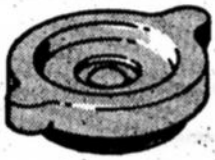

SIX (WSFC)



V8 (WSFC)

NOTES

4–1 ..... Has three (3) holes for mounting to Dash Panel.

4–2 ..... Has two (2) holes for mounting to Dash Panel.

4–3 ..... Use with Pull Back Spring that has 4 inch free length.

4–4 ..... Use with Pull Back Spring that has 5-1/4 inch free length.

4–5 ..... Bracket has Pullback Spring Anchor attached with Rivets.

4–6 ..... Bracket has no Pullback Spring Anchor attached with Rivets.

Printed in U.S.A.

NOTES

4–7 ..... Spring has a free length of 4 inches.

4–8 ..... Spring has a free length of 5-1/4 inches.

4–9 ..... Used with Filler Neck that uses a Hose and Tube to vent the Gasoline Tank.

4–10 .... Vented Cap which is used with a Filler Neck that does not use a Hose and Tube to vent the Gasoline Tank.

4–11 .... Has a Nipple for Hose Connection for venting Gas Tank.

4–12 .... Does not have a Nipple for Hose Connection for venting Gas Tank.

4–13 .... Used prior to Car Sequence No. E-036600.

4–14 .... Used beginning with Car Sequence No. E-036600.

4–15 .... Used with Bellcrank Type Shifting System.

4–16 .... Used with Single Rod Type Shifting System.

4–17 .... Switch has Bullet Type Terminal.

4–18 .... Switch has Blade Type Terminal.

4–19 .... Used prior to Regulator Serial Number J416H24.

4–20 .... Used beginning with Regulator Serial Number J416H24.

4–21 .... Duct is mounted to Manifold.

4–22 .... Duct is mounted to Spark Plug Shield.

4–23 .... Used prior to Engine Build Code Number 908-H-01 on 290 and 908-Z-01 on 343.

4–24 .... Used beginning with Engine Build Code Number 908-H-01 on 290 and 908-Z-01 on 343.

4–25 .... Used prior to Engine Build Code Number 911-H-22 on 290, 911-Z-22 on 343 and 911-W-22 on 390.

4–26 .... Used beginning with Engine Build Code Number 911-H-22 on 290, 911-Z-22 on 343 and 911-W-22 on 390.

4–29 .... Does not include a welded Accelerator Pedal Bellcrank Stop.

4–30 .... Includes a welded Accelerator Pedal Bellcrank Stop. This is the Bracket without a hole.

4–31 .... Cable length is 45-11/16" from center of Ball Joint to Pellet Retainer.

4–32 .... Cable length is 46-15/32" from center of Ball Joint to Pellet Retainer.

4–33 .... Used with Holley Carburetor.

4–34 .... Used with Carter Carburetor.

4–35 .... Cable length is 44-5/16" from center of Ball Joint to Pellet Retainer.

4–36 .... Cable length is 45-3/32" from center of Ball Joint to Pellet Retainer.

4–37 .... Spring free length is 3-11/16".

4–38 .... Spring free length is 4-1/16".

4–39 .... Bracket is 3-1/2" long and has 1 hole for anchoring Pull Back Spring.

4–40 .... Bracket is 4-3/8" long and has 3 holes for anchoring Pull Back Spring.

Printed in U.S.A.

NOTES

4–43 .... Used prior to Engine Build Code Number 912 (H or S) 04. Refer to Automotive Technical Service Bulletin No. TB, 6800 Series, Group 4.000, Date March 27, 1968.

4–44 .... Used beginning with Engine Build Code Number 912 (H or S) 04, and prior to Engine Code Number 103 H12. Refer to Automotive Technical Service Bulletin No. TB11, 6800 Series, Group 4.000, Date March 27, 1968.

4–45 .... Includes welded Rear Bracket on Tail Pipe.

4–46 .... Does not include welded Rear Bracket on Tail Pipe.

4–47 .... Used with In-Line Fuel Filter that screws into Carburetor or Carburetor Adapter.

4–48 .... Used with In-Line Fuel Filter that is connected in Fuel Line.

4–51 .... Used prior to Car Sequence No. E-55773 on domestic built Cars and 27962 on Canadian built Cars.

4–52 .... Used beginning with Car Sequence No. E-55773 on domestic built Cars and 27962 on Canadian built Cars.

4–53 .... Tube is routed along underside of Rear Seat Footwell.

4–54 .... Tube is routed along right hand side of Propeller Shaft Tunnel.

4–55 .... Used prior to Car Sequence No.

4–56 .... Used beginning with Car Sequence No.

4–57 .... Neck has two Ear Slots 9/32" wide.

4–58 .... Neck has one Ear Slot 9/32" wide and one 1/2" wide.

4–59 .... Used with Fuel Filter located on Right Side.

4–60 .... Used with Fuel Filter located on Left Side.

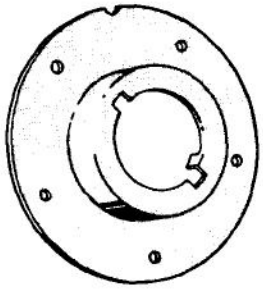

TYPE 1

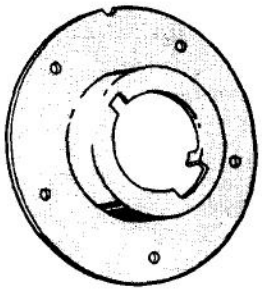

TYPE 2

4–61 .... Gasoline Tank Filler Neck has two Small Slots for Type 1 Cap Assembly above.

4–62 .... Gasoline Tank Filler Neck has one Large and one Small Slot for Type 2 Cap Assembly above.

4–63 .... Gasoline Tank Filler Tube is soldered in Tank and is part of Tank.

4–64 .... Gasoline Tank Filler Tube is fastened in Tank with a Grommet.

4–65 .... Brace does not include Grommet.

4–66 .... Brace includes Grommet.

4–67 .... On 1972 (V8) used prior to Engine Build Code No. 504 (N)(H)(P)(Z) 27.

4–68 .... On 1972 (V8) used beginning with Engine Build Code No. 504 (N)(H)(P)(Z) 27.

CARBURETOR CHART INDEX

	PAGE NO.
8HA2	Gr 4 - C 25
8HM2	Gr 4 - C 25
8ZA2	Gr 4 - C 25
9HA2	Gr 4 - C 28
9HM2	Gr 4 - C 28
9ZA2	Gr 4 - C 28
0DA2	Gr 4 - C 62
0DM2	Gr 4 - C 62
0RA2	Gr 4 - C 62
0WA4	Gr 4 - C 55
0WM4	Gr 4 - C 55
1DA2	Gr 4 - C 64
1DM2	Gr 4 - C 64
1RA2	Gr 4 - C 64
1TM4	Gr 4 - C 66
1TA4	Gr 4 - C 66
2DA2	Gr 4 - C 74
2DM2	Gr 4 - C 74
2RA2	Gr 4 - C 74
2RA4	Gr 4 - C 67a
2TA4	Gr 4 - C 67a
2TM4	Gr 4 - C 67a
AFB 4216	Gr 4 - C 31
AFB 4258	Gr 4 - C 35
AFB 4352	Gr 4 - C 31
AFB 4353	Gr 4 - C 35
AFB 4354	Gr 4 - C 31
AFB 4355	Gr 4 - C 31
AFB 4358	Gr 4 - C 35
AFB 4467	Gr 4 - C 39
AFB 4468	Gr 4 - C 39
AFB 4469	Gr 4 - C 39
AFB 4583	Gr 4 - C 43
AFB 4584	Gr 4 - C 43
AFB 4585	Gr 4 - C 43
AFB 4622	Gr 4 - C 39
AFB 4623	Gr 4 - C 39
AFB 4624	Gr 4 - C 43
AFB 4660	Gr 4 - C 51
AFB 4661	Gr 4 - C 51
AFB 4662	Gr 4 - C 51
AFB 4663	Gr 4 - C 51
AFB 4664	Gr 4 - C 47
AFB 4665	Gr 4 - C 47
AFB 4692	Gr 4 - C 43
AFB 6043S	Gr 4 - C 54a
AFB 6044S	Gr 4 - C 54a
AFB 6045S	Gr 4 - C 54a
AFB 6046S	Gr 4 - C 54a
R 3253	Gr 4 - C 7
R 3307-1	Gr 4 - C 15
R 3308-1	Gr 4 - C 15
R 3483-1	Gr 4 - C 17
R 3484-1	Gr 4 - C 17
R 3704	Gr 4 - C 7
R 3705	Gr 4 - C 7
R 3706	Gr 4 - C 9
R 3707-1	Gr 4 - C 9
R 3708-1	Gr 4 - C 9
R 3709	Gr 4 - C 9
R 3824	Gr 4 - C 15
R 3905	Gr 4 - C 17
R 3966	Gr 4 - C 11
R 3966-2	Gr 4 - C 11
R 3967	Gr 4 - C 11
R 3967-2	Gr 4 - C 11
R 3968	Gr 4 - C 13
R 3968-2	Gr 4 - C 13
R 3978	Gr 4 - C 9
R 4102	Gr 4 - C 13
R 4102-2	Gr 4 - C 13
R 4294	Gr 4 - C 13
RBS 3882	Gr 4 - C 1
RBS 4470	Gr 4 - C 3
RBS 4626	Gr 4 - C 3
RBS A4626	Gr 4 - C 3
RBS 4631	Gr 4 - C 5
RBS 4633	Gr 4 - C 5
RBS 4634	Gr 4 - C 5
RBS 4666	Gr 4 - C 5
RBS 4994S	Gr 4 - C 6a
RBS 4997S	Gr 4 - C 6a
RBS 4998S	Gr 4 - C 6c
RBS 6039S	Gr 4 - C 6e
WCD 3888	Gr 4 - C 19
WCD 4365	Gr 4 - C 19
WCD 4410	Gr 4 - C 22
WCD 4537	Gr 4 - C 22
WCD 4667	Gr 4 - C 22
WCD 4668	Gr 4 - C 22
WCD 4816S	Gr 4 - C 59
WCD 4817S	Gr 4 - C 59
WCD 4950S	Gr 4 - C 59
WCD 6042S	Gr 4 - C 61a
YF 4766S	Gr 4 - C 68
YF 4767S	Gr 4 - C 57
YF 4768S	Gr 4 - C 57
YF 4769S	Gr 4 - C 57
YF 4770S	Gr 4 - C 57
YF 4815S	Gr 4 - C 68
YF 4978S	Gr 4 - C 57
YF 6038S	Gr 4 - C 70
YF 6093S	Gr 4 - C 70
YF 6094S	Gr 4 - C 70
YF 6095S	Gr 4 - C 70
YF 6096S	Gr 4 - C 70
YF 6199S	Gr 4 - C 72
YF 6200S	Gr 4 - C 72
YF 6202S	Gr 4 - C 72
YF 6309	Gr 4 - C 71a

CARBURETOR COMPONENT CROSS REFERENCE

CARTER	A.M.
360	320 2945
368	320 8350
509	320 5883
525	320 7680
1A-17	315 3999
1A-70	317 3228
2-92	320 6444
2-99	320 7184
2-101	320 4318
2-204	320 6805
2-248	320 3868
2-251	320 3869
2-264	448 8317
2-297	448 8314
3-1250S	320 6467
3-1405S	320 6488
3-1412S	320 6800
3-1455S	320 6808
3-1469S	320 6801
3-1515S	320 6816
3-1572S	320 8525
3-1627S	320 9766
3-1696S	448 6604
3-1743S	448 7160
3-1778S	448 8358
4-1046	320 7681
4A-175	320 7682
7-107	320 6425
7-253S	320 6468
7-265S	320 6485
7-270S	320 6489
7-287	320 7683
7-291	320 8524
7-313	320 6425
11-181S	320 3835
11-202S	320 3834
11B-12	320 3801
11B-35	320 3802
11B-41	320 3803
11B-69	320 3804
11B-79	320 3805
11B-108	320 3806
11B-129S	320 3807
11B-134	320 3808
11B-223	320 3809
11B-231S	320 3810
11B-290	320 3811
11B-389	320 3870
11B-390	320 7684
11B-392	320 3833
11B-406	320 7685
11B-439	320 7686
11B-455	320 9931
11B-456	320 9858
11B-467	448 6558
13-222	320 6490
13-271	448 5503
14-383S	320 6446
14-384	320 6447
14-409	320 6426
14-411S	320 3836
14-494S	320 6469
14-512	320 7701
14-550	320 7704
14-609S	320 7705
14-612S	320 7706
14-619	320 8461
14-620	320 8462
14-737	320 6491
14-738	320 4319
14-757	320 6809
14-820S	320 7707
14-866	320 9859
14-880S	448 8315
14-888	448 6590
14-935S	448 8316
14-9505	812 0957
14-979	812 0958
15-35S	320 6448
15-86S	320 7708
15-90	448 6608
16-229	320 5582
16-412U	320 7185
16-445	320 7709
16-481	320 8426
16-482	320 8424
16-483	320 8427
16-484	320 8425
16-498	320 9965
16-551U	320 9860
16-552	320 9932
16-553	320 9933
16-554	320 9934
16-572	448 5789
16-575	448 5788
16-576	448 5790
16-577	448 5791
16-584	448 6609
16-585	448 6619
16-594U	448 6645
17-50	320 6449
17-51	320 7262
17-66	320 6817
17-70	320 9767
17-78	320 6492
20-31	320 6493
20-114	320 6427
21-117S	320 2231
21-150U	320 2232
21-188S	320 7710
21-210S	320 2954
21-217S	320 4320
21-223S	448 8047
21-228U	320 6136
23-84	320 6494
24-14	320 6470
24-24	320 6451
24-27	320 6428
24-29	320 7711
24-32	320 6495
25-189S	320 3146
25-445S	320 7712
25-483S	320 3147
25-510S	320 3146
25-530S	320 3148
25-726S	320 5124
25-787S	320 6710
25-855S	320 8526
25-860S	320 8392
25-891S	320 9861
25-892S	320 8979
25-897S	448 6591
25-905S	320 9718
25-1076S	448 8048
30-14	320 3837
30-20	320 3838
30A-44	320 2229
30A-64	320 2792
30A-65	320 2230
30A-75	320 8393
30A-81	320 4321
30A-121	320 8527
30A-174	448 5855
30A-184	448 6605
30A-185	448 8036
30A-202	448 7159
30A-214	812 2355
39-10	320 3812
39-11	320 3813
47-11	448 5707
47-14	320 3814
47-30	320 7714
47-33	448 5686
47-34	320 7715
47-36	320 7716
48-165S	320 8528
48-171S	320 6818
48-208S	320 7263
48-282S	320 6482
48-286S	320 6486
48-316S	320 7717
48-340S	320 9768
48-354S	448 6620
51-70	320 4322
53A-412	320 7718
53A-430	320 7719
53A-466	320 6810
53A-469S	320 6819
53A-485S	320 9769
53A-489	448 5793
53A-492	448 6592
53A-498	448 6955
58-978S	320 7720

CARBURETOR COMPONENT CROSS REFERENCE (Continued)

CARTER	A.M.
58-979S	320 7721
58-982S	320 7722
58-983S	320 7723
58-1032S	320 8394
58-1033S	320 8395
58-1036S	320 8396
58-1037S	320 8397
58-1040S	320 8407
58-1041S	320 8408
58-1044S	320 8409
58-1045S	320 8410
58-1048S	320 8411
58-1049S	320 8412
58-1099	320 8404
58-1100	320 8403
58-1107S	320 9937
58-1108S	320 9938
58-1111	320 8399
58-1112	320 8398
58-1168S	320 9935
58-1169S	320 9936
58-1172S	320 9939
58-1173S	320 9940
58-1180S	448 5794
58-1181S	448 5797
58-1182S	448 5796
58-1183S	448 5799
58-1185S	448 5795
58-1186S	448 5798
58-1190S	448 5945
58-1191S	448 5946
58-1215S	448 6610
58-1216S	448 6611
58-1219S	448 6624
58-1220S	448 6625
58-1221S	448 6612
58-1222S	448 6613
58-1223	448 6621
58-1224	448 6622
61-57	320 3845
61-58	812 1248
61-84	320 5885
61-128	320 3815
61-150	320 3847
61-171	320 7724
61-226	320 3848
61-242	320 3839
61-291	320 5125
61-298	320 3840
61-332	320 8413
61-382	320 3841
61-389	320 3842
61-390	320 3843
61-398	320 4323
61-426	320 3844
61-439	320 3852
61-451	320 3853
61-467	320 3844
61-475	320 9862
61-483	320 7725
61-498	320 8529
61-570	320 3854
61-585	320 7726
61-587	320 7189
61-604	320 3857
61-623	320 7727
61-624	320 8428
61-657	320 3855
61-658	320 3856
61-680	448 6606
61-731	320 7190
61-738	320 6497
61-758	320 6811
61-860	448 8065
61-958	812 2356
63-35	320 3816
63-57	320 3817
63-58	320 3818
63-92	320 3819
63-104	320 3858
63-118	320 3859
63-123	320 4325
63-135	320 3820
63-208	320 3821
63-209	320 3822
63-213	320 3823
63-251	320 3824
63-282	320 7191
63-298	320 4326
63-302	320 6498
63-306	320 4327
63-309	320 6499
63-310	320 4328
63-321	320 7495
63-336	812 1249
63-394	448 7102
64-192S	320 2237
64-233S	320 2941
64-306	320 4329
64-326S	320 7728
64-338S	320 8429
64-362	320 8468
64-365S	320 8530
64-369S	320 8778
64-370S	320 8920
64-374S	320 9863
64-383S	448 5856
64-384S	448 5857
64-385S	448 6559
64-394S	448 6593
64-398S	448 6614
64-401U	448 6557
64-415S	448 7905
65-43	320 7729
65-48	320 8430
65-49	320 8431
65-54	320 4330
65-59	448 7336
65-60	448 7337
75-793	320 6429
75-1464	320 6483
75-1465	320 6484
75-1621	316 9634
75-1715	320 7457
75-1746U	319 1223
75-1862	448 8052
75-1865	448 8050
75-1866	448 8051
75-1867	448 8053
75-1871	812 1001
75-1874	812 1000
75-1887	448 8462
75-1889	448 8647
75-1891	448 8648
75-1903	448 9437
75-1917	812 0194
75-1925	812 0960
75-1926	812 0961
96-33	448 8054
101-6	320 6452
101-11	320 9864
101-65	320 6412
101-67	320 6413
101-73	320 6453
101-74	320 6414
101-126	320 6820
101-136	320 6431
101-140	320 6454
101-148S	320 6455
101-149S	320 8531
101-152	320 6456
101-160S	320 6432
101-184S	320 7731
101-216S	320 6487
101-236	320 8523
101-278	320 6457
101-282S	320 6433
101-307	320 6807
101-319	320 6821
101-323	320 7732
101-354	320 6458
101-362S	320 7733
P101-378	320 6471
101-379S	320 7734
101-386S	320 8432
101-387	320 6415
101-393	320 6472
101-416	320 8433
101-419	320 6473
101-420	320 7735
101-421	320 7736
101-429	320 7737
101-431S	320 7738
101-436	320 7742
101-452	320 7743
101-453S	320 7744
101-472	320 6806
101-514	320 6416
101-536	448 8060
101-552	320 6822

CARBURETOR COMPONENT CROSS REFERENCE (Continued)

CARTER	A.M.
101-558	320 7745
101-560	320 7746
101-564	320 7264
101-641	812 1251
101-643	812 1252
101-645	812 1253
101-649	812 0959
101-666	812 0222
103-14	320 4948
103-16	320 4947
105A-10	320 6459
105A-60	320 6802
105A-69	320 6417
111-47S	320 6460
111-57S	320 6434
111-76	320 7747
111-97	320 8467
111-99S	320 7265
111-102	320 9941
114-75S	320 6435
114-146	320 7748
114-147	320 7749
114-161S	320 6474
115-139	320 6461
115-140	320 3860
115-159	320 6436
115-285	320 7750
115-308	320 7751
115-314	320 8434
115-332	320 6475
115-365	320 6418
115-366	320 6419
115-372	320 7752
115-385	320 6812
115-391	320 6803
115-428	320 7753
115-442	448 6912
115-443	320 9865
115-464	448 7101
116-13	320 3825
116-24	812 0145
116-25	320 3826
116-31	320 4331
117-113	320 3861
117-136	320 6462
117-137	320 6437
117-138	320 3862
117-165	320 6463
117-183	320 6476
117-185	320 6477
117-190	320 7754
117-200	320 4337
117-204	320 7266
117-206	448 8061
120-166	320 6823
120-368	320 8463
120-377	320 8464
120-380	320 7755
120-392	320 7756
120-398	448 8464
120-401	448 8445
120-404	812 0195
120-407	448 9438
120-489	320 8465
120-498	320 8466
121-78	448 5888
121-136	448 6535
122-132	320 5855
122-127	320 4332
122-126	320 4336
122-108S	320 3863
122-64S	320 6438
122-138	320 8779
122-143S	448 6560
129-22	320 6464
129-24	320 9770
136-34	320 7757
136-37	320 3827
136-159	320 7758
136-160	320 7759
136-174	320 7760
136-228	320 3828
136-257	320 6420
136-296	812 2352
150A-10	320 3830
150A-21	320 9866
150-62	320 3829
150-170	320 6421
150-190	320 7761
150-345	448 6607
156-17	320 6439
160-67S	320 3864
160-91	320 3865
160-106	320 6440
160-117	320 8415
160-128	320 8414
160-129	448 5859
160-133	320 6479
160-134	448 5858
160-138	320 3866
160-207	320 7762
160-208	320 7763
160-223S	320 9942
160-279	320 6422
160-299	320 8532
160-306	448 6594
160-307	448 6595
164-22	320 9867
169-100S	320 7764
170-215	320 6441
170-914S	320 7765
170-934S	320 8420
170-1002S	448 6615
170AC-478S	320 7766
170AD-478S	320 9943
170AE-61S	320 6268
170AE-478S	320 8418
170AJ-61S	448 9439
170AR-968S	448 5652
170AZ-61S	448 8063
170AZ-73S	320 8533
170AZ-536S	448 7906
170BE-478S	320 8417
170BH-478S	448 6616
170BL-73S	320 7267
170FA-771S	320 4333
170FD-976S	448 6596
170FF-771S	320 6728
170FH-976S	448 6597
170FK-976S	320 9868
170N-478S	320 8419
170T-61S	320 3867
170U-73SU	320 6796
172-21	320 3831
172-22	320 3822
172-41	320 9772
180-120	320 6423
180-121	320 8534
180-131	320 6813
180-167	812 0103
180-170	320 9773
181-150S	320 6824
180-208	812 0962
181-234S	320 6480
181-235S	320 6465
181-303	320 6424
181-328	320 6814
181-329	320 6804
181-380S	320 7268
181-386S	320 7767
181-393S	320 8421
181-401	320 9869
181-402	320 9870
181-404S	320 9774
181-413	448 6598
181-451	812 1254
186-14	320 6442
186-22	320 6466
186-24	320 6481
186-45	320 6443
186-67S	320 8422
186-70	320 7768
186-111S	320 7769
186-134S	448 7303
186-144	448 6623
186-145	448 6617
186-151	448 7907
186-152	448 8097
186-146	448 6618
202-69S	320 4334
202-89S	320 8423
202-187S	320 5126
202-323S	320 9776
202-325S	320 9945
202-361S	448 8064
202-345S	448 6954
202-406S	812 0963
203-137S	448 8066
203-43S	320 2236
203-172S	320 4335
203-323	448 9440
203-323S	448 9440
221-64	812 0149
902-210	320 5882
902-225	320 7000
902-247	320 8348
902-253	320 8777
902-255	320 9871

CARBURETOR COMPONENT CROSS REFERENCE (Continued)

HOLLEY	A.M.
1R-836A	320 6357
1R-841A	320 4846
2R-278	320 3259
2R-388A	320 4454
2R-421	320 7124
2R-423	320 7193
3R-278A	320 3186
4R-801	448 5944
4R-921A	320 8968
4R-962	448 6676
5R-4	320 3101
5R-16	320 3102
5R-155	320 3103
5R-294	320 3104
5R-357	320 4400
5R-367	320 5905
5R-370	320 3105
5R-375	320 5906
5R-420	320 3106
5R-421	320 3107
5R-423	320 6406
5R-425	320 3108
5R-441	320 3177
5R-447	320 3178
5R-476	320 5907
5R-492	320 6311
5R-520	320 5923
5R-534	320 3110
5R-552	320 3111
5R-565	320 6379
5R-567	320 3112
5R-568	320 3113
5R-569	320 3114
5R-571	320 3115
5R-579	320 3180
5R-582	320 3125
5R-584	320 3116
5R-595	320 3117
5R-614	320 3118
5R-635	320 3119
5R-641	320 3120
5R-659	320 7467
5R-682	320 3121
5R-716	320 6380
5R-731	320 6312
5R-757	320 6409
5R-765	320 3123
5R-773	320 3124
5R-775	320 6398
5R-779	320 5908
5R-797	320 5909
5R-806	320 3126
5R-807	320 3127
5R-808	320 5910
5R-816	320 4401
5R-835	320 5911
5R-837	320 4402
5R-847	320 6358
5R-848	320 4403
5R-849	320 4404
5R-872	320 5913
5R-893	320 4405
5R-906	320 4406
5R-928	320 4412
5R-943	320 8966
5R-998	320 7135
5R-1004	320 5914
5R-1016	320 5915
5R-1024	320 5916
5R-1035	320 5917
5R-1037	320 7370
5R-1043	320 5918
5R-1067	320 5919
5R-1083	320 5924
5R-1086	320 5933
5R-1196	320 8969
7R-5	320 6381
7R-48-3	320 6313
7R-218	320 5920
7R-225	320 3128
7R-255	320 6399
7R-274	320 6314
8R-534	320 2203
8R-669	320 2204
8R-1040	448 5887
8R-1044	448 5886
10R-1249A	320 6359
13R-617	320 5921
13R-885	320 5922
13R-892	320 6882
13R-996	320 5921
14R-320	320 6382
15R-36	320 2205
15R-40	320 2206
15R-59	320 6360
15R-61	320 6361
15R-72	320 5649
15R-88	320 7468
15R-119	448 5600
16R-178A	320 2207
16R-231A	320 6383
16R-258A	320 2208
16R-260A-4	320 2209
16R-316A	320 2946
16R-346A-3	320 4844
16R-346A-4	320 6835
17R-31	320 6400
18R-50A	320 2210
18R-53AS	320 2211
18R-81AS	320 3495
18R-85AS	320 2914
18R-86AS	320 3038
18R-104AS	320 5127
18R-221A	448 6728
19R-92	320 6385
19R-189	320 3160
19R-219	320 6401
19R-221	320 6338
19R-223	320 6362
19R-295A	320 5950
19R-416	320 8381
21R-355-28	320 6315
21R-578-21	320 6386
22R-40-35	320 3162
22R-40-48	320 6339
22R-40-49	320 3163
22R-40-50	320 3164
22R-40-51	320 3165
22R-40-53	320 7369
22R-40-54	320 7610
22R-40-55	320 3166
22R-40-56	320 3250
22R-40-57	320 6836
22R-40-58	320 3251
22R-40-59	320 3167
22R-40-60	320 6757
22R-40-63	320 6363
23R-196	320 3168
23R-211	320 3169
23R-258	320 6340
23R-280	320 3185
23R-321	320 6364
23R-406	320 6837
23R-453	320 5925
23R-470	320 5934
23R-496A	320 7469
25R-166A	320 2213
25R-167A	320 6407
25R-237A-50	320 2214
25R-237A-65	320 7342
25R-237A-85	320 2215
25R-322A	320 4424
25R-336AS	320 6365
25R-374A	320 5948
27R-109	320 2216
27R-204	320 6316
27R-223	320 6342
27R-229	320 6317
27R-238	320 6341
27R-250	320 6366
27R-442	320 7470
28R-1	320 3179
28R-6	320 6318
28R-35	320 6387
28R-94	320 3181
29R-726	320 6367
29R-814	320 6838
29R-1025	320 7471

CARBURETOR COMPONENT CROSS REFERENCE (Continued)

HOLLEY	A.M.	HOLLEY	A.M.	HOLLEY	A.M.
30R-367A	320 7488	35R-347A	320 2887	39R-193	320 4410
30R-371	320 7275	35R-722	320 7475	40R-108	320 3208
30R-511A	320 7368	36R-164	320 3183	40R-283	320 6323
30R-519	320 7274	36R-169	320 3189	40R-336	320 6391
30R-574A	320 9761	36R-225	320 3190	40R-450	320 6881
31R-211A	320 4845	36R-236	320 6388	40R-506	320 8972
31R-232A	320 6839	36R-340	320 4407	41R-218	320 6348
31R-238A	320 7151	36R-437	320 5926	41R-229A	320 6346
31R-244A	320 7472	36R-466	320 5927	41R-234A	320 6393
33R-344	320 6319	36R-477	320 5928	41R-240	320 6347
33R-368	320 6320	36R-515	320 7215	41R-244A	320 6392
33R-403	320 6368	38R-108	320 3191	41R-338A	320 6324
33R-443	320 6828	38R-110	320 3192	41R-428A	320 6369
33R-471	320 6840	38R-395	320 3193	41R-449	320 6883
33R-478	320 7158	38R-452	320 3194	41R-493	320 6829
33R-481	320 7229	38R-464	320 3195	41R-512	320 7220
33R-482	320 7213	38R-566	320 6402	41R-537	320 7231
33R-487	320 7212	38R-569	320 3196	41R-552	320 7478
33R-490	320 7473	38R-583	320 3197	41R-575	320 8973
33R-494	320 7474	38R-587	320 3198	41R-576	320 8974
33R-510	320 8970	38R-615	320 3199	41R-590	320 8976
33R-530	448 5504	38R-616	320 6389	42R-351	320 6884
34R-1374	320 3707	38R-635	320 6390	42R-366	320 7146
34R-1940A	320 3708	38R-757	320 3200	42R-385	320 7479
34R-1942A	320 3709	35R-787A	320 8380	43R-219	320 6394
34R-2007-8	320 6701	35R-843A	320 8971	43R-281	320 6395
34R-2379A	320 6321	36R-611	320 8957	43R-301	320 6370
34R-2813A	320 6343	38R-320	320 8389	43R-357	320 7221
34R-2818A	320 6269	38R-759	320 3201	43R-365	320 6885
34R-3016A	320 3710	38R-760	320 3202	43R-370	320 7137
34R-3151A	320 3711	38R-803	320 3203	43R-374	320 7222
34R-3174A	320 3712	38R-931	320 3184	43R-405	320 7480
34R-3386A	320 3713	38R-946	320 7216	43R-418	320 8975
34R-3453A	320 3714	38R-975	320 4408	43R-459	448 6730
34R-4654A	320 7214	38R-1002	448 6474	44R-123	320 6886
34R-4655A	320 7227	38R-1037	320 5929	46R-2	320 4411
34R-4656A	320 7228	38R-1112	320 5930	46R-3	320 7234
34R-4724A	320 7237	38R-1151	320 5931	46R-10	320 6325
34R-4750	320 7257	38R-1161	320 5932	46R-25	320 6396
34R-4823A	320 7238	38R-1175	448 6729	46R-112	320 8960
34R-4824A	320 7233	38R-1194	320 7217	46R-248	320 6349
34R-4844A	320 7343	38R-1199	320 5946	46R-252	320 6326
34R-4858A	320 7586	38R-1213	320 7157	46R-283	320 7169
34R-4925A	320 7489	38R-1225	320 7218	46R-445	320 7223
34R-5112	320 8388	38R-1226	320 7147	46R-529	320 6327
34R-5186	448 5961	38R-1232	320 7219	46R-636	320 6371
34R-5363A	320 8690	38R-1271	320 7476	46R-653	320 7481
34R-5455A	320 8956	38R-1290	320 7477	46R-692	320 5935
34R-5458A	320 8964	38R-1338	320 8382	46R-753	320 5936
34R-5499A	320 9728	38R-1412	320 8958	46R-763	320 5937
34R-5689	448 5698	39R-5	320 6344	46R-833	320 7149
34R-5690	448 5699	39R-11	320 4409	46R-837	320 7171
34R-5722	448 6472	39R-90	320 8959	46R-839	320 7224
35R-199A	320 2217	39R-143	320 6345	47R-114A	320 3213
35R-334A	320 2219	39R-160	320 3206	47R-116A	320 3222
35R-342A	320 2218	39R-166	320 6322	47R-144A	320 3225

CARBURETOR COMPONENT CROSS REFERENCE (Continued)

HOLLEY	A.M.
47R-160A	320 3224
47R-188A	320 4455
47R-190A	320 4425
47R-192A	320 4456
47R-193A	320 4457
47R-221	320 7276
47R-223A	320 6887
47R-230A	320 6893
47R-233A	320 6887
47R-243A	320 7225
47R-250A	320 7819
47R-259A	320 7819
48R-5	320 6403
48R-31	320 3227
48R-72	320 7483
48R-183	320 3228
49R-128	320 3229
49R-187	320 6404
49R-716	320 6891
49R-749	320 7136
49R-754	320 7236
49R-787	320 7159
49R-824	320 7486
52R-121	320 7484
52R-127	320 8383
56R-96	320 8961
57R-28A	320 6397
57R-35	320 6350
58R-49A	320 3209
58R-51A	320 6372
58R-54A	320 7487
58R-135A	448 6457
59R-75	320 6888
63R-233A	320 6328
63R-469	320 7226
63R-566	320 6373
63R-570	320 6329
63R-650	320 7232
63R-694	320 6889
63R-695	320 6890
63R-757	320 8962
63R-796A	320 8963
63R-801	448 5506
75R-37	320 3240
85R-575	320 2223
85R-641	320 2221
85R-709	320 2225
85R-716	320 2226
85R-733	320 3040
85R-759	320 3039
85R-760	320 4995
85R-766	320 3605
85R-770	320 4369
85R-781	320 4995
85R-787	320 5570
85R-788	320 5571
85R-790	320 5706
85R-792	320 6538
85R-963	320 2364
85R-981	320 2787
85G-1006	320 2787
85R-1077	320 3052
85R-1078	320 3041
85R-1106	320 6375
85R-1127	320 3604
85T-1160	320 6308
85T-1161	320 6309
85C-1162	320 6302
85C-1170	320 6305
85B-1173	320 6301
85D-1174	320 6303
85D-1175	320 6304
85C-1176	320 6306
85C-1177	320 6307
85T-1178	320 6310
85T-1187	320 6335
85T-1189	320 6337
85C-1190	320 6334
85D-1192	320 6333
85B-1194	320 6330
85C-1195	320 6331
85S-1208	320 6376
85B-1210	320 6378
85B-1211	320 6374
85R-1260	320 4370
85G-1261	320 4368
85R-1263	320 4367
85R-1269	316 9636
85C-1301	320 6351
85R-1302	320 6355
85T-1303	320 6356
85C-1304	320 6354
85R-1313	320 6353
85R-1314	320 6352
85B-1398	320 6300
85R-1401	317 0979
85R-1402	317 0980
85C-1446	320 6332
85T-1563	320 6833
85T-1564	320 6826
85C-1566	320 6825
85B-1567	320 6827
85R-1568	320 6830
85T-1570	320 6834
85R-1572	320 6831
85R-1577	320 5707
85G-1578	320 5708
85T-1589	320 6377
85R-1595	320 5951
85G-1675	320 6539
85R-1676	320 6537
85T-1684	320 6904
85C-1685	320 6905
85R-1686	320 6700
85R-1688	320 6917
85R-2525	320 6994
85R-2526	320 6995
85G-2527	320 6996
85R-2528	320 6997
85R-2529	320 6998
85G-2530	320 6999
85R-2531	320 7110
85R-2532	320 7111
85R-2533	320 7116
85R-2534	320 7117
85R-2537	320 7133
85T-2538	320 7165
85R-2541	320 7235
85G-2630	320 7462
85R-2631	320 7463
85R-2632	320 7464
85R-2636	320 7485
85R-1499	320 4996
85R-1500	320 4997
85R-1536	320 5572
85R-1537	320 5573
85G-1538	320 5574
85R-3133	448 6727
85R-3134	448 6726

CARBURETOR COMPONENT CROSS REFERENCE (Continued)

FORD	A.M.
40-9578	320 9917
31061-S8	448 5447
33923-S8	320 9906
34656-S36	448 8191
37626-S	448 8183
42790-S2	448 8239
43251-S8	448 5445
43252-S	448 5440
43256-S8	448 5444
43434-S2	448 8215
47290-S8	448 5446
54674-S	320 9914
54686-S8B	812 0069
67516-S2	320 9891
97402-S2	448 8171
351764-S	448 8195
351825-S8B	320 9894
353862-S8B	320 9925
356744-S2	812 2489
374832-S8B	448 5442
375016-S	320 9901
375894-S7	320 9899
376262-S	448 8169
377918-S	448 8186
377918-S8B	320 9922
378361-S2	448 5443
378546-S2	812 0086
378547-S8	448 5441
379436-S	320 9882
381761-S	448 8221
382008-S2	812 1329
382297-S36	448 8229
383070-S	448 8232
383252-S2	812 1332
383547-S2	448 8222
383677-S2	448 8233
384017-S	448 8245
5752152	320 9928
5752517	320 9929
C1AE-9871-A	448 5890
C2AF-9545-A	320 9900
C2AF-9B549-A	448 8199
C2AF-9E516-A	320 9885
C3AF-9A565-C	320 9915
C3AF-9B511-C	320 9883
C3AF-9B529-A	320 9892
C3AF-9D530-A	320 9893
C3MF-9F553-A	320 9909
C4AF-9576-A	320 9916
C4AF-9842-B	812 0075
C4AF-9848-B	812 0087
C4AF-9B538-A	320 9896
C4AF-9B542-A	320 9898
C4AF-9B545-A	320 9902
C4AF-9B559-A	320 9912
C4AF-9B792-A	320 9926
C5AF-9546-A	320 9903
C5AF-9550-B	448 5969
C5AF-9A599-B	320 9921
C5AF-9A753-A	320 9924
C5AF-9F558-A	320 9911
C5AF-9F560-A	320 9913
C6AF-9592-A	320 9919
C6AF-9B546-A	320 9904
C6AF-9C719-B	320 9923
C6TF-9508-A	320 9881
C6TF-9529-A	320 9890
C6TF-9E520-A	320 9886
C6TF-9E521-A	320 9887
C7AF-9529-B	448 8188
C7AF-9545-A	448 8196
C7AF-9550-A	448 8099
C7AF-9558-A	448 8223
C7AF-9564-B	448 8224
C7AF-9564-C	448 8225
C7AF-9688-A	448 8242
C7AF-9871-A	812 1333
C7AF-9A515-A	320 9884
C7AF-9A516-B	448 8187
C7AF-9A537-A	448 8190
C7AF-9A538-A	448 8192
C7AF-9A599-A	448 8238
C7AF-9A755-A	448 8477
C7AF-9B501-A	320 9880
C7AF-9B542-D	448 8194
C7AF-9B848-C	448 8244
C7AF-9C504-A	448 8185
C7AF-9D583-B	320 9918
C7AF-9D810-A	448 8243
C7AF-9E528-A	448 8388
C7AF-9G550-A	448 8216
C7AF-9G551-A	448 8217
C7AF-9H532-A	448 8189
C8AF-9541-A	448 8173
C8AF-9541-C	320 9897
C8AF-9541-E	448 8174
C8AF-9575-A	448 8226
C8AF-9842-B	448 6603
C8AF-9A753-A	448 8240
C8AF-9B549-A	320 9905
C8AF-9B550-A	320 9908
C8AF-9B550-C	448 8214
C8AF-9F594-A	320 9920
C8AF-9B792-C	448 8241
C8AF-9H578-A	448 8228
C8AF-9H582-A	448 8230
C8AF-9H583-A	448 8231
C8AF-9J500-D	320 9879
C8FF-9502-A	320 9876
C8FF-9561-A	448 5998
C8FF-9590-A	320 9878
C8FF-9848-A	448 5448
C8FF-9A523-A	320 9888
C8FF-9A523-B	320 9889
C8FF-9A586-A	320 9877
C9AF-9547-A	448 8197
C9AF-9551-B	448 8218
C9AF-9B511-A	812 0053
C9AF-9H532-A	812 0005
C9FF-9502-A	448 6218
C9FF-9564-A	448 6669
C9FF-9590-A	448 6220
C9FF-9A586-A	448 6219
CT3F-9BS38-B	812 0006
D0AF-9541-A	448 8193
D0AF-9545-A	448 8175
D0AF-9550-A	448 8178
D0AF-9551-A	448 8179
D0AF-9871-A	448 8184
D0AF-9A599-B	448 8246
D0AF-9B546-A	448 8177
D0AF-9B550-A	448 8322
D0AF-9B792-C	812 0012
D0AF-9F553-A	448 8180
D0AF-9H555-A	448 8219
D0AF-9H555-B	448 8220
D0AF-9I553-A	448 8181
D0AF-9J549-A	448 8478
D0AF-9J553-B	812 0068
D0AF-9J554-A	448 8182
D0FF-9597-A	448 8235
D0FF-94515-A	448 8170
D0FF-9848-A	448 8461
D0FF-9J549-B	812 0089
D0PF-9D532-A	448 8172
D0PF-9D532-B	812 0010
D1AF-9A754-AA	812 0074
D1AF-9508-CA	812 1326
D1AF-9529-AA	812 1328
D1AF-9564-AA	812 0009
D1AF-9871-AA	812 0076
D1AF-9D856-AA	812 0480
D2AF-9B46-AA	812 1330
D2AF-9B792-AA	812 1331
D2FF-9510-DA	321 4464
D2FF-9510-EA	321 3505
D2FF-9510-FA	812 1335
D3AF-9842	812 3150
EDC-9558-A	320 9910

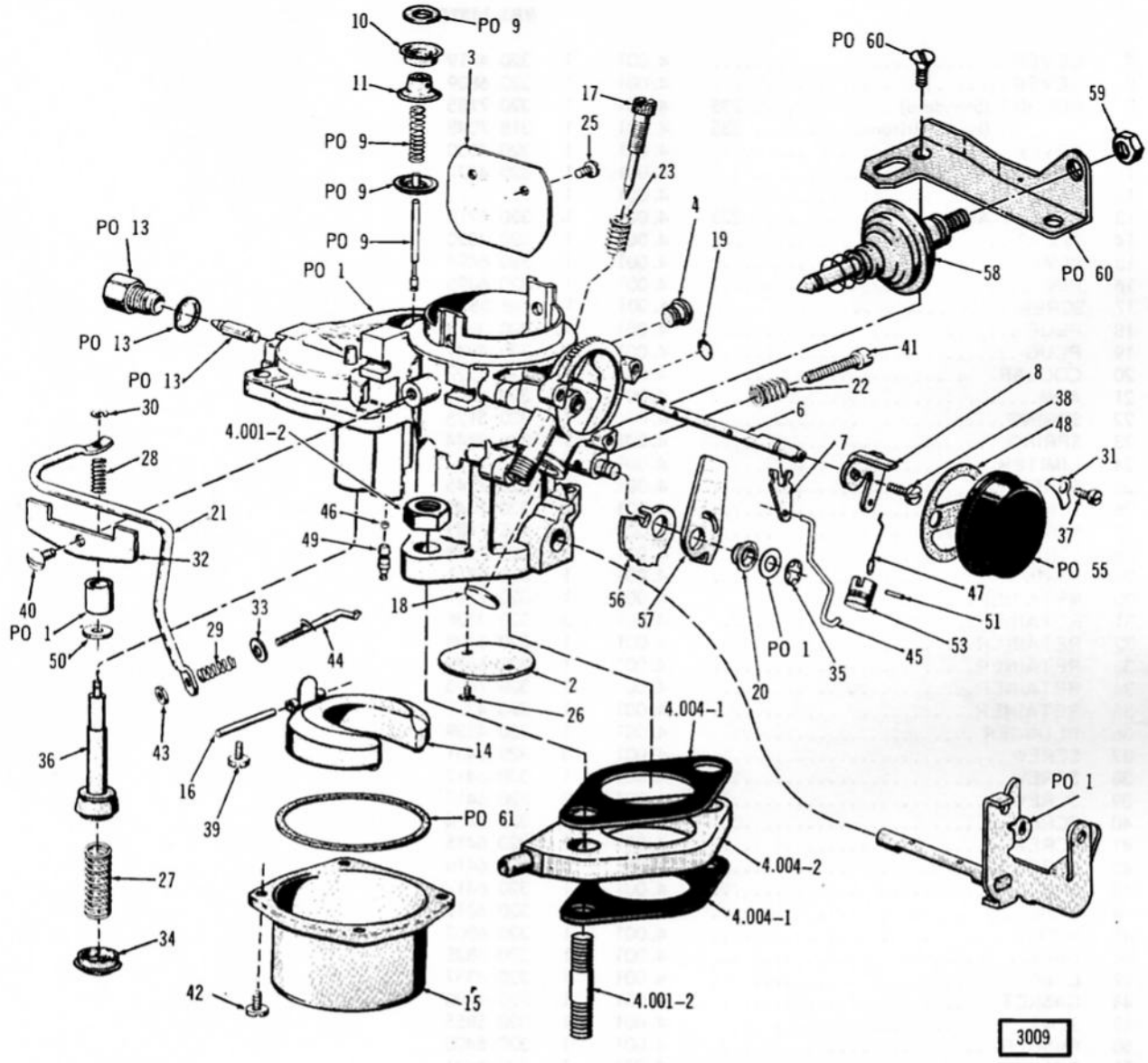

CARBURETOR

KEY NO.	DESCRIPTION	PAKS CODE	GROUP NO.	PER CAR	PART NO.	PART NO.	PART NO.	PART NO.	PART NO.
					RBS-3882S				
1	CARBURETOR		4.001	1	319 2058				
2	PLATE		4.001	1	320 7184				
3	PLATE		4.001	1	320 6489				
4	PLUG		4.001	1	320 3870				
5	PLUG		4.001	1	... .				
6	SHAFT		4.001	1	320 6490				

Printed in U.S.A.

KEY NO.	DESCRIPTION	PAKS CODE	GROUP NO.	PER CAR	PART NO.	PART NO.	PART NO.	PART NO.	PART NO.
					RBS-3882S				
7	LEVER		4.001	1	320 4319				
8	LEVER		4.001	1	320 6809				
9	ROD KIT (Standard)	235	4.001	1	320 7185				
	(High Altitude)	235	4.001	1	318 7048				
10	COVER		4.001	1	320 4330				
11	RETAINER		4.001	1	320 4337				
12	NEEDLE		4.001	1	... .				
13	NEEDLE ASSY.	225	4.001	1	320 6710				
14	FLOAT		4.001	1	320 4320				
15	BOWL		4.001	1	320 6494				
16	PIN		4.001	1	320 6495				
17	SCREW		4.001	1	448 5855				
18	PLUG		4.001	1	320 3814				
19	PLUG		4.001	1	320 4949				
20	COLLAR		4.001	1	320 4322				
21	ARM		4.001	1	320 6810				
22	SPRING		4.001	1	320 5125				
23	SPRING		4.001	1	320 3844				
24	LIMITER		4.001	1	... .				
25	SCREW		4.001	2	320 7745				
26	SCREW		4.001	2	320 7745				
27	SPRING		4.001	1	320 7189				
28	SPRING		4.001	1	320 7190				
29	SPRING		4.001	1	320 6811				
30	RETAINER		4.001	1	320 7191				
31	RETAINER		4.001	3	320 4326				
32	RETAINER		4.001	1	320 6498				
33	RETAINER		4.001	1	320 6499				
34	RETAINER		4.001	1	320 7495				
35	RETAINER		4.001	1	320 4325				
36	PLUNGER		4.001	1	320 4329				
37	SCREW		4.001	3	320 6431				
38	SCREW		4.001	1	320 6412				
39	SCREW		4.001	2	320 6413				
40	SCREW		4.001	1	320 6414				
41	SCREW		4.001	1	320 6415				
42	SCREW		4.001	4	320 6416				
43	NUT		4.001	1	320 6417				
44	LINK		4.001	1	320 6812				
45	ROD		4.001	1	320 6803				
46	BALL		4.001	1	320 3825				
47	LINK		4.001	1	320 4337				
48	GASKET		4.001	1	320 9190				
49	SEAT		4.001	1	320 5855				
50	WASHER		4.001	1	320 6420				
51	PIN		4.001	1	320 6421				
52	PIN		4.001	1	... .				
53	PISTON		4.001	1	320 6422				
54	GROMMET		4.001	1	... .				
55	THERMOSTAT	236	4.001	1	320 6728				
56	CAM		4.001	1	320 6814				
57	CAM		4.001	1	320 6804				
58	DASHPOT		4.001	1	320 4334				
59	NUT		4.001	1	320 6802				
60	DASHPOT KIT	282	4.001	1	320 7561				
61	MAJOR REPAIR KIT	248	4.001	1	320 7000				

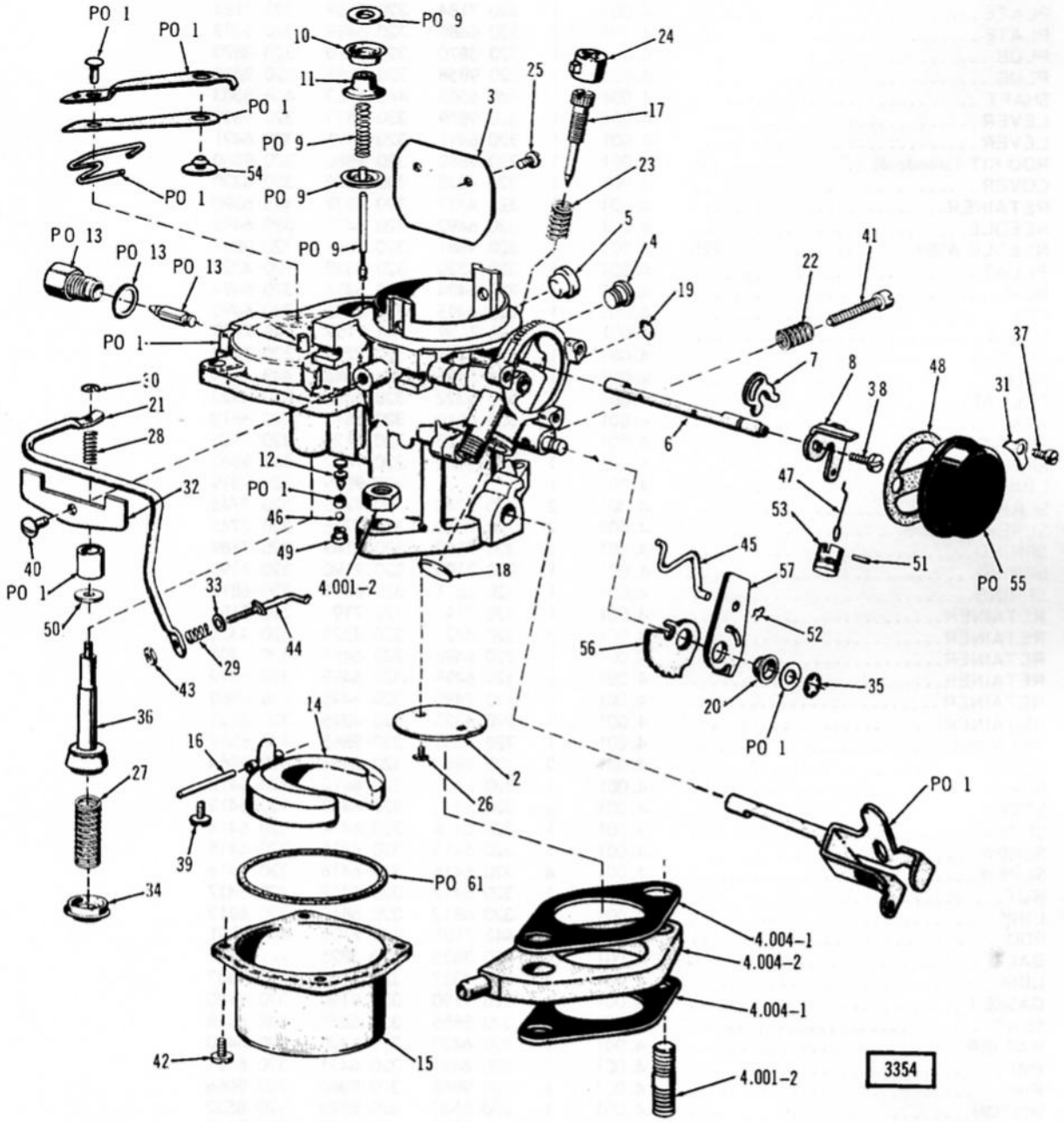

CARBURETOR

Printed in U.S.A.

FUEL - EXHAUST

KEY NO.	DESCRIPTION	PAKS CODE	GROUP NO.	PER CAR	PART NO.	PART NO.	PART NO.	PART NO.	PART NO.
					RBS-4470S	*RBS-4626S*	*RBS-A4626S*		
1	CARBURETOR	233	4.001	1	448 6586	448 6586	448 6586		
2	PLATE		4.001	1	320 7184	320 7184	320 7184		
3	PLATE		4.001	1	320 6489	320 6489	320 6489		
4	PLUG		4.001	1	320 3870	320 3870	320 3870		
5	PLUG		4.001	1	320 9858	320 9858	320 9858		
6	SHAFT		4.001	1	448 5503	448 5503	448 5503		
7	LEVER		4.001	1	320 9859	320 9859	320 9859		
8	LEVER		4.001	1	320 6491	320 6491	320 6491		
9	ROD KIT (Standard)	235	4.001	1	320 9860	320 9860	320 9860		
10	COVER		4.001	1	320 4330	320 4330	320 4330		
11	RETAINER		4.001	1	320 4337	320 4337	448 6590		
12	NEEDLE		4.001	1	320 6492	320 6492	320 6492		
13	NEEDLE ASSY.	225	4.001	1	320 9861	320 9861	320 9861		
14	FLOAT		4.001	1	320 4320	320 4320	320 4320		
15	BOWL		4.001	1	320 6494	320 6494	320 6494		
16	PIN		4.001	1	320 6495	320 6495	320 6495		
17	SCREW		4.001	1	448 7159	448 7159	448 7159		
18	PLUG		4.001	1	320 7714	320 7714	320 7714		
19	PLUG		4.001	1	448 5686	448 5686	448 5686		
20	COLLAR		4.001	1	320 4322	320 4322	320 4322		
21	ARM		4.001	1	320 6810	320 6810	320 6810		
22	SPRING		4.001	1	320 5125	320 5125	320 5125		
23	SPRING		4.001	1	320 9862	320 9862	320 9862		
24	LIMITER		4.001	1	... .	320 9879	320 9879		
25	SCREW		4.001	2	320 7745	320 7745	320 7745		
26	SCREW		4.001	2	320 7745	320 7745	320 7745		
27	SPRING		4.001	1	320 7189	320 7189	320 7189		
28	SPRING		4.001	1	320 7190	320 7190	320 7190		
29	SPRING		4.001	1	320 6811	320 6811	320 6811		
30	RETAINER		4.001	1	320 7191	320 7191	320 7191		
31	RETAINER		4.001	3	320 4326	320 4326	320 4326		
32	RETAINER		4.001	1	320 6498	320 6498	320 6498		
33	RETAINER		4.001	1	320 6499	320 6499	320 6499		
34	RETAINER		4.001	1	320 7495	320 7495	448 6560		
35	RETAINER		4.001	1	320 4325	320 4325	320 4325		
36	PLUNGER		4.001	1	320 9863	320 9863	448 6559		
37	SCREW		4.001	3	320 9864	320 9864	320 9864		
38	SCREW		4.001	1	320 6412	320 6412	320 6412		
39	SCREW		4.001	2	320 6413	320 6413	320 6413		
40	SCREW		4.001	1	320 6414	320 6414	320 6414		
41	SCREW		4.001	1	320 6415	320 6415	320 6415		
42	SCREW		4.001	4	320 6416	320 6416	320 6416		
43	NUT		4.001	1	320 6417	320 6417	320 6417		
44	LINK		4.001	1	320 6812	320 6812	320 6812		
45	ROD		4.001	1	448 7101	448 7101	448 7101		
46	BALL		4.001	1	320 3825	320 3825	... .		
47	LINK		4.001	1	320 4337	320 4337	320 4337		
48	GASKET		4.001	1	320 9190	320 9190	320 9190		
49	SEAT		4.001	1	320 5855	320 5855	448 6558		
50	WASHER		4.001	1	320 6420	320 6420	320 6420		
51	PIN		4.001	1	320 6421	320 6421	320 6421		
52	PIN		4.001	1	320 9866	320 9866	320 9866		
53	PISTON		4.001	1	320 8532	320 8532	320 8532		
54	GROMMET		4.001	1	320 9867	320 9867	320 9867		
55	THERMOSTAT	236	4.001	1	320 9868	320 9868	320 9868		
56	CAM		4.001	1	320 9869	320 9869	320 9869		
57	CAM		4.001	1	320 9870	320 9870	320 9870		
61	MAJOR REPAIR KIT	248	4.001	1	448 6585	448 6585	448 6585		

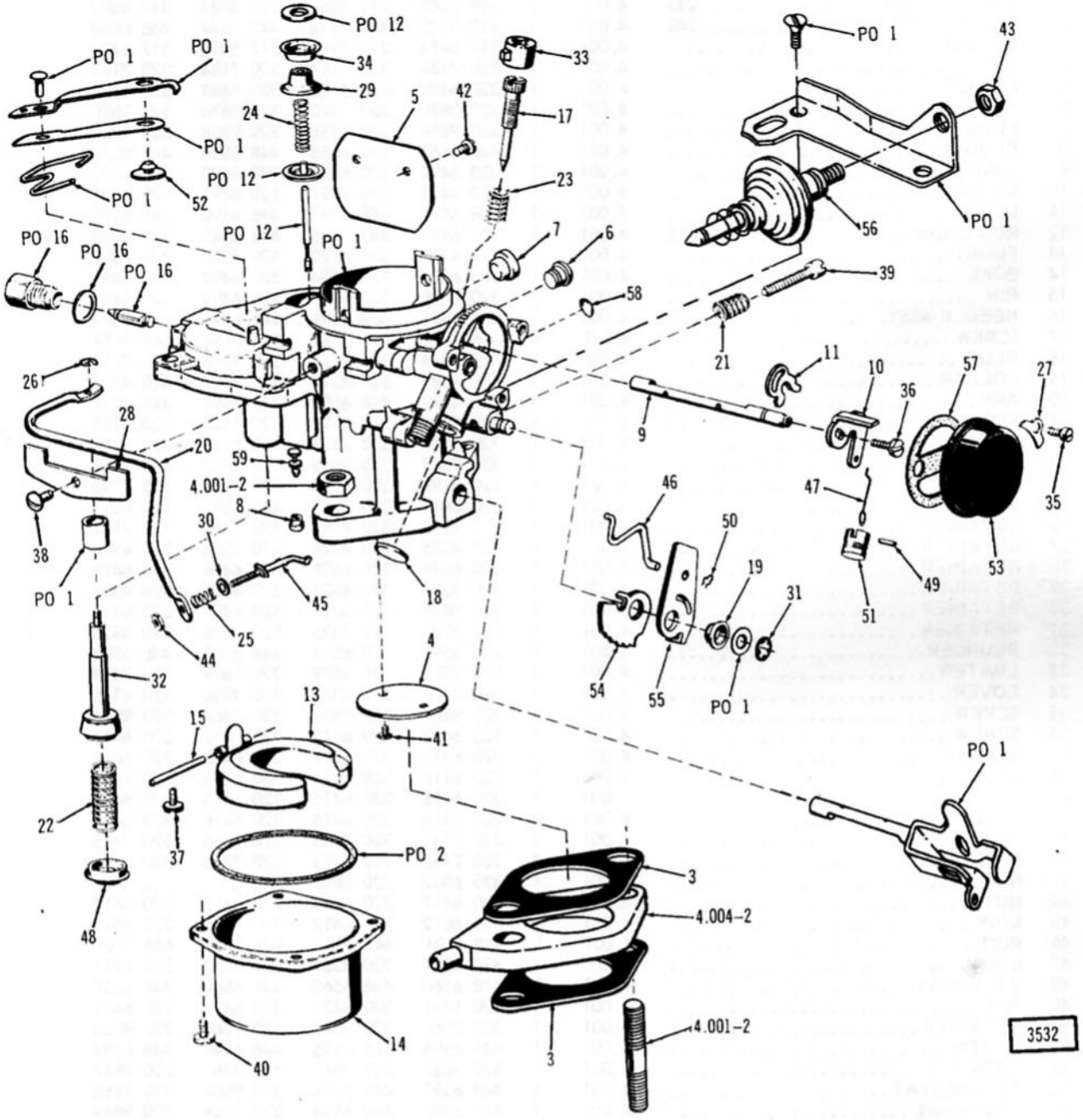

CARBURETOR

Printed in U.S.A.

KEY NO.	DESCRIPTION	PAKS CODE	GROUP NO.	PER CAR	PART NO.	PART NO.	PART NO.	PART NO.	PART NO.
					RBS-4631S	*RBS-4633S*	*RBS-4634S*	*RBS-4666S*	
1	CARBURETOR	233	4.001	1	319 3882	319 3885	319 3884	319 4502	
2	MAJOR REPAIR KIT	248	4.001	1	812 0522	448 6644	448 6644	448 6644	
3	GASKET		4.004	2	317 6474	317 5948	317 5948	317 6474	
4	PLATE		4.001	1	320 7184	320 7184	320 7184	320 7184	
5	PLATE		4.001	1	320 6489	320 6489	320 6489	320 6489	
6	PLUG		4.001	1	320 3870	320 3870	320 3870	320 3870	
7	PLUG		4.001	1	320 9858	320 9858	320 9858	320 9858	
8	PLUG		4.001	1	448 6558	448 6558	448 6558	448 6558	
9	SHAFT		4.001	1	320 6490	320 6490	320 6490	320 6490	
10	LEVER		4.001	1	320 6491	320 6491	320 6491	320 6491	
11	LEVER		4.001	1	448 6590	448 6590	448 6590	448 6590	
12	ROD (Standard)	235	4.001	1	448 6953	448 6645	448 6645	448 6952	
13	FLOAT		4.001	1	320 4320	320 4320	320 4320	320 4320	
14	BOWL		4.001	1	320 6494	320 6494	320 6494	320 6494	
15	PIN		4.001	1	320 6495	320 6495	320 6495	320 6495	
16	NEEDLE ASSY.	225	4.001	1	448 6591	448 6591	448 6591	448 6591	
17	SCREW		4.001	1	448 7159	448 7159	448 7159	448 7159	
18	PLUG		4.001	1	320 7714	320 7714	320 7714	320 7714	
19	COLLAR		4.001	1	320 4322	320 4322	320 4322	320 4322	
20	ARM		4.001	1	448 6592	448 6592	448 6592	448 6592	
21	SPRING		4.001	1	320 5125	320 5125	320 5125	320 5125	
22	SPRING		4.001	1	320 4323	320 4323	320 4323	320 4323	
23	SPRING		4.001	1	320 9862	320 9862	320 9862	320 9862	
24	SPRING		4.001	1	320 7190	320 7190	320 7190	320 7190	
25	SPRING		4.001	1	320 6811	320 6811	320 6811	320 6811	
26	RETAINER		4.001	1	320 7191	320 7191	320 7191	320 7191	
27	RETAINER		4.001	3	320 4326	320 4326	320 4326	320 4326	
28	RETAINER		4.001	1	320 6498	320 6498	320 6498	320 6498	
29	RETAINER		4.001	1	320 4327	320 4327	320 4327	320 4327	
30	RETAINER		4.001	1	320 6499	320 6499	320 6499	320 6499	
31	RETAINER		4.001	1	320 4325	320 4325	320 4325	320 4325	
32	PLUNGER		4.001	1	448 6593	448 6593	448 6593	448 6593	
33	LIMITER		4.001	1	320 9879	320 9879	320 9879	320 9879	
34	COVER		4.001	1	320 4330	320 4330	320 4330	320 4330	
35	SCREW		4.001	3	320 9864	320 9864	320 9864	320 9864	
36	SCREW		4.001	1	320 6412	320 6412	320 6412	320 6412	
37	SCREW		4.001	2	320 6413	320 6413	320 6413	320 6413	
38	SCREW		4.001	1	320 6414	320 6414	320 6414	320 6414	
39	SCREW		4.001	1	320 6415	320 6415	320 6415	320 6415	
40	SCREW		4.001	4	320 6416	320 6416	320 6416	320 6416	
41	SCREW		4.001	2	320 7745	320 7745	320 7745	320 7745	
42	NUT		4.001	2	320 7745	320 7745	320 7745	320 7745	
43	NUT		4.001	1	320 6802	320 6802	... .	... .	
44	LINK		4.001	1	320 6417	320 6417	320 6417	320 6417	
45	ROD		4.001	1	320 6812	320 6812	320 6812	320 6812	
46	LINK		4.001	1	448 7101	448 7101	448 7101	448 7101	
47	BALL ASSY.		4.001	1	320 4337	320 4337	320 4337	320 4337	
48	PIN		4.001	1	448 6560	448 6560	448 6560	448 6560	
49	RETAINER		4.001	1	320 6421	320 6421	320 6421	320 6421	
	PISTON		4.001	1	320 9866	320 9866	320 9866	320 9866	
	GROMMET		4.001	1	448 6595	448 6595	448 6594	448 6594	
	THERMOSTAT		4.001	1	320 9867	320 9867	320 9867	320 9867	
	CAM (Inner)		4.001	1	448 6597	448 6596	320 9868	320 9868	
	CAM (Outer)		4.001	1	448 6598	448 6598	320 9869	320 9869	
	DASHPOT		4.001	1	320 9870	320 9870	320 9870	320 9870	
	GASKET		4.001	1	320 4334	320 4334	... .	... .	
	PLUG		4.001	1	320 9190	320 9190	320 9190	320 9190	
	NEEDLE		4.001	1	448 5686	448 5686	448 5686	448 5686	
			4.001	1	320 6492	320 6492	320 6492	320 6492	

Printed in U.S.A.

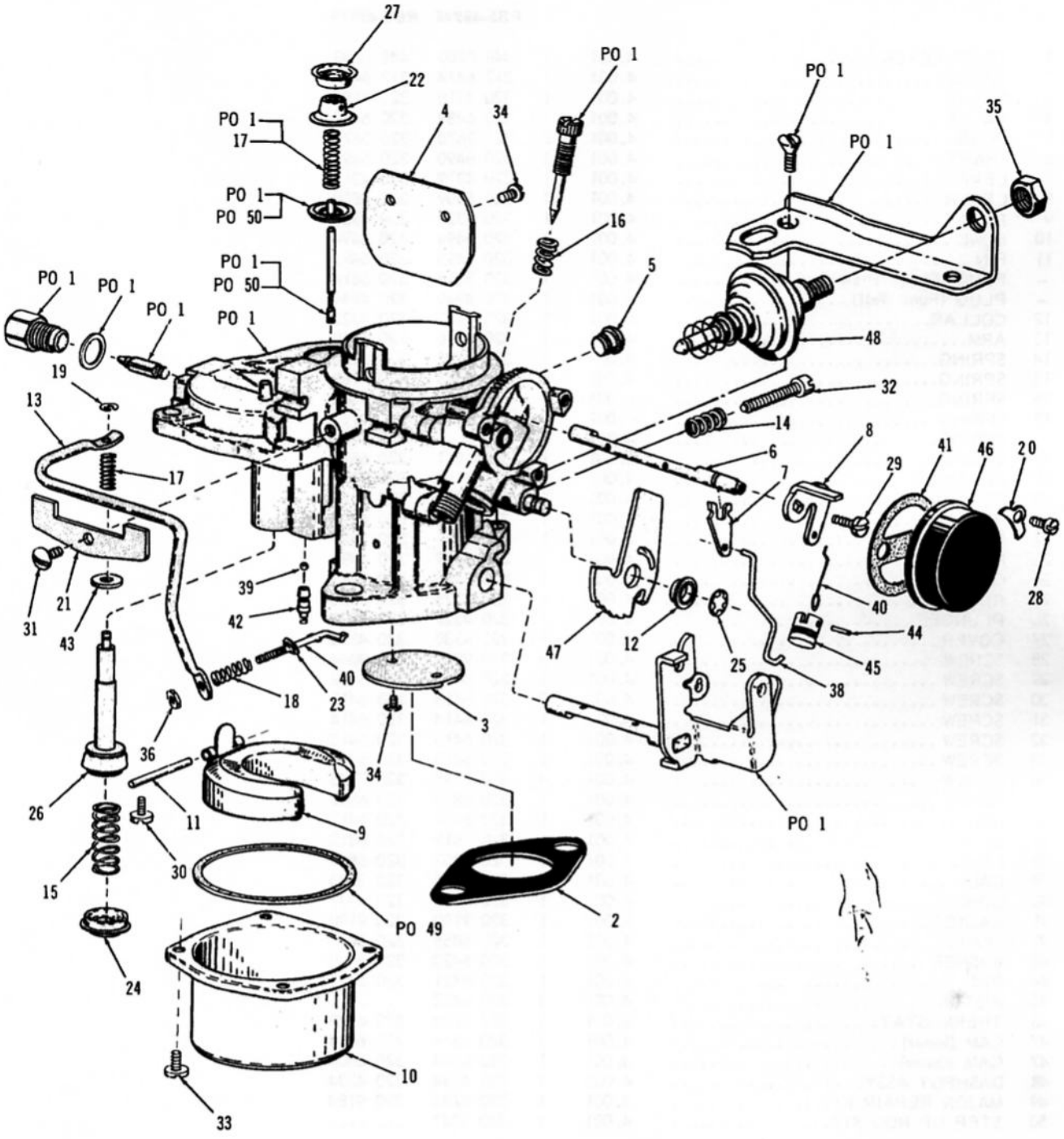

3655

CARBURETOR

FUEL - EXHAUST

KEY NO.	DESCRIPTION	PAKS CODE	GROUP NO.	PER CAR	PART NO.	PART NO.	PART NO.	PART NO.	PART NO.
					RBS-4994S	*RBS-4997S*			
1	CARBURETOR		4.001	1	448 8200	448 8203			
2	GASKET		4.001	1	317 6474	317 6474			
3	VALVE		4.001	1	320 4318	320 7184			
4	VALVE		4.001	1	320 6489	320 6489			
5	PLUG		4.001	2	320 3870	320 3870			
6	SHAFT		4.001	1	320 6490	320 6490			
7	LEVER		4.001	1	320 4319	320 4319			
8	LEVER		4.001	1	320 6809	320 6809			
9	FLOAT		4.001	1	320 4320	320 4320			
10	BOWL		4.001	1	320 6494	320 6494			
11	PIN		4.001	1	320 6495	320 6495			
–	PLUG (Choke Piston)		4.001	1	320 3814	320 3814			
–	PLUG (Fuel Well)		4.001	1	320 4949	320 4949			
12	COLLAR		4.001	1	320 4322	320 4322			
13	ARM		4.001	1	320 6810	320 6810			
14	SPRING		4.001	1	320 5125	320 5125			
15	SPRING		4.001	1	320 4323	320 7189			
16	SPRING		4.001	1	320 9862	320 9862			
17	SPRING		4.001	1	320 7190	... .			
	SPRING		4.001	2	... .	320 7190			
18	SPRING		4.001	1	320 6811	320 6811			
19	RETAINER		4.001	1	320 7191	320 7191			
20	RETAINER		4.001	3	320 4326	320 4326			
21	RETAINER		4.001	1	320 6498	320 6498			
22	RETAINER		4.001	1	320 4327	320 4327			
23	RETAINER		4.001	1	320 6499	320 6499			
24	COVER		4.001	1	320 7495	320 7495			
25	RETAINER		4.001	1	320 4325	320 4325			
26	PLUNGER		4.001	1	320 4329	320 4329			
27	COVER		4.001	1	320 4330	320 4330			
28	SCREW		4.001	3	320 9864	320 9864			
29	SCREW		4.001	1	320 6412	320 6412			
30	SCREW		4.001	2	320 6413	320 6413			
31	SCREW		4.001	1	320 6414	320 6414			
32	SCREW		4.001	1	320 6415	320 6415			
33	SCREW		4.001	1	320 6416	320 6416			
34	SCREW		4.001	4	320 7745	320 7745			
35	NUT		4.001	1	320 6802	320 6802			
36	NUT		4.001	1	320 6417	320 6417			
37	LINK		4.001	1	320 6812	320 6812			
38	LINK		4.001	1	320 6803	320 6803			
39	BALL		4.001	1	320 3825	320 3825			
40	LINK		4.001	1	320 4337	320 4337			
41	GASKET		4.001	1	320 9190	320 9190			
42	SEAT		4.001	1	320 5855	320 5855			
43	WASHER		4.001	1	320 6420	320 6420			
44	PIN		4.001	1	320 6421	320 6421			
45	PISTON		4.001	1	320 6422	... .			
46	THERMOSTAT		4.001	1	320 6728	320 6728			
47	CAM (Inner)		4.001	1	320 6814	320 6814			
47	CAM (Outer)		4.001	1	320 6804	320 6804			
48	DASHPOT ASSY.		4.001	1	320 4334	320 4334			
49	MAJOR REPAIR KIT		4.001	1	320 5745	320 9184			
50	STEP UP ROD KIT		4.001	1	320 5747	... .			

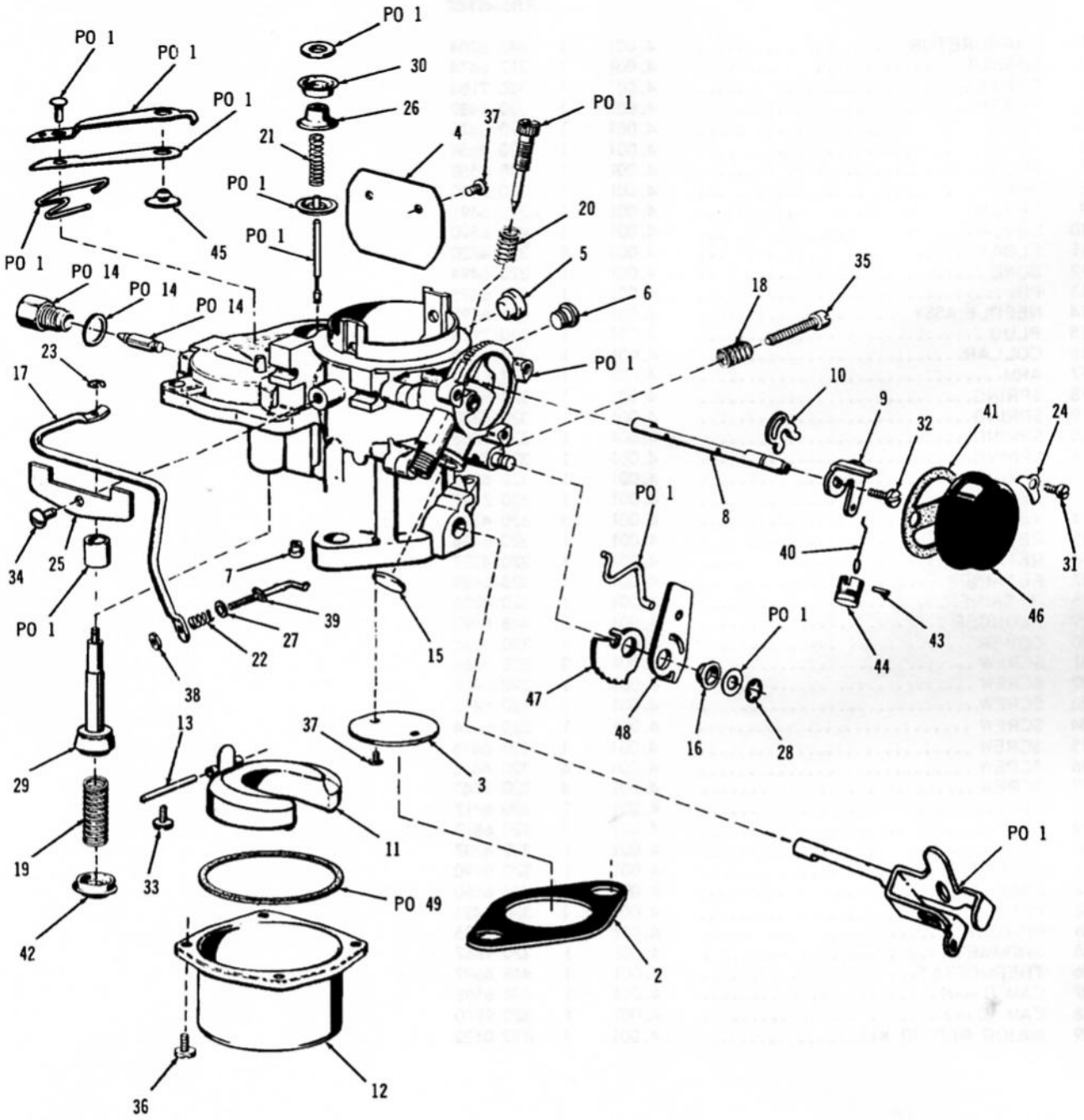

3659

CARBURETOR

FUEL - EXHAUST

KEY NO.	DESCRIPTION	PAKS CODE	GROUP NO.	PER CAR	PART NO.	PART NO.	PART NO.	PART NO.	PART NO.
					RBS-4998S				
1	CARBURETOR		4.001	1	448 8204				
2	GASKET		4.001	1	317 6474				
3	PLATE		4.001	1	320 7184				
4	PLATE		4.001	1	320 6489				
5	PLUG		4.001	1	320 3870				
6	PLUG		4.001	1	320 9858				
7	PLUG		4.001	1	448 6558				
8	SHAFT		4.001	1	320 6490				
9	LEVER		4.001	1	320 6491				
10	LEVER		4.001	1	448 6590				
11	FLOAT		4.001	1	320 4320				
12	BOWL		4.001	1	320 6494				
13	PIN		4.001	1	320 6495				
14	NEEDLE ASSY.		4.001	1	448 6591				
15	PLUG		4.001	1	320 7714				
16	COLLAR		4.001	1	320 4322				
17	ARM		4.001	1	448 6592				
18	SPRING		4.001	1	320 5125				
19	SPRING		4.001	1	320 4323				
20	SPRING		4.001	1	320 9862				
21	SPRING		4.001	1	320 7190				
22	SPRING		4.001	1	320 6811				
23	RETAINER		4.001	1	320 7191				
24	RETAINER		4.001	3	320 4326				
25	RETAINER		4.001	1	320 6498				
26	RETAINER		4.001	1	320 4327				
27	RETAINER		4.001	1	320 6499				
28	RETAINER		4.001	1	320 4325				
29	PLUNGER		4.001	1	448 6593				
30	COVER		4.001	1	320 4330				
31	SCREW		4.001	3	320 9864				
32	SCREW		4.001	1	320 6412				
33	SCREW		4.001	2	320 6413				
34	SCREW		4.001	1	320 6414				
35	SCREW		4.001	1	320 6415				
36	SCREW		4.001	4	320 6416				
37	SCREW		4.001	4	320 7745				
38	NUT		4.001	1	320 6417				
39	LINK		4.001	1	320 6812				
40	LINK		4.001	1	320 4337				
41	GASKET		4.001	1	320 9190				
42	BALL ASSY.		4.001	1	448 6560				
43	PIN		4.001	1	320 6421				
44	PISTON		4.001	1	448 6595				
45	GROMMET		4.001	1	320 9867				
46	THERMOSTAT		4.001	1	448 6597				
47	CAM (Inner)		4.001	1	448 6598				
48	CAM (Outer)		4.001	1	320 9870				
49	MAJOR REPAIR KIT		4.001	1	812 0522				

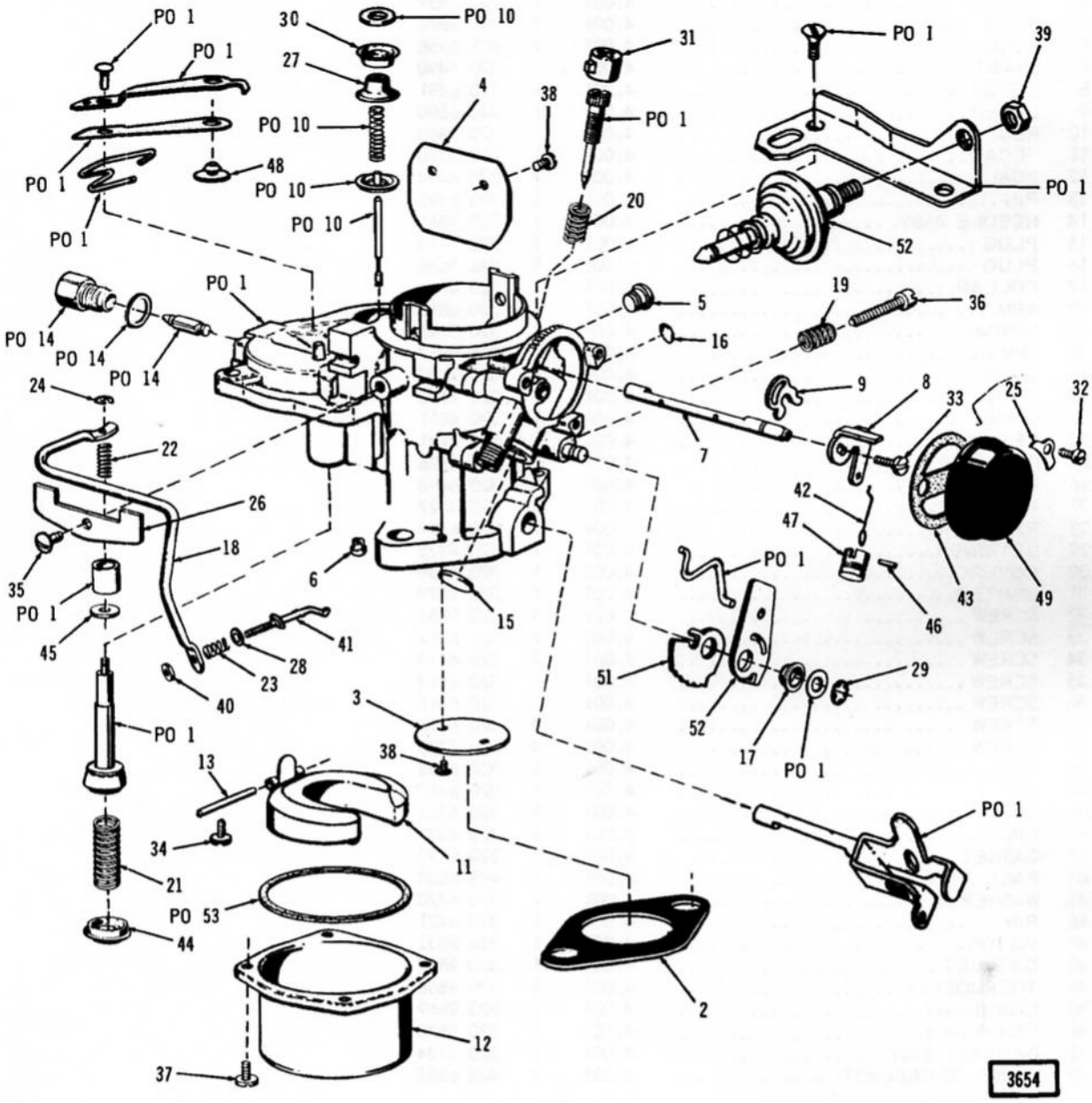
PO 1
PO 1
PO 1
PO 1
30
PO 10
27
PO 10
PO 10
PO 10
48
4
38
31
PO 1
20
PO 1
39
PO 1
52
PO 1
PO 14
PO 14
PO 14
5
16
19
36
24
22
26
18
35
PO 1
45
6
15
41
28
23
40
3
38
13
34
11
21
PO 53
44
2
12
37
9
8
33
25
32
7
42
47
PO 1
46
43
49
51
52
29
17
PO 1
PO 1
3654

CARBURETOR

KEY NO.	DESCRIPTION	PAKS CODE	GROUP NO.	PER CAR	PART NO.	PART NO.	PART NO.	PART NO.	PART NO.
					RBS-6039S				
1	CARBURETOR		4.001	1	448 8094				
2	GASKET		4.001	1	317 6474				
3	PLATE		4.001	1	320 7184				
4	PLATE		4.001	1	320 6489				
5	PLUG		4.001	1	320 3870				
6	PLUG		4.001	1	448 6558				
7	SHAFT		4.001	1	320 6490				
8	LEVER		4.001	1	320 6491				
9	LEVER		4.001	1	448 6590				
10	ROD		4.001	1	320 9860				
11	FLOAT		4.001	1	320 4320				
12	BOWL		4.001	1	320 6494				
13	PIN		4.001	1	320 6495				
14	NEEDLE ASSY.		4.001	1	320 9861				
15	PLUG		4.001	1	320 7714				
16	PLUG		4.001	1	448 5686				
17	COLLAR		4.001	1	320 4322				
18	ARM		4.001	1	320 6810				
19	SPRING		4.001	1	320 5125				
20	SPRING		4.001	1	320 9862				
21	SPRING		4.001	1	320 7189				
22	SPRING		4.001	1	320 7190				
23	SPRING		4.001	1	320 6811				
24	RETAINER		4.001	1	320 7191				
25	RETAINER		4.001	3	320 4326				
26	RETAINER		4.001	1	320 6498				
27	RETAINER		4.001	1	320 4327				
28	RETAINER		4.001	1	320 6499				
29	RETAINER		4.001	1	320 4325				
30	COVER		4.001	1	320 4330				
31	LIMITER		4.001	1	320 9879				
32	SCREW		4.001	3	320 9864				
33	SCREW		4.001	1	320 6412				
34	SCREW		4.001	2	320 6413				
35	SCREW		4.001	1	320 6414				
36	SCREW		4.001	1	320 6415				
37	SCREW		4.001	4	320 6416				
38	SCREW		4.001	4	320 7745				
39	NUT		4.001	1	320 6802				
40	NUT		4.001	1	320 6417				
41	LINK		4.001	1	320 6812				
42	LINK		4.001	1	320 4337				
43	GASKET		4.001	1	320 9190				
44	BALL ASSY.		4.001	1	448 6560				
45	WASHER		4.001	1	320 6420				
46	PIN		4.001	1	320 6421				
47	PISTON		4.001	1	320 8532				
48	GROMMET		4.001	1	320 9867				
49	THERMOSTAT		4.001	1	320 9868				
50	CAM (Inner)		4.001	1	320 9869				
51	CAM (Outer)		4.001	1	320 9870				
52	DASHPOT ASSY.		4.001	1	320 4334				
53	MAJOR REPAIR KIT		4.001	1	448 6585				

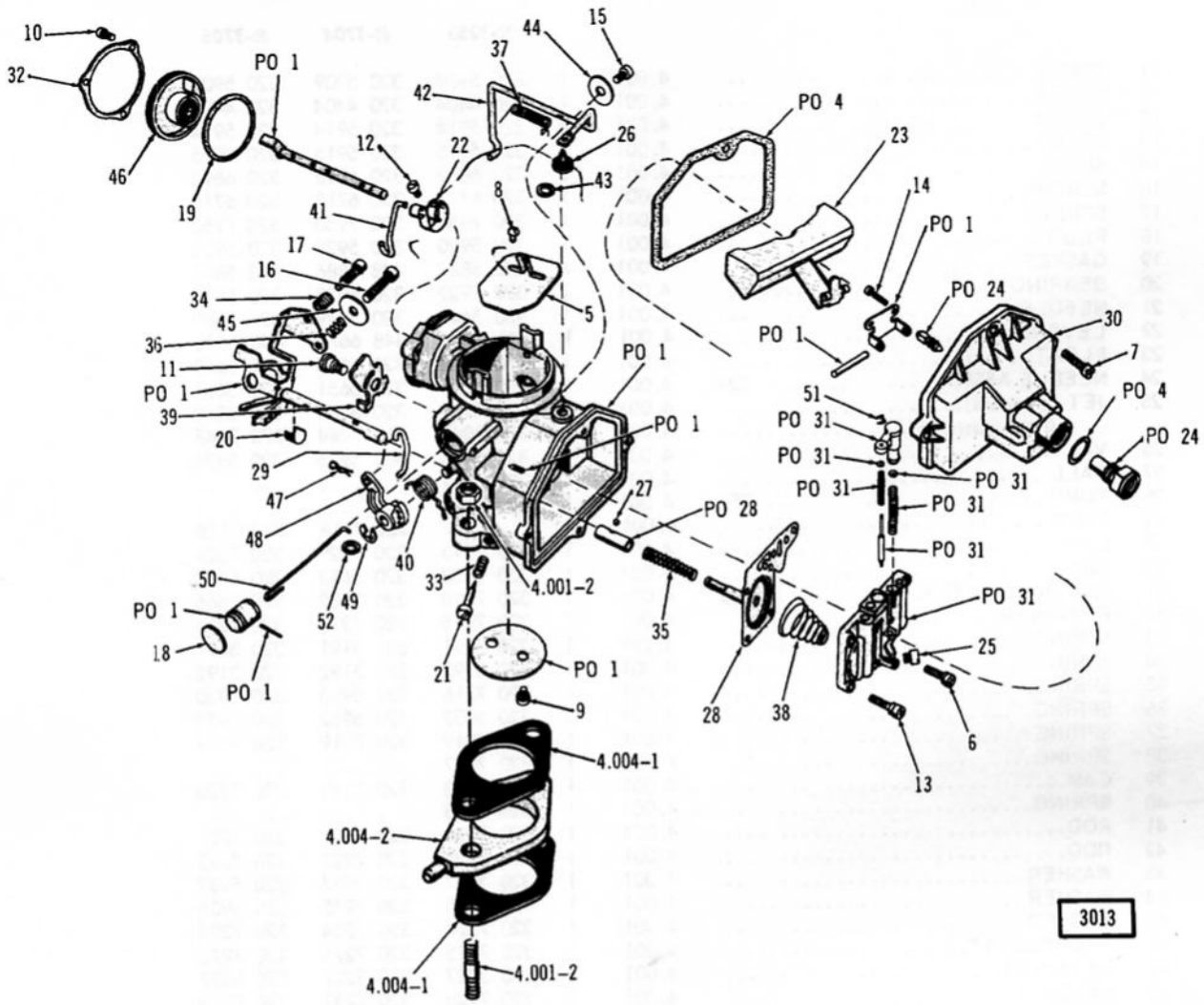

CARBURETOR

KEY NO.	DESCRIPTION	PAKS CODE	GROUP NO.	PER CAR	PART NO.	PART NO.	PART NO.	PART NO.	PART NO.
					R-3253	*R-3704*	*R-3705*		
1	CARBURETOR	230	4.001	1	318 0999	318 6502	318 6501		
2	MAJOR REPAIR KIT	246	4.001	1	320 6994	320 9953	320 9953		
3	MINOR REPAIR KIT	231	4.001	1	320 6995	320 9957	320 9957		
4	GASKET SET	245	4.001	1	320 6996	320 6996	320 6996		
5	PLATE		4.001	1	320 7193	320 7193	320 7193		
6	SCREW		4.001	1	320 3107	320 3107	320 3107		
7	SCREW		4.001	4	320 3108	320 3108	320 3108		
8	SCREW		4.001	2	320 5907	320 5907	320 5907		
9	SCREW		4.001	2	320 5907	320 5907	320 5907		
10	SCREW		4.001	3	320 6312	320 6312	320 6312		

KEY NO.	DESCRIPTION	PAKS CODE	GROUP NO.	PER CAR	PART NO.	PART NO.	PART NO.	PART NO.	PART NO.
					R-3253	R-3704	R-3705		
11	SCREW		4.001	1	320 5909	320 5909	320 5909		
12	SCREW		4.001	1	320 4404	320 4404	320 4404		
13	SCREW		4.001	4	320 5914	320 5914	320 5914		
14	SCREW		4.001	2	320 5915	320 5915	320 5915		
15	SCREW		4.001	2	320 6892	320 6892	320 6892		
16	SCREW		4.001	1	320 6715	320 6715	320 6715		
17	SCREW		4.001	1	320 7950	320 7950	320 7950		
18	PLUG		4.001	1	320 5920	320 5920	320 5920		
19	GASKET		4.001	1	448 5886	448 5886	448 5886		
20	BEARING		4.001	1	320 5922	320 5922	320 5922		
21	NEEDLE		4.001	1	320 5649	320 5649	320 5649		
22	LEVER		4.001	1	448 6676	448 6676	448 6676		
23	FLOAT		4.001	1	320 5650	320 5650	320 5650		
24	NEEDLE ASSY.	224	4.001	1	320 5651	320 5651	320 5651		
25	JET (Standard)		4.001	1	320 3167	320 3166	320 3250		
	(High Altitude)		4.001	1	318 7045	318 7044	320 7043		
26	VALVE		4.001	1	320 5925	320 5925	320 5925		
27	BALL		4.001	1	320 3181	... .	... .		
28	PUMP	250	4.001	1	320 7368	... .	... .		
28	PUMP		4.001	1	... .	320 7118	320 7118		
29	LINK		4.001	1	320 7213	320 7229	320 7229		
30	BOWL		4.001	1	320 5653	320 5653	320 5653		
31	METERING BLOCK	243	4.001	1	320 7228	320 7489	320 7566		
32	RETAINER		4.001	1	320 7215	320 7215	320 7215		
33	SPRING		4.001	1	320 3191	320 3191	320 3191		
34	SPRING		4.001	1	320 3192	320 3192	320 3192		
35	SPRING		4.001	1	320 7216	320 5930	320 5930		
36	SPRING		4.001	1	320 5932	320 5932	320 5932		
37	SPRING		4.001	1	320 7219	320 7219	320 7219		
38	SPRING		4.001	1	320 7217	... .	... .		
39	CAM		4.001	1	320 7220	320 7220	320 7220		
40	SPRING		4.001	1	320 7218	... .	... .		
41	ROD		4.001	1	320 7221	320 7221	320 7221		
42	ROD		4.001	1	320 7222	320 7222	320 7222		
43	WASHER		4.001	1	320 5937	320 5937	320 5937		
44	WASHER		4.001	1	320 5935	320 5935	320 5935		
45	WASHER		4.001	1	320 7224	320 7224	320 7224		
46	THERMOSTAT		4.001	1	320 7225	320 7225	320 7225		
47	RETAINER		4.001	1	320 3227	320 3227	320 3227		
48	LEVER		4.001	1	320 7226	320 7232	320 7232		
49	RETAINER		4.001	1	320 3240	320 3240	320 3240		
50	LINK		4.001	1	320 7212	320 7212	320 7212		
51	RETAINER		4.001	1	320 3190	320 3190	320 3190		
52	WASHER		4.001	1	320 7223	... .	... .		

Printed in U.S.A.

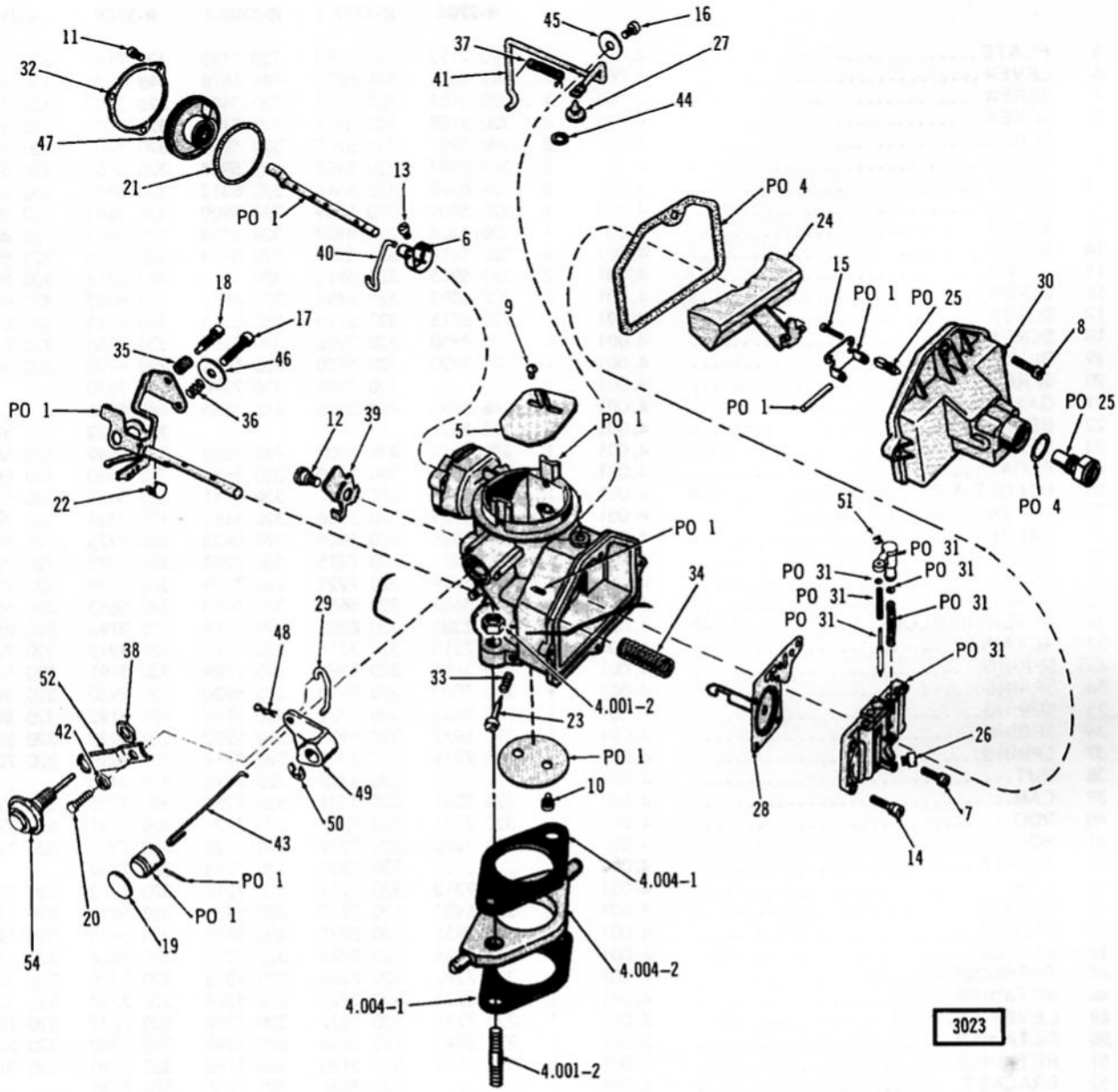

CARBURETOR

KEY NO.	DESCRIPTION	PAKS CODE	GROUP NO.	PER CAR	PART NO.	PART NO.	PART NO.	PART NO.	PART NO.
					R-3706	*R-3707-1*	*R-3708-1*	*R-3709*	*R-3978*
1	CARBURETOR	230	4.001	1	318 6504	318 6506	448 8203	318 6503	319 0588
2	MAJOR REPAIR KIT	246	4.001	1	320 9954	320 9954	320 9954	320 9954	320 9954
3	MINOR REPAIR KIT	247	4.001	1	320 9958	320 9958	320 9958	320 9958	320 9958
4	GASKET SET	245	4.001	1	320 6996	320 6996	320 6996	320 6996	320 6996

Printed in U.S.A.

KEY NO.	DESCRIPTION	PAKS CODE	GROUP NO.	PER CAR	PART NO.	PART NO.	PART NO.	PART NO.	PART NO.
					R-3706	*R-3707-1*	*R-3708-1*	*R-3709*	*R-3978*
5	PLATE		4.001	1	320 7193	320 7193	320 7193	320 7193	320 7193
6	LEVER		4.001	1	448 6676	448 6676	448 6676	448 6676	448 6676
7	SCREW		4.001	1	320 3107	320 3107	320 3107	320 3107	320 3107
8	SCREW		4.001	4	320 3108	320 3108	320 3108	320 3108	320 3108
9	SCREW		4.001	2	320 5907	320 5907	320 5907	320 5907	320 5907
10	SCREW		4.001	2	320 5907	320 5907	320 5907	320 5907	320 5907
11	SCREW		4.001	3	320 6312	320 6312	320 6312	320 6312	320 6312
12	SCREW		4.001	1	320 5909	320 5909	320 5909	320 5909	320 5909
13	SCREW		4.001	1	320 4404	320 4404	320 4404	320 4404	320 4404
14	SCREW		4.001	4	320 5914	320 5914	320 5914	320 5914	320 5914
15	SCREW		4.001	2	320 5915	320 5915	320 5915	320 5915	320 5915
16	SCREW		4.001	2	320 6892	320 6892	320 6892	320 6892	320 6892
17	SCREW		4.001	1	320 6715	320 6715	320 6715	320 6715	320 6715
18	SCREW		4.001	1	320 7950	320 7950	320 7950	320 7950	320 7950
19	PLUG		4.001	1	320 5920	320 5920	320 5920	320 5920	320 5920
20	SCREW		4.001	1	... .	320 7370	320 7370	320 7370	... .
21	GASKET		4.001	1	448 5886	448 5886	448 5886	448 5886	... .
22	BEARING		4.001	1	320 5922	... .	... .	320 5922	320 5922
23	NEEDLE		4.001	1	320 5649	448 5600	448 5600	320 5649	320 5649
24	FLOAT		4.001	1	320 5650	320 5650	320 5650	320 5650	320 5650
25	NEEDLE ASSY.	224	4.001	1	320 5651	320 5651	320 5651	320 5651	320 5651
26	JET (Standard)		4.001	1	320 3165	320 3166	320 3166	320 7369	320 7610
27	VALVE		4.001	1	320 5925	320 5925	320 5925	320 5925	320 5925
28	PUMP		4.001	1	320 7275	320 7275	320 7275	320 7275	320 7275
29	LINK		4.001	1	320 7229	320 7229	320 7229	320 7229	320 7229
30	BOWL		4.001	1	320 5653	320 5653	320 5653	320 5653	320 5653
31	METERING BLOCK	243	4.001	1	320 8385	320 8388	320 8388	320 9794	320 8690
32	RETAINER		4.001	1	320 7215	320 7215	320 7215	320 7215	320 7215
33	SPRING		4.001	1	320 3191	320 8389	320 8389	320 3191	320 3191
34	SPRING		4.001	1	320 5930	320 5930	320 5930	320 5930	320 5930
35	SPRING		4.001	1	320 5932	320 5932	320 3192	320 3192	320 5932
36	SPRING		4.001	1	320 5932	320 5932	320 5932	320 5932	320 5932
37	SPRING		4.001	1	320 7219	320 7219	320 7219	320 7219	320 7219
38	NUT		4.001	1	... .	320 4410	320 4410	320 4410	... .
39	CAM		4.001	1	320 7231	320 7231	320 7231	320 7231	320 7231
40	ROD		4.001	1	320 7221	320 7221	320 7221	320 7221	320 7221
41	ROD		4.001	1	320 7222	320 7222	320 7222	320 7222	320 7222
42	WASHER		4.001	1	... .	320 7234	320 7234	320 7234	... .
43	LINK		4.001	1	320 7212	320 7212	320 7212	320 7212	320 7212
44	WASHER		4.001	1	320 5937	320 5937	320 5937	320 5937	320 5937
45	WASHER		4.001	1	320 5935	320 5935	320 5935	320 5935	320 5935
46	WASHER		4.001	1	320 7224	320 7224	320 7224	320 7224	320 7224
47	THERMOSTAT		4.001	1	320 7276	320 7276	320 7276	320 7276	320 7276
48	RETAINER		4.001	1	320 3227	320 3227	320 3227	320 3227	320 3227
49	LEVER		4.001	1	320 7232	320 7232	320 7232	320 7232	320 7232
50	RETAINER		4.001	1	320 3240	320 3240	320 3240	320 3240	320 3240
51	RETAINER		4.001	1	320 3190	320 3190	320 3190	320 3190	320 3190
52	BRACKET		4.001	1	... .	320 7236	320 7236	320 7236	... .
53	DASHPOT		4.001	1	... .	320 6372	320 6372	320 6372	... .
54	DASHPOT KIT	259	4.001	1	... .	320 7235	320 7235	320 7235	... .

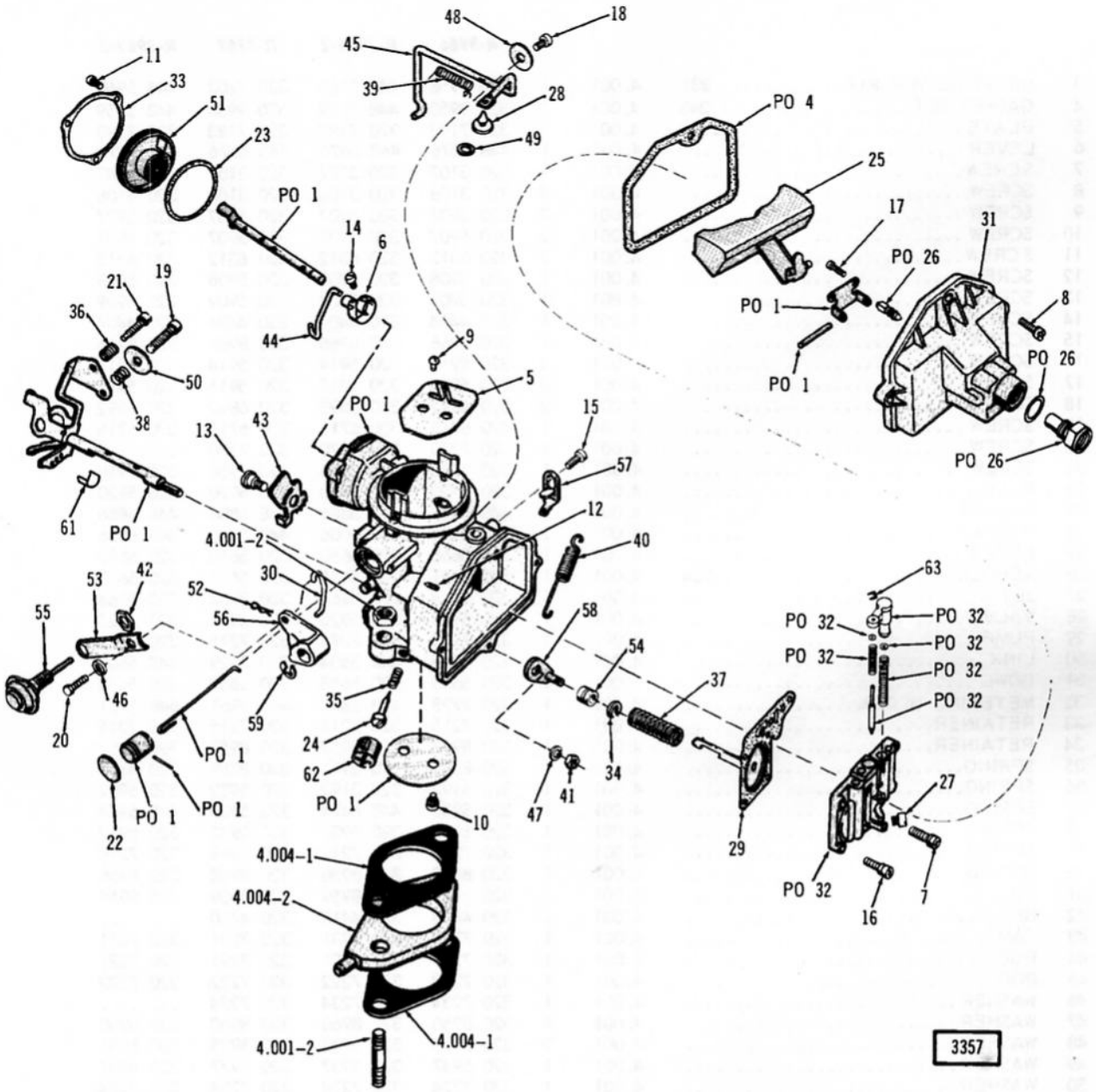

CARBURETOR

KEY NO.	DESCRIPTION	PAKS CODE	GROUP NO.	PER CAR	PART NO.	PART NO.	PART NO.	PART NO.	PART NO.
					R-3966	*R-3966-2*	*R-3967*	*R-3967-2*	
1	CARBURETOR	230	4.001	1	319 0582	319 0582	319 0583	319 0583	
2	MAJOR REPAIR KIT.....	246	4.001	1	320 9954	448 5962	320 7202	448 5962	

KEY NO.	DESCRIPTION	PAKS CODE	GROUP NO.	PER CAR	PART NO.	PART NO.	PART NO.	PART NO.	PART NO.
					R-3966	*R-3966-2*	*R-3967*	*R-3967-2*	
3	MINOR REPAIR KIT	231	4.001	1	320 9958	448 5960	320 7203	448 5960	
4	GASKET SET	245	4.001	1	320 9950	448 5959	320 9950	448 5959	
5	PLATE		4.001	1	320 7193	320 7193	320 7193	320 7193	
6	LEVER		4.001	1	448 6676	448 6676	448 6676	448 6676	
7	SCREW		4.001	1	320 3107	320 3107	320 3107	320 3107	
8	SCREW		4.001	4	320 3108	320 3108	320 3108	320 3108	
9	SCREW		4.001	2	320 5907	320 5907	320 5907	320 5907	
10	SCREW		4.001	2	320 5907	320 5907	320 5907	320 5907	
11	SCREW		4.001	3	320 6312	320 6312	320 6312	320 6312	
12	SCREW		4.001	1	320 5908	320 5908	320 5908	320 5908	
13	SCREW		4.001	1	320 5909	320 5909	320 5909	320 5909	
14	SCREW		4.001	1	320 4404	320 4404	320 4404	320 4404	
15	SCREW		4.001	1	320 8966	320 8966	320 8966	320 8966	
16	SCREW		4.001	4	320 5914	320 5914	320 5914	320 5914	
17	SCREW		4.001	2	320 5915	320 5915	320 5915	320 5915	
18	SCREW		4.001	2	320 6892	320 6892	320 6892	320 6892	
19	SCREW		4.001	1	320 6715	320 6715	320 6715	320 6715	
20	SCREW		4.001	1	320 7370	320 7370	320 7370	... .	
21	SCREW		4.001	1	320 7950	320 7950	320 7950	320 7950	
22	PLUG		4.001	1	320 5920	320 5920	320 5920	320 5920	
23	GASKET		4.001	1	448 5886	448 5886	448 5886	448 5886	
24	NEEDLE		4.001	1	448 5600	448 6086	448 5600	448 6086	
25	FLOAT		4.001	1	320 5650	320 5650	320 5650	320 5650	
26	NEEDLE ASSY.	224	4.001	1	320 5651	320 5651	320 5651	320 5651	
27	JET		4.001	1	320 3164	320 3164	320 3164	320 3164	
28	VALVE		4.001	1	320 5925	320 5925	320 5925	320 5925	
29	PUMP		4.001	1	320 7275	320 7275	320 7275	320 7275	
30	LINK		4.001	1	320 7229	448 5504	320 7229	448 5504	
31	BOWL		4.001	1	320 5653	320 5653	320 5653	320 5653	
32	METERING BLOCK		4.001	1	320 9728	448 6845	448 5961	448 5961	
33	RETAINER		4.001	1	320 7215	320 7215	320 7215	320 7215	
34	RETAINER		4.001	1	320 8957	320 8957	320 8957	320 8957	
35	SPRING		4.001	1	320 8389	320 3191	320 8389	320 3191	
36	SPRING		4.001	1	320 3192	320 3192	320 5932	320 5932	
37	SPRING		4.001	1	320 5930	448 6474	320 5930	448 6474	
38	SPRING		4.001	1	320 5932	320 5932	320 5932	320 5932	
39	SPRING		4.001	1	320 7219	320 7219	320 7219	320 7219	
40	SPRING		4.001	1	320 8958	320 8958	320 8958	320 8958	
41	NUT		4.001	1	320 8959	320 8959	320 8959	320 8959	
42	NUT		4.001	1	320 4410	320 4410	320 4410	... .	
43	CAM		4.001	1	320 7231	320 7231	320 7231	320 7231	
44	ROD		4.001	1	320 7221	320 7221	320 7221	320 7221	
45	ROD		4.001	1	320 7222	320 7222	320 7222	320 7222	
46	WASHER		4.001	1	320 7234	320 7234	320 7234	... .	
47	WASHER		4.001	1	320 8960	320 8960	320 8960	320 8960	
48	WASHER		4.001	2	320 5935	320 5935	320 5935	320 5935	
49	WASHER		4.001	1	320 5937	320 5937	320 5937	320 5937	
50	WASHER		4.001	1	320 7224	320 7224	320 7224	320 7224	
51	THERMOSTAT		4.001	1	320 7276	320 7276	320 7276	320 7276	
52	RETAINER		4.001	1	320 3227	320 3227	320 3227	320 3227	
53	BRACKET		4.001	1	320 7236	320 7236	320 7236	... .	
54	COLLAR		4.001	1	320 8961	320 8961	320 8961	320 8961	
55	DASHPOT		4.001	1	320 6372	448 6457	320 6372	448 6457	
56	LEVER		4.001	1	320 7232	448 5506	320 7232	448 5506	
57	BRACKET		4.001	1	320 8962	320 8962	320 8962	320 8962	
58	LEVER		4.001	1	320 8963	320 8963	320 8963	320 8963	
59	RETAINER		4.001	1	320 3240	320 3240	320 3240	320 3240	
60	DASHPOT ASSY.	259	4.001	1	320 7235	... .	320 7235	... .	
61	BEARING		4.001	1	... .	320 5922	... .	320 5922	
62	LIMITER		4.001	1	... .	320 9879	... .	320 9879	
63	RETAINER		4.001	1	320 3190	320 3190	320 3190	320 3190	

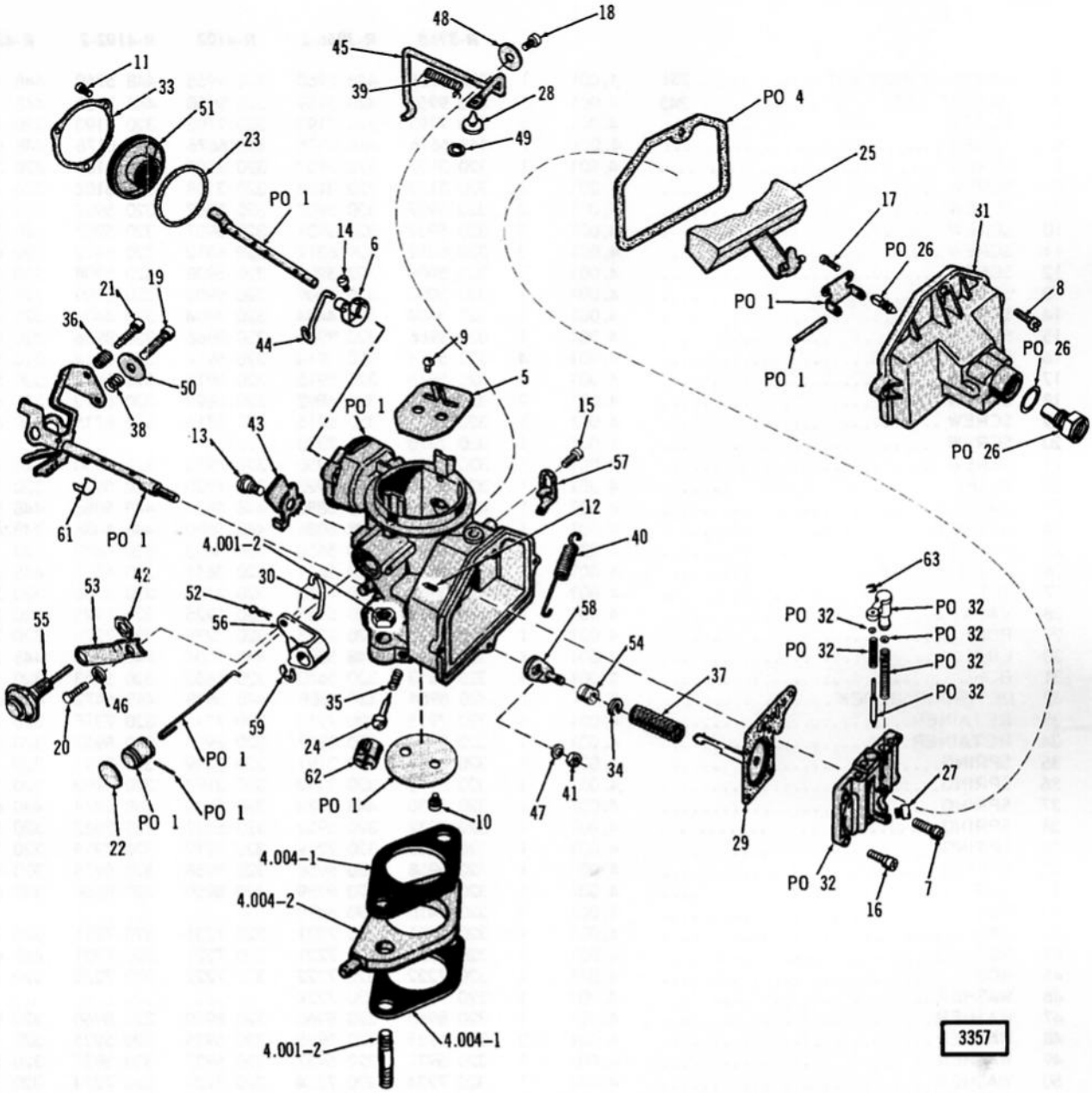

CARBURETOR

KEY NO.	DESCRIPTION	PAKS CODE	GROUP NO.	PER CAR	PART NO.	PART NO.	PART NO.	PART NO.	PART NO.
					R-3968	*R-3968-2*	*R-4102*	*R-4102-2*	*R-4294*
1	CARBURETOR	230	4.001	1	319 0584	319 0584	319 2076	319 2076	319 3893
2	MAJOR REPAIR KIT.....	246	4.001	1	320 9954	448 5962	320 9954	448 5962	448 6726

KEY NO.	DESCRIPTION	PAKS CODE	GROUP NO.	PER CAR	PART NO.	PART NO.	PART NO.	PART NO.	PART NO.
					R-3968	*R-3968-2*	*R-4102*	*R-4102-2*	*R-4294*
3	MINOR REPAIR KIT	231	4.001	1	320 9958	448 5960	320 9958	448 5960	448 6727
4	GASKET SET	245	4.001	1	320 9950	448 5959	320 9950	448 5959	448 5959
5	PLATE		4.001	1	320 7193	320 7193	320 7193	320 7193	320 7193
6	LEVER		4.001	1	448 6676	448 6676	448 6676	448 6676	448 6676
7	SCREW		4.001	1	320 3107	320 3107	320 3107	320 3107	320 3107
8	SCREW		4.001	4	320 3108	320 3108	320 3108	320 3108	320 3108
9	SCREW		4.001	2	320 5907	320 5907	320 5907	320 5907	320 5907
10	SCREW		4.001	2	320 5907	320 5907	320 5907	320 5907	320 5907
11	SCREW		4.001	3	320 6312	320 6312	320 6312	320 6312	320 6312
12	SCREW		4.001	1	320 5908	320 5908	320 5908	320 5908	320 5908
13	SCREW		4.001	1	320 5909	320 5909	320 5909	320 5909	320 5909
14	SCREW		4.001	1	320 4404	320 4404	320 4404	320 4404	320 4404
15	SCREW		4.001	1	320 8966	320 8966	320 8966	320 8966	320 8966
16	SCREW		4.001	4	320 5914	320 5914	320 5914	320 5914	320 5914
17	SCREW		4.001	2	320 5915	320 5915	320 5915	320 5915	320 5915
18	SCREW		4.001	2	320 6892	320 6892	320 6892	320 6892	320 6892
19	SCREW		4.001	1	320 6715	320 6715	320 6715	320 6715	320 6715
20	SCREW		4.001	1	320 7370	320 7370	... .	... .	... .
21	SCREW		4.001	1	320 7950	320 7950	320 7950	320 7950	320 7950
22	PLUG		4.001	1	320 5920	320 5920	320 5920	320 5920	320 5920
23	GASKET		4.001	1	448 5886	448 5886	448 5886	448 5886	448 5886
24	NEEDLE		4.001	1	448 5600	448 6086	448 5600	448 6086	448 6086
25	FLOAT		4.001	1	320 5650	320 5650	320 5650	320 5650	320 5650
26	NEEDLE ASSY.		4.001	1	320 5651	320 5651	320 5651	320 5651	448 6728
27	JET		4.001	1	320 3166	320 7610	320 3166	320 3166	320 3166
28	VALVE		4.001	1	320 5925	320 5925	320 5925	320 5925	320 5925
29	PUMP		4.001	1	320 7275	320 7275	320 7275	320 7275	320 7275
30	LINK		4.001	1	320 7229	448 5504	448 5504	448 5504	448 5504
31	BOWL		4.001	1	320 5653	320 5653	320 5653	320 5653	320 5653
32	METERING BLOCK		4.001	1	320 8964	320 8388	448 5698	448 6472	448 6472
33	RETAINER		4.001	1	320 7215	320 7215	320 7215	320 7215	320 7215
34	RETAINER		4.001	1	320 8957	320 8957	320 8957	320 8957	320 8957
35	SPRING		4.001	1	320 8389	320 3191	320 8389	320 3191	320 3191
36	SPRING		4.001	1	320 3192	320 3192	320 3192	320 3192	320 3192
37	SPRING		4.001	1	320 5930	448 6474	320 5930	448 6474	448 6729
38	SPRING		4.001	1	320 5932	320 5932	320 5932	320 5932	320 5932
39	SPRING		4.001	1	320 7219	320 7219	320 7219	320 7219	320 7219
40	SPRING		4.001	1	320 8958	320 8958	320 8958	320 8958	320 8958
41	NUT		4.001	1	320 8959	320 8959	320 8959	320 8959	320 8959
42	NUT		4.001	1	320 4410	320 4410	... .	... .	... .
43	CAM		4.001	1	320 7231	320 7231	320 7231	320 7231	320 7231
44	ROD		4.001	1	320 7221	320 7221	320 7221	320 7221	448 6730
45	ROD		4.001	1	320 7222	320 7222	320 7222	320 7222	320 7222
46	WASHER		4.001	1	320 7234	320 7234	... .	... .	... .
47	WASHER		4.001	1	320 8960	320 8960	320 8960	320 8960	320 8960
48	WASHER		4.001	2	320 5935	320 5935	320 5935	320 5935	320 5935
49	WASHER		4.001	1	320 5937	320 5937	320 5937	320 5937	320 5937
50	WASHER		4.001	1	320 7224	320 7224	320 7224	320 7224	320 7224
51	THERMOSTAT		4.001	1	320 7276	320 7276	320 7276	320 7276	320 7276
52	RETAINER		4.001	1	320 3227	320 3227	320 3227	320 3227	320 3227
53	BRACKET		4.001	1	320 7236	320 7236	... .	... .	... .
54	COLLAR		4.001	1	320 8961	320 8961	320 8961	320 8961	320 8961
55	DASHPOT		4.001	1	320 6372	448 6457	... .	... .	... .
56	LEVER		4.001	1	320 7232	320 7232	448 5506	448 5506	448 5506
57	BRACKET		4.001	1	320 8962	320 8962	320 8962	320 8962	320 8962
58	LEVER		4.001	1	320 8963	320 8963	320 8963	320 8963	320 8963
59	RETAINER		4.001	1	320 3240	320 3240	320 3240	320 3240	320 3240
60	DASHPOT ASSY.	259	4.001	1	320 7235	... .	... .	... .	... .
61	BEARING		4.001	1	... .	320 5922	320 5922	320 5922	320 5922
62	LIMITER		4.001	1	... .	320 9879	... .	320 9879	320 9879
63	RETAINER		4.001	1	320 3190	320 3190	320 3190	320 3190	320 3190

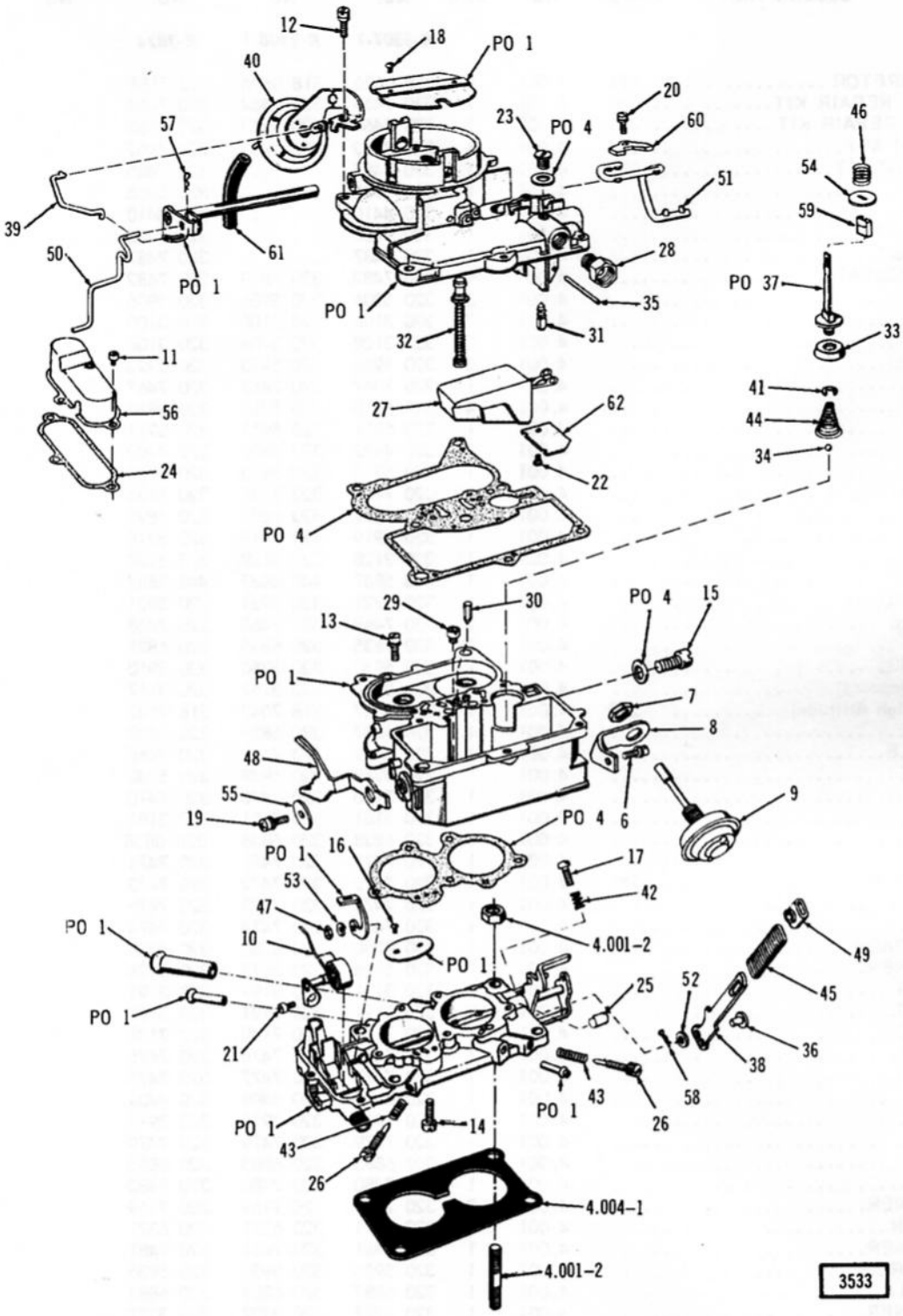
12
18
PO 1
40
20
23
PO 4
60
46
57
54
51
39
59
50
61
28
PO 37
PO 1
PO 1
35
32
31
33
11
41
27
62
56
44
22
34
24
PO 4
29
30
PO 4
15
13
PO 1
7
8
48
55
9
19
PO 4
6
PO 1
16
17
53
42
47
4.001-2
PO 1
10
PO 1
PO 1
25
52
49
45
21
36
38
43
58
PO 1
26
PO 1
14
43
26
4.004-1
4.001-2
3533

CARBURETOR

KEY NO.	DESCRIPTION	PAKS CODE	GROUP NO.	PER CAR	PART NO.	PART NO.	PART NO.	PART NO.	PART NO.
					R-3307-1	R-3308-1	R-3824		
1	CARBURETOR	239	4.001	1	318 0626	318 0626	318 7185		
2	MAJOR REPAIR KIT	258	4.001	1	320 7464	320 7464	320 7464		
3	MINOR REPAIR KIT	253	4.001	1	320 7463	320 7463	320 7463		
4	GASKET SET	264	4.001	1	320 7462	320 7462	320 7462		
5	DASHPOT KIT	229	4.001	1	320 7485	... .	320 7485		
6	SCREW		4.001	1	320 5905	... .	320 5905		
7	NUT		4.001	1	320 4410	... .	320 4410		
8	BRACKET		4.001	1	320 7486	... .	320 7486		
9	DASHPOT		4.001	1	320 7487	... .	320 7487		
10	THERMOSTAT		4.001	1	320 7482	320 7819	320 7482		
11	SCREW		4.001	3	320 5906	320 5906	320 5906		
12	SCREW		4.001	7	320 3108	320 3108	320 3108		
13	SCREW		4.001	2	320 3108	320 3108	320 3108		
14	SCREW		4.001	3	320 5923	320 5923	320 5923		
15	SCREW		4.001	1	320 7467	320 7467	320 7467		
16	SCREW		4.001	4	320 5910	320 5910	320 5910		
17	SCREW		4.001	1	320 5911	320 5911	320 5911		
18	SCREW		4.001	2	320 4402	320 4402	320 4402		
19	SCREW		4.001	1	320 5913	320 5913	320 5913		
20	SCREW		4.001	1	320 7135	320 7135	320 7135		
21	SCREW		4.001	1	320 6892	320 6892	320 6892		
22	SCREW		4.001	1	320 5919	320 5919	320 5919		
23	SCREW		4.001	1	320 3128	320 3128	320 3128		
24	GASKET		4.001	1	448 5887	448 5887	448 5887		
25	BEARING		4.001	1	320 5921	320 5921	320 5921		
26	NEEDLE		4.001	2	320 7468	320 7468	320 7468		
27	FLOAT		4.001	1	320 6835	320 6835	320 6835		
28	FITTING		4.001	1	320 5950	320 5950	320 5950		
29	JET (Standard)		4.001	2	320 3167	320 3167	320 3167		
	(High Altitude)	237	4.001	1	318 7047	318 7047	318 7047		
30	VALVE		4.001	1	320 6837	320 6837	320 6837		
31	NEEDLE		4.001	1	320 7469	320 7469	320 7469		
32	VALVE		4.001	1	320 5948	320 5948	320 5948		
33	CUP		4.001	1	320 7470	320 7470	320 7470		
34	VALVE		4.001	1	320 3181	320 3181	320 3181		
35	PIN		4.001	1	320 6838	320 6838	320 6838		
36	PIN		4.001	1	320 7471	320 7471	320 7471		
37	PUMP ASSY.	255	4.001	1	320 7472	320 7472	320 7472		
38	LINK		4.001	1	320 7473	320 7473	320 7473		
39	LINK		4.001	1	320 7474	320 7474	320 7474		
40	DIAPHRAGM		4.001	1	320 8380	320 8380	320 8380		
41	RETAINER		4.001	1	320 5928	320 5928	320 5928		
42	SPRING		4.001	1	320 3191	320 3191	320 3191		
43	SPRING		4.001	2	320 3191	320 3191	320 3191		
44	SPRING		4.001	1	320 7148	320 7148	320 7148		
45	SPRING		4.001	1	320 7476	320 7476	320 7476		
46	SPRING		4.001	1	320 7477	320 7477	320 7477		
47	NUT		4.001	1	320 4409	320 4409	320 4409		
48	CAM		4.001	1	320 7915	320 7915	320 7915		
49	GUIDE		4.001	1	320 7479	320 7479	320 7479		
50	ROD		4.001	1	320 6885	320 6885	320 6885		
51	ROD		4.001	1	320 7480	320 7480	320 7480		
52	RETAINER		4.001	2	320 7169	320 7169	320 7169		
53	WASHER		4.001	1	320 6371	320 6371	320 6371		
54	RETAINER		4.001	1	320 7481	320 7481	320 7481		
55	WASHER		4.001	1	320 5935	320 5935	320 5935		
56	COVER		4.001	1	320 6887	320 6887	320 6887		
57	RETAINER		4.001	1	320 3227	320 3227	320 3227		
58	RETAINER		4.001	1	320 3227	320 3227	320 3227		
59	LOCATOR		4.001	1	320 7176	320 7176	320 7176		
60	CLAMP		4.001	1	320 7136	320 7136	320 7136		
61	HOSE		4.001	1	320 7484	320 7484	320 7484		
62	BAFFLE		4.001	1	320 6888	320 6888	320 6888		

Printed in U.S.A.

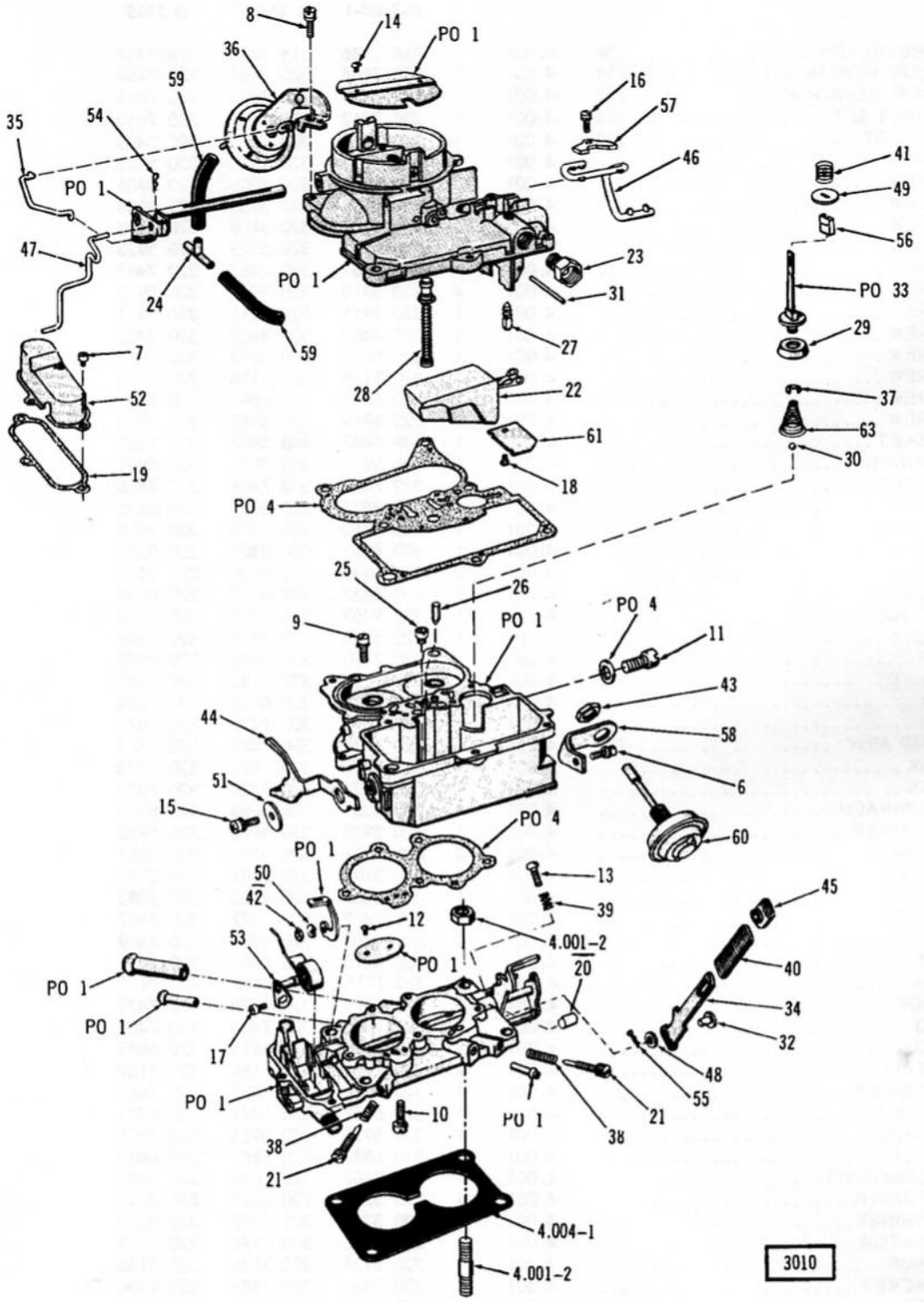
8
14
PO 1
36
59
16
57
35
54
46
41
49
PO 1
56
47
23
PO 33
PO 1
31
24
29
59
27
7
28
22
37
52
61
63
18
30
19
PO 4
25
26
PO 4
9
PO 1
11
43
44
58
51
6
15
PO 4
60
PO 1
13
50
45
42
39
12
4.001-2
53
PO 1
20
40
PO 1
34
PO 1
32
17
48
55
PO 1
10
PO 1
38
21
38
21
4.004-1
4.001-2
3010

CARBURETOR

KEY NO.	DESCRIPTION	PAKS CODE	GROUP NO.	PER CAR	PART NO.	PART NO.	PART NO.	PART NO.	PART NO.
					R-3483-1	*R-3484-1*	*R-3905*		
1	CARBURETOR	239	4.001	1	318 2486	318 2483	318 9707		
2	MAJOR REPAIR KIT	258	4.001	1	320 7464	320 7464	320 7464		
3	MINOR REPAIR KIT	253	4.001	1	320 7463	320 7463	320 7463		
4	GASKET SET	264	4.001	1	320 7462	320 7462	320 7462		
5	DASHPOT KIT	229	4.001	1	320 7485	320 7485	320 7485		
6	SCREW		4.001	1	320 5905	320 5905	320 5905		
7	SCREW		4.001	3	320 5906	320 5906	320 5906		
8	SCREW		4.001	7	320 3108	320 3108	320 3108		
9	SCREW		4.001	2	320 3108	320 3108	320 3108		
10	SCREW		4.001	3	320 5923	320 5923	320 5923		
11	SCREW		4.001	1	320 7467	320 7467	320 7467		
12	SCREW		4.001	4	320 5910	320 5910	320 5910		
13	SCREW		4.001	1	320 5911	320 5911	320 5911		
14	SCREW		4.001	2	320 4402	320 4402	320 4402		
15	SCREW		4.001	1	320 5913	320 5913	320 5913		
16	SCREW		4.001	1	320 7135	320 7135	320 7135		
17	SCREW		4.001	1	320 6892	320 6892	320 6892		
18	SCREW		4.001	1	320 5919	320 5919	320 5919		
19	GASKET		4.001	1	448 5887	448 5887	448 5887		
20	BEARING		4.001	1	320 5921	320 5921	320 5921		
21	NEEDLE		4.001	2	320 7468	320 7468	320 7468		
22	FLOAT		4.001	1	320 6835	320 6835	320 6835		
23	FITTING		4.001	1	320 5950	320 5950	320 5950		
24	TEE		4.001	1	320 8381	320 8381	320 8381		
25	JET		4.001	2	320 6836	320 6836	320 3251		
26	VALVE		4.001	1	320 6837	320 6837	320 6837		
27	NEEDLE		4.001	1	320 7469	320 7469	320 7469		
28	VALVE		4.001	1	320 5948	320 5948	320 5948		
29	CUP		4.001	1	320 7470	320 7470	320 7470		
30	VALVE		4.001	1	320 3181	320 3181	320 3181		
31	PIN		4.001	1	320 6838	320 6838	320 6838		
32	PIN		4.001	1	320 7471	320 7471	320 7471		
33	PUMP ASSY.	255	4.001	1	320 7472	320 7472	320 7472		
34	LINK		4.001	1	320 7473	320 7473	320 7473		
35	LINK		4.001	1	320 7474	320 7474	320 7474		
36	DIAPHRAGM		4.001	1	320 8380	320 8380	320 8380		
37	RETAINER		4.001	1	320 5928	320 5928	320 5928		
38	SPRING		4.001	2	320 3191	320 3191	320 3191		
39	SPRING		4.001	1	320 3191	320 3191	320 3191		
40	SPRING		4.001	1	320 8382	320 8382	320 8382		
41	SPRING		4.001	1	320 7477	320 7477	320 7477		
42	NUT		4.001	1	320 4409	320 4409	320 4409		
43	NUT		4.001	1	320 4410	320 4410	320 4410		
44	CAM		4.001	1	320 7915	320 7646	320 7915		
45	GUIDE		4.001	1	320 7479	320 7479	320 7479		
46	ROD		4.001	1	320 7480	320 7480	320 7480		
47	ROD		4.001	1	320 6885	320 6885	320 6885		
48	RETAINER		4.001	2	320 7169	320 7169	320 7169		
49	RETAINER		4.001	1	320 7481	320 7481	320 7481		
50	WASHER		4.001	1	320 6371	320 6371	320 6371		
51	WASHER		4.001	1	320 5935	320 5935	320 5935		
52	COVER		4.001	1	320 6887	320 6887	320 6887		
53	THERMOSTAT		4.001	1	320 7482	320 7819	320 7482		
54	RETAINER		4.001	1	320 3227	320 3227	320 3227		
55	RETAINER		4.001	1	320 3227	320 3227	320 3227		
56	LOCATOR		4.001	1	320 7176	320 7176	320 7176		
57	CLAMP		4.001	1	320 7136	320 7136	320 7136		
58	BRACKET		4.001	1	320 7486	320 7486	320 7486		
59	HOSE		4.001	2	320 8383	320 8383	320 8383		
60	DASHPOT		4.001	1	320 7487	320 7487	320 7487		
61	BAFFLE		4.001	1	320 6888	320 6888	320 6888		
63	SPRING		4.001	1	320 7148	320 7148	320 7148		

Printed in U.S.A.

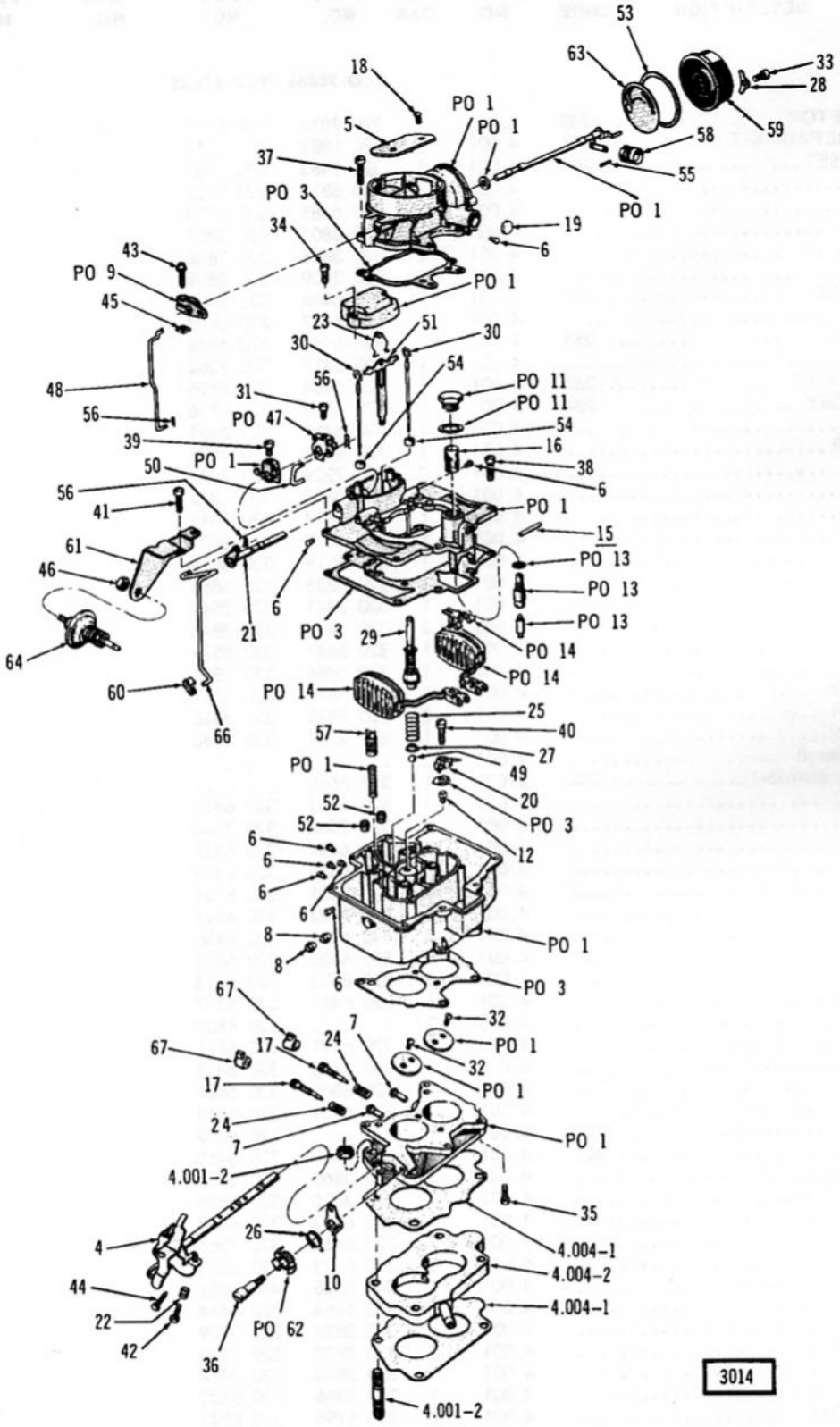

3014

CARBURETOR

KEY NO.	DESCRIPTION	PAKS CODE	GROUP NO.	PER CAR	PART NO.	PART NO.	PART NO.	PART NO.	PART NO.
					WCD-3888S	*WCD-4365S*			
1	CARBURETOR	240	4.001	1	320 7016	318 8967			
2	MAJOR REPAIR KIT	238	4.001	1	320 5882	320 8517			
3	GASKET SET	265	4.001	1	320 5883	320 5883			
4	SHAFT		4.001	1	320 6816	320 8525			
5	PLATE		4.001	1	320 6485	320 8524			
6	PLUG		4.001	5	320 3805	320 3805			
7	PLUG		4.001	2	320 3806	320 3806			
8	PLUG		4.001	2	320 3809	320 3809			
9	LEVER ASSY.	244	4.001	1	320 6446	320 6446			
10	LEVER		4.001	1	320 6447	320 6447			
11	NUT ASSY.	254	4.001	1	320 6448	320 6448			
12	NEEDLE		4.001	1	320 6817	320 7262			
13	NEEDLE ASSY.	232	4.001	1	320 5884	320 8526			
14	FLOAT ASSY.	234	4.001	1	320 6136	320 6136			
15	PIN		4.001	1	320 6451	320 6451			
16	STRAINER		4.001	1	320 3837	320 3837			
17	SCREW		4.001	2	320 2229	320 8527			
18	SCREW		4.001	2	320 3812	320 3812			
19	PLUG		4.001	1	320 3814	320 3814			
20	HOUSING		4.001	1	320 6818	320 8528			
21	LEVER		4.001	1	320 6819	320 6819			
22	SPRING		4.001	1	320 5885	320 5885			
23	SPRING		4.001	1	320 3841	320 3841			
24	SPRING		4.001	2	320 3844	320 3844			
25	SPRING		4.001	1	320 3847	320 8529			
26	SPRING		4.001	1	320 5886	320 3854			
27	RETAINER		4.001	1	320 3817	320 3817			
28	RETAINER		4.001	2	320 3818	320 3818			
29	PLUNGER		4.001	1	320 2237	320 8530			
30	ROD (Standard)		4.001	2	... .	... .			
	(High Altitude)	241	4.001	1	317 8668	... .			
31	SCREW		4.001	1	320 6452	320 6452			
32	SCREW		4.001	4	320 7264	320 7264			
33	SCREW		4.001	2	320 6431	320 6431			
34	SCREW		4.001	2	320 6455	320 6455			
35	SCREW		4.001	4	320 8531	320 8531			
36	SCREW		4.001	1	320 6822	320 6822			
37	SCREW		4.001	4	320 6456	320 6456			
38	SCREW		4.001	6	320 6432	320 6432			
39	SCREW		4.001	1	320 8523	320 8523			
40	SCREW		4.001	1	320 6457	320 6457			
41	SCREW		4.001	2	... .	320 6807			
42	SCREW		4.001	1	320 6821	320 6821			
43	SCREW		4.001	1	320 6458	320 6458			
44	SCREW		4.001	1	320 6806	320 6806			
45	NUT		4.001	1	320 6459	320 6459			
46	NUT		4.001	1	... .	320 6802			
47	ARM ASSY.	251	4.001	1	320 6460	320 6460			
48	ROD		4.001	1	320 3860	320 3860			
49	BALL		4.001	1	320 3825	320 3825			
50	LINK		4.001	1	320 6463	320 6463			
51	LINK		4.001	1	320 6462	320 7266			
52	JET		4.001	2	320 6823	320 6823			
53	GASKET		4.001	1	448 5888	448 5888			
54	DISK		4.001	2	320 6464	320 6464			
55	PIN		4.001	1	320 3829	320 3829			
56	RETAINER		4.001	3	320 3830	320 3830			
57	PISTON		4.001	1	320 3864	320 3864			
58	PISTON		4.001	1	320 3866	320 8532			
59	THERMOSTAT		4.001	1	320 6796	320 8533			

KEY NO.	DESCRIPTION	PAKS CODE	GROUP NO.	PER CAR	PART NO.	PART NO.	PART NO.	PART NO.	PART NO.
					WCD-3888S	WCD-4365S			
60	RETAINER		4.001	1	320 3822	320 3822			
61	BRACKET		4.001	1	... .	320 8534			
62	CAM ASSY.	226	4.001	1	320 6824	320 7268			
63	PLATE		4.001	1	320 6466	320 6466			
64	DASHPOT	260	4.001	1	... .	320 4334			
65	DASHPOT KIT	260	4.001	1	... .	320 5126			
66	ROD		4.001	1	... .	... .			

Printed in U.S.A.

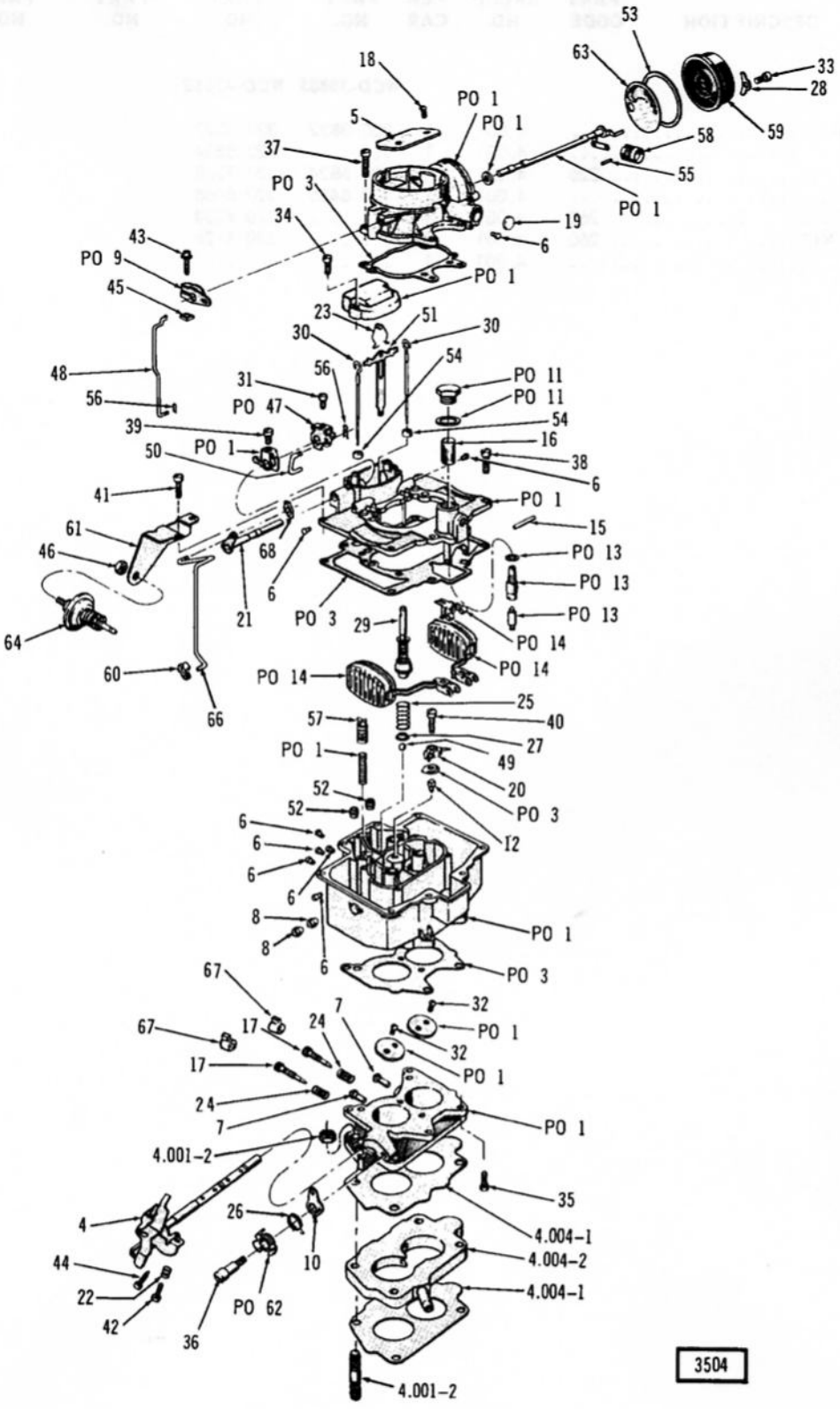

CARBURETOR

Printed in U.S.A.

KEY NO.	DESCRIPTION	PAKS CODE	GROUP NO.	PER CAR	PART NO.	PART NO.	PART NO.	PART NO.	PART NO.
					WCD-4410S	WCD-4537S	WCD-4667S	WCD-4668S	
1	CARBURETOR	240	4.001	1	319 0892	319 1302	319 4503	319 4504	
2	MAJOR REPAIR KIT	238	4.001	1	320 8517	320 8517	320 8517	320 8517	
3	GASKET SET	265	4.001	1	320 5883	320 5883	320 5883	320 5883	
4	SHAFT		4.001	1	320 9766	320 9766	448 7160	448 7160	
5	PLATE		4.001	1	320 8524	320 8524	320 8524	320 8524	
6	PLUG		4.001	5	320 3805	320 3805	320 3805	320 3805	
7	PLUG		4.001	2	320 3806	320 3806	320 3806	320 3806	
8	PLUG		4.001	2	320 3809	320 3809	320 3809	320 3809	
9	LEVER ASSY.	244	4.001	1	320 6446	320 6446	320 6446	320 6446	
10	LEVER		4.001	1	320 6447	320 6447	320 6447	320 6447	
11	NUT ASSY.	254	4.001	1	320 6448	320 6448	320 6448	320 6448	
12	NEEDLE		4.001	1	320 9767	320 9767	320 9767	320 9767	
13	NEEDLE ASSY.	232	4.001	1	320 8526	320 8526	320 8526	320 8526	
14	FLOAT ASSY.	234	4.001	1	320 6136	320 6136	320 6136	320 6136	
15	PIN		4.001	1	320 6451	320 6451	320 6451	320 6451	
16	STRAINER		4.001	1	320 3837	320 3837	320 3837	320 3837	
17	SCREW		4.001	2	320 8527	320 8527	448 6605	448 6605	
18	SCREW		4.001	2	320 7745	320 7745	320 7745	320 7745	
19	PLUG		4.001	1	320 3814	320 3814	320 3814	320 3814	
20	HOUSING		4.001	1	320 9768	320 9768	320 9768	320 9768	
21	LEVER		4.001	1	320 9769	320 9769	320 9769	320 9769	
22	SPRING		4.001	1	320 5885	320 5885	320 5885	320 5885	
23	SPRING		4.001	1	320 3841	320 3841	320 3841	320 3841	
24	SPRING		4.001	2	320 3844	320 3844	448 6606	448 6606	
25	SPRING		4.001	1	320 8529	320 8529	320 8529	320 8529	
26	SPRING		4.001	1	320 3854	320 3854	320 3854	320 3854	
27	RETAINER		4.001	1	320 3817	320 3817	320 3817	320 3817	
28	RETAINER		4.001	2	320 3818	320 3818	320 3818	320 3818	
29	PLUNGER		4.001	1	320 8530	320 8530	320 8530	320 8530	
30	ROD (Standard)		4.001	2	... .	... .	... .	... .	
31	SCREW		4.001	1	320 8523	320 8523	320 8523	320 8523	
32	SCREW		4.001	4	320 7264	320 7264	320 7264	320 7264	
33	SCREW		4.001	2	320 6431	320 6431	320 6431	320 6431	
34	SCREW		4.001	2	320 6455	320 6455	320 6455	320 6455	
35	SCREW		4.001	4	320 8531	320 8531	320 8531	320 8531	
36	SCREW		4.001	1	320 6822	320 6822	320 6822	320 6822	
37	SCREW		4.001	4	320 6456	320 6456	320 6456	320 6456	
38	SCREW		4.001	6	320 6432	320 6432	320 6432	320 6432	
39	SCREW		4.001	1	320 8523	320 8523	320 8523	320 8523	
40	SCREW		4.001	1	320 6457	320 6457	320 6457	320 6457	
41	SCREW		4.001	2	320 6807	320 6807	320 6807	320 6807	
42	SCREW		4.001	1	320 6821	320 6821	320 6821	320 6821	
43	SCREW		4.001	1	320 6458	320 6458	320 6458	320 6458	
44	SCREW		4.001	1	320 6806	320 6806	320 6806	320 6806	
45	NUT		4.001	1	320 6459	320 6459	320 6459	320 6459	
46	NUT		4.001	1	320 6802	320 6802	320 6802	320 6802	
47	ARM ASSY.	251	4.001	1	320 6460	320 6460	320 6460	320 6460	
48	ROD		4.001	1	320 3860	320 3860	320 3860	320 3860	
49	BALL		4.001	1	320 3825	320 3825	320 3825	320 3825	
50	LINK		4.001	1	320 6463	320 6463	320 6463	320 6463	
51	LINK		4.001	1	320 7266	320 7266	320 7266	320 7266	
52	JET		4.001	2	320 7756	320 7756	320 7756	320 7756	
53	GASKET		4.001	1	448 5888	448 5888	448 5888	448 5888	
54	DISK		4.001	2	320 9770	320 9770	320 9770	320 9770	
55	PIN		4.001	1	320 6421	320 6421	448 6607	448 6607	
56	RETAINER		4.001	2	320 3830	320 3830	320 3830	320 3830	
57	PISTON		4.001	1	320 3864	320 3864	320 3864	320 3864	
58	PISTON		4.001	1	320 8532	320 8532	320 6422	320 6422	
59	THERMOSTAT		4.001	1	448 5652	448 5652	448 5652	448 5652	
60	RETAINER		4.001	1	320 3822	320 3822	320 3822	320 3822	

Printed in U.S.A.

KEY NO.	DESCRIPTION	PAKS CODE	GROUP NO.	PER CAR	PART NO.	PART NO.	PART NO.	PART NO.	PART NO.
					WCD-4410S	*WCD-4537S*	*WCD-4667S*	*WCD-4668S*	
61	BRACKET		4.001	1	320 9773	320 9773	320 9773	320 9773	
62	CAM ASSY.	226	4.001	1	320 6465	320 6465	320 6465	320 6465	
63	PLATE		4.001	1	448 7303	448 7303	448 7303	448 7303	
64	DASHPOT	260	4.001	1	320 4334	320 4334	320 4334	320 4334	
65	DASHPOT KIT	260	4.001	1	... .	... .	... .	... .	
66	ROD		4.001	1	448 6912	448 6912	448 6912	448 6912	
67	LIMITER		4.001	2	... .	... .	320 9879	320 9879	
68	SPRING		4.001	1	320 9772	320 9772	320 9772	320 9772	

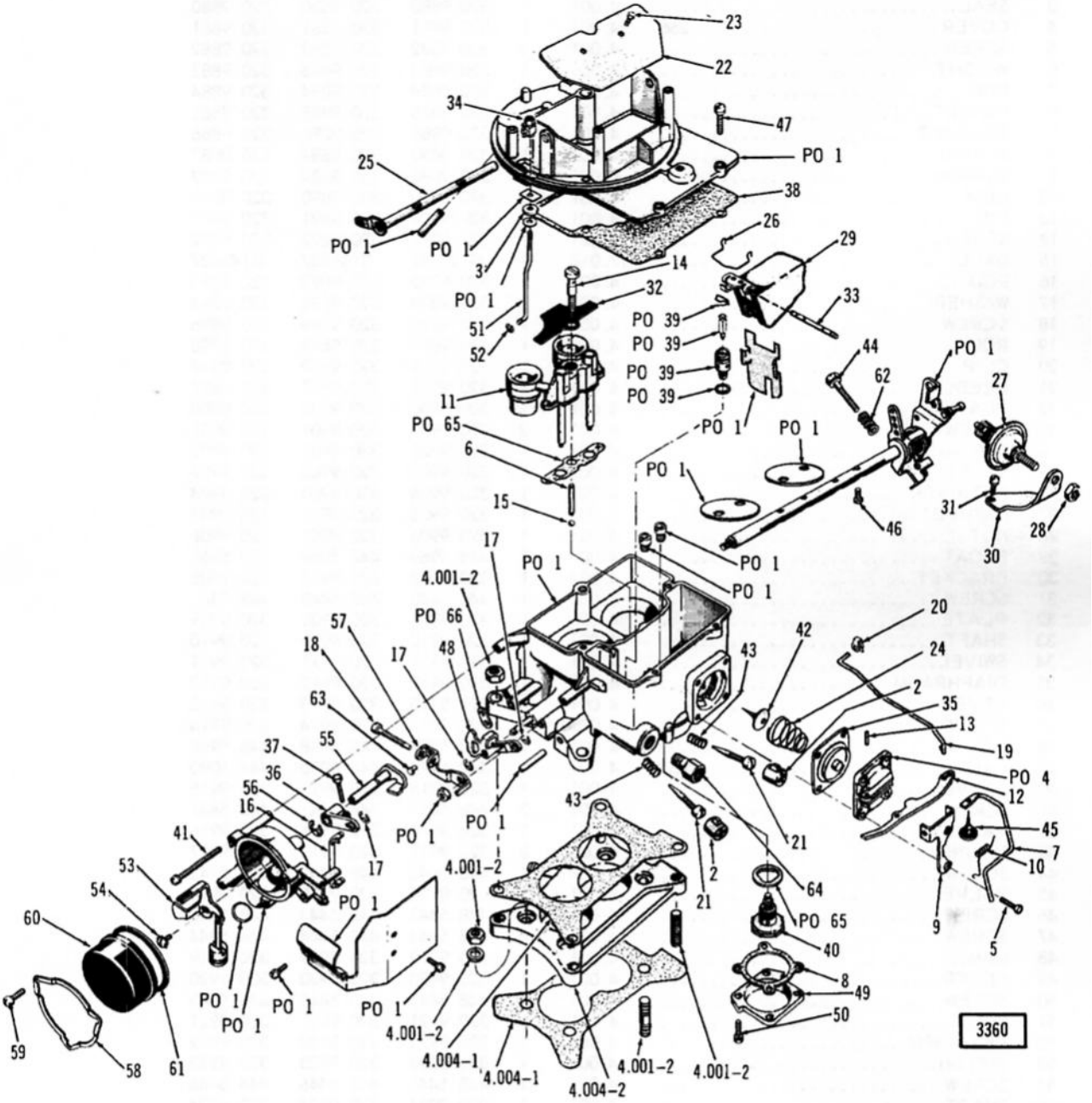

CARBURETOR

Printed in U.S.A.

FUEL - EXHAUST

KEY NO.	DESCRIPTION	PAKS CODE	GROUP NO.	PER CAR	PART NO.	PART NO.	PART NO.	PART NO.	PART NO.
					8HM2	8HA2	8ZA2		
1	CARBURETOR	274	4.001	1	448 6223	319 1867	448 6225		
2	LIMITER		4.001	2	320 9879	320 9879	320 9879		
3	SEAL		4.001	1	320 9880	320 9880	320 9880		
4	COVER	266	4.001	1	320 9881	320 9881	320 9881		
5	SCREW		4.001	4	320 9882	320 9882	320 9882		
6	WEIGHT		4.001	1	320 9883	320 9883	320 9883		
7	ROD		4.001	1	320 9884	320 9884	320 9884		
8	GASKET		4.001	1	320 9885	320 9885	320 9885		
9	BRACKET		4.001	1	320 9886	320 9886	320 9886		
10	SPRING		4.001	1	320 9887	320 9887	320 9887		
11	SUPPORT		4.001	1	320 9888	320 9889	320 9889		
12	LINK		4.001	1	320 9890	320 9890	320 9890		
13	PIN		4.001	1	320 9891	320 9891	320 9891		
14	SCREW		4.001	1	320 9892	320 9892	320 9892		
15	BALL		17.018	1	G145637	G145637	G145637		
16	ROD		4.001	1	320 9893	320 9893	320 9893		
17	WASHER		4.001	3	320 9894	320 9894	320 9894		
18	SCREW		4.001	1	320 9896	320 9896	320 9896		
19	ROD		4.001	1	320 9898	320 9898	320 9898		
20	CLIP		4.001	1	320 9899	320 9899	320 9899		
21	NEEDLE		4.001	2	320 9897	320 9897	320 9897		
22	PLATE		4.001	1	320 9900	320 9900	320 9900		
23	SCREW		4.001	2	320 9901	320 9901	320 9901		
24	SPRING		4.001	1	320 9902	320 9902	320 9902		
25	SHAFT		4.001	1	320 9903	320 9903	320 9903		
26	RETAINER		4.001	1	320 9904	320 9904	320 9904		
27	DASHPOT		4.001	1	320 9905	320 9905	320 9905		
28	NUT		4.001	1	320 9906	320 9906	320 9906		
29	FLOAT		4.001	1	448 5969	448 5969	448 5969		
30	BRACKET		4.001	1	320 9908	320 9908	320 9908		
31	SCREW		4.001	1	448 5440	448 5440	448 5440		
32	PLATE		4.001	1	320 9909	320 9909	320 9909		
33	SHAFT		4.001	1	320 9910	320 9910	320 9910		
34	SWIVEL		4.001	1	320 9911	320 9911	320 9911		
35	DIAPHRAGM		4.001	1	320 9912	320 9912	320 9912		
36	LEVER		4.001	1	320 9913	320 9913	320 9913		
37	SCREW		4.001	1	320 9914	320 9914	320 9914		
38	GASKET		4.001	1	448 5998	448 5998	448 5998		
39	VALVE	263	4.001	1	448 6090	448 6090	448 6090		
40	VALVE		4.001	1	320 9915	320 9915	320 9915		
41	SCREW		4.001	3	448 5441	448 5441	448 5441		
42	VALVE		4.001	1	320 9916	320 9916	320 9916		
43	SPRING		4.001	2	320 9917	320 9917	320 9917		
44	SCREW		4.001	1	448 5442	448 5442	448 5442		
45	VALVE		4.001	1	320 9918	320 9918	320 9918		
46	SCREW		4.001	4	448 5443	448 5443	448 5443		
47	SCREW		4.001	4	448 5444	448 5444	448 5444		
48	CAM		4.001	1	320 9919	320 9919	320 9919		
49	COVER		4.001	1	320 9920	320 9920	320 9920		
50	SCREW		4.001	4	448 5445	448 5445	448 5445		
51	ROD		4.001	1	320 9921	320 9921	320 9921		
52	RETAINER		4.001	1	320 9922	320 9922	320 9922		
53	PISTON		4.001	1	320 9923	320 9923	320 9923		
54	SCREW		4.001	1	448 5446	448 5446	448 5446		
55	SHAFT		4.001	1	320 9924	320 9924	320 9924		
56	RETAINER		4.001	1	320 9925	320 9925	320 9925		
57	LEVER		4.001	1	320 9926	320 9926	320 9926		
58	CLAMP		4.001	1	320 9927	320 9927	320 9927		
59	SCREW		4.001	3	448 5447	448 5447	448 5447		

KEY NO.	DESCRIPTION	PAKS CODE	GROUP NO.	PER CAR	PART NO.	PART NO.	PART NO.	PART NO.	PART NO.
					8HM2	8HA2	8ZA2		
60	THERMOSTAT		4.001	1	448 5448	448 5448	448 5448		
61	GASKET		4.001	1	448 5890	448 5890	448 5890		
62	SPRING		4.001	1	320 9928	320 9928	320 9928		
63	PIN		4.001	1	320 9929	320 9929	320 9929		
64	FITTING		17.160	1	G137406	G137406	G137406		
65	GASKET SET	275	4.001	1	448 6218	448 6218	448 6218		
66	MINOR REPAIR KIT	273	4.001	1	448 6219	448 6219	448 6219		
67	MAJOR REPAIR KIT	277	4.001	1	448 6220	448 6220	448 6220		

Printed in U.S.A.

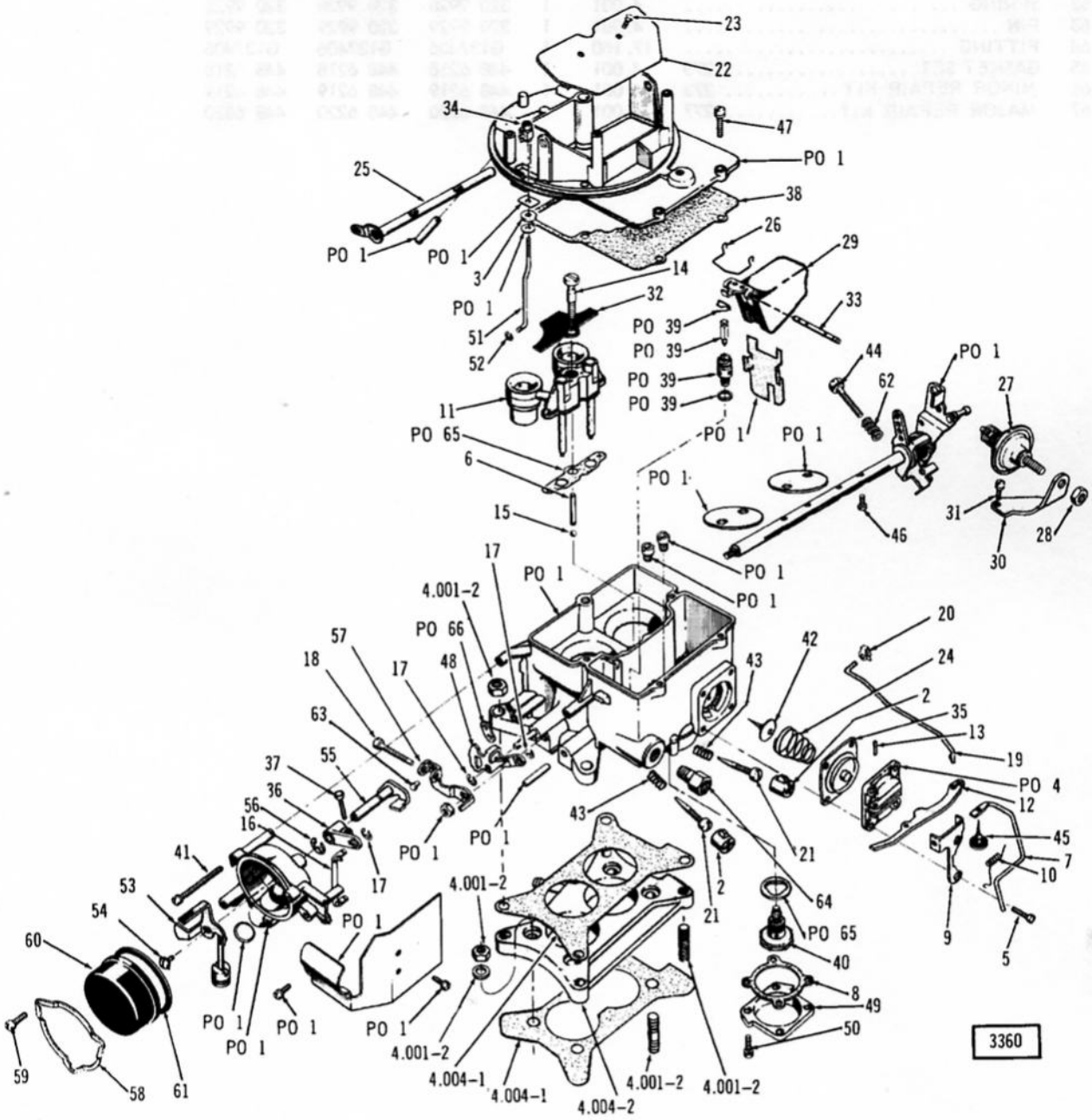

CARBURETOR

Printed in U.S.A.

KEY NO.	DESCRIPTION	PAKS CODE	GROUP NO.	PER CAR	PART NO.	PART NO.	PART NO.	PART NO.	PART NO.
					9HM2	9HA2	9ZA2		
1	CARBURETOR	274	4.001	1	319 4505	319 4506	319 4509		
2	LIMITER		4.001	2	320 9879	320 9879	320 9879		
3	SEAL		4.001	1	320 9880	320 9880	320 9880		
4	COVER	266	4.001	1	320 9881	320 9881	320 9881		
5	SCREW		4.001	4	320 9882	320 9882	320 9882		
6	WEIGHT		4.001	1	320 9883	320 9883	320 9883		
7	ROD		4.001	1	320 9884	320 9884	320 9884		
8	GASKET		4.001	1	320 9885	320 9885	320 9885		
9	BRACKET		4.001	1	320 9886	320 9886	320 9886		
10	SPRING		4.001	1	320 9887	320 9887	320 9887		
11	SUPPORT		4.001	1	320 9888	320 9889	320 9889		
12	LINK		4.001	1	320 9890	320 9890	320 9890		
13	PIN		4.001	1	320 9891	320 9891	320 9891		
14	SCREW		4.001	1	320 9892	320 9892	320 9892		
15	BALL		17.018	1	G145637	G145637	G145637		
16	ROD		4.001	1	320 9893	320 9893	320 9893		
17	WASHER		4.001	3	320 9894	320 9894	320 9894		
18	SCREW		4.001	1	320 9896	320 9896	320 9896		
19	ROD		4.001	1	320 9898	320 9898	320 9898		
20	CLIP		4.001	1	320 9899	320 9899	320 9899		
21	NEEDLE		4.001	2	320 9897	320 9897	320 9897		
22	PLATE		4.001	1	320 9900	320 9900	320 9900		
23	SCREW		4.001	2	320 9901	320 9901	320 9901		
24	SPRING		4.001	1	320 9902	320 9902	320 9902		
25	SHAFT		4.001	1	320 9903	320 9903	320 9903		
26	RETAINER		4.001	1	320 9904	320 9904	320 9904		
27	DASHPOT		4.001	1	320 9905	320 9905	320 9905		
28	NUT		4.001	1	320 9906	320 9906	320 9906		
29	FLOAT		4.001	1	448 5969	448 5969	448 5969		
30	BRACKET		4.001	1	320 9908	320 9908	320 9908		
31	SCREW		4.001	1	448 5440	448 5440	448 5440		
32	PLATE		4.001	1	320 9909	320 9909	320 9909		
33	SHAFT		4.001	1	320 9910	320 9910	320 9910		
34	SWIVEL		4.001	1	320 9911	320 9911	320 9911		
35	DIAPHRAGM		4.001	1	320 9912	320 9912	320 9912		
36	LEVER		4.001	1	320 9913	320 9913	320 9913		
37	SCREW		4.001	1	320 9914	320 9914	320 9914		
38	GASKET		4.001	1	448 5998	448 5998	448 5998		
39	VALVE	263	4.001	1	448 6669	448 6669	448 6669		
40	VALVE		4.001	1	320 9915	320 9915	320 9915		
41	SCREW		4.001	3	448 5441	448 5441	448 5441		
42	VALVE		4.001	1	320 9916	320 9916	320 9916		
43	SPRING		4.001	2	320 9917	320 9917	320 9917		
44	SCREW		4.001	1	448 5442	448 5442	448 5442		
45	VALVE		4.001	1	320 9918	320 9918	320 9918		
46	SCREW		4.001	4	448 5443	448 5443	448 5443		
47	SCREW		4.001	4	448 5444	448 5444	448 5444		
48	CAM		4.001	1	320 9919	320 9919	320 9919		
49	COVER		4.001	1	320 9920	320 9920	320 9920		
50	SCREW		4.001	4	448 5445	448 5445	448 5445		
51	ROD		4.001	1	320 9921	320 9921	320 9921		
52	RETAINER		4.001	1	320 9922	320 9922	320 9922		
53	PISTON		4.001	1	320 9923	320 9923	320 9923		
54	SCREW		4.001	1	448 5446	448 5446	448 5446		
55	SHAFT		4.001	1	320 9924	320 9924	320 9924		
56	RETAINER		4.001	1	320 9925	320 9925	320 9925		
57	LEVER		4.001	1	320 9926	320 9926	320 9926		
58	CLAMP		4.001	1	448 6603	448 6603	448 6603		
59	SCREW		4.001	3	448 5447	448 5447	448 5447		
60	THERMOSTAT		4.001	1	448 5448	448 5448	448 5448		

KEY NO.	DESCRIPTION	PAKS CODE	GROUP NO.	PER CAR	PART NO.	PART NO.	PART NO.	PART NO.	PART NO.
					9HM2	9HA2	9ZA2		
61	GASKET		4.001	1	448 5890	448 5890	448 5890		
62	SPRING		4.001	1	320 9928	320 9928	320 9928		
63	PIN		4.001	1	320 9929	320 9929	320 9929		
64	FITTING		17.160	1	G137406	G137406	G137406		
65	GASKET SET	275	4.001	1	448 6218	448 6218	448 6218		
66	MINOR REPAIR KIT	273	4.001	1	448 6219	448 6219	448 6219		
67	MAJOR REPAIR KIT	277	4.001	1	448 6220	448 6220	448 6220		

Printed in U.S.A.

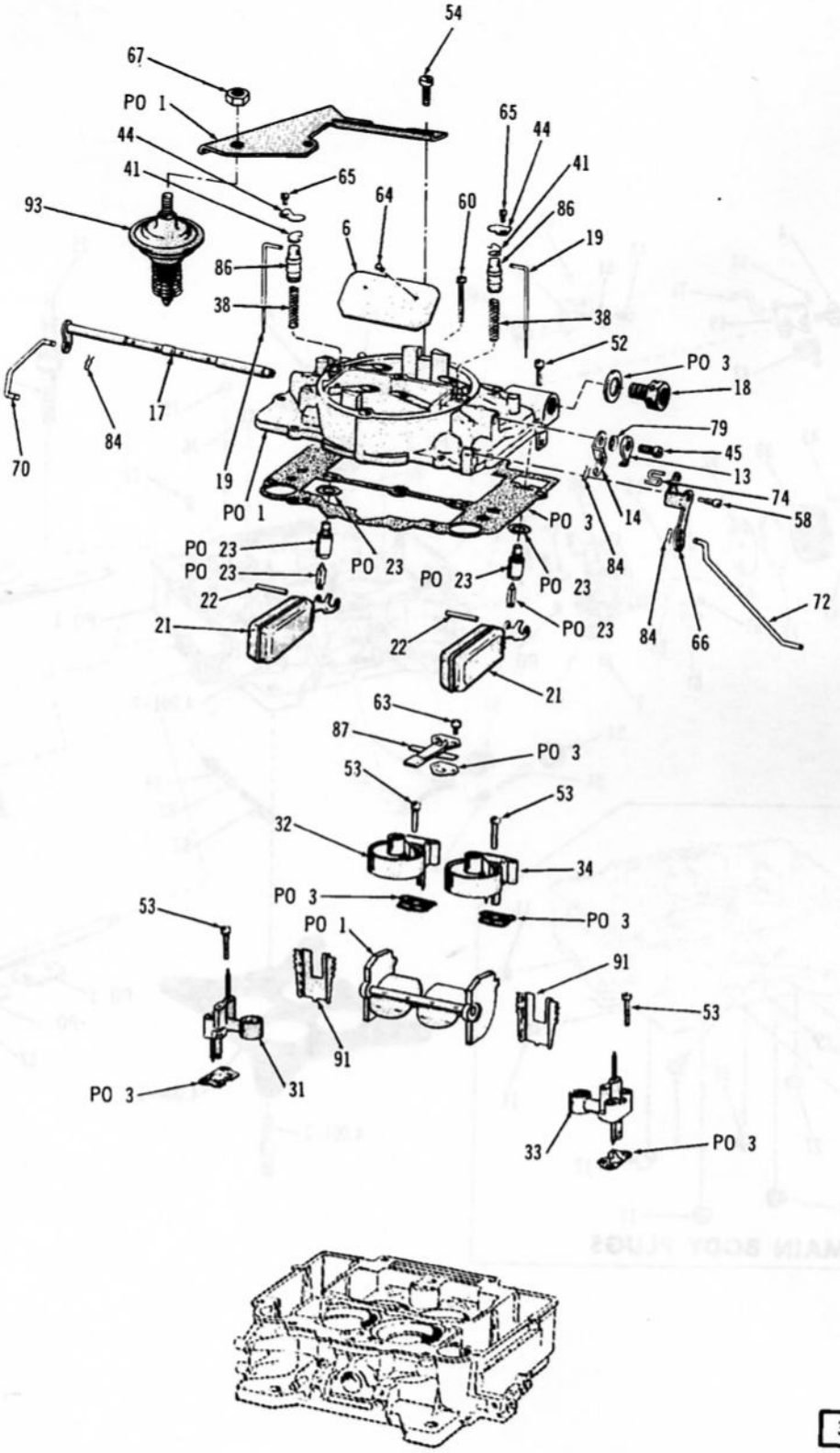

3025

CARBURETOR (Part 1 of 2)

Printed in U.S.A.

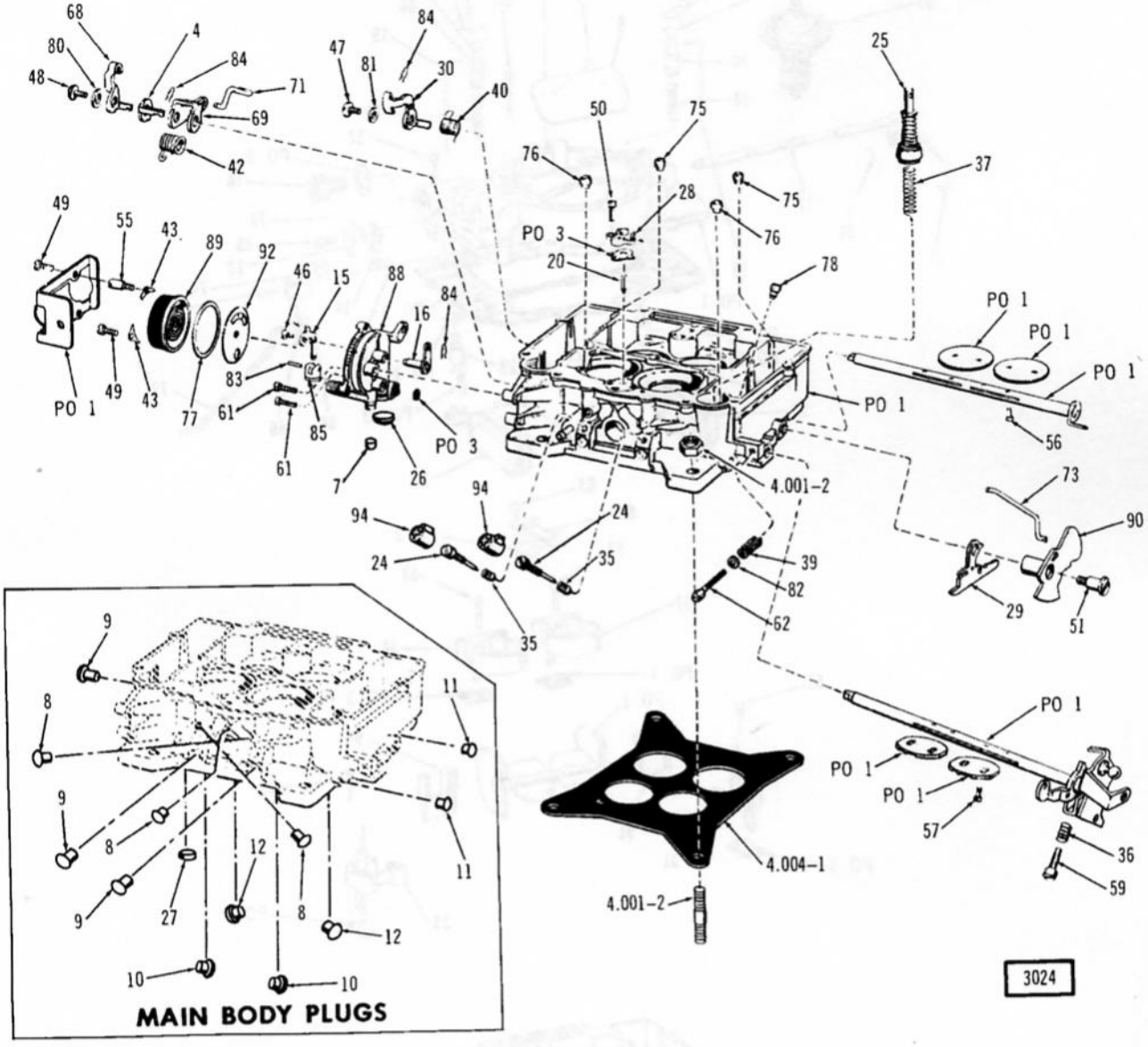

CARBURETOR (Part 2 of 2)

KEY NO.	DESCRIPTION	PAKS CODE	GROUP NO.	PER CAR	PART NO.	PART NO.	PART NO.	PART NO.	PART NO.
					AFB-4216	*AFB-4352*	*AFB-4354*	*AFB-4355*	
1	CARBURETOR	256	4.001	1	318 4780	318 7765	318 7766	318 7186	
2	MAJOR REPAIR KIT	249	4.001	1	448 5569	320 8922	448 5569	448 5569	
3	GASKET SET	252	4.001	1	320 8350	320 8350	320 8350	320 8350	
4	LEVER		4.001	1	320 7682	320 7682	320 7682	320 7682	
5	DASHPOT ARM		4.001	1	... .	... .	320 7681	... .	
6	PLATE		4.001	1	320 7683	320 7683	320 7683	320 7683	
7	PLUG		4.001	1	320 3802	320 3802	320 3802	320 3802	
8	PLUG		4.001	2	320 3805	320 3805	320 3805	320 3805	
9	PLUG		4.001	2	320 3870	320 3870	320 3870	320 3870	
10	PLUG		4.001	2	320 7684	320 7684	320 7684	320 7684	
11	PLUG		4.001	2	320 7685	320 7685	320 7685	320 7685	
12	PLUG		4.001	2	320 8716	320 8716	320 8716	320 8716	
13	LEVER		4.001	1	320 7701	320 7701	320 7701	320 7701	
14	LEVER		4.001	1	320 7704	320 7704	320 7704	320 7704	
15	LEVER		4.001	1	320 7705	320 7705	320 7705	320 7705	
16	LEVER		4.001	1	320 7706	320 7706	320 7706	320 7706	
17	SHAFT		4.001	1	320 7707	320 7707	320 7707	320 7707	
18	FITTING		4.001	1	320 7708	320 7708	320 7708	320 7708	
19	METERING ROD (Standard)		4.001	2	320 8424	320 8426	320 8424	320 8424	
	METERING ROD (High Altitude)		4.001	1	318 9666	318 9665	318 9666	318 9666	
20	NEEDLE		4.001	1	320 7262	320 7262	320 7262	320 7262	
21	FLOAT		4.001	2	320 7710	320 7710	320 7710	320 7710	
22	PIN		4.001	2	320 7711	320 7711	320 7711	320 7711	
23	NEEDLE ASSY.	232	4.001	2	320 8392	320 8392	320 8392	320 8392	
24	SCREW		4.001	2	448 7159	448 7159	448 7159	448 7159	
25	PLUNGER		4.001	1	320 8778	320 8920	320 8778	320 8778	
26	PLUG		4.001	1	320 7714	320 7714	320 7714	320 7714	
27	PLUG		4.001	1	320 7715	320 7715	320 7715	320 7715	
28	HOUSING		4.001	1	320 7717	320 7717	320 7717	320 7717	
29	LEVER		4.001	1	320 7718	320 7718	320 7718	320 7718	
30	LEVER		4.001	1	320 7719	320 7719	320 7719	320 7719	
31	VENTURI (Primary-Choke Side)		4.001	1	320 8396	320 8409	320 8396	320 8396	
32	VENTURI (Secondary-Choke Side)		4.001	1	320 8399	320 8411	320 8399	320 8399	
33	VENTURI (Primary-Pump Side)		4.001	1	320 8397	320 8410	320 8397	320 8397	
34	VENTURI (Secondary-Pump Side)		4.001	1	320 8398	320 8412	320 8398	320 8398	
35	SPRING		4.001	2	320 5885	320 5885	320 5885	320 5885	
36	SPRING		4.001	1	320 5885	320 5885	320 5885	320 5885	
37	SPRING		4.001	1	320 7724	320 7724	320 7724	320 7724	
38	SPRING		4.001	2	320 3848	320 3848	320 3848	320 3848	
39	SPRING		4.001	1	320 5125	320 5125	320 5125	320 5125	
40	SPRING		4.001	1	320 7725	320 7725	320 7725	320 7725	
41	SPRING		4.001	2	320 7726	320 7726	320 7726	320 7726	
42	SPRING		4.001	1	320 7727	320 7727	320 7727	320 7727	
43	RETAINER		4.001	3	320 3818	320 3818	320 3818	320 3818	
44	PLATE		4.001	2	320 7729	320 7729	320 7729	320 7729	
45	SCREW		4.001	1	320 6412	320 6412	320 6412	320 6412	
46	SCREW		4.001	1	320 6412	320 6412	320 6412	320 6412	
47	SCREW		4.001	1	320 6414	320 6414	320 6414	320 6414	
48	SCREW		4.001	1	320 6414	320 6414	320 6414	320 6414	
49	SCREW		4.001	2	320 6431	320 6431	320 6431	320 6431	
50	SCREW		4.001	2	320 7731	320 7731	320 7731	320 7731	
51	SCREW		4.001	1	320 7732	320 7732	320 7732	320 7732	
52	SCREW		4.001	8	320 7733	320 7733	320 7733	320 7733	
53	SCREW		4.001	8	320 7734	320 7734	320 7734	320 7734	
54	SCREW		4.001	2	... .	... .	320 8432	... .	
55	SCREW		4.001	2	320 8433	320 8433	320 8433	320 8433	
56	SCREW		4.001	4	320 6473	320 6473	320 6473	320 6473	
57	SCREW		4.001	4	320 7735	320 7735	320 7735	320 7735	
58	SCREW		4.001	1	320 7736	320 7736	320 7736	320 7736	
59	SCREW		4.001	1	320 7737	320 7737	320 7737	320 7737	
60	SCREW		4.001	1	320 7738	320 7738	320 7738	320 7738	
61	SCREW		4.001	3	320 7742	320 7742	320 7742	320 7742	

KEY NO.	DESCRIPTION	PAKS CODE	GROUP NO.	PER CAR	PART NO.	PART NO.	PART NO.	PART NO.	PART NO.
					AFB-4216	AFB-4352	AFB-4354	AFB-4355	
62	SCREW		4.001	1	320 7743	320 7743	320 7743	320 7743	
63	SCREW		4.001	2	320 7744	320 7744	320 7744	320 7744	
64	SCREW		4.001	2	320 7745	320 7745	320 7745	320 7745	
65	SCREW		4.001	2	320 7746	320 7746	320 7746	320 7746	
66	ARM		4.001	1	320 8467	320 9941	320 8467	320 8467	
67	NUT		4.001	1	... .	... .	320 6802	... .	
68	ARM		4.001	1	320 7748	320 7748	320 7748	320 7748	
69	ARM		4.001	1	320 7749	320 7749	320 7749	320 7749	
70	ROD		4.001	1	320 7750	320 7750	320 7750	320 7750	
71	ROD		4.001	1	320 7751	320 7751	320 7751	320 7751	
72	ROD		4.001	1	320 7752	320 7752	320 7752	320 7752	
73	ROD		4.001	1	320 7753	320 7753	320 7753	320 7753	
74	LINK		4.001	1	320 7754	320 7754	320 7754	320 7754	
75	JET (Secondary)		4.001	2	320 8464	320 8464	320 8464	320 8464	
76	JET (Primary)		4.001	2	320 7756	320 7756	320 7756	320 7756	
77	GASKET		4.001	1	448 5888	448 5888	448 5888	448 5888	
78	BALL		4.001	1	320 3863	320 3863	320 3863	320 3863	
79	WASHER		4.001	1	320 7757	320 7757	320 7757	320 7757	
80	WASHER		4.001	1	320 7758	320 7758	320 7758	320 7758	
81	WASHER		4.001	1	320 7759	320 7759	320 7759	320 7759	
82	WASHER		4.001	1	320 7760	320 7760	320 7760	320 7760	
83	PIN		4.001	1	320 7761	320 7761	320 7761	320 7761	
84	RETAINER		4.001	6	320 3830	320 3830	320 3830	320 3830	
85	PISTON		4.001	1	320 8414	320 8415	320 8414	320 8414	
86	PISTON		4.001	2	320 7762	320 7762	320 7762	320 7762	
87	VALVE		4.001	1	320 7764	320 7764	320 7764	320 7764	
88	HOUSING		4.001	1	320 7765	320 7765	320 7765	320 7765	
89	THERMOSTAT		4.001	1	320 7766	320 7766	320 7766	320 7766	
90	CAM		4.001	1	320 7767	320 7767	320 7767	320 7767	
91	BAFFLE		4.001	2	320 7768	320 7768	320 7768	320 7768	
92	BAFFLE		4.001	1	320 7769	320 7769	320 7769	320 7769	
93	DASHPOT		4.001	1	... .	... .	320 8423	... .	
94	LIMITER		4.001	2	320 9879	320 9879	320 9879	320 9879	

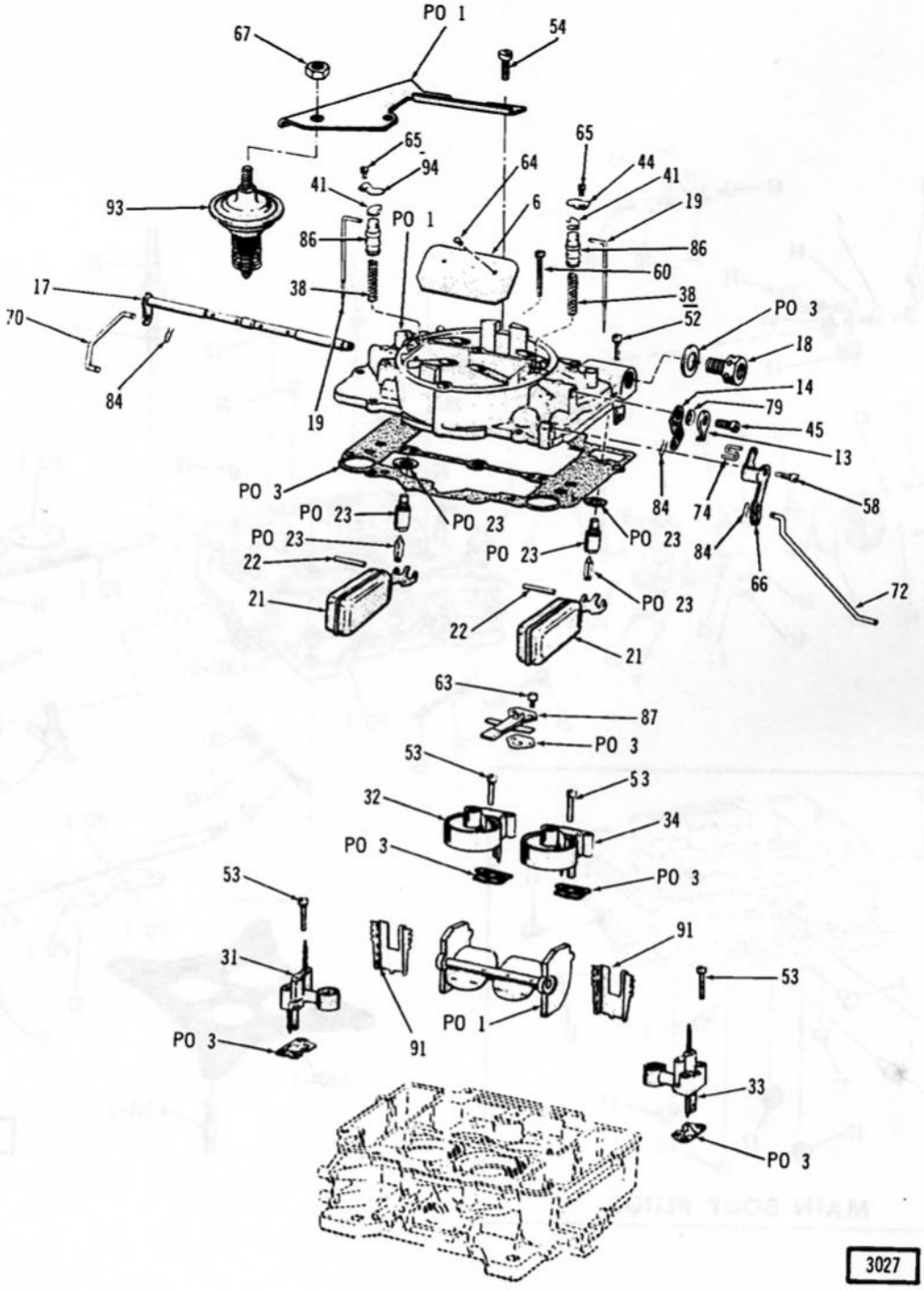

CARBURETOR (Part 1 of 2)

Printed in U.S.A.

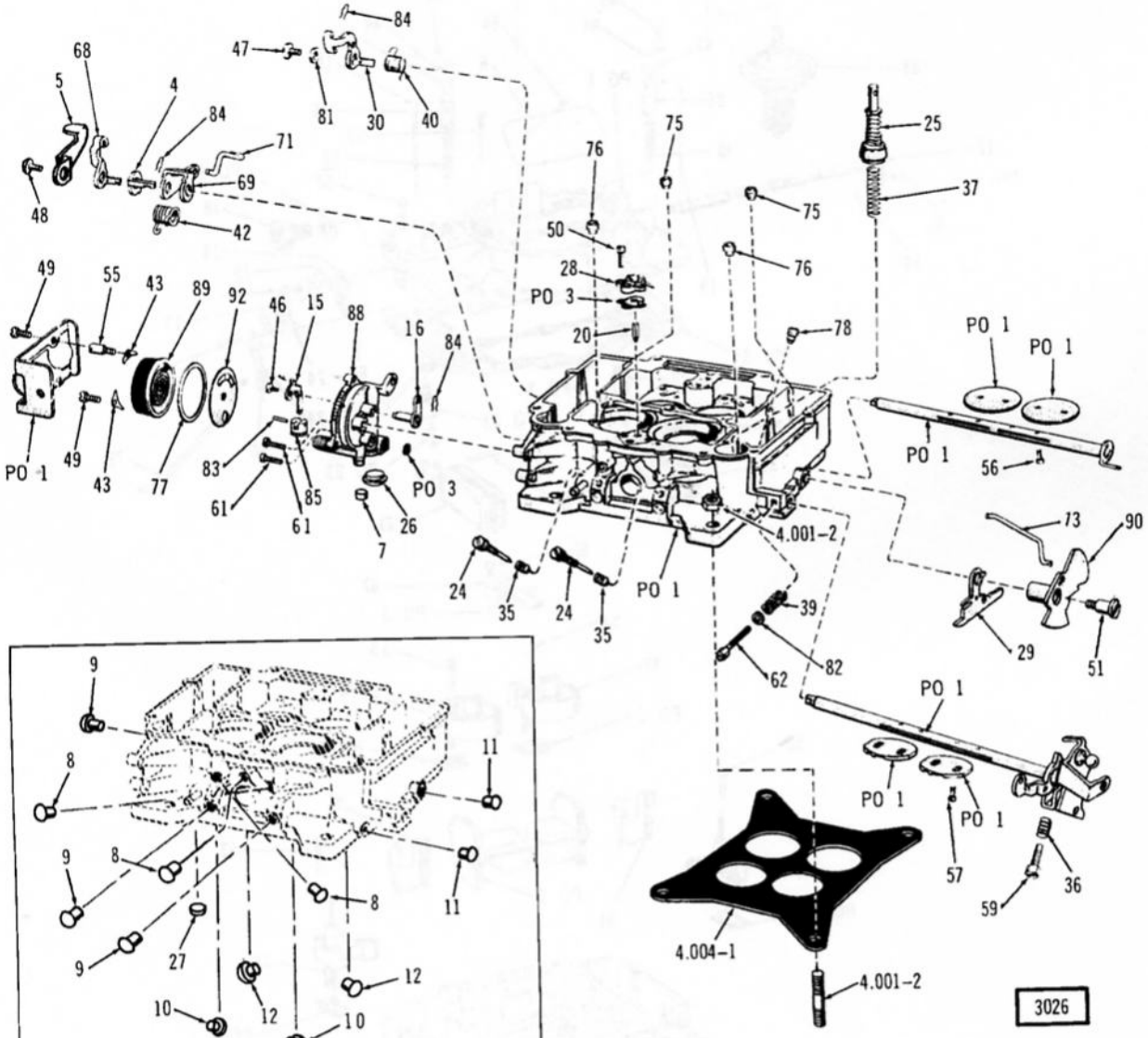

CARBURETOR (Part 2 of 2)

KEY NO.	DESCRIPTION	PAKS CODE	GROUP NO.	PER CAR	PART NO.	PART NO.	PART NO.	PART NO.	PART NO.
					AFB-4258	AFB-4353	AFB-4358		
1	CARBURETOR	256	4.001	1	318 5095	318 7635	318 7634		
2	MAJOR REPAIR KIT	249	4.001	1	320 8348	320 8348	320 8348		
3	GASKET SET	252	4.001	1	320 8350	320 8350	320 8350		
4	LEVER		4.001	1	320 7682	320 7682	320 7682		
5	DASHPOT ARM		4.001	1	320 7681	320 7681	320 7681		
6	PLATE		4.001	1	320 7683	320 7683	320 7683		
7	PLUG		4.001	1	320 3802	320 3802	320 3802		
8	PLUG		4.001	2	320 3805	320 3805	320 3805		
9	PLUG		4.001	2	320 3870	320 3870	320 3870		
10	PLUG		4.001	2	320 7684	320 7684	320 7684		
11	PLUG		4.001	2	320 7685	320 7685	320 7685		
12	PLUG		4.001	2	320 8716	320 8716	320 8716		
13	LEVER		4.001	1	320 8461	320 8461	320 8461		
14	LEVER		4.001	1	320 8462	320 8462	320 8462		
15	LEVER		4.001	1	320 7705	320 7705	320 7705		
16	LEVER		4.001	1	320 7706	320 7706	320 7706		
17	SHAFT		4.001	1	320 7707	320 7707	320 7707		
18	FITTING		4.001	1	320 7708	320 7708	320 7708		
19	METERING ROD		4.001	2	320 9965	320 8427	320 9965		
20	NEEDLE		4.001	1	320 7262	320 7262	320 7262		
21	FLOAT		4.001	2	320 7710	320 7710	320 7710		
22	PIN		4.001	2	320 7711	320 7711	320 7711		
23	NEEDLE ASSY.	232	4.001	2	320 8392	320 8392	320 8392		
24	SCREW		4.001	2	320 8393	448 7159	320 8393		
25	PLUNGER		4.001	1	320 8920	320 8920	320 8920		
26	PLUG		4.001	1	320 7714	320 7714	320 7714		
27	PLUG		4.001	1	320 7715	320 7715	320 7715		
28	HOUSING		4.001	1	320 7717	320 7717	320 7717		
29	LEVER		4.001	1	320 7718	320 7718	320 7718		
30	LEVER		4.001	1	320 7719	320 7719	320 7719		
31	VENTURI (Primary-Choke Side)		4.001	1	320 8395	320 8408	320 8395		
32	VENTURI (Secondary-Choke Side)		4.001	1	320 8404	320 8404	320 8404		
33	VENTURI (Primary-Pump Side)		4.001	1	320 8394	320 8407	320 8394		
34	VENTURI (Secondary-Pump Side)		4.001	1	320 8403	320 8403	320 8403		
35	SPRING		4.001	2	320 5885	320 5885	320 5885		
36	SPRING		4.001	1	320 5885	320 5885	320 5885		
37	SPRING		4.001	1	320 7724	320 7724	320 7724		
38	SPRING		4.001	2	320 8413	320 8413	320 8413		
39	SPRING		4.001	1	320 5125	320 5125	320 5125		
40	SPRING		4.001	1	320 7725	320 7725	320 7725		
41	SPRING		4.001	2	320 7726	320 7726	320 7726		
42	SPRING		4.001	1	320 7727	320 7727	320 7727		
43	RETAINER		4.001	3	320 3818	320 3818	320 3818		
44	PLATE		4.001	2	320 8431	320 8431	320 8431		
45	SCREW		4.001	1	320 6412	320 6412	320 6412		
46	SCREW		4.001	1	320 6412	320 6412	320 6412		
47	SCREW		4.001	1	320 6414	320 6414	320 6414		
48	SCREW		4.001	1	320 6414	320 6414	320 6414		
49	SCREW		4.001	2	320 6431	320 6431	320 6431		
50	SCREW		4.001	2	320 7731	320 7731	320 7731		
51	SCREW		4.001	1	320 7732	320 7732	320 7732		
52	SCREW		4.001	8	320 7733	320 7733	320 7733		
53	SCREW		4.001	8	320 7734	320 7734	320 7734		
54	SCREW		4.001	2	320 8432	320 8432	320 8432		
55	SCREW		4.001	2	320 8433	320 8433	320 8433		
56	SCREW		4.001	4	320 6473	320 6473	320 6473		
57	SCREW		4.001	4	320 7735	320 7735	320 7735		
58	SCREW		4.001	1	320 7736	320 7736	320 7736		
59	SCREW		4.001	1	320 7737	320 7737	320 7737		
60	SCREW		4.001	1	320 7738	320 7738	320 7738		
61	SCREW		4.001	2	320 7742	320 7742	320 7742		
62	SCREW		4.001	1	320 7743	320 7743	320 7743		

Printed in U.S.A.

KEY NO.	DESCRIPTION	PAKS CODE	GROUP NO.	PER CAR	PART NO.	PART NO.	PART NO.	PART NO.	PART NO.
					AFB-4258	*AFB-4353*	*AFB-4358*		
63	SCREW		4.001	2	320 7744	320 7744	320 7744		
64	SCREW		4.001	2	320 7745	320 7745	320 7745		
65	SCREW		4.001	2	320 7746	320 7746	320 7746		
66	ARM		4.001	1	320 7747	320 7747	320 7747		
67	NUT		4.001	1	320 6802	320 6802	320 6802		
68	ARM		4.001	1	320 7748	320 7748	320 7748		
69	ARM		4.001	1	320 7749	320 7749	320 7749		
70	ROD		4.001	1	320 7750	320 7750	320 7750		
71	ROD		4.001	1	320 7751	320 7751	320 7751		
72	ROD		4.001	1	320 7752	320 7752	320 7752		
73	ROD		4.001	1	320 8434	320 8434	320 8434		
74	LINK		4.001	1	320 7754	320 7754	320 7754		
75	JET (Secondary)		4.001	2	320 8463	320 8464	320 8463		
76	JET (Primary)		4.001	2	320 8466	320 8465	320 8466		
77	GASKET		4.001	1	448 5888	448 5888	448 5888		
78	BALL		4.001	1	320 3863	320 3863	320 3863		
79	WASHER		4.001	1	320 7757	320 7757	320 7757		
80	WASHER		.....	.	... .	... .	... .		
81	WASHER		4.001	1	320 7759	320 7759	320 7759		
82	WASHER		4.001	1	320 7760	320 7760	320 7760		
83	PIN		4.001	1	320 7761	320 7761	320 7761		
84	RETAINER		4.001	6	320 3830	320 3830	320 3830		
85	PISTON		4.001	1	320 7763	320 8415	320 7763		
86	PISTON		4.001	2	320 7762	320 7762	320 7762		
87	VALVE		4.001	1	320 7764	320 7764	320 7764		
88	HOUSING		4.001	1	320 8420	320 7765	320 8420		
89	THERMOSTAT		4.001	1	320 8418	320 8417	320 8419		
90	CAM		4.001	1	320 8421	320 8421	320 8421		
91	BAFFLE		4.001	2	320 7768	320 7768	320 7768		
92	BAFFLE		4.001	1	320 8422	320 8422	320 8422		
93	DASHPOT		4.001	1	320 8423	320 8423	320 8423		
94	PLATE		4.001	1	320 8430	320 8430	320 8430		

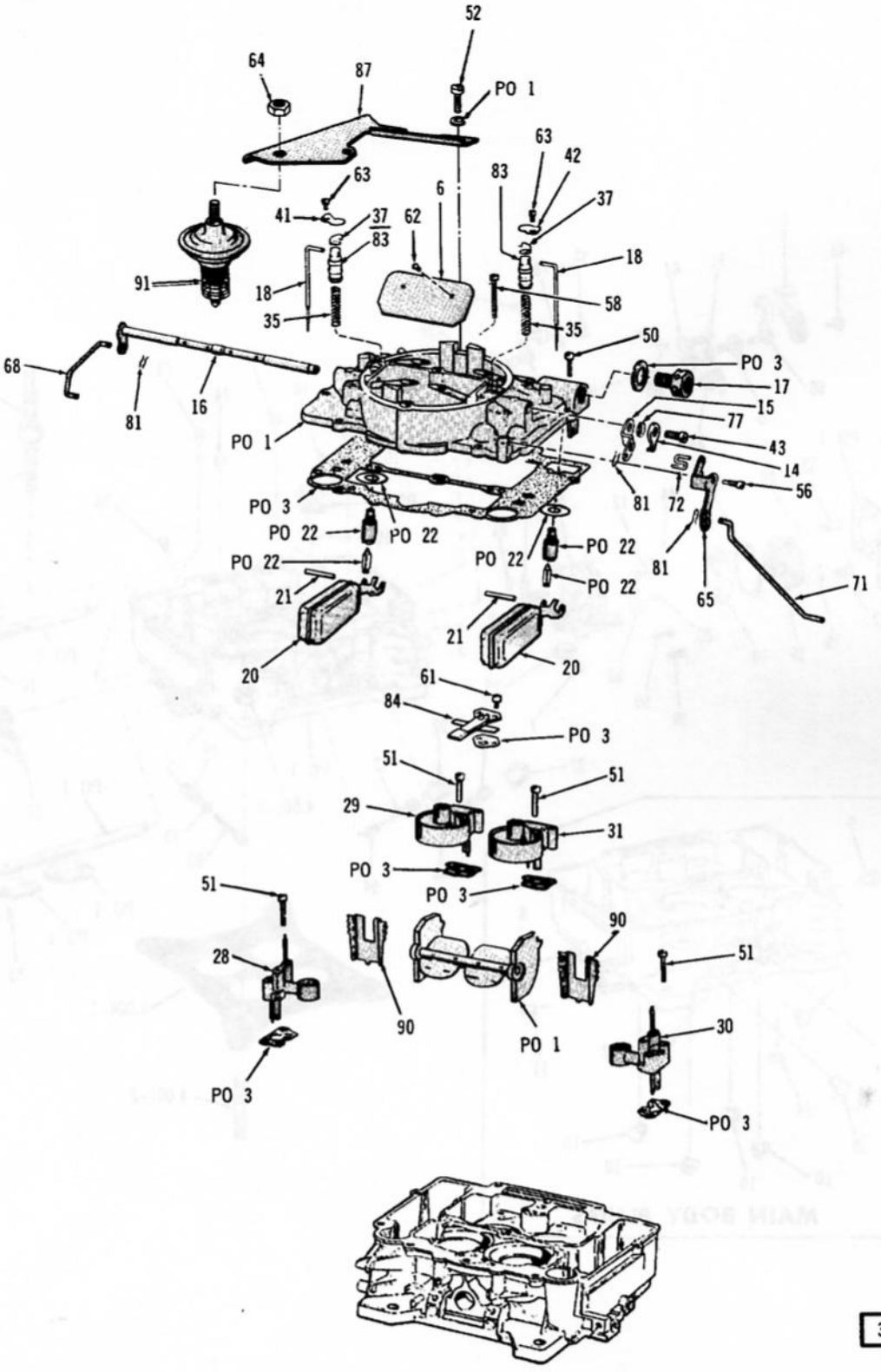

CARBURETOR (Part 1 of 2)

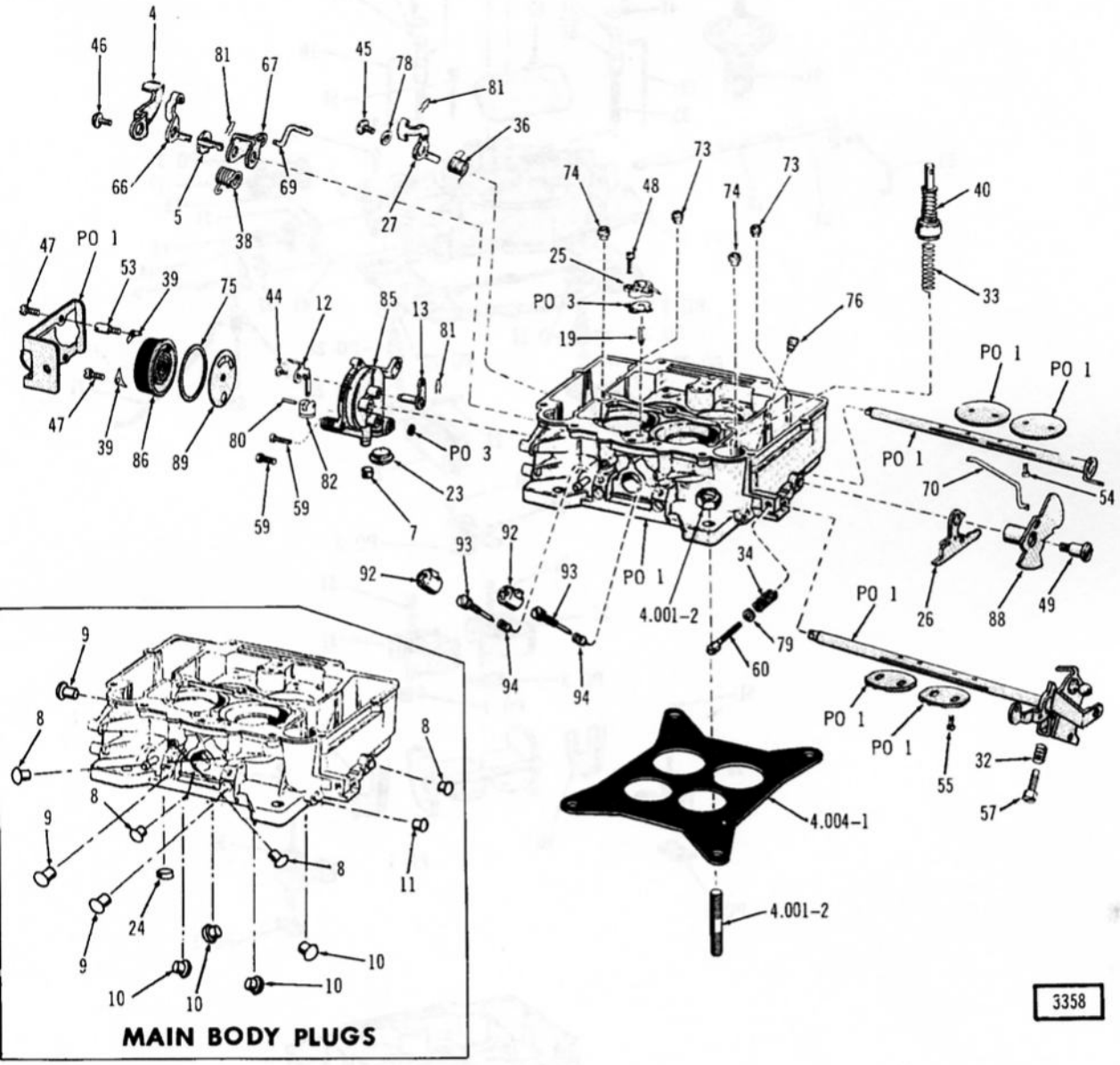

CARBURETOR (Part 2 of 2)

Printed in U.S.A.

KEY NO.	DESCRIPTION	PAKS CODE	GROUP NO.	PER CAR	PART NO.	PART NO.	PART NO.	PART NO.	PART NO.
					AFB-4467	AFB-4468	AFB-4469	AFB-4622	AFB-4623
1	CARBURETOR	256	4.001	1	319 0717	319 0719	319 0718	319 3276	319 3279
2	MAJOR REPAIR KIT	249	4.001	1	320 8922	448 5569	448 5569	320 8922	448 5569
3	GASKET SET	252	4.001	1	320 8350	320 8350	320 8350	320 8350	320 8350
4	LEVER		4.001	1	320 7681	320 7681	320 7681	320 7681	320 7681
5	LEVER		4.001	1	320 7682	320 7682	320 7682	320 7682	320 7682
6	PLATE		4.001	1	320 7683	320 7683	320 7683	320 7683	320 7683
7	PLUG		4.001	1	320 3802	320 3802	320 3802	320 3802	320 3802
8	PLUG		4.001	2	320 3805	320 3805	320 3805	320 3805	320 3805
9	PLUG		4.001	2	320 3870	320 3870	320 3870	320 3870	320 3870
10	PLUG		4.001	2	320 7684	320 7684	320 7684	320 7684	320 7684
11	PLUG		4.001	2	320 7685	320 7685	320 7685	320 7685	320 7685
12	LEVER		4.001	1	320 7705	320 7705	320 7705	320 7705	320 7705
13	LEVER		4.001	1	320 7706	320 7706	320 7706	320 7706	320 7706
14	LEVER		4.001	1	320 8461	320 8461	320 8461	320 8461	320 8461
15	LEVER		4.001	1	320 8462	320 8462	320 8462	320 8462	320 8462
16	SHAFT		4.001	1	320 7707	320 7707	320 7707	320 7707	320 7707
17	FITTING		4.001	1	320 7708	320 7708	320 7708	320 7708	320 7708
18	METERING ROD		4.001	2	320 9933	320 9932	320 9934	448 5791	448 5790
19	NEEDLE		4.001	1	320 7262	320 7262	320 7262	320 7262	320 7262
20	FLOAT		4.001	2	320 7710	320 7710	320 7710	320 7710	320 7710
21	PIN		4.001	2	320 7711	320 7711	320 7711	320 7711	320 7711
22	NEEDLE ASSY.	232	4.001	2	320 8392	320 8392	320 8392	320 8392	320 8392
23	PLUG		4.001	1	320 7714	320 7714	320 7714	320 7714	320 7714
24	PLUG		4.001	1	320 7715	320 7715	320 7715	320 7715	320 7715
25	HOUSING		4.001	1	320 7717	320 7717	320 7717	320 7717	320 7717
26	LEVER		4.001	1	448 6955	448 6955	448 6955	448 6955	448 6955
27	LEVER		4.001	1	320 7719	320 7719	320 7719	320 7719	320 7719
28	VENTURI (Primary-Choke Side)		4.001	1	320 9939	320 9935	320 9935	448 5796	448 5794
29	VENTURI (Secondary-Choke Side)		4.001	1	320 9937	320 8404	320 8404	320 9937	320 8404
30	VENTURI (Primary-Pump Side)		4.001	1	320 9940	320 9936	320 9936	448 5799	448 5797
31	VENTURI (Secondary-Pump Side)		4.001	1	320 9938	320 8403	320 8403	320 9938	320 8403
32	SPRING		4.001	1	320 5885	320 5885	320 5885	320 5885	320 5885
33	SPRING		4.001	1	320 7724	320 7724	320 7724	320 7724	320 7724
34	SPRING		4.001	1	320 5125	320 5125	320 5125	320 5125	320 5125
35	SPRING		4.001	2	320 8413	320 8413	320 8413	320 8413	320 8413
36	SPRING		4.001	1	320 7725	320 7725	320 7725	320 7725	320 7725
37	SPRING		4.001	2	320 7726	320 7726	320 7726	320 7726	320 7726
38	SPRING		4.001	1	320 7727	320 7727	320 7727	320 7727	320 7727
39	RETAINER		4.001	3	320 3818	320 3818	320 3818	320 3818	320 3818
40	PLUNGER		4.001	1	320 8920	320 8778	320 8778	448 5857	448 5856
41	PLATE		4.001	1	320 8430	320 8430	320 8430	320 8430	320 8430
42	PLATE		4.001	1	320 8431	320 8431	320 8431	320 8431	320 8431
43	SCREW		4.001	1	320 6412	320 6412	320 6412	320 6412	320 6412
44	SCREW		4.001	1	320 6412	320 6412	320 6412	320 6412	320 6412
45	SCREW		4.001	1	320 6414	320 6414	320 6414	320 6414	320 6414
46	SCREW		4.001	1	320 6414	320 6414	320 6414	320 6414	320 6414
47	SCREW		4.001	3	320 6431	320 6431	320 6431	320 6431	320 6431
48	SCREW		4.001	2	320 7731	320 7731	320 7731	320 7731	320 7731
49	SCREW		4.001	1	320 7732	320 7732	320 7732	320 7732	320 7732
50	SCREW		4.001	6	320 7733	320 7733	320 7733	320 7733	320 7733
51	SCREW		4.001	8	320 7734	320 7734	320 7734	320 7734	320 7734
52	SCREW		4.001	2	320 8432	320 8432	320 8432	320 8432	320 8432
53	SCREW		4.001	2	320 8433	320 8433	320 8433	320 8433	320 8433
54	SCREW		4.001	4	320 6473	320 6473	320 6473	320 6473	320 6473
55	SCREW		4.001	4	320 7735	320 7735	320 7735	320 7735	320 7735
56	SCREW		4.001	1	320 7736	320 7736	320 7736	320 7736	320 7736
57	SCREW		4.001	1	320 7737	320 7737	320 7737	320 7737	320 7737
58	SCREW		4.001	1	320 7738	320 7738	320 7738	320 7738	320 7738
59	SCREW		4.001	3	320 7742	320 7742	320 7742	320 7742	320 7742
60	SCREW		4.001	1	320 7743	320 7743	320 7743	320 7743	320 7743
61	SCREW		4.001	2	320 7744	320 7744	320 7744	320 7744	320 7744
62	SCREW		4.001	2	320 7745	320 7745	320 7745	320 7745	320 7745

Printed in U.S.A.

KEY NO.	DESCRIPTION	PAKS CODE	GROUP NO.	PER CAR	PART NO.	PART NO.	PART NO.	PART NO.	PART NO.
					AFB-4467	AFB-4468	AFB-4469	AFB-4622	AFB-4623
63	SCREW		4.001	2	320 7746	320 7746	320 7746	320 7746	320 7746
64	NUT		4.001	1	320 6802	320 6802	320 6802	320 6802	320 6802
65	ARM		4.001	1	320 9941	320 8467	320 8467	320 9941	320 8467
66	ARM		4.001	1	320 7748	320 7748	320 7748	320 7748	320 7748
67	ARM		4.001	1	320 7749	320 7749	320 7749	320 7749	320 7749
68	ROD		4.001	1	320 7750	320 7750	320 7750	320 7750	320 7750
69	ROD		4.001	1	320 7751	320 7751	320 7751	320 7751	320 7751
70	ROD		4.001	1	320 8434	320 8434	320 8434	320 8434	320 8434
71	ROD		4.001	1	320 7752	320 7752	320 7752	320 7752	320 7752
72	LINK		4.001	1	320 7754	320 7754	320 7754	320 7754	320 7754
73	JET (Secondary)		4.001	2	320 7755	320 7755	320 7755	320 7755	320 7755
74	JET (Primary)		4.001	2	320 8465	320 8466	320 8465	320 8465	320 8466
75	GASKET		4.001	1	448 5888	448 5888	448 5888	448 5888	448 5888
76	BALL		4.001	1	320 8779	320 8779	320 8779	320 3863	320 8779
77	WASHER		4.001	1	320 7757	320 7757	320 7757	320 7757	320 7757
78	WASHER		4.001	1	320 7759	320 7759	320 7759	320 7759	320 7759
79	WASHER		4.001	1	320 7760	320 7760	320 7760	320 7760	320 7760
80	PIN		4.001	1	320 7761	320 7761	320 7761	320 7761	320 7761
81	RETAINER		4.001	6	320 3830	320 3830	320 3830	320 3830	320 3830
82	PISTON		4.001	1	320 8415	320 8415	320 7763	320 7763	320 8415
83	PISTON		4.001	2	320 7762	320 7762	320 9942	320 7762	320 7762
84	VALVE		4.001	1	320 7764	320 7764	320 7764	320 7764	320 7764
85	HOUSING		4.001	1	320 7765	320 8420	320 7765	320 7765	320 8420
86	THERMOSTAT		4.001	1	320 9943	320 9943	320 9943	320 9943	320 9943
87	BRACKET		4.001	1	320 9944	320 9944	320 9944	320 9944	320 9944
88	CAM		4.001	1	320 8421	320 8421	320 8421	320 8421	320 8421
89	PLATE		4.001	1	320 8422	320 8422	320 8422	320 8422	320 8422
90	BAFFLE		4.001	2	320 7768	320 7768	320 7768	320 7768	320 7768
91	DASHPOT		4.001	1	448 6954	448 6954	448 6954	448 6954	448 6954
92	LIMITER		4.001	2	320 9879	320 9879	320 9879	320 9879	320 9879
93	NEEDLE		4.001	2	448 7159	448 7159	448 7159	448 7159	448 7159
94	SPRING		4.001	2	320 5885	320 5885	320 5885	320 5885	320 5885

Printed in U.S.A.

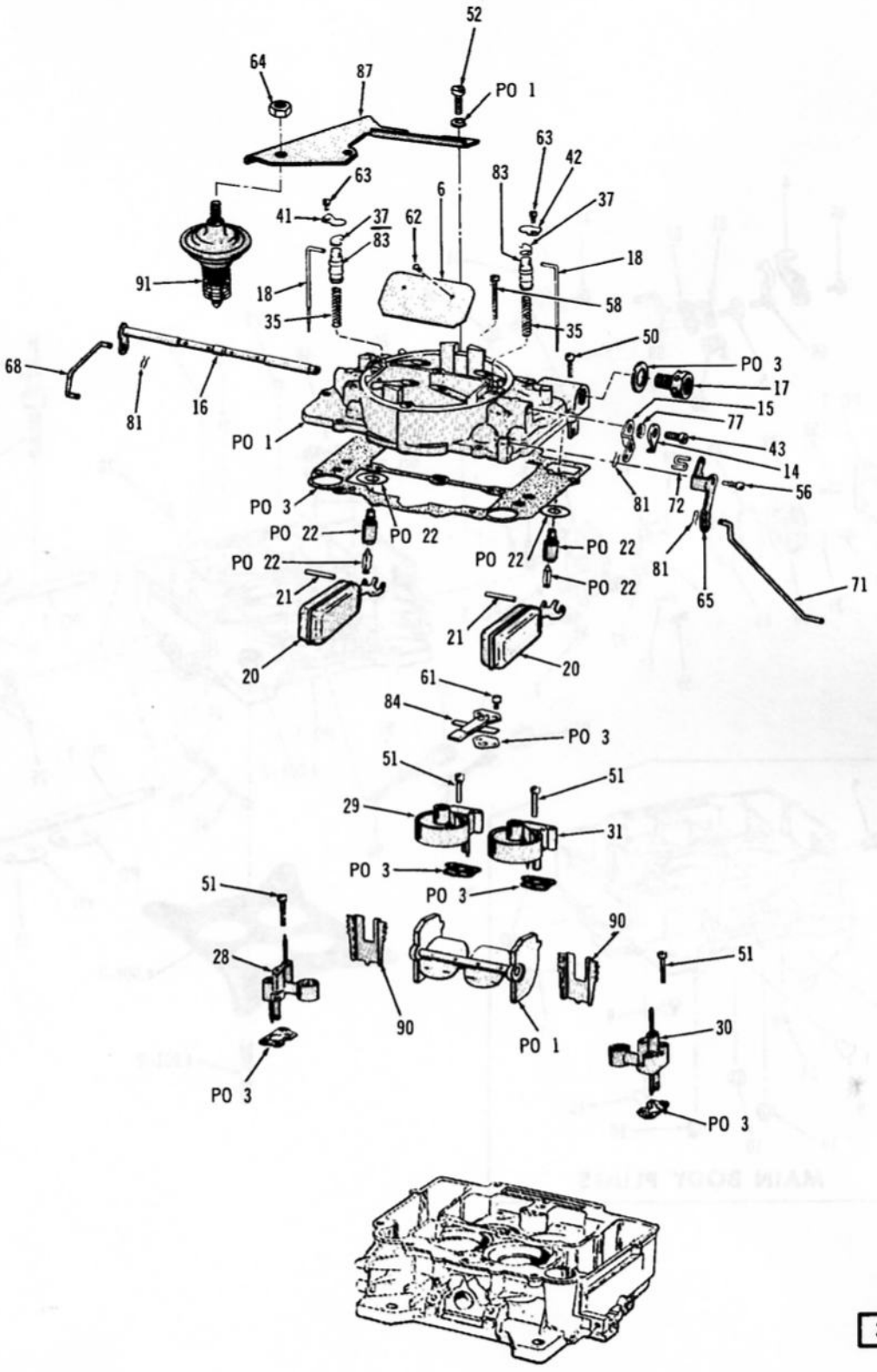

3359

CARBURETOR (Part 1 of 2)

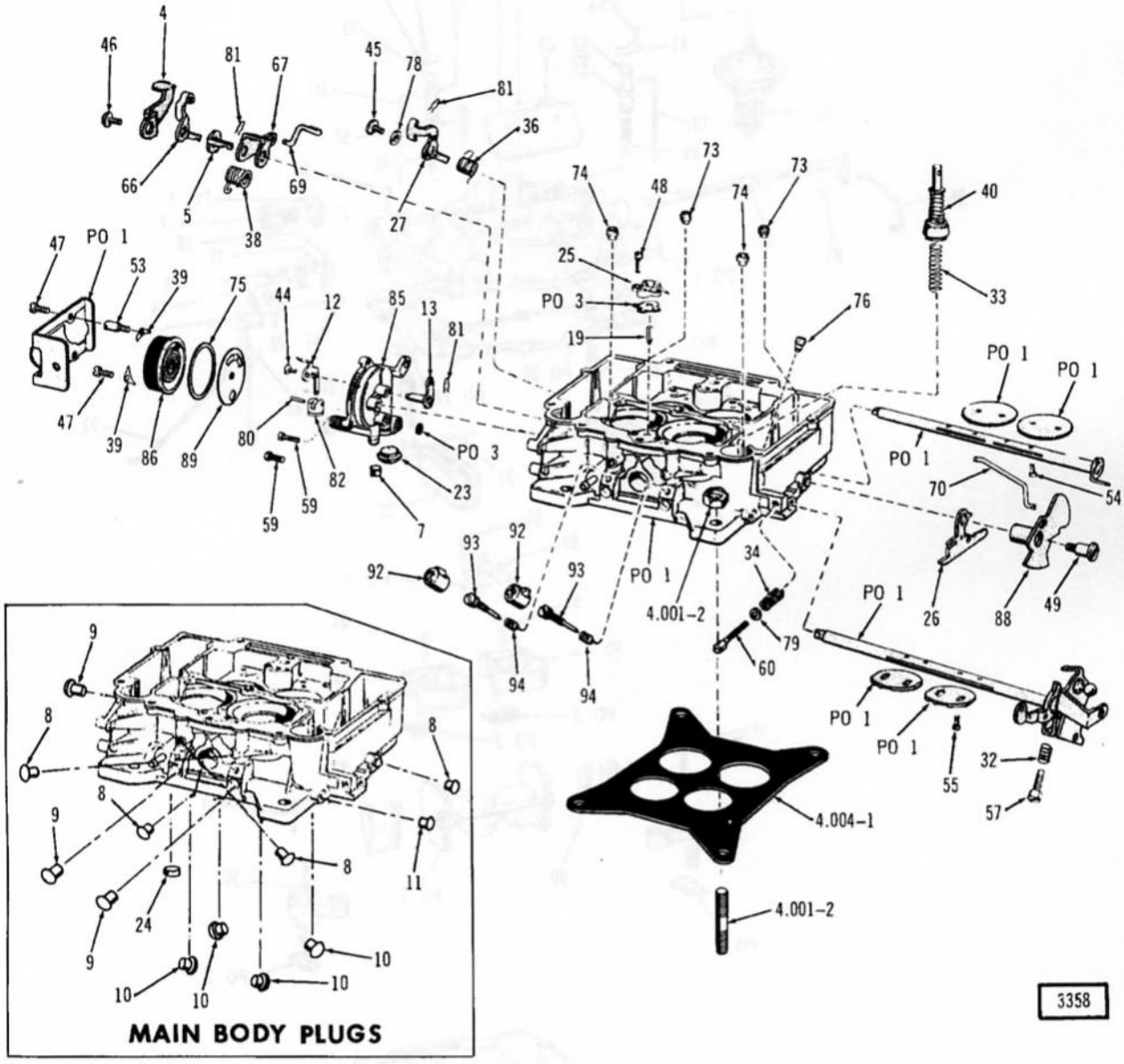

CARBURETOR (Part 2 of 2)

KEY NO.	DESCRIPTION	PAKS CODE	GROUP NO.	PER CAR	PART NO.	PART NO.	PART NO.	PART NO.	PART NO.
					AFB-4583	AFB-4584	AFB-4585	AFB-4624	AFB-4692
1	CARBURETOR	256	4.001	1	319 3070	319 3071	319 3069	319 3278	319 4360
2	MAJOR REPAIR KIT	249	4.001	1	448 5569	448 5569	448 5569	448 5569	448 5569
3	GASKET SET	252	4.001	1	320 8350	320 8350	320 8350	320 8350	320 8350
4	LEVER		4.001	1	320 7681	320 7681	320 7681	320 7681	320 7681
5	LEVER		4.001	1	320 7682	320 7682	320 7682	320 7682	320 7682
6	PLATE		4.001	1	320 7683	320 7683	320 7683	320 7683	320 7683
7	PLUG		4.001	1	320 3802	320 3802	320 3802	320 3802	320 3802
8	PLUG		4.001	2	320 3805	320 3805	320 3805	320 3805	320 3805
9	PLUG		4.001	2	320 3870	320 3870	320 3870	320 3870	320 3870
10	PLUG		4.001	2	320 7684	320 7684	320 7684	320 7684	320 7684
11	PLUG		4.001	2	320 7685	320 7685	320 7685	320 7685	320 7685
12	LEVER		4.001	1	320 7705	320 7705	320 7705	320 7705	320 7705
13	LEVER		4.001	1	320 7706	320 7706	320 7706	320 7706	320 7706
14	LEVER		4.001	1	320 8461	320 8461	320 8461	320 8461	320 8461
15	LEVER		4.001	1	320 8462	320 8462	320 8462	320 8462	320 8462
16	SHAFT		4.001	1	320 7707	320 7707	320 7707	320 7707	320 7707
17	FITTING		4.001	1	320 7708	320 7708	320 7708	320 7708	320 7708
18	METERING ROD		4.001	2	448 5788	448 5790	448 5790	448 5789	448 5789
19	NEEDLE		4.001	1	320 7262	320 7262	320 7262	320 7262	320 7262
20	FLOAT		4.001	2	320 7710	320 7710	320 7710	320 7710	320 7710
21	PIN		4.001	2	320 7711	320 7711	320 7711	320 7711	320 7711
22	NEEDLE ASSY.	232	4.001	2	320 8392	320 8392	320 8392	320 8392	320 8392
23	PLUG		4.001	1	320 7714	320 7714	320 7714	320 7714	320 7714
24	PLUG		4.001	1	320 7715	320 7715	320 7715	320 7715	320 7715
25	HOUSING		4.001	1	320 7717	320 7717	320 7717	320 7717	320 7717
26	LEVER		4.001	1	448 6955	448 6955	448 6955	448 6955	448 6955
27	LEVER		4.001	1	320 7719	320 7719	320 7719	320 7719	320 7719
28	VENTURI (Primary-Choke Side)		4.001	1	448 5795	448 5945	448 5945	448 5945	448 5945
29	VENTURI (Secondary-Choke Side)		4.001	1	320 8404	320 8404	320 8404	320 8404	320 8404
30	VENTURI (Primary-Pump Side)		4.001	1	448 5798	448 5946	448 5946	448 5946	448 5946
31	VENTURI (Secondary-Pump Side)		4.001	1	320 8403	320 8403	320 8403	320 8403	320 8403
32	SPRING		4.001	1	320 5885	320 5885	320 5885	320 5885	320 5885
33	SPRING		4.001	1	320 7724	320 7724	320 7724	320 7724	320 7724
34	SPRING		4.001	1	320 5125	320 5125	320 5125	320 5125	320 5125
35	SPRING		4.001	2	320 8413	320 8413	320 8413	320 8413	320 8413
36	SPRING		4.001	1	320 7725	320 7725	320 7725	320 7725	320 7725
37	SPRING		4.001	2	320 7726	320 7726	320 7726	320 7726	320 7726
38	SPRING		4.001	1	320 7727	320 7727	320 7727	320 7727	320 7727
39	RETAINER		4.001	3	320 3818	320 3818	320 3818	320 3818	320 3818
40	PLUNGER		4.001	1	448 5856	448 5856	448 5856	448 5856	448 5856
41	PLATE		4.001	1	320 8430	320 8430	320 8430	320 8430	320 8430
42	PLATE		4.001	1	320 8431	320 8431	320 8431	320 8431	320 8431
43	SCREW		4.001	1	320 6412	320 6412	320 6412	320 6412	320 6412
44	SCREW		4.001	1	320 6412	320 6412	320 6412	320 6412	320 6412
45	SCREW		4.001	1	320 6414	320 6414	320 6414	320 6414	320 6414
46	SCREW		4.001	1	320 6414	320 6414	320 6414	320 6414	320 6414
47	SCREW		4.001	3	320 6431	320 6431	320 6431	320 6431	320 6431
48	SCREW		4.001	2	320 7731	320 7731	320 7731	320 7731	320 7731
49	SCREW		4.001	1	320 7732	320 7732	320 7732	320 7732	320 7732
50	SCREW		4.001	6	320 7733	320 7733	320 7733	320 7733	320 7733
51	SCREW		4.001	8	320 7734	320 7734	320 7734	320 7734	320 7734
52	SCREW		4.001	2	320 8432	320 8432	320 8432	320 8432	320 8432
53	SCREW		4.001	2	320 8433	320 8433	320 8433	320 8433	320 8433
54	SCREW		4.001	4	320 6473	320 6473	320 6473	320 6473	320 6473
55	SCREW		4.001	4	320 7735	320 7735	320 7735	320 7735	320 7735
56	SCREW		4.001	1	320 7736	320 7736	320 7736	320 7736	320 7736
57	SCREW		4.001	1	320 7737	320 7737	320 7737	320 7737	320 7737
58	SCREW		4.001	1	320 7738	320 7738	320 7738	320 7738	320 7738
59	SCREW		4.001	3	320 7742	320 7742	320 7742	320 7742	320 7742
60	SCREW		4.001	1	320 7743	320 7743	320 7743	320 7743	320 7743
61	SCREW		4.001	2	320 7744	320 7744	320 7744	320 7744	320 7744
62	SCREW		4.001	2	320 7745	320 7745	320 7745	320 7745	320 7745

Printed in U.S.A.

KEY NO.	DESCRIPTION	PAKS CODE	GROUP NO.	PER CAR	PART NO.	PART NO.	PART NO.	PART NO.	PART NO.
					AFB-4583	*AFB-4584*	*AFB-4585*	*AFB-4624*	*AFB-4692*
63	SCREW		4.001	2	320 7746	320 7746	320 7746	320 7746	320 7746
64	NUT		4.001	1	320 6802	320 6802	320 6802	320 6802	320 6802
65	ARM		4.001	1	320 8467	320 8467	320 8467	320 8467	320 8467
66	ARM		4.001	1	320 7748	320 7748	320 7748	320 7748	320 7748
67	ARM		4.001	1	320 7749	320 7749	320 7749	320 7749	320 7749
68	ROD		4.001	1	320 7750	320 7750	320 7750	320 7750	320 7750
69	ROD		4.001	1	320 7751	320 7751	320 7751	320 7751	320 7751
70	ROD		4.001	1	320 8434	320 8434	320 8434	320 8434	320 8434
71	ROD		4.001	1	320 7752	320 7752	320 7752	320 7752	320 7752
72	LINK		4.001	1	320 7754	320 7754	320 7754	320 7754	320 7754
73	JET (Secondary)		4.001	2	320 7755	320 7755	320 7755	320 7755	320 7755
74	JET (Primary)		4.001	2	320 8465	320 8466	320 8466	320 8465	320 8465
75	GASKET		4.001	1	448 5888	448 5888	448 5888	448 5888	448 5888
76	BALL		4.001	1	320 8779	320 8779	320 8779	320 3863	320 3863
77	WASHER		4.001	1	320 7757	320 7757	320 7757	320 7757	320 7757
78	WASHER		4.001	1	320 7759	320 7759	320 7759	320 7759	320 7759
79	WASHER		4.001	1	320 7760	320 7760	320 7760	320 7760	320 7760
80	PIN		4.001	1	320 7761	320 7761	320 7761	320 7761	320 7761
81	RETAINER		4.001	6	320 3830	320 3830	320 3830	320 3830	320 3830
82	PISTON		4.001	1	448 5858	448 5859	448 5859	448 5858	448 5858
83	PISTON		4.001	2	320 9942	320 7762	320 7762	320 9942	320 9942
84	VALVE		4.001	1	320 7764	320 7764	320 7764	320 7764	320 7764
85	HOUSING		4.001	1	320 8420	320 8420	320 8420	320 8420	320 8420
86	THERMOSTAT		4.001	1	320 9943	320 9943	320 9943	320 9943	320 9943
87	BRACKET		4.001	1	320 9944	320 9944	320 9944	320 9944	320 9944
88	CAM		4.001	1	320 8421	320 8421	320 8421	320 8421	320 8421
89	PLATE		4.001	1	320 8422	320 8422	320 8422	320 8422	320 8422
90	BAFFLE		4.001	2	320 7768	320 7768	320 7768	320 7768	320 7768
91	DASHPOT		4.001	1	448 6954	448 6954	448 6954	448 6954	448 6954
92	LIMITER		4.001	2	320 9879	320 9879	320 9879	320 9879	320 9879
93	NEEDLE		4.001	2	448 7159	448 7159	448 7159	448 7159	448 7159
94	SPRING		4.001	2	320 5885	320 5885	320 5885	320 5885	320 5885

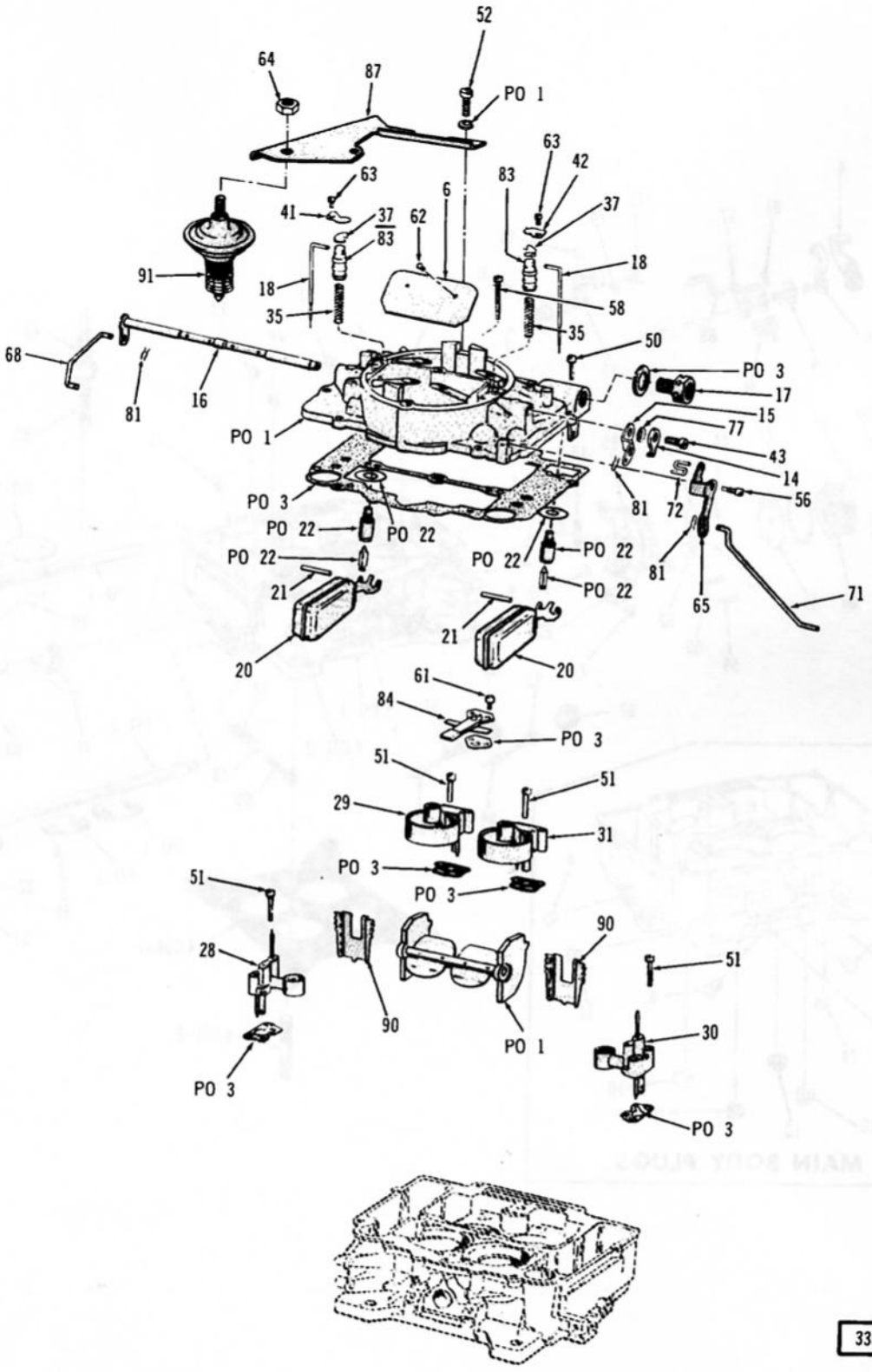

3359

CARBURETOR (Part 1 of 2)

Printed in U.S.A.

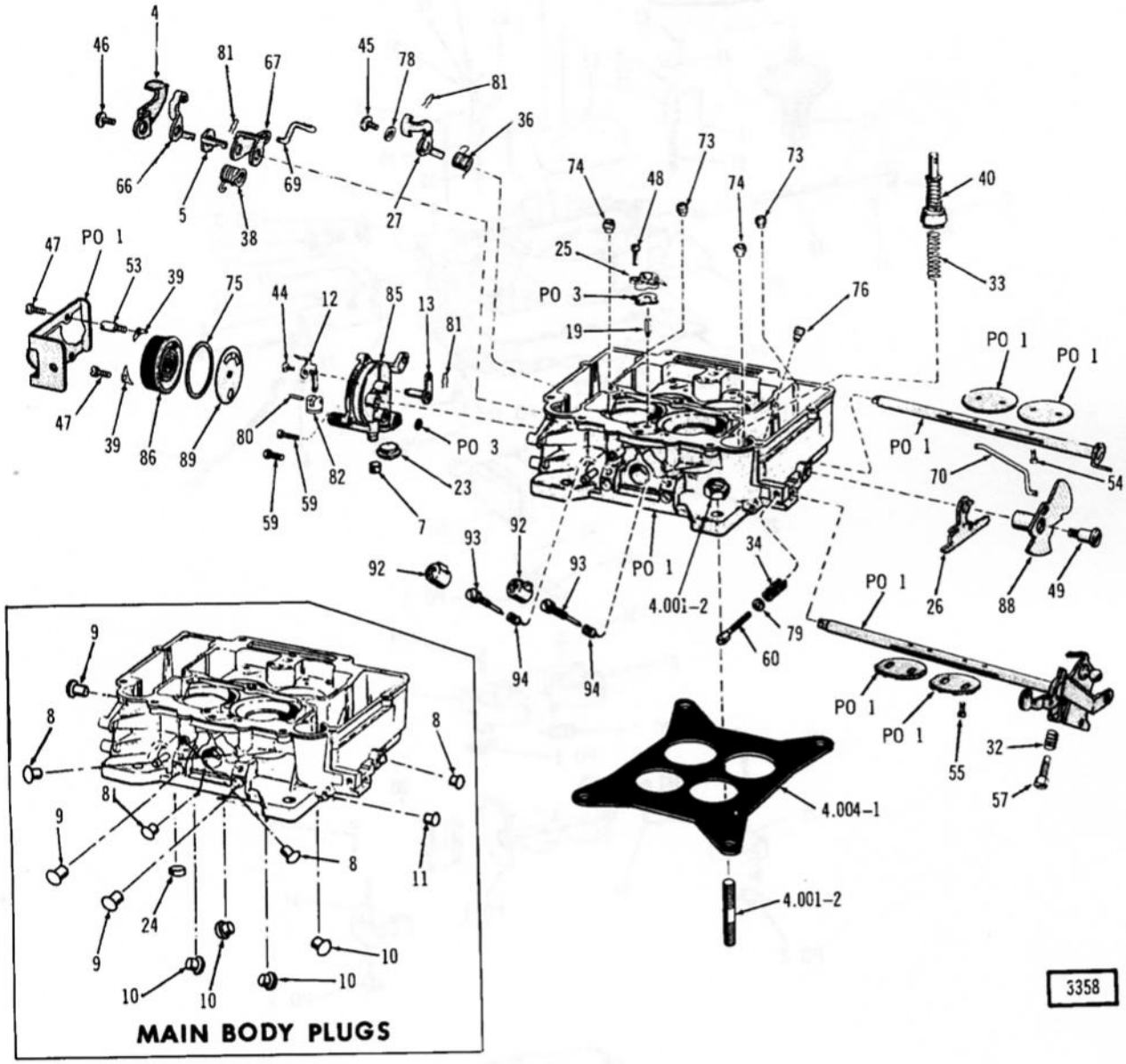

CARBURETOR (Part 2 of 2)

KEY NO.	DESCRIPTION	PAKS CODE	GROUP NO.	PER CAR	PART NO.	PART NO.	PART NO.	PART NO.	PART NO.
					AFB-4664S	*AFB-4665S*			
1	CARBURETOR	256	4.001	1	319 4512	319 4513			
2	MAJOR REPAIR KIT	249	4.001	1	448 6759	448 6759			
3	GASKET SET	252	4.001	1	320 8350	320 8350			
4	LEVER		4.001	1	320 7681	320 7681			
5	LEVER		4.001	1	320 7682	320 7682			
6	PLATE		4.001	1	320 7683	320 7683			
7	PLUG		4.001	1	320 3802	320 3802			
8	PLUG		4.001	2	320 3805	320 3805			
9	PLUG		4.001	2	320 3870	320 3870			
10	PLUG		4.001	2	320 7684	320 7684			
11	PLUG		4.001	2	320 7685	320 7685			
12	LEVER		4.001	1	320 7705	320 7705			
13	LEVER		4.001	1	320 7706	320 7706			
14	LEVER		4.001	1	320 8461	320 8461			
15	LEVER		4.001	1	320 8462	320 8462			
16	SHAFT		4.001	1	320 7707	320 7707			
17	FITTING		4.001	1	448 6608	448 6608			
18	METERING ROD		4.001	2	448 5788	320 9932			
19	NEEDLE		4.001	1	320 7262	320 7262			
20	FLOAT		4.001	2	320 7710	320 7710			
21	PIN		4.001	2	320 7711	320 7711			
22	NEEDLE ASSY.	232	4.001	2	320 8392	320 8392			
23	PLUG		4.001	1	320 7714	320 7714			
24	PLUG		4.001	1	320 7715	320 7715			
25	HOUSING		4.001	1	320 7717	320 7717			
26	LEVER		4.001	1	448 6955	448 6955			
27	LEVER		4.001	1	320 7719	320 7719			
28	VENTURI (Primary-Choke Side)		4.001	1	448 6624	448 6610			
29	VENTURI (Secondary-Choke Side)		4.001	1	320 8404	320 8404			
30	VENTURI (Primary-Pump Side)		4.001	1	448 6625	448 6611			
31	VENTURI (Secondary-Pump Side)		4.001	1	320 8403	320 8403			
32	SPRING		4.001	1	320 5885	320 5885			
33	SPRING		4.001	1	320 7724	320 7724			
34	SPRING		4.001	1	320 5125	320 5125			
35	SPRING		4.001	2	320 8413	320 8413			
36	SPRING		4.001	1	320 7725	320 7725			
37	SPRING		4.001	2	320 7726	320 7726			
38	SPRING		4.001	1	320 7727	320 7727			
39	RETAINER		4.001	3	320 3818	320 3818			
40	PLUNGER		4.001	1	448 6614	448 6614			
41	PLATE		4.001	1	320 8430	320 8430			
42	PLATE		4.001	1	320 8431	320 8431			
43	SCREW		4.001	1	320 6412	320 6412			
44	SCREW		4.001	1	320 6412	320 6412			
45	SCREW		4.001	1	320 6414	320 6414			
46	SCREW		4.001	1	320 6414	320 6414			
47	SCREW		4.001	3	320 6431	320 6431			
48	SCREW		4.001	2	320 7731	320 7731			
49	SCREW		4.001	1	320 7732	320 7732			
50	SCREW		4.001	6	320 7733	320 7733			
51	SCREW		4.001	8	320 7734	320 7734			
52	SCREW		4.001	2	320 8432	320 8432			
53	SCREW		4.001	2	320 8433	320 8433			
54	SCREW		4.001	4	320 6473	320 6473			
55	SCREW		4.001	4	320 7735	320 7735			
56	SCREW		4.001	1	320 7736	320 7736			
57	SCREW		4.001	1	320 7737	320 7737			
58	SCREW		4.001	1	320 7738	320 7738			
59	SCREW		4.001	3	320 7742	320 7742			
60	SCREW		4.001	1	320 7743	320 7743			
61	SCREW		4.001	2	320 7744	320 7744			
62	SCREW		4.001	2	320 7745	320 7745			

Printed in U.S.A.

KEY NO.	DESCRIPTION	PAKS CODE	GROUP NO.	PER CAR	PART NO.	PART NO.	PART NO.	PART NO.	PART NO.
					AFB-4664S	*AFB-4665S*			
63	SCREW		4.001	2	320 7746	320 7746			
64	NUT		4.001	1	320 6802	320 6802			
65	ARM		4.001	1	320 7747	320 7747			
66	ARM		4.001	1	320 7748	320 7748			
67	ARM		4.001	1	320 7749	320 7749			
68	ROD		4.001	1	320 7750	320 7750			
69	ROD		4.001	1	320 7751	320 7751			
70	ROD		4.001	1	320 8434	320 8434			
71	ROD		4.001	1	320 7752	320 7752			
72	LINK		4.001	1	320 7754	320 7754			
73	JET (Secondary)		4.001	2	320 7755	320 7755			
74	JET (Primary)		4.001	2	320 8465	320 8466			
75	GASKET		4.001	1	448 5888	448 5888			
76	BALL		4.001	1	320 3863	320 3863			
77	WASHER		4.001	1	320 7757	320 7757			
78	WASHER		4.001	1	320 7759	320 7759			
79	WASHER		4.001	1	320 7760	320 7760			
80	PIN		4.001	1	320 7761	320 7761			
81	RETAINER		4.001	6	320 3830	320 3830			
82	PISTON		4.001	1	448 5858	320 8415			
83	PISTON		4.001	2	320 9942	320 7762			
84	VALVE		4.001	1	320 7764	320 7764			
85	HOUSING		4.001	1	448 6615	448 6615			
86	THERMOSTAT		4.001	1	448 6616	448 6616			
87	BRACKET		4.001	1	320 9944	320 9944			
88	CAM		4.001	1	320 8421	320 8421			
89	PLATE		4.001	1	448 6617	448 6623			
90	BAFFLE		4.001	1	320 7768	320 7768			
91	DASHPOT		4.001	1	448 6954	448 6954			
92	LIMITER		4.001	2	320 9879	320 9879			
93	NEEDLE		4.001	2	448 7159	448 7159			
94	SPRING		4.001	2	320 5885	320 5885			

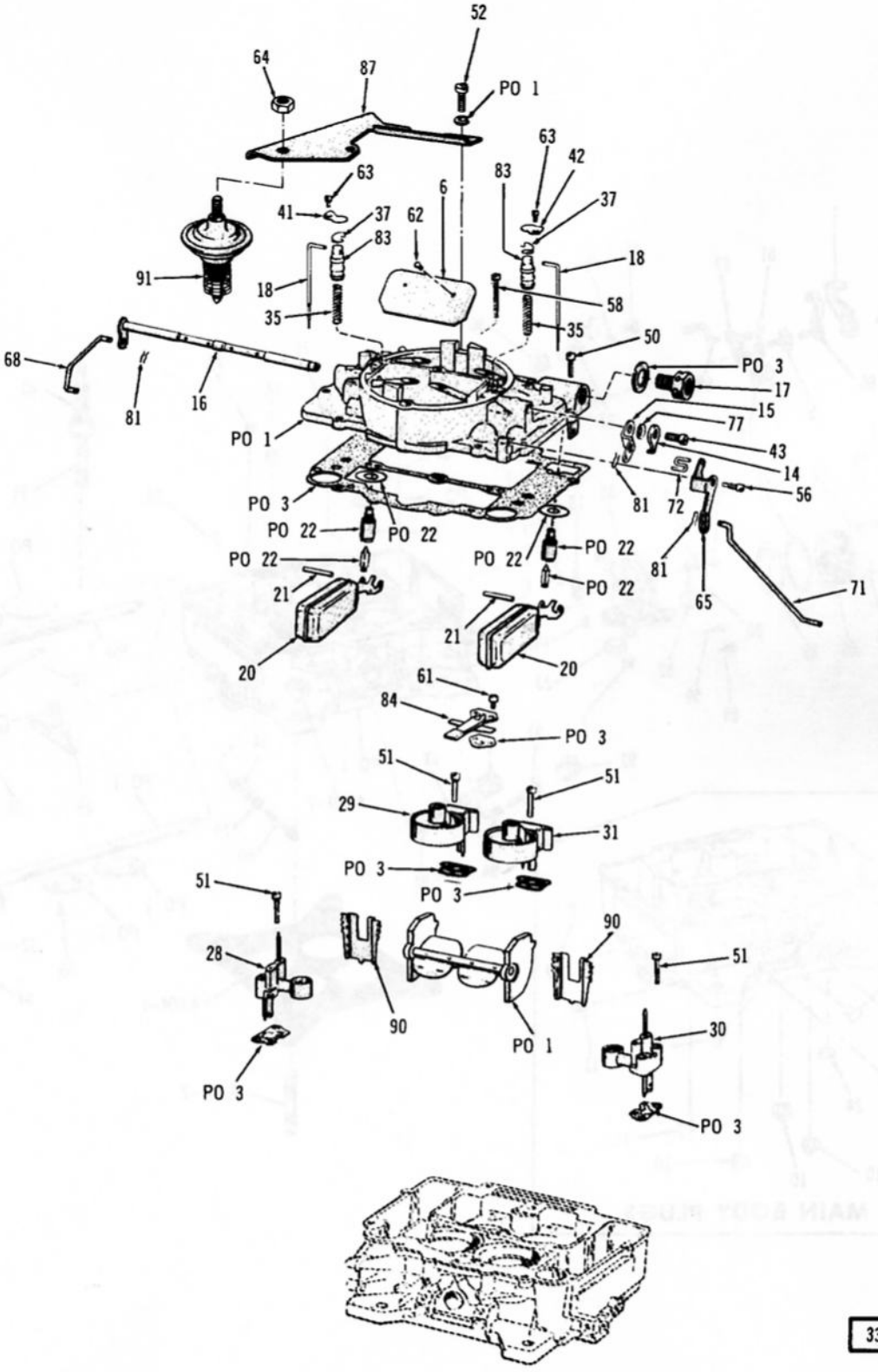

3359

CARBURETOR (Part 1 of 2)

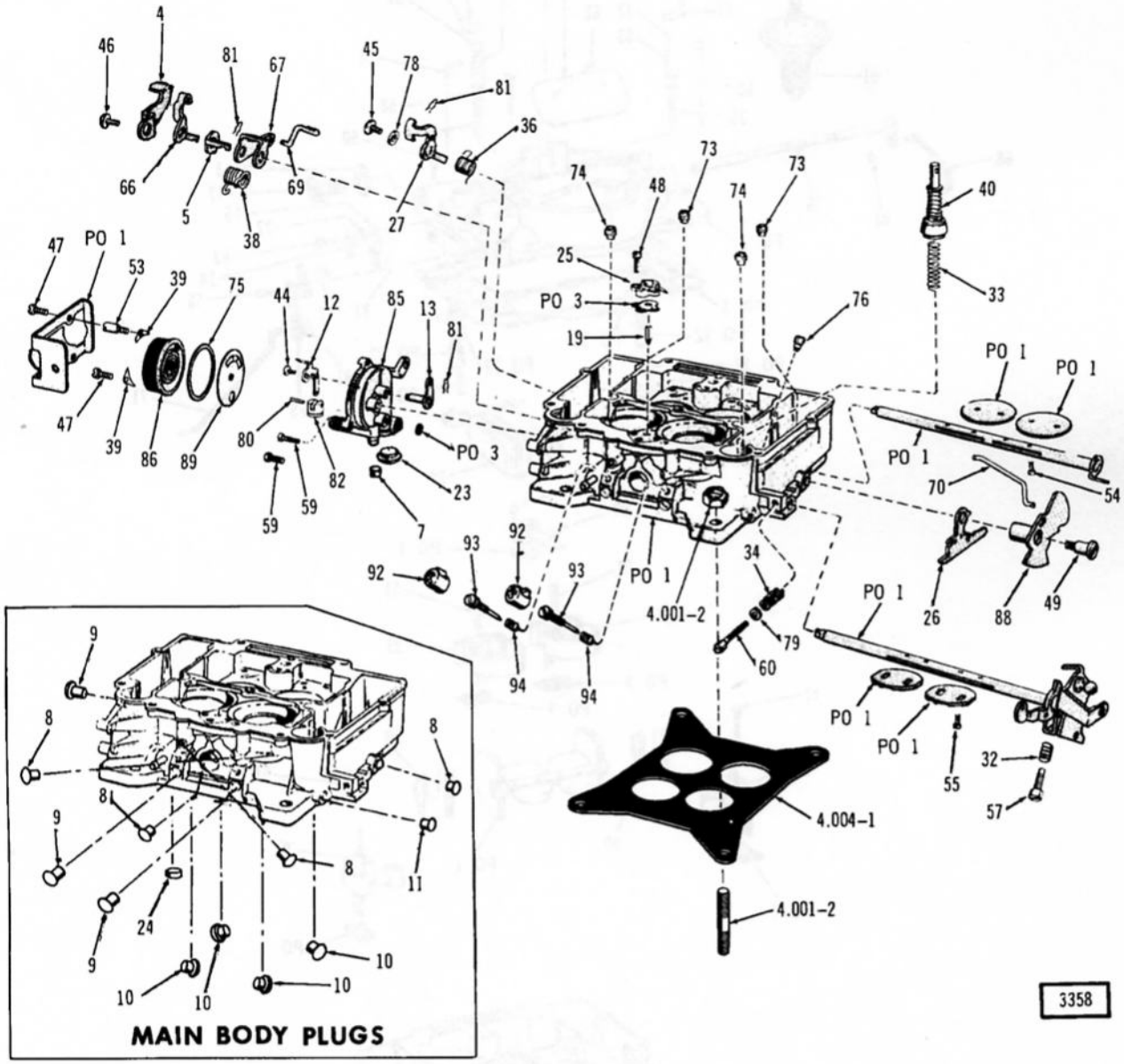

CARBURETOR (Part 2 of 2)

KEY NO.	DESCRIPTION	PAKS CODE	GROUP NO.	PER CAR	PART NO.	PART NO.	PART NO.	PART NO.	PART NO.
					AFB-4660S	*AFB-4661S*	*AFB-4662S*	*AFB-4663S*	
1	CARBURETOR	256	4.001	1	319 4507	319 4508	319 4510	319 4511	
2	MAJOR REPAIR KIT	249	4.001	1	448 6759	448 6759	448 6759	448 6759	
3	GASKET SET	252	4.001	1	320 8350	320 8350	320 8350	320 8350	
4	LEVER		4.001	1	320 7681	320 7681	320 7681	320 7681	
5	LEVER		4.001	1	320 7682	320 7682	320 7682	320 7682	
6	PLATE		4.001	1	320 7683	320 7683	320 7683	320 7683	
7	PLUG		4.001	1	320 3802	320 3802	320 3802	320 3802	
8	PLUG		4.001	2	320 3805	320 3805	320 3805	320 3805	
9	PLUG		4.001	2	320 3870	320 3870	320 3870	320 3870	
10	PLUG		4.001	2	320 7684	320 7684	320 7684	320 7684	
11	PLUG		4.001	2	320 7685	320 7685	320 7685	320 7685	
12	LEVER		4.001	1	320 7705	320 7705	320 7705	320 7705	
13	LEVER		4.001	1	320 7706	320 7706	320 7706	320 7706	
14	LEVER		4.001	1	320 8461	320 8461	320 8461	320 8461	
15	LEVER		4.001	1	320 8462	320 8462	320 8462	320 8462	
16	SHAFT		4.001	1	320 7707	320 7707	320 7707	320 7707	
17	FITTING		4.001	1	448 6608	448 6608	448 6608	448 6608	
18	METERING ROD		4.001	2	448 6609	448 5790	448 5789	448 6619	
19	NEEDLE		4.001	1	320 7262	320 7262	320 7262	320 7262	
20	FLOAT		4.001	2	320 7710	320 7710	320 7710	320 7710	
21	PIN		4.001	2	320 7711	320 7711	320 7711	320 7711	
22	NEEDLE ASSY.	232	4.001	2	320 8392	320 8392	320 8392	320 8392	
23	PLUG		4.001	1	320 7714	320 7714	320 7714	320 7714	
24	PLUG		4.001	1	320 7715	320 7715	320 7715	320 7715	
25	HOUSING		4.001	1	320 7717	320 7717	448 6620	320 7717	
26	LEVER		4.001	1	448 6955	448 6955	448 6955	448 6955	
27	LEVER		4.001	1	320 7719	320 7719	320 7719	320 7719	
28	VENTURI (Primary-Choke Side)		4.001	1	448 6612	448 6610	448 6610	448 6610	
29	VENTURI (Secondary-Choke Side)		4.001	1	320 9937	320 8404	320 8404	320 8404	
30	VENTURI (Primary-Pump Side)		4.001	1	448 6613	448 6611	448 6611	448 6611	
31	VENTURI (Secondary-Pump Side)		4.001	1	320 9938	320 8403	320 8403	320 8403	
32	SPRING		4.001	1	320 5885	320 5885	320 5885	320 5885	
33	SPRING		4.001	1	320 7724	320 7724	320 7724	320 7724	
34	SPRING		4.001	1	320 5125	320 5125	320 5125	320 5125	
35	SPRING		4.001	2	320 8413	320 8413	320 8413	320 8413	
36	SPRING		4.001	1	320 7725	320 7725	320 7725	320 7725	
37	SPRING		4.001	2	320 7726	320 7726	320 7726	320 7726	
38	SPRING		4.001	1	320 7727	320 7727	320 7727	320 7727	
39	RETAINER		4.001	3	320 3818	320 3818	320 3818	320 3818	
40	PLUNGER		4.001	1	448 6614	448 6614	448 6614	448 6614	
41	PLATE		4.001	1	320 8430	320 8430	320 8430	320 8430	
42	PLATE		4.001	1	320 8431	320 8431	320 8431	320 8431	
43	SCREW		4.001	1	320 6412	320 6412	320 6412	320 6412	
44	SCREW		4.001	1	320 6412	320 6412	320 6412	320 6412	
45	SCREW		4.001	1	320 6414	320 6414	320 6414	320 6414	
46	SCREW		4.001	1	320 6414	320 6414	320 6414	320 6414	
47	SCREW		4.001	3	320 6431	320 6431	320 6431	320 6431	
48	SCREW		4.001	2	320 7731	320 7731	320 7731	320 7731	
49	SCREW		4.001	1	320 7732	320 7732	320 7732	320 7732	
50	SCREW		4.001	6	320 7733	320 7733	320 7733	320 7733	
51	SCREW		4.001	8	320 7734	320 7734	320 7734	320 7734	
52	SCREW		4.001	2	320 8432	320 8432	320 8432	320 8432	
53	SCREW		4.001	2	320 8433	320 8433	320 8433	320 8433	
54	SCREW		4.001	4	320 6473	320 6473	320 6473	320 6473	
55	SCREW		4.001	4	320 7735	320 7735	320 7735	320 7735	
56	SCREW		4.001	1	320 7736	320 7736	320 7736	320 7736	
57	SCREW		4.001	1	320 7737	320 7737	320 7737	320 7737	
58	SCREW		4.001	1	320 7738	320 7738	320 7738	320 7738	
59	SCREW		4.001	3	320 7742	320 7742	320 7742	320 7742	
60	SCREW		4.001	1	320 7743	320 7743	320 7743	320 7743	
61	SCREW		4.001	2	320 7744	320 7744	320 7744	320 7744	
62	SCREW		4.001	2	320 7745	320 7745	320 7745	320 7745	

Printed in U.S.A.

KEY NO.	DESCRIPTION	PAKS CODE	GROUP NO.	PER CAR	PART NO.	PART NO.	PART NO.	PART NO.	PART NO.
					AFB-4660S	AFB-4661S	AFB-4662S	AFB-4663S	
63	SCREW		4.001	2	320 7746	320 7746	320 7746	320 7746	
64	NUT		4.001	1	320 6802	320 6802	320 6802	320 6802	
65	ARM		4.001	1	320 7747	320 7747	320 7747	320 7747	
66	ARM		4.001	1	320 7748	320 7748	320 7748	320 7748	
67	ARM		4.001	1	320 7749	320 7749	320 7749	320 7749	
68	ROD		4.001	1	320 7750	320 7750	320 7750	320 7750	
69	ROD		4.001	1	320 7751	320 7751	320 7751	320 7751	
70	ROD		4.001	1	320 8434	320 8434	320 8434	320 8434	
71	ROD		4.001	1	320 7752	320 7752	320 7752	320 7752	
72	LINK		4.001	1	320 7754	320 7754	320 7754	320 7754	
73	JET (Secondary)		4.001	2	320 7755	320 7755	320 7755	320 7755	
74	JET (Primary)		4.001	2	320 8465	320 8466	320 8465	320 8466	
75	GASKET		4.001	1	448 5888	448 5888	448 5888	448 5888	
76	BALL		4.001	1	320 3863	320 3863	320 3863	320 3863	
77	WASHER		4.001	1	320 7757	320 7757	320 7757	320 7757	
78	WASHER		4.001	1	320 7759	320 7759	320 7759	320 7759	
79	WASHER		4.001	1	320 7760	320 7760	320 7760	320 7760	
80	PIN		4.001	1	320 7761	320 7761	320 7761	320 7761	
81	RETAINER		4.001	6	320 3830	320 3830	320 3830	320 3830	
82	PISTON		4.001	1	320 7763	320 8415	448 5858	320 8415	
83	PISTON		4.001	2	320 7762	320 7762	320 9942	320 9942	
84	VALVE		4.001	1	320 7764	320 7764	320 7764	320 7764	
85	HOUSING		4.001	1	448 6615	448 6615	448 6615	448 6615	
86	THERMOSTAT		4.001	1	448 6616	448 6616	448 6616	448 6616	
87	BRACKET		4.001	1	320 9944	320 9944	320 9944	320 9944	
88	CAM		4.001	1	320 8421	320 8421	320 8421	320 8421	
89	PLATE		4.001	1	448 6618	448 6617	448 6617	448 6623	
90	BAFFLE		4.001	1	320 7768	320 7768	320 7768	320 7768	
91	DASHPOT		4.001	1	448 6954	448 6954	448 6954	448 6954	
92	LIMITER		4.001	2	320 9879	320 9879	320 9879	320 9879	
93	NEEDLE		4.001	2	448 7159	448 7159	448 7159	448 7159	
94	SPRING		4.001	2	320 5885	320 5885	320 5885	320 5885	

Printed in U.S.A.

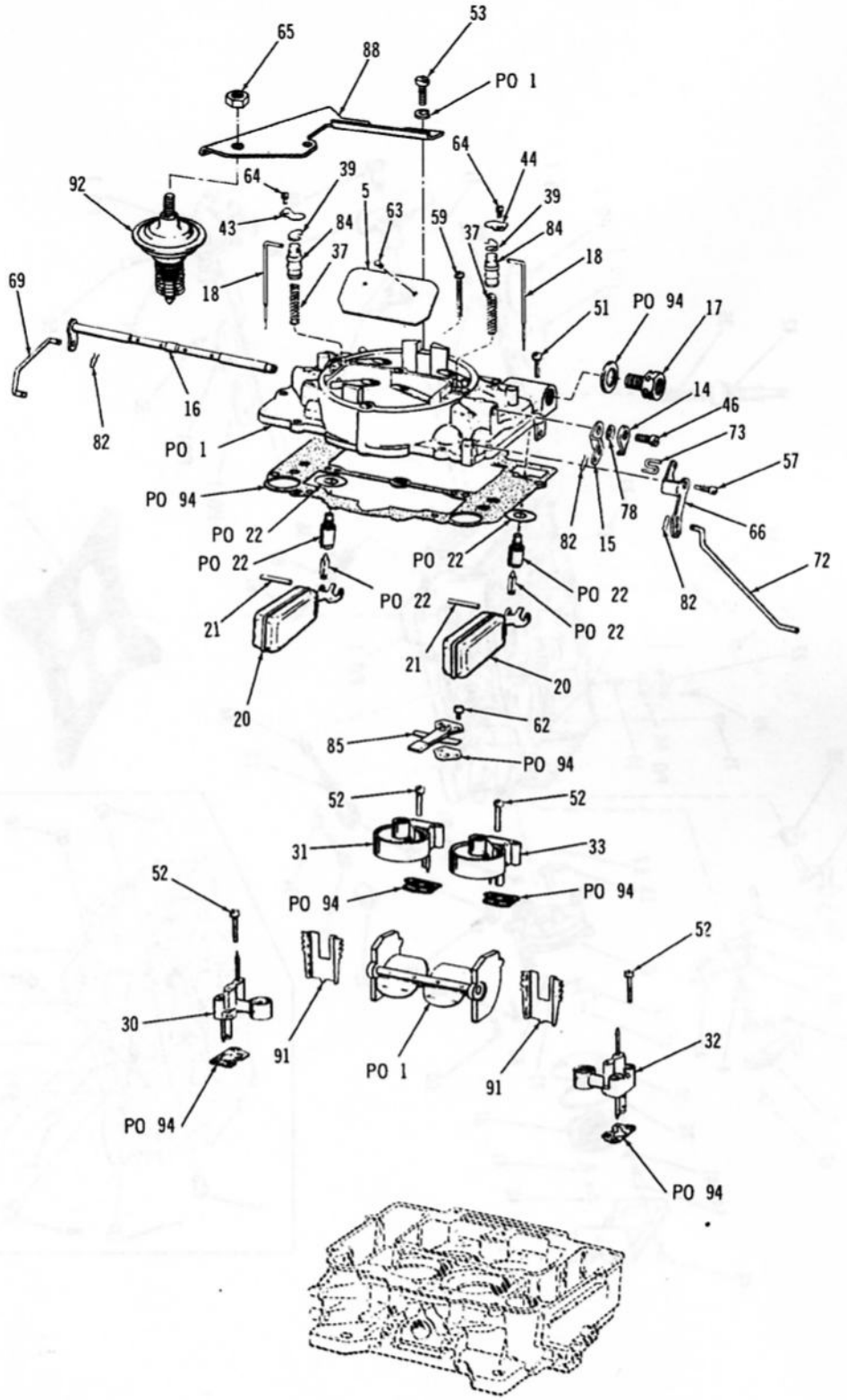

3657

CARBURETOR (Part 1 of 2)

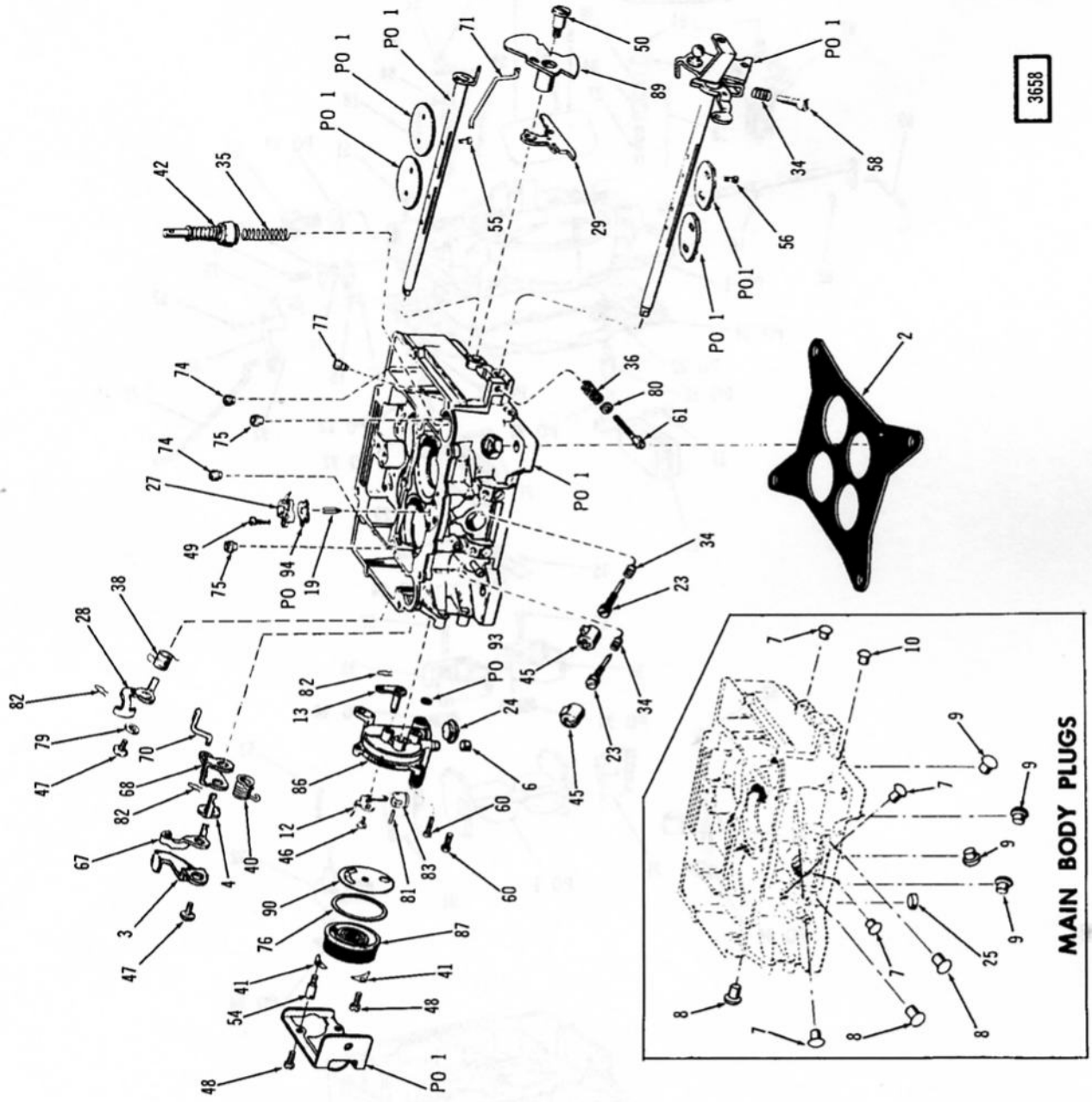

CARBURETOR (Part 2 of 2)

KEY NO.	DESCRIPTION	PAKS CODE	GROUP NO.	PER CAR	PART NO.	PART NO.	PART NO.	PART NO.	PART NO.
					AFB-6043S	AFB-6044S	AFB-6045S	AFB-6046S	
1	CARBURETOR		4.001	1	448 8207	448 8208	448 8209	448 8210	
2	GASKET		4.001	1	318 5729	318 5729	318 5729	318 5729	
3	LEVER		4.001	1	320 7681	320 7681	320 7681	320 7681	
4	LEVER		4.001	1	320 7682	320 7682	320 7682	320 7682	
5	PLATE		4.001	1	320 7683	320 7683	320 7683	320 7683	
6	PLUG		4.001	1	320 3802	320 3802	320 3802	320 3802	
7	PLUG		4.001	2	320 3805	320 3805	320 3805	320 3805	
8	PLUG		4.001	2	320 3870	320 3870	320 3870	320 3870	
9	PLUG		4.001	2	320 7684	320 7684	320 7684	320 7684	
10	PLUG		4.001	2	320 7685	320 7685	320 7685	320 7685	
11	PLUG		4.001	2	320 7686	320 7686	320 7686	320 7686	
12	LEVER		4.001	1	320 7705	320 7705	320 7705	320 7705	
13	LEVER		4.001	1	320 7706	320 7706	320 7706	320 7706	
14	LEVER		4.001	1	320 8461	320 8461	320 8461	320 8461	
15	LEVER		4.001	1	320 8462	320 8462	320 8462	320 8462	
16	SHAFT		4.001	1	320 7707	320 7707	320 7707	320 7707	
17	FITTING		4.001	1	448 6608	448 6608	320 7708	320 7708	
18	METERING ROD		4.001	2	448 6609	448 5788	448 5791	448 5788	
19	NEEDLE		4.001	1	320 7262	320 7262	320 7262	320 7262	
20	FLOAT		4.001	2	320 7710	320 7710	320 7710	320 7710	
21	PIN		4.001	2	320 7711	320 7711	320 7711	320 7711	
22	NEEDLE ASSY.	232	4.001	2	320 8392	320 8392	320 8392	320 8392	
23	NEEDLE		4.001	2	448 7159	448 7159	448 7159	448 7159	
24	PLUG		4.001	1	320 7714	320 7714	320 7714	320 7714	
25	PLUG		4.001	1	320 7715	320 7715	320 7715	320 7715	
26	PLUG		4.001	2	320 7716	320 7716	320 7716	320 7716	
27	HOUSING		4.001	1	320 7717	320 7717	320 7717	320 7717	
28	LEVER		4.001	1	320 7719	320 7719	320 7719	320 7719	
29	LEVER		4.001	1	448 6955	448 6955	448 6955	448 6955	
30	VENTURI (Primary-Choke Side)		4.001	1	448 6612	... .	... .	... .	
31	VENTURI (Secondary-Choke Side)		4.001	1	320 9937	320 8404	320 9937	320 8404	
32	VENTURI (Primary-Pump Side)		4.001	1	448 6613	... .	... .	... .	
33	VENTURI (Secondary-Pump Side)		4.001	1	320 9938	320 8403	320 9938	320 8403	
34	SPRING		4.001	3	320 5885	320 5885	320 5885	320 5885	
35	SPRING		4.001	1	320 7724	320 7724	320 7724	320 7724	
36	SPRING		4.001	1	320 5125	320 5125	320 5125	320 5125	
37	SPRING		4.001	2	320 8413	320 8413	320 8413	320 8413	
38	SPRING		4.001	1	320 7725	320 7725	320 7725	320 7725	
39	SPRING		4.001	2	320 7726	320 7726	320 7726	320 7726	
40	SPRING		4.001	1	320 7727	320 7727	320 7727	320 7727	
41	RETAINER		4.001	3	320 3818	320 3818	320 3818	320 3818	
42	PLUNGER		4.001	1	448 6614	448 6614	448 6614	448 6614	
43	PLATE		4.001	1	448 7336	448 7336	448 7336	448 7336	
44	PLATE		4.001	1	448 7337	448 7337	448 7337	448 7337	
45	LIMITER		4.001	2	320 9879	320 9879	320 9879	320 9879	
46	SCREW		4.001	2	320 6412	320 6412	320 6412	320 6412	
47	SCREW		4.001	2	320 6414	320 6414	320 6414	320 6414	
48	SCREW		4.001	3	320 6431	320 6431	320 6431	320 6431	
49	SCREW		4.001	2	320 7731	320 7731	320 7731	320 7731	
50	SCREW		4.001	1	320 7732	320 7732	320 7732	320 7732	
51	SCREW		4.001	6	320 7733	320 7733	320 7733	320 7733	
52	SCREW		4.001	8	320 7734	320 7734	320 7734	320 7734	
53	SCREW		4.001	2	320 8432	320 8432	320 8432	320 8432	
54	SCREW		4.001	2	320 8433	320 8433	320 8433	320 8433	
55	SCREW		4.001	4	320 6473	320 6473	320 6473	320 6473	
56	SCREW		4.001	4	320 7735	320 7735	320 7735	320 7735	
57	SCREW		4.001	1	320 7736	320 7736	320 7736	320 7736	
58	SCREW		4.001	1	320 7737	320 7737	320 7737	320 7737	
59	SCREW		4.001	1	320 7738	320 7738	320 7738	320 7738	
60	SCREW		4.001	3	320 7742	320 7742	320 7742	320 7742	
61	SCREW		4.001	1	320 7743	320 7743	320 7743	320 7743	
62	SCREW		4.001	2	... .	... .	320 7744	320 7744	

KEY NO.	DESCRIPTION	PAKS CODE	GROUP NO.	PER CAR	PART NO.	PART NO.	PART NO.	PART NO.	PART NO.
					AFB-6043S	*AFB-6044S*	*AFB-6045S*	*AFB-6046S*	
63	SCREW		4.001	2	320 7745	320 7745	320 7745	320 7745	
64	SCREW		4.001	2	320 7746	320 7746	320 7746	320 7746	
65	NUT		4.001	1	320 6802	320 6802	320 6802	320 6802	
66	ARM		4.001	1	320 7747	320 7747	320 9941	... .	
67	ARM		4.001	1	320 7748	320 7748	320 7748	320 7748	
68	ARM		4.001	1	320 7749	320 7749	320 7749	320 7749	
69	ROD		4.001	1	320 7750	320 7750	320 7750	320 7750	
70	ROD		4.001	1	320 7751	320 7751	320 7751	320 7751	
71	ROD		4.001	1	320 8434	320 8434	320 8434	320 8434	
72	ROD		4.001	1	320 7752	320 7752	320 7752	320 7752	
73	LINK		4.001	1	320 7754	320 7754	320 7754	320 7754	
74	JET (Secondary)		4.001	2	... .	... .	320 7755	320 7755	
75	JET (Primary)		4.001	2	320 8465	320 8465	320 8465	320 8465	
76	GASKET		4.001	1	448 5888	448 5888	448 5888	448 5888	
77	BALL		4.001	1	320 3863	320 3863	320 3863	320 3863	
78	WASHER		4.001	1	320 7757	320 7757	320 7757	320 7757	
79	WASHER		4.001	1	320 7759	320 7759	320 7759	320 7759	
80	WASHER		4.001	1	320 7760	320 7760	320 7760	320 7760	
81	PIN		4.001	1	320 7761	320 7761	320 7761	320 7761	
82	RETAINER		4.001	6	320 3830	320 3830	320 3830	320 3830	
83	PISTON		4.001	1	320 7763	448 5858	320 7763	448 5858	
84	PISTON		4.001	2	320 7762	320 9942	320 7762	320 9942	
85	VALVE		4.001	1	... .	... .	320 7764	320 7764	
86	HOUSING		4.001	1	448 6615	448 6615	320 7765	320 8420	
87	THERMOSTAT		4.001	1	448 6616	448 6616	320 9943	320 9943	
88	BRACKET		4.001	1	320 9944	320 9944	320 9944	320 9944	
89	CAM		4.001	1	... .	... .	320 8421	320 8421	
90	PLATE		4.001	1	448 6618	448 6623	320 8422	320 8422	
91	BAFFLE		4.001	2	320 7768	320 7768	320 7768	320 7768	
92	DASHPOT		4.001	1	448 6954	448 6954	448 6954	448 6954	
93	MAJOR REPAIR KIT		4.001	1	448 6759	448 6759	448 5569	320 8922	
94	GASKET SET		4.001	1	320 8350	320 8350	320 8350	320 8350	

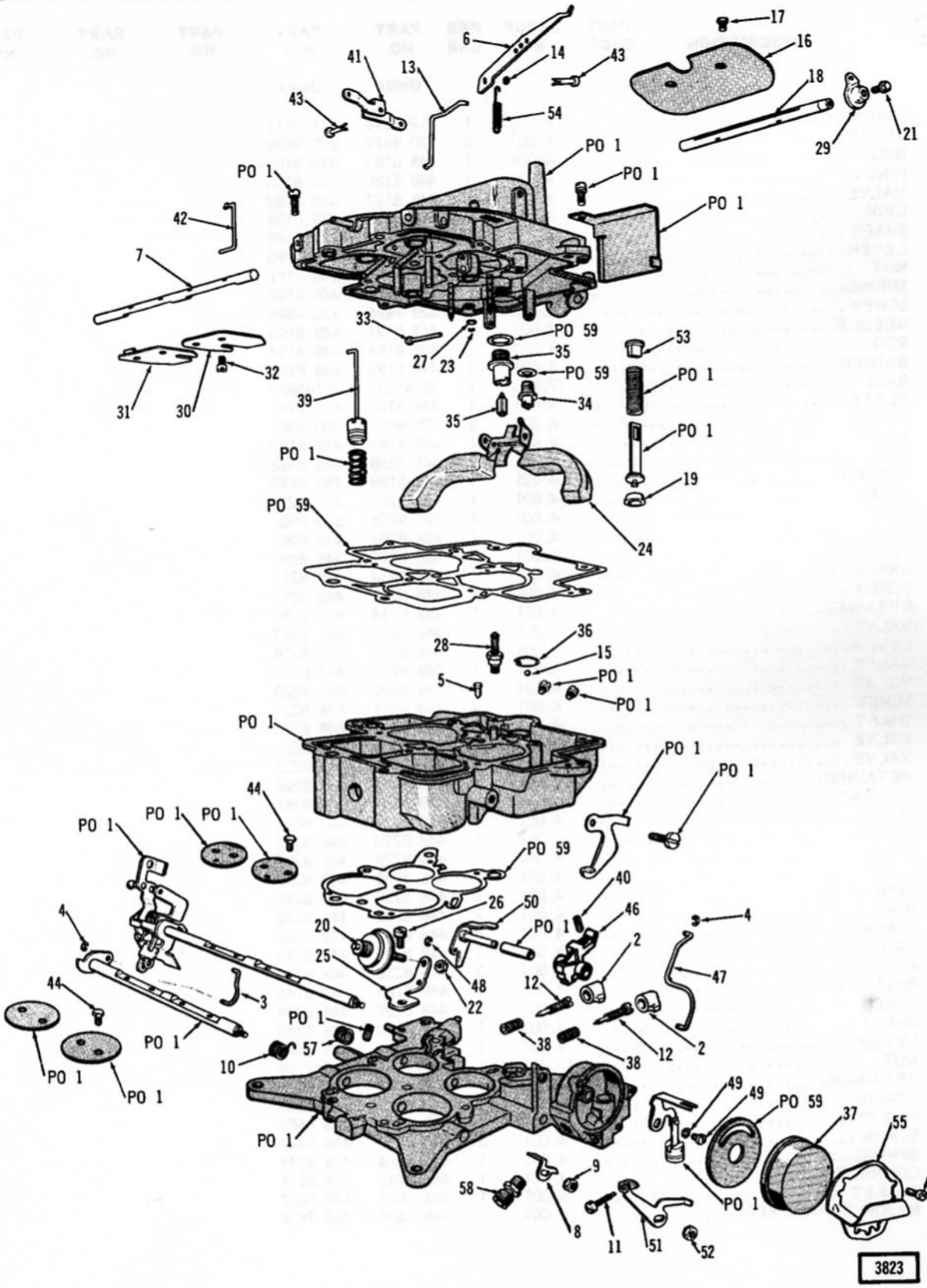

CARBURETOR

FUEL - EXHAUST

KEY NO.	DESCRIPTION	PAKS CODE	GROUP NO.	PER CAR	PART NO.	PART NO.	PART NO.	PART NO.	PART NO.
					OWM4	OWA4			
1	CARBURETOR		4.001	1	319 7610	319 7611			
2	LIMITER		4.001	2	320 9879	320 9879			
3	ROD		4.001	1	448 8185	448 8185			
4	RING		4.001	2	448 8186	448 8186			
5	VALVE		4.001	1	448 8187	448 8187			
6	LINK		4.001	1	448 8188	448 8188			
7	SHAFT		4.001	1	448 8189	448 8189			
8	LEVER		4.001	1	448 8190	448 8190			
9	NUT		4.001	2	448 8191	448 8191			
10	SPRING		4.001	1	448 8192	448 8192			
11	SCREW		4.001	1	320 9896	320 9896			
12	NEEDLE		4.001	2	448 8193	448 8193			
13	ROD		4.001	1	448 8194	448 8194			
14	WASHER		4.001	1	448 8195	448 8195			
15	BALL		17.018	1	G145637	G145637			
16	PLATE		4.001	1	448 8196	448 8196			
17	SCREW		4.001	2	320 9901	320 9901			
18	SHAFT		4.001	1	448 8197	448 8197			
19	CUP		4.001	1	448 8388	448 8388			
20	DASHPOT		4.001	1	448 8199	448 8199			
21	SCREW		4.001	1	448 8222	448 8222			
22	NUT		4.001	1	320 9906	320 9906			
23	DISC		4.001	1	448 8098	448 8098			
24	FLOAT		4.001	1	448 8099	448 8099			
25	BRACKET		4.001	1	448 8214	448 8214			
26	SCREW		4.001	1	448 8215	448 8215			
27	RETAINER		4.001	1	448 8216	448 8216			
28	VALVE		4.001	1	448 8217	448 8217			
29	LEVER		4.001	1	448 8218	448 8218			
30	VALVE		4.001	1	448 8219	448 8219			
31	VALVE		4.001	1	448 8220	448 8220			
32	SCREW		4.001	4	448 8221	448 8221			
33	SHAFT		4.001	1	448 8223	448 8223			
34	VALVE		4.001	1	448 8224	448 8224			
35	VALVE		4.001	1	448 8225	448 8225			
36	RETAINER		4.001	1	448 8226	448 8226			
37	HOUSING		4.001	1	448 8461	448 8461			
38	SPRING		4.001	2	320 9917	320 9917			
39	PISTON		4.001	1	448 8228	448 8228			
40	SCREW		4.001	1	448 8229	448 8229			
41	LEVER		4.001	1	448 8230	448 8230			
42	LINK		4.001	1	448 8231	448 8231			
43	PIN		4.001	2	448 8232	448 8232			
44	SCREW		4.001	8	448 8233	448 8233			
46	CAM		4.001	1	448 8235	448 8235			
47	ROD		4.001	2	448 8238	448 8238			
48	RING		4.001	1	448 8186	448 8186			
49	SCREW		4.001	1	448 8239	448 8239			
50	SHAFT		4.001	1	448 8240	448 8240			
51	LEVER		4.001	1	448 8241	448 8241			
52	NUT		17.412	1	G271169	G271169			
53	RETAINER		4.001	1	448 8242	448 8242			
54	SPRING		4.001	1	448 8243	448 8243			
55	CLAMP		4.001	1	448 6603	448 6603			
56	SCREW		4.001	3	448 5447	448 5447			
57	SPRING		4.001	1	448 8244	448 8244			
58	CONNECTOR		4.001	1	448 8245	448 8245			
59	GASKET KIT		4.001	1	448 7607	448 7607			
60	MAJOR REPAIR KIT		4.001	1	448 7608	448 7608			

Printed in U.S.A.

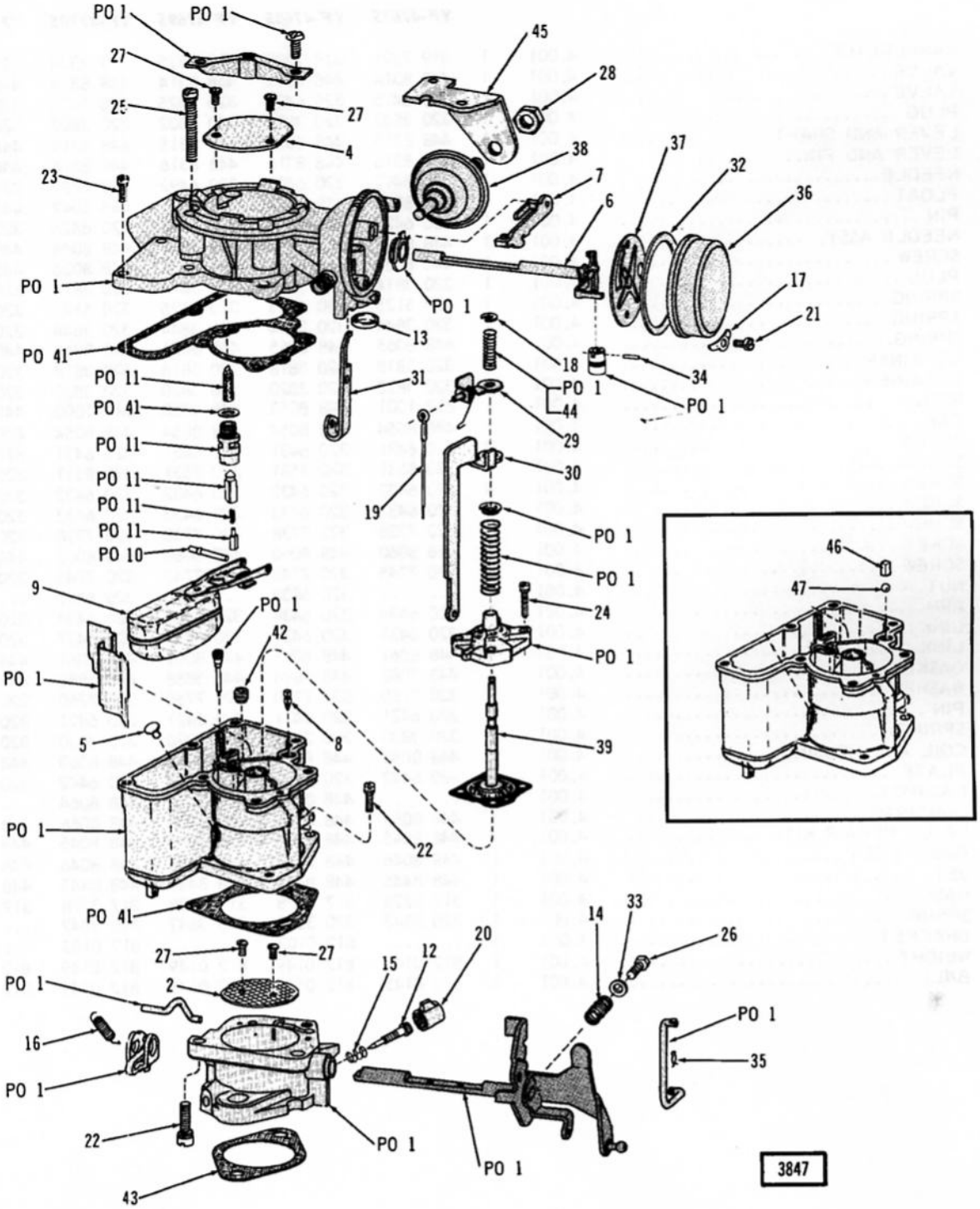
PO 1
PO 1
27
25
27
4
23
PO 1
PO 41
PO 11
PO 41
PO 11
PO 11
PO 11
PO 11
PO 10
9
PO 1
42
PO 1
5
8
PO 1
22
PO 41
27
27
PO 1
2
16
PO 1
22
43
PO 1
PO 1
15
12
20
14
33
26
PO 1
35
45
28
38
7
6
37
32
36
17
21
PO 1
13
18
PO 1
44
34
PO 1
31
29
30
19
PO 1
PO 1
24
PO 1
39
46
47
3847

CARBURETOR

KEY NO.	DESCRIPTION	PAKS CODE	GROUP NO.	PER CAR	PART NO.	PART NO.	PART NO.	PART NO.	PART NO.
					YF-4767S	YF-4768S	YF-4769S	YF-4770S	YF-4978S
1	CARBURETOR		4.001	1	319 7321	319 7320	319 7325	319 7324	321 0362
2	VALVE		4.001	1	448 8314	448 8314	448 8314	448 8314	448 8314
4	VALVE		4.001	1	320 6425	320 6425	320 6425	320 6425	320 6425
5	PLUG		4.001	1	320 3802	320 3802	320 3802	320 3802	320 3802
6	LEVER AND SHAFT		4.001	1	448 8315	448 8315	448 8315	448 8315	448 8315
7	LEVER AND PIN		4.001	1	448 8316	448 8316	448 8316	448 8316	448 8316
8	NEEDLE		4.001	1	320 6492	320 6492	320 6492	320 6492	320 6492
9	FLOAT		4.001	1	448 8047	448 8047	448 8047	448 8047	448 8047
10	PIN		4.001	1	320 6428	320 6428	320 6428	320 6428	320 6428
11	NEEDLE ASSY.		4.001	1	448 8048	448 8048	448 8048	448 8048	448 8048
12	SCREW		4.001	1	448 8036	448 8036	448 8036	448 8036	448 8036
13	PLUG		4.001	1	320 3814	320 3814	320 3814	320 3814	320 3814
14	SPRING		4.001	1	320 5125	320 5125	320 5125	320 5125	320 5125
15	SPRING		4.001	1	320 3844	320 3844	320 3844	320 3844	320 3844
16	SPRING		4.001	1	448 8065	448 8065	448 8065	448 8065	448 8065
17	RETAINER		4.001	3	320 3818	320 3818	320 3818	320 3818	320 3818
18	RETAINER		4.001	1	320 3820	320 3820	320 3820	320 3820	320 3820
19	ROD		4.001	1	812 1001	448 8053	448 8050	812 1000	448 8462
20	CAP		4.001	1	448 8054	448 8054	448 8054	448 8054	448 8054
21	SCREW		4.001	3	320 6431	320 6431	320 6431	320 6431	320 6431
22	SCREW		4.001	3	320 8531	320 8531	320 8531	320 8531	320 8531
23	SCREW		4.001	4	320 6432	320 6432	320 6432	320 6432	320 6432
24	SCREW		4.001	4	320 6433	320 6433	320 6433	320 6433	320 6433
25	SCREW		4.001	3	320 7738	320 7738	320 7738	320 7738	320 7738
26	SCREW		4.001	1	448 8060	448 8060	448 8060	448 8060	448 8060
27	SCREW		4.001	4	320 7745	320 7745	320 7745	320 7745	320 7745
28	NUT		4.001	1	... .	320 6802	... .	320 6802	... .
29	ARM		4.001	1	320 6434	320 6434	320 6434	320 6434	320 6434
30	LINK		4.001	1	320 6437	320 6437	320 6437	320 6437	320 6437
31	LINK		4.001	1	448 8061	448 8061	448 8061	448 8061	448 8061
32	GASKET		4.001	1	448 5888	448 5888	448 5888	448 5888	448 5888
33	WASHER		4.001	1	320 7760	320 7760	320 7760	320 7760	320 7760
34	PIN		4.001	1	320 6421	320 6421	320 6421	320 6421	320 6421
35	SPRING		4.001	1	320 3830	320 3830	320 3830	320 3830	320 3830
36	COIL AND HOUSING		4.001	1	448 8063	448 8063	448 8063	448 8063	448 8063
37	PLATE		4.001	1	320 6442	320 6442	320 6442	320 6442	320 6442
38	DASHPOT		4.001	1	... .	448 8064	... .	448 8064	... .
39	DIAPHRAGM		4.001	1	448 8066	448 8066	448 8066	448 8066	448 8066
40	MAJOR REPAIR KIT		4.001	1	448 8045	448 8045	448 8045	448 8045	448 8045
41	GASKET SET		4.001	1	448 8046	448 8046	448 8046	448 8046	448 8046
42	JET		4.001	1	448 8445	448 8445	448 8445	448 8445	448 8464
43	GASKET		4.001	1	317 3228	317 3228	317 3228	317 3228	317 3228
44	SPRING		4.001	1	320 3842	320 3842	320 3842	320 3842	... .
45	BRACKET		4.001	1	... .	812 0103	... .	812 0103	... .
46	WEIGHT		4.001	1	812 0149	812 0149	812 0149	812 0149	812 0149
47	BALL		4.001	1	812 0145	812 0145	812 0145	812 0145	812 0145

Printed in U.S.A.

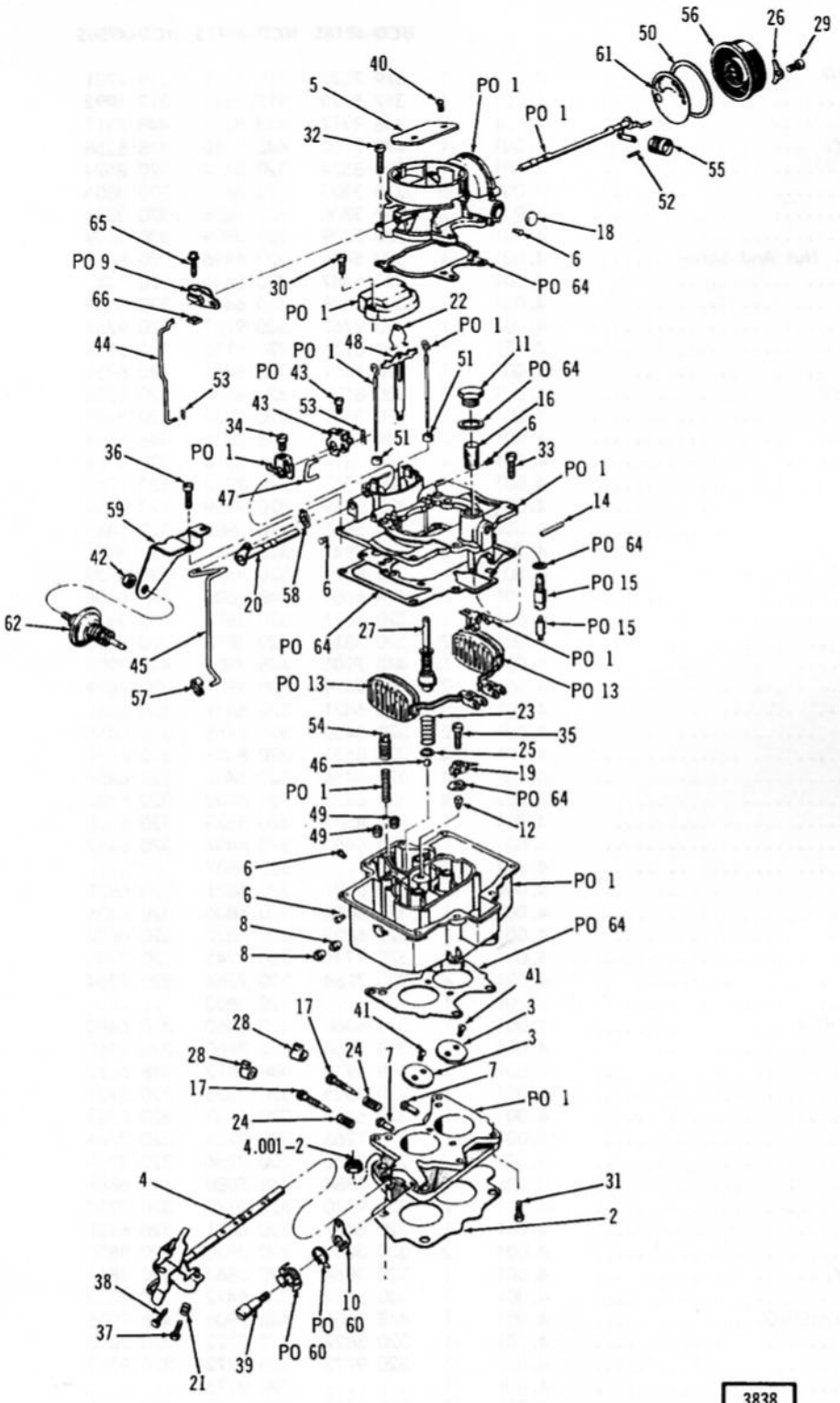
56
26
29
50
61
40
5
PO 1
PO 1
32
55
52
65
18
PO 9
6
30
PO 64
66
PO 1
22
PO 1
44
48
PO 1
11
51
PO 64
PO 43
53
16
43
53
6
34
51
33
PO 1
36
PO 1
47
14
59
PO 64
42
PO 15
20
58
6
PO 15
62
27
PO 64
PO 1
45
PO 13
PO 13
57
23
54
35
25
46
19
PO 1
PO 64
49
12
49
6
PO 1
6
8
PO 64
8
41
41
3
28
17
3
28
24
7
7
17
PO 1
24
4.001-2
4
31
2
38
10
PO 60
37
PO 60
39
21
3838

CARBURETOR

KEY NO.	DESCRIPTION	PAKS CODE	GROUP NO.	PER CAR	PART NO.	PART NO.	PART NO.	PART NO.	PART NO.
					WCD-4816S	*WCD-4817S*	*WCD-4950S*		
1	CARBURETOR		4.001	1	319 7327	319 7329	319 9701		
2	GASKET		4.001	1	317 5993	317 5993	317 5993		
3	VALVE		4.001	2	448 8317	448 8317	448 8317		
4	LEVER ASSY.		4.001	1	448 7160	448 7160	448 8358		
5	VALVE		4.001	1	320 8524	320 8524	320 8524		
6	PLUG		4.001	5	320 3805	320 3805	320 3805		
7	PLUG		4.001	2	320 3806	320 3806	320 3806		
8	PLUG		4.001	2	320 3809	320 3809	320 3809		
9	LEVER (Incl. Nut And Screw)		4.001	1	320 6446	320 6446	320 6446		
10	LEVER		4.001	1	320 6447	320 6447	320 6447		
11	NUT		4.001	1	320 6448	320 6448	320 6448		
12	NEEDLE		4.001	1	320 9767	320 9767	320 9767		
13	FLOAT		4.001	1	320 6136	320 6136	320 6136		
14	PIN		4.001	1	320 6451	320 6451	320 6451		
15	NEEDLE ASSY.		4.001	1	320 8526	320 8526	320 8526		
16	STRAINER		4.001	1	320 3837	320 3837	320 3837		
17	SCREW		4.001	2	448 6605	448 6605	448 6605		
18	PLUG		4.001	1	320 3814	320 3814	320 3814		
19	JET		4.001	1	320 7263	320 7263	320 7263		
20	LEVER		4.001	1	320 9769	320 9769	320 9769		
21	SPRING		4.001	1	320 5885	320 5885	320 5885		
22	SPRING		4.001	1	320 3841	320 3841	320 3841		
23	SPRING		4.001	1	320 8529	320 8529	320 8529		
24	SPRING		4.001	2	448 6606	448 6606	448 6606		
25	RETAINER		4.001	1	320 3817	320 3817	320 3817		
26	RETAINER		4.001	2	320 3818	320 3818	320 3818		
27	PLUNGER		4.001	1	448 7905	448 7905	448 7905		
28	CAP		4.001	2	320 9879	320 9879	320 9879		
29	SCREW		4.001	2	320 6431	320 6431	320 6431		
30	SCREW		4.001	2	320 6455	320 6455	320 6455		
31	SCREW		4.001	4	320 8531	320 8531	320 8531		
32	SCREW		4.001	4	320 6456	320 6456	320 6456		
33	SCREW		4.001	4	320 6432	320 6432	320 6432		
34	SCREW		4.001	1	320 8523	320 8523	320 8523		
35	SCREW		4.001	1	320 6457	320 6457	320 6457		
36	SCREW		4.001	2	... .	320 6807	... .		
37	SCREW		4.001	1	320 6821	320 6821	320 6821		
38	SCREW		4.001	1	320 6806	320 6806	320 6806		
39	SCREW		4.001	1	320 6822	320 6822	320 6822		
40	SCREW		4.001	2	320 7745	320 7745	320 7745		
41	SCREW		4.001	4	320 7264	320 7264	320 7264		
42	NUT		4.001	1	... .	320 6802	... .		
43	ARM AND SCREW		4.001	1	320 6460	320 6460	320 6460		
44	ROD		4.001	1	320 3860	320 3860	320 3860		
45	ROD		4.001	1	448 6912	448 6912	448 6912		
46	BALL		4.001	1	320 3825	320 3825	320 3825		
47	LINK		4.001	1	320 6463	320 6463	320 6463		
48	LINK		4.001	1	320 7266	320 7266	320 7266		
49	JET		4.001	2	320 7756	320 7756	320 7756		
50	GASKET		4.001	1	448 5888	448 5888	448 5888		
51	DISK		4.001	2	320 9770	320 9770	320 9770		
52	PIN		4.001	1	320 6421	320 6421	320 6421		
53	SPRING		4.001	2	320 3830	320 3830	320 3830		
54	PISTON ASSY.		4.001	1	320 3864	320 3864	320 3864		
55	PISTON		4.001	1	320 6422	320 6422	320 6422		
56	COIL AND HOUSING		4.001	1	448 7906	448 7906	448 7906		
57	RETAINER		4.001	1	320 3822	320 3822	320 3822		
58	RETAINER		4.001	1	320 9772	320 9772	320 9772		
59	BRACKET		4.001	1	... .	320 9773	... .		
60	CAM		4.001	1	320 6465	320 6465	320 6465		

KEY NO.	DESCRIPTION	PAKS CODE	GROUP NO.	PER CAR	PART NO.	PART NO.	PART NO.	PART NO.	PART NO.
					WCD-4816S	*WCD-4817S*	*WCD-4950S*		
61	PLATE		4.001	1	448 8097	320 8097	320 8097		
62	DASHPOT		4.001	1	... .	320 4334	... .		
63	MAJOR REPAIR KIT		4.001	1	448 7904	448 7904	448 7904		
64	GASKET SET		4.001	1	320 5883	320 5883	320 5883		
65	CLAMP SCREW		4.001	1	320 6458	320 6458	320 6458		
66	SCREW		4.001	1	320 6459	320 6459	320 6459		

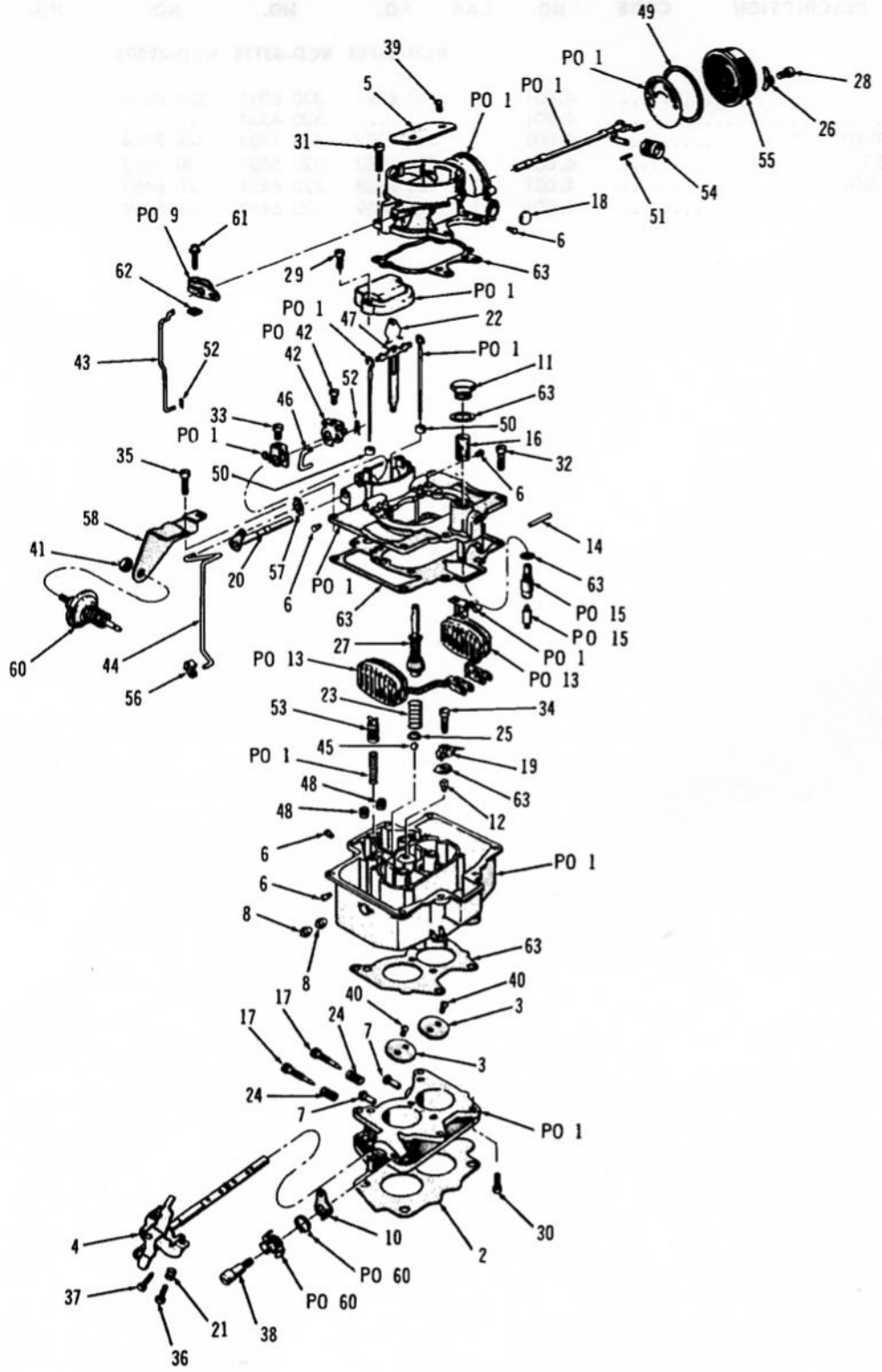

3656

CARBURETOR

KEY NO.	DESCRIPTION	PAKS CODE	GROUP NO.	PER CAR	PART NO.	PART NO.	PART NO.	PART NO.	PART NO.
					WCD-6042S				
1	CARBURETOR		4.001	1	448 8206				
2	GASKET		4.001	1	317 5993				
3	VALVE		4.001	2	448 8317				
4	SHAFT ASSY.		4.001	1	320 9766				
5	VALVE		4.001	1	320 8524				
6	PLUG		4.001	5	320 3805				
7	PLUG		4.001	2	320 3806				
8	PLUG		4.001	2	320 3809				
9	LEVER ASSY.		4.001	1	320 6446				
10	LEVER		4.001	1	320 6447				
11	NUT		4.001	1	320 6448				
12	NEEDLE		4.001	1	320 9767				
13	FLOAT		4.001	1	320 6136				
14	PIN		4.001	1	320 6451				
15	NEEDLE AND SEAT		4.001	1	320 8526				
16	STRAINER		4.001	1	320 3837				
17	SCREW		4.001	2	448 6605				
18	PLUG		4.001	1	320 3814				
19	JET		4.001	1	320 7263				
20	LEVER		4.001	1	320 9769				
21	SPRING		4.001	1	320 5885				
22	SPRING		4.001	1	320 3841				
23	SPRING		4.001	1	320 8529				
24	SPRING		4.001	2	448 6606				
25	RETAINER		4.001	1	320 3817				
26	RETAINER		4.001	2	320 3818				
27	PLUNGER		4.001	1	448 7905				
28	SCREW		4.001	2	320 6431				
29	SCREW		4.001	2	320 6455				
30	SCREW		4.001	4	320 8531				
31	SCREW		4.001	4	320 6456				
32	SCREW		4.001	4	320 6432				
33	SCREW		4.001	1	320 8523				
34	SCREW		4.001	1	320 6457				
35	SCREW		4.001	2	320 6807				
36	SCREW		4.001	1	320 6821				
37	SCREW		4.001	1	320 6806				
38	SCREW		4.001	1	320 6822				
39	SCREW		4.001	2	320 7745				
40	SCREW		4.001	4	320 7264				
41	NUT		4.001	1	320 6802				
42	ARM AND SCREW		4.001	1	320 6460				
43	ROD		4.001	1	320 3860				
44	ROD		4.001	1	448 6912				
45	BALL		4.001	1	320 3825				
46	LINK		4.001	1	320 6463				
47	LINK		4.001	1	320 7266				
48	JET		4.001	2	320 7756				
49	GASKET		4.001	1	448 5888				
50	DISK		4.001	2	320 9770				
51	PIN		4.001	1	320 6421				
52	SPRING		4.001	2	320 3830				
53	PISTON ASSY.		4.001	1	320 3864				
54	PISTON		4.001	1	320 6422				
55	COIL AND HOUSING		4.001	1	448 7906				
56	RETAINER		4.001	1	320 3822				
57	RETAINER		4.001	1	320 9772				
58	BRACKET		4.001	1	320 9773				
59	CAM		4.001	1	320 6465				
60	DASHPOT		4.001	1	320 4334				
61	SCREW		4.001	1	320 6458				
62	NUT		4.001	1	320 6459				
63	GASKET SET		4.001	1	320 5883				
64	MAJOR REPAIR KIT		4.001	1	448 7904				

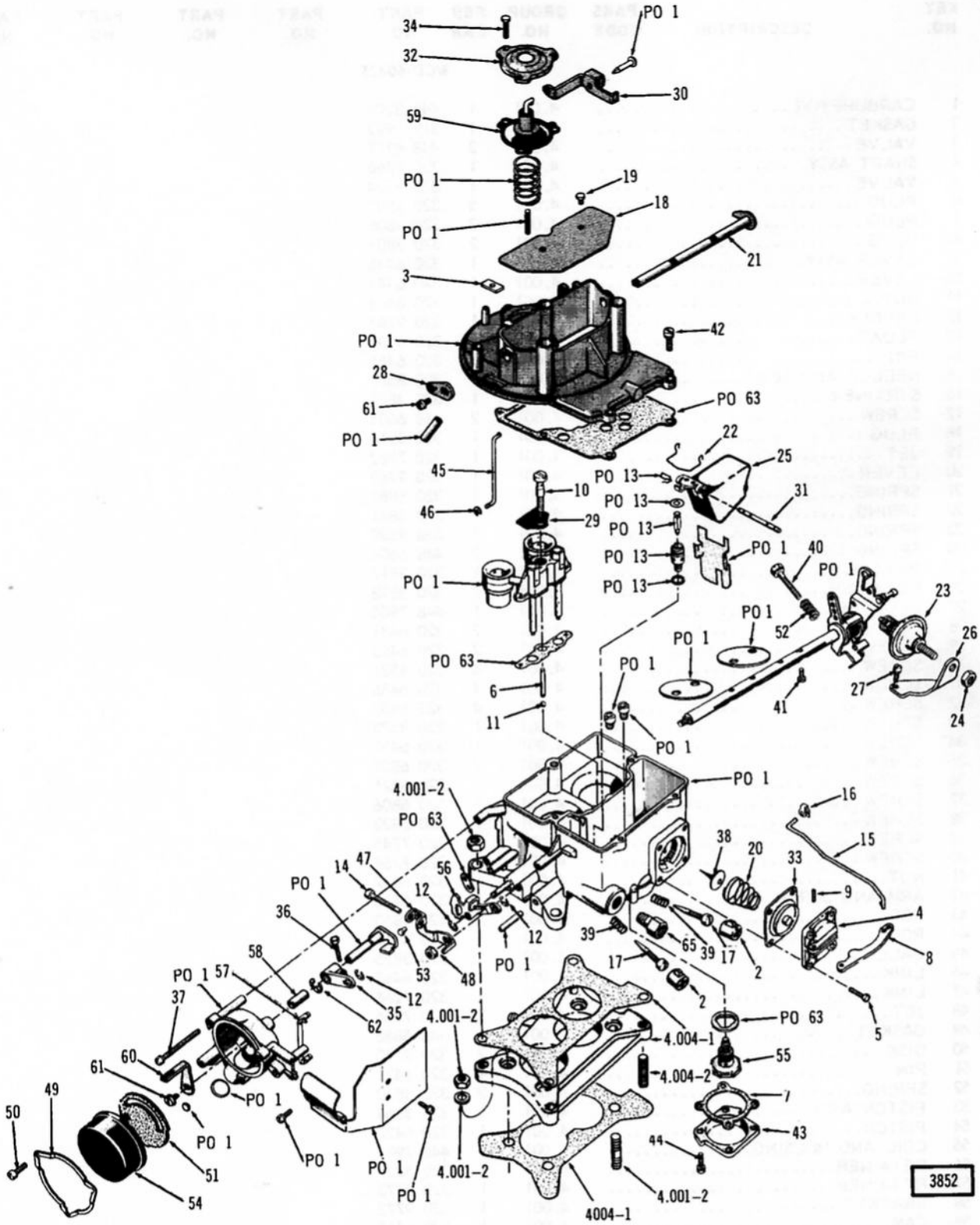
34
32
PO 1
30
59
PO 1
19
18
PO 1
21
3
42
PO 1
28
61
PO 63
PO 1
22
25
45
PO 13
10
31
46
29
PO 13
PO 13
PO 1
40
PO 1
PO 13
PO 1
23
PO 1
52
26
PO 1
PO 63
PO 1
6
27
41
11
24
PO 1
PO 1
4.001-2
16
PO 63
38
20
15
14
47
56
33
PO 1
12
9
36
12
39
65
39
17
4
58
53
48
PO 1
17
2
8
PO 1
57
12
2
37
35
62
4.001-2
PO 63
5
4.004-1
60
55
61
4.004-2
49
PO 1
7
50
PO 1
43
44
51
PO 1
PO 1
4.001-2
54
PO 1
4.001-2
4004-1
3852

CARBURETOR

KEY NO.	DESCRIPTION	PAKS CODE	GROUP NO.	PER CAR	PART NO.	PART NO.	PART NO.	PART NO.	PART NO.
					ODA2	ODM2	ORA2		
1	CARBURETOR		4.001	1	319 7592	319 7593	319 7617		
2	LIMITER		4.001	2	320 9879	320 9879	320 9879		
3	SEAL		4.001	1	320 9880	320 9880	320 9880		
4	COVER		4.001	1	320 9881	320 9881	320 9881		
5	SCREW		4.001	4	448 8169	448 8169	448 8169		
6	WEIGHT		4.001	1	320 9883	320 9883	320 9883		
7	GASKET		4.001	1	320 9885	320 9885	320 9885		
8	LINK		4.001	1	320 9890	320 9890	320 9890		
9	PIN		4.001	1	320 9891	320 9891	320 9891		
10	SCREW		4.001	1	320 9892	320 9892	320 9892		
11	BALL		17.018	1	G145637	G145637	G145637		
12	WASHER		4.001	3	448 8171	448 8171	448 8171		
13	VALVE KIT		4.001	1	448 8172	448 8172	448 8172		
14	SCREW		4.001	1	320 9896	320 9896	320 9896		
15	ROD		4.001	1	320 9898	320 9898	320 9898		
16	CLIP		4.001	1	320 9899	320 9899	320 9899		
17	NEEDLE		4.001	2	448 8173	448 8173	448 8174		
18	PLATE		4.001	1	448 8175	448 8175	448 8175		
19	SCREW		4.001	2	320 9901	320 9901	320 9901		
20	SPRING		4.001	1	320 9902	320 9902	320 9902		
21	SHAFT		4.001	1	448 8176	448 8176	448 8176		
22	RETAINER		4.001	1	448 8177	448 8177	448 8177		
23	DASHPOT		4.001	1	320 9905	320 9905	320 9905		
24	NUT		4.001	1	320 9906	320 9906	320 9906		
25	FLOAT		4.001	1	448 8178	448 8178	448 8178		
26	BRACKET		4.001	1	448 8322	448 8322	448 8322		
27	SCREW		4.001	1	448 5440	448 5440	448 5440		
28	LEVER		4.001	1	448 8179	448 8179	448 8179		
29	PLATE		4.001	1	448 8180	448 8180	448 8180		
30	LEVER		4.001	1	448 8181	448 8181	448 8181		
31	SHAFT		4.001	1	320 9910	320 9910	320 9910		
32	COVER		4.001	1	448 8182	448 8182	448 8182		
33	DIAPHRAGM		4.001	1	320 9912	320 9912	320 9912		
34	SCREW		4.001	3	448 8183	448 8183	448 8183		
35	LEVER		4.001	1	320 9913	320 9913	320 9913		
36	SCREW		4.001	1	320 9914	320 9914	320 9914		
37	SCREW		4.001	3	448 5441	448 5441	448 5441		
38	VALVE		4.001	1	320 9916	320 9916	320 9916		
39	SPRING		4.001	2	320 9917	320 9917	320 9917		
40	SCREW		4.001	1	448 5442	448 5442	448 5442		
41	SCREW		4.001	4	448 5443	448 5443	448 5443		
42	SCREW		4.001	4	448 5444	448 5444	448 5444		
43	COVER		4.001	1	320 9920	320 9920	320 9920		
44	SCREW		4.001	4	448 5445	448 5445	448 5445		
45	ROD		4.001	1	448 8246	448 8246	448 8246		
46	RING		4.001	1	320 9922	320 9922	320 9922		
47	LEVER		4.001	1	320 9926	320 9926	320 9926		
48	NUT		17.412	1	G271169	G271169	G271169		
49	CLAMP		4.001	1	448 6603	448 6603	448 6603		
50	SCREW		4.001	3	448 5447	448 5447	448 5447		
51	GASKET		4.001	1	448 8184	448 8184	448 5890		
52	SPRING		4.001	1	320 9928	320 9928	320 9928		
53	PIN		4.001	1	320 9929	320 9929	320 9929		
54	HOUSING		4.001	1	448 5448	448 5448	448 5448		
55	VALVE		4.001	1	320 9915	320 9915	320 9915		
56	CAM		4.001	1	320 9919	320 9919	320 9919		
57	ROD		4.001	1	320 9893	320 9893	320 9893		
58	BUSHING		4.001	1	448 8477	448 8477	448 8477		
59	DIAPHRAGM		4.001	1	448 8478	448 8478	448 8478		
60	LEVER		4.001	1	448 8451	448 8451	448 8451		
61	SCREW		4.001	2	448 5446	448 5446	448 5446		
62	RETAINER		4.001	1	320 9925	320 9925	320 9925		
63	GASKET SET		4.001	1	448 8324	448 8324	448 8324		
64	MAJOR REPAIR KIT		4.001	1	448 8325	448 8325	448 8325		
65	FITTING		17.160	1	G137406	G137406	G137406		

Printed in U.S.A.

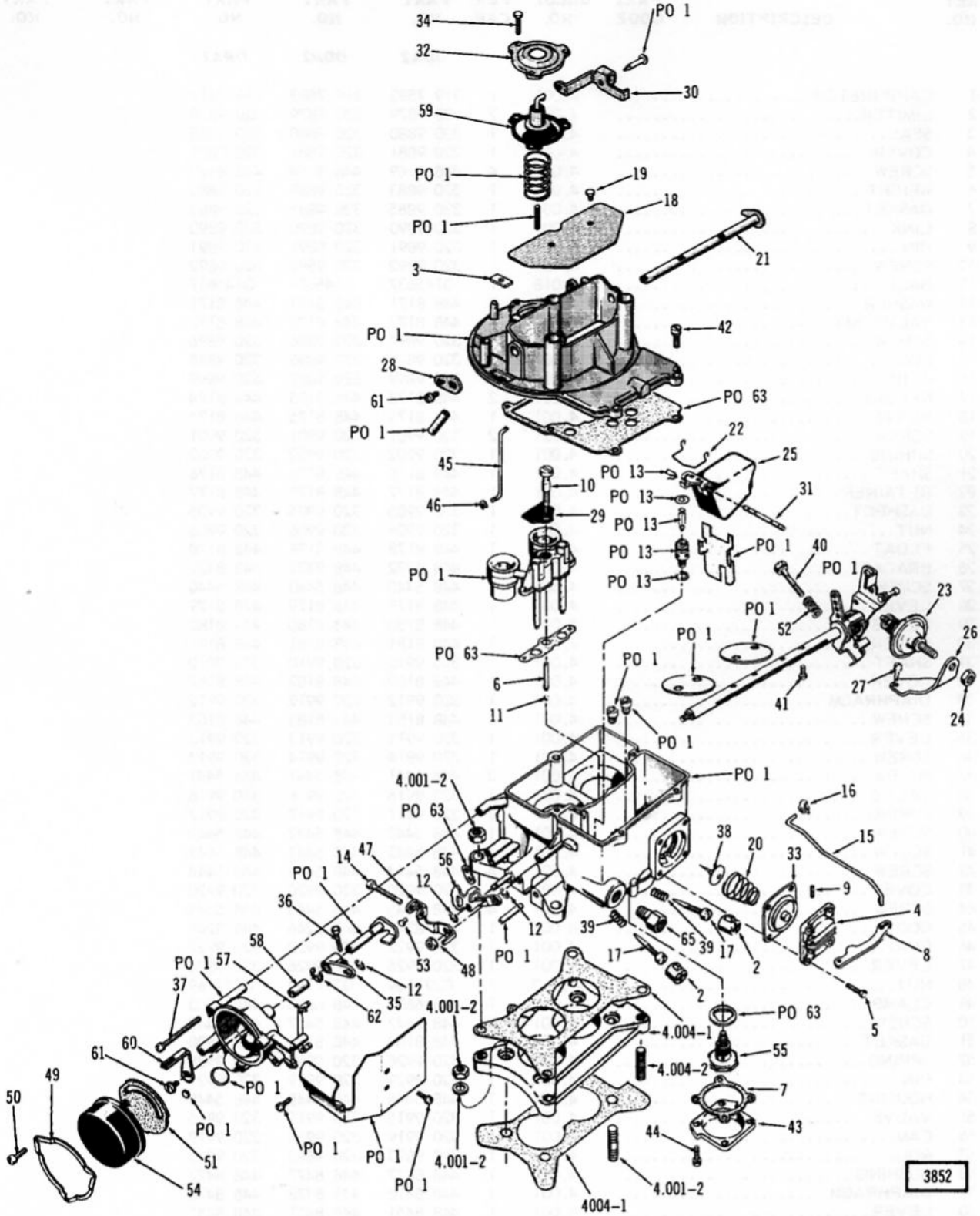

CARBURETOR

Printed in U.S.A.

KEY NO.	DESCRIPTION	PAKS CODE	GROUP NO.	PER CAR	PART NO.	PART NO.	PART NO.	PART NO.	PART NO.
					1DA2	*1DM2*	*1RA2*		
1	CARBURETOR		4.001	1	321 1104	321 1105	321 1108		
2	LIMITER		4.001	2	320 9879	320 9879	320 9879		
3	SEAL		4.001	1	320 9880	320 9880	320 9880		
4	COVER		4.001	1	320 9881	320 9881	320 9881		
5	SCREW		4.001	4	448 8169	448 8169	448 8169		
6	WEIGHT		4.001	1	812 0053	812 0053	812 0053		
7	GASKET		4.001	1	320 9885	320 9885	320 9885		
8	LINK		4.001	1	320 9890	320 9890	320 9890		
9	PIN		4.001	1	320 9891	320 9891	320 9891		
10	SCREW		4.001	1	320 9892	320 9892	320 9892		
11	BALL		4.001	1	G145637	G145637	G145637		
12	WASHER		4.001	3	448 8171	448 8171	448 8171		
13	VALVE KIT		4.001	1	448 8172	448 8172	448 8172		
14	SCREW		4.001	1	320 9896	320 9896	320 9896		
15	ROD		4.001	1	320 9898	320 9898	320 9898		
16	CLIP		4.001	1	320 9899	320 9899	320 9899		
17	NEEDLE		4.001	2	448 8173	448 8173	448 8174		
18	PLATE		4.001	1	448 8175	448 8175	448 8175		
19	SCREW		4.001	2	320 9901	320 9901	320 9901		
20	SPRING		4.001	1	320 9902	320 9902	320 9902		
21	SHAFT		4.001	1	448 8176	448 8176	448 8176		
22	RETAINER		4.001	1	448 8177	448 8177	448 8177		
23	DASHPOT		4.001	1	320 9905	320 9905	320 9905		
24	NUT		4.001	1	320 9906	320 9906	320 9906		
25	FLOAT		4.001	1	448 8178	448 8178	448 8178		
26	BRACKET		4.001	1	448 8322	448 8322	448 8322		
27	SCREW		4.001	1	448 5440	448 5440	448 5440		
28	LEVER		4.001	1	448 8179	448 8179	448 8179		
29	PLATE		4.001	1	448 8180	448 8180	448 8180		
30	LEVER		4.001	1	812 0068	812 0068	812 0068		
31	SHAFT		4.001	1	320 9910	320 9910	320 9910		
32	COVER		4.001	1	448 8182	448 8182	448 8182		
33	DIAPHRAGM		4.001	1	320 9912	320 9912	320 9912		
34	SCREW		4.001	3	448 8183	448 8183	448 8183		
35	LEVER		4.001	1	320 9913	320 9913	320 9913		
36	SCREW		4.001	1	812 0069	812 0069	812 0069		
37	SCREW		4.001	3	448 5441	448 5441	448 5441		
38	VALVE		4.001	1	320 9916	320 9916	320 9916		
39	SPRING		4.001	2	320 9917	320 9917	320 9917		
40	SCREW		4.001	1	448 5442	448 5442	448 5442		
41	SCREW		4.001	4	448 5443	448 5443	448 5443		
42	SCREW		4.001	4	448 5444	448 5444	448 5444		
43	COVER		4.001	1	320 9920	320 9920	320 9920		
44	SCREW		4.001	4	448 5445	448 5445	448 5445		
45	ROD		4.001	1	448 8246	448 8246	448 8246		
46	RING		4.001	1	320 9922	320 9922	320 9922		
47	LEVER		4.001	1	320 9926	320 9926	320 9926		
48	NUT AND WASHER		17.412	1	G271169	G271169	G271169		
49	CLAMP		4.001	1	812 0075	812 0075	812 0075		
50	SCREW		4.001	3	812 0086	812 0086	812 0086		
51	GASKET		4.001	1	812 0076	812 0076	812 0076		
52	SPRING		4.001	1	320 9928	320 9928	320 9928		
53	PIN		4.001	1	320 9929	320 9929	320 9929		
54	HOUSING		4.001	1	812 0087	448 5448	448 5448		
55	VALVE		4.001	1	320 9915	320 9915	320 9915		
56	CAM		4.001	1	320 9919	320 9919	320 9919		
57	ROD		4.001	1	320 9893	320 9893	320 9893		
58	BUSHING		4.001	1	448 8477	448 8477	448 8477		
59	DIAPHRAGM		4.001	1	812 0089	812 0089	812 0089		
60	LEVER		4.001	1	812 0074	812 0074	812 0074		
61	SCREW		4.001	2	448 5446	448 5446	448 5446		
62	RETAINER		4.001	1	320 9925	320 9925	320 9925		
63	GASKET SET		4.001	1	812 0090	812 0090	812 0090		
64	MAJOR REPAIR KIT		4.001	1	812 0091	812 0091	812 0091		
65	FITTING		17.160	1	G137406	G137406	G137406		

Printed in U.S.A.

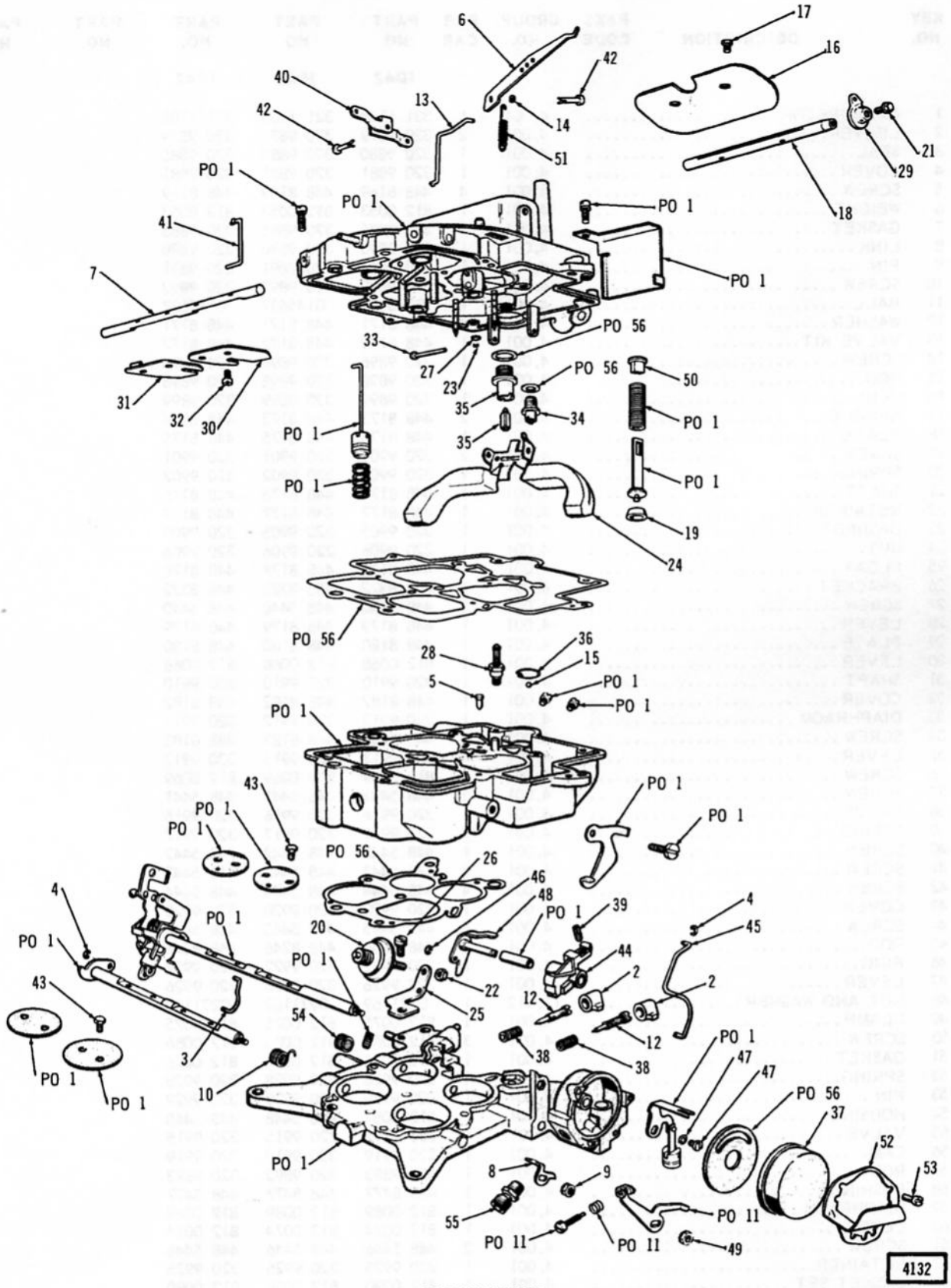
6
17
16
42
40
42
13
14
51
21
29
18
PO 1
PO 1
PO 1
PO 1
41
7
PO 1
PO 56
33
27
23
PO 56
50
35
34
31
32
30
PO 1
35
PO 1
PO 1
19
24
PO 56
28
36
15
5
PO 1
PO 1
PO 1
43
PO 1
PO 1
PO 1
PO 56
26
46
48
PO 1
39
4
45
4
PO 1
PO 1
20
PO 1
44
2
2
43
22
12
25
12
54
38
38
3
10
PO 1
47
47
PO 56
37
52
53
8
9
55
PO 11
PO 11
PO 11
49
4132

CARBURETOR

KEY NO.	DESCRIPTION	PAKS CODE	GROUP NO.	PER CAR	PART NO. 1TM4	PART NO. 1TA4
1	CARBURETOR		4.001	1	321 1106	321 1107
2	LIMITER		4.001	2	320 9879	320 9879
3	ROD		4.001	1	448 8185	448 8185
4	RING		4.001	2	448 8186	448 8186
5	VALVE		4.001	1	448 8187	448 8187
6	LINK		4.001	1	448 8188	448 8188
7	SHAFT		4.001	1	812 0005	812 0005
8	LEVER		4.001	1	448 8190	448 8190
9	NUT		4.001	2	448 8191	448 8191
10	SPRING		4.001	1	448 8192	448 8192
11	LEVER AND SCREW		4.001	1	812 0013	812 0013
12	NEEDLE		4.001	2	448 8193	448 8193
13	ROD		4.001	1	448 8194	448 8194
14	WASHER		4.001	1	448 8195	448 8195
15	BALL		17.018	1	G145637	G145637
16	PLATE		4.001	1	448 8196	448 8196
17	SCREW		4.001	2	320 9901	320 9901
18	SHAFT		4.001	1	448 8197	448 8197
19	CUP		4.001	1	448 8388	448 8388
20	DASHPOT		4.001	1	448 8199	448 8199
21	SCREW		4.001	1	448 8222	448 8222
22	NUT		4.001	1	320 9906	320 9906
23	RETAINER		4.001	1	448 8216	448 8216
24	FLOAT		4.001	1	448 8099	448 8099
25	BRACKET		4.001	1	448 8322	448 8322
26	SCREW		4.001	1	448 8215	448 8215
27	DISC		4.001	1	448 8098	448 8098
28	VALVE		4.001	1	448 8217	448 8217
29	LEVER		4.001	1	448 8218	448 8218
30	VALVE		4.001	1	448 8219	448 8219
31	VALVE		4.001	1	448 8220	448 8220
32	SCREW		4.001	4	448 8221	448 8221
33	SHAFT		4.001	1	448 8223	448 8223
34	VALVE		4.001	1	812 0009	812 0009
35	VALVE		4.001	1	812 0010	812 0010
36	RETAINER		4.001	1	448 8226	448 8226
37	HOUSING		4.001	1	812 0082	812 0082
38	SPRING		4.001	2	320 9917	320 9917
39	SCREW		4.001	1	448 8229	448 8229
40	LEVER		4.001	1	448 8230	448 8230
41	LINK		4.001	1	448 8231	448 8231
42	PIN		4.001	2	448 8232	448 8232
43	SCREW		4.001	8	448 8233	448 8233
44	CAM		4.001	1	448 8235	448 8235
45	ROD		4.001	1	448 8238	448 8238
46	RING		4.001	2	448 8186	448 8186
47	SCREW		4.001	1	448 8239	448 8239
48	SHAFT		4.001	1	448 8240	448 8240
49	NUT		17.412	1	G271169	G271169
50	RETAINER		4.001	1	448 8242	448 8242
51	SPRING		4.001	1	448 8243	448 8243
52	CLAMP		4.001	1	448 6603	448 6603
53	SCREW		4.001	3	448 5447	448 5447
54	SPRING		4.001	1	448 8244	448 8244
55	CONNECTOR		4.001	1	448 8245	448 8245
56	GASKET KIT		4.001	1	448 7607	448 7607
57	MAJOR REPAIR KIT		4.001	1	448 7608	448 7608

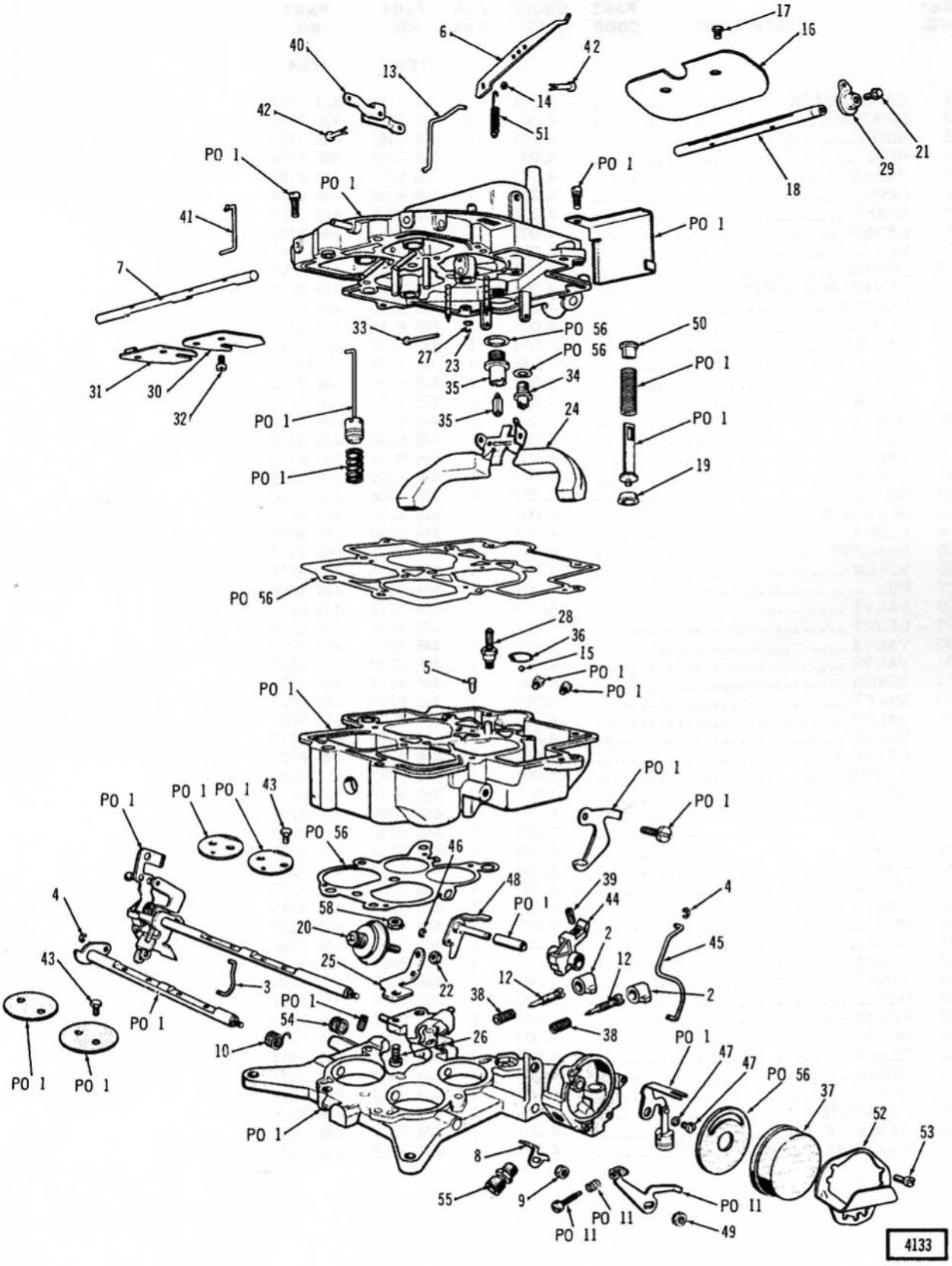
17
16
6
40
42
13
14
42
51
21
29
18
PO 1
PO 1
PO 1
PO 1
41
7
33
PO 56
50
27
23
PO 56
PO 1
31
30
35
34
32
PO 1
35
24
PO 1
PO 1
19
PO 56
28
36
15
5
PO 1
PO 1
PO 1
PO 1
PO 1
PO 1
PO 1
43
PO 56
46
48
39
4
4
58
PO 1
44
20
2
45
43
25
12
3
22
12
2
PO 1
38
PO 1
54
38
26
10
PO 1
47
47
PO 56
37
PO 1
PO 1
52
53
PO 1
8
55
9
PO 11
PO 11
PO 11
49
4133

CARBURETOR

KEY NO.	DESCRIPTION	PAKS CODE	GROUP NO.	PER CAR	PART NO. 2TM4	PART NO. 2RA4	PART NO. 2TA4	PART NO. 2RA4 (POLICE GOLD TAG)	PART NO. 2TA4 (POLICE GOLD TAG)
1	CARBURETOR		4.001	1	321 4465	812 1236	321 4466	812 1738	321 7754
2	LIMITER		4.001	2	320 9879	320 9879	320 9879	320 9879	320 9879
3	ROD		4.001	1	448 8185	448 8185	448 8185	448 8185	448 8185
4	RING		4.001	2	448 8186	448 8186	448 8186	448 8186	448 8186
5	VALVE		4.001	1	448 8187	448 8187	448 8187	448 8187	448 8187
6	LINK		4.001	1	448 8188	448 8188	448 8188	448 8188	448 8188
7	SHAFT		4.001	1	812 1422	812 1422	812 1422	812 1422	812 1422
8	LEVER		4.001	1	448 8190	448 8190	448 8190	448 8190	448 8190
9	NUT		4.001	2	448 8191	448 8191	448 8191	448 8191	448 8191
10	SPRING		4.001	1	448 8192	448 8192	448 8192	448 8192	448 8192
11	LEVER AND SCREW		4.001	1	812 0013	812 0013	812 0013	812 0013	812 0013
12	NEEDLE		4.001	2	448 8193	448 8193	448 8193	448 8193	448 8193
13	ROD		4.001	1	448 8194	448 8194	448 8194	448 8194	448 8194
14	WASHER		4.001	1	448 8195	448 8195	448 8195	448 8195	448 8195
15	BALL		17.018	1	G145637	G145637	G145637	G145637	G145637
16	PLATE		4.001	1	448 8196	448 8196	448 8196	448 8196	448 8196
17	SCREW		4.001	2	320 9901	320 9901	320 9901	320 9901	320 9901
18	SHAFT		4.001	1	448 8197	448 8197	448 8197	448 8197	448 8197
19	CUP		4.001	1	448 8388	448 8388	448 8388	448 8388	448 8388
20	DASHPOT		4.001	1	448 8199	... .	448 8199	... .	448 8199
21	SCREW		4.001	1	448 8222	448 8222	448 8222	448 8222	448 8222
22	NUT		4.001	1	320 9906	... .	320 9906	... .	320 9906
23	RETAINER		4.001	1	448 8216	448 8216	448 8216	448 8216	448 8216
24	FLOAT		4.001	1	448 8099	448 8099	448 8099	812 2490	812 2490
25	BRACKET (Dashpot)		4.001	1	448 8322	... .	448 8322	... .	448 8322
	BRACKET (Solenoid)		4.001	1	... .	812 1167	... .	812 1167	... .
26	SCREW		4.001	1	812 2489	812 2489	812 2489	812 2489	812 2489
27	DISC		4.001	1	448 8098	448 8098	448 8098	448 8098	448 8098
28	VALVE		4.001	1	448 8217	448 8217	448 8217	448 8217	448 8217
29	LEVER		4.001	1	448 8218	448 8218	448 8218	448 8218	448 8218
30	VALVE		4.001	1	448 8219	448 8219	448 8219	448 8219	448 8219
31	VALVE		4.001	1	448 8220	448 8220	448 8220	448 8220	448 8220
32	SCREW		4.001	4	448 8221	448 8221	448 8221	448 8221	448 8221
33	SHAFT		4.001	1	448 8223	448 8223	448 8223	448 8223	448 8223
34	VALVE		4.001	1	812 0009	812 0009	812 0009	812 0009	812 0009
35	VALVE		4.001	1	812 0010	812 0010	812 0100	812 0100	812 0100
36	RETAINER		4.001	1	448 8226	448 8226	448 8226	448 8226	448 8226
37	HOUSING		4.001	1	812 1426	812 1426	812 1426	812 1426	812 1426
38	SPRING		4.001	2	320 9917	320 9917	320 9917	320 9917	320 9917
39	SCREW		4.001	1	448 8229	448 8229	448 8229	448 8229	448 8229
40	LEVER		4.001	1	448 8230	448 8230	448 8230	448 8230	448 8230
41	LINK		4.001	1	448 8231	448 8231	448 8231	448 8231	448 8231
42	PIN		4.001	2	448 8232	448 8232	448 8232	448 8232	448 8232
43	SCREW		4.001	8	448 8233	448 8233	448 8233	448 8233	448 8233
44	CAM		4.001	1	448 8235	448 8235	448 8235	448 8235	448 8235
45	ROD		4.001	1	448 8238	448 8238	448 8238	448 8238	448 8238
46	RING		4.001	2	448 8186	448 8186	448 8186	448 8186	448 8186
47	SCREW		4.001	1	448 8239	448 8239	448 8239	448 8239	448 8239
48	SHAFT		4.001	1	448 8240	448 8240	448 8240	448 8240	488 8240
49	NUT		17.412	1	G271169	G271169	G271169	G271169	G271169
50	RETAINER		4.001	1	448 8242	448 8242	448 8242	448 8242	448 8242
51	SPRING		4.001	1	448 8243	448 8243	448 8243	448 8243	448 8243
52	CLAMP		4.001	1	448 6603	448 6603	448 6603	448 6603	448 6603
53	SCREW		4.001	3	448 5447	448 5447	448 5447	448 5447	448 5447
54	SPRING		4.001	1	448 8244	448 8244	448 8244	448 8244	448 8244
55	CONNECTOR		4.001	1	448 8245	448 8245	448 8245	448 8245	448 8245
56	GASKET KIT		4.001	1	812 1135	812 1135	812 1135	812 1135	812 1135
57	MAJOR REPAIR KIT		4.001	1	812 1134	812 1134	812 1134	812 1134	812 1134
58	NUT		4.001	1	448 8191	448 8191	448 8191	448 8191	448 8191

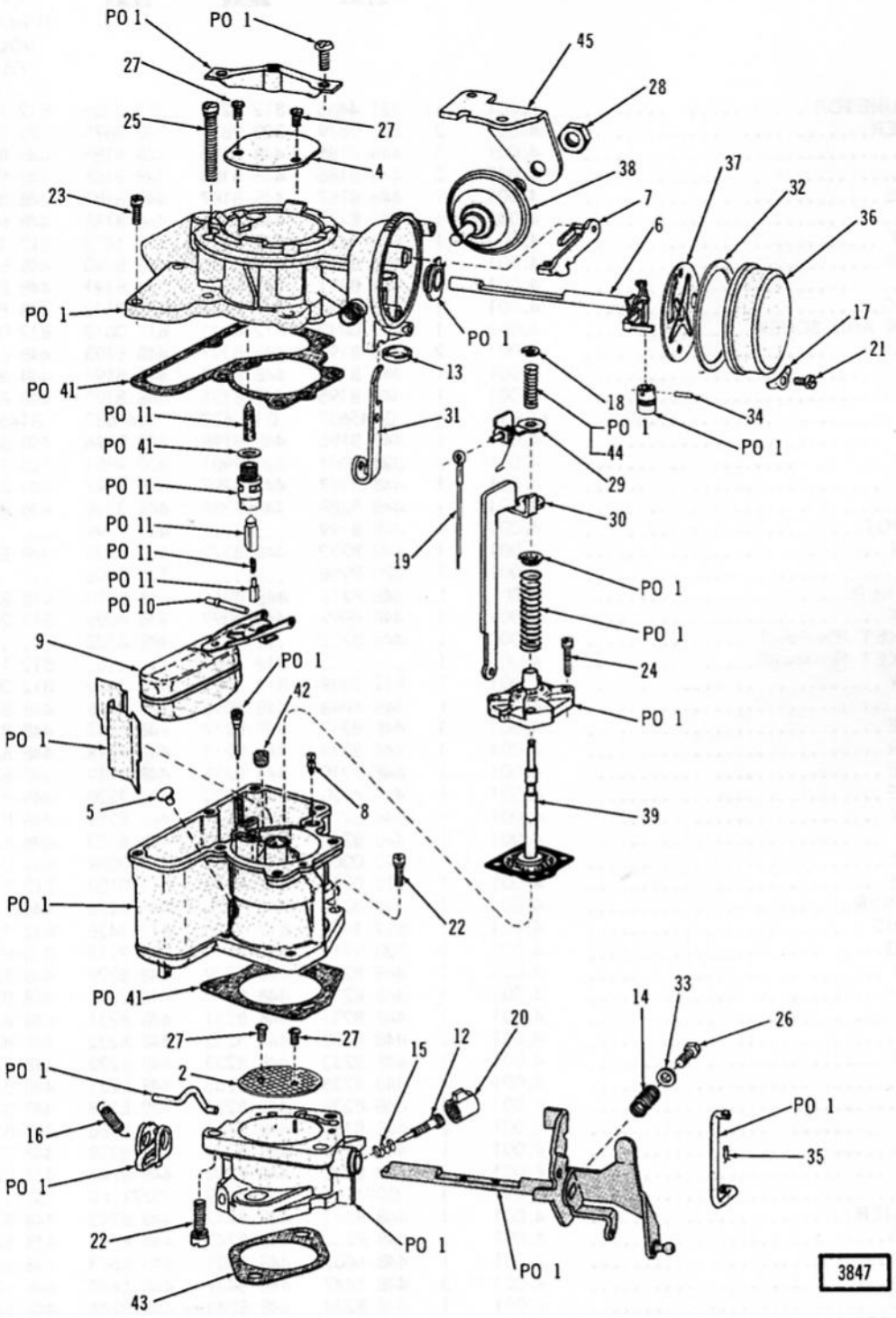
PO 1
PO 1
27
25
27
4
23
45
28
38
7
6
37
32
36
PO 1
PO 1
17
21
13
PO 41
18
34
PO 11
31
PO 1
PO 1
44
PO 41
29
PO 11
30
PO 11
19
PO 11
PO 11
PO 1
PO 10
PO 1
9
PO 1
24
42
PO 1
PO 1
5
8
39
PO 1
22
PO 41
14
33
26
27
27
20
15
12
PO 1
2
PO 1
16
35
PO 1
22
PO 1
PO 1
43
3847

CARBURETOR

KEY NO.	DESCRIPTION	PAKS CODE	GROUP NO.	PER CAR	PART NO.	PART NO.	PART NO.	PART NO.	PART NO.
					YF-4815S	YF-4766S			
1	CARBURETOR		4.001	1	319 7320	319 7321			
2	VALVE		4.001	1	448 8314	448 8314			
4	VALVE		4.001	1	320 6425	320 6425			
5	PLUG		4.001	1	320 3802	320 3802			
6	LEVER AND SHAFT		4.001	1	448 8315	448 8315			
7	LEVER AND PIN		4.001	1	448 8316	448 8316			
8	NEEDLE		4.001	1	320 6492	320 6492			
9	FLOAT		4.001	1	448 8047	448 8047			
10	PIN		4.001	1	320 6428	320 6428			
11	NEEDLE ASSY.		4.001	1	448 8048	448 8048			
12	SCREW		4.001	1	448 8036	448 8036			
13	PLUG		4.001	1	320 3814	320 3814			
14	SPRING		4.001	1	320 5125	320 5125			
15	SPRING		4.001	1	320 3844	320 3844			
16	SPRING		4.001	1	448 8065	448 8065			
17	RETAINER		4.001	3	320 3818	320 3818			
18	RETAINER		4.001	1	320 3820	320 3820			
19	ROD		4.001	1	448 8648	812 0120			
20	CAP		4.001	1	448 8054	448 8054			
21	SCREW		4.001	3	320 6431	320 6431			
22	SCREW		4.001	3	320 8531	320 8531			
23	SCREW		4.001	4	320 6432	320 6432			
24	SCREW		4.001	4	320 6433	320 6433			
25	SCREW		4.001	3	320 2973	320 2973			
26	SCREW		4.001	1	448 8060	448 8060			
27	SCREW		4.001	4	320 7745	320 7745			
28	NUT		4.001	1	320 6802	... .			
29	ARM		4.001	1	320 6434	320 6434			
30	LINK		4.001	1	320 6437	320 6437			
31	LINK		4.001	1	448 8061	448 8061			
32	GASKET		4.001	1	448 5888	488 5888			
33	WASHER		4.001	1	320 7760	320 7760			
34	PIN		4.001	1	320 6421	320 6421			
35	SPRING		4.001	1	320 3830	320 3830			
36	COIL AND HOUSING		4.001	1	448 8063	448 8063			
37	PLATE		4.001	1	320 6442	320 6442			
38	DASHPOT		4.001	1	448 8064	... .			
39	DIAPHRAGM		4.001	1	448 8066	448 8066			
40	MAJOR REPAIR KIT		4.001	1	448 8045	448 8045			
41	GASKET SET		4.001	1	448 8046	448 8046			
42	JET		4.001	1	448 8464	448 8464			
43	GASKET		4.001	1	317 3228	317 3228			
44	SPRING		4.001	1	320 3842	320 3842			
45	BRACKET		4.001	1	812 0103	... .			

Printed in U.S.A.

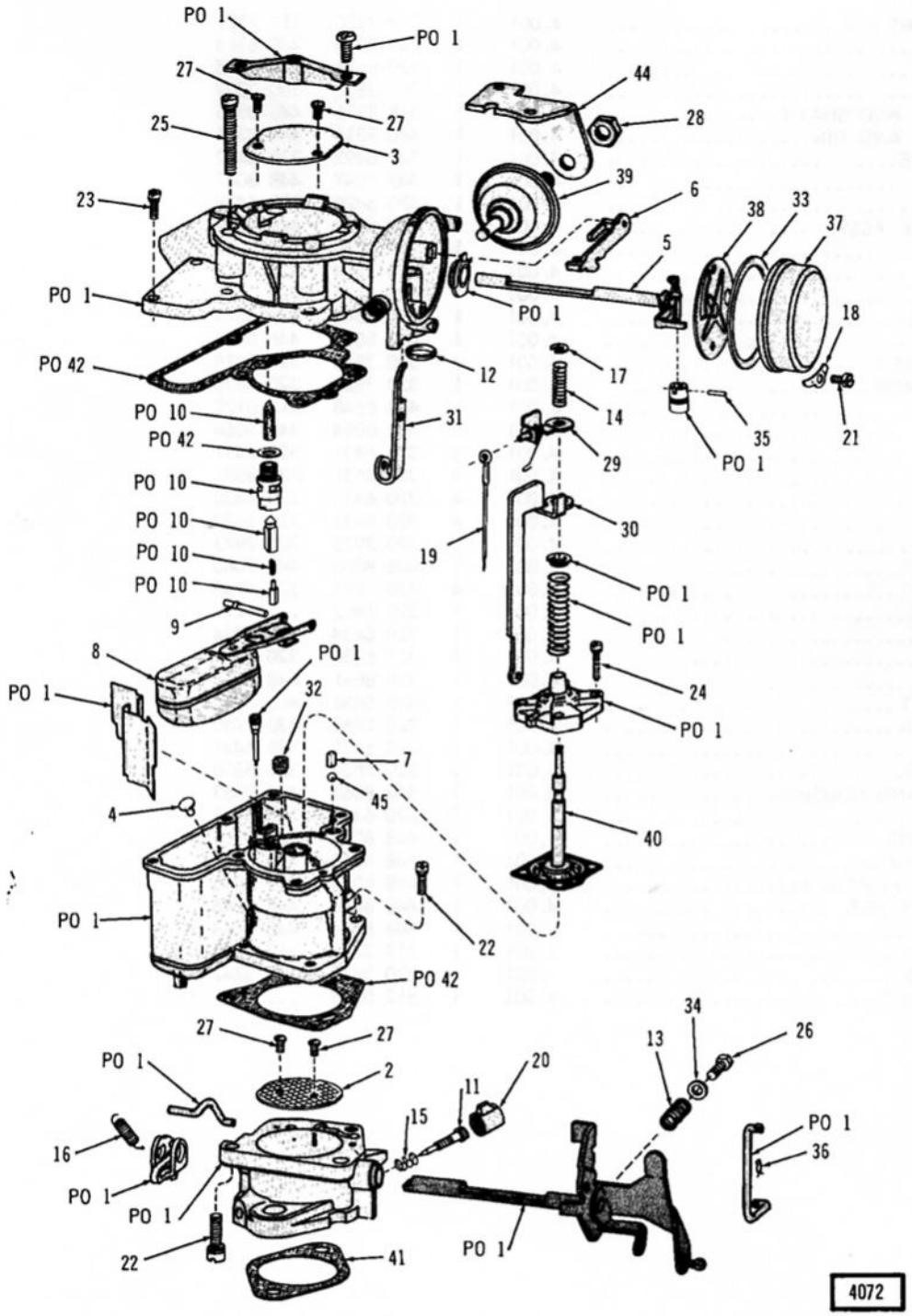
PO 1
PO 1
27
44
28
25
27
3
39
6
23
38
33
37
5
PO 1
PO 1
18
PO 42
12
17
PO 10
31
14
PO 42
29
35
21
PO 1
PO 10
PO 10
19
30
PO 10
PO 1
PO 10
PO 1
9
8
PO 1
PO 1
32
24
PO 1
7
45
4
40
PO 1
22
PO 42
27
27
34
26
PO 1
2
13
20
11
15
PO 1
16
36
PO 1
PO 1
22
41
PO 1
4072

CARBURETOR

NO. KEY	DESCRIPTION	CODE PAKS	NO. GROUP	CAR PER	NO. PART YF-6038S	NO. PART YF-6093S	NO. PART YF-6094S	NO. PART YF-6309
1	CARBURETOR		4.001	1	321 1227	321 1036	321 1741	321 1741
2	VALVE		4.001	1	448 8314	448 8314	448 8314	448 8314
3	VALVE		4.001	1	320 6425	320 6425	320 6425	320 6425
4	PLUG		4.001	1	320 3802	320 3802	320 3702	320 3802
5	LEVER AND SHAFT		4.001	1	448 8315	448 8315	448 8315	448 8315
6	LEVER AND PIN		4.001	1	448 8316	448 8316	448 8316	448 8316
7	WEIGHT		4.001	1	812 0149	812 0149	812 0149	812 0149
8	FLOAT		4.001	1	448 8047	448 8047	448 8047	448 8047
9	PIN		4.001	1	320 6428	320 6428	320 6428	320 6428
10	NEEDLE ASSY.		4.001	1	448 8048	448 8048	448 8048	448 8048
11	SCREW		4.001	1	448 8036	448 8036	448 8036	448 8036
12	PLUG		4.001	1	320 3814	320 3814	320 3814	320 3814
13	SPRING		4.001	1	320 5125	320 5125	320 5125	320 5125
14	SPRING		4.001	1	320 3842	320 3842	320 3842	320 3842
15	SPRING		4.001	1	320 3844	320 3844	320 3844	320 3844
16	SPRING		4.001	1	448 8065	448 8065	448 8065	448 8065
17	RETAINER		4.001	1	320 3820	320 3820	320 3820	320 3820
18	RETAINER		4.001	3	320 3818	320 3818	320 3818	320 3818
19	ROD		4.001	1	812 0194	448 8053	812 0104	812 0104
20	CAP		4.001	1	448 8054	448 8054	448 8054	448 8054
21	SCREW		4.001	3	320 6431	320 6431	320 6431	320 6431
22	SCREW		4.001	3	812 0222	812 0222	812 0222	812 0222
23	SCREW		4.001	4	320 6432	320 6432	320 6432	320 6432
24	SCREW		4.001	4	320 6433	320 6433	320 6433	320 6433
25	SCREW		4.001	3	320 7738	320 7738	320 7738	320 7738
26	SCREW		4.001	1	448 8060	448 8060	448 8060	448 8060
27	SCREW		4.001	4	320 7745	320 7745	320 7745	320 7745
28	NUT		4.001	1	... .	320 6802	... .	... .
29	ARM		4.001	1	320 6434	320 6434	320 6434	320 6434
30	LINK		4.001	1	320 6437	320 6437	320 6437	320 6437
31	LINK		4.001	1	448 8061	448 8061	448 8061	448 8061
32	JET		4.001	1	812 0195	448 8445	448 8445	448 8445
33	GASKET		4.001	1	448 5888	448 5888	448 5888	448 5888
34	WASHER		4.001	1	320 7760	320 7760	320 7760	320 7760
35	PIN		4.001	1	812 0121	812 0121	812 0121	812 0121
36	SPRING		4.001	1	320 3830	320 3830	320 3830	320 3830
37	COIL AND HOUSING		4.001	1	448 9439	448 9439	448 9439	448 9439
38	PLATE		4.001	1	320 6442	320 6442	320 6442	320 6442
39	DASHPOT		4.001	1	... .	448 8064	... .	... .
40	DIAPHRAGM		4.001	1	448 9440	448 9440	448 9440	448 9440
41	GASKET		4.001	1	317 3228	317 3228	317 3228	317 3228
42	GASKET SET		4.001	1	448 8046	448 8046	448 8046	448 8046
43	MAJOR REPAIR KIT		4.001	1	448 9461	448 9461	448 9461	448 9461
44	BRACKET		4.001	1	... .	812 0103	... .	... .
45	BALL		4.001	1	812 0145	812 0145	812 0145	812 0145

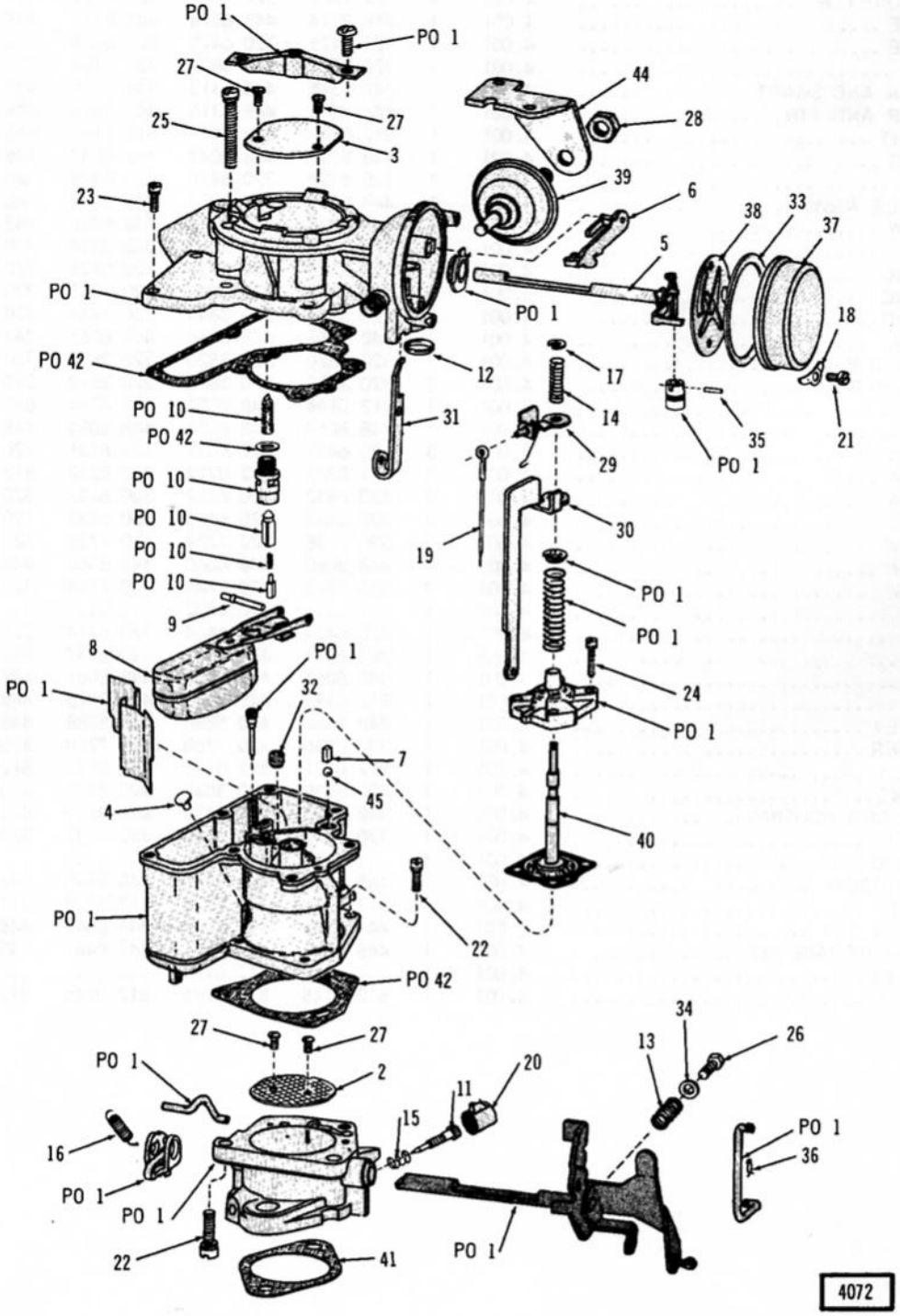
PO 1
PO 1
27
27
25
3
44
28
39
6
23
38
33
37
5
PO 1
PO 1
18
PO 42
12
17
PO 10
31
14
35
21
PO 42
29
PO 1
PO 10
30
PO 10
19
PO 10
PO 1
PO 10
PO 1
9
8
PO 1
24
PO 1
32
PO 1
7
45
4
40
PO 1
22
PO 42
34
27
27
13
26
PO 1
2
20
11
15
PO 1
16
36
PO 1
PO 1
22
41
PO 1
4072

CARBURETOR

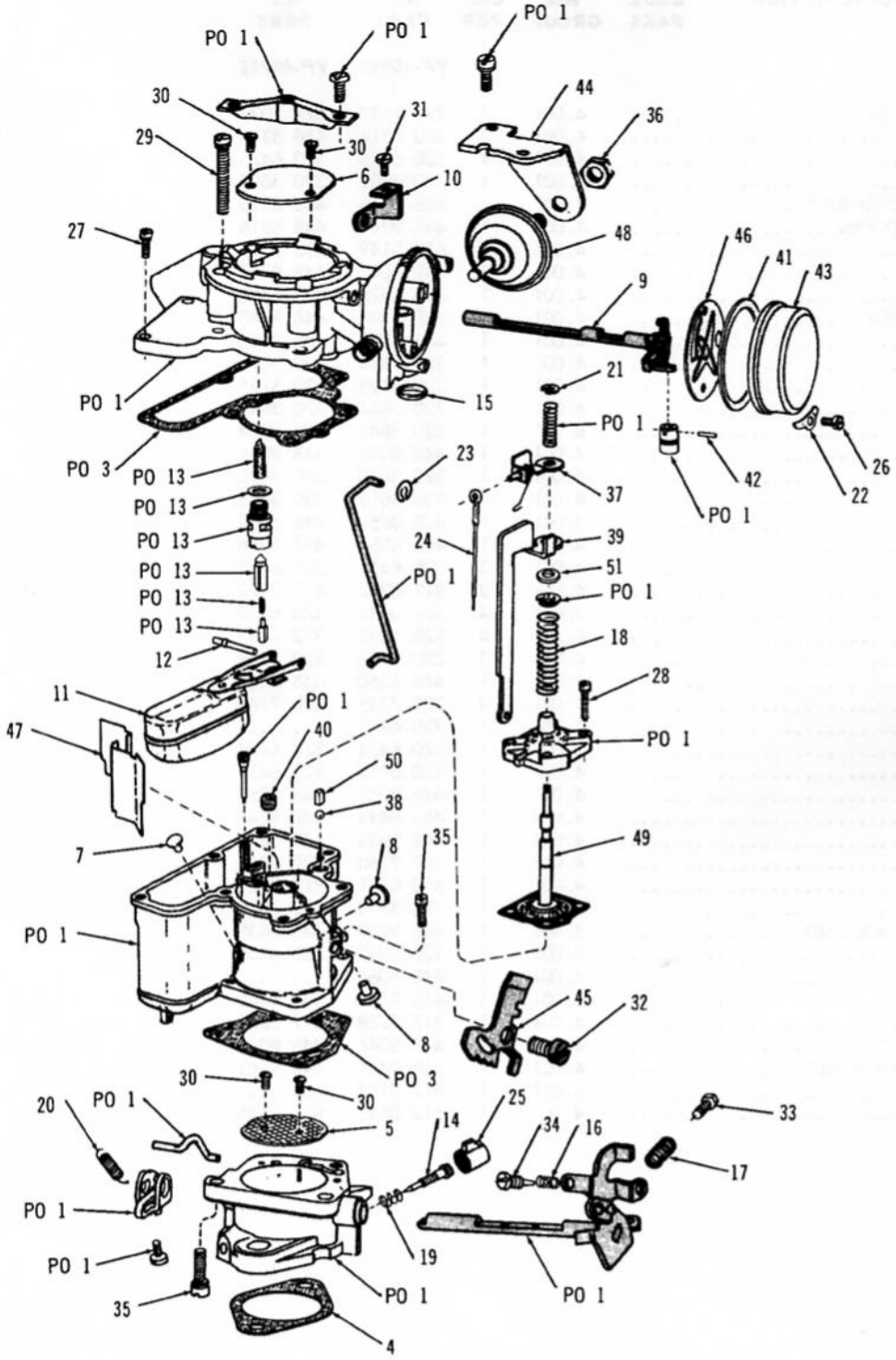

4159

CARBURETOR

KEY NO.	DESCRIPTION	PAKS CODE	GROUP NO.	PER CAR	PART NO. YF-6199	PART NO. YF-6200	PART NO. YF-6202
1	CARBURETOR		4.001	1	321 4461	321 2940	321 4463
2	REPAIR KIT	358	4.001	1	812 1138	812 1138	812 1138
3	GASKET SET	359	4.001	1	448 8046	448 8046	448 8046
4	GASKET		4.001	1	317 3228	317 3228	317 3228
5	VALVE		4.001	1	448 8314	448 8314	448 8314
6	VALVE		4.001	1	320 6425	320 6425	320 6425
7	PLUG		4.001	1	320 3802	320 3802	320 3802
8	PLUG		4.001	1	320 3805	320 3805	320 3805
9	LEVER AND SHAFT		4.001	1	812 0957	812 0957	812 0957
10	LEVER		4.001	1	812 0958	812 0958	812 0958
11	FLOAT		4.001	1	448 8047	448 8047	448 8047
12	PIN		4.001	1	320 6428	320 6428	320 6428
13	NEEDLE ASSY.	362	4.001	1	448 8048	448 8048	448 8048
14	SCREW		4.001	1	812 2355	812 2355	812 2355
15	PLUG		4.001	1	320 3814	320 3814	320 3814
16	SPRING		4.001	1	812 1248	812 1248	812 1248
17	SPRING		4.001	1	320 5125	320 5125	320 5125
18	SPRING		4.001	1	812 2356	812 2356	812 2356
19	SPRING		4.001	1	320 3844	320 3844	320 3844
20	SPRING		4.001	1	448 8065	448 8065	448 8065
21	RETAINER		4.001	1	320 3820	320 3820	320 3820
22	RETAINER		4.001	3	320 3818	320 3818	320 3818
23	RETAINER		4.001	1	812 1249	812 1249	812 1249
24	ROD		4.001	1	812 1250	812 0961	812 1776
25	CAP		4.001	1	448 8054	448 8054	448 8054
26	SCREW		4.001	3	320 6431	320 6431	320 6431
27	SCREW		4.001	3	320 6432	320 6432	320 6432
28	SCREW		4.001	4	320 6433	320 6433	320 6433
29	SCREW		4.001	3	320 7738	320 7738	320 7738
30	SCREW		4.001	4	320 7745	320 7745	320 7745
31	SCREW		4.001	1	812 1251	812 1251	812 1251
32	SCREW		4.001	1	812 1252	812 1252	812 1252
33	SCREW		4.001	1	812 1253	812 1253	812 1253
34	SCREW		4.001	1	812 0959	812 0959	812 0959
35	SCREW		4.001	3	812 0222	812 0222	812 0222
36	NUT		4.001	1	320 6802	320 6802	320 6802
37	ARM ASSY.		4.001	1	320 6434	320 6434	320 6434
38	BALL		4.001	1	812 0145	812 0145	812 0145
39	LINK		4.001	1	320 6437	320 6437	320 6437
40	JET		4.001	1	448 8445	448 8445	448 8445
41	GASKET		4.001	1	448 5888	448 5888	448 5888
42	PIN		4.001	1	320 7761	320 7761	320 7761
43	COIL AND HOUSING		4.001	1	448 8063	448 8063	448 8063
44	BRACKET		4.001	1	812 0962	812 0962	812 0962
45	CAM		4.001	1	812 1254	812 1254	812 1254
46	PLATE		4.001	1	320 6442	320 6442	320 6442
47	PLATE		4.001	1	320 6443	320 6443	320 6443
48	DASHPOT		4.001	1	812 0963	812 0963	812 0963
49	DIAPHRAGM		4.001	1	812 2353	812 2353	448 9440
50	WEIGHT		4.001	1	812 0149	812 0149	812 0149
51	SPACER		4.001	1	812 2352	812 2352	... .

Printed in U.S.A.

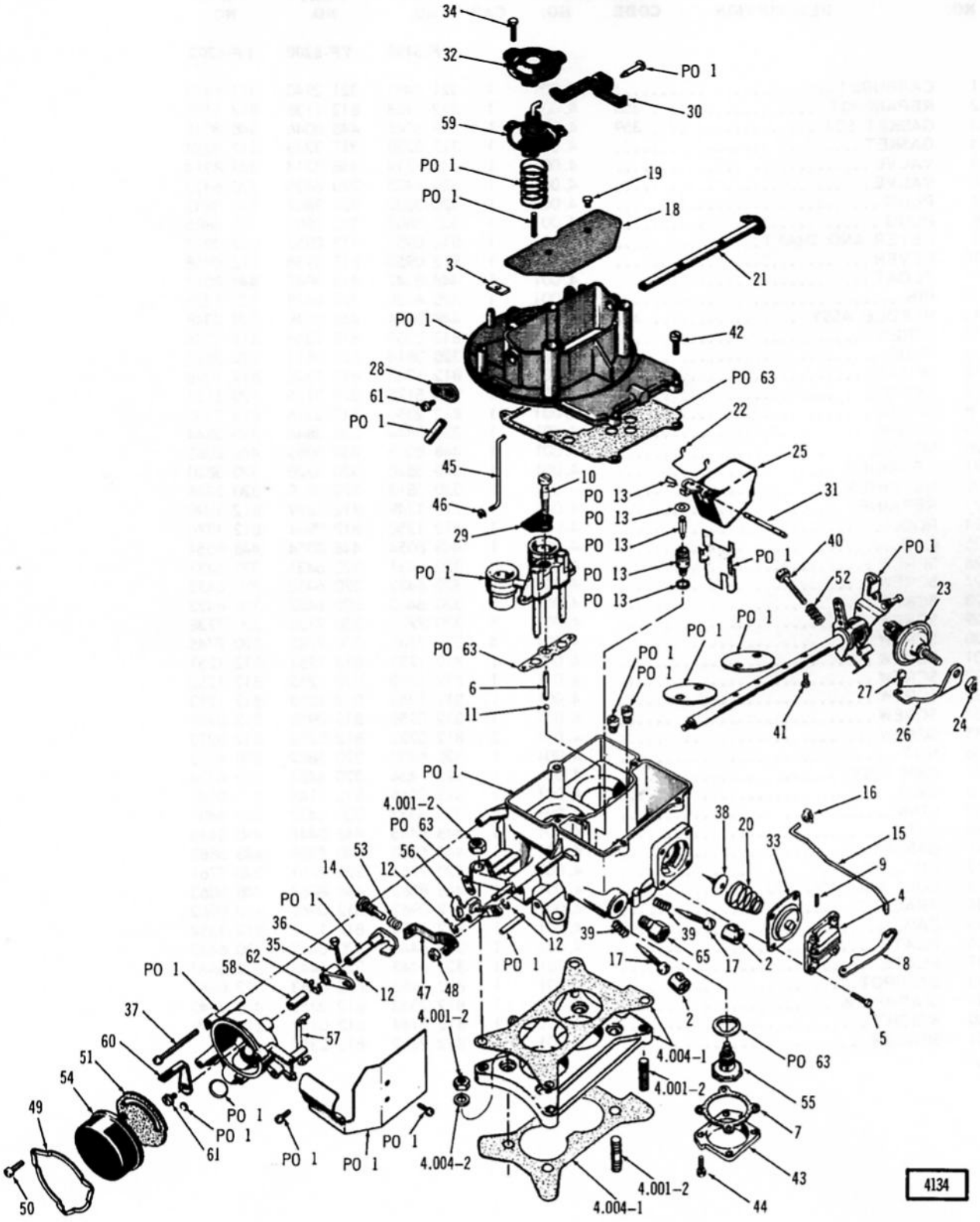
34
32
PO 1
30
59
PO 1
19
PO 1
18
3
21
PO 1
42
28
PO 63
61
PO 1
22
25
45
10
PO 13
31
46
PO 13
29
PO 13
40
PO 1
PO 1
PO 13
52
PO 13
23
PO 1
PO 1
PO 63
PO 1
PO 1
6
27
11
41
26
24
PO 1
16
4.001-2
38
20
PO 63
33
15
53
56
9
14
12
4
PO 1
36
39
39
35
12
65
17
2
8
62
PO 1
17
PO 1
58
12
47
48
2
37
4.001-2
5
57
60
4.004-1
PO 63
51
4.001-2
54
55
49
PO 1
7
PO 1
61
PO 1
PO 1
PO 1
4.004-2
43
4.001-2
50
4.004-1
44
4134

CARBURETOR

KEY NO.	DESCRIPTION	PAKS CODE	GROUP NO.	PER CAR	PART NO. 2DA2	PART NO. 2DM2	PART NO. 2RA2	PART NO.	PART NO.
1	CARBURETOR		4.001	1	321 3505	321 4464	812 1335		
2	LIMITER		4.001	2	320 9879	320 9879	320 9879		
3	SEAL		4.001	1	320 9880	320 9880	320 9880		
4	COVER		4.001	1	812 1326	812 1326	812 1326		
5	SCREW		4.001	4	448 8169	448 8169	448 8169		
6	WEIGHT		4.001	1	812 1327	812 1327	812 1327		
7	GASKET		4.001	1	320 9885	320 9885	320 9885		
8	LINK		4.001	1	812 1328	812 1328	812 1328		
9	PIN		4.001	1	320 9891	320 9891	320 9891		
10	SCREW		4.001	1	320 9892	320 9892	320 9892		
11	BALL		4.001	1	G145637	G145637	G145637		
12	WASHER		4.001	3	448 8171	448 8171	448 8171		
13	VALVE KIT		4.001	1	448 8172	448 8172	448 8172		
14	SCREW		4.001	1	812 1329	812 1329	812 1329		
15	ROD		4.001	1	320 9898	320 9898	320 9898		
16	CLIP		4.001	1	320 9899	320 9899	320 9899		
17	NEEDLE		4.001	2	448 8173	448 8173	448 8173		
18	PLATE		4.001	1	448 8175	448 8175	448 8175		
19	SCREW		4.001	2	320 9901	320 9901	320 9901		
20	SPRING		4.001	1	320 9902	320 9902	320 9902		
21	SHAFT		4.001	1	448 8176	448 8176	448 8176		
22	RETAINER		4.001	1	812 1330	812 1330	812 1330		
23	DASHPOT		4.001	1	320 9905	320 9905	... .		
24	NUT (Dashpot)		4.001	1	320 9906	320 9906	... .		
	NUT (Solenoid)		17.428	1	... .	... .	G107381		
25	FLOAT		4.001	1	448 8178	448 8178	448 8178		
26	BRACKET (Dashpot)		4.001	1	448 8322	448 8322	... .		
	BRACKET (Solenoid)		4.001	1	... .	... .	812 1166		
27	SCREW		4.001	1	448 5440	448 5440	448 5440		
28	LEVER		4.001	1	448 8179	448 8179	448 8179		
29	PLATE		4.001	1	448 8180	448 8180	448 8180		
30	LEVER		4.001	1	812 0068	812 0068	812 0068		
31	SHAFT		4.001	1	320 9910	320 9910	320 9910		
32	COVER		4.001	1	448 8182	448 8182	448 8182		
33	DIAPHRAGM		4.001	1	320 9912	320 9912	320 9912		
34	SCREW		4.001	3	448 8183	448 8183	448 8183		
35	LEVER		4.001	1	320 9913	320 9913	320 9913		
36	SCREW		4.001	1	812 0069	812 0069	812 0069		
37	SCREW		4.001	3	448 5441	448 5441	448 5441		
38	VALVE		4.001	1	320 9916	320 9916	320 9916		
39	SPRING		4.001	2	320 9917	320 9917	320 9917		
40	SCREW		4.001	1	448 5442	448 5442	448 5442		
41	SCREW		4.001	4	812 1332	812 1332	812 1332		
42	SCREW		4.001	4	448 5444	448 5444	448 5444		
43	COVER		4.001	1	320 9920	320 9920	320 9920		
44	SCREW		4.001	4	448 5445	448 5445	448 5445		
45	ROD		4.001	1	448 8246	448 8246	448 8246		
46	RING		4.001	1	320 9922	320 9922	320 9922		
47	LEVER		4.001	1	812 1331	812 1331	812 1331		
48	NUT AND WASHER		17.412	1	G271169	G271169	G271169		
49	CLAMP		4.001	1	812 0075	812 0075	812 0075		
50	SCREW		4.001	3	448 5447	448 5447	448 5447		
51	GASKET		4.001	1	812 1333	812 1333	812 1333		
52	SPRING		4.001	1	320 9928	320 9928	320 9928		
53	SPRING		4.001	1	320 9917	320 9917	320 9917		
54	HOUSING		4.001	1	812 1419	812 1419	812 1419		
55	VALVE		4.001	1	812 1418	812 1418	812 1418		
56	CAM		4.001	1	812 1421	812 1421	812 1421		
57	ROD		4.001	1	320 9893	320 9893	320 9893		
58	BUSHING		4.001	1	448 8477	448 8477	448 8477		
59	DIAPHRAGM		4.001	1	812 1417	812 1417	812 1417		
60	LEVER		4.001	1	812 1420	812 1420	812 1420		
61	SCREW		4.001	2	448 5446	448 5446	448 5446		
62	RETAINER		4.001	1	320 9925	320 9925	320 9925		
63	GASKET SET		4.001	1	812 0090	812 0090	812 0090		
64	MAJOR REPAIR KIT		4.001	1	812 0091	812 0091	812 0091		
65	FITTING		17.160	1	G137406	G137406	G137406		

Printed in U.S.A.

ILLUSTRATION SUPPLEMENT - SPECIAL INFORMATION

CARBURETOR COMPONENTS .... Refer to F-14072 Parts Catalog Charts.

Printed in U.S.A.

ILLUSTRATION SUPPLEMENT - SPECIAL INFORMATION

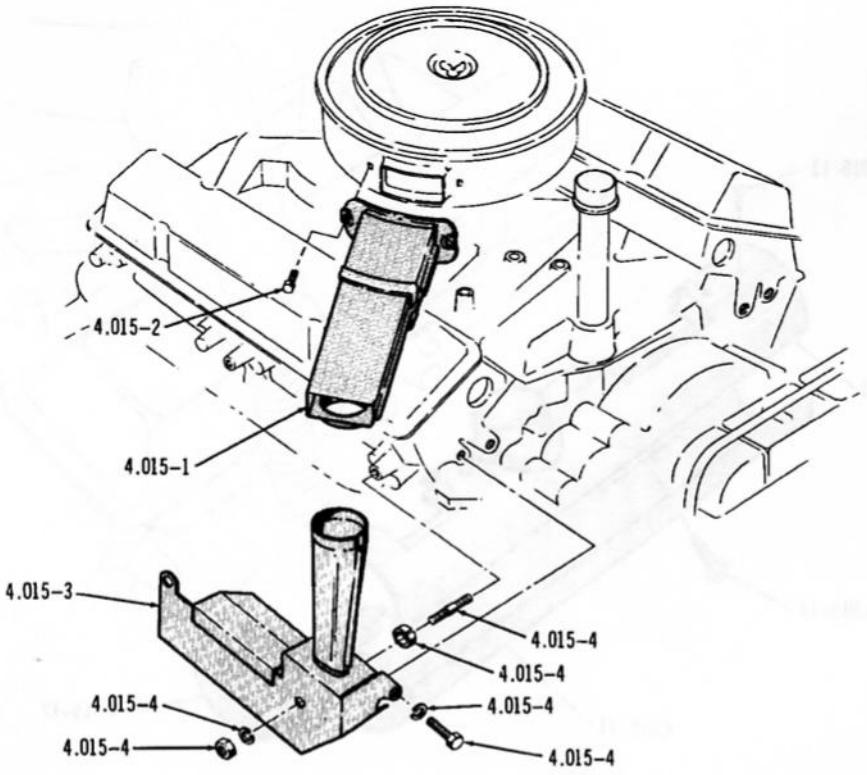

CARBURETOR AIR CLEANER DUCT AND SHROUD ... 1969/70 (V8-TYPE 1) 3331

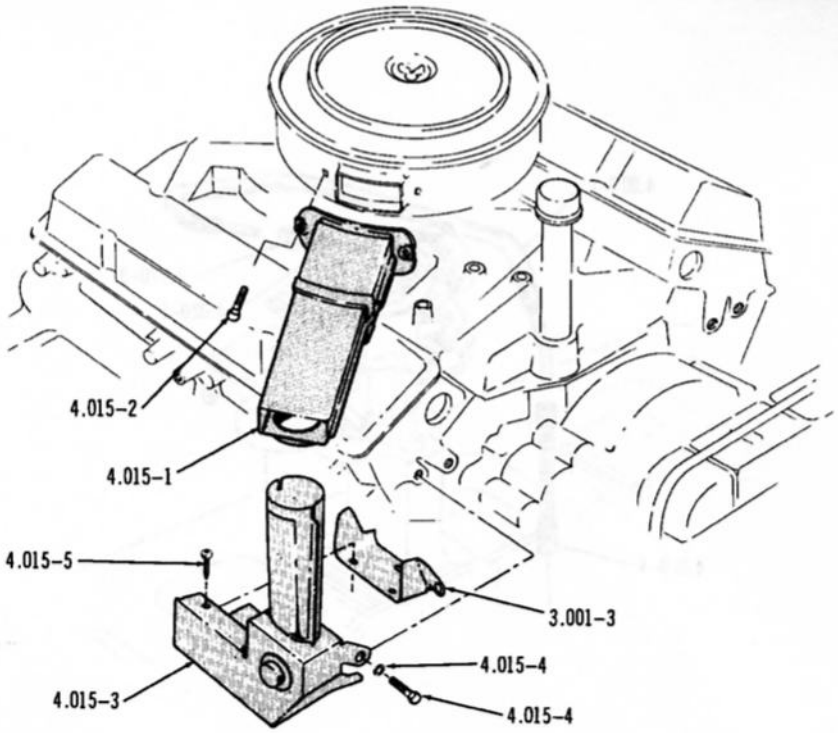

3379

CARBURETOR AIR CLEANER DUCT AND SHROUD ... 1969/70 (V8-TYPE 2)

Printed in U.S.A.

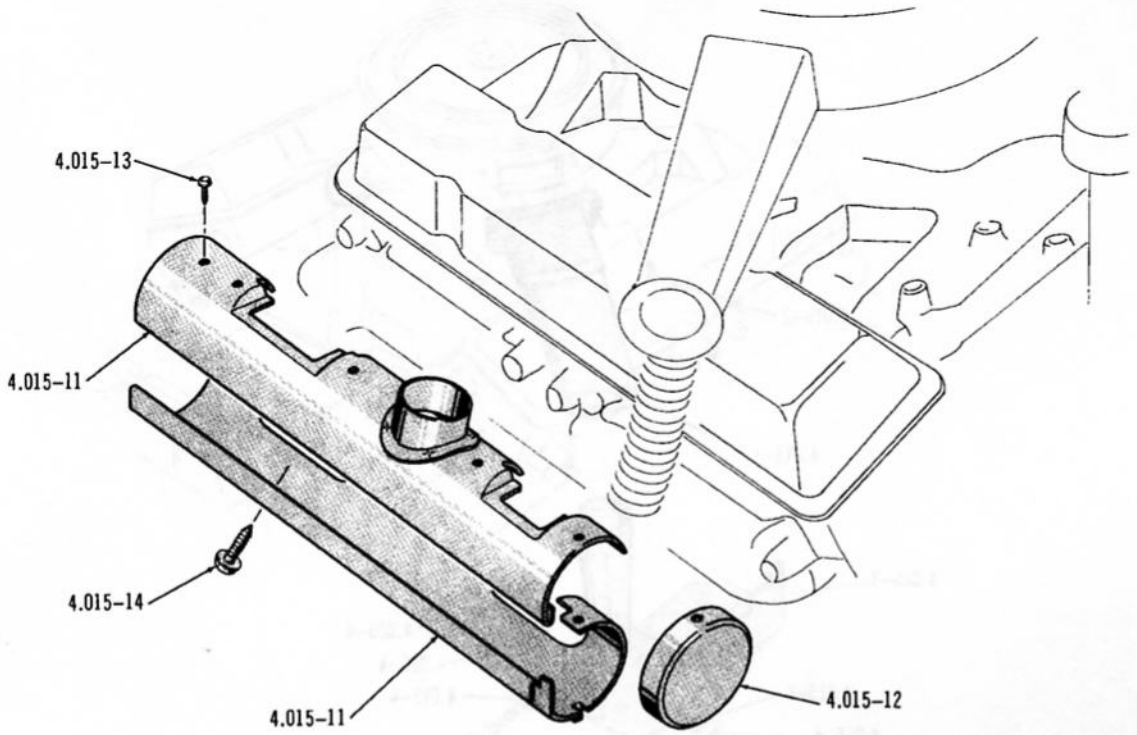

4177

MANIFOLD HEAT SHROUD . . . 1972–V8 (01)(40)

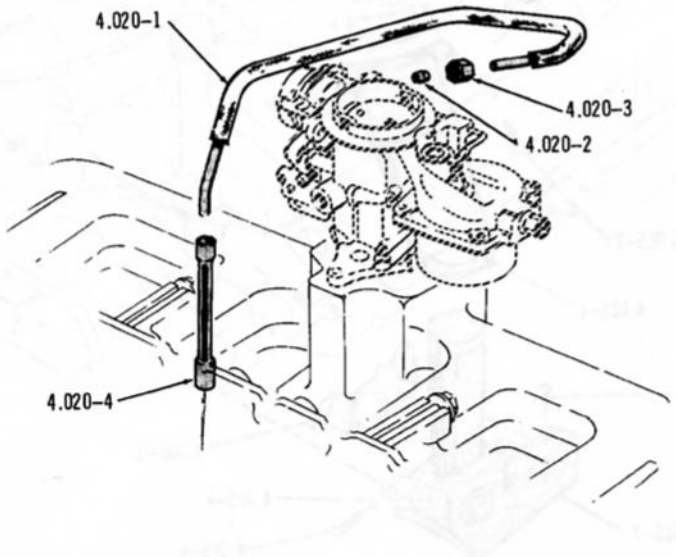

3186

CARBURETOR CHOKE HEATER TUBES . . . SIX

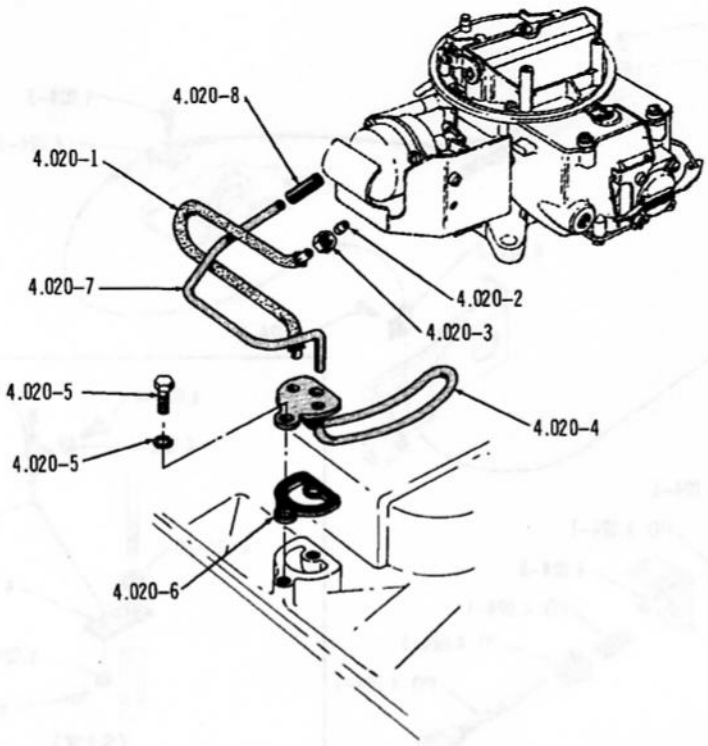

3347

CARBURETOR CHOKE HEATER TUBES . . . V8 (1967/71)

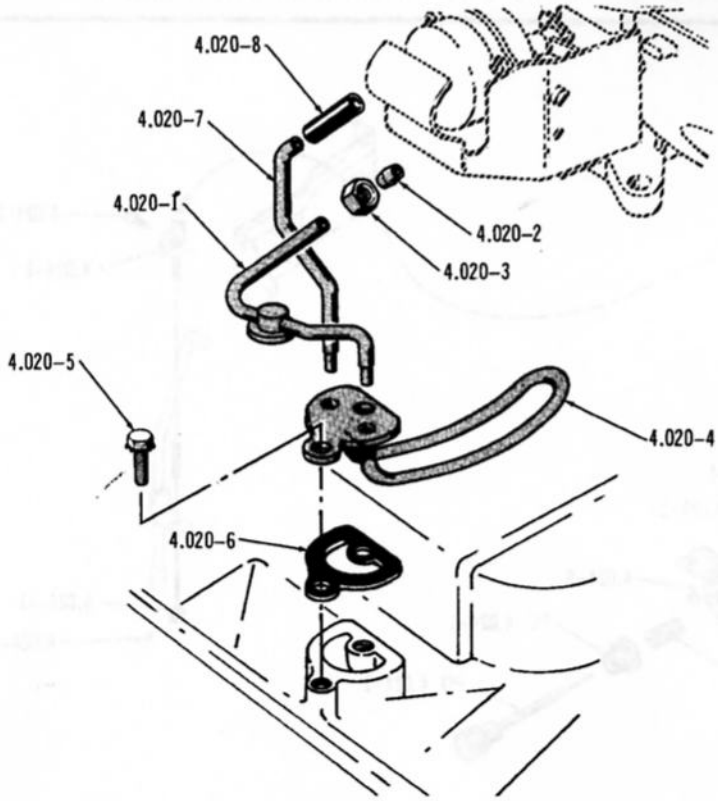

4076

CARBURETOR CHOKE HEATER TUBES . . . V8 (1972)

Printed in U.S.A.

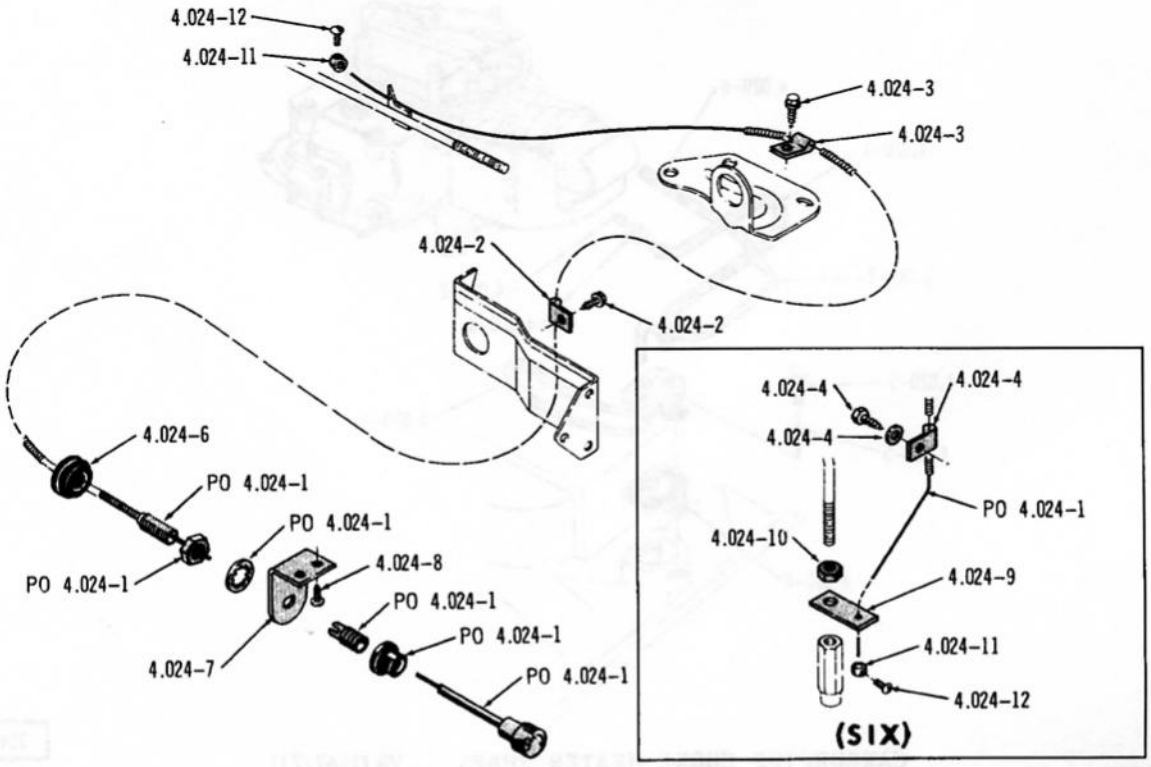

3150

HAND THROTTLE CONTROL . . . SIX (1967/68), V8 (1967-Type 1)

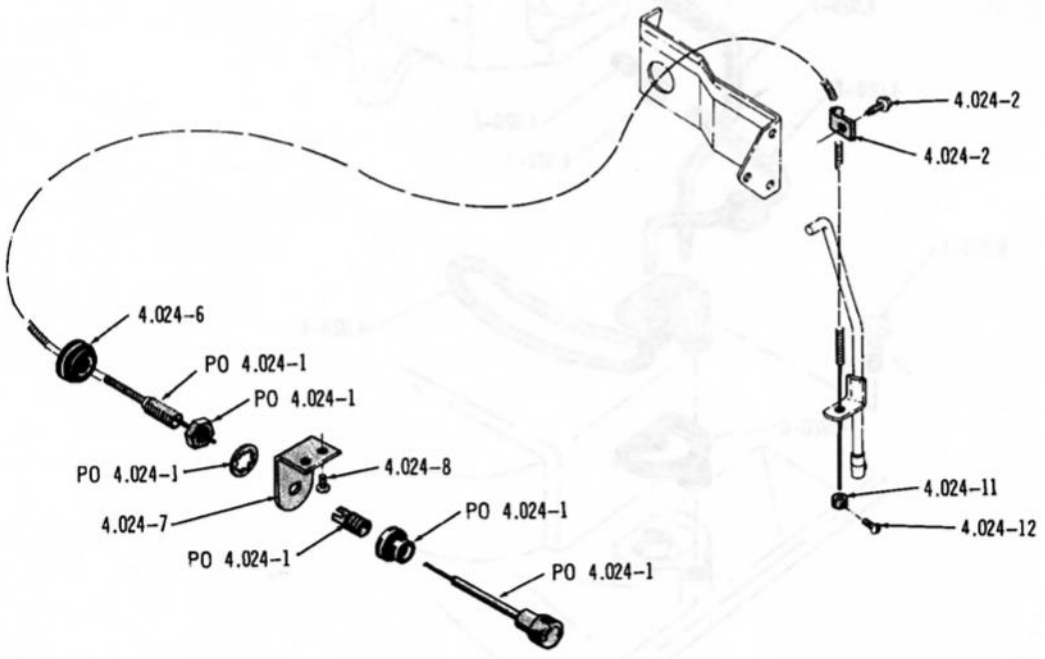

3152

HAND THROTTLE CONTROL . . . V8 (1967-Type 2)(1968)

Printed in U.S.A.

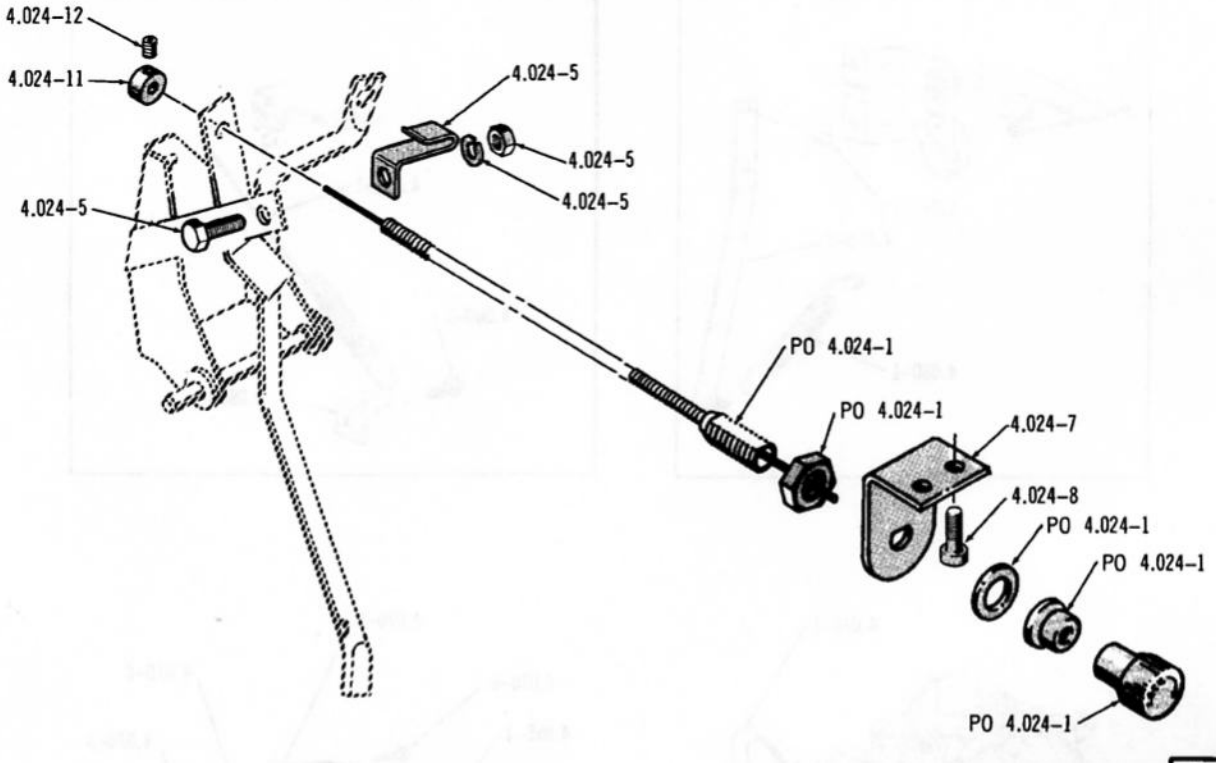

HAND THROTTLE CONTROL . . . 1972 (10) (80)

Printed in U.S.A.

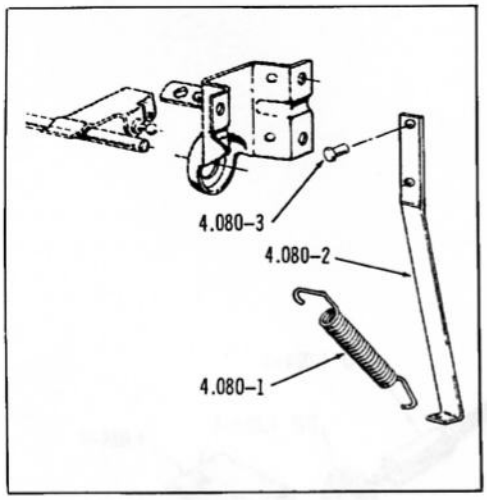

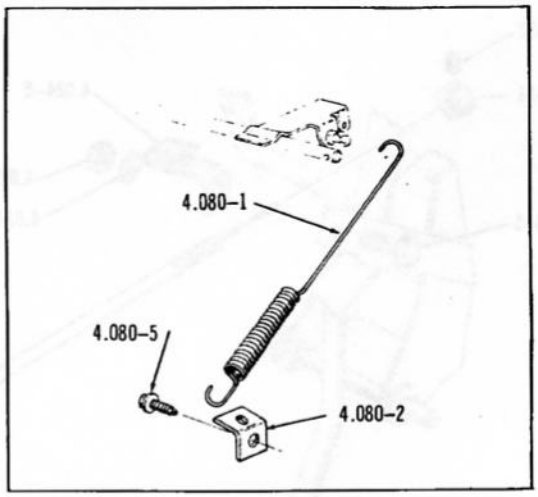

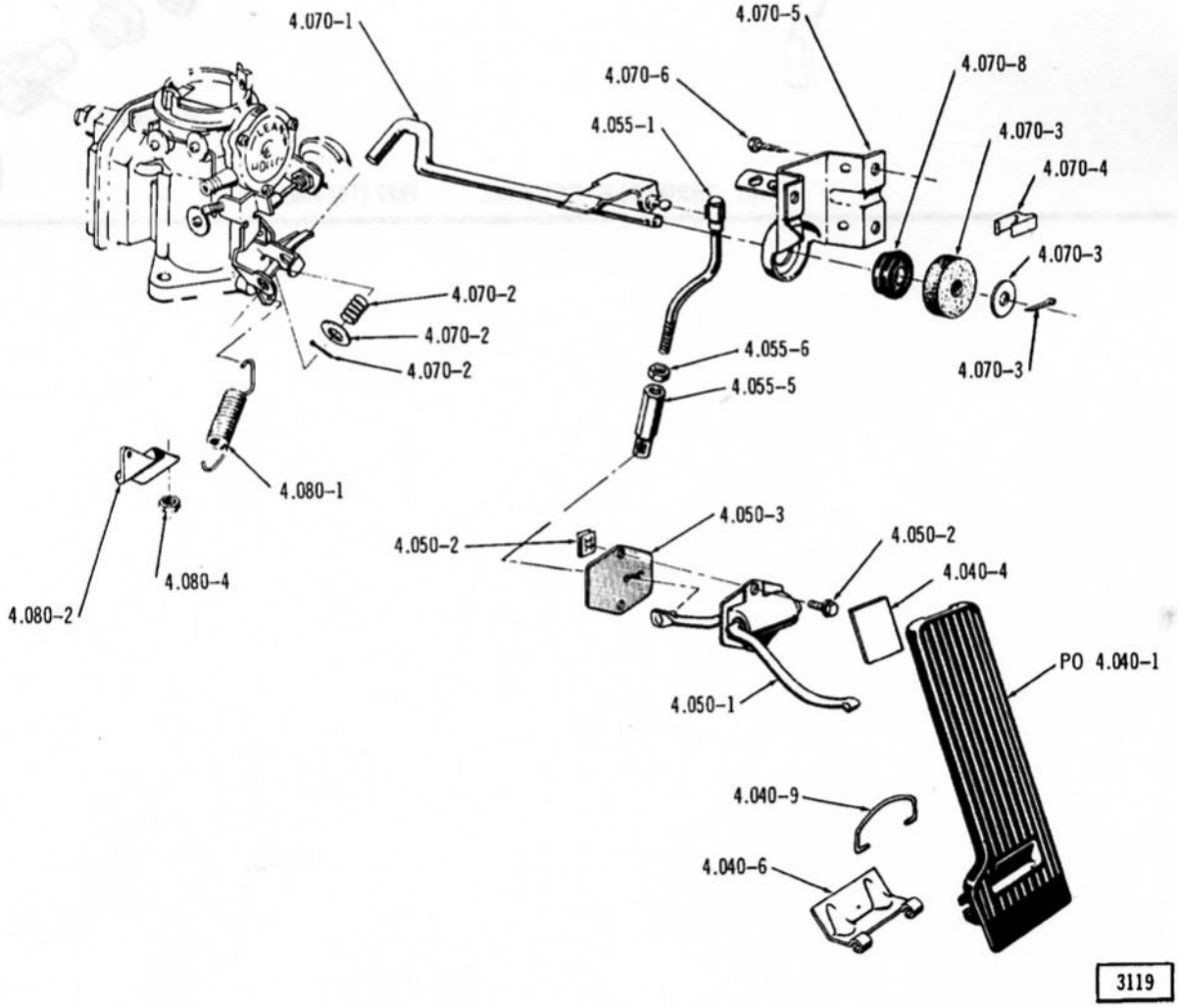

ACCELERATOR LINKAGE ... SIX-LHD (1967-01)(1968-01)

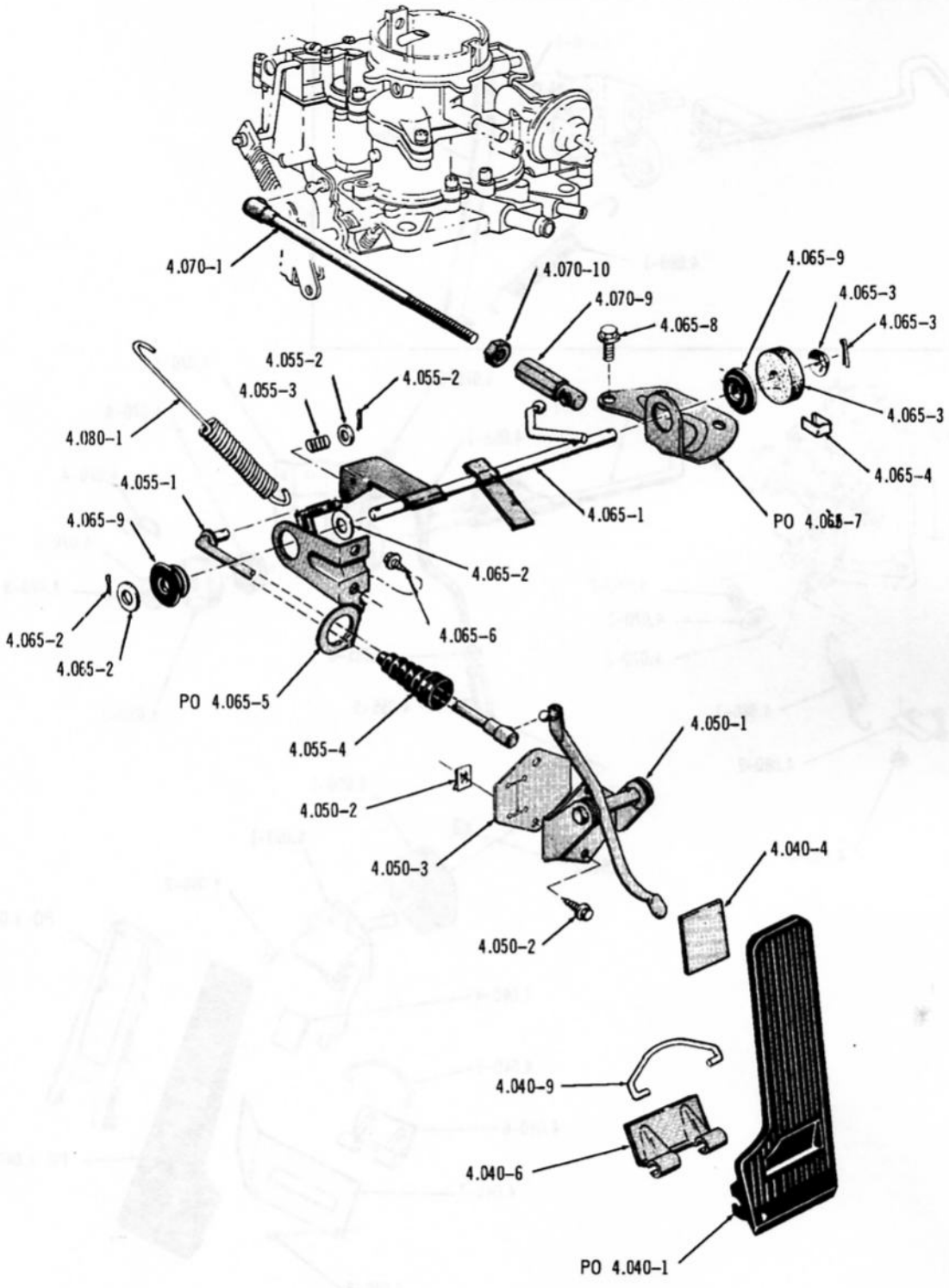

3351

ACCELERATOR LINKAGE ... V8-LHD (1967-01)(1968-01)

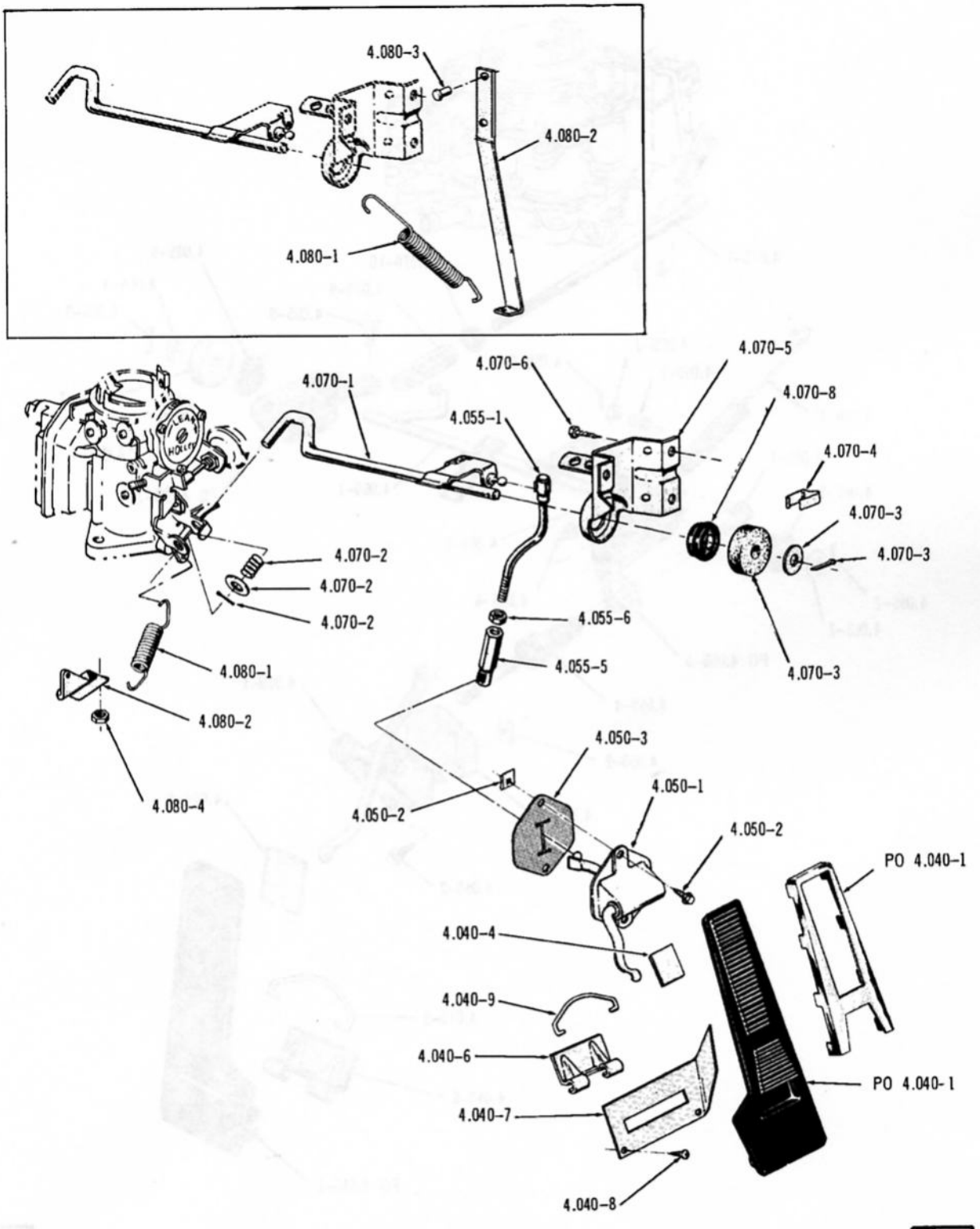

ACCELERATOR LINKAGE ... SIX-LHD (1967-E/01)(1968-E/01)

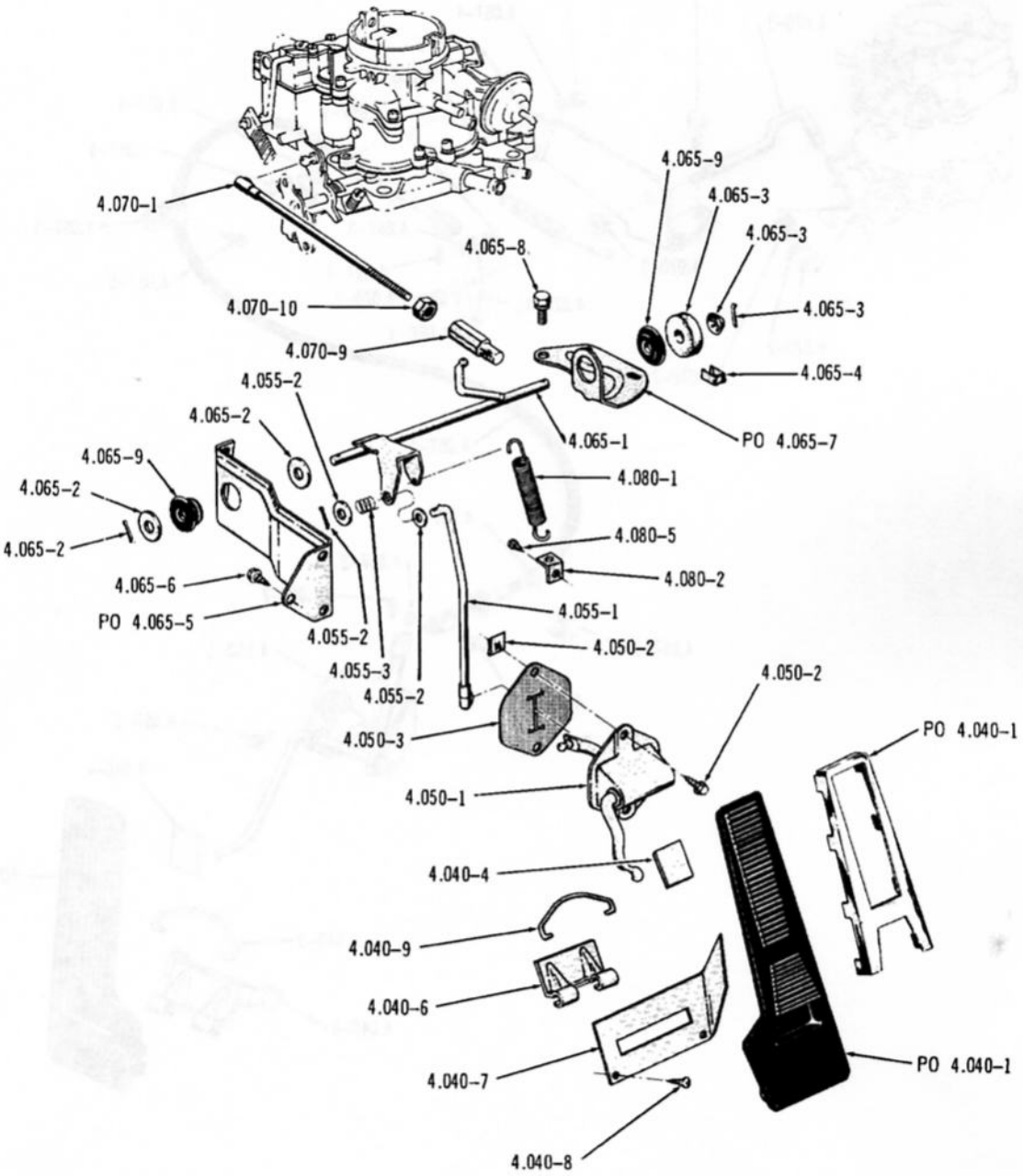

3141

ACCELERATOR LINKAGE ... V8-LHD (1967-E/01)(1968-E/01)

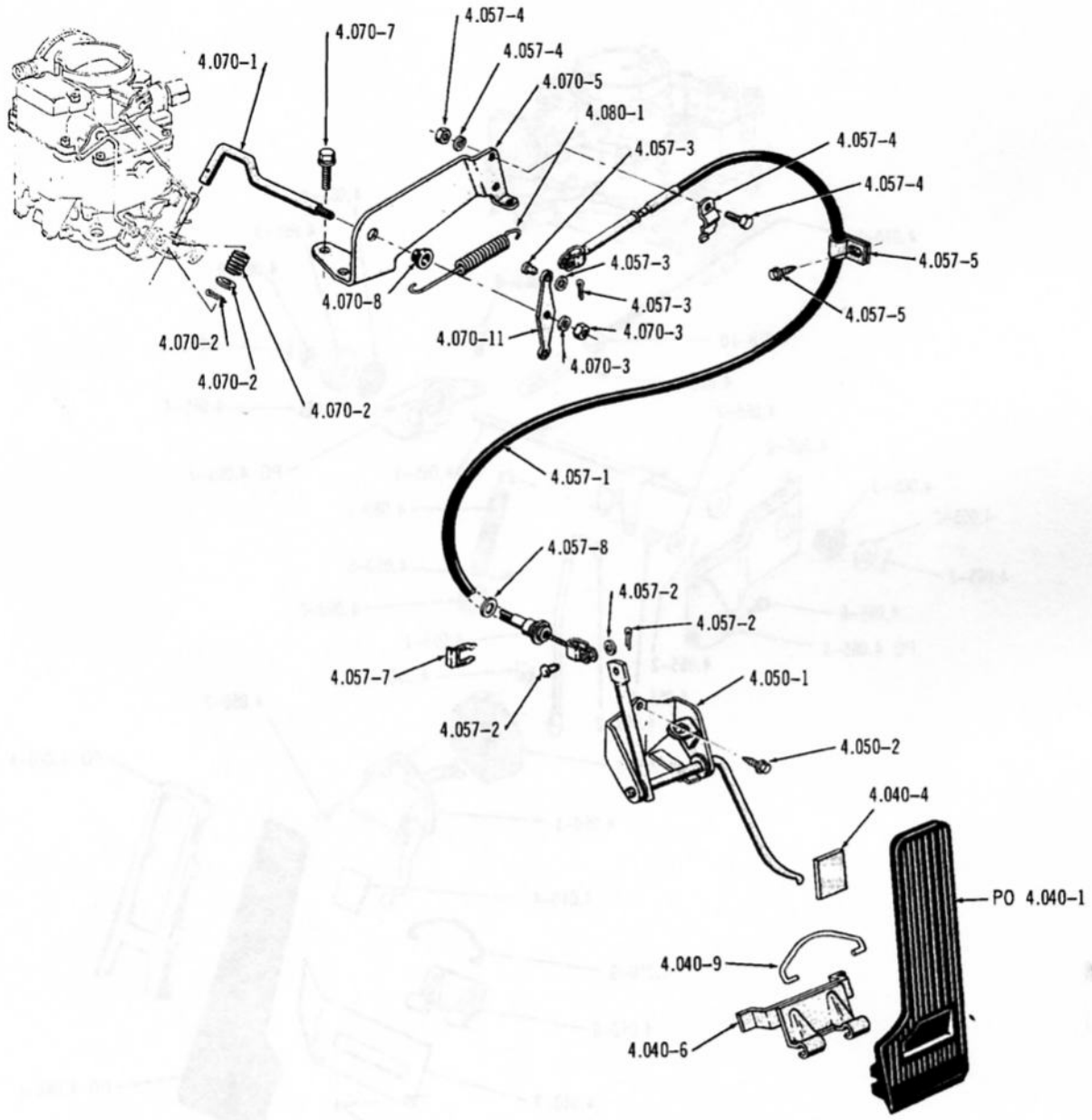

3139

ACCELERATOR LINKAGE ... SIX-RHD (1967)(1968)

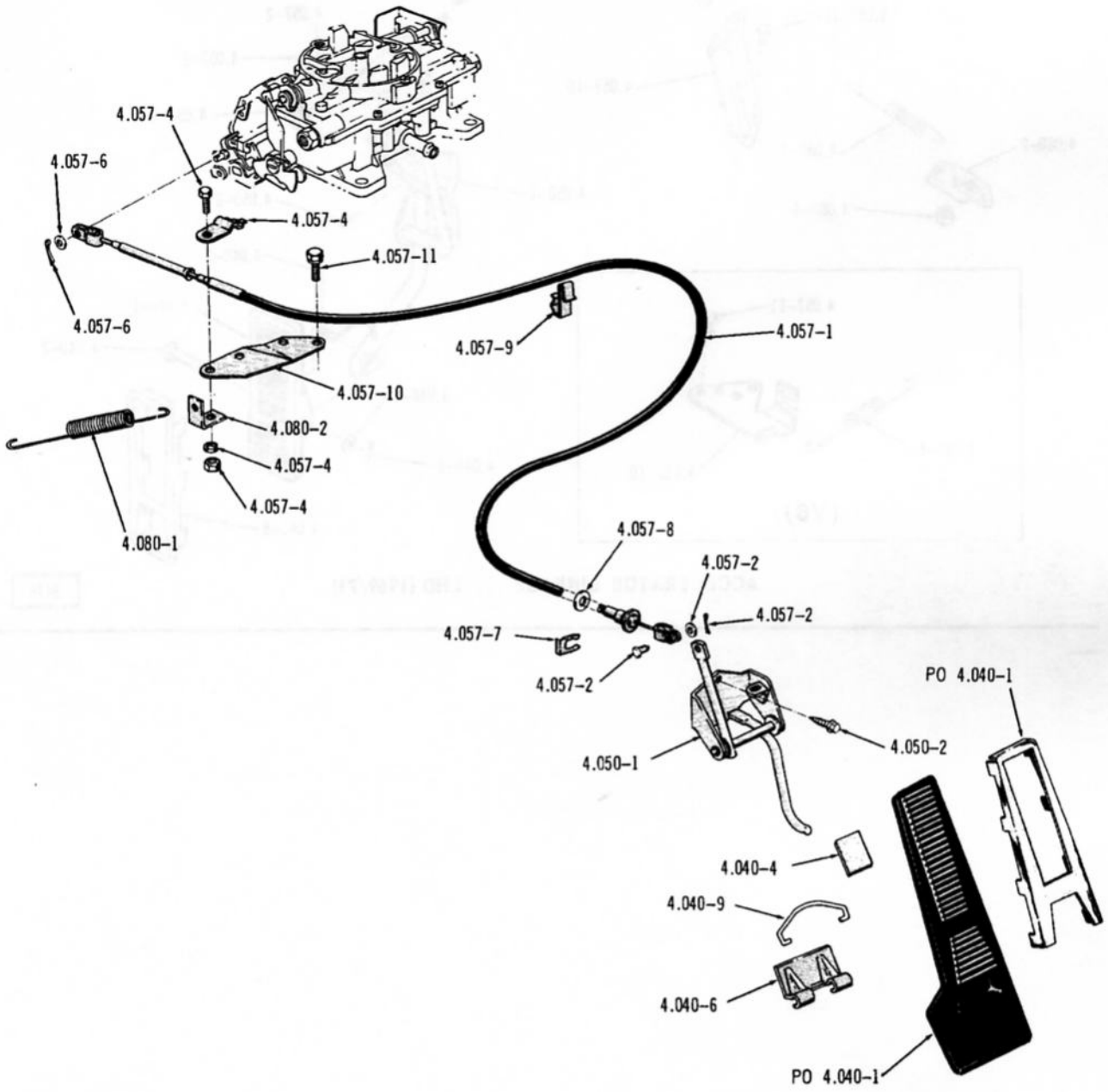

3140

ACCELERATOR LINKAGE ... V8-RHD (1967)(1968)

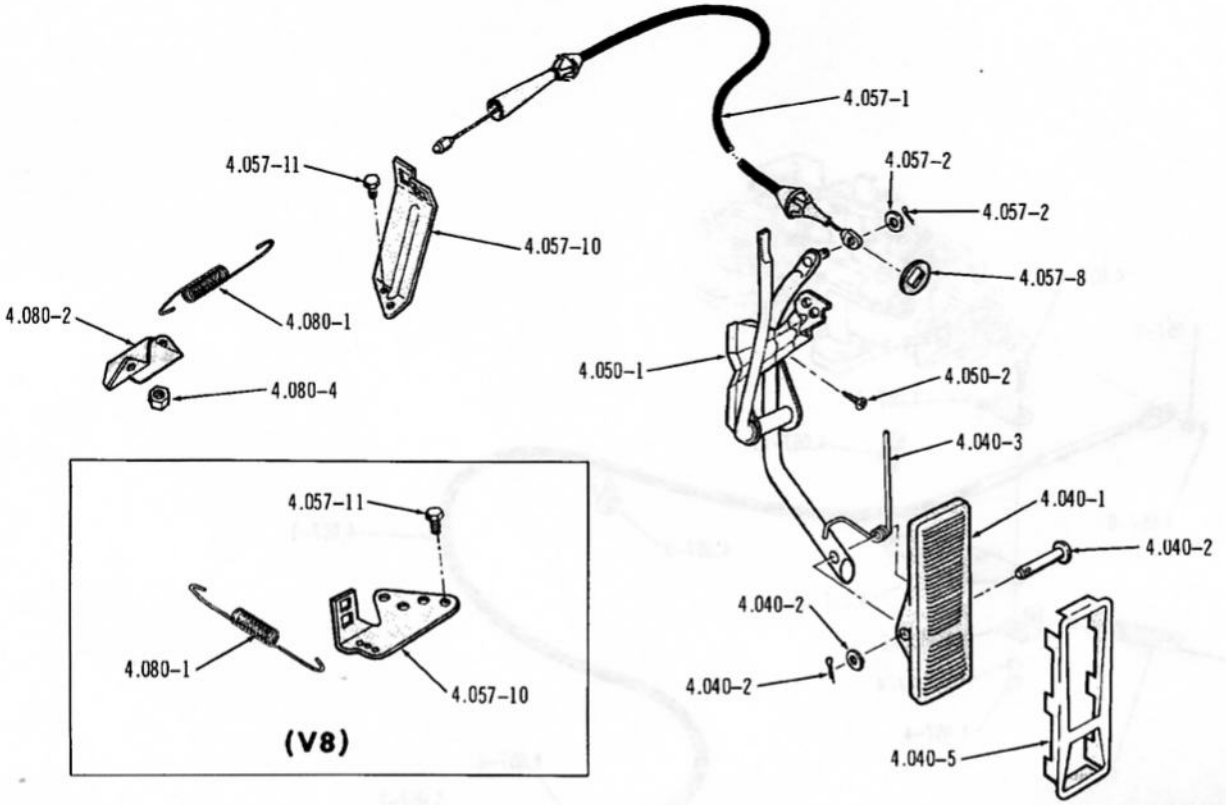

ACCELERATOR LINKAGE ... LHD (1969/71)

3476

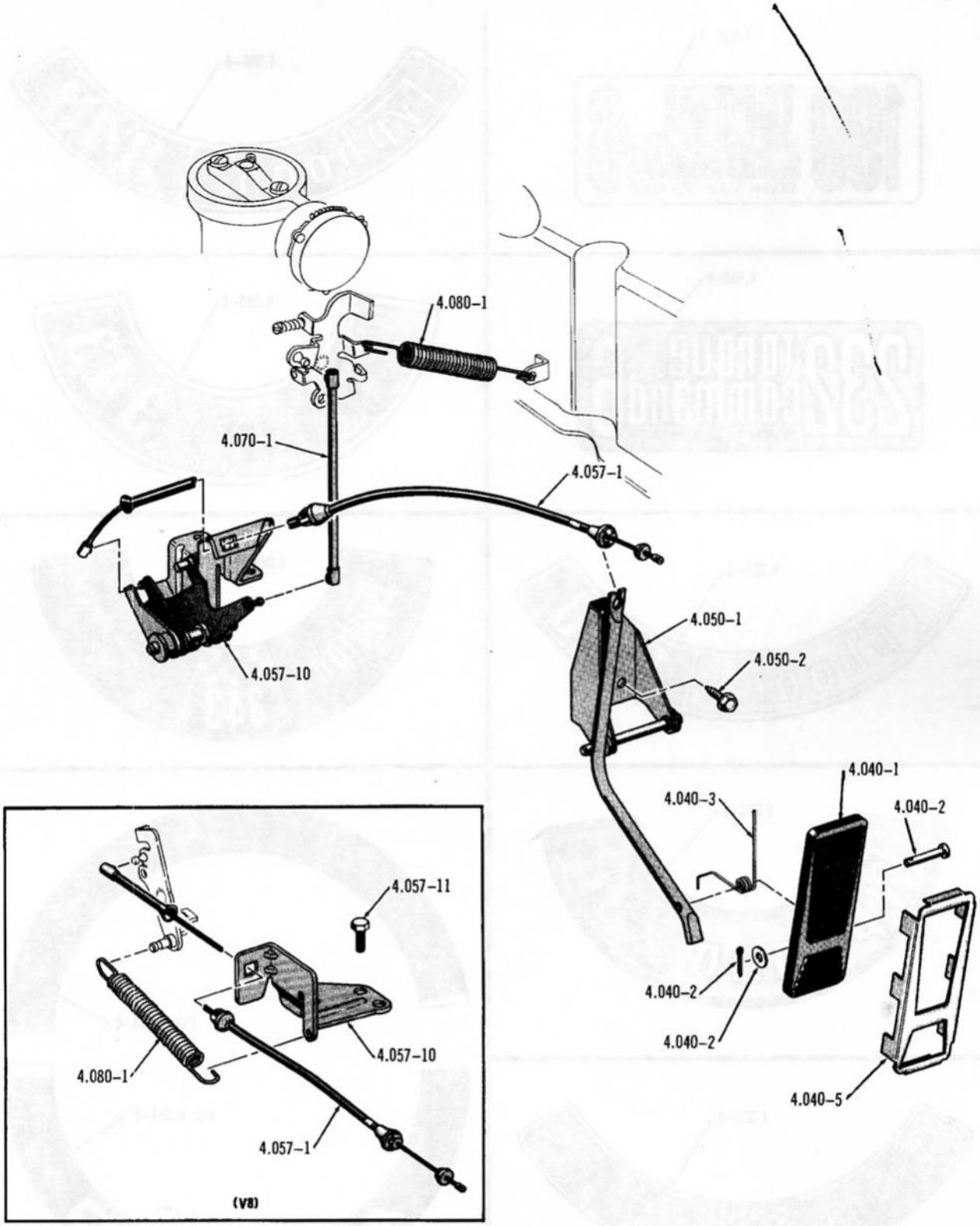

4150

ACCELERATOR LINKAGE . . . LHD (1972)



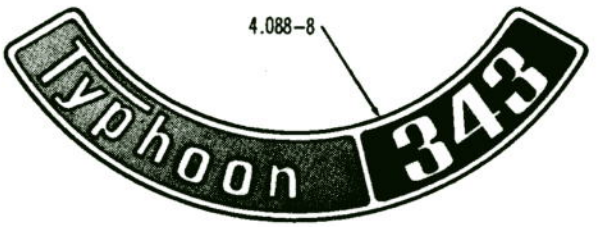



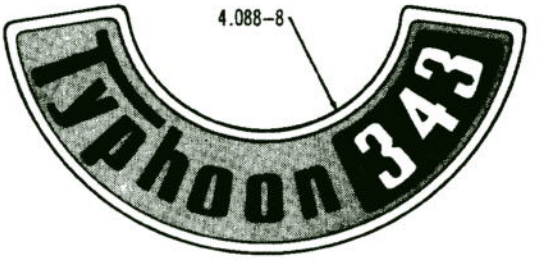

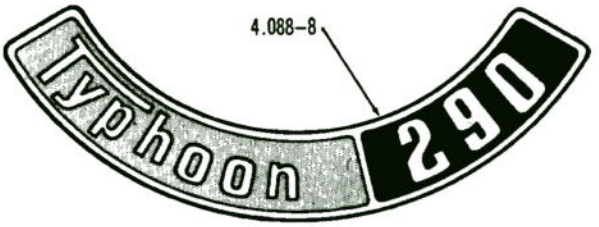







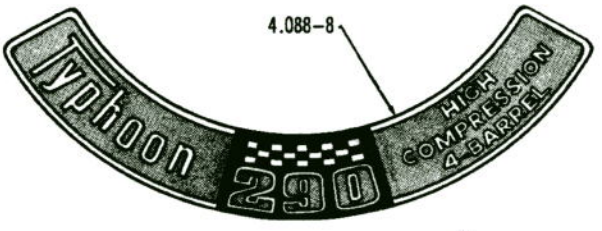



3155

CARBURETOR AIR CLEANER STICKERS

Printed in U.S.A.



1971/



1971/

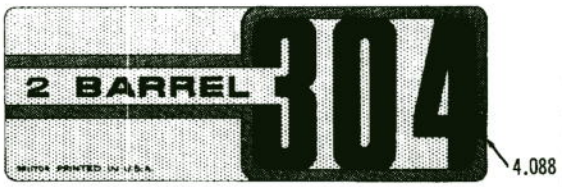

1971/

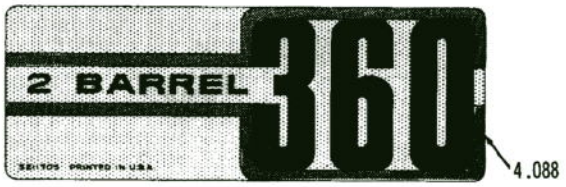

1971/

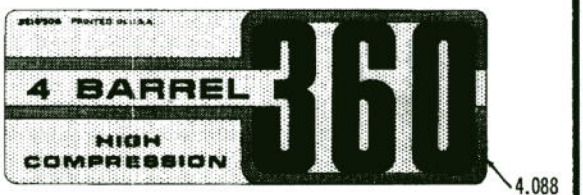

1971



1972



1971



1972

4195

CARBURETOR AIR CLEANER STICKERS . . . 1971/

Printed in U.S.A.

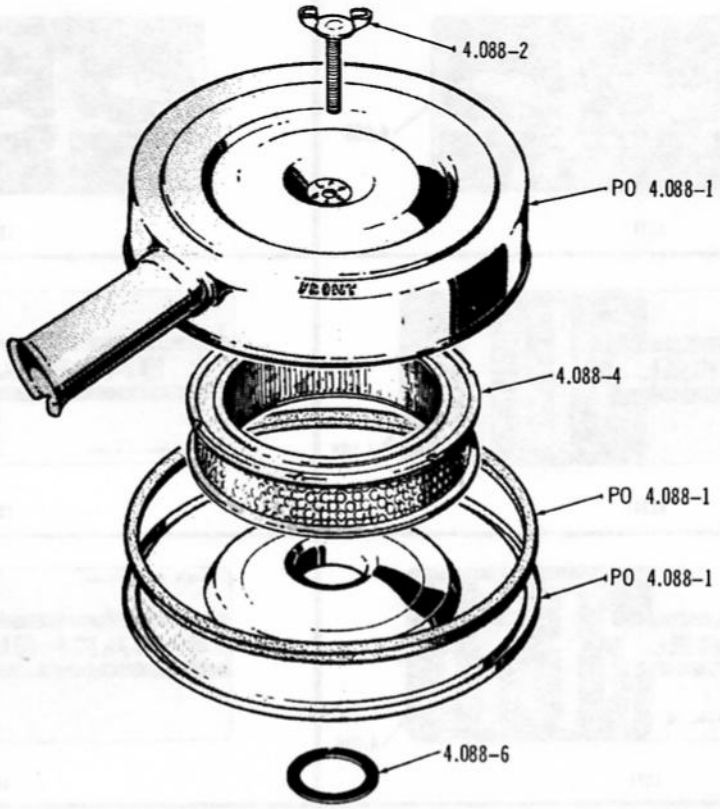

4196

CARBURETOR AIR CLEANER . . . 1971 (SIX), 1972–SIX–WAT (10)(70)(80)

Printed in U.S.A.

3178

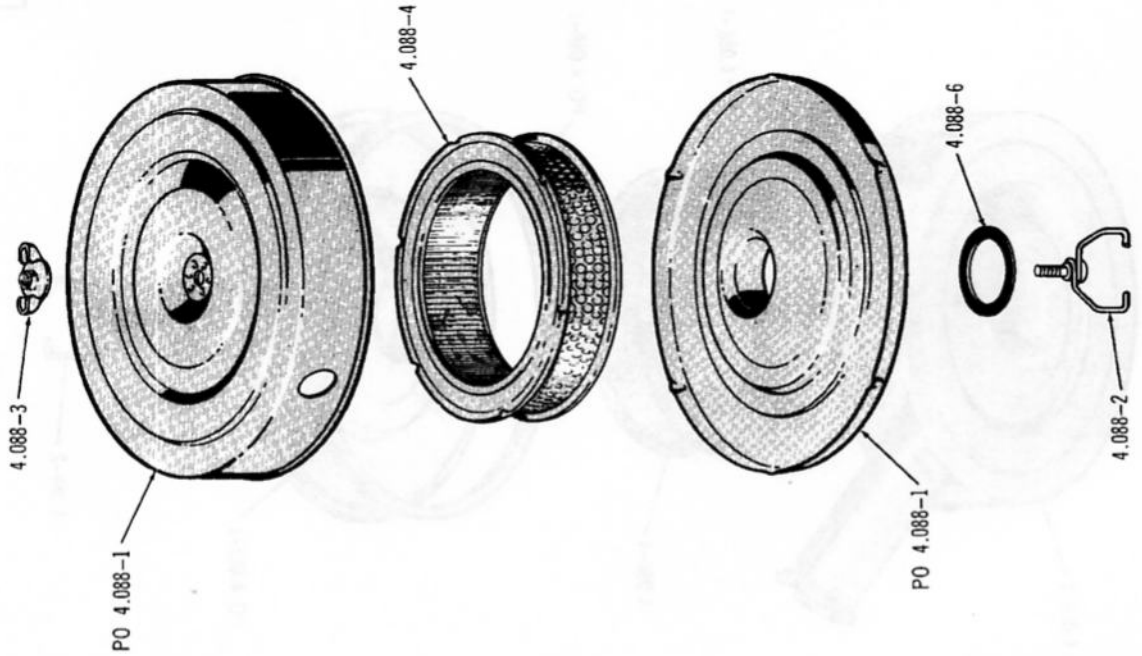

CARBURETOR AIR CLEANER ... 1967/69 (199)

3162

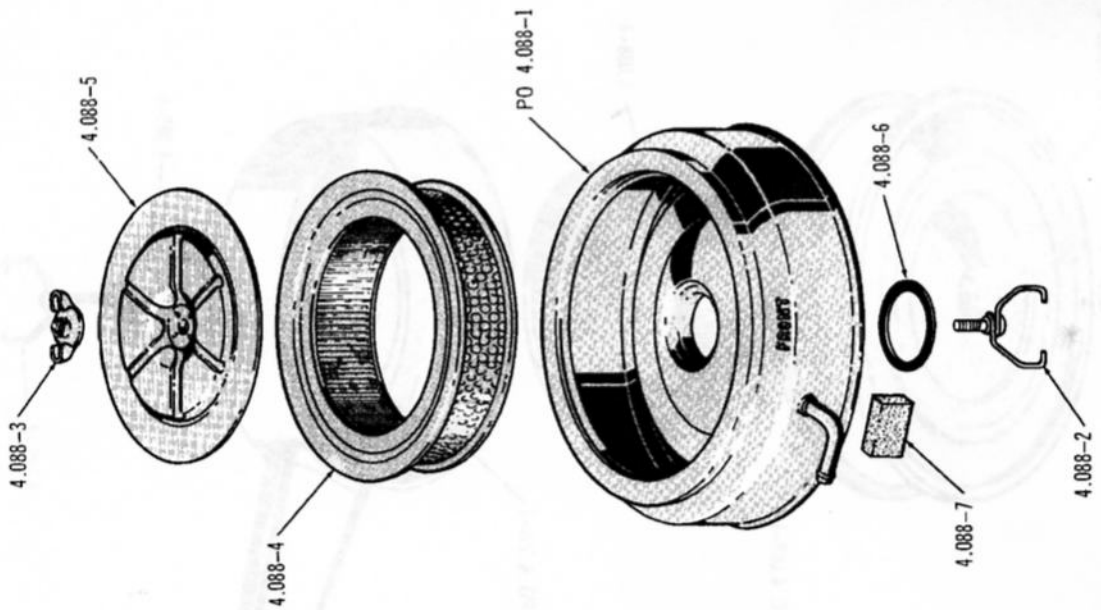

CARBURETOR AIR CLEANER ... UNITED

3169

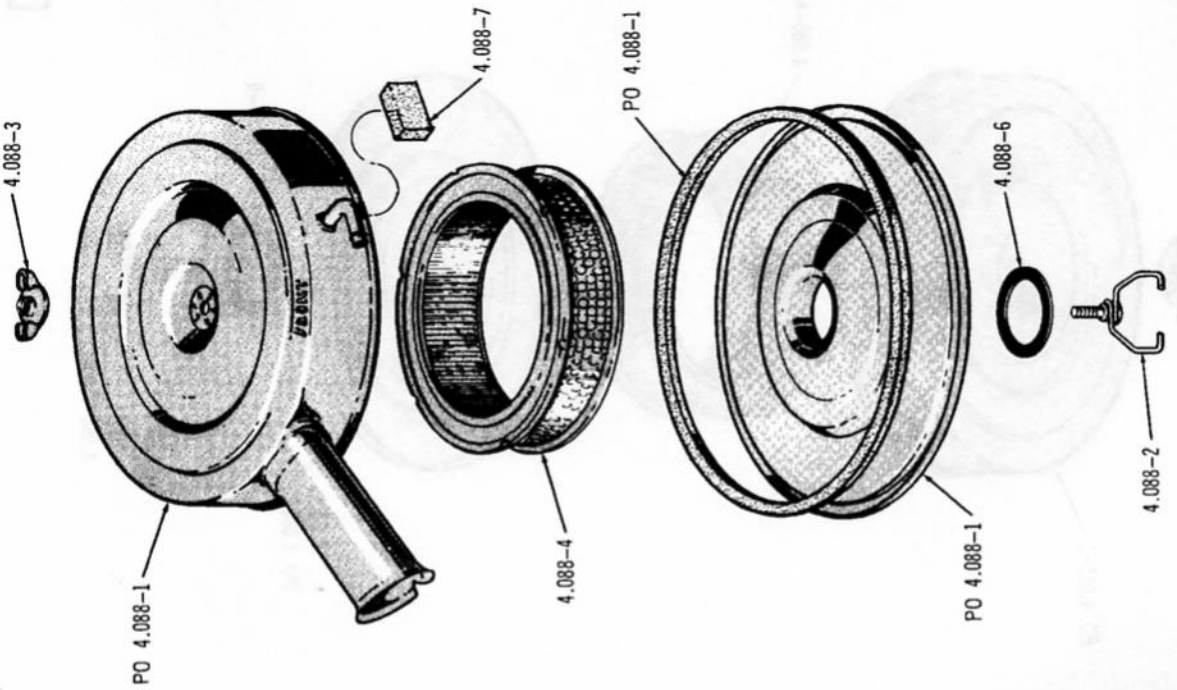

CARBURETOR AIR CLEANER ... CANADIAN FILTERS LTD.

3184

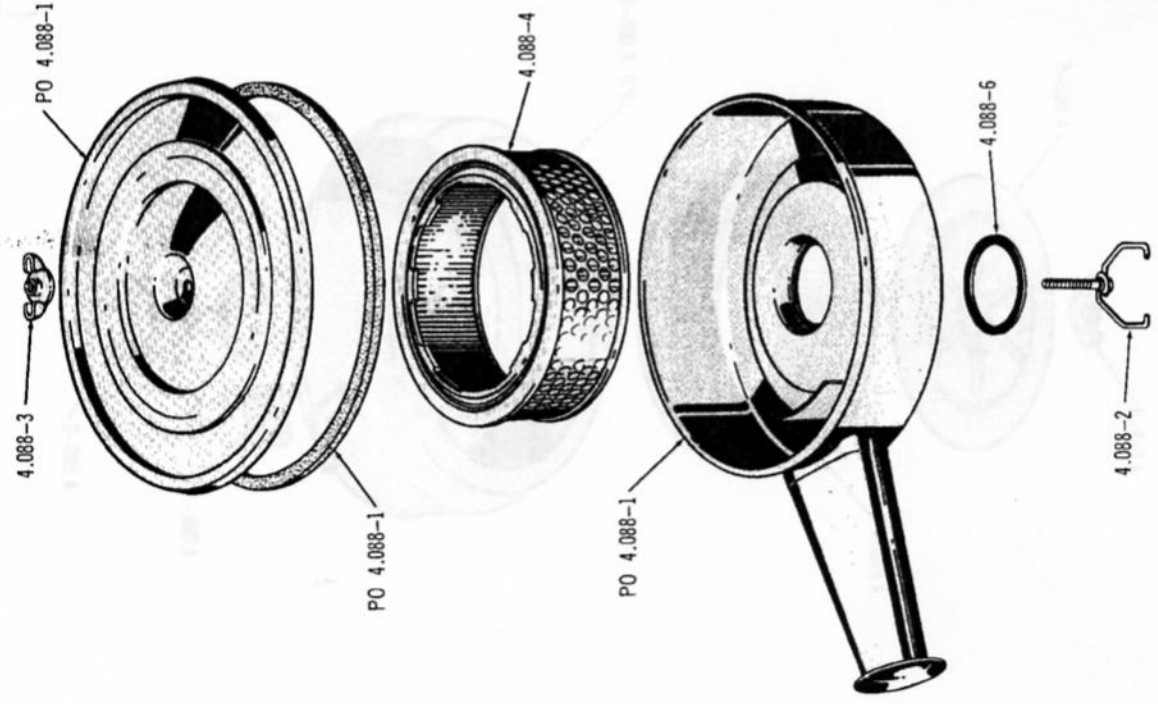

CARBURETOR AIR CLEANER ... CANADIAN FILTERS LTD.

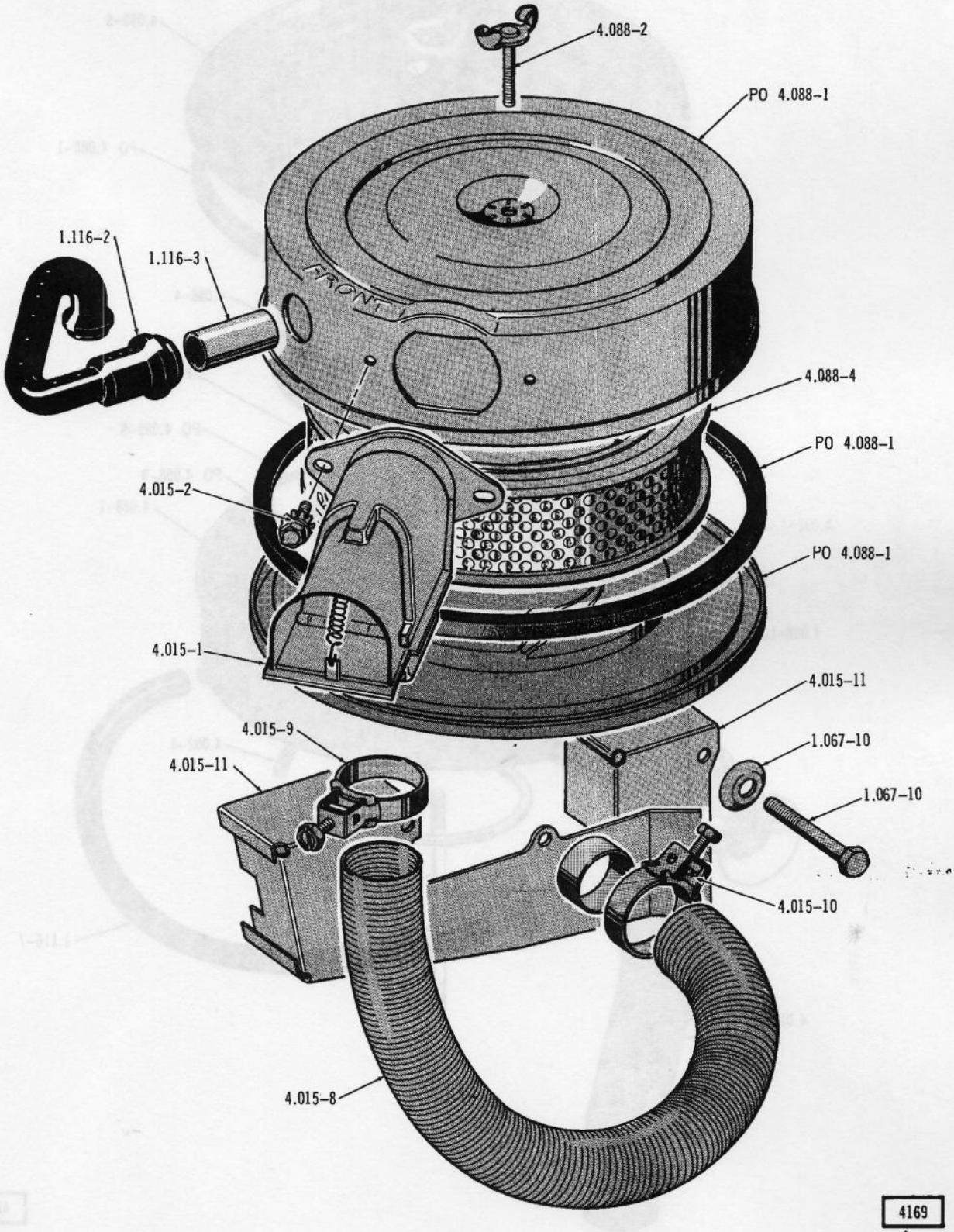

CARBURETOR AIR CLEANER . . . 1972–SIX (01)(40), 1972–SIX–WST (10)(70)(80)

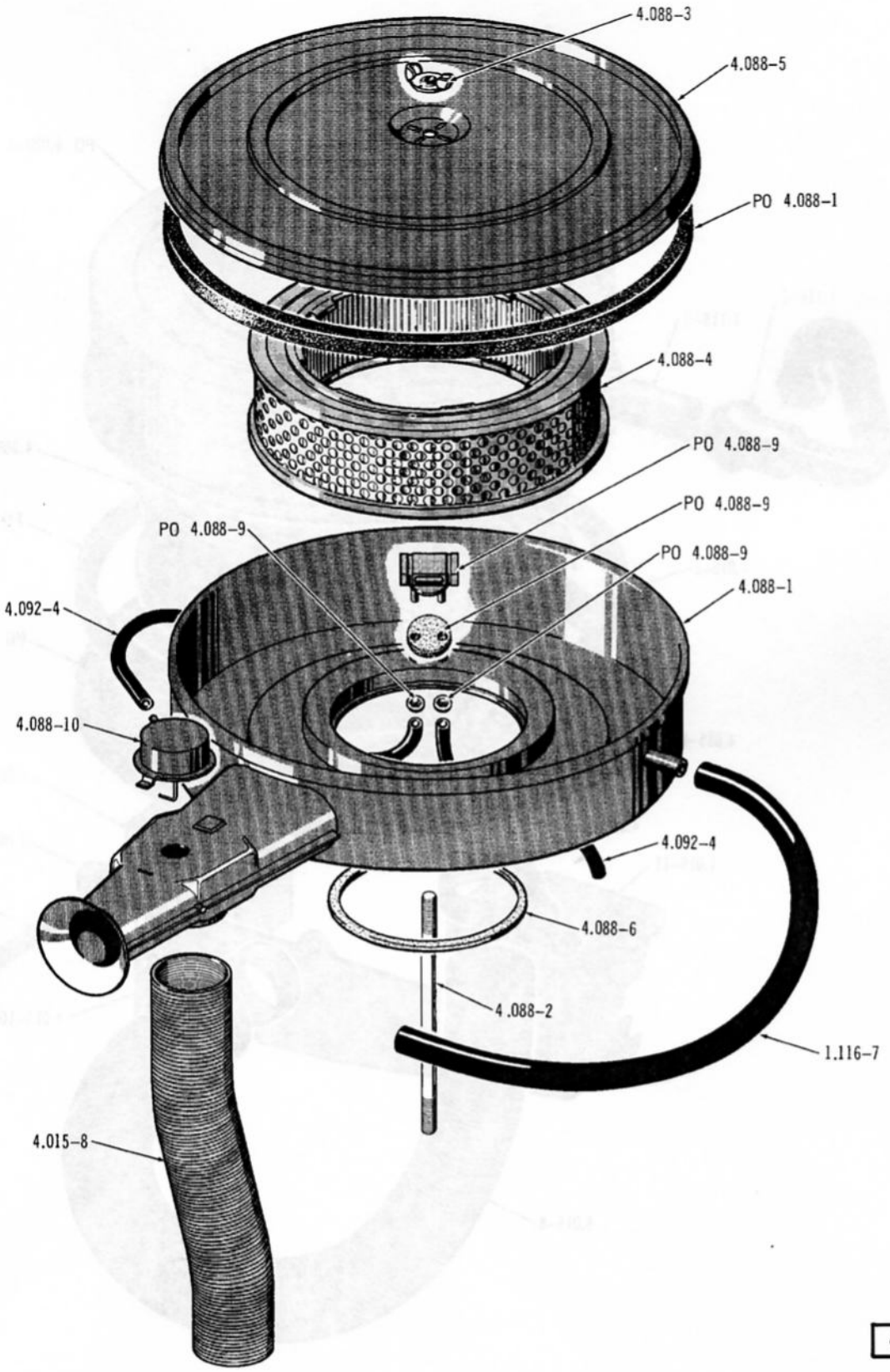

CARBURETOR AIR CLEANER . . . 1972 (V8-LCAI)

Printed in U.S.A.

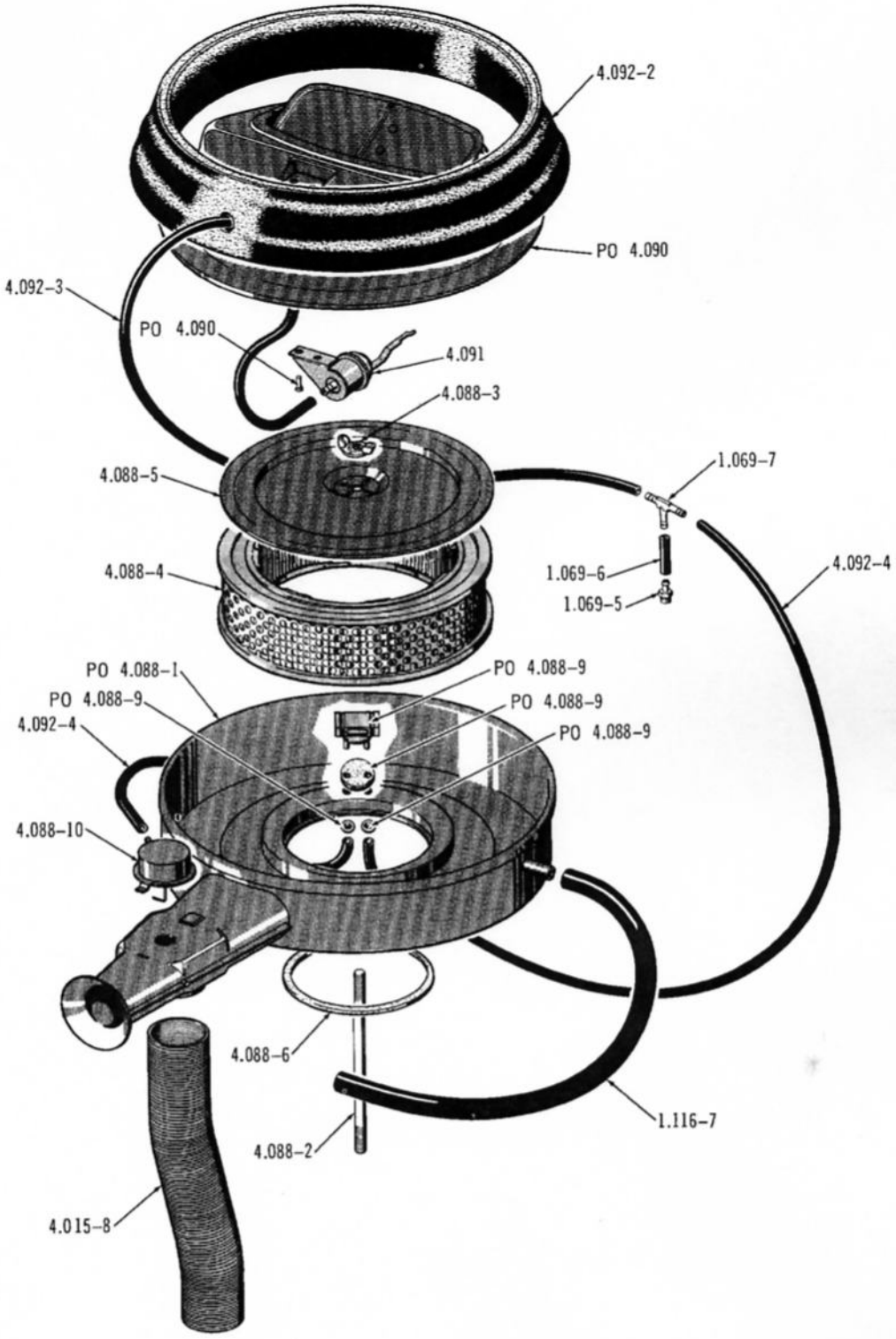

CARBURETOR AIR CLEANER . . . 1972 (V8-WCAI)

3159-A

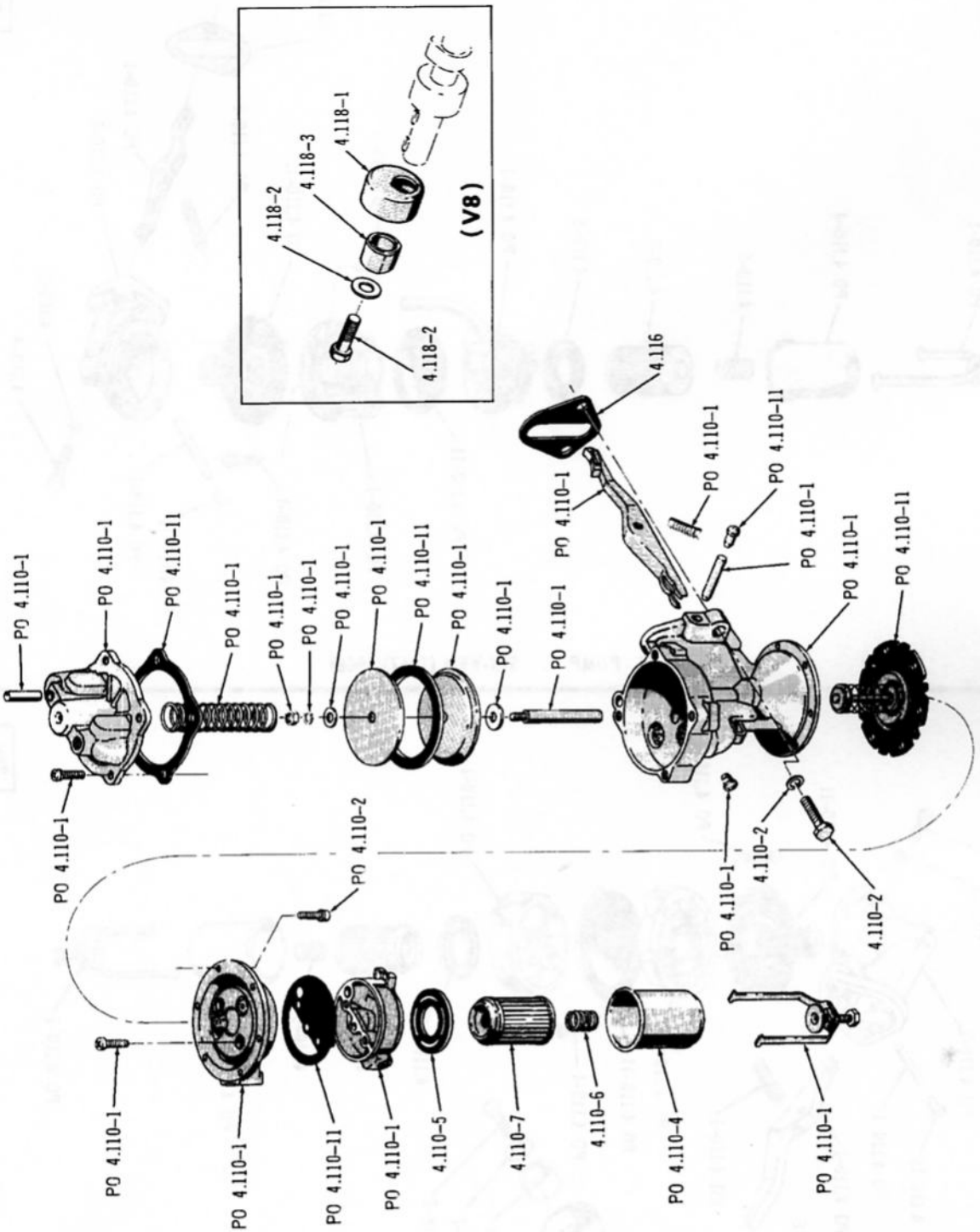

FUEL PUMP ... WVW (1967/68)

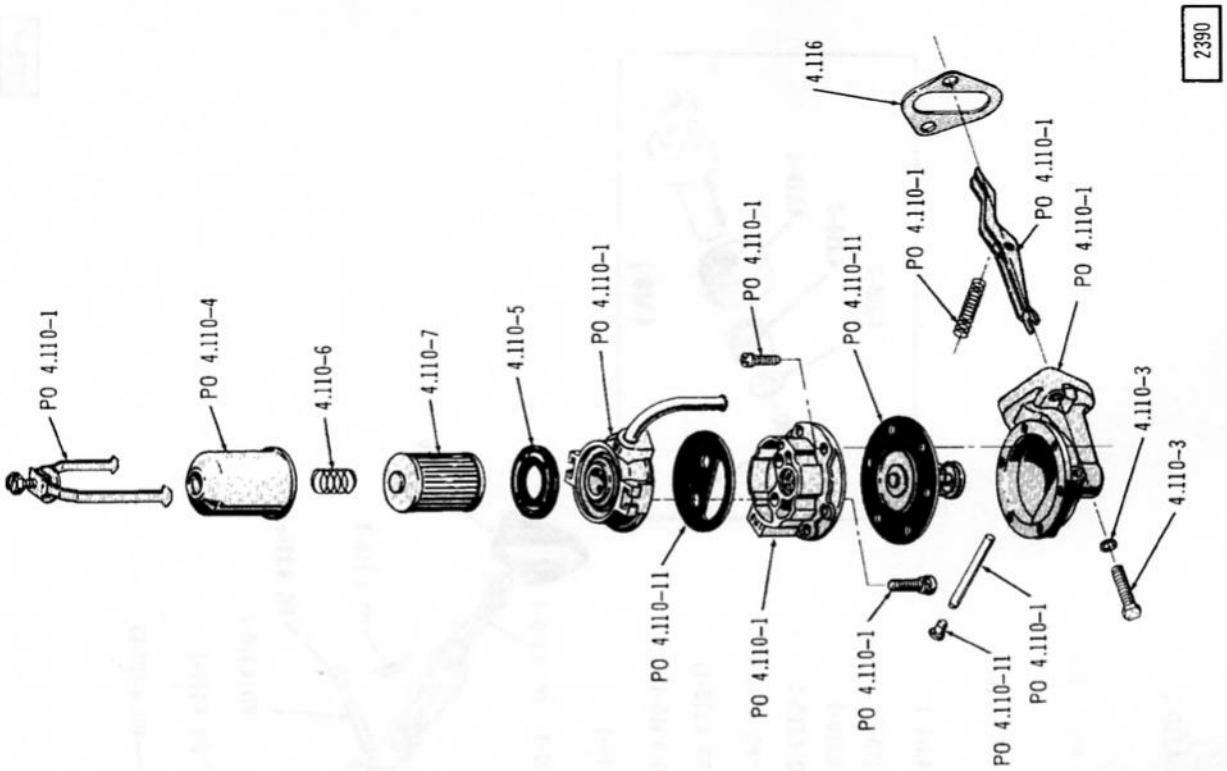

FUEL PUMP ... SIX-WEW (1967)(1968)

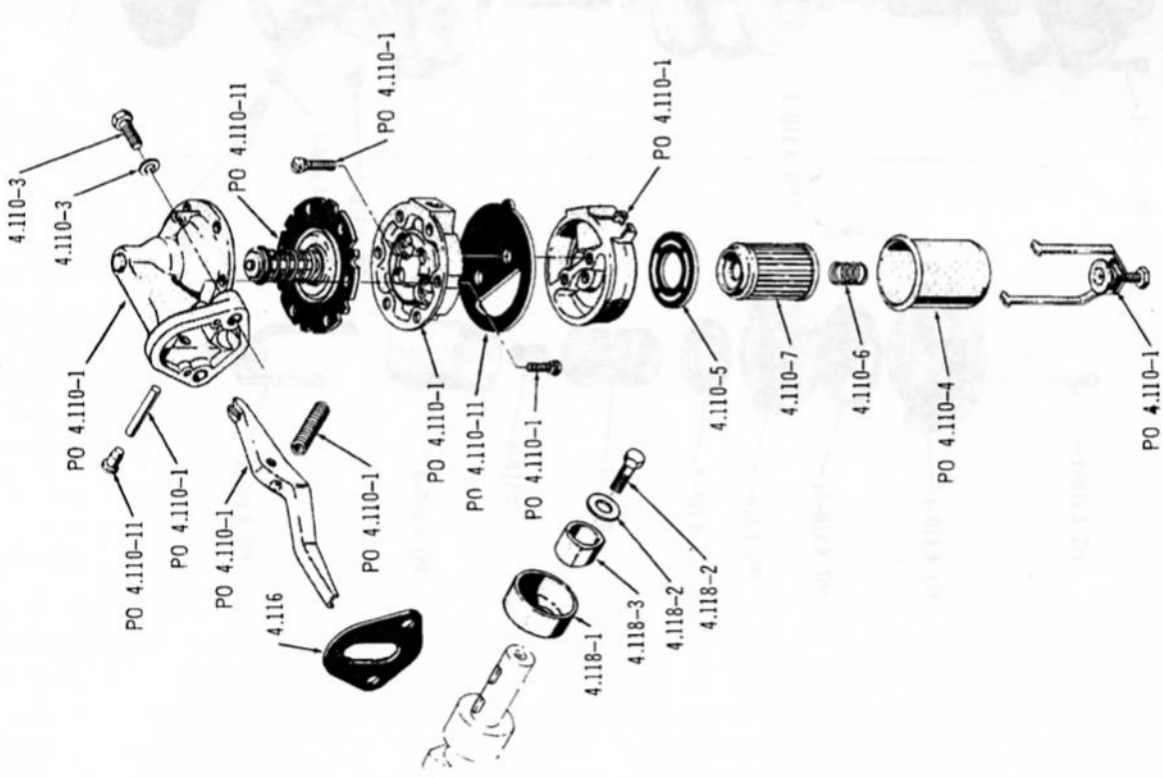

FUEL PUMP ... V8-WEW (1967)(1968)

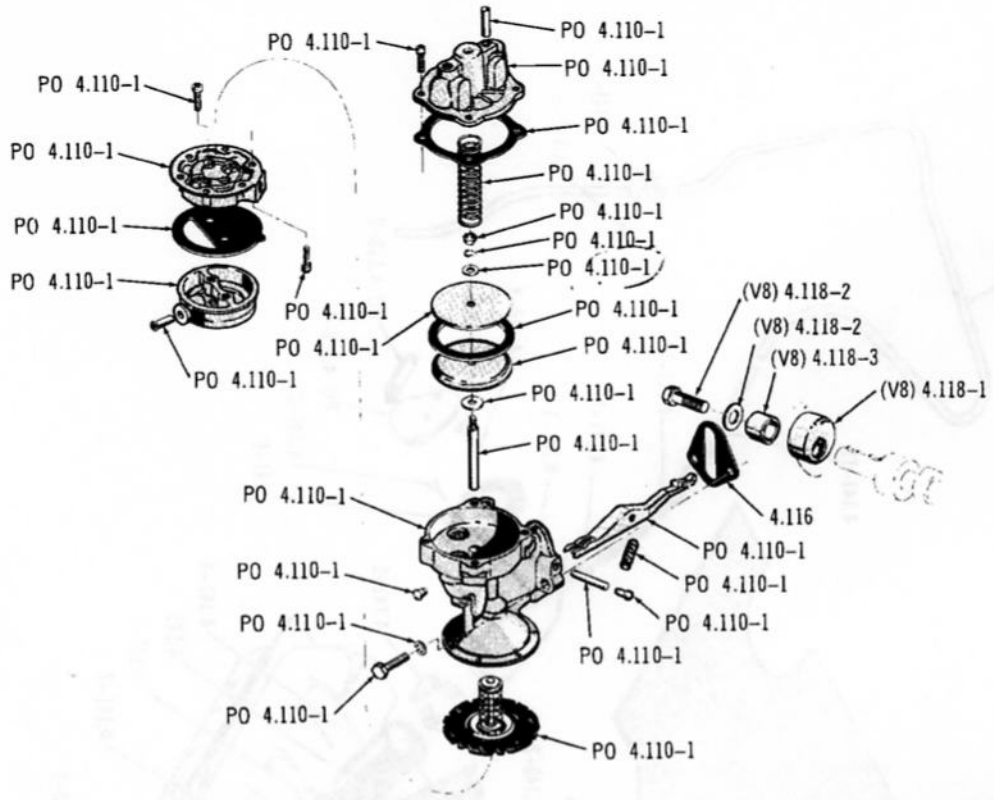

FUEL PUMP . . . WVW (1969/71)

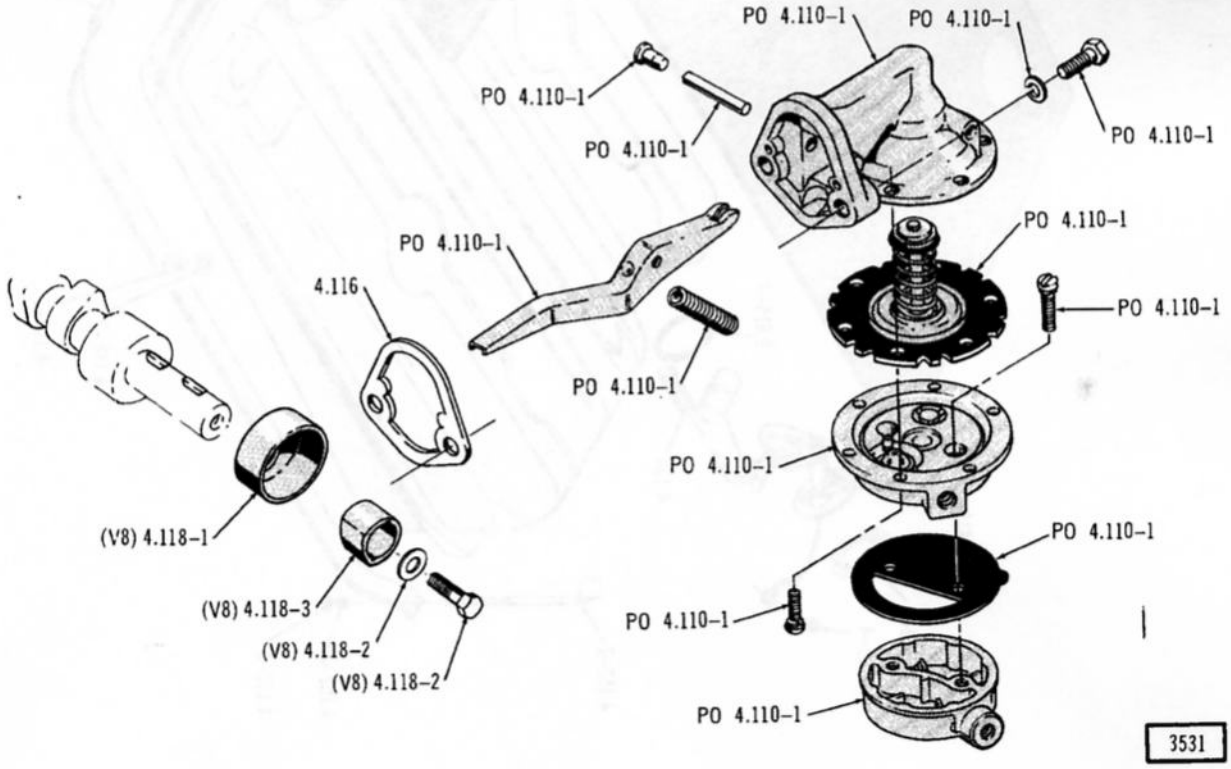

FUEL PUMP . . . WEW (1969)(1970-Type 1)

Printed in U.S.A.

2730

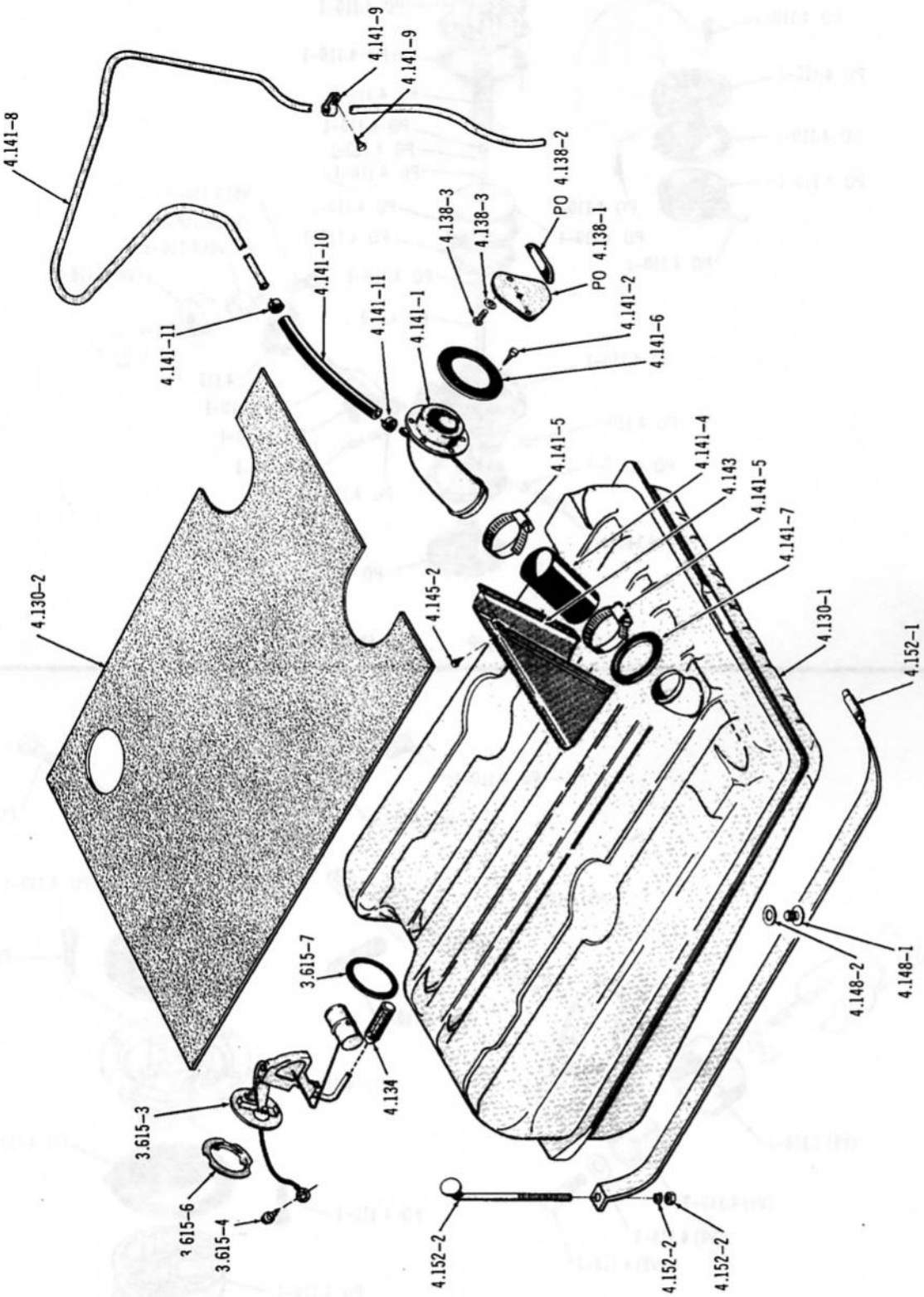

GASOLINE TANK ... 1967/69 (05)(06)(07)(09)

2734

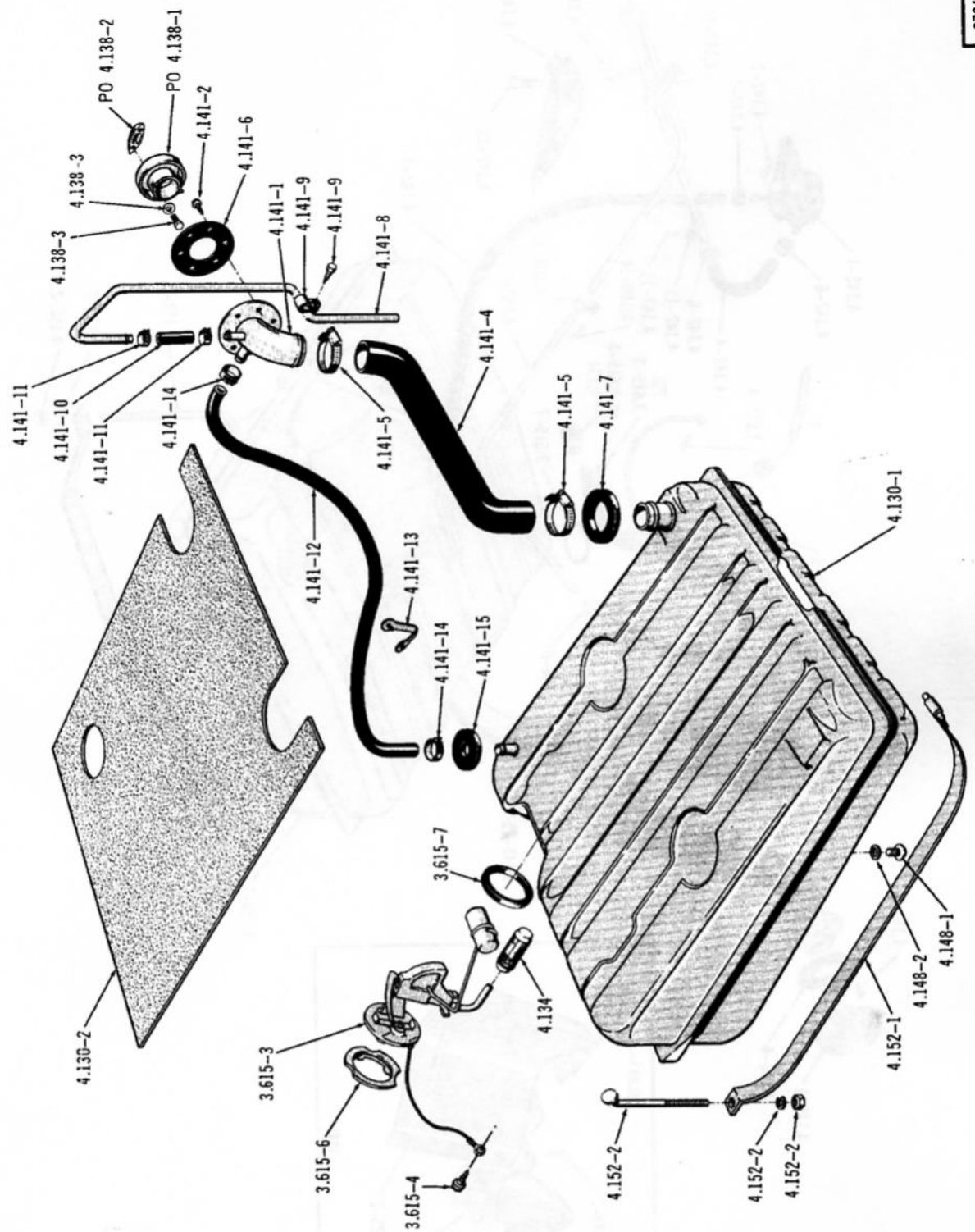

GASOLINE TANK ... 1967/69 (08)

4171

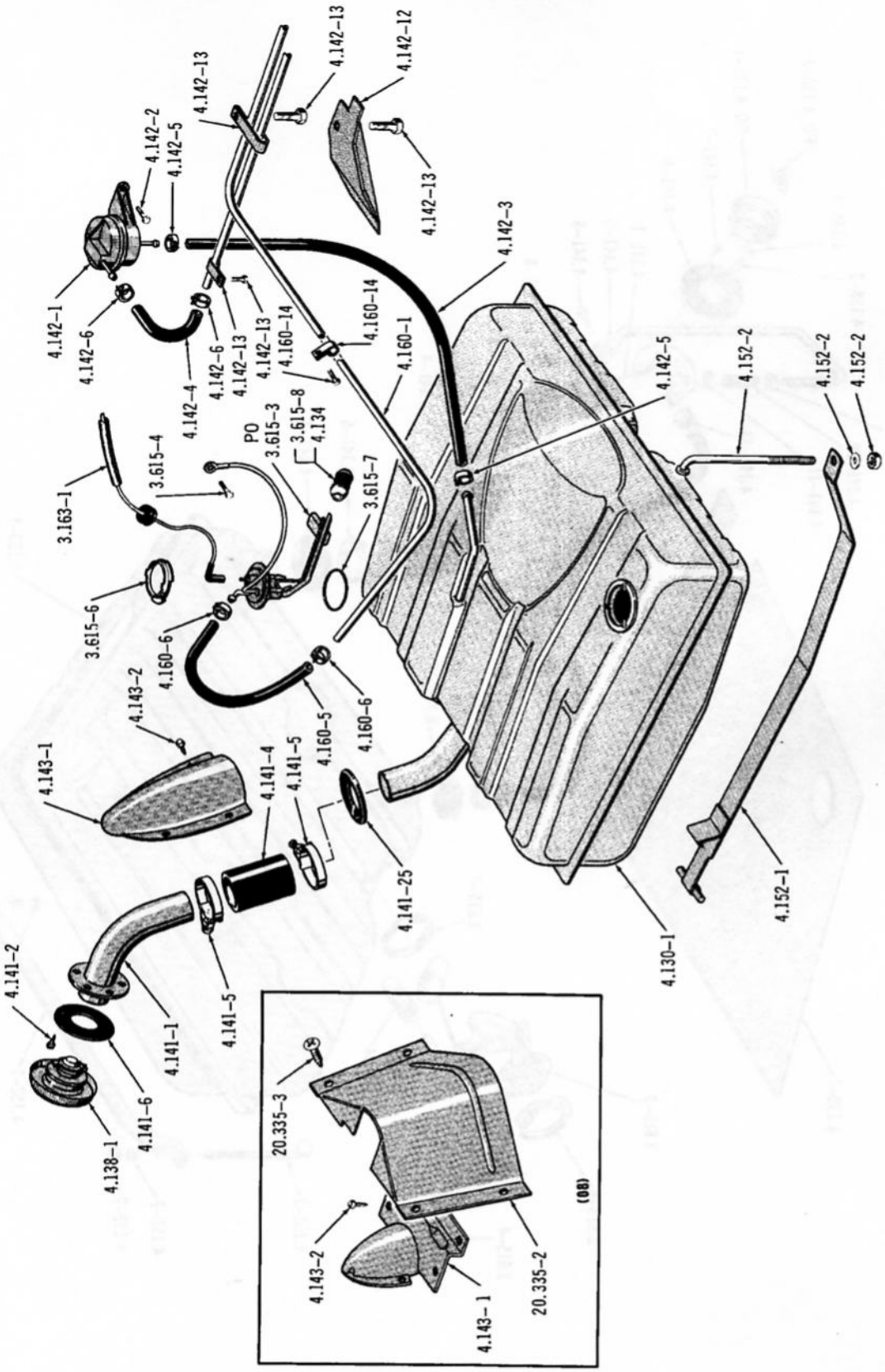

GASOLINE TANK . . . 1970/71 (01)

Printed in U.S.A.

4172

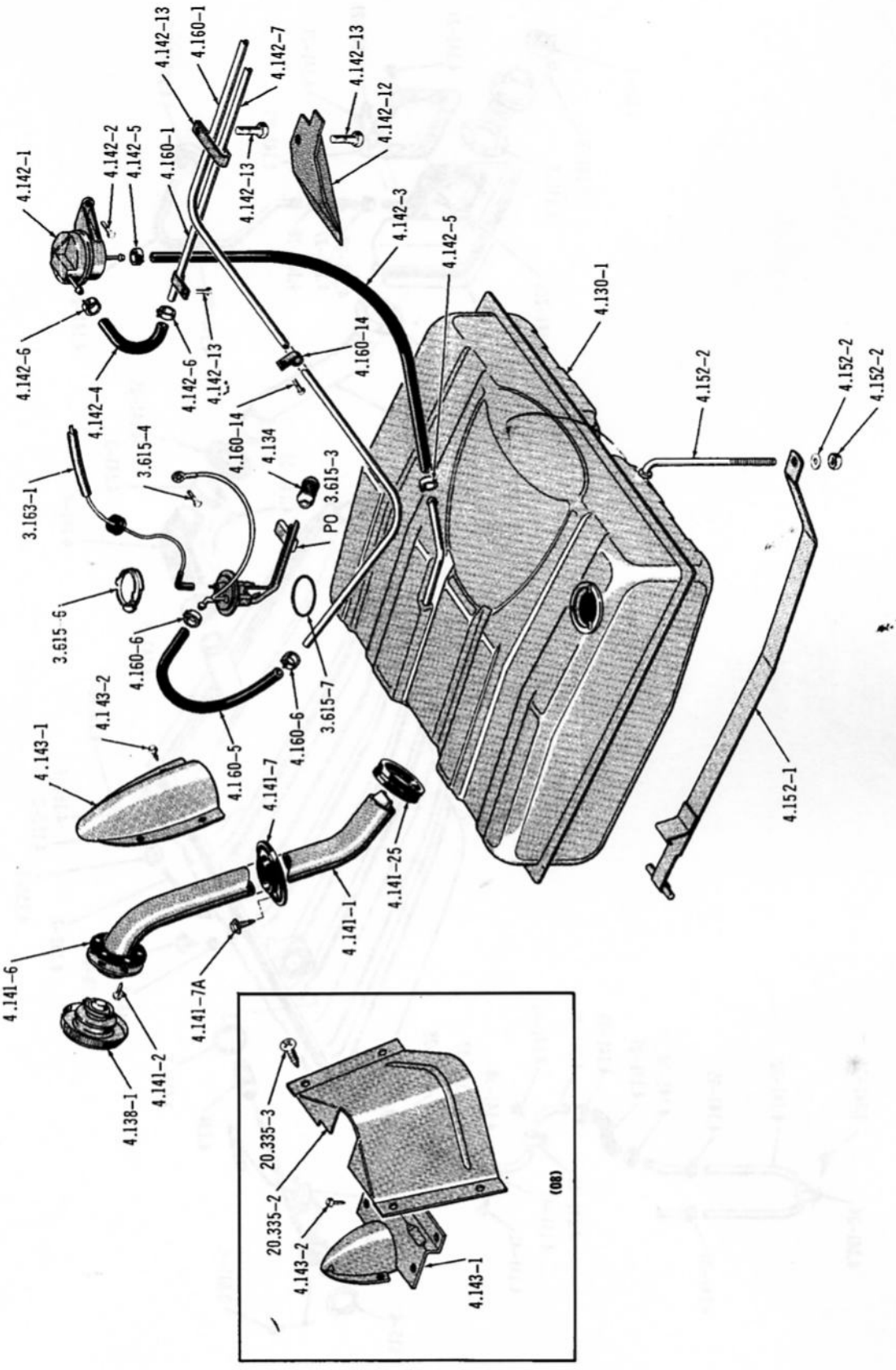

GASOLINE TANK . . . 1972 (01)

Printed in U.S.A.

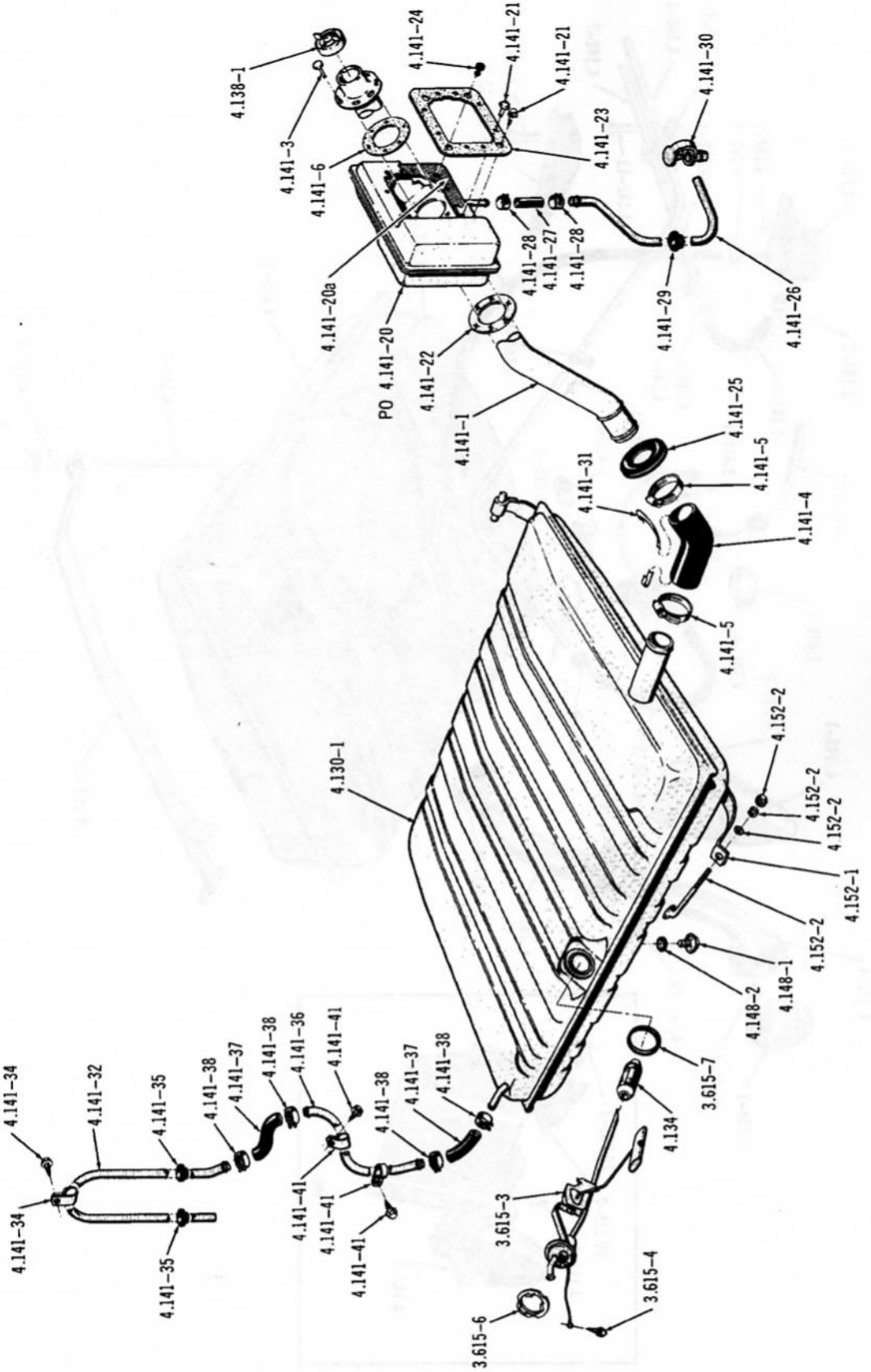

GASOLINE TANK ... 1967/70-LCFE (15)(16)(19)(59)(85)(86)(89)

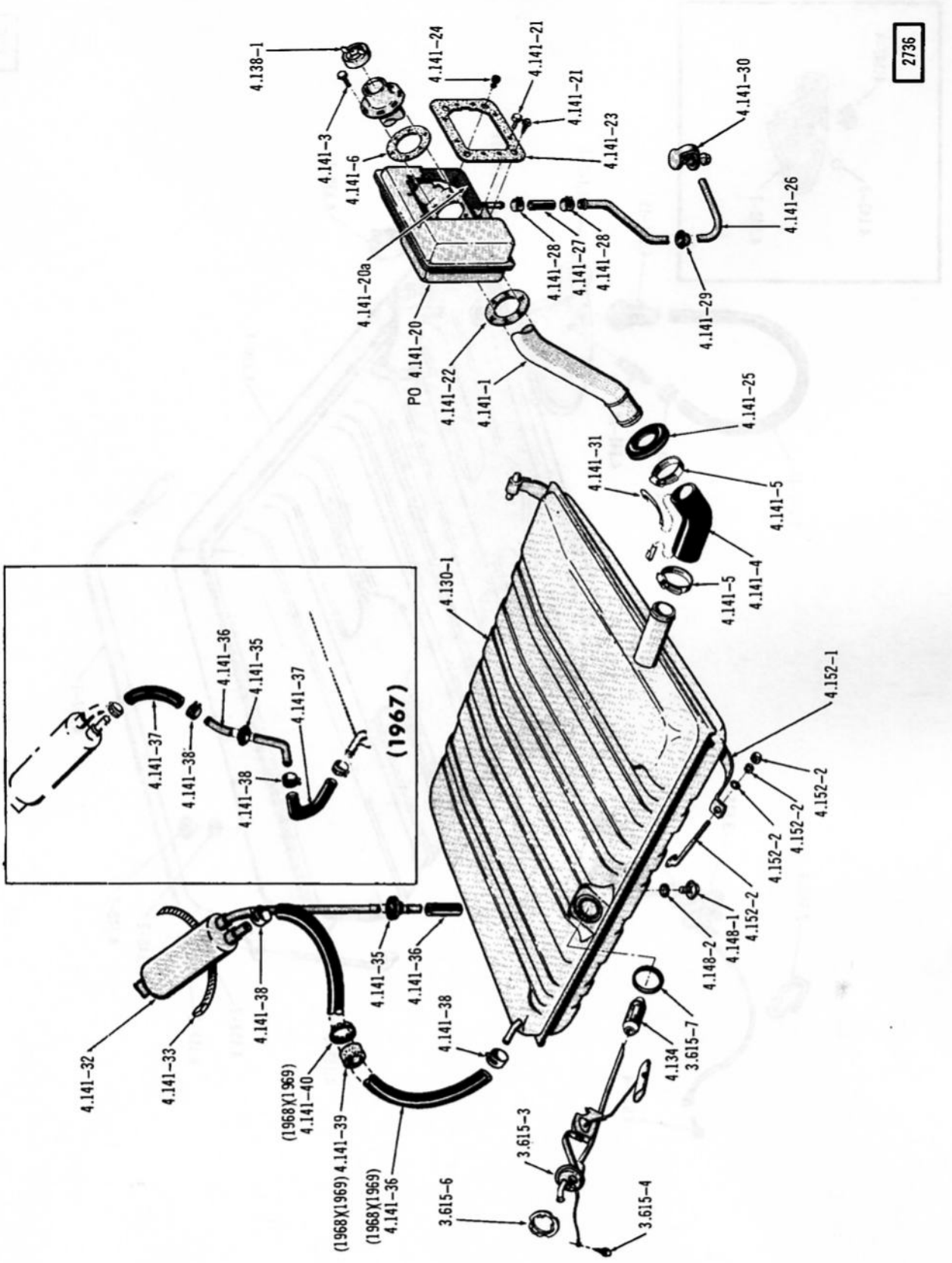

GASOLINE TANK ... 1967/69 (17)(18)(87)(88)

3206

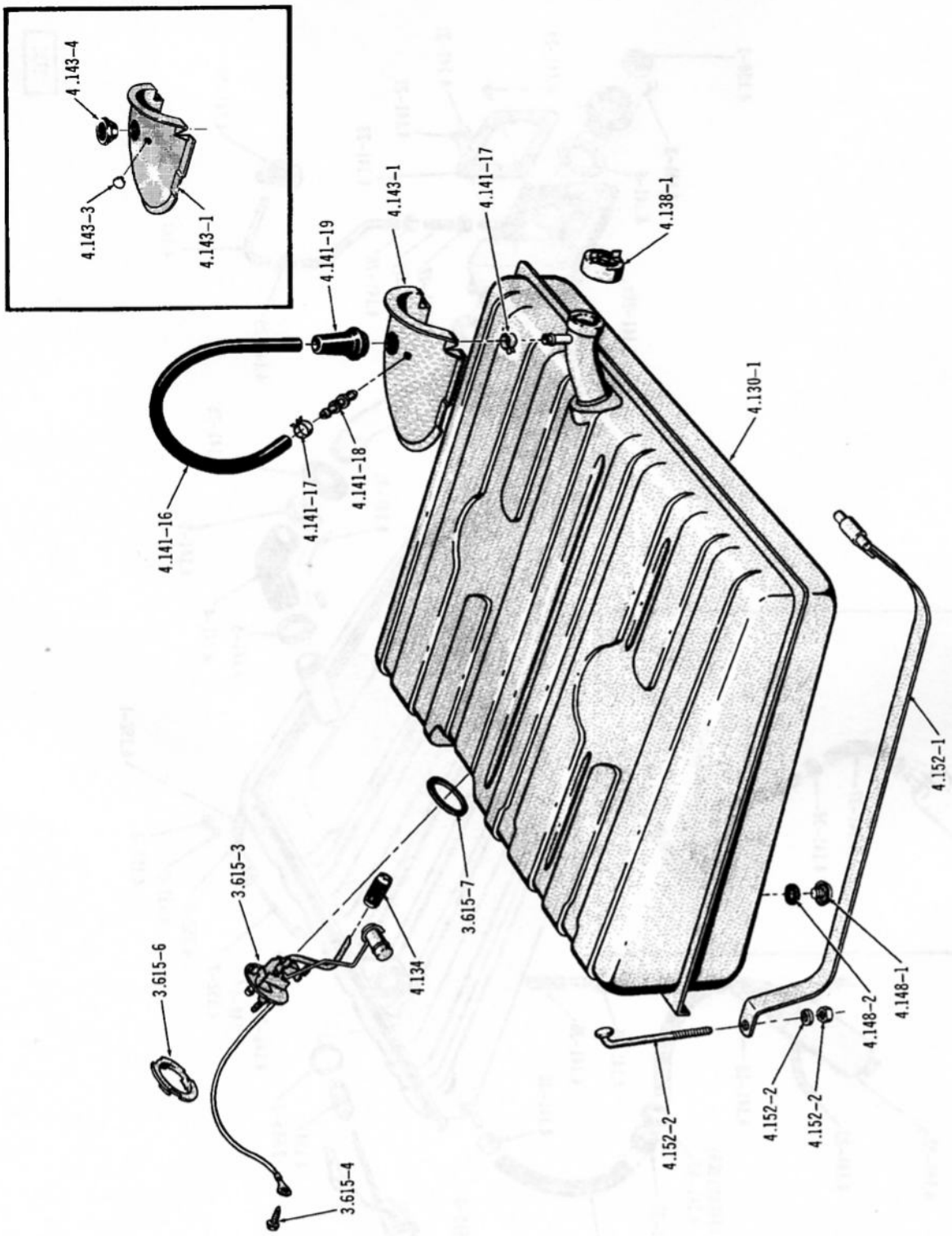

GASOLINE TANK ... 1968/70-LCFE (30)(70)

3925

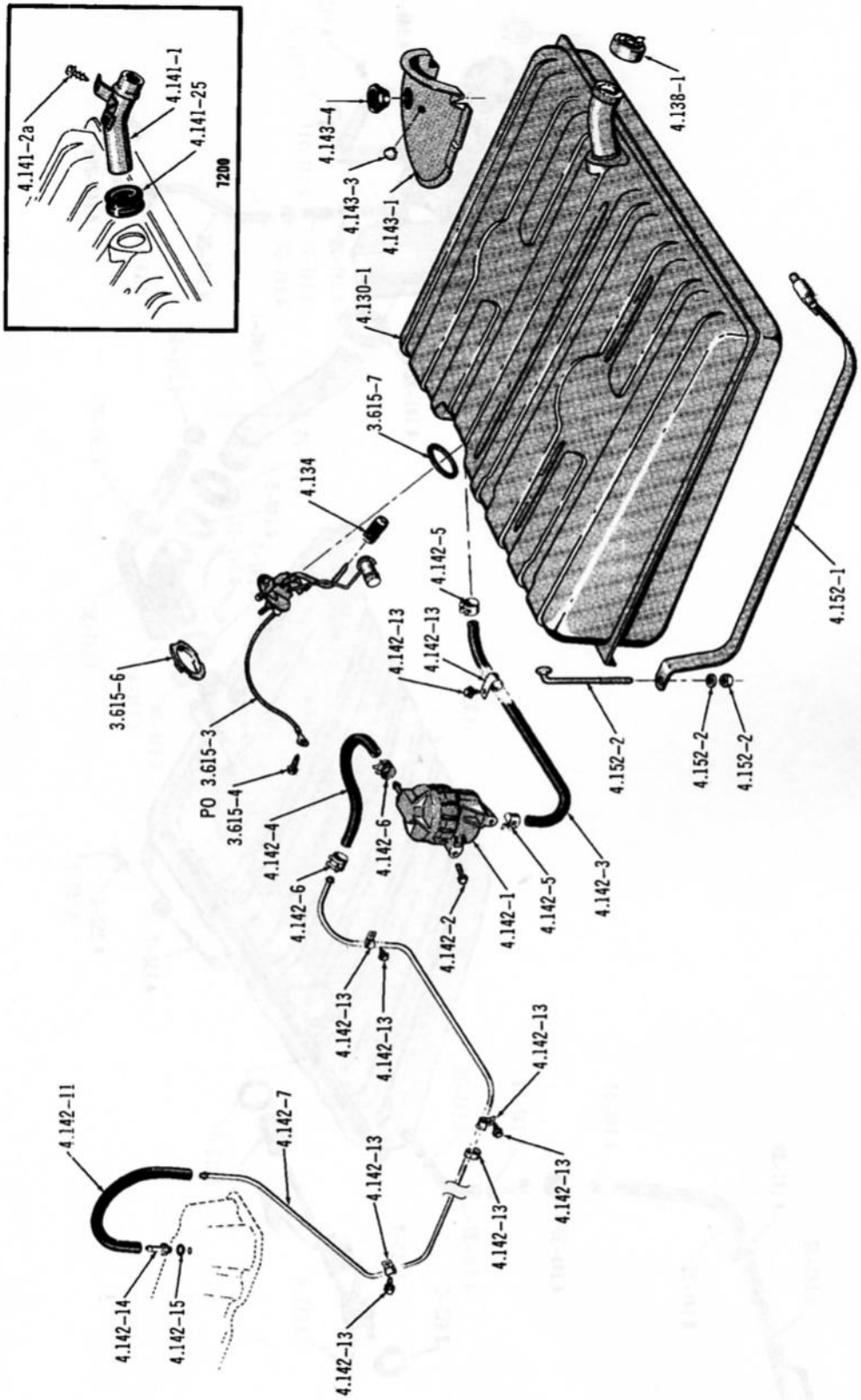

GASOLINE TANK ... 1970/ -WCFE (30)(70)

3923

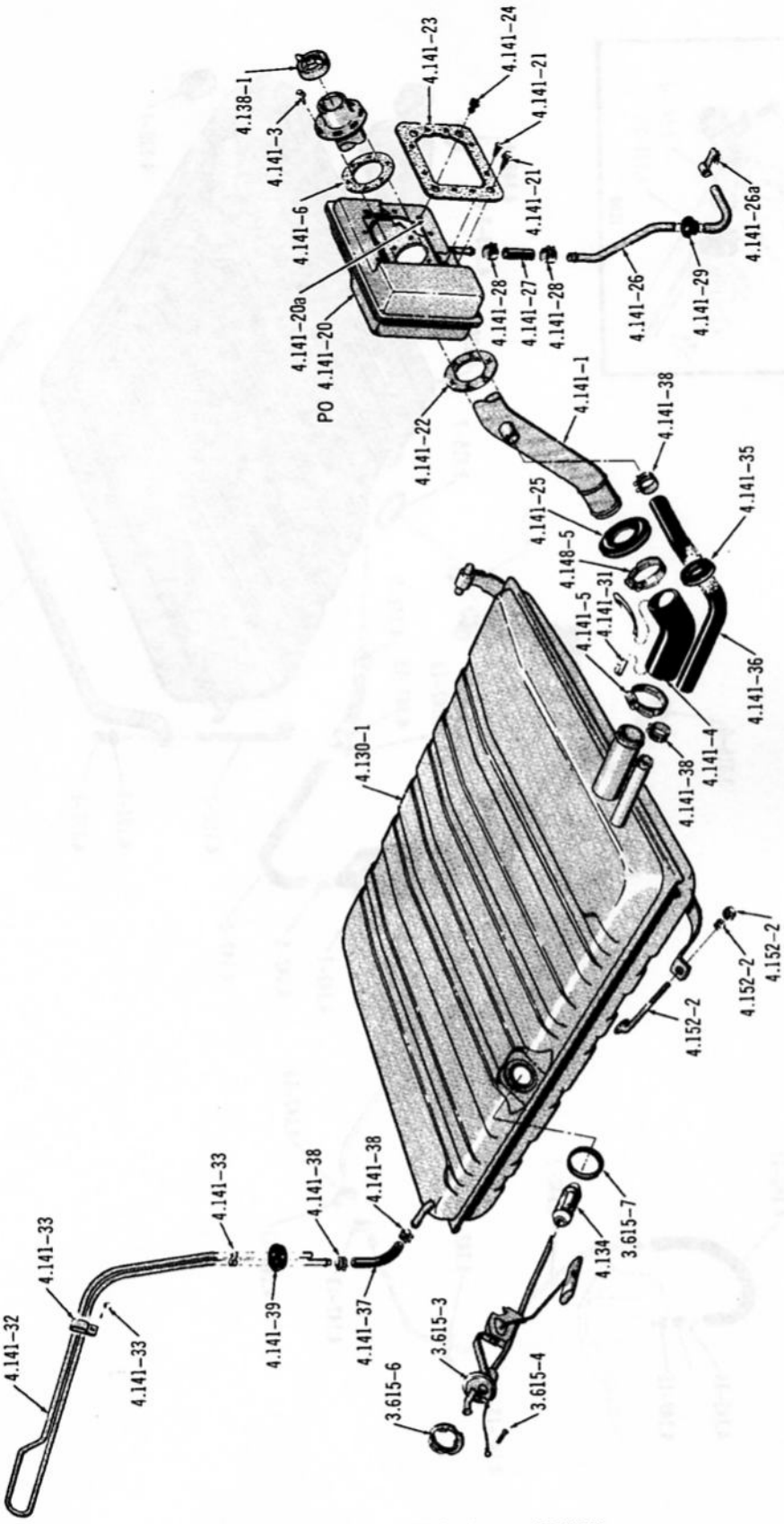

GASOLINE TANK ... 1970 - LCFE (18)(88)

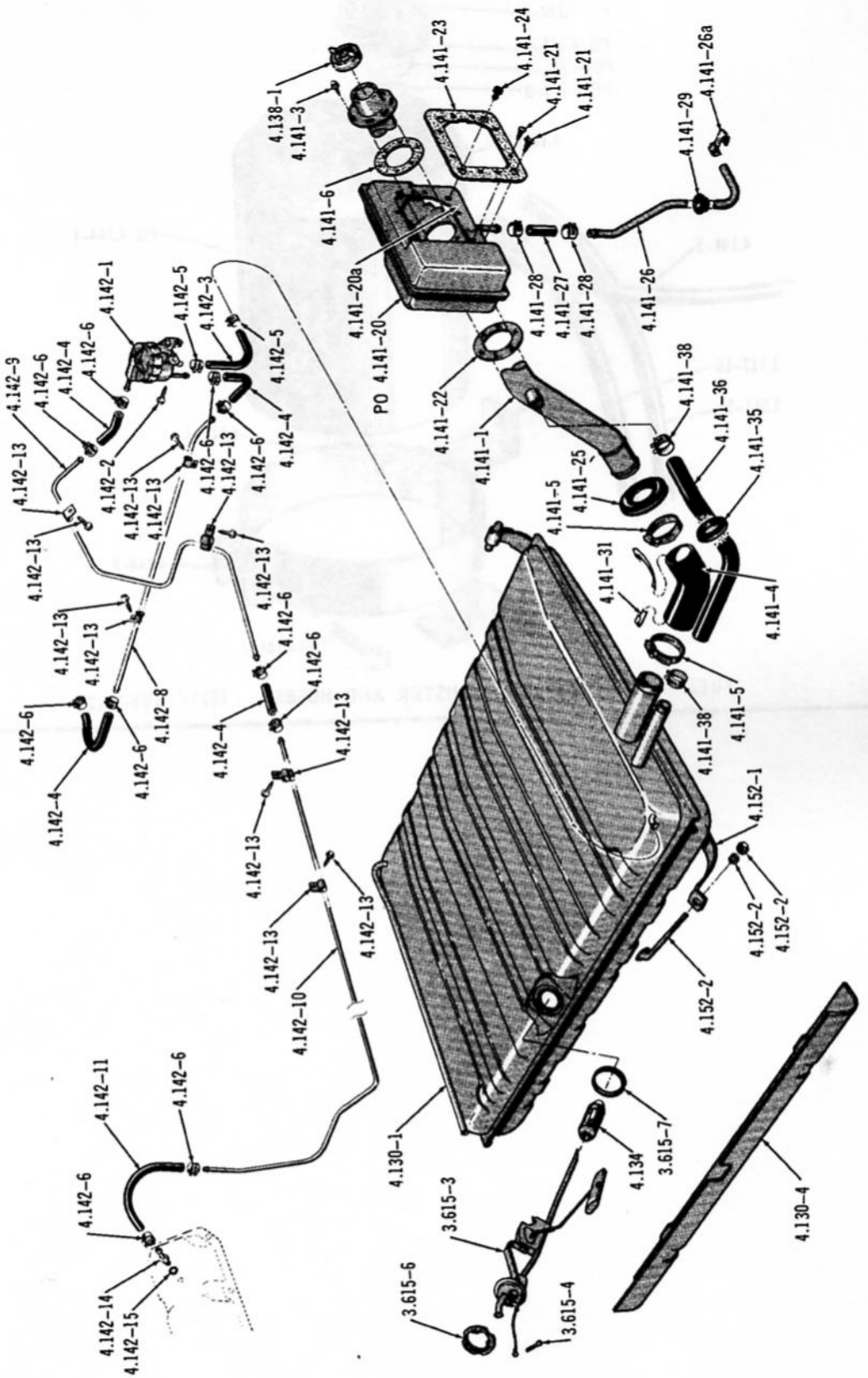

GASOLINE TANK ... 1970/ -WCFE (10)(80)

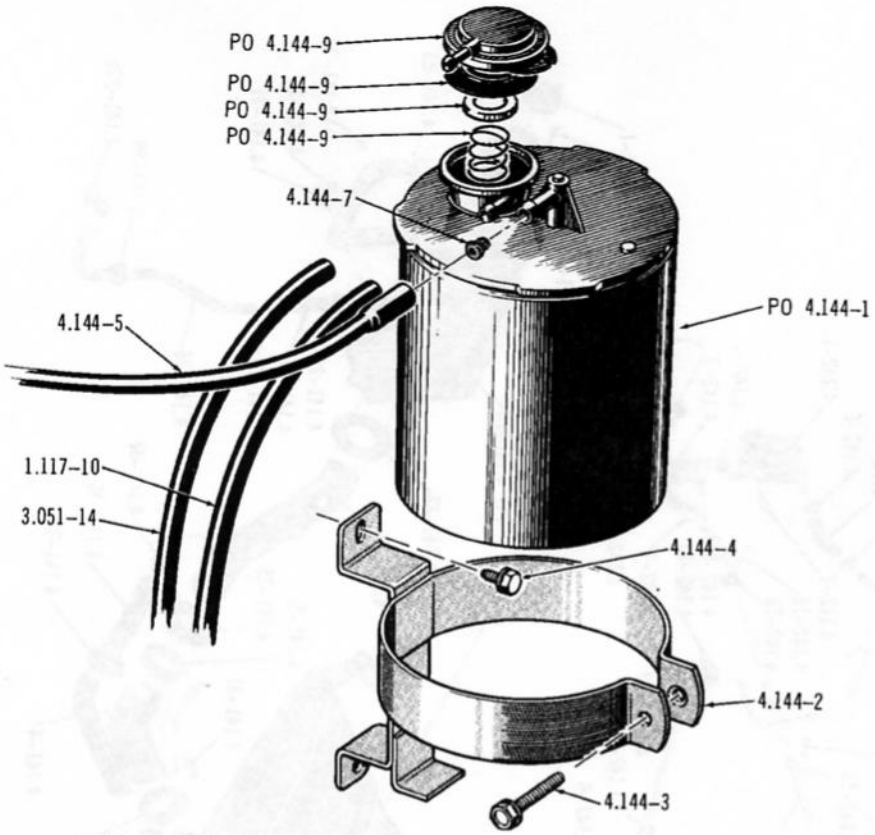

FUEL VAPOR STORAGE CANISTER AND HOSES . . . 1971/ (V8-WAT)

4085

Printed in U.S.A.

3126-A

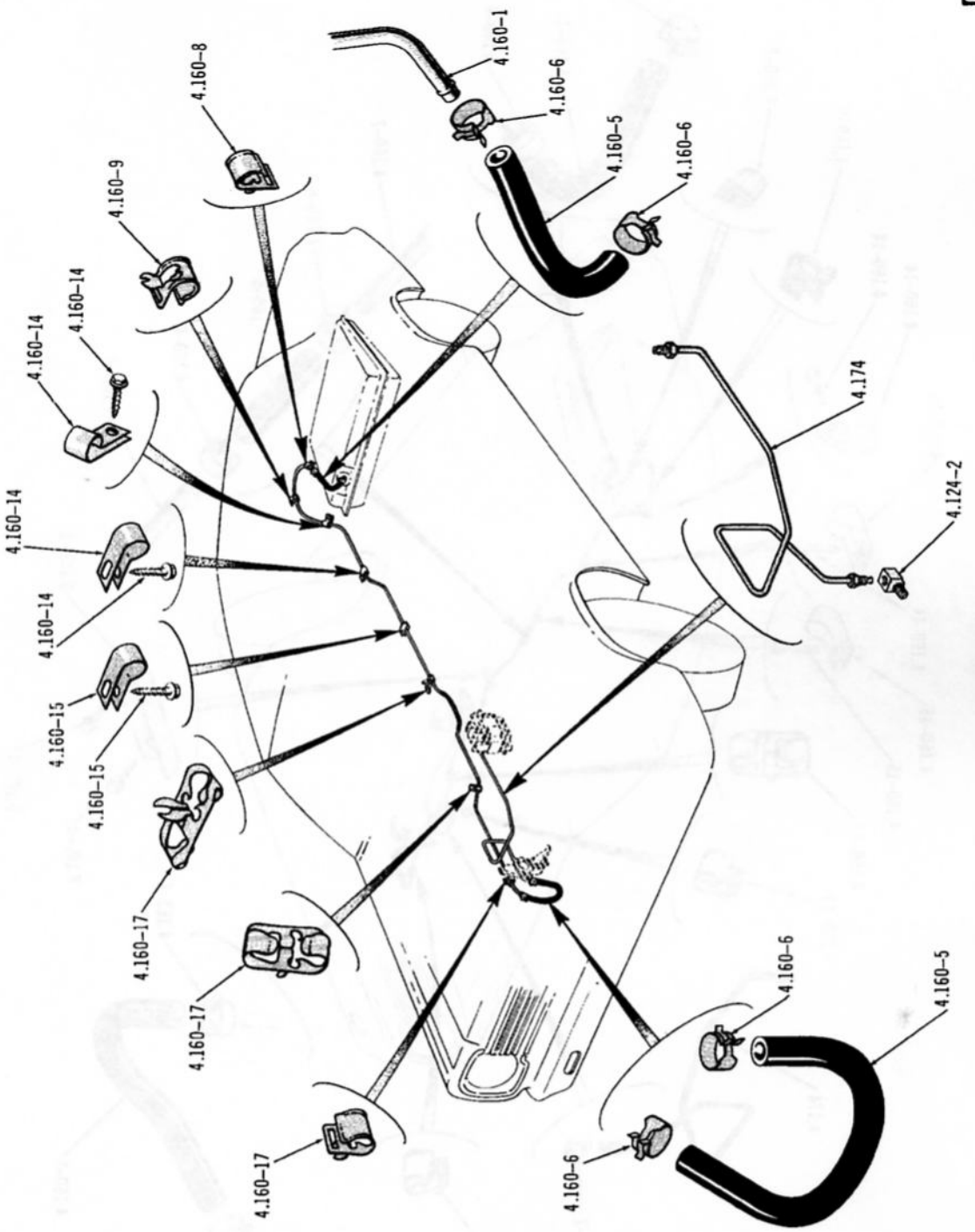

GASOLINE TANK TO CARBURETOR FUEL LINES ... 1967/69-LHD-SIX (05)(06)(08)(09)

3123

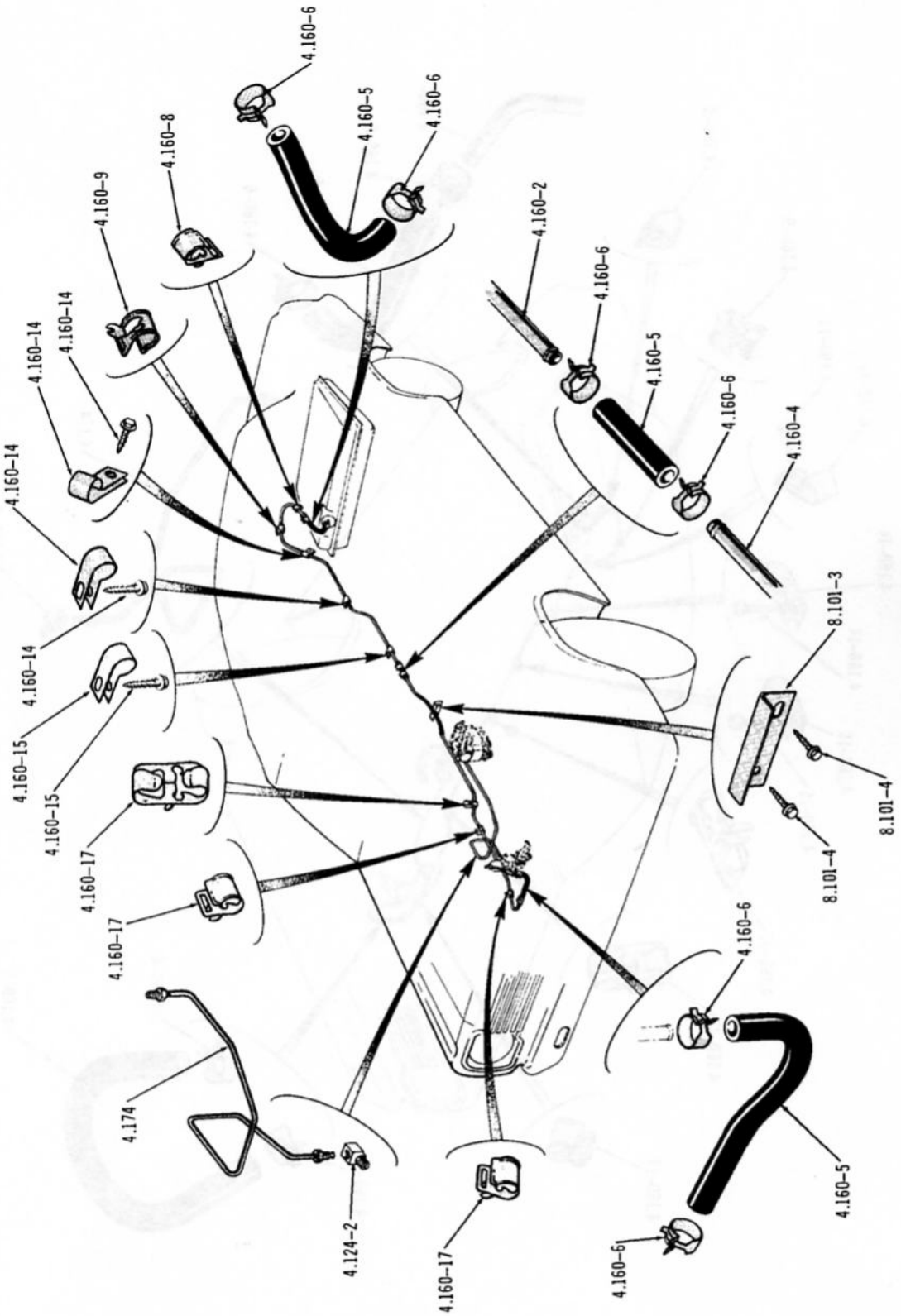

GASOLINE TANK TO CARBURETOR FUEL LINES ... LHD-SIX (07)

3128-A

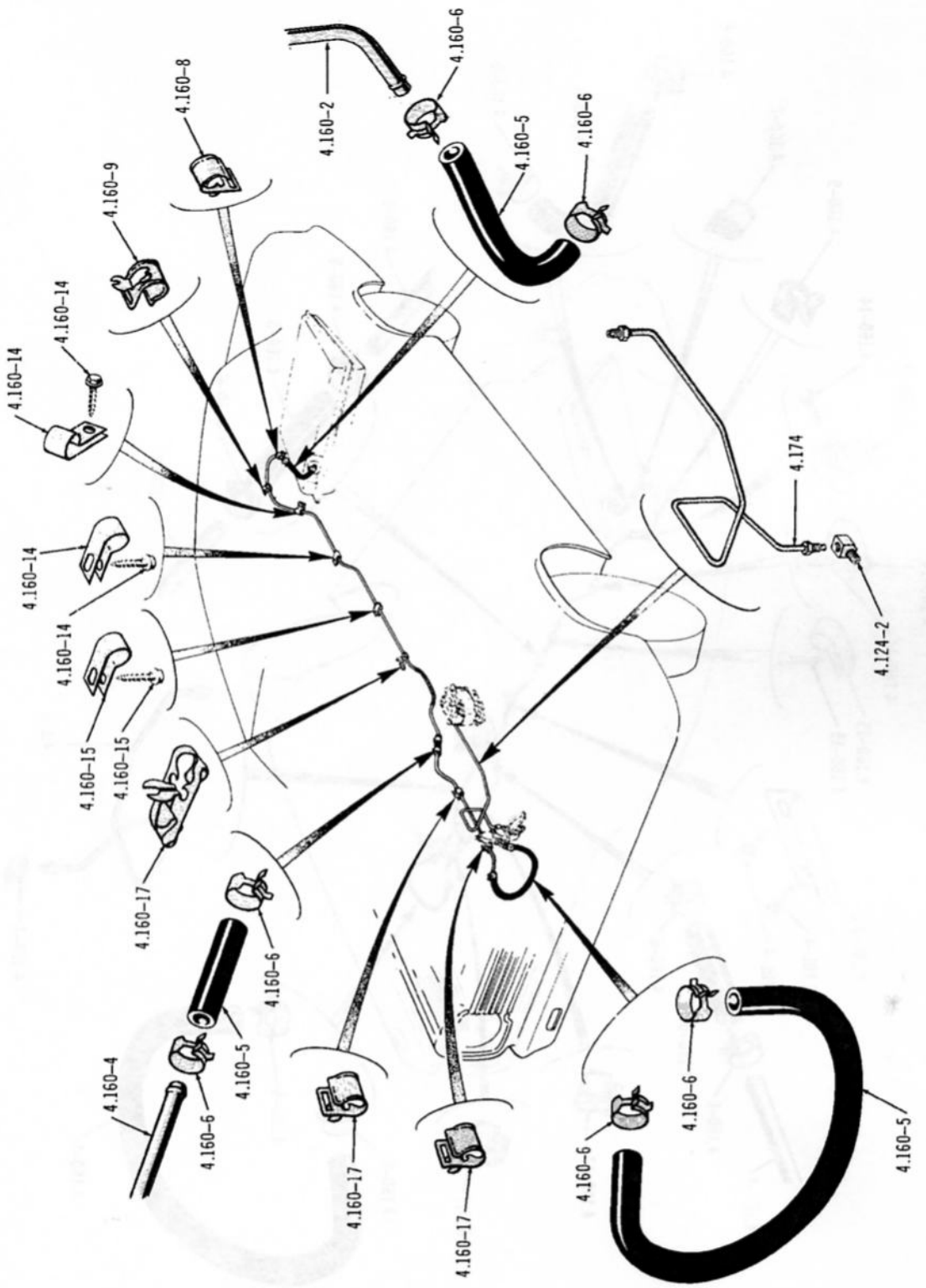

GASOLINE TANK TO CARBURETOR FUEL LINES ... 1967/69-RHD-SIX (05)(06)(08)(09)

3129

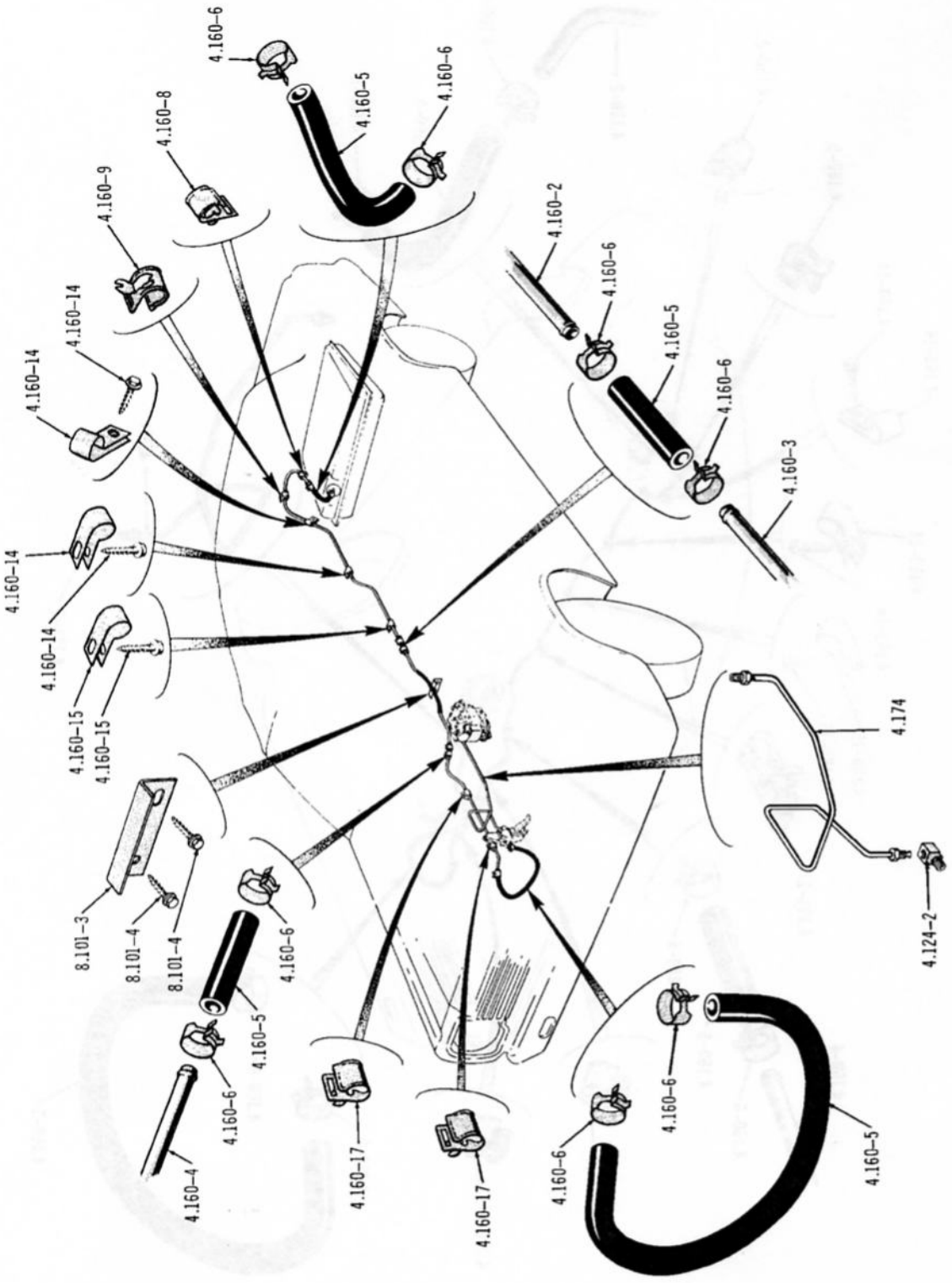

GASOLINE TANK TO CARBURETOR FUEL LINES ... RHD-SIX (07)

3120

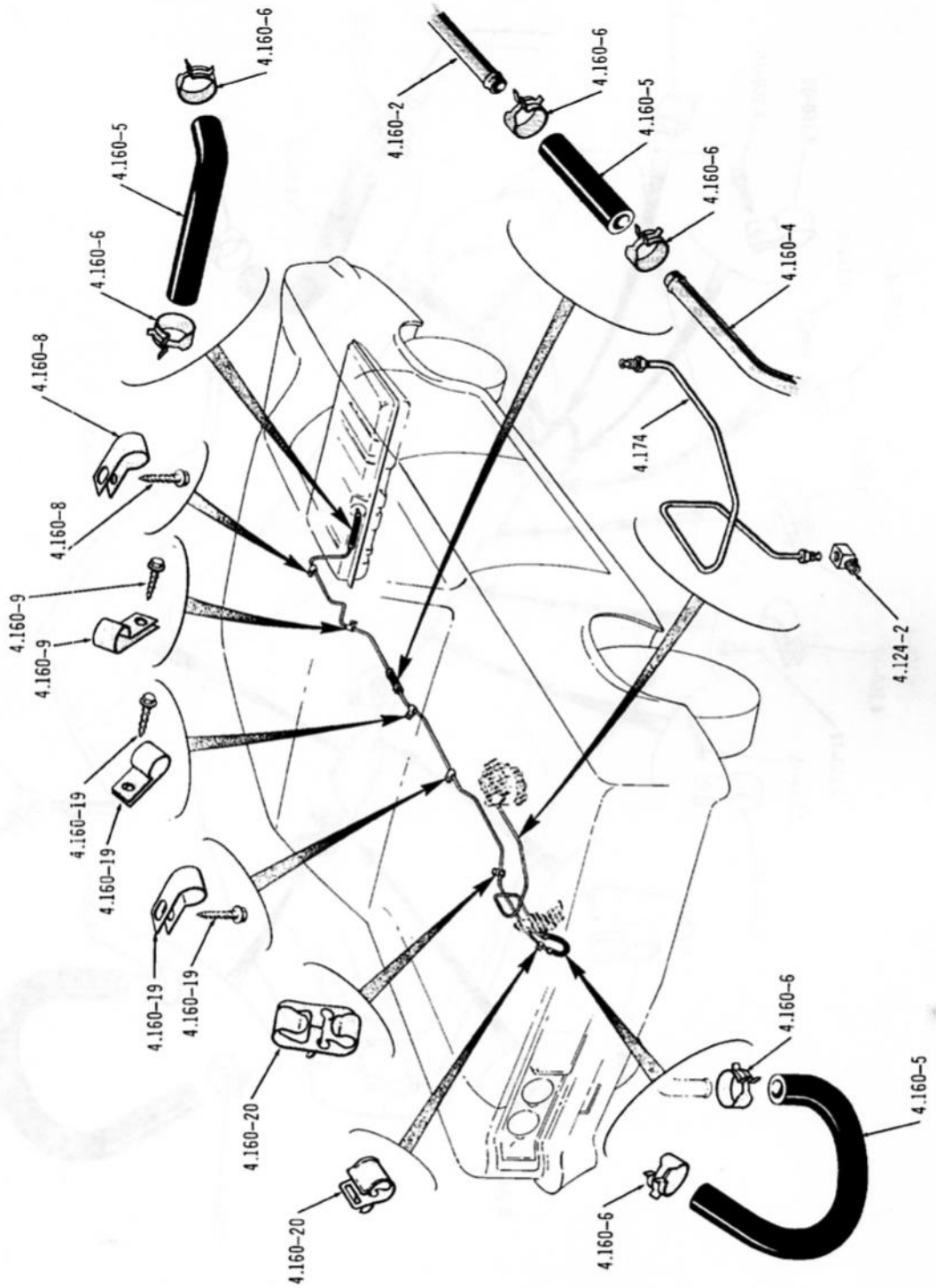

GASOLINE TANK TO CARBURETOR FUEL LINES ... SIX (10)(50)(80)

3385

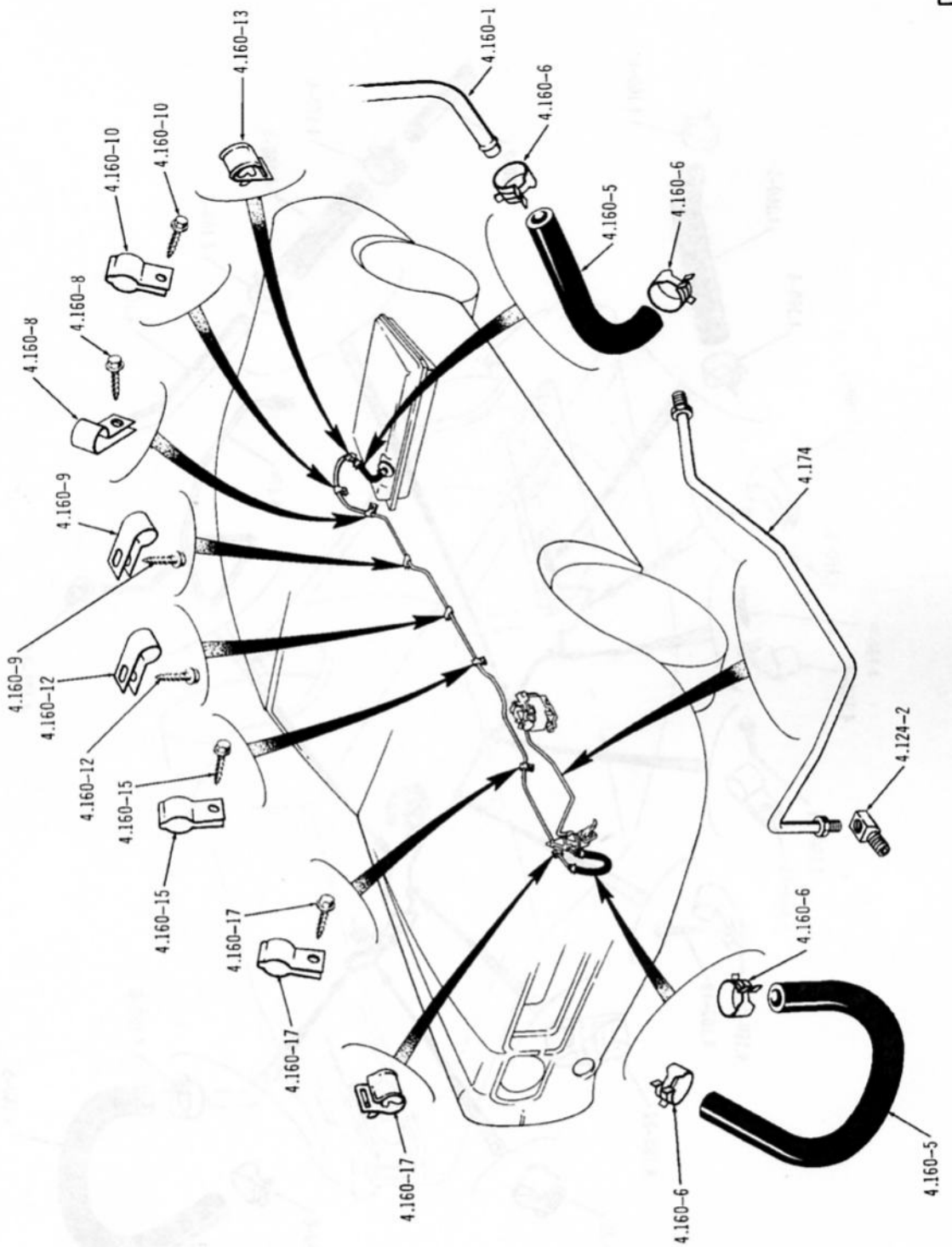

GASOLINE TANK TO CARBURETOR FUEL LINES ... SIX (70)

3121

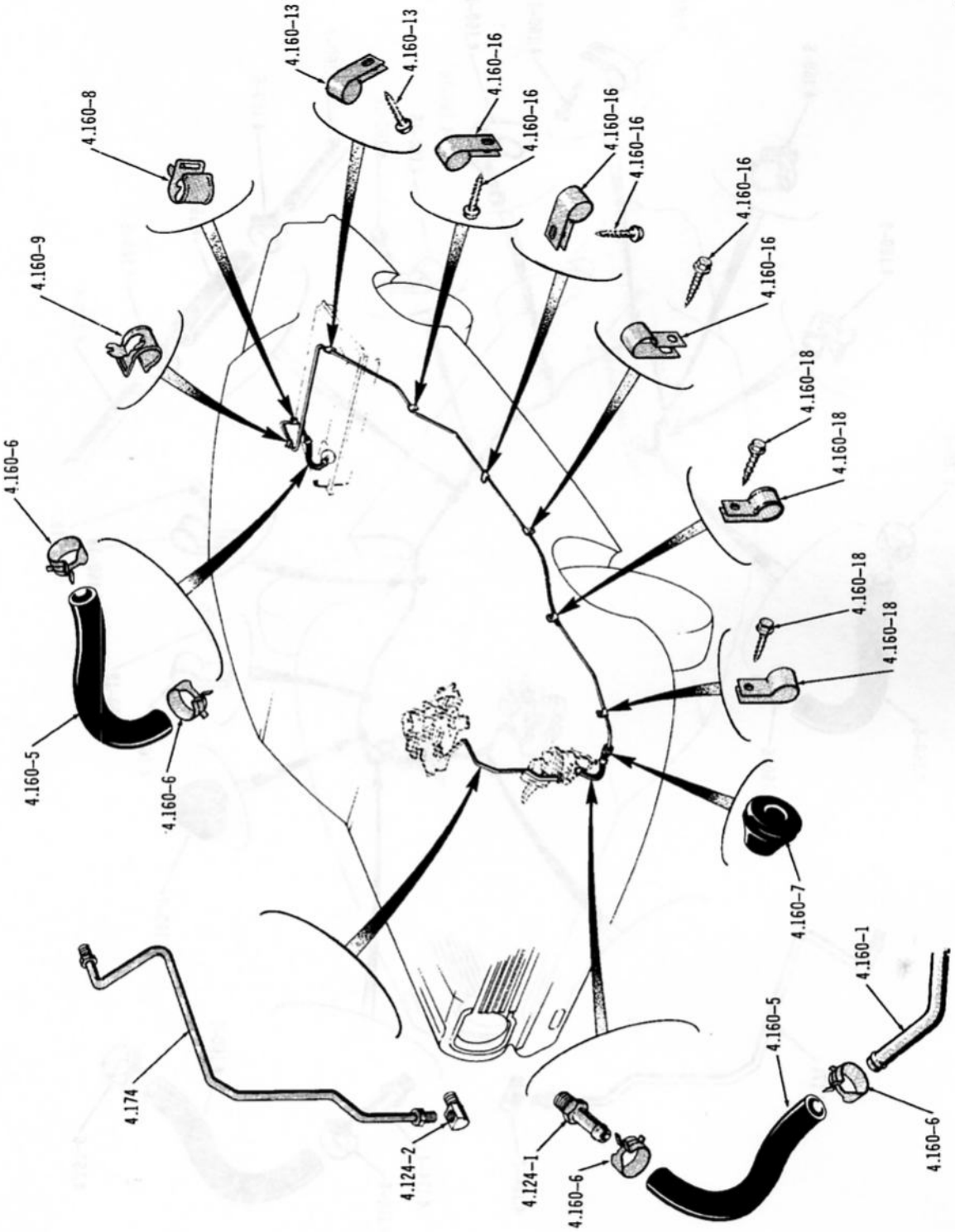

GASOLINE TANK TO CARBURETOR FUEL LINES ... 1967/69-V8 (05)(06)(08)(09)

Printed in U.S.A.

3127

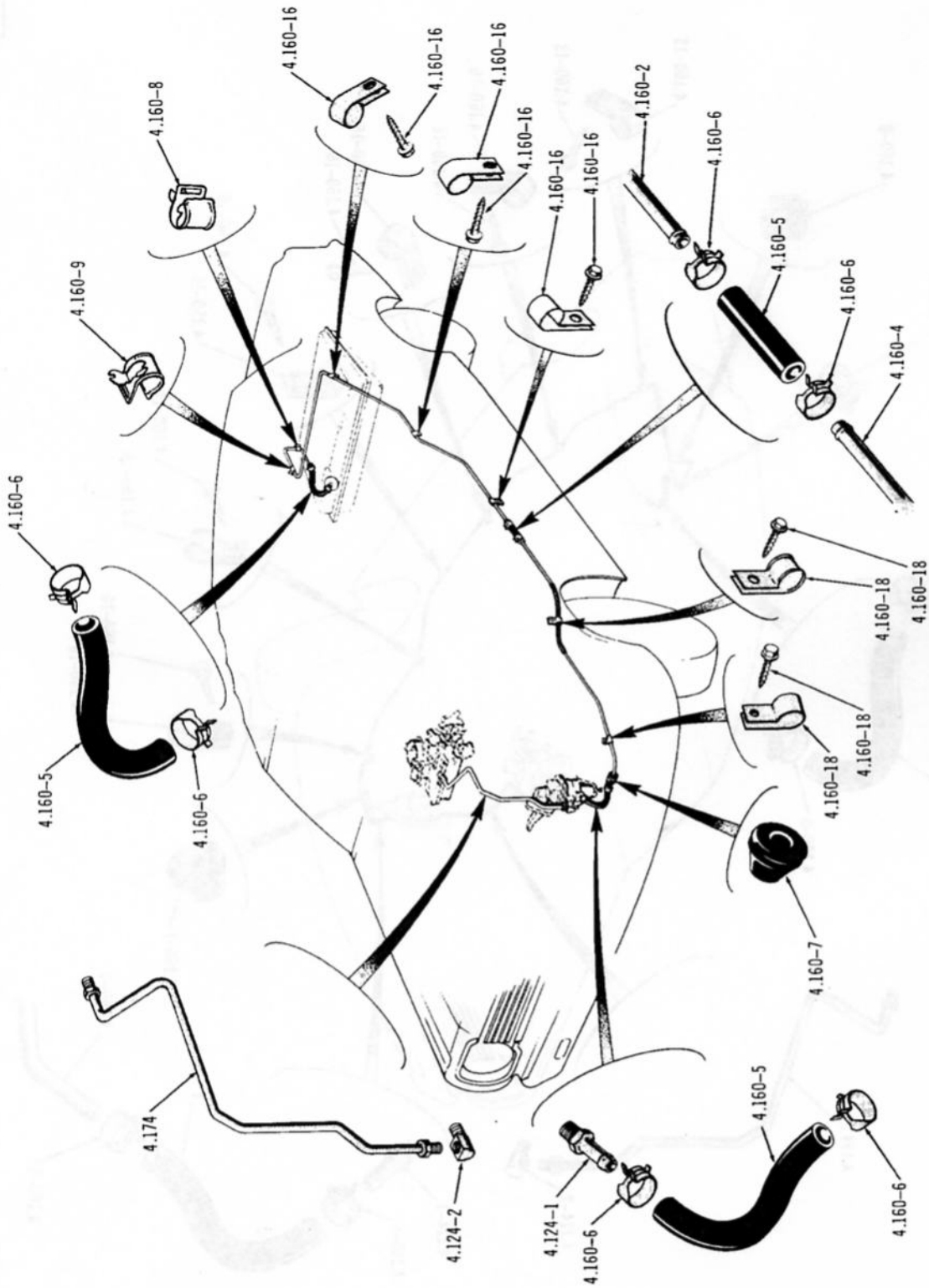

GASOLINE TANK TO CARBURETOR FUEL LINES ... V8 (07)

3124-A

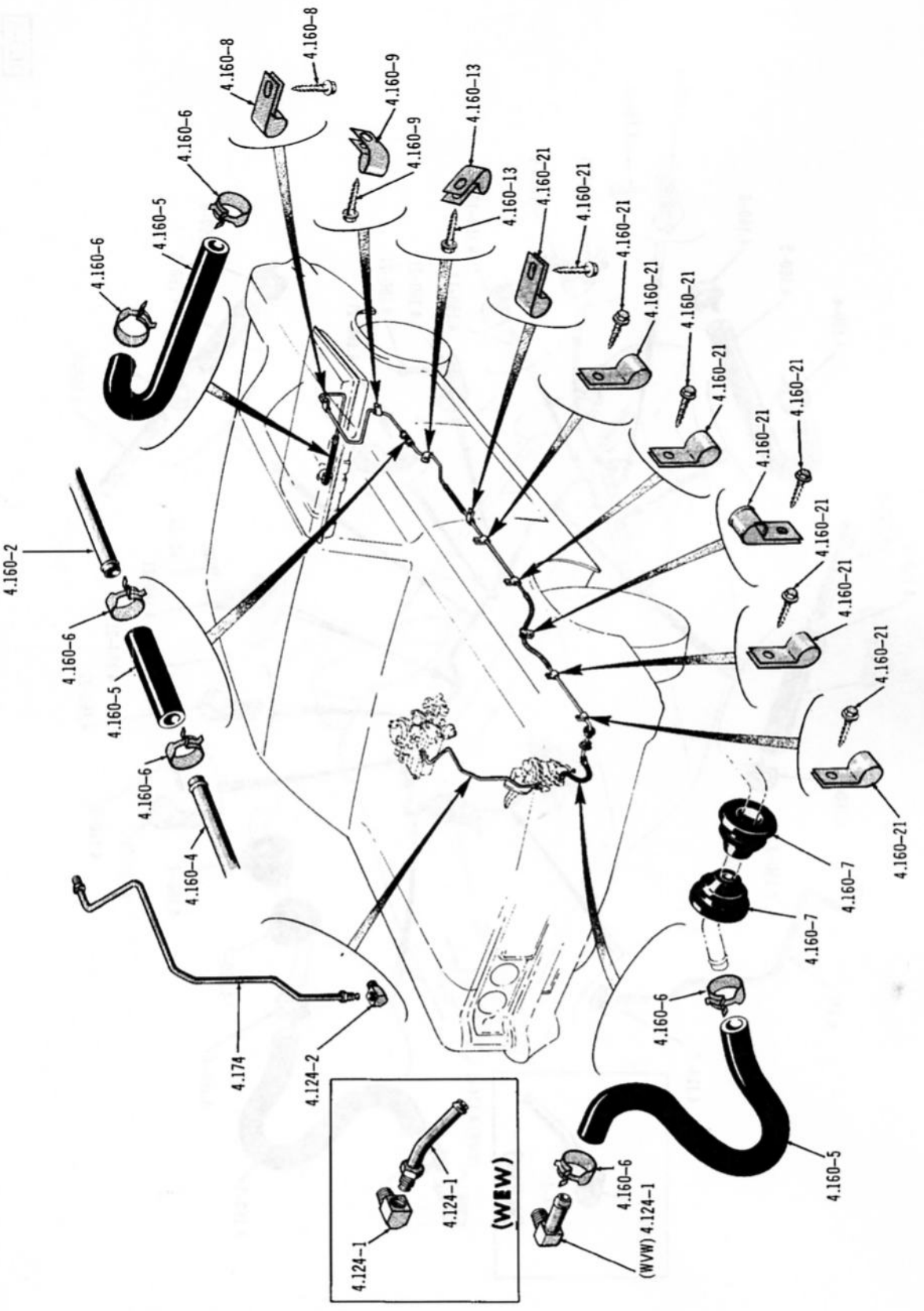

GASOLINE TANK TO CARBURETOR FUEL LINES ... V8 (15)(16)(18)(19)

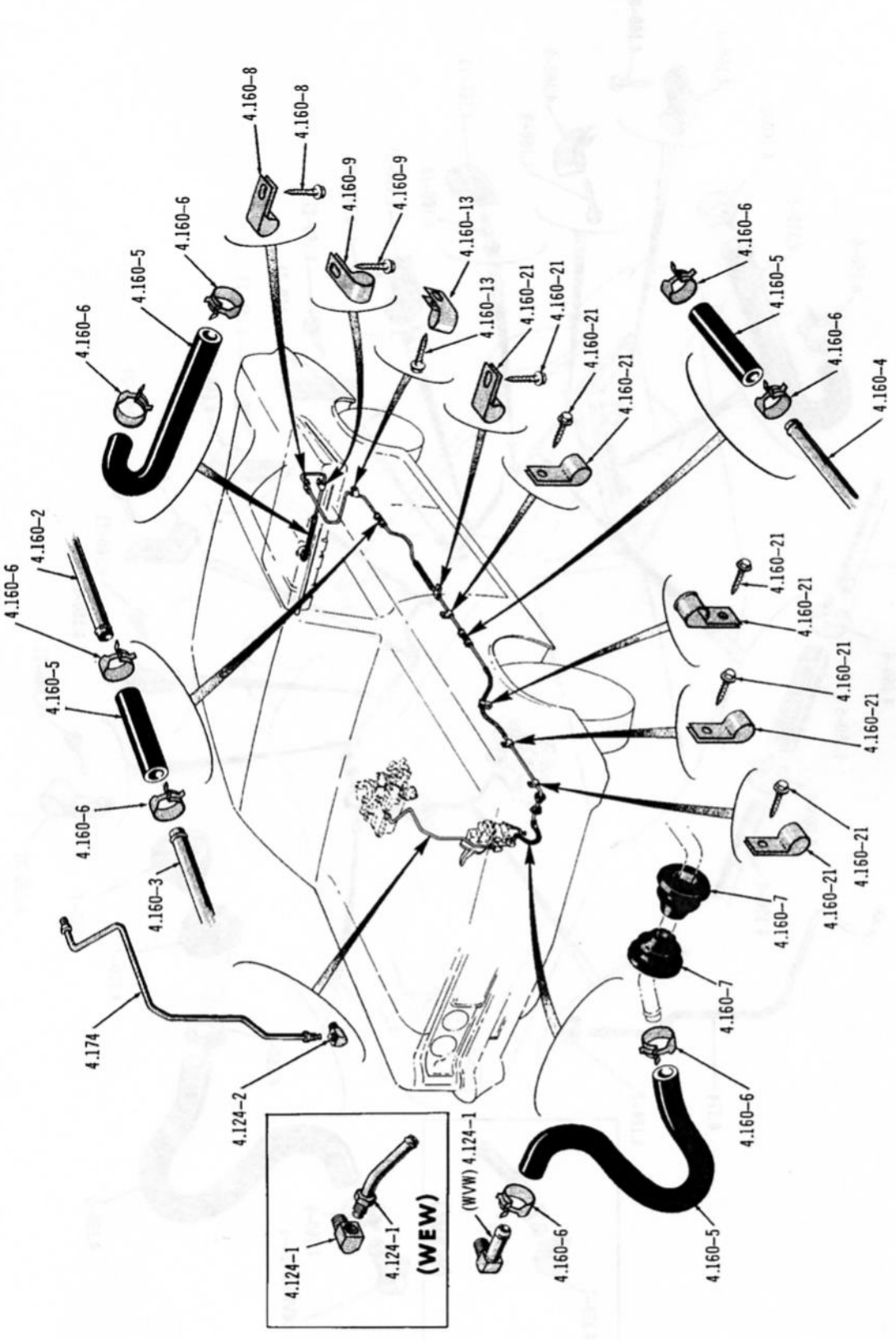

GASOLINE TANK TO CARBURETOR FUEL LINES ... V8 (17)(87)

3386

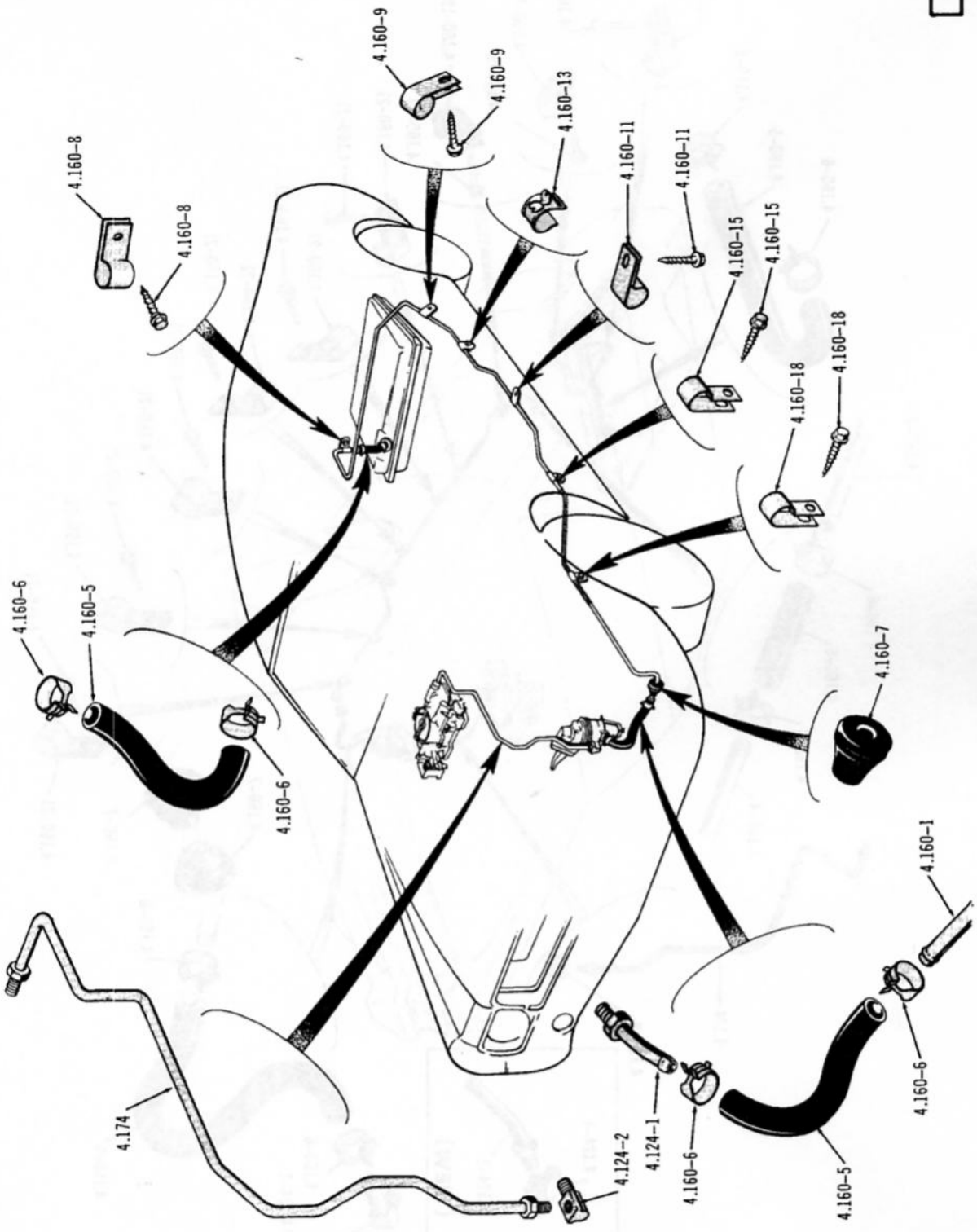

GASOLINE TANK TO CARBURETOR FUEL LINES ... V8 (30)(70)

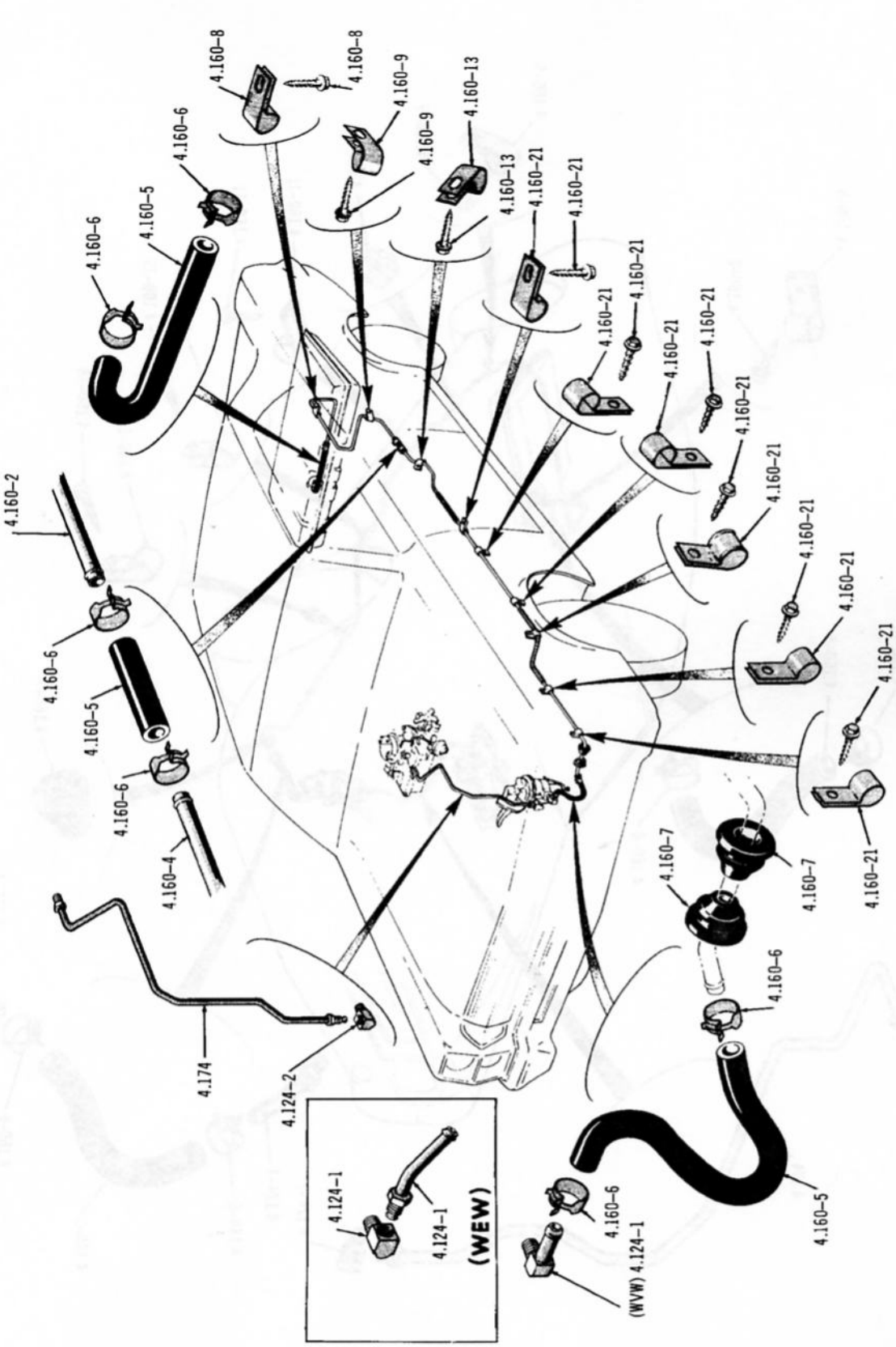

GASOLINE TANK TO CARBURETOR FUEL LINES ... V8 (50)(85)(86)(88)(89)

Printed in U.S.A.

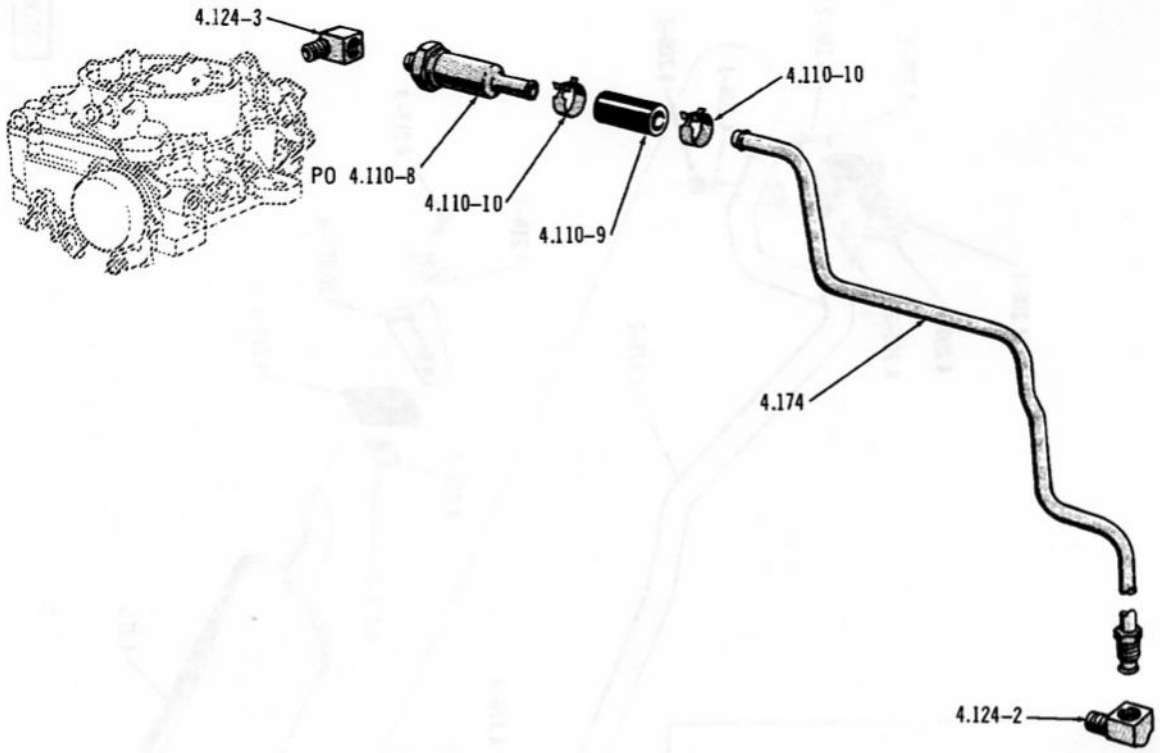

FUEL PUMP TO CARBURETOR TUBE AND FILTER ... WVW (1969-TYPE 1), WEW (1969)

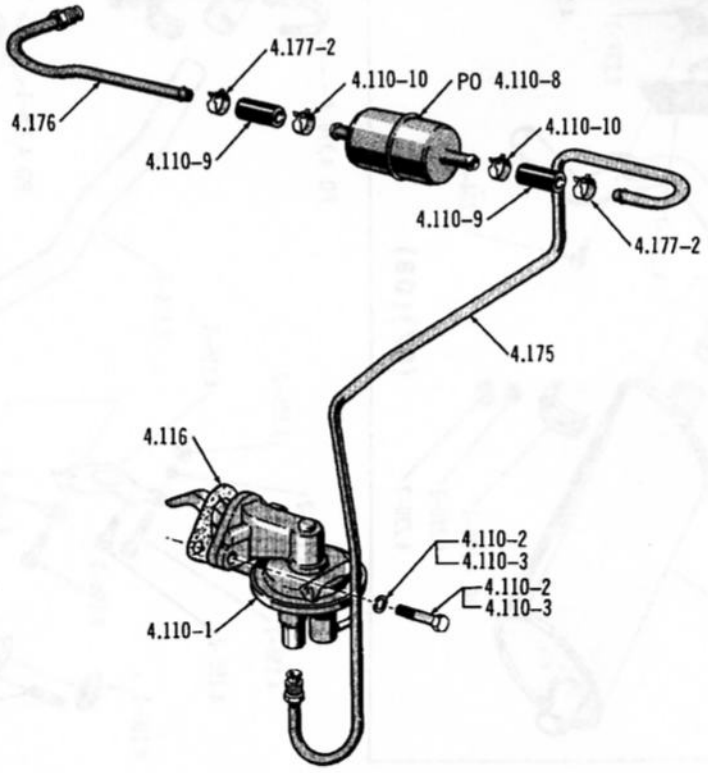

FUEL PUMP AND FUEL FILTER ... 1970/

Printed in U.S.A.

2728

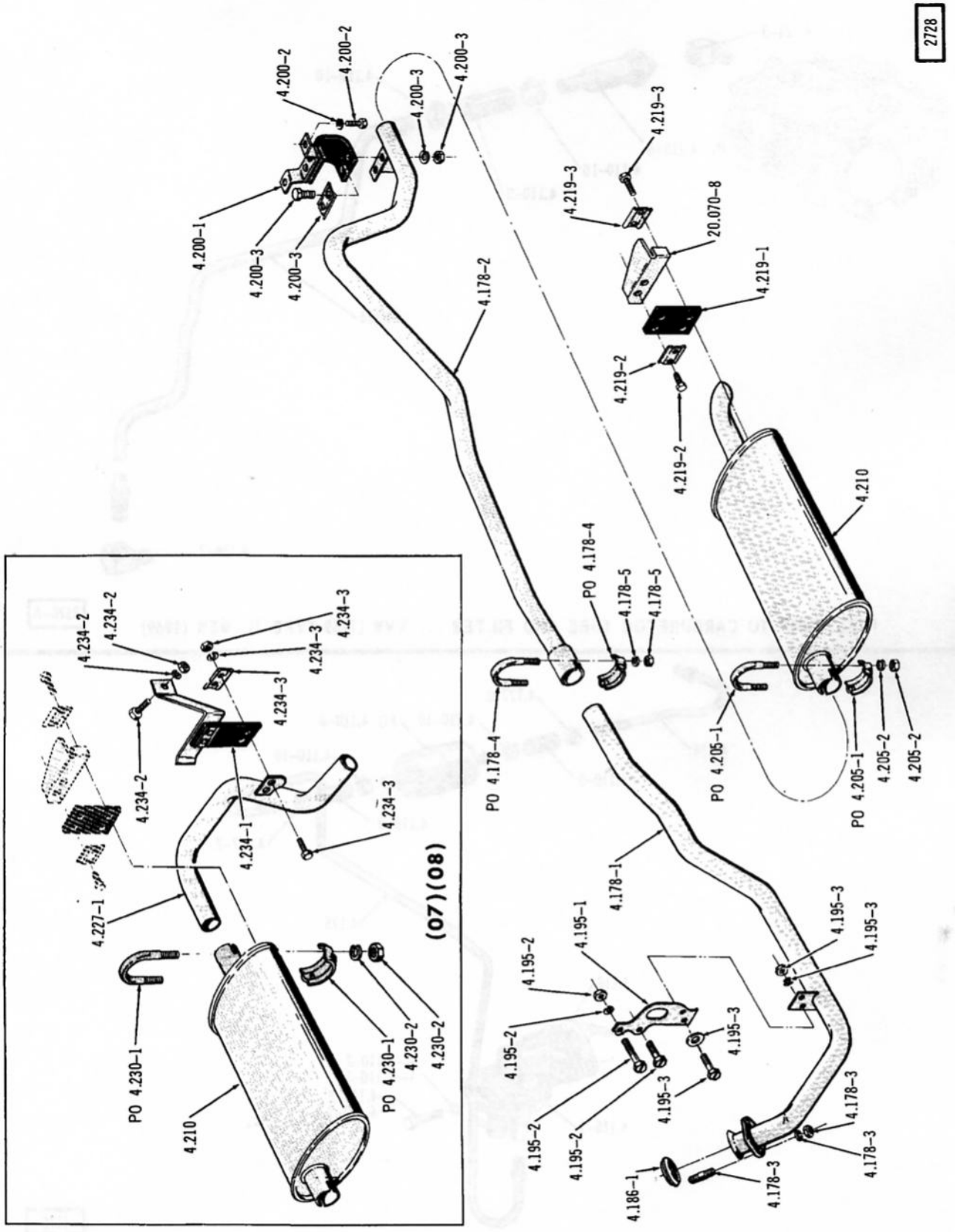

EXHAUST SYSTEM ... 1967/69 (SIX-01)

2931

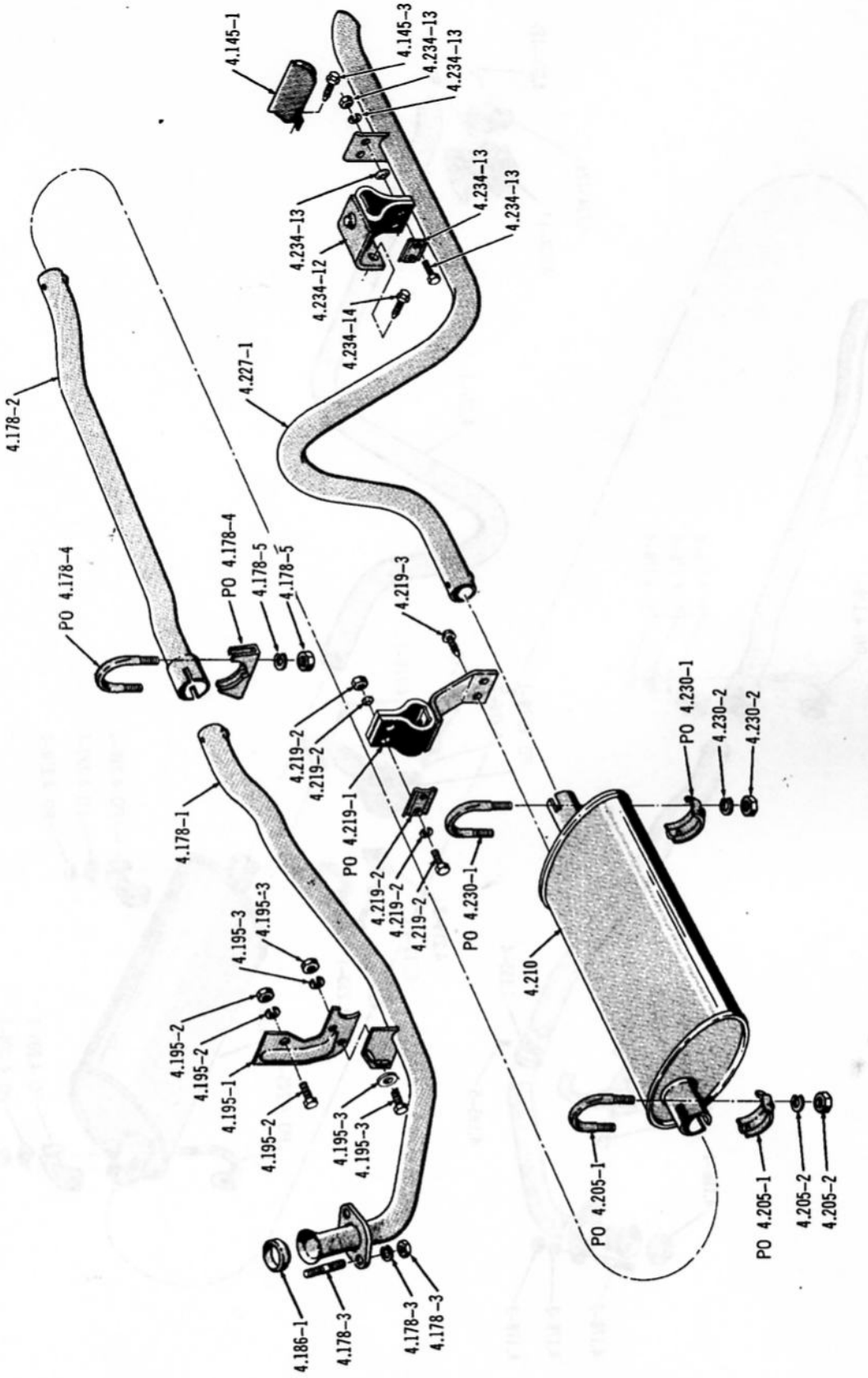

EXHAUST SYSTEM . . . 1967/71–SIX (10)(50)(80)

4049

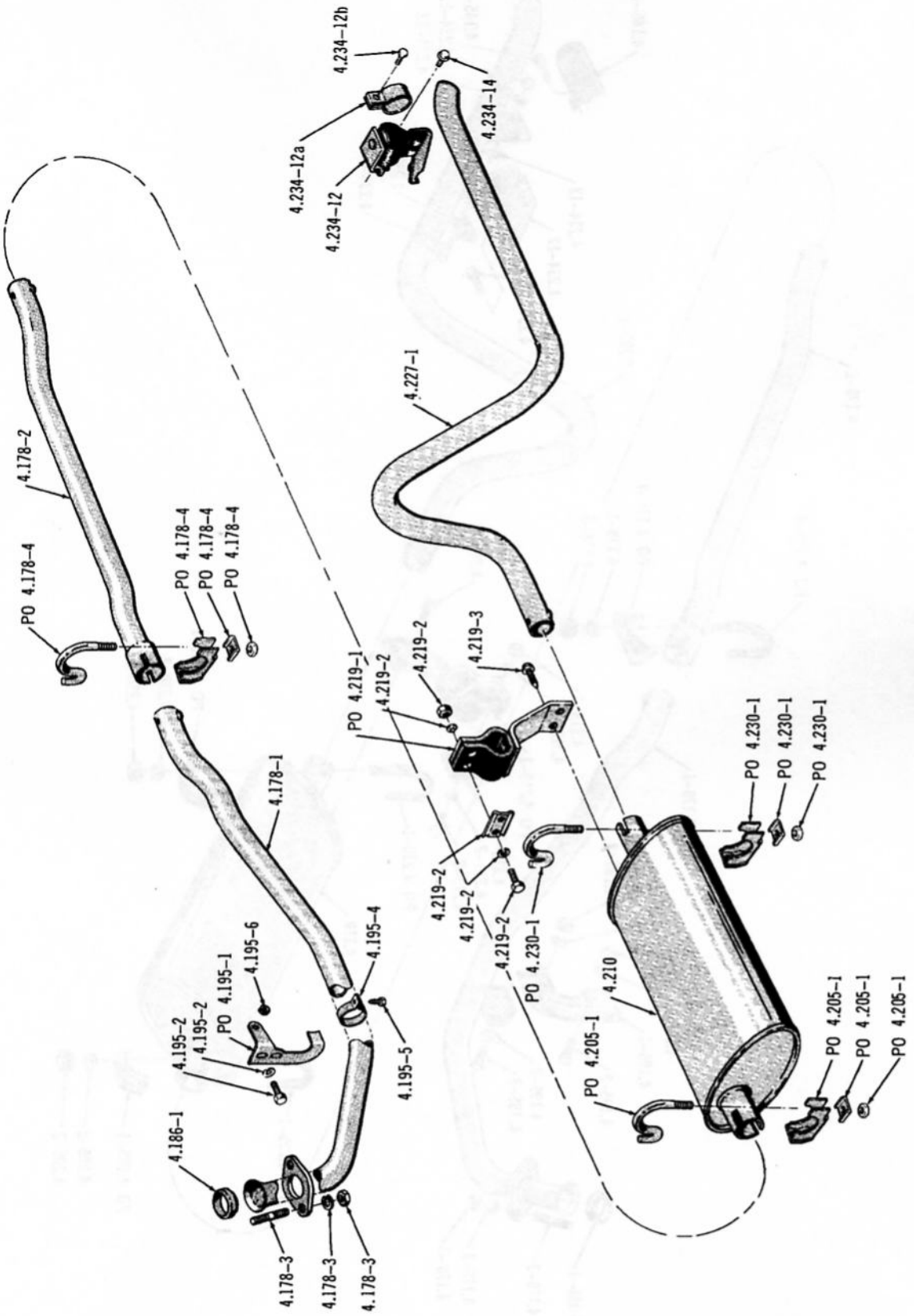

EXHAUST SYSTEM . . . 1972–SIX (10)(80)

Printed in U.S.A.

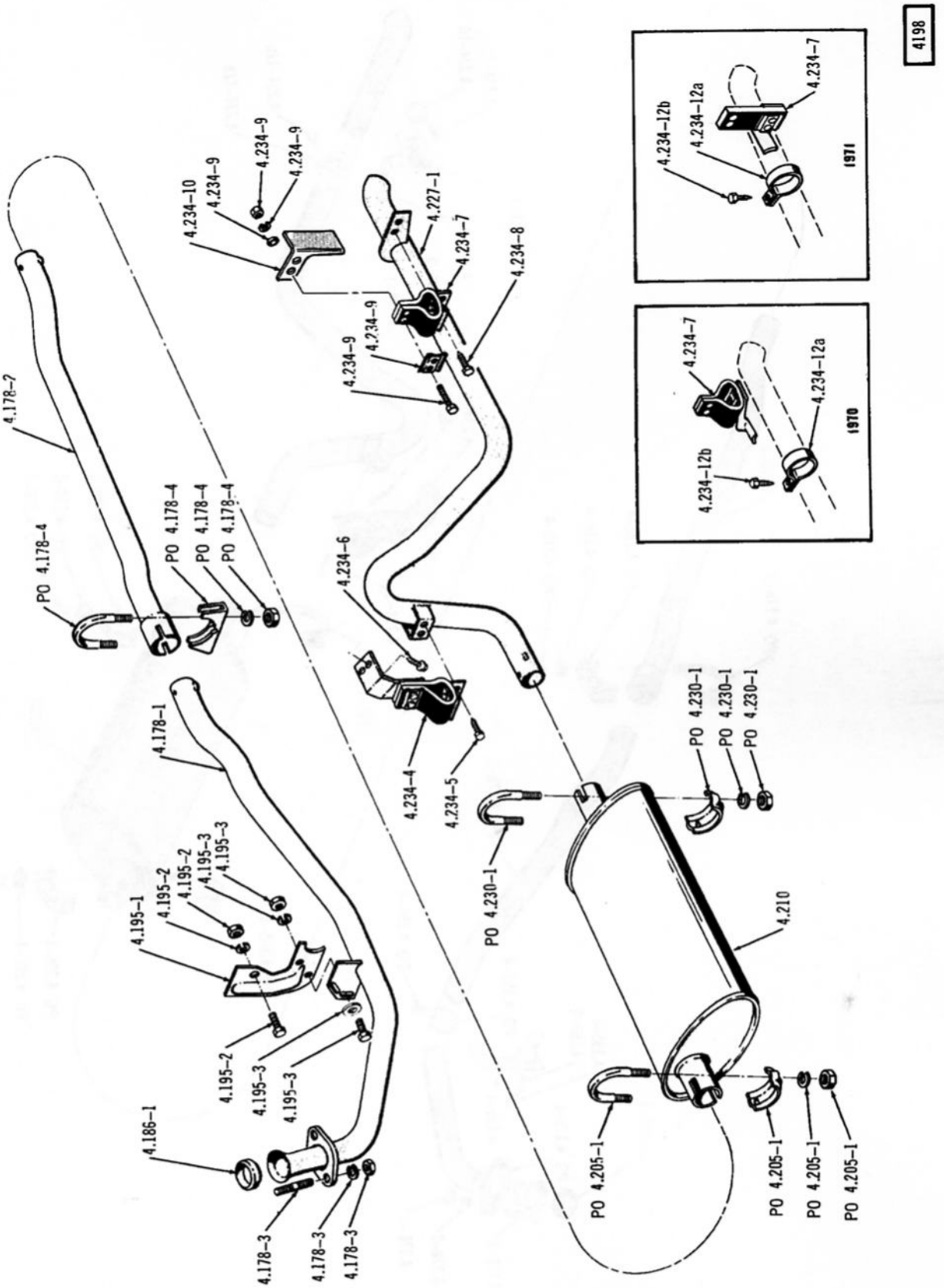

EXHAUST SYSTEM . . . 1968/71—SIX (70)

4199

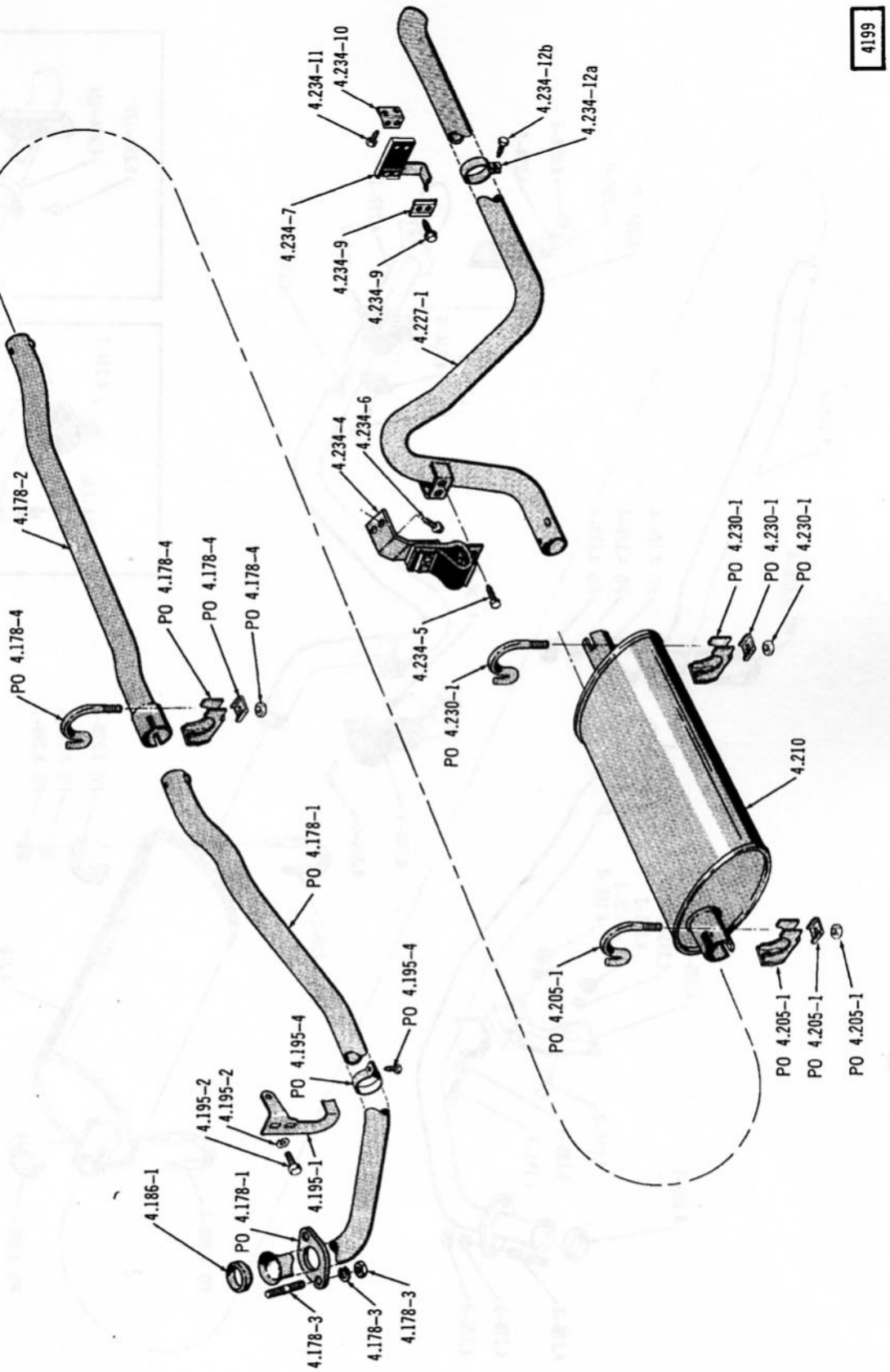

EXHAUST SYSTEM . . . 1972–SIX (70)

Printed in U.S.A.

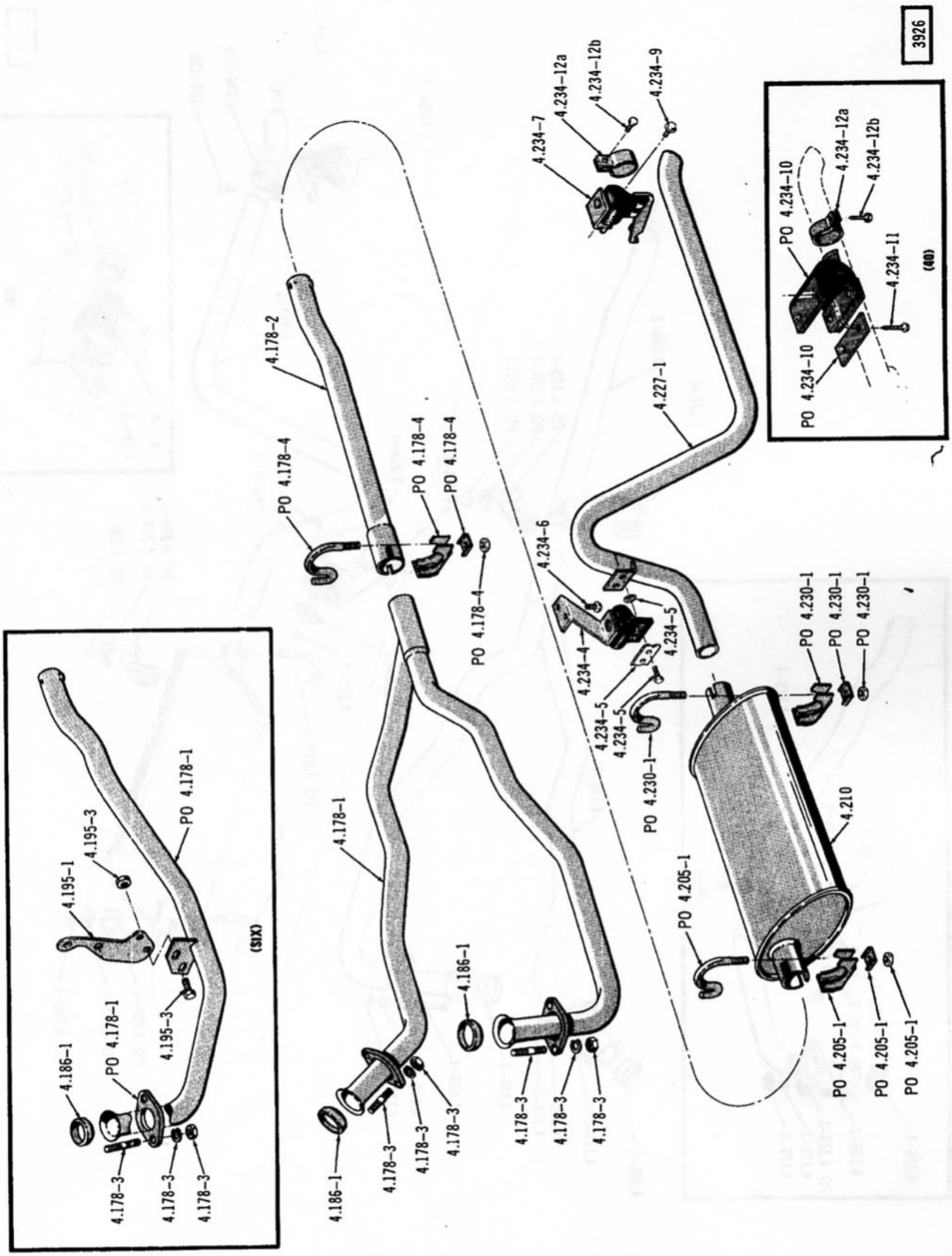

EXHAUST SYSTEM . . . 1970/71 (01)(40)

Printed in U.S.A.

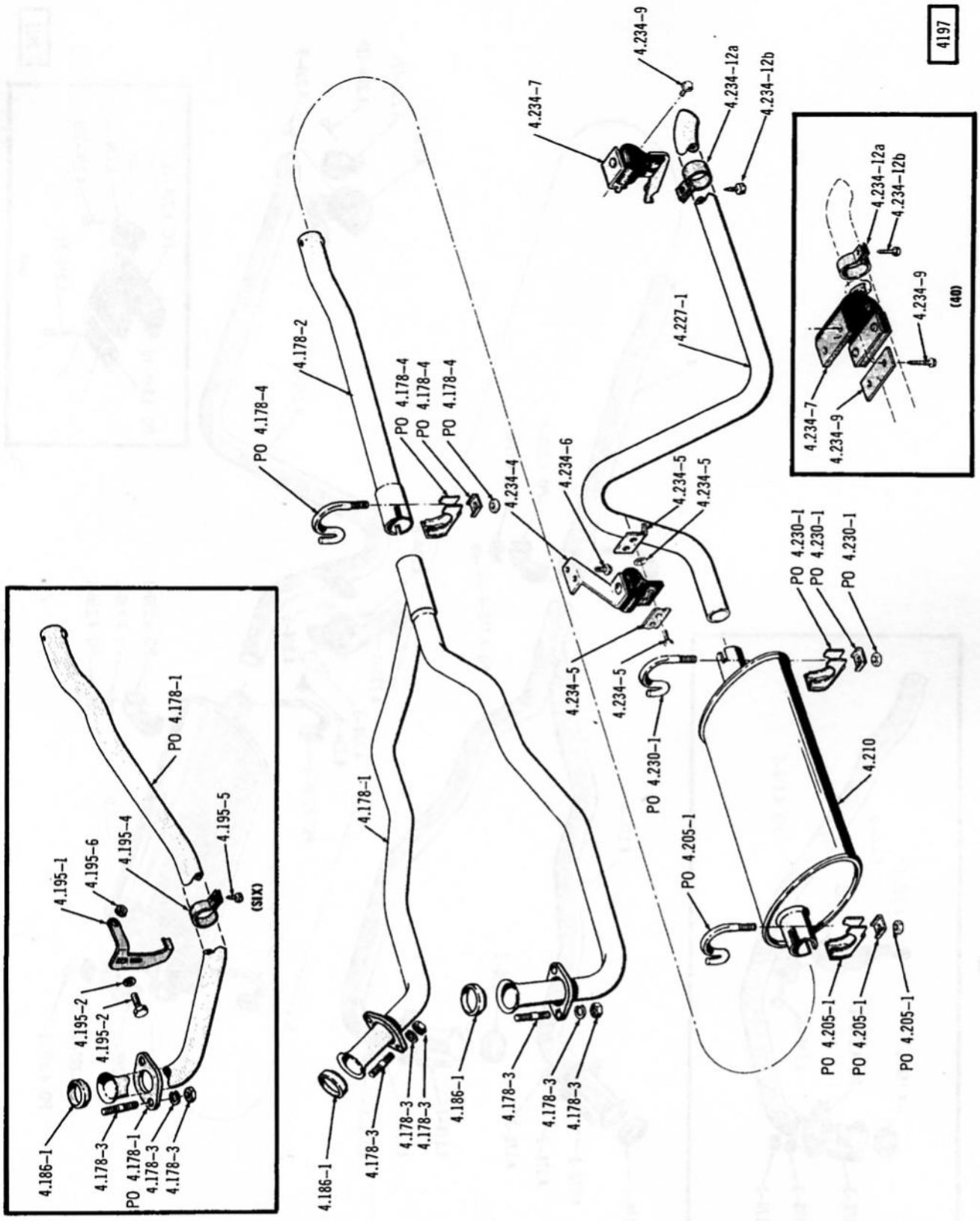

EXHAUST SYSTEM . . . 1972 (01)(40)

Printed in U.S.A.

2666

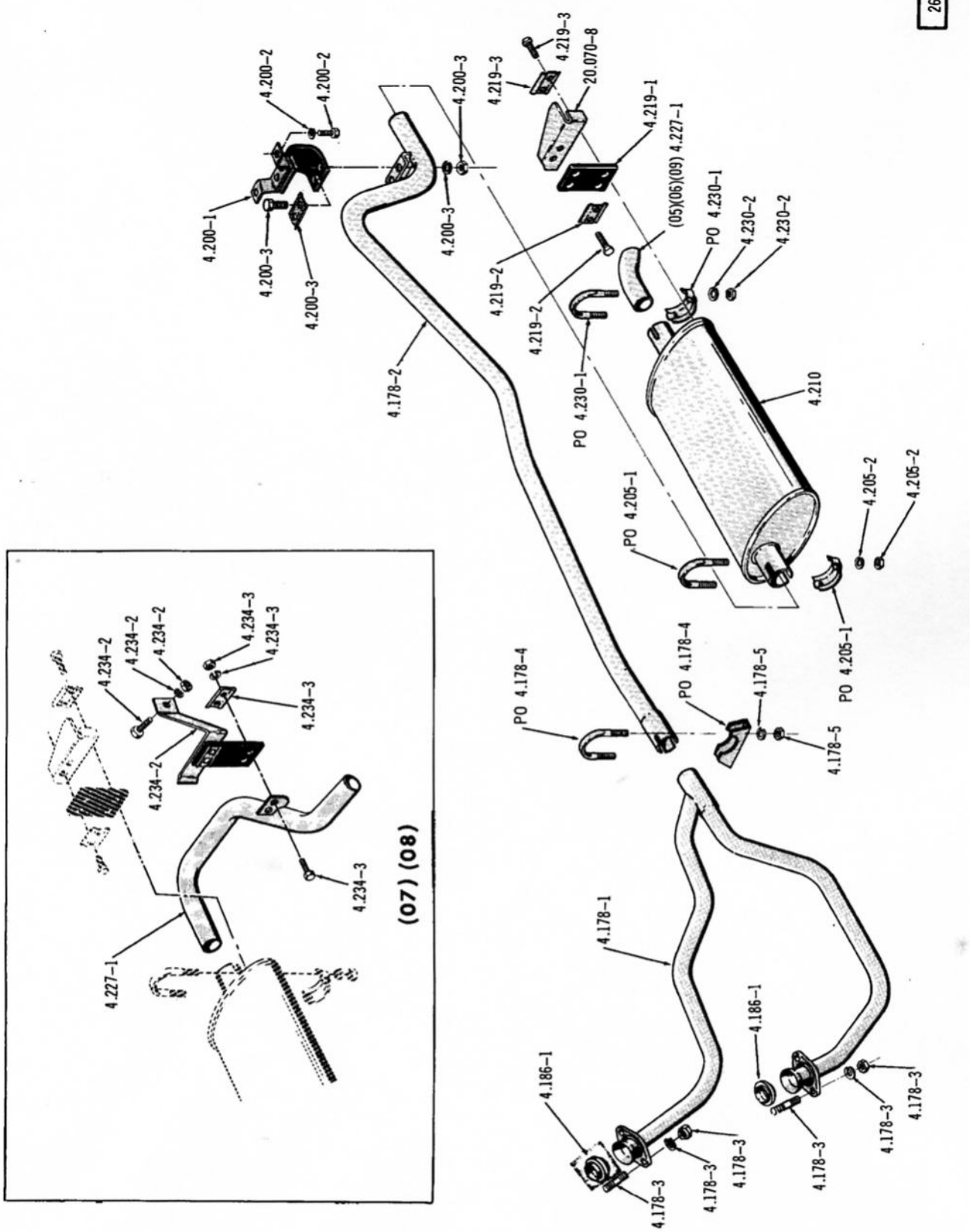

EXHAUST SYSTEM ... 1967/69 (V8-01)

2930

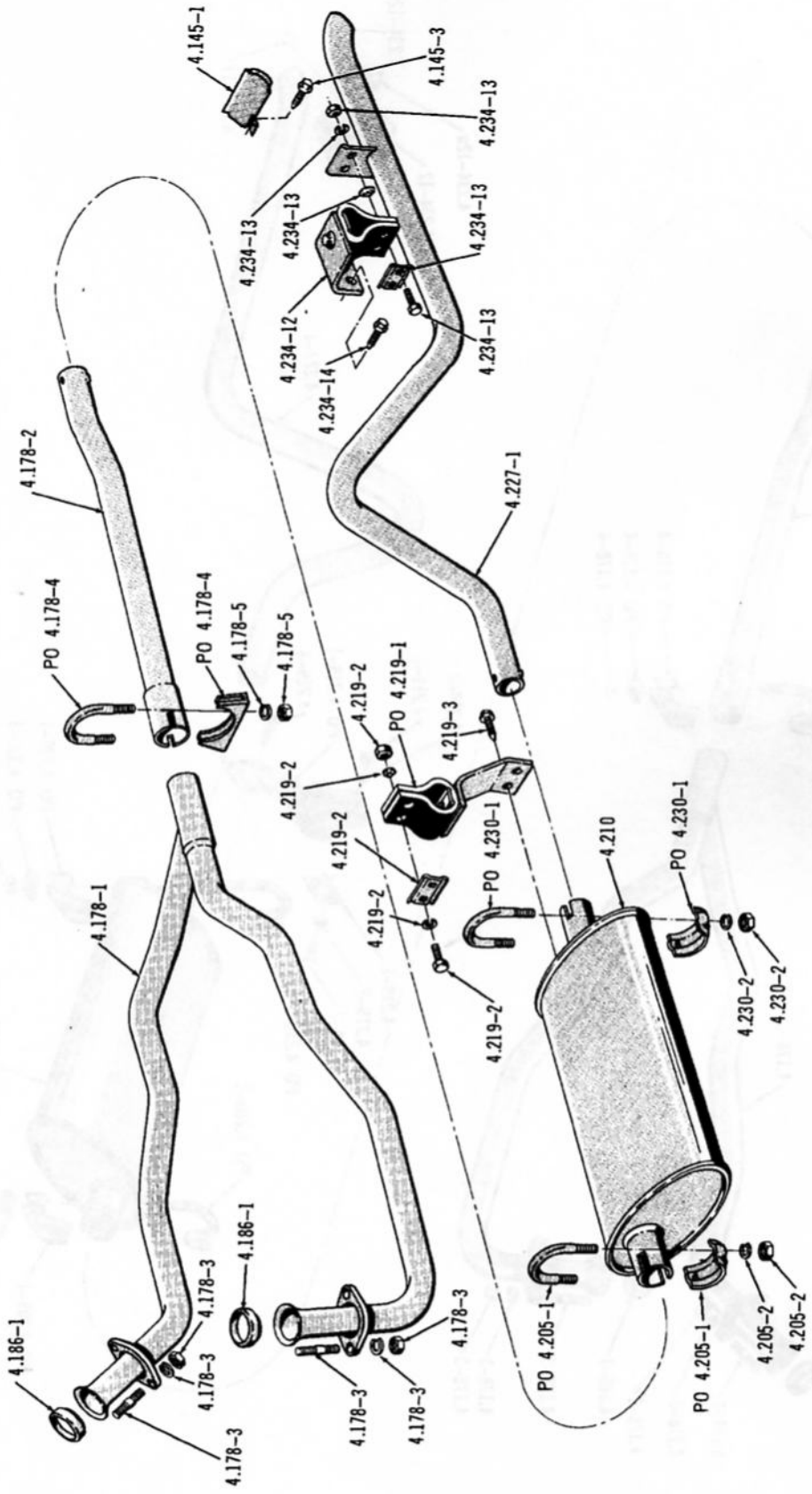

EXHAUST SYSTEM . . . 1967/71–V8–LDE (10)(50)(80)

Printed in U.S.A.

4099

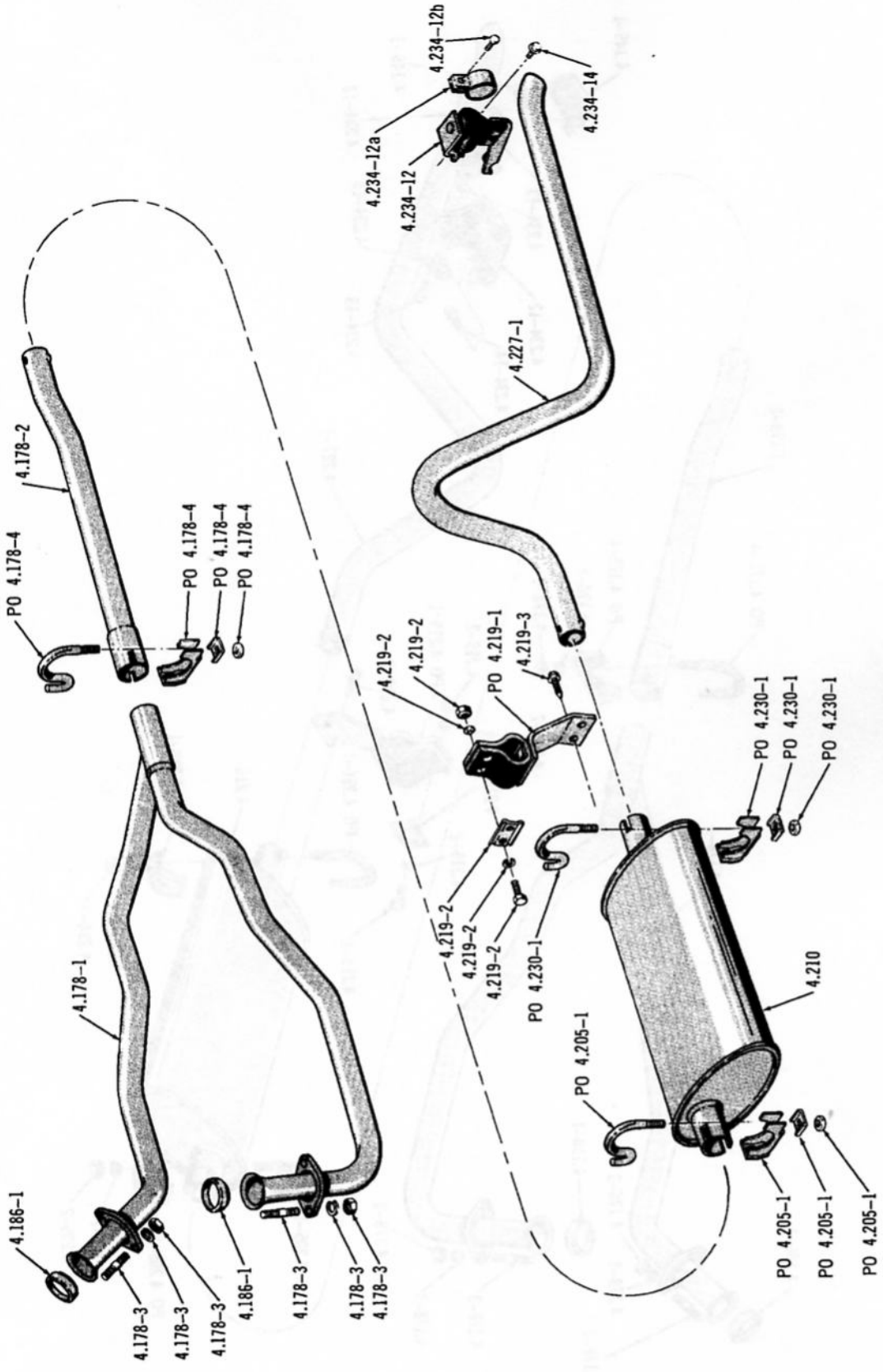

EXHAUST SYSTEM . . . 1972-V8-LDE (10)(80)

3210

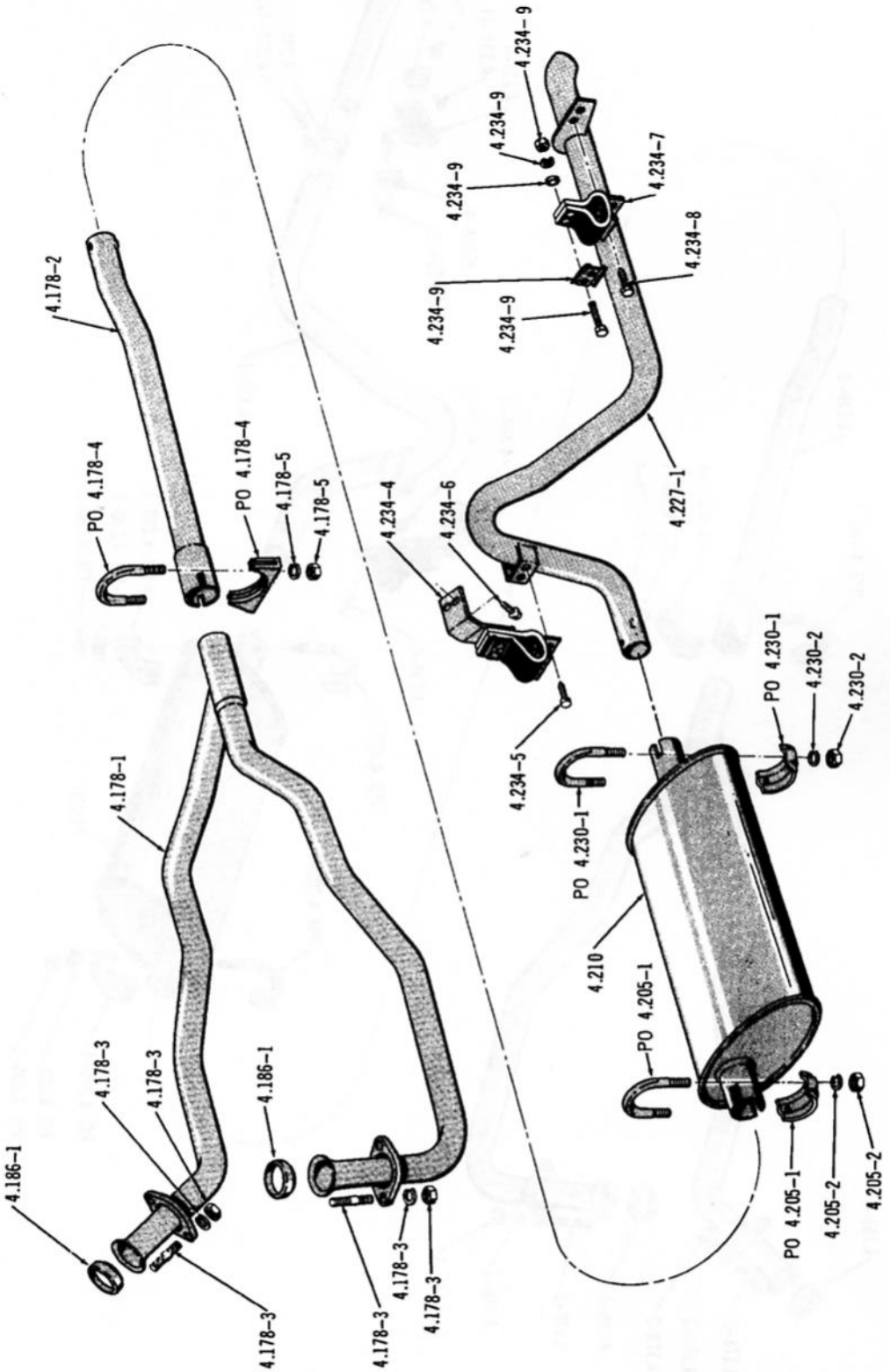

EXHAUST SYSTEM . . . 1968/69–V8–LDE (70)

Printed in U.S.A.

4082

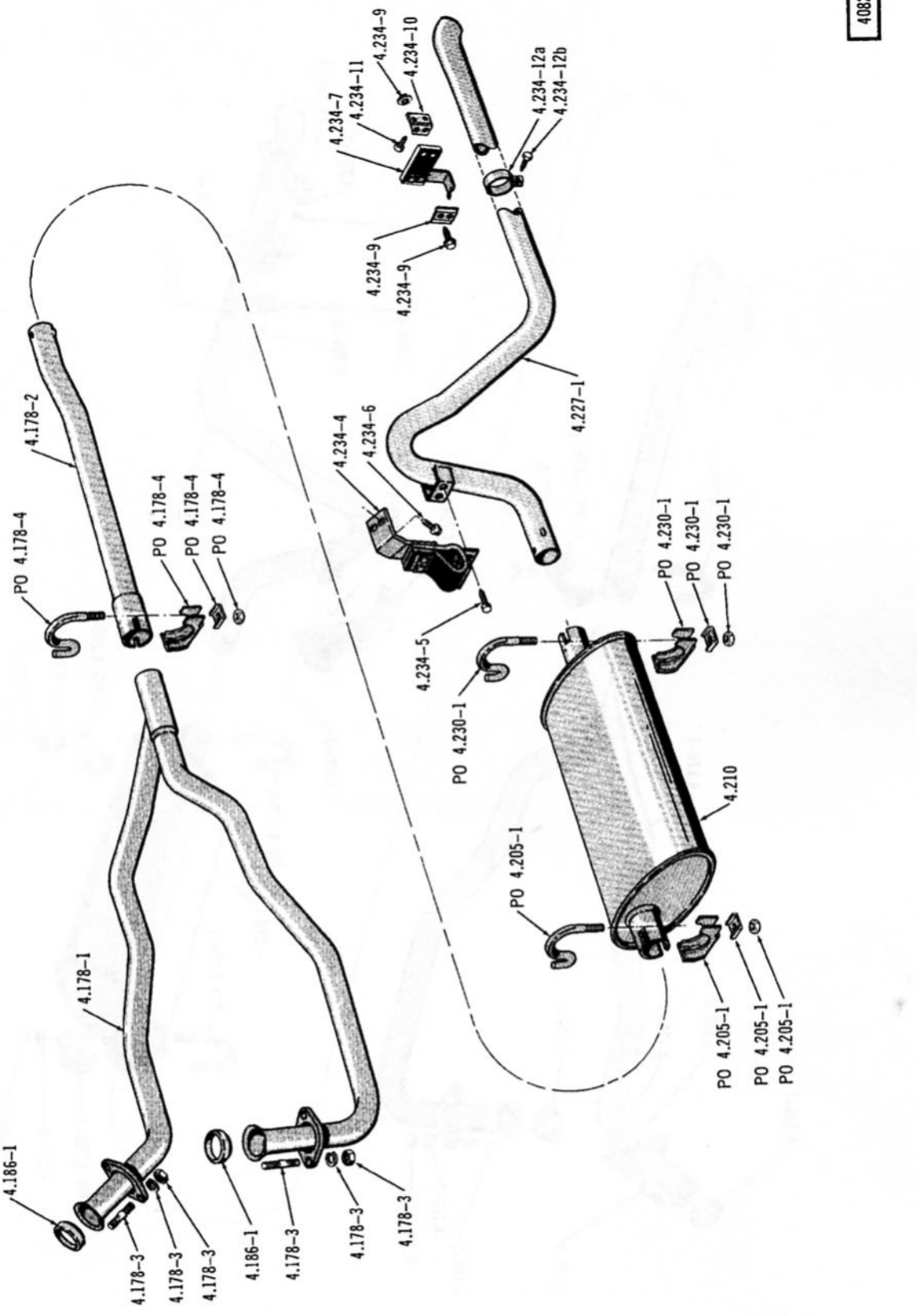

EXHAUST SYSTEM . . . 1970/ –V8–LDE (70)

3035

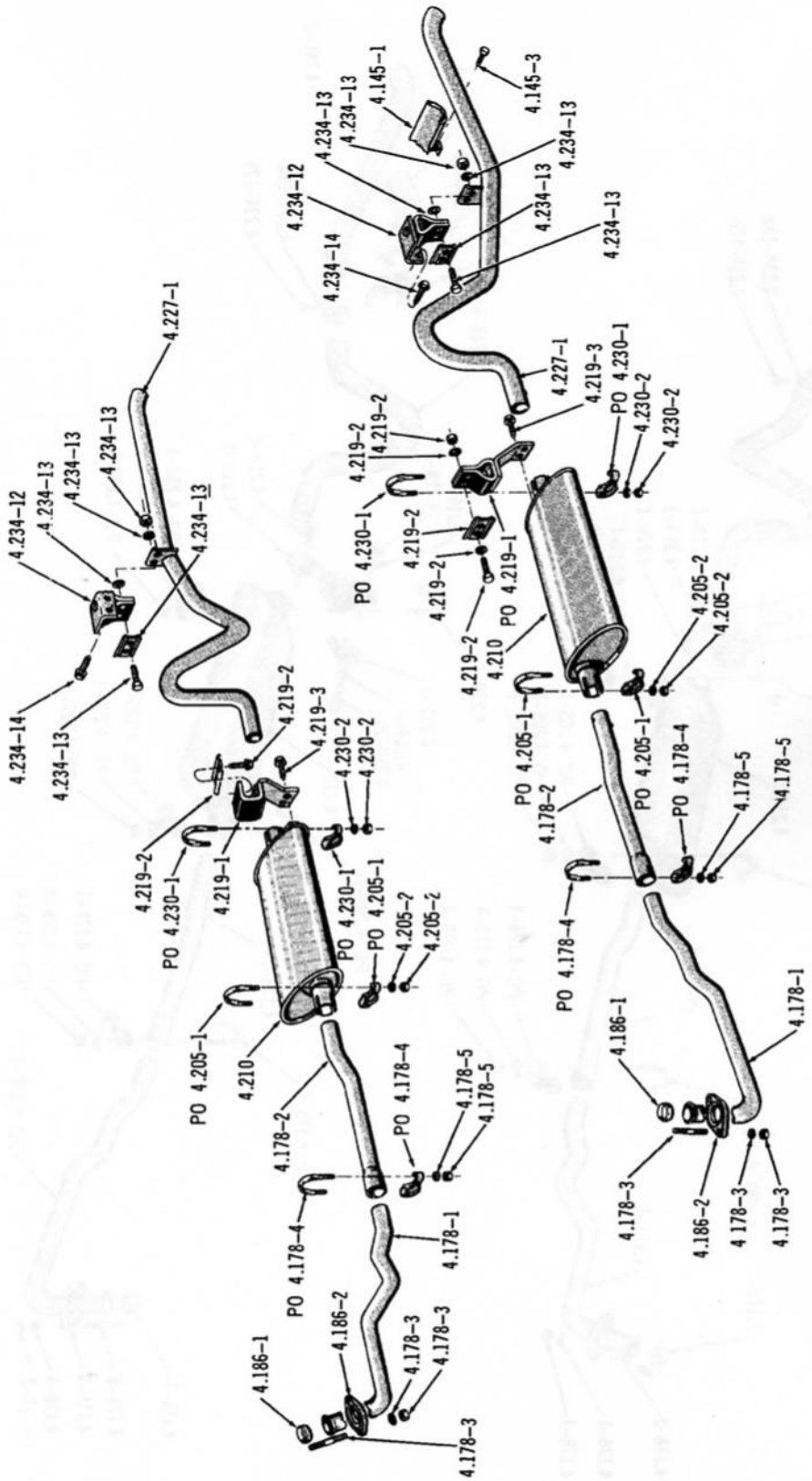

EXHAUST SYSTEM . . . 1967/71–V8–WDE (15)(16)(17)(19)(50)(85)(86)(87)(89)

Printed in U.S.A.

4048

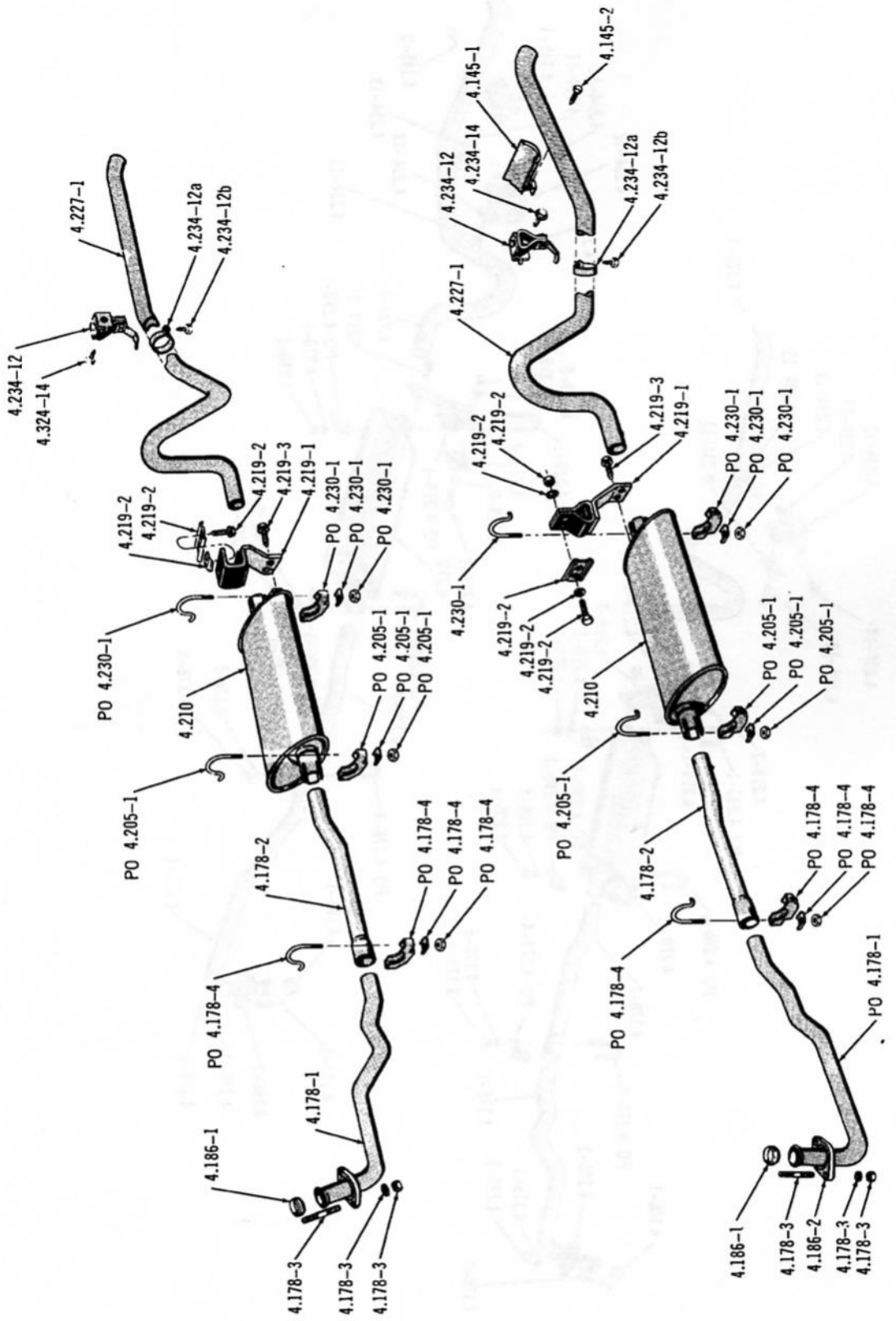

EXHAUST SYSTEM . . . 1972–V8–WDE (15)(19)(85)(89)

3433

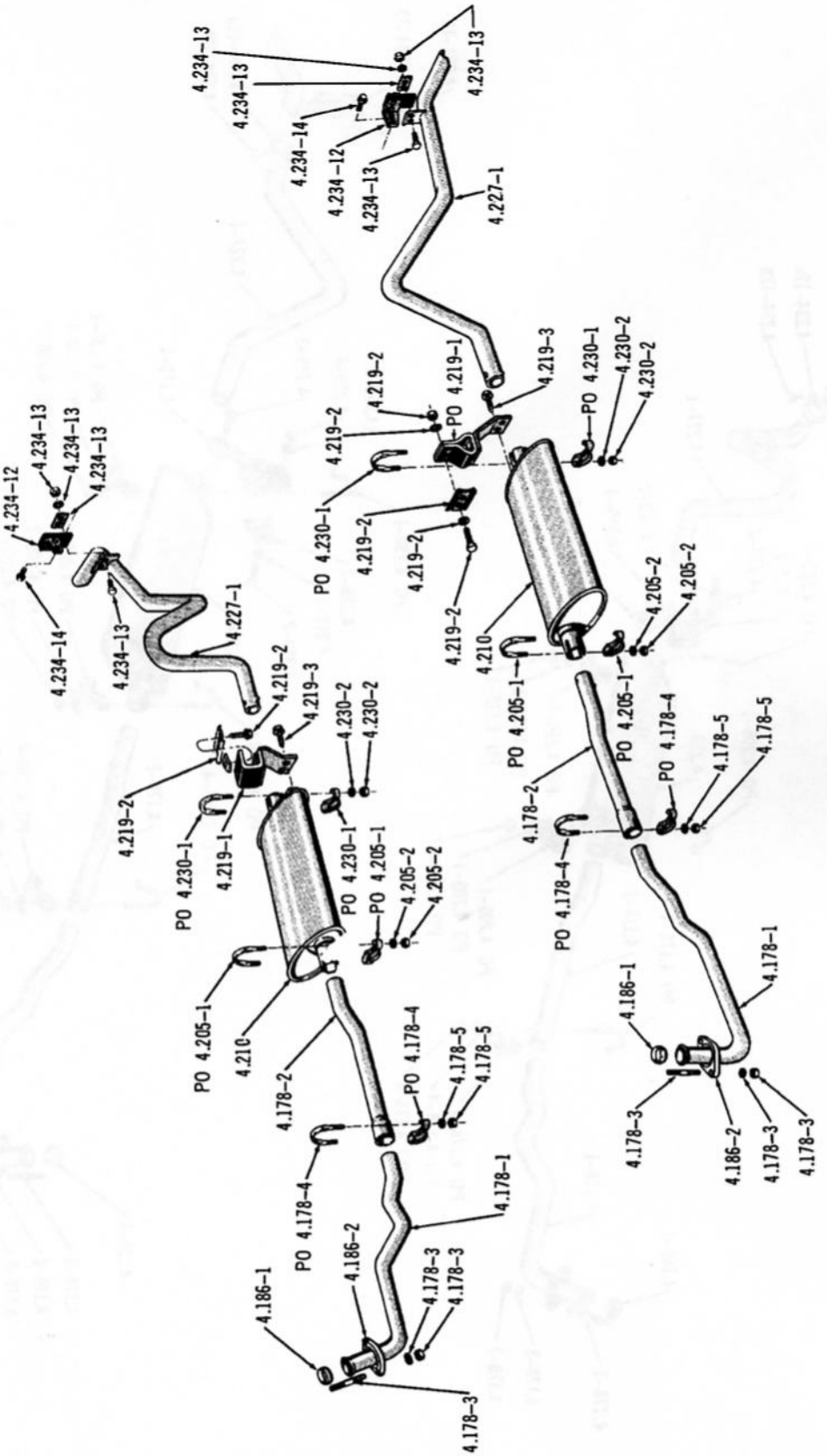

EXHAUST SYSTEM . . . 1967/71–V8–WDE (18)(88)

Printed in U.S.A.

4047

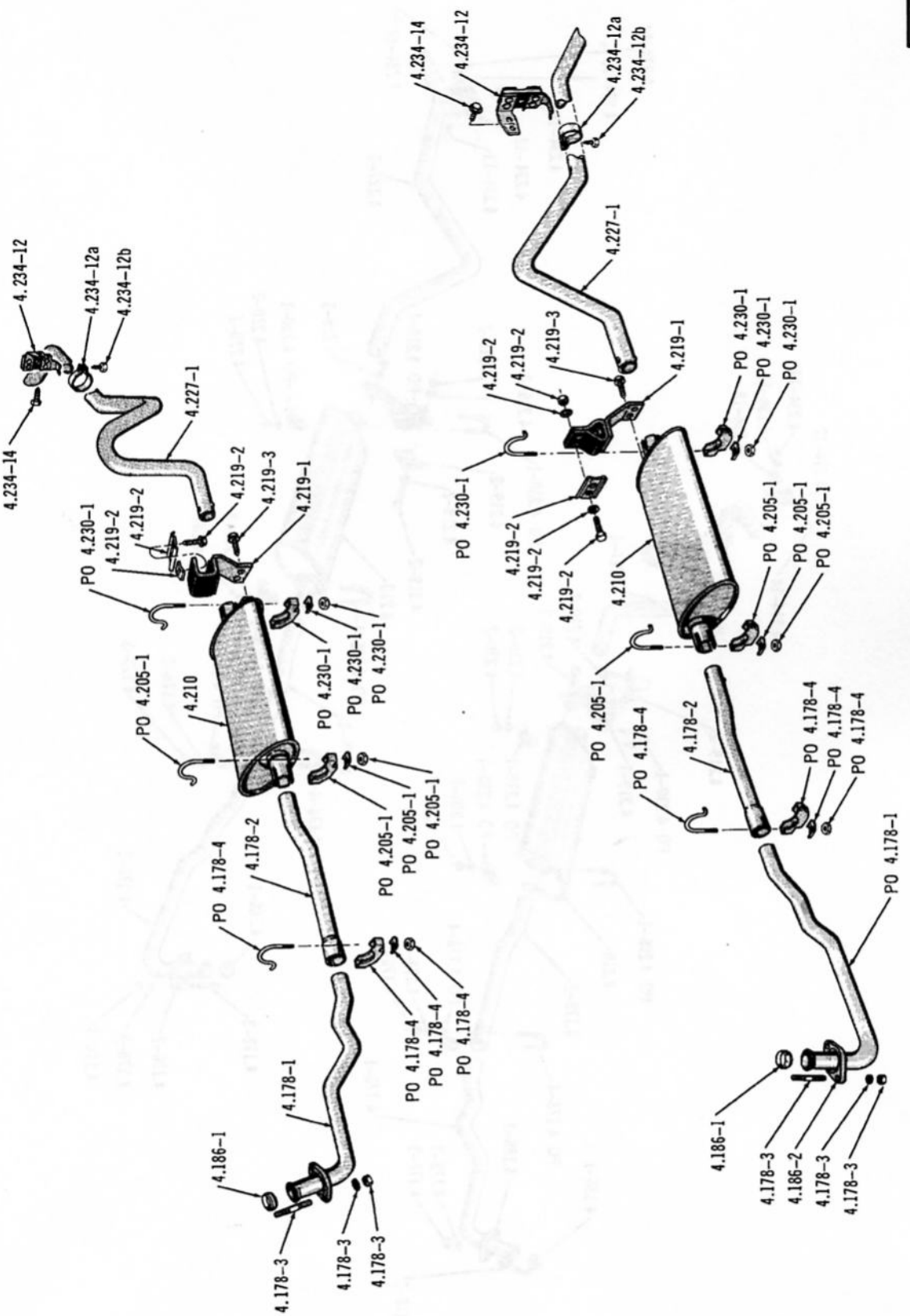

EXHAUST SYSTEM . . . 1972–V8–WDE (18)(88)

3211

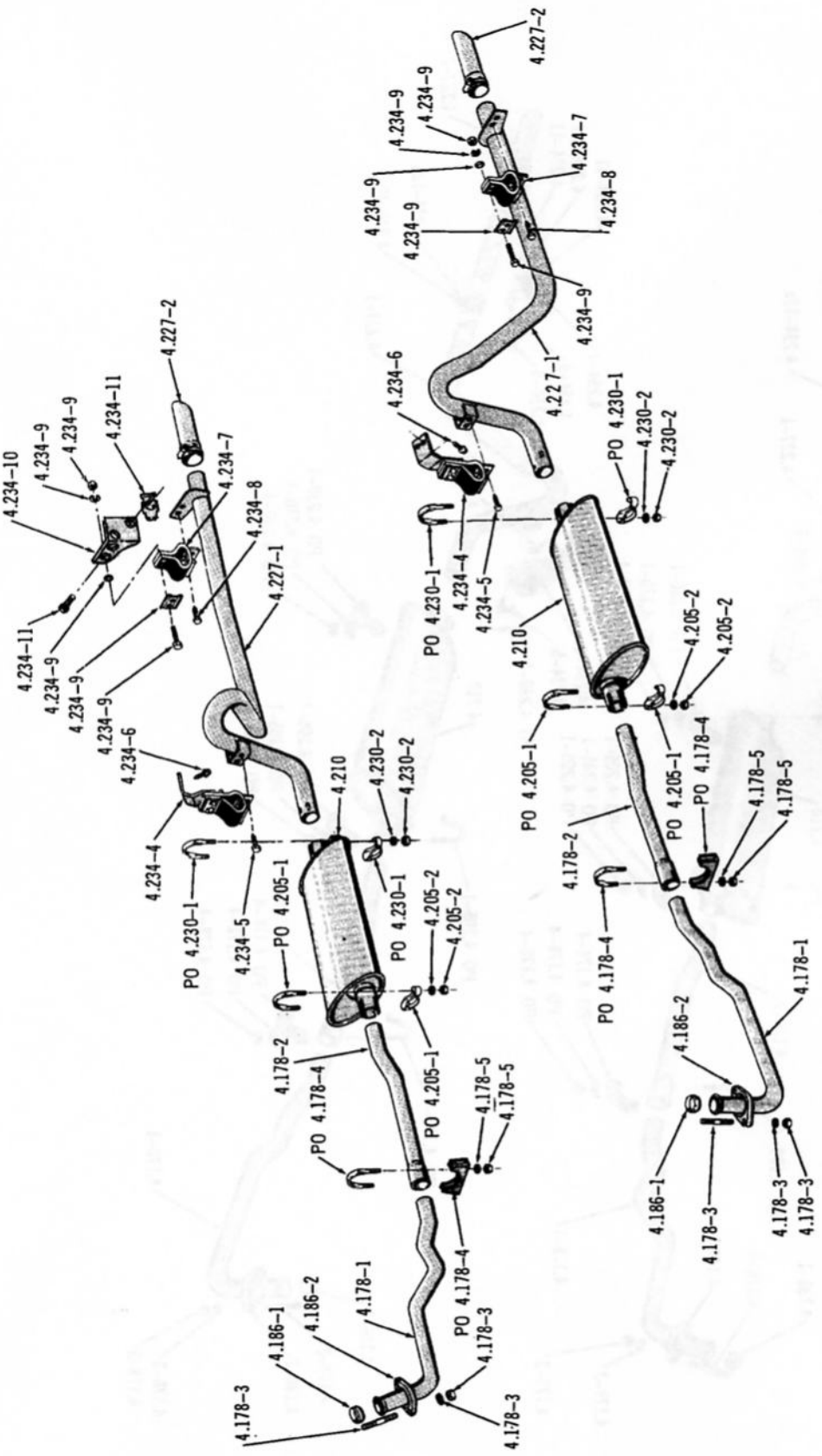

EXHAUST SYSTEM . . . 1968/70–V8–WDE (30)(70)

Printed in U.S.A.

4046

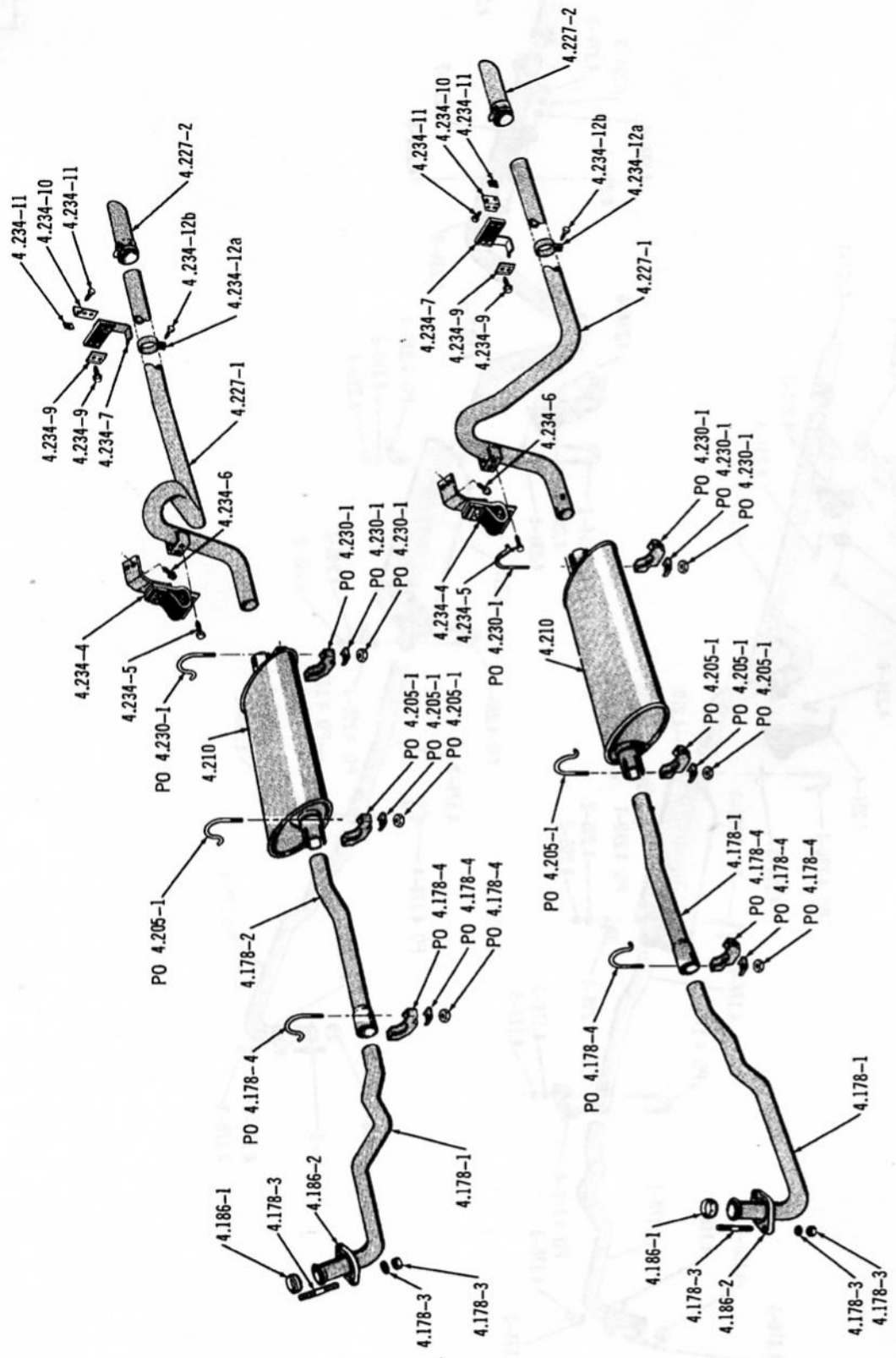

EXHAUST SYSTEM . . . 1971/ -V8-WDE (70)

3105

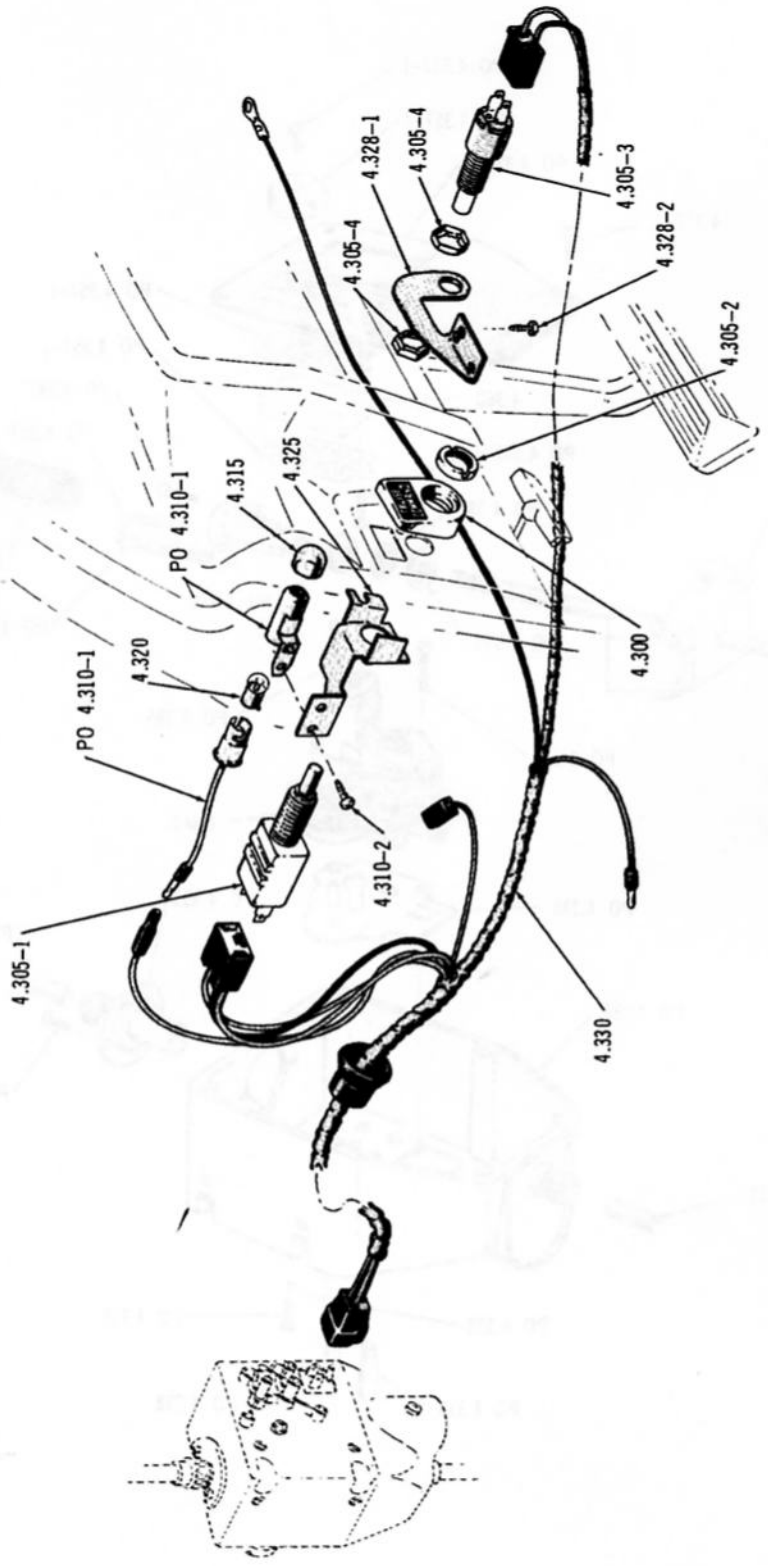

AUTOMATIC SPEED CONTROL ELECTRICAL SYSTEM ... 1967/69

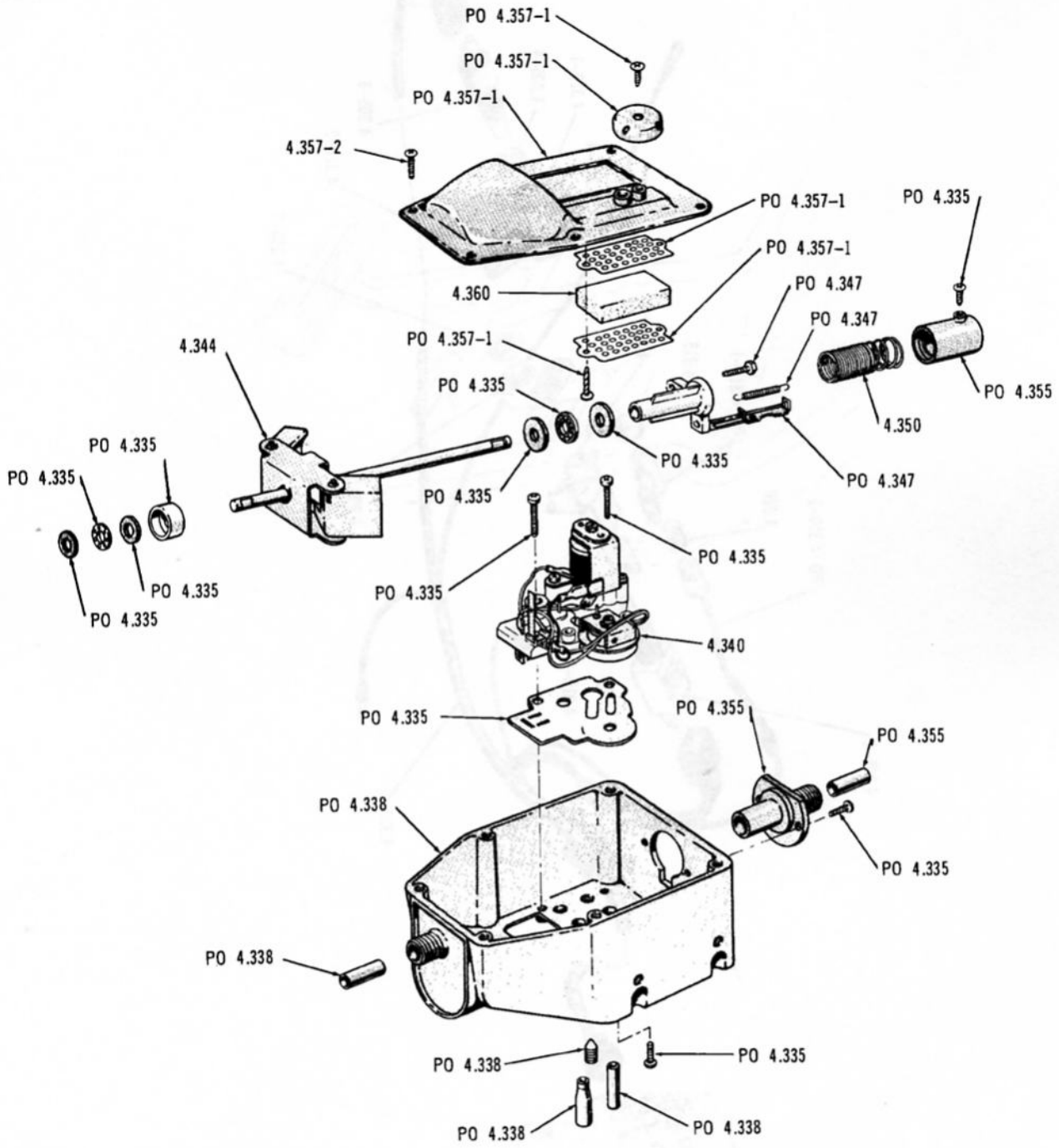

3102

AUTOMATIC SPEED CONTROL REGULATOR ... 1967, 1968

3107

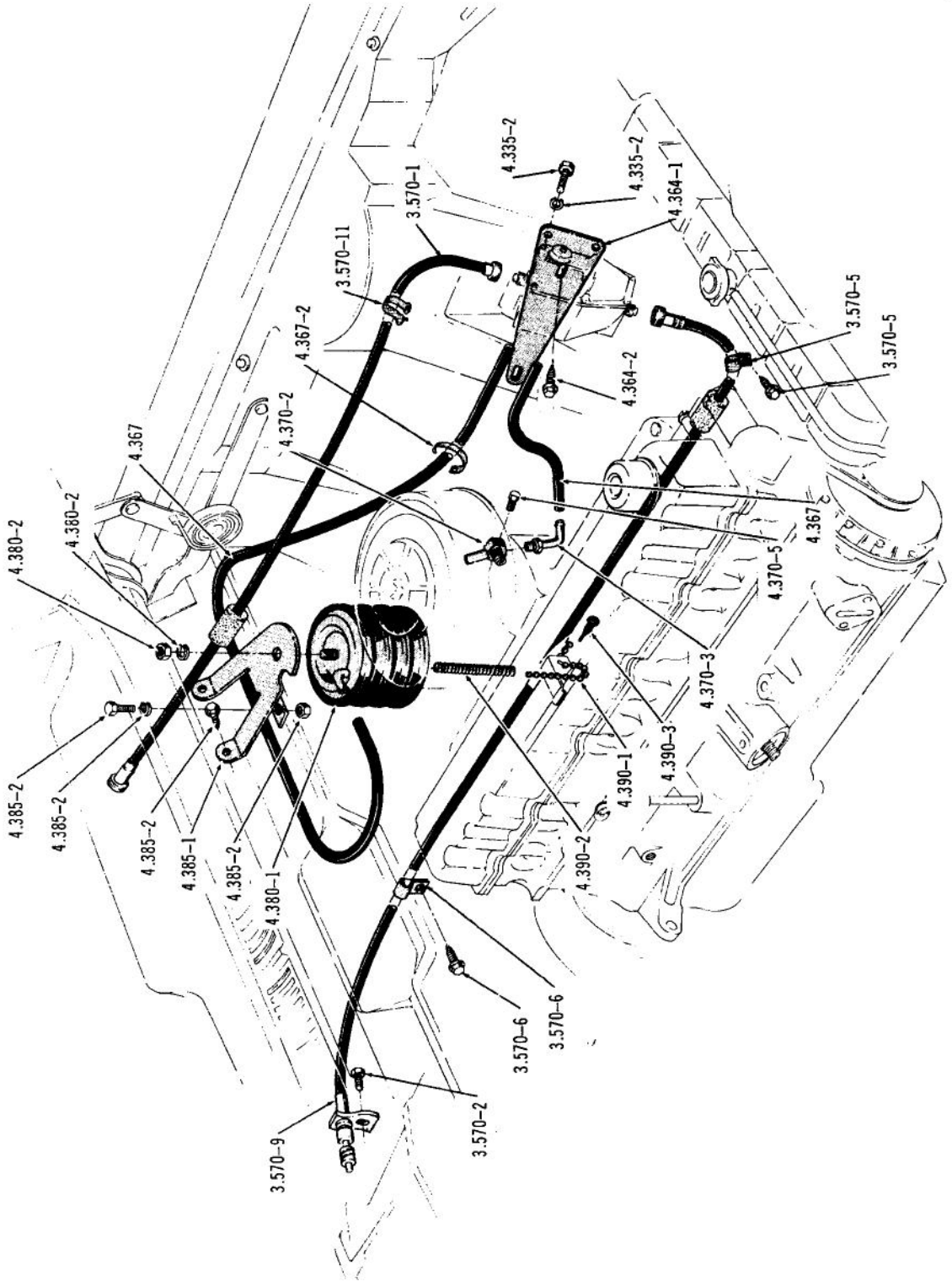

AUTOMATIC SPEED CONTROL HOSES, CABLES AND BELLOWS ... 1967 (SIX)

3106

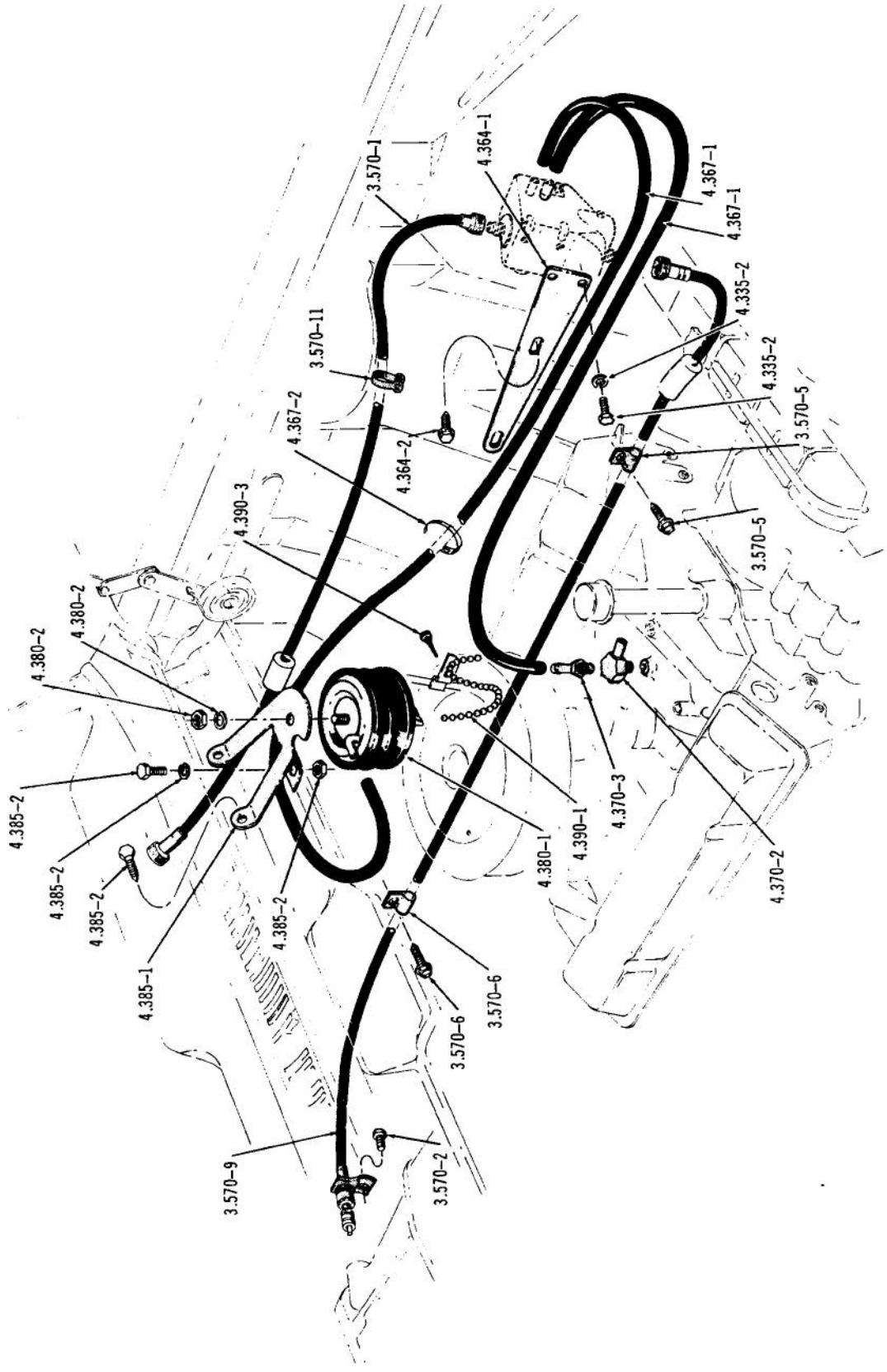

AUTOMATIC SPEED CONTROL HOSES, CABLES AND BELLOWS ... V8 (1967) (1968)

4173

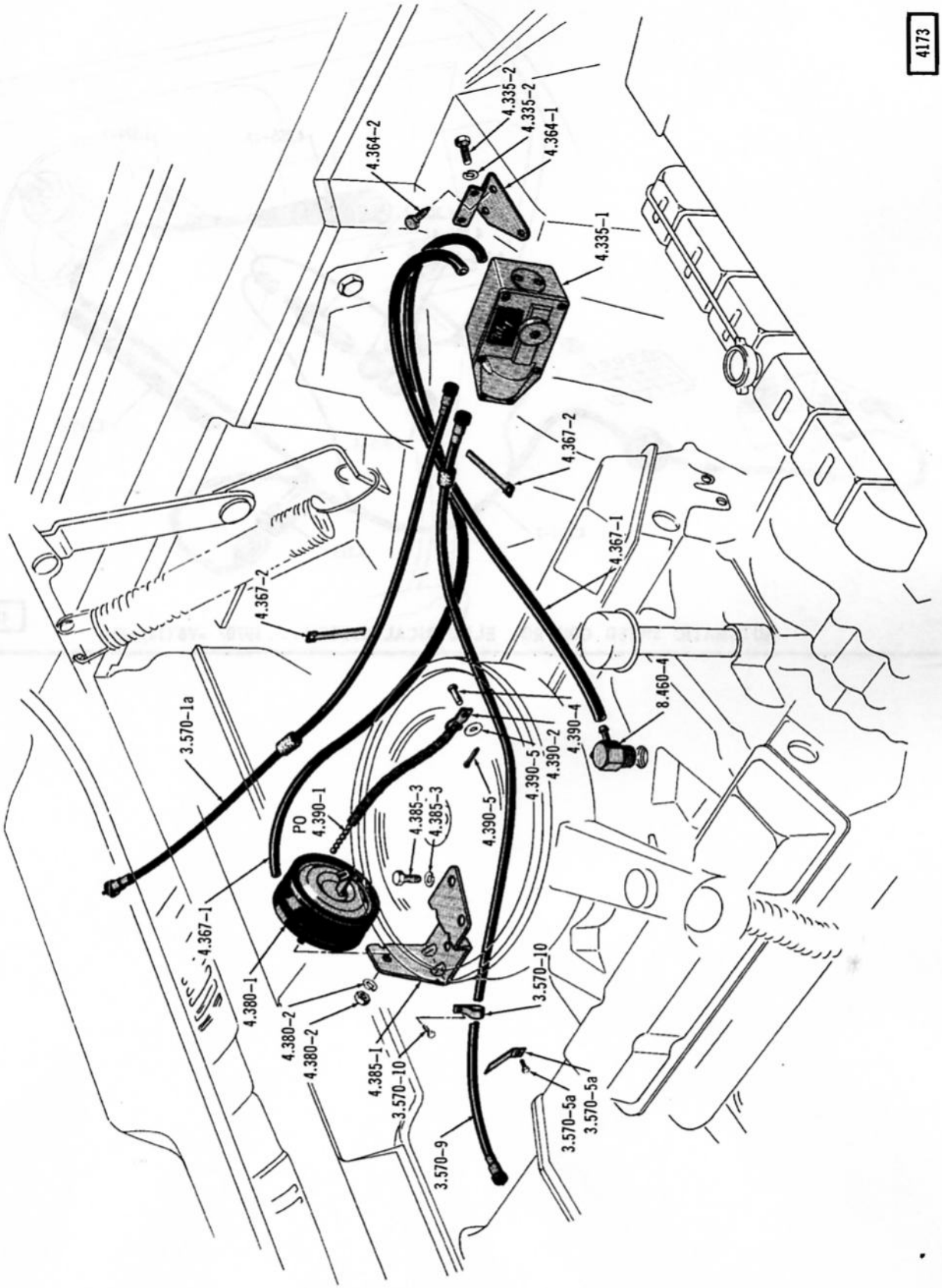

AUTOMATIC SPEED CONTROL HOSES, CABLES, BELLOWS AND REGULATOR . . . 1970/ -V8 (10)(80)

Printed in U.S.A.

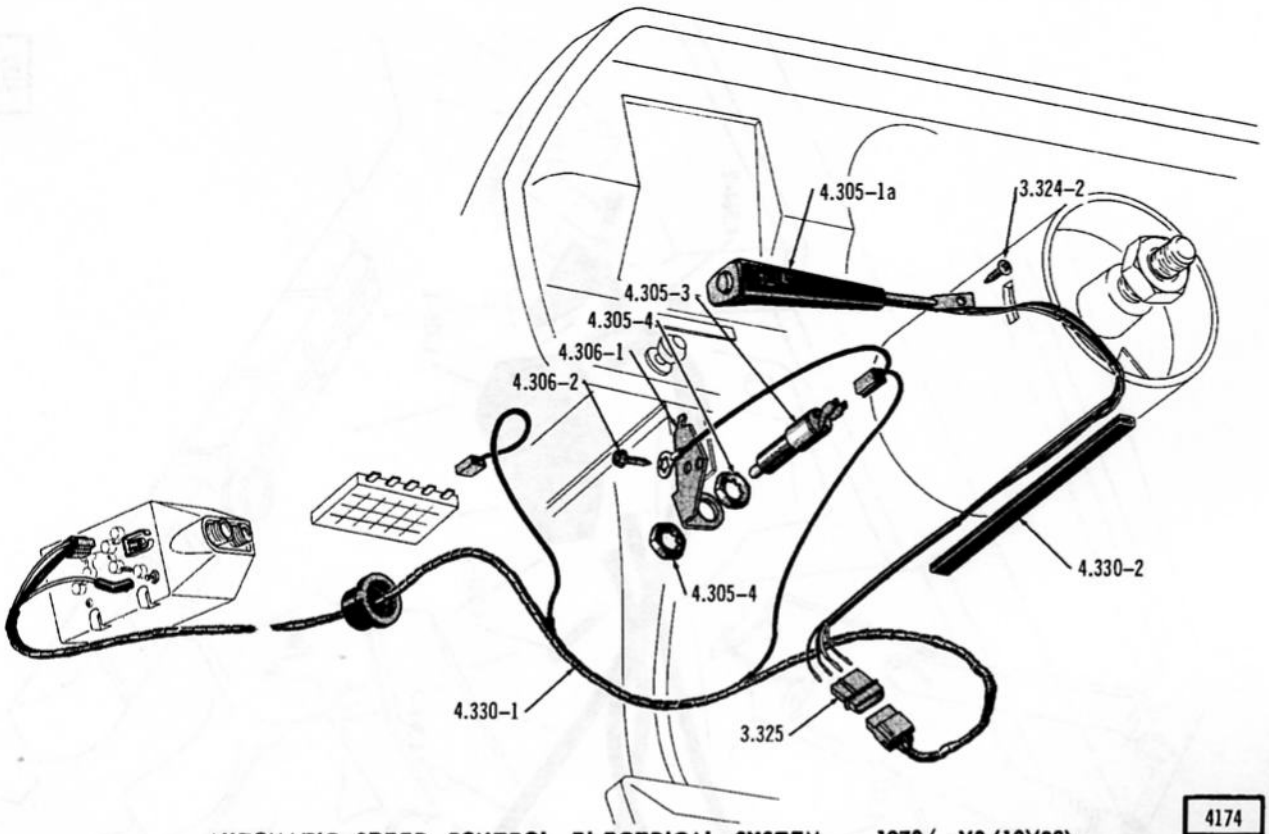

4174

AUTOMATIC SPEED CONTROL ELECTRICAL SYSTEM . . . 1970/ -V8 (10)(80)

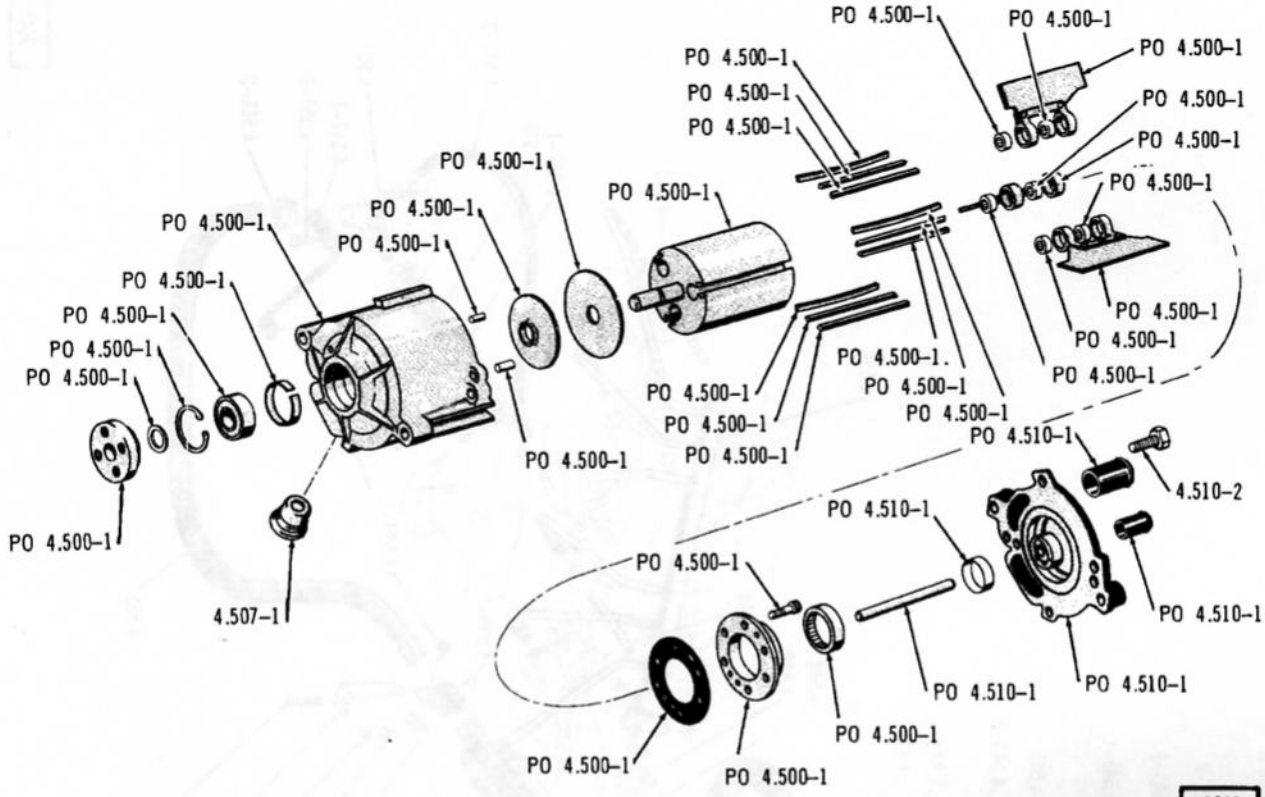

EXHAUST EMISSION AIR PUMP ... 1967

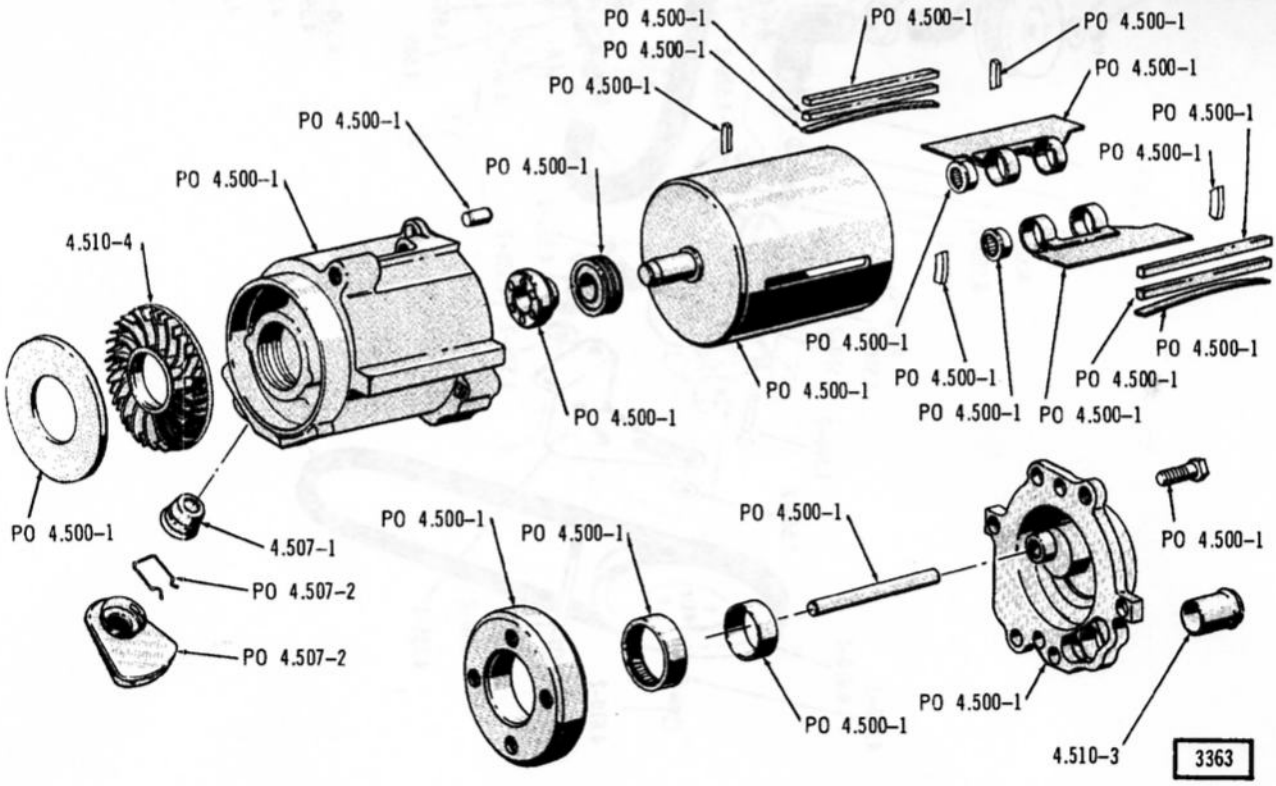

EXHAUST EMISSION AIR PUMP ... 1968/

3046

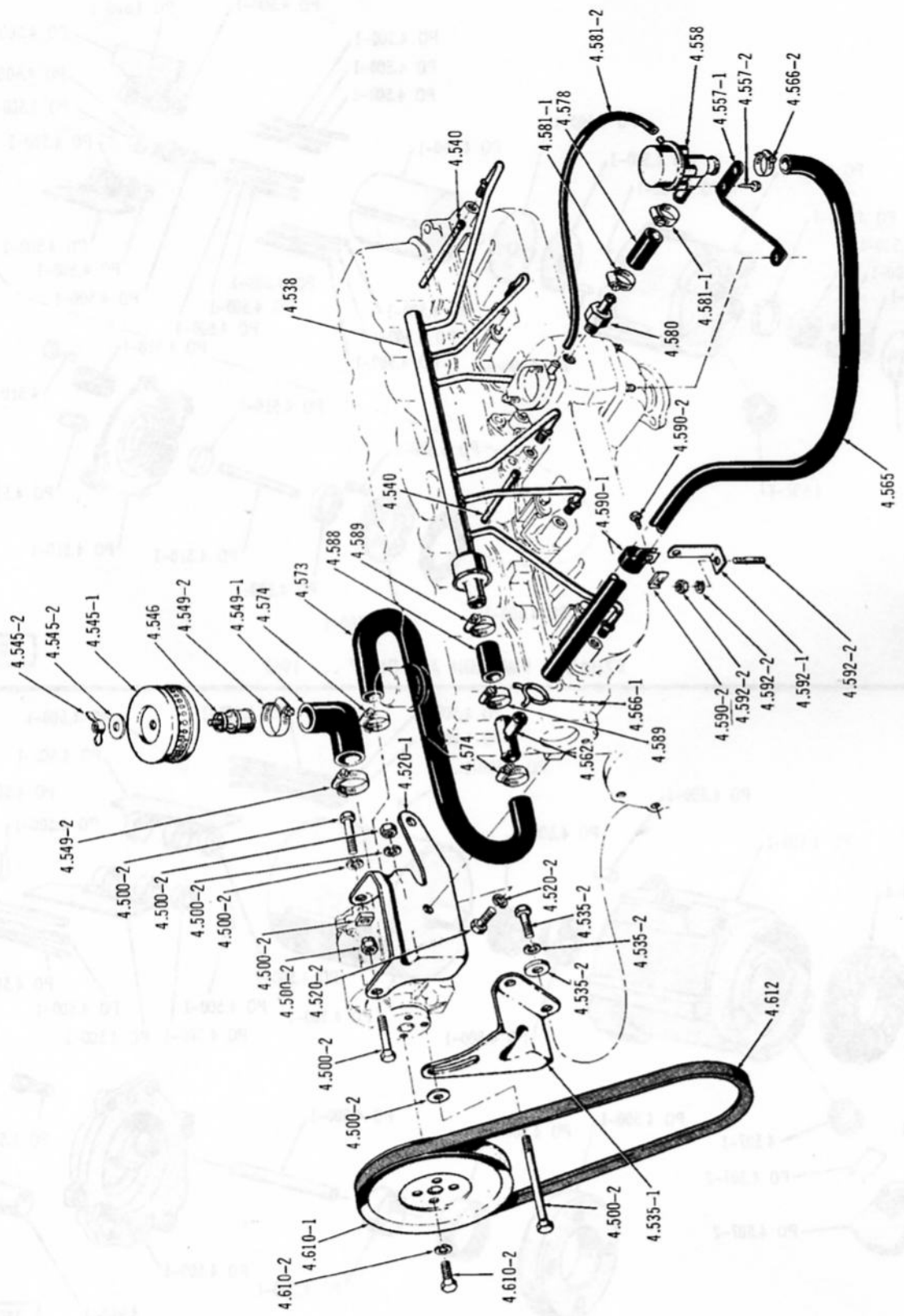

EXHAUST EMISSION SYSTEM ... SIX-LAC-LPS (1967-01)

3045

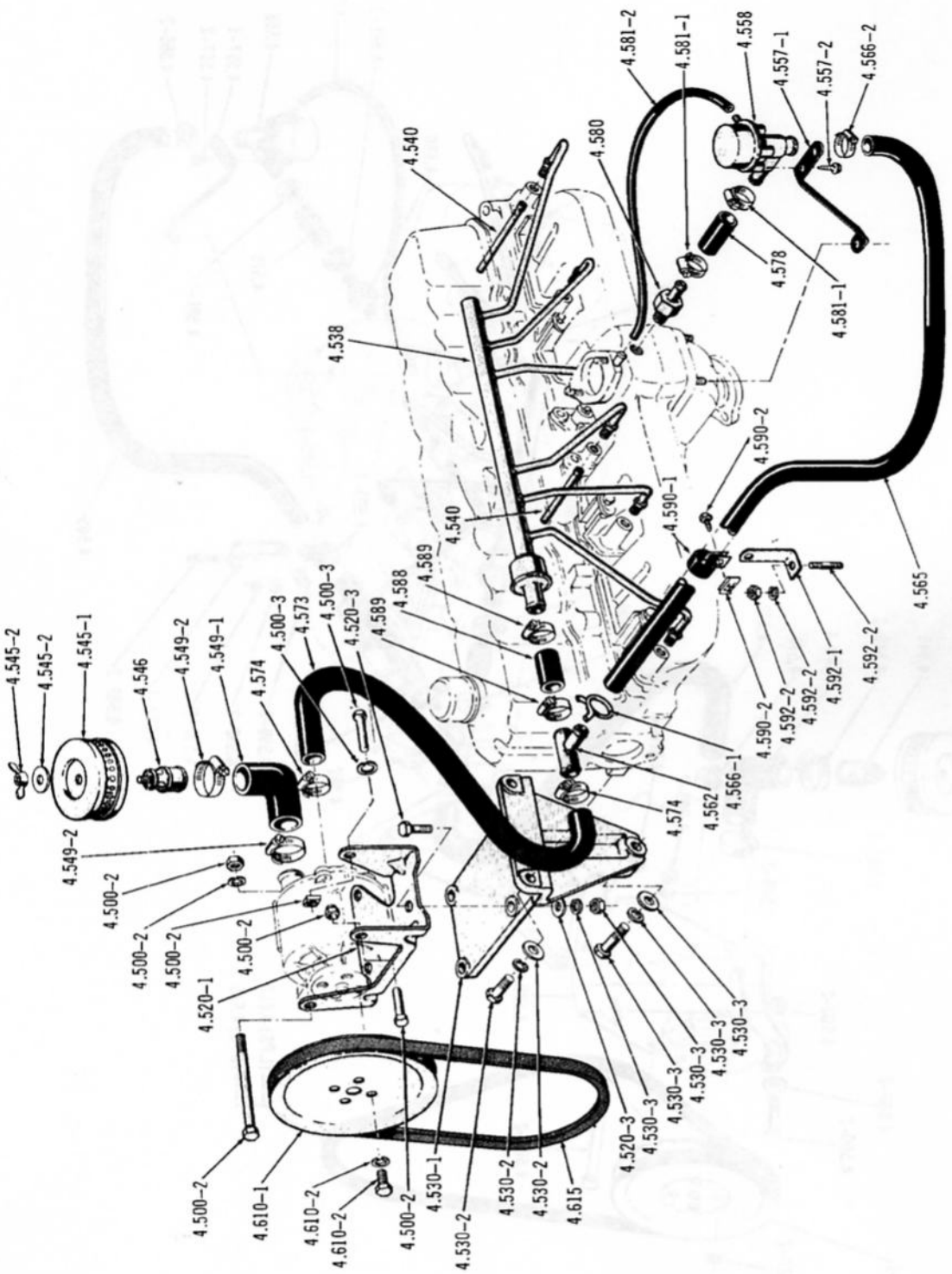

EXHAUST EMISSION SYSTEM ... SIX-LAC-WPS (1967-01)

3047

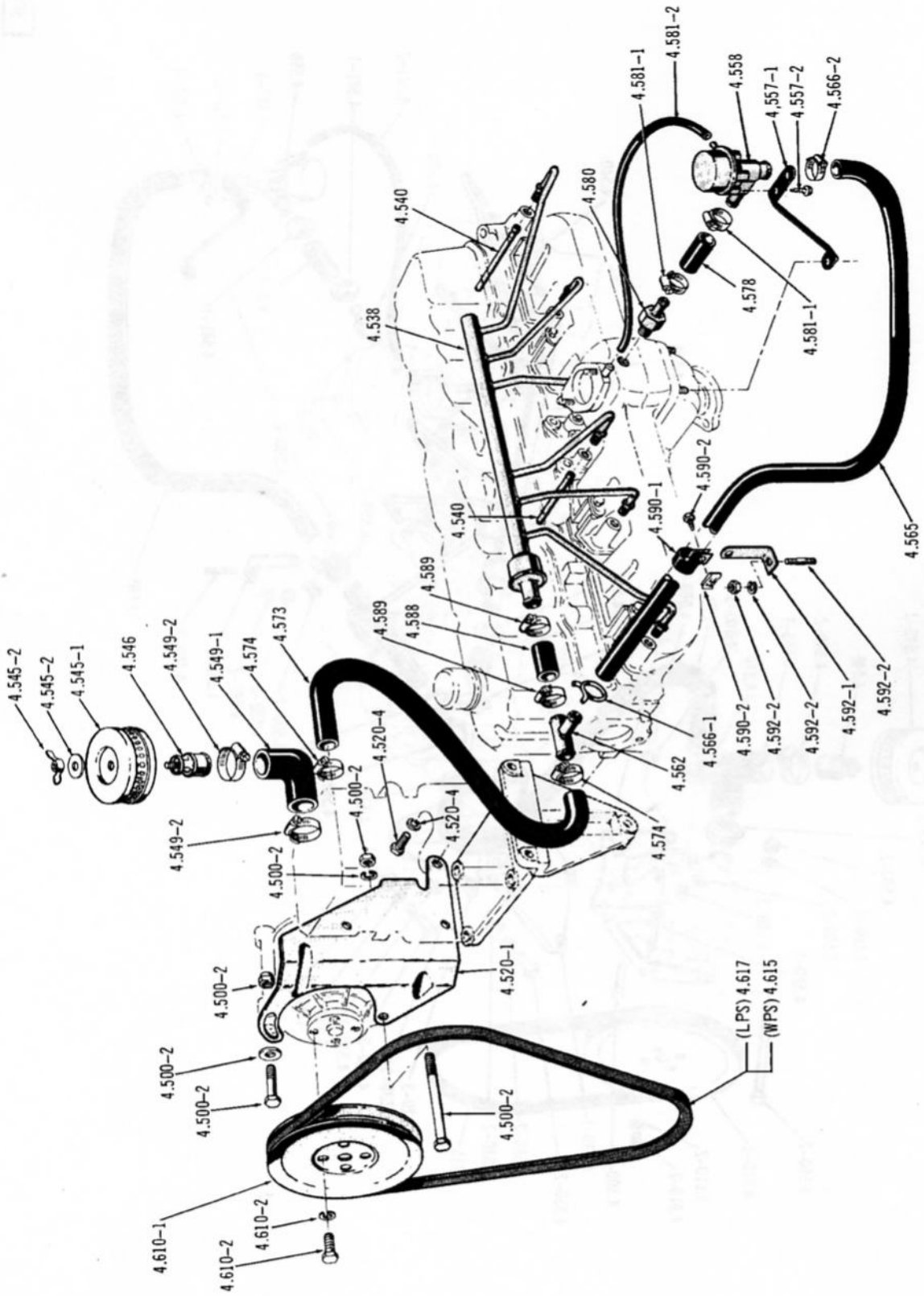

EXHAUST EMISSION SYSTEM ... SIX-WAC (1967-01)

3041

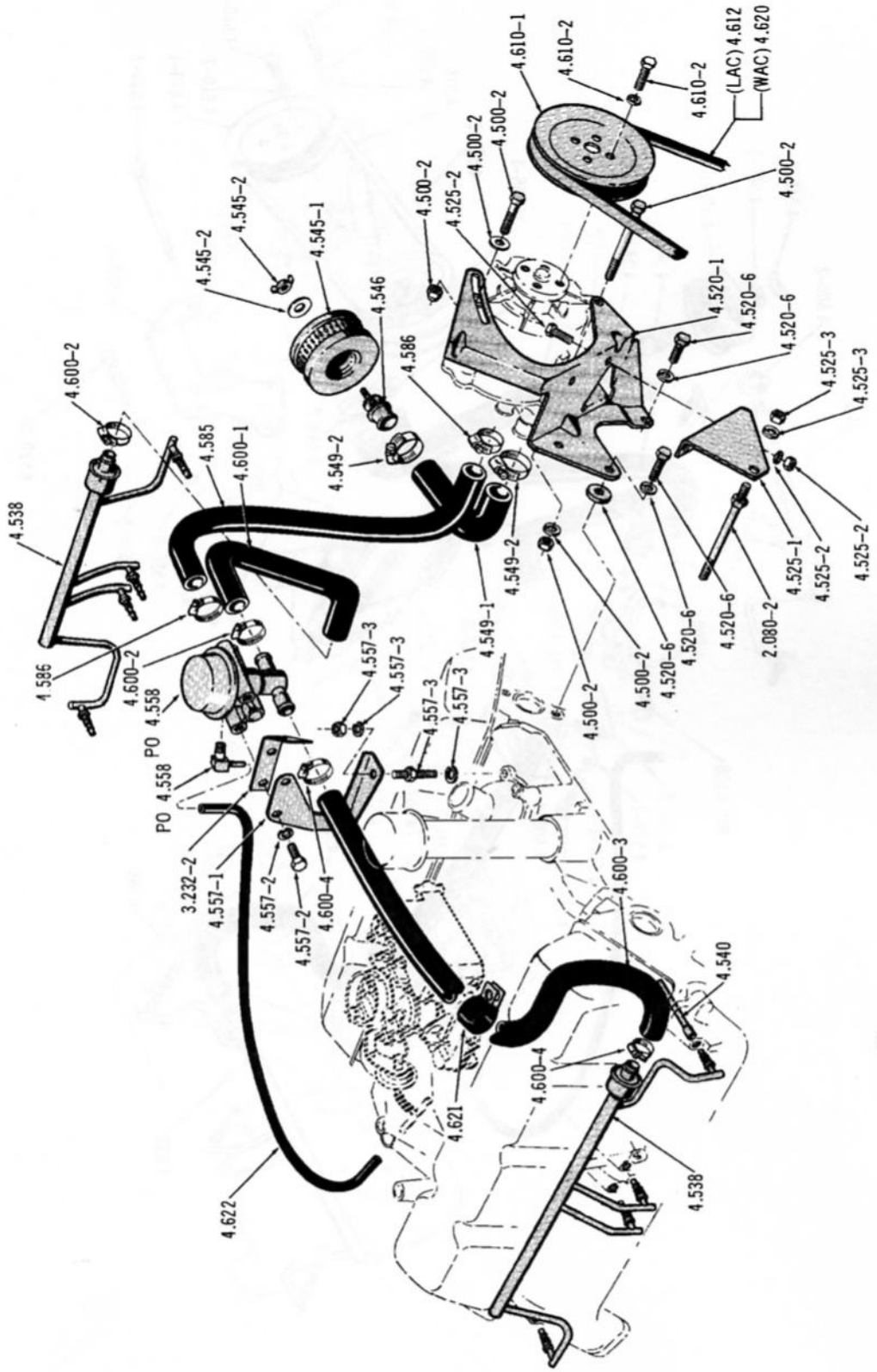

EXHAUST EMISSION SYSTEM ... V8-LPS (1967)

3042

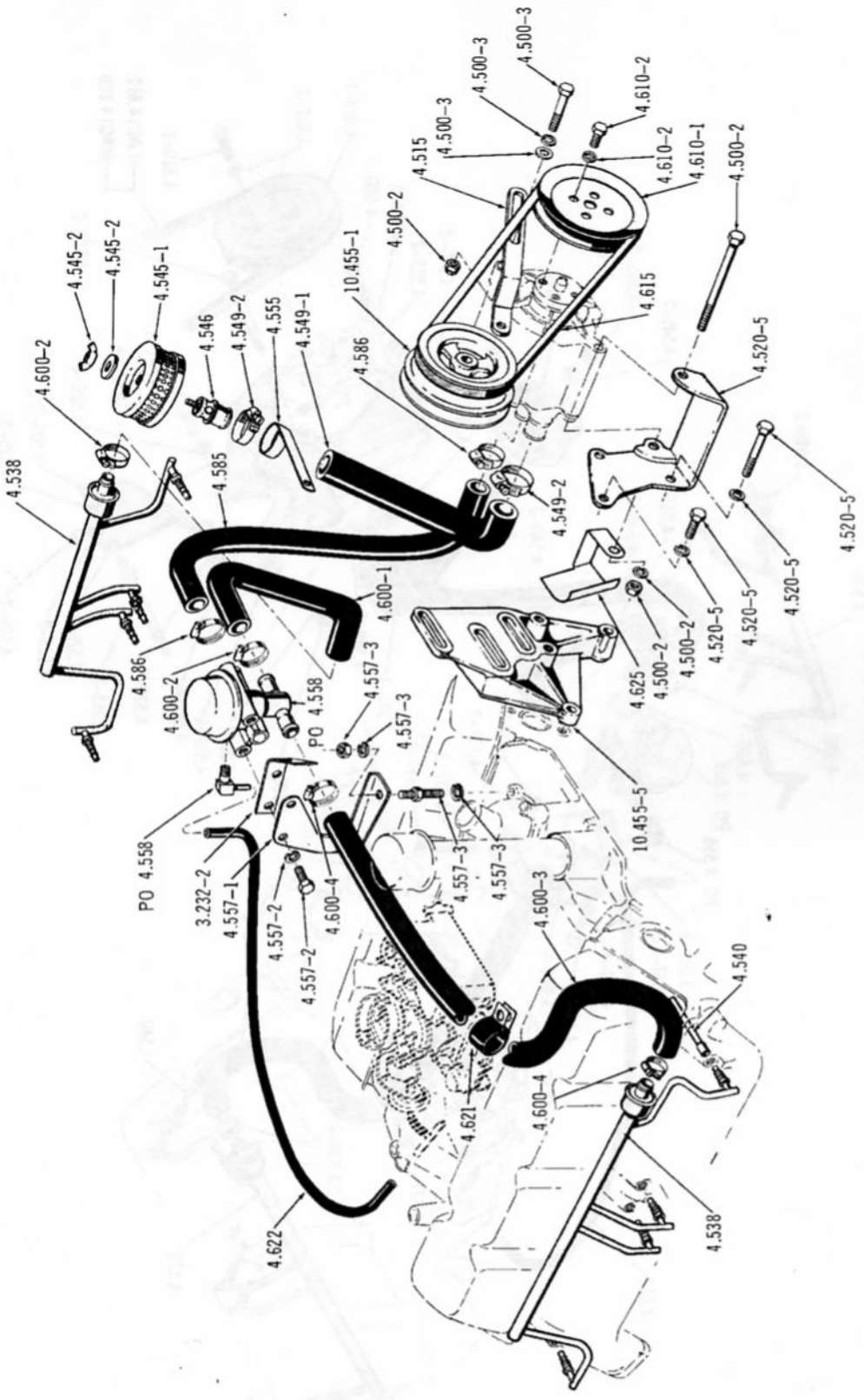

EXHAUST EMISSION SYSTEM ... V8-WPS (1967)

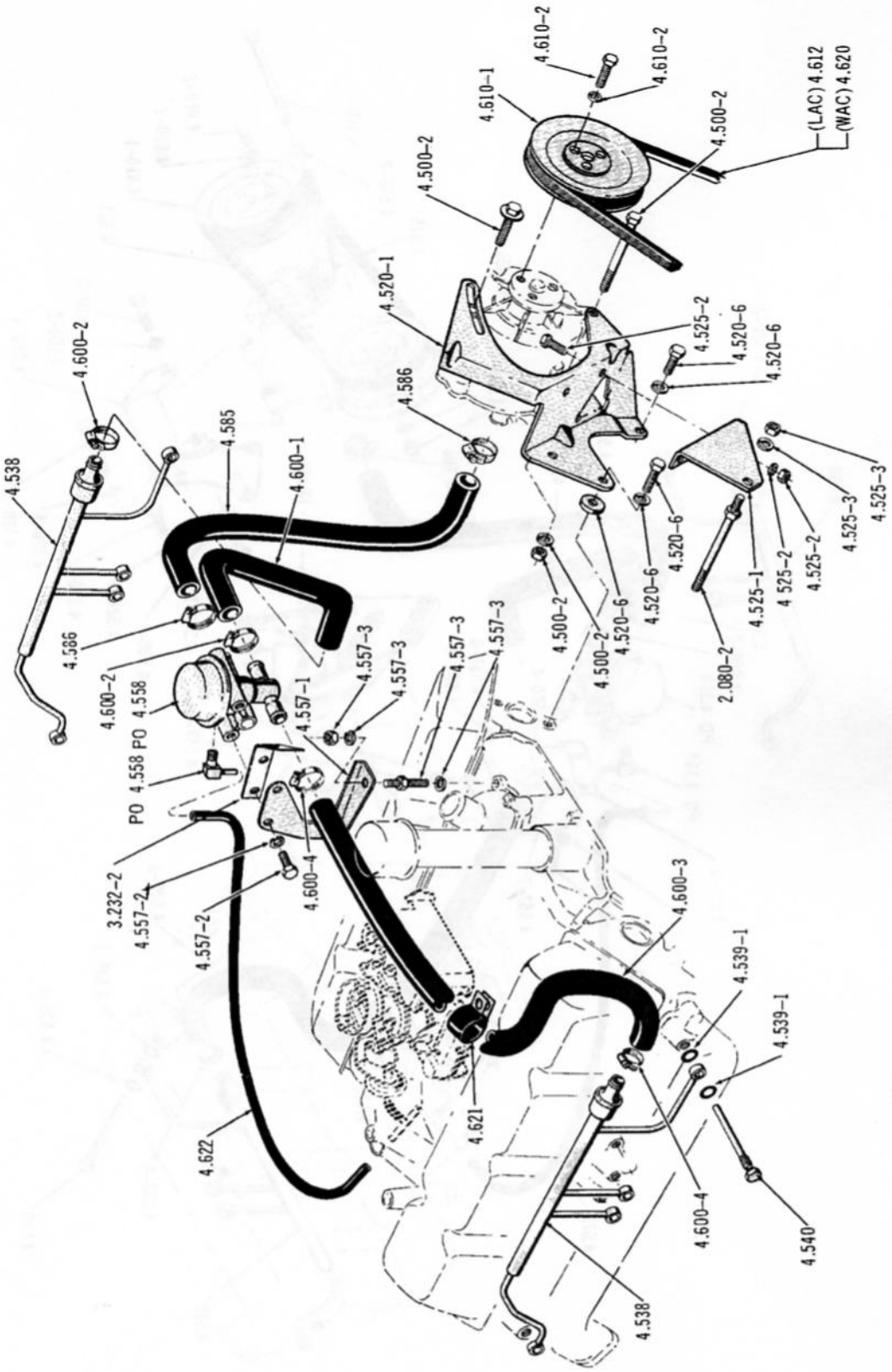

EXHAUST EMISSION SYSTEM ... V8-LPS (1968-Type 1)

3274

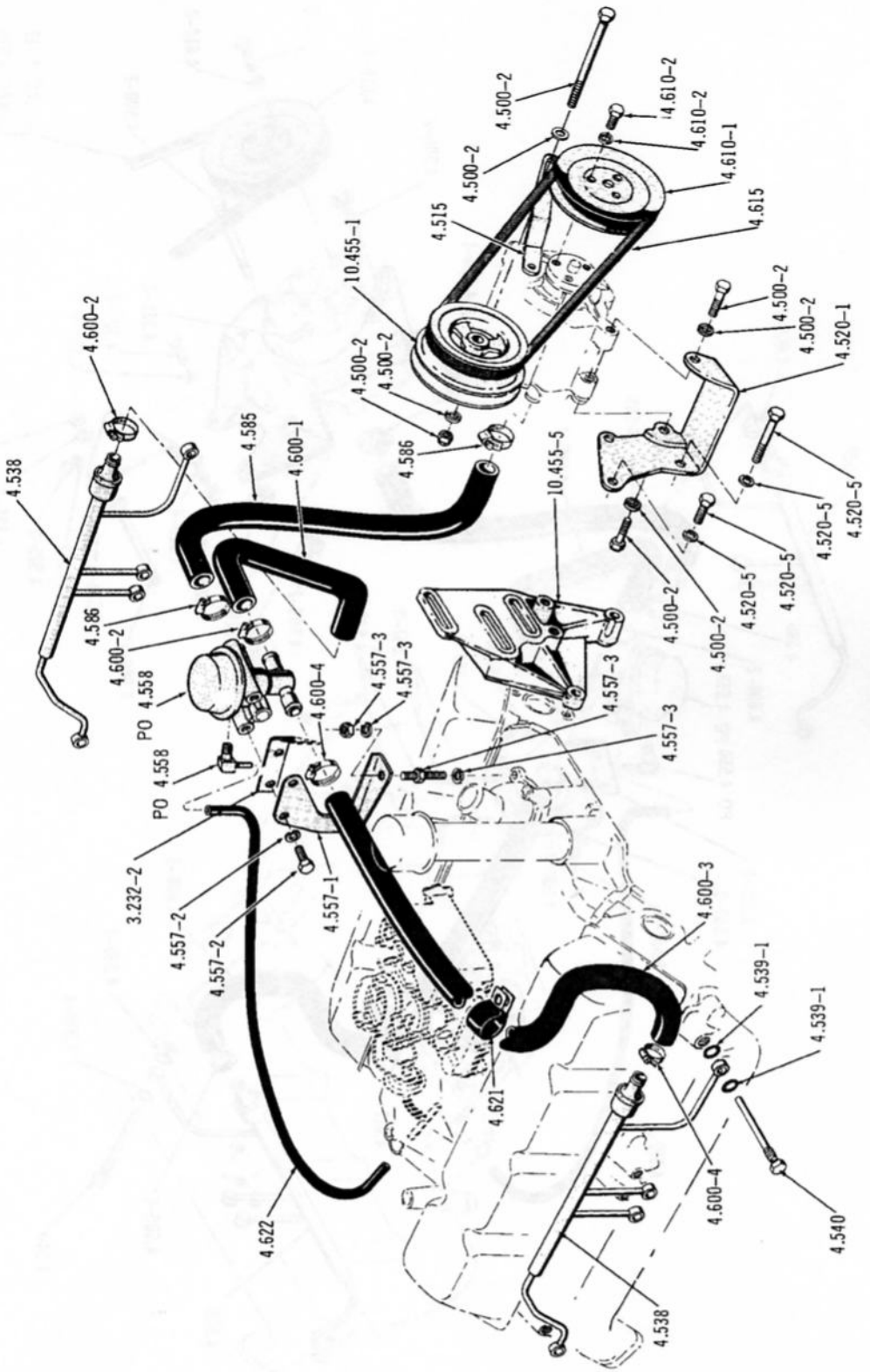

EXHAUST EMISSION SYSTEM ... V8-WPS (1968-Type 1)

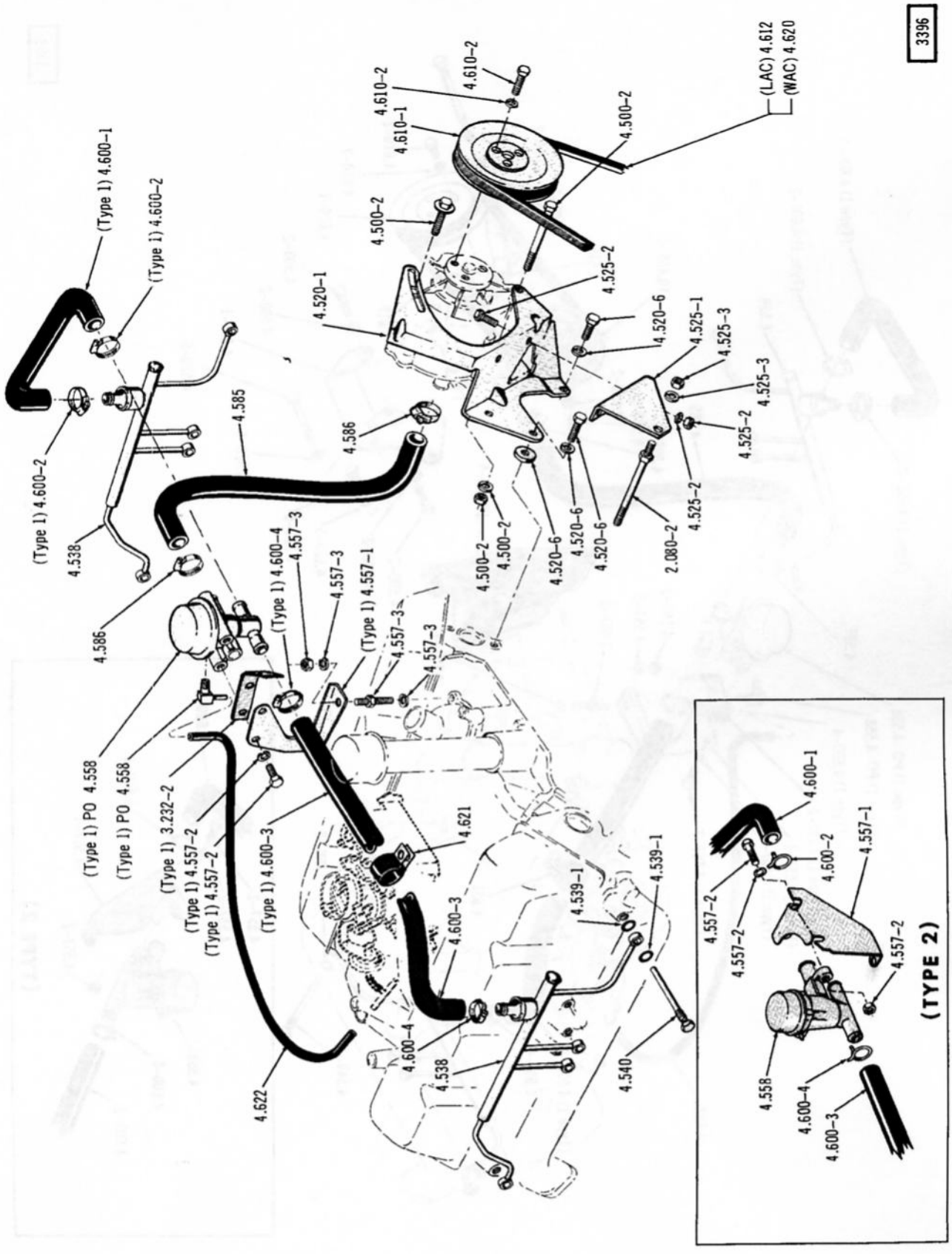

EXHAUST EMISSION SYSTEM ... V8-LPS (1968-Type 2)(1969/)

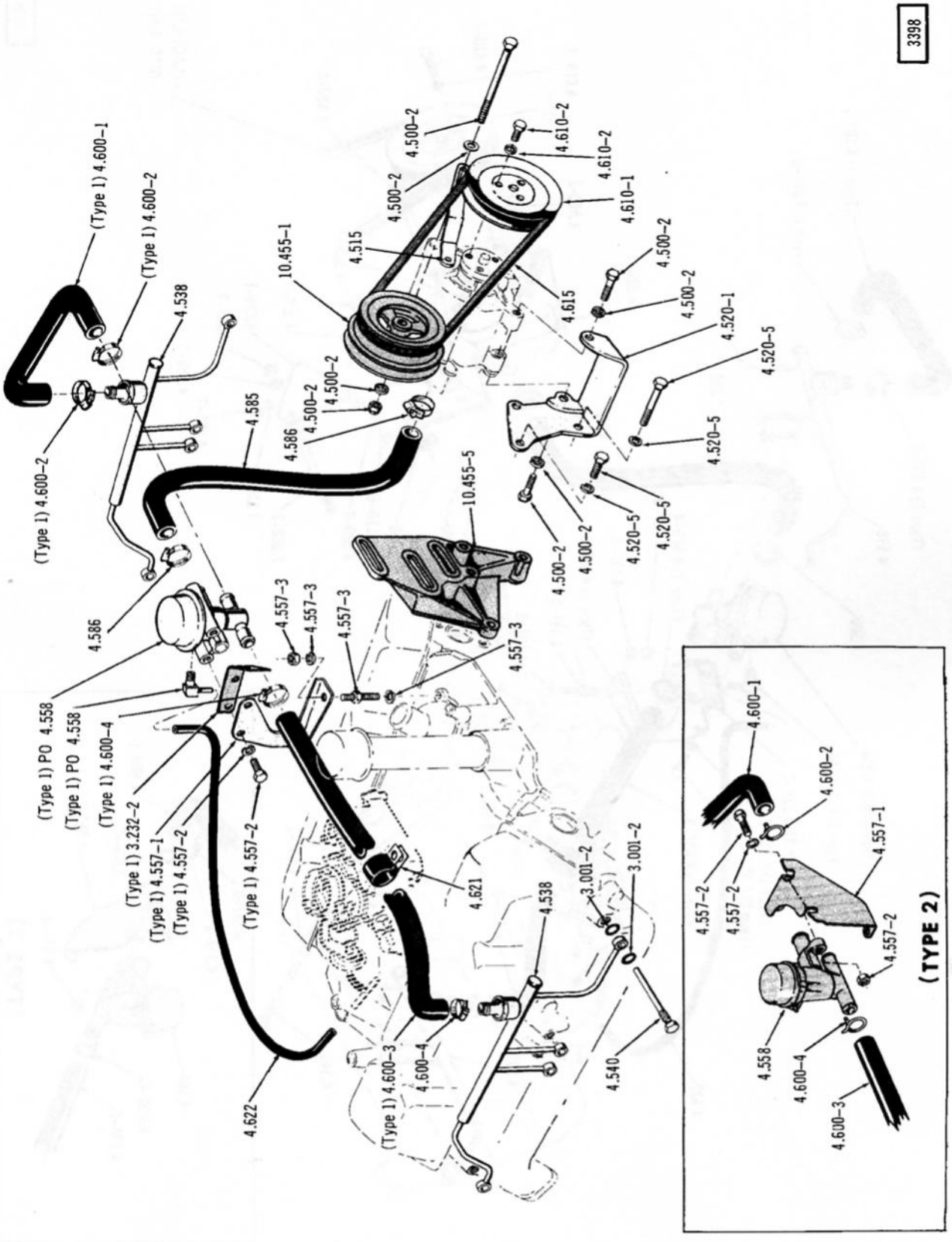

EXHAUST EMISSION SYSTEM . . . V8–WPS (1968–Type 2)(1969/71)

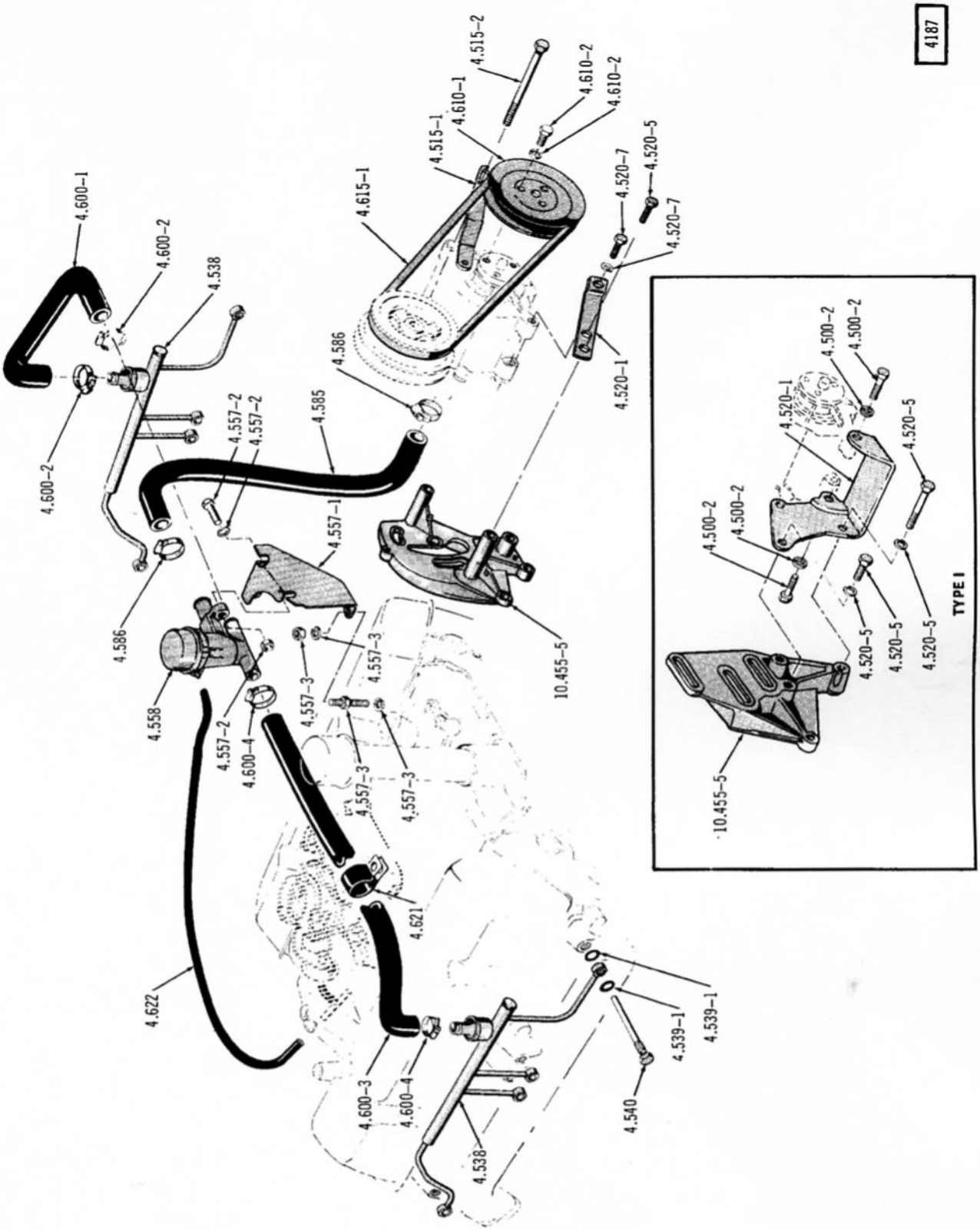

EXHAUST EMISSION SYSTEM . . . V8–WPS (1972)

GROUP NO. — DESCRIPTION — YEAR and MODEL	"L" CODE	PAKS CODE	PRIMARY GROUP NO.	PER CAR	PART NO.	CODE
4.001–1 CARBURETOR (For Components Refer To Chart Index Page Cr 4)						
LESS DUAL THROAT (LDT)						
67 (R-3705) 01 (Six-199-WST-LEEP)		230	.....	1	318 6501	
67 (R-3705) 01 (Six-199-WOD-LEEP)		230	.....	1	318 6501	
67 (R-3704) 01 (Six-199-WAT-LEEP)		230	.....	1	318 6502	
67 (R-3709)(RBS-4994S) 01 (Six-199-WST-WEEP)		230	.....	1	318 6503	
67 (R-3709)(RBS-4994S) 01 (Six-199-WOD-WEEP)		230	.....	1	318 6503	
67 (R-3706) 01 (Six-199-WAT-WEEP)		230	.....	1	318 6504	
67 (R-3978) 01 (Six-199-WAT-WEEP)		230	.....	1	319 0588	
67 (R-3253) 01-10-50-80 (Six-232-WST-LSFC)		230	.....	1	318 0999	
67 (R-3253) 01-10-50-80 (Six-232-WOD-LSFC)		230	.....	1	318 0999	
67 (RBS-3882) 01-10-50-80 (Six-232-WAT-LSFC)		***(Use 319 2058)***	.....	1	318 1105	
67 (R-3708-1)(RBS-4997S) 01-10-50-80 (Six-232-WST-WSFC)		***(Use 448 8203)***	.....	1	318 6505	
67 (R-3708-1)(RBS-4997S) 01-10-50-80 (Six-232-WOD-WSFC)		***(Use 448 8203)***	.....	1	318 6505	
67 (R-3707-1)(RBS-4997S) 01-10-50-80 (Six-232-WAT-WSFC)		***(Use 448 8203)***	.....	1	318 6506	
68 (R-3966)(RBS-6039S) 01 (Six-199-WST)(Six-199-WOD)		230	.....	1	319 0582	
68 (R-3966-2)(RBS-6039S) 01 (Six-199-WST)(Six-199-WOD)		230	.....	1	319 0582	
68 (R-3967) 01 (Six-199-WAT)		230	.....	1	319 0583	
68 (R-3967-2) 01 (Six-199-WAT)		230	.....	1	319 0583	
68 (R-4102) 01 (Six-232-WAT-Roque)		230	.....	1	319 2076	
68 (R-4102-2) 01 (Six-232-WAT-Roque)		230	.....	1	319 2076	
68 (RBS-4470) 01 (Six-232-WAT-Except Roque)		***(Use 448 6586)***	.....	1	319 1128	
68 (RBS-4626) 01 (Six-232-WAT-Except Roque)		***(Use 448 6586)***	.....	1	~~319 3778~~	
68 (RBS-A4626) 01 (Six-232-WAT-Except Roque)		233	.....	1	448 6586	
68 (RBS-4470) 10-70-80 (Six-232-WAT)		***(Use 448 6586)***	.....	1	319 1128	
68 (RBS-4626) 10-70-80 (Six-232-WAT)		***(Use 448 6586)***	.....	1	319 3778	
68 (R-3968)(RBS-6039S) 01-10-70-80 (Six-232-WST)(Six-232-WOD)		230	.....	1	319 0584	
68 (R-3968-2)(RBS-6039S) 01-10-70-80 (Six-232-WST)(Six-232-WOD)		230	.....	1	319 0584	
69 (RBS-4633) 01 (Six-199-WST)(Six-199-WOD)		233	.....	1	319 3885	
69 (RBS-4634) 01 (Six-199-WAT)		233	.....	1	319 3884	
69 (RBS-4666) 01 (Six-232-WAT-* 4-34)		233	.....	1	319 4502	
69 (R-4294)(RBS-4998S) 01 (Six-232-WAT-Roque-* 4-33)		230	.....	1	319 3893	
69 (RBS-4656) 10-70 (Six-232-WAT)		233	.....	1	319 4502	
69 (RBS-4631) 01-10-70 (Six-232-WST)(Six-232-WOD)		233	.....	1	319 3882	
70 (YF-4768S) 01 (Six-WST)			.....	1	319 7320	
70 (YF-4767S) 01-40 (Six-199-WAT)			.....	1	319 7321	
70 (YF-4978S) 01-40 (Six-232-WAT)			.....	1	321 0362	
70 (YF-4767S) 01 (Six-232-WAT)			.....	1	319 7321	
70 (YF-4768S) 40 (Six-199-WST)			.....	1	319 7320	
70 (YF-4815S) 40 (Six-232-WST)		***(Use 319 7320)***	.....	1	319 7322	
70 (YF-4766S) 40 (Six-232-WAT)		***(Use 319 7321)***	.....	1	319 7323	
70 (YF-4770S) 10-70 (Six-232-WST)			.....	1	319 7324	
70 (YF-4768S) 10-70 (Six-232-WST)			.....	1	319 7320	
70 (YF-4769S) 10-70 (Six-232-WAT)			.....	1	319 7325	
70 (YF-6093S) 01-40 (Canada-Six-232-WST)		***(Use 321 1037)***	.....	1	321 1036	
71 (YF-6093S) 01-40 (Six-232-WST)		***(Use 321 1037)***	.....	1	321 1036	
71 (YF-6094S) 01-40 (Six-232-WAT)			.....	1	321 1741	
70 (YF-6095S) 10-70 (Six-232-WST)		***(Use 321 1037)***	.....	1	321 1038	
70 (YF-6096S) 10-70 (Six-232-WAT)			.....	1	321 1037	
71 (YF-6096S) 01-10-40-70-80 (Six-258-WAT)			.....	1	321 1037	
71 (YF-6038S) 01-10-40-70-80 (Six-258-WAT)			.....	1	321 1227	
71 (YF-6095S) 10-70 (Six-232- WST)		***(Use 321 1037)***	.....	1	321 1038	
71 (YF-6096S) 10-80 (Six-232-WAT)			.....	1	321 1037	
71 (YF-6095S) 01-10-40-80 (Six-258-WST)		***(Use 321 1037)***	.....	1	321 1038	
72 (YF-6199S) 01-10-40-70-80 (Six-WST)			.....	1	321 4461	
72 (YF-6202S) 01-40 (Six-232-WAT)			.....	1	321 4463	
72 (YF-6200S) 01-40 (Six-258-WAT)			.....	1	321 2940	
72 (YF-6200S) 10-70-80 (Six-WAT)			.....	1	321 2940	

Printed in U.S.A.

FUEL - EXHAUST

WITH DUAL THROAT (WDT)

67	(WCD-3888)(WCD-6042S) 01-10-50-80 (Six-232-LSFC)	240	.....	1	320 7016
67	(WCD-4365)(WCD-6042S) 01-10-50-80 (Six-232-WSFC)	240	.....	1	318 8967
67	(R-3307-1) 01-10-50-80 (LHD-V8-WAT-LEEP)	***(Use 318 0626)***	.....	1	318 0627
67	(R-3308-1) 01-10-50-80 (V8-290-WST-LEEP)	239	.....	1	318 0626
67	(R-3308-1) 01-10-50-80 (V8-290-WOD-LEEP)	239	.....	1	318 0626
67	(R-3308-1) 01-10-50-80 (V8-290-W4ST-LEEP)	239	.....	1	318 0626
67	(R-3483-1) 01-10-50-80 (V8-290-WAT-WEEP)	239	.....	1	318 2486
67	(R-3484-1) 01-10-50-80 (V8-290-WST-WEEP)	239	.....	1	318 2483
67	(R-3484-1) 01-10-50-80 (V8-290-W4ST-WEEP)	239	.....	1	318 2483
67	(R-3905) 10-50-80 (V8-343-WAT-WEEP)	239	.....	1	318 9707
67	***(R-3824-1) 10-80 (RHD-V8-WAT)***	239	.....	1	318 7185
68	(WCD-4410)(WCD-6042S) 01-10-80 (Six-232-WST)(Six-232-WOD)	240	.....	1	319 0892
68	(WCD-4537)(WCD-6042S) 01-10-80 (Six-232-WAT)	240	.....	1	319 1302
68	***(WCD-4410)(WCD-6042S) 70 (Export-Six-232-WST)***	240	.....	1	319 0892
68	***(WCD-4537)(WCD-6042S) 70 (Export-Six-232-WAT)***	240	.....	1	319 1302
68	(8HM2) 01-10-70-80 (V8-290-WST)(V8-290-WOD)	***(Use 448 6223)***	.....	1	319 1866
68	(8HM2) 01-10-70-80 (V8-290-W4ST)	***(Use 448 6223)***	.....	1	319 1866
68	(8HA2) 01-10-70-80 (V8-290-WAT)	274	.....	1	319 1867
68	(8ZA2) 01-10-70-80 (V8-343-WAT)	***(Use 448 6225)***	.....	1	319 1868
69	(WCD-4667S) 01-10-80 (Six-232-WST)(Six-232-WOD)	240	.....	1	319 4503
69	(WCD-4668S) 01-10-80 (Six-232-WAT)	240	.....	1	319 4504
69	(9HM2) 70 (V8-290-WST-WFGS)	274	.....	1	319 4505
69	(9HA2) 01-10-70-80 (V8-290-WAT)	274	.....	1	319 4506
69	(9ZA2) 10-80 (V8-343-WAT)	274	.....	1	319 4509
70	(WCD-4816S) 01-10-80 (Six-232-WAT)		.....	1	319 7327
70	(WCD-4950S) 01-10-80 (Six-232-WAT)		.....	1	319 9701
70	***(WCD-4817S) 01-10-70 (Export-Six-232-WST)***		.....	1	319 7329
70	***(WCD-4816S) 70 (Export-Six-232-WAT)***		.....	1	319 7327
70	***(WCD-4950S) 70 (Export-Six-232-WAT)***		.....	1	319 9701
70	(WCD-4817S) 80 (Six-232-WST)		.....	1	319 7329
70	(0DA2) 01-10-70-80 (V8-304-WAT)		.....	1	319 7592
70	(0DM2) 70 (V8-304-WST-LTAC)		.....	1	319 7593
70	(0RA2) 10-70-80 (V8-360-WAT)		.....	1	319 7617
71	(1DA2) 01-10-70-80 (V8-304-WAT)		.....	1	321 1104
71	(1DM2) 01 (V8-360-WST)		.....	1	321 1105
71	(1DM2) 70 (V8-304-WST)(V8-360-WST)		.....	1	321 1105
71	(1RA2) 10-70-80 (V8-360-WAT)		.....	1	321 1108
72	(2DM2) 01-40-70 (V8-304-WST)		.....	1	321 4464
72	(2DA2) 01-10-40-70-80 (V8-304-WAT)		.....	1	321 3505
72	(2RA2) 01-10-70-80 (V8-360-WAT)		.....	1	812 1335

WITH FOUR BARREL (W4B)

67	(AFB-4352)(AFB-6045S) 01-10 (V8-290-WST-LEEP)	256	.....	1	318 7765
67	(AFB-4352)(AFB-6045S) 01-10 (V8-290-W4ST-LEEP)	256	.....	1	318 7765
67	(AFB-4353)(AFB-6045S) 01 (V8-290-WST-WEEP)	256	.....	1	318 7635
67	(AFB-4353)(AFB-6045S) 01 (V8-290-W4ST-WEEP)	256	.....	1	318 7635
67	(AFB-4216)(AFB-6046S) 01-10-50-80 (LHD-V8-343-W4ST-LEEP)	256	.....	1	318 4780
67	(AFB-4258)(AFB-6046S) 01-10-50-80 (LHD-V8-343-W4ST-WEEP)	256	.....	1	318 5095
67	(AFB-4354)(AFB-6046S) 10-50-80 (LHD-V8-343-WAT-LEEP)	256	.....	1	318 7766
67	(AFB-4358)(AFB-6046S) 10-50-80 (LHD-V8-343-WAT-WEEP)	256	.....	1	318 7634
67	***(AFB-4355) 80 (RHD-V8-343)***	256	.....	1	318 7186
68	(AFB-4467) 01-70 (V8-290-W4ST)	256	.....	1	319 0717
68	(AFB-4622)(AFB-6045S) 01-70 (V8-290-W4ST)	256	.....	1	319 3276
68	(AFB-4585)(AFB-6045S) 30 (V8-290-WAT)	256	.....	1	319 3069
68	(AFB-4468) 10-70-80 (LHD-V8-343-WAT)	***(Ref. Pr. List)***	.....	1	319 0719
68	(AFB-4623)(AFB-6046S) 10-70-80 (LHD-V8-343-WAT)	256	.....	1	319 3279
68	(AFB-4469) 10-70-80 (LHD-V8-343-W4ST)	256	.....	1	319 0718
68	(AFB-4624)(AFB-6046S) 10-70-80 (LHD-V8-343-W4ST)	256	.....	1	319 3278
68	***(AFB-4692)(AFB-6046S) 80 (RHD-V8-343-WAT)***	256	.....	1	319 4360
68	(AFB-4584)(AFB-6046S) 10-30-70-80 (V8-390-WAT)	256	.....	1	319 3071
68	(AFB-4583)(AFB-6046S) 10-30-70-80 (V8-390-W4ST)	256	.....	1	319 3070

69	(AFB-4661S)(AFB-6043S) 30 (V8-290-WAT)	256	.....	1	319 4508
69	(AFB-4660S)(AFB-6043S) 01-30-70 (V8-290-W4ST)	256	.....	1	319 4507
69	(AFB-4663S)(AFB-6044S) 10-30-70-80 (V8-343-WAT)	256	.....	1	319 4511
69	(AFB-4662S)(AFB-6044S) 01-30-70 (V8-343-W4ST)	256	.....	1	319 4510
69	(AFB-4665S)(AFB-6044S) 10-30-70-80 (V8-390-WAT)	256	.....	1	319 4513
69	(AFB-4664S)(AFB-6044S) 10-30-70 (V8-390-W4ST)	256	.....	1	319 4512
69	(AFB-4664S)(AFB-6044S) 09 (SC/RAMBLER-V8-390-W4ST)	256	.....	1	319 4512
70	(0WM4) 10-30-70 (V8-360-W4ST)(V8-390-W4ST)		.....	1	319 7610
70	(0WA4) 10-30-70-80 (V8-360-WAT)(V8-390-WAT)		.....	1	319 7611
71	(1RA4) 01-10-70-80 (V8-360-WAT)		.....	1	812 1002
71	(1TM4) 01-10-70 (V8-360-WST) (V8-360-W4ST) (V8-401-W4ST)		.....	1	321 1106
71	(1TA4) 10-70-80 (V8-401-WAT)		.....	1	321 1107
72	(2RA4) 01-10-70-80 (V8-360-WAT-Except Police)		.....	1	812 1236
72	(2TA4) 10-70-80 (V8-401-WAT-Except Police)		.....	1	321 4466
72	(2TM4) 70 (V8-WST)		.....	1	321 4465
72	***(2RA4) 10-80 (Police-V8-360-WAT)***		.....	1	812 1738
72	***(2TA4) 10-80 (Police-V8-401-WAT)***		.....	1	321 7754

4.001–1a MODIFICATION KIT, Carburetor (Service Fix)

68	V8 (WST-Used With Carburetors 8HM2, 8HA2, 8ZA2-* 4-43)	.....	1	448 5996
68	V8 (WDT-Used With Carburetors 8HM2, 8HA2, 8ZA2-* 4-44)	.....	1	448 5997
68/69	SIX (Used With RBS Carburetors)	.....	1	448 8473
71	360 (WDT-WAT-Anti-Diesel)	.....	1	812 1246
71	360 (W4B-WAT-Anti-Diesel)	.....	1	812 1247

4.001–2 ATTACHING PARTS, Carburetor To Manifold

STUD	67/70	SIX (LDT)	17.718	2	G191992
STUD	67/70	SIX (WDT)	17.718	4	G148090
STUD	71/	SIX	17.718	2	G113237
STUD	70/	V8 (W4B)	17.718	4	G148090
STUD	67/69	(5/16" x 1-1/2") V8	17.718	4	G148062
STUD	69/	(15/16" x 1-3/8") V8 (WDT)	17.718	4	G272962
WASHER, Plain	68/69	V8	17.814	4	400 1091
NUT, Jam	67/	SIX (LDT)	17.410	2	G114494 NA
NUT, Hexagon	67	SIX (WDT)	17.406	4	G120368
NUT, Hexagon	68/70	SIX (WDT)	.....	4	400 3825
NUT, Hexagon	67	V8	17.406	4	G120368
NUT, Hexagon	68/	V8	.....	4	400 3825

4.002–1 SOLENOID, Carburetor Throttle Stop

71/	360 (WAT-WDT)	.....	1	812 0480
71	360 (WAT-W4B)	.....	1	812 0323
72	360-401 (WAT-W4B)	.....	1	812 0480

4.002–2 BRACKET, Throttle Solenoid

71/	360 (WAT-WDT)	.....	1	812 1166
71	360 (WAT-W4B)	.....	1	812 1167
72	360-401 (WAT-W4B)	.....	1	812 1166

4.004–1 GASKET, Carburetor

67	199 (01-LEEP)	.....	2	317 3228
67	199 (01-WAT-WEEP)	.....	2	317 3228
67	199 (01-WST-WEEP)(01-WOD-WEEP)	.....	2	317 6474
68	199 (01)	.....	2	317 6474
69	199 (01)	.....	2	317 5948
67	232 (WAT-LDT-LSFC)	.....	2	317 6474
67	232 (WAT-LDT-WSFC)	.....	2	317 3228
67/68	232 (WST-LDT)(WOD-LDT)	.....	2	317 3228
68	232 (WAT-LDT)	.....	2	317 6474
67/70	232 (WDT)	.....	2	317 5993

Printed in U.S.A.

69	232 (01-WAT-LDT-Rogue-* 4-33)	2	317 3228	
69	232 (01-LDT-* 4-34)	2	317 6474	
70	SIX (01-LDT)(10-LDT)(70-LDT)(Carburetor To Manifold)	2	317 3228	
70	***232 (Export-70-WDT)***	2	317 3228	
71/	SIX	1	317 3228	
67	V8 (WDT) ***(Use 319 1887)***	1	318 7844	
68/69	V8 (WDT-Carburetor To Insulator)	1	319 1886	
68/69	V8 (WDT-Insulator To Manifold)	1	319 3036	
67/69	V8 (W4B)	1	318 5729	
70/	V8 (WDT-Carburetor To Insulator)	1	319 7873	
70/	V8 (WDT-Insulator To Manifold)	1	319 7874	
70/	V8 (W4B)	2	319 7887	

4.004–2 INSULATOR, Carburetor

67	199 (01-LEEP)	1	317 3289	
67	199 (01-WEEP)	1	318 1887	
68	199 (01)	1	317 6473	
69	199 (01)	1	317 6473	
70	199 (01)	1	319 8321	
67/68	232 (WAT-LDT)	1	317 6473	
67/68	232 (WST-LDT)(WOD-LDT)	1	317 3289	
67/69	232 (WDT)	1	317 5992	
69	232 (01-LDT-Rogue-* 4-33)	1	317 3289	
69	232 (01-LDT-* 4-34)	1	317 6473	
70	232 (01-LDT-WST)	1	319 8321	
70	232 (01-LDT-WAT)	1	317 3289	
69	232 (10-LDT)(70-LDT)	1	317 6473	
70	232 (10-LDT)(70-LDT)	1	319 8321	
70	232 (40-LDT)	1	317 3289	
70	232 (WDT)	1	319 8322	
70	***232 (Export-70-WDT)***	1	319 8322	
68/69	V8 (WAT-WDT)(Adapter)	1	319 2112	
68/69	V8 (WST-WDT)(W4ST-WDT)(Adapter)	1	319 2130	
70	V8 (WDT)(Adapter-Carburetor To Intake Manifold)...(Incl. Spacer And Tube)	1	319 7876	
70	V8 (W4B)	1	319 7909	
71/	V8 (WDT)(Adapter-Carburetor To Intake Manifold)	1	319 7877	
71/	V8 (W4B)	1	321 0126	

4.004–3 ATTACHING PARTS, Carburetor To Adapter

STUD	68/	V8 (WDT)	17.718	4	G272962	

4.004–4 ATTACHING PARTS, Carburetor Adapter To Intake Manifold

BOLT	70/	V8 (WDT)	17.038	4	G180078	NA
WASHER	70/	V8 (WDT)	17.814	4	G120393	NA

4.004–5 CAP, Carburetor Insulator Vacuum Outlet

70	390 (WAT)	1	321 0520	

4.015–1 DUCT, Carburetor Air Cleaner Hot Air (Thermostat Control)

72	SIX (01)(40)	1	321 6422	
72	SIX (WST-10)(WST-70)(WST-80)	1	321 6422	
68/70	V8 (WDT)	1	319 1899	
68/70	V8 (W4B)	1	319 1898	

4.015–2 ATTACHING PARTS, Duct To Air Cleaner

SCREW, Tapping	72	SIX (01)(40) ***(Use 318 9013)***	17.671	2	400 0478	
SCREW, Tapping	72	SIX (WST-10)(WST-70)(WST-80) ***(Use 318 9013)***	17.671	2	400 0478	
SCREW, Tapping	68/69	V8 ***(Use 318 9013)***	17.671	2	400 0478	
SCREW, Tapping	70	V8 ***(Use 318 9013)***	17.671	2	400 0478	

FUEL - EXHAUST

4.015–3 DUCT, Exhaust Manifold Hot Air

68	V8 (290-WAT-* 4-21)(343-WAT-* 4-21)	.....	1	319 1895
68	V8 (290-WAT-* 4-22)(343-WAT-* 4-22)	.....	1	319 2227
68/69	V8 (290-W4ST)(343-W4ST)	.....	1	319 2223
70	V8 (304-W4ST)(360-W4ST)	.....	1	319 2223
69	V8 (290-WAT)(343-WAT)	.....	1	319 2227
70	V8 (304-WAT)(360-WAT)	.....	1	319 2227
68/70	V8 (390-WAT)	.....	1	319 2228
68/70	V8 (390-W4ST)	.....	1	319 2224

4.015–4 ATTACHING PARTS, Duct To Manifold

BOLT, Hexagon	68/69	V8	17.038	1	G180144 NA
BOLT, Hexagon	70	V8	17.038	1	G180144 NA
STUD	68	V8 (290-WAT-* 4-21)(343-WAT-* 4-21)	17.718	2	G148062
SPACER	68	V8 (290-WAT-* 4-21)(343-WAT-* 4-21)	.....	2	319 1981
WASHER, Lock	68	V8 (290-WAT-* 4-21)(343-WAT-* 4-21)	17.820	2	G120214
WASHER, Lock	68	V8 (Used With Hexagon Bolt)	17.820	1	G131100
NUT, Hexagon	68	V8 (290-WAT-* 4-21)(343-WAT-* 4-21)	17.406	2	G120368

4.015–5 ATTACHING PARTS, Duct To Spark Plug Shield

SCREW, Tapping	68/69	V8	17.671	2	320 9585
SCREW, Tapping	70	V8	17.671	2	320 9585

4.015–6 AIR INLET, Carburetor Air Cleaner

70	19 (MACHINE)	.....	1	321 0004

4.015–7 ATTACHING PARTS, Air Inlet To Air Cleaner

SCREW, Tapping	70	19 (MACHINE) ***(Use 318 9013)***	17.671	2	400 0478

4.015–8 TUBE, Carburetor Air Cleaner To Exhaust Manifold Shroud

72	SIX (01)(40)	.....	1	321 6423
72	SIX (10-WST)(70-WST)(80-WST)	.....	1	321 6423
72	V8 (40-WST)(70-WST)	.....	1	321 6332
72	V8 (10-WAT)(40-WAT)(70-WAT)(80-WAT)	.....	1	321 1358

4.015–9 ATTACHING PARTS, Duct To Carburetor Air Cleaner

CLAMP, Hose	72	01-40 (Six-WTAC)	.....	1	320 3079
CLAMP, Hose	72	10-70-80 (Six-WTAC-WST)	.....	1	320 3079

4.015–10 ATTACHING PARTS, Duct To Exhaust Manifold Shroud

CLAMP, Hose	72	01-40 (Six-WTAC)	.....	1	320 3079
CLAMP, Hose	72	10-70-80 (Six-WST-WATC)	.....	1	320 3079

4.015–11 SHROUD, Exhaust Manifold Heat

72	(3.35" Long) SIX (01)(40)	.....	1	321 6420
72	(3.35" Long) SIX (10-WST)(70-WST)(80-WST)	.....	1	321 6420
72	(9.66" Long) SIX (01)(40)	.....	1	321 6421
72	(9.66" Long) SIX (10-WST)(70-WST)(80-WST)	.....	1	321 6421
72	(Inner) 01-40 (V8-WTAC)	.....	1	321 7593
72	(Outer) 01-40 (V8-WTAC)...(Incl. Heat Tube Connector)	.....	1	321 7589

4.015–12 CAP, Exhaust Manifold Heat Shroud End

72	01-40 (V8-WTAC)	.....	1	321 7591

4.015–13 ATTACHING PARTS, Cap And Inner To Outer Shroud

SCREW, Hexagon	72	01-40 (V8-WTAC)	17.671	5	G9421586 NA

FUEL - EXHAUST

4.015–14 ATTACHING PARTS, Shroud Retainer

SCREW, Hexagon	72	01-40 (V8-WTAC)	17.671	1	G442751

4.020–1 TUBE, Carburetor Choke Heater (To Carburetor)

67/68	199 (LDT)	.....	1	318 1935
69	199 (LDT)	.....	1	319 1468
67	232 (LDT-WAT)	.....	1	317 7010
68	232 (LDT-WAT)	.....	1	319 1468
67/68	232 (LDT-WST)(LDT-WOD)	.....	1	318 1935
69	232 (01-LDT-WAT-Rogue-* 4-33)	.....	1	318 1935
69	232 (01-LDT-WAT-Rogue-* 4-34)	.....	1	319 1468
69	232 (01-LDT-WAT-Except Rogue)	.....	1	319 1468
69	232 (10-LDT)(70-LDT)	.....	1	319 1468
70	SIX (LDT)	.....	1	319 4830
67/70	232 (WDT)	.....	1	317 7026
71	SIX	.....	1	321 1527
72	SIX	.....	1	321 5473
70	***232 (Export-70-WDT)***	.....	1	317 7026
67	V8 (WDT)	.....	1	318 5843
68/	V8 (WDT)	.....	1	319 1878
67/69	V8 (W4B)	.....	1	318 5844
70/71	V8 (W4B)	.....	1	319 8073
72	V8 (WDT-WST)	.....	1	321 6439
72	V8 (WDT-WAT)	.....	1	321 5970
72	V8 (W4B-WST)(W4B-W4ST)	.....	1	321 6440
72	V8 (W4B-WAT)	.....	1	321 5968

4.020–2 SLEEVE, Carburetor Choke Heater Tube

67/		17.030	1	G114628

4.020–3 NUT, Carburetor Choke Heater Tube

67/		17.448	1	G114627

4.020–4 TUBE, Carburetor Choke Heater (In Manifold)

67/	SIX	.....	1	320 7101
67/	V8	.....	1	318 0411

4.020–5 ATTACHING PARTS, Tube To Manifold

BOLT, Hexagon	67/68	V8	17.038	2	G180077 NA
BOLT, Hexagon	69/	V8	1.151	2	316 2258
WASHER, Lock	67/68	V8	17.820	2	G120214

4.020–6 GASKET, Carburetor Choke Heater Tube (To Manifold)

67/	V8	.....	1	318 0406

4.020–7 TUBE, Carburetor Clean Air

67	V8 (WDT)	.....	1	318 5871
68/71	V8 (WDT)	.....	1	319 1888
72	V8 (WDT)	.....	1	321 5969
67/69	V8 (W4B)	.....	1	318 5733
70/71	V8 (W4B)	.....	1	319 8138
72	V8 (W4B)	.....	1	321 5967

4.020–8 HOSE, Carburetor Clean Air Tube (To Carburetor)

67/	V8 ..... ***(Use 319 3524)***	16.240	1	318 8565

4.020–9 TUBE KIT, Carburetor Choke Clean Air (Incl. Grommet, Clip And Washer)

67/69	SIX	.....	1	448 6877

FUEL - EXHAUST

4.024–1 CABLE, Throttle Control (Hand)

67/68	10-80	296	.....	1	316 2119	
69/	10-80	296	.....	1	319 4733	

4.024–2 ATTACHING PARTS, Cable To Control Shaft Bracket (Left)

CLIP, Closed	67/68	10-80	17.134	1	G120520	
SCREW, Tapping	67/68	10-80	17.671	1	G443794	NA

4.024–3 ATTACHING PARTS, Cable To Control Shaft Bracket (Right)

CLIP, Closed	67	10-80 (V8)	17.134	1	G120520	
SCREW, Tapping	67	10-80 (V8)	17.671	1	G443794	NA

4.024–4 ATTACHING PARTS, Cable To Dash

CLIP, Closed	67/68	10-80 (Six)	17.134	1	G120520	
WASHER, Plain	67/68	10-80 (Six)	17.814	1	G120391	NA
SCREW, Tapping	67/68	10-80 (Six)	17.670	1	G189119	NA

4.024–5 ATTACHING PARTS, Cable To Bellcrank

CLIP	69/	10-80	.....	1	319 4850	
BOLT, Hexagon	69/	10-80	17.038	1	G180018	NA
WASHER, Lock	69/	10-80	17.820	1	G120380	NA
NUT, Hexagon	69/	10-80	17.406	1	G120375	

4.024–6 GROMMET, Throttle Control Cable (In Dash)

67/68	10-80		27.038	1	400 0329	

4.024–7 BRACKET, Throttle Control (On Instrument Panel)

67	10-80		.....	1	316 0015	
68	10-80		.....	1	319 1124	
69/	10-80		.....	1	316 0015	

4.024–8 ATTACHING PARTS, Bracket To Instrument Panel

SCREW, Tapping	67/70	10-80	17.660	2	G161901	
SCREW, Tapping	71/	10-80	17.660	2	G9414723	NA

4.024–9 ANCHOR, Throttle Control Cable (On Control Rod)

67/68	10-80 (Six)		.....	1	315 5555	

4.024–10 ATTACHING PARTS, Anchor To Control Rod

NUT, Hexagon	67/68	10-80 (Six)	17.406	1	G120367	

4.024–11 PELLET, Throttle Control Cable

67/	10-80		6.367	1	312 5873	

4.024–12 ATTACHING PARTS, Pellet To Cable

SCREW, Machine	67/69	10-80	12.061	1	310 8350	
SCREW, Machine	70	10-80 (* 4-49)	12.061	1	310 8350	
SCREW, Hexagon	70/	10-80 (10-24 x 1/4-* 4-50)	17.640	1	G140868	NA

4.040–1 PEDAL, Accelerator

67/68	01 (LHD)...(Incl. Insert)	292	.....	1	316 7539	
67/68	10-30-50-70 (LHD)...(Incl. Insert)	272	.....	1	318 5800	
67/68	80 (LHD-880)...(Incl. Insert)	272	.....	1	318 5800	
67/68	80 (LHD-990)(LHD-DPL)(LHD-SST)...(Incl. Insert And Trim)	271	.....	1	318 5801	
69/	LHD		.....	1	319 3332	

Printed in U.S.A.

67/69	***01 (RHD)***...(Incl. Insert)	292	.....	1	316 7539
70	***01 (RHD)***...(Incl. Insert)	272	.....	1	318 5800
67/70	***10 (RHD)***...(Incl. Insert)	272	.....	1	318 5800
67/70	***80 (RHD-880)***...(Incl. Insert)	272	.....	1	318 5800
67/70	***80 (RHD-990)(RHD-DPL)(RHD-SST)***...(Incl. Insert And Trim)	271	.....	1	318 5801

4.040–2 ATTACHING PARTS, Pedal To Bellcrank

PIN, Clevis	69/	LHD	.....	1	319 3368	
PIN, Cotter	69/	LHD	17.460	1	G103361	NA
WASHER, Plain.....	69/	LHD	17.814	1	G147579	NA

4.040–3 SPRING, Accelerator Pedal To Bellcrank

69/	LHD	.....	1	319 3369

4.040–4 INSERT, Accelerator Pedal

67/68	LHD	.....	1	316 7518
67/70	***RHD***	.....	1	316 7518

4.040–5 OVERLAY, Accelerator Pedal

69/	30-70	.....	1	319 3912
69/	80 (LHD-DPL)(LHD-SST)	.....	1	319 3912

4.040–6 PIVOT, Accelerator Pedal

67/68	LHD	.....	1	350 5771
67/70	***01 (RHD)***	.....	1	350 5783
67/70	***10-80 (RHD)***	.....	1	350 5771

4.040–7 BRACKET, Accelerator Pedal Pivot

67/68	10-50-80 (LHD)	.....	1	318 7299

4.040–8 ATTACHING PARTS, Bracket To Dash

SCREW, Tapping.....	67/68	10-50-80 (LHD)	22.027	2	400 0071

4.040–9 SPRING, Accelerator Pedal Hinge Safety

67/68	LHD	.....	1	316 7605
67/70	***RHD***	.....	1	316 7605

4.050–1 BELLCRANK, Accelerator Pedal Rod

67/68	01 (LHD-Six-LDT)	.....	1	317 6966
67	01 (LHD-Six-WDT)	.....	1	317 9993
67/68	01 (V8)	.....	1	318 5097
69	01 (LHD)	.....	1	319 4415
70	01-40 (Six-WAT-Kickdown Switch On Carburetor)	.....	1	319 9666
70	01-40 (Six-WAT-Kickdown Switch On Accelerator Pedal Bracket)	.....	1	319 9669
70	01-40 (Six-WST) ***(Use 319 9669)***	.....	1	319 5678
70	01 (V8-WAT) ***(Use 319 9669)***	.....	1	319 5678
71	01-40	.....	1	319 9669
72	01-40	.....	1	321 4010
67/68	10-50-70-80 (LHD-Six)	.....	1	318 5809
6//68	10-30-50-70-80 (LHD-V8)	.....	1	318 5810
69	10-30-70-80 (LHD-LHTC)	.....	1	319 4413

Printed in U.S.A.

70	10-30-70-80 (LHD-LHTC-WAT)	.....	1	319 9667	
70	10-30-70-80 (LHD-LHTC-WST)(LHD-LHTC-W4ST)	.....	1	319 9715	
71	10-80 (LHTC)	.....	1	319 9667	
69	10-80 (LHD-WHTC)	.....	1	448 5963	
70	10-80 (LHD-WHTC)	.....	1	448 5963	
71	10-80 (WHTC)	.....	1	448 8414	
72	10-80 (LHTC)	.....	1	321 5614	
72	10-80 (WHTC)	.....	1	321 5732	
71	70	.....	1	321 1710	
72	70	.....	1	321 5961	
67/68	***01 (RHD)***	.....	1	318 7125	
69	***01 (RHD-* 4-29)***	.....	1	318 7125	
69	***01 (RHD-* 4-30)***	.....	1	319 6478	
67/68	***10-80 (RHD)***	.....	1	318 7122	
69	***10-80 (RHD-* 4-29)***	.....	1	318 7122	
69	***10-80 (RHD-* 4-30)***	.....	1	319 6482	
70	***10-80 (RHD)***	.....	1	319 6482	

4.050–2 ATTACHING PARTS, Bellcrank To Dash

SCREW, Tapping	67/68	LHD	17.671	2	400 1042	
SCREW, Tapping	69	LHD	17.670	3	400 1054	
SCREW, Tapping	70/	(12-11 x 5/8") LHD	.....	3	400 4040	
SCREW, Tapping	70/	(12-28 x 5/8") LHD	.....	3	400 4137	
SCREW, Tapping	***67/69***	***RHD***	17.670	2	G189119	NA
SCREW, Tapping	***70***	***RHD***	.....	2	400 4040	
NUT, Speed	67/68	LHD	.....	2	316 3893	

4.050–3 GASKET, Accelerator Pedal Rod Bellcrank (To Dash)

67/68	01 (LHD)	.....	1	316 6679	
67/68	10-30-50-70-80 (LHD)	.....	1	318 5793	

4.055–1 ROD, Accelerator Control

67/68	LHD (Six-LDT)	.....	1	318 2964	
67	01 (LHD-Six-WDT)	.....	1	317 9978	
67/68	01 (LHD-V8)	.....	1	318 3532	
67/68	10-50-80 (LHD-Six-WDT)	.....	1	318 0020	
67	10-50-80 (LHD-V8-LASC)(LHD-V8-LHTC)	.....	1	318 5785	
67	10-80 (LHD-V8-WHTC)	.....	1	319 0788	
67	10-80 (LHD-V8-WASC)	.....	1	318 7892	
68	30-70 (LHD-V8) ***(Use 319 2133)***	.....	1	319 1967	
68	10-80 (LHD-V8-WASC)	.....	1	319 2133	
68	10-80 (LHD-V8-LASC)(LHD-V8-LHTC) ***(Use 319 2133)***	.....	1	319 1967	
68	10-80 (LHD-V8-WHTC)	.....	1	319 2025	

4.055–2 ATTACHING PARTS, Rod To Control Shaft Rod Bracket

PIN, Cotter	67/68	LHD (V8)	17.460	1	G103361	NA
WASHER, Plain	67/68	LHD (V8)	17.814	2	G147579	NA

4.055–3 SPRING, Accelerator Control Rod To Bracket

67/68	LHD (V8)	.....	4.068	1	314 3326

4.055–4 BOOT, Accelerator Control Rod

67/68	01 (LHD-V8)	.....	1	318 3527	

4.055–5 SOCKET, Accelerator Control Rod

67/68	LHD (Six)	.....	1	317 5202	

Printed in U.S.A.

4.055–6 NUT, Accelerator Control Rod Socket Adjusting

67/68	LHD (Six)		17.406	1	G120367

4.057–1 CABLE, Accelerator

69	LHD (Six)	***(Use 812 0143)***	.....	1	~~319 3537~~
70	LHD (Six-01)(Six-40)	***(Use 812 0144)***	.....	1	~~319 5523~~
70	LHD (Six-10)(Six-70)(Six-80)	***(Use 812 0143)***	.....	1	~~319 3537~~
71	LHD (Six-01) (Six-40)(Six-70)		.....	1	812 0144
72	LHD (Six-01)(Six-40) (Six-70)		.....	1	321 3954
71	LHD (Six-10)(Six-80)		.....	1	812 0143
72	LHD (Six-10) (Six-80)		.....	1	321 3955
69	LHD (V8-01)		.....	1	319 4526
70/71	LHD (V8-01)		.....	1	319 5524
72	LHD (V8-01)(V8-40)		.....	1	321 4018
69/70	LHD (V8-10)(V8-30)(V8-70)		.....	1	319 3538
71	LHD (V8-10) (V8-80)		.....	1	319 4525
72	LHD (V8-10) (V8-80)		.....	1	321 4017
69/70	LHD (V8-80)		.....	1	319 4525
71	LHD (V8-70)		.....	1	321 1736
72	LHD (V8-70)		.....	1	321 4016
67/68	***RHD (Six)***		.....	1	317 6070
67	***RHD (V8)***		.....	1	317 3027
68	***RHD (V8)***		.....	1	319 2060
69	***RHD (Six-* 4-31)***		.....	1	319 4429
69	***RHD (Six-* 4-32)***		.....	1	319 6546
70	***RHD (Six)***		.....	1	319 8265
69	***RHD (V8-* 4-35)***		.....	1	319 4428
69	***RHD (V8-* 4-36)***		.....	1	319 6547
70	***RHD (V8)***		.....	1	319 6547

4.057–2 ATTACHING PARTS, Cable To Bellcrank

PIN, Cotter	69	LHD	17.460	1	G137127	NA
PIN, Cotter	***67/69***	***RHD***	17.460	1	G137127	NA
CLIP, Hairpin	70/		.....	1	400 0793	
PIN, Clevis	***67/70***	***RHD***	16.300	1	316 4193	
WASHER, Plain	69/	LHD	17.814	1	G446152	NA
WASHER, Plain	***67/70***	***RHD***	17.814	1	G446152	NA

4.057–3 ATTACHING PARTS, Cable To Carburetor Control Shaft Lever

PIN, Clevis	***67/68***	***RHD (Six)***	16.300	1	316 4193	
PIN, Cotter	***67/68***	***RHD (Six)***	17.460	1	G137127	NA
WASHER, Plain	***67/68***	***RHD (Six)***	17.814	1	G446152	NA

4.057–4 ATTACHING PARTS, Cable To Bracket

CLIP	***67/68***	***RHD***	.....	1	317 3016	
BOLT, Hexagon	***67/68***	***RHD***	17.038	1	G180018	NA
WASHER, Lock	***67/68***	***RHD***	17.820	1	G120380	NA
NUT, Hexagon	***67/68***	***RHD***	17.406	1	G120375	

4.057–5 ATTACHING PARTS, Cable To Wheelhouse Panel

CLIP, Closed	***67/70***	***01-10 (RHD)***	17.134	1	G120521
SCREW, Tapping	***67/69***	***01 (RHD)***	17.671	1	400 1042

4.057–6 ATTACHING PARTS, Cable To Carburetor Pin

PIN, Cotter	***67/68***	***RHD (V8)***	17.460	1	G137127	NA
WASHER, Plain	***67/68***	***RHD (V8)***	17.814	1	G446152	NA

4.057–7 CLIP, Accelerator Control Cable (To Dash)

67/70	***RHD***	8.224	1	316	4299

4.057–8 GASKET, Accelerator Cable (To Dash)

69/	LHD	.....	1	319	4154
67/70	***RHD***	.....	1	317	0389

4.057–9 CLIP, Accelerator Cable (On Heater Valve)

67/70	***RHD (V8)***	15.320	1	400	1598

4.057–10 BRACKET, Accelerator Control Cable

69	LHD (Six)	.....	1	319	4965
70	LHD (Six)	.....	1	319	7779
71	LHD (Six)	.....	1	321	1117
72	SIX...(Incls. Transmission T.V. Bellcrank)	.....	1	321	4002
69	LHD (V8)	.....	1	319	3886
70/71	LHD (V8)	.....	1	319	8017
72	LHD (V8)	.....	1	321	5380
67	***RHD (V8-WDT)***	.....	1	318	7673
67	***RHD (V8-W4B)***	.....	1	318	7184
68	***RHD (V8-WDT)***	.....	1	319	2189
68	***RHD (V8-W4B)***	.....	1	319	2098

4.057–11 ATTACHING PARTS, Bracket To Intake Manifold

SCREW, Machine	69/70	LHD	17.626	2	400	0987
SCREW, Machine	71/		16.626	2	400	0987
SCREW, Machine	***67/68***	***RHD***	17.626	2	400	0987

4.065–1 ROD, Carburetor Control Shaft

67	01 (LHD-V8-WAT)	.....	1	318	9167
67	01 (LHD-V8-WST)(LHD-V8-W4ST)	.....	1	318	9168
67	10-50-80 (LHD-V8)	.....	1	318	9169
68	01 (LHD-V8)	.....	1	319	1654
68	10-30-70-80 (LHD-V8)	.....	1	319	1961

4.065–2 ATTACHING PARTS, Rod To Bracket (Left)

PIN, Cotter	67/68	LHD (V8)	17.460	1	G103373	NA
WASHER, Plain	67/68	LHD (V8-7/8" O. D.)	17.814	1	400	1100
WASHER, Plain	67/68	LHD (V8-1-1/8" O. D.)	17.814	1	400	0480

4.065–3 ATTACHING PARTS, Rod To Bracket (Right)

WASHER, Felt	67/68	LHD (V8)	4.070	1	318	5183
WASHER, Plain	67/68	LHD (V8)	17.814	1	400	1098
NUT, Push	67/68	LHD (V8)	13.440	1	400	0792

4.065–4 RETAINER, Carburetor Control Shaft Rod Lubricating Washer

67/68	LHD (V8)	.....	1	318	5240

Printed in U.S.A.

FUEL - EXHAUST

4.065–5 BRACKET, Carburetor Control Shaft (Left)

67	01 (LHD-V8)...(Incl. Bearing)	289	.....	1	318 4600
68	01 (LHD-V8-* 4-1)...(Incl. Bearing)	262	.....	1	319 1995
68	01 (LHD-V8-* 4-2)...(Incl. Bearing)	262	.....	1	319 1817
67/68	10-30-50-70-80 (LHD-V8)...(Incl. Bearing)	288	.....	1	318 5804

4.065–6 ATTACHING PARTS, Bracket To Dash

SCREW, Tapping.....	67/68	01 (LHD-V8-* 4-1)	17.670	3	400 1054
SCREW, Tapping.....	67/68	01 (LHD-V8-* 4-2)	17.670	2	400 1054
SCREW, Tapping.....	67/68	10-30-50-70-80 (LHD-V8)	17.670	3	400 1054

4.065–7 BRACKET, Carburetor Control Shaft (Right)

67/68	LHD (V8-290)(V8-343)...(Incl. Bearing)	287	.....	1	318 3526
68	LHD (V8-390)...(Incl. Bearing)	287	.....	1	319 1840

4.065–8 ATTACHING PARTS, Bracket To Manifold

SCREW, Machine.....	67/68	LHD (V8)	17.626	2	400 0987

4.065–9 BEARING, Carburetor Control Shaft (In Bracket)

67/68	LHD (V8)		4.070	2	318 0124

4.070–1 SHAFT, Carburetor Control

67	01 (LHD-Six-LDT)		.....	1	317 8377
67	01 (LHD-Six-WDT)	***(Use 318 4443)***	.....	1	318 0022
67	01 (LHD-V8-WDT)	***(Use 318 8521)***	.....	1	318 2999
67	01 (LHD-V8-W4B)	***(Use 318 8523)***	.....	1	318 5230
68	01 (LHD-Six-LDT)		.....	1	319 1794
68	01 (LHD-V8-WDT)		.....	1	319 1962
68	01 (LHD-V8-W4B)		.....	1	319 1964
67	10-50-80 (LHD-Six-LDT-LASC)		.....	1	317 8377
67	10-50-80 (LHD-Six-LDT-WASC)		.....	1	318 7769
67	10-50-80 (LHD-Six-WDT-LASC)	***(Use 318 4443)***	.....	1	318 0022
67	10-50-80 (LHD-Six-WDT-WASC)		.....	1	318 7770
67	10-50-80 (LHD-V8-WDT-LHTC)	***(Use 318 8521)***	.....	1	318 2999
67	10-50-80 (LHD-V8-WDT-WHTC)		.....	1	318 8521
67	10-50-80 (LHD-V8-W4B-LHTC)	***(Use 318 8523)***	.....	1	318 5230
67	10-50-80 (LHD-V8-W4B-WHTC)		.....	1	318 8523
68	10-70-80 (LHD-Six-LDT)		.....	1	319 1794
68	10-70-80 (LHD-Six-WDT-* 4-3)	***(Use 318 4443)***	.....	1	318 0022
68	10-70-80 (LHD-Six-WDT-* 4-4)		.....	1	319 1950
68	10-70-80 (LHD-V8-WDT)		.....	1	319 1962
68	10-30-70-80 (LHD-V8-W4B)		.....	1	319 1964
72	SIX (WAT)		.....	1	321 2944
67/68	***RHD (Six-LDT)***		.....	1	317 7593
67/68	***RHD (Six-WDT)***		.....	1	317 6741

4.070–2 ATTACHING PARTS, Shaft To Carburetor

SPRING.....	67/68	SIX	1.074	1	72 447
PIN, Cotter	67/68	SIX	17.460	1	G103373 NA
WASHER, Plain.....	67/68	SIX	17.814	1	400 1091

4.070–3 ATTACHING PARTS, Shaft To Bracket

PIN, Cotter	67/68	LHD (Six)		17.460	1	G103373 NA
WASHER, Felt	67/68	LHD (Six)		.....	1	318 5183
WASHER, Plain	67/68	LHD (Six)		17.814	1	400 1098
WASHER, Lock	***67/68***	***RHD (Six)***		17.820	1	G120380 NA
NUT, Hexagon	***67/68***	***RHD (Six)***		17.406	1	G120375

4.070–4 RETAINER, Accelerator Control Shaft Felt Washer

67/68	LHD (Six)		.....	1	318 5240

4.070–5 BRACKET, Carburetor Control Shaft

67/68	LDT (LHD-Six-WST)		.....	1	318 0032
67/68	LDT (LHD-Six-WAT)(LHD-Six-WOD)		.....	1	317 5758
67	WDT (LHD-Six-WAT)(LHD-Six-WOD)	294	.....	1	318 7298
68	WDT (10-LHD-Six-* 4-5)(70-LHD-Six-* 4-5)(80-LHD-Six-* 4-5)	294	.....	1	318 7298
68	WDT (10-LHD-Six-* 4-6)(70-LHD-Six-* 4-6)(80-LHD-Six-* 4-6)		.....	1	318 0033
67/68	***LDT (RHD-Six)***		.....	1	317 7578
67/68	***WDT (RHD-Six)***		.....	1	317 6061

4.070–6 ATTACHING PARTS, Bracket To Dash

SCREW, Tapping	67/68	LHD (Six)		17.670	3	G189119 NA

4.070–7 ATTACHING PARTS, Bracket To Manifold

SCREW, Machine	***67/68***	***RHD (Six)***		17.626	2	400 0987

4.070–8 BEARING, Carburetor Control Shaft (In Bracket)

67/68	LHD (Six)		.....	1	318 0124
67/68	***RHD (Six)***		.....	1	317 0829

4.070–9 SOCKET, Carburetor Control Shaft

67/68	LHD (V8)		4.055	1	317 5202

4.070–10 NUT, Carburetor Control Shaft Socket Adjusting

67/68	LHD (V8)		17.406	1	G120367

4.070–11 LEVER, Carburetor Control Shaft

67/68	***RHD (Six)***		.....	1	317 6054

4.080–1 SPRING, Carburetor Pullback

71		***(Use 318 5813)***	.....	1	317 4455
67	LHD (Six-WDT)	***(Use 318 5813)***	.....	1	317 4455
68	LHD (Six-LDT)	***(Use 319 3008)***	.....	1	319 0726
70	LHD (Six)	***(Use 318 5813)***	.....	1	317 4455
72	SIX	***(Use 318 5813)***	.....	1	317 4455
69	V8 (W4B)		.....	1	317 5971
72	V8		.....	1	321 5648
67	01 (LHD-Six-199)(LHD-Six-232-WSFC)		.....	1	318 5767
67	01 (LHD-Six-232-WAT-LSFC)		.....	1	318 7996
67	01 (LHD-Six-232-WST-LSFC)(LHD-Six-232-WOD-LSFC)		.....	1	317 8976
67	10-50-80 (LHD-Six-LDT-LSFC)		.....	1	318 7996
67	10-50-80 (LHD-Six-LDT-WSFC)	***(Use 319 3008)***	.....	1	319 0726

FUEL - EXHAUST

67/68	01 (LHD-V8)	.....	1	318	3729
67/70	10-30-50-70-80 (LHD-V8) ***(Use 318 5813)***	.....	1	317	4455
68	10-70-80 (LHD-Six-WDT-* 4-7) ***(Use 318 5813)***	.....	1	317	4455
68	10-70-80 (LHD-Six-WDT-* 4-8)	.....	1	318	3729
69	01-10-70 (Six-LDT-* 4-37)	.....	1	319	3008
69	01-10-70 (Six-LDT-* 4-38)	.....	1	319	6286
69	01-10-70-80 (V8-WDT) ***(Use 318 5813)***	.....	1	317	4455
69/	01 (LHD-V8) ***(Use 318 5813)***	.....	1	317	4455
67/70	***RHD (Six)*** ***(Use 318 5813)***	.....	1	317	4455
67/68	***RHD (V8-WDT)***	.....	1	318	5813
67/68	***RHD (V8-W4B)*** ***(Use 318 5813)***	.....	1	317	4455
69	***RHD (V8)*** ***(Use 318 5813)***	.....	1	317	4455
70	***70 (Export-232-WDT)*** ***(Use 318 5813)***	.....	1	317	4455

4.080–2 BRACKET, Carburetor Pullback Spring Anchor

67	LHD (Six-232-LDT-WSFC)	.....	1	318	6269
71	SIX	.....	1	319	6282
72	SIX (Attaches To Manifold)	.....	1	321	7345
67/68	01 (LHD-Six-199-LDT)	.....	1	318	6269
67	01 (LHD-Six-232-LDT-WAT-LSFC)	.....	1	318	7966
67	01 (LHD-Six-232-LDT-WST-LSFC)(LHD-Six-232-LDT-WOD-LSFC)	.....	1	315	3673
67	01 (LHD-Six-WST-WDT)	.....	1	318	0019
67	01 (LHD-Six-WAT-WDT)(LHD-Six-WOD-WDT)	.....	1	318	0019
69	01-10-70 (Six-LDT-* 4-39)	.....	1	318	6269
69	01-10-70 (Six-LDT-* 4-40)	.....	1	319	6282
70	01-10-40-70 (Six-LDT)	.....	1	319	6282
70	01-10-80 (Six-WDT)	.....	1	319	3642
67	10-50-80 (LHD-Six-LDT-LSFC)	.....	1	318	7966
67	10-50-80 (LHD-V8)	.....	1	315	3673
68	10-70-80 (LHD-Six-LDT)	.....	1	318	6269
68	10-70-80 (LHD-V8)	.....	1	318	3560
69	10-70 (Six-LDT)	.....	1	318	6269
69	10-80 (Six-WDT)	.....	1	319	3642
67/68	***10-80 (RHD-V8-WDT)***	.....	1	315	3673
67/68	***10-80 (RHD-V8-W4B)***	.....	1	318	3560
69	***01 (RHD-Six)***	.....	1	319	3642

4.080–3 ATTACHING PARTS, Bracket To Control Shaft Bracket

RIVET, Tubular	67	LDT (LSFC)	17.555	2	G9411491	NA

4.080–4 ATTACHING PARTS, Bracket To Engine Bolt

NUT, Hexagon	67/68	01 (LHD-Six-199)	1.067	1	314 9892
NUT, Hexagon	67/68	01 (LHD-Six-232-WSFC)	1.067	1	314 9892
NUT, Hexagon	67/68	10-50-70-80 (LHD-Six-232)	1.067	1	314 9892
NUT, Hexagon	69	LHD (Six)	1.067	1	314 9892

4.080–5 ATTACHING PARTS, Bracket To Dash

SCREW, Tapping	67/68	LHD (V8)	17.671	1	400 1042

4.088–1 CLEANER, Carburetor Air

67	LDT (199) ***(Ord. 319 0564, 319 0565)***	.....	1	318	8807
67	LDT (232-LSFC) 298	.....	1	318	8808
67	LDT (232-WSFC) 303	.....	1	318	8811
67	WDT (232-LSFC) 298	.....	1	318	8812
67	WDT (232-WSFC) 303	.....	1	318	8815
67	WDT (290-LSFC) 297	.....	1	318	7857
67	WDT (290-WSFC) 297	.....	1	318	7858

Printed in U.S.A.

67	WDT (343-10-LSFC)(343-50-LSFC)(343-80-LSFC)	299	.....	1	318 9690
67	WDT (343-10-WSFC)(343-50-WSFC)(343-80-WSFC)	299	.....	1	318 9691
67	W4B (290-01-LSFC)	297	.....	1	318 7859
67	W4B (290-01-WSFC)	297	.....	1	318 7860
67	W4B (343-LSFC)	299	.....	1	318 7893
67	W4B (343-WSFC)	299	.....	1	318 7894
68/69	LDT (199)	304	.....	1	319 0564
68/69	LDT (232)	298	.....	1	319 0562
68/69	WDT (232)	298	.....	1	319 0563
68/69	WDT (290-WEEP)	297	.....	1	319 1919
68/69	WDT (290-WTAC)(343-WTAC)	302	.....	1	319 1907
68	W4B (290)(343)	301	.....	1	319 1912
68	W4B (390)	301	.....	1	319 2101
69	W4B (290-01)(290-10)(290-80)(343-01)(343-10)(343-80)	301	.....	1	319 1912
69	W4B (290-30)(290-70)(343-30)(343-70)	301	.....	1	319 4903
69	W4B (390-10)(390-80)	301	.....	1	319 2101
69	W4B (390-30)(390-70)	301	.....	1	319 4904
69	W4B (09-SC/RAMBLER)		.....	1	448 9295
70	SIX	298	.....	1	319 7236
70	WDT (304-WST-70)	297	.....	1	319 1919
70	WDT (304-Except-WST-70) (360)	302	.....	1	319 1907
70	W4B (360-10) (360-80)		.....	1	319 7797
70	W4B (360-30-LCAI)(360-70-LCAI)		.....	1	319 7796
70	W4B (360-30-WCAI)(360-70-WCAI)		.....	1	319 8376
70	W4B (390-10-LCAI)(390-80)		.....	1	319 7913
70	W4B (390-30-LCAI)(390-70-LCAI)		.....	1	319 7912
70	W4B (390-10-WCAI)(390-30-WCAI)(390-70-WCAI)		.....	1	319 8715
71	SIX	298	.....	1	321 1612
71	WDT (304-01) (360-01)	297	.....	1	321 1306
71	WDT (304-Except 01) (360-Except 01)	299	.....	1	321 2008
71	W4B (360-10-LCAI)(360-70-LCAI)(360-80-LCAI)	299	.....	1	321 2007
71	W4B (401-10-LCAI)(401-70-LCAI)(401-80-LCAI)		.....	1	321 2009
71	W4B (360-01-WCAI)(360-70-WCAI)		.....	1	321 2005
71	W4B (401-10-WCAI) (401-70-WCAI)		.....	1	321 2006
72	SIX (01)(40)	298	.....	1	321 6419
72	SIX (10-WST)(70-WST)(80-WST)		.....	1	321 6419
72	SIX (10-WAT)(70-WAT)(80-WAT)	298	.....	1	321 1612
72	V8 (LTAC-01)(LTAC-40)	297	.....	1	321 1306
72	V8 (WTAC-01)(WTAC-40)		.....	1	321 8196
72	V8 (WST-LCAI-70)		.....	1	321 5803
72	V8 (W4B-WCAI-70)		.....	1	321 5804
72	V8 (WAT-10) (WAT-LCAI-70) (WAT-80)		.....	1	321 5803

4.088-2 STUD, Carburetor Air Cleaner Retaining

67/69	LDT (Six)	.....	1	318 4155
70/	LDT (Six)	.....	1	319 4758
67/70	WDT (232)	.....	1	318 4154
67	WDT (290)(343)	.....	1	318 4153
68/70	WDT (290)(304)(360)(343)	.....	1	319 1879
71/	WDT (V8-01) (V8-40)	.....	1	321 0016
71/	WDT (V8-10) (V8-70)(V8-80)	.....	1	321 1311
72	WDT (V8-40-LTAC)(V8-01-LTAC)	.....	1	321 0016
72	WDT (V8-40-WTAC)(V8-01-WTAC)	.....	1	321 1311
67/69	W4B	.....	1	318 8535
70	W4B	.....	1	319 7891
71/	W4B	.....	1	321 1310

Printed in U.S.A.

4.088–3 NUT, Carburetor Air Cleaner Wing

67/69	199-232-290-343	.....	1	315 1735
70	WDT (232)(304)(360)	.....	1	315 1735
68/70	390	.....	1	319 2131
71/	V8	.....	1	315 1735

4.088–4 ELEMENT, Carburetor Air Cleaner

67/70	199	15.135	1	899 1386
67/70	232 (Used With Fram Or Canadian Filters Limited Cleaner)	15.135	1	899 1386
67/69	232 (Used With United Cleaner)	15.135	1	899 1677
71/	SIX (Used With Canadian Filters Limited Cleaner)	15.135	1	899 1386
67/	V8 (Used With United Cleaner)	15.135	1	899 0838
67/70	V8 (Used With Fram Or Canadian Filters Limited Cleaner)	15.135	1	899 1451
71/	V8 (Used With Canadian Filters Limited Cleaner)	15.135	1	899 2661
72	01-40 (V8-WTAC)	.....	1	899 2873

4.088–5 CAP, Carburetor Air Cleaner Top

67/	(Used With United Cleaner)	.....	1	320 2643
67/	(Used With Canadian Filters Limited Cleaner With 14-3/4" Cover-Black)	.....	1	812 0004
72	(Used With Canadian Filters Limited Cleaner With 12-5/8" Cover-Black)	.....	1	812 2058
68/69	390 (Chrome-Except SC/RAMBLER)	.....	1	448 8143
69	390 (Chrome-SC/RAMBLER) ***(Use 448 8456)***	.....	1	319 8327
70	390 (Chrome-LCAI)	.....	1	448 8143
70	390 (Chrome-WCAI)	.....	1	448 8456
72	70 (W4B-WCAI)	.....	1	812 1116

4.088–6 GASKET, Carburetor Air Cleaner To Carburetor

67/69	LDT	.....	1	316 7056
67	WDT	.....	1	317 2428
68/69	WDT (Six)	.....	1	317 2428
70/	SIX	.....	1	317 2428
68/69	WDT (V8)	.....	1	319 1884
70/	V8	.....	1	319 1884
67/69	W4B	.....	1	318 5173

4.088–7 FILTER, Carburetor Air Cleaner Positive Crankcase Ventilation

67	232 (WSFC)	.....	1	320 9834

4.088–8 STICKER, Carburetor Air Cleaner (Refer To Group 14.145–3)

4.088–9 SENSOR KIT, Air Cleaner Temperature

72	V8	366	.....	1	812 1111

4.088–10 MOTOR, Air Cleaner Air Temperature Control Vacuum

72	V8	.....	1	812 1115

4.090 AIR SCOOP, Air Cleaner To Hood

71/	70 (360-W4B-WCAI)(401-WCAI)	367	.....	1	321 0874

4.091 CONTROL, Hood Air Scoop Damper (Vacuum Motor)

71/	70 (WCAI)	.....	1	319 9613

4.092–1 ADAPTER, Carburetor Air

69	09 (SC/RAMBLER)	.....	1	319 8688
70	19 (MACHINE) ***(Use 319 9615)***	.....	1	319 9713
71	06 (SC-360)	.....	1	319 9615

4.092–1a ATTACHING PARTS, Carburetor Air Adapter To Air Cleaner

SCREW, Tapping	69	09 (SC/RAMBLER)	.....	5	400 0774

4.092–2 SEAL, Carburetor Air Adapter

69	09 (SC/RAMBLER)	.....	1	319 8693
70	19 (MACHINE)	.....	1	319 9614
70	30-70 (WCAI)	12.001	1	319 8730
71	06 (SC-360)	.....	1	319 9614
71/	70 (WCAI)	.....	1	319 9614

4.092–3 HOSE, Hood Air Scoop Damper To Intake Manifold (Bulk)

71/	70 (WCAI)	.....	AR	320 3440

4.092–4 HOSE, Air Cleaner Sensor To Motor Or Tee (Bulk)

72	01-40 (V8-WTAC)	.....	AR	320 3440
72	10-70-80 (V8)	.....	AR	320 3440

4.092–5 HOSE, Air Cleaner Sensor To Fitting In Manifold (Bulk)

72	01-40 (V8-WTAC)	.....	AR	320 3440
72	10-70-80 (V8)	.....	AR	320 3440

4.092–6 CLAMP, Air Cleaner Vacuum Hose To Heater Hose

72	70 (V8-WCAI)	.....	1	318 1008

4.110–1 PUMP, Fuel

67/68	(Carter MPF-3943S) SIX (WVW)	276	.....	1	320 6148
69/	(Carter MP-4655S) SIX (WVW)	311	.....	1	319 3900
67/68	(Carter MF-3805S) SIX (WEW)	269	.....	1	317 3674
69	(Carter M-4142S) SIX (WEW)	310	.....	1	319 3899
70	(Carter M-4142S) SIX (WEW-WDT-Pump Top Screwed On)	310	.....	1	319 3899
70	(Carter MS-4771S) SIX (WEW-WDT-Pump Top Pressed On)		.....	1	319 7738
70	(Carter MS-4771S) SIX (WEW-LDT)		.....	1	319 7738
71	(Carter MS-4771S) SIX (WEW)		.....	1	319 7738
72	(Carter MS-4771S) SIX		.....	1	319 7738
67	(Carter MPF-4336S) V8 (WVW)	276	.....	1	318 2236
68	(Carter MPF-4336SA) V8 (WVW)	276	.....	1	448 5861
69/71	(Carter MP-4657S) V8 (WVW)	311	.....	1	319 3986
67	(Carter MF-4182SB) V8 (WEW)	***(Use 448 5860)***	.....	1	318 1925
68	(Carter MF-4182SC) V8 (WEW)	280	.....	1	448 5860
69	(Carter M-4656S) V8 (WEW)	310	.....	1	319 3985
70	(Carter M-4656S) V8 (WEW-WDT-Pump Top Screwed On)	310	.....	1	319 3985
70	(Carter MS-4772S) V8 (WEW-WDT-Pump Top Pressed On)		.....	1	319 7739
70	(Carter MS-4772S) V8 (WEW-W4B)		.....	1	319 7739
71	(Carter MS-4772S) V8 (WEW)		.....	1	319 7739
72	(Carter MS-4772S) V8		.....	1	319 7739

4.110–2 ATTACHING PARTS, Pump To Block

BOLT, Hexagon	67/	SIX...(1-1/4" Long)	***(Use G180081)***	.....	2	316 0300
BOLT, Hexagon	72	SIX...(1-1/8" Long)		.....	2	G180080
WASHER, Lock	67/69	SIX		17.820	2	G103320 NA
WASHER, Lock	70/	SIX		17.820	2	G120214

4.110–3 ATTACHING PARTS, Pump To Front Cover

BOLT, Hexagon	67/72	V8 (1-3/8" Long)		17.038	2	G180125 NA
BOLT, Hexagon	72	V8 (1-1/2" Long)		17.038	2	G180126 NA
WASHER, Lock	67/69	V8		17.820	2	G120382
WASHER, Lock	70/	V8		10.260	2	400 3803

4.110–4 BOWL, Fuel Pump Filter (Incl. Gasket)

67/68	***(Use 320 8705)***	.....	1	320 4193

FUEL - EXHAUST

4.110–5 GASKET, Fuel Pump Filter Bowl

67/68		4.002	1	311 7226

4.110–6 SPRING, Fuel Pump Filter Bowl

67/68		.....	1	320 7089

4.110–7 ELEMENT, Fuel Pump Filter Bowl

67/68		15.190	1	899 1450

4.110–8 FILTER KIT, Fuel Pump In-Line (Incl. Hose And Clamps)

69		15.190	1	899 2430
70	(* 4-48)	15.190	1	899 2638
71/	368	15.190	1	899 2638

4.110–9 HOSE, Fuel Pump In-Line Filter To Tube

69/	(Bulk-Order In Feet)	4.160	AR	320 2187

4.110–10 CLAMP, Fuel Pump In-Line Filter Hose

69/		4.160	2	318 1643

4.110–11 REPAIR KIT, Fuel Pump

67/68	WVW (Six) 278	.....	1	320 5746
67/68	WVW (V8) 278	.....	1	320 3286
67/68	WEW (Six) 270	.....	1	320 7121
67/68	WEW (V8) 279	.....	1	320 8709

4.116 GASKET, Fuel Pump

67/		.....	1	317 4685

4.118–1 ECCENTRIC, Fuel Pump Camshaft

67/	V8 (* 4-67)	.....	1	318 2492
72	V8 (* 4-68)	.....	1	321 8314

4.118–2 ATTACHING PARTS, Eccentric To Camshaft

BOLT, Hexagon	67/	V8	17.042	1	G192353
WASHER, Lock	67	V8	1.134	1	318 0207
WASHER, Lock	68/	V8	1.134	1	318 9338

4.118–3 SPACER, Fuel Pump Camshaft Eccentric

67/	(* 4-67)	.....	1	318 2491

4.124–1 ELBOW, Fuel Pump To Gas Line (Inlet)

70/	(90 Deg.) SIX (01-In Pump)	17.218	1	G137422
70/	(Connector) SIX (Vacuum Line-In Pump)	17.160	1	G137406
67/69	(Nipple-1-1/4" Long) V8 (01-At Pump)	.....	1	318 7949
67/69	(2-1/2" Tube And Fitting) V8 (WEW-To Elbow In Pump-Except 01)	.....	1	319 0367
67/	(90 Deg.) V8 (WEW-In Pump)	17.218	1	G137422
67/	(90 Deg.) V8 (WVW-At Pump-Except 01)	.....	1	318 2682
70/	(90 Deg.) V8 (WVW-In Pump)	17.218	1	G137422

4.124–2 ELBOW, Fuel Pump To Gas Line (Outlet)

67/69		17.218	1	G137422

4.124–3 ELBOW, Fuel Pump Filter To Carburetor (At Carburetor)

69	(45 Deg.) SIX (10-WDT)(80-WDT)	.....	1	319 3896
69	***(45 Deg.) SIX (RHD-01-WDT)***	.....	1	319 3896

69	(90 Deg.) SIX (LDT)(10-WDT)(80-WDT)	.....	1	319 3933
70	(90 Deg.) SIX (WDT-At Carburetor)	.....	1	318 2682
70	(90 Deg.) SIX (WDT)	.....	1	319 3933
69	***(90 Deg.) SIX (RHD-01-WDT)***	.....	1	319 3933
70	***(90 Deg.)(WDT-At Carburetor)(Export-232-At Carburetor)***	.....	1	318 2682
69	(90 Deg.) V8 (W4B-LASC)	.....	1	319 3933
70	(Connector) SIX (18-WDT-At Carburetor)	17.160	1	G137406
70/	(Connector) V8 (WDT-At Carburetor)	17.160	1	G137406
71	(Connector) V8 (W4B-At Carburetor-* 4-60)	.....	1	G137406
72	(Connector) V8 (W4B-At Carburetor)	17.160	1	G137406
70/	(Nipple-1-1/4" Long) SIX (LDT-At Carburetor)	.....	1	318 7949
70	(Nipple-1-1/4" Long) V8 (W4B-At Carburetor)	.....	1	318 7949
71	(Nipple-1-1/4" Long) V8 (W4B-At Carburetor-* 4-59)	.....	1	318 7949

4.130-1 TANK ASSEMBLY, Gasoline (Less Gauge)

67/69	05-06-07-09	.....	1	320 6763
67/69	08	.....	1	320 6764
70	01 (LCFE)	.....	1	448 7632
70	01 (WCFE)	.....	1	448 7633
71/	01 (* 4-63)	.....	1	448 7633
72	01 (* 4-64)	.....	1	812 1451
67/69	15-16-17-19-59-85-86-87-89	.....	1	320 7934
70	15-19-85-89 (LCFE)	.....	1	320 7934
70	15-19-85-89 (WCFE)	.....	1	448 7646
71/	15-18-19-85-89 (L3S)	.....	1	448 7646
67/68	18-88 (L3S)	.....	1	320 7934
69	18 (L3S)	.....	1	320 7934
70	18 (L3S-LCFE)	.....	1	448 7636
70	18 (L3S-WCFE)	.....	1	448 7646
67/69	18-88 (W3S)	.....	1	320 7935
70	18 (W3S-LCFE)	.....	1	448 7637
70	18 (W3S-WCFE)	.....	1	448 7647
71	18-88 (W3S)	.....	1	448 7647
72	18-88 (W3S)	.....	1	812 0517
68/69	30-70	.....	1	320 8833
70	30-70 (LCFE)	.....	1	448 7634
70	30-70 (WCFE)	.....	1	448 7635
70	40 (LCFE)	.....	1	448 8033
70	40 (WCFE)	.....	1	448 8034
71/	40	.....	1	448 8034
71/	70 (* 4-63)	.....	1	448 9223
72	70 (* 4-64)	.....	1	812 1513
69	88 (L3S)	.....	1	320 7935
70	88 (LCFE)	.....	1	448 7637
70	88 (WCFE)	.....	1	448 7647
71	88	.....	1	448 7647
72	88	.....	1	812 0517

4.130-2 INSULATOR, Gasoline Tank To Body

67/68	01	.....	1	317 2893

4.130-3 SPACER, Gasoline Tank To Floor Pan

70	01 (2-1/2" Dia.-3/8" Thick)	.....	1	319 8777
70/	01 (1-7/8" Dia.-3/4" Thick)	27.038	1	400 0499

4.130-4 SHIELD, Gasoline Tank Stone Protector

71/	18 (W3S)	.....	1	321 5621
71/	88	.....	1	321 5621

4.134 FILTER, Gasoline Tank

67/69	01	.....	1	316 3974
70/	01-40	.....	1	318 4620
67/	10-30-50-70-80	.....	1	318 4620

FUEL - EXHAUST

4.138–1 CAP, Non Locking Gasoline Tank Filler

67	05-06-07-09...(Incl. Ornament)	220	.....	1	317 9247
67	08...(Incl. Ornament)	221	.....	1	317 6695
68	05-06-09 (* 4-9)...(Incl. Ornament)	220	.....	1	317 9247
68	05-06-09 (* 4-10)...(Incl. Ornament)	220	.....	1	319 1026
68	08 (* 4-9)...(Incl. Ornament)	221	.....	1	317 6695
68	08 (* 4-10)...(Incl. Ornament)	221	.....	1	319 1024
69	05-06-09...(Incl. Ornament)	220	.....	1	319 1026
69	08...(Incl. Ornament)	221	.....	1	319 1024
70	01 (LCFE)		.....	1	319 6847
70	01 (WCFE)	***(Use 319 9768)***	.....	1	319 7097
71	01 (* 4-61)		.....	1	321 1317
71	01 (* 4-62-Die Cast Cap)		.....	1	321 2688
71	01 (* 4-62-Stainless Steel Stamping Cap)		.....	1	321 4411
72	01 (* 4-63)		.....	1	321 4411
72	01 (* 4-64)		.....	1	321 6667
67	10-30-80		.....	1	318 6042
68/69	10-80	***(Use 448 7419)***	.....	1	318 9848
70	10-80 (LCFE)		.....	1	448 7419
70	10-80 (WCFE)		.....	1	319 7098
71/	10-80		.....	1	319 9894
68/69	30-70	***(Use 448 7418)***	.....	1	318 9135
70/	30-70		.....	1	319 9894
70	40 (LCFE)	319 9775	.....	1	~~319 9774~~
70	40 (WCFE)		.....	1	319 9775
71	40 (* 4-61)		.....	1	319 9775
71	40 (* 4-62-Die Cast Cap)		.....	1	321 2491
71	40 (* 4-62-Stainless Steel Stamping Cap)		.....	1	321 4415
72	40		.....	1	321 4415

4.138–2 ORNAMENT, Gasoline Tank Filler Cap (Handle)

67/69	05-06-07-09...(Incl. Attaching Parts)	222	.....	1	320 6766
67/69	08...(Incl. Attaching Parts)	223	.....	1	320 4386
70	01		.....	1	448 7544

4.138–3 ATTACHING PARTS, Ornament To Cap

SCREW, Machine	67/70	01	.....	2	400 3924
WASHER, Lock	67/69	01	17.822	2	G121752

4.138–4 COVER, Gasoline Tank Filler Cap

70/71	40	.....	1	319 9773

4.138–5 ATTACHING PARTS, Cover To Cap

SCREW, Tapping.....	70/71	40	17.660	3	G9415952 NA

4.138–6 GASKET, Filler Cap Gasoline

70/	01-40 (Used With Locking Gasoline Cap)	.....	1	812 0608
70/	01-40 (Used Less Locking Gasoline Cap)	.....	1	812 1690

4.141–1 NECK, Gasoline Tank Filler (Upper)

67	08	.....	1	318 0783
68	05-06-09 (* 4-11)	.....	1	318 0782
68	05-06-09 (* 4-12)	.....	1	319 1028
67	05-06-07-09	.....	1	318 0782
69	05-06-09	.....	1	319 1028
68	08 (* 4-11)	.....	1	318 0783
68	08 (* 4-12)	.....	1	319 1029
69	08	.....	1	319 1029
70	01	.....	1	319 8064
71	01 (* 4-57)	.....	1	319 8064
71	01 (* 4-58)	.....	1	321 2689

Printed in U.S.A.

72	01 (* 4-63)	.....	1	321 2689
72	01 (* 4-64)	.....	1	321 6666
67/69	10-50-80	.....	1	318 6039
71/	10-80	.....	1	319 5357
70	15-19-85-89 (LCFE)	.....	1	319 5358
70	15-19-85-89 (WCFE)	.....	1	319 5357
70	18-88 (LCFE)	.....	1	319 5357
70	18-88 (WCFE)	.....	1	319 5357
70	40 (* 4-57)	.....	1	319 8682
70	40 (* 4-58)	.....	1	321 2460
71/	40	.....	1	321 2460
72	70 (* 4-64)	.....	1	321 6640

4.141-2 ATTACHING PARTS, Neck To Body

WASHER, Lock	67/69	01	17.822	2	G121752
SCREW, Tapping	67/	05-06-07-09-40 ***(Use 812 0054)***	17.671	6	G274773
SCREW, Tapping	67/69	08 ***(Use 318 9013)***	17.671	6	400 0478

4.141-2a ATTACHING PARTS, Filler Tube Bracket To Deck Opening

SCREW, Hexagon	72	70 (* 4-64)	.....	2	400 1042

4.141-3 ATTACHING PARTS, Neck To Housing

RIVET, Tubular	67/	10-50-80	.....	6	400 2185

4.141-4 CONNECTOR, Gasoline Tank Filler Neck To Tank

67/69	05-06-07-09	.....	1	317 5295
70/	01 (* 4-63)	.....	1	317 5295
67/69	08	.....	1	318 0898
67/	10-50-80	.....	1	318 6034
70/	40	.....	1	319 8683

4.141-5 CLAMP, Gasoline Tank Filler Neck Connector

67/71	01-10-40-50-80	17.108	2	320 3079
72	01 (* 4-63)	.....	2	320 3079

4.141-6 GASKET, Gasoline Tank Filler Neck Flange

67/69	01	.....	1	318 0795
70/	01-40 (* 4-63)	.....	1	319 8119
72	01 (* 4-64)	.....	1	321 7231
67/	10-50-80	.....	1	318 6040

4.141-7 SEAL, Gasoline Tank Filler Tube (Lower-At Tank)

67/69	01	.....	1	317 0228
72	01 (* 4-64)	.....	1	321 7232

4.141-7a ATTACHING PARTS, Seal To Floor Pan

SCREW, Tapping	72	01 (* 4-64)	17.671	3	812 0054

4.141-8 TUBE, Gasoline Tank Filler Neck Air Vent

67	05-06-07-09	.....	1	318 0908
67	08	.....	1	318 0917
68	05-06-09 (* 4-11)	.....	1	318 0908
68	08 (* 4-11)	.....	1	318 0917

4.141-9 ATTACHING PARTS, Tube To Panel

CLIP, Closed	67	01 ***(Use G120521)***	17.134	1	G105245
SCREW, Tapping	67	01	17.671	1	400 1040
SCREW, Tapping	68	01 (*4-11)	17.671	1	400 1040

Printed in U.S.A.

FUEL - EXHAUST

4.141–10 HOSE, Gasoline Tank Filler Neck To Vent Tube (Bulk–Order Per Foot)

67	01	.....	AR	320	6752
68	01 (*4–11)	.....	AR	320	6752

4.141–11 CLAMP, Gasoline Tank Filler Neck Vent Tube Hose

67	01	.....	2	318	0753
68	01 (* 4–11)	.....	2	318	0753

4.141–12 HOSE, Gasoline Tank Filler Neck To Tank Return (Bulk–Order Per Foot)

67/69	08	.....	AR	320	6694

4.141–13 ATTACHING PARTS, Hose To Floor Pan

FASTENER	67/69 08	.....	1	400	1712

4.141–14 CLAMP, Gasoline Tank Filler Neck To Tank Return Hose

67/69	08	.....	2	318	0752

4.141–15 SEAL, Gasoline Tank Air Vent Nipple (To Floor Pan)

67	08	.....	1	317	1873
68/69	08	.....	1	319	3849

4.141–16 HOSE, Gasoline Tank Air Vent (Bulk–Order Per Foot)

68/69	30–70	.....	AR	320	6752
70	30–70 (Used With Breather Tube)	.....	AR	320	6752

4.141–17 CLAMP, Gasoline Tank Air Vent Hose

68/69	30–70	.....	2	318	0753
70	30–70 (Used With Breather Tube)	.....	2	318	0753

4.141–18 BREATHER, Gasoline Tank Air Vent Hose

68/69	30–70	9.001	1	318	7999
70	30–70 (Used With Breather Tube)	.....	1	318	7999

4.141–19 GROMMET, Gasoline Tank Air Vent Hose (In Cover)

68/69	30–70	.....	1	319	0887
70	30–70 (Used With Breather Tube)	.....	1	319	0887

4.141–20 HOUSING, Gasoline Tank Filler Neck

67/69	10–50–80 227	.....	1	357	4855
70/	10–80	.....	1	319	5554

4.141–20a RETAINER, Gasoline Tank Filler Neck Housing (To Panel)

67/	10–50–80	.....	1	357	4853

4.141–21 ATTACHING PARTS, Retainer And Housing To Panel

SCREW, Tapping	67/ 10–50–80	.....	2	400	2015
RIVET, Tubular	67/ 10–50–80	.....	6	400	2162

4.141–22 RETAINER, Gasoline Tank Filler Neck To Housing

67/	10–50–80	.....	1	357	4904

Printed in U.S.A.

FUEL - EXHAUST

4.141–23 GASKET, Gasoline Tank Filler Neck Housing Door

67/	10-50-80	.....	1	357 4857	

4.141–24 BUMPER, Gasoline Tank Filler Neck Housing Door

67/	10-50-80	12.125	2	400 2003	

4.141–25 GROMMET, Gasoline Tank Filler Neck

70/	01-40 (* 4-63)	.....	1	318 7295	
72	01-70 (* 4-64)	.....	1	321 2102	
67/	10-50-80	.....	1	318 7295	

4.141–26 TUBE, Gasoline Tank Filler Neck Housing Overflow Drain

67/	10-50-80 (To Fender-Lower-Rear)	.....	1	318 9232	

4.141–26a ATTACHING PARTS, Overflow Drain Tube (Bottom Of Left Rear Fender)

CLIP, Snap On	70/ 10-80	4.141	1	400 1880	

4.141–27 HOSE, Gasoline Tank Filler Neck Housing Overflow Drain Tube (Bulk–Order Per Foot)

67/69	10-50-80 (1/2" I. D. -3/4" O. D.)	.....	AR	320 6694	
70/	10-80	.....	AR	448 6230	

4.141–28 CLAMP, Gasoline Tank Filler Neck Overflow Drain Tube Hose

67/	10-50-80	.....	2	318 0752	

4.141–29 GROMMET, Gasoline Tank Filler Neck Overflow Drain Tube

67/	10-50-80	.....	1	318 7296	

4.141–30 FASTENER, Gasoline Tank Filler Neck Overflow Drain Tube

67/69	10-50-80	4.165	1	400 0306	

4.141–31 STRAP, Gasoline Filler Neck Ground (On Connector)

67/	10-50-80	.....	1	318 6113	

4.141–32 TUBE, Gasoline Tank Vent (Upper)

67/69	17-18-87-88 (Tank Type)	.....	1	318 9006	
67	15-16-19-59-85-86-89 (Tube Type)	.....	1	318 7282	
68/69	15-19-85-89 (Tube Type) ***(Use 448 5918)***	.....	1	319 4027	
70	15-19-85-89 (LCFE)	.....	1	448 5918	
70	18-88 (LCFE)	.....	1	319 6508	

4.141–33 ATTACHING PARTS, Tube To Wheelhouse Panel

STRAP	67/69	17-18-87-88	13.050	2	318 5027	
CLIP, Double	70	18-88 (LCFE)	8.101	AR	314 1309	
CLIP, Retaining	70	18-88 (LCFE)	8.101	1	316 8875	
SCREW, Tapping.....	70	18-88 (LCFE)(#12-11 x 1/2)	17.671	AR	400 1042	
SCREW, Tapping.....	70	18-88 (LCFE)(#14-14 x 1/2)	17.671	AR	G9414012	NA

4.141–34 ATTACHING PARTS, Tube To Rear Shelf Panel

CLIP, Closed	67	15-16-19-59-85-86-89	.....	1	400 0786	
CLIP, Closed	68/69	15-19-85-89 ***(Use 400 3015)***	17.134	1	G120525	
CLIP, Closed	70	15-19-85-89 (LCFE)	.....	1	400 0786	
SCREW, Tapping.....	67/69	15-16-19-59-85-86-89	17.660	1	G161901	
SCREW, Tapping.....	70	15-19-85-89 (LCFE)	17.660	1	G161901	

FUEL - EXHAUST

4.141–35 GROMMET, Gasoline Tank Upper Vent Tube (In Floor Pan)

67/69	17-18-87-89	.....	1	318 7296
67/69	15-16-19-59-85-86-87-89	.....	2	318 7296
70	15-19-85-89 (LCFE)	.....	2	318 7296
70	15-19-85-89 (WCFE)	.....	1	400 3117
70	18-88	.....	1	400 3117
71/	10-80	.....	1	400 3117

4.141–35a PLUG, Gasoline Tank Upper Vent Tube Grommet

70	15-19-85-89 (LCFE)	27.038	1	400 0328

4.141–36 TUBE, Gasoline Tank Vent (Lower)

67	17-18-87-88 (Steel Tubing)(6-1/2" Long) ***(Use 319 0320)***	.....	1	318 7281
67	17-18-87-88 (Rubber-Bulk-Order Per Foot)	.....	AR	320 6694
67/70	15-16-19-59-85-86-89 (Steel Tubing)	.....	1	318 7283
68	17-18-88 (Rubber-Bulk-Order Per Foot)	.....	AR	320 6694
68	17-18-88 (Plastic-Bulk-Order Per Foot)	.....	AR	448 6230
69	18-88 (Bulk-Order Per Foot)	.....	AR	448 6230
70	15-19-85-89 (WCFE)(17-1/2" Long)(Curved)	.....	1	319 7662
70	18-88	.....	1	319 7662
71/	10-80 (Bulk-Order Per Foot)	.....	AR	448 6230
71/	10-80	.....	1	319 7662

4.141–37 HOSE, Gasoline Tank Lower Vent Tube Connecting (Bulk-Order Per Foot)

67	17-18-87-88 (Used With Steel Tubing)	.....	AR	320 6694
67/69	15-16-19-59-85-86-89	.....	AR	320 6694
70	15-19-85-89 (Bulk-Order Per Foot)	.....	AR	448 6230
70	18 (L3S-LCFE)(6-3/4" Long-Line Reducer)	.....	1	319 5355
70	18 (W3S): 88 (Bulk-Order Per Foot)	.....	AR	448 7656

4.141–38 CLAMP, Gasoline Tank Lower Vent Tube Hose Connecting

67	17-18-87-88 (Used With Steel Tubing)	.....	4	318 0752
67	17-18-87-88 (Used With Rubber Tubing)	.....	2	318 0752
68/69	17-18-88	.....	2	318 0752
67/70	15-16-19-59-85-86-89	.....	4	318 0752
70	15-19-85-89 (LCFE)	17.108	1	320 3077
70	15-19-85-89 (WCFE)	.....	1	319 7619
70	18 (W3S): 88	.....	1	319 7619
70	18 (L3S-LCFE-3/4" Dia.-For Reducer)	.....	1	318 0752
70	18 (L3S-LCFE-3/8" Dia.-For Reducer)	.....	1	319 7566
70	18-88	.....	2	319 7566
71/	10-80	.....	1	320 3077

4.141–39 SEAL, Gasoline Tank Lower Vent Tube

67/68	17-18-87-88 (Used With Rubber Tubing)	.....	1	318 9516
68	17-18-88 (Used With Plastic Tubing)	.....	1	319 3641
69	18-88	.....	1	319 3641
70	10-80 (LCFE)	.....	1	319 8012

4.141–40 SPEEDNUT, Gasoline Tank Lower Vent Tube Seal

67/68	17-18-87-88 (Used With Rubber Tubing)	.....	1	400 1838
68	17-18-88 (Used With Plastic Tubing)	.....	1	400 3824
69	18-88	.....	1	400 3824

Printed in U.S.A.

4.141–41 ATTACHING PARTS, Tube To Body

CLIP, Closed	67/69	15-16-19-59-85-86-89..... *(Use 400 3015)*	17.134	2	G120525
CLIP, Closed	70	15-19-85-89..... *(Use 400 3015)*	17.134	2	G120525
SCREW, Tapping.....	67/69	15-16-19-59-85-86-89.....	17.671	2	400 1042
SCREW, Tapping.....	70	15-19-85-89.....	17.671	2	400 1042

4.142–1 VALVE, Gasoline Tank Fuel Vent Line Check

70/	01-30-70 (WCFE)	.....	1	319 8667
70/	10-80 (WCFE)	.....	1	319 8666

4.142–2 ATTACHING PARTS, Check Valve Mounting

SCREW, Tapping.....	70/	01-10-30-70-80 (WCFE)	17.671	2	400 1042

4.142–3 HOSE, Gasoline Tank To Check Valve (Bulk - Order In Feet)

70/	01-10-30-70-80 (WCFE)	.....	AR	448 7656

4.142–4 HOSE, Check Valve To Engine Vent Tube (Bulk - Order In Feet)

70/	01-10-30-40-70-80 (WCFE)	.....	AR	448 7656

4.142–5 CLAMP, Gasoline Tank To Check Valve Hose

70/	01-10-30-70-80 (WCFE)	.....	2	319 7566

4.142–6 CLAMP, Check Valve To Engine Vent Tube Hose

70/	01-10-30-40-70-80 (WCFE)	.....	AR	319 7566

4.142–7 TUBE, Check Valve To Engine Vent Tube

70/71	01 (WCFE)	.....	1	319 9787
72	01 (WCFE)	.....	1	321 6270
70	30 (WCFE)	.....	1	319 9695
70/71	70 (WCFE)	.....	1	319 9696
72	70 (WCFE)	.....	1	321 5704

4.142–8 TUBE, Gasoline Tank To Check Valve Vent

70/	10-80 (WCFE)	.....	1	319 8179
70/71	40 (WCFE)	.....	1	321 0499
72	40 (WCFE)	.....	1	321 5898

4.142–9 TUBE, Check Valve To Connector Hose

70/	10-80 (31-1/2" Long)(WCFE).....	.....	1	319 8180

4.142–10 TUBE, Connector To Engine Vent

70/	10-80 (WCFE)	.....	1	319 9677

4.142–11 HOSE, Vent Tube To Engine

70/	(WCFE).....	.....	1	319 9789

4.142–12 SHIELD, Heat Check Valve

70/	01.....	.....	1	319 8897

Printed in U.S.A.

4.142–13 ATTACHING PARTS. Check Valve Hoses And Tubes (WCFE)

CLIP	70/	10-30-70-80 (Gas Tank To Check Valve Hose) ***(Use 400 3015)***	17.134	2	G120525
CLIP	70/	10-80 (V8)(Check Valve To Connector Tube)	4.160	2	400 1844
CLIP	70	30-70 (Vent Tube To Gas Tube)	.....	1	313 7319
CLIP	70	70 (Six)(Check Valve To Engine Vent Tube)			
CLIP	72	01-40 (Six)(Vent Tube To Engine) ... ***(Use 400 3015)***	.....	7	G120520
CLIP	72	40 (V8)(Vent Tube To Engine) ..... ***(Use 400 3015)***	.....	4	G120520
CLIP	72	01 (V8)(Check Valve To Engine Vent) ***(Use 400 3015)***	.....	5	G120520
		(Use G120520)	.....	1	312 8541
CLIP, Closed	70/	01-30-70 (Check Valve To Engine Vent Tube) ***(Use 400 3015)***	17.134	AR	G120520
CLIP, Closed	70/	10-80 (Vent Tube To Floor Pan) .... ***(Use 400 3015)***	17.134	2	G120520
CLIP, Closed	70/	10-80 (Six)(Check Valve To Connector Tube) ***(Use 400 3015)***	17.134	2	G120520
CLIP, Closed	70/	10-80 (Six)(Connector To Engine Vent Tube) ***(Use 400 3015)***	17.134	4	G120520
CLIP, Closed	70/	10-80 (V8)(Connector To Engine Vent Tube) ***(Use 400 3015)***	17.134	6	G120520
CLIP, Closed	70/71	40 (Vent Tube To Engine Vent) ..... ***(Use 400 3015)***	17.134	8	G120520
CLIP, Double	70/	01-30-70 (V8) (Check Valve To Engine Vent Tube) ..	4.160	AR	400 1844
CLIP, Double	70/	10-30-70-80 (Vent Tube To Wheel House)(3/16" Dia.)	8.101	1	314 1309
CLIP, Double	70/	10-80 (V8)(Connector To Engine Vent Tube)	4.160	2	400 1844
CLIP, Double	72	70 (Vent Tube To Brake Tube)	8.101	1	314 1309
SCREW	70/	01 (Valve To Engine Vent Tube)	17.671	AR	400 1042
SCREW	70/	10-30-70-80 (Gas Tank To Check Valve Clip)	17.671	2	400 1042
SCREW	70/	10-80 (Vent Tube To Floor Pan)	17.671	2	400 1042
SCREW	70/	10-80 (Check Valve To Connector Tube Clip)	17.671	2	400 1042
SCREW	70/	40 (Engine Vent Tube Clip)	17.671	7	400 1042
NUT, Lock	70/	10-80 (Screw Protector)(In Trunk & Luggage Comp.) .	26.096	3	400 0802

4.142–14 NIPPLE. Gasoline Tank Vent Tube To Rocker Arm Cover

70	.....	.....	1	319 9740
71	SIX (Metal Nipple)	.....	1	319 9740
71/	SIX (Plastic Nipple)	9.001	1	318 7999
71	V8	.....	1	319 9740
72	40-70 (V8-WST)(V8-W4ST)	.....	1	319 9740

4.142–15 "O" RING. Gasoline Vent Nipple To Rocker Arm Cover

70	.....	.....	1	319 9744
71	SIX (Used With Metal Nipple)	.....	1	319 7944
71	V8	.....	1	319 7944
72	40-70 (V8-WST)(V8-W4ST)	.....	1	319 9744

4.143–1 COVER. Gasoline Tank Vent Tube Protective

67/69	05-06-07-09	4.145	1	317 9241
70	01-40	.....	1	319 7337
71/	05-06	.....	1	321 1318
71/	08	.....	1	364 1992
68/70	30-70	.....	1	360 0520

4.143–2 ATTACHING PARTS. Protective Cover To Lower Center Panel Brace

SCREW, Tapping	71/	05-06	17.671	4	812 0054
SCREW, Tapping	71/	08	17.671	6	812 0054

4.143–3 PLUG. Gasoline Tank Air Vent Tube

70	30-70 (Used Less Breather Tube)	27.038	1	319 9986

4.143–4 PLUG. Gasoline Tank Breather Tube

70	30-70 (Used Less Breather Tube)	27.038	1	400 0328

4.144–1 CANISTER, Fuel Vapor Storage

71	V8 (WAT)	.....	.....	1	321 0962
72	V8 (WAT)	.....	.....	1	812 1644

4.144–2 BRACKET, Fuel Vapor Canister Mounting

71/	V8 (WAT)	.....	.....	1	321 0961

4.144–3 ATTACHING PARTS, Canister Strap Clamp

SCREW, Tapping.....	71/	V8 (WAT)	.....	17.671	1	G9426711	NA

4.144–4 ATTACHING PARTS, Canister Bracket Mounting

SCREW, Tapping.....	71/	V8 (WAT)	.....	17.671	2	400 1042	

4.144–5 HOSE, Tank Vent To Canister

71/	01-40-70 (V8-WAT)	.....	.....	1	321 1673
71/	10-80 (V8-WAT)	.....	.....	1	321 1719

4.144–6 ATTACHING PARTS, Hose To Wire Harness

CLIP.....	71	01-40-70 (V8-WAT)	.....	.....	1	79 394
CLIP.....	72	.....	.....	.....	2	400 3838

4.144–7 PLUG, Fuel Vent Canister Metering

71/	V8 (WAT)	.....	.....	1	321 3949

4.144–8 FILTER, Fuel Vapor Storage Canister

71/	V8 (WAT)	.....	.....	1	812 0330

4.144–9 REPAIR KIT, Canister Purge Valve

72	V8 (WAT)	 378	.....	1	812 2115

4.145–1 SHIELD, Gasoline Tank Filler Tube

67/	15-16-17-19-59-85-86-87-89	.....	.....	1	318 9050

4.145–2 ATTACHING PARTS, Shield And Protective Cover To Lower Center Panel Brace

SCREW, Tapping.....	67/	05-06-07-09-46	..... ***(Use 812 0054)***	17.671	4	G274773	

4.145–3 ATTACHING PARTS, Shield To Underbody

SCREW, Tapping.....	67/71	15-16-17-19-59-85-86-87-89	.....	17.671	1	G442751	
SCREW, Tapping.....	72	15-19-85-89	.....	.....	2	400 0032	

4.148–1 PLUG, Gasoline Tank Drain

67/68	.....	.....	.....	1	316 0725

4.148–2 GASKET, Gasoline Tank Drain Plug

67/68	.....	.....	.....	1	316 0632

4.152–1 STRAP, Gasoline Tank Mounting

67/69	01	.....	.....	1	317 0235
70/	01 (* 4-63)	.....	.....	2	319 5025
72	01 (* 4-64)	.....	.....	2	321 7233
67/	15-16-17-19-59-85-86-87-89	.....	.....	2	318 5617
67/	18 (L3S)	.....	.....	2	318 5617
67/	18-88 (W3S)	.....	.....	2	318 6304
72	18 (W3S)	.....	.....	2	321 5619

Printed in U.S.A.

68/70	30-70	.....	2	318 9134	
70/	40	.....	2	319 9905	
71	70	.....	2	319 5025	
67/	88 (L3S)	.....	2	318 6304	
72	88	.....	2	321 5619	

4.152-2 ATTACHING PARTS, Strap To Rear Floor Pan Support

BOLT	67/69	01	.....	1	317 0233	
BOLT	70/	01-30-40-70	.....	2	319 8330	
BOLT	72	10-80	.....	2	316 6804	
BOLT	67/71	15-16-17-19-59-85-86-87-89	.....	2	316 6804	
BOLT	67/68	18-88 (L3S)	.....	2	316 6804	
BOLT	69/71	18 (L3S)	.....	2	316 6804	
BOLT	67/70	18-88 (W3S)(2-1/2" Thread)	.....	2	318 6457	
BOLT	70/	18-88 (W3S)(3" Thread)	.....	2	316 6804	
BOLT	68/69	30-70	.....	2	318 9132	
BOLT	69/70	88 (L3S)(2-1/2" Thread)	.....	2	318 6457	
BOLT	70/71	88 (L3S)(3" Thread)	.....	2	316 6804	
WASHER, Lock	67/69	01	17.820	1	G120382	
WASHER, Lock	67/69	10-50-80	17.820	2	G120214	
WASHER, Lock	68/69	30-70	17.820	2	G120382	
WASHER, Plain	67/	01-10-30-70-80	17.814	2	G120393	NA
WASHER (External Tooth)	70/	01-10-30-70-80	17.822	2	G138485	
NUT, Hexagon	67/69	01	17.406	1	G120369	NA
NUT, Hexagon	67/69	10-30-50-70-80 (5/16")	17.406	2	G120368	
NUT, Hexagon	68/69	30-70 (3/8")	17.406	2	G120369	NA
NUT, Hexagon	70/		17.406	2	G120368	

4.160-1 TUBE, Gasoline Tank To Fuel Pump (Full Length)

67/69	05-06-08-09 (LHD-Six)	.....	1	318 4060
67/69	05-06-08-09 (V8)	.....	1	318 5242
70/	01 (V8)	.....	1	319 7671
70	01 (Six-* 4-53) ***(Use 321 0877)***	.....	1	319 7375
70	01 (Six-* 4-54)	.....	1	321 0877
71/	01 (Six)	.....	1	321 0877
68/69	30	.....	1	319 0989
70	30	.....	1	319 7792
70	40 (* 4-53) ***(Use 321 0894)***	.....	1	321 0363
70	40 (* 4-54)	.....	1	321 0894
71/	40 (Six)	.....	1	321 0894
72	40 V8	.....	1	321 5897
68/70	70 (Six)	.....	1	319 0573
71	70 (Six-* 4-55)	.....	1	321 1546
71	70 (Six-* 4-56)	.....	1	321 2941
72	70 (Six)	.....	1	321 2941
68/69	70 (V8)	.....	1	319 0572
70	70 (V8)	.....	1	319 7793
71/	70 (V8)	.....	1	321 1610

4.160-2 TUBE, Gasoline Tank To Fuel Pump (Rear)

67	07 (LHD-Six)	.....	1	317 2171
67	07 (V8)	.....	1	318 5243
71/	18 (Six-W3S)	.....	1	318 7288
67/70	18-88 (Six-W3S)	.....	1	318 7288
67/68	17-87 (V8)	.....	1	318 7286
67/	15-16-18-19 (V8-L3S)	.....	1	318 7286
67/68	59-85-86-88-89 (V8-L3S)	.....	1	318 7286
67/68	18-88 (V8-W3S)	.....	1	318 7289
67/70	15-18-19-59-85-88-89 (Six-L3S)	.....	1	318 7285
71/	15-18-19-85-89 (Six-L3S)	.....	1	318 7285
69/	18-88 (V8-W3S)	.....	1	319 5240
69/	85-89 (V8)	.....	1	318 7286
69/	88 (V8-L3S)	.....	1	319 5240
67/69	***05-06-08-09 (RHD-Six)***	.....	1	317 1887
67	***07 (RHD-Six)***	.....	1	317 2171

4.160–3 TUBE, Gasoline Tank To Fuel Pump (Center)

67/68	17–87 (V8)	.....	1	318 7630
67	***07 (RHD-Six)***	.....	1	317 2173

4.160–4 TUBE, Gasoline Tank To Fuel Pump (Front)

67	07 (LHD–Six)	.....	1	317 8961
67	07 (V8)	.....	1	318 5235
67/68	10–50–80 (Six)	.....	1	318 7287
67/68	15–16–18–19 (V8)	.....	1	318 7629
67/68	17 (V8)	.....	1	318 7631
67/68	59–85–86–88–89 (V8)	.....	1	318 9302
67	87 (V8)	.....	1	318 7632
69/70	10 (Six)	.....	1	318 7287
71/	10 (Six)	.....	1	321 0430
69/70	10 (V8)	.....	1	318 7629
71/	10 (V8)	.....	1	321 0530
69	80 (Six)	.....	1	319 3977
70/	80 (Six)	.....	1	319 7736
69/	80 (V8)	.....	1	319 3978
67/69	***05-06-08-09 (RHD-Six)***	.....	1	318 0154
67	***07 (RHD-Six)***	.....	1	318 0154

4.160–5 HOSE, Gasoline (Bulk–Order Per Foot)

67/		.....	AR	320 2187

4.160–6 CLAMP, Gasoline Hose

67/		.....	AR	318 1643

4.160–7 GROMMET, Gasoline Front Fuel Line

67/69	01 (V8–In Left Wheelhouse)	3.615	1	400 0336
68/70	30–70 (V8–In Left Front Sill)	.....	1	400 1803
67/70	10–50–80 (V8–In Left Front Sill)	.....	2	400 1803
71/	01–10–40–70 (V8–In Left Front Sill)	.....	1	400 1803

4.160–8 ATTACHING PARTS, To Gas Tank Support

CLIP	67/69	01	4.152	1	47 272
CLIP, Closed	67/	10–30–40–50–70–80	8.220	1	400 1802
SCREW, Tapping	67	10–50–80	17.671	1	400 1042
SCREW, Tapping	68/	15–18–19–85–89 (L3S)	17.671	1	400 1042
SCREW, Tapping	68/	18–88 (W3S)	15.320	1	400 1701
SCREW, Tapping	68/	30–70	17.671	1	400 1042
SCREW, Tapping	68/	88 (L3S)	15.320	1	400 1701

4.160–8a ATTACHING PARTS, To Vent Tube

CLIP, Open	72	40 (V8)	3.048	1	313 7319

4.160–8b ATTACHING PARTS, To Brake Tube

CLIP, Open	72	01–70 (Six)	3.048	2	313 7319

Printed in U.S.A.

FUEL - EXHAUST

4.160–9 ATTACHING PARTS, To Rear Shock Crossmember

CLIP	67/69	01	4.152	1	47 272
CLIP	67/	10-50-70-80	8.220	1	400 1802
CLIP	68/70	30-70	8.220	2	400 1802
CLIP	71/	70 (V8)	8.220	1	400 1802
CLIP (Double)	72	40 (V8)	.....	3	400 1844
SCREW, Tapping	67/	10-50-70-80	17.671	1	400 1042
SCREW, Tapping	68/70	30-70	17.671	2	400 1042
SCREW, Tapping	72	40 (V8)	17.671	3	400 1042
SCREW, Tapping	71/	70 (V8)	17.671	1	400 1042

4.160–10 ATTACHING PARTS, To Right Rear Floor Pan

CLIP	68/	70 (Six)	.....	1	400 1844
SCREW, Tapping	68/	70 (Six)	17.671	1	400 1042

4.160–11 ATTACHING PARTS, To Left Rear Floor Pan

CLIP	68/	70 (V8)	8.220	1	400 1802
SCREW, Tapping	68/	70 (V8)	17.671	1	400 1042

4.160–12 ATTACHING PARTS, To Right Rear Sill

CLIP (Single)	68/	70 (Six)	8.220	1	400 1802
CLIP (Double)	68/70	70 (Six)	8.101	1	312 6110
CLIP (Double)	72	01-40 (Six)	.....	1	400 1844
SCREW, Tapping	72	01-40 (Six)	17.671	1	400 1042
SCREW, Tapping	68/	70 (Six)	17.671	1	400 1042

4.160–13 ATTACHING PARTS, To Left Rear Sill

CLIP, Closed	70/	01 (V8)	8.220	2	400 1802
CLIP, Closed	70	01 (Six)(* 4-53)	8.220	3	400 1802
CLIP, Closed	67/	10-50-80	8.220	2	400 1802
CLIP, Closed	68/70	30-70 (V8)	8.220	1	400 1802
CLIP, Closed	70/	40 (Gas And Brake Tube)	.....	1	400 1844
CLIP, Closed	70/	40	8.220	2	400 1802
CLIP, Closed	71/	70 (V8)	8.220	2	400 1802
CLIP, Snap	68/70	30-70 (V8)	4.152	1	47 272
SCREW, Tapping	67/	10-30-70-80	17.671	2	400 1042
SCREW, Tapping	70	01 (Six)(* 4-53)	17.671	3	400 1042
SCREW, Tapping	70/	01 (V8)	17.671	2	400 1042
SCREW, Tapping	70/	40	17.671	3	400 1042

4.160–14 ATTACHING PARTS, To Floor Pan

CLIP, Closed	67/69	01 (LHD-Six)	8.220	3	400 1802
CLIP, Closed	70/	01-40 (Six)	.....	1	400 1844
CLIP, Closed	70	01 (V8-Except California)	8.220	5	400 1802
CLIP, Closed	70	01 (V8-California)	8.220	4	400 1802
CLIP, Closed	71/	01 (V8)	8.220	4	400 1802
CLIP, Open	70	01 (Six)(* 4-54)	3.048	2	313 7319
CLIP, Open	71/	01 (Six)	3.048	2	313 7319
CLIP, Open	71	70 (Six)	3.048	1	313 7319
CLIP (Double)	72	70 (Six) (Gas And Brake Tube)	.....	3	400 1844
SCREW, Tapping	67/	01 (LHD-Six)	17.671	3	400 1042
SCREW, Tapping	70/	01 (V8)	17.671	4	400 1042
SCREW, Tapping	72	70 (Six)	17.671	3	400 1042

Printed in U.S.A.

FUEL - EXHAUST

4.160–15 ATTACHING PARTS, To Front Stringer

CLIP	67/69	01	8.220	1	400 1802
CLIP	68/70	70 (Six)	.....	1	400 1844
CLIP	71/	70	.....	1	400 1844
CLIP	68/70	30-70 (V8)	8.220	1	400 1802
SCREW, Tapping	67/69	01-30-70	17.671	1	400 1042
SCREW, Tapping	70/	30-70	17.671	1	400 1042

4.160–16 ATTACHING PARTS, To Sill, Floor Pan And Wheelhouse

CLIP	67/	01 (V8)	8.220	6	400 1802
SCREW, Tapping	67/	01 (V8)	17.671	6	400 1042

4.160–17 ATTACHING PARTS, To Right Front Sill

CLIP, Snap	67/69	01 (Six)	4.152	2	47 272
CLIP, Snap	68/70	70 (Six)	4.152	1	47 272
CLIP, Double	67/69	01 (Six)	8.101	2	312 6110
CLIP, Closed	68/	70 (Six)	.....	2	400 1844
SCREW, Tapping	68/	70 (Six)	.....	2	400 1042

4.160–18 ATTACHING PARTS, To Left Front Wheelhouse

CLIP, Closed	67/69	01 (V8)	8.330	1	313 5224
CLIP, Closed	72	40 (V8)	8.330	1	313 5224
CLIP, Closed	68/70	70 (V8)	8.220	1	400 1802
CLIP, Cable	67/69	01 (V8)	8.220	1	400 1802
SCREW, Tapping	67/69	01 (V8)	17.671	1	400 1042
SCREW, Tapping	68/70	70 (V8)	17.671	1	400 1042

4.160–19 ATTACHING PARTS, To Front Floor Reinforcement

CLIP, Closed	70/	01-40 (V8)	8.220	4	400 1802
CLIP, Closed	70/	01-40 (Six)(Gas And Brake)(Double Clip)(1/2" Wide)	.....	4	400 1844
CLIP, Closed	67/	10-50-80	8.220	2	400 1802
CLIP, Closed	72	10-80 (Six)	.....	1	400 1844
CLIP, Closed	70/	40	8.220	1	400 1802
CLIP, Closed	70/	30-70 (V8)	8.220	4	400 1802
SCREW, Tapping	67/	10-50-80	17.671	2	400 1042
SCREW, Tapping	70/	01-40 (Six)	17.671	3	400 1042
SCREW, Tapping	70/	01-30-70 (V8)	17.671	4	400 1042

4.160–20 ATTACHING PARTS, Gas Tube To Distributor Vacuum Tube

SCREW, Tapping	70	01 (Six)	.....	1	400 1042

4.160–21 ATTACHING PARTS, To Right Front Sill

CLIP, Closed	72	01-40 (Six)(Gas And Brake)	8.220	3	400 1844
CLIP, Double	67/69	10-50-80 (Six)	8.101	1	312 6110
CLIP, Snap	67/69	10-50-80 (Six)	.....	1	47 272
SCREW, Tapping	72	01-40 (Six)	17.671	3	400 1042

4.160–22 ATTACHING PARTS, To Left Front Sill

CLIP, Closed	67/	10-50-80 (V8)	8.220	2	400 1802
CLIP, Closed	70/	01 (V8)	8.220	4	400 1802
CLIP, Cable	67/	10-50-80 (V8)	8.330	1	313 5224
CLIP, Cable	70/	01 (V8)	8.330	1	313 5224
CLIP, Cable	70/	30-70 (V8)	8.330	1	313 5224
SCREW, Tapping	67/	10-50-80 (V8)	17.671	3	400 1042
SCREW, Tapping	70/	01-30-70 (V8)	17.671	1	400 1042

Printed in U.S.A.

FUEL - EXHAUST

4.160–23 ATTACHING PARTS, At Engine Cushion Bracket

CLIP	***70/***	***10 (RHD-Six)***	***(Use 317 8717)***	13.050	1	319 3340
WASHER	***70/***	***10 (RHD-Six)***		17.814	1	400 1102
SCREW, Tapping	70	01 (V8)		17.671	4	400 1042
SCREW, Tapping	70	30–70 (V8)		17.671	1	400 1042

4.160–24 ATTACHING PARTS, Gasoline Tube To Front Suspension Bracket

CLIP, Closed	70/	01–10–40–70–80 (Six)		8.220	1	400 1802
SCREW, Tapping	70/	01–10–40–70–80 (Six)		17.671	1	400 1042

4.160–25 HEAT SHIELD, Fuel Line

69		09 (SC/RAMBLER)		.....	1	319 8078

4.160–26 ATTACHING PARTS, Heat Shield To Sill

SCREW, Tapping	69	09 (SC/RAMBLER)	***(Use 812 0054)***	.....	2	G274773

4.174 TUBE, Fuel Pump To Carburetor

67	LDT (LHD–Six–WVW)		.....	1	317 7170
67	LDT (Six–WEW)		.....	1	317 4330
67	WDT (LHD–Six–WVW)		.....	1	317 6995
67	WDT (Six–WEW)		.....	1	317 8759
67	WDT (V8)		.....	1	318 7415
67/68	W4B (V8)		.....	1	318 7412
68	LDT (LHD–Six–WVW)		.....	1	319 1524
68	LDT (Six–WEW)		.....	1	319 1522
68	WDT (LHD–Six–WVW)		.....	1	319 1518
68	WDT (Six–WEW)		.....	1	319 1520
68	WDT (V8)		.....	1	319 1925
69	LDT (LHD–Six–WVW)	***(Use 319 5403)***	.....	1	319 3902
69	LDT (Six–WEW)		.....	1	319 3903
69	WDT (LHD–Six–WVW)		.....	1	319 3901
69	WDT (Six–WEW)	***(Use 319 5404)***	.....	1	319 3904
69	WDT (V8)		.....	1	319 4711
69	W4B (V8–LASC)	***(Use 319 6208)***	.....	1	319 4062
69	W4B (V8–WASC)		.....	1	319 6208

4.175 TUBE, Fuel Pump To Carburetor Filter

70	SIX (LDT–WEW)		.....	1	319 9544
70	SIX (LDT–WVW)		.....	1	319 9545
70	SIX (WDT–WEW–* 4–47)		4.174	1	319 5404
70	SIX (WDT–WEW–* 4–48)		.....	1	319 9546
70	SIX (WDT–WVW–* 4–47)		4.174	1	319 5406
70	SIX (WDT–WVW–* 4–48)		.....	1	319 9547
71	SIX (WEW)		.....	1	319 9544
71	SIX (WVW)		.....	1	321 1545
72	SIX		.....	1	319 9544
70	V8 (WDT–* 4–47)		4.174	1	319 4711
70	V8 (WEW–* 4–48)		.....	1	319 7922
70	V8 (WVW–* 4–48)		.....	1	319 7784
71	V8 (WEW–* 4–59)		.....	1	319 7922
71	V8 (WEW–* 4–60)		.....	1	321 3849
71	V8 (WVW–* 4–59)		.....	1	319 7784
71	V8 (WVW–* 4–60)		.....	1	321 3848
72	V8		.....	1	321 5899
70	***70 (Export-Six-WDT-WEW-* 4-48)***		.....	1	319 9546
70	***70 (Export-Six-WDT-WVW-* 4-48)***		.....	1	319 9547

4.176 TUBE, Filter To Carburetor (Metal)

70	V8 (WDT-* 4-48)	.....	1	319 9531
71	V8 (WDT-* 4-59)	.....	1	319 9531
71	V8 (WDT-* 4-60)	.....	1	321 3836
71	V8 (W4B-* 4-60)	.....	1	321 3850
72	V8 (WDT)	.....	1	321 3836
72	V8 (W4B)	.....	1	321 3850

4.177-1 HOSE, Carburetor To In-Line Filter (Bulk - Order Per Foot)

70/		4.160	AR	320 2187

4.177-2 CLAMP, Carburetor To In-Line Filter Hose

70/		4.160	AR	318 1643

4.178-1 PIPE, Exhaust (Front)

1967 Thru 1972 01-40

67/69	01 (199)	.....	1	318 6374
67	01 (232)	.....	1	318 6375
68	01 (232-* 4-13)	.....	1	318 6375
68	01 (232-* 4-14)	.....	1	318 6374
69	01 (232)	.....	1	318 6374
70	01-40 (Six)	.....	1	319 6673
71	01-40 (Six)	.....	1	321 0246
72	01-40 (Six)	.....	1	321 5747
67/69	01 (V8-Except SC/RAMBLER)	.....	1	318 1781
69	09 (SC/RAMBLER-V8-WDE-Left)	.....	1	319 8059
69	09 (SC/RAMBLER-V8-WDE-Right)	.....	1	319 8060
70	01 (304)	.....	1	319 8146
71	01 (304)(360-LDE)	.....	1	321 0469
71	01 (360-WDE-Left)	.....	1	321 0470
71	01 (360-WDE-Right)	.....	1	321 0471
72	01-40 (V8-LDE)	.....	1	321 5837

1967 Thru 1972 10-50-80

67/69	10-50-80 (232)	.....	1	318 4796
70	10-80 (Six)	.....	1	319 6673
71	10-80 (Six)	.....	1	321 0246
72	10-80 (Six)	.....	1	321 5747
67/69	10-50-80 (V8-LDE)	.....	1	318 4668
70	10-80 (304)(360-LDE)	.....	1	319 8146
71	10-80 (304)(360-LDE)	.....	1	321 0234
72	10-80 (V8-LDE)	.....	1	321 5755
67/69	10-50-80 (V8-WDE-Left)	.....	1	318 9460
67/69	10-50-80 (V8-WDE-Right)	.....	1	318 9461
70	10 (360-WDE-Left)(390-WDE-Left-E/MACHINE)	.....	1	319 6815
70	10 (360-WDE-Right)(390-WDE-Right-E/MACHINE)	.....	1	319 6816
70	19 (MACHINE-WDE-Left)	.....	1	319 9910
70	19 (MACHINE-WDE-Right)	.....	1	319 9919
70	80 (360-WDE-Left)(390-WDE-Left)	.....	1	319 6815
70	80 (360-WDE-Left)(390-WDE-Right)	.....	1	319 6816
71	10-80 (360-WDE-Left)(401-WDE-Left)	.....	1	321 0235
71	10-80 (360-WDE-Right)(401-WDE-Right)	.....	1	321 0236
72	10-80 (V8-WDE-Left)	.....	1	321 5807
72	10-80 (V8-WDE-Right)	.....	1	321 5808

FUEL - EXHAUST

1968 Thru 1972 30-70

68/69	70 (Six)	.....	1	318 4796
70	70 (Six)	.....	1	319 6673
71	70 (Six)	.....	1	321 0246
72	70 (Six)	.....	1	321 5747
68/69	70 (V8-LDE)	.....	1	318 4668
70	70 (304)(360-LDE)	.....	1	319 8146
71	70 (304)(360-LDE)	.....	1	321 0234
72	70 (V8-LDE)	.....	1	321 5755
68/69	30-70 (V8-WDE-Left)	.....	1	318 9460
68/69	30-70 (V8-WDE-Right)	.....	1	318 9461
70	30-70 (360-WDE-Left)(390-WDE-Left)	.....	1	319 6815
70	30-70 (360-WDE-Right)(390-WDE-Right)	.....	1	319 6816
71	70 (360-WDE-Left)(401-WDE-Left)	.....	1	321 0235
71	70 (360-WDE-Right)(401-WDE-Right)	.....	1	321 0236
72	70 (V8-WDE-Left)	.....	1	321 5807
72	70 (V8-WDE-Right)	.....	1	321 5808

4.178–2 PIPE, Exhaust (Rear)

1967 Thru 1972 01-40

67/68	01 (199) ***(Use 448 6007)***	.....	1	317 5665
67	01 (232) ***(Use 448 6010)***	.....	1	317 6976
68	01 (232-* 4-13) ***(Use 448 6010)***	.....	1	317 6976
68	01 (232-* 4-14) ***(Use 448 6007)***	.....	1	317 5665
69	01 (Six)	.....	1	448 6007
70	01 (Six-* 4-51)	.....	1	448 6018
70	01 (Six-* 4-52)	.....	1	321 0517
71	01 (Six)	.....	1	321 0517
72	01 (Six)	.....	1	321 2874
67/68	01 (V8) ***(Use 448 6011)***	.....	1	318 0596
69	01 (V8-Except SC/RAMBLER)	.....	1	448 6011
69	09 (SC/RAMBLER-V8-WDE-Left)	.....	1	319 8070
69	09 (SC/RAMBLER-V8-WDE-Right)	.....	1	319 8071
70	01 (304)	.....	1	319 6809
71	01 (304)(360-LDE)	.....	1	321 0655
71	01 (360-WDE-Left)	.....	1	321 0658
71	01 (360-WDE-Right)	.....	1	321 0652
72	01 (V8-LDE)	.....	1	321 3522
70/71	40	.....	1	321 0069
72	40 (Six)	.....	1	321 3681
72	40 (V8)	.....	1	321 5838

1967 Thru 1972 10-50-80

67/68	10-50-80 (Six) ***(Use 448 6013)***	.....	1	318 4800
69/70	10 (Six)	.....	1	448 6013
69/70	80 (Six)	.....	1	448 6571
71	10-80 (Six)	.....	1	321 0884
72	10-80 (Six)	.....	1	321 3657
67	10-50-80 (V8-LDE) ***(Use 448 6012)***	.....	1	318 4654
68	10-80 (V8-LDE-2" Dia. Muffler End) ***(Use 448 6012)***	.....	1	318 4654
68	10-80 (V8-LDE-2-1/4" Dia. Muffler End)	.....	1	448 6570
69/70	10 (V8-LDE)	.....	1	448 6570
69/70	80 (V8-LDE)	.....	1	448 6572
71	10-80 (V8-LDE)	.....	1	321 0477
72	10-80 (V8-LDE)	.....	1	321 2546
67/68	10-50-80 (V8-WDE-Left) ***(Use 448 6014)***	.....	1	318 9290
67/68	10-50-80 (V8-WDE-Right) ***(Use 448 6015)***	.....	1	318 9291

69/70	10 (V8-WDE-Left-E/MACHINE)	.....	1	448	6014
69/70	10 (V8-WDE-Right-E/MACHINE)	.....	1	448	6015
70	19 (MACHINE-Left)	.....	1	319	9899
70	19 (MACHINE-Right)	.....	1	319	9918
69/70	80 (V8-WDE-Left)	.....	1	448	6573
69/70	80 (V8-WDE-Right)	.....	1	448	6574
71	10-80 (V8-WDE-Left)	.....	1	321	0477
71	10-80 (V8-WDE-Right)	.....	1	321	0237
72	10-80 (V8-WDE-Left)	.....	1	321	2546
72	10-80 (V8-WDE-Right)	.....	1	321	2547

1968 Thru 1972 30-70

68	70 (232) ***(Use 448 6018)***	.....	1	318	9679
68	70 (232) ***(Use 448 6018)***	.....	1	318	9679
69/70	70 (232)	.....	1	448	6018
71	70 (Six)	.....	1	321	0427
72	70 (Six)	.....	1	321	2873
68	30 (V8-WDE-Left) ***(Use 448 6019)***	.....	1	319	0951
68	30 (V8-WDE-Right) ***(Use 448 6020)***	.....	1	319	0952
69/70	30 (V8-WDE-Left)	.....	1	448	6019
69/70	30 (V8-WDE-Right)	.....	1	448	6020
68	70 (V8-LDE) ***(Use 448 6584)***	.....	1	319	0767
69	70 (V8-LDE)	.....	1	448	6584
70	70 (V8-LDE)	.....	1	319	7737
71	70 (V8-LDE)	.....	1	321	0540
71	70 (V8-LDE)	.....	1	321	0540
72	70 (V8-LDE)	.....	1	321	2823
68	70 (V8-WDE-Left)	.....	1	318	9628
68	70 (V8-WDE-Right) ***(Use 448 6017)***	.....	1	318	9634
69/70	70 (V8-WDE-Left)	.....	1	448	6016
69/70	70 (V8-WDE-Right)	.....	1	448	6017
71	70 (V8-WDE-Left)	.....	1	321	0540
71	70 (V8-WDE-Right)	.....	1	321	0883
72	70 (V8-WDE-Left)	.....	1	321	2823
72	70 (V8-WDE-Right)	.....	1	321	2824

4.178–3 ATTACHING PARTS, Pipe To Manifold

STUD	67/	SIX	.....	2	315 6257	
STUD	67/69	V8 (Left)	.....	2	318 2464	
STUD	67/69	V8 (Right)	.....	2	318 2465	
STUD	70	V8 (Left-E/MACHINE)	.....	2	318 2464	
STUD	70	V8 (Right-E/Machine)	.....	2	318 2465	
STUD	70	19 (MACHINE)	.....	4	318 2464	
STUD	70	19 (MACHINE)	.....	4	400 4110	
STUD	71/	V8 (Left)	.....	2	400 4110	
STUD	71/	V8 (Right)	.....	2	400 4109	
WASHER, Lock	67/	SIX	17.820	2	G103321	NA
WASHER, Lock	67/	V8	17.820	4	G103321	NA
NUT, Hexagon	67/	SIX	1.067	2	314 9892	
NUT, Hexagon	67/	V8	1.067	4	314 9892	

4.178–4 CLAMP ASSEMBLY, Front Exhaust Pipe To Rear Exhaust Pipe

67/68	01 (199)	218	4.230	1	317	7362
67	01 (232)	219	4.230	1	313	1516
67/68	10-50-70-80 (Six)	219	4.230	1	313	1516
67/70	LDE (V8)	219	4.205	1	314	3124
67/68	WDE (V8)	219	.....	2	319	0706
68	01 (232-* 4-13)	219	4.230	1	313	1516
68	01 (232-* 4-14)	218	4.230	1	317	7362

69	01 (Six)	219	4.230	1	317 7362
69	10-70-80 (Six)	218	.....	1	317 0598
70/	SIX	218	.....	1	319 5231
69	WDE (V8-Except SC/RAMBLER)	219	.....	2	319 0706
69	09 (SC/RAMBLER-WDE-Left)	219	4.205	1	314 3124
69	09 (SC/RAMBLER-WDE-Right)	218	.....	1	319 5231
70	10-30 (V8-WDE-E/MACHINE)		.....	2	319 5232
70	19 (MACHINE)	219	4.205	2	314 3124
70	70-80 (V8-WDE)		.....	2	319 5232
71/	LDE (V8)		.....	1	319 5233
71	01 (V8-WDE)		.....	2	319 5232
71/	10-70-80 (V8-WDE)		.....	2	319 5233

4.178-5 ATTACHING PARTS, Clamp To Pipe

WASHER, Lock	67/69	LDE	17.820	2	G120214	
NUT, Hexagon	67/69	LDE (5/16" x 18) ***(Use 400 2117)***	17.406	2	G120376	NA
NUT, Hexagon	67/68	WDE (5/16" x 24)	17.406	4	G120368	
NUT, Hexagon	69	WDE (5/16" x 18) ***(Use 400 2117)***	17.406	4	G120376	NA

4.186-1 SEAL, Exhaust Pipe To Manifold

67/71	SIX ***(Use 319 2234)***	.....	1	317 5842	
72	SIX	.....	1	321 6643	
67/69	V8 ***(Use 319 2234)***	.....	2	317 5842	
70	01-70-80 (V8) ***(Use 319 2234)***	.....	2	317 5842	
70	10 (V8-E/MACHINE) ***(Use 319 2234)***	.....	2	317 5842	
71	10-70-80 (V8)	.....	2	321 1094	
72	10-70-80	.....	2	321 6644	
70	19 (MACHINE)	.....	2	319 9897	
70	30 (V8) ***(Use 319 2234)***	.....	2	317 5842	
71	(Left) 01-40 (V8)	.....	1	321 1094	
72	(Left) 01-40 (V8)	.....	1	321 6644	
71	(Right) 01-40 (V8) ***(Use 319 2234)***	.....	1	317 5842	
72	(Right) 01-40 (V8)	.....	1	321 6643	

4.186-2 FLANGE, Exhaust Pipe To Manifold

67/69	V8 (WDE)	.....	2	318 1873
70	V8 (WDE-E/MACHINE)	.....	2	318 1873
70	19 (MACHINE)	.....	2	319 9896
71	10-70-80 (V8-WDE)	.....	2	321 1138
72	V8 (WDE)	.....	2	321 1248

4.186-3 ATTACHING PARTS, Flange To Manifold Stud

WASHER, Lock	67/	V8 (WDE)	17.820	4	G103321	NA
NUT, Hexagon	67/	V8 (WDE)	1.067	4	314 9892	

4.195-1 BRACE, Exhaust Pipe

72	SIX (* 4-65)	.....	1	321 3750
72	SIX (* 4-66)	.....	1	321 7580
67/69	01 (Six)	.....	1	317 1429
70/71	01-10-40-70-80 (Six)	.....	1	319 7661
67/69	10-50-70-80 (Six-WST)(Six-WOD)	.....	1	318 2968
67	10-50-80 (Six-WAT)	.....	1	318 6210
68	10-70-80 (Six-WAT-* 4-15)	.....	1	318 6210
68	10-70-80 (Six-WAT-* 4-16)	.....	1	318 2968
69	10-70-80 (Six-WAT)	.....	1	318 2968

FUEL - EXHAUST

4.195–2 ATTACHING PARTS, Brace To Housing And Engine

BOLT, Hexagon	72	SIX		17.038	2	G180077 NA
BOLT, Hexagon	67/69	(2-1/8" Long) 01 (WAT)		17.038	1	G186307 NA
BOLT, Hexagon	67/69	(2-3/4" Long) 01 (WAT)		17.038	1	G181384 NA
BOLT, Hexagon	67/69	(1-3/4" Long) 01 (WST)(WOD)		17.038	1	G181377 NA
BOLT, Hexagon	67/69	(2-1/2" Long) 01 (WST)(WOD)		17.038	1	G179868 NA
BOLT, Hexagon	67/71	10-50-70-80 (Six)		17.038	1	G181377 NA
BOLT, Hexagon	***70***	***10 (RHD-Six)***		12.060	2	400 3872
WASHER, Lock	72	SIX		17.820	2	G120214 NA
WASHER, Lock	67/71	01 (WAT)		17.820	1	G103321 NA
WASHER, Lock	67/71	01 (WST)(WOD)		17.820	1	G103328 NA
WASHER, Lock	67/71	10-50-70-80 (Six)		17.820	1	G103321 NA
NUT, Hexagon	67/71	SIX		17.406	1	G103026 NA
NUT, Hexagon	***70***	***10 (RHD-Six)***		3.303	2	400 1457

4.195–3 ATTACHING PARTS, Brace To Exhaust Pipe

BOLT, Hexagon	67/69	SIX		17.038	2	G181596 NA
BOLT, Hexagon	70/	01-10-40-70-80 (LHD-Six)		2.020	2	400 3847
WASHER, Lock	67/69	SIX		17.820	2	G120214
WASHER, Plain	67/69	SIX		17.814	2	G120393 NA
NUT, Hexagon	67/69	SIX		17.406	2	G120368
NUT, Hexagon	70/	01-10-40-70-80 (LHD-Six)		3.303	2	400 1457

4.195–4 CLAMP ASSEMBLY, Exhaust Pipe To Bracket

72	SIX		4.178	1	321 2686

4.195–5 ATTACHING PARTS, Exhaust Pipe Clamp

SCREW	72	SIX		17.670	1	G273420

4.195–6 GROMMET, Exhaust Pipe Brace

72	SIX (* 4-66)		7.110	1	319 4672

4.200–1 SUPPORT, Exhaust Pipe Rear

67/69	01		.....	1	317 4573

4.200–2 ATTACHING PARTS, Support To Body

SCREW, Tapping	67/68	01		17.670	2	G172475 NA
SCREW, Tapping	69	01		17.671	2	G442751
WASHER, Lock	67/68	01		17.820	2	G120214

4.200–3 ATTACHING PARTS, Support To Pipe

PLATE, Tapping	67/69	01		.....	1	317 0879
BOLT, Hexagon	67/69	01		17.038	2	G181608 NA
WASHER, Lock	67/69	01		17.820	2	G120214
NUT, Hexagon	67/69	01		17.406	2	G120368

4.205–1 CLAMP ASSEMBLY, Rear Exhaust Pipe To Muffler

70/	(Six)		4.178	1	319 5231
67/68	01 (199)	218	4.230	1	317 7362
67	01 (232)	218	4.205	1	317 7363
68	01 (232-* 4-13)	218	4.205	1	317 7363
68	01 (232-* 4-14)	218	4.230	1	317 7362
69	01 (Six)	219	4.178	1	317 7362
67/68	10-50-70-80 (232)	218	4.205	1	317 7363
69	10-70-80 (232)	219	4.230	1	313 1516
67	V8 (LDE)	218	4.230	1	317 7364
69	V8 (LDE)	219	4.178	1	319 0706
71/	V8 (LDE)		.....	1	319 5233
68	10-80 (V8-LDE-2" Dia.)	218	4.230	1	317 7364
68	10-80 (V8-LDE-2-1/4" Dia.)		4.178	1	314 3124

Printed in U.S.A.

67/68	V8 (WDE) 218	4.230	2	317 7364	
69	V8 (WDE) 219	4.178	2	319 0706	
70	V8 (LDE)	4.178	1	314 3124	
70	V8 (WDE-E/MACHINE)	4.178	2	319 5232	
70	19 (MACHINE)	4.178	2	314 3124	
71	01 (V8-WDE)	.....	2	319 5232	
71/	10-70-80 (V8-WDE)	.....	2	319 5233	

4.205-2 ATTACHING PARTS, Clamp To Pipe

WASHER, Lock	67/69	LDE	17.820	2	G120214	
WASHER, Lock	67/69	WDE	17.820	4	G120214	
NUT, Hexagon	67/69	SIX ..... ***(Use 400 2117)***	17.406	2	G120376	NA
NUT, Hexagon	67/68	V8 (LDE) ..... ***(Use 400 2117)***	17.406	2	G120376	NA
NUT, Hexagon	67/68	V8 (WDE) ..... ***(Use 400 2117)***	17.406	4	G120376	NA
NUT, Hexagon	69	V8 (LDE)	17.406	2	G120368	
NUT, Hexagon	69	V8 (WDE)	17.406	4	G120368	

4.210 MUFFLER

1967 Thru 1972 01-40

67/68	05-06-09 (199)	.....	1	318 0674
67/68	07-08 (199) ..... ***(Use 448 6031)***	.....	1	317 1698
67	05-06-09 (232)	.....	1	318 0673
67	07-08 (232) ..... ***(Use 448 6032)***	.....	1	317 8586
68	05-06-09 (232-* 4-13)	.....	1	318 0673
68	05-06-09 (232-* 4-14)	.....	1	318 0674
68	08 (232-* 4-13) ..... ***(Use 448 6032)***	.....	1	317 8586
68	08 (232-* 4-14) ..... ***(Use 448 6031)***	.....	1	317 1698
69	05-06-09 (Six) ..... ***(Ref. Pr. List)***	.....	1	319 4081
69	08 (Six) ..... ***(Ord. 448 6031, 448 6257)***	.....	1	319 4873
70	01 (Six-* 4-51)	.....	1	448 6032
70	01 (Six-* 4-52)	.....	1	321 0089
71/	01 (Six)	.....	1	321 0089
70/	40 (Six)	.....	1	321 0089
67	01 (V8) ..... ***(Use 319 1758)***	.....	1	318 0785
68	01 (V8)	.....	1	319 1758
69	01 (V8-Except SC/RAMBLER)	.....	1	448 6038
69	09 (SC/RAMBLER) ..... ***(Use 319 9649)***	.....	2	319 8063
70	01 (304)	.....	1	319 7908
71/	01 (304)(360-LDE)	.....	1	321 0660
71	01 (360-WDE)	.....	2	321 0821
72	40 (V8)	.....	1	321 2197

1967 Thru 1972 10-50-80

67/68	10-50-80 (Six) ..... ***(Use 448 6039)***	.....	1	318 6028
69/70	10-80 (Six)	.....	1	448 6039
71/	10-80 (Six)	.....	1	321 0886
67	10-50-80 (V8-LDE) ..... ***(Use 448 6040)***	.....	1	318 6029
68	10-80 (V8-LDE-2" Dia. Inlet) ..... ***(Use 448 6040)***	.....	1	318 6029
68	10-80 (V8-LDE-2-1/4" Dia. Inlet)	.....	1	448 6398
69/70	10-80 (V8-LDE)	.....	1	448 6398
71/	10-80 (304)	.....	1	321 2646
71/	10-80 (360-LDE-For Installation In California)	.....	1	321 2683
71/	10-80 (360-LDE-For Installation Except California)	.....	1	321 2646
67/68	10-50-80 (V8-WDE) ..... ***(Use 448 6040)***	.....	2	318 8568
69	10-80 (V8-WDE)	.....	2	448 6040
70	10 (V8-WDE-E/MACHINE)	.....	2	448 6040
71/	10-80 (V8-WDE)	.....	2	321 0474
70	19 (MACHINE)	.....	2	319 9909
70	80 (V8-WDE)	.....	2	448 6040

1968 Thru 1972 30-70

68	70 (Six) ..... ***(Use 448 6032)***	.....	1	318 9739
69/	70 (Six)	.....	1	448 6032
68	70 (V8-LDE)	.....	1	319 1758
69	70 (V8-LDE)	.....	1	448 6038
70	70 (V8-LDE)	.....	1	319 7908
71/	70 (V8-LDE-For Installation Except Califomia)	.....	1	321 2934
71/	70 (V8-LDE-For Installation In California)	.....	1	321 2647
68	30-70 (V8-WDE)	.....	2	319 1758
67/70	30-70 (V8-WDE)	.....	2	448 6038
71/	70 (V8-WDE)	.....	2	321 2648

4.219-1 INSULATOR, Muffler Support

67/69	01 (Rubber)	.....	1	317 2214
67/70	10-50-80 (LDE)...(Incl. Bracket) ..... ***(Use 319 4558)***	.....	1	318 8860
71/	10-80 (LDE)...(Incl. Bracket)	.....	1	319 4558
67/70	10-50-80 (WDE-Left)...(Incl. Bracket) ..... ***(Use 319 4558)***	.....	1	318 8860
71	10-80 (WDE-Left)...(Incl. Bracket)	.....	1	319 4558
67/	10-50-80 (WDE-Right)...(Incl. Bracket)	.....	1	318 9216

4.219-2 ATTACHING PARTS, Insulator To Body

PLATE	67/70	01	.....	1	317 2213	
PLATE	67/	10-80 (V8-LDE)	4.200	1	317 0879	
PLATE	67/	10-50-80 (Left-WDE)	4.200	1	317 0879	
PLATE	67/	10-50-80 (Right-WDE)	.....	1	318 9213	
WASHER, Lock	67/	10-50-80 (Left)	17.820	2	G120214	NA
SCREW, Tapping.....	67/69	01	17.671	2	G442751	
SCREW, Tapping.....	68/69	(1-1/2" Long) 10-50-80	17.670	2	G176011	NA
SCREW, Tapping.....	68/	(1-1/4" Long) 10-50-80	17.670	2	G175997	NA
SCREW, Tapping.....	67/70	10-50-80 (Right)	17.671	2	G442751	
SCREW, Tapping.....	71/	10-80	17.671	AR	G442751	
NUT, Speed	67/69	10-50-80 (Left)	4.234	2	400 1702	
NUT, Speed	70	10-80 (WDE-Left)	4.234	2	400 1702	
NUT, Speed	70	10-80 (LDE)	4.234	1	400 1702	
NUT, Spring.....	68/	10-80	17.421	2	G445177	
NUT, Weld	67/68	10-50-80	17.406	4	G9417139	NA

4.219-3 ATTACHING PARTS, Insulator To Muffler

PLATE	67/69	01	.....	1	317 2213	
SCREW, Tapping.....	67/69	01	17.671	2	G442751	
SCREW, Tapping.....	67/69	10-50-80 (LDE)	17.671	2	G442751	
SCREW, Tapping.....	67/69	10-50-80 (WDE)	17.671	4	G442751	
SCREW, Tapping.....	70	70 (LDE)	17.671	2	G271444	NA
SCREW, Tapping.....	70	30-70 (WDE)	17.671	4	G271444	NA
SCREW, Tapping.....	70/	10-80 (LDE)	17.671	2	G442751	
SCREW, Tapping.....	70/	15-19-85-89 (WDE)	17.671	4	G442751	

4.227-1 PIPE, Tail

1967 Thru 1972 01-40

67/68	07-08 (199) ..... ***(Use 448 6067)***	.....	1	318 0242
67	07-08 (232) ..... ***(Use 448 6068)***	.....	1	318 0839
68	08 (232-* 4-14) ..... ***(Use 448 6067)***	.....	1	318 0242
69	05-06-09 (Six)	.....	1	448 6256
69	08 (Six)	.....	1	448 6257

70	01 (Six-* 4-51)	.....	1	319 5551
70	01 (Six-* 4-52) ***(Use 448 9361)***	.....	1	321 0518
71/	01 (Six) ***(Use 448 9361)***	.....	1	321 0518
67/68	05-06-09 (V8) ***(Use 448 6070)***	.....	1	318 2975
67/68	07-08 (V8)	.....	1	318 0840
69	08 (V8)	.....	1	448 6069
69	05-06-09 (V8-Except SC/RAMBLER)	.....	1	448 6070
69	09 (SC/RAMBLER-WDE-Left)	.....	1	319 8061
69	09 (SC/RAMBLER-WDE-Right)	.....	1	319 8062
70	01 (304)	.....	1	319 4972
71/	01 (304)(360-LDE)	.....	1	321 0654
71	01 (360-WDE-Left)	.....	1	321 0654
71	01 (360-WDE-Right)	.....	1	321 0656
70/	40 (Six)	.....	1	321 0553
72	40 (V8)	.....	1	321 5879

1967 Thru 1972 10-50-80

67/68	15-16-17-19-59-85-86-87-89 (Six) ***(Use 319 2287)***	.....	1	318 8839
69	15-19-85-89 (Six) ***(Use 319 2287)***	.....	1	448 6076
70	15-19-85-89 (Six-* 4-45) ***(Use 448 6076)***	.....	1	448 6076
70	15-19-85-89 (Six-* 4-46)	.....	1	319 7175
71/	15-19-85-89 (Six)	.....	1	321 0887
67/68	18-88 (Six) ***(Use 448 6074)***	.....	1	318 5217
69	18-88 (Six)	.....	1	448 6074
70	18-88 (Six-* 4-45)	.....	1	448 6074
70	18-88 (Six-* 4-46)	.....	1	319 7176
71/	18 (Six)	.....	1	321 0888
67/68	15-16-17-19-59-85-86-87-89 (V8-LDE) ***(Use 319 2286)***	.....	1	318 8767
69	15-19-85-89 (V8-LDE) ***(Use 319 2286)***	.....	1	448 6075
70	15-19-85-89 (V8-LDE-* 4-45) ***(Use 319 2286)***	.....	1	448 6075
70	15-19-85-89 (V8-LDE-* 4-46)	.....	1	319 7174
71/	15-19-85-89 (V8-LDE)	.....	1	321 0649
67/68	18-88 (V8) ***(Use 448 6073)***	.....	1	318 5216
69	18-88 (V8-LDE)	.....	1	448 6073
70	18-88 (304-LDE-* 4-45)	.....	1	448 6073
70	18-88 (304-LDE-* 4-46)	.....	1	319 7177
70	18-88 (360-LDE-For Installation Except California-* 4-45)	.....	1	448 6073
70	18-88 (360-LDE-For Installation Except California-* 4-46)	.....	1	319 7177
70	18-88 (360-LDE-For Installation In California-* 4-45)	.....	1	319 9992
70	18-88 (360-LDE-For Installation In California-* 4-46)	.....	1	321 0070
71/	18-88 (304-LDE)(360-LDE)	.....	1	321 0653
67/68	15-16-17-19-59-85-86-87-89 (V8-WDE-Left) ***(Use 319 2286)***	.....	1	318 8767
67/68	15-16-17-19-59-85-86-87-89 (V8-WDE-Right) ***(Use 448 6077)***	.....	1	318 9234
69	15-19-85-89 (V8-WDE-Left) ***(Use 319 2286)***	.....	1	448 6075
69	15-19-85-89 (V8-WDE-Right)	.....	1	448 6077
70	15-19-85-89 (V8-WDE-Left-* 4-45) ***(Use 319 2286)***	.....	1	448 6075
70	15-19-85-89 (V8-WDE-Left-* 4-46)	.....	1	319 7174
70	15-19-85-89 (V8-WDE-Right-* 4-45)	.....	1	448 6077
70	15-19-85-89 (V8-WDE-Right-* 4-46)	.....	1	319 7178
71/	15-19-85-89 (V8-WDE-Left)	.....	1	321 0649
71/	15-19-85-89 (V8-WDE-Right)	.....	1	321 0650
69	18-88 (V8-WDE-Left)	.....	1	448 6073
69	18-88 (V8-WDE-Right)	.....	1	448 6575
70	18-88 (V8-WDE-Left-* 4-45)	.....	1	448 6073
70	18-88 (V8-WDE-Left-* 4-46)	.....	1	319 7177
70	18-88 (V8-WDE-Right-* 4-45)	.....	1	448 6575
70	18-88 (V8-WDE-Right-* 4-46)	.....	1	319 7179
71/	18-88 (V8-WDE-Left)	.....	1	321 0653
71/	18-88 (V8-WDE-Right)	.....	1	321 0651

1968 Thru 1972 30-70

68	70 (Six)	.....	1	318 9721
69	70 (Six)	.....	1	448 6080
70	70 (Six-* 4-45)	.....	1	448 6080
70	70 (Six-* 4-46)	.....	1	319 7192
71/	70 (Six)	.....	1	321 0292
68	70 (V8-LDE) ***(Use 448 6081)***	.....	1	319 0765
69	70 (V8-LDE)	.....	1	448 6081
70	70 (V8-LDE-* 4-45)	.....	1	448 6081
70	70 (V8-LDE-* 4-46)	.....	1	319 7193
71/	70 (V8-LDE)	.....	1	321 0293
68	30-70 (V8-WDE-Left) ***(Use 448 6081)***	.....	1	319 0765
68	30-70 (V8-WDE-Right) ***(Use 448 6078)***	.....	1	318 9641
69/70	30-70 (V8-WDE-Left) ***(Use 448 6079)***	.....	1	318 9642
69/70	30-70 (V8-WDE-Right)	.....	1	448 6078
71/	70 (V8-WDE-Left)	.....	1	448 6079
71/	70 (V8-WDE-Right)	.....	1	321 0295
		.....	1	321 0294

4.227-2 EXTENSION, Tailpipe

68	30-70 (V8-WDE) ***(Use 319 4842)***	.....	2	319 0938
69	09 (SC/RAMBLER)	.....	2	319 4842
69/71	30-70 (V8-WDE)	.....	2	319 4842
72	(Left) 70 (360-WDE)(401-WDE)	.....	1	321 6608
72	(Right) 70 (360-WDE)(401-WDE)	.....	1	321 6609

4.230-1 CLAMP ASSEMBLY, Muffler To Tailpipe

67/68	07-08 (199)	218	.....	1	317 7361
67	07-08 (232)	218	4.178	1	317 7362
67/68	01 (V8)	218	.....	1	317 7364
67/68	10-50-70-80 (232)	218	4.178	1	317 7362
67/68	10-50-70-80 (V8-LDE)	218	.....	1	317 7364
67/68	10-30-50-70-80 (V8-WDE)	218	.....	2	317 7364
68	08 (232-* 4-13)	218	4.178	1	317 7362
68	08 (232-* 4-14)	218	.....	1	317 7361
69	01 (Six)	.....	.....	1	448 6450
69	10-70-80 (232)	219	4.178	1	317 7362
69	01-10-70-80 (V8-LDE)	219	4.178	1	319 0706
69	09 (SC/RAMBLER)	219	4.178	2	319 0706
69	10-30-70-80 (V8-WDE)	219	4.178	2	319 0706
70	SIX ***(Use 317 7362)***	.....	4.178	1	319 4040
70/	V8 (LDE)	.....	4.178	1	319 5232
70/	V8 (WDE)	.....	4.178	2	319 5232
71/	SIX	.....	.....	1	319 5322

4.230-2 ATTACHING PARTS, Clamp To Muffler

WASHER, Lock	67/69	LDE	17.820	2	G120214
WASHER, Lock	67/69	WDE	17.820	4	G120214
NUT, Hexagon	67/68	LDE ***(Use 400 2117)***	17.406	2	G120376 NA
NUT, Hexagon	67/68	WDE ***(Use 400 2117)***	17.406	4	G120376 NA
NUT, Hexagon	69	LDE (Six) ***(Use 400 2117)***	17.406	2	G120376 NA
NUT, Hexagon	69	LDE (V8)	17.406	2	G120368
NUT, Hexagon	69	WDE (V8)	17.406	4	G120368

4.234-1 BRACKET, Tailpipe Support (Incl. Insulator)

67/69	07-08	.....	1	317 2223

FUEL - EXHAUST

4.234–2 ATTACHING PARTS, Bracket To Body Bracket

BOLT, Hexagon	67/69	07-08	17.038	1	G181595	NA
WASHER, Lock	67/69	07-08	17.820	1	G120214	
NUT, Hexagon	67/69	07-08	17.406	1	G120368	

4.234–3 ATTACHING PARTS, Bracket Insulator To Pipe

PLATE	67/69	07-08	4.219	1	317 2213	
BOLT, Hexagon	67/69	07-08	17.038	2	G181608	NA
WASHER, Lock	67/69	07-08	17.820	2	G120214	
NUT, Hexagon	67/69	07-08	17.406	2	G120368	

4.234–4 BRACKET, Tailpipe Support (Front-Incl. Insulator)

69	09 (SC/RAMBLER-Left)	.....	1	319 8076
69	09 (SC/RAMBLER-Right)	.....	1	319 8077
70/	01-40 (Six)	.....	1	319 4975
70	01 (304)	.....	1	319 4975
71/	01-40 (304)(360-LDE)	.....	1	319 4975
71	01 (360-WDE-Left)	.....	1	319 4975
71	01 (360-WDE-Right)	.....	1	319 6982
68/	70 (LDE)	.....	1	319 0065
68/	30-70 (WDE-V8-Left)	.....	1	319 0065
68/	30-70 (WDE-V8-Right)	.....	1	319 0063

4.234–5 ATTACHING PARTS, Bracket To Tailpipe

PLATE	70/	01-40	4.219	AR	317 2213	
SCREW, Tapping	70/	01-40	17.671	AR	G9424757	
SCREW, Tapping	68/70	70 (LDE)	17.671	2	G271444	NA
SCREW, Tapping	68/70	30-70 (WDE-V8)	17.671	4	G271444	NA
SCREW, Tapping	71/	70	17.671	AR	G442751	
NUT, Speed	70/	01-40	.....	AR	400 1702	

4.234–6 ATTACHING PARTS, Bracket To Crossmember

SCREW, Tapping	68/	70 (LDE)	17.671	2	G442751	
SCREW, Tapping	68/	30-70 (WDE-V8)	17.671	4	G442751	
SCREW, Self-Threading	70/	01-40 (To Rear Shock Crossmember)	29.131	AR	400 1933	

4.234–7 INSULATOR, Tailpipe Support (Rear)

70/	01 (Hanger)	.....	AR	319 6980	
69	09 (SC/RAMBLER)	286	2	319 1134	
68/70	30-70 (WDE-V8)	286	2	319 1134	
70/	40	.....	1	321 0851	
68/69	70 (LDE)	286	1	319 1134	
70	70 (LDE-* 4-45)	286	1	319 1134	
70	70 (LDE-* 4-46)	.....	1	319 7187	
71/	70 (LDE)	.....	1	321 2628	
71/	70 (WDE)	.....	2	321 1659	

4.234–8 ATTACHING PARTS, Insulator To Pipe

SCREW, Tapping	68/	70 (LDE)	17.671	2	G442751	
SCREW, Tapping	68/	30-70 (WDE-V8)	17.671	4	G442751	

FUEL - EXHAUST

4.234–9 ATTACHING PARTS, Insulator To Body Bracket

PLATE	68/	30-70 (WDE-V8)	4.219	2	317 2213
PLATE	70/	40	.....	1	321 0848
PLATE	68/	70 (LDE)	4.219	1	317 2213
BOLT, Hexagon	68/70	70 (LDE)	17.038	2	G181610
BOLT, Hexagon	68/70	30-70 (WDE-V8)	17.038	4	G181610
BOLT, Hexagon	70/	40	.....	2	400 4081
BOLT, Hexagon	71/	70	17.671	AR	G9425173 NA
WASHER, Lock	68/70	70 (LDE)	17.820	2	G120214
WASHER, Lock	68/70	30-70 (WDE-V8)	17.820	4	G120214
NUT, Speed	68/	30-70 (LDE)	.....	2	400 1702
NUT, Speed	68/	30-70 (WDE-V8)	.....	4	400 1702
NUT, Speed	70/	40	13.012	2	400 0268
NUT, Hexagon	68/70	70 (LDE)	17.406	2	G120368
NUT, Hexagon	68/70	30-70 (WDE-V8)	17.406	4	G120368
SCREW, Self-Threading	70/	SIX (Hanger To Sill)	29.131	1	400 1933
SCREW, Self-Threading	70/	V8 (Hanger To Sill)	29.131	AR	400 1933

4.234–10 BRACKET, Tailpipe Support Insulator (To Side Sill)

68/70	30-70 (Rear-Left Hand Side Only-Welded To Side Sill)	4.200	1	319 0597
68/70	30-70 (WDE-Right Hand Side Only-Bolted To Side Sill)	4.200	1	319 0598
71/	70 (Rear-Left Hand Side Only-Welded To Side Sill)	4.200	1	321 0344
71/	70 (Rear-Right Hand Side Only)	4.234	1	321 0345

4.234–11 ATTACHING PARTS, Bracket To Sill

BOLT, Hexagon	68/	30-70 (V8-WDE)	12.075	2	400 0066
NUT, Speed	68/	30-70 (V8-WDE)	12.075	2	400 0199

4.234–12 INSULATOR, Tailpipe Support (Hanger)

67/69	15-16-17-19-59-85-86-87-89 (LDE)	.....	1	318 8624
70	15-19-85-89 (LDE-* 4-45)	.....	1	318 8624
70	15-19-85-89 (LDE-* 4-46)	.....	1	319 7159
71/	15-19-85-89 (LDE)	.....	1	319 7159
67/69	15-16-17-19-59-85-86-87-89 (WDE-Left)	.....	1	318 8624
70	15-19-85-89 (WDE-Left-* 4-45)	.....	1	318 8624
70	15-19-85-89 (WDE-Left-* 4-46)	.....	1	319 7159
71/	15-19-85-89 (WDE-Left)	.....	1	319 7159
67/69	15-16-17-19-59-85-86-87-89 (WDE-Right)	.....	1	318 9019
70	15-19-85-89 (WDE-Right-* 4-45)	.....	1	318 9019
70	15-19-85-89 (WDE-Right-* 4-46)	.....	1	319 7160
71/	15-19-85-89 (WDE-Right)	.....	1	319 7160
67/69	18-88 (LDE)	.....	1	318 5261
70	18-88 (LDE-* 4-45)	.....	1	318 5261
70	18-88 (LDE-* 4-46)	.....	1	319 7161
71/	18-88 (LDE)	.....	1	319 7161
69	18-88 (WDE-Left)	.....	1	318 5261
70	18-88 (WDE-Left-* 4-46)	.....	1	319 7161
70	18-88 (WDE-Left-* 4-45)	.....	1	318 5261
71/	18-88 (WDE-Left)	.....	1	319 7161
69	18-88 (WDE-Right)	.....	1	318 8572
70	18-88 (WDE-Right-* 4-46)	.....	1	319 7162
71/	18-88 (WDE-Right)	.....	1	319 7162
70	18-88 (WDE-Right-* 4-45)	.....	1	318 8572

Printed in U.S.A.

4.234–12a CLAMP, Tailpipe (To Hanger)

70	SIX (1-3/4" Dia.)...(Incl. Screw)	.....	1	319 7182	
71/	SIX (1-3/4" Dia.)...(Incl. Screw)	.....	1	319 8779	
70	V8 (LDE-2" Dia.)...(Incl. Screw)	.....	1	319 6978	
70	V8 (WDE-2" Dia.)...(Incl. Screw)	.....	2	319 6978	
71/	V8 (LDE-2" Dia) ...(Incl. Screw)	.....	1	319 8778	
71/	V8 (WDE-2" Dia.) ...(Incl. Screw)	.....	2	319 8778	

4.234–12b ATTACHING PARTS, Tailpipe Clamp

SCREW, Tapping.....	70/	.....	17.670	AR	G273420

4.234–13 ATTACHING PARTS, Insulator To Tailpipe

PLATE	67/	10-50-80 (LDE).....	4.219	1	317 2213
PLATE	67/	10-50-80 (WDE).....	4.219	2	317 2213
BOLT, Hexagon	67/69	10-50-80 (LDE).....	17.038	2	G181610
BOLT, Hexagon	70	18-88 (LDE-* 4-45)	17.038	2	G181610
BOLT, Hexagon	67/69	10-50-80 (WDE).....	17.038	4	G181610
BOLT, Hexagon	70	18-88 (WDE-* 4-45)	17.038	4	G181610
RIVET, Solid.....	70	18-88 (LDE-* 4-46)	17.540	2	G104265 NA
RIVET, Solid.....	70	18-88 (WDE-* 4-46)	17.540	4	G104265 NA
WASHER, Lock	67/70	10-50-80 (LDE-* 4-45)	17.820	2	G120214
WASHER, Lock	67/70	10-50-80 (WDE-* 4-45)	17.820	4	G120214
NUT, Speed	67/	10-50-80 (LDE).....	.....	2	400 1702
NUT, Speed	67/	10-50-80 (WDE).....	.....	4	400 1702
NUT, Hexagon.....	67/70	10-50-80 (LDE-* 4-45)	17.406	2	G120368
NUT, Hexagon.....	67/70	10-50-80 (WDE-* 4-45)	17.406	4	G120368

4.234–14 ATTACHING PARTS, Insulator To Bracket

SCREW, Tapping.....	67/	10-50-80 (LDE).....	17.671	2	G442751
SCREW, Tapping.....	67/	10-50-80 (WDE).....	17.671	4	G442751

4.300 ESCUTCHEON, Automatic Speed Control

67/68	10-50-80.....	.....	1	359 0994
69	10-80.....	.....	1	361 4959

4.305–1 SWITCH, Automatic Speed Control (On Instrument Panel)

67	10-50-80 (* 4-17) ..... ***(Use 320 8918)***	.....	1	358 5848
67	10-50-80 (* 4-18) ..... ***(Use 448 7151)***	.....	1	359 0711
68/69	10-80..... ***(Use 448 7151)***	.....	1	359 0711

4.305–1a SWITCH, Directional Lever And Automatic Speed Control

70/	10-80.....	3.324	1	319 8013

4.305–2 NUT, Automatic Speed Control Switch Lock (On Instrument Panel)

67/69	10-50-80.....	3.145	1	400 0880

4.305–3 SWITCH, Automatic Speed Control (On Brake Support Bracket)

67/	10-50-80.....	.....	1	318 4307

4.305–4 ATTACHING PARTS, Switch To Bracket

NUT, Stamped	67/	10-50-80.....	17.428	2	320 9575

FUEL - EXHAUST

4.306–1 BRACKET, Automatic Speed Control Switch

70/71	10–80	.....	1	319 7034	
72	10–80	.....	1	321 6297	

4.306–2 ATTACHING PARTS, Control Switch Bracket

SCREW, Hexagon	70/	10–80	23.006	1	400 0318

4.310–1 LAMP, Automatic Speed Control (Incl. Filter And Bulb)

67/69	10–50–80	291	.....	1	359 0997

4.310–2 ATTACHING PARTS, Lamp To Bracket

SCREW, Tapping.....	67/69	10–50–80	17.660	1	G161790 NA

4.315 FILTER, Automatic Speed Control Lamp Bulb

67/69	10–50–80		3.510	1	352 0871

4.320 BULB, Automatic Speed Control Lamp

67/69	10–50–80		3.215	1	320 4552

4.325 BRACKET, Automatic Speed Control Lamp And Switch Mounting

67/69	10–50–80		.....	1	359 0995

4.328–1 BRACKET, Automatic Speed Control Brake Pedal Release Switch

67	10–50–80		.....	1	318 7932
68/	10–80		.....	1	319 2132

4.328–2 ATTACHING PARTS, Bracket To Brake Pedal Support

SCREW, Tapping.....	67/68	10–50–80	17.670	2	G189119 NA
SCREW, Tapping.....	69	10–80	17.671	2	400 1042
SCREW, Tapping.....	70/	10–80 ***(Use 812 0054)***	17.671	2	G274773

4.330–1 HARNESS, Automatic Speed Control Wiring

67	10–50–80 (* 4–17)		.....	1	318 6838
67	10–50–80 (* 4–18)		.....	1	318 9207
68	10–80		.....	1	318 9207
69	10–80		.....	1	319 4640
70/	10–80		.....	1	319 8342

4.330–2 PROTECTOR, Automatic Speed Control Lever Wire

70/	10–80		.....	1	319 8820

4.330–3 INSULATOR, Automatic Speed Control Harness (Directional Lever Harness Connector)

70/	10–80		3.325	1	319 8786

4.335–1 REGULATOR, Automatic Speed Control (Complete)

67	10–50–80 (* 4–19)	***(Use 318 9849)***	.....	1	318 4287
67	10–50–80 (* 4–20)	284	.....	1	318 9849
68	10–80	284	.....	1	318 9849
69	10–80	284	.....	1	319 4134
70/	10–80	284	.....	1	319 7883

4.335–1a MODIFICATION KIT, Regulator

67/70		***(Use 448 9464)***	.....	1	448 8865

FUEL - EXHAUST

4.335–2 ATTACHING PARTS, Regulator To Bracket

BOLT, Hexagon	67/71	10-50-80	17.038	2	G180018	NA
BOLT, Hexagon	72	10-80	.....	2	400 1730	
WASHER, Lock	67/	10-50-80	17.820	2	G120380	NA

4.338 HOUSING, Automatic Speed Control Regulator

67/68	10-50-80	242	.....	1	320 8587
69	10-80	242	.....	1	448 6881

4.340 VALVE BODY, Automatic Speed Control Regulator (Incl. Magnet)

67	10-50-80 (* 4-19)		.....	1	320 7357
67	10-50-80 (* 4-20)		.....	1	320 8588
68	10-80		.....	1	320 8588
69	10-80		.....	1	448 6882

4.344 GOVERNOR, Automatic Speed Control Regulator

67	10-50-80 (* 4-19)		.....	1	320 7358
67	10-50-80 (* 4-20)		.....	1	320 8589
68/69	10-80		.....	1	320 8589

4.347 CUP ASSEMBLY, Automatic Speed Control Regulator Actuator

67	10-50-80 (* 4-19)	268	.....	1	320 7359
67	10-50-80 (* 4-20)	268	.....	1	320 8590
68/69	10-80	268	.....	1	320 8590

4.350 SPRING, Automatic Speed Control Regulator Governor

67/69	10-50-80		.....	1	320 7360

4.355 ADAPTER ASSEMBLY, Automatic Speed Control Regulator

67/68	10-50-80	295	.....	1	320 7361
69	10-80	295	.....	1	448 6883

4.357–1 COVER ASSEMBLY, Automatic Speed Control Regulator

67/69	10-50-80	293	.....	1	320 7362

4.357–2 ATTACHING PARTS, Cover To Housing

SCREW, Tapping	67/68	10-50-80	17.666	6	G163988	NA

4.360 FILTER, Automatic Speed Control Regulator

67/69	10-50-80		.....	1	320 8591

4.364–1 BRACKET, Automatic Speed Control Regulator Mounting

67	10-50-80 (Six)		.....	1	318 7822
67/68	10-50-80 (V8)		.....	1	318 8638
69/	10-80		.....	1	319 4061

4.364–2 ATTACHING PARTS, Bracket To Wheelhouse Panel

SCREW, Tapping	67/	10-50-80	17.671	3	G455702	NA
CLIP	70/	10-80 (Wire Harness To Bracket)	13.440	1	400 0443	

FUEL - EXHAUST

4.367–1 HOSE, Automatic Speed Control Vacuum (Bulk–Order Per Foot)

67/	10-50-80 (Regular To Bellows-7/32" I.D.)	4.141	AR	320 3865
67/	10-50-80 (Regulator To Manifold-9/32" I.D.)	22.050	AR	320 2250

4.367–2 FASTENER, Automatic Speed Control Vacuum Hose

67/	10-50-80 (Front)	3.312	1	79 394
70/	10-80 (Rear)	3.210	1	63 045

4.370–1 ELBOW, Automatic Speed Control Vacuum Line Hose (In Manifold)

67	10-50-80 (Six-WEW-LPB)	22.050	1	317 5858
67/	10-50-80 (V8-LPB)	22.050	1	317 5858

4.370–2 NIPPLE, Automatic Speed Control Vacuum Line Hose (In Manifold)

67	10-50-80 (Six-WVW-WPB)	8.460	1	318 4705
67	10-50-80 (Six-WEW-WPB)	8.460	1	318 5004
67/68	10-50-80 (V8-WPB)	8.460	1	318 5004
69	10-80 (V8-WPB)	.....	1	318 4337

4.370–3 ADAPTER, Automatic Speed Control Vacuum Line Hose

67	10-50-80 (Six-WEW)	4.160	1	315 5856
67/	10-50-80 (V8)	4.160	1	315 5856
67	10-50-80 (Six-WVW)	22.050	1	316 7489

4.370–4 TEE, Automatic Speed Control Vacuum Line Hose

67	10-50-80 (Six-WVW-LPB)	22.050	1	318 5005

4.370–5 BUSHING, Automatic Speed Control Vacuum Line Hose

67/68	10-50-80 (Six-WVW-LPB)	17.086	1	G119923
70	10-80 (V8-LPB)	17.086	1	G119923

4.380–1 BELLOWS, Automatic Speed Control Vacuum Servo

67	10-50-80 (Six)	.....	1	318 1091
67/68	10-50-80 (V8) *(Use 319 4135)*	.....	1	318 7856
69/	10-80	.....	1	319 4135

4.380–2 ATTACHING PARTS, Bellows To Bracket

WASHER, Lock	67/	10-50-80	17.820	1	*G120380 NA
NUT, Hexagon	67/	10-50-80	17.406	1	G120375

4.385–1 BRACKET, Automatic Speed Control Vacuum Servo Bellows Mounting

67	10-50-80	.....	1	318 7820
68	10-80	.....	1	319 3555
69/	10-80	.....	1	319 3951

4.385–2 ATTACHING PARTS, Bracket To Dash

BOLT, Hexagon	67/68	10-50-80	17.038	1	G180020 NA
SCREW, Tapping	67/68	10-50-80 *(Use 812 0054)*	17.671	2	G274773
WASHER, Lock	67/68	10-50-80	17.820	1	G120380 NA
NUT, Hexagon	67/68	10-50-80	17.406	1	G120375

4.385–3 ATTACHING PARTS, Bracket To Intake Manifold

SCREW, Machine	69/	10-80	17.626	2	400 0987

FUEL - EXHAUST

4.390–1 CHAIN, Automatic Speed Control Bellows To Shaft

67/68	10-50-80	.....	1	318 7947	
69	10-80...(Incl. Spring)	*(Use 319 8055)*	.....	1	319 4300
70/	10-80...(Incl. Spring)	.....	1	319 8055	

4.390–2 SPRING, Automatic Speed Control Chain Protective

68/	10-80	.....	1	319 1136

4.390–3 GROMMET, Automatic Speed Control Bellows Chain (To Shaft)

67/68	10-50-80	20.450	1	400 0313

4.390–4 PIN, Automatic Speed Control Chain Clevis (To Carburetor)

70/	10-80	.....	1	319 4849

4.390–5 ATTACHING PARTS, Automatic Speed Control Chain Clevis Pin

PIN, Cotter	70/	10-80	4.057	1	400,0793
WASHER, Plain	70/	10-80	17.814	1	G446152

4.500–1 PUMP, Exhaust Emission Air

67	SIX (01)	281	.....	1	318 7327
67	V8	281	.....	1	318 7327
68/	V8	228	.....	1	318 9720

4.500–2 ATTACHING PARTS, Pump To Mounting Bracket

BOLT, Hexagon	67	SIX (4-3/4" Long)	17.038	1	G180768 NA
BOLT, Hexagon	67	SIX (1-3/4" Long)	17.038	1	G181646 NA
BOLT, Hexagon	67	SIX (LAC-1-3/8" Long)	17.038	1	G181641 NA
BOLT, Hexagon	67	V8 (WPS)	17.038	1	G189335
BOLT, Hexagon	67	V8 (LPS-1-3/4" Long)	17.038	1	G181646 NA
BOLT, Hexagon	67	V8 (LPS-4-3/4" Long)	17.038	1	G180768 NA
BOLT, Hexagon	68/71	V8 (WPS)	17.038	1	G180768 NA
BOLT, Hexagon	68/71	V8 (LPS-4-3/4" Long)	17.038	1	G180768 NA
BOLT, Hexagon	72	V8 (WPS)	17.038	1	G450517 NA
SCREW, Machine	68/71	V8 (LPS-1" Long)	17.629	1	G274195
WASHER, Lock	67/71	.....	17.820	1	G120382
WASHER, Lock	70/	V8	10.260	1	400 3803
WASHER, Plain	67/71	.....	17.814	1	400 1766
NUT, Hexagon	67/71	.....	17.406	1	G120369 NA
NUT, Lock	67/70	.....	17.416	1	G442828
NUT, Square	67	SIX	17.413	1	G213537
NUT, Hexagon	72	V8 (LPS)	17.406	1	G120377

4.500–3 ATTACHING PARTS, Pump To Adjustable Brace

BOLT, Hexagon	67	V8 (WPS)	17.038	1	G181646 NA
BOLT, Hexagon	68/71	V8 (WPS)	17.038	1	G180123 NA
WASHER, Plain	67/71	V8 (WPS)	17.814	1	400 1766
WASHER, Lock	67/71	V8 (WPS)	17.820	1	G120382

4.507–1 VALVE, Exhaust Emission Air Pump Relief

67	.....	.....	1	320 6895
68/	V8	.....	1	448 5439

FUEL - EXHAUST

4.507–2 MUFFLER, Exhaust Emission Air Pump Relief Valve

68/	V8	267	.....	1	319 3879	

4.510–1 COVER, Exhaust Emission Air Pump

67		283	.....	1	320 8387	

4.510–2 ATTACHING PARTS, Cover To Pump

BOLT, Hexagon	67		17.038	4	G122017	NA

4.510–3 TUBE, Exhaust Emission Air Pump Exhaust

68/	V8		.....	1	448 5481	

4.510–4 FAN, Exhaust Emission Air Pump Filter

68/	V8		.....	1	448 5482	

4.515–1 BRACE, Exhaust Emission Air Pump Support

67	V8 (WPS)		.....	1	318 5531	
68/71	V8 (WPS)		4.535	1	318 9713	
72	V8 (WPS)		.....	1	321 5107	

4.515–2 ATTACHING PARTS, Brace To Power Steering Pump Or Air Pump

BOLT, Hexagon	67/71	V8	17.038	1	G186276	NA
BOLT, Hexagon	72	V8 (WPS)	.....	1	G274195	NA

4.520–1 BRACKET, Exhaust Emission Air Pump Mounting

67	SIX (01-WAC)	.....	1	318 4224	
67	SIX (01-LAC-WPS)	.....	1	318 1140	
67	SIX (01-LAC-LPS)	.....	1	318 2267	
67/	V8 (LPS)	.....	1	318 1667	
67	V8 (WPS)	.....	1	318 6476	
68/71	V8 (WPS)	.....	1	318 9716	
72	V8 (WPS)	.....	1	321 5102	

4.520–2 ATTACHING PARTS, Bracket To Cylinder Head

BOLT, Hexagon	67	SIX (01-LAC-LPS)	17.038	2	G180121	
WASHER, Lock	67	SIX (01-LAC-LPS)	17.820	2	G120382	

4.520–3 ATTACHING PARTS, Bracket To Support

BOLT, Hexagon	67	SIX (01-LAC-WPS)	17.038	3	G181639	
WASHER, Plain	67	SIX (01-LAC-WPS)	17.814	3	400 1102	
WASHER, Lock	67	SIX (01-LAC-WPS)	17.820	3	G120382	
NUT, Hexagon	67	SIX (01-LAC-WPS)	17.406	3	G120369	NA

4.520–4 ATTACHING PARTS, Bracket To Compressor

BOLT, Hexagon	67	SIX (01-WAC)	17.038	2	G180120	NA
WASHER, Lock	67	SIX (01-WAC)	17.820	2	G120382	

FUEL - EXHAUST

4.520–5 ATTACHING PARTS, Bracket To Power Steering Bracket

BOLT, Hexagon	67/71	V8 (WPS-1" Long)	17.038	2	G180122 NA
BOLT, Hexagon	67/71	V8 (WPS-2-3/4" Long)	17.038	2	G180137 NA
BOLT, Hexagon	72	V8 (WPS-1" Long)	17.629	1	G274195 NA
WASHER, Lock	67/69	V8 (WPS)	17.820	3	G120382
WASHER, Lock	70/	V8 (WPS)	10.260	2	400 3803

4.520–6 ATTACHING PARTS, Bracket To Cylinder Head

BOLT, Hexagon	67/	V8 (LPS-3/4" Long)	17.038	1	G180120 NA
BOLT, Hexagon	67/	V8 (LPS-1" Long)	17.038	2	G180122 NA
WASHER, Plain	67	V8 (LPS)	17.814	2	400 1180
WASHER, Lock	67/69	V8 (LPS)	17.820	3	G120382
WASHER, Lock	70/	V8 (LPS)	10.260	3	400 3803
WASHER, Plain	68/	V8 (LPS)	17 814	2	400 1161

4.525–1 BRACE, Exhaust Emission Air Pump Reinforcement

67/69	V8 (LPS)	.....	1	318 5759
70/	V8 (LPS)	.....	1	319 7132

4.525–2 ATTACHING PARTS, Brace To Pump Mounting Bracket

BOLT, Hexagon	67/	V8 (LPS)	17.038	2	G181595 NA
WASHER, Lock	67/	V8 (LPS)	17.820	2	G120214
NUT, Hexagon	67/	V8 (LPS)	17.406	2	G120368

4.525–3 ATTACHING PARTS, Brace To Water Pump Stud

WASHER, Lock	67/	V8 (LPS)	17.820	1	400 3803
NUT, Hexagon	67/71	V8 (LPS)	17.406	1	G120369 NA
NUT, Hexagon	72	V8 (LPS)	.....	1	400 3869

4.530–1 SUPPORT, Exhaust Emission Air Pump Mounting Bracket

67	SIX (01-LAC-WPS)	13.410	1	318 0325

4.530–2 ATTACHING PARTS, Support To Cylinder Head

BOLT, Hexagon	67	SIX (01-LAC-WPS)	17.038	2	G180123 NA
WASHER, Plain	67	SIX (01-LAC-WPS)	17.814	2	400 1102
WASHER, Lock	67	SIX (01-LAC-WPS)	17.820	2	G120382

4.530–3 ATTACHING PARTS, Support To Cylinder Block

BOLT, Hexagon	67	SIX (01-LAC-WPS)	17.038	1	G180130 NA
WASHER, Plain	67	SIX (01-LAC-WPS)	17.814	1	400 1104
WASHER, Lock	67	SIX (01-LAC-WPS)	17.820	1	G120382

4.535–1 STRAP, Exhaust Emission Air Pump To Compressor

67	SIX (01-LAC-LPS)	.....	1	318 2260

4.535–2 ATTACHING PARTS, Strap To Block

BOLT, Hexagon	67	SIX (01-LAC-LPS)	17.038	2	G180123 NA
WASHER, Plain	67	SIX (01-LAC-LPS)	17.814	2	400 1180
WASHER, Lock	67	SIX (01-LAC-LPS)	17.820	2	G120382

FUEL - EXHAUST

4.585 HOSE, Exhaust Emission Air Pump To Back-Fire Valve

67	V8 (LPS)	.....	.....	1	318 7641
68/	V8 (LPS)	.....	.....	1	318 9869
67/	V8 (WPS)	.....	.....	1	318 4646

4.586 CLAMP, Exhaust Emission Air Pump To Back-Fire Valve Hose

67/	V8	.....	17.108	2	320 3077

4.588 HOSE, Exhaust Emission Air Injection Manifold To Tee

67	01 (Six)	.....	.....	1	318 4365

4.589 CLAMP, Exhaust Emission Air Injection Manifold To Tee Hose

67	01 (Six)	.....	17.108	2	320 3077

4.590–1 CLIP, Exhaust Emission Back-Fire Valve To Tee Hose

67	01 (Six)	.....	3.165	1	400 1717

4.590–2 ATTACHING PARTS, Clip To Bracket

SCREW, Tapping	67	01 (Six)	17.671	1	G443794 NA
NUT, Speed	67	01 (Six)	4.050	1	316 3893

4.592–1 BRACKET, Exhaust Emission Back-Fire Valve To Tee Hose Clip

67	01 (Six)	.....	13.440	1	315 8227

4.592–2 ATTACHING PARTS, Bracket To Intake Manifold

STUD	67	01 (Six)	17.718	1	G144532 NA
WASHER, Lock	67	01 (Six)	17.820	1	G120380 NA
NUT, Hexagon	67	01 (Six)	17.406	1	G120367

4.600–1 HOSE, Exhaust Emission Back-Fire Valve To Injection Manifold (Left-Bank)

67	V8	.....	.....	1	318 7640
68	V8 (* 4-23)	.....	.....	1	318 7640
68	V8 (* 4-24)	.....	.....	1	319 2221
68	V8 (* 4-25)	.....	.....	1	319 2221
68	V8 (* 4-26)	.....	.....	1	319 3194
69/	V8	.....	.....	1	319 3194

4.600–2 CLAMP, Exhaust Emission Back-Fire Valve To Injection Manifold Hose (Left-Bank)

67	V8	.....	17.108	2	320 3077
68	V8 (* 4-23)	.....	17.108	2	320 3077
68	V8 (* 4-24)	.....	17.108	2	320 3077
68	V8 (* 4-25)	.....	17.108	2	320 3077
68	V8 (* 4-26)	.....	17.108	2	G272850
69/	V8	.....	17.108	2	G272850

4.600–3 HOSE, Exhaust Emission Back-Fire Valve To Injection Manifold (Right-Bank)

67	V8	.....	.....	1	318 7748
68	V8 (* 4-23)	.....	.....	1	318 7748
68	V8 (* 4-24)	.....	.....	1	319 2214
68	V8 (* 4-25)	.....	.....	1	319 2214
68	V8 (* 4-26)	.....	.....	1	319 3195
69/	V8	.....	.....	1	319 3195

Printed in U.S.A.

FUEL - EXHAUST

4.600–4 CLAMP, Exhaust Emission Back-Fire Valve To Injection Manifold Hose (Right-Bank)

67	V8	17.108	2	320 3077	
68	V8 (* 4-23)	17.108	2	320 3077	
68	V8 (* 4-24)	17.108	2	320 3077	
68	V8 (* 4-25)	17.108	2	320 3077	
70/	V8	17.108	2	320 3077	
68	V8 (* 4-26)	17.108	2	G272850	
69	V8	17.108	2	G272850	

4.610–1 PULLEY, Exhaust Emission Air Pump

67	V8 (LPS)	.....	1	318 1137	
67	V8 (WPS)	.....	1	318 1134	
68/	V8 (LPS)	.....	1	318 9870	
68/	V8 (WPS)	.....	1	318 9717	
67	SIX (01-LAC)	.....	1	318 2263	
67	SIX (01-WAC)	.....	1	318 1602	

4.610–2 ATTACHING PARTS, Pulley To Pump

BOLT, Hexagon	67	SIX (01)	17.038	4	G181591	NA
BOLT, Hexagon	67	V8	17.038	4	G181591	NA
SCREW, Hexagon	68/	V8 (LPS)	.....	3	400 1730	
SCREW, Hexagon	68/	V8 (WPS)	.....	4	400 1730	
WASHER, Lock	67	SIX (01)	17.820	4	G120214	
WASHER, Lock	67	V8	17.820	4	G120214	
WASHER, Lock	68/	V8	17.820	3	G120380	NA

4.612 BELT, Crankshaft To Exhaust Emission Air Pump

67	SIX (01-LAC-LPS)	.....	1	318 2261	
67/	V8 (LAC-LPS)	.....	1	318 1133	

4.615 BELT, Power Steering Pump To Exhaust Emission Air Pump

67	SIX (01-LAC-WPS)	.....	1	318 2264	
67	SIX (01-WAC-WPS)	.....	1	316 9177	
67/71	V8 (WPS)	.....	1	318 1778	
72	V8 (WPS)	.....	1	321 5366	

4.617 BELT, Idler To Air Pump And Compressor

67	SIX (01-WAC-LPS)	.....	1	317 2681	

4.620 BELT, Crankshaft To Air Pump To Compressor

67/70	V8 (WAC-LPS)	.....	1	318 1777	
71/	V8 (WAC-LPS)	.....	1	321 2071	

4.621 CLIP, Exhaust Emission Back-Fire Valve To Injection Manifold Hose (Right-Bank)

67/	V8	4.065	1	400 1847	

4.622 HOSE, Exhaust Emission Back-Fire Valve Trigger To Carburetor Vacuum Diaphragm

67/	V8 (Bulk-Order Per Foot)	5.260	AR	320 3440	

4.625 SHIELD, Exhaust Emission Air Pump Inlet Hose Heat

67	V8 (WPS)	.....	1	318 5631	

SPECIAL INFORMATION

...gine Build Code Number, Vehicle Identification Number and the information provided on the Unit Body Plate ...e often necessary when determining the proper replacement parts for your automobile. For their location refer to the General Information Section found at the front of this catalog.

NOTES

5–1 ..... Cars having a production installed Heavy Duty Drive Package can be identified by a stamped tag bearing part number 318 6417 (Warner Gear No. AS5-T90BB), 318 9339 (Warner Gear No. AS9-T90BB) or 319 1405 (Warner Gear No. AS5T-15) attached to the Transmission.

5–2 ..... For 67 01 (Heavy Duty-Six): 68-69 01-70 (Six-232-Except Heavy Duty): 68 10-80 (Except Heavy Duty-LHD-232-* 5-5): 67-68 10-80 (LHD-Export-Six-WST)(LHD-Export-Six-WOD): 67 50 (LHD-Export-Six-WST)(LHD-Export-Six-WOD): 67-68 10 (RHD-Six) use 319 4726 Driven Plate.
For 67 10 (Heavy Duty-LHD-Six) use 317 6717 Driven Plate.
For 69 10-80 (232-WST) use 319 4726 Driven Plate.
For 69 10 (232-WOD) use 319 5661 Driven Plate.
For 70 01-70 (232-WST)(Except Export) use 319 4726 Driven Plate.

5–3 ..... For 68 10-80 (Heavy Duty-LHD-232-* 5-5): 67-68 10 (Heavy Duty-RHD-232-WST) use 318 0620 Driven Plate.
For 69 10-80 (Heavy Duty-232-WST) use 319 4726 Driven Plate.
For 69 10 (Heavy Duty-232-WOD) use 319 5661.
For 70 10-80 (232-WST)(Except Export) use 319 4726 Driven Plate.

5–4 ..... The Clutch is self adjusting and is used prior to Car Sequence No. W-016683 on 68 10-80.

5–5 ..... The Clutch is conventional and is used beginning with Car Sequence No. W-016683 on 68 10-80.

5–6 ..... Both ends of the Bellcrank to Lever or Clutch Pedal Rod are circular.

5–7 ..... One end of the Bellcrank to Lever or Clutch Pedal Rod is circular, the other end is flat.

5–8 ..... The Lower Lever on the Bellcrank does not have a Pin welded to it.

5–9 ..... The Lower Lever on the Bellcrank has a Pin welded to it.

5–10 .... On 68 30-70 used prior to Car Sequence No. E-016210.

5–11 .... On 68 30-70 used beginning with Car Sequence No. E-016210.

5–12 .... On 68 10-80 (V8) used prior to Car Sequence No. W-020532.

5–13 .... On 68 10-80 (V8) used beginning with Car Sequence No. W-020532.

5–14 .... Both ends of the Bellcrank To Throwout Lever are circular.

5–15 .... One end of the Bellcrank to Throwout Lever is circular, the other end is flat.

5–16 .... Clutch Pedal Support has 5 Weld Nuts for attaching to the Dash Panel and attachment of the Brake Cylinder.

5–17 .... Clutch Pedal Support is less Weld Nuts, but includes 1 Weld Bolt for attaching to the Dash Panel and attachment of the Brake Master Cylinder (LPB).

5–18 .... Used where the Transmission Oil Filler Tube goes into the Transmission Oil Pan.

5–19 .... Used where the Transmission Oil Filler Tube goes into the Transmission Case.

5–20 .... For 70 01-10-70-80 (232-WST)(Heavy Duty-LHD-Export) use 319 4913 Driven Plate.
For 70-71 70 (304-WST) use 319 6886 Driven Plate.

5–21 .... Used at point where the Anchor Clutch Throwout Lever Spring attached has a round hole.

5–22 .... Used at point where the Anchor Clutch Throwout Lever Spring attached has a slotted hole.

5–23 .... Used without Bellcrank Retainer Clip.

5–24 .... Used with Bellcrank Retainer Clip.

NOTES

5–25 .... Dana Clutch (Components not available–Must order Cover Assembly for replacement).

5–26 .... For 70 40 (232-WST) and 71 01-40-70 (232-WST) use 319 9796 Driven Plate.
For 71 10 (232-WST-Except Export) and 71 01-40 (258-WST-Except Export) use 321 2135 Driven Plate.

5–27 .... Used with 10-1/2" Clutch.

5–28 .... Used with 11" Clutch.

5–29 .... Used prior to Car Sequence No.

5–30 .... Used beginning with Car Sequence No.

5–31 .... For 72 01-40-70 (Six-Except Export)(Six-Except Heavy Duty) use 321 3996 Driven Plate.
For 72 10 (Six-Except Export)(Six-Except Heavy Duty) use 321 2135 Driven Plate.

5–32 .... Used with 6-3/4" Link, Bellcrank to Throwout Lever.

5–33 .... Used with 5-7/16" Link, Bellcrank to Throwout Lever.

5–34 .... On 1971 (V8) used prior to Engine Build Code No. 312-N-P-02 and can be identified by having 10-1/2" Clutch.

5–35 .... On 1971 (V8) used beginning with Engine Build Code No. 312-N-P-02 and can be identified by having 11" Clutch.

3287

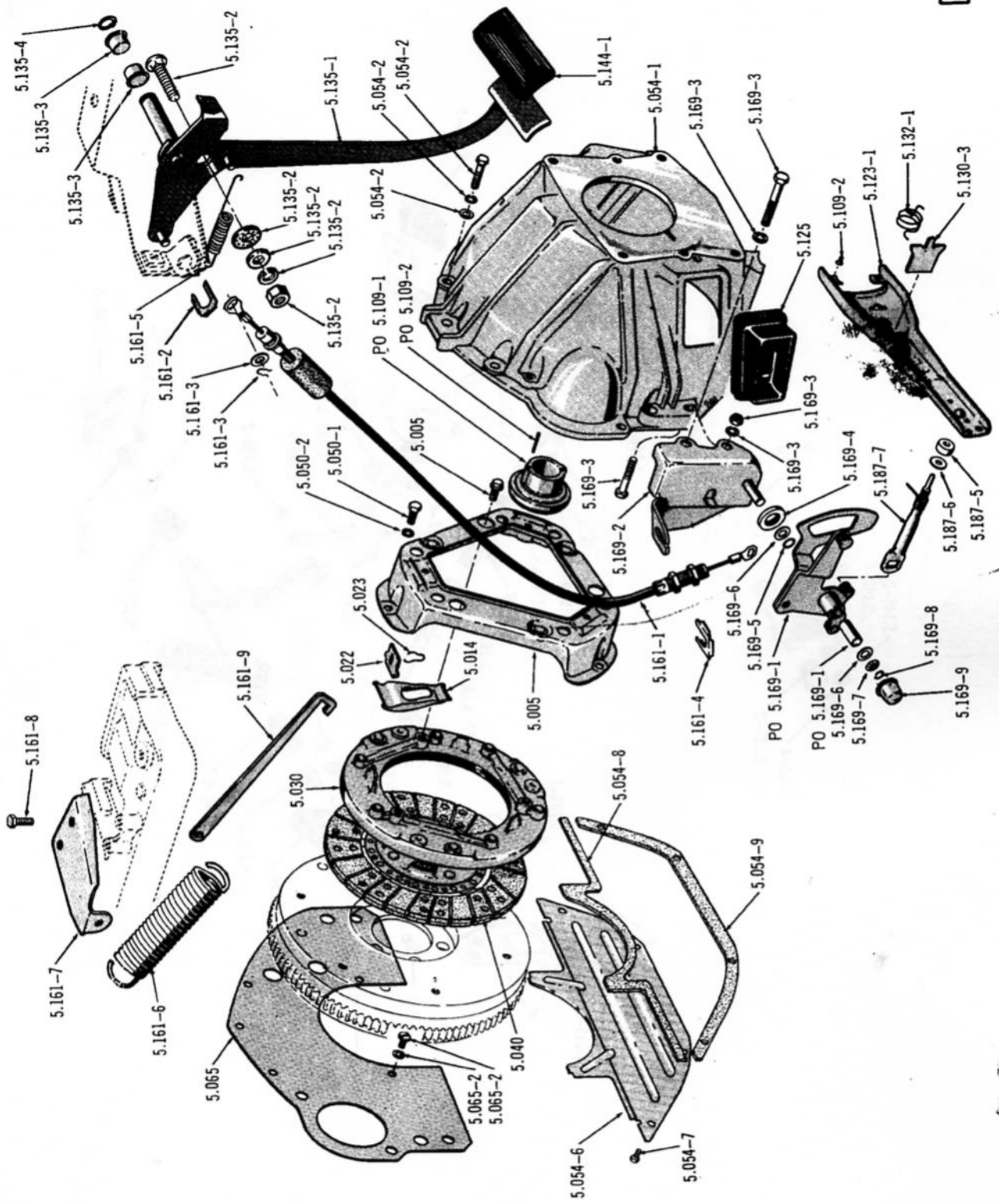

SELF ADJUSTING CLUTCH ... 1967/68

2297-A

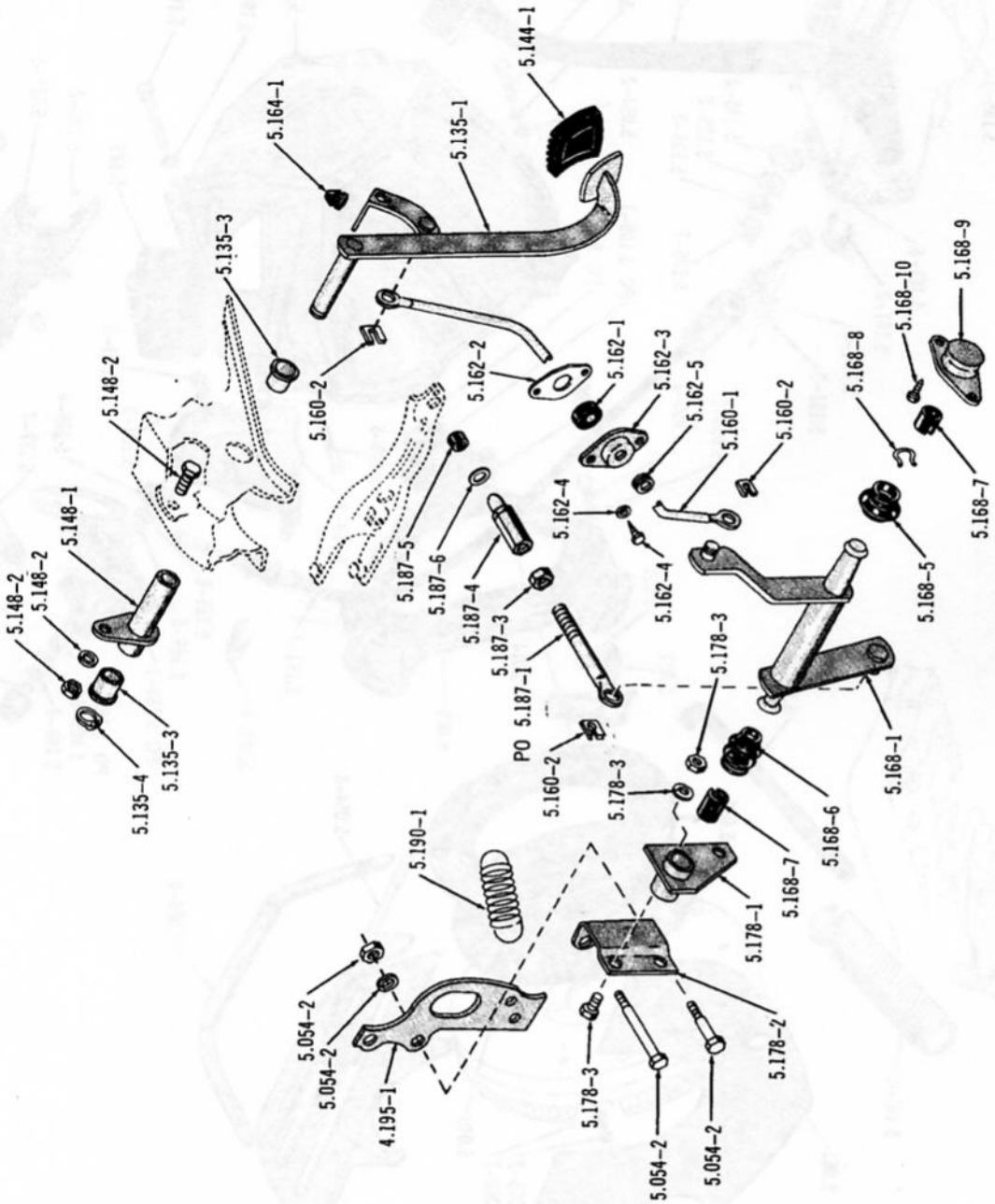

CLUTCH PEDAL AND LINKAGE ... 1967/69 (199)

Printed in U.S.A.

3845

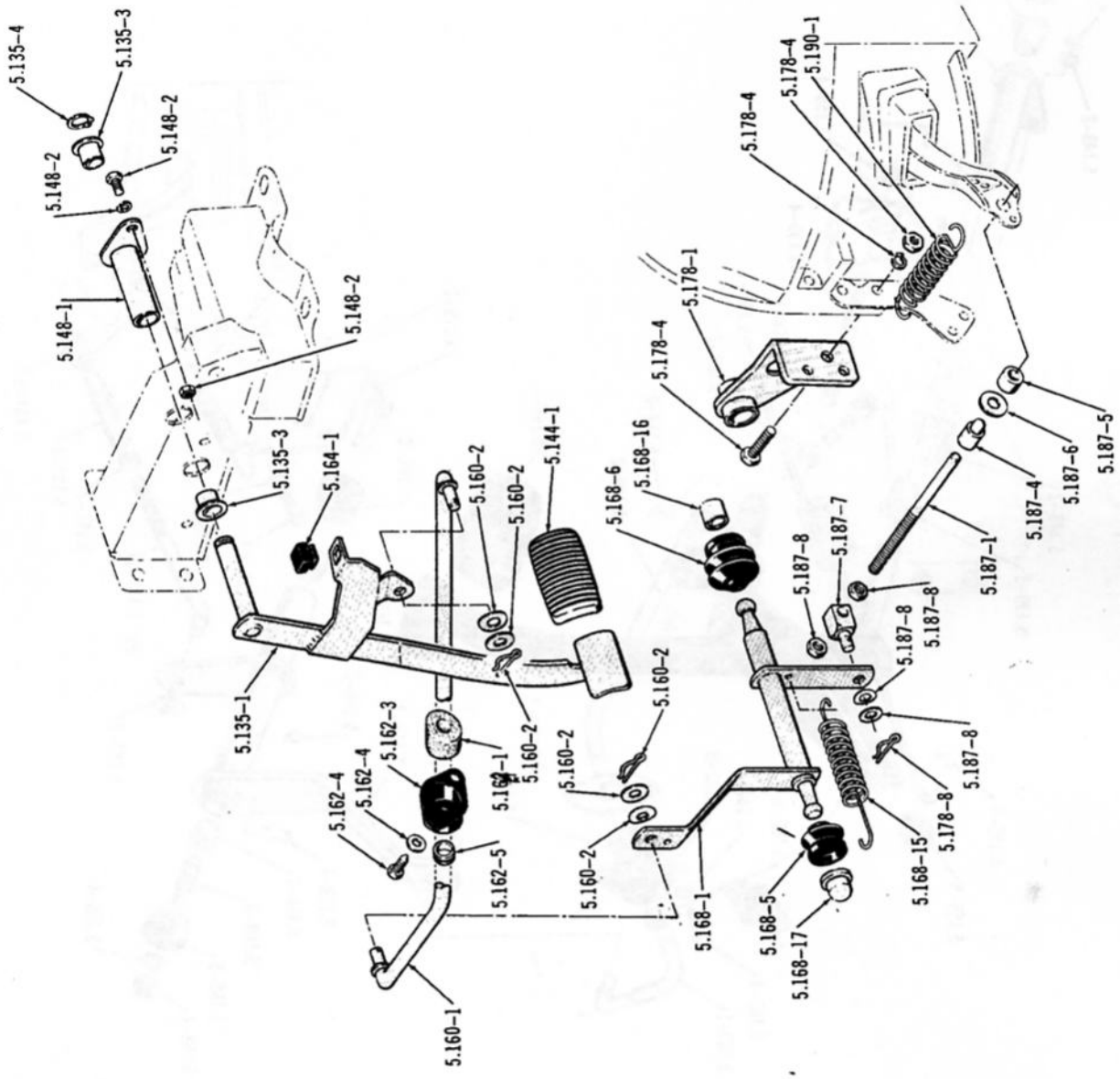

CLUTCH PEDAL AND LINKAGE ... 1970 (199)

Printed in U.S.A.

2735-C

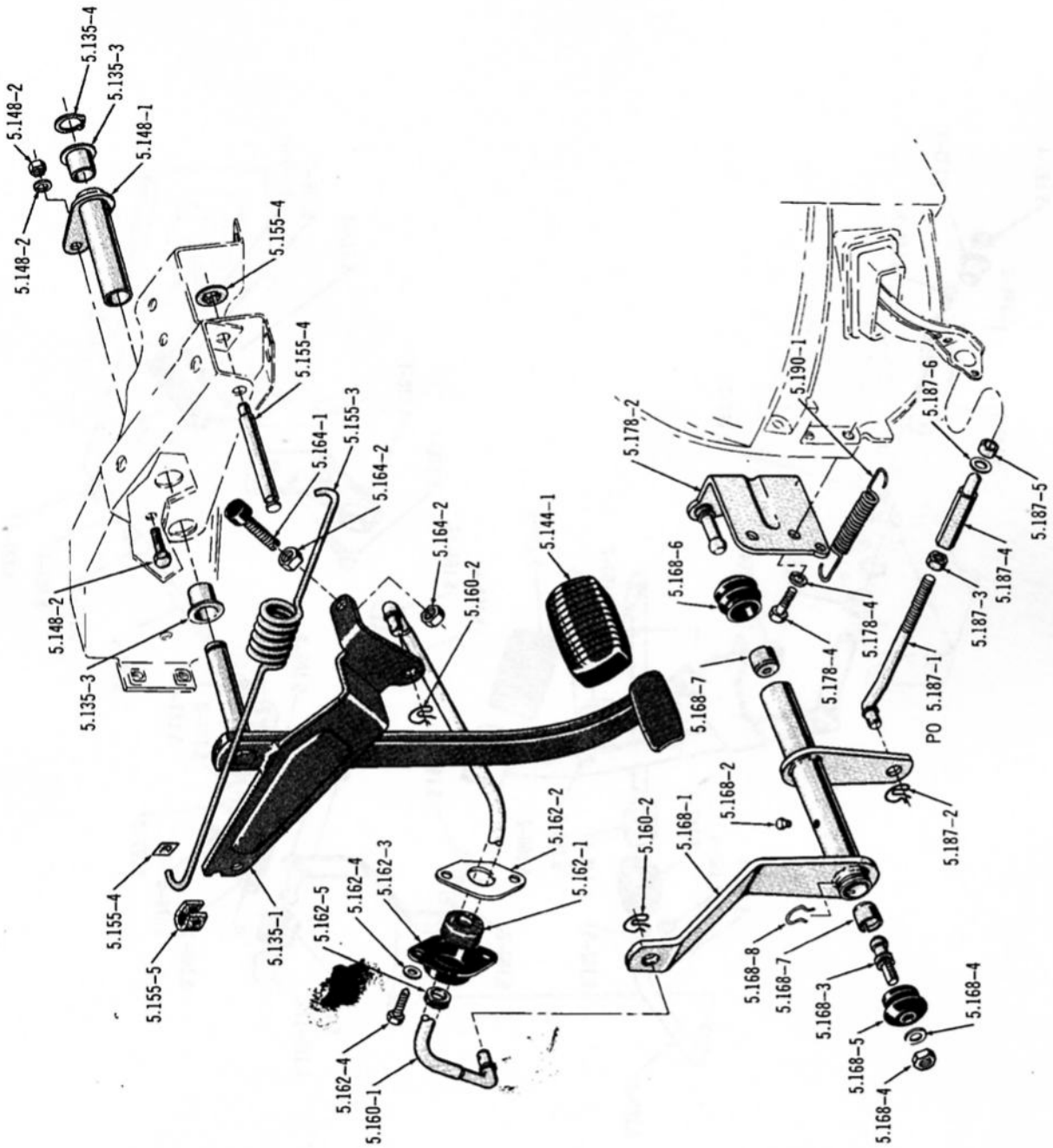

CLUTCH PEDAL AND LINKAGE ... 1967/69 (01-V8)

Printed in U.S.A.

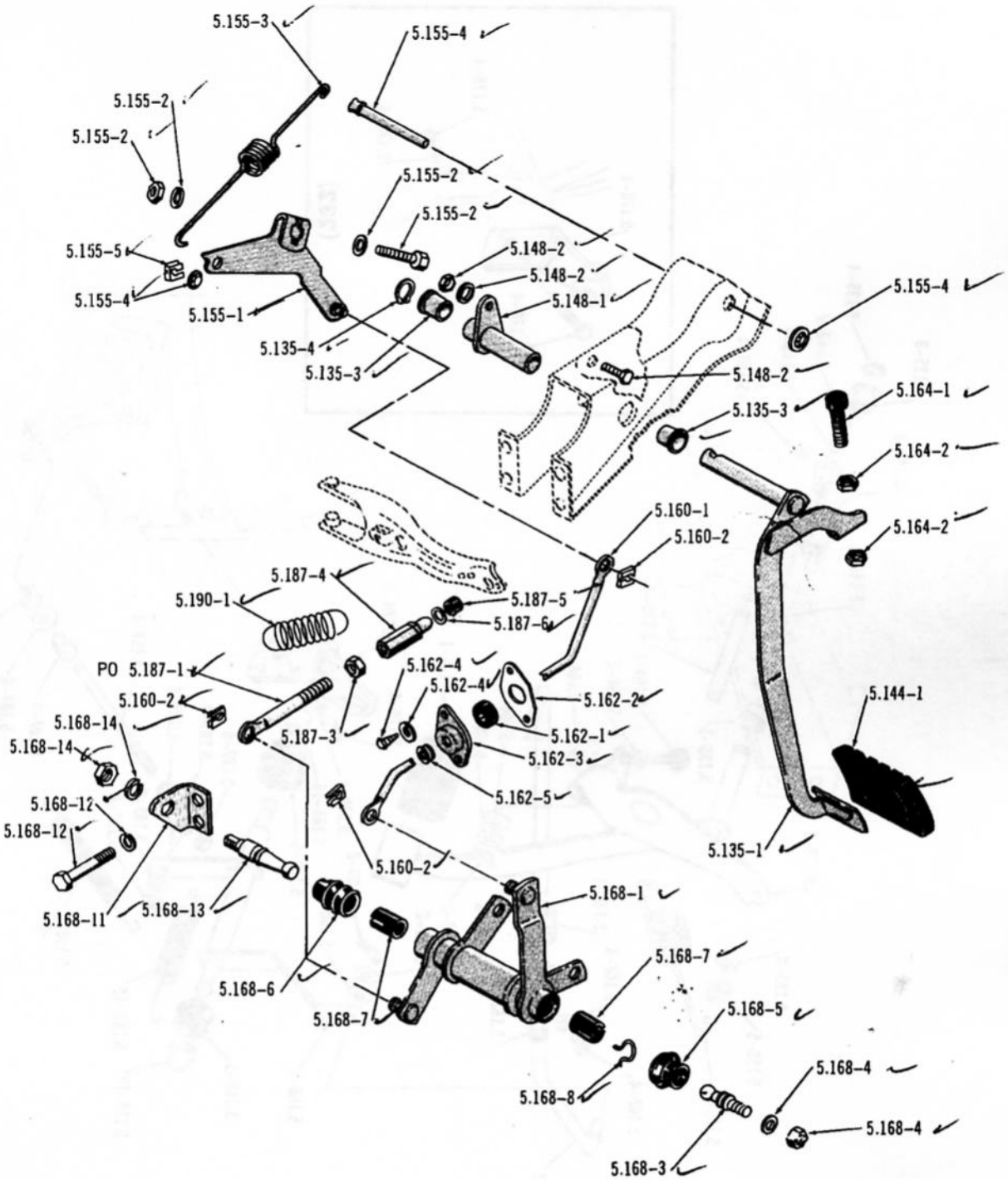

3114-C

CLUTCH PEDAL AND LINKAGE ... 1967/69-V8 (10)(30)(50)(70)(80)

Printed in U.S.A.

3844

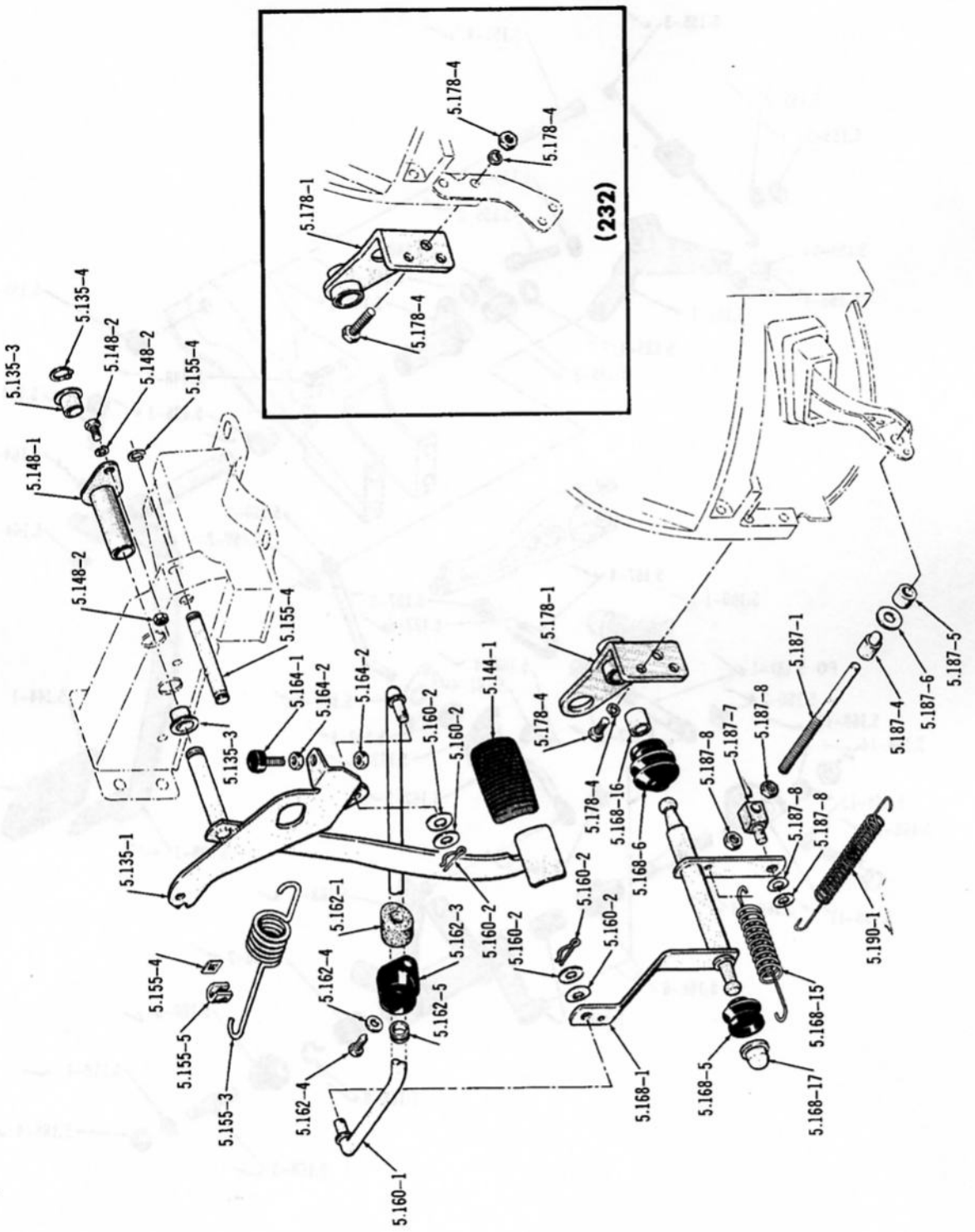

CLUTCH PEDAL AND LINKAGE . . . 1970/ (232)(258)(V8)

CLUTCH COVER ASSEMBLY COMPONENTS

COVER ASSEMBLY *VENDOR NUMBER*		317 1967 *1651*	317 1968 *1654*	317 3322 *1671*	317 6685 *1676*	317 9097 *1688*	319 6887 *10020*
COVER (Only)	5.005	(1) 307 810	(1) 307 810	(1) 307 810	(1) 307 810	.....	(1) 320 7080
BOLT, Cover.....	5.005	.....	.....	.....	.....	(3) 448 6546	.....
LEVER.....	5.014	(3) 27 989	(3) 27 989	(3) 27 989	(3) 27 989	(3) 320 7241	(3) 320 7082
EYEBOLT AND NUT	5.018	(3) 320 4989	(3) 320 4989	(3) 310 7686	(3) 310 7686	.....	(3) 320 8196
PIN	5.018	(3) 45 473	(3) 45 473	(3) 45 473	(3) 45 473	.....	(3) 45 473
PAD, Grease	5.018	(3) 320 4419	(3) 320 4419	(3) 320 4419	(3) 320 4419	.....	(3) 320 4419
FULCRUM	5.022	(3) 46 024	(3) 46 024	(3) 46 024	(3) 46 024	(3) 320 7240	(3) 320 7083
RETAINER, Fulcrum	5.023	.....	.....	.....	.....	(3) 448 6545	.....
SPRING, Anti-Rattle	5.026	(3) 46 242	(3) 46 242	(3) 46 242	(3) 46 242	.....	(3) 46 242
PLATE, Pressure ..	5.030	(1) 320 4991	(1) 320 4991	(1) 320 4991	(1) 320 4991	(1) 320 7239	(1) 320 8195
SPRING	5.035	(6) 320 4990	(6) 320 4990	(6) 311 8825	(6) 320 4990	.....	(6) 311 8826
SPRING	5.035	(3) 320 7053	(3) 311 8825	(3) 320 7053	(3) 311 8825	.....	(3) 311 9905
PLATE, Driven	5.040	(1) 317 7211	(1) 317 7211	(1) 319 4726	* 5-2	(1) 448 6157	* 5-20

COVER ASSEMBLY *VENDOR NUMBER*		318 2657 *1725*	318 5840 *1749*	318 7795 *1755*	319 0960 *1782*	317 3175 *1664*	319 0860 *1787*
COVER (Only).....	5.005	(1) 320 7080	(1) 320 7085	(1) 320 8194	(1) 307 810	(1) 311 8782	(1) 320 7085
LEVER.....	5.014	(3) 320 7082	(3) 320 5478	(3) 320 7082	(3) 27 989	(3) 320 5478	(3) 320 5478
EYEBOLT AND NUT	5.018	(3) 320 8196	(3) 320 8172	(3) 320 8196	(3) 310 7686	(3) 311 8939	(3) 320 8953
PIN	5.018	(3) 45 473	(3) 45 473	(3) 45 473	(3) 45 473	(3) 45 473	(3) 45 473
PAD, Grease.....	5.018	(3) 320 4419	(3) 320 4419	(3) 320 4419	(3) 320 4419	(3) 320 4419	(3) 320 4419
FULCRUM	5.022	(3) 320 7083	(3) 320 7083	(3) 320 7083	(3) 46 024	(3) 46 024	(3) 320 7083
SPRING, Anti-Rattle	5.026	(3) 46 242	(3) 46 242	(3) 46 242	(3) 46 242	(3) 46 242	(3) 46 242
PLATE, Pressure ..	5.030	(1) 320 7081	(1) 320 7086	(1) 320 8195	(1) 320 4991	(1) 311 9156	(1) 320 8955
ROLLER ASSEMBLY	5.030	(3) 320 7084	(3) 320 7084	.....	.....	.....	(6) 320 7084
SPRING.....	5.035	(6) 311 8826	(6) 311 8825	(6) 311 8825	(6) 311 8825	(6) 311 9644	(9) 320 8954
SPRING.....	5.035	(3) 320 4990	(6) 320 7053	(3) 311 8826	(3) 311 8826	(6) 310 4343	(3) 311 8826
PLATE, Driven	5.040	(1) 318 9633	(1) 318 5837	(1) 318 9633	* 5-3	(1) 317 3218	(1) 319 8117

CLUTCH

CLUTCH COVER ASSEMBLY COMPONENTS

COVER ASSEMBLY *VENDOR NUMBER*		319 6973 *10017*	319 8709 *10001*	319 9795 ** 5-25*	319 3847 ** 5-25*	319 9723 *10030*	321 2523 *1828*
COVER (Only)	5.005	(1) 320 7085	(1) 320 8194	.....	.....	(1) 320 7085	(1) 812 0106
LEVER	5.014	(3) 448 8419	(3) 320 7082	.....	.....	(3) 448 8419	(3) 812 0101
EYEBOLT AND NUT	5.018	(3) 448 8420	(3) 320 8196	.....	.....	(3) 448 9462	(3) 448 9462
PIN	5.018	(3) 45 473	(3) 45 473	.....	.....	(3) 448 9474	(3) 448 9474
PAD, Grease	5.018	.....	.....	.....	.....	.....	.....
FULCRUM	5.022	(3) 320 7083	(3) 320 7083	.....	.....	(3) 320 7083	(3) 320 7083
SPRING, Anti-Rattle	5.026	(3) 46 242	(3) 46 242	.....	.....	(3) 46 242	(3) 46 242
PLATE	5.030	(1) 320 7086	(1) 320 8195	.....	.....	(1) 448 9473	(1) 812 0107
ROLLER ASSEMBLY	5.030	(3) 320 7084	.....	.....	.....	(6) 320 7084	.....
SPRING	5.035	(9) 311 8825	(6) 320 8954	.....	.....	(9) 320 8954	(6) 812 0108
SPRING	5.035	(3) 310 4299	(3) 311 8826	.....	.....	(3) 311 8826	(6) 310 4299
PLATE, Driven	5.040	(1) 319 8117	(1) 319 4913	* 5-26	(1) 319 9796	(1) 319 8117	(1) 321 2524

COVER ASSEMBLY *VENDOR NUMBER*		321 5786 *10280*	321 6159 ** 5-25*
COVER	5.005	(1) 320 7080	.....
LEVER	5.014	(3) 320 7082	.....
EYEBOLT AND NUT	5.018	(3) 320 8196	
PIN	5.018	(3) 45 473	.....
PAD, Grease	5.018	.....	.....
FULCRUM	5.022	(3) 320 7083	.....
SPRING, Anti-Rattle	5.026	(3) 46 242	.....
PLATE, Pressure ..	5.030	(1) 320 8195	.....
ROLLER ASSEMBLY	5.030	.....	.....
SPRING (Black)	5.035	(6) 311 8826	.....
SPRING (White).....	5.035	(3) 311 9905	.....
PLATE, Driven	5.040	(1) 321 5787	* 5-26, * 5-31

GROUP NO. — DESCRIPTION — YEAR and MODEL	"L" CODE	PAKS CODE	PRIMARY GROUP NO.	PER CAR	PART NO.	CODE

CLUTCH SPRING COLOR CODE

27 897 PINK	311 8826 BLACK	311 9905 WHITE	320 4990 YELLOW
310 4343 LIGHT BLUE	311 8827 DARK BLUE	320 0029 NONE	320 7053 LAVENDER
311 8825 RED OR NONE	311 9644 LIGHT GREEN		

5.001 COVER ASSEMBLY, Clutch

67/69	(B & B #1651) 01 (199-Except Heavy Duty)	.....	1	317 1967	
70	(B & B #1654) 01 (199-Except Export-Except Heavy Duty)	.....	1	317 1968	
70	(Dana) 40 (199-* 5-25) ***(Use 321 6159)***	.....	1	319 3847	
67	(B & B #1671) 01 (232)	.....	1	317 3322	
68/70	(B & B #1676) 01-70 (232-Except Heavy Duty)	.....	1	317 6685	
67/68	(B & B #1755) 01 (V8-WST-Except Heavy Duty)	.....	1	318 7795	
67/69	(B & B #1725) 01-30-70 (290-W4ST)	.....	1	318 2657	
67	(B & B #1749) 01-50 (343-W4ST)	.....	1	318 5840	
69	(B & B #1787) 09 (SC/RAMBLER-390-W4ST)	.....	1	319 0860	
67	(B & B #1688) 10-50-80 (LHD-232-Except Heavy Duty)	.....	1	317 9097	
67/68	(B & B #1676) 10-50-80 (LHD-232-Std. -9" Clutch-Except Export-Except Heavy Duty)	.....	1	317 6685	
68	(B & B #1688) 10-80 (LHD-232-* 5-4-Except Heavy Duty)	.....	1	317 9097	
68	(B & B #1676) 10-80 (LHD-232-* 5-5-Except Heavy Duty)	.....	1	317 6685	
69	(B & B #1676) 10-80 (232-Except Heavy Duty)	.....	1	317 6685	
70	(B & B #1782) 10-80 (232-Except Heavy Duty)	.....	1	319 0960	
70	(Dana) 40 (232-Except Export-* 5-25) ***(Use 321 6159)***	.....	1	319 9795	
71	(Dana) 01-10-40-70 (Six-Except Export-* 5-25)	.....	1	321 6159	
72	(Dana-Spicer) 01-10-40-70 (Six-Except Export)(Six-Except Heavy Duty)	.....	1	321 6159	
67/68	(B & B #1664) 10-50-80 (290-WST)(290-WOD)	.....	1	317 3175	
67/68	(B & B #1725) 10-50-80 (290-W4ST)	.....	1	318 2657	
67/68	(B & B #1755) 10-50-80 (290-Except Heavy Duty)	.....	1	318 7795	
67/69	(B & B #1749) 10-30-70-80 (343-W4ST)	.....	1	318 5840	
68/69	(B & B #1787) 10-30-70-80 (390-W4ST)	.....	1	319 0860	
70	(B & B #10017) 10-30-70 (360-W4ST)	.....	1	319 6973	
71	(B & B #10017) 01-70 (360-WST-WFGS-* 5-34)	.....	1	319 6973	
71	(B & B #1828) 01-70 (360-WST-WFGS-* 5-35)	.....	1	321 2523	
72	(B & B #1828) 70 (360-WST-WFGS)(401-WST-WFGS)	.....	1	321 2523	
72	(B & B #1828) 70 (360-W4ST)(401-W4ST)	.....	1	321 2523	
71	(B & B #10017) 01-70 (360-W4ST-* 5-34)	.....	1	319 6973	
71	(B & B #1828) 01-10-70 (360-W4ST)(401-W4ST-* 5-35)	.....	1	321 2523	
70	(B & B #1787) 10-30-70 (390-W4ST)	.....	1	319 0860	
68/69	(B & B #1755) 70 (V8-WST-Except Heavy Duty)	.....	1	318 7795	
69	(B & B #1664) 70 (290-WST)	.....	1	317 3175	
70/71	(B & B #10020) 70 (304-WST)	.....	1	319 6887	
72	(B & B #10280) 01-40-70 (304-WST-WFGS)	.....	1	321 5786	
71	(B & B # 0030) 10-70 (401-W4ST)	.....	1	319 9723	
67/70	***(B & B #1654) 01 (Heavy Duty-199)***	.....	1	317 1968	
67	***(B & B #1676) 01 (Heavy Duty-232-9" Clutch)***	.....	1	317 6685	
67/68	***(B & B #1725) 01-10-50-80 (Heavy Duty-V8)***	.....	1	318 2657	
70	***(B & B #10001) 01 (Heavy Duty-Six-WST)(Export-Six-WST)***	.....	1	319 8709	
67/68	***(B & B #1782) 10-50-80 (Heavy Duty-LHD-232-9" Clutch)(Export-LHD-232-9" Clutch)***	.....	1	319 0960	
67/69	***(B & B #1755) 10-50-80 (Heavy Duty-232-10" Clutch-* 5-1)***	.....	1	318 7795	
68	***(B & B #1782) 10-80 (Heavy Duty-LHD-232-9" Clutch-* 5-5)***	.....	1	319 0960	
69	***(B & B #1664) 10 (Heavy Duty-232-10-1/2" Clutch)***	.....	1	317 3175	
69	***(B & B #1782) 10-80 (Heavy Duty-232-9" Clutch)***	.....	1	319 0960	
70	***(B & B #10001) 10-70-80 (Heavy Duty-Six-WST)(Export-Six-WST)***	.....	1	319 8709	
71/	***(B & B #10001) SIX (Heavy Duty-WST)(Export-WST)***	.....	1	319 8709	
69	***(B & B #1725) 70 (Heavy Duty-V8)***	.....	1	318 2657	
67/68	***(B & B #1782) 10 (Heavy Duty-RHD-232-WST-9" Clutch)***	.....	1	319 0960	
67/68	***(B & B #1676) 10 (RHD-232-WST-9" Clutch-Except Heavy Duty)***	.....	1	317 6685	

CLUTCH

5.040–1 PLATE KIT, Clutch Driven (Clutch Anti-Chatter Kit)(Incl. Plate, Spring, Adjuster And Bushing)

67	10-50-80 (LHD-232-Except Heavy Duty)	.....	1	448 6157
68	10-50-80 (LHD-232-* 5-4-Except Heavy Duty)	.....	1	448 6157

5.042 SPRING, Clutch Anti-Chatter (Located In Crankshaft)

67	10-50-80 (LHD-232-Except Heavy Duty)	.....	1	448 5663
68	10-80 (LHD-232-* 5-4-Except Heavy Duty)	.....	1	448 5663

5.045 ANTI-SQUAWK KIT, Clutch (Incl. Sleeve, Flyweight And Boot)

67	10-50-80 (LHD-232-Except Heavy Duty)	.....	1	448 6168
68	10-80 (LHD-232-* 5-4-Except Heavy Duty)	.....	1	448 6168

5.050–1 SCREW, Clutch Cover To Flywheel

67/70	SIX	.....	6	311 0965
71/	SIX (Except Export)	.....	3	311 0965
67/71	V8 (* 5-27)	.....	6	318 4266
71/	V8 (* 5-28)	.....	6	400 4165
67/69	***10-80 (Heavy Duty-232-* 5-1)***	.....	6	318 4266
70	***01-10-40-70-80 (Export-232)***	.....	6	318 4266
71	***SIX (Heavy Duty)(Export)***	.....	6	318 4266
72	***SIX (Heavy Duty)(Export)***	.....	6	400 4165

5.050–2 WASHER, Clutch Cover To Flywheel Screw

67/70	SIX	17.820	6	G120214
71/	SIX (Except Export)	17.820	3	G120214
67/71	V8	17.820	6	G120382
67/69	***10-80 (Heavy Duty-232-* 5-1)***	17.820	6	G120382
70	***01-10-40-70-80 (Export-232)***	17.820	6	G120382
71	***SIX (Heavy Duty)(Export)***	17.820	6	G120382

5.054–1 HOUSING, Clutch

67/69	SIX (LHD-Except Heavy Duty) ***(Use 319 4911)***	.....	1	318 7399
70/71	SIX (WST)	.....	1	319 4911
72	SIX (WST)	.....	1	321 5181
71	V8	.....	1	321 0949
67/68	01 (V8-WST)	.....	1	318 6929
67/69	01 (V8-W4ST)	.....	1	317 9072
70	01-10-30-70 (V8)	.....	1	317 9072
67/69	10-30-50-70-80 (V8)	.....	1	317 9072
72	40-70 (304-WST)	.....	1	321 5181
72	70 (360-W4ST)(401-W4ST)	.....	1	321 5152
67/69	***10-80 (Heavy Duty-Six-* 5-1)***	.....	1	319 1360
67/69	***01 (RHD-Six-WST)***	.....	1	318 7542
67/68	***10 (RHD-Six-WST)***	.....	1	318 7542

5.054–2 ATTACHING PARTS, Housing To Engine

BOLT, Hexagon	72	(2-3/16" Long)...(Incl. Washer)	.....	4	400 1885	
BOLT, Hexagon	72	(2-3/4" Long)	.....	2	400 4370	
BOLT, Hexagon	67/68	SIX (1-1/4" long)	17.038	3	G179841	NA
BOLT, Hexagon	67/69	SIX (1-3/4" long)	17.038	1	G181377	NA
BOLT, Hexagon	67/69	SIX (2" long)	17.038	1	G179866	NA
BOLT, Hexagon	67/69	SIX (2-1/2" long)	17.038	1	G179868	NA
BOLT, Hexagon	70/71	SIX (WST)(Left)(2-1/4" Long)	17.038	1	G179867	NA
BOLT, Hexagon	70/71	SIX (WST)(Right)(2" Long)	17.038	1	G179866	NA
BOLT, Hexagon	69/71	SIX (1-3/16" long) ...(Incl. Washer)	16.040	3	400 1884	
BOLT, Hexagon	72	SIX (1-3/16" Long)...(Incl. Washer)	16.040	1	400 1884	

BOLT, Hexagon	67/68	V8 (2-1/4" long).....	17.038	4	G179848 NA
BOLT, Hexagon	67/69	V8 (2-3/4" long).....	17.038	2	G179869 NA
BOLT, Hexagon	70/71	V8 (WST)(2-3/4" Long)	17.038	2	G179869 NA
BOLT, Hexagon	69/71	V8 (2-3/16" long)...(Incl. Washer)	.....	4	400 1885
BOLT, Hexagon	72	40 (304-WST)(1-3/16" Long)...(Incl. Washer)	16.040	1	400 1884
WASHER, Plain.....	67/69	SIX (13/32" I. D.).....	17.814	3	400 1101
WASHER, Plain.....	67/69	SIX (15/32" I. D.).....	17.814	1	400 1156
WASHER, Plain.....	67/69	V8 (13/32" I. D.)	17.814	4	400 1101
WASHER, Plain.....	67/69	V8 (15/32" I. D.)	17.814	2	400 1156
WASHER, Plain.....	70/	(15/32" I. D.)	17.814	AR	400 1156
WASHER, Lock.....	67/68	(3/8" I. D.)	17.820	AR	G120382
WASHER, Lock	68/71	(7/16" I. D.)(Dowel Bolt)	17.820	2	G103328 NA
NUT, Hexagon.....	67/69	SIX.....	17.406	1	G103026 NA
NUT, Hexagon.....	72	SIX (3/8 I. D.)	17.406	2	G219422 NA

5.054–3 ATTACHING PARTS, Housing To Transmission

BOLT, Hexagon	67/	.....	17.038	4	G179861 NA
WASHER, Lock.....	67/	.....	17.822	4	G114607 NA

5.054–4 ROD, Clutch Housing To Engine

67/71	10-50-80 (Six-WST)		.....	1	318 7401

5.054–5 ATTACHING PARTS, Rod To Housing

WASHER, Plain.....	67/	10-50-80 (Six-WST)	17.814	2	400 1156
WASHER, Lock	67/	10-50-80 (Six-WST)	17.820	1	400 1898
NUT, Hexagon.....	67/	10-50-80 (Six-WST)	17.406	2	G120370

5.054–6 COVER, Clutch Housing

67/71	SIX.....		.....	1	318 7403
72	.....		.....	1	321 3744

5.054–7 ATTACHING PARTS, Cover To Housing

SCREW, Tapping.....	67/71	SIX.....	17.670	4	G448423 NA

5.054–8 GASKET, Clutch Housing Cover Upper

67	10-50-80 (LHD-232-Except Heavy Duty)		.....	1	318 4264
68	10-80 (LHD-232-* 5-4-Except Heavy Duty)		.....	1	318 4264

5.054–9 GASKET, Clutch Housing Cover Lower

67	10-50-80 (LHD-232-Except Heavy Duty)		.....	1	318 4263
68	10-80 (LHD-232-* 5-4-Except Heavy Duty)		.....	1	318 4263

5.054–10 DOWEL, Clutch Housing

67	.....		.....	2	314 5091
68/70	.....		.....	2	318 0313
71/	.....		.....	2	321 2857

5.065–1 SPACER, Clutch Housing To Engine

67/68	SIX.....		.....	1	317 2627
69	SIX (* 5-18)		.....	1	317 2627
69	SIX (* 5-19).....		.....	1	319 5265
70/71	SIX.....		.....	1	319 5265
67/71	V8		.....	1	318 0318
72	.....		.....	1	321 3743

CLUTCH

5.065–2 ATTACHING PARTS, Spacer To Engine

BOLT, Hexagon	67/69	V8 (7/8" Long)	17.038	2	G180078 NA
BOLT, Hexagon	69/	V8 (3/4" Long) ...(Incl. Washer)	.....	2	316 2258
WASHER, Lock	67/69	V8	17.820	2	G120214

5.109–1 SLEEVE, Clutch Throwout Lever (Incl. Bearing)

67	01 (Six)	.....	1	319 0517
68/69	01-70 (Six)	.....	1	319 0517
70/	SIX	.....	1	319 0517
67	10-50-80 (LHD-232-Except Heavy Duty) ...(Incl. Screw)	.....	1	320 8566
68	10-80 (LHD-232-* 5-4-Except Heavy Duty) ...(Incl. Screw)	.....	1	320 8566
68	10-80 (LHD-232-* 5-5-Except Heavy Duty)	.....	1	319 0517
67/69	V8	.....	1	320 7521
70/	V8	.....	1	319 0517
69	10-80 (232-Except Heavy Duty)	.....	1	319 0517
68	***10-80 (Export-LHD-232)***	.....	1	319 0517
67/69	***10-80 (Heavy Duty-232-* 5-1)***	.....	1	320 7521
68	***10 (RHD-232-WST)***	.....	1	319 0517

5.109–2 SCREW, Clutch Throwout Lever Sleeve

67	10-50-80 (LHD-232-Except Heavy Duty)	.....	2	318 5222
68	10-80 (LHD-232-* 5-4-Except Heavy Duty)	.....	2	318 5222

5.123–1 LEVER, Clutch Throwout

71/	.....	.....	1	319 3954
67/70	01-70 (LHD-Six-* 5-21)	.....	1	316 9944
70	SIX (* 5-22)	.....	1	319 3954
67/70	V8	.....	1	317 3524
67	10-50-80 (LHD-232-Except Heavy Duty)	.....	1	320 7844
68	10-80 (LHD-232-* 5-4-Except Heavy Duty)	.....	1	320 7844
68	10-80 (LHD-232-* 5-5-Except Heavy Duty)	.....	1	316 9944
69/70	10-80 (LHD-232-Except Heavy Duty)	.....	1	316 9944
68	***10-80 (Export-LHD-232)***	.....	1	316 9944
67/69	***10-80 (Heavy Duty-232-* 5-1)***	.....	1	317 3524
67/69	***01 (RHD-Six-WST)***	.....	1	317 3524
67/68	***10 (RHD-Six-WST)***	.....	1	317 3524

5.123–2 WASHER, Lever To Clutch Throwout Lever Pin

71/	.....	.....	1	317 8359
67/70	01-40-70	.....	1	317 8359
68	10-80 (LHD-232-* 5-5-Except Heavy Duty)	.....	1	317 8359
69/70	10-80 (232)	.....	1	317 8359
67/70	10-30-50-80 (V8)	.....	1	317 8359
68	***10-80 (Export-LHD-232)***	.....	1	317 8359
67/68	***10-80 (Heavy Duty-232-* 5-1)***	.....	1	317 8359
67/68	***10 (RHD-Six-WST)***	.....	1	317 8359

5.125 BOOT, Clutch Throwout Lever

67	SIX (LHD-Except Heavy Duty)	.....	1	318 0370
69/	SIX	.....	1	317 3646
68	10-80 (LHD-232-* 5-4-Except Heavy Duty)	.....	1	318 0370
68	10-80 (LHD-232-* 5-5-Except Heavy Duty)	.....	1	317 3646
67/	V8	.....	1	317 3646
68	***10-80 (Export-LHD-Six)***	.....	1	317 3646
67/68	***10-80 (Heavy Duty-* 5-1)***	.....	1	317 3646
67/68	***01-80 (RHD-Six-WST)***	.....	1	317 3646

CLUTCH

5.130–1 PIVOT ASSEMBLY, Clutch Throwout Lever

69	10–80 (LHD–232–Except Heavy Duty)	1	320 5648	
67/69	01–70 (LHD–Six)	1	320 5648	
70/71	SIX	1	320 5648	—
67/69	V8	1	320 5362	
70/71	V8	1	448 7604	
68	10–80 (LHD–232–* 5–5)	1	320 5648	
72	70 (360)(401)	1	321 3859	
67/69	***10-80 (Heavy Duty-232-* 5-1)***	1	320 5362	
67/69	***01-10 (RHD-Six-WST)***	1	320 6273	
68	***10-80 (Export-LHD-Six)***	1	320 5362	

5.130–2 ATTACHING PARTS, Pivot To Housing Bolt

WASHER, Lock	67/		17.820	1	G103328 NA
WASHER, Plain	70	SIX (* 5–24)	17.814	1	400 1116
WASHER, Plain	71	SIX	17.814	1	400 1116

5.130–3 PIVOT, Clutch Throwout Lever

67	10–50–80 (LHD–232–Except Heavy Duty)	1	317 5323	—
68	10–80 (LHD–232–* 5–4–Except Heavy Duty)	1	317 5323	—

5.130–4 BALL, Throwout Lever Pivot

67/		17.018	1	G169162 NA

5.130–5 SPACER, Clutch Throwout Lever Pivot

68	LHD (Six)	1	400 1116	

5.132–1 SPRING, Clutch Throwout Lever (In Clutch)

71/		1	319 9503	
67	01	1	310 6505	
68	01–70 (Six–* 5–17)	1	317 5584	
69	SIX	1	310 6505	
70	SIX (* 5–21) ROUND	1	310 6505	
70	SIX (* 5–22) SLOTTED	1	319 9503	—
67	10–80 (232–Except Heavy Duty)	1	317 5584	
68	10–80 (232–* 5–4–Except Heavy Duty)	1	317 5584	
68	10–80 (232–* 5–5–Except Heavy Duty)	1	310 6505	
67/69	V8	1	310 6505	
70	V8	1	319 8128	
68	***10-80 (Export-LHD-232)***	1	310 6505	
67/68	***10-80 (Heavy Duty-232-* 5-1)***	1	310 6505	
67/68	***01-10 (RHD-Six-WST)***	1	310 6505	

5.132–2 ANCHOR, Clutch Throwout Lever Spring

69	SIX	1	317 2037	
70	SIX (* 5–21)	1	317 2037	
68	10–80 (LHD–232–* 5–5–Except Heavy Duty)	1	317 2037	
67/69	V8	1	317 2037	
70	V8	1	319 8324	
71/	V8	1	321 0423	
68	***10-80 (Export-LHD-232)***	1	317 2037	
67/69	***10-80 (Heavy Duty-232-* 5-1)***	1	317 2037	
67	***01 (RHD-Six-WST)***	1	317 2037	
67/68	***10 (RHD-Six-WST)***	1	317 2037	

Printed in U.S.A.

CLUTCH

5.135–1 PEDAL, Clutch

67/69	01 (LHD-199)	1	318 6406	
70	01-40 (LHD-199)	1	319 8350	
67	01 (LHD-232)(V8)	1	318 6408	
68/69	01 (LHD-232)(V8)	1	319 0441	
70	01-40 (LHD-232)(V8)	1	319 7156	
71/	01-40	1	321 2242	
67	10-50-80 (LHD-232-Except Heavy Duty)	1	318 6426	
68	10-80 (LHD-232-* 5-4-Except Heavy Duty)	1	319 0311	
68	10-80 (LHD-232-* 5-5-Except Heavy Duty)	1	318 6430	
69	10-80 (232)	1	318 6430	
67/69	10-50-80 (V8)	1	318 6430	
70	10-70-80 (LHD-Six)	1	319 6913	
70	10-30-70 (V8-W4ST)	1	319 6913	
71/	10-70-80	1	321 2243	
68/69	30-70	1	318 9281	
68	***10-80 (Export-LHD-232)***	1	318 6430	
67/68	***10-80 (Heavy Duty-232-* 5-1)***	1	318 6430	
67/69	***01 (RHD-Six-WST)***	1	317 2531	
67/68	***10 (RHD-232-WST)***	1	318 7648	

5.135–2 ATTACHING PARTS, Pedal To Lever

BOLT, Carriage	68	10-80 (LHD-Six-Except Heavy Duty)	17.046	1	G126406 NA
WASHER, Bite	68	10-80 (LHD-Six-Except Heavy Duty)	10.003	1	310 8995
WASHER, Plain	68	10-80 (LHD-Six-Except Heavy Duty)	17.814	1	G120394
WASHER, Lock	68	10-80 (LHD-Six-Except Heavy Duty)	17.820	1	G120382
NUT, Hexagon	68	10-80 (LHD-Six-Except Heavy Duty)	17.406	1	G120369 NA

5.135–3 BUSHING, Clutch Pedal

67/	(Nylon)	2	314 5488	

5.135–4 RING, Clutch Pedal Shaft Retaining

67/		1	317 2124	

5.140–1 ROD, Clutch Pedal

67/68	***RHD (Six-WST)***	1	317 2526	

5.140–2 ATTACHING PARTS, Rod To Pedal

NUT, Hexagon	***67/68***	***RHD (Six)***	17.406	1	G120369 NA
WASHER, Lock	***67/68***	***RHD (Six)***	17.820	1	G120382

5.144–1 COVER, Clutch Pedal Pad

67/	01-40	8.148	1	317 1670
67/	10-30-50-70-80	8.148	1	317 5994

5.144–2 OVERLAY, Clutch Pedal Pad Cover

69/	30	8.148	1	317 6315
67/68	50 (WST)(WOD)(W4ST)	8.148	1	317 6315
69/	70 (SST)	8.148	1	317 6315
67/	80 (990)(DPL)	8.148	1	317 6315

CLUTCH

5.148–1 SHAFT, Clutch Pedal

67/	01–40	.....	1	317 2018
67/69	10–50–80 (V8–WST)(V8–WOD)(V8–W4ST)	8.160	1	317 3432
70	10 (V8–W4ST)	.....	1	317 2018
67	10–50–80 (LHD–232–Except Heavy Duty)	.....	1	317 2018
68	10–80 (LHD–232–* 5–4–Except Heavy Duty)	.....	1	317 2018
68	10–80 (LHD–232–* 5–5–Except Heavy Duty)	8.160	1	317 3432
69	10 (Six–WST)(Six–WOD)	8.160	1	317 3432
69/70	10–80 (Six)	.....	1	317 2018
71/	10–70–80	8.160	1	321 1165
68/70	30–70	.....	1	317 2018
68	***10–80 (Export–LHD–232)***	8.160	1	317 3432
67/68	***10–80 (Heavy Duty–232–* 5–1)***	8.160	1	317 3432
67/68	***10 (RHD–232)***	8.160	1	317 3432

5.148–2 ATTACHING PARTS, Shaft To Pedal Support

BOLT, Hexagon	67/	.....	17.038	1	G181593 NA
WASHER, Lock	67/	.....	17.820	1	G120214
NUT, Hexagon.....	67/	.....	17.406	1	G120368

5.155–1 LEVER, Clutch Pedal To Rod

67/69	10–50–80 (V8)	.....	1	318 6456
68	10–80 (LHD–232–* 5–5–Except Heavy Duty)	.....	1	318 6456
69	10–80 (LHD–232)	.....	1	318 6456
68	***10–80 (Export–LHD–232)***	.....	1	318 6456
67/68	***10–80 (Heavy Duty–232–* 5–1)***	.....	1	318 6456
67/68	***10 (RHD–232–WST)***	.....	1	317 5121

5.155–2 ATTACHING PARTS, Lever To Shaft

BOLT, Hexagon	67/69	10–50–80	17.038	1	G181647 NA
WASHER, Plain.....	67/69	10–50–80	17.814	2	G120394 NA
NUT, Lock.....	67/69	10–50–80	.....	1	317 5205

5.155–3 SPRING, Clutch Pedal Over Center

67/70	01–40 (232)(V8)	.....	1	317 7793
67/	10–50–80 (V8)	.....	1	317 7793
68/70	10–80 (LHD–232–* 5–5–Except Heavy Duty)	.....	1	317 7793
68/70	30–70	.....	1	317 7793
68/70	***10–80 (Export–LHD–232)***	.....	1	317 7793
67/70	***10–80 (Heavy Duty–232– * 5–1)***	.....	1	317 7793
67/70	***10 (RHD–232–WST)***	.....	1	317 3463

5.155–4 ATTACHING PARTS, Over Center Spring To Bracket

RING, Retaining	67/70	01 (232)(V8)	7.020	1	315 8724
RING, Retaining	67/69	10–50–80 (V8)	7.020	1	315 8724
RING, Retaining	70	10 (LHD–V8)	7.020	1	315 8724
RING, Retaining	68	10–80 (LHD–232–* 5–5–Except Heavy Duty)	7.020	1	315 8724
RING, Retaining	69/70	10 (LHD–232)	7.020	1	315 8724
RING, Retaining	68/70	30–70	7.020	1	315 8724
RING, Retaining	69/70	80 (232)	7.020	1	315 8724
***RING, Retaining	68***	***10–80 (Export–LHD–232)***	7.020	1	315 8724
***RING, Retaining	67/68***	***10–80 (Heavy Duty–232–* 5–1)***	7.020	1	315 8724

PIN, Retaining	67/69	01 (232)(V8)(3-1/4" Long)	.....	1	318 6403
PIN, Retaining	70/	01-30-40-70 (232)(V8)(2-3/4" Long)	.....	1	319 7522
PIN, Retaining	67/69	10-50-80 (V8)	.....	1	318 6421
PIN, Retaining	70	10 (LHD-V8)	.....	1	319 7522
PIN, Retaining	68	10-80 (LHD-232-* 5-5-Except Heavy Duty)	.....	1	318 6421
PIN, Retaining	69	10-80 (LHD-232)	.....	1	318 6421
PIN, Retaining	70	10-80 (LHD-232)	.....	1	319 7522
PIN, Retaining	68/69	30-70	.....	1	318 6403
PIN, Retaining	***68***	***10-80 (Export-LHD-232)***	.....	1	318 6421
PIN, Retaining	***67/68***	***10-80 (Heavy Duty-232-* 5-1)***	.....	1	318 6421
PIN, Retaining	***67/68***	***10 (RHD-232-WST)***	.....	1	317 3472
NUT, Stamped	67/70	01-40 (232)(V8)	13.012	1	400 0268
NUT, Stamped	67/70	10-50-80 (V8)	13.012	1	400 0268
NUT, Stamped	68/70	10-80 (LHD-232-* 5-5-Except Heavy Duty)	13.012	1	400 0268
NUT, Stamped	68/70	30-70	13.012	1	400 0268
NUT, Stamped	***67/70***	***10-80 (Heavy Duty-232-* 5-1)***	13.012	1	400 0268
NUT, Stamped	***68/70***	***10-80 (Export-LHD-232)***	13.012	1	400 0268
NUT, Stamped	***67/70***	***10 (RHD-WST)***	13.012	1	400 0268

5.155-5 WICK, Clutch Pedal Over Center Spring

67/70	01-40 (232)(V8)	.....	1	316 9182
67/70	10-50-80 (V8)	.....	1	316 9182
68/70	10-80 (LHD-232-* 5-5-Except Heavy Duty)	.....	1	316 9182
68/70	30-70	.....	1	316 9182
68/70	***10-80 (Export-LHD-232)***	.....	1	316 9182
67/70	***10-80 (Heavy Duty-232-* 5-1)***	.....	1	316 9182
67/70	***10 (RHD-232-WST)***	.....	1	316 9182

5.160-1 ROD, Bellcrank To Clutch Pedal

67/69	01 (LHD-199)	.....	1	317 4648
67/69	01 (LHD-232)	.....	1	317 7797
70/	01-40 (LHD)	.....	1	319 7683
67	01 (290-W4ST-* 5-6)	.....	1	318 3503
67	01 (290-W4ST-* 5-7)	.....	1	318 6507
68/69	01 (290-WST)	.....	1	318 6507
68	01 (343-W4ST)	.....	1	318 6507
69	09 (SC/RAMBLER-390-W4ST)	.....	1	318 6507
68	10-80 (LHD-232-* 5-5-Except Heavy Duty)	.....	1	317 3455
69	10 (LHD-232)	.....	1	317 3455
70	10-70 (LHD-Six)	.....	1	319 7237
71/	10-80 (LHD-Six)	.....	1	319 7238
67/69	10-50-80 (V8)	.....	1	317 3455
70	10-30-70 (LHD-V8)	.....	1	319 7237
71	10 (LHD-V8)	.....	1	319 7238
68/69	30-70	.....	1	318 9279
71/	70 (LHD)	.....	1	319 7237
69	80 (LHD-232)	.....	1	319 3867
70	80 (LHD-232)	.....	1	319 7238
67/68	***10-80 (Heavy Duty-* 5-1)***	.....	1	317 3455
68	***10-80 (Export-LHD-232)***	.....	1	317 3455
67/69	***01 (RHD-Six-WST)***	.....	1	317 2010
67/68	***10 (RHD-232-WST)***	.....	1	317 4788
69	***10 (RHD-232-WST)***	.....	1	317 2010

5.160-2 ATTACHING PARTS, Rod To Bellcrank And Lever Or Clutch Pedal

CLIP, Wire	67/69	01 (232)(V8)	.....	AR	400 1542
CLIP, "U" Shaped	67/69	01 (LHD-199)(V8)	.....	AR	316 7609
CLIP, "U" Shaped	67/69	10-30-50-70-80	.....	2	316 7609
PIN, Locking (Hairpin Type)	70/	LHD	29.162	2	400 0407
WASHER, Plain	70/	LHD	17.814	2	400 1100
WASHER, Spring	70/	LHD	7.125	2	316 7670

CLUTCH

5.161–1 CABLE, Clutch Release

67	10-50-80 (LHD-232-Except Heavy Duty)	.....	1	317 7766
68	10-80 (LHD-232-* 5-4-Except Heavy Duty)	.....	1	318 9854

5.161–2 ATTACHING PARTS, Cable To Clutch Pedal Support (At Pedal)

CLIP	68	10-80 (LHD-232-* 5-4-Except Heavy Duty)	5.192	1	312 8734

5.161–3 ATTACHING PARTS, Cable To Clutch Pedal Bracket

CLIP, Spring	67	10-50-80 (LHD-232-Except Heavy Duty)	17.710	1	G148148
CLIP, Spring	68	10-80 (LHD-232-* 5-4-Except Heavy Duty)	17.710	1	G148148
WASHER, Plain	67	10-50-80 (LHD-232-Except Heavy Duty)	.....	1	317 6132
WASHER, Plain	67	10-80 (LHD-232-* 5-4-Except Heavy Duty)	.....	1	317 6132

5.161–4 ATTACHING PARTS, Cable To Clutch Release Main Lever (At Clutch Housing)

CLIP	67	10-50-80 (LHD-232-Except Heavy Duty)	5.192	1	312 8734
CLIP	68	10-80 (LHD-232-* 5-4-Except Heavy Duty)	5.192	1	312 8734

5.161–5 SPRING, Clutch Release Cable Tension

67	10-50-80 (LHD-232-Except Heavy Duty)	.....	1	318 6601
68	10-80 (LHD-232-* 5-4-Except Heavy Duty)	.....	1	318 6601

5.161–6 SPRING, Clutch Release Cable Actuating

67	10-50-80 (LHD-232-Except Heavy Duty)	.....	1	318 5117
68	10-80 (LHD-232-* 5-4-Except Heavy Duty)	.....	1	318 5117

5.161–7 BRACKET, Clutch Release Cable Actuating Spring Anchor

67	10-50-80 (LHD-232-Except Heavy Duty)	.....	1	318 4439
68	10-80 (LHD-232-* 5-4-Except Heavy Duty)	.....	1	319 0859

5.161–8 ATTACHING PARTS, Spring Bracket To Intake Manifold

SCREW, Machine	67	10-50-80 (232-Except Heavy Duty)	17.626	2	400 0987

5.161–9 LINK, Clutch Actuating Spring

67	10-50-80 (LHD-232-Except Heavy Duty)	.....	1	318 5116
68	10-80 (LHD-232-* 5-1-Except Heavy Duty)	.....	1	318 5116

5.162–1 SEAL, Clutch Pedal To Bellcrank Rod

67/69	01 (LHD-199)	.....	1	316 7464
67/69	01 (LHD-232)(V8)	.....	1	317 3449
67/69	10-50-80 (V8)	.....	1	317 3449
68	10-80 (LHD-232-* 5-5-Except Heavy Duty)	.....	1	317 3449
69	10-80 (LHD-232)	.....	1	317 3449
70/	01-10-40-80 (LHD)	.....	1	318 9314
68/	30-70	.....	1	318 9314
67/68	**10-80 (Heavy Duty-232-* 5-1)**	.....	1	317 3449
68	***10-80 (Export-LHD-232)***	.....	1	317 3449
67/69	***01 (RHD-Six-WST)***	.....	1	316 7464
67/68	***10 (RHD-232-WST)***	.....	1	317 3449
69	***10 (RHD-232-WST)***	.....	1	316 7464

5.162–2 PLATE, Clutch Pedal To Bellcrank Rod Seal Retainer

67/69	01 (WST)(WOD)(W4ST)	.....	1	318 1697

5.162–3 RETAINER, Clutch Pedal To Bellcrank Rod Seal

67/69	01 (LHD-199)	.....	1	317 7184
67/69	01 (LHD-232)(V8)	.....	1	317 7792
67/69	10-50-80 (V8)	.....	1	317 7183
68	10-80 (LHD-232-* 5-5-Except Heavy Duty)	.....	1	317 7183
69	10-80 (LHD-232)	.....	1	317 7183
68/69	30-70	.....	1	318 9315
70/	LHD	.....	1	319 7691
67/68	***10-80 (Heavy Duty-232-* 5-1)***	.....	1	317 7183
68	***10-80 (Export-LHD-232)***	.....	1	317 7183
67/69	***01 (RHD-Six-WST)***	.....	1	317 7184
67/68	***10 (RHD-232-WST)***	.....	1	317 7183
69	***10 (RHD-232-WST)***	.....	1	317 7184

5.162–4 ATTACHING PARTS, Retainer To Dash Panel

SCREW, Tapping.....	67/70	.....	17.670	2	400 1054
SCREW, Tapping.....	71/	.....	2.050	2	400 3831
WASHER, Plain	67/	.....	17.814	2	400 0481

5.162–5 BUSHING, Clutch Pedal To Bellcrank Rod Seal

67/69	01 (LHD-199)	.....	1	316 7487
67/69	01 (LHD-232)(V8)	.....	1	317 3461
67/69	10-50-80 (V8)	.....	1	317 3461
68	10-80 (LHD-232-* 5-5-Except Heavy Duty)	.....	1	317 3461
69	10-80 (LHD-232)	.....	1	317 3461
68/69	30-70	.....	1	317 3461
70/	LHD	.....	1	317 3461
67/68	***10-80 (Heavy Duty-232-* 5-1)***	.....	1	317 3461
68	***10-80 (Export-LHD-232)***	.....	1	317 3461
67/69	***01 (RHD-Six-WST)***	.....	1	316 7487
67/68	***10 (RHD-232-WST)***	.....	1	317 3461
69	***10 (RHD-232-WST)***	.....	1	316 7487

5.164–1 STOP, Clutch Pedal

71/		.....	1	317 7189
67/70	01-40 (199)(Cushion)	.....	1	317 7189
67/70	01-40 (232)(V8)	.....	1	318 6431
67	10-50-80 (Six-WST)(Six-WOD)	.....	1	317 3448
67/69	10-50-80 (V8)	.....	1	318 6431
68	10-80 (LHD-232-* 5-5-Except Heavy Duty)	.....	1	318 6431
69/70	10-80 (232)	.....	1	318 6431
68/70	30-70	.....	1	318 6431
67/68	***10-80 (Heavy Duty-232-* 5-1)***	.....	1	318 6431
68	***10-80 (Export-LHD-232)***	.....	1	318 6431
67/69	***01 (RHD-Six-WST)***	.....	1	317 7189
67/68	***10 (RHD-232-WST)***	.....	1	317 3448

5.164–2 ATTACHING PARTS, Cushion To Bracket

NUT, Jam.....	67/70	(232)(V8)	.....	2	G124925

CLUTCH

5.168–1 BELLCRANK, Clutch Release Idler Outer

67/69	01 (LHD-199)	.....	1	317 4647
70	01-40 (LHD-199-* 5-23)	.....	1	319 8212
70	01-40 (LHD-199-* 5-24)	.....	1	321 0270
67	01 (LHD-232-* 5-8)	.....	1	318 1968
67	01 (LHD-232-* 5-9)	.....	1	318 8961
68/69	01 (LHD-232)	.....	1	318 8961
70	01-40 (LHD-232-* 5-23)	.....	1	319 7687
70	01-40 (LHD-232-* 5-24)	.....	1	321 0271
71	01-40 (LHD-Six)	.....	1	321 0591
72	01-40 (LHD-Six-* 5-32)	.....	1	321 0966
72	01-40 (LHD-Six-* 5-33)	.....	1	321 7485
67/68	01 (LHD-290-WST)	7.110	1	318 6449
67	01 (290-W4ST-* 5-8)	.....	1	318 4254
67	01 (290-W4ST-* 5-9)	.....	1	318 8941
68/69	01 (290-W4ST)	.....	1	318 8941
67	01 (343-W4ST)	.....	1	318 8941
71	01 (LHD-360)	.....	1	321 0966
72	01-40 (LHD-V8)	.....	1	321 0966
69	09 (SC/RAMBLER-390-W4ST)	.....	1	318 8941
68	10-80 (LHD-232-* 5-5-Except Heavy Duty)	.....	1	319 2467
69	10 (LHD-232)	.....	1	319 2467
70	10-70-80 (LHD-Six-* 5-23)	.....	1	319 7241
70	10-70-80 (LHD-Six-* 5-24)	.....	1	321 0272
71	10-70-80 (Six)	.....	1	321 0590
72	10-70-80 (WST)(W4ST)	.....	1	321 1687
67	10-50-80 (V8-WST)(V8-WOD)	.....	1	318 6799
67	10-50-80 (V8-W4ST)	.....	1	318 7040
68	10-80 (V8-WST-* 5-12)(V8-WOD-* 5-12)	.....	1	318 6799
68	10-80 (V8-W4ST-* 5-12)	.....	1	318 7040
68	10-80 (V8-WST-* 5-13)(V8-WOD-* 5-13)	.....	1	319 2467
68	10-80 (V8-W4ST-* 5-13)	.....	1	319 2495
69	10 (V8-W4ST)	.....	1	319 2495
70	10-30-70 (LHD-V8)	.....	1	319 7241
70	10-30-70 (V8-W4ST-* 5-23)	.....	1	319 7241
70	10-30-70 (V8-W4ST-* 5-24)	.....	1	321 0272
71	10-70 (V8-W4ST)	.....	1	321 1687
68	30-70 (V8-W4ST-* 5-10)	.....	1	318 9289
68	30-70 (V8-W4ST-* 5-11)	.....	1	319 2493
69	30-70 (W4ST)	.....	1	319 2493
68	70 (232-WST-* 5-10)	.....	1	318 9288
68	70 (232-WST-* 5-11)	.....	1	319 2494
68	70 (290-WST-* 5-10)	.....	1	318 9288
68	70 (290-WST-* 5-11)	.....	1	319 2494
69	70 (232-WST-WFGS)	.....	1	319 2493
69	70 (290-WST-WFGS)	.....	1	319 2493
69	80 (232-WST)	.....	1	319 2495
67/68	**10-80 (Heavy Duty-232-* 5-1)**	.....	1	318 6799
68	**10-80 (Export-LHD-232)**	.....	1	318 6799
67/69	**01 (RHD-Six-WST)**	.....	1	317 2547
67/68	**10 (RHD-232-WST)**	.....	1	317 5551
69	**10 (RHD-232-WST)**	.....	1	317 2547

5.168–2 PLUG, Clutch Release Idler Outer Oiler Hole

67/69	01-10-50-80 (V8)	5.170	1	316 4636
67	10-50-80 (LHD-232-Except Heavy Duty)	5.170	1	316 4636
68	10-80 (LHD-232-* 5-4-Except Heavy Duty)	5.170	1	316 4636
68	10-80 (LHD-232-* 5-4-Except Heavy Duty)	5.170	1	316 4636
69	10-80 (232)	5.170	1	316 4636
68/69	30-70	5.170	1	316 4636
67/68	**10-80 (Heavy Duty-232-* 5-1)**	5.170	1	316 4636
68	**10-80 (Export-LHD-232)**	5.170	1	316 4636
67/68	**10 (RHD-232-WST)**			

CLUTCH

5.168–3 PIVOT, Clutch Release Idler Lever (Outer)

67/69	01-10-50-80 (V8)	.....	1	317 3485
68	10-80 (LHD-232-* 5-5-Except Heavy Duty)	.....	1	317 3485
69	10-80 (232)	.....	1	317 3485
68/69	30-70	.....	1	317 3485
67/68	***10-80 (Heavy Duty-232-* 5-1)***	.....	1	317 3485
68	***10-80 (Export-LHD-232)***	.....	1	317 3485
67/68	***10 (RHD-232-WST)***	.....	1	317 3485

5.168–4 ATTACHING PARTS, Pivot To Strut Rod Bracket

WASHER, Lock	67/69	17.822	1	G114607 NA
NUT, Hexagon	67/69	17.410	1	G272123 NA

5.168–5 BOOT, Clutch Pivot To Lever (Outer)

71/	LHD	.....	1	316 7049
67/69	01 (LHD-Six)	.....	1	317 0937
70	01-40 (LHD-Six)	.....	1	316 7049
67/69	01-10-50-80 (V8)	.....	1	316 7049
70	10 (LHD-V8)	.....	1	316 7049
68	10-80 (LHD-232-* 5-5-Except Heavy Duty)	.....	1	316 7049
69/70	10-80 (232)	.....	1	316 7049
68/70	30-70	.....	1	316 7049
67/68	***10-80 (Heavy Duty-232-* 5-1)***	.....	1	316 7049
69	***01 (RHD-Six-WST)***	.....	1	316 7049
68	***10-80 (Export-LHD-232)***	.....	1	316 7049
68	***10-80 (LHD-Export-232)***	.....	1	316 7049
67/68	***10 (RHD-232-WST)***	.....	1	316 7049

5.168–6 BOOT, Clutch Pivot To Lever (Inner)

71/	LHD	.....	1	317 0937
67/70	01-40	.....	1	317 0937
67/69	10-50-80 (V8)	.....	1	317 0937
70	10 (V8)	.....	1	317 0937
68	10-80 (LHD-232-* 5-5-Except Heavy Duty)	.....	1	317 0937
69/70	10-80 (232)	.....	1	317 0937
68/70	30-70	.....	1	317 0937
67/68	***10-80 (Heavy Duty-232-* 5-1)***	.....	1	317 0937
68	***10-80 (Export-LHD-232)***	.....	1	317 0937
67/68	***10 (RHD-232-WST)***	.....	1	317 0937

5.168–7 RETAINER, Clutch Pivot To Lever Boot

67/69	01	.....	2	316 7067
67/69	10-50-80 (V8)	.....	2	316 7067
68	10-80 (LHD-232-* 5-5-Except Heavy Duty)	.....	2	316 7067
69	10-80 (232)	.....	2	316 7067
68/69	30-70	.....	2	316 7067
67/68	***10-80 (Heavy Duty-232-* 5-1)***	.....	2	316 7067
68	***10-80 (Export-LHD-232)***	.....	2	316 7067
67/68	***10 (RHD-232-WST)***	.....	2	316 7067

5.168–8 CLIP, Retainer To Pivot Retaining

67/69	01	.....	1	316 9769
67/69	10-50-80 (V8)	.....	1	316 9769
68	10-80 (LHD-232-* 5-5-Except Heavy Duty)	.....	1	316 9769
69	10-80 (232)	.....	1	316 9769
68/69	30-70	.....	1	316 9769
67/68	***10-80 (Heavy Duty-232-* 5-1)***	.....	1	316 9769
68	***10-80 (Export-LHD-232)***	.....	1	316 9769
67/68	***10 (RHD-232-WST)***	.....	1	316 9769

5.168–9 SLEEVE, Clutch Idler Outer Pivot

67/69	01 (Six)	.....	1	317 2035

5.168–10 ATTACHING PARTS, Sleeve To Sill

SCREW, Tapping.....	67/69	01 (Six)	17.671	2	400 1037

5.168–11 BRACKET, Clutch Release Idler Pivot

67/69	10-30-50-70-80 (LHD-V8)	.....	1	318 4752

5.168–12 ATTACHING PARTS, Bracket To Cover

BOLT, Hexagon	67/69	10-30-50-70-80 (LHD-V8)	17.038	2	G180079 NA
WASHER, Lock	67/69	10-30-50-70-80 (LHD-V8)	17.820	2	G120214

5.168–13 PIVOT, Clutch Release Idler (Inner)

67/69	10-30-50-70-80 (LHD-V8)	.....	1	318 4753

5.168–14 ATTACHING PARTS, Release Idler Pivot To Bracket

WASHER, Lock.....	67/69	10-30-50-70-80 (V8)	17.822	1	G114607 NA
NUT, Hexagon.....	67/69	10-30-50-70-80 (V8)	17.410	1	G272123 NA

5.168–15 SPRING, Clutch Release Idler Bellcrank Retaining

70/	LHD	.....	5.190	1	319 0712

5.168–15a CLIP, Clutch Release Idler Bellcrank Retaining Spring

70	LHD (* 5-24)	.....	1	316 7609
71/	LHD	.....	1	316 7609

5.168–16 BUSHING, Clutch Release Idler Pivot (Inner)

70/	LHD (Bellcrank To Support On Engine)(Nylon)	.....	5.168	1	316 7067

5.168–17 BUSHING, Clutch Release Idler Pivot (Outer)

70	LHD (* 5-23)(Bellcrank To Sill Bracket)(Nylon)	.....	1	319 7246
70	LHD (* 5-24)(Bellcrank To Sill Bracket)(Nylon)	.....	1	321 0267
71/	LHD (Bellcrank To Sill Bracket)(Nylon)	.....	1	321 0267

5.169–1 LEVER, Clutch Release Main

67	10-50-80 (LHD-232-Except Heavy Duty)	.....	1	317 9142
68	10-80 (LHD-232-* 5-4-Except Heavy Duty)	.....	1	319 0794

CLUTCH

5.169–2 BRACKET, Clutch Release Main Lever

67	10-50-80 (LHD-232-Except Heavy Duty)	.....	1	318 1768	
68	10-80 (LHD-232-* 5-4-Except Heavy Duty)	.....	1	318 1768	

5.169–3 ATTACHING PARTS, Bracket To Clutch Housing

BOLT, Hexagon	67	(7/16-14) 10-50-80 (LHD-232-Except Heavy Duty) ..	17.038	1	G179868	NA
BOLT, Hexagon	68	(7/16-14) 10-80 (LHD-232-* 5-4-Except Heavy Duty)	17.038	1	G179868	NA
BOLT, Hexagon	67	(3/8-24) 10-50-80 (LHD-232-Except Heavy Duty) ...	17.038	1	G181377	NA
BOLT, Hexagon	68	(3/8-24) 10-80 (LHD-232-* 5-4-Except Heavy Duty)	17.038	1	G181377	NA
WASHER, Plain	67	10-50-80 (LHD-232-Except Heavy Duty)	.....	2	400 1101	
WASHER, Plain	68	10-80 (LHD-232-* 5-4-Except Heavy Duty)	.....	2	400 1101	
WASHER, Lock	67	10-50-80 (LHD-232-Except Heavy Duty)	17.820	2	G120382	
WASHER, Lock	68	10-80 (LHD-232-* 5-4-Except Heavy Duty)	17.820	2	G120382	
NUT, Hexagon	67	10-50-80 (LHD-232-Except Heavy Duty)	17.406	2	G103026	NA
NUT, Hexagon	68	10-80 (LHD-232-* 5-4-Except Heavy Duty)	17.406	2	G103026	NA

5.169–4 SEAL, Clutch Release Main Lever

67	10-50-80 (LHD-23_-Except Heavy Duty)	.....	1	317 6027
68	10-80 (LHD-232-* 5-4-Except Heavy Duty)	.....	1	317 6027

5.169–5 "O" RING, Clutch Release Main Lever

67	10-50-80 (LHD-232-Except Heavy Duty)	.....	1	317 9280
68	10-80 (LHD-232-* 5-4-Except Heavy Duty)	.....	1	317 9280

5.169–6 WASHER, Clutch Release Main Lever Thrust

67	10-50-80 (LHD-232-Except Heavy Duty)	.....	2	317 6010
68	10-80 (LHD-232-* 5-4-Except Heavy Duty)	.....	2	317 6010

5.169–7 RING, Clutch Release Main Lever Retainer

67	10-50-80 (LHD-232-Except Heavy Duty)	.....	1	317 6029
68	10-80 (LHD-232-* 5-4-Except Heavy Duty)	.....	1	317 6029

5.169–8 RING, Clutch Release Main Lever Snap

67	10-50-80 (LHD-232-Except Heavy Duty)	.....	1	317 6028
68	10-80 (LHD-232-* 5-4-Except Heavy Duty)	.....	1	317 6028

5.169–9 SHIELD, Clutch Release Main Lever

67	10-50-80 (LHD-232-Except Heavy Duty)	.....	1	318 3647
68	10-80 (LHD-232-* 5-4-Except Heavy Duty)	.....	1	318 3647

5.178–1 SUPPORT, Clutch Idler Lever Or Beam Pivot (Inner)

67/69	01 (LHD-199).....	.....	1	317 2028
67/69	01 (LHD-232).....	.....	1	318 1970
70	01-40 (LHD-* 5-23).....	.....	1	319 7693
70	01-40 (LHD-* 5-24).....	.....	1	321 0489
71/	01-40 (Six).....	.....	1	321 0489
68	10-80 (LHD-232-* 5-5-Except Heavy Duty) ..... ***(Use 319 6529)***	.....	1	318 7176
69	10-80 (LHD-232)...(Incl. Welded Pivot).....	.....	1	319 6529
70	10-70-80 (LHD-Six-* 5-23)	.....	1	319 7245
70	10-70-80 (LHD-Six-* 5-24)	.....	1	321 0490
71/	10-70-80 (LHD-Six).....	.....	1	321 0490
70	10-30-70 (LHD-V8-* 5-23).....	.....	1	319 7252
70	10-30-70 (LHD-V8-* 5-24).....	.....	1	321 0491
71	10-70 (LHD-V8)	.....	1	321 0491

72	40 (LHD-304)	.....	1	321 0489	
68	70 (232) ***(Use 319 6529)***	.....	1	318 7176	
69	70 (232)...(Incl. Welded Pivot)	.....	1	319 6529	
72	70 (LHD-V8)	.....	1	321 0491	
67/68	***10-80 (Heavy Duty-232-* 5-1)*** ***(Use 319 6529)***	.....	1	318 7176	
68	**10-80 (Export-LHD-232)** **(Use 319 6529)**	.....	1	318 7176	
67/69	***01 (RHD-Six-WST)***	.....	1	317 2959	
67/68	***10 (RHD-232-WST)***	.....	1	317 2448	

5.178–2 BRACKET, Clutch Beam Support

67/69	01 (LHD-Six)	.....	1	317 2445	
67/69	01 (V8)...(Incl. Welded Pivot)	.....	1	318 3513	
67/69	10-30-50-70-80 (LHD-V8)...(Less Pivot)	5.168	1	318 4752	
68	10-80 (LHD-232-* 5-5-Except Heavy Duty)	.....	1	317 2445	
69	10-80 (232)	.....	1	317 2445	
68/69	70 (232)	.....	1	317 2445	
67/68	***10-80 (Heavy Duty-232-* 5-1)***	.....	1	317 2445	
68	**10-80 (Export-LHD-232)**	.....	1	317 2445	
67/69	***01 (RHD-Six-WST)***	.....	1	317 2446	
67/68	***10 (RHD-232-WST)***	.....	1	317 2446	

5.178–3 ATTACHING PARTS, Bracket To Support

BOLT, Hexagon	67/69	SIX	17.038	2	G181596	NA
WASHER, Lock	67/69	SIX	17.820	2	G120214	
NUT, Hexagon	67/69	SIX	17.406	2	G120368	

5.178–4 ATTACHING PARTS, Bracket To Clutch Housing

BOLT, Hexagon	72		17.038	2	G180079	NA
BOLT, Hexagon	70/71	SIX	17.038	1	G181377	NA
BOLT, Hexagon	67/71	V8	17.038	2	G180079	NA
WASHER, Lock	72		17.820	2	G120214	
WASHER, Lock	70/71	SIX	17.820	1	G120382	
WASHER, Lock	67/71	V8	17.820	2	G120214	
NUT, Hexagon	70/71	SIX	17.406	1	G103026	NA

5.178–5 SPACER, Clutch Beam Or Support Bracket

67/69	***01 (RHD-Six-WST)***	17.814	2	400 1289	NA
67/68	***10 (RHD-232-WST)***	17.814	2	400 1289	NA

5.187–1 ROD ASSEMBLY, Bellcrank To Throwout Lever

67/69	01 (199)...(Incl. End And Nut)	.....	1	317 1061	
70	01-40 (LHD-199)	.....	1	319 7243	
67/69	01 (LHD-232)...(Incl. End And Nut)	.....	1	602 0435	
70	01-40 (LHD-232)	.....	1	319 7242	
71	01-40 (LHD-Six)...(Incl. End And Nut)	.....	1	321 0965	
72	01-40 (LHD-Six-5-7/16" Long)	.....	1	321 0965	
72	01-40 (LHD-Six-6-3/4" Long)	.....	1	321 3760	
67	01 (290-W4ST-* 5-14)...(Incl. End And Nut)	.....	1	608 0129	
67	01 (290-W4ST-* 5-15)...(Incl. End And Nut)	.....	1	602 0436	
67/68	01 (290)...(Incl. End And Nut)	.....	1	608 0269	
68/69	01 (290-W4ST)...(Incl. End And Nut)	.....	1	602 0436	
67	01 (343)...(Incl. End And Nut)	.....	1	602 0436	
71	01 (LHD-360)	.....	1	319 7243	
72	01-40 (LHD-V8)	.....	1	321 3760	
69	09 (SC/RAMBLER-390-W4ST)...(Incl. End And Nut)	.....	1	602 0436	
68	10-80 (LHD-232-* 5-5-Except Heavy Duty)...(Incl. End And Nut)	.....	1	600 1128	
69	10-70-80 (LHD-232)...(Incl. End And Nut)	.....	1	600 1128	

70	10-70-80 (LHD-232)	.....		1	319 7242
71	10-70-80 (LHD-Six)	.....		1	319 7243
72	10-70 (LHD-Six)	.....		1	321 3760
67	10-50-80 (V8)...(Incl. End And Nut)	.....		1	608 0130
68	10-80 (V8-* 5-12)...(Incl. End And Nut)	.....		1	608 0130
68	10-80 (V8-* 5-13)...(Incl. End And Nut)	.....		1	317 1061
69	10-30-70 (V8)...(Incl. End And Nut)	.....		1	317 1061
70	10-30-70 (LHD-V8-W4ST)...(Less Nut)	.....		1	319 7243
71	10-70 (LHD-V8)	.....		1	321 0965
68	30-70 (V8-* 5-10)...(Incl. End And Nut)	.....		1	608 0130
68	30-70 (V8-* 5-11)...(Incl. End And Nut)	.....		1	317 1061
72	40 (304)	.....		1	321 3760
68	70 (Six-* 5-10)...(Incl. End And Nut)	.....		1	600 0213
68	70 (Six-* 5-11)...(Incl. End And Nut)	.....		1	600 1128
70	70 (LHD-V8-L4ST)	.....		1	319 7243
72	70 (V8)...(Incl. End And Nut)	.....		1	321 0965
67/68	***10-80 (Heavy Duty-232-* 5-1)...(Incl. End And Nut)***	.....		1	600 0213
67/69	***01 (RHD-Six-WST)...(Incl. End And Nut)***	.....		1	317 1061
67/68	***10 (RHD-232-WST)...(Incl. End And Nut)***	.....		1	317 3609

5.187–2 ATTACHING PARTS, Rod To Bellcrank

CLIP	67/69	.....	5.160	1	316 7609

5.187–3 ATTACHING PARTS, Rod To End

NUT, Hexagon	67/69	.....	17.406	1	G120369 NA

5.187–4 PIVOT, Bellcrank To Throwout Lever Rod

67/69	01	.....		1	316 9763
67/69	10-50-80 (V8)	.....		1	316 9763
68	10-80 (LHD-232-* 5-5-Except Heavy Duty)	.....		1	316 9763
69	10-80 (232)	.....		1	316 9763
68/69	30-70	.....		1	316 9763
70/	LHD (Nylon)	.....		1	319 4959
67/68	***10-80 (Heavy Duty-232-* 5-1)***	.....		1	316 9763
68	***10-80 (Export-LHD-232)***	.....		1	316 9763
67/68	***10 (RHD-232-WST)***	.....		1	316 9763

5.187–5 SEAL, Bellcrank To Throwout Lever Rod End

67/		.....	5.160	1	313 0998

5.187–6 ATTACHING PARTS, Bellcrank To Throwout Lever Rod End To Seal

WASHER, Plain	67/69	(7/32" I. D.) 10-50-80 (LHD-232-Except Heavy Duty)	17.814	1	400 1081
WASHER, Plain	67/69	01-30-70	17.814	1	400 1102
WASHER, Plain	67/69	(13/32" I. D.) 10-50-80	17.814	1	400 1102
WASHER, Plain	70/71	(25/64") LHD	17.814	1	400 1100
WASHER, Plain	72	LHD	7.125	1	400 4437

5.187–7 ADJUSTER, Clutch Wear

67	10-50-80 (LHD-232-Except Heavy Duty)	.....		1	317 9325
68	10-80 (LHD-232-* 5-4-Except Heavy Duty)	.....		1	317 9325
70/	LHD (Trunnion)	.....	7.135	1	318 9626

CLUTCH

5.187–8 ATTACHING PARTS, Clutch Wear Adjuster Trunnion

NUT, Hexagon	70/	LHD	17.410	2	G124925
WASHER, Plain	70/71	LHD	17.814	1	400 1100
WASHER, Spring	70/71	LHD	7.125	1	316 7670
WASHER, Plain	72	LHD	7.125	1	400 4437
WASHER, Spring	72	LHD	.....	1	321 5893
PIN, Locking (Hairpin Type)	70	01 (LHD-199)	29.162	1	400 0407
PIN, Locking (Hairpin Type)	71/	LHD	29.162	1	400 0407

5.190–1 SPRING, Clutch Throwout Lever

72		.....	1	319 0712
67/69	01 (Six)	.....	1	314 5435
70	01–40 (LHD–199)	.....	1	314 5435
70	01–40 (LHD–232)	.....	1	317 5971
68	10–80 (LHD–232–* 5–5–Except Heavy Duty)	.....	1	319 0712
67/69	01–10–30–50–70 (V8)	.....	1	316 5060
70	01–10–30–70 (LHD–V8)	.....	1	317 5971
69	10–80 (LHD–232)	.....	1	319 0712
70	10–70–80 (LHD–Six)	.....	1	317 5971
71	SIX	.....	1	314 5435
71	V8	.....	1	319 0712
68/69	70 (232)	.....	1	319 0712
67/68	***10-80 (Heavy Duty-232-* 5-1)***	.....	1	319 0712
68	***10-80 (Export-LHD-232)***	.....	1	319 0712
67/68	***10 (RHD-232-WST)***	.....	1	314 5435

5.190–2 ANCHOR, Clutch Throwout Lever Spring

67/69	***01 (RHD-232-WST)***	5.132	1	317 2037
67/68	***10 (RHD-232-WST)***	5.132	1	317 3037

Printed in U.S.A.

SPECIAL INFORMATION

The Engine Build Code Number, Vehicle Identification Number and the information provided on the Unit Body Plate are often necessary when determining the proper replacement parts for your automobile. For their location refer to the General Information Section found at the front of this catalog.

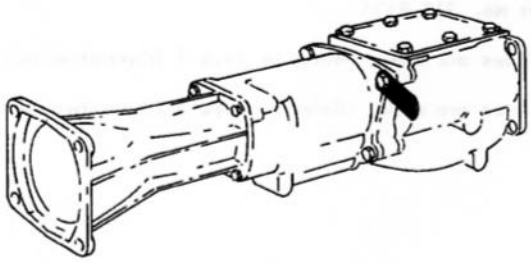

This illustration points out the general location of the Transmission Identification Tag which carries the Vendor Part Number. This information is necessary to determine the proper components of your transmission.

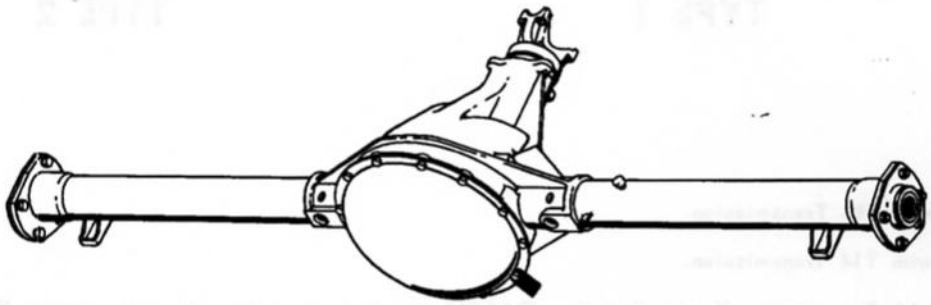

Illustrated is the general location of the rear axle Ratio Tag used on all cars except 1970 10-80. These cars have a stamped code on the cover flange. "A" is 11/39, "B" is 13/41, "C" is 15/43, "D" is 11/43. This information is necessary to determine the proper components of your transmission.

NOTES

6–1 ..... The "Close Ratio" Fourspeed Transmission can be identified by Vendor Tag No. AS1-T10V or AS2-T10V and A. M. Tag No. 3193964 or 3195689.

6–2 ..... The Heavy Duty Standard Transmission for the 67 10 (Six) can be identified by Vendor Tag No. AS5-T90BB and A. M. No. 3186417, also Vendor Tag No. AS9-T90BB and A. M. Tag No. 3189339. The Heavy Duty Transmission for the 68-69 10-80 (Six) can be identified by Vendor Tag No. AS5-T15 and A. M. Tag No. 3191405. There is no Heavy Duty Transmission available for the 70 10-80 (Six).

6–3 ..... The Standard Transmission for 1970, 01-40 (199) can be identified by Vendor Part No. AS25-T96H and A. M. Part No. 319 7050.

6–4 ..... The Standard Transmission for 1970, 01-40 (199) can be identified by Vendor Part No. AS1-T96K and A. M. Part No. 321 0326, also Vendor Part No. AS3-T96K and A. M. Part No. 319 8134.

6–5 ..... This Main Shaft is used with Transmission Vendor Part No. AS25-T96H and A. M. Part No. 319 7050.

6–6 ..... This Main Shaft is used with Transmission Vendor Part No. AS1-T96K and A. M. Part No. 321 0326 also Vendor Part No. AS3-T96K and A. M. Part No. 319 8134.

6–7 ..... This Countershaft is used with Transmission Vendor Part No. AS1-T96K and A. M. Part No. 321 0326 also Vendor Part No. AS3-T96K and A. M. Part No. 319 8134.

NOTES

6–8 ..... The Heavy Duty Standard Transmission for 1971, 01-40 (232) can be identified by Vendor Tag No. AS17-T14 and A.M. Tag No. 319 7051, Vendor Tag No. 13-02-003 and A.M. Tag No. 319 9502, Vendor No. 13-02-000-017 and A.M. Tag No. 321 4890, Vendor No. 13-02-000-018 and A.M. Tag No. 321 4891.

6–9 ..... Used with Transmission Vendor Part No. AS1-T96K and A.M. Part No. 321 0326.

6–10 .... Used with Transmission Vendor Part No. AS27-T96H and A.M. Part No. 321 1616, Vendor Part No. AS3-T96K and A.M. Part No. 319 8134.

6–11 .... Two types of Shifting Plates are used. (Refer to Type 1 Illustration below for correct type needed).

6–12 .... Two types of Shifting Plates are used. (Refer to Type 2 Illustration below for correct type needed).

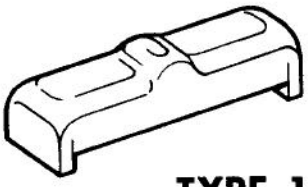

TYPE 1

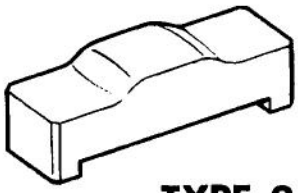

TYPE 2

6–13 .... Used with T96 Transmission.

6–14 .... Used with T14 Transmission.

6–15 .... Used with Transmission Vendor Part No. 13-04-007 and A.M. Part No. 321 4895, Vendor Part No. 13-04-001 and A.M. Part No. 321 1842, Vendor Part No. 13-04-008 and A.M. Part No. 321 5312.

6–16 .... Used with Transmission Vendor Part No. 13-04-020 and A.M. Part No. 321 8670, Vendor Part No. 13-04-021 and A.M. Part No. 321 8671, Vendor Part No. 13-04-022 and A.M. Part No. 321 8672.

6–17 .... The Shift Lever Fork hole size is 23/64".

6–18 .... The Shift Lever Fork hole size is 25/64".

6–19 .... The diameter of the Fork Shaft is 15-5/16".

6–20 .... The diameter of the Fork Shaft is 15-13/32".

SPEEDOMETER DRIVE GEAR

Model Year	Trans. Tag No.	Model	Tire Size	Gear Ratio	Teeth	Color	Part No.
STANDARD TRANSMISSION 1967 Thru 1969							
67	(AS13-T96H)	01 (LHD-199-WST)	6.45 x 14; 6.95 x 14; 6.85 x 15	13/40	8	GREEN	316 7456
67	(AS13-T96H)	01 (LHD-199-WST)	6.45 x 14; 6.95 x 14; 6.85 x 15	13/43	8	GREEN	316 7456
67	(AS19-T96H)	01 (LHD-199-WST)	6.45 x 14; 6.95 x 14; 6.85 x 15	13/40	7	TAN	317 1549
67	(AS19-T96H)	01 (LHD-199-WST)	6.45 x 14; 6.95 x 14; 6.85 x 15	13/43	7	TAN	317 1549
67	(AS19-T96H)	01 (LHD-199-WST)	6.45 x 14; 6.95 x 14; 6.85 x 15	12/43	7	TAN	317 1549
67	(AS15-T96H)	01 (LHD-199-WST)	6.45 x 14; 6.95 x 14; 6.85 x 15	12/43	7	BLUE	316 7457
67	(AS39-T96J)	***01 (RHD-WST)***	6.45 x 14; 6.95 x 14; 6.85 x 15	13/40	8	GREEN	316 7456
67	(AS39-T96J)	***01 (RHD-WST)***	6.45 x 14; 6.95 x 14; 6.85 x 15	13/43	8	GREEN	316 7456
67	(AS49-T96J)	***01 (RHD-WST)***	6.45 x 14; 6.95 x 14; 6.85 x 15	13/40	7	TAN	317 1549
67	(AS49-T96J)	***01 (RHD-WST)***	6.45 x 14; 6.95 x 14; 6.85 x 15	13/43	7	TAN	317 1549
67	(AS49-T96J)	***01 (RHD-WST)***	6.45 x 14; 6.95 x 14; 6.85 x 15	12/43	7	TAN	317 1549
67	(AS41-T96J)	***01 (RHD-WST)***	6.45 x 14; 6.95 x 14; 6.85 x 15	12/43	7	BLUE	316 7457
67	(AS35-T96J)	01 (LHD-232-WST)	6.45 x 14; 6.95 x 14; 6.85 x 15	13/40	8	GREEN	316 7456
67	(AS35-T96J)	01 (LHD-232-WST)	6.45 x 14; 6.95 x 14; 6.85 x 15	13/43	8	GREEN	316 7456
67	(AS47-T96J)	01 (LHD-232-WST)	6.45 x 14; 6.95 x 14; 6.85 x 15	13/40	7	TAN	317 1549
67	(AS47-T96J)	01 (LHD-232-WST)	6.45 x 14; 6.95 x 14; 6.85 x 15	13/43	7	TAN	317 1549
67	(AS47-T96J)	01 (LHD-232-WST)	6.45 x 14; 6.95 x 14; 6.85 x 15	12/43	7	TAN	317 1549
67	(AS37-T96J)	01 (LHD-232-WST)	6.45 x 14; 6.95 x 14; 6.85 x 15	12/43	7	BLUE	316 7457
67	(AS15-T86BB)	01 (V8-WST)	6.95 x 14; 7.35 x 14	13/41	8	GREEN	316 7456
67	(AS23-T96J)	10-50-80 (Except Heavy Duty-LHD-Six-WST-* 6-2)	6.95 x 14; 7.35 x 14; 7.75 x 14; 8.25 x 14; 7.35 x 15; 7.75 x 15	13/41	8	GREEN	316 7456
67	(AS23-T96J)	10-50-80 (Except Heavy Duty-LHD-Six-WST-* 6-2)	6.95 x 14; 7.35 x 14; 7.75 x 14; 8.25 x 14; 7.35 x 15; 7.75 x 15	11/39	8	GREEN	316 7456
67	(AS25-T96J)	10-50-80 (Except Heavy Duty-LHD-Six-WST-* 6-2)	7.35 x 15	13/41	7	TAN	317 1549
67	(AS25-T96J)	10-50-80 (Except Heavy Duty-LHD-Six-WST-* 6-2)	6.95 x 14; 7.35 x 14; 7.35 x 15; 7.75 x 15	11/39	7	TAN	317 1549
67	(AS27-T96J)	***10 (RHD-Six-WST)***	6.95 x 14; 7.35 x 14; 7.75 x 14; 7.75 x 15	13/41	8	GREEN	316 7456
67	(AS27-T96J)	***10 (RHD-Six-WST)***	6.95 x 14; 7.35 x 14; 7.35 x 15; 7.75 x 14; 7.75 x 15	11/39	8	GREEN	316 7456
67	(AS29-T96J)	***10 (RHD-Six-WST)***	6.95 x 14; 7.75 x 14; 7.75 x 14; 7.35 x 15; 7.75 x 15	11/39	7	TAN	317 1549
67	(AS29-T96J)	***10 (RHD-Six-WST)***	7.35 x 15	13/41	7	TAN	317 1549
67	(AS5-190BB)	***10 (Heavy Duty-Six-WST)***	6.95 x 14; 7.35 x 15; 7.75 x 15	11/39	7	STEEL	317 6224
67	(AS9-T90BB)	***10 (Heavy Duty-Six-WST)***	7.35 x 14; 7.75 x 14; 8.25 x 14; 7.35 x 15; 7.75 x 15	11/39	8	WHITE	318 9340
67	(AS53-T96J)	***10-50-80 (Export-LHD-Six-WST)***	7.35 x 14; 7.75 x 14; 8.25 x 14; 7.35 x 15; 7.75 x 15	13/41	8	GREEN	316 7456
67	(AS53-T96J)	***10-50-80 (Export-LHD-Six-WST)***	7.35 x 14; 7.75 x 14; 8.25 x 14; 7.35 x 15; 7.75 x 15	11/39	8	GREEN	316 7456
67	(AS13-T86BB)	10-50-80 (V8-WST)	7.75 x 14; 7.35 x 15	11/39	7	TAN	317 1549
67	(AS11-T86BB)	10-50-80 (V8-WST)	7.35 x 14; 7.75 x 14; 8.25 x 14; 7.35 x 15; 7.75 x 15	11/39	8	GREEN	316 7456
68	(AS19-T96H)	01 (Except Export-LHD-199-WST)	6.45 x 14; 6.95 x 14; 6.85 x 15	13/40	7	TAN	317 1549
68	(AS19-T96H)	01 (Except Export-LHD-199-WST)	6.45 x 14; 6.95 x 14; 6.85 x 15	13/43	7	TAN	317 1549

Printed in U.S.A.

SPEEDOMETER DRIVE GEAR

Model Year	Trans. Tag No.	Model	Tire Size	Gear Ratio	Teeth	Color	Part No.
68	(AS19-T96H)	01 (Except Export-LHD-199-WST)	6.45 x 14; 6.95 x 14; 6.85 x 15	12/43	7	TAN	317 1549
68	(AS5-T14)	***01 (RHD-WST)***	6.45 x 14; 6.95 x 14; 6.85 x 15	13/40	7	TAN	317 1549
68	(AS5-T14)	***01 (RHD-WST)***	6.45 x 14; 6.95 x 14; 6.85 x 15	13/43	7	TAN	317 1549
68	(AS5-T14)	***01 (RHD-WST)***	6.45 x 14; 6.95 x 14; 6.85 x 15	12/43	7	TAN	317 1549
68	(AS3-T14)	01 (LHD-232-WST)	6.45 x 14; 6.95 x 14; 6.85 x 15	13/40	7	TAN	317 1549
68	(AS3-T14)	01 (LHD-232-WST)	6.45 x 14; 6.95 x 14; 6.85 x 15	13/43	7	TAN	317 1549
68	(AS3-T14)	01 (LHD-232-WST)	6.45 x 14; 6.95 x 14; 6.85 x 15	12/43	7	TAN	317 1549
68	(AS3-T14)	***01 (Export-LHD-199-WST)***	6.45 x 14; 6.95 x 14; 6.85 x 15	13/40	7	TAN	317 1549
68	(AS3-T14)	***01 (Export-LHD-199-WST)***	6.45 x 14; 6.95 x 14; 6.85 x 15	12/43	7	TAN	317 1549
68	(AS3-T14)	***01 (Export-LHD-199-WST)***	6.45 x 14; 6.95 x 14; 6.85 x 15	13/43	7	TAN	317 1549
68/69	(AS3-T15)	01 (V8-WST)	6.95 x 14; 7.35 x 14; D70 x 14	13/41	8	GREEN	316 7456
68	(AS9-T14)	70 (Six-WST)	6.95 x 14; 7.35 x 14	13/40	7	TAN	317 1549
68	(AS9-T14)	70 (Six-WST)	6.95 x 14; 7.35 x 14	12/43	7	TAN	317 1549
68	(AS9-T14)	70 (Six-WST)	6.95 x 14; 7.35 x 14	13/40	7	TAN	317 1549
68	(AS7-T14)	10-80 (Except Heavy Duty-LHD-Six-WST-* 6-2)	7.35 x 14; 7.75 x 14; 8.25 x 14; 7.35 x 15; 7.75 x 15	13/41	8	GREEN	316 7456
68	(AS11-T14)	***10-80 (RHD-Six-WST)***	7.35 x 14; 7.75 x 14; 8.25 x 14; 7.35 x 15; 7.75 x 15	11/39	8	GREEN	316 7456
68	(AS11-T14)	***10-80 (RHD-Six-WST)***	7.35 x 14; 7.75 x 14; 8.25 x 14; 7.35 x 15; 7.75 x 15	13/41	8	GREEN	316 7456
68	(AS1-T14)	10-80 (Except Heavy Duty-LHD-Six-WST-* 6-2)	7.35 x 14; 7.75 x 14; 8.25 x 14; 7.35 x 15; 7.75 x 15	11/39	8	GREEN	316 7456
68	(AS1-T14)	10-80 (Except Heavy Duty-LHD-Six-WST-* 6-2)	7.35 x 14; 7.75 x 14; 8.25 x 14; 7.35 x 15; 7.75 x 15	13/41	8	GREEN	316 7456
68	(AS1-T15)	10-70-80 (V8-WST)	7.35 x 14; 7.75 x 14; 8.25 x 14; E70 x 14; F70 x 14; 7.35 x 15; 7.75 x 15	11/39	8	GREEN	316 7456
68	(AS1-T15)	10-70-80 (V8-WST)	7.35 x 14; 7.75 x 14; 8.25 x 14; E70 x 14; F70 x 14; 7.35 x 15; 7.75 x 15	13/41	8	GREEN	316 7456
68/69	(AS5-T15)	***10-80 (Heavy Duty-Six-WST-* 6-2)***	7.35 x 14; 7.75 x 14; 8.25 x 14; 7.35 x 15; 7.75 x 15	11/39	8	GREEN	316 7456
68	(AS5-T15)	***10-80 (Heavy Duty-Six-WST-* 6-2)***	7.35 x 14; 7.75 x 14; 8.25 x 14; 7.35 x 15; 7.75 x 15	13/41	8	STEEL	319 1324
69	(AS23-T96H)	01 (Except Export-LHD-WST)	6.45 x 14; 6.95 x 14; 7.35 x 14; 6.85 x 15	11/39	8	STEEL	319 2418
69	(AS23-T96H)	01 (Except Export-LHD-WST)	6.45 x 14; 6.95 x 14; 7.35 x 14; 6.85 x 15	13/40	8	GREEN	316 7456
69	(AS13-T14)	01 (LHD-232-WST)	6.45 x 14; 6.95 x 14; 7.35 x 14; 6.85 x 15	12/43	8	GREEN	316 7456
69	(AS13-T14)	01 (LHD-232-WST)	6.45 x 14; 6.95 x 14; 7.35 x 14; 6.85 x 15	13/40	8	GREEN	316 7456
69	(AS13-T14)	01 (LHD-232-WST)	6.45 x 14; 6.95 x 14; 7.35 x 14; 6.85 x 15	13/43	8	GREEN	316 7456
69	(AS13-T14)	***01 (Export-LHD-199-WST)***	6.45 x 14; 6.95 x 14; 7.35 x 14; 6.85 x 15	12/43	8	GREEN	316 7456
69	(AS13-T14)	***01 (Export-LHD-199-WST)***	6.45 x 14; 6.95 x 14; 7.35 x 14; 6.85 x 15	13/40	8	GREEN	316 7456
69	(AS13-T14)	***01 (Export-LHD-199-WST)***	6.45 x 14; 6.95 x 14; 7.35 x 14; 6.85 x 15	13/43	8	GREEN	316 7456
69	(AS13-T14)	80 (Except Heavy Duty-Six-WST-* 6-2)	7.75 x 14; 8.25 x 14; 7.75 x 15	12/43	8	GREEN	316 7456
				13/41	8	GREEN	316 7456

Printed in U.S.A.

SPEEDOMETER DRIVE GEAR

Model Year	Trans. Tag No.	Model	Tire Size	Gear Ratio	Teeth	Color	Part No.
69	(AS13-T14)	80 (Except Heavy Duty-Six-WST-* 6-2)	7.75 x 14: 8.25 x 14: 7.75 x 15	11/39	8	GREEN	316 7456
69	(AS11-T14)	***01 (RHD-Six-WST)***	6.45 x 14: 6.95 x 14: 7.35 x 14: 6.85 x 15	13/40	8	GREEN	316 7456
69	(AS11-T14)	***01 (RHD-Six-WST)***	6.45 x 14: 6.95 x 14: 7.35 x 14: 6.85 x 15	13/43	8	GREEN	316 7456
69	(AS11-T14)	***01 (RHD-Six-WST)***	6.45 x 14: 6.95 x 14: 7.35 x 14: 6.85 x 15	12/43	8	GREEN	316 7456
69	(AS1-T15)	70 (V8-WST)	7.35 x 14: E70 x 14	13/41	8	GREEN	316 7456
69	(AS7-T14)	10 (Except Heavy Duty-Six-WST-* 6-2)	7.35 x 14: 7.75 x 14: 8.25 x 14: 7.35 x 15: 7.75 x 15	13/41	8	GREEN	316 7456
69	(AS7-T14)	10 (Except Heavy Duty-Six-WST-* 6-2)	7.35 x 14: 7.75 x 14: 8.25 x 14: 7.35 x 15: 7.75 x 15	11/39	8	GREEN	316 7456
69	(AS7-T14)	70 (Six-WST)	6.95 x 14: 7.35 x 14	13/40	8	GREEN	316 7456
69	(AS7-T14)	70 (Six-WST)	6.95 x 14: 7.35 x 14	13/43	8	GREEN	316 7456
STANDARD TRANSMISSION (With Column Gear Shift) 1970 Thru 1972							
70	(AS25-T96H)	01-40 (LHD-199-WST)	6.45 x 14: 6.95 x 14: B78 x 14: C78 x 14: 6.85 x 15	13/40	8	GREEN	316 7456
70	(AS25-T96H)	01-40 (LHD-199-WST)	6.45 x 14: 6.95 x 14: B78 x 14: C78 x 14: 6.85 x 15	13/43	8	GREEN	316 7456
70	(AS1-T96K)	01-40 (LHD-199-WST)	6.45 x 14: 6.95 x 14: B78 x 14: C78 x 14: 6.85 x 15	12/43	8	GREEN	316 7456
70	(AS1-T96K)	01-40 (LHD-199-WST)	6.45 x 14: 6.95 x 14: B78 x 14: C78 x 14: 6.85 x 15	13/40	8	GREEN	316 7456
70	(AS1-T96K)	01 (LHD-199-WST)	6.45 x 14: 6.95 x 14: B78 x 14: C78 x 14: 6.85 x 15	13/43	8	GREEN	316 7456
70	(AS27-T96H)	40 (LHD-199-WST)	6.45 x 14: 6.95 x 14: B78 x 14: C78 x 14: 6.85 x 15	12/43	8	GREEN	316 7456
70	(AS3-T96K)	40 (LHD-199-WST)	6.00 x 13: 6.45 x 14: 6.95 x 14: B78 x 14	15/41	8	ROSE	317 1548
70	(AS55-T96J)	01-40 (LHD-232-WST)	6.00 x 13: 6.45 x 14: 6.95 x 14: B78 x 14	15/41	8	ROSE	317 1548
70	(AS55-T96J)	01-40 (LHD-232-WST)	6.45 x 14: 6.95 x 14: B78 x 14: C78 x 14: 6.85 x 15	13/40	8	GREEN	316 7456
70	(AS21-T14)	01-10 (LHD-Six-WST)	6.45 x 14: 6.95 x 14: B78 x 14: C78 x 14: 6.85 x 15	13/43	8	GREEN	316 7456
70	(AS21-T14)	01-10 (LHD-Six-WST)	6.45 x 14: 6.95 x 14: 7.35 x 14: B78 x 14: C78 x 14: E78 x 14: F78 x 14: G78 x 14: 6.85 x 15: 7.35 x 15	13/40	8	GREEN	316 7456
70	(AS17-T14)	80 (LHD-232-WST)	6.45 x 14: 6.95 x 14: 7.35 x 14: B78 x 14: C78 x 14: E78 x 14: F78 x 14: G78 x 14: 6.85 x 15: 7.35 x 15	13/43	8	GREEN	316 7456
70	(AS17-T14)	80 (LHD-232-WST)	7.75 x 14: 8.25 x 14: 8.78 x 14: G78 x 14: H78 x 14: 7.75 x 15: 8.25 x 15	13/41	8	GREEN	316 7456
			7.75 x 14: 8.25 x 14: 8.78 x 14: G78 x 14: H78 x 14: 7.75 x 15: 8.25 x 15	11/39	8	GREEN	316 7456

Printed in U.S.A.

SPEEDOMETER DRIVE GEAR

Model Year	Trans. Tag No.	Model	Tire Size	Gear Ratio	Teeth	Color	Part No.
71	(13-03-001)	01-40 (232-WST-WCGS)	6.00 x 13: 6.45 x 14: 6.95 x 14: B78 x 14: C78 x 14: D78 x 14: 6.85 x 15	13/40	8	GREEN	316 7456
71	(13-03-001)	01-40 (232-WST-WCGS)	6.00 x 13: 6.45 x 14: 6.95 x 14: B78 x 14: C78 x 14: D78 x 14: 6.85 x 15	13/43	8	GREEN	316 7456
71	(13-03-003)	40 (232-Except Export)	6.00 x 13: 6.45 x 14: B78 x 14	15/41	8	ROSE	317 1548
71	(13-03-006)	40 (232-WST)	6.00 x 13: 6.45 x 14: B78 x 14	15/41	8	ROSE	317 1548
71	(AS55-T96J)	40 (232-WST-Except Export)	6.00 x 13: 6.45 x 14: 6.95 x 14: B78 x 14: C78 x 14: D78 x 14: E70 x 14: 6.85 x 15	13/40	8	GREEN	316 7456
71	(AS55-96J)	40 (232-WST-Except Export)	6.00 x 13: 6.45 x 14: 6.95 x 14: B78 x 14: C78 x 14: D78 x 14: E70 x 14: 6.85 x 15	13/43	8	GREEN	316 7456
71	(13-02-001)	10-80 (Six-WST)	8.25 x 14: E78 x 14: F78 x 14: G78 x 14: H78 x 14: 7.35 x 15: 7.75 x 15: 8.25 x 15	11/39	8	GREEN	316 7456
71	(13-02-001)	10-80 (Six-WST)	8.25 x 14: E78 x 14: F78 x 14: G78 x 14: H78 x 14: 7.35 x 15: 7.75 x 15: 8.25 x 15	13/41	8	GREEN	316 7456
71	(AS17-T14)	***40 (Export-232-WST)***	6.00 x 13: 6.45 x 14: B78 x 14	13/43	8	ROSE	317 1548
71	(AS17-T14)	***40 (Export-232-WST)***	6.00 x 13: 6.45 x 14: B78 x 14	15/41	8	GREEN	316 7456
71	(AS17-T14)	***40 (Export-232-WST)***	6.00 x 13: 6.45 x 14: B78 x 14	15/41	8	GREEN	316 7456
71	(13-03-008)	***40 (Export-232-WST)***	6.00 x 13: 6.45 x 14: B78 x 14	13/40	8	ROSE	317 1548
72	(13-03-003)	01-40 (LHD-232-WST)	6.00 x 13: 6.45 x 14: B78 x 14	13/43	8	GREEN	316 7456
72	(13-03-006)	01 (LHD-232-WST)	6.95 x 14: C78 x 14: D70 x 14: D78 x 14	13/40	8	ROSE	317 1548
72	(13-03-011)	01 (LHD-232-WST)	6.95 x 14: C78 x 14: D70 x 14: D78 x 14	13/40	8	ROSE	317 1548
72	(13-03-011)	01-40 (LHD-232-WST)	6.45 x 14: B78 x 14	13/40	7	TAN	317 1549
72	(13-03-013)	01-40 (LHD-232-WST)	C78 x 14: E70 x 14: D70 x 14	13/43	7	TAN	317 1549
72	(13-02-017)	01 (LHD-232-WST)	6.45 x 14: B78 x 14	13/40	7	TAN	317 1549
72	(13-02-018)	01 (LHD-232-WST)	6.95 x 14: C78 x 14: D78 x 14	13/40	8	ROSE	317 1548
72	(13-02-022)	01-40 (LHD-232-WST)	6.95 x 14: C78 x 14: D70 x 14: D78 x 14	13/43	7	TAN	317 1549
72	(13-02-023)	01-40 (LHD-232-WST)	6.45 x 14: B78 x 14	13/43	8	ROSE	317 1548
72	(13-02-023)	01-40 (LHD-232-WST)	6.45 x 14: B78 x 14	13/40	7	TAN	317 1549
72	(13-02-017)	10-80 (LHD-Six-WST)	6.95 x 14: D70 x 14: E78 x 14	13/43	7	TAN	317 1549
72	(13-02-017)	10-80 (LHD-Six-WST)	B78 x 14: G78 x 14: H78 x 14	13/41	8	ROSE	317 1548
72	(13-02-018)	10-80 (LHD-Six-WST)	F78 x 14: H78 x 14: G78 x 15	11/39	8	ROSE	317 1548
72	(13-02-018)	10-80 (LHD-Six-WST)	F78 x 14	13/41	7	TAN	317 1549
72	(13-02-022)	10-80 (LHD-Six-WST)	E78 x 14: G78 x 14: H78 x 15	11/39	7	TAN	317 1549
72	(13-02-022)	10-80 (LHD-Six-WST)	E78 x 14: G78 x 14: H78 x 14	13/41	8	ROSE	317 1548
72	(13-02-023)	10-80 (LHD-Six-WST)	F78 x 14: H78 x 14: G78 x 15	11/39	8	ROSE	317 1548
72	(13-02-023)	10-80 (LHD-Six-WST)	F78 x 14	13/41	7	TAN	317 1549
			E78 x 14: G78 x 14	11/39	7	TAN	317 1549

STANDARD TRANSMISSION (With Floor Gear Shift) 1970 Thru 1972

70	(AS59-T96J)	40 (232-WFGS)	6.00 x 13: 6.45 x 14: 6.95 x 14: 7.35 x 14: B78 x 14: C78 x 14: 6.85 x 15	13/40	8	GREEN	316 7456
70	(AS59-T96J)	40 (LHD-232-WST)	6.00 x 13: 6.45 x 14: 6.95 x 14: 7.35 x 14: B78 x 14: C78 x 14: 6.85 x 15	13/43	8	GREEN	316 7456
70	(AS19-T14)	70 (232-WFGS)	6.95 x 14: 7.35 x 14: C78 x 14: D78 x 14: E70 x 14: E78 x 14	13/40	8	GREEN	316 7456
70	(AS19-T14)	70 (232-WFGS)	6.95 x 14: 7.35 x 14: C78 x 14: D78 x 14: E70 x 14: E78 x 14	13/41	8	GREEN	316 7456

Printed in U.S.A.

SPEEDOMETER DRIVE GEAR

Model Year	Trans. Tag No.	Model	Tire Size	Gear Ratio	Teeth	Color	Part No.
70	(AS19-T14)	70 (232-WFGS)	6.95 x 14; 7.35 x 14; C78 x 14; D78 x 14; E70 x 14; E78 x 14	13/43	8	GREEN	316 7456
70	(AS11-T15)	70 (304-WFGS)	7.35 x 14; D78 x 14; E70 x 14; E78 x 14; E60 x 15	13/41	8	GREEN	316 7456
70	(AS11-T15)	70 (304-WFGS)	7.35 x 14; D78 x 14; E70 x 14; E78 x 14; E60 x 15	13/43	8	GREEN	316 7456
70	(AS11-T15)	70 (304-WFGS)	7.35 x 14; D78 x 14; E70 x 14; E78 x 14; E60 x 15	11/39	8	GREEN	316 7456
71	(13-03-002)	40 (232-WST-WFGS)	6.00 x 13; 6.45 x 14; B78 x 14; E78 x 14	13/40	8	GREEN	316 7456
71	(13-03-002)	40 (232-WST-WFGS)	6.00 x 13; 6.45 x 14; B78 x 14; E78 x 14	13/43	8	GREEN	316 7456
71	(13-03-004)	40 (232-WST-WFGS)	6.00 x 13; 6.45 x 14; B78 x 14	15/41	8	GREEN	316 7456
71	(13-03-005)	40 (232-WST-WFGS)	6.00 x 13; 6.45 x 14; B78 x 14	13/40	8	GREEN	316 7456
71	(13-03-005)	40 (232-WST-WFGS)	6.00 x 13; 6.45 x 14; B78 x 14	13/41	8	GREEN	316 7456
71	(13-03-007)	40 (232-WST-WFGS)	6.00 x 13; 6.45 x 14; B78 x 14	15/41	8	ROSE	317 1548
71	(13-02-003)	40 (258-WST-WFGS)	6.00 x 13; 6.45 x 14; B78 x 14	15/41	8	ROSE	317 1548
71	(13-02-009)	40 (258-WST-WFGS)	6.00 x 13; 6.45 x 14; B78 x 14	15/41	8	ROSE	317 1548
71	(13-02-010)	40 (258-WST-WFGS)	6.00 x 13; 6.45 x 14; B78 x 14	15/41	8	ROSE	317 1548
71	(13-02-015)	40 (258-WST-WFGS)	6.00 x 13; 6.45 x 14; B78 x 14	15/41	8	ROSE	317 1548
71	(13-02-016)	40 (258-WST-WFGS)	6.00 x 13; 6.45 x 14; B78 x 14	15/41	8	ROSE	317 1548
71	(13-02-003)	40 (258-WST-WFGS)	6.00 x 13; D78 x 14; E70 x 14; E78 x 14; G78 x 14	13/40	8	GREEN	316 7456
71	(13-02-003)	70 (232-WST-WFGS)	C78 x 14; D78 x 14; E70 x 14; E78 x 14	12/43	8	GREEN	316 7456
71	(13-02-003)	70 (232-WST-WFGS)	C78 x 14; D78 x 14; E70 x 14; E78 x 14	13/41	8	GREEN	316 7456
71	(13-02-003)	70 (232-WST-WFGS)	C78 x 14; D78 x 14; E70 x 14; E78 x 14	13/40	8	GREEN	316 7456
71	(13-02-003)	70 (232-WST-WFGS)	C78 x 14; D78 x 14; E70 x 14; E78 x 14	13/43	8	GREEN	316 7456
71	(13-02-004)	40 (258-WST-WFGS)	6.00 x 13; 6.45 x 14, B78 x 14	13/43	8	GREEN	316 7456
71	(13-02-004)	70 (232-WST-WFGS)	D78 x 14; E70 x 14; E78 x 14	11/39	8	GREEN	316 7456
71	(13-02-004)	70 (232-WST-WFGS)	E70 x 14	11/43	8	GREEN	316 7456
71	(13-02-004)	70 (232-WST-WFGS)	C78 x 14; D78 x 14; E70 x 14; E78 x 14	12/43	8	GREEN	316 7456
71	(13-02-004)	70 (232-WST-WFGS)	D78 x 14; E70 x 14; E78 x 14	13/41	8	GREEN	316 7456
71	(13-02-004)	70 (232-WST-WFGS)	C78 x 14; D78 x 14; E70 x 14; E78 x 14	13/40	8	GREEN	316 7456
71	(13-02-004)	70 (232-WST-WFGS)	C78 x 14; D78 x 14; E70 x 14; E78 x 14	13/43	8	GREEN	316 7456
71	(13-02-002)	70 (304-WST-WFGS)	D78 x 14; E70 x 14; E78 x 14; E60 x 15	11/39	7	BLUE	316 7457
71	(13-02-002)	70 (304-WST-WFGS)	E70 x 14; E60 x 15	11/43	7	BLUE	316 7457
71	(13-02-002)	70 (304-WST-WFGS)	D78 x 14; E70 x 14; E78 x 14; E60 x 15	13/41	7	BLUE	316 7457
71	(13-02-005)	70 (304-WST-WFGS)	D78 x 14; E70 x 14; E78 x 14; E60 x 15	11/39	8	GREEN	316 7456
71	(13-02-005)	70 (304-WST-WFGS)	E70 x 14; E60 x 15	11/43	8	GREEN	316 7456
71	(13-02-005)	70 (304-WST-WFGS)	D78 x 14; E70 x 14; E78 x 14; E60 x 15	13/41	8	GREEN	316 7456
71	(13-07-001)	01 (360-WST-WFGS)	D70 x 14	11/39	8	GREEN	316 7456
71	(13-07-001)	01 (360-WST-WFGS)	D70 x 14	11/43	8	GREEN	316 7456
71	(13-07-001)	01 (360-WST-WFGS)	D70 x 14	13/41	8	GREEN	316 7456
71	(13-07-001)	70 (360-WST-WFGS)	D78 x 14; E70 x 14; E78 x 14; E60 x 15	11/39	8	GREEN	316 7456
71	(13-07-001)	70 (360-WST-WFGS)	E70 x 14; E60 x 15	11/43	8	GREEN	316 7456
71	(13-07-001)	70 (360-WST-WFGS)	D78 x 14; E70 x 14; E78 x 14; E60 x 15	13/41	8	GREEN	316 7456
72	(13-03-012)	01 (LHD-232-WFGS)	6.95 x 14; C78 x 14; D70 x 14; D78 x 14	13/40	7	TAN	317 1549
72	(13-02-024)	01 (LHD-232-WFGS)	6.45 x 14; B78 x 14; C78 x 14; D78 x 14	12/43	7	TAN	317 1549
72	(13-02-019)	01 40 (LHD-Six-WFGS)	6.45 x 14; B78 x 14	13/40	7	TAN	317 1549

Printed in U.S.A.

SPEEDOMETER DRIVE GEAR

Model Year	Trans. Tag No.	Model	Tire Size	Gear Ratio	Teeth	Color	Part No.
72	(13-02-019)	01-40 (LHD-Six-WFGS)	E78 x 14	13/43	7	TAN	317 1549
72	(13-02-024)	01-40 (LHD-Six-WFGS)	E78 x 14	13/43	7	TAN	317 1549
72	(13-03-008)	40 (LHD-Six-WFGS)	D70 x 14	15/41	8	ROSE	317 1548
72	(13-03-008)	40 (LHD-Six-WFGS)	D70 x 14	13/40	8	ROSE	317 1548
72	(13-03-009)	40 (LHD-Six-WFGS)	D70 x 14	15/41	8	ROSE	317 1548
72	(13-03-009)	40 (LHD-Six-WFGS)	D70 x 14	13/40	8	ROSE	317 1548
72	(13-02-010)	40 (LHD-Six-WFGS)	D70 x 14	13/40	8	ROSE	317 1548
72	(13-02-010)	40 (LHD-Six-WFGS)	D70 x 14	15/41	8	ROSE	317 1548
72	(13-03-012)	40 (LHD-Six-WFGS)	6.00 x 13: 6.45 x 14: B78 x 14	13/40	7	TAN	317 1549
72	(13-03-012)	40 (LHD-Six-WFGS)	6.00 x 13: 6.45 x 14: B78 x 14	13/43	7	TAN	317 1549
72	(13-03-014)	40 (LHD-Six-WFGS)	6.00 x 13: 6.45 x 14: B78 x 14	13/40	7	TAN	317 1549
72	(13-03-014)	40 (LHD-Six-WFGS)	6.00 x 13: 6.45 x 14: B78 x 14	13/43	7	TAN	317 1549
72	(13-02-024)	40 (LHD-Six-WFGS)	6.00 x 13	13/40	7	TAN	317 1549
72	(13-02-024)	40 (LHD-Six-WFGS)	6.00 x 13: 6.45 x 14: B78 x 14	12/43	7	TAN	317 1549
72	(13-02-003)	40 (304-WFGS)	C78 x 14: D78 x 14: E70 x 14	13/43	7	TAN	317 1549
72	(13-02-010)	70 (LHD-Six-WFGS)	C78 x 14: D78 x 14: E78 x 14	13/40	8	ROSE	317 1548
72	(13-02-010)	70 (LHD-Six-WFGS)	E78 x 14	13/43	8	ROSE	317 1548
72	(13-02-019)	70 (LHD-Six-WFGS)	E78 x 14	13/40	7	TAN	317 1549
72	(13-02-019)	70 (LHD-Six-WFGS)	C78 x 14: D78 x 14: E70 x 14	13/43	7	TAN	317 1549
72	(13-02-019)	70 (LHD-Six-WFGS)	C78 x 14: D78 x 14: E70 x 14: E78 x 14	12/43	7	TAN	317 1549
72	(13-02-024)	70 (LHD-Six-WFGS)	E78 x 14	13/40	7	TAN	317 1549
72	(13-02-024)	70 (LHD-Six-WFGS)	C78 x 14: D78 x 14: E70 x 14	13/43	7	TAN	317 1549

OVERDRIVE TRANSMISSION 1967 Thru 1969

67	(AS14-T96H)	01 (LHD-199-WOD)	6.45 x 14: 6.95 x 14	13/40	8	PINK	318 9340
67	(AS14-T96H)	01 (LHD-199-WOD)	6.45 x 14: 6.95 x 14: 6.85 x 15	13/43	8	PINK	318 9340
67	(AS16-T96H)	01 (LHD-199-WOD)	6.45 x 14: 6.95 x 14: 6.85 x 15	12/43	7	GREEN	316 7454
67/69	(AS22-T96H)	01 (LHD-199-WOD)	6.45 x 14: 6.95 x 14: 6.85 x 15	13/40	7	PURPLE	317 0766
67/69	(AS22-T96H)	01 (LHD-199-WOD)	6.45 x 14: 6.95 x 14: 6.85 x 15	13/43	7	PURPLE	317 0766
67/69	(AS22-T96H)	01 (LHD-199-WOD)	6.45 x 14: 6.95 x 14: 6.85 x 15	12/43	7	PURPLE	317 0766
67	(AS36-T96J)	01 (LHD-232-WOD)	6.45 x 14: 6.95 x 14	13/40	8	PINK	318 9340
67	(AS36-T96J)	01 (LHD-232-WOD)	6.45 x 14: 6.95 x 14: 6.85 x 15	13/43	8	PINK	318 9340
67	(AS34-T96J)	01 (LHD-232-WOD)	6.45 x 14: 6.95 x 14: 6.85 x 15	12/43	7	GREEN	316 7454
67	(AS48-T96J)	01 (LHD-232-WOD)	6.45 x 14: 6.95 x 14: 6.85 x 15	13/40	7	PURPLE	317 0766
67	(AS48-T96J)	01 (LHD-232-WOD)	6.45 x 14: 6.95 x 14: 6.85 x 15	13/43	7	PURPLE	317 0766
67	(AS48-T96J)	01 (LHD-232-WOD)	6.45 x 14: 6.95 x 14: 6.85 x 15	12/43	7	PURPLE	317 0766
67	(AS26-T96J)	10-50-80 (LHD-232-WOD)	6.95 x 14: 7.75 x 14: 7.35 x 15: 7.75 x 15	11/39	7	GREEN	316 7454
67	(AS24-T96J)	10-50-80 (LHD-232-WOD)	7.35 x 14: 7.75 x 14: 8.25 x 14: 7.35 x 15: 7.75 x 15	11/39	8	PINK	318 9340
67	(AS52-T96J)	***10-50-80 (Export-LHD-232-WOD)***	7.35 x 14: 7.75 x 14: 8.25 x 14: 7.35 x 15: 7.75 x 15	11/39	8	PINK	318 9340
67	(AS14-T86BB)	10-50-80 (V8-WOD)	7.75 x 14: 7.35 x 15: 7.75 x 15	11/39	7	GREEN	316 7454

Printed in U.S.A.

SPEEDOMETER DRIVE GEAR

Model Year	Trans. Tag No.	Model	Tire Size	Gear Ratio	Teeth	Color	Part No.
67	(AS12-T86BB)	10-50-80 (V8-WOD)	7.35 x 14: 7.75 x 14: 8.25 x 14: 7.35 x 15: 7.75 x 15	11/39	8	PINK	318 9340
67	(AS4-T96H)	01 (LHD-199-WOD)	6.45 x 14: 6.95 x 14: 6.85 x 15	12/43	7	GREEN	316 7454
68/69	(AS4-T14)	10-80 (LHD-Six-WOD)	7.35 x 14: 7.75 x 14: 8.25 x 14: 7.35 x 15: 7.75 x 15	11/39	8	PINK	318 9340
68	(AS2-T14)	10-80 (LHD-Six-WOD-Less Export)	7.35 x 14: 7.75 x 14: 8.25 x 14: 7.35 x 15: 7.75 x 15	11/39	8	PINK	318 9340
68	(AS1-T15)	10-80 (LHD-V8-WOD)	7.35 x 14: 7.75 x 14: 8.25 x 14: 7.35 x 15: 7.75 x 15	11/39	8	PINK	318 9340
69	(AS24-T96H)	01 (LHD-199-WOD)	6.45 x 14: 6.95 x 14: 6.85 x 15	13/43	8	PINK	318 9340
69	(AS24-T96H)	01 (LHD-199-WOD)	6.45 x 14: 6.95 x 14: 6.85 x 15	12/43	8	PINK	318 9340
FOURSPEED TRANSMISSION 1967 Thru 1972							
67	(AS8-T10P)	01-10-50-80 (V8-W4ST)	6.95 x 14: 7.35 x 14: 7.75 x 14: 7.35 x 15: 7.75 x 15	13/41	8	TAN	318 4518
67	(AS8-T10P)	01-10-50-80 (V8-W4ST)	6.95 x 14: 7.35 x 14: 7.75 x 14: 7.35 x 15: 7.75 x 15	11/39	8	TAN	318 4518
67	(AS9-T10P)	10-50-80 (V8-W4ST)	7.75 x 14: 7.75 x 15	11/39	7	PINK	318 7908
67	(AS1-T10T)	01-10-50-80 (V8-W4ST)	6.95 x 14: 7.35 x 14: 7.75 x 14: 8.25 x 14: 7.35 x 15: 7.75 x 15	13/41	8	TAN	318 4518
67	(AS1-T10T)	01-10-50-80 (V8-W4ST)	6.95 x 14: 7.35 x 14: 7.75 x 14: 8.25 x 14: 7.35 x 15: 7.75 x 15	11/39	8	TAN	318 4518
67	(AS2-T10T)	10-50-80 (V8-W4ST)	7.35 x 15	13/41	7	PINK	318 7908
67	(AS2-T10T)	10-50-80 (V8-W4ST)	7.75 x 14	11/39	7	PINK	318 7908
68/69	(AS1-T10V)	01-10-30-70-80 (V8-W4ST-* 6-1)	7.35 x 14: 7.75 x 14: 8.25 x 14: D70 x 14: E70 x 14: F70 x 14: 7.35 x 15: 7.75 x 15	13/41	8	TAN	318 4518
68/69	(AS1-T10V)	01-10-30-70-80 (V8-W4ST-* 6-1)	7.35 x 14: 7.75 x 14: 8.25 x 14: D70 x 14: E70 x 14: F70 x 14: 7.35 x 15: 7.75 x 15	11/39	8	TAN	318 4518
68/69	(AS2-T10V)	01-10-30-70-80 (V8-W4ST-* 6-1)	7.35 x 14: 7.75 x 14: 8.25 x 14: D70 x 14: E70 x 14: F70 x 14: 7.35 x 15: 7.75 x 15	13/41	8	TAN	318 4518
68/69	(AS2-T10V)	01-10-30-70-80 (V8-W4ST-* 6-1)	7.35 x 14: 7.75 x 14: 8.25 x 14: D70 x 14: E70 x 14: F70 x 14: 7.35 x 15: 7.75 x 15	11/39	8	TAN	318 4518
70	(AS4-T10V)	(W4ST)	7.35 x 14: 7.75 x 14: 8.25 x 14: C78 x 14: E70 x 14: E78 x 14: F78 x 14: G78 x 14: H78 x 14: 7.35 x 15: 7.75 x 15: 8.25 x 15: E60 x 15	13/41	8	TAN	318 4518
70	(AS4-T10V)	(W4ST)	7.35 x 14: 7.75 x 14: 8.25 x 14: C78 x 14: E70 x 14: E78 x 14: F78 x 14: G78 x 14: H78 x 14: 7.35 x 15: 7.75 x 15: 8.25 x 15: E60 x 15	11/39	8	TAN	318 4518
70	(AS5-T10V)	(W4ST)	D70 x 14: E70 x 14: E60 x 15	11/43	7	GOLD	318 4517
71	(13-04-001)	01-10-70 (W4ST)	D70 x 14: D78 x 14: E70 x 14: E60 x 15	11/39	8	TAN	318 4518
71	(13-04-001)	01-10-70 (W4ST)	D70 x 14: D78 x 14: E70 x 14: E60 x 15	13/41	8	TAN	318 4518
71	(13-04-002)	01-10-70 (W4ST)	D70 x 14: E70 x 14: E60 x 15	11/43	7	GOLD	318 4517
71	(13-04-003)	01-10-70 (W4ST)	D70 x 14: D78 x 14: E70 x 14: E60 x 15	11/39	7	GOLD	318 4517
71	(13-04-003)	01-10-70 (W4ST)	D70 x 14: D78 x 14: E70 x 14: E60 x 15	13/41	7	GOLD	318 4517

Printed In U.S.A.

SPEEDOMETER DRIVE GEAR

Model Year	Trans. Tag No.	Model	Tire Size	Gear Ratio	Teeth	Color	Part No.
72	(13-04-002)	70 (W4ST)	E70 x 14: E60 x 15	11/43	7	GOLD	318 4517
72	(13-04-007)	70 (W4ST)	D78 x 14: E70 x 14	13/41	7	PINK	318 7908
72	(13-04-007)	70 (W4ST)	D78 x 14: E70 x 14: E78 x 14: E60 x 15	11/39	7	PINK	318 7908
72	(13-04-008)	70 (W4ST)	E78 x 14: E60 x 15	13/41	8	PURPLE	321 5313
72	(13-04-021)	70 (W4ST)	D78 x 14: E70 x 14	13/41	8	PINK	318 7908
72	(13-04-022)	70 (W4ST)	D78 x 14: E70 x 14: E60 x 15	11/39	8	PINK	318 7908

Printed in U.S.A.

2743

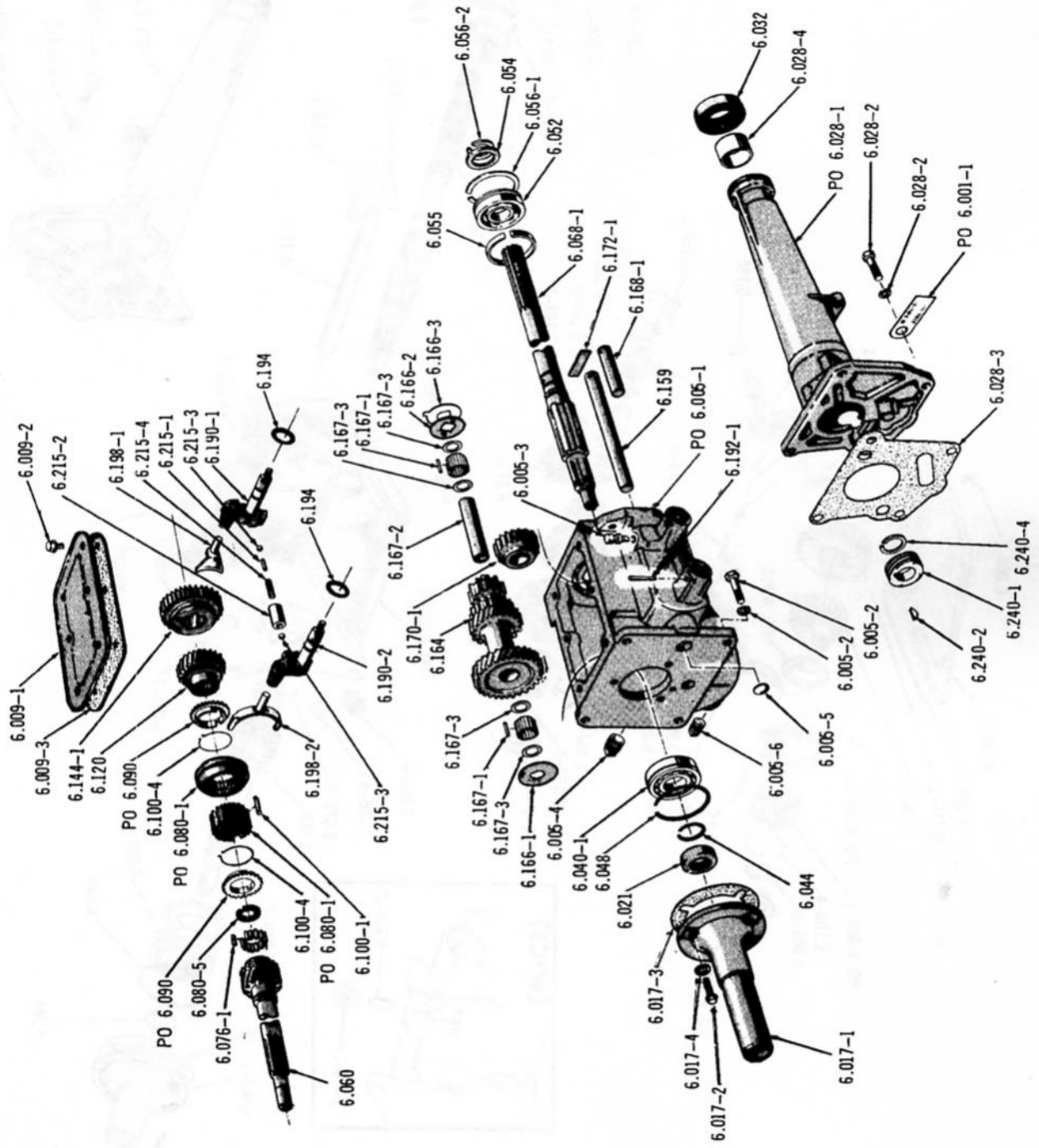

STANDARD TRANSMISSION ... SIX-HEAVY DUTY (1967), V8 (1967)

Printed in U.S.A.

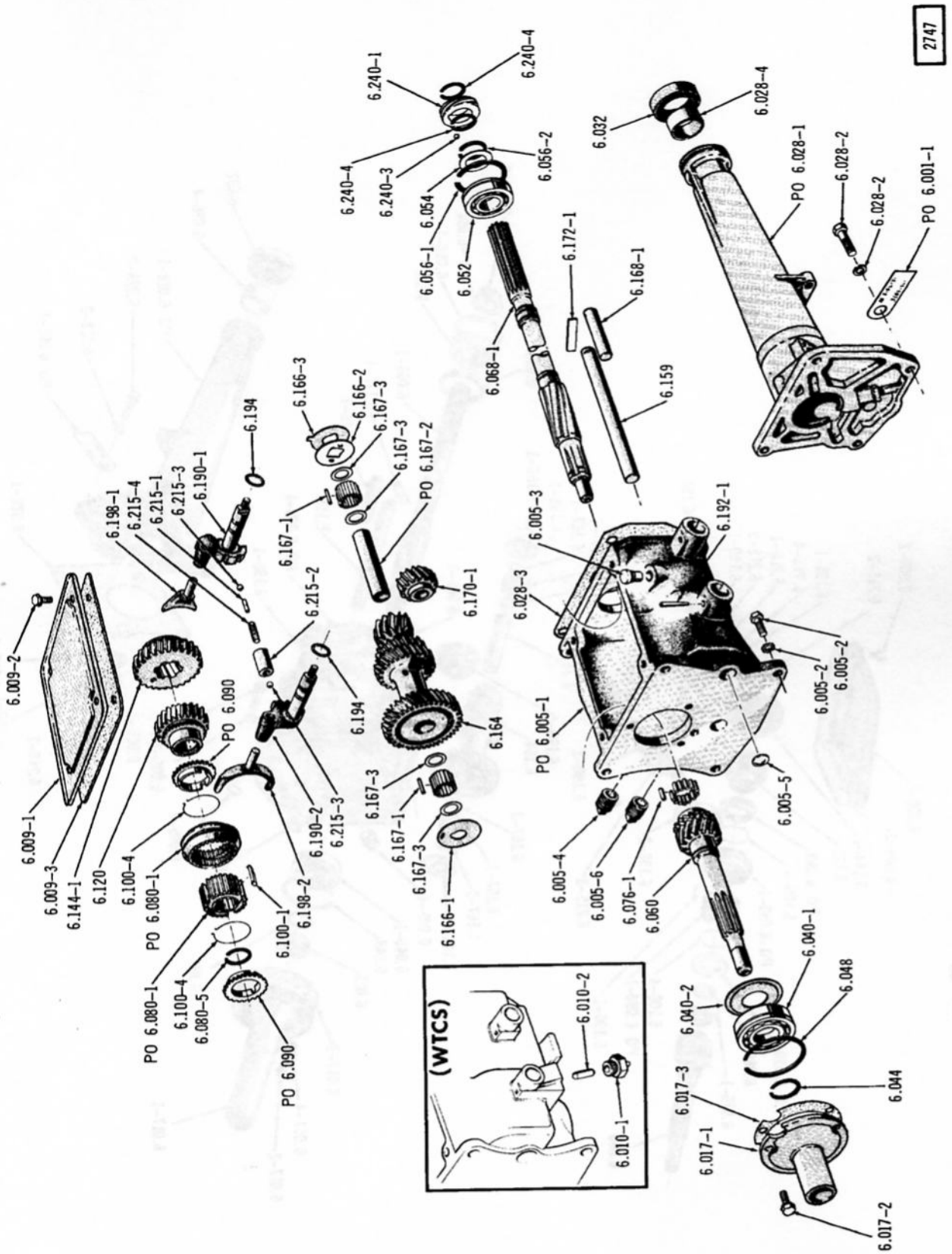

STANDARD TRANSMISSION ... SIX-E/HEAVY DUTY (1967), 199-E/EXPORT (1968/70), 232-E/EXPORT-1970/ (01)(40)

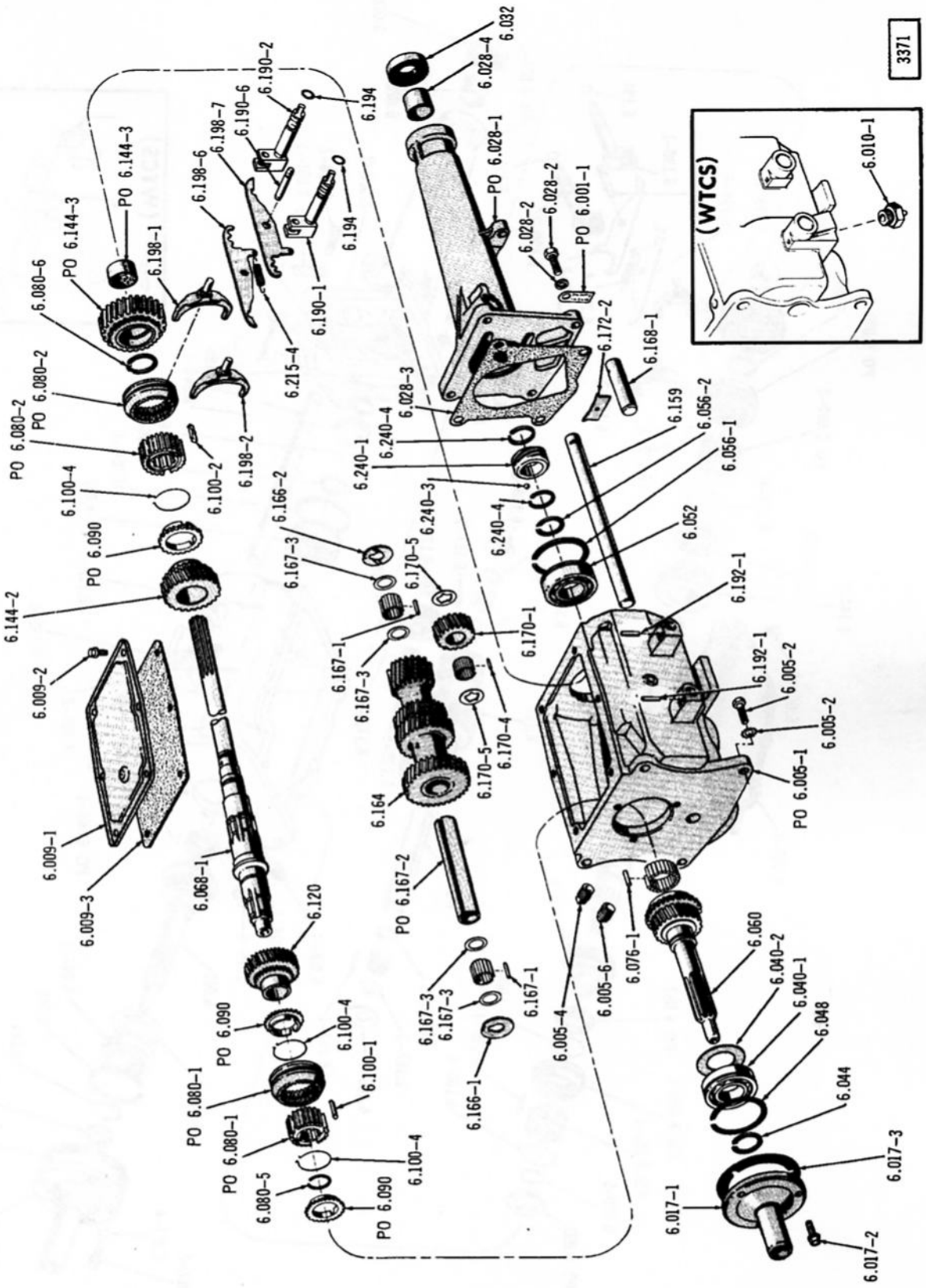

STANDARD TRANSMISSION ... 199-EXPORT-RHD (1968/69), 232-E/HEAVY DUTY (1968/69), SIX-1970/ (10)(70)(80)

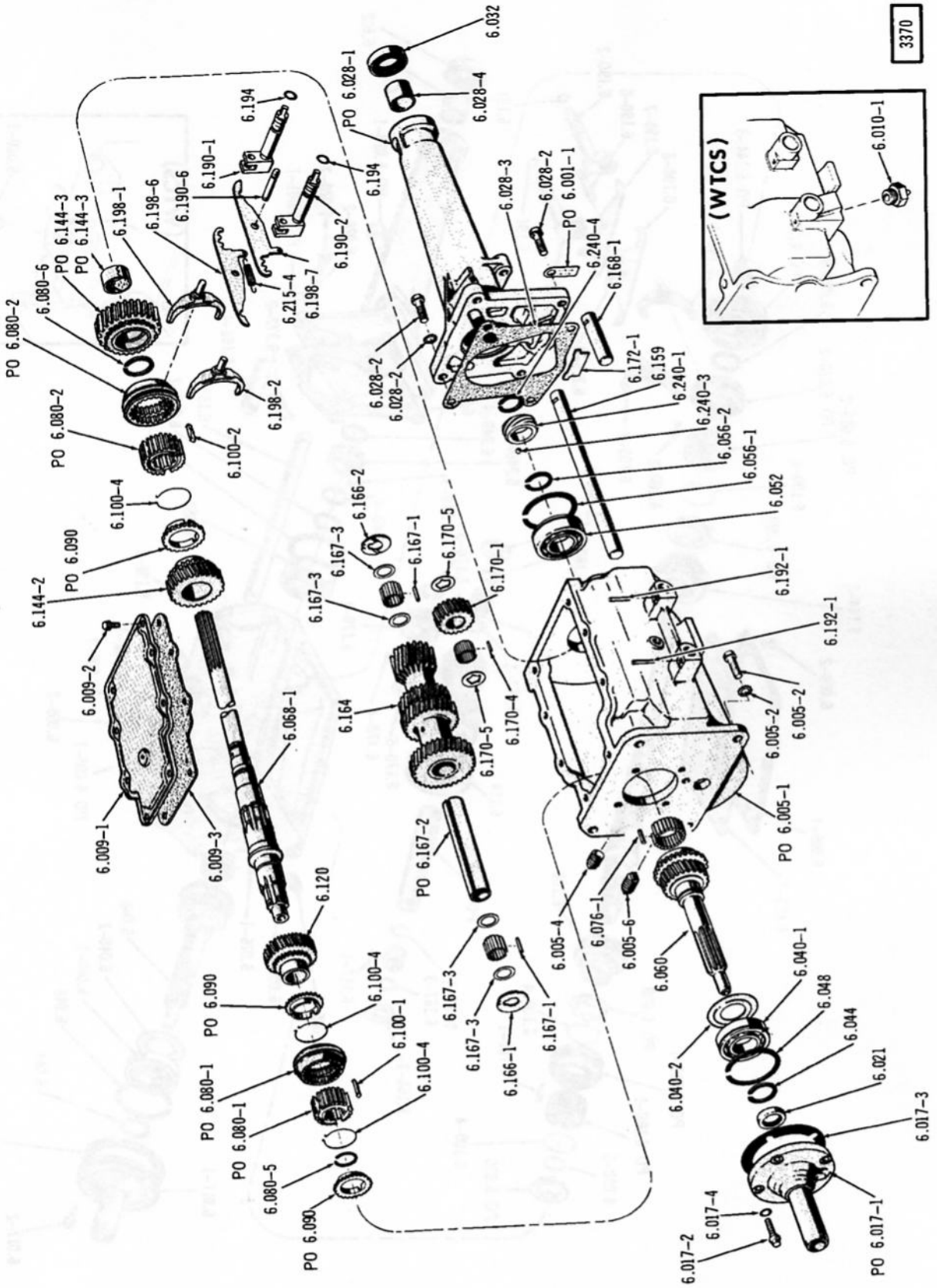

STANDARD TRANSMISSION ... 232-HEAVY DUTY (1968/), V8 (1968/)

2750

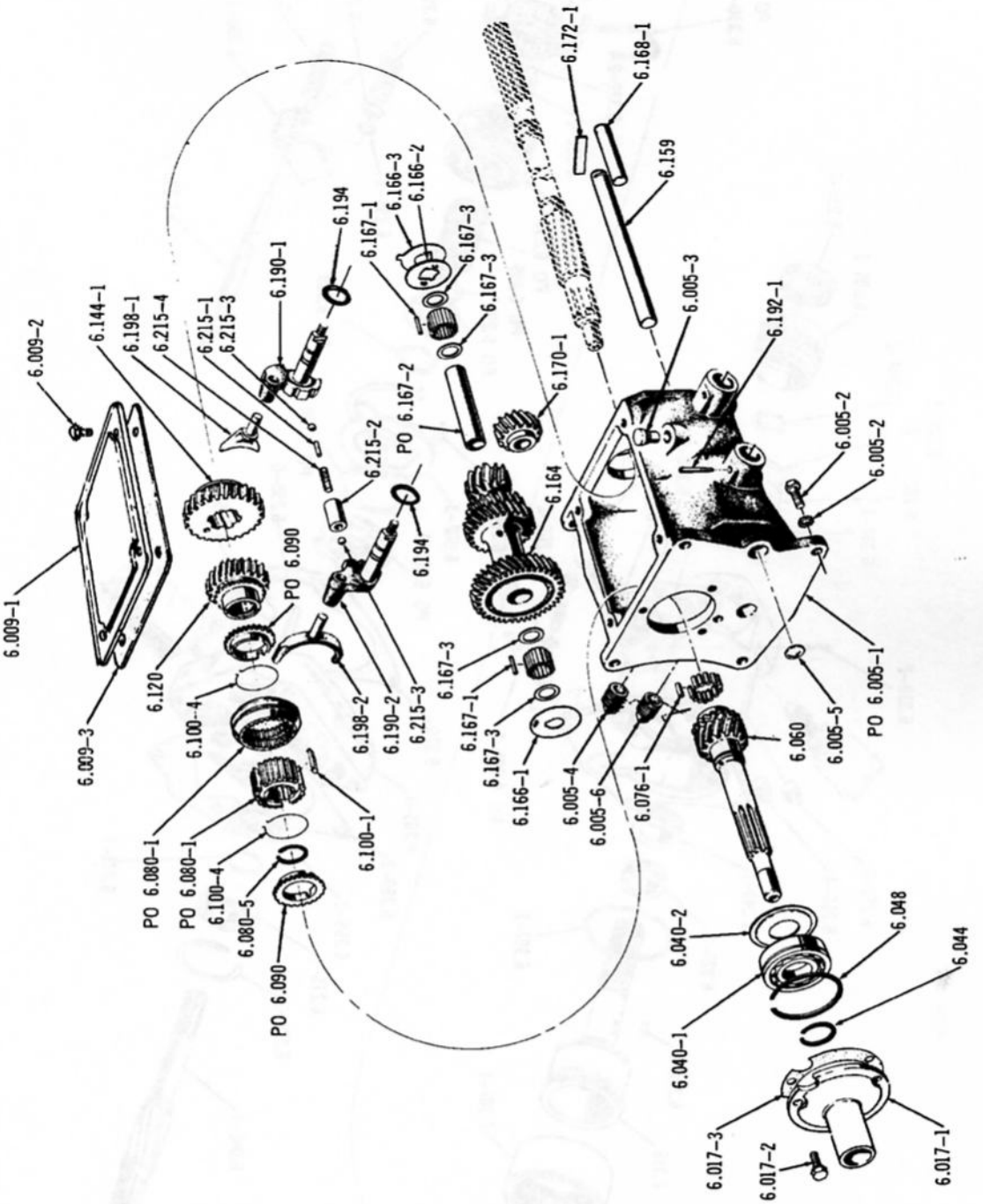

OVERDRIVE TRANSMISSION (Part 1 of 2) ... 199, 232 (1967)

Printed in U.S.A.

2751

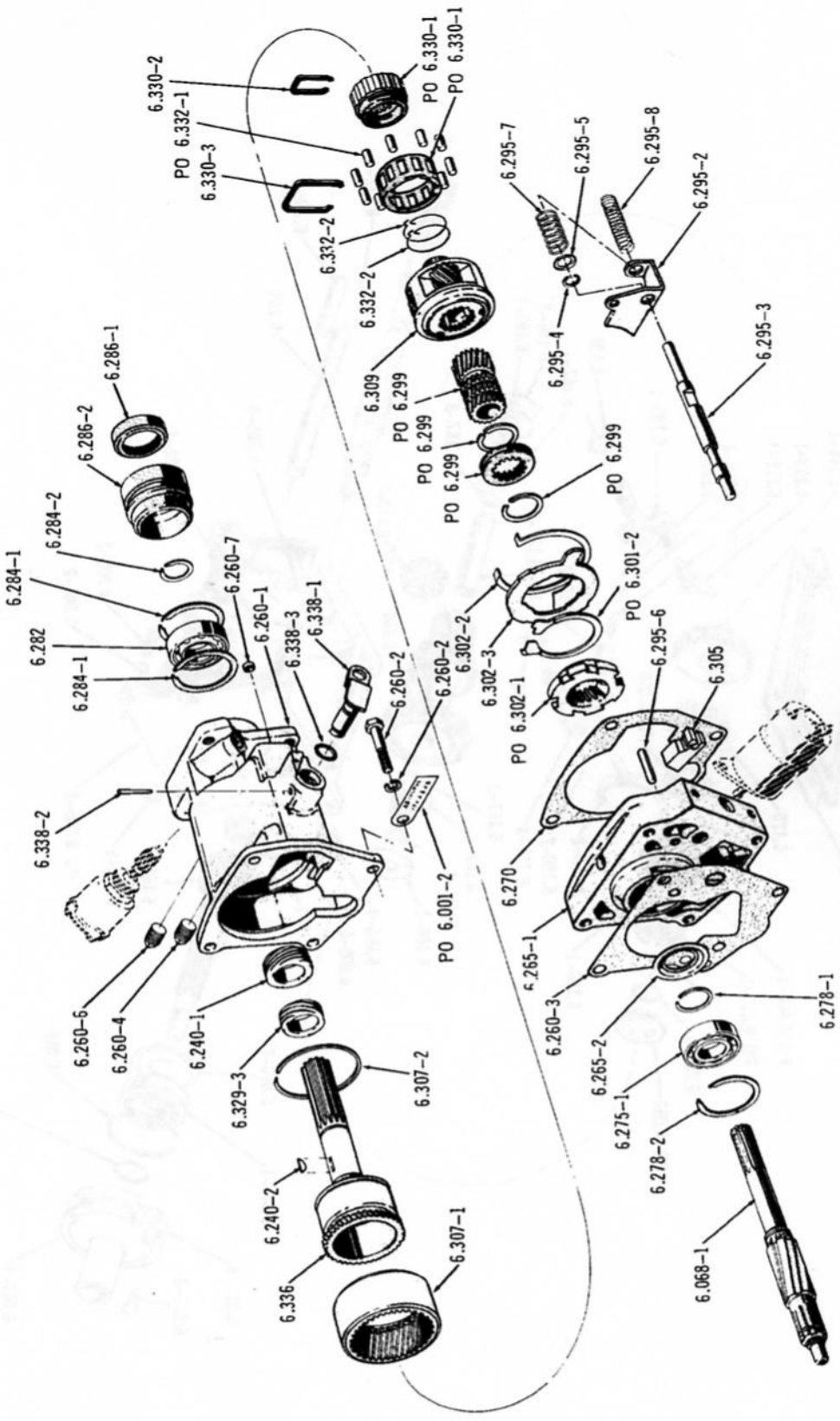

OVERDRIVE TRANSMISSION (Part 2 of 2) ... 199, 232 (1967)

2748

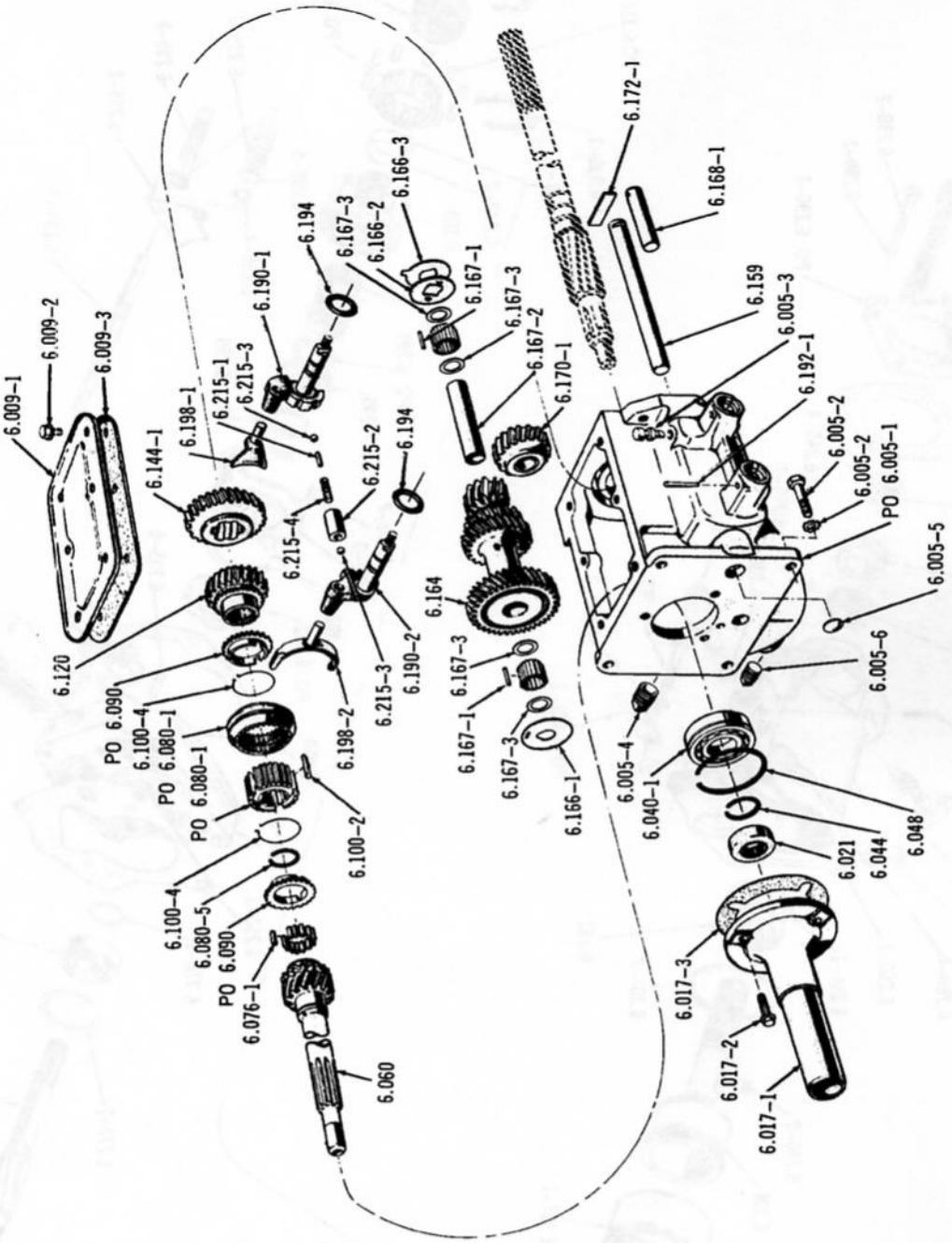

OVERDRIVE TRANSMISSION (Part 1 of 2) ... V8 (1967)

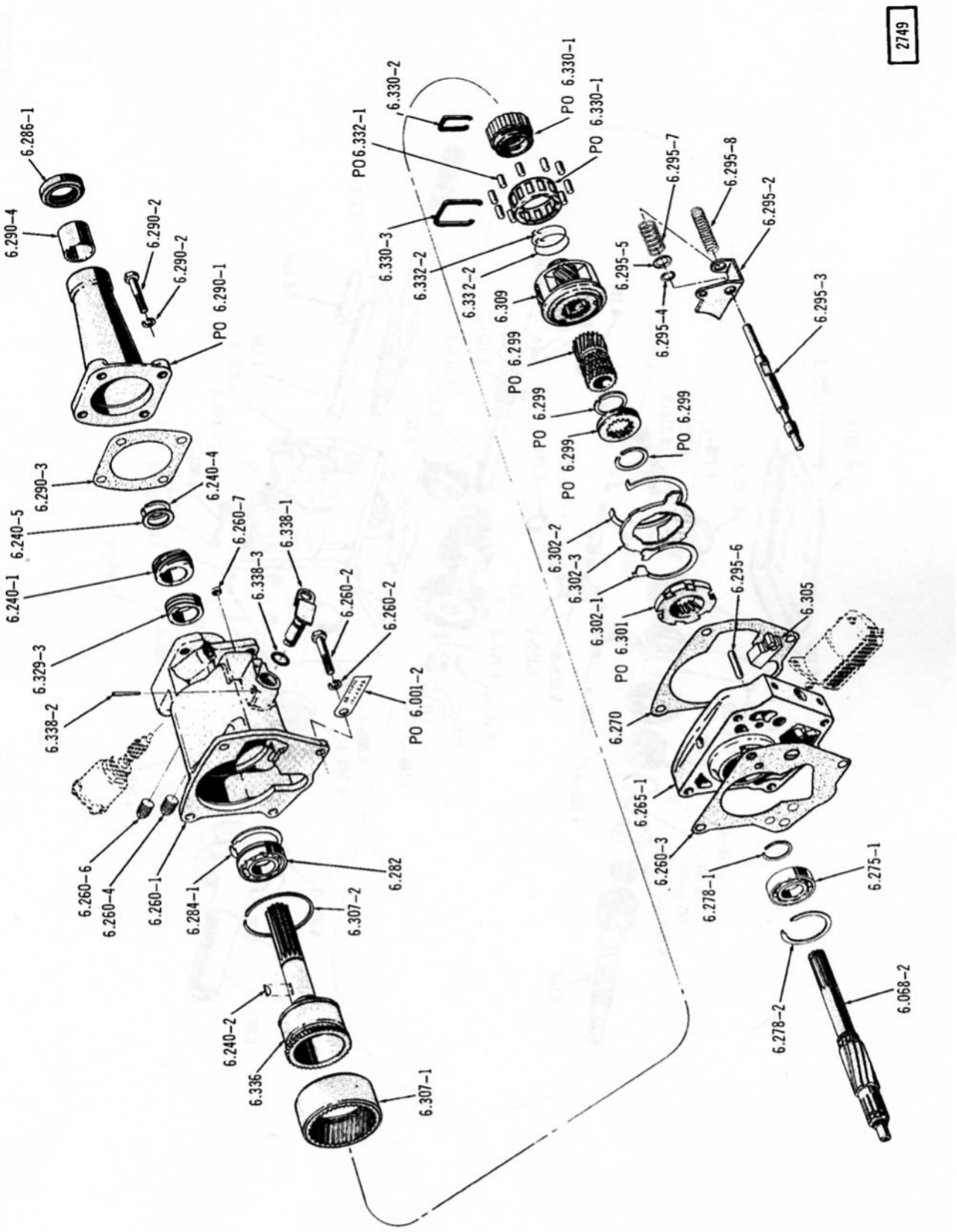

OVERDRIVE TRANSMISSION (Part 2 of 2) ... V8 (1967)

3374

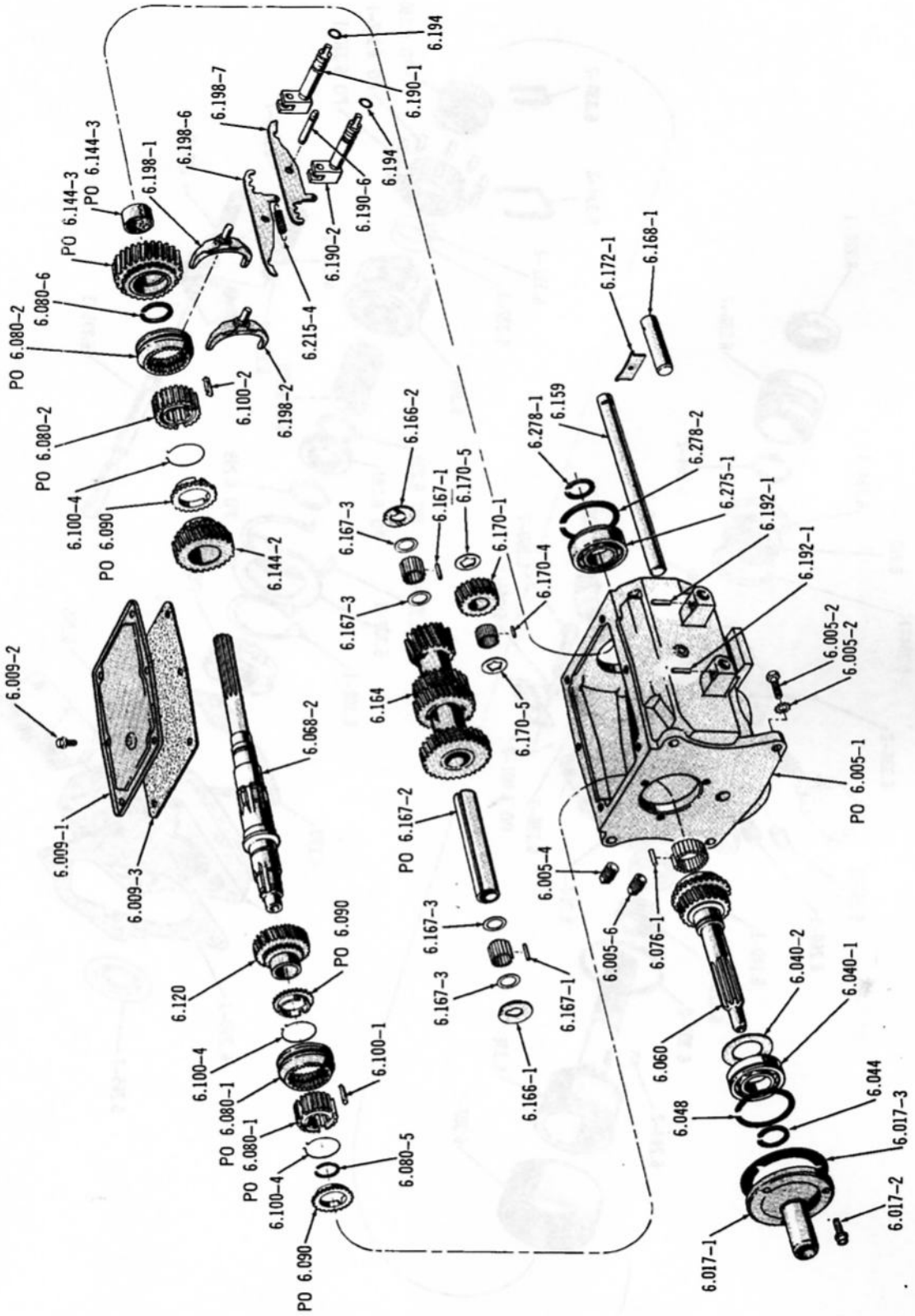

OVERDRIVE TRANSMISSION (Part 1 of 2) ... 232 (1968/69)

Printed in U.S.A.

3375

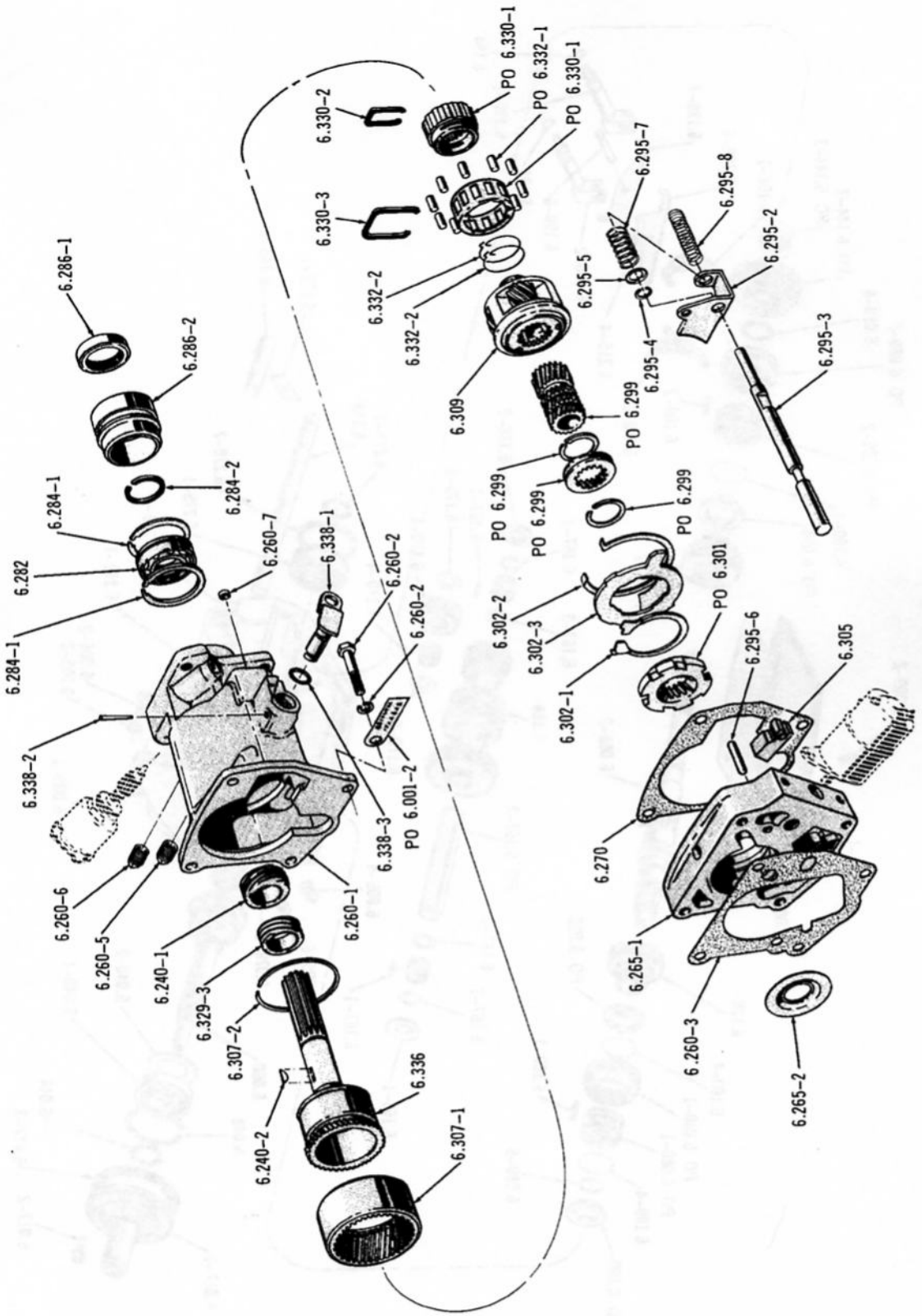

OVERDRIVE TRANSMISSION (Part 2 of 2) ... 232 (1968/69)

3372

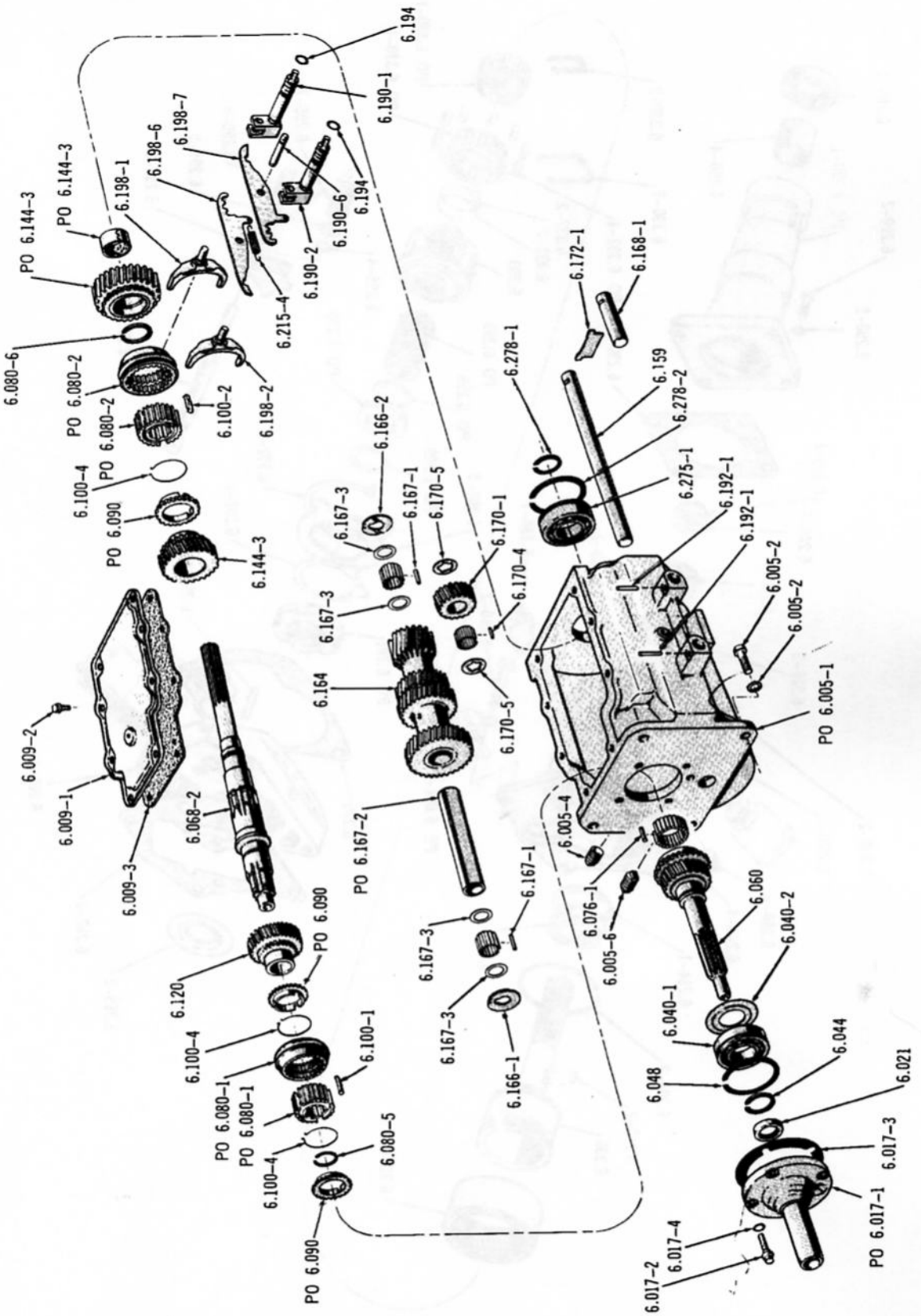

OVERDRIVE TRANSMISSION (Part 1 of 2) ... V8 (1968)

3373

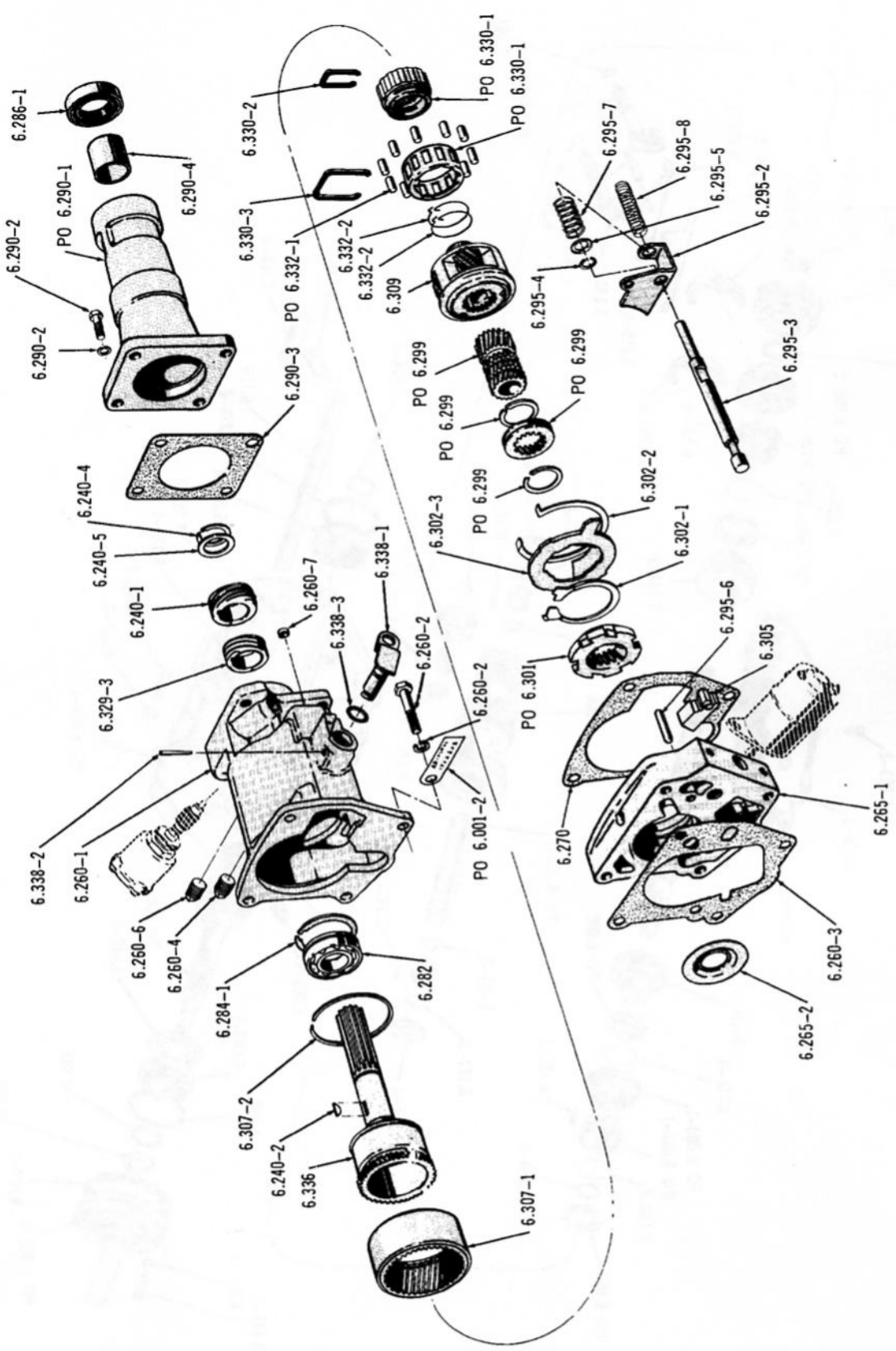

OVERDRIVE TRANSMISSION (Part 2 of 2) ... V8 (1968)

2756

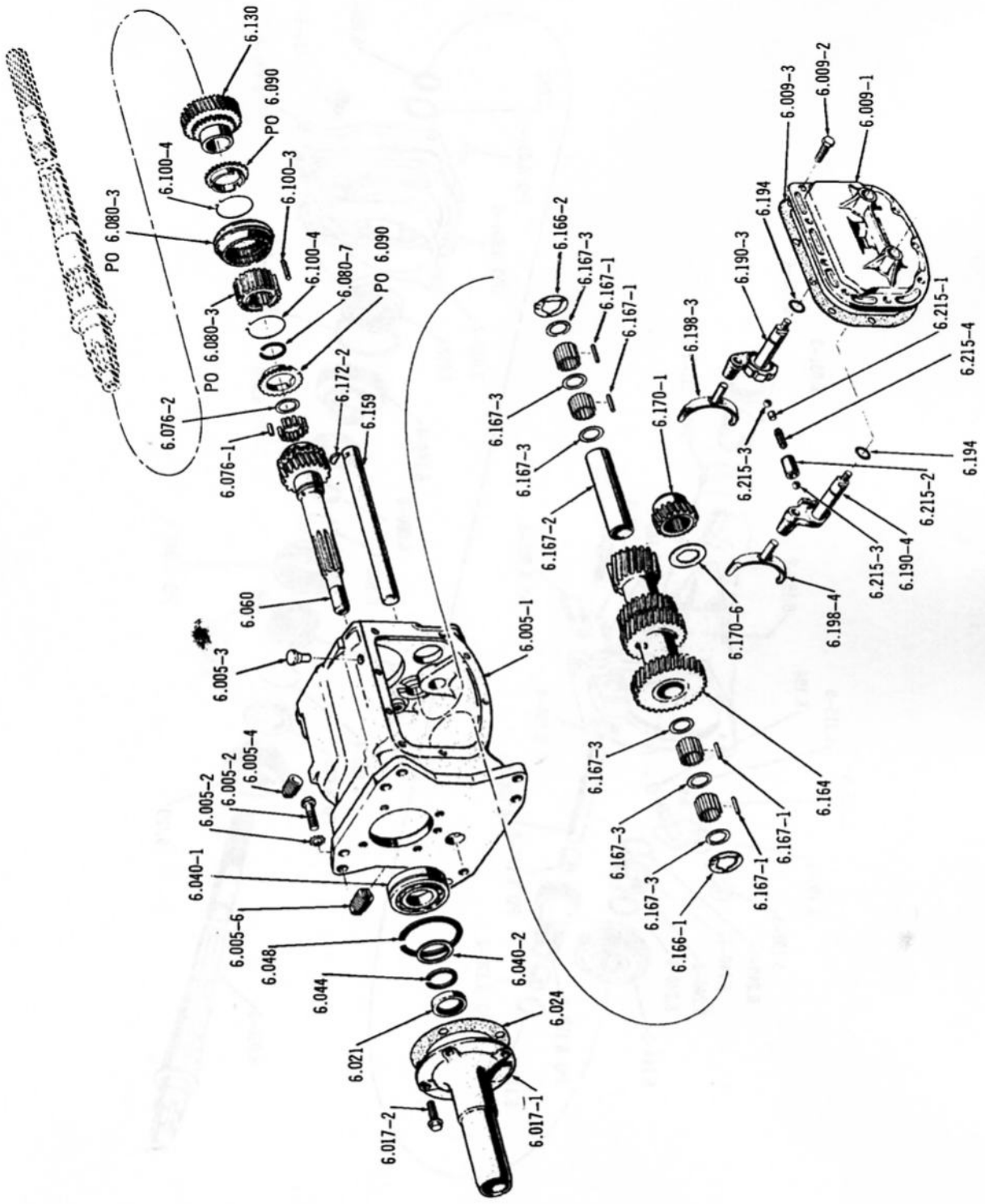

FOURSPEED TRANSMISSION (Part 1 of 2) ... V8

2757

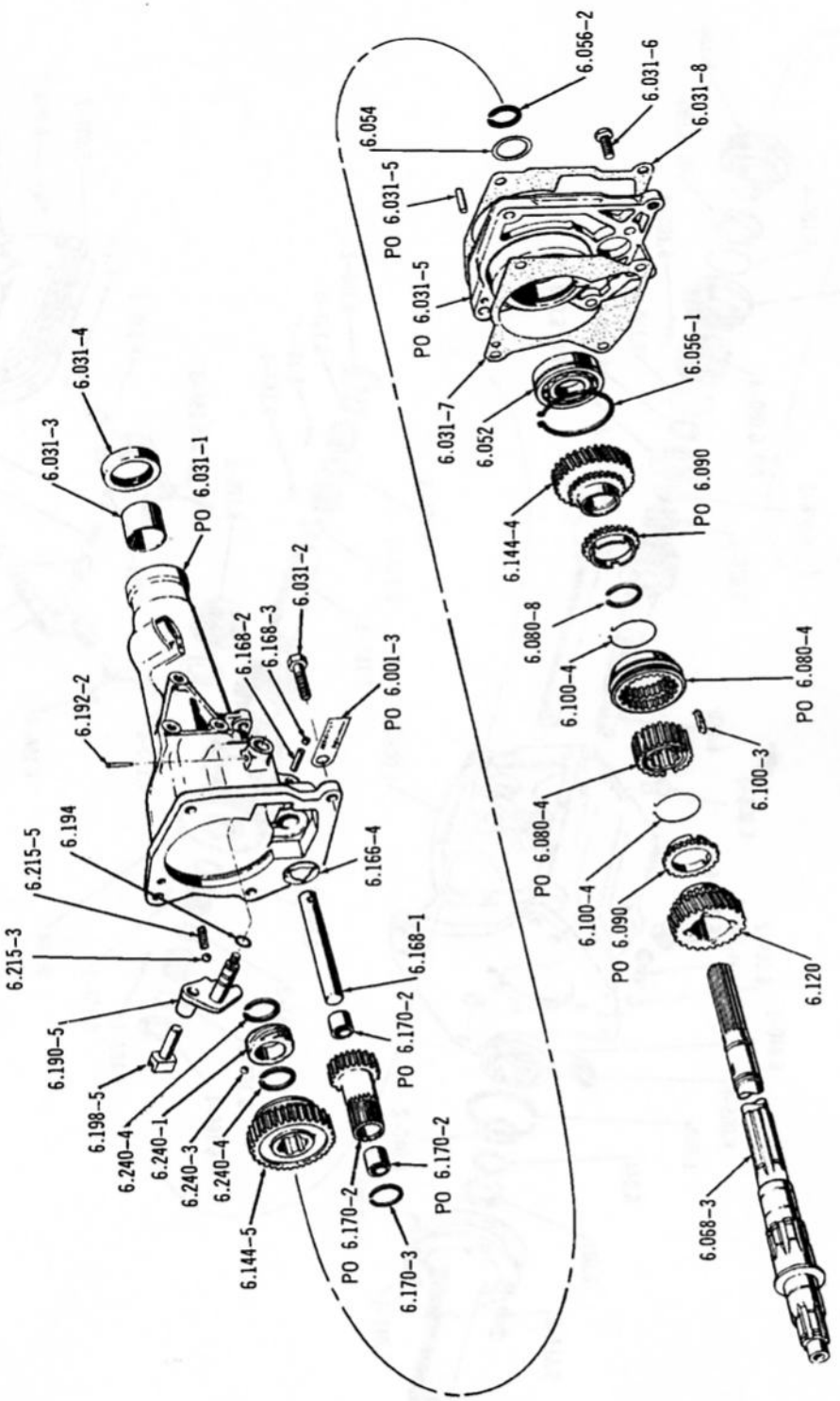

FOURSPEED TRANSMISSION (Part 2 of 2) ... V8

2829

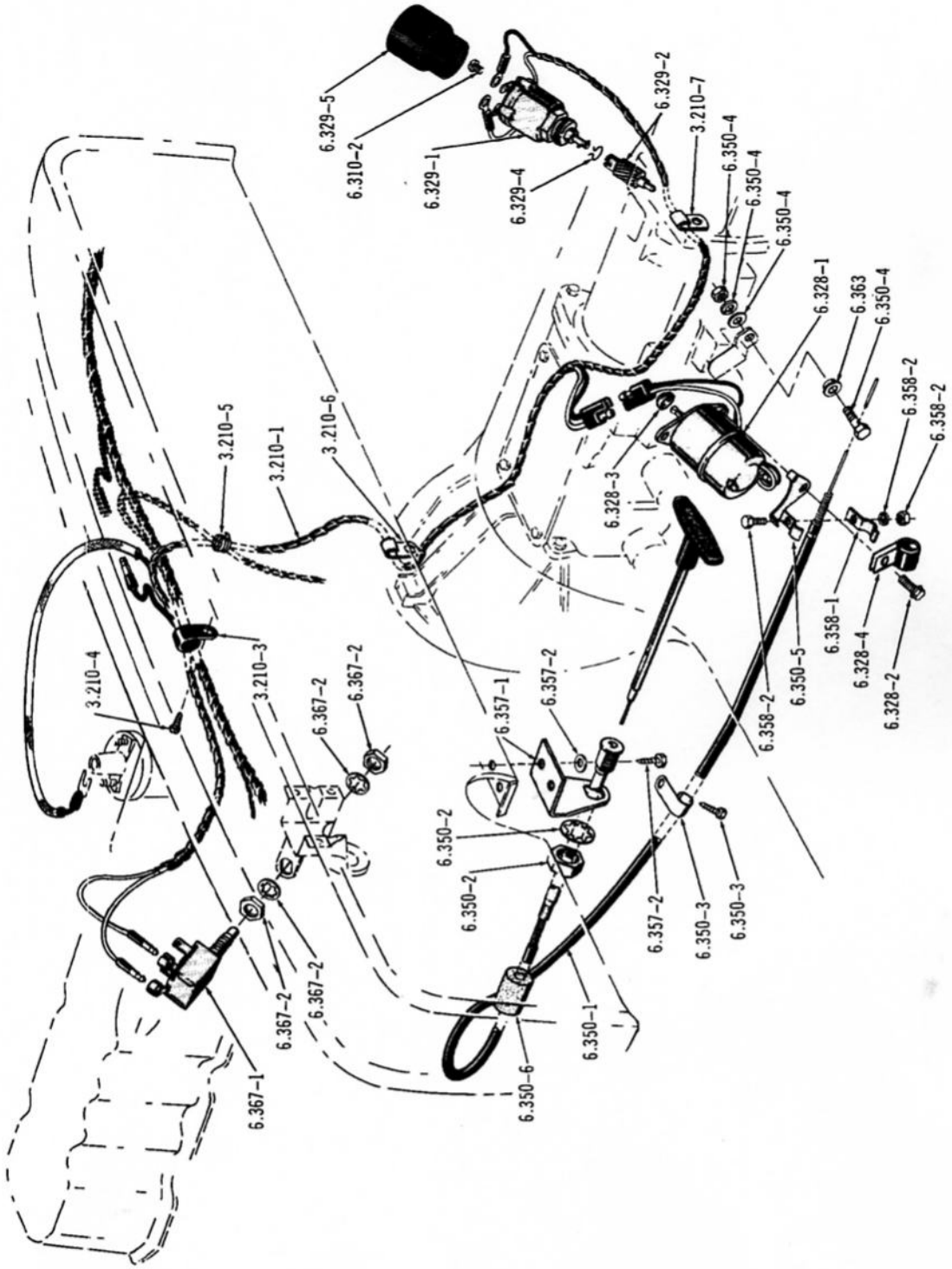

OVERDRIVE ACTUATING SYSTEM AND CONTROLS

STANDARD, OVERDRIVE AND FOURSPEED TRANSMISSION

GROUP NO. — DESCRIPTION — YEAR and MODEL	"L" CODE	PAKS CODE	PRIMARY GROUP NO.	PER CAR	PART NO.	CODE
6.001–1 TRANSMISSION, Standard (Less Shift Levers)						
67 (AS 13-T96H)(AS 15-T96H) 01 (LHD-199)		***(Use 319 0371)***	.....	1	320 8016	
67 (AS 19-T96H) 01 (LHD-199)		76	.....	1	448 5955	
68 (AS 19-T96H) 01 (LHD-199-Except Export)		76	.....	1	448 5955	
69/70 (AS 25-T96H) 01-40 (LHD-199-Except Export-* 6-3)		76	.....	1	448 5955	
70 (AS 1-T96K) 01-40 (LHD-199-Except Export-* 6-4)		76	.....	1	448 8429	
68/70 (AS27-T96H) 01-40 (LHD-199-Except Export)		76	.....	1	448 5955	
67 01 (LHD-232)		76	.....	1	448 5955	
68/69 01 (LHD-232)		76	.....	1	319 1272	
70 01 (232-Except Export)		76	.....	1	318 6418	
71 01-40 (232-WCGS-Except Export)		***(Use 812 0179)***	.....	1	448 9007	
72 01-40 (232-WST-Except Export-* 6-13)		76	.....	1	812 0658	
72 01-40 (232-WST-* 6-14)		76	.....	1	812 0660	
72 01-40 (258-WFGS)		76	.....	1	812 0660	
71 01-40 (Heavy Duty-232-WCGS-* 6-8)(Export-232-WCGS)		76	.....	1	448 9008	
68/70 01 (Export-LHD-199)		90	.....	1	319 1272	
70 01-40 (Export-LHD-Six)		90	.....	1	319 1272	
72 01-40 (Export-232-WCGS)		76	.....	1	812 0660	
67 10-50-80 (Six-Except Heavy Duty-* 6-2)		76	.....	1	318 6418	
68/70 10-70-80 (LHD-232-WCGS-Except Heavy Duty-* 6-2)		90	.....	1	319 1272	
71 10-80 (Six)		90	.....	1	448 9008	
72 10-80 (Six)		76	.....	1	812 0660	
67 10 (Heavy Duty-Six-* 6-2)		80	.....	1	320 7989	
68/69 10-80 (Heavy Duty-LHD-232-* 6-2)		104	.....	1	320 8987	
70 40 (232-WST)		90	.....	1	448 8443	
71 40 (232-WFGS-* 6-13)		***(Use 812 0179)***	.....	1	448 9007	
71 40 (232-WFGS-* 6-14)			.....	1	448 9289	
71 40 (258-WST-WFGS)		90	.....	1	448 9289	
69/70 70 (232-WFGS)		90	.....	1	448 6543	
71 70 (Six-WFGS)		90	.....	1	448 9289	
72 70 (Six-WFGS)		76	.....	1	812 0660	
67 V8 (WST)		80	.....	1	320 7991	
68/69 290 (LHD)		104	.....	1	320 8987	
70 01 (360-WFGS)		90	.....	1	448 7605	
71 01-70 (360-WFGS)		90	.....	1	448 7605	
72 01-40-70 (304-WFGS)		76	.....	1	812 0660	
69 70 (V8-WFGS)		104	.....	1	448 6544	
70 70 (304-WFGS)		90	.....	1	448 8360	
71 70 (304-WFGS)		90	.....	1	448 9330	
67 01 (RHD)		76	.....	1	448 5955	
68/69 01-10 (RHD)		90	.....	1	319 1272	
6.001–2 TRANSMISSION, Overdrive (Less Shift Levers)(Incls. Overdrive)						
67 (AS 4-T96H) 01 (199)		97	.....	1	320 7166	
67 (AS 14-T96H) 01 (199)		97	.....	1	320 7999	
67 (AS 16-T96H) 01 (199)		97	.....	1	320 8245	
67 (AS 22-T96H) 01 (199)		97	.....	1	320 8815	
68 (AS 22-T96H) 01 (199)		97	.....	1	448 5956	
69 01 (199)		97	.....	1	448 5956	
67 (AS 34-T96J)(AS 36-T96J) 01 (232)		97	.....	1	320 8000	
67 (AS 48-T96J) 01 (232)		97	.....	1	320 8815	
67 10-50-80 (232)		97	.....	1	320 8001	
68/69 10-80 (232)		103	.....	1	320 8995	
67 10-50-80 (290)		97	.....	1	320 8002	
68 10-80 (290)		98	.....	1	320 8916	

STANDARD, OVERDRIVE AND FOURSPEED TRANSMISSION

6.001–3 TRANSMISSION, Fourspeed (Less Shift Levers)

67	(AS 8-T10P)(AS 9-T10P)(AS 1-T10T)(AS 2-T10T) V8 (W4ST)	84	.....	1	320 8321
68	(AS 1-T10T) V8 (W4ST)	***(Use 448 5724)***	.....	1	448 5436
68/69	(AS 1-T10V)(AS 2-T10V) V8 (W4ST-* 6-1)	84	.....	1	448 5724
70	V8 (W4ST)	84	.....	1	448 8359
71	V8 (W4ST)	84	.....	1	448 9328
72	V8 (W4ST-* 6-15)	84	.....	1	448 9328
72	V8 (W4ST-* 6-16)	84	.....	1	812 1973

6.002 GASKET SET, Transmission Overhaul

67	SIX (WST-Except Heavy Duty-* 6-2)(WOD)	89	.....	1	320 7647
70/	SIX (10-WST)(70-WST)(80-WST)	91	.....	1	320 9995
68/70	199 (LHD-WST-Except Export)(WOD)	89	.....	1	320 7647
68/69	232 (LHD-WST-Except Heavy Duty-* 6-2)(WOD)	91	.....	1	320 9995
70/	232 (01-Except Export)(40-Except Export-* 6-13)	89	.....	1	320 7647
71/	232 (40-WST-* 6-14)	91	.....	1	320 9995
71/	258 (01-WST)(40-WST)	91	.....	1	320 9995
67	***SIX (Heavy Duty-10-WST-* 6-2)***	89	.....	1	448 5675
68/69	***232 (Heavy Duty-LHD-10-WST-* 6-2)(Heavy Duty-LHD-80-WST-* 6-2)***	109	.....	1	320 9996
71/	***232 (Heavy Duty-01-WCGS-* 6-8)(Heavy Duty-40-WCGS-* 6-8)***	91	.....	1	320 9995
68/70	***199 (Export-LHD-WST)***	91	.....	1	320 9995
70/	***232 (Export-LHD-01-WST)(Export-LHD-40-WST)***	91	.....	1	320 9995
67	V8 (WST)(WOD)	89	.....	1	448 5675
68/69	V8 (WST)(WOD)	109	.....	1	320 9996
70/71	V8 (WST-WFGS)	109	.....	1	320 9996
72	304 (40-WST)(70-WST)	91	.....	1	320 9995
67/	V8 (W4ST)	106	.....	1	320 7130
68/69	***01-10 (RHD)***	91	.....	1	320 9995

6.003 OVERHAUL KIT, Standard Transmission Small Parts

67	01 (Six)		.....	1	448 8258
68/69	01 (199)		.....	1	448 8258
70/	01-40		.....	1	448 8258
67	10-50-80 (Six)		.....	1	448 8258

6.004 RING SET, Transmission Overhaul Snap

67	SIX (WST-Except Heavy Duty-* 6-2)(WOD)	75	.....	1	320 7648
68/70	199 (LHD-WST-Except Export)(WOD)	75	.....	1	320 7648
68/69	232 (LHD-WST-Except Heavy Duty-* 6-2)(WOD)	95	.....	1	320 9997
70/	232 (01-WST-Except Export)(40-WST-Except Export-* 6-13)	75	.....	1	320 7648
71/	232 (40-WST-* 6-14)	95	.....	1	320 9997
70/	SIX (10-WST)(70-WST)(80-WST)	95	.....	1	320 9997
71/	258 (01-WST)(40-WST)	95	.....	1	320 9997
67	***SIX (Heavy Duty-10-WST-* 6-2)***	75	.....	1	320 8234
68/69	***SIX (Heavy Duty-LHD-10-WST-* 6-2)(Heavy Duty-LHD-80-WST-* 6-2)***	99	.....	1	320 9998
71/	***232 (Heavy Duty-LHD-01-WST-* 6-8)(Heavy Duty-LHD-40-WST-* 6-8)***	95	.....	1	320 9997
68/70	***199 (Export-LHD-WST)***	95	.....	1	320 9997
70/	***232 (Export-LHD-01-WST)(Export-LHD-40-WST)***	95	.....	1	320 9997
67	V8 (WST)(WOD)	75	.....	1	320 8234
68/69	V8 (WST)(WOD)	99	.....	1	320 9998
70/71	V8 (WST-WFGS)		.....	1	448 8144
72	304 (40-WST)(70-WST)	95	.....	1	320 9997
67/	V8 (W4ST)	110	.....	1	320 7131
68/69	***01-10 (RHD)***	95	.....	1	320 9997

6.005–1 CASE, Transmission

67	SIX (10-WST-Except Heavy Duty-* 6-2)(80-WST-Except Heavy Duty-* 6-2)	73	.....	1	320 7926
71/	SIX (10-WST)(70-WST)(80-WST)	86	.....	1	321 2204
67	(AS 4-T96H) 199 (LHD-01-WOD)	73	.....	1	320 7619
67	(AS 14-T96H)(AS 16-T96H)(AS 22-T96H) 199 (LHD-01-WOD)	73	.....	1	320 8106

67	199 (LHD-01-WST)	73	.....	1	320 8083
68/70	199 (LHD-01-WST-Except Export)(40-Except Export)	73	.....	1	320 9967
68/69	199 (WOD)	73	.....	1	448 5438
67	232 (LHD-01-WST)	73	.....	1	320 8088
67	232 (WOD)	73	.....	1	320 8106
68/69	232 (WOD)	86	.....	1	319 2354
68/69	232 (LHD-WST-Except Heavy Duty-* 6-2)	86	.....	1	319 2355
70	232 (01-Except Export)(40-Except Export)	73	.....	1	320 7926
70	232 (10-WST)(70-WST)(80-WST)	86	.....	1	319 2355
71/	232 (01-Except Export)(40-Except Export-* 6-13)	73	.....	1	448 9426
71/	232 (40-WST-* 6-14)	86	.....	1	321 2204
71/	258 (01-WST)(40-WST)	86	.....	1	321 2204
67	***SIX (Heavy Duty-LHD-10-WST-* 6-2)***	87	.....	1	320 7992
68/69	***SIX (Heavy Duty-LHD-10-WST-* 6-2)(Heavy Duty-LHD-80-WST-* 6-2)***	112	.....	1	319 2353
71/	***232 (Heavy Duty-LHD-01-WST-* 6-8)(Heavy Duty-LHD-40-WST-* 6-8)***	86	.....	1	321 2204
68/70	***199 (Export-LHD-WST)***	86	.....	1	319 2355
70	***232 (Export-LHD-01-WST)(Export-LHD-40-WST)***	86	.....	1	319 2355
71/	***232 (Export-LHD-01-WST)(Export-LHD-40-WST)***	86	.....	1	321 2204
67	V8 (WST)	87	.....	1	320 7992
68/69	V8 (WST)	112	.....	1	319 2353
67	V8 (WOD)	87	.....	1	320 8028
68	V8 (WOD)	112	.....	1	319 2352
67/	V8 (W4ST)		.....	1	320 9999
70	V8 (70-WST)	112	.....	1	319 2353
71	304 (70-WST)		.....		321 2203
72	304 (40-WST)(70-WST)		.....	1	321 2204
71	360 (01-WST)(70-WST)		.....	1	319 9584
67	***01 (RHD-WST)***	73	.....	1	320 8088
68/69	***01-10 (RHD-WST)***	86	.....	1	319 2355

6.005–2 ATTACHING PARTS, Transmission To Clutch Housing

BOLT, Hexagon	67/		17.038	4	G179861 NA
WASHER, Lock	67/		17.822	4	G114607 NA

6.005–3 BREATHER, Transmission Case

67	SIX (WST-Except Heavy Duty-* 6-2)(WOD)	.....	1	315 0594
68/70	199 (LHD-WST-Except Export)(WOD)	.....	1	315 0594
70/	232 (01-Except Export)(40-Except Export)	.....	1	315 0594
67	***SIX (Heavy Duty-LHD-10-WST-* 6-2)***	.....	1	317 1841
67	V8 (WST)(WOD)	.....	1	317 1841
67/	V8 (W4ST)	.....	1	315 0594

6.005–4 PLUG, Transmission Filler Pipe

67		17.512	1	G438159	NA
68/70	199 (LHD-WST-Except Export)(WOD)	17.512	1	G438159	NA
68/70	232	17.512	1	G444592	NA
71/	232 (01-WST-Except Export)(40-WST-Except Export-* 6-13)	17.512	1	G438159	NA
71/	232 (40-WST-* 6-14)	17.512	1	G444592	NA
71/	232 (10-WST)(70-WST)(80-WST)	17.512	1	G444592	NA
71/	258 (01-WST)(40-WST)	17.512	1	G444592	NA
68/69	***199 (RHD)***	17.512	1	G444592	NA
68/	V8 (WST)(WOD)	17.512	1	G444592	NA
68/	V8 (W4ST)	17.512	1	G438159	NA

6.005–5 PLUG, Transmission Expansion

67	(WST)(WOD)	17.500	1	G105602
68/70	199 (LHD-WST-Except Export)(WOD)	17.500	1	G105602
70/	232 (01-WST-Except Export)(40-WST-Except Export)	17.500	1	G105602

STANDARD, OVERDRIVE AND FOURSPEED TRANSMISSION

6.005–6 PLUG, Transmission Drain

67		.....	1	315 5923	
68/70	199 (LHD-WST-Except Export)(WOD)	.....	1	315 5923	
68/69	232 (Except Heavy Duty-* 6-2)	17.512	1	G444592	NA
70/	232 (01-WST-Except Export)(40-WST-Except Export)	.....	1	315 5923	
70/	232 (10-WST)(70-WST)(80-WST)	.....	1	319 2370	
71/	258 (01-WST)(40-WST)	.....	1	319 2370	
68/69	***SIX (Heavy Duty-LHD-10-WST-* 6-2)(Heavy Duty-LHD-80-WST-* 6-2)***	.....	1	319 2370	
71/	***SIX (Heavy Duty-LHD-01-WST-* 6-8)(Heavy Duty-LHD-40-WST-* 6-8)***	.....	1	319 2370	
68/70	***199 (Export-LHD-WST)***	17.512	1	G444592	NA
70/	***232 (Export-LHD-01-WST)(Export-LHD-40-WST)***	17.512	1	G444592	NA
68/69	***199 (RHD)***	17.512	1	G444592	NA
68/	V8 (WST)(WOD)	.....	1	319 2370	
68/	V8 (W4ST)	.....	1	315 5923	

6.009–1 COVER, Transmission Case

67	SIX (WST-Except Heavy Duty-* 6-2)(WOD)	.....	1	317 3617
70/	SIX (10-WST)(70-WST)(80-WST)	.....	1	319 2388
68/70	199 (LHD-WST-Except Export)(WOD)	.....	1	317 3617
68/69	232 (LHD-WST-Except Heavy Duty-* 6-2)(WOD)	.....	1	319 2388
70/	232 (01-WST-Except Export)(40-WST-Except Export-* 6-13)	.....	1	317 3617
71/	232 (40-WST-* 6-14)	.....	1	319 2388
71/	258 (01-WST)(40-WST)	.....	1	319 2388
67	***SIX (Heavy Duty-LHD-10-* 6-2)***	.....	1	317 4617
68/69	***SIX (Heavy Duty-LHD-10-WST-* 6-2)(Heavy Duty-LHD-80-WST-* 6-2)***	.....	1	319 2392
71/	***232 (Heavy Duty-LHD-01-* 6-8)(Heavy Duty-LHD-40-* 6-8)***	.....	1	319 2388
68/70	***199 (Export-LHD-WST)***	.....	1	319 2388
70/	***232 (Export-01-WST)(Export-40-WST)***	.....	1	319 2388
68/69	***01-10 (RHD)***	.....	1	319 2388
67	V8 (WST)(WOD)	.....	1	317 4617
68/70	V8 (WST)(WOD)	.....	1	319 2392
71/	304 (40-WST)(70-WST)	.....	1	319 2388
71	360 (01-WST)(70-WST)	.....	1	319 2392
67/70	V8 (W4ST)	.....	1	318 4151
71/	V8 (W4ST)	.....	1	448 9329

6.009–2 ATTACHING PARTS, Cover To Case

SCREW, Machine.....	67	SIX (WST-Except Heavy Duty-* 6-2)(WOD)	9.007	4	400 0722	
SCREW, Machine.....	68/70	199 (LHD-WST-Except Export)(WOD)	9.007	4	400 0722	
SCREW, Machine.....	68/69	232 (Six-WST-Except Heavy Duty-* 6-2)(WOD).....	9.007	6	400 0722	
SCREW, Machine.....	70/	232 (01-WST-Except Export)(40-WST-Except Export)	9.007	4	400 0722	
SCREW, Machine.....	71/	258 (01-WST)(40-WST)	9.007	6	400 0722	
SCREW, Machine.....	70/	SIX (10-WST)(70-WST)(80-WST)	9.007	6	400 0722	
SCREW, Machine.....	67	V8 (WST)(WOD)	9.007	6	400 0722	
SCREW, Machine.....	68/	V8 (WST)(WOD)	9.007	8	400 0722	
***SCREW, Machine.....	***68/70***	***199 (Export-LHD-WST)***	9.007	6	400 0722	
***SCREW, Machine.....	***70/***	***232 (Export-01-WST)(Export-40-WST)***	9.007	6	400 0722	
***SCREW, Machine.....	***71/***	***232 (Heavy Duty-01-WST-* 6-8) (Heavy Duty-LHD-40-* 6-8)***	9.007	6	400 0722	
***SCREW, Machine.....	***67***	***SIX (Heavy Duty-10-WST-* 6-2)***	9.007	6	400 0722	
BOLT, Hexagon	67/	V8 (W4ST)	17.038	9	G179816	NA

6.009–3 GASKET, Transmission Case Cover

67	SIX (WST-Except Heavy Duty-* 6-2)(WOD)	.....	1	317 2103
70/	SIX (10-WST)(70-WST)(80-WST)	.....	1	319 2413
68/70	199 (LHD-WST-Except Export)(WOD)	.....	1	317 2103
68/69	232 (LHD-WST-Except Heavy Duty-* 6-2)(WOD)	.....	1	319 2413
70/	232 (01-WST-Except Export)(40-WST-Except Export-* 6-13)	.....	1	317 2103
71/	232 (40-WST-* 6-14)	.....	1	319 2413
71/	258 (01-WST)(40-WST)	.....	1	319 2413

67	***SIX (Heavy Duty-LHD-10-* 6-2)***	.....	.....	1	320 5225
68/69	***SIX (Heavy Duty-LHD-10-WST-* 6-2)(Heavy Duty-LHD-80-WST-* 6-2)***	.....	.....	1	319 2404
71/	***232 (Heavy Duty-LHD-01-WST-* 6-8)(Heavy Duty-LHD-40-WST-* 6-8)***	.....	.....	1	319 2413
68/70	***199 (Export-LHD-WST)***	.....	.....	1	319 2413
70/	***232 (Export-LHD-01-WST)(Export-LHD-40-WST)***	.....	.....	1	319 2413
67	V8 (WST)(WOD)	.....	.....	1	320 5225
68/70	V8 (WST)(WOD)	.....	.....	1	319 2404
71/	304 (40-WST)(70-WST)	.....	.....	1	319 2413
71	360 (01-WST)(70-WST)	.....	.....	1	319 2404
67/	V8 (W4ST)	.....	.....	1	315 0618
68/69	***01-10 (RHD)***	.....	.....	1	319 2413

6.010–1 SWITCH, Solenoid Control (WTCS)

71/		.....	.....	1	321 1322

6.010–2 PLUNGER, Solenoid Control Switch (WTCS)

71/	SIX (01-WST)(40-WST)	.....	.....	1	321 1321

6.010–3 PLUG, Solenoid Control Switch

71/	SIX (01-WST)(40-WST)	.....	.....	1	321 4061
72	V8 (W4ST)	.....	.....	1	321 4061

6.017–1 CAP, Transmission Front Bearing

67/69	SIX (WST-Except Heavy Duty-* 6-2)(WOD)	.....	.....	1	318 4014
70/	SIX (10-WST)(70-WST)(80-WST)	.....	.....	1	318 4014
70	199 (WST-Except Export)	.....	.....	1	318 4014
70/	232 (01-WST)(40-WST)	.....	.....	1	318 4014
71/	258 (01-WST)(40-WST)	.....	.....	1	318 4014
67	***SIX (Heavy Duty-LHD-10-WST-* 6-2)***	.....	.....	1	319 0452
68/69	***SIX (Heavy Duty-LHD-10-WST-* 6-2)(Heavy Duty-LHD-80-WST-* 6-2)***	 85	.....	1	319 2409
70/	***232 (Export-01-WST)(Export-40-WST)***	.....	.....	1	318 4014
71/	***232 (Heavy Duty-LHD-01-WST-* 6-8)(Heavy Duty-LHD-40-WST-* 6-8)***	.....	.....	1	318 4014
67	V8 (WST)(WOD)	.....	.....	1	319 0452
68/69	V8 (WST)(WOD)	 85	.....	1	319 2409
70	V8 (01-WST)	.....	.....	1	319 9586
70	V8 (70-WST)	.....	.....	1	319 9585
71	304 (70-WST)	.....	.....	1	321 2216
72	304 (40-WST)(70-WST)	.....	.....	1	318 4014
71	360 (01-WST)(70-WST)	.....	.....	1	319 9586
67/69	V8 (W4ST)	.....	.....	1	318 5168
70/	V8 (W4ST)	.....	.....	1	319 9591

6.017–2 ATTACHING PARTS, Cap To Transmission

BOLT, Hexagon	67/69	01-10-30-50-70-80 (Six-WST-Except Heavy Duty) (Six-WOD)(V8-W4ST)	.....	3	317 1599
BOLT, Hexagon	71/	SIX (WST)	.....	3	317 1599
BOLT, Hexagon	67	V8 (WST)(WOD)	.....	3	317 1599
BOLT, Hexagon	71/	V8 (W4ST)	.....	4	317 1599
BOLT, Hexagon	71/	304 (40-WST)(70-WST)	.....	3	317 1599
SCREW, Cap	68/71	V8 (WST)(WOD)	.....	3	319 0386
SCREW, Cap	71	360 (01-WST)(70-WST)	.....	4	319 0386
***SCREW, Cap	***67/69***	***SIX (Heavy Duty-LHD-10-WST-* 6-2) (Heavy Duty-LHD-80-WST-* 6-2)***	.....	3	319 0386

Printed in U.S.A.

STANDARD, OVERDRIVE AND FOURSPEED TRANSMISSION

6.017–3 GASKET, Transmission Front Bearing Cap

67/70	SIX (WST–Except Heavy Duty–* 6–2)(WOD)	.....	1	318 4012
71/	SIX (10–WST)(70–WST)(80–WST)	.....	1	318 4012
71/	232 (01–WST–Except Export)(40–WST–Except Export)	.....	1	318 4012
71/	258 (01–WST)(40–WST)	.....	1	318 4012
67	***SIX (Heavy Duty-LHD-10-WST-* 6-2)***	.....	1	319 0458
68/69	***SIX (Heavy Duty-LHD-10-WST-* 6-2)(Heavy Duty-LHD-80-WST-* 6-2)***	.....	1	319 2431
67	V8 (WST)(WOD)	.....	1	319 0458
68/70	V8 (WST)(WOD)	.....	1	319 2431
71	304 (70–WST)	.....	1	321 2207
72	304 (40–WST)(70–WST)	.....	1	318 4012
71	360 (01–WST)(70–WST)	.....	1	314 2431

6.017–4 GASKET, Transmission Front Bearing Cap Screw

68/70	V8 (WST)(WOD)	.....	3	319 0387
71	360 (01–WST)(70–WST)	.....	4	319 0387
67/69	***SIX (Heavy Duty-LHD-10-WST-* 6-2)(Heavy Duty-LHD-80-WST-* 6-2)***	.....	3	319 0387

6.021 SEAL, Transmission Front Bearing Oil

67/	V8	.....	1	317 4533
67/69	***SIX (Heavy Duty-LHD-10-WST-* 6-2)(Heavy Duty-LHD-80-WST-* 6-2)***	.....	1	317 4533

6.024 SHIM, Transmission Front Bearing Cap

67/	(.010) V8 (W4ST)	6.017	AR	315 0649
67/	(.015) V8 (W4ST)	6.017	AR	315 0650

6.028–1 CAP, Transmission Rear Bearing (Incls. Bushing)

67	01 (LHD–199–WST)	111	.....	1	320 6216
68/69	01–40 (LHD–199–WST–Except Export)	111	.....	1	320 6216
70	01–40 (LHD–199–WST–Except Export–* 6–9)	111	.....	1	320 6216
70	01–40 (LHD–199–WST–Except Export–* 6–10)	111	.....	1	321 0898
67	01 (LHD–232–WST)	111	.....	1	320 7109
68/69	01–10–70–80 (LHD–232–WST–WCGS–Except Heavy Duty–* 6–2)	107	.....	1	320 9979
70	01 (232–WST–Except Export)	111	.....	1	320 7981
71/	01–40 (232–WST–Except Export–* 6–13)	111	.....	1	319 9888
71	01–40 (258–WST)	107	.....	1	448 9350
72	01–40 (258–WST)	107	.....	1	812 1786
67	10–50–80 (Six–WST–Except Heavy Duty–* 6–2)	111	.....	1	320 7981
70	10–80 (Six–WST)	107	.....	2	320 9979
71	10–80 (Six–WST)	107	.....	1	448 9350
72	10–80 (Six–WST)	107	.....	1	812 1786
70	40 (232–WST–WFGS)	.....	.....	1	448 8463
71	40 (232–WST–* 6–14)	107	.....	1	448 9350
72	40 (232–WST–* 6–14)	107	.....	1	812 1786
71	70 (232–WST–WFGS)	107	.....	1	448 9350
72	70 (232–WST–WFGS)	107	.....	1	812 1786
69/70	70 (232–WST–WFGS)	.....	.....	1	319 5128
71	***01-40 (Heavy Duty-232-WST-* 6-8)***	107	.....	1	448 9350
67	***10 (Heavy Duty-Six-WST-* 6-2)***	111	.....	1	318 4766
68/69	***10-80 (Heavy Duty-Six-WST-* 6-2)***	101	.....	1	320 9982
68/70	***01-40 (Export-LHD-199-WST)***	107	.....	1	320 9979
70	***01-40 (Export-LHD-232-WST)***	107	.....	1	320 9979
71	***01-40 (Export-LHD-232-WST)***	107	.....	1	448 9350
72	***01-40 (Export-LHD-232-258)***	107	.....	1	812 1786
67	01–10–50–80 (LHD–V8–WST)	111	.....	1	318 4766
68/69	01–10–70–80 (V8–WST–WCGS)	101	.....	1	320 9982
71	01–70 (360–WST)	.....	.....	1	448 8040
71/	40–70 (304–WST)	107	.....	1	448 9350
69/70	70 (V8–WST–WFGS)	.....	.....	1	319 5176
67	***01 (RHD-WST)***	111	.....	1	320 7109
68/69	***01-10 (RHD-WST)***	107	.....	1	320 9979

Printed in U.S.A.

STANDARD, OVERDRIVE AND FOURSPEED TRANSMISSION

6.028–2 ATTACHING PARTS, Cap To Case

BOLT, Hexagon	67/71	SIX (WST–Except Heavy Duty–* 6–2)	17.038	4	G179860	NA
BOLT, Hexagon	71/	304 (40–WST)(70–WST)	17.038	4	G179860	NA
BOLT, Hexagon	67	V8 (WST)	.....	4	320 5234	
BOLT, Hexagon	68/71	V8 (WST)	.....	1	318 6013	
BOLT, Hexagon	68/71	V8 (WST)	17.038	3	G179859	NA
***BOLT, Hexagon	***67***	***SIX (Heavy Duty-10-WST-* 6-2)***	.....	4	320 5234	
***BOLT, Hexagon	***68/69***	***SIX (Heavy Duty-10-WST-* 6-2) (Heavy Duty-80-WST-* 6-2)***	.....	1	318 6013	
***WASHER, Lock	***67/69***	***SIX (Heavy Duty-10-WST-* 6-2)***	17.822	4	G114607	NA
WASHER, Lock	67/70	SIX (WST–Except Heavy Duty–* 6–2)	17.820	4	G103322	NA
WASHER, Lock	71/	SIX (WST)	17.822	4	G114607	NA
WASHER, Lock	71/	304 (40–WST)(70–WST)	17.820	4	G103322	NA
WASHER, Lock	67	V8 (WST)	17.822	4	G114607	NA
WASHER, Lock	68/71	V8 (WST)	17.822	3	G114607	NA

6.028–3 GASKET, Transmission Rear Bearing Cap

70	10–70–80 (WST)	.....	1	319 2437
67	SIX (WST–Except Heavy Duty–* 6–2)	.....	1	318 7310
71/	SIX (10–WST)(70–WST)(80–WST)	.....	1	319 2437
68/70	199 (LHD–WST–Except Export)	.....	1	318 7310
68/69	(232–WST)(V8–WST)	.....	1	319 2437
70/	232 (01–WST–Except Export)(40–WST–Except Export–* 6–13)	.....	1	318 7310
71/	232 (40–WST–* 6–14)	.....	1	319 2437
71/	258 (01–WST)(40–WST)	.....	1	319 2437
67	***SIX (Heavy Duty-10-WST)***	.....	1	318 7382
71/	***232 (Heavy Duty-01-WST-* 6-8)(Heavy Duty-40-WST-* 6-8)***	.....	1	319 2437
68/70	***199 (Export-LHD-WST)***	.....	1	319 2437
70/	***SIX (Export-LHD-01-WST)(Export-LHD-10-WST)***	.....	1	319 2437
67	V8 (WST)	.....	1	318 7382
71/	V8 (WST)	.....	1	319 2437

6.028–4 BUSHING, Transmission Rear Bearing Cap

67/70	WST	16.175	1	320 4721
71	WST ..... ***(Use 320 4721)***	.....	1	321 0937
72	WST	.....	1	812 0148

6.031–1 HOUSING, Transmission Reverse Gear

67/	V8 (W4ST) 82	.....	1	318 4491

6.031–2 ATTACHING PARTS, Housing To Transmission

BOLT, Hexagon	67/	V8 (W4ST–1–1/8" Long)	17.038	2	G179859	NA
BOLT, Hexagon	67/	V8 (W4ST–1–5/8" Long)	17.038	3	G179886	NA

6.031–3 BUSHING, Transmission Reverse Gear Housing

67/	V8 (W4ST)	.....	1	320 7936

6.031–4 SEAL, Transmission Reverse Gear Housing

67/	V8 (W4ST)	.....	1	318 0041

6.031–5 ADAPTER, Fourspeed Transmission To Reverse Gear Housing

67/	V8 (W4ST) 81	.....	1	318 2301

STANDARD, OVERDRIVE AND FOURSPEED TRANSMISSION

6.031–6 ATTACHING PARTS, Adapter To Transmission Case

BOLT, Hexagon 67/	V8 (W4ST)	.....	1	318 2602

6.031–7 GASKET, Fourspeed Transmission Reverse Gear Housing Adapter To Transmission

67/	V8 (W4ST)	.....	1	318 2310

6.031–8 GASKET, Fourspeed Transmission Reverse Gear Housing Adapter To Housing

67/	V8 (W4ST)	.....	1	318 2308

6.032 SEAL, Transmission Rear Bearing Cap Oil

67/	WST	.....	1	315 8703

6.040–1 BEARING, Transmission Front Ball

67/69	SIX (WST-Except Heavy Duty-* 6-2)(WOD)	.....	1	318 4013
70/	SIX (01-WST)(40-WST)	.....	1	318 4013
70/	SIX (10-WST)(70-WST)(80-WST)	.....	1	318 4013
67	***SIX (Heavy Duty-10-WST-* 6-2)***	.....	1	318 9515
68/69	***SIX (Heavy Duty-10-WST-* 6-2)(Heavy Duty-80-WST-* 6-2)***	.....	1	319 2358
67	V8 (WST)(WOD)	.....	1	318 9515
68/69	V8 (WST)(WOD)	.....	1	319 2358
70	V8 (01-WST)	.....	1	448 8141
70	V8 (70-WST)	.....	1	319 2358
71/	304 (40-WST)(70-WST)	.....	1	318 4013
71	360 (01-WST)(70-WST)	.....	1	448 8141
67/	V8 (W4ST)	.....	1	318 3963

6.040–2 WASHER, Transmission Front Ball Bearing

67	SIX (WST-Except Heavy Duty-* 6-2)(WOD)	.....	1	311 3033
70	SIX (10-WST)(70-WST)(80-WST)	.....	1	319 2363
71/	SIX (10-WST)(70-WST)(80-WST)	.....	1	319 3968
68/70	199 (LHD-WST-Except Export)(LHD-WOD)	.....	1	311 3033
68/69	232 (LHD-WST-Except Heavy Duty-* 6-2)(WOD)	.....	1	319 2363
70/	232 (01-WST-Except Export)(40-WST-Except Export-* 6-13)	.....	1	311 3033
71/	232 (40-WST-* 6-14)	.....	1	319 3968
71/	258 (01-WST)(40-WST)	.....	1	319 3968
68/69	***SIX (Heavy Duty-10-WST-* 6-2)(Heavy Duty-80-WST-* 6-2)***	.....	1	319 2377
71/	***232 (Heavy Duty-01-WST-* 6-8)(Heavy Duty-40-WST-* 6-8)***	.....	1	319 3968
68/70	***199 (Export-LHD-WST)***	.....	1	319 2363
70	***232 (Export-LHD-01-WST)(Export-LHD-40-WST)***	.....	1	319 2371
71/	***232 (Export-LHD-01-WST)(Export-LHD-40-WST)***	.....	1	319 3968
68/69	***SIX (RHD-10)(RHD-80)***	.....	1	319 2363
68/71	V8 (WST)(WOD)	.....	1	319 2377
71/	304 (40-WST)(70-WST)	.....	1	319 3968
71	360 (01-WST)(70-WST)	.....	1	319 2377
67/	V8 (W4ST)	.....	1	315 0656

6.044 RING, Transmission Front Ball Bearing Snap

SIX

67	***(.087) 10 (Heavy Duty-Six-WST-* 6-2)***	.....	1	320 8149
67	***(.090) 10 (Heavy Duty-Six-WST-* 6-2)***	.....	1	320 8150
67	***(.093) 10 (Heavy Duty-Six-WST-* 6-2)***	.....	1	320 8151
68/69	***(.118) 10-80 (Heavy Duty-Six-WST-* 6-2)***	.....	1	319 2351
67/69	(.119) SIX (WST-Except Heavy Duty-* 6-2)(WOD)	.....	1	318 4552
70/	(.119) SIX	.....	1	318 4552

68/69	***(.121) 10-80 (Heavy Duty-Six-WST-* 6-2)***	.....	1	320 9983
67/69	(.122) SIX (WST-Except Heavy Duty-* 6-2)(WOD)	.....	1	318 6261
70/	(.122) SIX	.....	1	318 6261
68/69	***(.124) 10-80 (Heavy Duty-Six-WST-* 6-2)***	.....	1	320 9984
67/69	(.125) SIX (WST-Except Heavy Duty-* 6-2)(WOD)	.....	1	318 6262
70/	(.125) SIX	.....	1	318 6262
67/69	(.128) SIX (WST-Except Heavy Duty-* 6-2)(WOD)	.....	1	318 6263
70/	(.128) SIX	.....	1	318 6263
68/69	***(.128) 10-80 (Heavy Duty-Six-WST-* 6-2)***	.....	1	320 9985
67/69	(.131) SIX (WST-Except Heavy Duty-* 6-2)(WOD)	.....	1	318 6264
70/	(.131) SIX	.....	1	318 6264

V8

67	(.087) V8 (WST)(WOD)	.....	1	320 8149
67/	(.087) V8 (W4ST)	.....	1	315 0622
67	(.090) V8 (WST)(WOD)(V8-WST)(V8-WOD)	.....	1	320 8150
67/	(.090) V8 (W4ST)	.....	1	315 0657
67	(.093) V8 (WST)(WOD)	.....	1	320 8151
67/	(.093) V8 (W4ST)	.....	1	315 0658
67/	(.096) V8 (W4ST)	.....	1	315 0659
67/	(.099) V8 (W4ST)	.....	1	315 0660
68/70	(.118) V8 (WST)(WOD)	.....	1	319 2351
71	(.118) 360 (01-WST)(70-WST)	.....	1	319 2351
68/70	(.121) V8 (WST)(WOD)	.....	1	320 9983
71	(.121) 360 (01-WST)(70-WST)	.....	1	320 9983
71/	(.122) 304 (40-WST)(70-WST)	.....	1	318 6261
68/70	(.124) V8 (WST)(WOD)	.....	1	320 9984
71	(.124) 360 (01-WST)(70-WST)	.....	1	320 9984
71/	(.125) 304 (40-WST)(70-WST)	.....	1	318 6262
68/70	(.128) V8 (WST)(WOD)	.....	1	320 9985
71/	(.128) 304 (40-WST)(70-WST)	.....	1	318 6263
71	(.128) 360 (01-WST)(70-WST)	.....	1	320 9985
71/	(.131) 304 (40-WST)(70-WST)	.....	1	318 6264

6.048 RING, Transmission Front Ball Bearing Lock

67/69		.....	1	315 0655
70/	SIX	.....	1	315 0655
70	V8 (70-WST)	.....	1	315 0655
71	304 (40-WST)(70-WST)	.....	1	315 0655
71	360 (01-WST)(70-WST)	.....	1	448 8142
71/	V8 (W4ST)	.....	1	315 0655

6.052 BEARING, Transmission Rear Ball

67	199 (LHD-WST)	.....	1	319 1774
68/70	199 (LHD-WST-Except Export)	.....	1	319 1774
67	232 (WST-Except Heavy Duty-* 6-2)	.....	1	318 1921
68/69	232 (WST-Except Heavy Duty-* 6-2)	.....	1	319 2371
70/	232 (01-WST-Except Export)(40-WST-Except Export-* 6-13)	.....	1	318 1921
71/	232 (40-WST-* 6-14)	.....	1	319 2371
70/	SIX (10-WST)(70-WST)(80-WST)	.....	1	319 2371
71/	258 (01-WST)(40-WST)	.....	1	319 2371
67	***SIX (Heavy Duty-10-WST-* 6-2)***	.....	1	318 9514
68/69	***SIX (Heavy Duty-10-WST-* 6-2)(Heavy Duty-80-WST-* 6-2)***	.....	1	319 2357
71/	***232 (Heavy Duty-01-WST-* 6-8)(Heavy Duty-40-WST-* 6-8)***	.....	1	319 2371
68/70	***199 (Export-LHD-WST)***	.....	1	319 2371
70/	***232 (Export-LHD-01-WST)(Export-LHD-40-WST)***	.....	1	319 2371
67	***SIX (RHD-01)(RHD-10)***	.....	1	318 1921

67	V8 (WST)	.....	1	318 9514
68/69	V8 (WST)	.....	1	319 2357
70	V8 (01-WST)	.....	1	448 8041
70	V8 (70-WST)	.....	1	319 2357
71/	304 (40-WST)(70-WST)	.....	1	319 2371
71	360 (01-WST)(70-WST)	.....	1	321 0459
67/	V8 (W4ST)	6.031	1	318 3963

6.054 WASHER, Transmission Rear Ball Bearing

67	SIX (WST-Except Heavy Duty-* 6-2)	.....	1	318 2391
70	SIX (10-WST)(70-WST)(80-WST)	.....	1	318 2391
68/70	199 (LHD-WST-Except Export)	.....	1	318 2391
70/	232 (01-WST-Except Export)(40-WST-Except Export)	.....	1	318 2391
67	***SIX (Heavy Duty-10-WST-* 6-2)***	6.040	1	315 0656
67	V8 (WST)	6.040	1	315 0656
67/	V8 (W4ST)	6.040	1	315 0656

6.055 RING, Transmission Rear Ball Bearing Spacer

67/	(.087) V8 (W4ST)	6.080	1	315 0622
67/	(.090) V8 (W4ST)	6.069	1	315 0657
67/	(.093) V8 (W4ST)	6.069	1	315 0658
67/	(.096) V8 (W4ST)	6.069	1	315 0659
67/	(.099) V8 (W4ST)	6.069	1	315 0660
67/	(.102) V8 (W4ST)	6.069	1	315 0661
67	V8 (WST)	.....	1	318 5917
67	***SIX (Heavy Duty-10-WST-* 6-2)***	.....	1	318 5917

6.056-1 RING, Transmission Rear Ball Bearing Lock (On Bearing)

70/	SIX (10-WST)(70-WST)(80-WST)	.....	1	319 2378
67	199 (LHD-WST)	.....	1	311 3844
68/70	199 (LHD-WST-Except Export)	.....	1	311 3844
67	232 (LHD-WST-Except Heavy Duty-* 6-2)	.....	1	311 3832
68/69	232 (LHD-01-WST)(LHD-10-WST)(LHD-70-WST)(LHD-80-WST)	.....	1	319 2378
70/	232 (01-WST-Except Export)(40-WST-Except Export-* 6-13)	.....	1	311 3832
71/	232 (40-WST-* 6-14)	.....	1	319 2378
71/	258 (01-WST)(40-WST)	.....	1	319 2378
67	***SIX (Heavy Duty-10-WST-* 6-2)***	6.048	1	315 0655
71/	***232 (Heavy Duty-01-WST-* 6-8)(Heavy Duty-40-WST-* 6-8)***	.....	1	319 2378
68/70	***199 (Export-LHD-WST)***	.....	1	319 2378
70/	***232 (Export-LHD-01-WST)(Export-LHD-40-WST)***	.....	1	319 2378
67	***SIX (RHD-01)(RHD-10)***	.....	1	311 3832
68/69	***SIX (RHD-01)(RHD-10)***	.....	1	319 2378
67	V8 (WST)	6.048	1	315 0655
68/69	V8 (01-WST)(10-WST)(70-WST)(80-WST)	.....	1	319 2378
70	V8 (01-WST)	.....	1	448 8042
70	V8 (70-WST)	.....	1	319 2378
71/	304 (40-WST)(70-WST)	.....	1	319 2378
71	360 (01-WST)(70-WST)	.....	1	321 0460
67/	V8 (W4ST)	6.031	1	318 2587

6.056-2 RING, Transmission Rear Ball Bearing Lock (On Shaft)

SIX

67	***(.087) 10 (Heavy Duty-Six-WST-* 6-2)***	6.080	1	315 0622
67	***(.090) 10 (Heavy Duty-Six-WST-* 6-2)***	6.069	1	315 0657
67	***(.093) 10 (Heavy Duty-Six-WST-* 6-2)***	6.069	1	315 0658
67	***(.096) 10 (Heavy Duty-Six-WST-* 6-2)***	6.069	1	315 0659
67	***(.099) 10 (Heavy Duty-Six-WST-* 6-2)***	6.069	1	315 0660
67	***(.102) 10 (Heavy Duty-Six-WST-* 6-2)***	6.069	1	315 0661

Printed in U.S.A.

STANDARD, OVERDRIVE AND FOURSPEED TRANSMISSION

67/69	(.119) SIX (WST-Except Heavy Duty-* 6-2)	.....	1	318 1923
70/	(.119) SIX (WST)	.....	1	318 1923
68/	***(.119) 10-80 (Heavy Duty-Six-WST-* 6-2)***	6.044	1	318 4552
67/69	(.122) SIX (WST-Except Heavy Duty-* 6-2)	.....	1	318 3904
70/	(.122) SIX (WST)	.....	1	318 3904
68/69	***(.122) 10-80 (Heavy Duty-Six-WST-* 6-2)***	6.044	1	318 6261
67/69	(.125) SIX (WST-Except Heavy Duty-* 6-2)	.....	1	318 3905
70/	(.125) SIX (WST)	.....	1	318 3905
68/69	***(.125) 10-80 (Heavy Duty-Six-WST-* 6-2)***	6.044	1	318 6262
67/69	(.128) SIX (WST-Except Heavy Duty-* 6-2)	.....	1	318 3906
70/	(.128) SIX (WST)	.....	1	318 3906
68/69	***(.128) 10-80 (Heavy Duty-Six-WST-* 6-2)***	6.044	1	318 6263
67/69	(.131) SIX (WST-Except Heavy Duty-* 6-2)	.....	1	318 3930
70/	(.131) SIX (WST)	.....	1	318 3930
68/69	***(.131) 10-80 (Heavy Duty-Six-WST-* 6-2)***	6.044	1	318 6264

V8

67	(.087) V8 (WST)	6.080	1	315 0622
67/	(.087) V8 (W4ST)	6.080	1	315 0622
67	(.090) V8 (WST)	6.069	1	315 0657
67/	(.090) V8 (W4ST)	6.069	1	315 0657
67	(.093) V8 (WST)	6.069	1	315 0658
67/	(.093) V8 (W4ST)	6.069	1	315 0658
67	(.096) V8 (WST)	6.069	1	315 0659
67/	(.096) V8 (W4ST)	6.069	1	315 0659
67	(.099) V8 (WST)	6.069	1	315 0660
67/	(.099) V8 (W4ST)	6.069	1	315 0660
67	(.102) V8 (WST)	6.069	1	315 0661
67/70	(.102) V8 (W4ST)	6.069	1	315 0661
68/70	(.119) V8 (WST)	6.044	1	318 4552
71/	(.119) 304 (40-WST)(70-WST)	.....	1	318 1923
71	(.119) 360 (01-WST)(70-WST)	6.044	1	318 4552
68/70	(.122) V8 (WST)	6.044	1	318 6261
71/	(.122) 304 (40-WST)(70-WST)	.....	1	318 3904
71	(.122) 360 (01-WST)(70-WST)	6.044	1	318 6261
68/70	(.125) V8 (WST)	6.044	1	318 6262
71/	(.125) 304 (40-WST)(70-WST)	.....	1	318 3905
71	(.125) 360 (01-WST)(70-WST)	6.044	1	318 6262
68/70	(.128) V8 (WST)	6.044	1	318 6263
71/	(.128) 304 (40-WST)(70-WST)	.....	1	318 3906
71	(.128) 360 (01-WST)(70-WST)	6.044	1	318 6263
68/70	(.131) V8 (WST)	6.044	1	318 6264
71/	(.131) 304 (40-WST)(70-WST)	.....	1	318 3930
71	(.131) 360 (01-WST)(70-WST)	6.044	1	318 6264

6.060 SHAFT, Transmission Clutch

71/	SIX (10-WST)(70-WST)(80-WST)	.....	1	319 2389
67	199 (LHD-WST)(WOD)	.....	1	318 4561
68/69	199 (LHD-WST-Except Export)(WOD)	.....	1	318 4561
70	199 (LHD-WST-Except Export-* 6-5)	.....	1	318 4561
70	199 (LHD-WST-Except Export-* 6-6)	.....	1	321 0900
67	232 (LHD-WST-Except Heavy Duty-* 6-2)(WOD)	.....	1	318 4728
68/69	232 (LHD-WST-Except Heavy Duty-* 6-2)(WOD)	.....	1	319 2389
70/	232 (01-WST-Except Export)(40-WST-Except Export-* 6-13)	.....	1	318 4728
71/	232 (40-WST-* 6-14)	.....	1	319 2389
71/	258 (01-WST)(40-WST)	.....	1	319 2389
67	***SIX (Heavy Duty-10-WST-* 6-2)***	.....	1	318 7349
68/69	***SIX (Heavy Duty-10-WST-* 6-2)(Heavy Duty-80-WST-* 6-2)***	.....	1	319 2391
71/	***232 (Heavy Duty-01-WST-* 6-8)(Heavy Duty-40-WST-* 6-8)***	.....	1	319 2389
68/70	***199 (Export-LHD-WST)***	.....	1	319 2389
70/	***232 (Export-LHD-01-WST)(Export-LHD-40-WST)***	.....	1	319 2389

STANDARD, OVERDRIVE AND FOURSPEED TRANSMISSION

67	V8 (WST)(WOD)	.....	1	318 7349
68/69	V8 (WST)(WOD)	.....	1	319 2391
70	V8 (70-WST-WFGS)	.....	1	319 9590
71	304 (70-WST)	.....	1	321 2217
72	304 (40-WST)(70-WST)	.....	1	319 2389
71	360 (01-WST)(70-WST)	.....	1	319 9588
67	(AS 8-T10P) V8 (W4ST)	.....	1	318 5638
67	(AS 9-T10P) V8 (W4ST)	.....	1	318 5638
67/68	(AS 1-T10T) V8 (W4ST)	.....	1	318 9056
67	(AS 2-T10T) V8 (W4ST)	.....	1	318 9056
68/70	(AS 1-T10V) V8 (W4ST-* 6-1)	.....	1	319 4306
68/69	(AS 2-T10V) V8 (W4ST-* 6-1)	.....	1	319 4306
70	(AS 4-T10V) V8 (W4ST)	.....	1	319 9595
71/	V8 (W4ST)	.....	1	319 9595
67	***SIX (RHD-01-WST)(RHD-10-WST)***	.....	1	318 4728
68/69	***01-10 (RHD-WST)***	.....	1	319 2389

6.068–1 SHAFT, Standard Transmission Spline

67	10-50-80 (Six-Except Heavy Duty-* 6-2)	.....	1	318 7303
70/	10-70-80 (Six-WST)	.....	1	319 2448
67	01 (LHD-199)	.....	1	318 2562
68/70	01-40 (LHD-199-Except Export-* 6-5)	.....	1	318 2562
70	01 (LHD-199-Except Export-* 6-6)	.....	1	321 0899
67	01 (LHD-232)	.....	1	318 2561
68/69	01-10-70-80 (232-Except Heavy Duty-* 6-2)	.....	1	319 2448
70/	01-40 (232-WST-Except Export-* 6-13)	.....	1	318 7303
71/	01-40 (258-WST)	.....	1	319 2448
71/	40 (232-WST-* 6-14)	.....	1	319 2448
71/	***01-40 (Heavy Duty-232)***	.....	1	319 2448
67	***10 (Heavy Duty-Six-* 6-2)***	.....	1	318 8529
68/69	***10-80 (Heavy Duty-Six-* 6-2)***	.....	1	319 2447
68/70	***01 (Export-LHD-199)***	.....	1	319 2448
70/	***01-40 (Export-LHD-232)***	.....	1	319 2448
67	***01 (RHD-Six)***	.....	1	318 2561
68/69	***01 (RHD-Six)***	.....	1	319 2448
67	01-10-50-80 (V8)	.....	1	318 7352
68/69	01-10-70-80 (V8)	.....	1	319 2447
70	70 (V8)	.....	1	319 2447
71/	40-70 (304-WST)	.....	1	319 2448
71	01-70 (360-WST)	.....	1	319 9593

6.068–2 SHAFT, Overdrive Transmission Spline

67/69	199	.....	1	318 2563
67	232	.....	1	318 1904
68/69	232	.....	1	319 2445
67	V8	.....	1	318 7348
68	V8	.....	1	319 2347

6.068–3 SHAFT, Fourspeed Transmission Spline

67/71	V8 (W4ST)	.....	1	318 5639
72	V8 (W4ST-* 6-15)	.....	1	318 5639
72	V8 (W4ST-* 6-16)	.....	1	321 8973

6.076–1 ROLLER, Transmission Spline Shaft Pilot Bearing

67	SIX (Except Heavy Duty-* 6-2)	.....	21	318 1914
70/	SIX (10-WST)(70-WST)(80-WST)	.....	21	320 8152
68/70	199 (LHD-WST-Except Export)(WOD)	.....	21	318 1914
68/69	232	.....	21	320 8152
70/	232 (01-WST-Except Export)(40-WST-Except Export-* 6-13)	.....	21	318 1914
71/	232 (40-WST-* 6-14)	.....	21	320 8152
71/	258 (01-WST)(40-WST)	.....	21	320 8152

67	***SIX (Heavy Duty-10-WST-* 6-2)***	.....	.....	21	320 8152
71	***01-40 (Heavy Duty-232-WST-* 6-8)***	.....	.....	21	320 8152
68/70	***199 (Export-LHD-WST)***	.....	.....	21	320 8152
70/	***232 (Export-LHD-01-WST)(Export-LHD-40-WST)***	.....	.....	21	320 8152
68/69	***199 (RHD)***	.....	.....	21	320 8152
67	V8 (WST)(WOD)	.....	.....	21	320 8152
68/	V8 (WST)(WOD)	.....	.....	21	320 8152
67/	V8 (W4ST)	.....	.....	16	318 6922

6.076–2 SPACER, Transmission Spline Shaft Pilot Bearing Roller

67/	V8 (W4ST)	.....	.....	1	318 6924

6.080–1 CLUTCH ASSEMBLY, Transmission Synchronizer Second And High (Incl. Friction Ring)

67	199 (LHD)	78	.....	1	320 3012
68/70	199 (LHD-Except Export)(WOD)	78	.....	1	320 3012
67	232 (Except Heavy Duty-* 6-2)	78	.....	1	318 1922
68/69	232 (Except Heavy Duty-* 6-2)	78	.....	1	319 3809
70	232 (01-WST-Except Export)(40-WST-Except Export)	78	.....	1	318 1922
71/	232 (01-WST-Except Export)(40-WST-Except Export-* 6-13)	78	.....	1	812 0321
71/	232 (40-WST-* 6-14)	78	.....	1	319 3809
71/	258 (01-WST)(40-WST)	78	.....	1	319 3809
70/	SIX (10-WST)(70-WST)(80-WST)	78	.....	1	319 3809
67	V8 (WST)(WOD)	78	.....	1	320 7558
68/70	V8 (WST)(WOD)	***(Use 319 3779)***	.....	1	320 9969
71	360 (01-WST)(70-WST)	***(Use 319 3779)***	.....	1	320 9969
71/	304 (40-WST)(70-WST)	78	.....	1	319 3809
68/70	***199 (Export-LHD)***	78	.....	1	319 3809
70/	***232 (Export-LHD-01-WST)(Export-LHD-40-WST)***	78	.....	1	319 3809
71/	***232 (Heavy Duty-LHD-01-WST-* 6-8)(Heavy Duty-LHD-40-WST-* 6-8)***	78	.....	1	319 3809
67	***SIX (Heavy Duty-10-WST-* 6-2)***	78	.....	1	320 7558
68/69	***SIX (Heavy Duty-10-WST-* 6-2)(Heavy Duty-80-WST-* 6-2)***	***(Use 319 3779)***	.....	1	320 9969
67	***199 (RHD)***	78	.....	1	318 1922
68/69	***199 (RHD)***	78	.....	1	319 3809

6.080–2 CLUTCH ASSEMBLY, Transmission Synchronizer Low And Reverse (Incl. Friction Rings)

68/69	232 (Except Heavy Duty-* 6-2)	100	.....	1	320 9973
70/	SIX (01-WST)(10-WST)(70-WST)(80-WST)	100	.....	1	320 9973
71/	258 (40-WST)	100	.....	1	320 9973
71/	304 (40-WST)(70-WST)	100	.....	1	320 9973
68/70	V8 (WST)(WOD)	108	.....	1	320 9974
71	360 (01-WST)(70-WST)	108	.....	1	320 9974
68/70	***199 (Export-LHD)***	100	.....	1	320 9973
70/	***232 (Export-LHD-01-WST)(Export-LHD-40-WST)***	100	.....	1	320 9973
71/	***01-40 (Heavy Duty-LHD-WST-* 6-8)***	100	.....	1	320 9973
68/69	***SIX (Heavy Duty-10-WST-* 6-2)(Heavy Duty-80-WST-* 6-2)***	108	.....	1	320 9974
68/69	***199 (RHD)***	100	.....	1	320 9973

6.080–3 CLUTCH ASSEMBLY, Fourspeed Transmission Synchronizer Third And Fourth (Incl. Friction Ring)

67/	V8 (W4ST)	***(Use 320 7584)***	.....	1	318 2304

6.080–4 CLUTCH ASSEMBLY, Fourspeed Transmission Synchronizer Low And Second (Incl. Friction Rings)

67/	V8 (W4ST)	***(Use 320 7585)***	.....	1	318 2574

Printed in U.S.A.

STANDARD, OVERDRIVE AND FOURSPEED TRANSMISSION

6.080–5 RING, Transmission Synchronizer Clutch Second And High Snap

SIX

67	***(.087) 10 (Heavy Duty-Six-WST-* 6-2)***	.....	1	315 0622
67	***(.090) 10 (Heavy Duty-Six-WST-* 6-2)***	6.069	1	315 0657
67	***(.093) 10 (Heavy Duty-Six-WST-* 6-2)***	6.069	1	315 0658
67	***(.096) 10 (Heavy Duty-Six-WST-* 6-2)***	6.069	1	315 0659
68/	(.119) 232-258	6.044	1	318 4552
68/70	***(.119) 199 (Export-LHD-WST)***	6.044	1	318 4552
68/69	***(.119) 199 (RHD)***	6.044	1	318 4552
68/	(.122) 232-258	6.044	1	318 6261
68/70	***(.122) 199 (Export-LHD-WST)***	6.044	1	318 6261
68/69	***(.122) 199 (RHD)***	6.044	1	318 6261
68/	(.125) 232-258	6.044	1	318 6262
68/70	***(.125) 199 (Export-LHD-WST)***	6.044	1	318 6262
68/69	***(.125) 199 (RHD)***	6.044	1	318 6262
68/	(.128) 232-258	6.044	1	318 6263
68/70	***(.128) 199 (Export-LHD-WST)***	6.044	1	318 6263
68/69	***(.128) 199 (RHD)***	6.044	1	318 6263
67	SIX (Except Heavy Duty-* 6-2)	.....	1	318 3655
68/70	199 (LHD-WST-Except Export)(WOD)	.....	1	318 3655
70/	232 (01-WST-Except Export)(40-WST-Except Export)	.....	1	318 3655

V8

67	(.087) V8 (WST)(WOD)	.....	1	315 0622
67	(.090) V8 (WST)(WOD)	6.069	1	315 0657
67	(.093) V8 (WST)(WOD)	6.069	1	315 0658
67	(.096) V8 (WST)(WOD)	6.069	1	315 0659
68/	(.119) V8 (WST)(WOD)	6.044	1	318 4552
68/	(.122) V8 (WST)(WOD)	6.044	1	318 6261
68/	(.125) V8 (WST)(WOD)	6.044	1	318 6262
68/	(.128) V8 (WST)(WOD)	6.044	1	318 6263

6.080–6 RING, Transmission Synchronizer Clutch Low And Reverse Snap

SIX

68/69	***(.118) 10-80 (Heavy Duty-Six-WST-* 6-2)***	6.120	1	318 2332
68/	(.119) 232 (Except Heavy Duty-* 6-2)	6.044	1	318 4552
68/70	***(.119) 199 (Export-LHD-WST)***	6.044	1	318 4552
68/69	***(.119) 199 (RHD)***	6.044	1	318 4552
68/69	***(.121) 10-80 (Heavy Duty-Six-WST-* 6-2)***	.....	1	318 6124
68/	(.122) 232 (WST-Except Heavy Duty-* 6-2)	6.044	1	318 6261
68/70	***(.122) 199 (Export-LHD-WST)***	6.044	1	318 6261
68/69	***(.122) 199 (RHD)***	6.044	1	318 6261
68/69	***(.124) 10-80 (Heavy Duty-Six-WST-* 6-2)***	.....	1	318 6125
68/	(.125) 232 (WST-Except Heavy Duty-* 6-2)	6.044	1	318 6262
68/70	***(.125) 199 (Export-LHD-WST)***	6.044	1	318 6262
68/69	***(.125) 199 (RHD)***	6.044	1	318 6262
68/	(.128) 232 (WST-Except Heavy Duty-* 6-2)	6.044	1	318 6263
68/70	***(.128) 199 (Export-LHD-WST)***	6.044	1	318 6263
68/69	***(.128) 199 (RHD)***	6.044	1	318 6263

Printed in U.S.A.

V8

68/70	(.118) V8 (WST)(WOD)	6.120	1	318 2332
71	(.118) 360 (70-WST)	6.120	1	318 2332
71/	(.119) 304 (40-WST)(70-WST)	6.044	1	318 4552
68/70	(.121) V8 (WST)(WOD)	.....	1	318 6124
71/	(.121) 304 (40-WST)(70-WST)	6.044	1	318 6261
71	(.121) 360 (70-WST)	.....	1	318 6124
68/70	(.124) V8 (WST)(WOD)	.....	1	318 6125
71	(.124) 360 (70-WST)	.....	1	318 6125
71/	(.125) 304 (40-WST)(70-WST)	6.044	1	318 6262
71/	(.128) 304 (40-WST)(70-WST)	6.044	1	318 6263

6.080–7 RING, Fourspeed Transmission Synchronizer Third And Fourth Snap

67/	(.087) V8 (W4ST)	.....	1	315 0622
67/	(.090) V8 (W4ST)	6.069	1	315 0657
67/	(.093) V8 (W4ST)	6.069	1	315 0658
67/	(.096) V8 (W4ST)	6.069	1	315 0659

6.080–8 RING, Fourspeed Transmission Synchronizer Low And Second Snap

67/	(.118) V8 (W4ST)	6.120	1	318 2332
67/	(.121) V8 (W4ST)	.....	1	318 6124
67/	(.124) V8 (W4ST)	.....	1	318 6125

6.090 RING SET, Transmission Synchronizer Clutch Friction

70/	SIX (10)(70)(80)	88	.....	1	320 9971
67	199 (LHD)	74	.....	1	320 4224
68/70	199 (LHD-WST-Except Export)(WOD)	74	.....	1	320 4224
67	232 (Except Heavy Duty-* 6-2)	74	.....	1	320 7320
68/69	232 (Except Heavy Duty-* 6-2)	88	.....	1	320 9971
70/	232 (01-WST-Except Export)(40-WST-Except Export-* 6-13)	74	.....	1	320 7320
71/	232 (40-WST-* 6-14)	88	.....	1	320 9971
71/	258 (01-WST)(40-WST)	88	.....	1	320 9971
67	***SIX (Heavy Duty-10-WST-* 6-2)***	74	.....	1	320 7559
68/69	***SIX (Heavy Duty-10-WST-* 6-2)(Heavy Duty-80-WST-* 6-2)***	88	.....	1	320 9972
71/	***232 (Heavy Duty-01-WST-* 6-8)(Heavy Duty-40-WST-* 6-8)***	88	.....	1	320 9971
68/70	***199 (Export-LHD-WST)***	88	.....	1	320 9971
70	***232 (Export-LHD-01-WST)(Export-LHD-40-WST)***	88	.....	1	320 9971
67	***199 (RHD)***	74	.....	1	320 7320
68/69	***199 (RHD)***	88	.....	1	320 9971
67	V8 (WST)(WOD)	74	.....	1	320 7559
68/70	V8 (WST)(WOD)	88	.....	1	320 9972
71/	304 (40-WST)(70-WST)	88	.....	1	320 9971
71	360 (01-WST)(70-WST)	88	.....	1	320 9972
67/	V8 (W4ST)	74	.....	2	320 0045

6.100–1 PLATE, Transmission Synchronizer Clutch Shaft Second And High

67	SIX (Except Heavy Duty-* 6-2 And * 6-11)	.....	3	311 3847
70/	SIX (10-WST)(70-WST)(80-WST)	.....	3	319 2412
68/70	199 (LHD-WST-Except Export-* 6-11)(WOD-* 6-11)	.....	3	311 3847
68/70	232	.....	3	319 2412
70/71	232 (01-WST-Except Export-* 6-11)(40-WST-Except Export-* 6-11)	.....	3	311 3847
71	232 (01-WST-Except Export-* 6-12)(40-WST-Except Export-* 6-12)	.....	3	321 5175
72	232 (01-WST-Except Export)(40-WST-Except Export-* 6-13)	.....	3	321 5175
71/	232 (40-WST-* 6-14)	.....	3	319 2412
71/	258 (01-WST)(40-WST)	.....	3	319 2412

67	***SIX (Heavy Duty-10-WST-* 6-2)***	.....	3	310 8241
71/	***232 (Heavy Duty-LHD-01-WST-* 6-8)(Heavy Duty-LHD-40-WST-* 6-8)***	.....	3	319 2412
68/70	***199 (Export-LHD-WST)***	.....	3	319 2412
70/	***232 (Export-LHD-01-WST)(Export-LHD-40-WST)***	.....	3	319 2412
68/69	***199 (RHD)***	.....	3	319 2412
67	V8 (WST)(WOD)	.....	3	310 8241
68/	V8 (WST)(WOD)	.....	3	319 2412

6.100–2 PLATE, Transmission Synchronizer Clutch Shaft Low And Reverse

70/	SIX (10-WST)(70-WST)(80-WST)	.....	3	319 2428
68/69	232 (Except Heavy Duty-* 6-2)	.....	3	319 2428
70/	232 (01-WST-Except Export)(40-WST-Except Export)	.....	3	319 2428
71/	258 (01-WST)(40-WST)	.....	3	319 2428
68/70	***SIX (Heavy Duty-10-WST-* 6-2)(Heavy Duty-LHD-80-WST-* 6-2)***	.....	3	319 2434
71/	***232 (Heavy Duty-01-WST-* 6-8)(Heavy Duty-40-WST-* 6-8)***	.....	3	319 2428
68/70	***199 (Export-LHD-WST)***	.....	3	319 2428
70/	***232 (Export-LHD-01-WST)(Export-LHD-40-WST)***	.....	3	319 2428
68/69	***199 (RHD)***	.....	3	319 2428
68/70	V8 (WST)(WOD)	.....	3	319 2434
71/	304 (40-WST)(70-WST)	.....	3	319 2428
71	360 (01-WST)(70-WST)	.....	3	319 2434

6.100–3 PLATE, Fourspeed Transmission Synchronizer Clutch Shaft

67/	V8 (W4ST)	.....	6	318 2573

6.100–4 SPRING, Transmission Synchronizer Shaft Plate Retaining

70/	SIX (10-WST)(70-WST)(80-WST)	.....	3	319 3236
67	199 (LHD)	.....	2	310 8317
68/70	199 (LHD-WST-Except Export)(WOD)	.....	2	310 8317
67	232 (Except Heavy Duty-* 6-2)	.....	2	318 1918
68/69	232 (Except Heavy Duty-* 6-2)	.....	3	319 3236
70/	232 (01-WST-Except Export)(40-WST-Except Export-* 6-13)	.....	2	318 1918
71/	232 (40-WST-* 6-14)	.....	2	319 3236
71/	258 (01-WST)(40-WST)	.....	2	319 3236
67	***SIX (Heavy Duty-10-WST-* 6-2)***	.....	2	318 4702
68/71	***SIX (Heavy Duty-10-WST-* 6-2)(Heavy Duty-80-WST-* 6-2)***	.....	3	319 2454
71/	***232 (Heavy Duty-LHD-01-WST-* 6-8)(Heavy Duty-LHD-40-WST-* 6-8)***	.....	2	319 3236
68/70	***199 (Export-LHD-WST)***	.....	3	319 3236
70/	***232 (Export-LHD-01-WST)(Export-LHD-40-WST)***	.....	3	319 3236
67	***199 (RHD)***	.....	2	318 1918
68/69	***199 (RHD)***	.....	3	319 3236
67	V8 (WST)(WOD)	.....	2	318 4702
68/70	V8 (WST)(WOD)	.....	3	319 2454
71/	304 (40-WST)(70-WST)	.....	2	319 3236
71	360 (01-WST)(70-WST)	.....	2	319 2454
67/	V8 (W4ST)	.....	4	318 2306

6.120 GEAR, Transmission Second Speed (Incls. Bushing)

70/	SIX (10-WST)(70-WST)(80-WST)	.....	1	319 2390
67	199 (LHD)	.....	1	316 2785
68/70	199 (LHD-WST-Except Export)(WOD)	.....	1	316 2785
70	199 (LHD-* 6-4)	.....	1	448 8907
67	232 (Except Heavy Duty-* 6-2)	.....	1	320 8215
68/69	232 (Except Heavy Duty-* 6-2)	.....	1	319 2390
70/	232 (01-WST-Except Export)(40-WST-Except Export-* 6-13)	.....	1	320 8215
71/	232 (40-WST-* 6-14)	.....	1	319 2390
71/	258 (01-WST)(40-WST)	.....	1	319 2390

67	***SIX (Heavy Duty-10-WST-* 6-2)***	.....	.....	1	320 8099
68/69	***SIX (Heavy Duty-10-WST-* 6-2)(Heavy Duty-80-WST-* 6-2)***	.....	.....	1	319 2385
71/	***232 (Heavy Duty-LHD-01-WST-* 6-8)(Heavy Duty-LHD-40-WST-* 6-8)***	.....	.....	1	319 2390
68/70	***199 (Export-LHD-WST)***	.....	.....	1	319 2390
70/	***232 (Export-LHD-01-WST)(Export-LHD-40-WST)***	.....	.....	1	319 2390
67	***199 (RHD)***	.....	.....	1	320 8215
68/69	***199 (RHD)***	.....	.....	1	319 2390
67	V8 (WST)(WOD)	.....	.....	1	320 8099
68/70	V8 (WST)(WOD)	.....	.....	1	319 2385
71/	304 (40-WST)(70-WST)	.....	.....	1	319 2390
71	360 (01-WST)(70-WST)	.....	.....	1	319 2385
67/68	(AS 1-T10T)(AS 2-T10T) V8 (W4ST)	.....	.....	1	318 6012
67/68	(AS 8-T10P) (AS 9-T10P) V8 (W4ST)	.....	.....	1	318 2329
68/70	(AS 1-T10V)(AS 2-T10V) V8 (W4ST-* 6-1)	.....	.....	1	318 6012
71	V8 (W4ST)	.....	.....	1	318 6012
72	V8 (W4ST-* 6-15)	.....	.....	1	318 6012
72	V8 (W4ST-* 6-16)	.....	.....	1	321 8972

6.130 GEAR, Fourspeed Transmission Third Speed

67/68	(AS 8-T10P)(AS 9-T10P) V8	.....	.....	1	318 2321
67/68	(AS 1-T10T)(AS 2-T10T) V8	.....	.....	1	318 9055
68/70	(AS 1-T10V) V8 (* 6-1)	.....	.....	1	318 2321
71/	V8 (W4ST)	.....	.....	1	318 2321

6.144-1 GEAR, Transmission Low And Reverse

67	SIX (Except Heavy Duty-* 6-2)	.....	.....	1	316 2719
68/70	199 (LHD-WST-Except Export)(WOD)	.....	.....	1	316 2719
70/	232 (01-WST-Except Export)(40-WST-Except Export)	.....	.....	1	316 2719
67	***SIX (Heavy Duty-10-WST-* 6-2)***	.....	.....	1	315 6634
67	V8 (WST)(WOD)	.....	.....	1	319 0110

6.144-2 GEAR, Transmission Low

70/	SIX (10-WST)(70-WST)(80-WST)	.....	.....	1	319 2397
68/69	232 (Except Heavy Duty-* 6-2)	.....	.....	1	319 2397
71/	SIX (01-WST)(40-WST)	.....	.....	1	319 2397
68/69	***SIX (Heavy Duty-10-WST-* 6-2)(Heavy Duty-80-WST-* 6-2)***	.....	.....	1	319 2393
71/	***232 (Heavy Duty-01-WST-* 6-8)(Heavy Duty-40-WST-* 6-8)***	.....	.....	1	319 2397
68/70	***199 (Export-LHD-WST)***	.....	.....	1	319 2397
70/	***232 (Export-LHD-01-WST)(Export-LHD-40-WST)***	.....	.....	1	319 2397
68/69	***199 (RHD)***	.....	.....	1	319 2397
68/70	V8 (WST)(WOD)	.....	.....	1	319 2393
71/	304 (40-WST)(70-WST)	.....	.....	1	319 2397
71	360 (01-WST)(70-WST)	.....	.....	1	319 2393

6.144-3 GEAR, Transmission Reverse

70/	SIX (10-WST)(70-WST)(80-WST)	96	.....	1	320 9975
68/69	232 (WST-Except Heavy Duty-* 6-2)	96	.....	1	320 9975
71/	SIX (01-WST)(40-WST)	96	.....	1	320 9975
68/69	***SIX (Heavy Duty-10-WST-* 6-2)(Heavy Duty-80-WST-* 6-2)***	96	.....	1	320 9976
71/	***232 (Heavy Duty-01-WST-* 6-8)(Heavy Duty-40-WST-* 6-8)***	96	.....	1	320 9975
68/70	***199 (Export-LHD-WST)***	96	.....	1	320 9975
70/	***232 (Export-LHD-01-WST)(Export-LHD-40-WST)***	96	.....	1	320 9975
68/69	***199 (RHD)***	96	.....	1	320 9975
68/70	V8 (WST)(WOD)	96	.....	1	320 9976
71/	304 (40-WST)(70-WST)	96	.....	1	320 9975
71	360 (01-WST)(70-WST)	96	.....	1	320 9976

Printed in U.S.A.

STANDARD, OVERDRIVE AND FOURSPEED TRANSMISSION

6.144–4 GEAR, Fourspeed Transmission Low

67/	V8 (W4ST)	.....	1	318 2323

6.144–5 GEAR, Fourspeed Transmission Reverse

67/	V8 (W4ST)	.....	1	318 2327

6.159 COUNTERSHAFT, Transmission

67	SIX (Except Heavy Duty-* 6-2)	.....	1	311 3837
70/	SIX (10-WST)(70-WST)(80-WST)	.....	1	319 2435
68/70	199 (LHD-WST-Except Export)(WOD)	.....	1	311 3837
68/69	232 (Except Heavy Duty-* 6-2)	.....	1	319 2435
70/	232 (01-WST-Except Export)(40-WST-Except Export-* 6-13)	.....	1	311 3837
71/	232 (40-WST-* 6-14)	.....	1	319 2435
71/	258 (01-WST)(40-WST)	.....	1	319 2435
67	***SIX (Heavy Duty-10-WST-* 6-2)***	.....	1	316 2279
71/	***232 (Heavy Duty-01-WST-* 6-8)(Heavy Duty-40-WST-* 6-8)***	.....	1	319 2435
68/69	***SIX (Heavy Duty-10-WST-* 6-2)(Heavy Duty-80-WST-* 6-2)***	.....	1	319 2422
68/70	***199 (Export-LHD-WST)***	.....	1	319 2435
70/	***232 (Export-LHD-01-WST)(Export-LHD-40-WST)***	.....	1	319 2435
68/69	***199 (RHD)***	.....	1	319 2435
67	V8 (WST)(WOD)	.....	1	316 2279
68/70	V8 (WST)(WOD)	.....	1	319 2422
71/	304 (40-WST)(70-WST)	.....	1	319 2435
71	360 (01-WST)(70-WST)	.....	1	319 2422
67/	V8 (W4ST)	.....	1	315 0637

6.164 GEAR, Transmission Countershaft (Cluster Gear)

67	SIX (Except Heavy Duty-* 6-2)	.....	1	318 1905
70/	SIX (10-WST)(70-WST)(80-WST)	.....	1	319 2386
68/70	199 (LHD-WST-Except Export)(WOD)	.....	1	318 1905
70	199 (LHD-WST-* 6-7)	.....	1	448 9331
68/69	232 (Except Heavy Duty-* 6-2)	.....	1	319 2386
70/	232 (01-WST-Except Export)(40-WST-Except Export-* 6-13)	.....	1	318 1905
71/	232 (40-WST-* 6-14)	.....	1	319 2386
71/	258 (01-WST)(40-WST)	.....	1	319 2386
67	***SIX (Heavy Duty-10-WST-* 6-2)***	.....	1	318 8682
68/71	***SIX (Heavy Duty-10-WST-* 6-2)(Heavy Duty-80-WST-* 6-2)***	.....	1	319 2395
71/	***232 (Heavy Duty-01-WST-* 6-8)(Heavy Duty-40-WST-* 6-8)***	.....	1	319 2386
68/70	***199 (Export-LHD-WST)***	.....	1	319 2386
70/	***232 (Export-LHD-01-WST)(Export-LHD-40-WST)***	.....	1	319 2386
68/69	***199 (RHD)***	.....	1	319 2386
67	V8 (WST)(WOD)	.....	1	318 7984
68/70	V8 (WST)(WOD)	.....	1	319 2395
71/	304 (40-WST)(70-WST)	.....	1	319 2386
71	360 (01-WST)(70-WST)	.....	1	319 2395
67/68	(AS 8-T10P)(AS 9-T10P) V8 (W4ST)	.....	1	318 2326
67/68	(AS 1-T10T)(AS 2-T10T) V8 (W4ST)	.....	1	318 9057
68/70	(AS 1-T10V)(AS 2-T10V) V8 (W4ST-* 6-1)	.....	1	319 4307
71/	V8 (W4ST)	.....	1	319 4307

6.166–1 WASHER, Transmission Countershaft Gear Thrust (Front)

70/	SIX (10-WST)(70-WST)(80-WST)	.....	1	311 3840
70	199 (WST-Except Export)	.....	1	311 3840
67/69	SIX (Except Heavy Duty-* 6-2)	.....	1	311 3840
70/	232 (01-WST-Except Export)(40-WST-Except Export-* 6-13)	.....	1	311 3840
71/	232 (40-WST-* 6-14)	.....	1	311 3840
71/	258 (01-WST)(40-WST)	.....	1	311 3840
67/69	***SIX (Heavy Duty-WST-* 6-2)***	.....	1	318 7985
67/70	V8 (WST)(WOD)	.....	1	318 7985
71/	304 (40-WST)(70-WST)	.....	1	311 3840
71	360 (01-WST)(70-WST)	.....	1	318 7985
67/	V8 (W4ST)	.....	1	318 2331

6.166–2 WASHER, Transmission Countershaft Gear Thrust (Rear)(Less Lip)

67	SIX (WST–Except Heavy Duty–* 6–2)(WOD)		.....	1	318 0057
70/	SIX (10–WST)(70–WST)(80–WST)		.....	1	319 2365
68/70	199 (WST–Except Export)(WOD)		.....	1	318 0057
68/69	232 (WST–Except Heavy Duty–* 6–2)(WOD)		.....	1	319 2365
70/	232 (01–WST–Except Export)(40–WST–Except Export–* 6–13)		.....	1	318 0057
71/	232 (40–WST–* 6–14)		.....	1	319 2365
71/	258 (01–WST)(40–WST)		.....	1	319 2365
67	***SIX (Heavy Duty–10–WST–* 6–2)***		.....	1	318 0058
68/69	***SIX (Heavy Duty–10–WST–* 6–2)(Heavy Duty–80–WST–* 6–2)***		.....	1	318 7985
71/	***232 (Heavy Duty–01–WST–* 6–8)(Heavy Duty–40–WST–* 6–8)***		.....	1	319 2365
68/70	***199 (Export–LHD–WST)***		.....	1	319 2365
70/	***232 (Export–LHD–01–WST)(Export–LHD–40–WST)***		.....	1	319 2365
68/69	***199 (RHD)***		.....	1	319 2365
67	V8 (WST)(WOD)		.....	1	318 0058
68/70	V8 (WST)(WOD)		.....	1	318 7985
71/	304 (40–WST)(70–WST)		.....	1	319 2365
71	360 (01–WST)(70–WST)		.....	1	318 7985
67/	V8 (W4ST)		.....	1	318 2331

6.166–3 WASHER, Transmission Countershaft Gear Thrust (Rear)(With Lip)

67	SIX (WST–Except Heavy Duty–* 6–2)(WOD)		.....	1	311 3838
68/70	199 (WST–Except Export)(WOD)		.....	1	311 3838
70/	232 (01–WST–Except Export)(40–WST–Except Export)		.....	1	311 3838
67	***SIX (Heavy Duty–10–WST–* 6–2)***		.....	1	311 2996
67	V8 (WST)(WOD)		.....	1	311 2996

6.166–4 WASHER, Fourspeed Transmission Idler Gear Shaft Thrust

67/	V8 (W4ST)		.....	1	318 2331

6.167–1 ROLLER, Transmission Countershaft Gear Bearing

67/69	SIX (WST–Except Heavy Duty–* 6–2)(WOD)		.....	40	311 2997
70/	SIX (10–WST)(70–WST)(80–WST)		.....	40	311 2997
70	199 (WST)		.....	40	311 2997
70/	232 (01–WST)(40–WST)		.....	40	311 2997
71/	258 (01–WST)(40–WST)		.....	40	311 2997
67	***SIX (Heavy Duty–10–WST–* 6–2)***		.....	44	311 2997
68/69	***SIX (Heavy Duty–10–WST–* 6–2)(Heavy Duty–80–WST–* 6–2)***		.....	44	448 5673
71/	***232 (Heavy Duty–01–WST–* 6–8)(Heavy Duty–40–WST–* 6–8)***		.....	40	311 2997
67	V8 (WST)(WOD)		.....	44	311 2997
68/70	V8 (WST)(WOD)		.....	44	448 5673
71/	304 (40–WST)(70–WST)		.....	40	311 2997
71	360 (01–WST)(70–WST)		.....	44	448 5673
67/	V8 (W4ST)		.....	80	315 0638

6.167–2 SPACER, Transmission Countershaft Gear Roller Bearing

67	SIX (WST–Except Heavy Duty–* 6–2)(WOD)	93	.....	1	320 5825
70/	SIX (10–WST)(70–WST)(80–WST)	93	.....	1	320 9977
68/70	199 (LHD–WST–Except Export)(WOD)	93	.....	1	320 5825
68/69	232 (WST–Except Heavy Duty–* 6–2)(WOD)	93	.....	1	320 9977
70/	232 (01–WST–Except Export)(40–WST–Except Export–* 6–13)	93	.....	1	320 5825
71/	232 (40–WST–* 6–14)	93	.....	1	320 9977
71/	258 (01–WST)(40–WST)	93	.....	1	320 9977
67	***SIX (Heavy Duty–10–WST–* 6–2)***		.....	1	314 2739
68/69	***SIX (Heavy Duty–10–WST–* 6–2)(Heavy Duty–80–WST–* 6–2)***	93	.....	1	320 9978
71/	***232 (Heavy Duty–01–WST–* 6–8)(Heavy Duty–40–WST–* 6–8)***	93	.....	1	320 9977
68/70	***199 (Export–LHD–WST)***	93	.....	1	320 9977
70	***232 (Export–LHD–01–WST)(Export–LHD–40–WST)***	93	.....	1	320 9977
68/69	***199 (RHD)***	93	.....	1	320 9977

Printed in U.S.A.

67	V8 (WST)(WOD)	93	.....	1	314 2739
68/70	V8 (WST)(WOD)	93	.....	1	320 9978
71/	304 (40-WST)(70-WST)	93	.....	1	320 9977
71	360 (01-WST)(70-WST)	93	.....	1	320 9978
67/	V8 (W4ST)		.....	1	318 2335

6.167-3 WASHER, Transmission Countershaft Gear Bearing Roller

67/	SIX (WST)(WOD)		.....	4	311 3841
67/70	V8 (WST)(WOD)		.....	4	311 2993
71/	304 (40-WST)(70-WST)		.....	4	311 3841
71	360 (01-WST)(70-WST)		.....	4	311 2993
67/	V8 (W4ST)		.....	6	315 0642

6.168-1 SHAFT, Transmission Idler Gear

67	SIX (WST-Except Heavy Duty-* 6-2)(WOD)		.....	1	311 3836
70/	SIX (10-WST)(70-WST)(80-WST)		.....	1	319 2366
68/70	199 (LHD-WST-Except Export)(WOD)		.....	1	311 3836
68/69	232 (WST-Except Heavy Duty-* 6-2)(WOD)		.....	1	319 2366
70/	232 (01-WST-Except Export)(40-WST-Except Export-* 6-13)		.....	1	311 3836
71/	232 (40-WST-* 6-14)		.....	1	319 2366
71/	258 (01-WST)(40-WST)		.....	1	319 2366
67	***SIX (Heavy Duty-10-WST-* 6-2)***		.....	1	311 3026
68/69	***SIX (Heavy Duty-10-WST-* 6-2)(Heavy Duty-80-WST-* 6-2)***		.....	1	319 2373
71/	***232 (Heavy Duty-01-WST-* 6-8)(Heavy Duty-40-WST-* 6-8)***		.....	1	319 2366
68/70	***199 (Export-LHD-WST)***		.....	1	319 2366
70/	***232 (Export-LHD-01-WST)(Export-LHD-40-WST)***		.....	1	319 2366
68/69	***199 (RHD)***		.....	1	319 2366
67	V8 (WST)(WOD)		.....	1	311 3026
68/70	V8 (WST)(WOD)		.....	1	319 2373
71/	304 (40-WST)(70-WST)		.....	1	319 2366
71	360 (01-WST)(70-WST)		.....	1	319 2373
67/	V8 (W4ST)		.....	1	318 2339

6.168-2 PIN, Fourspeed Transmission Idler Gear Shaft Retaining

67/	V8 (W4ST)	17.472		1	G456876

6.168-3 PLUG, Fourspeed Transmission Idler Gear Shaft Pin Access

67/	V8 (W4ST)	6.172		1	318 2697

6.170-1 GEAR, Transmission Reverse Idler

67	SIX (WST-Except Heavy Duty-* 6-2)(WOD)...(Incl. Bushing)		.....	1	316 2786
70/	SIX (10-WST)(70-WST)(80-WST)		.....	1	319 2429
68/70	199 (LHD-WST-Except Export)(WOD)...(Incl. Bushing)		.....	1	316 2786
68/69	232 (WST-Except Heavy Duty-* 6-2)(WOD)		.....	1	319 2429
70/	232 (01-WST-Except Export)(40-WST-Except Export-* 6-13)...(Incl. Bushing)		.....	1	316 2786
71/	232 (40-WST-* 6-14)		.....	1	319 2429
71/	258 (01-WST)(40-WST)		.....	1	319 2429
67	***SIX (Heavy Duty-10-WST-* 6-2)*** ...(Incl. Bushing)		.....	1	315 6669
68/69	***SIX (Heavy Duty-10-WST-* 6-2)(Heavy Duty-80-WST-* 6-2)***		.....	1	319 2424
71/	***232 (Heavy Duty-01-WST-* 6-8)(Heavy Duty-40-WST-* 6-8)***		.....	1	319 2429
68/70	***199 (Export-LHD-WST)***		.....	1	319 2429
70/	***232 (Export-LHD-01-WST)(Export-LHD-40-WST)***		.....	1	319 2429
68/69	***199 (RHD)***		.....	1	319 2429
67	V8 (WST)(WOD) ...(Incl. Bushing)		.....	1	320 8101
68/70	V8 (WST)(WOD)		.....	1	319 2424
71/	304 (40-WST)(70-WST)		.....	1	319 2429
71	360 (01-WST)(70-WST)		.....	1	319 2424
67	(AS 8-T10P)(AS 9-T10P) V8 (W4ST) ***(Use 319 3177)***		.....	1	318 2325
67/70	(AS 1-T10T)(AS 2-T10T)(AS 1-T10V)(AS 2-T10V) V8 (W4ST)		.....	1	319 3177
71/	V8 (W4ST)		.....	1	319 3177

6.170–2 GEAR, Transmission Reverse Idler Gear (Rear)

67/	V8 (W4ST)...(Incl. Bushing)	102	.....	1	318 2603

6.170–3 RING, Transmission Reverse Idler Rear Snap

67/	V8 (W4ST)		.....	1	318 2336

6.170–4 ROLLER, Transmission Reverse Idler Gear Bearing

70/	SIX (10-WST)(70-WST)(80-WST)		6.167	20	311 2997
68/69	232 (WST-Except Heavy Duty-* 6-2)(WOD)		6.167	20	311 2997
71/	SIX (01-WST)(40-WST)		6.167	20	311 2997
68/69	***SIX (Heavy Duty-10-WST-* 6-2)(Heavy Duty-80-WST-* 6-2)***		.....	22	448 5673
71/	***232 (Heavy Duty-01-WST-* 6-8)(Heavy Duty-40-WST-* 6-8)***		6.167	20	311 2997
68/70	***199 (Export-LHD-WST)***		6.167	20	311 2997
70/	***232 (Export-LHD-01-WST)(Export-LHD-40-WST)***		6.167	20	311 2997
68/69	***199 (RHD)***		6.167	20	311 2997
68/70	V8 (WST)(WOD)		.....	22	448 5673
71/	304 (40-WST)(70-WST)		6.167	20	311 2997
71	360 (01-WST)(70-WST)		.....	22	448 5673

6.170–5 WASHER, Transmission Reverse Idler Gear Bearing Roller

70/	SIX (10-WST)(70-WST)(80-WST)		.....	2	319 2427
68/69	232 (WST-Except Heavy Duty-* 6-2)(WOD)		.....	2	319 2427
71/	SIX (01-WST)(40-WST)		.....	2	319 2427
68/69	***SIX (Heavy Duty-10-WST-* 6-2)(Heavy Duty-80-WST-* 6-2)***		.....	2	320 9981
71/	***232 (Heavy Duty-01-WST-* 6-8)(Heavy Duty-40-WST-* 6-8)***		.....	2	319 2427
68/70	***199 (Export-LHD-WST)***		.....	2	319 2427
70/	***232 (Export-LHD-01-WST)(Export-LHD-40-WST)***		.....	2	319 2427
68/69	***199 (RHD)***		.....	2	319 2427
68/70	V8 (WST)(WOD)		.....	2	320 9981
71/	304 (40-WST)(70-WST)		.....	2	319 2427

6.170–6 WASHER, Transmission Reverse Idler Gear Thrust

67/	V8 (W4ST)		6.166	1	318 2337

6.172–1 PLATE, Transmission Reverse Idler Shaft And Countershaft

67	SIX (WST-Except Heavy Duty-* 6-2)(WOD)	***(Use 319 2369)***	.....	1	317 4537
70/	SIX (10-WST)(70-WST)(80-WST)		.....	1	319 2369
68/70	199 (LHD-WST-Except Export)(WOD)	***(Use 319 2369)***	.....	1	317 4537
68/69	232 (WST-Except Heavy Duty-* 6-2)(WOD)		.....	1	319 2369
70/	232 (01-WST-Except Export)(40-WST-Except Export)		.....	1	319 2369
71/	258 (01-WST)(40-WST)		.....	1	319 2369
67	***SIX (Heavy Duty-10-WST-* 6-2)***		.....	1	317 4536
68/69	***SIX (Heavy Duty-10-WST-* 6-2)(Heavy Duty-80-WST-* 6-2)***		.....	1	319 2372
71/	***232 (Heavy Duty-01-WST-* 6-8)(Heavy Duty-40-WST-* 6-8)***		.....	1	319 2369
68/70	***199 (Export-LHD-WST)***		.....	1	319 2369
70/	***232 (Export-LHD-01-WST)(Export-LHD-40-WST)***		.....	1	319 2369
68/69	***199 (RHD)***		.....	1	319 2369
67	V8 (WST)(WOD)		.....	1	317 4536
68/70	V8 (WST)(WOD)		.....	1	319 2372
71/	304 (40-WST)(70-WST)		.....	1	319 2369
71	360 (01-WST)(70-WST)		.....	1	319 2372

6.172–2 KEY, Transmission Reverse Idler Shaft And Countershaft

67/	V8 (W4ST)		17.344	1	G103905

STANDARD, OVERDRIVE AND FOURSPEED TRANSMISSION

6.190–1 SHAFT, Transmission Shifter Fork (Low And Reverse)

67	SIX (WST–Except Heavy Duty–* 6–2)	.....	1	318 7509
67	SIX (10–WOD)(50–WOD)(80–WOD)	.....	1	318 7509
70	SIX (10–WST)(70–WST)(80–WST)	.....	1	319 2430
71/	SIX (10–WST)(70–WST)(80–WST)	.....	1	321 2213
67/69	(AS 14–T96H)(AS 16–T96H)(AS 22–T96H) 199 (WOD)	.....	1	318 7509
68/70	199 (LHD–WST–Except Export)	.....	1	318 7509
67	232 (01–WOD)	.....	1	318 7509
68/69	232	.....	1	319 2430
70/	232 (01–WST–Except Export)(40–WST–Except Export–* 6–13)	.....	1	318 7509
71/	232 (40–WST–* 6–14)	.....	1	321 2213
71/	258 (01–WST)(40–WST)	.....	1	321 2213
67	***SIX (Heavy Duty–10–WST–* 6–2)***	.....	1	318 7346
71/	***232 (Heavy Duty–01–WST–* 6–8)(Heavy Duty–40–WST–* 6–8)***	.....	1	321 2213
68/70	***199 (Export–LHD–WST)***	.....	1	319 2430
70	***232 (Export–LHD–01–WST)(Export–LHD–40–WST)***	.....	1	319 2430
71/	***232 (Export–LHD–01–WST)(Export–LHD–40–WST)***	.....	1	321 2213
68/69	***199 (RHD)***	.....	1	319 2430
67	V8 (WST)(WOD)	.....	1	318 7346
68/70	V8 (WST)(WOD)	.....	1	319 2430
71/	V8 (WST)	.....	1	321 2213

6.190–2 SHAFT, Transmission Shifter Fork (Second And High)

70	SIX (10–WST)(70–WST)(80–WST)	.....	1	319 2430
71/	SIX (10–WST)(70–WST)(80–WST)	.....	1	321 2213
67	199 (LHD–WST)	.....	1	318 7688
68/70	199 (LHD–WST–Except Export)	.....	1	318 7688
67	(AS 4–T96H) 199 (WOD)	.....	1	311 3856
67/69	(AS 14–T96H)(AS 16–T96H)(AS 22–T96H) 199 (WOD)	.....	1	318 7688
67	232 (WST–Except Heavy Duty–* 6–2)(WOD) ***(Use 321 2220)***	.....	1	318 7309
68/69	232	.....	1	319 2430
70	232 (01–WST–Except Export)(40–WST–Except Export) ***(Use 321 2220)***	.....	1	318 7309
71/	232 (01–WST–Except Export)(40–WST–Except Export–* 6–13)	.....	1	321 2220
71/	232 (40–WST–* 6–14 And * 6–17)	.....	1	321 2213
71/	232 (40–WST–* 6–14 And * 6–18)	.....	1	322 0163
71/	258 (01–WST–* 6–17)(40–WST–* 6–17)	.....	1	321 2213
71/	258 (01–WST–* 6–18)(40–WST–* 6–18)	.....	1	322 0163
67	***SIX (Heavy Duty–10–WST–* 6–2)***	.....	1	318 7347
71/	***232 (Heavy Duty–01–WST–* 6–8 And * 6–17)(Heavy Duty–40–WST–* 6–8 And * 6–17)***	.....	1	321 2213
71/	***232 (Heavy Duty–01–WST–* 6–8 And * 6–18)(Heavy Duty–40–WST–* 6–8 And * 6–18)***	.....	1	322 0163
68/70	***199 (Export–LHD–WST)***	.....	1	319 2430
70	***232 (Export–LHD–01–WST)(Export–LHD–40–WST)***	.....	1	319 2430
71/	***232 (Export–LHD–01–WST)(Export–LHD–40–WST)***	.....	1	321 2213
71/	***232 (Export–LHD–01–WST–* 6–18)(Export–LHD–40–WST–* 6–18)***	.....	1	322 0163
68/69	***199 (RHD)***	.....	1	319 2430
67	V8 (WST)(WOD)	.....	1	318 7347
68/70	V8 (WST)(WOD)	.....	1	319 2430
71/	V8 (WST–* 6–17)	.....	1	321 2213
71/	V8 (WST–* 6–18)	.....	1	322 0163

6.190–3 SHAFT, Fourspeed Transmission Shifter Fork (Low And Second)

67/	V8 (W4ST)	.....	1	318 5442

6.190–4 SHAFT, Fourspeed Transmission Shifter Fork (Third And Fourth)

67/70	V8 (W4ST)	.....	1	318 2303
71/	V8 (W4ST)	.....	1	448 9466

6.190–5 SHAFT, Fourspeed Transmission Shifter Fork (Reverse)

67/	V8 (W4ST)	.....	1	318 2566

6.190–6 PIN, Transmission Shifter Fork Interlock Lever Pivot

70/	SIX (10-WST)(70-WST)(80-WST)	.....	1	319 2362
68/69	232	.....	1	319 2362
71/	SIX (01-WST)(40-WST)	.....	1	319 2362
71	***232 (Heavy Duty-LHD-01-WST-* 6-8)(Heavy Duty-LHD-40-WST-* 6-8)***	.....	1	319 2362
68/70	***199 (Export-LHD-WST)***	.....	1	319 2362
70/	***232 (Export-LHD-01-WST)(Export-LHD-40-WST)***	.....	1	319 2362
68/69	***199 (RHD)***	.....	1	319 2362
68/	V8 (WST)(WOD)	.....	1	319 2362

6.192–1 PIN, Standard And Overdrive Transmission Shifter Fork Retaining

67		17.470	2	G103565
70/	SIX (10-WST)(70-WST)(80-WST)	17.472	2	G271488 NA
68/70	199 (LHD-WST-Except Export)(WOD)	17.470	2	G103565
68/69	232	17.472	2	G271448 NA
70/	232 (01-WST-Except Export)(40-WST-Except Export-* 6-13)	17.470	1	G103565
71/	232 (40-WST-* 6-14)	17.472	1	G271448 NA
71/	258 (01-WST)(40-WST)	17.472	1	G271448 NA
71/	***232 (Heavy Duty-LHD-01-WST-* 6-8)(Heavy Duty-LHD-40-WST-* 6-8)***	17.472	1	G271448 NA
68/70	***199 (Export-LHD-WST)***	17.472	2	G271448 NA
70/	***232 (Export-LHD-01-WST)(Export-LHD-40-WST)***	17.472	2	G271448 NA
68/69	***199 (RHD)***	17.472	2	G271448 NA
68/	V8 (WST)(WOD)	17.472	2	G271448 NA

6.192–2 PIN, Fourspeed Transmission Reverse Shifter Fork Shaft Retaining

67/	V8 (W4ST)	17.470	1	G103565

6.194 SEAL, Transmission Shifter Fork Shaft

68/	SIX (WST)(WOD)	.....	2	315 0617
67	(AS 4-T96H) 199 (WOD)	.....	2	312 3668
67	(AS 14-T96H)(AS 16-T96H)(AS 22-T96H) 199 (WST)(WOD)	.....	2	315 0617
67	232	.....	2	315 0617
67/	V8 (WST-2 Req.)(WOD-2 Req.)(W4ST-3 Req.)	.....	AR	315 0617

6.198–1 FORK, Transmission Shifter (Low And Reverse)

67	SIX (WST-Except Heavy Duty-* 6-2)	.....	1	311 3850
70/	SIX (10-WST-* 6-19)(70-WST-* 6-19)(80-WST-* 6-19)	.....	1	319 2407
70/	SIX (10-WST-* 6-20)(70-WST-* 6-20)(80-WST-* 6-20)	.....	1	322 0165
68/70	199 (LHD-WST-Except Export)(WOD)	.....	1	311 3850
68/69	232 (WST-Except Heavy Duty-* 6-19)(WOD)	.....	1	319 2407
68/69	232 (WST-Except Heavy Duty-* 6-2 And * 6-20)	.....	1	322 0165
70/	232 (01-WST-Except Export)(40-WST-Except Export-* 6-13)	.....	1	311 3850
71/	232 (40-WST-* 6-14 And * 6-19)	.....	1	319 2407
71/	232 (40-WST-* 6-14 And * 6-20)	.....	1	322 0165
71/	258 (01-WST-* 6-19)(40-WST-* 6-19)	.....	1	319 2407
71/	258 (01-WST-* 6-20)(40-WST-* 6-20)	.....	1	322 0165
67	***SIX (Heavy Duty-10-WST-* 6-2)***	.....	1	311 2977
68/69	***SIX (Heavy Duty-10-WST-* 6-2)(Heavy Duty-80-WST-* 6-2)***	.....	1	319 2410
68/70	***199 (Export-LHD-WST-* 6-19)***	.....	1	319 2407
68/70	***199 (Export-LHD-WST-* 6-20)***	.....	1	322 0165
70/	***232 (Export-LHD-01-WST-* 6-19)(Export-LHD-40-WST-* 6-19)***	.....	1	319 2407
70/	***232 (Export-LHD-01-WST-* 6-20)(Export-LHD-40-WST-* 6-20)***	.....	1	322 0165
68/69	***199 (RHD-* 6-19)***	.....	1	319 2407
68/69	***199 (RHD-* 6-20)***	.....	1	322 0165
67	V8 (WST)(WOD)	.....	1	311 2977
68/70	V8 (WST)(WOD)	.....	1	319 2410
72	304 (40-WST-* 6-19)	.....	1	319 2407
72	304 (40-WST-* 6-20)	.....	1	322 0165
71/	304 (70-WST-* 6-19)	.....	1	319 2407
71/	304 (70-WST-* 6-20)	.....	1	322 0165
71	360 (01-WST)(70-WST)	.....	1	319 2410

STANDARD, OVERDRIVE AND FOURSPEED TRANSMISSION

6.198–2 FORK, Transmission Shifter (Second And High)

70/	SIX (10-WST)(70-WST)(80-WST)	.....	1	319 2407
67	199 (LHD-WST)(WOD)	.....	1	311 3851
68/70	199 (LHD-WST-Except Export)(WOD)	.....	1	311 3851
67	232 (WST-Except Heavy Duty-* 6-2)(WOD)	.....	1	318 1911
68/69	232 (WST-Except Heavy Duty-* 6-2)(WOD)	.....	1	319 2407
70/	232 (01-WST-Except Export)(40-WST-Except Export-* 6-13)	.....	1	318 1911
71/	232 (40-WST-* 6-14)	.....	1	319 2407
71/	258 (01-WST)(40-WST)	.....	1	319 2407
67	***SIX (Heavy Duty-10-WST-* 6-2)(Heavy Duty-80-WST-* 6-2)***	.....	1	320 4604
68/69	***SIX (Heavy Duty-10-WST-* 6-2)(Heavy Duty-80-WST-* 6-2)***	.....	1	319 2410
71/	***232 (Heavy Duty-LHD-01-WST-* 6-8)(Heavy Duty-LHD-40-WST-* 6-8)***	.....	1	319 2407
68/70	***199 (Export-LHD-WST)***	.....	1	319 2407
70/	***232 (Export-LHD-01-WST)(Export-LHD-40-WST)***	.....	1	319 2407
68/69	***199 (RHD)***	.....	1	319 2407
67	V8 (WST)(WOD)	.....	1	320 4604
68/70	V8 (WST)(WOD)	.....	1	319 2410
71/	304 (40-WST)(70-WST)	.....	1	319 2407
71	360 (70-WST)	.....	1	319 2410

6.198–3 FORK, Fourspeed Transmission Shifter (Low And Second)

67/	V8 (W4ST)	.....	1	316 2992

6.198–4 FORK, Fourspeed Transmission Shifter (Third And Fourth)

67/	V8 (W4ST)	.....	1	316 2992

6.198–5 FORK, Fourspeed Transmission Shifter (Reverse)

67/	V8 (W4ST)	.....	1	318 2312

6.198–6 LEVER, Transmission Shifter Interlock (Low And Reverse)

71/	SIX (10-WST-* 6-21)(70-WST-* 6-21)(80-WST-* 6-21)	.....	1	319 2384
71/	SIX (10-WST-* 6-22)(70-WST-* 6-22)(80-WST-* 6-22)	.....	1	322 0166
68/	232 (WST-Except Heavy Duty-* 6-2 And * 6-21)(WOD-* 6-21)	.....	1	319 2384
68/	232 (WST-Except Heavy Duty-* 6-2 And * 6-22)(WOD-* 6-22)	.....	1	322 0166
71/	SIX (01-WST-* 6-21)(40-WST-* 6-21)	.....	1	319 2384
71/	SIX (01-WST-* 6-22)(40-WST-* 6-22)	.....	1	322 0166
68/69	***SIX (Heavy Duty-10-WST-* 6-2)(Heavy Duty-80-WST-* 6-2)***	.....	1	319 2382
70/	***232 (Export-LHD-01-WST-* 6-21)(Export-LHD-40-WST-* 6-21)***	.....	1	319 2384
70/	***232 (Export-LHD-01-WST-* 6-22)(Export-LHD-40-WST-* 6-22)***	.....	1	322 0166
71/	***232 (Heavy Duty-LHD-01-WST-* 6-8 And * 6-21)(Heavy Duty-LHD-40-WST-* 6-8 And * 6-21)***	.....	1	319 2384
71/	***232 (Heavy Duty-LHD-01-WST-* 6-8 And * 6-22)(Heavy Duty-LHD-40-WST-* 6-8 And * 6-22)***	.....	1	322 0166
68/70	***199 (Export-LHD-WST-* 6-21)***	.....	1	319 2384
68/70	***199 (Export-LHD-WST-* 6-22)***	.....	1	322 0166
68/69	***199 (RHD-* 6-21)***	.....	1	319 2384
68/69	***199 (RHD-* 6-22)***	.....	1	322 0166
68/70	V8 (WST)(WOD)	.....	1	319 2382
71/	304 (40-WST-* 6-21)(70-WST-* 6-21)	.....	1	319 2384
71/	304 (40-WST-* 6-22)(70-WST-* 6-22)	.....	1	322 0166
71	360 (01-WST)(70-WST)	.....	1	319 2382

6.198–7 LEVER, Transmission Shifter Interlock (Second And High)

70/	SIX (10-WST-* 6-21)(70-WST-* 6-21)(80-WST-* 6-21)	.....	1	319 2384
70/	SIX (10-WST-* 6-22)(70-WST-* 6-22)(80-WST-* 6-22)	.....	1	322 0166
68/69	232 (WST-Except Heavy Duty-* 6-2 And * 6-21)	.....	1	319 2384
68/69	232 (WST-Except Heavy Duty-* 6-2 And * 6-22)	.....	1	322 0166
71/	258 (01-WST-* 6-21)(40-WST-* 6-21)	.....	1	319 2384
71/	258 (01-WST-* 6-22)(40-WST-* 6-22)	.....	1	322 0166
68/69	***SIX (Heavy Duty-10-WST-* 6-2)(Heavy Duty-80-WST-* 6-2)***	.....	1	319 2383
68/70	***199 (Export-LHD-WST-* 6-21)***	.....	1	319 2384
68/70	***199 (Export-LHD-WST-* 6-22)***	.....	1	322 0166

70/	***232 (Export-LHD-01-WST-* 6-21)(Export-LHD-40-WST-* 6-21)***	.....	1	319 2384
70/	***232 (Export-LHD-01-WST-* 6-22)(Export-LHD-40-WST-* 6-22)***	.....	1	322 0166
68/69	***199 (RHD-* 6-21)***	.....	1	319 2384
68/69	***199 (RHD-* 6-22)***	.....	1	322 0166
68/70	V8 (WST)(WOD)	.....	1	319 2383
71/	304 (40-WST-* 6-21)(70-WST-* 6-21)	.....	1	319 2384
71/	304 (40-WST-* 6-22)(70-WST-* 6-22)	.....	1	322 0166
71	360 (01-WST)(70-WST)	.....	1	319 2383

6.215–1 PIN, Transmission Speed Finder Interlock

67	SIX	.....	1	311 3852
68/70	199 (LHD-WST-Except Export)(WOD)	.....	1	311 3852
70/	232 (01-WST-Except Export)(40-WST-Except Export)	.....	1	311 3852
67	V8 (WST)(WOD)	.....	1	311 3852
67/	V8 (W4ST)	.....	1	315 0616

6.215–2 SLEEVE, Transmission Speed Finder Interlock

SIX

67	(1.287) SIX	.....	1	311 2982
68/70	(1.287) 199 (LHD-WST-Except Export)(WOD)	.....	1	311 2982
70/	(1.287) 232 (01-WST-Except Export)(40-WST-Except Export)	.....	1	311 2982
67	(1.291) SIX	.....	1	311 2981
68/70	(1.291) 199 (LHD-WST-Except Export)(WOD)	.....	1	311 2981
70/	(1.291) 232 (01-WST-Except Export)(40-WST-Except Export)	.....	1	311 2981
67	(1.295) SIX	.....	1	311 2980
68/70	(1.295) 199 (LHD-WST-Except Export)(WOD)	.....	1	311 2980
70/	(1.295) 232 (01-WST-Except Export)(40-WST-Except Export)	.....	1	311 2980
67	(1.299) SIX	.....	1	311 2979
68/70	(1.299) 199 (LHD-WST-Except Export)(WOD)	.....	1	311 2979
70/	(1.299) 232 (01-WST-Except Export)(40-WST-Except Export)	.....	1	311 2979
67	(1.303) SIX	.....	1	311 2983
68/70	(1.303) 199 (LHD-WST-Except Export)(WOD)	.....	1	311 2983
70/	(1.303) 232 (01-WST-Except Export)(40-WST-Except Export)	.....	1	311 2983

V8

67/	(1.008) V8 (W4ST)	.....	1	315 0614
67/	(1.013) V8 (W4ST)	.....	1	315 0613
67/	(1.018) V8 (W4ST)	.....	1	315 0612
67/	(1.023) V8 (W4ST)	.....	1	315 0615
67	(1.287) V8 (WST)(WOD)	.....	1	311 2982
67	(1.291) V8 (WST)(WOD)	.....	1	311 2981
67	(1.295) V8 (WST)(WOD)	.....	1	311 2980
67	(1.299) V8 (WST)(WOD)	.....	1	311 2979
67	(1.303) V8 (WST)(WOD)	.....	1	311 2983

6.215–3 POPPET, Transmission Speed Finder Interlock

67	SIX	17.018	2	G169110
68/70	199 (LHD-WST-Except Export)(WOD)	17.018	2	G169110
70/	232 (01-WST-Except Export)(40-WST-Except Export)	17.018	2	G169110
67	V8 (WST)(WOD)	17.018	2	G169110
67/	V8 (W4ST)	17.018	3	G147500

6.215–4 SPRING, Transmission Speed Finder Interlock Poppet

67	SIX	.....	1	311 2984
70	SIX (10-WST)(70-WST)(80-WST)	.....	1	319 2361
71/	SIX (10-WST)(70-WST)(80-WST)	.....	1	319 3397
68/70	199 (LHD-WST-Except Export)(WOD)	.....	1	311 2984
68/69	232	.....	1	319 2361
70/	232 (01-WST-Except Export)(40-WST-Except Export-* 6-13)	.....	1	311 2984
71/	232 (40-WST-* 6-14)	.....	1	319 3397
71/	258 (01-WST)(40-WST)	.....	1	319 3397
71/	***232 (Heavy Duty-LHD-01-WST-* 6-8)(Heavy Duty-LHD-40-WST-* 6-8)***	.....	1	319 3397

68/70	***199 (Export-LHD-WST)***	.....	1	319 2361
70	***232 (Export-LHD-01-WST)(Export-LHD-40-WST)***	.....	1	319 2361
71/	***232 (Export-LHD-01-WST)(Export-LHD-40-WST)***	.....	1	319 3397
68/69	***199 (RHD)***	.....	1	319 2361

STANDARD, OVERDRIVE AND FOURSPEED TRANSMISSION

67	V8 (WST)(WOD)	.....	1	311 2984
68/70	V8 (WST)(WOD)	.....	1	319 2361
71/	V8 (WST)	.....	1	319 3397
67/	V8 (W4ST)	.....	1	315 0611

6.215–5 SPRING, Fourspeed Transmission Speed Finder Interlock Poppet (Reverse)

67/	V8 (W4ST)	.....	1	318 2338

6.240–1 GEAR, Speedometer Drive (Refer Chart Gr 6 - C 1)

6.240–2 KEY, Speedometer Drive Gear

67/69	01-10-50-70-80 (WOD)	17.344	1	G106749
67	***10 (Heavy Duty-Six-WST-* 6-2)***	17.344	1	G106749

6.240–3 BALL, Speedometer Drive Gear

67	SIX (WST-Except Heavy Duty-* 6-2)	17.018	1	G147485
68/	SIX (WST)	17.018	1	G147485
67/	V8 (WST)	17.018	1	G147485
67/70	V8 (W4ST)	17.018	1	G147500
71	V8 (W4ST)	17.018	1	G147485
72	V8 (W4ST-* 6-15)	17.018	1	G147485
72	V8 (W4ST-* 6-16)	.....	1	321 3666

6.240–4 RING, Speedometer Drive Gear

67/69	SIX (WST-Except Heavy Duty-* 6-2)	6.069	2	310 8405
70/	SIX (10-WST)(70-WST)(80-WST)	6.069	2	310 8405
70	199 (WST)	6.069	2	310 8405
70/	232 (01-WST)(40-WST)	6.069	2	310 8405
71/	258 (01-WST)(40-WST)	6.069	2	310 8405
67/69	***SIX (Heavy Duty-10-WST-* 6-2)(Heavy Duty-80-WST-* 6-2)***	6.069	2	310 8405
67/68	(.199) V8 (WOD)	6.056	1	318 1923
67/68	(.122) V8 (WOD)	6.056	1	318 3904
67/68	(.125) V8 (WOD)	6.056	1	318 3905
67/68	(.128) V8 (WOD)	6.056	1	318 3906
67/68	(.131) V8 (WOD)	6.056	1	318 3930
67/68	(.134) V8 (WOD)	6.056	1	318 6305
67/	V8 (WST)	6.069	2	310 8405
67/	V8 (W4ST)	.....	2	318 5996

6.240–5 SPACER, Speedometer Drive Gear

67/68	V8 (WOD)	6.282	1	311 5977

6.250 OVERDRIVE (Incl. Transmission)(Refer To Group 6.001–2)

6.255 SHAFT, Overdrive Spline (Transmission Spline Shaft)(Refer To Group 6.068–1)

6.260–1 CASE, Overdrive

67	(AS 4-T96H) 199	.....	1	316 7510
67/69	(AS 14-T96H)(AS 16-T96H)(AS 22-T96H) 199	.....	1	318 7240
67	232	.....	1	318 7240
68/69	232	.....	1	320 9980
67/68	V8	.....	1	318 5880

STANDARD, OVERDRIVE AND FOURSPEED TRANSMISSION

6.260–2 ATTACHING PARTS, Transmission To Overdrive

BOLT, Hexagon	67/69	SIX	17.038	4	G179868 NA
BOLT, Hexagon	67/68	V8 (2-1/2" Long)	17.038	3	G179868 NA
BOLT, (Oil Seal)	67/68	V8 (2-3/8" Long)		1	317 4616
WASHER, Lock	67/69	SIX	17.820	4	G103322 NA
WASHER, Lock	67/68	V8	17.820	3	G103322 NA

6.260–3 GASKET, Overdrive Transmission To Overdrive Adapter

67/69	199		1	311 4532
68/69	232		1	319 2406
67	V8		1	311 3005
68	V8		1	319 2406

6.260–4 PLUG, Overdrive Transmission Case Drain Magnetic

67/69		6.260	1	318 0324

6.260–5 PLUG, Overdrive Transmission Case Drain Non-Magnetic

67/69		17.512	1	G445673 NA

6.260–6 PLUG, Overdrive Transmission Case Filler

67/69		17.512	1	G445673 NA

6.260–7 PLUG, Overdrive Transmission Case Oil Seal

67/69			1	314 5192

6.265–1 ADAPTER, Overdrive Housing

67/69	199		1	314 3098
67	232		1	318 1902
68/69	232		1	319 2449
67	V8		1	318 5905
68	V8		1	319 2449

6.265–2 BAFFLE, Overdrive Housing Adapter Oil

67/69	199		1	311 4534
67	232		1	312 3651
68/69	232		1	319 2375
68	V8		1	319 2375

6.270 GASKET, Overdrive Housing Adapter

67/69			1	312 3649

6.275–1 BEARING, Overdrive Front Ball

67/69	199		1	318 1920
67	232	6.052	1	318 1921
68/69	232	6.052	1	319 2371
67	V8		1	318 5916
68	V8	6.052	1	319 2357

STANDARD, OVERDRIVE AND FOURSPEED TRANSMISSION

6.278–1 RING, Overdrive Front Ball Bearing Snap (Inner)

67	(.087) V8	6.080	1	315 0622
67	(.090) V8	6.069	1	315 0657
67	(.093) V8	6.069	1	315 0658
67	(.096) V8	6.069	1	315 0659
67/69	(.119) SIX	6.056	1	318 1923
68	(.119) V8	6.044	1	318 4552
67/69	(.122) SIX	6.056	1	318 3904
68	(.122) V8	6.044	1	318 6261
67/69	(.125) SIX	6.056	1	318 3905
68	(.125) V8	6.044	1	318 6262
67/69	(.128) SIX	6.056	1	318 3906
68	(.128) V8	6.044	1	318 6263
68/69	(.131) SIX	6.056	1	319 3930
68	(.131) V8	6.044	1	318 6264

6.278–2 RING, Overdrive Front Ball Bearing Snap (Outer)

67	(.087) V8	.....	1	91 942
67	(.090) V8	.....	1	91 943
67	(.093) V8	.....	1	91 944
67/69	199	6.056	1	314 3100
67	232	.....	1	318 1924
68/69	232	.....	1	319 2378
68	V8	.....	1	319 2378

6.282 BEARING, Overdrive Rear Ball

67/69	199	6.275	1	318 1920
67	232	6.275	1	318 1920
68/69	232 *(Use 318 1920)*	.....	1	318 3911
67/68	V8	.....	1	318 2341

6.284–1 RING, Overdrive Rear Ball Bearing Snap (Inner And Outer)

67/69	SIX	.....	2	310 8331
67/68	V8	16.160	1	315 0994

6.284–2 RING, Overdrive Rear Ball Bearing Snap (On Shaft)

67/69	(.199) SIX	6.056	1	318 1923
67/69	(.122) SIX	6.056	1	318 3904
67/69	(.125) SIX	6.056	1	318 3905
67/69	(.128) SIX	6.056	1	318 3906
67/69	(.131) SIX	6.056	1	318 3930
67/69	(.134) SIX	.....	1	318 6305

6.286–1 SEAL, Overdrive Rear Oil

67	(AS 4-T96H) 199	6.032	1	311 3831
67/68	(AS 14-T96H)(AS 16-T96H)(AS 22-T96H) 199	6.032	1	315 8703
69	199	6.032	1	315 8703
67/69	232	6.032	1	315 8703
67/68	V8	6.032	1	315 8703

6.286–2 ADAPTER, Overdrive Rear Oil Seal

67	(AS 4-T96H) 199	.....	1	312 6342
67/68	(AS 14-T96H)(AS 16-T96H)(AS 22-T96H) 199	.....	1	318 6987
69	199	.....	1	318 6987
67/69	232	.....	1	318 6987

Printed in U.S.A.

STANDARD, OVERDRIVE AND FOURSPEED TRANSMISSION

6.290–1 ADAPTER, Overdrive Case To Propeller Shaft (Incls. Bushing)

67/68	V8	83	.....	1	320 8118

6.290–2 ATTACHING PARTS, Adapter To Case

BOLT, Hexagon	67/68	V8	17.038	4	G179861 NA
WASHER, Lock	67/68	V8	17.820	4	G103322 NA

6.290–3 GASKET, Adapter To Overdrive Case

67/68	V8		.....	1	316 3950

6.290–4 BUSHING, Overdrive Case To Propeller Shaft Adapter

67/68	V8		16.175	1	320 4721

6.295–1 RAIL ASSEMBLY, Overdrive Shift

67/69	199	94	.....	1	314 9958
67	232	94	.....	1	314 9958
67	V8	94	.....	1	314 9957

6.295–2 FORK, Overdrive Shift

67/69			.....	1	315 0714

6.295–3 RAIL, Overdrive Shift

67/69	199		.....	1	314 4614
67	232		.....	1	314 4614
68/69	232		.....	1	319 1918
67	V8		.....	1	314 4609
68	V8		.....	1	319 2438

6.295–4 WASHER, Overdrive Shift Rail Assembly "C"

67/69			.....	1	314 2802

6.295–5 CUP, Overdrive Shift Rail Assembly "C" Washer

67/69			.....	1	314 2803

6.295–6 PIN, Overdrive Shift Guide

67/69			.....	1	312 3666

6.295–7 SPRING, Overdrive Shift Rail Reverse Lockup

67/69			.....	1	314 2801

6.295–8 SPRING, Overdrive Shift Rail Retractor

67/69			6.288	1	312 4351

6.299 GEAR ASSEMBLY, Overdrive Sun (Incl. Snap Rings)

67/69		79	.....	1	312 3658

6.301 HUB ASSEMBLY, Overdrive Sun Gear (Incl. Balk Ring)

67/69		77	.....	1	312 3652

Printed in U.S.A.

STANDARD, OVERDRIVE AND FOURSPEED TRANSMISSION

6.302–1 RING, Overdrive Sun Gear Balk

67/69		.....	1	314 2762

6.302–2 RING, Overdrive Sun Gear Balk Snap

67/69		.....	1	312 3654

6.302–3 PLATE, Overdrive Sun Gear Balk Snap Ring (Incl. Trough)

67/69		.....	1	312 3653

6.305 PAWL, Overdrive Sun Gear Locking

67/69		.....	1	311 2915

6.307–1 GEAR, Overdrive Ring

67/69	SIX	.....	1	311 3999
67/68	V8	.....	1	318 5019

6.307–2 RING, Overdrive Ring Gear Snap

67/69		.....	1	312 3664

6.309 PINION, Overdrive (Planetary Gear)

67/69		.....	1	312 3659

6.328–1 SOLENOID, Overdrive

67/69		.....	1	318 7878

6.328–2 ATTACHING PARTS, Solenoid To Transmission

BOLT, Hexagon (Oil Seal) 67/69		..... 6.017	2	317 1599

6.328–3 SEAL, Overdrive Solenoid Pawl Operating Rod Oil

67/69		.....	1	312 3416

6.328–4 CLIP, Overdrive Solenoid Wire

67/69		.....	1	319 2380

6.329–1 GOVERNOR, Overdrive

67	(13/40) 01 (Six)	.....	1	318 8795
67	(13/43) 01 (Six)	.....	1	318 8795
67	(12/43) 01 (Six)	.....	1	317 4450
68/69	01 (Six)	.....	1	318 8795
67/69	10-50-80 (Six)	.....	1	318 8795
67/68	01-10-50-80 (V8)	.....	1	317 2554

6.329–2 GEAR, Overdrive Governor

67/69		.....	1	312 3670

6.329–3 GEAR, Overdrive Governor Drive

67/69		.....	1	311 2157

6.329–4 RING, Overdrive Governor Gear Retaining

67/69			1	312 3674

6.329–5 BOOT, Overdrive Governor

67/69			1	313 1032

6.330–1 CAM ASSEMBLY, Overdrive Free Wheeling

67/69	69		1	312 3660

6.330–2 CLIP, Overdrive Cam Retainer

67/69			1	312 3661

6.330–3 CLIP, Overdrive Cam To Pinion Case Retainer

67/69			1	312 3676

6.332–1 ROLLER, Overdrive Free Wheeling Set (Incl. 12 Rollers)

67/69			1	310 8236

6.332–2 SPRING, Overdrive Roller Set Retaining

67/69		6.330	2	91 237

6.336 SHAFT, Overdrive Main

67/69	SIX		1	320 7557
67/68	V8		1	320 8117

6.338–1 SHAFT ASSEMBLY, Overdrive Control

67	(AS 4-T96H) 199		1	314 4612
67/68	(AS 14-T96H)(AS 16-T96H)(AS 22-T96H) 199		1	317 4604
69	199		1	317 4604
67/69	232		1	317 4604
67/68	V8		1	317 4604

6.338–2 ATTACHING PARTS, Shaft To Case

PIN, Taper.....	67/69	17.470	1	G103565

6.338–3 SEAL, Shaft Assembly Oil

67	(AS 4-T96H) 199		1	312 3668
67/68	(AS 14-T96H)(AS 16-T96H)(AS 22-T96H) 199	6.194	1	315 0617
69	199	6.194	1	315 0617
67/69	232	6.194	1	315 0617
67/68	V8	6.194	1	315 0617

6.350–1 CONTROL ASSEMBLY, Overdrive Cable (Incl. Knob And Armor)

67/69	01 (Six)		1	318 0393
67/68	10-50-80		1	317 8735
69	10 (Six)		1	319 5141

6.350–2 ATTACHING PARTS, Cable To Mounting Bracket

NUT, Jam.....	67/69	17.410	1	G114499 NA
WASHER, Lock.....	67/69	17.824	1	G115554

Printed in U.S.A.

STANDARD, OVERDRIVE AND FOURSPEED TRANSMISSION

6.350–3 ATTACHING PARTS, Cable To Toeboard

CLIP, Closed	67/69	*(Use 400 1802)*	4.160	1	15 708
SCREW, Tapping	67/69		17.671	1	400 1042

6.350–4 ATTACHING PARTS, Cable To Lever

BOLT, Hexagon	67/69		3.363	1	312 1627
WASHER, Lock	67/69		17.820	1	G120380 NA
WASHER, Plain	67/69		17.814	1	G120392
NUT, Hexagon	67/69		17.406	1	G120367

6.350–5 BRACKET, Overdrive Control Cable Clip

67/69		.....	1	314 5191

6.350–6 BUSHING, Overdrive Control Cable

67/68	01	.....	1	318 8620
69	01	.....	1	314 6956
67/69	10-50-80	.....	1	314 6956

6.357–1 BRACKET, Overdrive Control Cable To Instrument Panel

67/69	01	.....	1	318 7738
67/69	10-50-80	.....	1	318 7391

6.357–2 ATTACHING PARTS, Bracket To Instrument Panel

SCREW, Tapping	67/69	01	17.671	2	400 1037
SCREW, Tapping	67/69	10-50-80	17.660	2	G161901 NA
WASHER, Plain	67/69	01 (WAC)	17.814	2	G446188 NA

6.358–1 CLAMP, Overdrive Control Cable Lower

67/69		.....	1	530 6722

6.358–2 ATTACHING PARTS, Clamp To Bracket

BOLT, Hexagon	67/69		17.038	1	G180020 NA
WASHER, Lock	67/69		17.820	1	G120380 NA
NUT, Hexagon	67/69		17.406	1	G120375

6.363 SPACER, Overdrive Control (At Control Shaft)

67/69		.....	1	312 1626

6.367–1 SWITCH, Overdrive Kickdown

67/69		.....	1	316 6620

6.367–2 ATTACHING PARTS, Switch To Bracket

WASHER, Lock	67/69		17.824	2	G115550 NA
NUT, Hexagon	67/69		.....	2	316 6650

6.370–1 BRACKET, Overdrive Kickdown Switch

69	01 (199-WOD-WCGS)	.....	1	319 3803
69	10 (SIX-WOD-WCGS)	.....	1	319 5588

6.370–2 ATTACHING PARTS, Bracket To Accelerator Bellcrank

BOLT, Hexagon	69		17.038	1	G180018 NA
WASHER, Lock	69		17.820	1	G120380 NA
NUT, Hexagon	69		17.406	1	G120375

Printed in U.S.A.

SPECIAL INFORMATION

The Engine Build Code Number, Vehicle Identification Number and the information provided on the Unit Body Plate are often necessary when determining the proper replacement parts for your automobile. For their location refer to the General Information Section found at the front of this catalog.

NOTES

7–1 ..... A Screw and Speed Nut attach the Bezel to the Console.

7–2 ..... Two "J" Clips attach the Bezel to the Console.

7–3 ..... On 68 01 (LHD-Six-WST)(WOD)(LHD-WAT-WCGS) used prior to Car Sequence No. E-000138: 68 10-80 (LHD-WCGS-LAW) used prior to Car Sequence No. W-000188 and 68 10 (LHD-LAW) Canada prior to Car Sequence No. 10045.

7–4 ..... On 68 01 (LHD-Six-WST)(WOD)(LHD-WAT-WCGS) used after Car Sequence No. E-000138: 68 10-80 (LHD-WCGS-LAW) used after Car Sequence No. W-000188 and 68 10 (LHD-LAW) Canada after Car Sequence No. 10045.

7–5 ..... Bellcrank is used in Shift Linkage, requiring use of 2 Shift Rods.

7–6 ..... Bellcrank is eliminated, requiring only 1 Shift Rod and a Rubber Bushing in Transmission Shift Lever.

7–7 ..... Bellcrank is eliminated, requiring only 1 Shift Rod and a Nylon Bushing in Transmission Shift Lever.

7–8 ..... These Cars are equipped with the self-adjusting type Clutch.

7–9 ..... These Cars are equipped with the conventional type Clutch.

7–10 .... Used on Cars with Transmission Vendor No. AS51-T96J and A. M. Part No. 318 9191.

7–11 .... Used on Cars with Transmission Vendor No. AS9-T14 and A. M. Part No. 319 1271.

7–12 .... Rod is used with a Rubber Bushing in Transmission Shift Lever.

7–13 .... Rod is used with a Nylon Bushing in Transmission Shift Lever.

7–14 .... Lower Rod has adjusting threads.

7–15 .... Upper Rod has adjusting threads.

7–16 .... Cars with a Production installed Heavy Duty Drive Package can be identified by a stamped Tag attached to the Transmission with Part Number 318 6417 or 319 1405 on its face.

7–17 .... Use with Transmission AS42-37A.

7–18 .... Use with Transmission AS52-37A.

7–19 .... On 69 30-70 (W4ST) used prior to Car Sequence No. E-40423.

7–20 .... On 69 30-70 (W4ST) used beginning with Car Sequence No. E-40423.

7–21 .... Trunnion Adjustor is located at the Bellcrank End of the Gear Selector Rod and prior to Car Sequence No. W-026741 on the 69 80, prior to Car Sequence No. E-42775 on the 69 70 and prior to Car Sequence No. W-49364 on the 69 10.

7–22 .... Trunnion Adjustor is located at the Steering Column End of the Gear Selector Rod and beginning with Car Sequence No. W-026741 on the 69 80, beginning with Car Sequence No. E-42775 on the 69 70 and beginning with W-49364 on the 69 10.

7–23 .... Parts have a Black Finish or are used with Black Finished parts.

7–24 .... Parts have a Chrome Finish or are used with Chrome Finished parts.

7–25 .... Bracket uses a Nylon Bearing.

7–26 .... Bracket uses a Rubber Grommet.

Printed in U.S.A.

NOTES

7–27 .... Used prior to Car Sequence No.

7–28 .... Used beginning with Car Sequence No.

7–29 .... Used on Cars having a Steering Gear Shaft Flange that is bolted to Shaft.

7–30 .... Used on Cars having a Steering Gear Shaft Flange that is welded to Shaft.

7–31 .... The Trunnion to Lever Grommet has an I. D. of 33/64" and an O. D. of 49/64", also uses a bushing (or sleeve) between the Grommet and Trunnion.

7–32 .... The Trunnion to Lever Grommet has an I. D. of 25/64" and an O. D. of 5/8" and does not use a bushing (or sleeve).

7–33 .... Used with Anti-Theft Lock at Transmission.

7–34 .... The overall length of the Trunnion is 1.47".

7–35 .... The overall length of the Trunnion is 1.36".

7–36 .... Used prior to Car Sequence No.

7–37 .... Used beginning with Car Sequence No.

7–38 .... Rod, Gear Shift End size is 3/8-24 threads.

7–39 .... Rod, Gear Shift End size is 7/16-20 threads.

7–40 .... Use with Rod, Gear Shift Low and Reverse and the overall length of the Trunnion is 1.26".

7–41 .... Use with Rod, Gear Shift Low and Reverse and the overall length of the Trunnion is 1.34".

7–42 .... Use with Transmission Vendor No. 13-02-000-016 and A. M. Part No. 321 4069.

7–43 .... Use with Transmission Vendor No. 13-02-000-015 and A. M. Part No. 321 4027.

7–44 .... Used with T-96J Transmission.

7–45 .... Used with T-14 Transmission.

7–46 .... Used prior to Car Sequence No. E-056553.

7–47 .... Used beginning with Car Sequence No. E-056553.

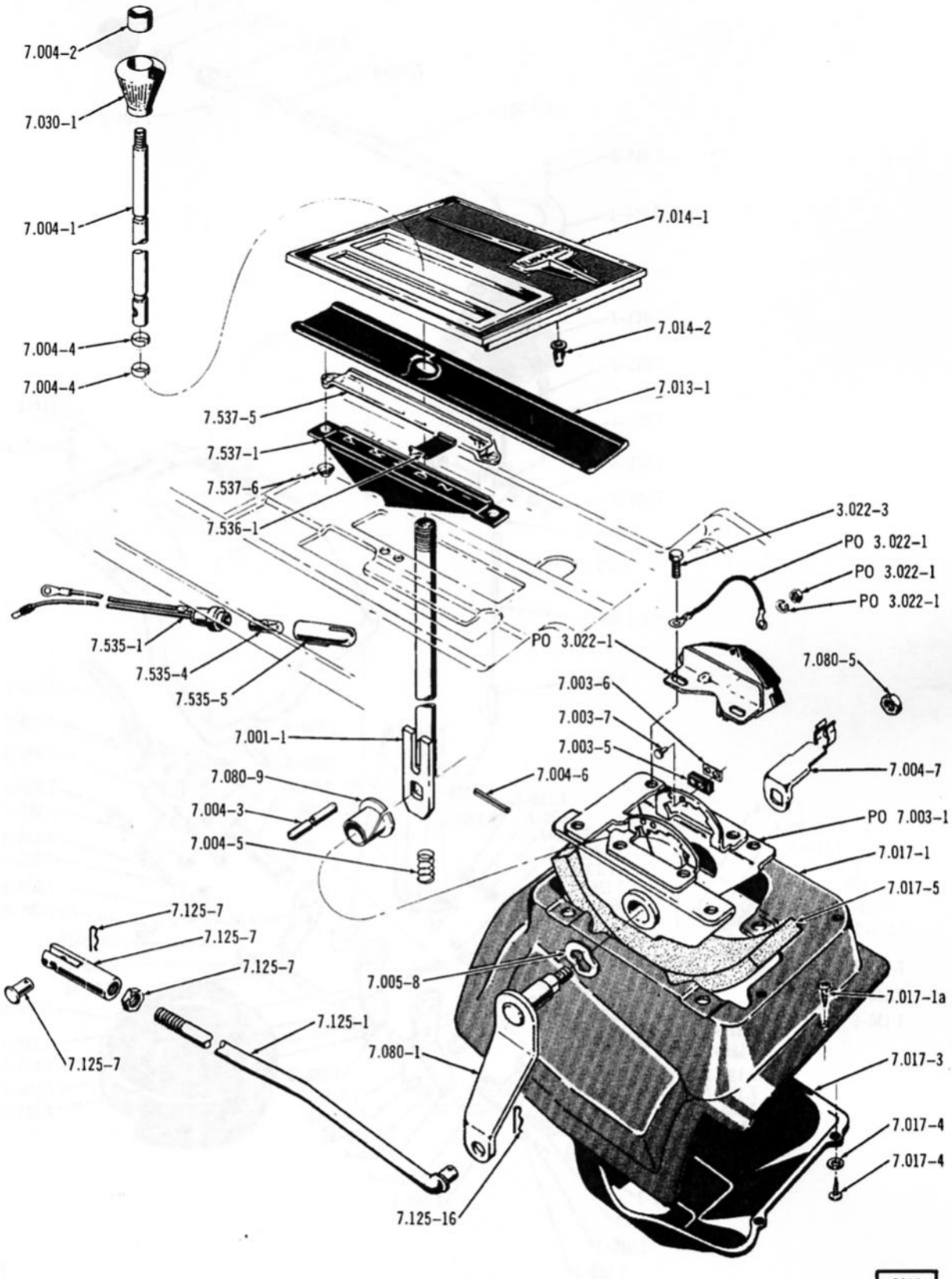

FLOOR GEAR SHIFT ... 1967-01 (V8-WAT)

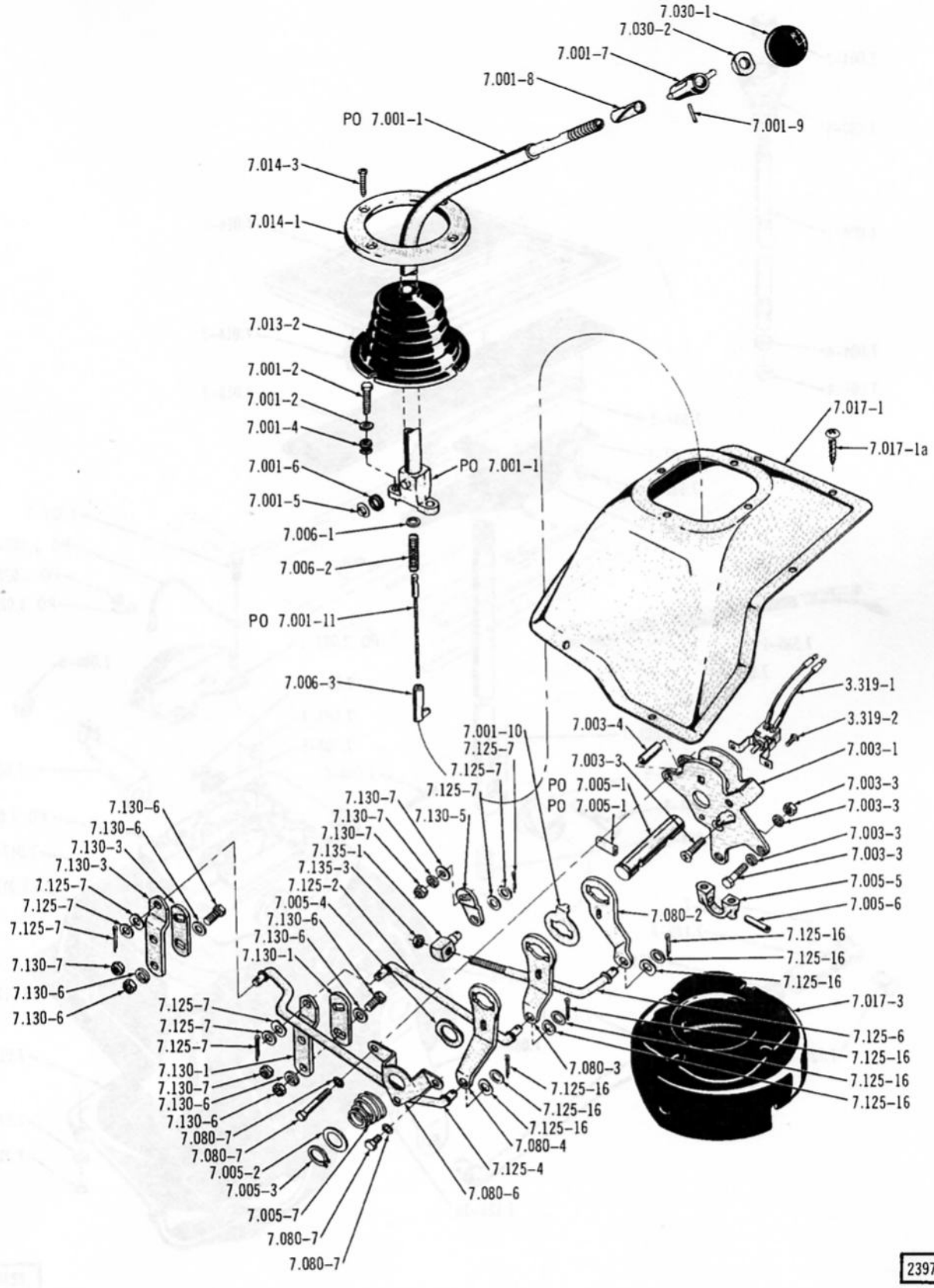

FLOOR GEAR SHIFT (E/HURST) ... 1967/69-V8 (W4ST-LFC)

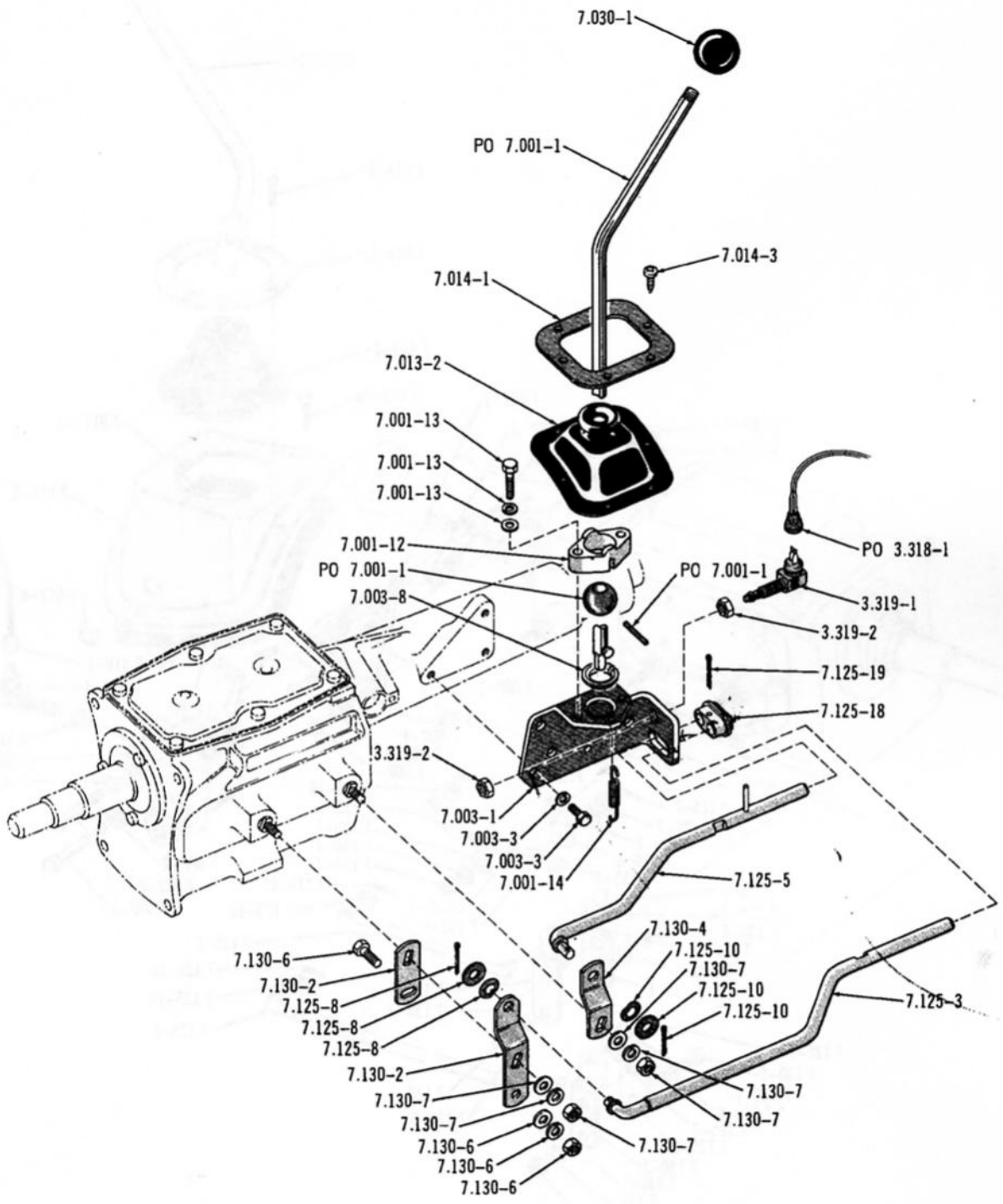

FLOOR GEAR SHIFT ... WST (01)(40)(70)

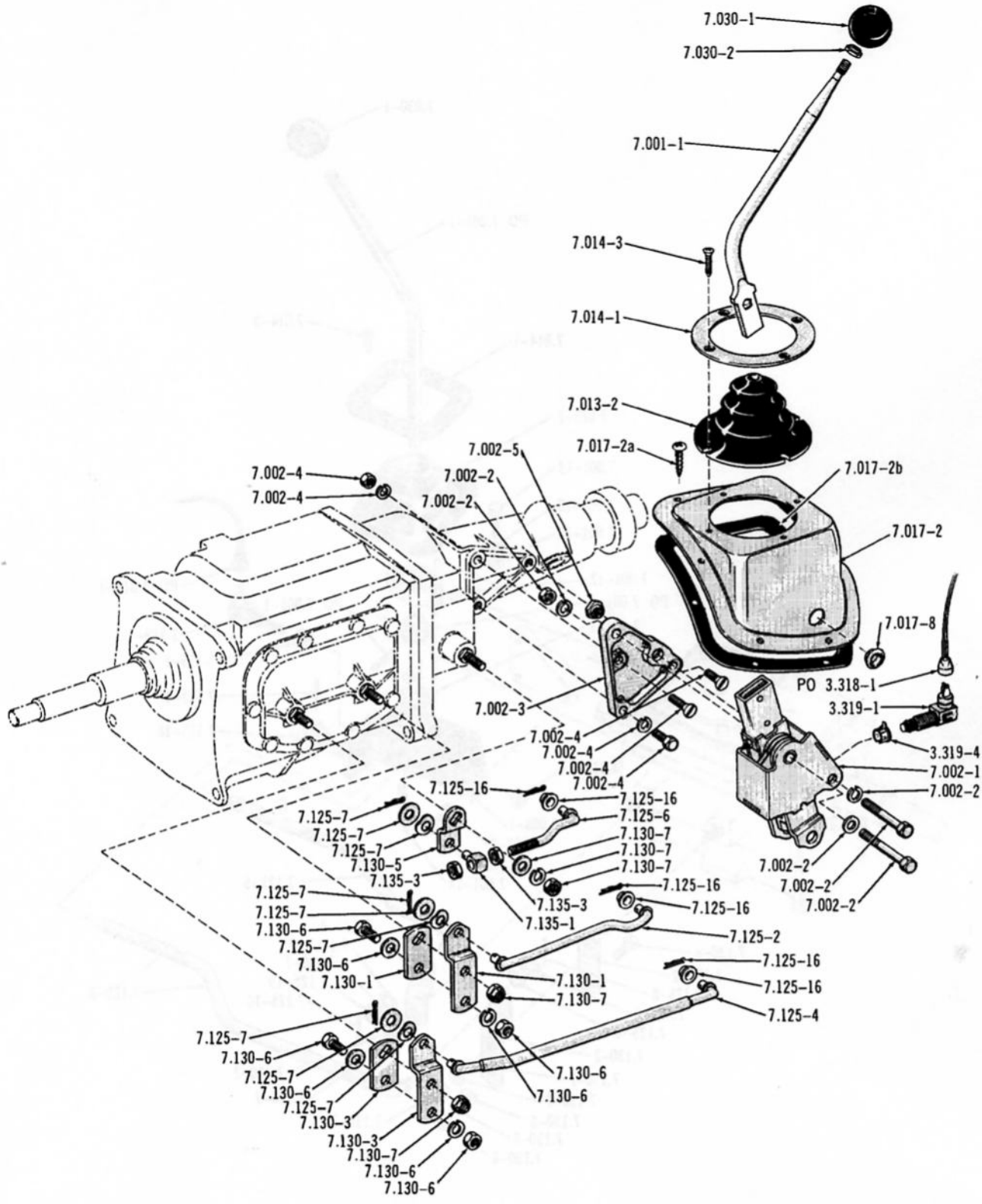

3540-A

FLOOR GEAR SHIFT (HURST) . . . 1969/ W4ST (01)(10)(30)(70)

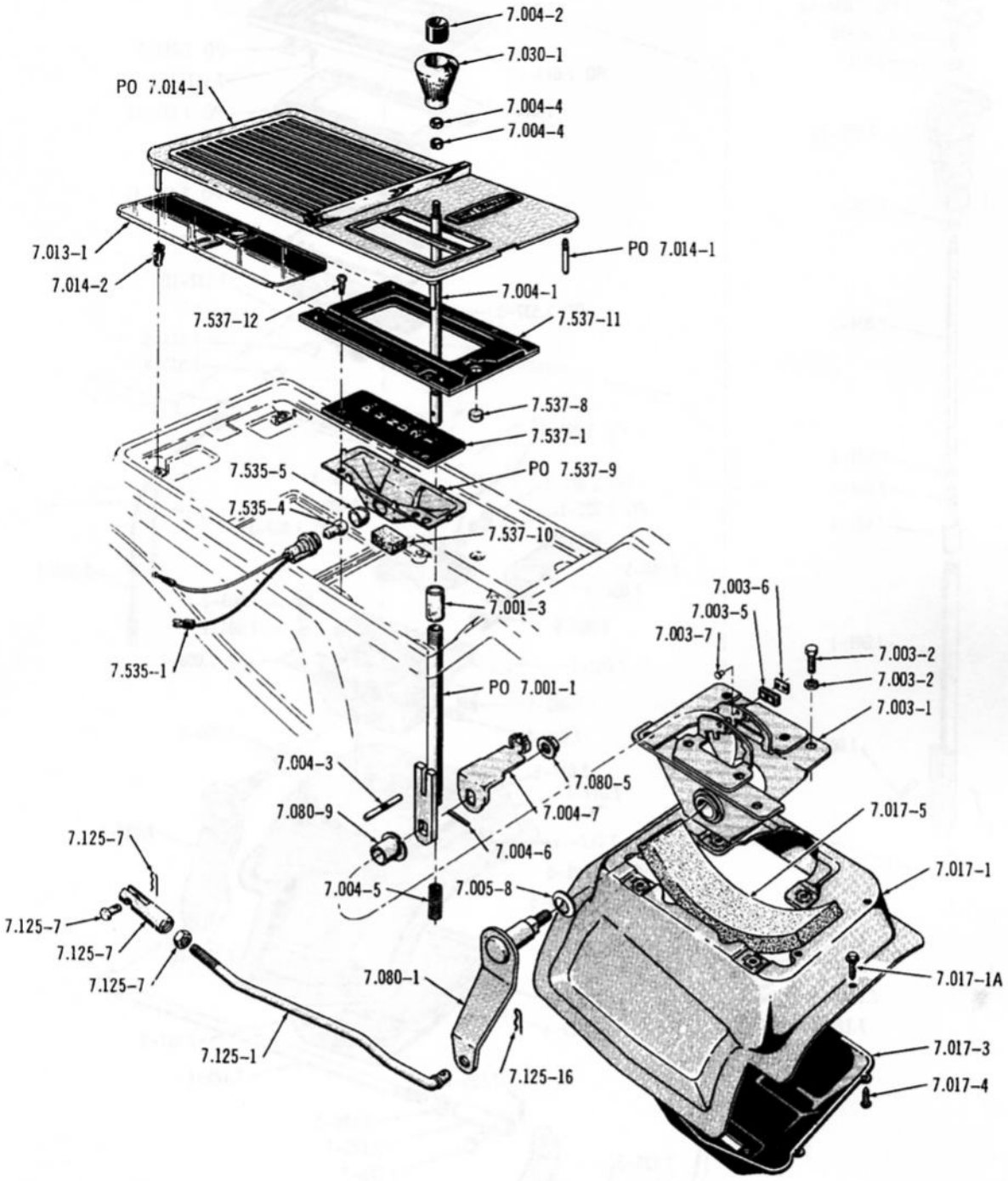

3688

FLOOR GEAR SHIFT (WAT) . . . 1967/69 (10)(80)

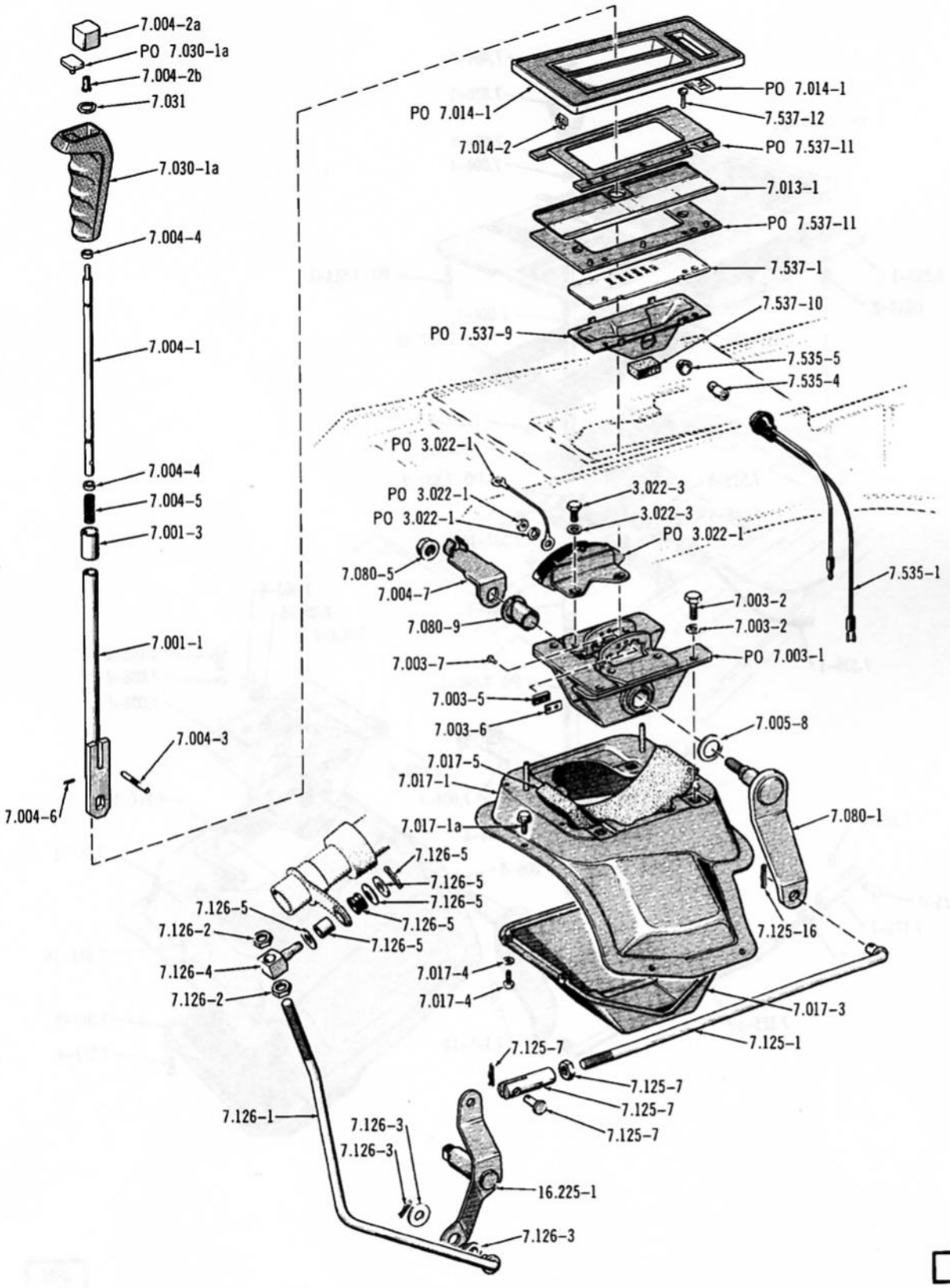

FLOOR GEAR SHIFT (WAT) ... 1970, 1971 (10)(80)

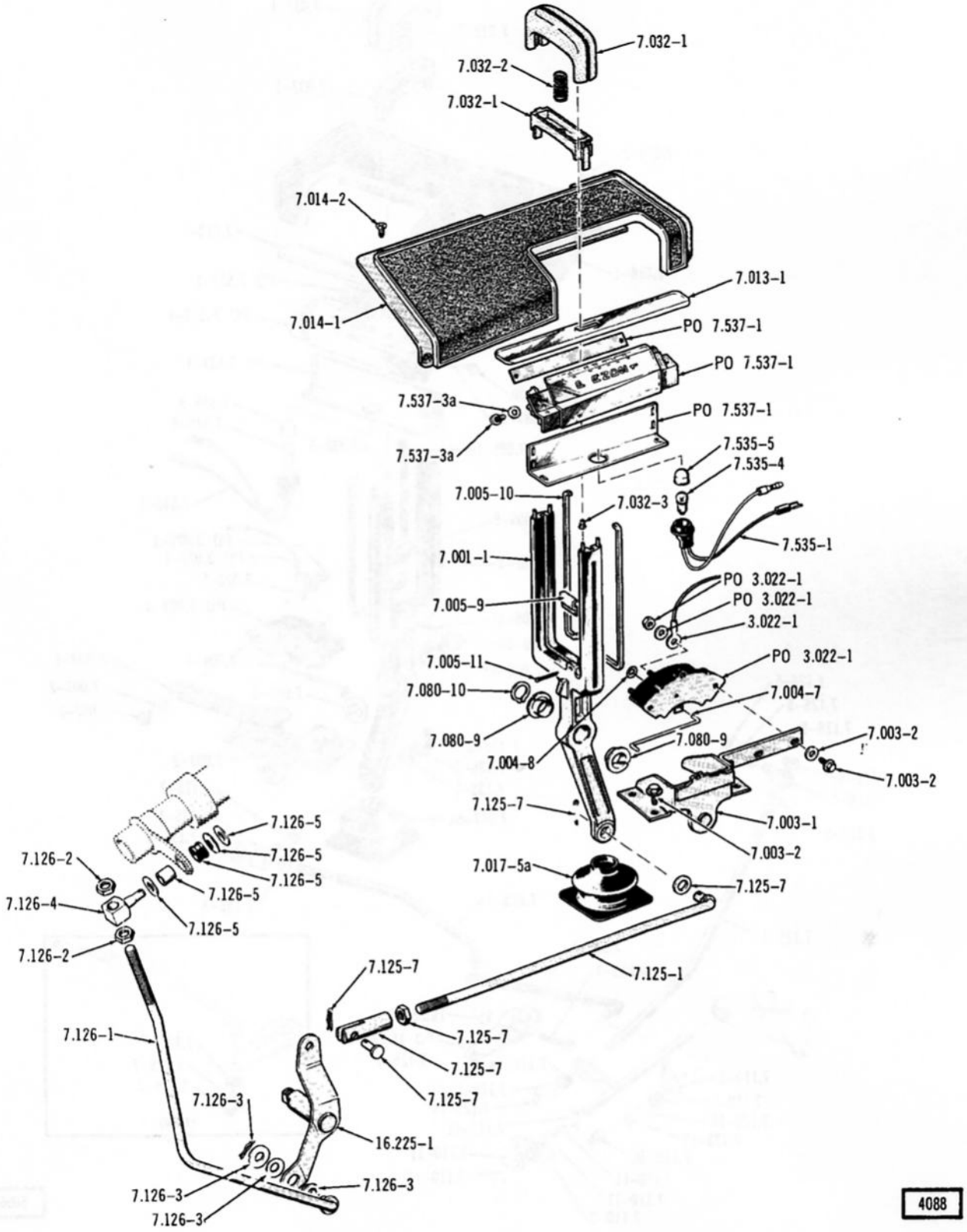

FLOOR GEAR SHIFT (WAT) . . . 1971 (70)

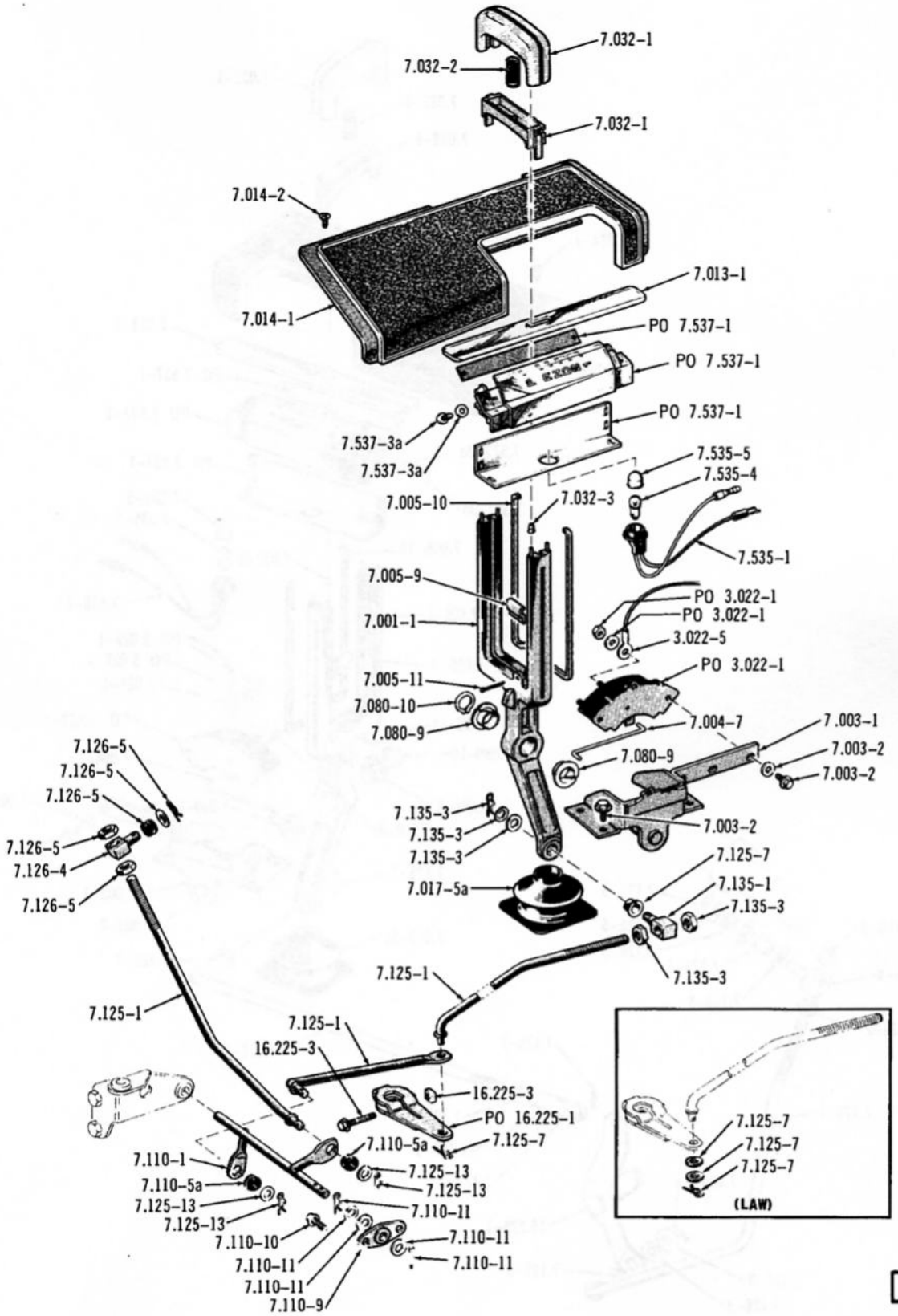

FLOOR GEAR SHIFT (WAT) . . . 1972 (70)

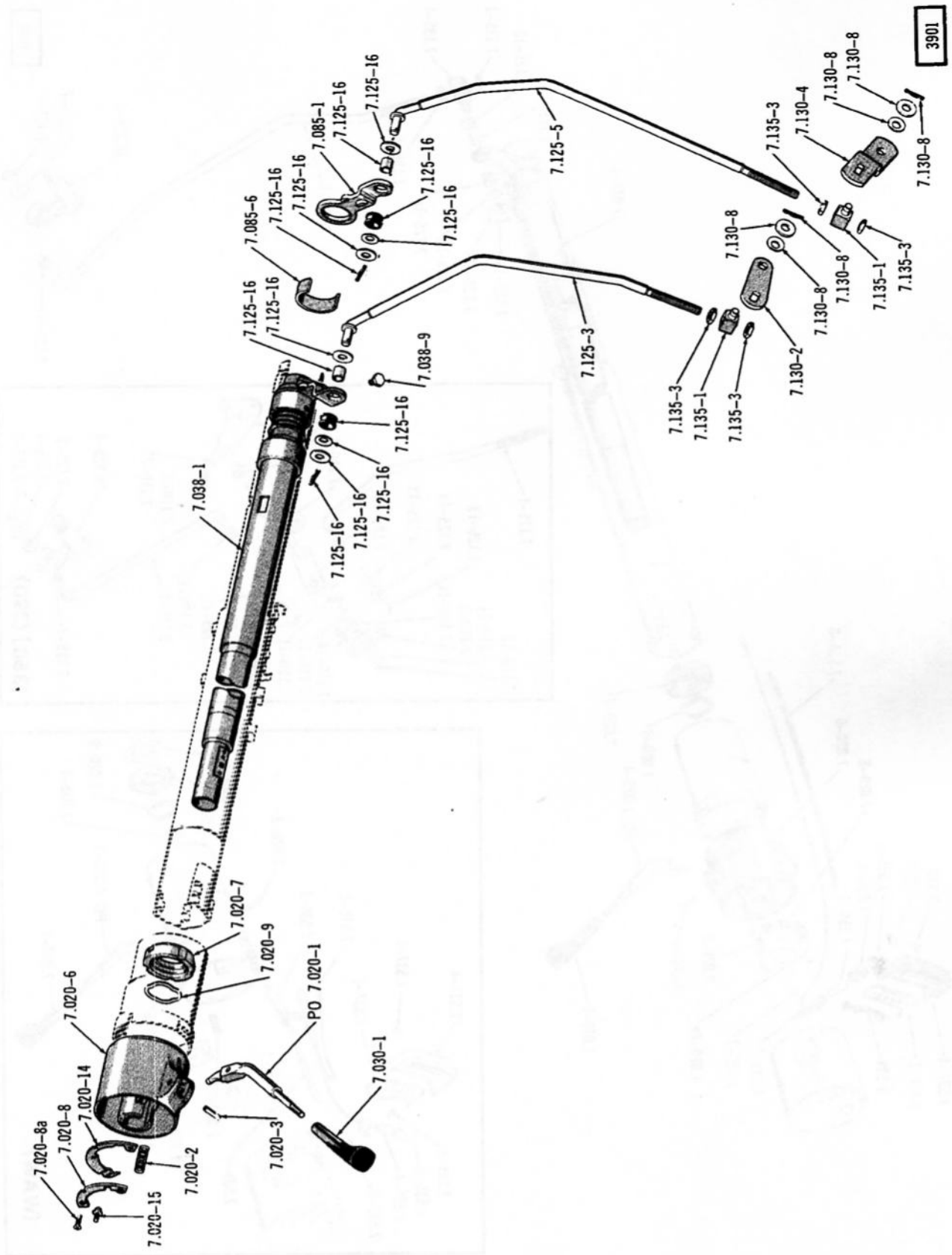

TRANSMISSION SHIFTING AND LOCK ROD . . . 1970/71 (WCGS-WST)

Printed in U.S.A.

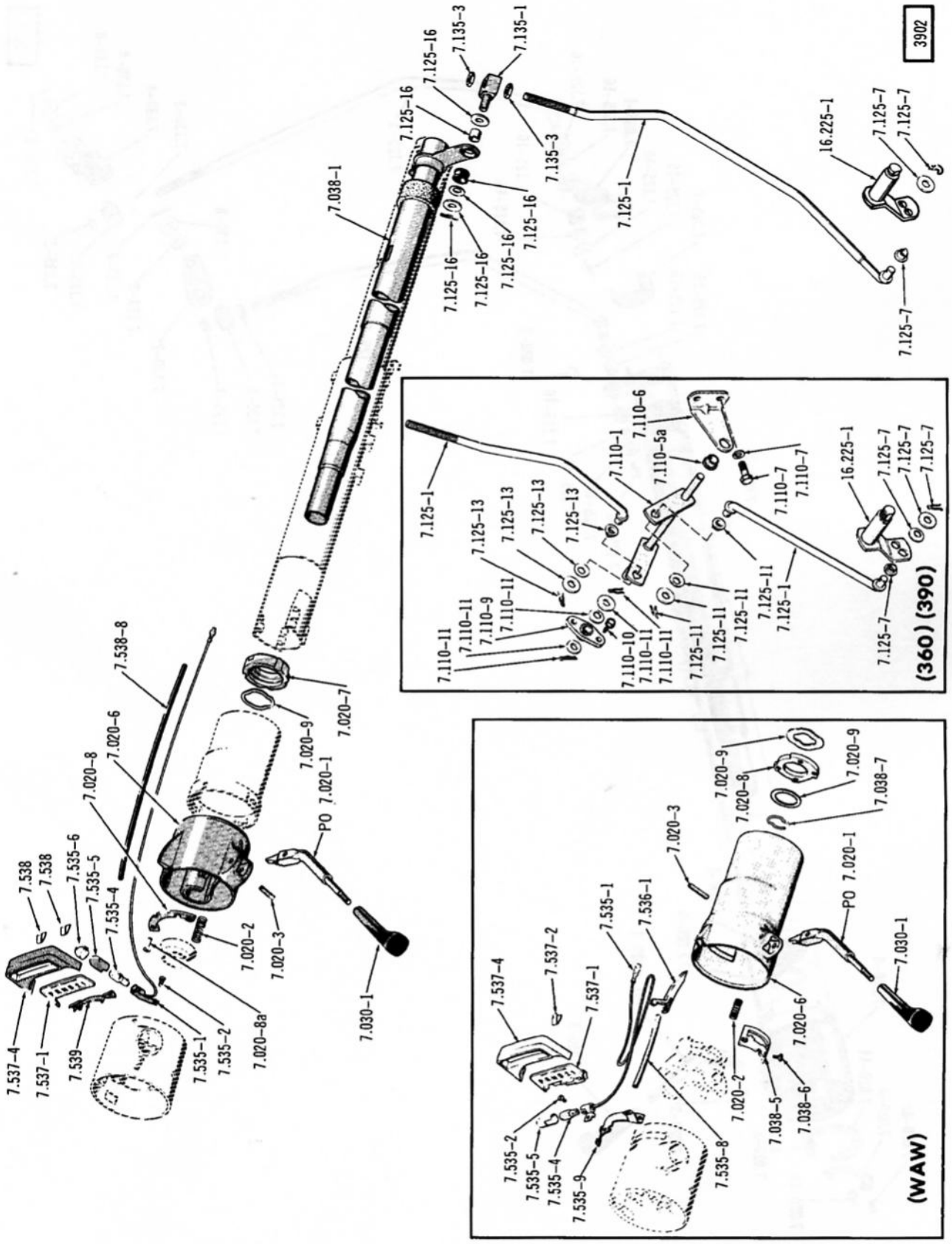

TRANSMISSION SHIFTING AND LOCK ROD ... 1970/71 (WCGS-WAT)

Printed in U.S.A.

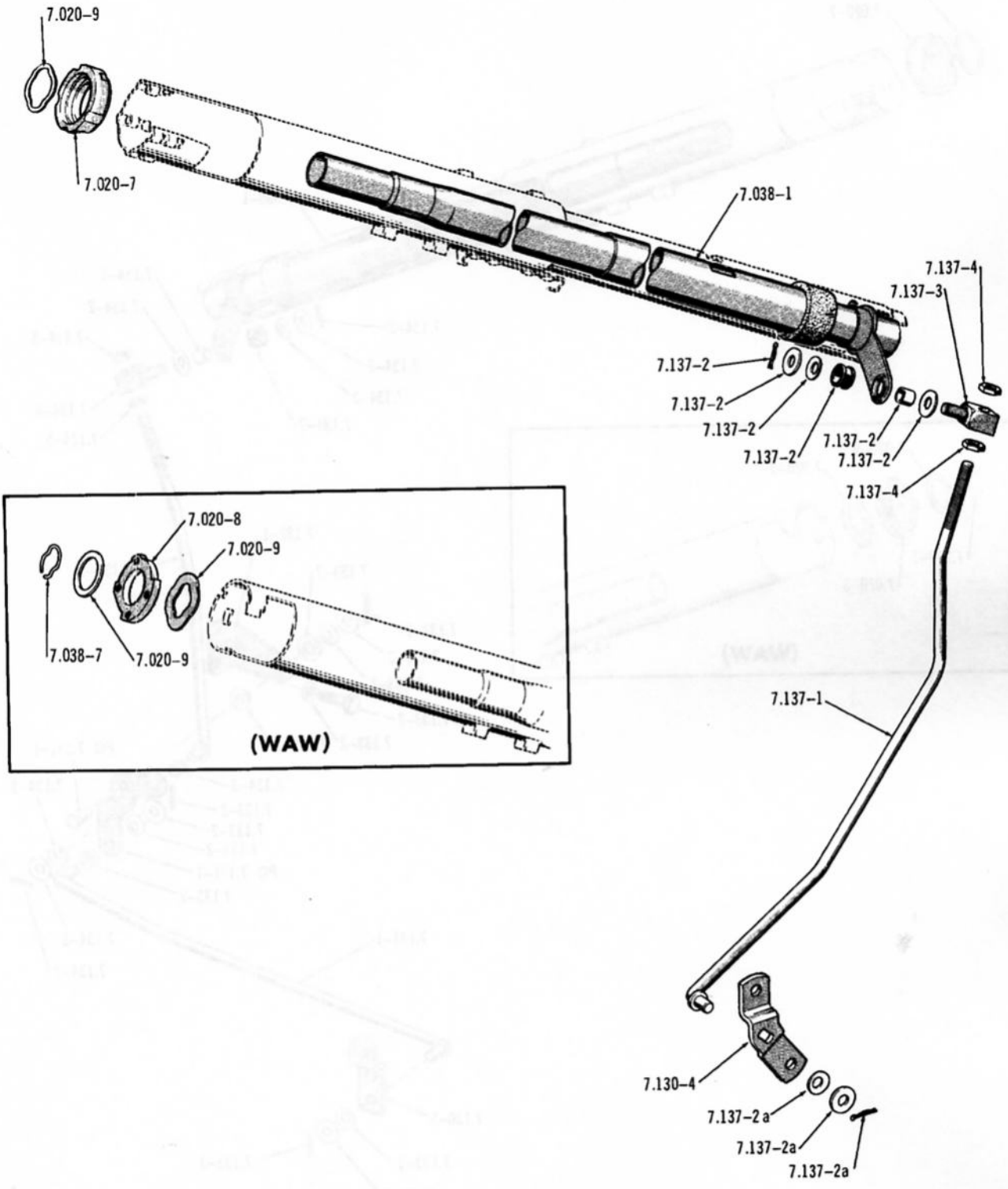

3900

TRANSMISSION LOCK ROD . . . 1970/71 (WFGS-WST)

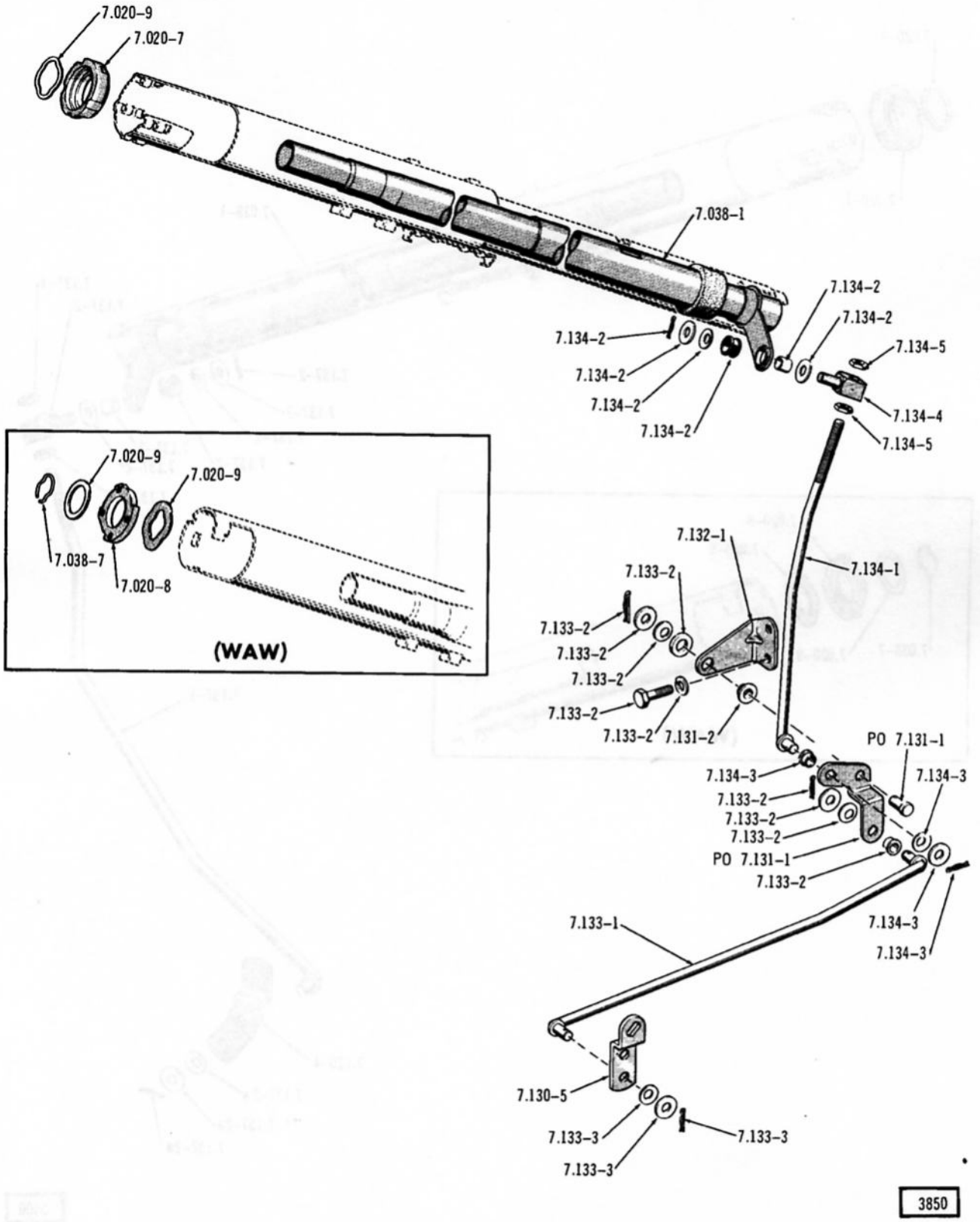

TRANSMISSION LOCK RODS . . . 1970/71 (WFGS-W4ST)

Printed in U.S.A.

GROUP NO. — DESCRIPTION — YEAR and MODEL	"L" CODE	PAKS CODE	PRIMARY GROUP NO.	PER CAR	PART NO.	CODE
7.001–1 LEVER, Floor Gear Shift						
71 01 (360-WST-WFGS)			.....	1	319 7858	
70 40 (Six-WST-WFGS)			.....	1	319 5125	
71 40 (232-WST-WFGS)			.....	1	321 2024	
72 40 (232-WST-WFGS-* 7-44)			.....	1	321 3976	
72 40 (232-WST-WFGS-* 7-45)			.....	1	321 3972	
71 01-40 (258-WST-WFGS)			.....	1	319 5125	
72 01-40 (258-WST-WFGS)			.....	1	321 3972	
72 01-40 (304-WST-WFGS)			.....	1	321 3972	
69 70 (WST-WFGS-* 7-23)			.....	1	319 5125	
69 70 (WST-WFGS-* 7-24)			.....	1	319 7719	
70/71 70 (WST-WFGS)			.....	1	319 7719	
72 70 (WST-WFGS)			.....	1	321 0550	
70 W4ST			.....	1	319 6315	
67/69 01 (W4ST-Except SC/RAMBLER): 10-50-80 (W4ST)			.....	1	318 4477	
69 09 (SC/RAMBLER-W4ST)			.....	1	319 8118	
71 01-10 (W4ST)			.....	1	321 2061	
68 30-70 (W4ST) ...(Incl. Base)			.....	1	318 9197	
69 30-70 (W4ST-* 7-19) ...(Incl. Base)			.....	1	318 9197	
69 30-70 (W4ST-* 7-20)			.....	1	319 6315	
71/ 70 (W4ST)			.....	1	321 2060	
67/69 WAT (WFGS)			.....	1	318 6758	
70 10-30-70-80 (WAT-WFGS)			.....	1	319 7731	
71 10-80 (WAT-WFGS)			.....	1	319 7731	
71/ 70 (WAT-WFGS)			.....	1	321 1283	
7.001–2 ATTACHING PARTS, Lever To Yoke						
BOLT, Hexagon	67/68	W4ST	.....	2	318 5179	
BOLT, Hexagon	69	01 (W4ST-Except SC/RAMBLER): 10 (W4ST)	.....	2	318 5179	
BOLT, Hexagon	69	30-70 (W4ST-* 7-19)	.....	2	318 5179	
WASHER, Plain.....	67/68	W4ST ***(Use 400 3808)***	17.814	2	G120394	NA
WASHER, Plain.....	69	01 (W4ST-Except SC/RAMBLER): 10 (W4ST) ***(Use 400 3808)***	17.814	2	G120394	NA
WASHER, Plain.....	69	30-70 (W4ST-* 7-19) ***(Use 400 3808)***	17.814	2	G120394	NA
7.001–3 SLEEVE, Gear Shift Lever						
67/70 WAT (WFGS)			.....	1	318 6749	
71 10-80 (WAT-WFGS)			.....	1	318 6749	
7.001–4 INSULATOR, Gear Shift Lever						
67/68 W4ST			.....	2	318 4469	
69 01 (W4ST-Except SC/RAMBLER): 10 (W4ST)			.....	2	318 4469	
69 30-70 (W4ST-* 7-19)			.....	2	318 4469	
7.001–5 RETAINER, Gear Shift Lever						
67/68 W4ST			.....	2	318 4730	
69 01 (W4ST-Except SC/RAMBLER): 10 (W4ST)			.....	2	318 4730	
69 30-70 (W4ST-* 7-19)			.....	2	318 4730	
7.001–6 CUSHION, Gear Shift Lever						
67/68 W4ST			.....	2	318 4731	
69 01 (W4ST-Except SC/RAMBLER): 10 (W4ST)			.....	2	318 4731	
69 30-70 (W4ST-* 7-19)			.....	2	318 4731	

Printed in U.S.A.

SHIFTING

7.001–7 GRIP, Reverse Lockout Finger

67	W4ST	.....	1	318 1543
68	W4ST	.....	1	319 1427
69	01 (W4ST-Except SC/RAMBLER): 10 (W4ST)	.....	1	319 1427
69	30-70 (W4ST-* 7-19)	.....	1	319 1427

7.001–8 BUSHING, Reverse Lockout Finger Grip

67/68	W4ST	.....	1	318 1294
69	01 (W4ST-Except SC/RAMBLER): 10 (W4ST)	.....	1	318 1294
69	30-70 (W4ST-* 7-19)	.....	1	318 1294

7.001–9 PIN, Reverse Lockout Finger Grip Spring

67/68	W4ST ..... ***(Use 400 1698)***	17.472	1	G273753
69	01 (W4ST-Except SC/RAMBLER): 10 (W4ST) ..... ***(Use 400 1698)***	17.472	1	G273753
69	30-70 (W4ST-* 7-19) ..... ***(Use 400 1698)***	17.472	1	G273753

7.001–10 INTERLOCK, Reverse Control Lever

67/68	W4ST	.....	1	318 4459
69	01 (W4ST-Except SC/RAMBLER): 10 (W4ST)	.....	1	318 4459
69	30-70 (W4ST-* 7-19)	.....	1	318 4459

7.001–11 CABLE ASSEMBLY, Reverse Release

67/68	W4ST	.....	1	320 9832
69	01 (W4ST-Except SC/RAMBLER): 10 (W4ST)	.....	1	320 9832
69	30-70 (W4ST-* 7-19)	.....	1	320 9832

7.001–12 RETAINER, Gear Shift Lever To Bracket

70/	01-40 (WST-WFGS)	.....	1	319 5110
69/	70 (WST-WFGS)	.....	1	319 5110

7.001–13 ATTACHING PARTS, Lever Retainer To Bracket

BOLT, Hexagon	70/	(5/16"-18 x 1-1/4") 01-40 (WST-WFGS) ..... ***(Use G180081)***	4.110	2	316 0300
BOLT, Hexagon	72	(5/16"-18 x 1-3/8") 01-40 (WST-WFGS)	10.260	2	400 3930
BOLT, Hexagon	69/	(5/16"-18 x 1-1/4") 70 (WST-WFGS) ***(Use G180081)***	4.110	2	316 0300
BOLT, Hexagon	72	(5/16"-18 x 1-3/8") 70	10.260	2	400 3930
WASHER, Lock	70/	01-40 (WST-WFGS)	17.820	2	G120214
WASHER, Lock	69/	70 (WST-WFGS)	17.820	2	G120214
WASHER, Plain.....	70/	01-40 (WST-WFGS)	17.814	2	G120393 NA
WASHER, Plain.....	69/	70 (WST-WFGS)	17.814	2	G120393 NA

7.001–14 SPRING, Gear Shift Lever Tension

70/	01-40 (WST-WFGS)	.....	1	319 5119
69/	70 (WST-WFGS)	.....	1	319 5119

7.002–1 SHIFT MECHANISM, Gear (Hurst Shift)

69	09 (SC/RAMBLER): 30-70 (W4ST-* 7-20)	.....	1	319 6316
70	W4ST	.....	1	319 6316
71/	01-70 (W4ST)	.....	1	319 6316
71	10 (W4ST)	.....	1	321 1051

SHIFTING

7.002–2 ATTACHING PARTS, Shift Mechanism To Adapter

BOLT, Hexagon	69	(7/16-14 x 3-1/4) 09 (SC/RAMBLER): 30-70 (W4ST-* 7-20)	17.038	1	G122340
BOLT, Hexagon	70/	(3-1/4" Long) W4ST	17.038	1	G122340
BOLT, Hexagon	69	(3/8-16 x 2-3/4) 09 (SC/RAMBLER): 30-70 (W4ST-* 7-20)	17.038	1	G180137
BOLT, Hexagon	70	(2-3/4" Long) W4ST	17.038	1	G180137
BOLT, Hexagon	71/	(2-3/4" Long) 01-70 (W4ST)	17.038	1	G180137
BOLT, Hexagon	71	10 (W4ST)	17.038	1	G186279 NA
WASHER, Plain	69	09 (SC/RAMBLER): 30-70 (W4ST-* 7-20)	17.814	2	400 1116
WASHER, Plain	70/	W4ST	17.814	2	400 1116
WASHER, Lock (Spring Type).....	69	(7/16" I. D.) 09 (SC/RAMBLER): 30-70 (W4ST-* 7-20)	17.820	1	G131100
WASHER, Lock (External Tooth)	69	30-70 (W4ST)	17.822	1	G114607 NA
WASHER, Lock (External Tooth)	70/	W4ST	17.822	1	G114607 NA
WASHER, Lock (Spring Type)	70/	W4ST	10.260	1	400 3803
WASHER, Lock	69	(3/8" I. D.) 09 (SC/RAMBLER): 30-70 (W4ST-* 7-20)	17.820	1	G120382
NUT, Jam.....	69	09 (SC/RAMBLER): 30-70 (W4ST-* 7-20)	17.410	1	G272122
NUT, Jam.....	70	W4ST	17.410	1	G272122
NUT, Jam.....	71/	(3/8-16) 01-10-70 (W4ST)	17.410	1	G272122
NUT, Jam.....	71	(7/16-14) 10 (W4ST)	17.406	1	G120377

7.002–3 ADAPTER, Gear Shift Mechanism To Transmission

69	09 (SC/RAMBLER)	.....	1	319 6381
69	30-70 (W4ST-* 7-20)	.....	1	319 6381
70	W4ST	.....	1	319 6381
71	01-70 (W4ST)	.....	1	319 6381
71	10 (W4ST)	.....	1	321 1025
72	70 (W4ST)	.....	1	319 6381

7.002–4 ATTACHING PARTS, Adapter To Transmission

BOLT, Hexagon	69	09 (SC/RAMBLER): 30-70 (W4ST-* 7-20)	17.038	1	G180080 NA
BOLT, Hexagon	70	W4ST	17.038	1	G180080 NA
BOLT, Hexagon	71/	01-70 (360-W4ST)(401-W4ST)	17.038	1	G180080 NA
BOLT, Hexagon	71	(5/16-18 x 1-3/64) 10 (W4ST)..... ***(Use G180081)***	.....	1	316 0300
BOLT, Hexagon	71	(5/16-18 x 7/8) 10 (W4ST).....	17.038	2	G180078
SCREW, Machine.....	69	(5/16-18 x 1-1/4) 09 (SC/RAMBLER): 30-70 (W4ST-* 7-20)	17.586	1	G156471
SCREW, Machine.....	70/	(5/16-18 x 1-1/4) W4ST.....	17.586	1	G156471
SCREW, Machine.....	69	(5/16-18 x 1) 09 (SC/RAMBLER): 30-70 (W4ST-* 7-20)	17.586	1	G156466
SCREW, Machine	70/	(5/16-18 x 1) W4ST	17.586	1	G156466
WASHER, Lock	69	09 (SC/RAMBLER): 30-70 (W4ST-* 7-20)	17.820	2	G120214
WASHER, Lock	70/	W4ST	17.820	2	G120214
NUT, Hexagon.....	69	09 (SC/RAMBLER): 30-70 (W4ST-* 7-20) ..... ***(Use 400 2117)***	17.406	1	G120376 NA
NUT, Hexagon.....	70/	W4ST ..... ***(Use 400 2117)***	17.406	1	G120376 NA

7.002–5 INSERT, Gear Shift Mechanism To Adapter

69	09 (SC/RAMBLER): 30-70 (W4ST-* 7-20)	.....	1	319 6464
70/71	W4ST	.....	1	319 6464
72	70 (W4ST)	.....	1	319 6464

Printed in U.S.A.

SHIFTING

7.003–1 BRACKET, Gear Shift Lever Mounting

70	01-40 (WST-WFGS)	.....	1	319 7512
71	01 (360-WST-WFGS)	.....	1	321 2287
71	40 (232-WST-WFGS-* 7-44)	.....	1	321 2288
71	40 (232-WST-WFGS-* 7-45)	.....	1	321 2287
72	40 (232-WST-WFGS-* 7-44)	.....	1	321 5867
72	40 (232-WST-WFGS-* 7-45)	.....	1	321 5869
71	01-40 (258-WST-WFGS)	.....	1	321 2287
72	01-40 (258-WST-WFGS)(304-WST-WFGS)	.....	1	321 5869
69	70 (WST-WFGS)	.....	1	319 5116
70	70 (WST-WFGS)	.....	1	319 7899
71	70 (232-WST-WFGS)(304-WST-WFGS)(360-WST-WFGS)	.....	1	321 2288
72	70 (232-WST-WFGS)(304-WST-WFGS)	.....	1	321 5867
67/68	W4ST	.....	1	318 4464
69	01 (W4ST-Except SC/RAMBLER): 10 (W4ST)	.....	1	318 4464
69	30-70 (W4ST-* 7-19)	.....	1	318 4464
67/70	WAT (WFGS-* 7-27)	.....	1	318 5937
70	WAT (WFGS-* 7-28)	.....	1	321 0545
71/	10-80 (V8-WAT-WFGS)	.....	1	321 0545
71	70 (V8-WAT-WFGS)	.....	1	321 1289
71/	70 (WAT-WFGS)	.....	1	321 3577

7.003–2 ATTACHING PARTS, Bracket To Support

BOLT, Hexagon	67/70	WAT (WFGS)	17.038	4	G180020 NA
BOLT, Hexagon	71/	WAT (WFGS)	17.038	4	G179795 NA
WASHER, Lock	67/	WAT (WFGS)	17.820	4	G120380 NA

7.003–3 ATTACHING PARTS, Bracket To Transmission

BOLT, Hexagon	67/68	W4ST	17.038	2	G180078 NA
BOLT, Hexagon	69	01 (W4ST-Except SC/RAMBLER): 10 (W4ST)	17.038	2	G180078 NA
BOLT, Hexagon	70/	(3/8"-16 x 7/8") 01-40 (WST-WFGS)	17.038	AR	G180121
BOLT, Hexagon	72	(5/16"-18 x 7/8") 01-40 (WST-WFGS)	.....	2	400 4508
BOLT, Hexagon	70/	(1" Long) 01-40-70 (WST-WFGS)	17.038	1	G180122 NA
BOLT, Hexagon	69	30-70 (W4ST-* 7-19)	17.038	2	G180078 NA
BOLT, Hexagon	69/	(3/8"-16 x 7/8") 70 (WST-WFGS)	17.038	2	G180121
BOLT, Hexagon	72	(5/16"-18 x 7/8") 70 (WST-WFGS)	.....	2	400 4508
BOLT, Hexagon	69/70	(1" Long) 70 (WST-WFGS)	17.038	1	G180122 NA
SCREW, Machine	67/68	W4ST	17.586	1	G156471
SCREW, Machine	69	01 (W4ST-Except SC/RAMBLER): 10 (W4ST)	17.586	1	G156471
SCREW, Machine	69	30-70 (W4ST-* 7-19)	17.586	1	G156471
WASHER, Plain	70/	01-40 (WST-WFGS)	17.814	1	400 1161
WASHER, Plain	69/	70 (WST-WFGS)	17.814	1	400 1161
WASHER, Lock	69	01 (W4ST-Except SC/RAMBLER): 10 (W4ST)	17.820	3	G120214
WASHER, Lock	70/	01-40 (WST-WFGS)	10.260	AR	400 3803
WASHER, Lock	67/68	W4ST	17.820	3	G120214
WASHER, Lock	69	30-70 (W4ST-* 7-19)	17.820	3	G120214
WASHER, Lock	69	70 (WST-WFGS)	17.820	3	G120382
WASHER, Lock	70/	70 (WST-WFGS)	10.260	3	400 3803
NUT, Hexagon	67/70	W4ST ..... ***(Use 400 2117)***	17.406	1	G120376 NA
NUT, Hexagon	69	01 (W4ST-Except SC/RAMBLER): 10 (W4ST) ..... ***(Use 400 2117)***	17.406	1	G120376 NA
NUT, Hexagon	69	30-70 (W4ST-* 7-19) ..... ***(Use 400 2117)***	17.406	1	G120376 NA

7.003–4 SPACER, Gear Shift Lever Mounting Bracket

67/68	W4ST	.....	1	318 4446
69	01-10 (W4ST)	.....	1	318 4446
69	30-70 (W4ST-* 7-19)	.....	1	318 4446

SHIFTING

7.003–5 BUMPER, Gear Shift Lever Mounting Bracket

67/70	WAT (WFGS))	.....	2	318 5932
71/	10-80 (WAT-WFGS)	.....	2	318 5932

7.003–6 RETAINER, Gear Shift Lever Mounting Bracket Bumper

67/70	WAT (WFGS)	.....	2	318 5931
71/	10-80 (WAT-WFGS)	.....	2	318 5931

7.003–7 ATTACHING PARTS, Retainer To Bracket

RIVET, Tubular	67/70	WAT (WFGS)	.....	4	400 1788
RIVET, Tubular	71/	10-80 (WAT-WFGS)	.....	4	400 1788

7.003–8 SEAT, Gear Shift Lever Ball

70/	01-40 (WST-WFGS)	.....	1	319 5114
69/	70 (WST-WFGS)	.....	1	319 5114

7.004–1 ROD, Floor Gear Shift Lever Actuating

67/69	WAT (WFGS)	.....	1	317 9756
70	WAT (WFGS)	.....	1	319 7732
71/	10-80 (WAT-WFGS)	.....	1	319 7732

7.004–2 BUTTON, Gear Shift Lever Control Knob

67/69	WAT (WFGS)	.....	1	317 9746

7.004–2a BUTTON, Gear Shift Lever Handle

70	WAT (WFGS)	.....	1	319 7727
71	10-80 (WAT-WFGS)	.....	1	319 7727

7.004–2b ATTACHING PARTS, Button To Handle

CLIP, Tubular	70	WAT (WFGS)	.....	1	319 7725
CLIP, Tubular	71	10-80 (WAT-WFGS)	.....	1	319 7725

7.004–3 PIN, Gear Shift Lever Control

67/70	WAT (WFGS)	.....	1	317 9750
71/	10-80 (WAT-WFGS)	.....	1	317 9750

7.004–4 BUSHING, Gear Shift Lever Rod

67/70	WAT (WFGS)	.....	2	317 9752
71/	10-80 (WAT-WFGS)	.....	1	317 9752

7.004–5 SPRING, Gear Shift Lever Actuating

67/70	WAT (WFGS)	.....	1	317 9753
71/	10-80 (WAT-WFGS)	.....	1	317 9753

7.004–6 ATTACHING PARTS, Spring To Lever

PIN, Spring	67/70	WAT (WFGS)	17.472	1	G455798 NA
PIN, Spring	71/	10-80 (WAT-WFGS)	17.472	1	G455798 NA

Printed in U.S.A.

SHIFTING

7.004–7 LEVER, Neutral Safety And Back-Up Light Switch Actuating

67/70	WAT (WFGS)	.....	1	317 9759
71	10-80 (WAT-WFGS)	.....	1	317 9759
71	70 (WAT-WFGS)	.....	1	321 1602

7.004–8 ATTACHING PARTS, Switch To Actuating Lever

NUT, Speed	71	70 (WAT-WFGS)	7.215	1	400 0459

7.005–1 SHAFT, Gear Shift Lever Pivot

67/68	W4ST	.....	1	318 4455
69	01 (W4ST-Except SC/RAMBLER): 10 (W4ST)	.....	1	318 4455
69	30-70 (W4ST-* 7-19)	.....	1	318 4455

7.005–2 WASHER, Gear Shift Lever Pivot Shaft Spring

67/68	W4ST	.....	1	318 4449
69	01 (W4ST-Except SC/RAMBLER): 10 (W4ST)	.....	1	318 4449
69	30-70 (W4ST-* 7-19)	.....	1	318 4449

7.005–3 RING, Gear Shift Pivot Shaft Snap

67/68	W4ST	.....	1	318 4447
69	01 (W4ST-Except SC/RAMBLER): 10 (W4ST)	.....	1	318 4447
69	30-70 (W4ST-* 7-19)	.....	1	318 4447

7.005–4 WASHER, Gear Shift Lever Wave

67/68	W4ST	.....	1	318 4451
69	01 (W4ST-Except SC/RAMBLER): 10 (W4ST)	.....	1	318 4451
69	30-70 (W4ST-* 7-19)	.....	1	318 4451

7.005–5 YOKE, Gear Shift Lever Pivot Shaft

67/68	W4ST	.....	1	318 4453
69	01 (W4ST-Except SC/RAMBLER): 10 (W4ST)	.....	1	318 4453
69	30-70 (W4ST-* 7-19)	.....	1	318 4453

7.005–6 PIN, Gear Shift Lever Pivot Shaft Yoke

67/68	W4ST	.....	1	318 4452
69	01 (W4ST-Except SC/RAMBLER): 10 (W4ST)	.....	1	318 4452
69	30-70 (W4ST-* 7-19)	.....	1	318 4452

7.005–7 SPRING, Gear Shift Lever Pivot Shaft

67/68	W4ST	.....	1	318 4457
69	01 (W4ST-Except SC/RAMBLER): 10 (W4ST)	.....	1	318 4457
69	30-70 (W4ST-* 7-19)	.....	1	318 4457

7.005–8 WASHER, Gear Shift Lever Pivot Shaft Spring

67/70	WAT (WFGS)	.....	1	316 7594
71/	10-80 (WAT-WFGS)	.....	1	316 7594

7.005–9 KEY, Gate Gear Shift Selector

71/	70 (WAT-WFGS)	.....	1	321 1286

SHIFTING

7.005–10 LIFTER, Gear Shift Lever

71/	70 (WAT-WFGS)	.....	1	321 1290	

7.005–11 ATTACHING PARTS, Floor Shift Lever To Lifter Shift Lever

PIN, Spring 71	70 (WAT-WFGS)	17.472	1	G455862	NA
PIN, Cotter 72	70 (WAT-WFGS)	17.460	1	G108630	NA

7.006–1 SEAT, Reverse Release Spring

67/69	W4ST ***(Ord. 320 9832)***	.....	1	318 4470	

7.006–2 SPRING, Reverse Release

67/69	W4ST ***(Ord. 320 9832)***	.....	1	318 4471	

7.006–3 BLOCKER, Reverse Release

67/68	W4ST ***(Ord. 320 9832)***	.....	1	318 4475	
69	01 (W4ST-Except SC/RAMBLER): 10 (W4ST) ***(Ord. 320 9832)***	.....	1	318 4475	
69	30-70 (W4ST-* 7-19) ***(Ord. 320 9832)***	.....	1	318 4475	

7.013–1 COVER, Gear Shift Lever

67	01 (WAT-WFGS)	.....	1	318 7404	
67/70	10-30-50-70-80 (WAT-WFGS-WFC)...(Incl. Indicator)	.....	1	318 6759	
71	10-80 (WAT-WFGS-WFC)...(Incl. Indicator)	.....	1	318 6759	
71/	70 (WAT-WFGS)	.....	1	321 1408	

7.013–2 BOOT, Gear Shift Lever

70/	01-40 (WST-WFGS)	.....	1	319 5126	
69	70 (WST-WFGS-* 7-23)	.....	1	319 5126	
69	70 (WST-WFGS-* 7-24)	.....	1	319 7721	
70	70 (WST-WFGS)	.....	1	319 7721	
71/	70 (232-WST-WFGS)(304-WST-WFGS)(360-WST-WFGS)	.....	1	321 1121	
67/70	W4ST (LFC)	.....	1	318 9199	
67	W4ST (WFC)	.....	1	318 6690	
71	01-10 (W4ST)	.....	1	318 9199	
71	70 (W4ST)	.....	1	321 1298	

7.014–1 BEZEL, Gear Shift Lever

67	W4ST (WFC)	.....	1	318 6692	
67/70	W4ST (LFC)	.....	1	318 4485	
71	01-10 (W4ST)	.....	1	318 4485	
71/	01-40 (WST-WFGS)	.....	1	319 7720	
70	40 (Six-WST-WFGS)	.....	1	319 5120	
69	70 (WST-WFGS-* 7-23)	.....	1	319 5120	
69	70 (WST-WFGS-* 7-24)	.....	1	319 7720	
70	70 (WST-WFGS)	.....	1	319 7720	
71/	70 (WST-WFGS-WFC)(Black)(On Boot)	.....	1	321 2344	
71/	70 (WST-WFGS-LFC)(Chrome)(On Boot)	.....	1	321 1122	
71/	70 (WST-WFGS-WFC)(On Console)	.....	1	321 1124	
71/	70 (W4ST-LFC)	.....	1	321 1330	
71/	70 (360-W4ST-WFC)(401-W4ST-WFC)	.....	1	321 1300	

67	01 (WAT-WFGS)	.....	1	318 8933
67/71	10-50-80 (WAT-WFGS)	.....	1	318 6762
68	30-70 (WAT-WFGS-WFC-* 7-1)	.....	1	319 0342
68	30-70 (WAT-WFGS-WFC-* 7-2)	.....	1	319 3026
69/70	30-70 (WAT-WFGS)	.....	1	319 3026
71/	70 (V8-WAT-WFGS-WFC)	.....	1	321 1297

7.014-2 ATTACHING PARTS, Bezel To Console

CLIP, Tubular	67	01 (WAT-WFGS)	27.261	2	400 0856
CLIP, Tubular	67/71	10-50-80 (WAT-WFGS)	27.261	4	400 0856
NUT, Speed	68	30-70 (WAT-WFGS-WFC-* 7-1)	23.055	1	400 1932
SCREW, Tapping	68	30-70 (WAT-WFGS-WFC-* 7-1)	17.660	1	G443946
SCREW, Tapping	71/	70 (WFGS-WFC)	.....	4	400 2809
"J" CLIP	68	30-70 (WAT-WFGS-WFC-* 7-2)	.....	2	319 3023
"J" CLIP	69/	30-70 (WAT-WFGS)	.....	2	319 3023

7.014-3 ATTACHING PARTS, Bezel To Support

SCREW, Tapping	67/71	W4ST (LFC)	17.654	4	G168623
SCREW, Tapping	72	W4ST	17.655	4	812 1623
SCREW, Tapping	69/	WST (WFGS-Zinc Plated)	27.250	6	400 2045
SCREW, Tapping	71/	WST (WFGS-Black)	29.010	6	400 2192

7.014-4 PAD, Gear Shift Lever Bezel

67	WAT (WFGS)	.....	2	317 5385
68	WAT (Six)	.....	2	317 5385

7.015 SEAL, Gear Shift Boot And Bezel

69/70	70 (WST-WFGS)	.....	1	319 7196
71/	WST (WFGS)	.....	1	319 7196

7.017-1 SUPPORT, Gear Shift Lever Mounting Bracket (On Floor Pan)

67/69	01 (W4ST-Except SC/RAMBLER)	.....	1	358 3185
69	09 (SC/RAMBLER)	.....	1	363 5762
67/68	10-30-50-70-80 (W4ST)	.....	1	357 6748
69	10-80 (W4ST)	.....	1	357 6748
69	30-70 (W4ST-* 7-19)	.....	1	357 6748
67/68	01 (WAT-WFGS)	.....	1	317 6923
67/70	10-30-50-70-80 (WAT-WFGS)	.....	1	357 6747
71/	10-80 (WAT-WFGS)	.....	1	357 6747

7.017-1a ATTACHING PARTS, Support To Floor Pan

SCREW, Tapping	67/	(#10-16 x 3/4) 01 (W4ST-Except SC/RAMBLER)	17.671	6	400 0774
SCREW, Tapping	69	(#10-12 x 1/2) 01 (W4ST-Except SC/RAMBLER) ..... ***(Use 812 0054)***	17.671	6	G274773 NA
SCREW, Tapping	69	09 (SC/RAMBLER)	17.671	6	400 1042
SCREW, Tapping	67/69	10-30-50-70-80 (W4ST)	17.660	6	G161895
SCREW, Tapping	67/70	WAT (WFGS)	2.050	6	400 0738
SCREW, Tapping	71/	.....	2.050	6	400 0738

7.017-2 HOUSING, Gear Shift Mechanism (Nylon)

69	09 (SC/RAMBLER): 30-70 (W4ST-* 7-20)	.....	1	319 6449
70	W4ST	.....	1	319 6449
71	01-10 (W4ST)	.....	1	319 6449
71/	70 (W4ST)	.....	1	321 1301

SHIFTING

7.017–2a ATTACHING PARTS, Housing To Floor Pan

SCREW, Tapping.....	69	09 (SC/RAMBLER): 30–70 (W4ST–* 7–20) ..... ***(Use 812 0054)***	17.671	6	G274773	NA
SCREW, Tapping.....	70	W4ST ..... ***(Use 812 0054)***	17.671	6	G274773	NA
SCREW, Tapping.....	71/	W4ST	17.671	6	G9421073	NA

7.017–2b SEALER, Gear Shift Mechanism Housing

69	30–70.....	23.012	1	360 9111	
70	WFGS.....	23.012	1	360 9111	

7.017–3 SEAL, Gear Shift Lever Mounting Bracket Support To Floor Pan

67/70	WAT (WFGS).....	.....	1	317 2595	
71/	10–80 (WAT–WFGS).....	.....	1	317 2595	
67/68	W4ST	.....	1	318 4487	
69	01 (W4ST–Except SC/RAMBLER): 10 (W4ST)	.....	1	318 4487	
69	30–70 (W4ST–* 7–19)	.....	1	318 4487	

7.017–4 ATTACHING PARTS, Seal To Support

SCREW, Tapping.....	67/70	WAT (WFGS).....	17.660	4	G163216	NA
SCREW, Tapping.....	71/	10–80 (WAT–WFGS).....	17.660	4	G163216	NA
WASHER, Plain.....	67/70	WAT (WFGS).....	17.814	4	G9416128	NA
WASHER, Plain.....	71/	10–80 (WAT–WFGS).....	17.814	4	G9416128	NA

7.017–5 SEAL, Gear Shift Lever Mounting Bracket Support

67/70	WAT (WFGS).....	13.028	1	316 0310	
71/	10–80 (WAT–WFGS).....	13.028	1	316 0310	

7.017–5a BOOT, Gear Shift Lever

71	70 (WAT–WFGS).....	.....	1	321 2668	
72	70 (WAT–WFGS).....	.....	1	321 3728	

7.017–5b PLATE, Boot Gear Shift Lever

71/	70 (WAT–WFGS).....	.....	1	321 2669	

7.017–6 BRACKET, Gear Shift Lever Mounting Bracket Support

67	10–50–80 (W4ST–WFGS)	.....	1	318 6689	

7.017–7 ATTACHING PARTS, Bracket To Support

SCREW, Tapping.....	67	10–50–80 (W4ST–WFGS) ..... ***(Use 812 0054)***	17.671	4	G274773	NA

7.017–8 PLUG, Gear Shift Lever Adjusting Hole (In Housing)

69	09 (SC/RAMBLER): 30–70 (W4ST–* 7–20)	27.038	1	400 0333	
70/	W4ST	27.038	1	400 0333	

7.020–1 LEVER, Column Gear Shift Upper (Incl. Knob)

67	01 (LHD–WST)(LHD–WOD)..... ***(Use 448 6867)***	.....	1	318 6519	
68	01 (LHD–WST)(LHD–WOD)..... ***(Use 448 6867)***	.....	1	318 6518	
67/68	10–50–70–80 (LHD–WST)(LHD–WOD)..... ***(Use 448 6867)***	.....	1	318 6518	
69	01–10–80 (LHD–Six–WST–WCGS)(LHD–Six–WOD–WCGS)	.....	1	448 6867	
70/	01–10–40–80 (LHD–Six–WST)	.....	1	319 6203	

Printed in U.S.A.

67/69	***01 (RHD-WST)***	.....	1	317 1809
67/68	***10 (RHD-WST)***	.....	1	317 2909
67	01 (LHD-WAT-WCGS)	.....	1	318 6517
68	01 (LHD-WAT-WCGS) ***(Use 448 6868)***	.....	1	318 6516
69	01-10-70-80 (LHD-WAT-WCGS-LAW)	.....	1	448 6868
70/	01-40-70 (WAT-LAW)	.....	1	319 6201
72	01-40 (WAT-WAW)	.....	1	319 6205
67/68	10-50-70-80 (LHD-WAT-WCGS-LAW) ***(Use 448 6868)***	.....	1	318 6516
67/68	10-50-70-80 (LHD-WAT-WCGS-WAW)	.....	1	318 6521
69	10-70-80 (LHD-WAT-WCGS-WAW)	.....	1	448 6869
70/	10-80 (LHD-WAT-LAW)	.....	1	319 6201
70/	10-70-80 (WAT-WCGS-WAW)	.....	1	319 6205
67/69	***01 (RHD-WAT)***	.....	1	317 1011
67/70	***10-80 (RHD-WAT)***	.....	1	317 2907

7.020–2 SPRING, Column Gear Shift Upper Lever Tension

67/69	LHD (WST)(WOD)	.....	1	320 8080
70/	01-10-40-80 (LHD-WST-LAW)	.....	1	448 7709
67/69	LHD (WAT-LAW)	.....	1	320 8082
70/	LHD (WAT-WCGS-LAW)	.....	1	448 7791
70	10-70-80 (WAT-WCGS-WAW)	.....	1	448 7871
67/69	LHD (WAT-WAW)	.....	1	320 8095
71/	10-70-80 (WAT-WCGS-WAW)	.....	1	812 0251

7.020–3 PIN, Column Gear Shift Upper Lever Pivot

67/69	(Knurled) LHD ***(Use 400 3925)***	.....	1	318 6414
69/	(Split) LHD	.....	1	400 3925
67/70	***RHD***	.....	1	315 7685

7.020–4 SPACER, Column Gear Shift Upper Lever Anti-Rattle

67/69	LHD (Used With Knurled Pin)	.....	1	318 8635

7.020–5 GROMMET, Column Gear Shift Upper Lever

67/70	***RHD***	.....	1	316 2336

7.020–6 HOUSING, Gear Shift Upper Lever (On Steering Column)

67/69	LHD (WST)(WOD)	.....	1	320 8071
70	01-10-40-80 (LHD-WST-LAW)	.....	1	448 7697
71	01-10-40-80 (LHD-WST-WCGS-LAW-* 7-31)	.....	1	448 7697
71	01-10-40-80 (LHD-WST-WCGS-LAW-* 7-32)	.....	1	448 9031
72	01-10-40-80 (LHD-WST-WCGS-LAW)	.....	1	448 9031
72	01-40 (LHD-Six-WAT-WCGS-LAW)	.....	1	448 9040
72	01-40 (LHD-V8-WAT-WCGS-LAW-* 7-31) ***(Ord. 448 9040)***	.....	1	448 7767
72	01-40 (LHD-V8-WAT-WCGS-LAW-* 7-32)	.....	1	448 9040
72	10-70-80 (LHD-WAT-WCGS-LAW)	.....	1	448 9040
67/69	LHD (WAT-WFGS-LAW)(W4ST-LAW)	10.338	1	320 8073
67/69	LHD (WAT-WFGS-WAW)(W4ST-WAW)	10.338	1	320 8154
67/69	LHD (WAT-WCGS-LAW)	.....	1	320 8079
70	LHD (WAT-WCGS-LAW) ***(Ord. 448 9040)***	.....	1	448 7767
71	LHD (WAT-WCGS-LAW-* 7-31) ***(Ord. 448 9040)***	.....	1	448 7767
71	LHD (WAT-WCGS-LAW-* 7-32)	.....	1	448 9040
67/69	LHD (WAT-WCGS-WAW)...(Incl. Spring)	.....	1	320 8094
70/	WAT (WCGS-WAW)	.....	1	319 6538
67/69	***01 (RHD-WAT)***...(Incl. Pointer)	.....	1	320 4898
67/69	***01 (RHD-WST)***	.....	1	320 4712
67/68	***10 (RHD-WST)***	.....	1	320 5228
67/70	***10-80 (RHD-WAT-WCGS)***	.....	1	320 5229

SHIFTING

7.020–7 BEARING, Gear Shift Upper Lever Housing

67/69	LHD (LAW)	.....	1	320 8293
70	LHD (LAW)	.....	1	448 7716
67/70	***RHD (WCGS)***	.....	1	317 5539
71	01-40 (WFGS-* 7-32 And * 7-33)	.....	1	448 7716
71/	01-40 (LHD-WCGS)	.....	1	448 7716
71	10-80 (LHD-LAW)	.....	1	448 7716
72	10-80 (LHD-WCGS-LAW)	.....	1	448 7716
71/	70 (LHD-WCGS-LAW)	.....	1	448 7716
71	70 (WFGS-LAW-* 7-33)	.....	1	448 7716

7.020–8 PLATE, Gear Shift Upper Lever Housing Lock

67	LHD (WAT-WCGS-LAW)	3.321	1	318 9065
68/69	LHD (WAT-WCGS-LAW)	3.321	1	319 1076
70	LHD (WAT-WCGS-LAW)	.....	1	448 7786
71	LHD (WAT-WCGS-LAW-* 7-31)	.....	1	448 7786
67/69	LHD (WST-LAW)(WOD-LAW)(WFGS-LAW)	3.321	1	320 8020
70	01-10-40-80 (LHD-WST-LAW)	.....	1	448 7706
71	01-10-40-80 (LHD-WST-LAW-* 7-31)	.....	1	448 7706
67/69	LHD (WAW)	.....	1	320 8155
70/	WAW	.....	1	448 7860

7.020–8a ATTACHING PARTS, Lock Plate To Steering Column Housing

SCREW, Machine.....	70	LHD (WST-LAW)(WAT-WCGS-LAW)	.....	2	448 7707
SCREW, Machine.....	71	LHD (WST-LAW-* 7-31)(WAT-WCGS-LAW-* 7-31)	.....	2	448 7707

7.020–9 WASHER, Gear Shift Upper Lever Housing

67/69	LHD (WST)(WOD)	.....	1	320 8086
70	LHD (WAT-WCGS-LAW)(WFGS-LAW)	.....	1	448 7769
71	LHD (WAT-WCGS-LAW-* 7-31)(WFGS-LAW-* 7-31)	.....	1	448 7769
70/	(Conica) LHD (WST-WCGS-LAW)	.....	1	448 8432
70/71	(Wave) LHD (WST-WCGS-LAW) ***(Use 448 8432)***	.....	1	448 7766
71	(Wave) LHD (WST-WCGS-LAW-* 7-31) ***(Use 448 8432)***	.....	1	448 7766
67/69	(Thrust) LHD (WAW)	.....	1	320 8158
70/	(Thrust) WAW	.....	1	448 7872
67/71	(Wave) LHD (WAW)	.....	1	320 8159
70/	(Wave) WAW	.....	1	448 7873

7.020–10 SPRING, Gear Shift Upper Lever Vibration Dampening

67/70	***RHD (WCGS)***	.....	1	317 5545

7.020–11 BUSHING, Gear Shift Upper Lever Housing

67/70	***RHD (WCGS)***	.....	1	320 5403

7.020–12 INSERT, Gear Shift Upper Lever Positioning

67	***RHD (WAT-WCGS)***	.....	1	320 4902
68/70	***RHD (WAT-WCGS)***	.....	1	319 1938

7.020–13 ATTACHING PARTS, Insert To Directional Signal Switch Housing

SCREW, Tapping..... 67/69		***01 (RHD-WAT)***	.....	2	320 2780
SCREW, Machine..... 67/70		***10-80 (RHD-WAT-WCGS)***	17.598	2	G273876 NA

Printed in U.S.A.

SHIFTING

7.020–14 SPRING, Gearshift Upper Lever Housing Detent

70	01-10-40-80 (LHD-WST-LAW)	.....	1	448 7708
71	01-10-40-80 (LHD-WST-LAW-* 7-31)	.....	1	448 7708

7.020–15 SCREW, Gearshift Detent

70	01-10-40-80 (LHD-WST-LAW)	.....	1	448 7863
71	01-10-40-80 (LHD-WST-LAW-* 7-31)	.....	1	448 7863

7.025–1 PIN, Gear Shift Upper Lever Pressure

67/70	*RHD (WAT-WCGS)*	.....	1	317 5529

7.025–2 SPRING, Gear Shift Upper Lever Pressure Pin

67/70	*RHD (WAT-WCGS)*	.....	1	317 9338

7.025–3 RETAINER, Gear Shift Upper Lever Pressure Pin

67/70	*RHD (WAT-WCGS)*	.....	1	320 4064

7.025–4 ATTACHING PARTS, Retainer To Housing

SCREW, Tapping..... 67/70	*RHD (WAT-WCGS)*	17.660	1	G166985 NA

7.025–5 SPRING, Gear Shift Upper Lever Pressure Pin Retainer

67/70	*RHD (WAT-WCGS)*	.....	1	320 4060

7.025–6 WASHER, Gear Shift Upper Lever Pressure Pin Retainer Spring

67/70	*RHD (WAT-WCGS)*	.....	1	317 5531

7.030–1 KNOB, Gear Shift Lever

67/71	LHD (WCGS)	.....	1	318 6515
69	70 (WST-WFGS-* 7-23)	.....	1	319 5113
69	70 (WST-WFGS-* 7-24)	.....	1	319 7718
72	01-40-70 (WST-WFGS)	.....	1	321 5795
70/71	01-40-70 (WST-WFGS)	.....	1	319 7718
67/68	W4ST	.....	1	318 4484
69	01 (W4ST-Except SC/RAMBLER): 10 (W4ST)	.....	1	318 4484
69	09 (SC/RAMBLER)	.....	1	319 8606
69	30-70 (W4ST-* 7-19)	.....	1	318 4484
69	30-70 (W4ST-* 7-20)	.....	1	319 6314
70	W4ST	.....	1	319 6314
71/	W4ST	.....	1	321 2058
67/69	WAT (WFGS)	.....	1	317 9764
67/69	***01 (RHD)***	.....	1	317 1810
67/70	***10-80 (RHD)***	.....	1	317 2906

7.030–1a HANDLE, Gear Shift Lever (Stick Type)

70	WAT (WFGS)	.....	1	319 7916
71	10-80 (WAT-WFGS)	.....	1	319 7916

7.030–2 NUT, Gear Shift Lever Knob

70/71	01–40 (WST–WFGS)	17.410	1	G9419666 NA
72	01–40 (WST–WFGS–1/2–13–Hexagon)	.....	1	400 4418 NA
69/71	70 (WST–WFGS–1/2–20–Hexagon)	17.410	1	G9419666 NA
72	70 (WST–WFGS–1/2–13–Hexagon)	.....	1	400 4418 NA
67/68	W4ST	.....	1	318 4483
69	01 (W4ST–Except SC/RAMBLER): 10 (W4ST)	.....	1	318 4483
69	09 (SC/RAMBLER) ***(Use 319 6313)***	.....	1	319 8696
69	30–70 (W4ST–1/2–20–Clinch–* 7–19)	.....	1	318 4483
69	30–70 (W4ST–3/8–24–* 7–20)	.....	1	319 6313
70	W4ST	.....	1	319 6313
71/	W4ST	.....	1	321 2059

7.031 RING, Gear Shift Lever Handle Retaining

70	WAT (WFGS)	.....	1	319 7724
71	10–80 (WAT–WFGS)	.....	1	319 7724

7.032–1 HANDLE, Gear Shift Lever (2 Piece Type)

71/	(Inner) 70 (WAT–WFGS)	.....	1	321 1291 —
71/	(Outer) 70 (WAT–WFGS)	.....	1	321 1294

7.032–2 SPRING, Inner Handle

71/	70 (WAT–WFGS)	.....	1	321 1292

7.032–3 CLIP, Handle To Selector Lever

71/	70 (WAT–WFGS)	.....	4	321 1293

7.038–1 SHAFT, Gear Shift Operating (Incl. Seal) (On Steering Column)

67	LHD (WFGS–LAW)	.....	1	320 8063
67/69	WFGS (WAW)	.....	1	320 8091
67	01 (LHD–Six–WST)(WOD)	.....	1	320 8060
68	01 (LHD–Six–WST–* 7–3)(WOD–* 7–3)	.....	1	320 8060
68	01 (LHD–Six–WST–* 7–4)(WOD–* 7–4)	.....	1	320 9780
67/68	01 (LHD–V8–WST)	.....	1	320 8061
69	01 (LHD–WST)(LHD–WOD)	.....	1	320 9780
67	01 (LHD–WAT–WCGS)	.....	1	320 8062
68	01–10–80 (LHD–WFGS–LAW–* 7–3)	.....	1	320 8063
68	01–10–80 (LHD–WFGS–LAW–* 7–4)	.....	1	320 9753
68	01 (LHD–WAT–WCGS–* 7–3)	.....	1	320 8062
68	01 (LHD–WAT–WCGS–* 7–4)	.....	1	320 9781
69	01 (LHD–WAT–WCGS)	.....	1	320 9781
69	01–10–80 (LHD–WFGS–LAW)	.....	1	320 9753
70/	01–10–40–80 (LHD–WST–WCGS–LAW)	.....	1	448 7728
70	01–40 (Six–WAT–LAW)	.....	1	448 7734
71	01 (Six–WAT–WCGS–LAW–* 7–31)	.....	1	448 7734
71	01 (Six–WAT–WCGS–LAW–* 7–32)(Six–WFGS–* 7–32 And * 7–33)	.....	1	448 9041
70	01 (V8–WAT–WCGS–LAW)	.....	1	448 7735
71	01 (LHD–V8–WAT–WCGS–LAW–* 7–31) (LHD–WFGS–LAW–* 7–31)	.....	1	448 7735
71	01 (LHD–V8–WAT–WCGS–LAW–* 7–32) (LHD–V8–WFGS–LAW–* 7–32 And * 7–33	.....	1	448 9042
72	01–40 (LHD–Six–WAT–WCGS–LAW)	.....	1	448 9041
71/	01–40 (Six–WAT–WCGS–WAW)	.....	1	448 9059
72	01–40 (LHD–V8–WAT–WCGS–LAW)	.....	1	448 9042
71/	01–40 (V8–WAT–WCGS–WAW)	.....	1	812 1279

67/69	10-50-80 (LHD-WST)(LHD-WOD)	.....	1	320 8064
67	10-50-80 (LHD-WAT-WCGS-LAW)	.....	1	320 8069
68	10-80 (LHD-WAT-WCGS-LAW-* 7-3)	.....	1	320 8069
68	10-80 (LHD-WAT-WCGS-LAW-* 7-4)	.....	1	320 9782
69	10-80 (LHD-WAT-WCGS-LAW)	.....	1	320 9782
67/69	10-50-80 (LHD-WAT-WCGS-WAW)	.....	1	320 8090
70	10-80 (LHD-WAT-WCGS-LAW)(LHD-WFGS-LAW)	.....	1	448 7734
70	10-80 (WAW)	.....	1	448 7848
71	10-80 (LHD-WAT-WCGS-LAW-* 7-31)(LHD-WFGS-LAW-* 7-31)	.....	1	448 7734
71	10-80 (LHD-WAT-WCGS-LAW-* 7-32)(LHD-WFGS-LAW-* 7-32 And * 7-33)	.....	1	448 9041
71	10-80 (WAW-* 7-31)	.....	1	448 7848
71	10-80 (WAW-* 7-32)	.....	1	448 9059
72	10-80 (LHD-WAT-WCGS-LAW)	.....	1	448 9041
72	10-80 (WAW)	.....	1	448 9059
68/69	30-70 (WFGS-LAW)	.....	1	320 9753
70	30-70 (LHD-LAW)	.....	1	448 7738
70	30-70 (WAW)	.....	1	448 7849
70	40 (WFGS-LAW)	.....	1	448 7735
71	40 (WFGS-LAW-* 7-31)	.....	1	448 7734
71	40 (WAT-WCGS-LAW-* 7-32)(WFGS-LAW-* 7-32 And * 7-33)	.....	1	448 9041
68	70 (WST-WCGS-LAW)	.....	1	320 9784
68/69	70 (WAT-WCGS-LAW)	.....	1	320 9783
68/69	70 (WAT-WCGS-WAW)	.....	1	320 9801
71	70 (LHD-LAW-* 7-31)	.....	1	448 7738
71	70 (LHD-LAW-* 7-32)	.....	1	448 9043
71	70 (LHD-WAW-* 7-31)	.....	1	448 7849
71	70 (LHD-WAW-* 7-32)	.....	1	448 9060
72	70 (LHD-WAT-WCGS-LAW)	.....	1	448 9043
72	70 (LHD-WAW)	.....	1	448 9060
67/69	***01 (RHD-WST)***	.....	1	320 8369
67/69	***01 (RHD-WAT)***	.....	1	320 6125
67/68	***10 (RHD-Six-WST)***	.....	1	320 8370
67/70	***10 (RHD-Six-WAT-WCGS)***	.....	1	320 7383
67/70	***10 (RHD-V8-WAT-WCGS)***	.....	1	320 8371
67/68	***80 (RHD-WAT-WCGS)***	.....	1	320 8371
69/70	***80 (RHD-V8-WAT-WCGS)***	.....	1	448 6534

7.038–2 SEAL, Gear Shift Operating Shaft

67/69	LHD	.....	1	320 8070
67/69	***RHD (WCGS)***	.....	1	317 7560
70	***10-80 (RHD-WCGS)***	.....	2	448 8024

7.038–3 SPRING, Gear Shift Operating Shaft Return

67/69	LHD (WAT-LAW)(W4ST-LAW)	.....	1	320 8089

7.038–4 WASHER, Gear Shift Operating Shaft Return Spring

67/69	LHD (WAT-LAW)(W4ST-LAW)	.....	1	320 8160

7.038–5 PLATE, Gear Shift Operating Shaft Stop

67	LHD (WAT-WCGS-LAW)	3.321	1	318 9065
67	LHD (WAT-WCGS-WAW)	.....	1	318 6508
68/69	LHD (WAT-WCGS-LAW)	3.321	1	319 1076
70/	01-70 (WAT-WCGS-LAW)	.....	1	319 5304
70/	10-40-80 (LHD-WAT-WCGS-LAW)	.....	1	319 5304
68/69	LHD (WAT-WCGS-WAW)	.....	1	319 1075
70/	WAT (WCGS-WAW)	.....	1	319 5616

7.038–6 ATTACHING PARTS, Plate To Steering Column

SCREW, Tapping.....	67/	LHD (WCGS-WAW).....	.....	2	320 8210

7.038–7 RING, Gear Shift Operating Shaft Retainer (Upper)

67/69	LHD (WAW).....	.....	1	320 8156
70/	10-30-70 (WAW).....	.....	1	448 7864

7.038–8 RING, Gear Shift Operating Shaft Retainer (Lower)

67	LHD (WAW)..... ***(Use 320 8378)***	.....	1	320 8157

7.038–9 SCREW, Gear Shift Operating Shaft

70/	01-10-40-80 (LHD-WST-WCGS-LAW).....	17.626	3	G425322 NA

7.080–1 LEVER, Floor Gear Shift Selector (At Gear Shift Lever Shaft)

67/70	WAT (WFGS).....	.....	1	317 9758
71	10-80 (WAT-WFGS).....	.....	1	317 9758

7.080–2 LEVER, Reverse Floor Gear Shift Selector (At Gear Shift Lever Shaft)

67/68	W4ST.....	.....	1	318 4461
69	01 (Except SC/RAMBLER): 10 (W4ST).....	.....	1	318 4461
69	30-70 (W4ST-* 7-19).....	.....	1	318 4461

7.080–3 LEVER, First And Second Floor Gear Shift Selector (At Gear Shift Lever Shaft)

67/68	W4ST.....	.....	1	318 4462
69	01 (W4ST-Except SC/RAMBLER): 10 (W4ST).....	.....	1	318 4462
69	30-70 (W4ST-* 7-19).....	.....	1	318 4462

7.080–4 LEVER, Third And Fourth Floor Gear Shift Selector (At Gear Shift Lever Shaft)

67/68	W4ST.....	.....	1	318 4460
69	01 (W4ST-Except SC/RAMBLER): 10 (W4ST).....	.....	1	318 4460
69	30-70 (W4ST-* 7-19).....	.....	1	318 4460

7.080–5 ATTACHING PARTS, Lever To Lever

NUT, Hexagon.....	70	WAT (WFGS).....	.....	1	400 1749
NUT, Hexagon.....	71	10-80 (WAT-WFGS).....	.....	1	400 1749

7.080–6 RETAINER, Gear Shift Selector Lever

67/68	W4ST.....	.....	1	318 4463
69	01 (W4ST-Except SC/RAMBLER): 10 (W4ST).....	.....	1	318 4463
69	30-70 (W4ST-* 7-19).....	.....	1	318 4463

7.080–7 ATTACHING PARTS, Retainer To Mounting Bracket

BOLT, Hexagon	67/68	(3/8" Long) W4ST.....	17.038	1	G181558 NA
BOLT, Hexagon	67/68	(2" Long) W4ST.....	17.038	1	G181579 NA
BOLT, Hexagon	69	(3/8" Long) 01 (W4ST-Except SC/RAMBLER): 10 (W4ST).....	17.038	1	G181558 NA
BOLT, Hexagon	69	(2" Long) 01 (W4ST-Except SC/RAMBLER): 10 (W4ST).....	17.038	1	G181579 NA
BOLT, Hexagon	69	(3/8" Long) 30-70 (W4ST-* 7-19).....	17.038	1	G181558 NA
BOLT, Hexagon	69	(2" Long) 30-70 (W4ST-* 7-19).....	17.038	1	G181579 NA

WASHER, Lock	67/68	W4ST	29.103	2	400 1527
WASHER, Lock	69	01 (W4ST-Except SC/RAMBLER): 10 (W4ST)	29.103	1	400 1527
WASHER, Lock	69	30-79 (W4ST-* 7-19)	29.103	1	400 1527

7.080–8 BRACKET KIT, Gear Shift Lever Stop

67	SIX (WST)(WOD)		1	320 9717

7.080–9 BUSHING, Gear Shift Selector

67/70	WAT (WFGS)		1	317 9745
71/	10-80 (WAT-WFGS)		1	317 9745
71/	70 (WAT-WFGS)		2	321 1406

7.080–10 RING, Gear Shift Selector Bushing Snap

71/	70 (WAT-WFGS)		1	321 1405

7.085–1 LEVER, Low And Reverse Gear Shift Operating Shaft (On Steering Column)

67/69	01 (LHD-Six-WST)(LHD-Six-WOD)		1	318 6363
67/68	01 (LHD-V8-WST)		1	318 6499
70/	01-10-40-80 (LHD-Six-WST)		1	319 6248
67/69	10-50-80 (LHD-WST)(LHD-WOD)		1	318 6363
68	70 (WST)		1	318 9473
67	***01 (RHD-WST)(RHD-WOD)***		1	317 5523
67/68	***10 (RHD-WST)(RHD-WOD)***		1	317 5523

7.085–2 PLATE, Column Gear Shift Alignment

67	01 (LHD-Six-WST)		1	320 8390
67	01 (LHD-V8-WST)		1	320 8401
68	01 (LHD-WST-* 7-3)		1	320 8390
68	01 (LHD-WST-* 7-4)(LHD-WOD)		1	320 8401
69	01 (LHD-WST)(LHD-WOD)		1	320 8401
67/69	10-50-70-80 (LHD-WST-LAW)(LHD-WOD-LAW)		1	320 8401

7.085–3 ATTACHING PARTS, Plate To Operating Shaft

BOLT, Hexagon	67/69	(5/16-24) LHD (WST)(WOD)		1	320 8379
BOLT, Hexagon	67/69	(7/16-24) LHD (WST)(WOD)		2	320 8270

7.085–4 LEVER, Low And Reverse Gear Shift Operating Shaft Extension (To Lever On Column)

67/68	01 (V8-WST)...(Incl. Grommet)		1	318 6379

7.085–5 ATTACHING PARTS, Lever To Operating Shaft Lever

BOLT, Hexagon	67/68	01 (V8-WST)		2	317 2936
WASHER, Lock	67/68	01 (V8-WST)	17.820	2	G103319 NA
NUT, Hexagon	67/68	01 (V8-WST)	17.406	2	G120367

7.085–6 SPACER, Column Gear Shift Operating Shaft Lever

67/69	LHD (WST)(WOD)		1	320 8087
70/	01-10-40-80 (LHD-WST-WCGS-LAW)		1	448 7764
67/69	***01-10 (RHD-Six-WST)***		1	317 5522

7.088 GROMMET, Gear Shift Operating Shaft Lever

67/71	01 (LHD-WST-WCGS)(LHD-WOD)	7.125	2	318 7697
67/71	01 (LHD-WAT)	7.125	1	318 7697
67/69	***01-10 (RHD-Six-WST)***		1	315 7677

SHIFTING

7.110–5 BEARING, Gear Shift Bellcrank To Transmission Arm (Nylon)

67	10-50-80 (LHD-Six-WST-Except Export)(LHD-Six-WOD-Except Export)	1	318	2909
68	10-80 (Six-WST-* 7-8)(Six-WOD-* 7-8)	1	318	2909
69	10-70-80 (LHD-343-WAT-WCGS-* 7-25)(390-WAT-WCGS-* 7-25)	1	318	2909
67	***10-50-80 (Export-LHD-Six-WST-* 7-8)(Export-LHD-Six-WOD-* 7-8)***	1	318	2909

7.110–5a GROMMET, Gear Selector Bellcrank Bracket (Rubber)

69	10-70-80 (LHD-343-WAT-WCGS-* 7-26)(390-WAT-WCGS-* 7-26)	1	319	4672
70/71	10-70-80 (LHD-360-WAT-WCGS)(LHD-390-WAT-WCGS)(LHD-401-WAT-WCGS)	1	319	4672
72		2	321	2549

7.110–6 BRACKET, Gear Shift Bellcrank To Converter Housing

67	10-50-80 (LHD-V8-WAT-WCGS)	1	318	4550
68	10-70-80 (LHD-290-WAT-WCGS-* 7-5)	1	318	4550
68	10-70-80 (LHD-343-WAT-WCGS)(390-WAT-WCGS)	1	318	4550
69	10-70-80 (LHD-343-WAT-WCGS-* 7-25)(390-WAT-WCGS-* 7-25)	1	318	4550
69	10-70-80 (LHD-343-WAT-WCGS-* 7-26)(390-WAT-WCGS-* 7-26)	1	319	4671
70/71	10-70-80 (LHD-360-WAT-WCGS)(LHD-390-WAT-WCGS)(LHD-401-WAT-WCGS)	1	319	4671

7.110–6a BRACKET, Gear Selector Bellcrank Support

71	10 (LHD-360-WAT-WCGS)(LHD-401-WAT-WCGS)	1	321	1618

7.110–7 ATTACHING PARTS, Bracket To Converter Housing

BOLT, Hexagon	67	10-50-80 (LHD-V8-WAT-WCGS)	17.038	2	G180078	NA
BOLT, Hexagon	68	10-70-80 (LHD-290-WAT-WCGS-* 7-5)	17.038	2	G180078	NA
BOLT, Hexagon	68/69	10-70-80 (LHD-343-WAT-WCGS)(390-WAT-WCGS)	17.038	2	G180078	NA
BOLT, Hexagon	70/71	10-70-80 (LHD-360-WAT-WCGS)(LHD-390-WAT-WCGS)(LHD-401-WAT-WCGS)	17.038	2	G180078	NA
WASHER, Lock	68	10-70-80 (LHD-290-WAT-WCGS-* 7-5)	17.820	2	G120214	NA
WASHER, Lock	68/69	10-70-80 (LHD-343-WAT-WCGS)(390-WAT-WCGS)	17.820	2	G120214	NA
WASHER, Lock	70/71	10-70-80 (LHD-360-WAT-WCGS)(LHD-390-WAT-WCGS)(LHD-401-WAT-WCGS)	17.820	2	G120214	NA

7.110–8 ATTACHING PARTS, Bracket To Bellcrank

BUSHING	67	10-50-80 (LHD-V8-WAT-WCGS)	1	318	2909
BUSHING	68	10-70-80 (LHD-290-WAT-WCGS-* 7-5)(LHD-343-WAT-WCGS)(390-WAT-WCGS)	1	318	2909
CLIP	67	10-50-80 (LHD-V8-WAT-WCGS)	1	316	7428
CLIP	68	10-70-80 (LHD-290-WAT-WCGS-* 7-5)(LHD-343-WAT-WCGS)(390-WAT-WCGS)	1	316	7428

7.110–9 BUSHING, Gear Shift Bellcrank To Side Sill

67	10-50-80 (LHD-WAT-WCGS)	1	318	0569
68	10-70-80 (LHD-Six-WAT-WCGS-* 7-5)(LHD-290-WAT-WCGS-* 7-5)	1	318	0569
68/69	10-70-80 (LHD-343-WAT-WCGS)(390-WAT-WCGS)	1	318	0569
70/71	10-70-80 (LHD-360-WAT-WCGS)(LHD-390-WAT-WCGS)(LHD-401-WAT-WCGS)	1	318	0569
72	(WAT-WCGS)	1	321	5884
72	70 (WAT-WFGS)	1	318	0569

SHIFTING

7.110–10 ATTACHING PARTS, Bushing To Side Sill

SCREW, Tapping.....	67	10-50-80 (LHD-WAT-WCGS).....	17.671	2	400 1042
SCREW, Tapping.....	68	10-70-80 (LHD-Six-WAT-WCGS-* 7-5) (LHD-290-WAT-WCGS-* 7-5).....	17.671	2	400 1042
SCREW, Tapping.....	68/69	10-70-80 (LHD-343-WAT-WCGS)(390-WAT-WCGS) ..	17.671	2	400 1042
SCREW, Tapping.....	70/71	10-70-80 (LHD-360-WAT-WCGS) (LHD-390-WAT-WCGS)(LHD-401-WAT-WCGS)...	17.671	2	400 1042
WASHER, Plain.....	71	10 (LHD-360-WAT-WCGS)(LHD-401-WAT)(WCGS) ...	17.814	2	400 1104
WASHER, Plain.....	72	(WAT)	17.814	2	400 1042

7.110–11 ATTACHING PARTS, Bushing To Bellcrank (At Sill)

PIN, Cotter	67	10-50-80 (LHD-WAT-WCGS).....	17.460	2	G103373 NA
PIN, Cotter	68	10-70-80 (LHD-Six-WAT-WCGS-* 7-5) (LHD-290-WAT-WCGS-* 7-5).....	17.460	2	G103373 NA
PIN, Cotter (Inner).....	68	10-70-80 (LHD-343-WAT-WCGS)(390-WAT-WCGS) ..	17.460	1	G103373 NA
PIN, Cotter (Outer).....	68/69	10-70-80 (LHD-343-WAT-WCGS)(390-WAT-WCGS) ..	17.460	1	G103362 NA
PIN, Cotter (Outer).....	70/71	10-70-80 (LHD-360-WAT-WCGS) (LHD-390-WAT-WCGS)(LHD-401-WAT-WCGS) ...	17.460	1	G103362 NA
PIN, Locking (Inner) ...	69	10-70-80 (LHD-343-WAT-WCGS)(390-WAT-WCGS) ..	29.162	1	400 0407
PIN, Locking (Inner) ...	70/71	10-70-80 (LHD-360-WAT-WCGS) (LHD-390-WAT-WCGS)(LHD-401-WAT-WCGS) ...	29.162	1	400 0407
PIN, Locking (Inner) ...	72	WAT.....	29.162	1	400 0407
PIN, Locking (Outer)...	72	WAT.....	17.460	1	G103362
WASHER, Spring.....	67	10-50-80 (LHD-WAT-WCGS).....	7.125	1	316 7670
WASHER, Spring.....	68	10-70-80 (LHD-Six-WAT-WCGS-* 7-5) (LHD-290-WAT-WCGS-* 7-5)	7.125	1	316 7670
WASHER, Spring	68/69	10-70-80 (LHD-343-WAT-WCGS)(390-WAT-WCGS) ..	7.125	1	316 7670
WASHER, Spring	70/71	10-70-80 (LHD-360-WAT-WCGS) (LHD-390-WAT-WCGS)(LHD-401-WAT-WCGS) ...	7.125	1	316 7670
WASHER, Spring.....	72	WAT.....	7.125	1	321 5893
WASHER, Plain.....	67	10-50-80 (LHD-WAT-WCGS).....	17.814	1	400 1100
WASHER, Plain.....	68	10-70-80 (LHD-Six-WAT-WCGS-* 7-5) (LHD-290-WAT-WCGS-* 7-5).....	17.814	1	400 1100
WASHER, Plain.....	68/69	10-70-80 (LHD-343-WAT-WCGS)(390-WAT-WCGS) ..	17.814	1	400 1100
WASHER, Plain	70/71	10-70-80 (LHD-360-WAT-WCGS) (LHD-390-WAT-WCGS)(LHD-401-WAT-WCGS) ...	17.814	1	400 1100
WASHER, Plain.....	67	10-50-80 (LHD-WAT-WCGS).....	17.814	1	400 1102
WASHER, Plain.....	68	10-70-80 (LHD-Six-WAT-WCGS-* 7-5) (LHD-290-WAT-WCGS-* 7-5).....	17.814	1	400 1102
WASHER, Plain.....	68/69	10-70-80 (LHD-343-WAT-WCGS)(390-WAT-WCGS) ..	17.814	1	400 1102
WASHER, Plain	70/71	10-70-80 (LHD-360-WAT-WCGS) (LHD-390-WAT-WCGS)(LHD-401-WAT-WCGS) ...	17.814	1	400 1102
WASHER, Plain.....	72	WAT.....	7.125	2	400 4437

7.110–12 BRACKET, Gear Shift Bellcrank To Exhaust Pipe Mounting

67	10-50-80 (LHD-Six-WAT-WCGS)	.....	1	318 6210
68	10-70-80 (LHD-Six-WAT-WCGS-* 7-5)	.....	1	318 6210

7.110–13 ATTACHING PARTS, Bracket To Exhaust Pipe Mounting

BOLT, Hexagon	67/68	10-50-70-80 (LHD-Six-WAT-WCGS).....	17.038	1	G181377 NA
WASHER, Lock.....	67/68	10-50-70-80 (LHD-Six-WAT-WCGS).....	17.820	1	G103321 NA
NUT, Hexagon.....	67/68	10-50-70-80 (LHD-Six-WAT-WCGS).....	17.406	1	G103026 NA

7.110–14 ATTACHING PARTS, Bracket To Bellcrank

BUSHING	67	10-50-80 (LHD-Six-WAT-WCGS).....	.....	1	318 2909
BUSHING	68	10-70-80 (V8-WAT-WFGS)	.....	1	318 2909
CLIP.....	67	10-50-80 (LHD-Six-WAT-WCGS).....	.....	1	316 7428
CLIP.....	68	10-70-80 (V8-WAT-WFGS)	.....	1	316 7428

SHIFTING

7.125–1 ROD, Gear Shift (With Automatic Transmission)

67	01 (LHD-V8-WAT-WFGS)	.....	1	317 5605
67	01 (LHD-WAT-WCGS)	.....	1	318 0090
68	01 (LHD-WAT-WCGS-* 7-12)	.....	1	319 1688
68	01 (LHD-WAT-WCGS-* 7-13)	.....	1	319 3080
69	01 (LHD-WAT-WCGS-Except 19/45 Ratio)	.....	1	319 3080
69	01 (LHD-WAT-WCGS-19/45 Ratio-* 7-17)	.....	1	319 1688
69	01 (LHD-WAT-WCGS-19/45 Ratio-* 7-18)	.....	1	319 3080
70/71	01-40 (LHD-Six-WAT-WCGS)(LHD-304-WAT-WCGS)	.....	1	319 6596
71	01 (LHD-360-WAT-WCGS)	.....	1	319 6597
67/68	10-50-70-80 (290-WAT-WFGS)	.....	1	318 5824
68	10-70-80 (LHD-Six-WAT-WCGS-* 7-6) ***(Use 319 2305)***	.....	1	319 2178
68	10-70-80 (LHD-Six-WAT-WCGS-* 7-7)	.....	1	319 2305
68	10-70-80 (LHD-290-WAT-WCGS-* 7-6)	.....	1	319 2179
68	10-70-80 (LHD-290-WAT-WCGS-* 7-7)	.....	1	319 2306
67/68	10-50-70-80 (343-WAT-WFGS)(390-WAT-WFGS)	.....	1	318 5823
69/70	10-70 (LHD-232-WAT-WCGS)	.....	1	319 2305
69	10-70 (LHD-290-WAT-WCGS)	.....	1	319 2306
69	10-70 (290-WAT-WFGS)	.....	1	318 5824
69	10-70 (343-WAT-WFGS)(390-WAT-WFGS)	.....	1	318 5823
70	10-70 (LHD-304-WAT-WCGS)	.....	1	319 2306
70	10-70 (304-WAT-WFGS)	.....	1	318 5824
70	10-30-70 (360-WAT-WFGS)(390-WAT-WFGS)	.....	1	318 5823
71	10-80 (LHD-Six-WAT-WCGS)	.....	1	319 3804
71	10 (304-WAT-WFGS)	.....	1	319 2027
71	10-80 (LHD-304-WAT-WCGS)	.....	1	319 3805
71	10-80 (360-WAT-WFGS)(401-WAT-WFGS)	.....	1	319 2217
68/69	30 (WAT-WFGS)	.....	1	318 5823
71	70 (LHD-Six-WAT-WCGS)	.....	1	319 2305
71	70 (LHD-304-WAT-WCGS)	.....	1	319 2306
71	70 (304-WAT-WFGS)	.....	1	321 1280
72	70 (304-WAT-WFGS)	.....	1	321 3504
71	70 (360-WAT-WFGS)(401-WAT-WFGS)	.....	1	321 1281
72	70 (360-WAT-WFGS)(401-WAT-WCGS)	.....	1	321 3504
69/70	80 (LHD-Six-WAT-WCGS)	.....	1	319 3804
69	80 (LHD-290-WAT-WCGS)	.....	1	319 3805
69	80 (290-WAT-WFGS)	.....	1	319 2027
69	80 (343-WAT-WFGS)(390-WAT-WFGS)	.....	1	319 2217
70	80 (LHD-304-WAT-WCGS)	.....	1	319 3805
70/71	80 (304-WAT-WFGS)	.....	1	319 2027
70	80 (360-WAT-WFGS)(390-WAT-WFGS)	.....	1	319 2217
72	(Lower) 01-40 (WAT-WCGS)	.....	1	321 2766
67	(Lower) 10-50-80 (LHD-Six-WAT-WCGS)	.....	1	318 6208
67	(Lower) 10-50-80 (LHD-290-WAT-WCGS)	.....	1	318 6489
67	(Lower) 10-50-80 (LHD-343-WAT-WCGS)	.....	1	318 6207
68	(Lower) 10-70-80 (LHD-Six-WAT-WCGS-* 7-5)	.....	1	318 6208
68	(Lower) 10-70-80 (LHD-290-WAT-WCGS-* 7-5)	.....	1	318 6489
68	(Lower) 10-70-80 (LHD-343-WAT-WCGS-* 7-14)(390-WAT-WCGS-* 7-14)	.....	1	318 6207
68	(Lower) 10-70-80 (LHD-343-WAT-WCGS-* 7-15)(390-WAT-WCGS-* 7-15)	.....	1	318 9520
69	(Lower) 10-70-80 (LHD-343-WAT-WCGS)(390-WAT-WCGS)	.....	1	318 9520
70/71	(Lower) 10-70-80 (LHD-360-WAT-WCGS)(LHD-390-WAT-WCGS) (LHD-401-WAT-WCGS)	.....	1	318 9520
72	(Lower) 10-70-80 (Six-WAT-WCGS)	.....	1	321 2766
72	(Lower) 10-70-80 (V8-WAT-WCGS)	.....	1	321 3546
72	(Lower) 70 (WAT-WFGS)	.....	1	321 5160

Printed in U.S.A.

72	(Upper) 01-40 (LHD-WAT-WCGS)	1	321	2879
67	(Upper) 10-50-80 (LHD-WAT-WCGS)	1	318	6209
68	(Upper) 10-80 (LHD-Six-WAT-WCGS-* 7-5)(LHD-290-WAT-WCGS-* 7-5) (LHD-343-WAT-WCGS-* 7-14)(390-WAT-WCGS-* 7-14)	1	318	6209
68	(Upper) 10-70-80 (LHD-343-WAT-WCGS-* 7-15)(390-WAT-WCGS-* 7-15)	1	318	9517
69	(Upper) 10-70 (LHD-343-WAT-WCGS-* 7-21)(390-WAT-WCGS-* 7-21)	1	318	9517
69	(Upper) 10-70 (LHD-343-WAT-WCGS-* 7-22)(LHD-390-WAT-WCGS-* 7-22)	1	319	6933
70	(Upper) 10-70 (LHD-360-WAT-WCGS)(LHD-390-WAT-WCGS)	1	319	6933
71	(Upper) 10 (LHD-360-WAT-WCGS)(LHD-401-WAT-WCGS)	1	319	6903
72	(Upper) 10 (WAT-WCGS)	1	321	3549
68	(Upper) 70 (Six-WAT-WCGS-* 7-5)(290-WAT-WCGS-* 7-5)(343-WAT-WCGS-* 7-14) (390-WAT-WCGS-* 7-14)	1	318	9179
71	(Upper) 70 (LHD-360-WAT-WCGS)	1	319	6933
72	(Upper) 70 (WAT-WCGS)	1	321	2765
69	(Upper) 80 (LHD-343-WAT-WCGS-* 7-21)(390-WAT-WCGS-* 7-21)	1	319	1684
69	(Upper) 80 (LHD-343-WAT-WCGS-* 7-22)(LHD-390-WAT-WCGS-* 7-22)	1	319	6903
70/71	(Upper) 80 (LHD-360-WAT-WCGS)(LHD-390-WAT-WCGS)(LHD-401-WAT-WCGS)	1	319	6903
72	(Upper) 80 (WAT-WCGS)	1	321	3549
72	(Upper) 70 (WAT-WFGS)	1	321	2765

7.125–2 ROD, Gear Shift (First And Second) (With 4 Speed Transmission)

67/68	W4ST	1	318	7550
69	01 (W4ST-Except SC/RAMBLER): 10 (W4ST)	1	318	7550
69	30-70 (W4ST-* 7-19)	1	318	7550
69	09 (SC/RAMBLER): 30-70 (W4ST-* 7-20)	1	319	5687
70	W4ST	1	319	5687
71/	01-70 (W4ST)	1	319	5687
71	10 (W4ST)	1	321	1049

7.125–3 ROD, Gear Shift (Second And High) (With Standard Transmission)

67	01 (LHD-Six-WST)(LHD-Six-WOD)	1	318	6216
68/69	01 (LHD-199-WST-Except Export)(LHD-199-WOD-Except Export)	1	319	1694
68/69	01 (LHD-232-WST)	1	319	1329
70/71	01-40 (Six-WST-WCGS)	1	319	6246
72	01-40 (Six-WST-WCGS)	1	321	4406
71	01-40 (Six-WST-WFGS)	1	319	7298
72	01-40 (232-WST-WFGS)	1	319	7298
72	01-40 (258-WST-WFGS)(304-WST-WFGS)	1	321	8897
67	01 (LHD-V8-WST)	1	318	6450
68	01 (V8-WST)	1	319	1538
71	01 (V8-WST-WFGS)	1	319	7298
67	10 (LHD-Six-WST-Except Heavy Duty)(LHD-Six-WOD)	1	318	6415
68/69	10 (LHD-Six-WST-Except Heavy Duty)(LHD-Six-WOD)	1	319	1331
70	10 (Six-WST-WCGS)	1	319	7235
71/	10 (Six-WST-WCGS)	1	319	7365
67	10-50-80 (LHD-V8-WST)(LHD-V8-WOD)	1	318	6214
68	10-80 (LHD-290-WST)(LHD-290-WOD)	1	319	1732
70	40 (WST-WFGS)	1	319	7766
67	50-80 (LHD-Six-WST)(LHD-Six-WOD)	1	318	6415
68	70 (Six-WST-* 7-10)	1	318	9192
68	70 (Six-WST-* 7-11)	1	319	1407
69/70	70 (Six-WST-WFGS)	1	319	5121
71/	70 (232-WST-WFGS)	1	319	8920
68	70 (290-WST)	1	319	1483
69	70 (V8-WST-WFGS)	1	319	5181
70	70 (V8-WST-WFGS)	1	319	7766
71	70 (304-WST-WFGS)	1	319	8920
72	70 (304-WST-WFGS)	1	321	5842
71	70 (360-WST-WFGS)	1	319	7766

Printed in U.S.A.

68	80 (LHD-Six-WST-Except Heavy Duty)(LHD-Six-WOD)	.....	1	319 1331
69	80 (LHD-Six-WST)(LHD-Six-WOD)	.....	1	319 3606
70/	80 (Six-WST-WCGS)	.....	1	319 7365
67/69	***01 (RHD-WST)***	.....	1	318 7155
68/69	***01 (Export-LHD-199-WST)(Export-LHD-199-WOD)***	.....	1	319 1329
67/68	***10 (RHD-Six-WST)***	.....	1	318 6795
67	***10-80 (Heavy Duty-Six-WST-* 7-16)***	.....	1	318 7178
68/69	***10-80 (Heavy Duty-Six-WST)***	.....	1	319 1751

7.125–4 ROD, Gear Shift (Third And Fourth) (With 4 Speed Transmission)

67/68	W4ST ... ***(Use 319 5526)***	.....	1	318 4481
69	01 (W4ST-Except SC/RAMBLER): 10 (W4ST) ... ***(Use 319 5526)***	.....	1	318 4481
69	30-70 (W4ST-* 7-19) ... ***(Use 319 5526)***	.....	1	318 4481
69	01 (SC/RAMBLER): 30-70 (W4ST-* 7-20)	.....	1	319 5688
70	W4ST	.....	1	319 5688
71/	01-70 (W4ST)	.....	1	319 5688
71	10 (W4ST)	.....	1	321 1048

7.125–5 ROD, Gear Shift (Low And Reverse) (With Standard Transmission)

67	01 (LHD-Six-WST)(LHD-Six-WOD)	.....	1	318 6215
68/69	01 (LHD-199-WST-Except Export)(LHD-199-WOD-Except Export)	.....	1	319 1693
68/69	01 (LHD-232)	.....	1	319 1328
70	01-40 (LHD-Six-WCGS)	.....	1	319 1328
71	01-40 (LHD-Six-WST-WCGS-* 7-38)	.....	1	321 1724
71	01-40 (LHD-Six-WST-WCGS-* 7-39)	.....	1	321 4048
72	01-40 (232-WCGS)	.....	1	321 5806
71	01 (V8-WST-WFGS)	.....	1	319 7299
70	10 (LHD-Six-WCGS)	.....	1	319 7234
71/	10-80 (LHD-Six-WST-WCGS)	.....	1	319 7366
70/	40 (232-WST-WFGS-* 7-44)	.....	1	319 9960
71/	40 (WST-WFGS-* 7-45)	.....	1	319 7299
71/	01-40 (258-WST-WFGS)(304-WST-WFGS)	.....	1	319 7299
69/70	70 (Six-WST-WFGS)	.....	1	319 5123
71	70 (232-WST-WFGS)(304-WST-WFGS)	.....	1	319 8919
69	70 (V8-WST-WFGS) ... ***(Use 319 7768)***	.....	1	319 5182
70	70 (V8-WST-WFGS)	.....	1	319 7768
71	70 (360-WST-WFGS)	.....	1	319 7768
72	70 (232-WST-WFGS)	.....	1	319 8919
72	70 (304-WST-WFGS)	.....	1	321 5841
69	80 (LHD-Six-WST)(LHD-Six-WOD)	.....	1	319 3605
70	80 (Six-WCGS)	.....	1	319 7366
67	***01 (RHD-Six-WST)***	.....	1	318 7156
68/69	***01 (RHD-Six-WST)***	.....	1	319 1397
68/69	***01 (Export-LHD-199-WST)(Export-LHD-199-WOD)***	.....	1	319 1328
67	***10 (RHD-Six-WST)***	.....	1	318 6796
68	***10 (RHD-Six-WST)***	.....	1	319 1346
67	(Lower) 01 (V8-WST)	.....	1	318 7622
68	(Lower) 01 (V8-WST)	.....	1	319 1541
67	(Lower) 10 (LHD-Six-WST-Except Heavy Duty)(LHD-Six-WOD)	.....	1	318 1770
67	(Lower) 10-50-80 (LHD-Six-WST-Except Export)(LHD-Six-WOD-Except Export)	.....	1	318 1770
68	(Lower) 10-80 (Six-WST-* 7-8)(Six-WOD-* 7-8)	.....	1	319 1332
68	(Lower) 10-80 (Six-WST-* 7-9)(Six-WOD-* 7-9)(V8-WST)(V8-WOD)	.....	1	319 1402
69	(Lower) 10 (Six-WST-Except Heavy Duty)(LHD-Six-WOD-Except Heavy Duty)	.....	1	319 1402
67	(Lower) 10-50-80 (LHD-V8-WST)(LHD-V8-WOD)	.....	1	318 4761
68	(Lower) 70 (Six-WST-* 7-10)	.....	1	318 9621
68	(Lower) 70 (Six-WST-* 7-11)(290-WST)	.....	1	319 1402
67	***(Lower) 10-50-80 (Export-LHD-Six-WST-* 7-8)(Export-LHD-Six-WOD-* 7-8)***	.....	1	318 1770
67	***(Lower) 10-50-80 (Export-LHD-Six-WST-* 7-9)(Export-LHD-Six-WOD-* 7-9)***	.....	1	318 9621
68/69	***(Lower) 10-80 (Heavy Duty-Six-WST)***	.....	1	319 1408
67	***(Lower) 10-80 (Heavy Duty-LHD-Six-WST-* 7-16)***	.....	1	318 7177
68/69	***(Lower) 10-80 (Heavy Duty-Six-WST)***	.....	1	319 1330

SHIFTING

67/68	(Upper) 01 (V8-WST)	.....	1	318 7679	
67	(Upper) 10 (LHD-Six-WST-Except Heavy Duty)(LHD-Six-WOD)	.....	1	318 6438	
68/69	(Upper) 10 (LHD-Six-WST)(LHD-Six-WOD)	.....	1	319 1330	
67/68	(Upper) 10-50-80 (LHD-V8-WST)(LHD-V8-WOD)	.....	1	318 6213	
67	(Upper) 50-80 (LHD-Six-WST)(LHD-Six-WOD)	.....	1	318 6438	
68	(Upper) 70 (WST)	.....	1	318 9158	
68	(Upper) 80 (LHD-Six-WST)(LHD-Six-WOD)	.....	1	319 1330	
67	***(Upper) 10-80 (Heavy Duty-LHD-Six-WST-* 7-16)***	.....	1	318 6213	

7.125–6 ROD, Gear Shift (Reverse) (With 4 Speed Transmission)

67/68	W4ST	.....	1	318 4479	
69	01 (W4ST-Except SC/RAMBLER): 10 (W4ST)	.....	1	318 4479	
69	01 (SC/RAMBLER): 30-70 (W4ST-* 7-20)	.....	1	319 5685	
69	30-70 (W4ST-* 7-19)	.....	1	318 4479	
70	W4ST	.....	1	319 5685	
71/	01-70 (W4ST)	.....	1	319 5685	
71	10 (W4ST)	.....	1	321 1050	

7.125–7 ATTACHING PARTS, Rod To Transmission Lever

CLEVIS	67/70	WAT (WFGS)	.....	1	317 2601	
CLEVIS	71	WAT (WFGS)	.....	1	321 0104	
NUT, Clevis	67/71	WAT (WFGS)	17.410	1	G124925	
PIN, Clevis	67/71	WAT (WFGS)	.....	1	316 7258	
PIN, Cotter	67/68	01 (WST)(WOD)(LHD-WAT-WCGS)	17.460	2	G103373	NA
PIN, Cotter	***67/68***	***10 (RHD-Six-WST)***	17.460	2	G103373	NA
PIN, Locking	67/	W4ST	29.162	AR	400 0407	
PIN, Locking	69	01 (WST)(WOD)(LHD-WAT-WCGS)	29.162	2	400 0407	
PIN, Locking	70/	01-10-40-80 (Six-WST-WCGS)	29.162	2	400 0407	
PIN, Locking	70	70 (WST-WFGS)	29.162	2	400 0407	
PIN, Locking	71	WAT (WFGS)	.....	1	400 0407	
PIN, Locking	72	WAT	.....	1	400 4173	
SPRING, Retainer	67/71	WAT (WFGS)	.....	2	316 8869	
BUSHING (Nylon)	68	LHD (WAT-WCGS)	.....	1	317 1414	
BUSHING (Nylon)	69	01 (LHD-WAT-WCGS-19/45 Ratio-* 7-18)	.....	1	317 1414	
BUSHING (Nylon)	70	01-10-40-70 (LHD-WAT-WCGS)	.....	1	317 1414	
BUSHING (Nylon)	71	01-40 (LHD-Six-WAT-WCGS)(LHD-304-WAT-WCGS)	.....	1	317 1414	
BUSHING (Nylon)	69	01 (SC/RAMBLER): 30-70 (W4ST-* 7-20)	.....	3	319 6311	
BUSHING (Nylon)	71	01 (LHD-360-WAT-WCGS)	.....	1	319 3806	
BUSHING (Nylon)	71	10 (LHD-Six-WAT-WCGS)(LHD-304-WAT-WCGS)	.....	1	319 3806	
BUSHING (Nylon)	71	10 (LHD-360-WAT-WCGS)(LHD-401-WAT-WCGS)	.....	1	317 1414	
BUSHING (Nylon)	71	70 (WAT-WFGS)	.....	1	321 1282	
BUSHING (Nylon)	72	70 (WAT-WFGS)	.....	1	321 1282	
BUSHING (Nylon)	71	70 (LHD-WAT-WCGS)	.....	1	317 1414	
BUSHING (Nylon)	70/71	80 (LHD-Six-WAT-WCGS)(LHD-304-WAT-WCGS)	.....	1	319 3806	
BUSHING (Nylon)	70	80 (LHD-360-WAT-WCGS)(LHD-390-WAT-WCGS)	.....	1	317 1414	
BUSHING (Nylon)	71	80 (LHD-360-WAT-WCGS)(LHD-401-WAT-WCGS)	.....	1	317 1414	
BUSHING (Nylon)	70	W4ST	.....	3	319 6311	
BUSHING (Rubber)	68	LHD (WAT-WCGS)	16.225	1	315 1145	
WASHER, Plain	67/69	01 (WST)(WOD)(LHD-WAT-WCGS)	17.814	2	400 1100	
WASHER, Plain	70/71	01-10-40-80 (Six-WST-WCGS)	17.814	2	400 1100	
WASHER, Plain	72	01-40-70-80 (Six-WST-WCGS)	7.125	6	400 4437	
WASHER, Plain	70/71	LHD (WAT-WCGS)	17.814	1	400 1100	
WASHER, Plain	72	WAT	17.814	2	400 1085	
WASHER, Plain	68	10-80 (LHD-WST)(LHD-WOD)	10.339	1	400 1775	
WASHER, Plain	71	70 (WAT-WFGS)	17.814	1	400 1100	
WASHER, Plain	67/71	W4ST	17.814	AR	400 1100	
WASHER, Plain	72	W4ST	.....	3	400 4437	
WASHER, Plain	68	LHD (WAT-WCGS)	10.339	2	400 1775	

WASHER, Plain	68/71	WFGS	17.814	1	400 1102
WASHER, Plain	68	LHD (WAT-WCGS)	10.339	2	400 1775
WASHER, Plain	***67/68***	***10 (RHD-Six-WST)***	17.814	2	400 1100
WASHER, Spring	67/69	01 (WST)(WOD)(LHD-WAT-WCGS)	.....	2	316 7670
WASHER, Spring	70/71	01-10-40-80 (Six-WST-WCGS)	.....	2	316 7670
WASHER, Spring	72	01-40-70-80 (Six-WST-WCGS)	.....	4	321 5893
WASHER, Spring	67/71	W4ST	.....	AR	316 7670
WASHER, Spring	72	W4ST	.....	3	321 5893
WASHER, Spring	***67/68***	***10 (RHD-Six-WST)***	.....	2	316 7670
CLIP, Wire	70/71	LHD (WAT-WCGS)	5.160	1	400 1542

7.125-8 ATTACHING PARTS, Rod To Transmission Lever (Second And High)

PIN, Cotter	67/68	10-50-70-80 (LHD-WST)(LHD-WOD)	17.460	1	G103373 NA
PIN, Locking	69	10-70-80 (LHD-WST)(LHD-WOD)	29.162	1	400 0407
PIN, Locking	70/	01-40-70 (WST-WFGS)	.....	1	400 0407
WASHER, Plain	67/69	10-50-70-80 (LHD-WST)(LHD-WOD)	17.814	1	400 1100
WASHER, Plain	70/71	01-40-70 (WST-WFGS)	.....	1	400 1100
WASHER, Spring	72	01-40-70 (WST-WFGS)	7.125	2	321 5893
WASHER, Spring	67/69	10-50-70-80 (LHD-WST)(LHD-WOD)	.....	1	316 7670
WASHER, Spring	70/71	01-40-70 (WST-WFGS)	.....	1	316 7670
WASHER, Plain	72	01-40-70 (WST-WFGS)	7.125	2	400 4437
CLIP	67/69	10-50-80 (LHD-WST)(LHD-WOD)	5.160	1	316 7609

7.125-9 ATTACHING PARTS, Lower Rod To Automatic Transmission Lever

BUSHING	67/68	10-50-70-80 (WAT-WCGS)	.....	1	317 1414
BUSHING	69	10-70 (WAT-WCGS)	.....	1	317 1414
BUSHING	69	80 (LHD-Six-WAT-WCGS)(LHD-290-WAT-WCGS)	.....	1	319 3806
BUSHING	69	80 (LHD-343-WAT-WCGS)(390-WAT-WCGS)	.....	1	317 1414
PIN, Cotter	67/68	10-50-70-80 (WAT-WCGS)	17.460	1	G103373 NA
PIN, Locking	69	10-70-80 (WAT-WCGS)	29.162	1	400 0407
WASHER, Plain	67/69	10-50-70-80 (WAT-WCGS)	17.814	1	400 1100
WASHER, Spring	67/69	10-50-70-80 (WAT-WCGS)	.....	1	316 7670

7.125-10 ATTACHING PARTS, Lower Rod To Standard Transmission Lever (Low And Reverse)

PIN, Cotter	67/68	10-50-70-80 (LHD-WST)(LHD-WOD)	17.460	1	G103373 NA
PIN, Locking	69	10-70-80 (LHD-WST)(LHD-WOD)	29.162	1	400 0407
PIN, Cotter	70/71	01-40-70 (WST-WFGS)	29.162	1	400 0407
WASHER, Plain	67/69	10-50-70-80 (LHD-WST)(LHD-WOD)	17.814	1	400 1100
WASHER, Plain	70/71	01-40-70 (WST-WFGS)	17.814	1	400 1100
WASHER, Spring	67/69	10-50-70-80 (LHD-WST)(LHD-WOD)	.....	1	316 7670
WASHER, Spring	70/71	01-40-70 (WST-WFGS)	.....	1	316 7670

7.125-11 ATTACHING PARTS, Lower Rod To Bellcrank

BUSHING	67/71	10-50-70-80 (WAT-WCGS)	.....	1	317 1414
PIN, Cotter	67/68	10-50-70-80 (WAT-WCGS)	17.460	1	G103373 NA
PIN, Locking	69	10-70-80 (WAT-WCGS)	29.162	1	400 0407
WASHER, Plain	67/71	10-50-70-80 (WAT-WCGS)	17.814	1	400 1100
WASHER, Spring	67/71	10-50-70-80 (WAT-WCGS)	.....	1	316 7670

7.125-12 ATTACHING PARTS, Lower Rod To Bellcrank (Low And Reverse)

PIN, Cotter	67/68	10-50-70-80 (LHD-WST)(LHD-WOD)	17.460	1	G103373 NA
WASHER, Plain	67/68	10-50-70-80 (LHD-WST-WCGS)(LHD-WOD)	17.814	1	400 1100
WASHER, Spring	67/68	10-50-70-80 (LHD-WST-WCGS)(LHD-WOD)	.....	1	316 7670

SHIFTING

7.125–13 ATTACHING PARTS, Upper Rod To Bellcrank

BUSHING	67/71	10-50-70-80 (WAT-WCGS)	.....	1	317 1414
PIN, Cotter	67/68	10-50-70-80 (WAT-WCGS)	17.460	1	G103373 NA
PIN, Locking	69/71	10-70-80 (WAT-WCGS)	29.162	1	400 0407
PIN, Locking	72	WAT	.....	2	316 8869
WASHER, Plain	67/71	10-50-70-80 (WAT-WCGS)	17.814	1	400 1100
WASHER, Spring	67/71	10-50-70-80 (WAT-WCGS)	.....	1	316 7670
WASHER, Spring	72	WAT	17.814	2	400 1091

7.125–14 ATTACHING PARTS, Upper Rod To Bellcrank (Low And Reverse)

PIN, Cotter	67/68	10-50-70-80 (LHD-WST)(LHD-WOD)	17.460	1	G103373 NA
WASHER, Plain	67/68	10-50-70-80 (LHD-WST-WCGS)(LHD-WOD)	17.814	1	400 1100
WASHER, Plain	67	(13/16" O.D.) 10-50-80 (LHD-WST)(LHD-WOD) ***(Use 400 3803)***	17.814	1	G120394 NA
WASHER, Plain	68	(7/8" O.D.) 10-80 (LHD-WST)(LHD-WOD)	10.339	1	400 1775
WASHER, Spring	67/68	10-50-70-80 (LHD-WST-WCGS)(LHD-WOD)	.....	1	316 7670
CLIP	67	10-50-80 (LHD-WST)(LHD-WOD)	5.160	1	316 7609

7.125–15 ATTACHING PARTS, Upper Rod To Bellcrank (Second And High)

PIN, Cotter	67/68	10-50-70-80 (LHD-Six-WST)(LHD-Six-WOD)	17.460	1	G103373 NA
WASHER, Plain	67/68	10-50-70-80 (LHD-Six-WST-WCGS)(LHD-Six-WOD)	17.814	1	400 1100
WASHER, Spring	67/68	10-50-70-80 (LHD-Six-WST-WCGS)(LHD-Six-WOD)	.....	1	316 7670

7.125–16 ATTACHING PARTS, Gear Shift Rod To Gear Selector Shift Levers (At Column)

BUSHING	67/71	01 (LHD-WAT)	.....	1	318 7696
BUSHING	67/69	LHD (WST-WCGS)(WOD)	.....	2	318 7696
BUSHING	70/	01-10-40-80 (Six-WST-WCGS)	.....	2	318 7696
BUSHING	70	10-70-80 (LHD-WAT-WCGS)	.....	1	318 7696
BUSHING (Nylon)	69	30-70 (W4ST-* 7-20)	.....	3	319 6311
BUSHING (Nylon)	71/	W4ST	.....	3	319 6311
CLIP	67/69	LHD (WST-WCGS)(WOD)	5.160	2	316 7609
GROMMET	67/70	01-40 (LHD-WAT-WCGS)	.....	1	318 7697
GROMMET	67/69	LHD (WST-WCGS)(WOD)	.....	2	318 7697
GROMMET	70/	01-10-40-80 (Six-WST-WCGS)	.....	2	318 7697
GROMMET	70	10-70-80 (LHD-WAT-WCGS)	.....	1	318 7697
GROMMET	71/	WAT (WCGS)	.....	1	319 4672
PIN, Cotter	67/69	01 (LHD-WAT-WCGS)	17.460	1	G103373 NA
PIN, Cotter	67/68	LHD (WST-WCGS)(WOD)	17.460	2	G103373 NA
PIN, Locking	70/71	01-10-40-80 (Six-WST-WCGS)	29.162	2	400 0407
PIN, Locking	67/	W4ST	28.162	3	400 0407
PIN, Locking	69	LHD (WST-WCGS)(WOD)	29.162	2	400 0407
PIN, Locking	70/	LHD (WAT-WCGS)	29.162	1	400 0407
SPRING, Retainer	67/69	LHD (WAT-WFGS)	.....	2	316 8869
WASHER, Plain	67/71	01-40 (WAT-WCGS)	17.814	2	400 1100
WASHER, Plain	67/71	01 (WAT-WCGS)	17.814	2	400 1100
WASHER, Plain	67/69	LHD (WST-WCGS)(WOD)	17.814	4	400 1100
WASHER, Plain	70/71	01-10-40-80 (Six-WST-WCGS)	17.814	4	400 1100
WASHER, Plain	70/71	10-70-80 (LHD-WAT-WCGS)	17.814	2	400 1100
WASHER, Plain	67/71	W4ST	17.814	3	400 1100
WASHER, Plain	72	W4ST	.....	3	400 4437
WASHER, Plain	71/	WAT (WCGS)(At Trunnion)	17.814	1	400 1102
WASHER, Spring	67/71	01-40 (WAT-WCGS)	.....	1	316 7670
WASHER, Spring	67/69	LHD (WST-WCGS)(WOD)	.....	2	316 7670
WASHER, Spring	70/71	01-10-40-80 (Six-WST-WCGS)	.....	2	316 7670
WASHER, Spring	70/71	10-70-80 (LHD-WAT-WCGS)	.....	2	316 7670
WASHER, Spring	67/71	W4ST	.....	3	316 7670
INSULATOR	***67/71***	***01 (RHD-Six-WST)***	7.088	2	315 7677

SHIFTING

7.125–17 ATTACHING PARTS, Upper Rod To Column Lever

BUSHING	68	01 (LHD-WAT)(LHD-V8-WST)	.....	1	318 7696
BUSHING	67/69	10-50-70-80 (LHD-WAT-WCGS)	.....	1	318 7696
BUSHING	70	10-70-80 (LHD-360-WAT-WCGS) (LHD-390-WAT-WCGS)	.....	1	318 7696
GROMMET	68	01 (LHD-WAT)(LHD-V8-WST)	.....	1	318 7697
GROMMET	67/69	10-50-70-80 (LHD-WAT-WCGS)	.....	1	318 7697
GROMMET	70	10-70-80 (LHD-360-WAT-WCGS) (LHD-390-WAT-WCGS)	.....	1	318 7697
PIN, Cotter	68	01 (LHD-WAT)	17.460	1	G103373 NA
PIN, Cotter	67/68	10-50-70-80 (LHD-WAT-WCGS)	17.460	1	G103373 NA
PIN, Locking	69	10-70-80 (LHD-WAT-WCGS)	29.162	1	400 0407
PIN, Lock	70/71	10-70-80 (LHD-360-WAT-WCGS) (LHD-390-WAT-WCGS)(LHD-401-WAT-WCGS)	29.162	1	400 0407
WASHER, Plain	68	01 (LHD-WAT)	17.814	1	400 1100
WASHER, Plain	67/69	10-50-70-80 (LHD-WAT-WCGS)	17.814	1	400 1100
WASHER, Plain	70/71	10-70-80 (LHD-360-WAT-WCGS) (LHD-390-WAT-WCGS)(LHD-401-WAT-WCGS)	17.814	2	400 1100
WASHER, Spring	68	01 (LHD-WAT)	.....	1	316 7670
WASHER, Spring	67/69	10-50-70-80 (LHD-WAT-WCGS)	.....	1	316 7670
WASHER, Spring	70/71	10-70-80 (LHD-360-WAT-WCGS) (LHD-390-WAT-WCGS)(LHD-401-WAT-WCGS)	.....	1	316 7670

7.125–18 BUSHING, Gear Shift Rods (In Bracket)

69/	70 (WST-WFGS)	.....	1	319 5108
70/	01-40 (WST-WFGS)	.....	1	319 5108

7.125–19 ATTACHING PARTS, Bushing To Bracket

PIN, Cotter	70/	01-40 (WST-WFGS)	17.460	1	G103375 NA
PIN, Cotter	69/	70 (WST-WFGS)	17.460	1	G103375 NA

7.125–20 BRACKET, Gear Shift Rod Guide

71/	01-40 (WST-WFGS)	.....	1	812 2116
70	40 (WST-WFGS)	.....	1	321 2890
72	70 (WST-WFGS)	.....	1	321 7425

7.125–21 ANTI-RATTLE KIT, Gear Shift Lever

72	WST (WFGS)	.....	1	812 2888

7.125–22 SPRING, Anti-Rattle

72	WST (WFGS)	.....	1	812 2889

7.125–23 PIN, Anti-Rattle Spring

72	WST (WFGS)	.....	1	322 0106

7.126–1 ROD, Column To Transmission Park-Lock

70	10-70 (304-WAT-WFGS)	.....	1	319 2306
71	70 (304-WAT-WFGS-LAW-* 7-33)	.....	1	319 2306
71	70 (304-WAT-WFGS-WAW)	.....	1	319 2306
70	80 (304-WAT-WFGS)	.....	1	319 3805
70	80 (360-WAT-WFGS)(390-WAT-WFGS)	.....	1	319 2304
70	10-30-70 (360-WAT-WFGS)(390-WAT-WFGS)	.....	1	319 2302
71	10-80 (304-WAT-WFGS-LAW-* 7-33)	.....	1	319 3805
71	10-80 (304-WAT-WFGS-WAW)	.....	1	319 3805
71	10-80 (360-WAT-WFGS-LAW-* 7-33)(401-WAT-WFGS-LAW-* 7-33)	.....	1	319 2304
71	10-80 (360-WAT-WFGS-WAW)(401-WAT-WFGS-WAW)	.....	1	319 2304
71	70 (360-WAT-WFGS-LAW-* 7-33)(401-WAT-WFGS-LAW-* 7-33)	.....	1	319 2302
71	70 (360-WAT-WFGS-WAW)(401-WAT-WFGS-WAW)	.....	1	319 2302

7.126–2 ATTACHING PARTS. Park-Lock Rod To Trunnion (At Steering Column)

NUT, Jam	70	WAT (WFGS)	17.410	2	G124925
NUT, Jam	71	WAT (WFGS-LAW-* 7-33)	17.410	2	G124925
NUT, Jam	71	WAT (WFGS-WAW)	17.410	2	G124925

7.126–3 ATTACHING PARTS. Park-Lock Rod To Transmission Lever

BUSHING (Nylon)	70	10-30-70 (WAT-WFGS)	7.125	1	317 1414
BUSHING (Nylon)	71	10 (304-WAT-WFGS-LAW-* 7-33)	7.125	1	319 3806
BUSHING (Nylon)	71	10 (304-WAT-WFGS-WAW)	7.125	1	319 3806
BUSHING (Nylon)	71	10 (360-WAT-WFGS-LAW-* 7-33) (401-WAT-WFGS-LAW-* 7-33)	7.125	1	317 1414
BUSHING (Nylon)	71	10 (360-WAT-WFGS-WAW)(401-WAT-WFGS-WAW)	7.125	1	317 1414
BUSHING (Nylon)	71	70 (WAT-WFGS-LAW-* 7-33)	7.125	1	317 1414
BUSHING (Nylon)	71	70 (WAT-WFGS-WAW)	7.125	1	317 1414
BUSHING (Nylon)	70	80 (304-WAT-WFGS)	7.125	1	319 3806
BUSHING (Nylon)	71	80 (304-WAT-WFGS-LAW-* 7-33)	7.125	1	319 3806
BUSHING (Nylon)	71	80 (304-WAT-WFGS-WAW)	7.125	1	319 3806
BUSHING (Nylon)	70	80 (360-WAT-WFGS)(390-WAT-WFGS) (401-WAT-WFGS)	7.125	1	317 1414
BUSHING (Nylon)	71	80 (360-WAT-WFGS-LAW-* 7-33) (401-WAT-WFGS-LAW-* 7-33)	7.125	1	317 1414
BUSHING (Nylon)	71	80 (360-WAT-WFGS-WAW)(304-WAT-WFGS-WAW)	7.125	1	317 1414
WASHER, Plain	70	WAT (WFGS)	17.814	1	400 1100
WASHER, Plain	71	WAT (WFGS-LAW-* 7-33)	17.814	1	400 1100
WASHER, Plain	71	WAT (WFGS-WAW)	17.814	1	400 1100
WASHER, Plain	72	70 (WAT-WFGS-LAW)	17.671	1	400 1085
CLIP, Wire	71	WAT (WFGS-LAW-* 7-33)	5.160	1	400 1542
CLIP, Wire	71	WAT (WFGS-WAW)	5.160	1	400 1542
CLIP, Wire	70	WAT (WFGS)	5.160	1	400 1542
PIN, Locking	72	70 (304-WAT-WFGS-LAW)	17.406	1	G103361 NA
PIN, Locking	72	70 (360-WAT-WFGS-LAW)(401-WAT-WFGS-LAW)	17.406	1	G103361 NA

7.126–4 TRUNNION. Column To Transmission Park-Lock Rod

70	WAT (WFGS)	7.135	1	318 8633
71	10-70-80 (WAT-WFGS-LAW-* 7-33)	.....	1	321 1181
71	10-70-80 (WAT-WFGS-WAW)	.....	1	321 1181
72	70 (WAT-WAW)	.....	1	321 2690

7.126–5 ATTACHING PARTS. Trunnion To Column Lever

GROMMET	70	WAT (WFGS)	7.125	1	318 7697
GROMMET	71	WAT (WFGS-LAW-* 7-33)	.....	1	319 4672
GROMMET	71/	WAT (WFGS-WAW)	.....	1	319 4672
BUSHING	70/71	WAT (WFGS)	7.125	1	318 7696
WASHER, Plain	70	WAT (WFGS)	17.814	2	400 1100
WASHER, Plain	71	WAT (WFGS-LAW-* 7-33)	17.814	1	400 1102
WASHER, Plain	71/	WAT (WFGS-WAW)	17.814	1	400 1102
WASHER, Spring	70/	WAT (WFGS)	7.125	1	316 7670
PIN, Locking	70	WAT (WFGS)	29.162	1	400 0407
PIN, Locking	71	WAT (WFGS-LAW-* 7-33)	29.162	1	400 0407
PIN, Locking	71/	WAT (WFGS-WAW)	29.162	1	400 0407

7.130–1 LEVER, Gear Shift (On Transmission) (First And Second)

67/68	(Inner) W4ST	.....	1	318 2995
69	(Inner) W4ST (* 7-19 Except SC/RAMBLER)	.....	1	318 2995
69	(Inner) W4ST (* 7-20)	.....	1	319 5684
70	(Inner) W4ST	.....	1	319 5684
71	(Inner) W4ST	.....	1	321 2218
67/70	(Outer) W4ST	.....	1	318 2992
71/	(Outer) W4ST	.....	1	321 1798

SHIFTING

7.130–2 LEVER, Gear Shift (On Transmission) (Second And High)

67/68	01 (LHD-Six-WST)(Six-WOD)	.....	1	318 0365
67/68	01 (V8-WST)	.....	1	318 7375
69	01-80 (LHD-Six-WST)(LHD-Six-WOD)	.....	1	319 4952
70	01-40 (LHD-Six-WST-WCGS-Except Export)	.....	1	319 4952
71	01 (LHD-Six-WST-WCGS-Except Export)	.....	1	321 1798
71	40 (232-WST-WCGS-Except Export)	.....	1	321 5661
71	40 (258-WST-WCGS-Except Export)	.....	1	321 1798
71	01-70 (360-WST-WFGS)	.....	1	321 1798
67	10 (LHD-Six-WST-Except Heavy Duty)(Six-WOD)	.....	1	318 7311
67/69	10-50-70-80 (V8-WST)(V8-WOD)	.....	1	317 9768
68	10-80 (LHD-Six-WST-Except Heavy Duty)(LHD-Six-WOD)	.....	1	319 2411
69	10 (LHD-Six-WST-Except Heavy Duty)(LHD-Six-WOD)	.....	1	319 2411
70/71	10-80 (Six-WST-WCGS)	.....	1	319 8858
71	40 (Six-WST-WFGS-* 7-44)	.....	1	321 5661
71	40 (Six-WST-WFGS-* 7-45)	.....	1	321 1798
72	40 (258-WST-WFGS)(304-WST-WFGS)	.....	1	321 1798
67	50-80 (LHD-Six-WST)(Six-WOD)	.....	1	318 7311
68	70 (LHD-Six-WST)	.....	1	319 2411
71	70 (232-WST-WFGS)(304-WST-WFGS)	.....	1	321 1798
67	***01-10 (RHD-Six-WST)***	.....	1	318 6793
68/69	***01-10 (RHD-Six-WST)***	.....	1	319 1340
70/	***01-40 (Export-Six-WST-WCGS)***	.....	1	319 8858
67/69	***10-80 (Heavy Duty-LHD-Six-WST-* 7-16)***	.....	1	317 9768
69/70	(Inner) 70 (WST-WFGS)	.....	1	319 5317
71	(Inner) 70 (WST-WFGS)	.....	1	321 2219
70	(Inner) 40 (WST-WFGS)	.....	1	319 5317
72	(Inner) WST-WFGS	.....	1	321 2219
69/70	(Outer) 70 (WST-WFGS)	.....	1	318 2992
70	(Outer) 40 (WST-WFGS)	.....	1	318 2992
71	(Outer) 70 (WST-WFGS)	.....	1	321 1798
72	(Outer) 40 (WST-WFGS-* 7-44)	.....	1	321 5661
72	(Outer) WST-WFGS (* 7-45)	.....	1	321 1798

7.130–3 LEVER, Gear Shift (On Transmission) (Third And Fourth)

67/68	(Inner) W4ST	.....	1	318 2995
69	(Inner) W4ST (* 7-19-Except SC/RAMBLER)	.....	1	318 2995
69	(Inner) W4ST (* 7-20)	.....	1	319 5684
70	(Inner) W4ST	.....	1	319 5684
71	(Inner) W4ST	.....	1	321 2218
67/70	(Outer) W4ST	.....	1	318 2992
71/	(Outer) W4ST	.....	1	321 1798

7.130–4 LEVER, Gear Shift (On Transmission) (Low And Reverse)

67	01 (LHD-Six-WST)(Six-WOD)	.....	1	316 3951
68/69	01 (LHD-232-WST)	.....	1	319 2443
69	01 (LHD-199-WST-Except Export)(Six-WOD)	.....	1	316 3951
70	01-40 (LHD-232-WST-Except Export)	.....	1	316 3951
70/	01-40 (LHD-Six-WST-WCGS-Except Export)	.....	1	319 8770
67	01 (V8-WST)	.....	1	317 9729
68/69	01 (LHD-V8-WST)	.....	1	319 2441
71	01 (360-WST-WFGS)	.....	1	321 1798
72	01-40-70 (WST-WFGS-* 7-45)	.....	1	812 0488
67	10 (LHD-Six-WST-Except Heavy Duty)	.....	1	318 2497
67	10-50-80 (LHD-Six-WST-Except Export)(Six-WOD-Except Export)	.....	1	318 2497
68	10-80 (LHD-Six-WST-Except Heavy Duty-* 7-3)	.....	1	319 2414
68	10-80 (LHD-Six-WST-Except Heavy Duty-* 7-4)	.....	1	319 2442
68	10-80 (LHD-Six-WST-Except Export-* 7-3)(Six-WOD-Except Export-* 7-3)	.....	1	319 2414
68	10-80 (LHD-Six-WST-Except Export-* 7-4)(Six-WOD-Except Export-* 7-4)	.....	1	319 2442

69	10 (LHD-Six-WST)(Six-WOD)	1	319 2442	
70/71	10-80 (Six-WST-WCGS)	1	319 8859	
67	10-50-80 (V8-WST)(V8-WOD)	1	318 7380	
68	10-70-80 (LHD-V8-WST)(LHD-V8-WOD)	1	319 2442	
70	40 (WST-WFGS)	1	319 9882	
71	40 (LHD-232-WST-WFGS)	1	319 9882	
72	40 (232-WFGS-* 7-44)	1	321 7579	
71	40 (258-WST-WFGS-* 7-42)	1	319 8774	
71	40 (258-WST-WFGS-* 7-43)	1	812 0488	
72	40 (258-WST-WFGS)	1	812 0488	
68	70 (LHD-Six-WST)	1	319 2442	
69	70 (Six-WST-WFGS)	1	319 5112	
70/71	70 (Six-WST-WFGS)	1	319 8774	
69	70 (V8-WST-WFGS)	1	319 5178	
70/	70 (304-WST-WFGS)	1	319 8774	
69	80 (LHD-Six-WST)	1	319 2443	
68/69	***01 (Export-LHD-199-WST)***	1	319 2443	
70/	***01-40 (Export-232-WST-WCGS)***	1	319 8859	
67	***01-10 (RHD-Six-WST)***	1	318 6792	
68/69	***01-10 (RHD-Six-WST)***	1	319 1342	
67	***10 (Heavy Duty-LHD-Six-WST-* 7-16)***	1	318 7380	
68	***10-80 (Heavy Duty-LHD-Six-WST)***	1	319 2442	
67	***10-50-80 (Export-Six-WST)(Export-Six-WOD)***	1	318 7380	
68	***10-80 (Export-LHD-Six-WST)(Export-LHD-Six-WOD)***	1	319 2442	

7.130–5 LEVER, Gear Shift (On Transmission) (Reverse)

67/68	W4ST	1	318 4492	
69	W4ST (* 7-19-Except SC/RAMBLER)	1	318 4492	
69	W4ST (* 7-20)	1	319 5686	
70/	W4ST	1	319 8771	

7.130–6 ATTACHING PARTS, Lever To Lever

BUSHING (Nylon)	71/	WST (WFGS)(.56" O.D.)	4.050	1	316 7590	
BUSHING (Nylon)	72	WST (WFGS)(.74" O.D.)	7.125	1	319 6311	
BUSHING (Nylon)	71/	W4ST (.56" O.D.)	4.050	2	316 7590	
BUSHING (Nylon)	72	W4ST (.74" O.D.)		1	319 6311	
BOLT, Hexagon	67/	W4ST	17.038	2	G181636	NA
BOLT, Hexagon	70/	01-40 (WST-WFGS)	17.038	1	G181636	NA
BOLT, Hexagon	69/	70 (WST-WFGS)	17.038	1	G181636	NA
WASHER, Lock	67/	W4ST	10.260	2	400 3803	
WASHER, Lock	70/	01 (WST-WFGS)	17.820	1	G120382	NA
WASHER, Lock	69/	70 (WST-WFGS)	10.260	1	400 3803	
WASHER, Plain	67/	W4ST	10.260	2	400 3808	
WASHER, Plain	69/	01-40-70 (WST-WFGS)	10.260	1	400 3808	
NUT, Hexagon	67/	W4ST	17.406	2	G120369	NA
NUT, Hexagon	69/	01-70 (WST-WFGS)	17.406	1	G120369	NA
NUT, Hexagon	70/	40 (WST-WFGS)	17.406	1	G120369	NA

7.130–7 ATTACHING PARTS, Lever To Transmission

NUT, Hexagon	67/	W4ST	17.406	1	G120369	NA
NUT, Hexagon	67/71	01-50-80 (Six-WST)(Six-WOD)	17.406	2	G118614	NA
NUT, Hexagon	67	10 (Six-WST-Except Heavy Duty)(Six-WOD)	17.406	2	G118614	NA
NUT, Hexagon	70	10 (Six-WST)	17.406	2	G120369	NA
NUT, Hexagon	67/71	V8 (WST)(WOD)	17.406	2	G120369	NA
NUT, Hexagon	***67/69***	***10-80 (Heavy Duty-LHD-Six)***	17.406	2	G120369	NA
NUT, Lock	67/71	W4ST	17.416	2	G443336	NA
NUT, Lock	72	W4ST	17.412	2	G271193	
NUT, Lock	72	01-40 (258-WST-WFGS)(304-WST-WFGS)	17.416	1	G443336	NA
NUT, Lock	71	01 (V8-WST-WFGS)	17.416	1	G443336	NA
NUT, Lock	70	40 (WST-WFGS)	17.416	1	G443333	NA
NUT, Lock	71	40 (232-WST-WFGS)	17.416	1	G443333	NA
NUT, Lock	71	40 (258-WST-WFGS)	17.416	1	G443336	NA
NUT, Lock	72	40 (232-WST-WFGS-* 7-44)	17.416	1	G443333	NA
NUT, Lock	72	40 (232-WST-WFGS-* 7-45)	17.416	1	G443336	NA
NUT, Lock	69/	70 (WST-WFGS)	17.416	1	G443336	NA

SHIFTING

WASHER, Plain	67/71	01-50-80 (Six-WST)(Six-WOD)	17.814	2	G103340	NA
WASHER, Plain	71	40 (258-WST-WCGS-Except Export)	17.814	1	400 1100	
WASHER, Plain	67	10 (Six-WST-Except Heavy Duty)(Six-WOD)	17.814	2	G103340	NA
WASHER, Plain	70	10 (Six-WST)	10.260	2	400 3808	
WASHER, Plain	67/71	V8 (WST)(WOD)	17.814	2	400 3808	
WASHER, Plain	67/	W4ST	17.814	1	400 3808	
WASHER, Plain	***67/69***	***10-80 (Heavy Duty-LHD-Six) ..... (Use 400 3808)***	17.814	2	G120394	NA
WASHER, Lock	67/69	01-50-80 (Six-WST)(Six-WOD)	17.820	2	G108579	NA
WASHER, Lock	70	01 (Six-WST)	17.820	2	G108579	NA
WASHER, Lock	67/69	10 (Six-WST-Except Heavy Duty)(Six-WOD)	17.820	2	G108579	NA
WASHER, Lock	67/69	V8 (WST)(WOD)	17.820	2	G131099	NA
WASHER, Lock	70	WST	17.820	2	G131099	NA
WASHER, Lock	67/	W4ST	17.820	1	G131099	NA
WASHER, Lock	***67/69***	***10-80 (Heavy Duty-LHD-Six)***	17.820	2	G131099	NA

7.130-8 ATTACHING PARTS, Lever To Bracket

PIN, Cotter	***67/69***	***01-10 (RHD-Six-WST)***	17.460	2	G103362	NA
WASHER, Plain	***67/69***	***01-10 (RHD-Six-WST)***	17.814	2	400 1100	
WASHER, Spring	***67/69***	***01-10 (RHD-Six-WST)***	7.125	2	316 7670	

7.130-9 BUSHING, Transmission Lever To Pivot Bracket

67/69	***01-10 (RHD-Six-WST)***	.....	2	318 6786	

7.130-10 BRACKET, Transmission Lever Pivot (On Transmission)

67	***01-10 (RHD-Six-WST)***...(Less Levers)	.....	1	318 6791	
68/69	***01-10 (RHD-Six-WST)***...(Less Levers)	.....	1	319 1344	

7.130-11 ATTACHING PARTS, Bracket To Transmission

BOLT, Hexagon	***67/69***	***01-10 (RHD-Six-WST)***	17.038	2	G179862	NA

7.131-1 BELLCRANK, Reverse Lock-Up

70	W4ST	.....	1	319 7757	
71	W4ST (LAW-* 7-33)	.....	1	321 1111	
71/	W4ST (WAW)	.....	1	321 1111	

7.131-2 BUSHING, Reverse Lock-Up Bellcrank

70	W4ST	.....	1	319 6311	
71/	W4ST (LAW-* 7-33)	.....	1	319 6311	

7.132-1 BRACKET, Reverse Lock-Up Bellcrank

70	W4ST	.....	1	319 4671	
71	W4ST (LAW-* 7-33)	.....	1	321 1113	
71/	W4ST (WAW)	.....	1	321 1113	

7.132-2 ATTACHING PARTS, Bracket To Transmission

BOLT, Hexagon	70	W4ST	17.038	2	G180078	NA
BOLT, Hexagon	71	W4ST (LAW-* 7-33)	17.038	2	G180078	NA
BOLT, Hexagon	71/	W4ST (WAW)	17.038	2	G180078	NA
WASHER, Lock	70	W4ST	17.820	2	G120214	NA
WASHER, Lock	71	W4ST (LAW-* 7-33)	17.820	2	G120214	NA
WASHER, Lock	71	W4ST (WAW)	17.038	2	G120214	NA
WASHER, Spring	72	W4ST (WAW)	7.125	1	321 5893	
WASHER, Plain	72	W4ST (WAW)	7.125	1	400 4437	
PIN, Locking	72	W4ST (WAW)	29.162	1	400 0407	

Printed in U.S.A.

SHIFTING

7.133–1 ROD, Reverse Lock-Up Transmission To Bellcrank

70	W4ST	.....	1	319	7758
71	W4ST (LAW-* 7-33)	.....	1	321	1115
71/	W4ST (WAW)	.....	1	321	1115

7.133–2 ATTACHING PARTS, Rod To Bellcrank

BUSHING	70	W4ST	7.125	1	317	1414
BUSHING	71	W4ST (LAW-* 7-33)	7.125	1	317	1414
BUSHING	71	W4ST (WAW)	7.125	1	317	1414
WASHER, Spring	70	W4ST	7.125	1	316	7670
WASHER, Spring	71	W4ST (LAW-* 7-33)	7.125	1	316	7670
WASHER, Spring	71	W4ST (WAW)	7.125	1	316	7670
WASHER, Plain	70	W4ST	17.814	1	400	1100
WASHER, Plain	71	W4ST (LAW-* 7-33)	17.814	1	400	1100
WASHER, Plain	71	W4ST (WAW)	17.814	1	400	1100
WASHER, Plain	71	W4ST (LAW-* 7-33)	17.814	1	400	1178 NA
WASHER, Plain	71	W4ST (WAW)	17.814	1	400	1178 NA
PIN, Locking	70	W4ST	29.162	1	400	0407
PIN, Locking	71	W4ST (LAW-* 7-33)	29.162	1	400	0407
PIN, Locking	71	W4ST (WAW)	29.162	1	400	0407

7.133–3 ATTACHING PARTS, Rod To Transmission

WASHER, Spring	70	W4ST	7.125	1	316	7670
WASHER, Spring	71	W4ST (LAW-* 7-33)	7.125	1	316	7670
WASHER, Spring	71	W4ST (WAW)	7.125	1	316	7670
WASHER, Spring	70	W4ST	17.814	1	400	1100
WASHER, Spring	71	W4ST (LAW-* 7-33)	17.814	1	400	1100
WASHER, Spring	71	W4ST (WAW)	17.814	1	400	1100
PIN, Locking	70	W4ST	29.162	1	400	0407
PIN, Locking	71	W4ST (LAW-* 7-33)	29.162	1	400	0407
PIN, Locking	71/	W4ST (WAW)	29.162	1	400	0407

7.134–1 ROD, Reverse Lock-Up Column To Bellcrank

70	01 (W4ST)	.....	1	319	8145
70	10-30-70 (W4ST)	.....	1	319	7759
71	01 (W4ST-LAW-* 7-33)	.....	1	321	1825
71	01 (W4ST-WAW)	.....	1	321	1825
71	10 (W4ST-LAW-* 7-33)	.....	1	321	1824
71	10 (W4ST-WAW)	.....	1	321	1824
71	70 (W4ST-LAW-* 7-33)	.....	1	321	1823
71/	70 (W4ST-WAW)	.....	1	321	1823

7.134–2 ATTACHING PARTS, Rod To Column Lever

BUSHING	70/	W4ST	7.125	1	317	1414
WASHER, Spring	70	W4ST	7.125	1	316	7670
WASHER, Spring	71	W4ST (LAW-* 7-33)	7.125	1	316	7670
WASHER, Spring	71	W4ST (WAW)	7.125	1	316	7670
GROMMET	70	W4ST	7.125	1	318	7697
GROMMET	71	W4ST (LAW-* 7-33)	7.110	1	319	4672
GROMMET	71/	W4ST (WAW)	7.110	1	319	4672
WASHER, Plain	71	W4ST (LAW-* 7-33)	17.814	1	400	1102
WASHER, Plain	71/	W4ST	17.814	1	400	1102
WASHER, Plain	71	W4ST (WAW)	17.814	2	400	1100

BUSHING	70	W4ST	7.125	1	318 7696
BUSHING	71	W4ST (LAW-* 7-33)	7.125	1	318 7696
BUSHING	71	W4ST (WAW)	7.125	1	318 7696
BUSHING	72	70 (W4ST-WAW)	.....	2	317 1414
PIN, Locking	70	W4ST	29.162	1	400 0407
PIN, Locking	71	W4ST (LAW-* 7-33)	29.162	1	400 0407
PIN, Locking	71/	W4ST (WAW)	29.162	1	400 0407

7.134-4 TRUNNION, Reverse Lock-Up Rod (At Column)

70	W4ST	.....	1	318 8633
71	W4ST (LAW-* 7-33)	.....	1	321 1181
71/	W4ST (WAW)	.....	1	321 1181

7.134-5 ATTACHING PARTS, Rod To Trunnion

NUT, Jam	70	W4ST	7.410	2	G124925
NUT, Jam	71	W4ST (LAW-* 7-33)	7.410	2	G124925
NUT, Jam	71/	W4ST (WAW)	7.410	2	G124925

7.135-1 TRUNNION, Gear Shift Rod

67/70	01 (WAT-WCGS)	.....	1	318 8633
69	01 (LHD-199-WST-Except Export)(LHD-199-WOD-Except Export)	.....	2	318 8633
69	01 (LHD-232-WST-Except Heavy Duty)	.....	2	318 9626
70	01-40 (Six-WST-WCGS)	.....	2	318 9626
71	01-40 (Six-WST-WCGS-* 7-40)	.....	1	318 9626
71	01-40 (Six-WST-WCGS-* 7-41)	.....	1	321 4049
72	01-40 (Six-WST-WCGS)	.....	2	321 4049
67/68	01 (LHD-V8-WST-Except Heavy Duty)	.....	1	318 8633
67/68	(Low And Reverse) 01 (LHD-V8-WST)	.....	1	318 3541
67/68	(Second And High) 01 (LHD-V8-WST)	.....	1	318 8633
67	LHD (Six-WST)(Six-WOD)	.....	2	318 8633
68	LHD (WST)(WOD)	.....	2	318 9626
67/	W4ST	.....	1	318 3541
67	10-50-80 (V8-WST)(V8-WOD)	.....	2	317 1186
67	10-50-80 (LHD-WAT-WCGS)	.....	1	318 3541
68	10-70-80 (LHD-Six-WAT-WCGS-* 7-5)(LHD-290-WAT-WCGS-* 7-5) (LHD-343-WAT-WCGS)(390-WAT-WCGS)	.....	1	318 3541
69	10 (LHD-Six-WST-Except Heavy Duty)(LHD-WOD-Except Heavy Duty)	.....	2	318 9626
69	10-70-80 (LHD-Six-WAT-WCGS)(LHD-290-WAT-WCGS)	.....	1	318 8633
69	10-70-80 (LHD-343-WAT-WCGS-* 7-21)(390-WAT-WCGS-* 7-21)	.....	1	318 3541
69	10-70-80 (LHD-343-WAT-WCGS-* 7-22)(LHD-390-WAT-WCGS-* 7-22)	.....	1	318 8633
70	10-70-80 (LHD-WAT-WCGS)	.....	1	318 8633
70/	10-80 (LHD-Six-WST)	.....	2	318 9626
68	70 (WST)	.....	1	318 8633
69	80 (LHD-Six-WST)	.....	2	318 8633
71	LHD (WAT-WCGS)	.....	1	321 1181
72	LHD (WAT-WCGS)	.....	1	321 2690
72	70 (WAT-WFGS)	.....	1	318 9626
67	***01-10 (RHD-Six-WST)***	.....	2	316 7840
68/69	***01-10 (RHD-WST)***	.....	2	318 8633
69	***01 (RHD-Six-WST)***	.....	2	318 8633
69	***01 (Export-LHD-199-WST)(Export-LHD-WOD)***	.....	2	318 9626
67	***10-80 (Heavy Duty-LHD-Six-* 7-16)***	.....	2	317 1186

7.135-2 ATTACHING PARTS, Trunnion To Bellcrank

CLIP	67/68	01 (Six-WST)(Six-WOD)	5.160	2	316 7609
CLIP	67/68	10-50-80 (WST)(WOD)	5.160	2	316 7609

7.135–3 ATTACHING PARTS, Trunnion To Rod

NUT, Jam	67/71	LHD (WAT-WCGS)	17.410	2	G124925
NUT, Jam	72	70 (WAT-WFGS)	17.410	2	G124925
NUT, Jam	72	LHD (WAT-WCGS)	17.410	2	G120376
NUT, Jam	67/	W4ST	17.410	2	G124925
NUT, Jam	67/68	(WST)(WOD)	17.410	4	G124925
NUT, Jam	69	SIX (WST-WCGS)(WOD-WCGS)	17.410	4	G124925
NUT, Jam	70	01-10-40-80 (Six-WST-WCGS)	17.410	4	G124925
NUT, Jam	71	01-40 (Six-WST-WCGS-* 7-38)	17.410	2	G124925
NUT, Jam	71	01-40 (Six-WST-WCGS-* 7-39)	17.406	2	G120370
NUT, Jam	72	01-40 (Six-WST-WCGS)	17.406	2	G120370
NUT, Jam	71/	10-80 (Six-WST-WCGS)	17.410	4	G124925
WASHER, Spring	71	01-40 (Six-WST-WCGS)(I.D. 25/64")	7.125	1	316 7670
WASHER, Spring	72	70 (WAT-WFGS)	7.125	1	321 5893
WASHER, Plain	71	01-40 (Six-WST-WCGS)(I.D. 25/64")	17.814	1	400 1100
WASHER, Plain	71/	01-40 (Six-WST-WCGS)(I.D. 17/32")	17.814	1	400 1128
WASHER, Plain	72	70 (WAT-WFGS)	7.125	1	400 4437
PIN, Locking	71	01-40 (Six-WST-WCGS-* 7-40)	29.162	2	400 0407
PIN, Locking	71	01-40 (Six-WST-WCGS-* 7-41)	17.536	1	G103374
PIN, Locking	72	01-40 (Six-WST-WCGS)	17.536	2	G103374
PIN, Locking	72	70 (WAT-WFGS)	29.162	1	400 0407
CLIP	***67/68***	***01-80 (Heavy Duty-LHD-Six-* 7-16)***	5.160	2	316 7609

7.135–4 ATTACHING PARTS, Trunnion To Gear Shift Operating Lever (On Steering Column)

CLIP	67/68	01 (LHD-WAT-WCGS)	5.160	1	316 7609
CLIP	67/68	(WST)(WOD)	5.160	2	316 7609

7.137–1 ROD, Transmission Reverse Lock-Up

71	01 (WST-WFGS-* 7-33)	.....	1	319 7863
70	40 (232)	.....	1	321 0014
71	40 (232-* 7-33)	.....	1	321 0014
71	40-70 (WST-WFGS-* 7-33)	.....	1	321 2404
70	70 (WST-WFGS)	.....	1	319 5326
72	70 (232-WST-WFGS-WAW)	.....	1	321 2404
72	70 (304-WST-WFGS-WAW)	.....	1	321 0014

7.137–2 ATTACHING PARTS, Reverse Lock-Up To Column Lever

GROMMET	70	01-40-70 (WST-WFGS)	7.125	1	318 7697
GROMMET	71	01-40-70 (WST-WFGS-* 7-30 And * 7-33)	7.125	1	318 7697
GROMMET	71	01-40-70 (WST-WFGS-* 7-30 And * 7-33)	7.110	1	319 4672
GROMMET	72	70 (WST-WFGS-WAW)	7.110	1	319 4672
BUSHING	70	01-40-70 (WST-WFGS)	7.125	1	318 7696
BUSHING	71	01-40-70 (WST-WFGS-* 7-33)	7.125	1	318 7696
WASHER, Spring	70	01-40-70 (WST-WFGS)	7.125	1	316 7670
WASHER, Spring	71	01-40-70 (WST-WFGS-* 7-33)	7.125	1	316 7670
WASHER, Spring	72	70 (WST-WFGS-WAW)	7.125	1	321 5893
WASHER, Plain	70	01-40-70 (WST-WFGS)	17.814	2	400 1100
WASHER, Plain	71	01-40-70 (WST-WFGS-* 7-33)(I.D. 25/64")	17.814	2	400 1100
WASHER, Plain	71	01-40-70 (WST-WFGS-* 7-33)(I.D. 13/32")	17.814	2	400 1102
WASHER, Plain	72	70 (WST-WFGS-WAW)	17.814	2	400 1102
PIN, Locking	70	01-40-70 (WST-WFGS)	29.162	2	400 0407
PIN, Locking	71	01-40-70 (WST-WFGS-* 7-33)	29.162	2	400 0407
PIN, Locking	72	70 (WST-WFGS-WAW)	29.162	2	400 0407

7.137–2a ATTACHING PARTS, Reverse Lock-Up Rod To Transmission Lever

WASHER, Spring	70	70 (WST-WFGS)	7.125	1	316 7670	
WASHER, Plain	70	70 (WST-WFGS)	17.814	1	400 1100	
PIN, Locking	70	70 (WST-WFGS)	29.162	1	400 0407	

7.137–3 TRUNNION, Reverse Lock-Up Rod (At Steering Column)

70	01-40-70 (WST-WFGS)	7.135	1	318 8633	
71	01-40-70 (WST-WFGS-* 7-33 And * 7-34)	.....	1	318 8633	
71	01-40-70 (WST-WFGS-* 7-33 And * 7-35)	.....	1	321 1181	
72	70 (232-WST-WFGS-WAW)(304-WST-WFGS-WAW)	.....	1	321 1181	

7.137–4 ATTACHING PARTS, Trunnion To Rod

NUT, Jam	70	40-70 (WST-WFGS)	17.410	2	G124925	
NUT, Jam	71	40-70 (WST-WFGS-* 7-33)	17.410	2	G124925	
NUT, Jam	72	70 (WST-WFGS-WAW)	17.410	2	G124925	

7.230–1 CABLE, Gear Selector

67/69	*01 (RHD-Six-WAT-WCGS)*	.....	1	317 4561
67/70	*10 (RHD-Six-WAT-WCGS)*	.....	1	317 4236
67/69	*10-80 (RHD-290-WAT-WCGS)*	.....	1	318 8900
70	*10 (RHD-304-WAT-WCGS)*	.....	1	318 8900
70	*10 (RHD-360-WAT-WCGS)*	.....	1	317 4236
67/68	*80 (RHD-343-WAT-WCGS)(RHD-Post Office-Six)*	.....	1	317 4236
69	*80 (RHD-343-WAT-WCGS)*	.....	1	319 4338
70	*80 (RHD-360-WAT-WCGS)*	.....	1	319 4338

7.230–2 ATTACHING PARTS, Cable To Transmission Lever

CLEVIS	*67/68*	*RHD (WAT-WCGS)*	.....	1	317 4250	
CLEVIS	*69/70*	*RHD (WAT-WCGS)*	.....	1	319 4399	
PIN, Clevis	*67/70*	*RHD (WAT-WCGS)*	.....	1	317 4249	
PIN, Cotter	*67/70*	*RHD (WAT-WCGS)*	17.460	1	G103361	NA
NUT, Jam	*67/70*	*RHD (WAT-WCGS)*	17.410	1	G120613	NA

7.230–3 ATTACHING PARTS, Cable To Steering Column

CLEVIS	*67/68*	*RHD (Six-WAT-WCGS)*	.....	1	317 4250	
CLEVIS	*69*	*RHD (Six-WAT-WCGS)*	.....	1	319 4399	
PIN, Clevis	*67/69*	*RHD (Six-WAT-WCGS)*	.....	1	317 4249	
PIN, Cotter	*67/70*	*RHD (Six-WAT-WCGS)*	17.460	1	G103361	NA
NUT, Jam	*67/70*	*RHD (Six-WAT-WCGS)*	17.410	1	G120613	NA
NUT, Jam	*67/70*	*RHD (V8-WAT-WCGS)*	17.410	2	G120613	NA

7.230–4 ATTACHING PARTS, Cable To Bracket

CLAMP	*67/70*	*RHD (WAT-WCGS)*	.....	2	317 3579	
WASHER, Lock	*67/70*	*RHD (WAT-WCGS)*	17.820	4	G120214	NA
NUT, Hexagon	*67/70*	*RHD (WAT-WCGS)*	17.406	4	G120368	

7.240–1 BRACKET, Gear Selector Cable To Converter Housing

67/69	*(5-11/16" Long) 01-10 (RHD-Six-WAT-WCGS)*	.....	1	318 8845
67	*(5-13/32" Long) 01-10 (RHD-Six-WAT-WCGS)*	.....	1	318 6550
70	*01-10 (RHD-Six-WAT-WCGS)*	.....	1	319 7780
67	*(5-13/32" Long) 10-80 (RHD-290-WAT-WCGS)*	.....	1	318 6550
67/69	*(6-19/32" Long) 10-80 (RHD-290-WAT-WCGS)*	.....	1	318 8869

70	10 (RHD-304-WAT-WCGS)	.....	1	318 8869	
70	10 (RHD-360-WAT-WCGS)	.....	1	318 7939	
67/68	80 (RHD-343-WAT-WCGS)	.....	1	318 7939	
69	80 (RHD-343-WAT-WCGS)	.....	1	319 3534	
70	80 (RHD-360-WAT-WCGS)	.....	1	319 3534	

7.240–2 ATTACHING PARTS, Bracket To Converter Housing

BOLT, Hexagon	67/69	RHD (Six-WAT-WCGS)	17.038	2	G181596	NA
BOLT, Hexagon	67/70	RHD (V8-WAT-WCGS)	17.038	2	G180079	NA
WASHER, Lock	67/69	RHD (Six-WAT-WCGS)	17.820	2	G120214	NA
WASHER, Lock	67/70	RHD (V8-WAT-WCGS)	17.820	2	G120214	NA
WASHER, Plain	69	80 (RHD-343-WAT-WCGS)	17.814	2	G120393	NA
WASHER, Plain	70	80 (RHD-360-WAT-WCGS)	17.814	2	G120393	NA
NUT, Hexagon	67/69	RHD (Six-WAT-WCGS)	17.406	2	G120368	
NUT, Hexagon	67/70	RHD (V8-WAT-WCGS)	17.406	1	G120376	NA

7.240–3 CLIP, Gear Selector Cable To Converter Housing

67/71	RHD (Six-WAT-WCGS)	8.330	1	313 5224	
67/68	RHD (V8-WAT-WCGS)	10.470	1	315 8792	
69/71	10 (RHD-V8-WAT-WCGS)	10.470	1	315 8792	

7.240–4 ATTACHING PARTS, Clip To Converter Housing

BRACKET	67/68	RHD (V8-WAT-WCGS)	13.440	2	317 5813	
BRACKET	69/70	10 (RHD-V8-WAT-WCGS)	13.440	2	317 5813	
BOLT, Hexagon	67/68	RHD (V8-WAT-WCGS)	17.038	2	G180018	NA
BOLT, Hexagon	69/70	10 (RHD-V8-WAT-WCGS)	17.038	2	G180018	NA
WASHER, Lock	67/68	RHD (V8-WAT-WCGS)	17.820	2	G120380	NA
WASHER, Lock	69/70	10 (RHD-V8-WAT-WCGS)	17.820	2	G120380	NA
WASHER, Plain	67/70	RHD (Six-WAT-WCGS)	17.814	1	G120391	NA
NUT, Hexagon	67/68	RHD (V8-WAT-WCGS)	17.406	2	G120375	
NUT, Hexagon	69/70	10 (RHD-V8-WAT-WCGS)	17.406	2	G120375	
SCREW, Machine	67/69	RHD (Six-WAT-WCGS)	17.626	2	400 0987	

7.240–5 BRACKET, Gear Selector Cable To Strut Rod

67/70	10 (RHD-Six-WAT-WCGS)	.....	1	317 4240	

7.240–6 BRACKET, Gear Selector Cable To Steering Column

67/70	10 (RHD-V8-WAT-WCGS)	.....	1	317 4326	
70	01 (RHD-Six-WAT-WCGS)	.....	1	319 6512	
67/68	80 (RHD-V8-WAT-WCGS)	.....	1	317 4326	

7.240–7 ATTACHING PARTS, Bracket To Steering Column

PIN, Cotter	67/68	RHD (V8-WAT-WCGS)	17.460	1	G103362	NA
PIN, Cotter	69/70	10 (RHD-V8-WAT-WCGS)	17.460		G103362	NA
STUD	67/68	RHD (V8-WAT-WCGS)	.....	1	317 4408	
STUD	69/70	10 (RHD-V8-WAT-WCGS)	.....	1	317 4408	
WASHER, Spring	67/68	RHD (V8-WAT-WCGS)	7.125	1	316 7670	
WASHER, Spring	69/70	10 (RHD-V8-WAT-WCGS)	7.125	1	316 7670	
WASHER, Lock	67/68	RHD (V8-WAT-WCGS)	17.820	1	G103319	NA
WASHER, Lock	69/70	10 (RHD-V8-WAT-WCGS)	17.820	1	G103319	NA
WASHER, Plain	67/68	RHD (V8-WAT-WCGS)	17.814	1	400 1102	
WASHER, Plain	69/70	10 (RHD-V8-WAT-WCGS)	17.814	1	400 1102	
NUT, Hexagon	67/68	RHD (V8-WAT-WCGS)	17.406	1	G120375	
NUT, Hexagon	69/70	10 (RHD-V8-WAT-WCGS)	17.406	1	G120375	

SHIFTING

7.240–8 BRACKET, Gear Selector Cable To Dash Panel

69	*80 (RHD-343-WAT-WCGS)*	.....	1	319 3533	
70	*80 (RHD-360-WAT-WCGS)*	.....	1	319 3533	

7.240–9 ATTACHING PARTS, Bracket To Dash Panel

BOLT, Hexagon	*69*	*80 (RHD-343-WAT-WCGS)*	17.038	2	G181595	NA
BOLT, Hexagon	*70*	*80 (RHD-360-WAT-WCGS)*	17.038	2	G181595	NA
WASHER, Plain	*69*	*80 (RHD-343-WAT-WCGS)*	17.814	2	400 0480	
WASHER, Plain	*70*	*80 (RHD-360-WAT-WCGS)*	17.814	2	400 0480	
WASHER, Lock	*69*	*80 (RHD-343-WAT-WCGS)*	17.820	2	G120214	
WASHER, Lock	*70*	*80 (RHD-360-WAT-WCGS)*	17.820	2	G120214	
NUT, Hexagon	*69*	*80 (RHD-343-WAT-WCGS)*	17.406	2	G120368	
NUT, Hexagon	*70*	*80 (RHD-360-WAT-WCGS)*	17.406	2	G120368	

7.240–10 BRACKET, Gear Selector Cable At Side Sill

67	*80 (RHD-Post Office-Six)*	.....	1	318 7981	
67/70	*RHD (V8-WAT-WCGS)*	.....	1	318 7981	

7.535–1 SOCKET, Gear Selector Dial Lamp

67	01 (LHD-WAT-WFGS)	.....	1	318 6894	
70/	01-30-40-70 (WAT-WCGS-LAW)	.....	1	448 7785	
70/	01-10-40-70-80 (WAT-WCGS-WAW)	.....	1	448 7846	
67	10-50-80 (LHD-WAW-WCGS)	.....	1	317 2951	
67/69	10-30-50-70-80 (LHD-WAT-WFC)...(Incl. Wire)	.....	1	318 6754	
70	10-80 (LHD-WAT-WCGS-LAW)	.....	1	448 7785	
72	70 (WAT-WFGS)	.....	1	321 5528	
70/71	WAT (WFGS)	.....	1	318 6754	
67/69	*01 (RHD-WAT)*	.....	1	320 5863	
67/70	*10-80 (RHD-WAT-WCGS)*	.....	1	317 0869	

7.535–2 ATTACHING PARTS, Socket To Cover

SCREW, Machine	70/	LHD (WAT-WCGS-LAW)	.....	1	448 8307	
SCREW, Machine	67	10-50-80 (LHD-WAW-WCGS)	17.598	1	G273228	NA
SCREW, Machine	70/	10-70-80 (WAT-WCGS-WAW)	.....	2	448 7865	
SCREW, Tapping	*67/69*	*01 (RHD-Six-WAT)*	17.660	1	G166985	NA

7.535–3 SHIELD, Gear Selector Dial Lamp

67/69	LHD (WAT-WCGS)	.....	1	319 0060
67/70	*10-80 (RHD-WAT-WCGS)*	.....	1	317 0865

7.535–4 BULB, Gear Selector Dial

70/71	WAT (WFGS)	3.215	1	345 1933
67	01 (V8-WAT-WFGS)	3.215	1	G454626
70/71	01-70 (WAT-WCGS-LAW)	3.215	1	G454626
67	10-50-80 (WAT-WFGS)(LHD-WAW)	3.215	1	320 4552
70/71	10-70-80 (WAT-WCGS-WAW)	3.215	1	345 1933
70/71	01-10-70-80 (LHD-WAT-WCGS-LAW)	3.215	1	G454626
68/69	WAT (WFGS-WAW)	3.215	1	345 1933
67/68	LHD (WAT-WCGS-LAW)	3.215	1	320 4552
69	LHD (WAT-WCGS-LAW)	3.215	1	345 1933
72	70 (WAT-WFGS)	.....	1	344 1593
72	(WAT-LAW)	3.215	1	G454626
72	(WAT-WAW)	.....	1	345 1933
68/70	*10-80 (RHD-WAT-WCGS)*	3.215	1	345 1933

Printed in U.S.A.

7.535–5 HOOD, Gear Selector Dial Lamp

67	01 (LHD-WAT-WFGS)	.....	1	317	6431
67/71	10-30-50-70-80 (WAT-WFGS-WFC)	.....	1	358	3920
67/68	LHD (WAT-WCGS-LAW)	.....	1	320	8030
67/68	LHD (WAT-WCGS-WAW)	.....	1	318	7834
69	LHD (WAT-WCGS-LAW)	.....	1	319	4699
70/71	01-70 (WAT-WCGS-LAW)	.....	1	319	6504
70/71	10-80 (LHD-WAT-WCGS-LAW)	.....	1	319	6504
69	LHD (WAT-WCGS-WAW)	.....	1	319	4797
70/71	10-70-80 (WAT-WCGS-WAW)	.....	1	319	6687
72	70 (WAT-WFGS)	.....	1	358	3920
72	(WAT-LAW)	.....	1	319	6504
72	(WAT-WAW)	.....	1	319	6687
67/69	***01 (RHD-WAT)***...(Incl. Filter)	.....	1	320	5862

7.535–6 FILTER, Gear Selector Dial Lamp Hood

67/69	LHD (WAT-WCGS)	.....	1	318	7833
70/	LHD (WAT-WCGS-WAW)	.....	1	318	7833
70	LHD (WAT-WCGS-LAW)	.....	1	318	7833
67/69	***01 (RHD-WAT)***	3.510	1	352	0871

7.535–7 WIRE, Gear Selector Dial Lamp

72	10-70-80 (WAT-WFGS)	.....	1	321	5538
67/70	***10-80 (RHD-WAT-WCGS)***	.....	1	320	5204

7.535–7a ATTACHING PARTS, Wire To Floor Shift Lever Assembly

CLIP	72	10-70-80 (WAT-WFGS)	.....	1	400	1801

7.535–8 PROTECTOR, Gear Selector Lampwire

70/	LHD (WAT-WCGS-LAW)	.....	1	448	7742

7.535–9 RETAINER, Gear Selector Dial Lamp Lens

70/	10-70-80 (WAT-WCGS-WAW)	.....	1	448	7852

7.536–1 POINTER, Gear Selector

67	01 (V8-WAT-WFGS)	.....	1	318	7497
67/69	10-50-70-80 (LHD-WAT-WCGS-WAW)	.....	1	318	7279
70/	WAT (WCGS-WAW)	.....	1	319	6688
67/68	LHD (WAT-WCGS-LAW)	.....	1	318	7975
67/70	***10-80 (RHD-WAT-WCGS)***	.....	1	317	0864

7.536–2 ATTACHING PARTS, Pointer To Column

SCREW, Tapping.....	67/69	LHD (WAT-WCGS-LAW)	17.655	2	G168974	NA
SCREW, Machine**.....**	***67/70***	***10-80 (RHD-WAT-WCGS)***	17.598	1	G273876	NA

7.536–3 PAD, Gear Selector Pointer

67	01 (WAT-WFGS)	.....	2	318	5953

7.536–4 INDICATOR, Gear Selector Pointer

71/	WAT (WCGS-LAW)(Aluminum)	.....	1	321	5679

SHIFTING

7.537–1 DIAL, Gear Selector Pointer

1967 Thru 1971

67	01 (WAT-WFGS)	.....	1	317 6433
70/71	01-40-70 (WAT-WCGS-LAW)	.....	1	319 6506
67/70	10-30-50-70-80 (WAT-WFGS)	.....	1	318 6756
70/71	10-80 (LHD-WAT-WCGS-LAW)	.....	1	319 6506
71	10-80 (WAT-WFGS)	.....	1	318 6756
67	LHD (WAT-WCGS-LAW)...(Less Bezel)	.....	1	318 6774
68/69	LHD (WAT-WCGS-LAW)...(Less Bezel)	.....	1	319 1086
69	WAT (WCGS-WAW)...(Incl. Bezel)	.....	1	319 3682
70/71	(WAT-WCGS-WAW)	.....	1	319 6690
71	70 (WAT-WFGS)	.....	1	321 1410
67	***01 (RHD-WAT)***	.....	1	317 9737
68/69	***01 (RHD-WAT)***	.....	1	319 1486
67	***10-80 (RHD-WAT-WCGS)***	.....	1	317 0868
68/70	***10-80 (RHD-WAT-WCGS)***	.....	1	319 1488
67	(Chrome) 10-50-80 (LHD-WAT-WCGS-WAW) ...(Incl. Bezel)	.....	1	318 7280
67	(Chrome) LHD (WAT-WCGS-LAW) ...(Incl. Bezel)	.....	1	318 6776
(T-753)	(LHD-WAT-WCGS-WAW)...(Incl. Bezel)	.....	1	319 0662
(T-758)	(LHD-WAT-WCGS-WAW)...(Incl. Bezel)	.....	1	319 0661
(T-759)	(LHD-WAT-WCGS-WAW)...(Incl. Bezel)	.....	1	319 0666
(T-771)	(LHD-WAT-WCGS-WAW)...(Incl. Bezel)	.....	1	319 0661
(T-773)	(LHD-WAT-WCGS-WAW)...(Incl. Bezel)	.....	1	319 0662
(T-774)	(LHD-WAT-WCGS-WAW)...(Incl. Bezel)	.....	1	319 0663
(T-775)	(LHD-WAT-WCGS-WAW)...(Incl. Bezel)	.....	1	319 0664
(T-776)	(LHD-WAT-WCGS-WAW)...(Incl. Bezel)	.....	1	319 0667
(T-777)	(LHD-WAT-WCGS-WAW)...(Incl. Bezel)	.....	1	319 0665
(T-778)	(LHD-WAT-WCGS-WAW)...(Incl. Bezel)	.....	1	319 0661
(T-779)	(LHD-WAT-WCGS-WAW)...(Incl. Bezel)	.....	1	319 0666
(T-781)	(LHD-WAT-WCGS-WAW)...(Incl. Bezel)	.....	1	319 0661
(T-783)	(LHD-WAT-WCGS-WAW)...(Incl. Bezel)	.....	1	319 0662
(T-787)	(LHD-WAT-WCGS-WAW)...(Incl. Bezel)	.....	1	319 0665
(T-789)	(LHD-WAT-WCGS-WAW)...(Incl. Bezel)	.....	1	319 0666
(T-791)	(LHD-WAT-WCGS-WAW)...(Incl. Bezel)	.....	1	319 0661
(T-793)	(LHD-WAT-WCGS-WAW)...(Incl. Bezel)	.....	1	319 0662
(T-794)	(LHD-WAT-WCGS-WAW)...(Incl. Bezel)	.....	1	319 0663
(T-795)	(LHD-WAT-WCGS-WAW)...(Incl. Bezel)	.....	1	319 0664
(T-796)	(LHD-WAT-WCGS-WAW)...(Incl. Bezel)	.....	1	319 0667
(T-797)	(LHD-WAT-WCGS-WAW)...(Incl. Bezel)	.....	1	319 0665
(T-798)	(LHD-WAT-WCGS-WAW)...(Incl. Bezel)	.....	1	319 0661
(T-799)	(LHD-WAT-WCGS-WAW)...(Incl. Bezel)	.....	1	319 0666
(T-828)	(LHD-WAT-WCGS-WAW)...(Incl. Bezel)	.....	1	319 1140
(T-831)	(LHD-WAT-WCGS-WAW)...(Incl. Bezel)	.....	1	319 1140
(T-832)	(LHD-WAT-WCGS-WAW)...(Incl. Bezel)	.....	1	319 1146
(T-835)	(LHD-WAT-WCGS-WAW)...(Incl. Bezel)	.....	1	319 1141
(T-843)	(LHD-WAT-WCGS-WAW)...(Incl. Bezel)	.....	1	319 1142
(T-844)	(LHD-WAT-WCGS-WAW)...(Incl. Bezel)	.....	1	319 1143
(T-845)	(LHD-WAT-WCGS-WAW)...(Incl. Bezel)	.....	1	319 1141
(T-848)	(LHD-WAT-WCGS-WAW)...(Incl. Bezel)	.....	1	319 1140
(T-851)	(LHD-WAT-WCGS-WAW)...(Incl. Bezel)	.....	1	319 1140
(T-853)	(LHD-WAT-WCGS-WAW)...(Incl. Bezel)	.....	1	319 1142
(T-855)	(LHD-WAT-WCGS-WAW)...(Incl. Bezel)	.....	1	319 1141
(T-871)	(LHD-WAT-WCGS-WAW)...(Incl. Bezel)	.....	1	319 1140
(T-873)	(LHD-WAT-WCGS-WAW)...(Incl. Bezel)	.....	1	319 1142
(T-874)	(LHD-WAT-WCGS-WAW)...(Incl. Bezel)	.....	1	319 1143
(T-875)	(LHD-WAT-WCGS-WAW)...(Incl. Bezel)	.....	1	319 1141
(T-876)	(LHD-WAT-WCGS-WAW)...(Incl. Bezel)	.....	1	319 1145
(T-879)	(LHD-WAT-WCGS-WAW)...(Incl. Bezel)	.....	1	319 1144
(T-881)	(LHD-WAT-WCGS-WAW)...(Incl. Bezel)	.....	1	319 1140

(T-883)(LHD-WAT-WCGS-WAW)...(Incl. Bezel)				1	319 1142
(T-885)(LHD-WAT-WCGS-WAW)...(Incl. Bezel)				1	319 1141
(T-891)(LHD-WAT-WCGS-WAW)...(Incl. Bezel)				1	319 1140
(T-893)(LHD-WAT-WCGS-WAW)...(Incl. Bezel)				1	319 1142
(T-894)(LHD-WAT-WCGS-WAW)...(Incl. Bezel)				1	319 1143
(T-895)(LHD-WAT-WCGS-WAW)...(Incl. Bezel)				1	319 1141
(T-896)(LHD-WAT-WCGS-WAW)...(Incl. Bezel)				1	319 1145
(T-899)(LHD-WAT-WCGS-WAW)...(Incl. Bezel)				1	319 1144

1972

72	(Black) WAT (WCGS-LAW)			1	321 6404
72	(Blue) WAT (WCGS-LAW)			1	321 6405
72	(Green) WAT (WCGS-LAW)			1	321 6406
72	(Tan) WAT (WCGS-LAW)			1	321 6407
72	(Black) WAT (WCGS-WAW-* 7-46)			1	321 6409
72	(Black) WAT (WCGS-WAW-* 7-47)			1	321 8724
72	(Blue) WAT (WCGS-WAW-* 7-46)			1	321 6410
72	(Blue) WAT (WCGS-WAW-* 7-47)			1	321 8725
72	(Green) WAT (WCGS-WAW-* 7-46)			1	321 6411
72	(Green) WAT (WCGS-WAW-* 7-47)			1	321 8726
72	(Tan) WAT (WCGS-WAW-* 7-46)			1	321 6412
72	(Tan) WAT (WCGS-WAW-* 7-47)			1	321 8727
72	70 (WAT-WFGS)			1	321 1410

7.537-2 ATTACHING PARTS, Dial To Directional Signal Switch Housing

CLIP, Spring	71/	01-40 (WAT-WCGS-WAW)		1	319 6686
CLIP, Spring	70/	10-70-80 (WAT-WCGS-WAW)		1	319 6686
SCREW, Machine	***67/70***	***10-80 (RHD-WAT-WCGS)***	17.598	2	G273876 NA
SCREW, Machine	***68/69***	***01 (RHD-WAT)***	17.616	2	G271085 NA

7.537-3 ATTACHING PARTS, Dial To Column

SCREW, Machine	67/69	10-50-70-80 (LHD-WCGS-WAW)	17.592	2	G156642 NA

7.537-3a ATTACHING PARTS, Dial To Bezel

SCREW, Tapping	71/	70 (WAT-WFGS)	17.660	2	G163216 NA
WASHER, Plain	71/	70 (WAT-WFGS)	17.814	2	G9416128 NA

7.537-4 BEZEL, Gear Selector Pointer Dial

69	LHD (WAT-WCGS-LAW)			1	319 3675 NC
70/	01-40-70 (WAT-WCGS-LAW)			1	319 7139 NC
70/	10-80 (LHD-WAT-WCGS-LAW)			1	319 7139 NC
69	WAW...(Incl. Dial)			1	319 3682 NC
70/	WAT (WCGS-WAW)			1	319 7145 NC
(T-723)(LHD-WAT-WCGS-LAW)				1	319 0670
(T-728)(LHD-WAT-WCGS-LAW)				1	319 0669
(T-729)(LHD-WAT-WCGS-LAW)				1	319 0674
(T-741)(LHD-WAT-WCGS-LAW)				1	319 0669
(T-743)(LHD-WAT-WCGS-LAW)				1	319 0670
(T-744)(LHD-WAT-WCGS-LAW)				1	319 0671
(T-745)(LHD-WAT-WCGS-LAW)				1	319 0672
(T-747)(LHD-WAT-WCGS-LAW)				1	319 0673
(T-748)(LHD-WAT-WCGS-LAW)				1	319 0669
(T-749)(LHD-WAT-WCGS-LAW)				1	319 0674
(T-753)(LHD-WAT-WCGS-LAW)				1	319 0670
(T-758)(LHD-WAT-WCGS-LAW)				1	319 0669
(T-759)(LHD-WAT-WCGS-LAW)				1	319 0674
(T-771)(LHD-WAT-WCGS-LAW)				1	319 0669
(T-773)(LHD-WAT-WCGS-LAW)				1	319 0670
(T-774)(LHD-WAT-WCGS-LAW)				1	319 0671
(T-775)(LHD-WAT-WCGS-LAW)				1	319 0672

(T-776)(LHD-WAT-WCGS-LAW)		.....	1	319 0675
(T-777)(LHD-WAT-WCGS-LAW)		.....	1	319 0673
(T-778)(LHD-WAT-WCGS-LAW)		.....	1	319 0669
(T-779)(LHD-WAT-WCGS-LAW)		.....	1	319 0674
(T-781)(LHD-WAT-WCGS-LAW)		.....	1	319 0669
(T-783)(LHD-WAT-WCGS-LAW)		.....	1	319 0670
(T-787)(LHD-WAT-WCGS-LAW)		.....	1	319 0673
(T-789)(LHD-WAT-WCGS-LAW)		.....	1	319 0674
(T-791)(LHD-WAT-WCGS-LAW)		.....	1	319 0669
(T-793)(LHD-WAT-WCGS-LAW)		.....	1	319 0670
(T-794)(LHD-WAT-WCGS-LAW)		.....	1	319 0671
(T-795)(LHD-WAT-WCGS-LAW)		.....	1	319 0672
(T-796)(LHD-WAT-WCGS-LAW)		.....	1	319 0675
(T-797)(LHD-WAT-WCGS-LAW)		.....	1	319 0673
(T-798)(LHD-WAT-WCGS-LAW)		.....	1	319 0669
(T-799)(LHD-WAT-WCGS-LAW)		.....	1	319 0674
(T-828)(LHD-WAT-WCGS-LAW)		.....	1	319 1701
(T-831)(LHD-WAT-WCGS-LAW)		.....	1	319 1701
(T-832)(LHD-WAT-WCGS-LAW)	*(Use 319 3675)*	.....	1	319 1101
(T-835)(LHD-WAT-WCGS-LAW)		.....	1	319 1702
(T-843)(LHD-WAT-WCGS-LAW)		.....	1	319 0813
(T-844)(LHD-WAT-WCGS-LAW)		.....	1	319 0814
(T-845)(LHD-WAT-WCGS-LAW)		.....	1	319 1702
(T-848)(LHD-WAT-WCGS-LAW)		.....	1	319 1701
(T-851)(LHD-WAT-WCGS-LAW)		.....	1	319 1701
(T-853)(LHD-WAT-WCGS-LAW)		.....	1	319 0813
(T-855)(LHD-WAT-WCGS-LAW)		.....	1	319 1702
(T-871)(LHD-WAT-WCGS-LAW)		.....	1	319 1701
(T-873)(LHD-WAT-WCGS-LAW)		.....	1	319 0813
(T-874)(LHD-WAT-WCGS-LAW)		.....	1	319 0814
(T-875)(LHD-WAT-WCGS-LAW)		.....	1	319 1702
(T-876)(LHD-WAT-WCGS-LAW)		.....	1	319 0816
(T-879)(LHD-WAT-WCGS-LAW)		.....	1	319 0815
(T-881)(LHD-WAT-WCGS-LAW)		.....	1	319 1701
(T-883)(LHD-WAT-WCGS-LAW)		.....	1	319 0813
(T-885)(LHD-WAT-WCGS-LAW)		.....	1	319 1702
(T-891)(LHD-WAT-WCGS-LAW)		.....	1	319 1701
(T-893)(LHD-WAT-WCGS-LAW)		.....	1	319 0813
(T-894)(LHD-WAT-WCGS-LAW)		.....	1	319 0814
(T-895)(LHD-WAT-WCGS-LAW)		.....	1	319 1702
(T-896)(LHD-WAT-WCGS-LAW)		.....	1	319 0816
(T-899)(LHD-WAT-WCGS-LAW)		.....	1	319 0815

7.537–5 COVER, Gear Selector Pointer Dial

67	01 (WAT-WFGS)	.....	1	317 6435

7.537–6 ATTACHING PARTS, Cover To Bezel

NUT, Speed	67 WAT (WFGS)	7.215	2	400 0459

7.537–7 SEAL, Gear Selector Dial To Jacket Tube

67/70	*10-80 (RHD-WAT-WCGS)*	.....	1	317 0867

7.537–8 CUSHION, Gear Selector Pointer Dial

67/70	10-30-50-70-80 (WAT-WFGS-WFC)	.....	2	318 6750
71	10-80 (WAT-WFGS-WFC)	.....	2	318 6750

SHIFTING

7.537–9 SHROUD, Gear Selector Pointer Dial

67/70	10-30-50-70-80 (WAT-WFGS)...(Incl. Dial And Pad).....	.....	1	318 6757
71	10-80 (WAT-WFGS-WFC).....	.....	1	318 6757

7.537–10 PAD, Gear Selector Pointer Dial Shroud

67/70	10-30-50-70-80 (WAT-WFGS).....	.....	1	318 6748
71	10-80 (WAT-WFGS).....	.....	1	318 6748
71/	70 (WAT-WFGS)(Seal).....	.....	1	321 1296

7.537–10a ATTACHING PARTS, Pad (Seal) To Console

SCREW, Tapping.....	71/	70.....	26.032	2	400 1638
WASHER, Lock	71/	70.....	17.814	2	G9416712 NA

7.537–11 RETAINER, Gear Selector Pointer Dial

67/70	10-30-50-70-80 (WAT-WFGS-WFC).....	.....	1	318 6753
71	10-80 (WAT-WFGS-WFC).....	.....	1	318 6753

7.537–12 ATTACHING PARTS, Retainer To Console

SCREW, Tapping.....	67/71	10-50-80 (WAT-WFGS-WFC).....	.....	4	400 2046
SCREW, Tapping.....	67/70	30-70 (WAT-WFGS-WFC).....	.....	4	400 2046

7.538 SPRING, Gear Selector Dial Retaining

70/	01-40-70 (WAT-WCGS-LAW).....	.....	2	319 6503
70/	10-80 (LHD-WAT-WCGS-LAW).....	.....	2	319 6503

7.539 BRACKET, Gear Selector Bezel

70/	01-40-70 (WAT-WCGS-LAW).....	.....	1	319 6505
70/	10-80 (LHD-WAT-WCGS-LAW).....	.....	1	319 6505

SPECIAL INFORMATION

The Engine Build Code Number, Vehicle Identification Number and the information provided on the Unit Body Plate are often necessary when determining the proper replacement parts for your automobile. For their location refer to the General Information Section found at the front of this catalog.

NOTES

8–1 ..... Uses a Wagner Brake Assembly and the self-adjusting mechanism uses two Wire Links.

8–2 ..... Uses a Bendix Brake Assembly and the self-adjusting mechanism uses a Wire Cable and the Hold Down Springs on the Front Wheel are Black.

8–3 ..... Uses a Bendix Brake Assembly and the self-adjusting mechanism uses a Wire Cable and the Hold Down Springs on the Front Wheel are Orange.

8–4 ..... Cars equipped with Heavy Duty Brakes can be identified as follows: On 67 thru 69 15-16-17-19 (Six) the Brake Drum inside diameter is 10" on Heavy Duty and 9" for Cars Except Heavy Duty. On 67 thru 69 15-16-17-19 (V8-LDB): 67 thru 69 18 (LDB): 67 thru 70 80 Heavy Duty Brakes can be identified by the color of the Brake Shoe Return Springs (Upper), Aluminum for Heavy Duty and Yellow for Except Heavy Duty.

8–5 ..... On 67 01-10-50-80 the Brake Shoe Linings are bonded to the shoes.

8–6 ..... On 67 01-10-50-80 the Brake Shoe Linings are riveted to the shoes.

8–7 ..... On 67 05-06 (LHD-LPB), uses a Wagner Brake Master Cylinder.

8–8 ..... On 67 05-06 (LHD-LPB), uses a Bendix Brake Master Cylinder.

8–9 ..... On 68 01-10-70-80 (LHD-LPB), Brake Master Cylinder has a square pipe plug in Piston Stop Hole. The Piston Stop is a separate part.

8–10 .... On 68 01-10-70-80 (LHD-LPB), Brake Master Cylinder has a hexagon head Piston Stop Bolt.

8–11 .... On 67 01 (V8-LDB), Wheel Cylinder is 29/32" diameter.

8–12 .... On 67 01 (V8-LDB), Wheel Cylinder is 7/8" diameter.

8–13 .... On 68 10-80 used prior to Car Sequence No. W-016164. On 68 70 used prior to Car Sequence No. E-005665 and beginning with Car Sequence No. E-009241 and prior to E-009634.

8–14 .... On 68 10-80 used beginning with Car Sequence No. W-016164. On 68 70 used beginning with Car Sequence No. E-005665 and prior to Car Sequence E-009241 and beginning with Car Sequence No. E-009634.

8–15 .... On 68 10-80 (LHD-Six) used prior to Car Sequence No. W-016683.

8–16 .... On 68 10-80 (LHD-Six) used beginning with Car Sequence No. W-016683.

8–17 .... On 67 15-16-17-19 (Six-LDB), Brake Drum does not have cooling ribs.

8–18 .... On 67 15-16-17-19 (Six-LDB), Brake Drum has cooling ribs.

8–19 .... On 68 01-70 (Six), Brake Drum does not have cooling ribs.

8–20 .... On 68 01-70 (Six), Brake Drum has cooling ribs.

8–21 .... Used on Kenosha Built Cars which can be identified by the third digit "K" on the Vehicle Identification Number Plate.

8–22 .... Used on Brampton Built Cars which can be identified by the third digit "B" on the Vehicle Identification Number Plate.

8–23 .... On 67 05-06-07-09 (Six-199-WAT-WEEP), uses a 14" x 4.50" Wheel.

8–24 .... On 67 05-06-07-09 (Six-199-WAT-WEEP), uses a 14" x 5.00" Wheel.

8–25 .... On 68 80 (W/14" wheels), the embossed slots along outside diameter are cut out.

Printed in U.S.A.

NOTES

8–26 .... On 68 80 (W/14" wheels), the embossed slots along outside diameter are solid and painted Black.

8–27 .... On 68 01-10-70-80 (WDB), Master Cylinder Cover attaches with 4 metal Strap Retainers. The Identification Tag Number, located on the Master Cylinder Mounting Stud, is 250 6978 for the 68 01 (V8-WDB) and 68 10-80 (Export-LHD-Six-WDB); 250 7037 for the 68 10-70-80 (LHD-V8-WDB) and 250 5905 for the 68 10-80 (RHD-WDB).

8–28 .... On 68 01-10-70-80 (WDB), Master Cylinder Cover attaches with a Retainer (Wire Bail). The Identification Tag Number, located on the Master Cylinder Mounting Stud, is 250 7164 for the 68 01 (V8-WDB) and 68 10-80 (Export-LHD-Six-WDB); 250 7165 for the 68 10-70-80 (LHD-V8-WDB); 250 7176 for the 68 10-80 (RHD-WDB).

8–29 .... On 68 70 (LDB) used prior to Car Sequence No. E-030427. On 68 70 (WDB) used prior to Car Sequence No. E-030445.

8–30 .... On 68 70 (LDB) used beginning with Car Sequence No. E-030427. On 68 70 (WDB) used beginning with Car Sequence No. E-030445.

8–31 .... On 68 01-10-70-80 (LHD-WPB), Brake Master Cylinder uses a square head Pipe Plug in Piston Stop Hole and the Piston Stop is a separate part.

8–32 .... On 68 01-10-70-80 (LHD-WPB), Brake Master Cylinder uses a hexagon head Piston Stop Screw.

8–33 .... On 68 01-10-70-80 (WDB), the Caliper Mounting Bolts, Caliper to Mounting Bracket, are 1-3/8" long. On 68 01-10-70-80 (WDB) used prior to Car Sequence No. E-030781 and W-039520.

8–34 .... On 68 01-10-70-80 (WDB), the Caliper Mounting Bolts, Caliper to Mounting Bracket, are 1-5/8" long. On 68 01-10-70-80 (WDB) used beginning with Car Sequence No. E-030781 and W-039520.

8–35 .... The Front and Rear Drums on 69 10-80 (LDB) do not have Cooling Ribs.

8–36 .... The Front and Rear Drums on 69 10-80 (LDB) do have Cooling Ribs.

8–37 .... Brake Pedal Support has five Weldnuts for attaching to the Dash Panel and attachment of the Brake Cylinder. The Vacuum Check Valve is 1.787" long and has one Radial Groove in front.

8–38 .... Brake Pedal Support is less Weldnuts but includes one Weld Bolt for attaching to the Dash Panel and attachment of the Brake Master Cylinder (LPB). The Vacuum Check Valve is 2.05" long and has four Radial Grooves in front.

8–41 .... The Master Cylinder Cover attaches with a Bolt.

8–42 .... The Master Cylinder Cover is attached with a Retainer (Wire Bail).

8–43 .... Inner surface of Center of Wheel Cover encircled with "AMERICAN MOTORS" is painted Black.

8–44 .... Inner surface of Center of Whoel Cover encircled with "AMERICAN MOTORS" has a Brushed Finish.

8–45 .... I. D. of Cylinder is 15/16".

8–46 .... I. D. of Cylinder is 7/8".

8–47 .... Tube is routed along underside of Rear Seat Footwell.

8–48 .... Tube is routed along right hand side of Propeller Shaft Tunnel.

8–49 .... Jack Handle is a two piece Swivel Type.

8–50 .... Jack Handle is a one piece Forged Type.

8–51 .... Used with Horizontal Grooved Cover.

8–52 .... Used with Vertical Grooved Cover.

8–53 .... Used with 1-3/4" wide Rear Brake Lining.

8–54 .... Used with 2-1/2" wide Rear Brake Lining.

8–55 .... Wheel has 5 slotted openings.

8–56 .... Wheel has 8 slotted openings.

Printed in U.S.A.

610/595/015

NOTES

8–57 .... Used prior to Car Sequence No.

8–58 .... Used beginning with Car Sequence No.

8–59 .... Used prior to Car Sequence No.

8–60 .... Used beginning with Car Sequence No.

8–61 .... Linings are bonded to Shoes.

8–62 .... Linings are riveted to Shoes.

8–63 .... Used with a Motor Wheel Drum With Part No. 35342 and Motor Wheel Trademark stamped on Mounting Face of Drum and the Wheel Stud Holes are .595 Diameter.

8–64 .... Used with a Kelsey Hayes or Budd Co. Drum and the Wheel Stud Holes are .610 diameter.

8–65 .... Used with 1/2"-20 Nut at Master Cylinder End.

8–66 .... Used with 9/16"-20 Nut at Master Cylinder End and Adapter in Master Cylinder.

8–67 .... Used with Charcoal Glitter Color Paint.

8–68 .... Used with Gray Glitter Color Paint.

8–69 .... Backing Plate has one Brake adjusting Slot.

8–70 .... Backing Plate has two Brake adjusting Slots.

8–71 .... Parking Brake Cable Clip attaches to the Clip welded on Right Rear Axle Tube.

8–72 .... Parking Brake Cable Clip attaches under Brake Tee.

8–73 .... Hose is used with a Three-Way Tee.

8–74 .... Three-Way Tee is integral part of Hose.

8–75 .... Wheel is Chrome Plated.

1583

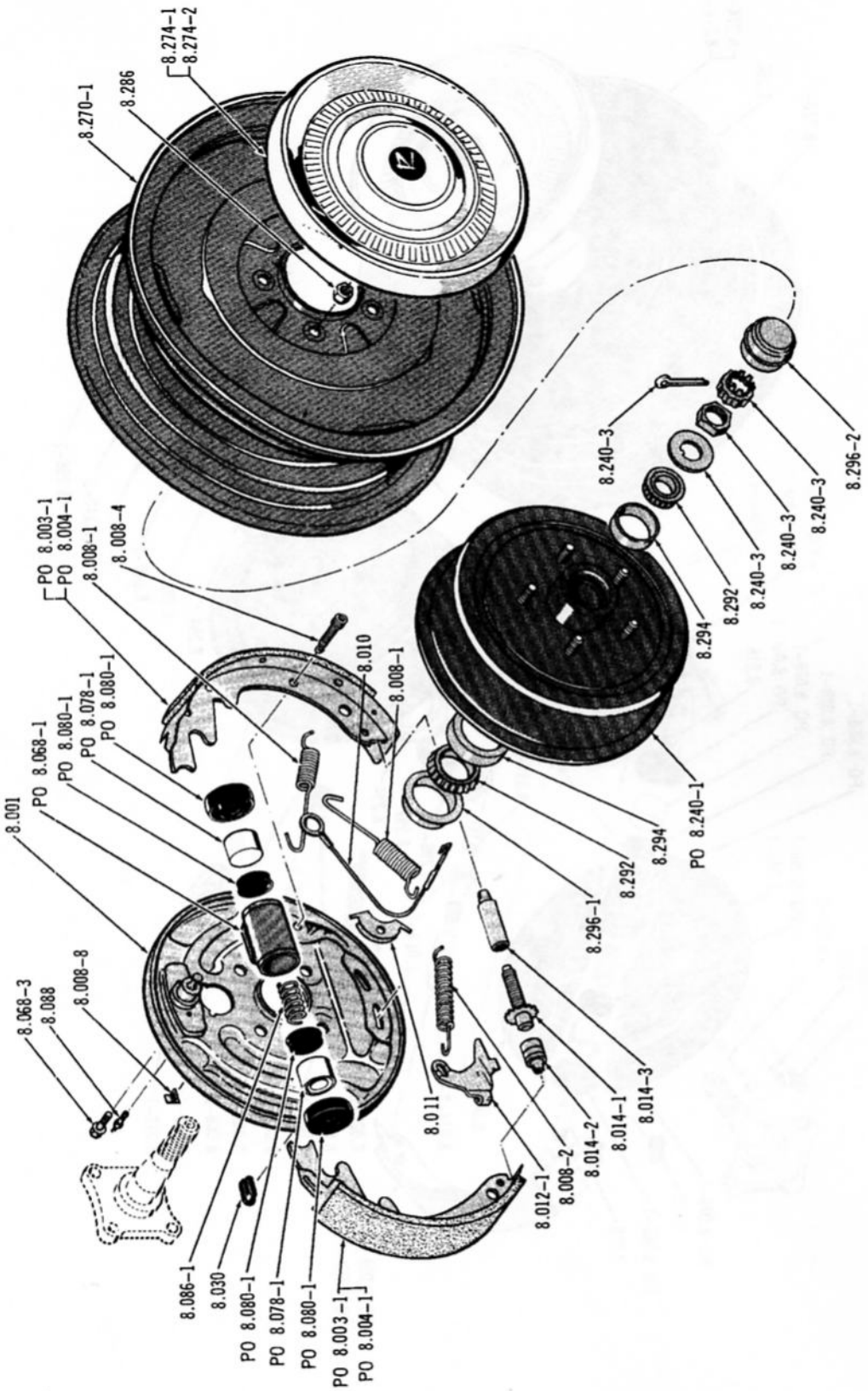

FRONT BRAKE AND WHEEL . . . SIX (01)(40)(70), 1967/69-SIX-LDB-BENDIX-E/HEAVY DUTY (15)(16)(17)(19)

Printed in U.S.A.

1682

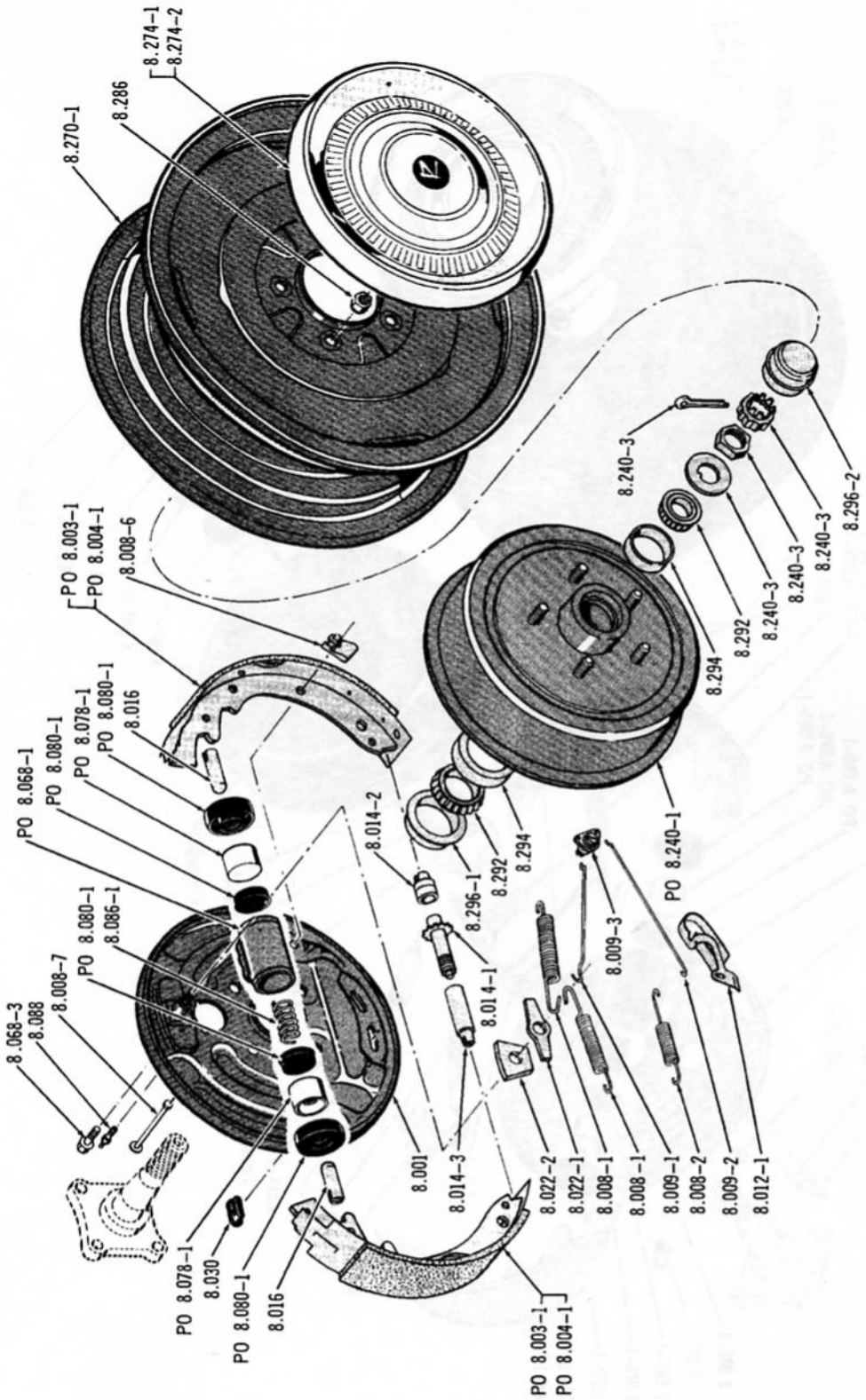

FRONT BRAKE AND WHEEL ... 1967/69-SIX-LDB-WAGNER-E/HEAVY DUTY (15)(16)(17)(19)

1584

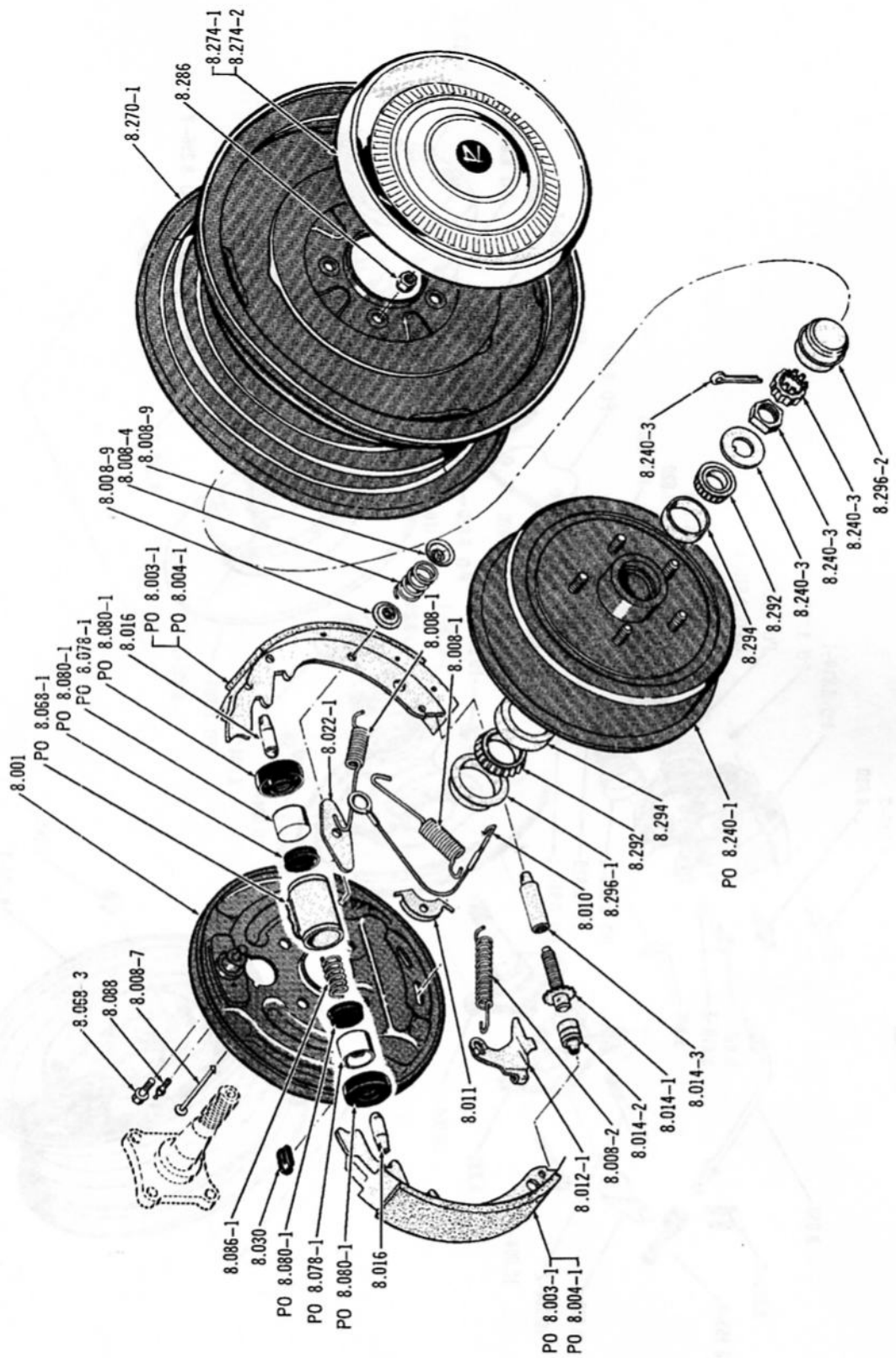

FRONT BRAKE AND WHEEL ... 1967/69-SIX-HEAVY DUTY (15)(16)(17)(19), 1967/69-SIX-LDB (18)(50)(80), 1970/ -SIX-LDB (10)(80), V8 (LDB)

Printed in U.S.A.

2613

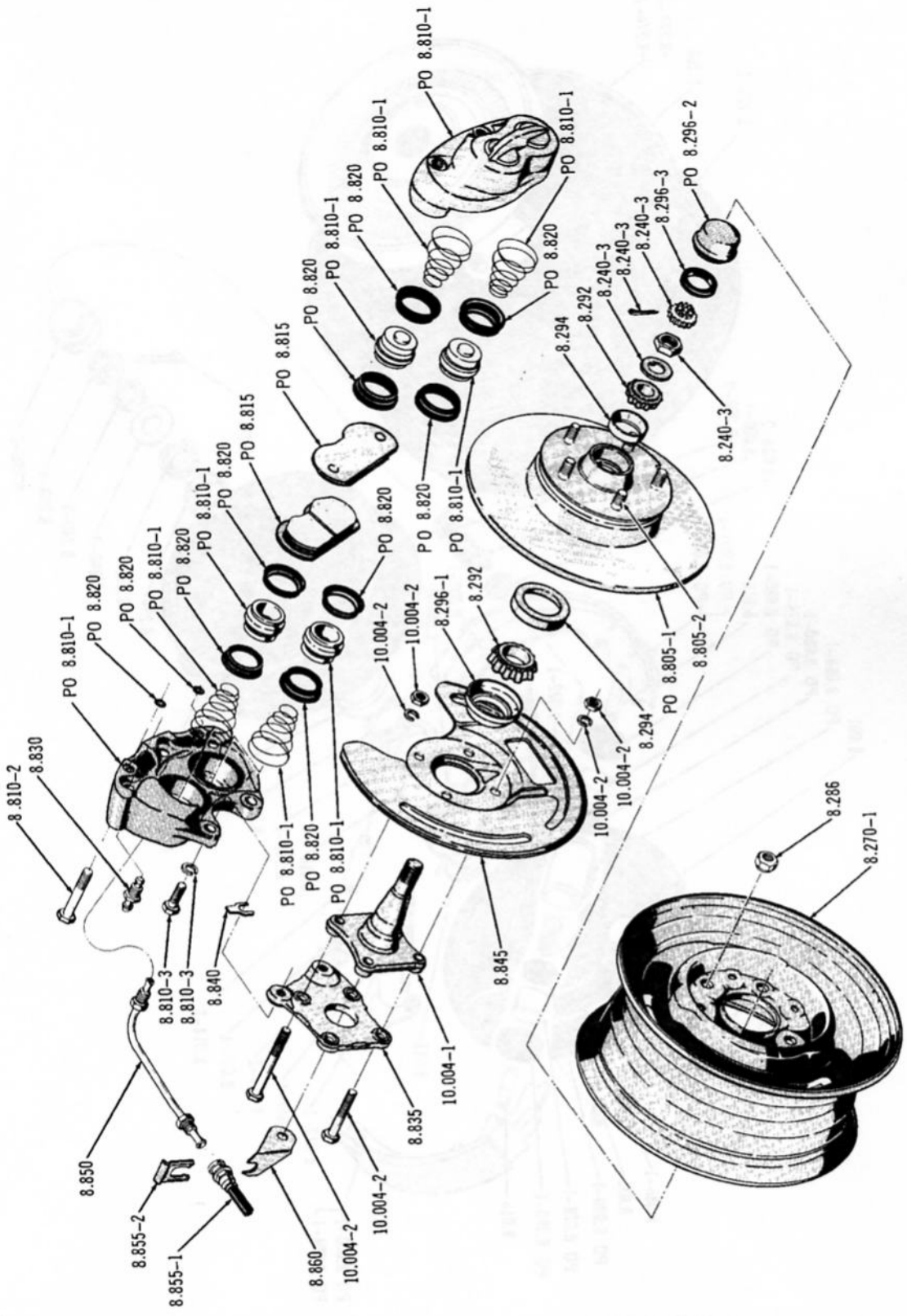

CALIPER DISC FRONT BRAKE ... 1967/70 (WDB)

Printed in U.S.A.

4060

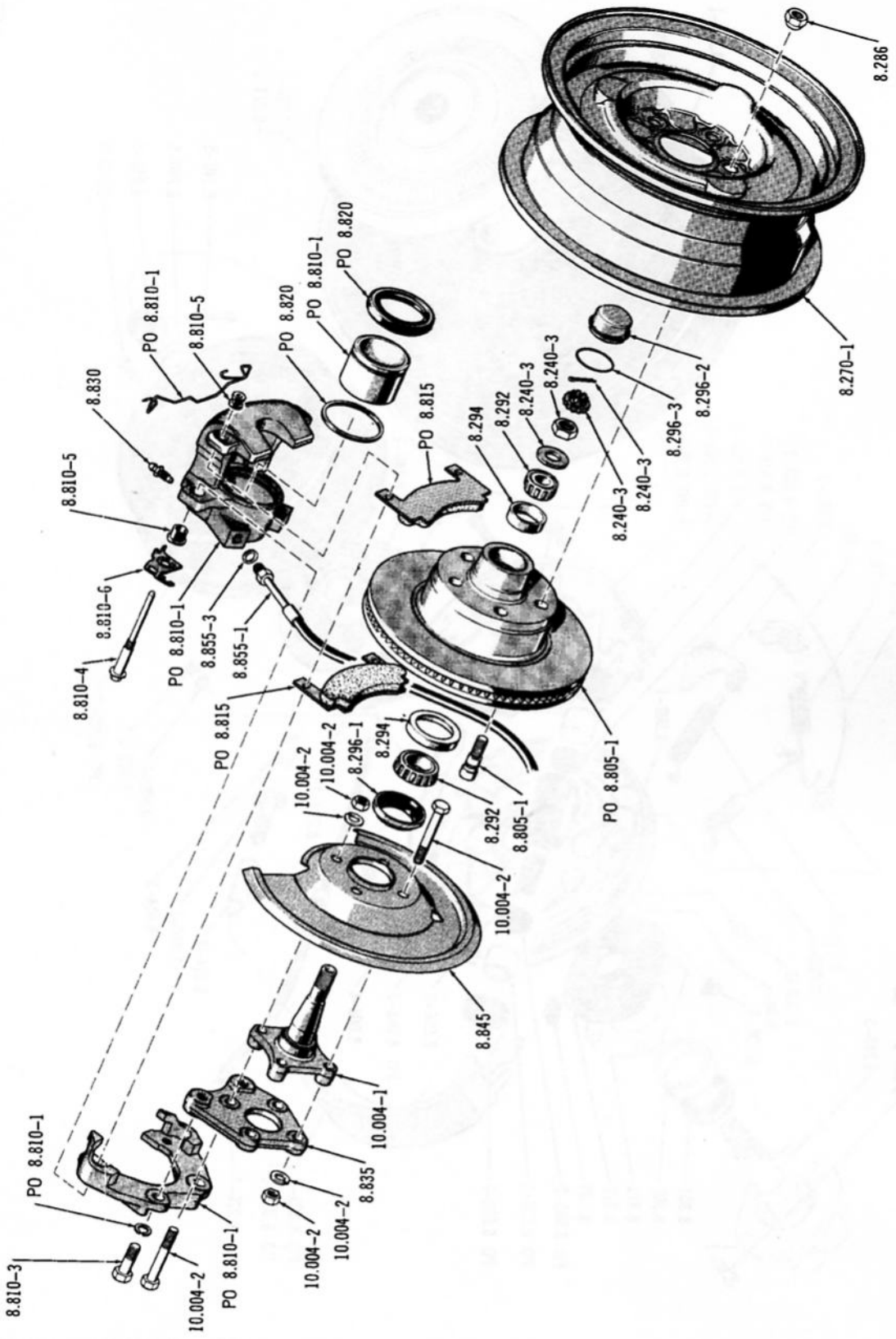

CALIPER DISC FRONT BRAKE . . . 1971/ (WDB)

Printed in U.S.A.

1592

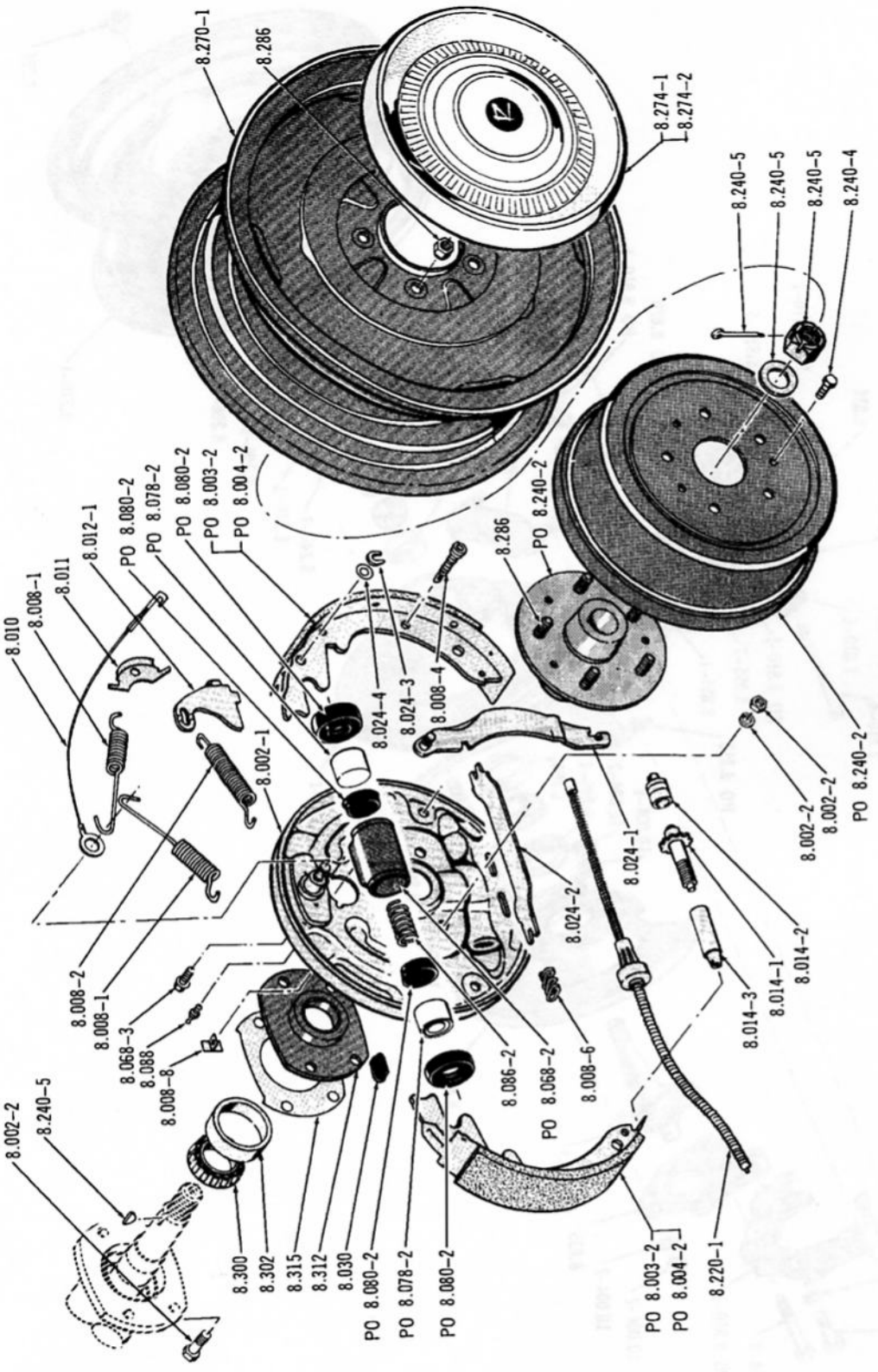

REAR BRAKE AND WHEEL . . . SIX (01)(40)(70), 1967/69-SIX-LDB-BENDIX-E/HEAVY DUTY (15)(16)(17)(19)

Printed in U.S.A.

1683

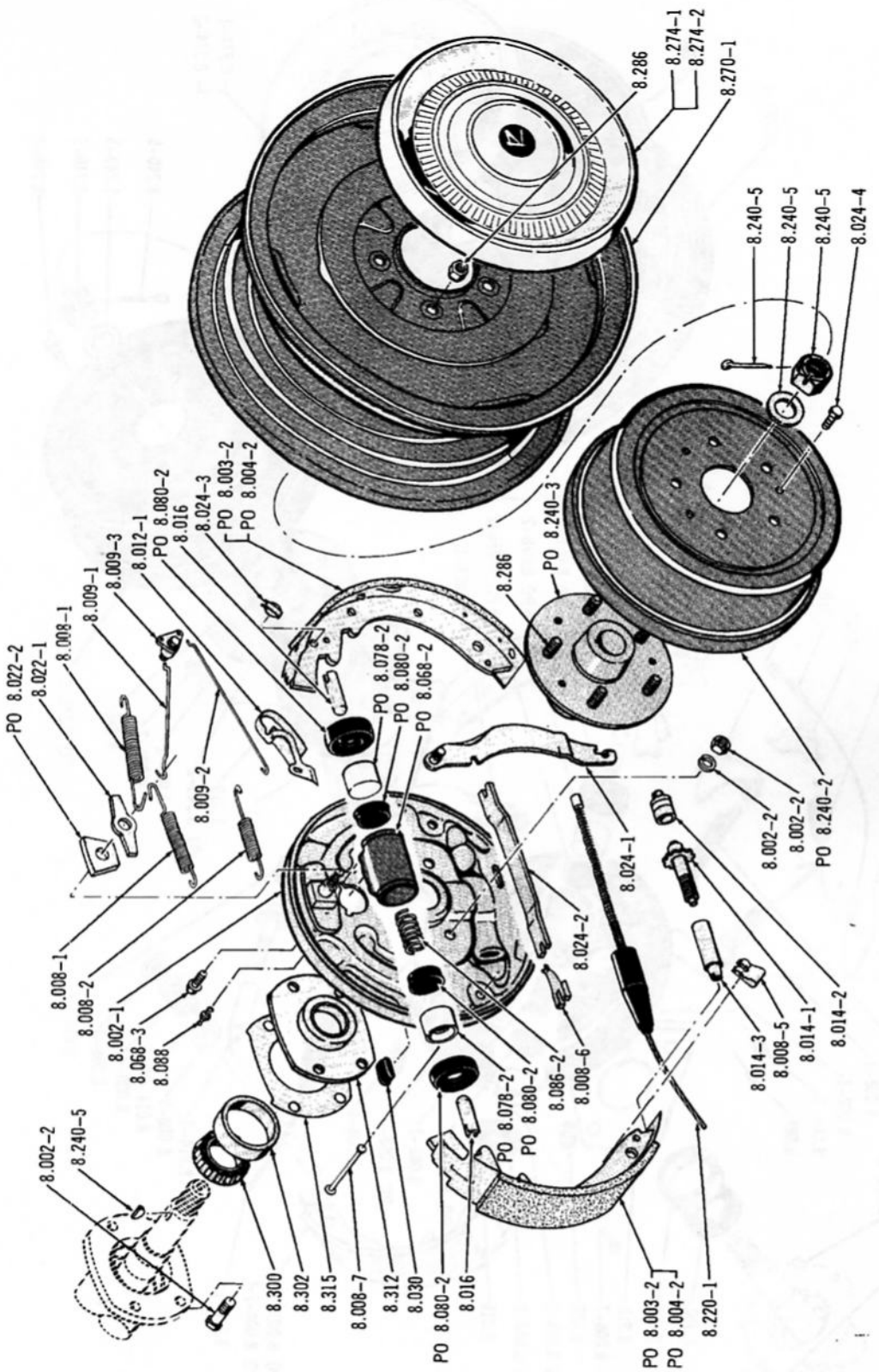

REAR BRAKE AND WHEEL ... 1967/69-SIX-LDB-WAGNER-E/HEAVY DUTY (15)(16)(17)(19)

Printed in U.S.A.

1593

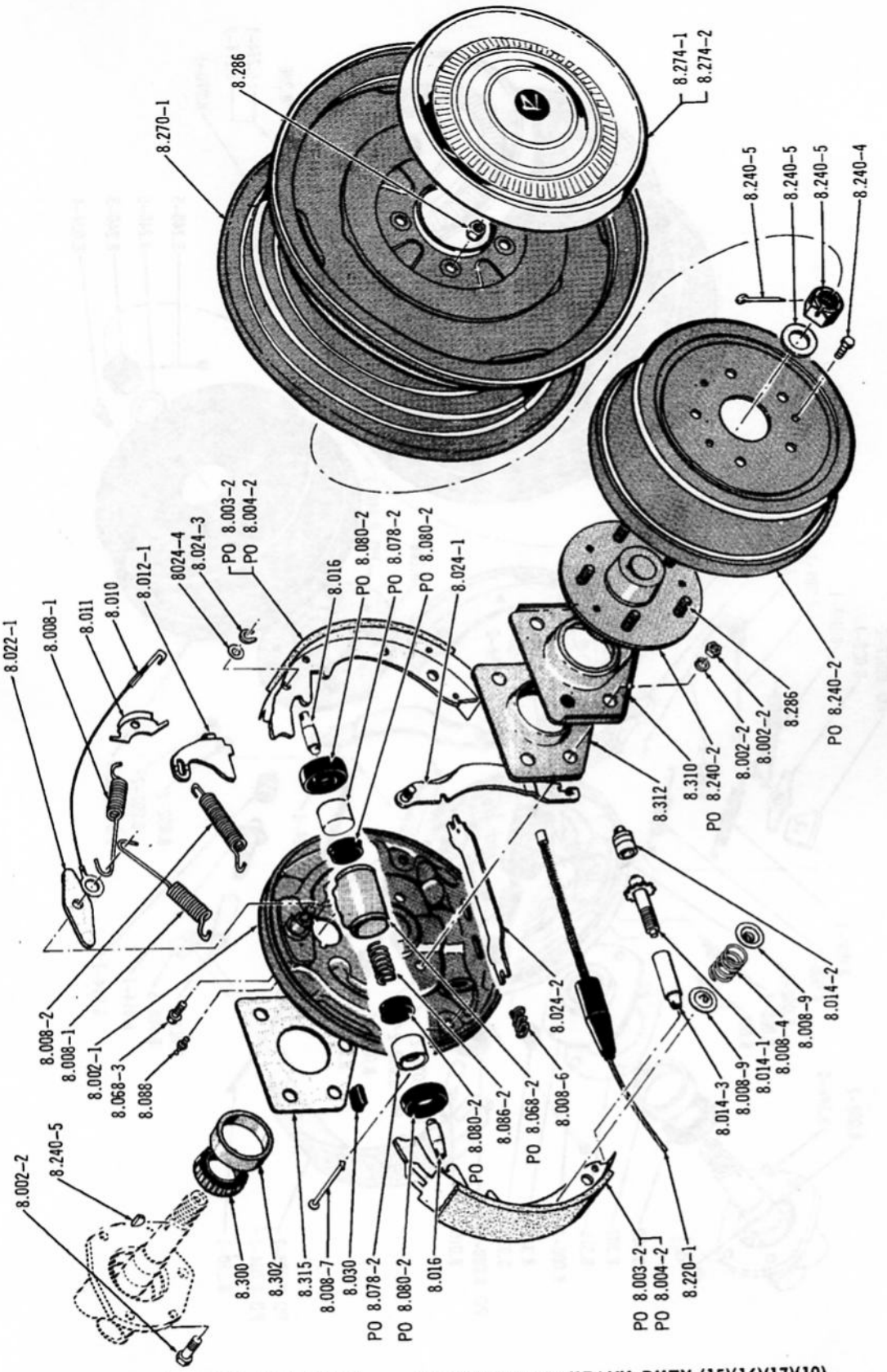

REAR BRAKE AND WHEEL ... 1967/69-SIX-LDB-HEAVY DUTY (15)(16)(17)(19), 1967/69-SIX-LDB (18)(50)(80), 1970/ -SIX-LDB (10)(80) 1967/68-V8 (LDB)(30-WDB), 1969/ (V8)

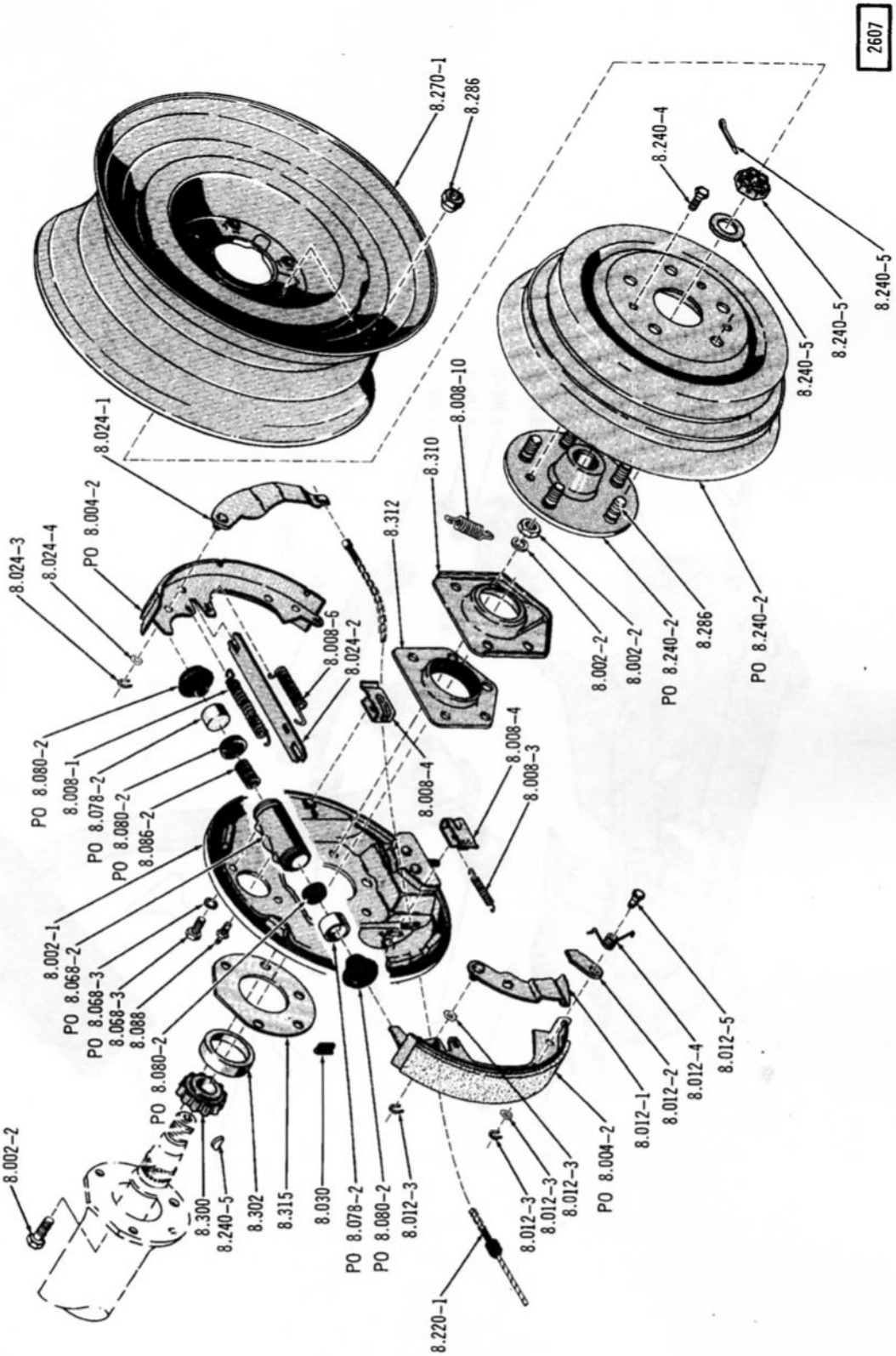

REAR BRAKE AND WHEEL ... 1967 (WDB), 1968-WDB (10)(80), 1969-RHD-WDB (10)(80)

Printed in U.S.A.

2951

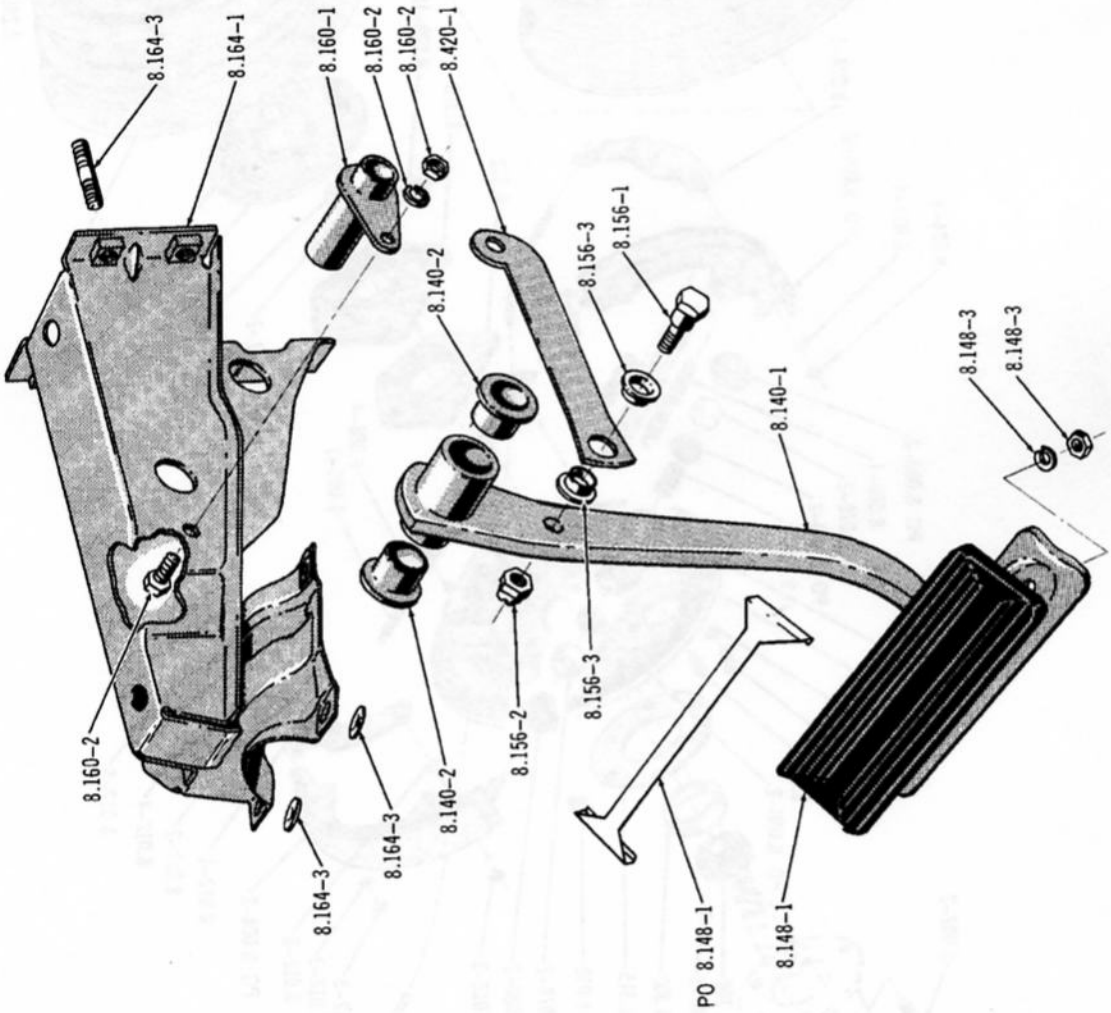

BRAKE PEDAL AND SUPPORT

Printed in U.S.A.

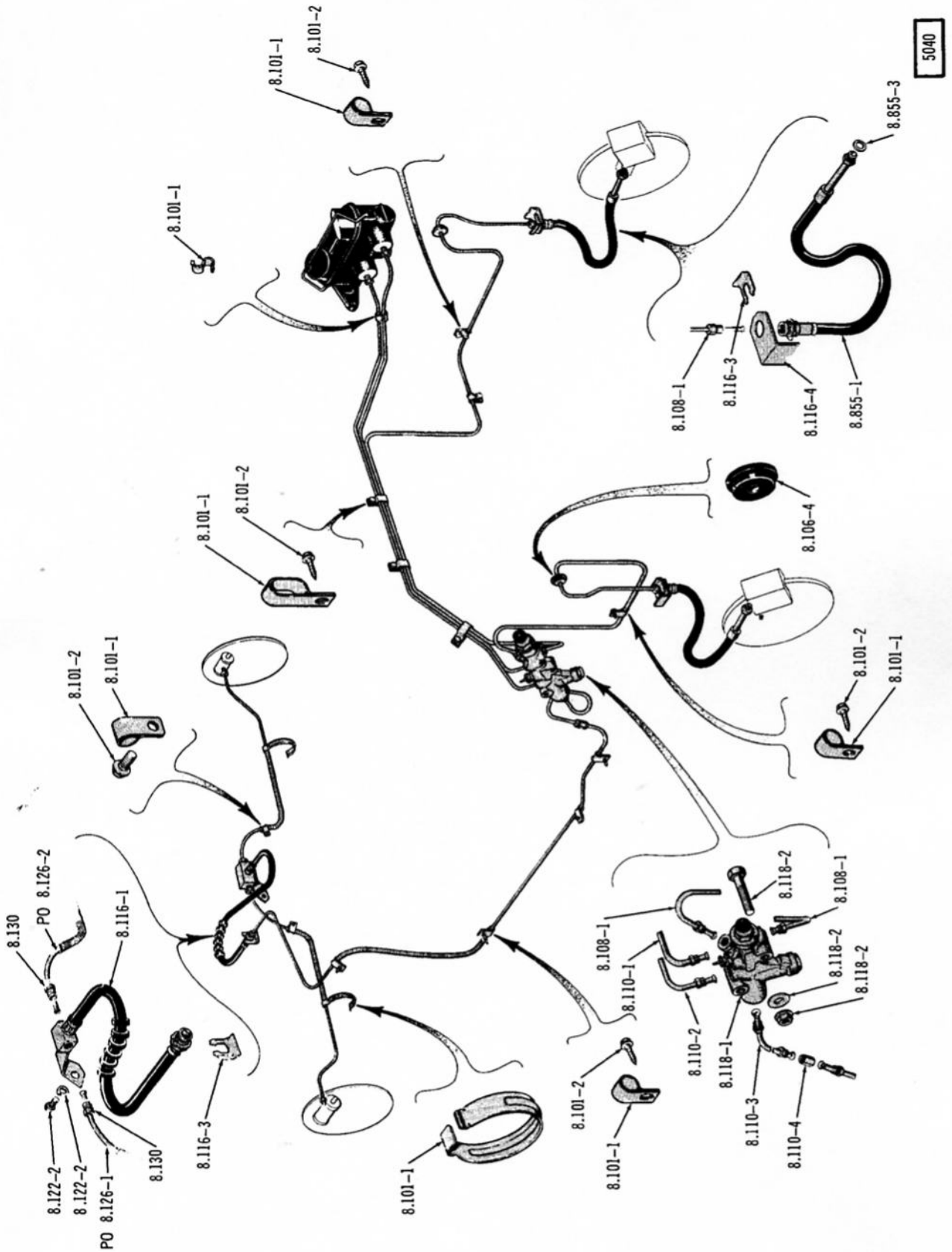

BRAKE LINES AND CLIPS . . . WDB (10)(80)

Printed in U.S.A.

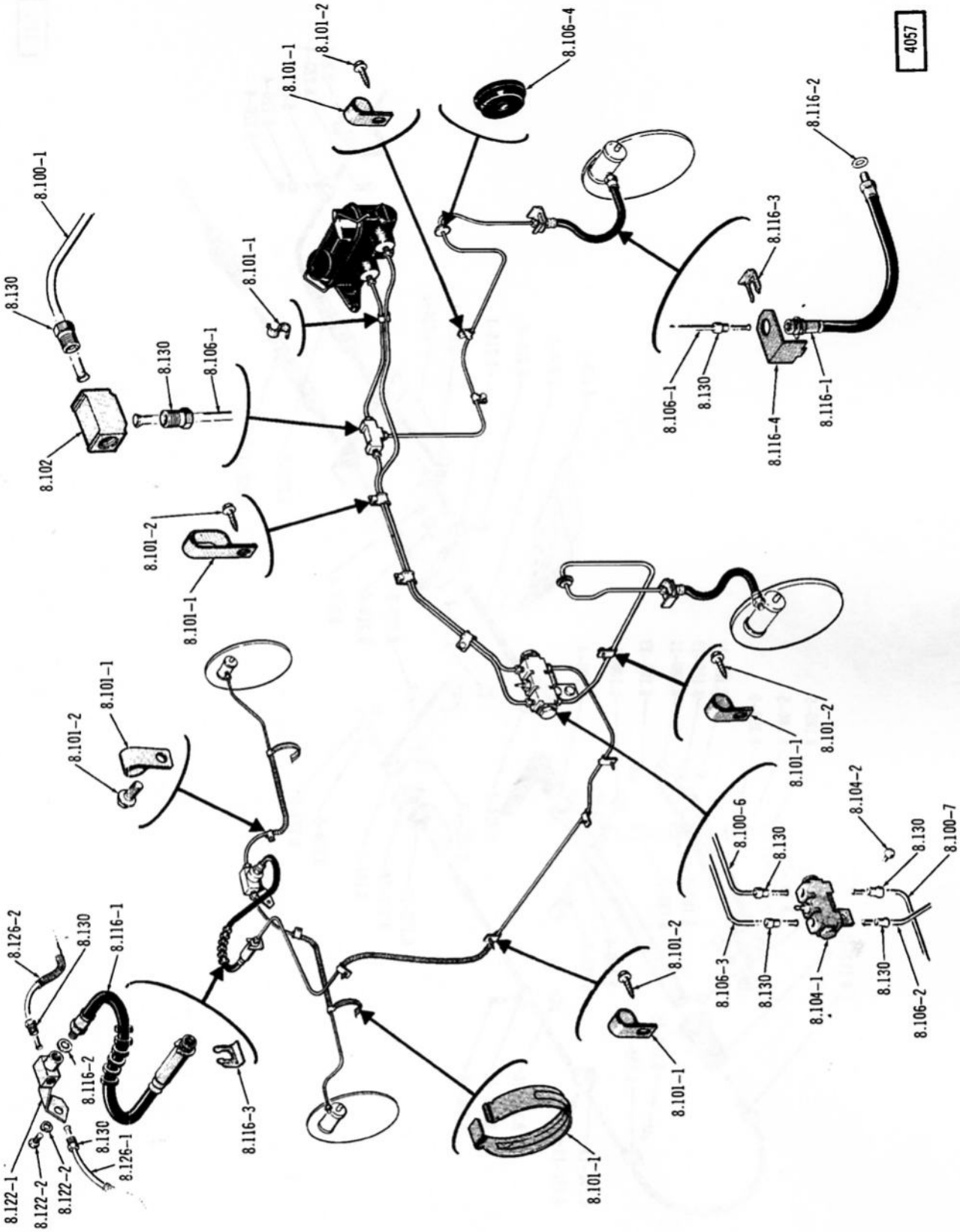

BRAKE LINES AND CLIPS . . . LDB (10)(80)

2952

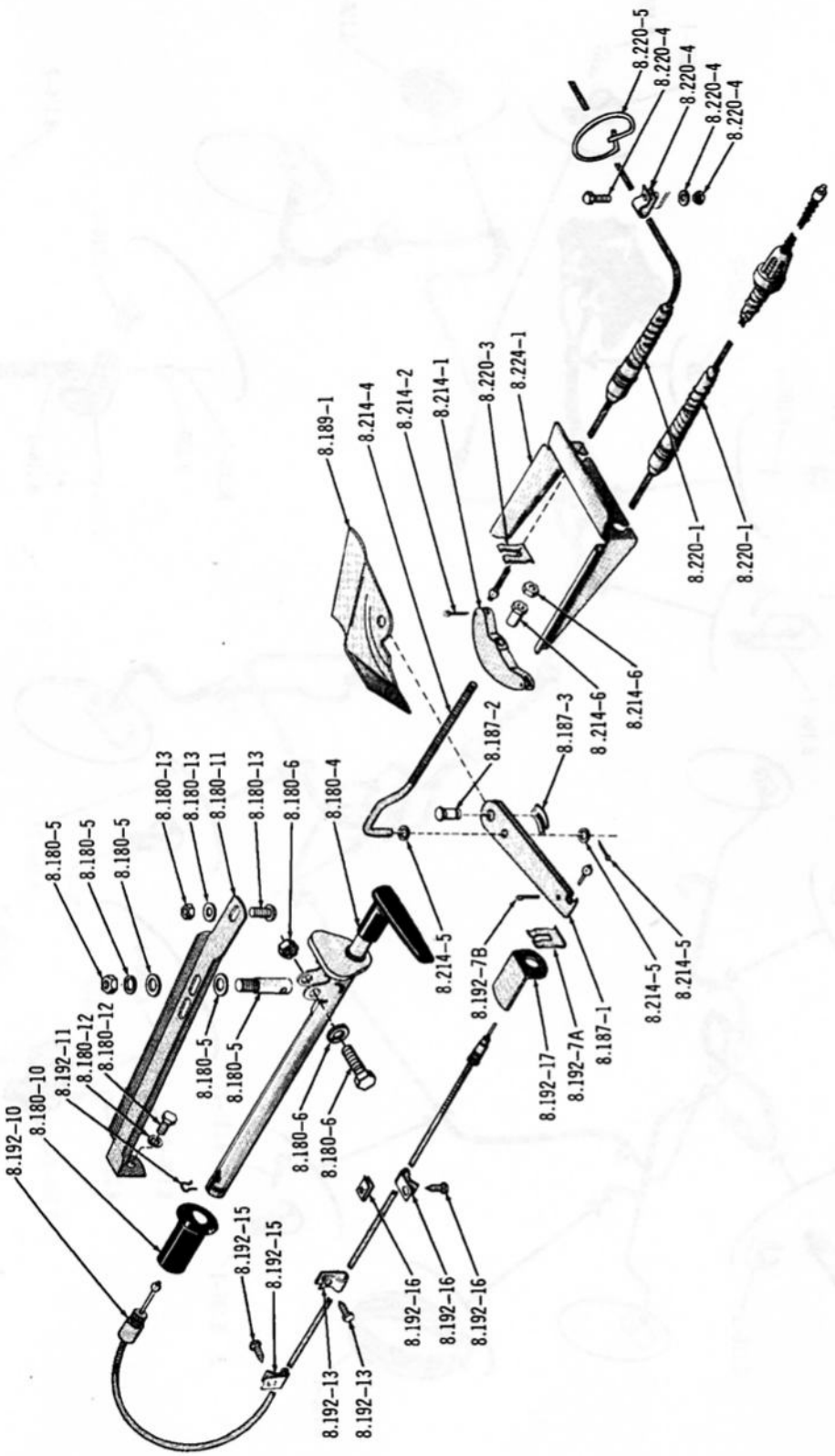

HAND OPERATED PARKING BRAKE ... 1967/69 (01)

2953

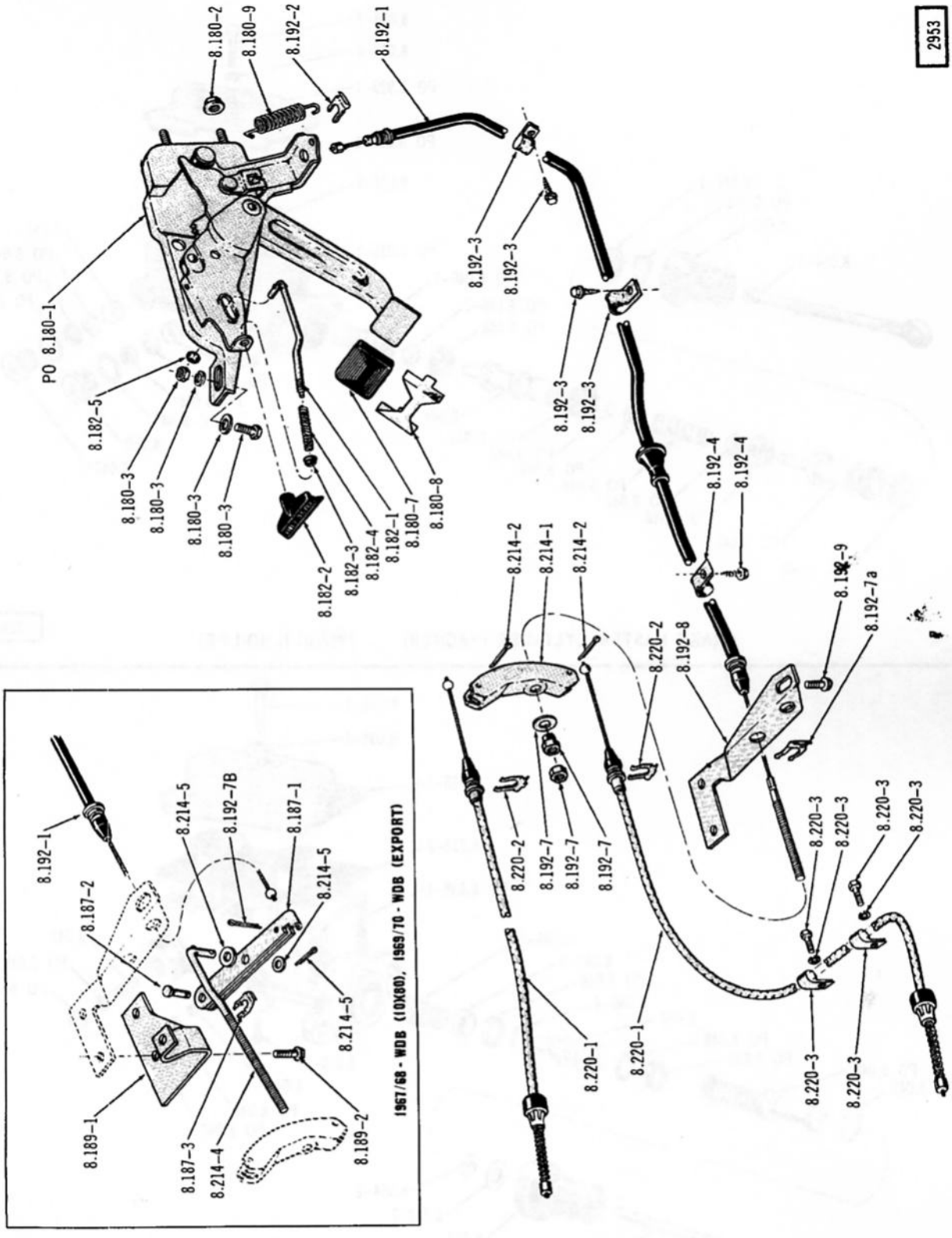

FOOT OPERATED PARKING BRAKE . . . LHD

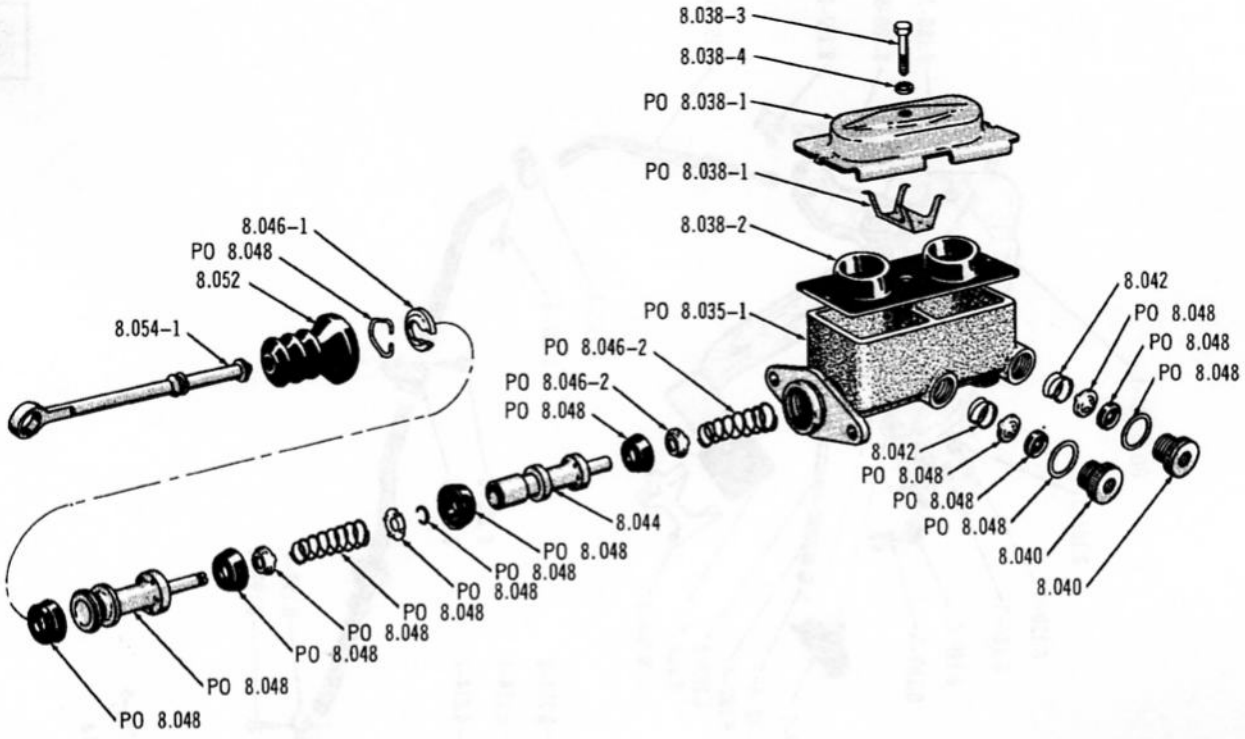

2264

BRAKE MASTER CYLINDER (WAGNER) ... 1967-01 (LHD-LPB)

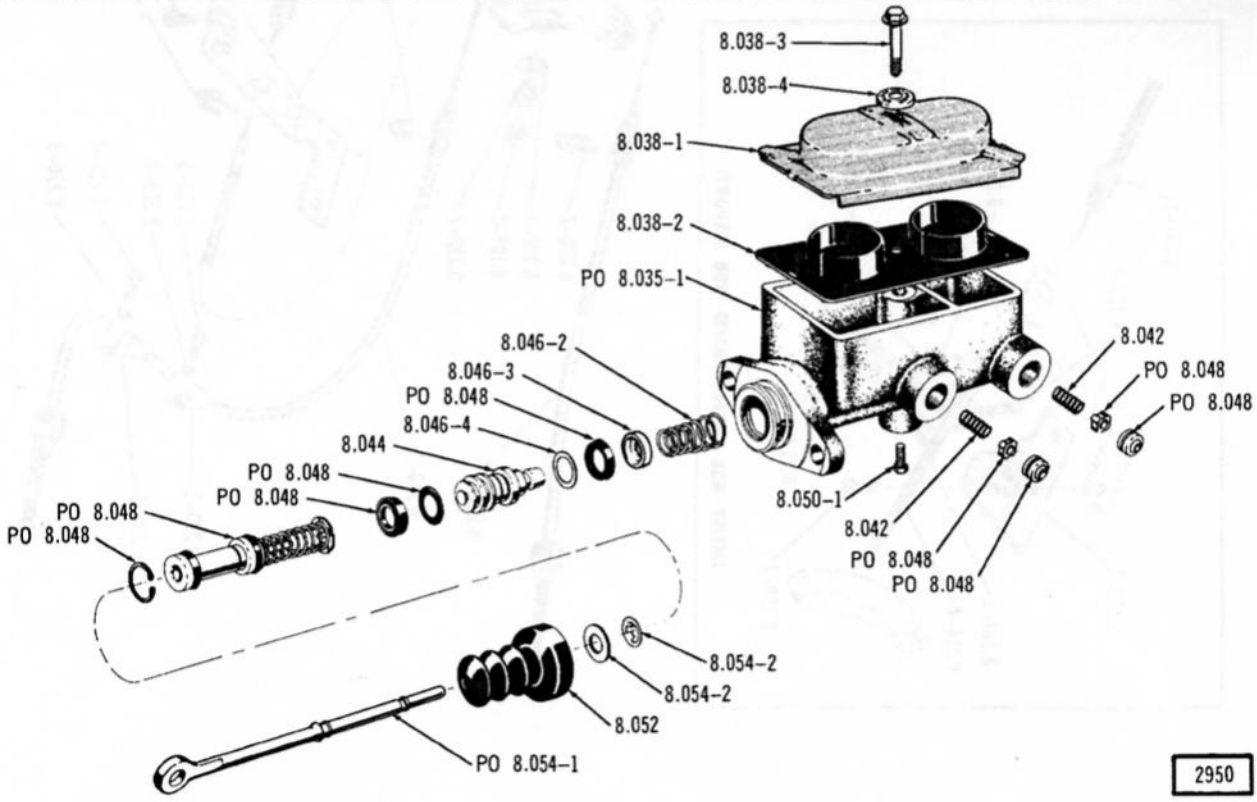

2950

BRAKE MASTER CYLINDER ... 1967/69-LPB (10)(30)(50)(70)(80)

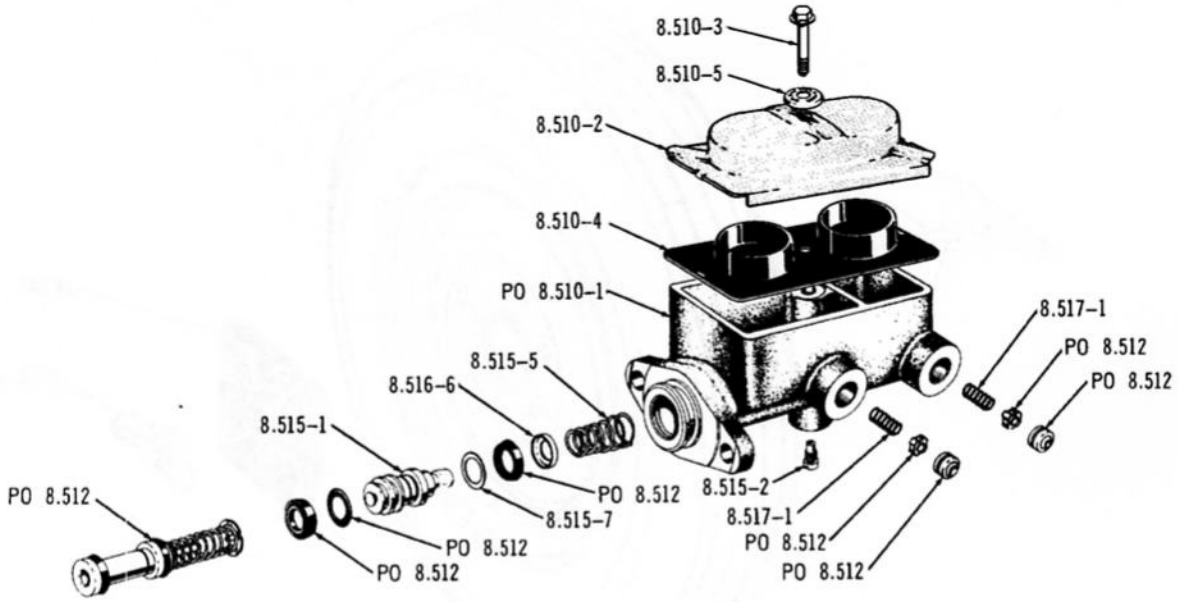

POWER BRAKE MASTER CYLINDER ... 1967/69-Type 1 (LHD-LDB)(RHD-10-SIX)

2268

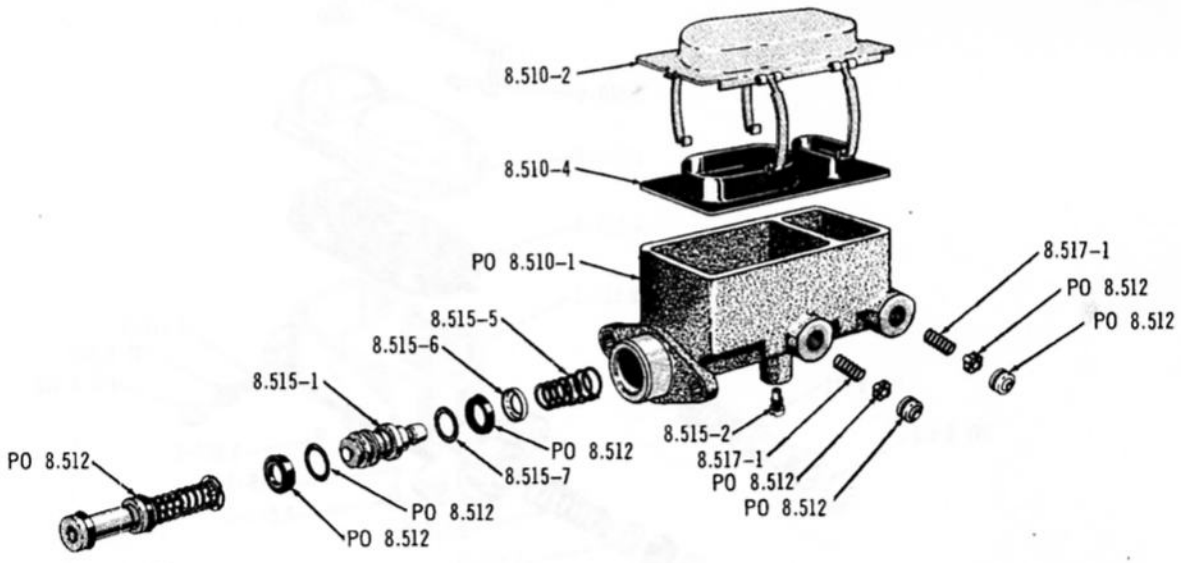

2954

POWER BRAKE MASTER CYLINDER ... LHD-WDB (1967)(1968-Type 1)

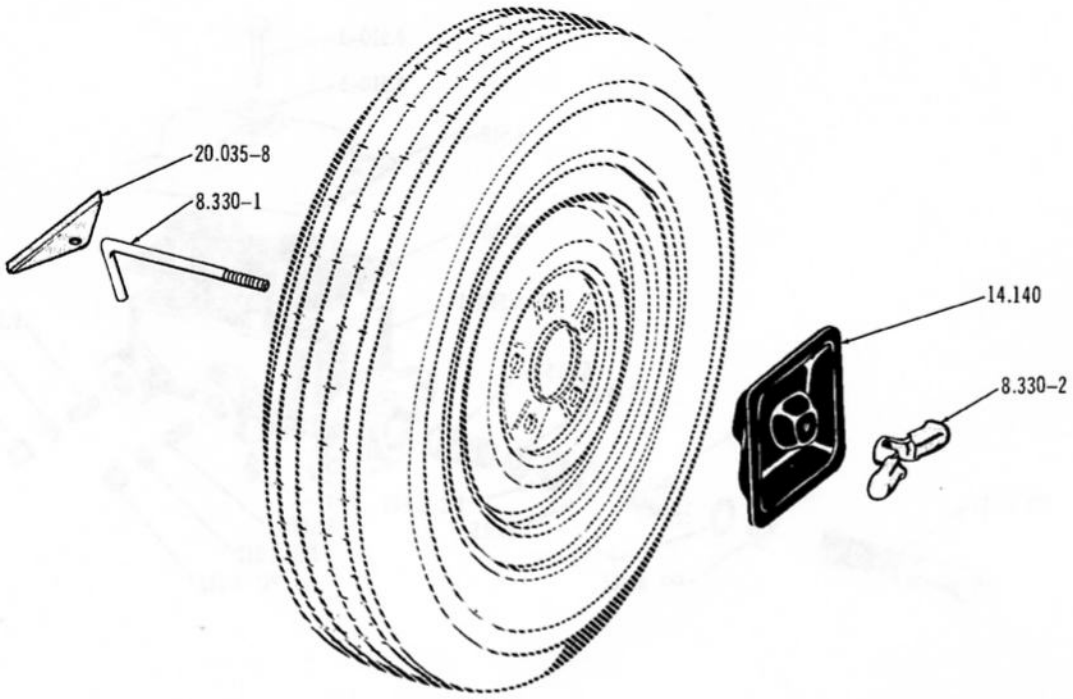

1510

SPARE WHEEL MOUNTING ... 1967/69 (01), 10, 50, 80

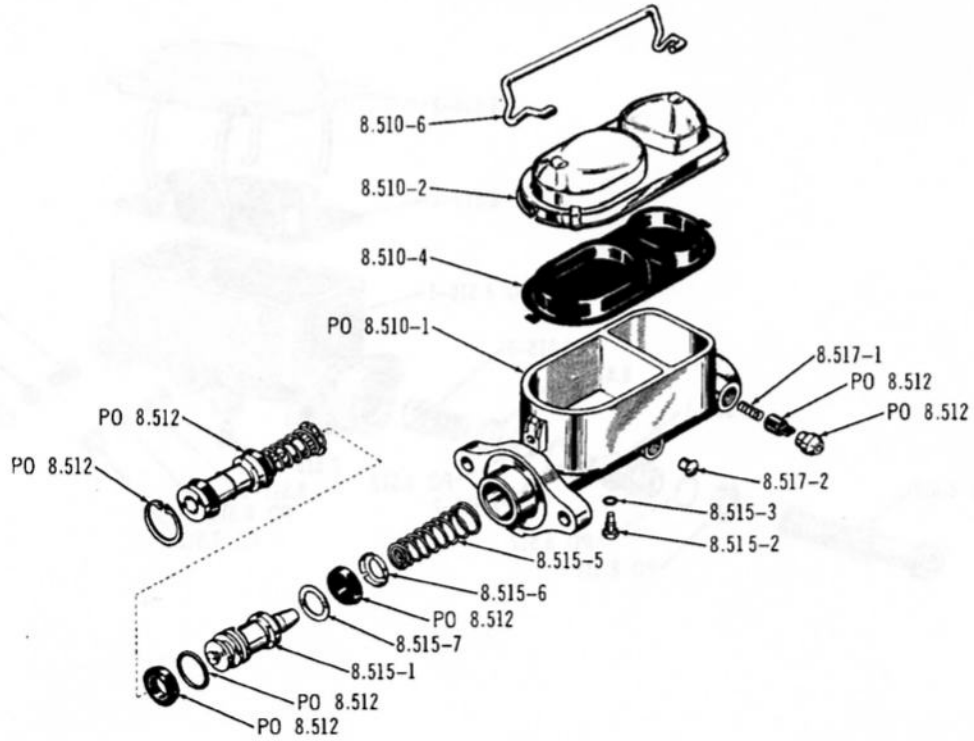

3438

POWER BRAKE MASTER CYLINDER ... WDB (1968-Type 2)(1969), LDB (1969-Type 2), 1970/

2320

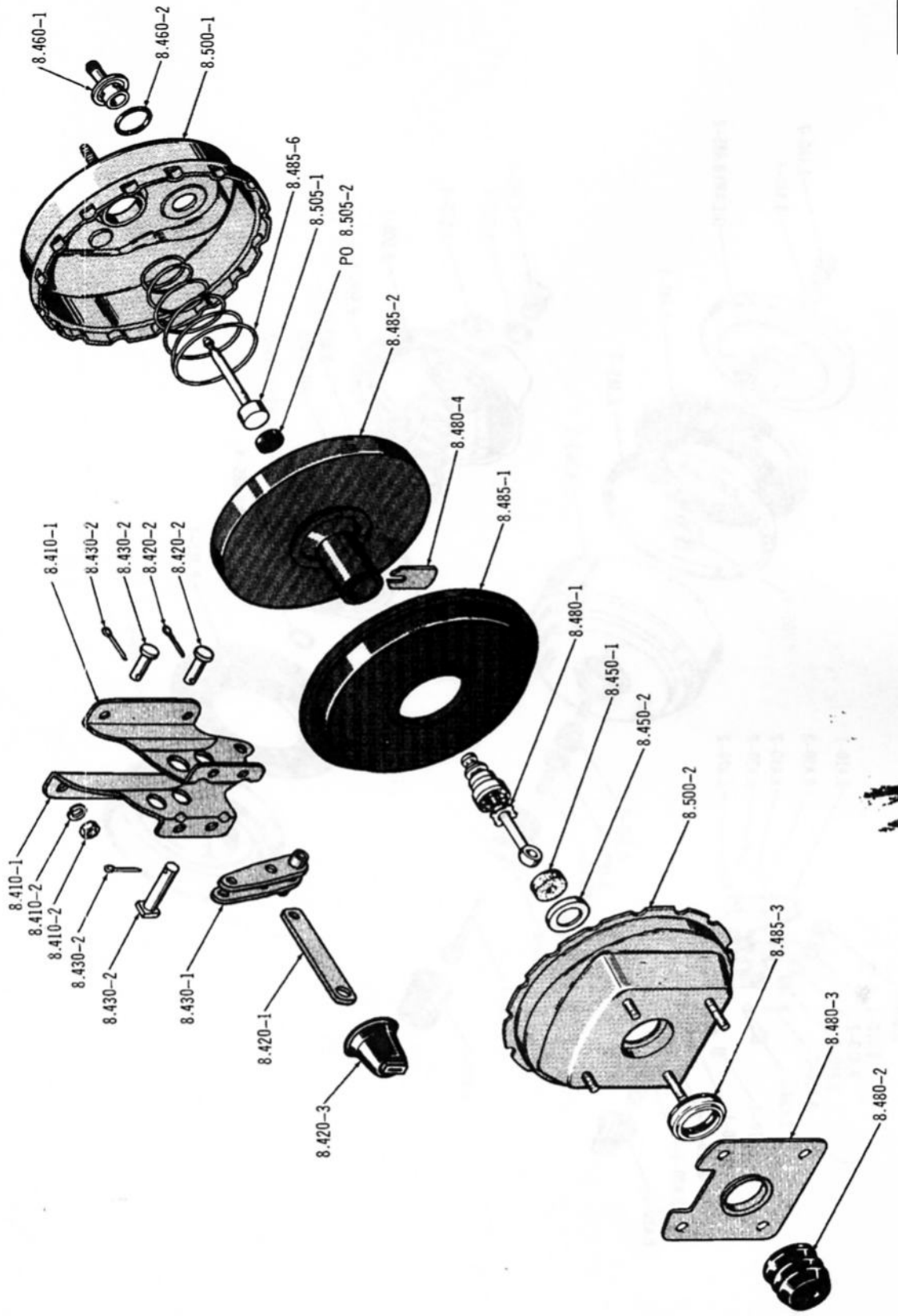

POWER BRAKE POWER UNIT . . . LHD (01)(40), 1967/ -LHD-LDB (10)(30)(50)(70)(80)

Printed in U.S.A.

3015

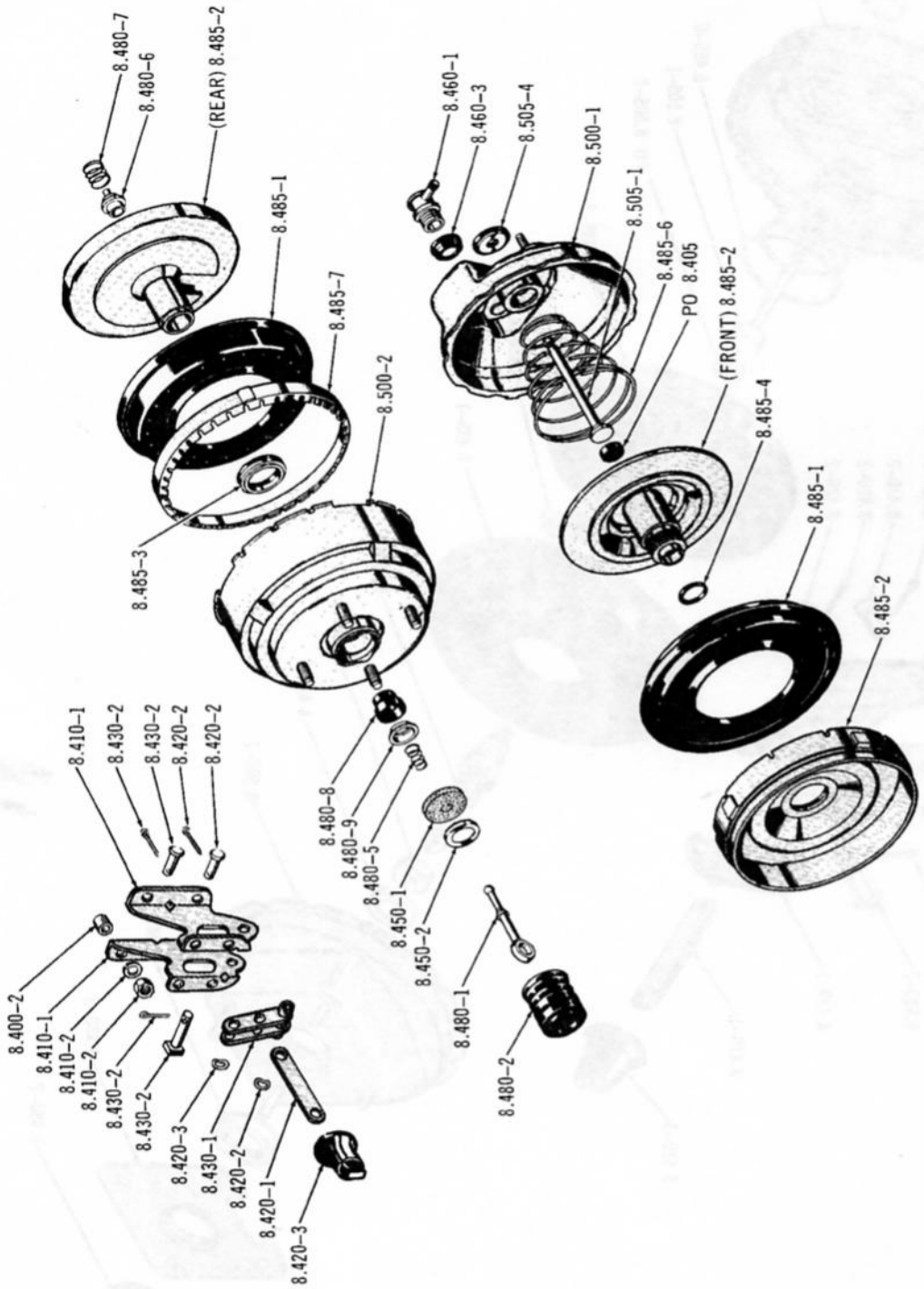

POWER BRAKE POWER UNIT ... WDB (10)(30)(50)(70)(80)

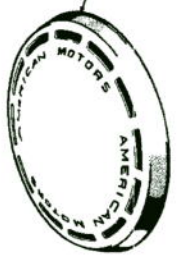

CAP . . . EXCEPT 15" X 6" WHEEL



CAP . . . WITH 15" X 6" WHEEL

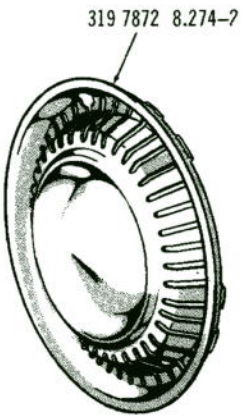

13" COVER . . . 40

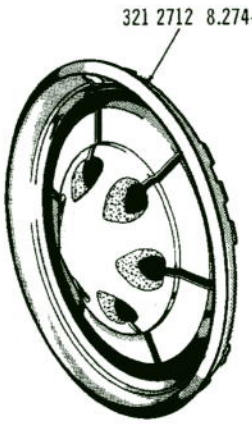

14" COVER . . . 01

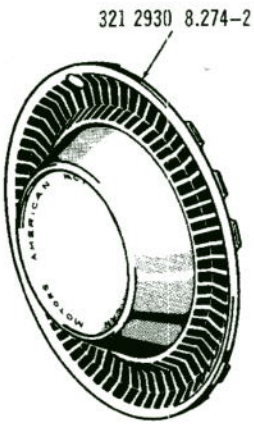

14" COVER . . . 10,80

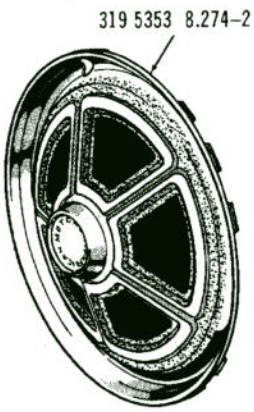

14" COVER . . . 40

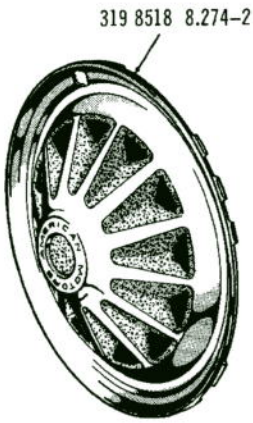

14" COVER . . . 70

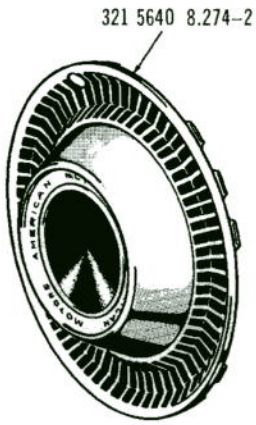

14" COVER . . . 80

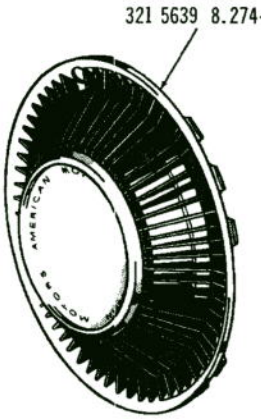

14" COVER . . . CUSTOM

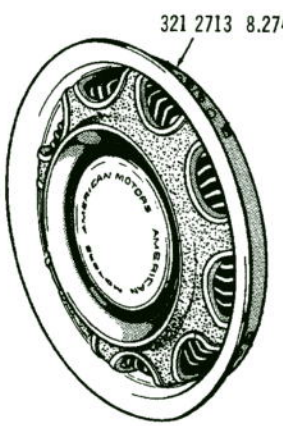

14" COVER . . . TURBO-CAST

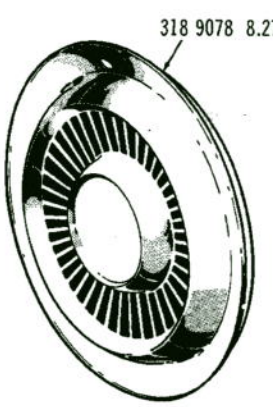

4185

15" COVER . . . 01,10,80

WHEEL CAPS AND COVERS . . . 1972

Printed in U.S.A.

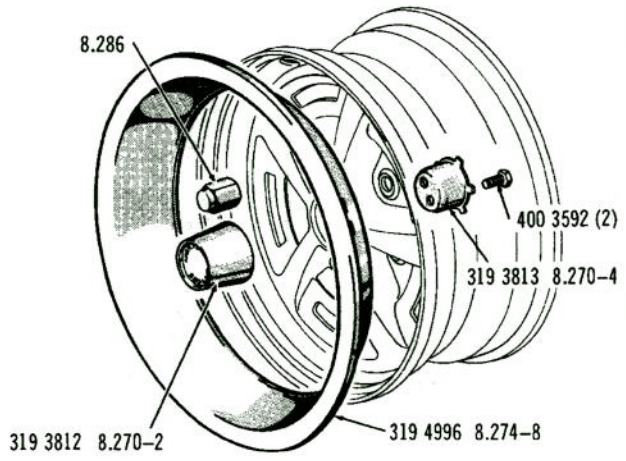

CAP AND TRIM RING . . . WITH MAG TYPE WHEEL

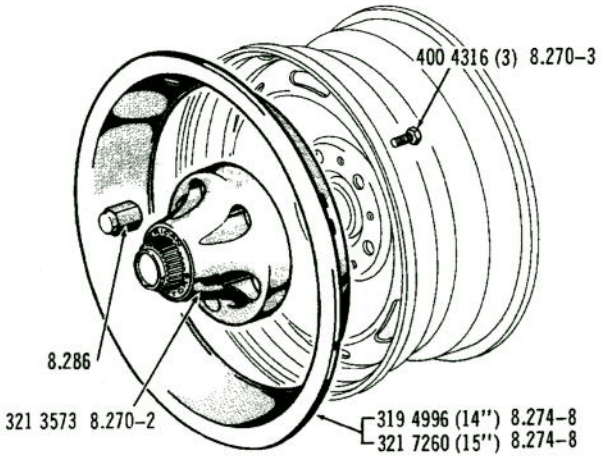

CAP AND TRIM RING . . . WITH STYLED WHEEL

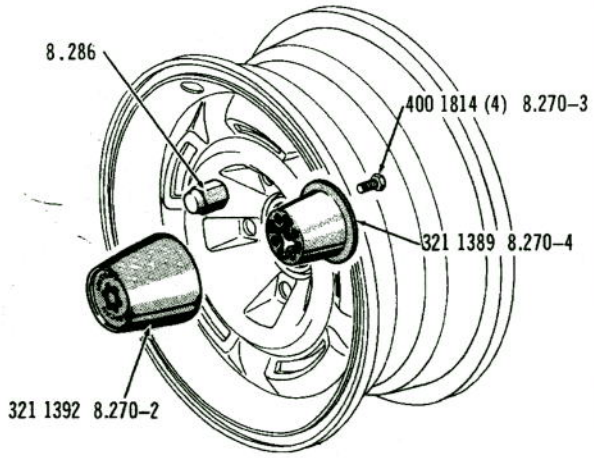

CAP . . . WITH 15" STYLED WHEEL

4186

WHEEL CAPS AND TRIM RINGS . . . 1972 (WITH STYLED WHEELS)

GROUP NO. — DESCRIPTION — YEAR and MODEL	"L" CODE	PAKS CODE	PRIMARY GROUP NO.	PER CAR	PART NO.	CODE
8.001 PLATE, Front Brake Support						
67/69 01-70 (Six)			.....	2	320 7247	
70/ 01-40-70 (Six-LDB)			.....	2	448 8261	
67/69 15 (Six-* 8-2-Except Heavy Duty-* 8-4)			.....	2	448 5782	
72 10-80 (Heavy Duty-LDB)			.....	2	321 8158	
67/69 (Left) 01-30-70 (V8-LDB) ***(Use 448 8449)***			.....	1	320 5701	
70/ (Left) 01-30-40-70 (V8-LDB)			.....	1	448 8449	
67/69 (Left) 15 (Six-LDB-* 8-1-Except Heavy Duty-* 8-4)			.....	1	320 4587	
67/69 (Left) 16-17-19 (Six-LDB-Except Heavy Duty-* 8-4)			.....	1	320 4587	
67/69 (Left) 15-16-17-19 (V8-LDB) ***(Use 448 8449)***			.....	1	320 5701	
67/69 (Left) 18 (LDB) ***(Use 448 8449)***			.....	1	320 5701	
67/69 (Left) 50-80 (LDB) ***(Use 448 8449)***			.....	1	320 5701	
70/ (Left) 10-80 (LDB)			.....	1	448 8449	
67/69 (Left) 15-16-17-19 (Heavy Duty-Six-* 8-4) ***(Use 448 8449)***			.....	1	320 5701	
67/69 (Right) 01-30-70 (V8-LDB)			.....	1	320 5700	
70/ (Right) 01-30-40-70 (V8-LDB)			.....	1	448 8448	
67/69 (Right) 15 (Six-LDB-* 8-1-Except Heavy Duty-* 8-4)			.....	1	320 4588	
67/69 (Right) 16-17-19 (Six-LDB-Except Heavy Duty-* 8-4)			.....	1	320 4588	
67/69 (Right) 15-16-17-19 (V8 -LDB)			.....	1	320 5700	
67/69 (Right) 18 (LDB)			.....	1	320 5700	
67/69 (Right) 50-80 (LDB)			.....	1	320 5700	
70/ (Right) 10-80 (LDB)			.....	1	448 8448	
67/69 (Right) 15-16-17-19 (Heavy Duty-Six-* 8-4)			.....	1	320 5700	
8.002-1 PLATE, Rear Brake Support						
67/ (Left) C1-40-70 (Six-LDB) ***(Use 320 9757)***			.....	1	320 7249	
72 (Left) C1-40-70 (Six) ~~320975~~ 7			.....	1	320 7249	
67/69 (Left) 01-30-70 (V8-LDB)			.....	1	320 7445	
70/ (Left) C1-30-70 (V8-LDB)			.....	1	448 8453	
67/69 (Left) 15 (Six-LDB-* 8-1-Except Heavy Duty-* 8-4)			.....	1	320 6133	
67/69 (Left) 15 (Six-LDB-* 8-2-Except Heavy Duty-* 8-4)			.....	1	320 9757	
67/69 (Left) 16-17-19 (Six-LDB-Except Heavy Duty-* 8-4)			.....	1	320 6133	
67/69 (Left) 15-16-17-19 (V8-LDB)			.....	1	320 7445	
70 (Left) 10-80 (LDB)			.....	1	448 8453	
67/69 (Left) 18 (LDB)			.....	1	320 7445	
67/69 (Left) 50-80 (LDB)			.....	1	320 7445	
70/71 (Left) 01-30-70 (WDB)			.....	1	448 8453	
67 (Left) 01-10-50-80 (WDB)			.....	1	320 8323	
68/69 (Left) 01-30-70 (V8-WDB)			.....	1	320 7445	
72 (Left) 01-40-70 (V8)			.....	1	448 8453	
68 (Left) 10-80 (WDB)			.....	1	320 8323	
69/70 (Left) 10-80 (Six-WDB)			.....	1	320 8323	
69 (Left) 10-80 (V8-WDB)			.....	1	320 7445	
70 (Left) 10-80 (V8-WDB)			.....	1	448 8453	
71/ (Left) 15-19-85-89 (Except Heavy Duty-* 8-4)			.....	1	448 8453	
71/ (Left) 18-88			.....	1	321 0418	
67/69 (Left) 15-16-17-19 (Heavy Duty-Six-* 8-4)			.....	1	320 7445	
71 (Left) 15-19-85-89 (Heavy Duty-* 8-4)			.....	1	321 0418	
72 (Left) 10-80 (Heavy Duty-* 8-69)			.....	1	321 0418	
72 (Left) 10-80 (Heavy Duty-* 8-70)			.....	1	321 8163	
67/71 (Right) 01-40-70 (Six-LDB) ***(Use 320 9756)***			.....	1	320 7248	
72 (Right) 01-40-70 (Six)			.....	1	320 7248	
67/69 (Right) 01-30-70 (V8-LDB)			.....	1	320 7444	
70/71 (Right) 01-30-70 (V8-LDB)			.....	1	448 8452	
67/69 (Right) 15 (Six-* 8-1-Except Heavy Duty-* 8-4)			.....	1	320 6132	
67/69 (Right) 15 (Six-* 8-2-Except Heavy Duty-* 8-4)			.....	1	320 9756	
67/69 (Right) 16-17-19 (Six-LDB-* 8-1-Except Heavy Duty-* 8-4)			.....	1	320 6132	
67/69 (Right) 15-16-17-19 (V8- LDB)			.....	1	320 7444	
67/69 (Right) 18 (LDB)			.....	1	320 7444	

67/69	(Right) 50-80 (LDB)	.....	1	320 7444
70	(Right) 10-80 (LDB)	.....	1	448 8452
70/71	(Right) 01-30-70 (WDB)	.....	1	448 8452
67	(Right) 01-10-50-80 (WDB)	.....	1	320 8322
72	(Right) 01-40-70 (V8)	.....	1	448 8452
68/69	(Right) 01-30-70 (V8-WDB)	.....	1	320 7444
68	(Right) 10-80 (WDB)	.....	1	320 8322
69/70	(Right) 10-80 (Six-WDB)	.....	1	320 8322
69	(Right) 10-80 (V8-WDB)	.....	1	320 7444
70	(Right) 10-80 (V8-WDB)	.....	1	448 8452
71/	(Right) 15-19-85-89 (Except Heavy Duty-* 8-4)	.....	1	448 8452
71/	(Right) 18-88	.....	1	321 0419
67/69	***(Right) 15-16-17-19 (Heavy Duty-Six-* 8-4)***	.....	1	320 7444
71	***(Right) 15-19-85-89 (Heavy Duty-* 8-4)***	.....	1	321 0419
72	***(Right) 10-80 (Heavy Duty-* 8-69)***	.....	1	321 0419
72	***(Right) 10-80 (Heavy Duty-* 8-70)***	.....	1	321 8164

8.002–2 ATTACHING PARTS, Plate To Axle Tube

SCREW, Machine 67/	.....	.....	8	314 3794
WASHER, Lock 67/	.....	17.820	8	G103321 NA
NUT, Hexagon 67/	.....	17.406	8	400 1239

8.003–1 SHOE SET, Front Brake (Std.)(Axle Set Of 4 Shoes)(Incl. Linings)(Exchange)

67/69	01-70 (Six)	.....	1	320 8504
67/71	01-30-70 (V8-LDB)	.....	1	320 7924
67/69	16-17-19 (Six-LDB-* 8-1-Except Heavy Duty-* 8-4)	.....	1	320 3379
67/69	15-16-17-19 (V8-LDB)	.....	1	320 7924
67/69	15 (Six-LDB-* 8-1-Except Heavy Duty-* 8-4)	.....	1	320 3379
67/69	15 (Six-LDB-* 8-2-Except Heavy Duty-* 8-4)	.....	1	448 6764
67/69	18 (LDB)	.....	1	320 7924
67/69	50-80 (LDB)	.....	1	320 7924
70/71	10-80 (LDB)	.....	1	320 7924
67/69	***15-16-17-19 (Heavy Duty-Six-* 8-4)***	.....	1	320 7924

8.003–2 SHOE SET, Rear Brake (Std.)(Axle Set Of 4 Shoes)(Incl. Linings)(Exchange)

67/71	01-40-70 (Six)	.....	1	320 2993
67/71	01-30-70 (V8-LDB)	.....	1	320 7925
67/69	15 (Six-LDB-* 8-1-Except Heavy Duty-* 8-4)	.....	1	320 3380
67/69	15 (Six-LDB-* 8-2-Except Heavy Duty-* 8-4)	.....	1	448 6765
67/69	16-17-19 (Six-LDB-* 8-1-Except Heavy Duty-* 8-4)	.....	1	320 3380
67/69	15-16-17-19 (V8-LDB)	.....	1	320 7925
67/69	18 (LDB)	.....	1	320 7925
67/69	50-80 (LDB)	.....	1	320 7925
70	10-80 (LDB)	.....	1	320 7925
71	15-19-85-89 (LDB-Except Heavy Duty-* 8-4)	.....	1	320 7925
71	18-88 (LDB)	.....	1	320 7924
67/69	***15-16-17-19 (Heavy Duty-Six-* 8-4)***	.....	1	320 7925
71	***15-19-85-89 (Heavy Duty-* 8-4)***	.....	1	320 7924

8.004–1 SHOE SET, Front Brake (Std.)(Axle Set Of 4 Shoes)(Incl. Linings)(Warranty)

67/69	01-70 (Six-LDB)	.....	1	320 7245
70/	01-40-70 (Six-LDB-* 8-61)	.....	1	448 8262
71/	01-40-70 (Six-LDB-* 8-62)	.....	1	812 0308
67/71	01-30-70 (V8-LDB-* 8-61)	.....	1	320 7087
71	01-70 (V8-LDB-* 8-62)	.....	1	812 0282
72	01-40-70 (V8-LDB)	.....	1	812 0282
70	10-80 (LDB)	.....	1	320 7087
71	10-80 (LDB-* 8-61)	.....	1	320 7087
71/	10-80 (LDB-* 8-62)	.....	1	812 0282

67/69	15 (Six-LDB-* 8-1-Except Heavy Duty-* 8-4)	.....	1	320 6130
67/69	15 (Six-LDB-* 8-2-Except Heavy Duty-* 8-4)	.....	1	320 7245
67/69	16-17-19 (Six-LDB-* 8-1-Except Heavy Duty-* 8-4)	.....	1	320 6130
67/69	15-16-17-19 (V8-LDB)	.....	1	320 7087
67/69	18 (LDB)	.....	1	320 7087
67/69	50-80 (LDB)	.....	1	320 7087
67/69	***15-16-17-19 (Heavy Duty-Six-LDB-* 8-4)***	.....	1	320 7087
72	***10-80 (Heavy Duty-LAB-* 8-61)***	.....	1	812 1782

8.004–2 SHOE SET, Rear Brake (Std.)(Axle Set Of 4 Shoes)(Incl. Linings)(Warranty)

67/71	01-40-70 (Six-LDB-* 8-61)	.....	1	320 7246
71	01-40-70 (Six-LDB-* 8-62)	.....	1	812 0310
72	01-40-70 (Six)	.....	1	812 0310
67/71	01-30-70 (V8-LDB-* 8-61)	.....	1	320 7088
71	01-40-70 (V8-LDB-* 8-62)	.....	1	812 0309
72	01-40-70 (V8-* 8-62)	.....	1	812 0309
67/69	15 (Six-LDB-* 8-1-Except Heavy Duty-* 8-4)	.....	1	320 6131
67/69	15 (Six-LDB-* 8-2-Except Heavy Duty-* 8-4)	.....	1	320 7246
67/69	16-17-19 (Six-* 8-1-Except Heavy Duty-* 8-4)	.....	1	320 6131
67/69	15-16-17-19 (V8-LDB)	.....	1	320 7088
67/69	18 (LDB)	.....	1	320 7088
67/69	50-80 (LDB)	.....	1	320 7088
70	10-80 (LDB)	.....	1	320 7088
71	15-19-85-89 (LDB-Except Heavy Duty-* 8-4 And * 8-61)	.....	1	320 7088
71	15-19-85-89 (LDB-Except Heavy Duty-* 8-4 And * 8-62)	.....	1	812 0309
72	15-19-85-89 (Except Heavy Duty-* 8-4 And * 8-62)	.....	1	812 0309
71	18-88 (LDB-* 8-61)	.....	1	320 7088
71/	18-88 (LDB-* 8-62)	.....	1	812 0282
67	01-10-50-80 (WDB-* 8-5) ***(Use 320 8726, 320 8727)***	.....	1	320 5725
67	01-10-50-80 (WDB-* 8-6)	.....	1	320 8726
68/70	01-30-70 (WDB)	.....	1	320 9964
71	01-70 (WDB)	.....	1	448 6530
68	10-80 (WDB)	.....	1	320 8726
69/70	10-80 (Six-WDB)	.....	1	320 8726
69/70	10-80 (V8-WDB)	.....	1	448 6530
71	15-19-85-89 (WDB-* 8-53)	.....	1	448 6530
71	15-19-85-89 (WDB-* 8-54)	.....	1	812 0003
71	18-88 (WDB)	.....	1	812 0003
72	18-88 (WDB-Except Heavy Duty-* 8-62)	.....	1	812 0282
67/69	***15-16-17-19 (Heavy Duty-Six-LDB-* 8-4)***	.....	1	320 7088
71	***15-19-85-89 (Heavy Duty-* 8-4)***	.....	1	812 0282
72	***10-80 (Heavy Duty-* 8-4 And * 8-62)***	.....	1	812 0282
72	***10-80 (Heavy Duty-* 8-61)***	.....	1	812 1782

8.004–3 HOLD-DOWN KIT, Rear Brake Shoe (Incls. 4 Springs And 2 Struts)

67	01-10-50-80 (WDB-* 8-5)	.....	1	320 8727

8.008–1 SPRING, Brake Shoe Return (Upper)

67/69	01-70 (Six)	.....	8	320 1928
67/	01-30-40-70 (V8-LDB)	.....	8	311 2780
67/69	15 (Six-* 8-1-Except Heavy Duty-* 8-4)	.....	8	320 1934
67/69	15 (Six-* 8-2-Except Heavy Duty-* 8-4)	.....	8	320 1928
67/69	16-17-19 (Six-LDB-* 8-1-Except Heavy Duty-* 8-4)	.....	8	320 1934
67/69	15-16-17-19 (V8-LDB-Except Heavy Duty-* 8-4)	.....	8	311 2780
67/69	18 (LDB-Except Heavy Duty-* 8-4)	.....	8	311 2780
67/69	50-80 (LDB-Except Heavy Duty-* 8-4)	.....	8	311 2780
70/	10-80 (LDB-Except Heavy Duty-* 8-4)	.....	4	311 2780
67/69	***15-16-17-19 (Heavy Duty-Six-* 8-4)***	.....	8	311 2780
67/69	***15-16-17-19 (Heavy Duty-V8-* 8-4)***	.....	8	320 3059
67/69	***18 (Heavy Duty-V8-* 8-4)***	.....	8	320 3059
67/69	***80 (Heavy Duty-V8-* 8-4)***	.....	8	320 3059
70/	***10-80 (Heavy Duty-LDB-* 8-4)***	.....	4	320 3059

70/	(Front) 01-40-70 (Six-LDB)	.....	4	448 8257
67	(Rear) 01-10-50-80 (WDB-* 8-5)	.....	4	320 5738
67	(Rear) 01-10-50-80 (WDB-* 8-6)	.....	4	320 8741
70/71	(Rear) 01-40-70 (Six-LDB)	.....	4	320 1928
72	(Rear) 01-40-70 (Six)	.....	4	320 1928
72	(Rear) 01-40-70 (V8)	.....	4	311 2780
68/69	(Rear) 01-30-70 (V8-WDB)	.....	4	311 2780
70	(Rear) 01-30-70 (WDB)	.....	4	311 2780
68	(Rear) 10-80 (WDB)	.....	4	320 8741
69/70	(Rear) 10-80 (Six-WDB)	.....	4	320 8741
69/70	(Rear) 10-80 (V8-WDB)	.....	4	311 2780
71	(Rear) 10-80 (WDB)	.....	4	311 2780
72	(Rear) 10-80 (Except Heavy Duty-* 8-4)	.....	4	311 2780

8.008–2 SPRING, Brake Shoe Automatic Adjusting Lever (Lower)

67/69	01-70 (Six)	.....	4	320 1927
67/	01-30-40-70 (V8-LDB)	.....	4	320 1937
67/69	15 (Six-LDB-* 8-1-Except Heavy Duty-* 8-4)	.....	4	320 3727
67/69	15 (Six-LDB-* 8-2-Except Heavy Duty-* 8-4)	.....	4	320 1927
67/69	16-17-19 (Six-LDB-Except Heavy Duty-* 8-4)	.....	4	320 3727
67/69	15-16-17-19 (V8-LDB)	.....	4	320 1937
67/69	18 (LDB)	.....	4	320 1937
67/69	50-80 (LDB)	.....	4	320 1937
70/	10-80 (LDB)	.....	4	320 1937
67/69	***15-16-17-19 (Heavy Duty-Six-* 8-4)***	.....	4	320 1937
70	***01-70 (Export-Six-WDB)***	.....	2	320 1937
70/	(Front) 01-40-70 (Six-LDB)	.....	2	448 8256
72	***(Front) 10 (Heavy Duty-LAB)***	.....	2	49 561
70/71	(Rear) 01-40-70 (Six-LDB)	.....	2	320 1927
72	(Rear) 01-40-70 (Six)	.....	2	320 1927
68/70	(Rear) 01-30-70 (V8-WDB)	.....	2	320 1937
72	(Rear) 01-40-70 (V8)	.....	2	320 1937
69/70	(Rear) 10-80 (V8-WDB)	.....	2	320 1937
71	(Rear) WDB	.....	2	320 1937
72	(Rear) 10-80	.....	2	320 1937

8.008–3 SPRING, Rear Brake Shoe Retaining (Lower)

67	01-10-50-80 (WDB-* 8-5)	.....	2	320 5737
67	01-10-50-80 (WDB-* 8-6)	.....	2	320 8740
68	10-80 (WDB)	.....	2	320 8740
69/70	10-80 (Six-WDB)	.....	2	320 8740

8.008–4 SPRING, Brake Shoe Hold Down

67/	01-40-70 (Six-LDB)	.....	8	320 2296
67	01-30-70 (V8-LDB)	.....	8	320 5979
67	15 (Six-LDB-* 8-2-Except Heavy Duty-* 8-4)	.....	8	320 2296
68	15 (Six-LDB-* 8-2-Except Heavy Duty-* 8-4)	.....	8	320 1956
67	15-16-17-19 (V8-LDB)	.....	8	320 5979
67	18 (LDB)	.....	8	320 5979
67	50-80 (LDB)	.....	8	320 5979
67/69	***15-16-17-19 (Heavy Duty-V8-LDB-* 8-4)***	.....	8	320 3060
67/69	***18 (Heavy Duty-LDB-* 8-4-Purple)***	.....	8	320 3060
67/69	***80 (Heavy Duty-LDB-* 8-4)***	.....	8	320 3060
67/69	***15-16-17-19 (Heavy Duty-Six-* 8-4-Orange)***	.....	8	320 5979
68/	(Front) 01-30-40-70 (V8-LDB)	.....	4	320 1956
67	(Front) 15 (Six-LDB-* 8-3-Except Heavy Duty-* 8-4)	.....	4	320 5979
68/69	(Front) 15 (Six-LDB-* 8-2-Except Heavy Duty-* 8-4)	.....	4	320 1956
68/69	(Front) 15-16-17-19 (V8-LDB)	.....	4	320 1956
68/69	(Front) 18 (LDB)	.....	4	320 1956
68/69	(Front) 80 (LDB)	.....	4	320 1956
70/	(Front) 10-80 (LDB-Except Heavy Duty-* 8-4)	.....	4	320 1956
68/69	***(Front) 15-17-19 (Heavy Duty-Six-LDB-* 8-4)***	.....	4	320 1956
70/	***(Front) 10-80 (Heavy Duty-LDB-* 8-4)***	.....	4	320 3060

68/71	(Rear) 01-30-70 (V8-LDB)	.....	4	320 5979
72	(Rear) 01-40-70 (Six)	.....	4	320 2296
72	(Rear) 01-40-70 (V8)	.....	4	320 5979
67	(Rear) 15 (Six-LDB-* 8-3-Except Heavy Duty-* 8-4)	.....	4	320 2296
68/69	(Rear) 15-16-17-19 (V8-LDB)	.....	4	320 5979
68/69	(Rear) 18 (LDB)	.....	4	320 5979
68/69	(Rear) 80 (LDB)	.....	4	320 5979
70	(Rear) 10-80 (LDB-Except Heavy Duty-* 8-4)	.....	4	320 5979
71	(Rear) 15-19-85-89 (LDB-Except Heavy Duty-* 8-4)	.....	4	320 5979
71	(Rear) 18-88 (LDB-Except Heavy Duty-* 8-4)	.....	4	320 1956
67	(Rear) 01 (WDB)	.....	2	320 5736
68/70	(Rear) 01-30-70 (WDB)	.....	4	320 1956
71	(Rear) 01-70 (WDB)	.....	4	320 5979
67/68	(Rear) 10-50-80 (WDB)	.....	2	320 5736
69/70	(Rear) 10-80 (Six-WDB)	.....	4	320 5736
69/70	(Rear) 10-80 (V8-WDB)	.....	4	320 5979
71/	(Rear) 15-19-85-89 (WDB-* 8-53)	.....	4	320 5979
71	(Rear) 15-19-85-89 (WDB-* 8-54)	.....	4	320 1956
71/	(Rear) 18-88 (WDB)	.....	4	320 1956
68/69	***(Rear) 15-17-19 (Heavy Duty-Six-* 8-4)***	.....	4	320 5979
70/	***(Rear) 10-80 (Heavy Duty-LDB-* 8-4)***	.....	4	320 3060

8.008-5 CLIP, Brake Shoe Hold Down

67/69	15 (Six-* 8-1-Except Heavy Duty-* 8-4)	.....	8	320 1936
67/69	16-17-19 (Six-Except Heavy Duty-* 8-4)	.....	8	320 1936

8.008-6 SPRING, Parking Brake Lever Strut

67/71	01-70 (Six-LDB)	.....	2	320 1958
72	01-40-70 (Six)	.....	2	320 1958
67/71	01-30-70 (V8-LDB)	.....	2	311 2779
72	01-40-70 (V8)	.....	2	311 2779
67/69	15 (Six-LDB-* 8-1-Except Heavy Duty-* 8-4)	.....	2	320 0264
67/69	15 (Six-LDB-* 8-2-Except Heavy Duty-* 8-4)	.....	2	320 1958
67/69	16-17-19- (Six-LDB-Except Heavy Duty-* 8-4)	.....	2	320 0264
67	15-16-17-19 (V8-LDB)	.....	2	311 2779
67/69	18 (LDB)	.....	2	311 2779
67/69	50-80 (LDB)	.....	2	311 2779
70/	10-80 (LDB)	.....	2	311 2779
68/69	01-30-70 (V8-WDB)	.....	2	311 2779
70	01-30-70 (WDB)	.....	2	311 2779
69/70	10-80 (V8-WDB)	.....	2	311 2779
71	WDB	.....	2	311 2779
67/69	***15-16-17-19 (Heavy Duty-Six-* 8-4)***	.....	2	311 2779
67	(Left) 01 (WDB)	.....	1	320 5741
67/68	(Left) 10-50-80 (WDB)	.....	1	320 5741
69/70	(Left) 10-80 (Six-WDB)	.....	1	320 5741
67	(Right) 01 (WDB)	.....	1	320 5740
67/68	(Right) 10-50-80 (WDB)	.....	1	320 5740
69/70	(Right) 10-80 (Six-WDB)	.....	1	320 5740

8.008-7 PIN, Brake Shoe Hold Down Spring On Clip Retaining

67/69	15 (Six-LDB-* 8-1-Except Heavy Duty-* 8-4)	.....	8	320 0257
67/69	16-17-19 (Six-LDB-Except Heavy Duty-* 8-4)	.....	8	320 0257
67/	(Front) 01-30-70 (V8-LDB)	.....	4	311 5381
68/69	(Front) 15 (Six-LDB-* 8-2-Except Heavy Duty-* 8-4)	.....	4	311 5381
67	(Front) 15 (Six-LDB-* 8-3-Except Heavy Duty-* 8-4) ***(Use 321 0994)***	.....	4	448 5718
67/69	(Front) 15-16-17-19 (V8-LDB)	.....	4	311 5381
67/69	(Front) 18 (LDB)	.....	4	311 5381
67/69	(Front) 50-80 (LDB)	.....	4	311 5381
70/	(Front) 10-80 (LDB)	.....	4	311 5381
67/69	***(Front) 15-16-17-19 (Heavy Duty-Six-* 8-4)***	.....	4	311 5381

72	(Rear) 01-40-70 (Six)	.....	4	320 1954
67/71	(Rear) 01-30-70 (V8)	.....	4	314 3612
72	(Rear) 01-40-70 (V8)	.....	4	314 3612
67/69	(Rear) 15-16-17-19 (V8-LDB)	.....	4	314 3612
67/69	(Rear) 18-50-80 (LDB)	.....	4	314 3612
69/70	(Rear) 10-80 (V8-WDB)	.....	4	314 3612
70/71	(Rear) 01-30-70 (WDB)	.....	4	314 3612
70	(Rear) 10-80 (LDB)	.....	4	314 3612
71/	(Rear) 15-19-85-89 (Except Heavy Duty-* 8-4)	.....	4	314 3612
71/	(Rear) 18-88	.....	4	321 0994
67/69	***(Rear) 15-16-17-19 (Heavy Duty-Six-* 8-4)***	.....	4	314 3612
71/	***(Rear) 15-19-85-89 (Heavy Duty-* 8-4)***	.....	4	321 0994

8.008-8 ANCHOR, Brake Shoe Hold Down Spring

67/	01-40-70 (Six-LDB)	.....	8	320 1954
67	(Front) 15 (Six-LDB-* 8-2-Except Heavy Duty-* 8-4)	.....	4	320 1934
67/70	(Rear) 15 (Six-LDB-* 8-2-Except Heavy Duty-* 8-4)	.....	4	320 1954

8.008-9 RETAINER, Brake Shoe Hold Down Spring

67/	01-30-40-70 (V8-LDB)	.....	16	89 259
67/69	15-16-17-19 (V8-LDB)	.....	16	89 259
67/69	18 (LDB)	.....	16	89 259
67/69	50-80 (LDB)	.....	16	89 259
70/	10-80 (LDB)	.....	16	89 259
67/69	***15-16-17-19 (Heavy Duty-Six-* 8-4)***	.....	16	89 259
67	(Front) 15 (Six-LDB-* 8-3-Except Heavy Duty-* 8-4)	.....	12	89 259
68/69	(Front) 15 (Six-LDB-* 8-2-Except Heavy Duty-* 8-4)	.....	8	89 259
68/70	(Rear) 01-30-70 (V8-WDB)	.....	8	89 259
69/70	(Rear) 10-80 (V8-WDB)	.....	8	89 259
71	(Rear) WDB	.....	8	89 259
70	***(Rear) 01-70 (Export-Six-WDB)***	.....	8	89 259

8.008-10 SPRING, Brake Shoe Anti-Noise

67	01 (V8-WDB)	.....	2	320 8558
67/68	10-50-80 (WDB)	.....	2	320 8558
69/70	10-80 (Six-WDB)	.....	2	320 8558

8.009-1 LINK, Brake Shoe Automatic Adjusting (Upper)

67/69	15 (Six-LDB-* 8-1-Except Heavy Duty-* 8-4)	.....	4	320 3733
67/69	16-17-19 (Six-LDB-Except Heavy Duty-* 8-4)	.....	4	320 3733

8.009-2 LINK, Brake Shoe Adjusting Actuator (Lower)

67/69	15 (Six-LDB-* 8-1-Except Heavy Duty-* 8-4)	.....	4	320 3734
67/69	16-17-19 (Six-LDB-Except Heavy Duty-* 8-4)	.....	4	320 3734

8.009-3 CRANK, Brake Shoe Automatic Adjusting Link

67/69	(Left) 15 (Six-LDB-* 8-1-Except Heavy Duty-* 8-4)	.....	2	320 3731
67/69	(Left) 16-17-19 (Six-LDB-Except Heavy Duty-* 8-4)	.....	2	320 3731
67/69	(Right) 15 (Six-LDB-* 8-1-Except Heavy Duty-* 8-4)	.....	2	320 3732
67/69	(Right) 16-17-19 (Six-LDB-Except Heavy Duty-* 8-4)	.....	2	320 3732

8.010 CABLE, Brake Shoe Automatic Adjusting Link

67/	01-40-70 (Six-LDB)	.....	4	320 1961
67/	01-40-70 (V8-LDB)	.....	4	320 1027

67/69	15-16-17-19 (V8-LDB)	.....	4	320 1027
67/69	18 (LDB)	.....	4	320 1027
67/69	50-80 (LDB)	.....	4	320 1027
67/69	15 (Six-LDB-* 8-2-Except Heavy Duty-* 8-4)	.....	4	320 1961
70/	10-80 (LDB)	.....	4	320 1027
67/69	***15-16-17-19 (Heavy Duty-Six-* 8-4)***	.....	4	320 1027
68/70	(Rear) 01-30-70 (WDB)	.....	2	320 1027
72	(Rear) 01-40-70 (Six)	.....	2	320 1961
72	(Rear) 01-40-70 (V8)	.....	2	320 1027
72	(Rear) 10-80	.....	2	320 1027
69/70	(Rear) 10-80 (V8-WDB)	.....	2	320 1027
71	(Rear) WDB	.....	2	320 1027

8.011 GUIDE, Brake Shoe Automatic Adjusting Cable

67/	LDB	.....	4	320 1947
72	(Rear) 01-40-70	.....	2	320 1947
68/71	(Rear) 01-30-70 (WDB)	.....	4	320 1947
72	(Rear) 10-80 (WDB)	.....	2	320 1947
69/71	(Rear) 10-80 (V8-WDB)	.....	4	320 1947

8.012-1 LEVER, Brake Shoe Automatic Adjusting

67/	(Left) 01-30-40-70 (LDB)	.....	2	320 1029
67/69	(Left) 15 (Six-LDB-* 8-1-Except Heavy Duty-* 8-4)	.....	2	320 3725
67/69	(Left) 15 (Six-LDB-* 8-2-Except Heavy Duty-* 8-4)	.....	2	320 1029
67/69	(Left) 16-17-19 (Six-LDB-Except Heavy Duty-* 8-4)	.....	2	320 3725
67/69	(Left) 15-16-17-19 (V8-LDB)	.....	2	320 1029
67/69	(Left) 18 (LDB)	.....	2	320 1029
67/69	(Left) 50-80 (LDB)	.....	2	320 1029
70/	(Left) 10-80 (LDB)	.....	2	320 1029
67/69	***(Left) 15-16-17-19 (Heavy Duty-Six-* 8-4)***	.....	2	320 1029
67	(Left-Rear) 01 (V8-WDB)	.....	1	320 5731
68/70	(Left-Rear) 01-30-70 (V8-WDB)	.....	1	320 1029
67/68	(Left-Rear) 10-50-80 (WDB)	.....	1	320 5731
69/70	(Left-Rear) 10-80 (Six-WDB)	.....	1	320 5731
69/70	(Left-Rear) 10-80 (V8-WDB)	.....	1	320 1029
71/	(Left-Rear) WDB	.....	1	320 1029
70	***(Left-Rear) 01-70 (Export-Six-WDB)***	.....	1	320 1029
67/	(Right) 01-30-40-70 (Six)(V8-LDB)	.....	2	320 1030
67/69	(Right) 15 (Six-LDB-* 8-1-Except Heavy Duty-* 8-4)	.....	2	320 3726
67/69	(Right) 15 (Six-LDB-* 8-2-Except Heavy Duty-* 8-4)	.....	2	320 1030
67/69	(Right) 16-17-19 (Six-Except Heavy Duty-* 8-4)	.....	2	320 3726
67/69	(Right) 15-16-17-19 (V8-LDB)	.....	2	320 1030
67/69	(Right) 18 (LDB)	.....	2	320 1030
67/69	(Right) 50-80 (LDB)	.....	2	320 1030
70/	(Right) 10-80 (LDB)	.....	2	320 1030
67/69	***(Right) 15-16-17-19 (Heavy Duty-Six-* 8-4)***	.....	2	320 1030
67	(Right-Rear) 01 (V8-WDB)	.....	1	320 5730
68/70	(Right-Rear) 01-30-70 (V8-WDB)	.....	1	320 1030
67/68	(Right-Rear) 10-50-80 (WDB)	.....	1	320 5730
69/70	(Right-Rear) 10-80 (Six-WDB)	.....	1	320 5730
69/70	(Right-Rear) 10-80 (V8-WDB)	.....	1	320 1030
71/	(Right-Rear) WDB	.....	1	320 1030
70	***(Right-Rear) 01-70 (Export-Six-WDB)***	.....	1	320 1030

8.012-2 LATCH, Rear Brake Shoe Automatic Adjusting Lever

67	01 (V8-WDB)	.....	2	320 5732
67/68	10-50-80 (WDB)	.....	2	320 5732
69/70	10-80 (Six-WDB)	.....	2	320 5732

8.012–3 ATTACHING PARTS, Latch And Lever To Shoe

RETAINER	67	01 (WDB)	8.024	4	310 8202
RETAINER	67/68	10-50-80 (WDB)	8.024	4	310 8202
RETAINER	69/70	10-80 (Six-WDB)	8.024	4	310 8202
WASHER, Spring	67	01 (WDB)	8.024	4	310 8203
WASHER, Spring	67/68	10-50-80 (WDB)	8.024	4	310 8203
WASHER, Spring	69/70	10-80 (Six-WDB)	8.024	4	310 8203

8.012–4 SPRING, Rear Brake Shoe Automatic Adjusting Lever Latch

67	(Left) 01 (WDB)	.....	1	320 7179
67/68	(Left) 10-50-80 (WDB)	.....	1	320 7179
69/70	(Left) 10-80 (Six-WDB)	.....	1	320 7179
67	(Right) 01 (WDB)	.....	1	320 7178
67/68	(Right) 10-50-80 (WDB)	.....	1	320 7178
69/70	(Right) 10-80 (Six-WDB)	.....	1	320 7178

8.012–5 PIN, Rear Brake Shoe Automatic Adjusting Lever Latch

67	01 (WDB)	.....	2	320 5733
67/68	10-50-80 (WDB)	.....	2	320 5733
69/70	10-80 (Six-WDB)	.....	2	320 5733

8.014–1 SCREW, Brake Shoe Adjusting

67/71	(Left) 01-30-40-70 (Six)(V8-LDB)	.....	2	320 1022
72	(Left) 01-40-70 (LDB)	.....	1	320 1022
67/69	(Left) 15 (Six-LDB-* 8-1-Except Heavy Duty-* 8-4)	.....	2	320 3728
67/69	(Left) 15 (Six-LDB-* 8-2-Except Heavy Duty-* 8-4)	.....	2	320 1022
67/69	(Left) 16-17-19 (Six-LDB-Except Heavy Duty-* 8-4)	.....	2	320 3728
67/69	(Left) 15-16-17-19 (V8-LDB)	.....	2	320 1022
67/69	(Left) 18 (LDB)	.....	2	320 1022
67/69	(Left) 50-80 (LDB)	.....	2	320 1022
70/	(Left) 10-80 (LDB)	.....	2	320 1022
67/69	***(Left) 15-16-17-19 (Heavy Duty-Six-* 8-4)***	.....	2	320 1022
68/70	(Left-Rear) 01-30-70 (WDB)	.....	1	320 1022
69/70	(Left-Rear) 10-80 (V8-WDB)	.....	1	320 1022
71	(Left-Rear) WDB	.....	1	320 1022
72	(Left Rear)	.....	1	320 1022
67/71	(Right) 01-30-40-70 (Six)(V8-LDB)	.....	2	320 1023
72	(Right) 01-40-70 (LDB)	.....	1	320 1023
67/69	(Right) 15 (Six-LDB-* 8-1-Except Heavy Duty-* 8-4)	.....	2	320 3729
67/69	(Right) 15 (Six-LDB-* 8-2-Except Heavy Duty-* 8-4)	.....	2	320 1023
67/69	(Right) 16-17-19 (Six-LDB-* 8-1-Except Heavy Duty-* 8-4)	.....	2	320 3729
67/69	(Right) 15-16-17-19 (V8-LDB)	.....	2	320 1023
67/69	(Right) 18 (LDB)	.....	2	320 1023
67/69	(Right) 50-80 (LDB)	.....	2	320 1023
70/	(Right) 10-80 (LDB)	.....	2	320 1023
67/69	***(Right) 15-16-17-19 (Heavy Duty-Six-* 8-4)***	.....	2	320 1023
68/70	(Right-Rear) 01-30-70 (WDB)	.....	1	320 1023
69/70	(Right-Rear) 10-80 (V8-WDB)	.....	1	320 1023
71	(Right-Rear) WDB	.....	1	320 1023
72	(Right Rear)	.....	1	320 1023
72	***(Front) 10 (Heavy Duty-258-360-LDB-LAB)***	.....	2	320 0258
72	***(Rear) 10 (Heavy Duty-258-360-LAB)***	.....	2	320 0258

8.014–2 SOCKET, Brake Shoe Adjusting Screw

67/69	01-30-70 (Six)(V8-LDB) ***(Use 320 7638)***	.....	4	320 1919
70/	01-40-70 (Six-LDB)	.....	4	448 8255
70/	01-30-40-70 (V8-LDB) ***(Use 320 7638)***	.....	4	320 1919
67/69	15 (Six-LDB-* 8-1-Except Heavy Duty-* 8-4)	.....	4	320 3730
67/69	15 (Six-LDB-* 8-2-Except Heavy Duty-* 8-4) ***(Use 320 7638)***	.....	4	320 1919

67/69	16-17-19 (Six-LDB-Except Heavy Duty-* 8-4)	4	320	3730
67/69	15-16-17-19 (V8-LDB)	4	320	1919
67/69	18 (LDB)	4	320	1919
67/69	50-80 (LDB)	4	320	1919
70/	10-80 (LDB)	4	320	1919
67/69	***15-16-17-19 (Heavy Duty-Six-* 8-4)***	4	320	1919
72	***(Front) 10 (Heavy Duty-258-360-LDB-LAB)***	2	320	0260
68/70	(Rear) 01-30-70 (WDB)	2	320	1919
69/70	(Rear) 10-80 (V8-WDB)	2	320	1919
71	(Rear) WDB	2	320	1919
72	(Rear) 10-80	2	320	1919
72	***(Rear) 10 (Heavy Duty-258-360-LAB)***	2	320	0260

8.014-3 NUT, Brake Shoe Adjusting Screw

67/69	(Left) 01-30-70 (Six)(V8-LDB)	2	320	1917
70/71	(Left) 01-40-70 (Six-LDB)	2	448	8259
72	(Left) 01-40-70 (LDB)	1	448	8259
67/69	(Left) 15 (Six-LDB-* 8-1-Except Heavy Duty-* 8-4)	2	320	0259
67/69	(Left) 15 (Six-LDB-* 8-2-Except Heavy Duty-* 8-4)	2	320	1917
67/69	(Left) 16-17-19 (Six-LDB-Except Heavy Duty-* 8-4)	2	320	0259
67/69	(Left) 15-16-17-19 (V8-LDB)	2	320	1917
67/69	(Left) 18 (LDB)	2	320	1917
70/	(Left) 10-80 (LDB)	2	320	1917
70/	(Left) 01-30-40-70 (V8-LDB)	2	320	1917
67/69	(Left) 50-80 (LDB)	2	320	1917
67/69	***(Left) 15-16-17-19 (Heavy Duty-Six-* 8-4)***	2	320	1917
68/71	(Left-Rear) 01-30-70 (WDB)	1	320	1917
69/71	(Left-Rear) 10-80 (V8-WDB)	1	320	1917
72	(Left-Rear)	1	320	1917
67/69	(Right) 01-30-70 (Six)(V8-LDB)	2	320	1918
70/71	(Right) 01-40-70 (Six-LDB)	2	448	8260
72	(Right) 01-40-70 (LDB)	1	448	8260
67/69	(Right) 15-16-17-19 (V8-LDB)	2	320	1918
67/69	(Right) 18 (LDB)	2	320	1918
70/	(Right) 01-30-40-70 (V8-LDB)	2	320	1918
67/69	(Right) 50-80 (LDB)	2	320	1918
67/69	(Right) 15 (Six-LDB-* 8-1-Except Heavy Duty-* 8-4)	2	320	1541
67/69	(Right) 15 (Six-LDB-* 8-2-Except Heavy Duty-* 8-4)	2	320	1918
67/69	(Right) 16-17-19 (Six-LDB-Except Heavy Duty-* 8-4)	2	320	1541
70/	(Right) 10-80 (LDB)	2	320	1918
67/69	***(Right) 15-16-17-19 (Heavy Duty-Six-* 8-4)***	2	320	1918
68/71	(Right-Rear) 01-30-70 (WDB)	1	320	1918
69/71	(Right-Rear) 10-80 (V8-WDB)	1	320	1918
72	(Right-Rear) 10-80	1	320	1918
72	***(Front) 10 (Heavy Duty-258-360-LDB-LAB)***	2	320	0259
72	***(Rear) 10 (Heavy Duty-258-360-LAB)***	2	320	0259

8.016 LINK, Brake Shoe To Cylinder Operating

67/	01-30-40-70 (V8-LDB)	8	48	331
67/69	15 (Six-LDB-* 8-1-Except Heavy Duty-* 8-4)	8	320	0272
67/69	16-17-19 (Six-LDB-Except Heavy Duty-* 8-4)	8	320	0272
67/69	15-16-17-19 (V8-LDB)	8	48	331
67/69	18 (LDB)	8	48	331
67/69	50-80 (LDB)	8	48	331
70/	10-80 (LDB)	8	48	331
67/69	***15-16-17-19 (Heavy Duty-Six-* 8-4)***	8	48	331
68/69	(Rear) 01-30-70 (V8-WDB)	4	48	331
70/	(Rear) 01-30-40-70 (WDB)	4	48	331
69/70	(Rear) 10-80 (V8-WDB)	4	48	331
71	(Rear) 10-80 (WDB)	4	48	331

Printed in U.S.A.

8.022–1 PLATE, Brake Shoe Anchor Pin Guide

67/	01–30–40–70 (V8–LDB)	.....	4	320 1032
67/69	15 (Six–LDB–* 8–1–Except Heavy Duty–* 8–4)	.....	4	320 0262
67/69	16–17–19 (Six–LDB–Except Heavy Duty–* 8–4)	.....	4	320 0262
67/69	15–16–17–19 (V8–LDB)	.....	4	320 1032
67/69	18 (LDB)	.....	4	320 1032
67/69	50–80 (LDB)	.....	4	320 1032
70/	10–80 (LDB)	.....	4	320 1032
67/71	***15–16–17–19 (Heavy Duty–Six–* 8–4)***	.....	4	320 1032
70/	(Front) 01–40–70 (Six–LDB)	.....	2	319 8888
67/69	(Rear) 01–70 (Six–LDB)	.....	2	320 2470
67/69	(Rear) 15 (Six–LDB–* 8–2–Except Heavy Duty–* 8–4)	.....	2	320 2470
68/	(Rear) 01–30–40–70 (WDB)	.....	2	320 1032
69/70	(Rear) 10–80 (V8–WDB)	.....	2	320 1032
71/	(Rear) 10–80 (WDB)	.....	2	320 1032

8.022–2 BLOCK, Brake Shoe Anchor Pin Guide

67/71	15 (Six–LDB–* 8–1–Except Heavy Duty–* 8–4)...(Incl. 2)	.....	2	320 4589
67/71	16–17–19 (Six–LDB–Except Heavy Duty–* 8–4)...(Incl. 2)	.....	2	320 4589

8.024–1 LEVER, Brake Shoe Parking Brake

67/	(Left) 01–40–70 (Six)	.....	1	320 1959
72	(Left) 01–40–70 (V8)	.....	1	320 1033
67/71	(Left) 01–30–70 (V8–LDB)	.....	1	320 1033
67/69	(Left) 15 (Six–LDB–* 8–1–Except Heavy Duty–* 8–4)	.....	1	320 3262
67/69	(Left) 15 (Six–LDB–* 8–2–Except Heavy Duty–* 8–4)	.....	1	320 1959
67/69	(Left) 16–17–19 (Six–LDB–* 8–1–Except Heavy Duty–* 8–4)	.....	1	320 3262
67/69	(Left) 15–16–17–19 (V8–LDB)	.....	1	320 1033
67/69	(Left) 18 (LDB)	.....	1	320 1033
67/69	(Left) 50–80 (LDB)	.....	1	320 1033
70/	(Left) 10–80 (LDB)	.....	1	320 1033
67	(Left) 01 (WDB)	.....	1	320 5743
68/71	(Left) 01–30–70 (WDB)	.....	1	320 1033
67/68	(Left) 10–50–80 (WDB)	.....	1	320 5743
69/70	(Left) 10–80 (Six–WDB)	.....	1	320 5743
69/70	(Left) 10–80 (V8–WDB)	.....	1	320 1033
71/	(Left) 15–19–85–89 (WDB–* 8–53)	.....	1	320 1033
71/	(Left) 15–19–85–89 (WDB–* 8–54)	.....	1	321 2998
71	(Left) 18–88 (WDB)	.....	1	321 2998
67/69	***(Left) 15–16–17–19 (Heavy Duty–Six–* 8–4)***	.....	1	320 1033
71	***(Left) 15–19–85–89 (Heavy Duty–* 8–4)***	.....	1	321 2998
72	***(Left) 10–80 (Heavy Duty–* 8–4)***	.....	1	320 1033
67/	(Right) 01–40–70 (Six)	.....	1	320 1960
67/71	(Right) 01–30–70 (V8–LDB)	.....	1	320 1034
72	(Right) 01–40–70 (V8)	.....	1	320 1034
67/69	(Right) 15 (Six–LDB–* 8–1–Except Heavy Duty–* 8–4)	.....	1	320 3263
67/69	(Right) 15 (Six–LDB–* 8–2–Except Heavy Duty–* 8–4)	.....	1	320 1960
67/69	(Right) 16–17–19 (Six–LDB–* 8–1–Except Heavy Duty–* 8–4)	.....	1	320 3263
67/69	(Right) 16–17–19 (V8–LDB)	.....	1	320 1034
67/69	(Right) 18 (LDB)	.....	1	320 1034
67/69	(Right) 50–80 (LDB)	.....	1	320 1034
70/	(Right) 10–80 (LDB)	.....	1	320 1034
67	(Right) 01 (WDB)	.....	1	320 5742
68/71	(Right) 01–30–70 (WDB)	.....	1	320 1034
67/68	(Right) 10–50–80 (WDB)	.....	1	320 5742
69/70	(Right) 10–80 (Six–WDB)	.....	1	320 5744
69/70	(Right) 10–80 (V8–WDB)	.....	1	320 1034
71	(Right) 15–19–85–89 (WDB–* 53)	.....	1	320 1034

71	(Right) 15-19-85-89 (WDB-* 8-54)	1	321	2999
71	(Right) 18-88 (WDB)	1	321	2999
67/69	***(Right) 15-16-17-19 (Heavy Duty-Six-* 8-4)***	1	320	1034
71	***(Right) 15-19-85-89 (Heavy Duty-* 8-4)***	1	321	2999
72	***(Right) 10-80 (Heavy Duty-* 8-4)***	1	321	2999

8.024–2 STRUT, Brake Shoe Parking Brake Lever

67/71	01-40-70 (Six-LDB)	2	320	1944
72	01-40-70 (Six)	2	320	1944
67/71	01-30-70 (V8-LDB)	2	311	2778
72	01-40-70 (V8)	2	311	2778
67/69	15 (Six-LDB-* 8-1-Except Heavy Duty-* 8-4)	2	320	3393
67/69	15 (Six-LDB-* 8-2-Except Heavy Duty-* 8-4)	2	320	1944
67/69	16-17-19 (Six-LDB-* 8-1-Except Heavy Duty-* 8-4)	2	320	3393
67/69	15-16-17-19 (V8-LDB)	2	311	2778
67/69	18 (LDB)	2	311	2778
67/69	50-80 (LDB)	2	311	2778
70/	10-80	2	311	2778
67	01-10-50-80 (WDB-* 8-5)	2	320	5739
67	01-10-50-80 (WDB-* 8-6)	2	320	8742
68/71	01-30-70 (WDB)	2	311	2778
68	10-80 (WDB)	2	320	8742
69	10-80 (Six-WDB)	2	320	8742
69	10-80 (V8-WDB)	2	311	2778
67/69	***15-16-17-19 (Heavy Duty-Six-* 8-4)***	2	311	2778

8.024–3 RETAINER, Brake Shoe Parking Brake Lever Strut

67/	01-30-40-70	2	310	8202
67/69	15 (Six-LDB-* 8-1-Except Heavy Duty-* 8-4)	2	320	0253
67/69	15 (Six-LDB-* 8-2-Except Heavy Duty-* 8-4)	2	310	8202
67/69	16-17-19 (Six-LDB-* 8-1-Except Heavy Duty-* 8-4)	2	320	0253
67/69	15-16-17-19 (V8)	2	310	8202
67/69	18-50-80	2	310	8202
70/	10-80	2	310	8202
67/69	***15-16-17-19 (Heavy Duty-Six-* 8-4)***	2	310	8202

8.024–4 WASHER, Brake Shoe Parking Brake Lever Strut

67/		2	310	8203

8.030 COVER, Brake Adjusting Hole

67/	(WDB-2 Req.)(LDB-4 Req.)	AR	320	1957

8.035–1 CYLINDER ASSEMBLY, Brake Master

67	05-06 (LHD-LPB-* 8-7) ...(Incl. Link)	1	318	2131
67	05-06 (LHD-LPB-* 8-8)	1	320	8311
67	07-08-09 (LHD-LPB) ...(Incl. Link)	1	318	2131
67	10-50-80 (LPB)	1	320	8311
68/69	LHD (LPB-* 8-41)	1	448	5452
69	LHD (LPB-* 8-42)	1	448	7376
70/	LHD (LPB-LDB)	1	448	7376
71	70 (LPB-WDB)	1	812	0018
72	01-40-70 (LPB-WDB)	1	812	0018
72	10 (LPB-WDB-LAC)	1	812	0018
67/69	***RHD (LPB-* 8-41)***	1	320	8311
69	***RHD (LPB-* 8-42)***	1	448	7377
70	***RHD (LPB)***	1	448	7377

Printed in U.S.A.

8.035–2 ATTACHING PARTS, Cylinder To Dash Panel

PLATE	69	LPB (* 8-38)...(Incl. Screws)	8.164	1	319 4871
STUD	67/68	01-30-70 (LPB)	.....	2	315 7870
STUD	69	01-30-70 (LPB-* 8-37)	.....	2	315 7870
STUD	67/68	10-50-80 (V8-LPB)	.....	2	315 7870
STUD	67/68	10-50-80 (Six-WAT-LPB)	.....	2	315 7870
STUD	67/68	10-50-80 (Six-WST-LPB)(Six-WOD-LPB)	.....	2	318 8527
STUD	69	10-80 (V8-LDB-* 8-37)	.....	2	315 7870
STUD	69	10-80 (Six-WAT-* 8-37)	.....	2	315 7870
STUD	69	10-80 (Six-WST-LPB-* 8-37)(Six-WOD-LDB-* 8-37)	.....	2	315 7870
WASHER, Plain	67/69	LPB	17.814	2	400 1104
WASHER, Plain	69	LPB (* 8-37)	17.814	2	400 1104
WASHER, Plain	70/	LHD	17.814	AR	400 1104
WASHER, Lock	67/68	LPB	17.820	2	G120382 NA
WASHER, Lock	69	LPB (* 8-37)	17.820	2	G120382 NA
WASHER, Lock	***70***	***10-80 (RHD-LPB)***	17.820	4	G120382 NA
NUT, Hexagon	67/68	LPB	17.406	2	G120369 NA
NUT, Hexagon	69	LPB (* 8-37)	17.406	2	G120369 NA
NUT, Hexagon	70/	LHD	17.412	AR	G271190 NA
NUT, Hexagon	***70***	***10-80 (RHD-LPB)***	17.406	4	G120369 NA
NUT, Speed	69	LPB (* 8-38)	8.164	1	400 3901
NUT, Lock	69	LPB (* 8-38)	17.417	1	448 6876

8.035–3 SEAL, Brake Master Cylinder To Dash

67/	LPB	.....	1	314 7257

8.035–4 SHIELD, Brake Master Cylinder Dust

67	05-06 (LHD-LPB-* 8-8)	.....	1	320 6920
68/69	01-30-70 (LPB-* 8-41)	.....	1	320 6920
67/69	10-50-80 (LPB-* 8-41)	.....	1	320 6920
67/69	***01 (RHD-* 8-41)***	.....	1	320 6920

8.035–5 DEFLECTOR, Brake Master Cylinder Water

67/70	.....	29.010	1	351 0436

8.038–1 COVER, Brake Master Cylinder Filler

67	05-06 (LHD-LPB-* 8-7)	.....	1	320 6923
67	05-06 (LHD-LPB-* 8-8) ***(Use 320 8435)***	.....	1	320 8312
67	07-08-09 (LHD-LPB)	.....	1	320 6923
68	01-30-70 (LPB) ***(Use 320 8435)***	.....	1	320 8312
67/68	10-50-80 (LPB) ***(Use 320 8435)***	.....	1	320 8312
69	LPB (* 8-41) ***(Use 320 8435)***	.....	1	320 8312
69	LPB (* 8-42)	.....	1	448 8293
70/	(LPB-LDB)	.....	1	448 8293
71	70 (LPB-WDB)	.....	1	448 5601
72	01-40-70 (LPB-WDB)	.....	1	448 5601
72	10 (Six-LPB-WDB-LAC)	.....	1	448 5601
67	***01 (RHD)*** ***(Use 320 8435)***	.....	1	320 8312

8.038–2 GASKET, Brake Master Cylinder Filler Cover

67	05-06 (LHD-LPB-* 8-7)	.....	1	320 7043
67	05-06 (LHD-LPB-* 8-8)	.....	1	320 7021
67	07-08-09 (LHD-LPB)	.....	1	320 7043
68	01-30-70 (LPB)	.....	1	320 7021
67/68	10-50-80 (LPB)	.....	1	320 7021

69	LPB (* 8-41)	.....	1	320 7021
69	LPB (* 8-42)	.....	1	448 8291
70/	(LPB-LDB)	.....	1	448 8291
71	70 (LPB-WDB)	.....	1	448 5607
72	01-40-70 (LPB-WDB)	.....	1	448 5607
72	10 (Six-LPB-WDB-LAC)	.....	1	448 5607
67	***01 (RHD)***	.....	1	320 7021

8.038–3 BOLT, Brake Master Cylinder Filler Cover

67	05-06 (LHD-LPB-* 8-7)	.....	1	320 6935
67	05-06 (LHD-LPB-* 8-8)	.....	1	320 7056
67	07-08-09 (LHD-LPB)	.....	1	320 7056
68	01-30-70 (LPB)	.....	1	320 7056
67/68	10-50-80 (LPB)	.....	1	320 7056
69	LPB (* 8-41)	.....	1	320 7056
67	***01 (RHD)***	.....	1	320 7056

8.038–4 GASKET, Brake Master Cylinder Filler Cover Bolt

67	05-06 (LHD-LPB-* 8-7)	.....	1	320 6924
67	07-08-09 (LHD-LPB)	.....	1	320 6924

8.038–5 RETAINER, Brake Master Cylinder Cover (Wire Bail)

69	LPB (* 8-42)	.....	1	448 8292
70/	(LPB-LDB)	.....	1	448 8292
71	70 (LPB-WDB)	.....	1	448 5608
72	01-40-70 (LPB-WDB)	.....	1	448 5608
72	10 (Six-LPB-WDB-LAC)	.....	1	448 5608

8.040 FITTING, Brake Master Cylinder Outlet

67	05-06 (LHD-LPB-* 8-7)	.....	2	320 7964
67	07-08-09 (LHD-LPB)	.....	2	320 7964

8.042 SPRING, Brake Master Cylinder Check Valve

67	05-06 (LHD-LPB-* 8-7)	.....	2	320 6921
67	05-06 (LHD-LPB-* 8-8)	.....	2	320 4994
67	07-08-09 (LHD-LPB)	.....	2	320 4994
68/	01-30-40-70 (LPB)	.....	2	320 4994
67/	10-50-80 (LPB)	.....	2	320 4994
67	***01 (RHD)***	.....	2	320 4994

8.044 PISTON, Brake Master Cylinder Secondary

67	05-06 (LHD-LPB-* 8-7)	.....	1	320 6908
67	05-06 (LHD-LPB-* 8-8)	.....	1	320 5768
67	07-08-09 (LHD-LPB)	.....	1	320 6908
68/71	30-70 (LPB-LDB)	.....	1	320 5768
67/71	01-10-40-50-70 (LPB-LDB)	.....	1	320 5768
71	70 (LPB-WDB)	.....	1	812 0019
72	(LPB-LDB)	.....	1	320 5768
72	01-40-70 (LPB-WDB)	.....	1	812 0019
72	10 (Six-LPB-WDB-LAC)	.....	1	812 0019
67/69	***01 (RHD)***	.....	1	320 5768

8.046–1 PLATE, Brake Master Cylinder Piston Stop

67	05-06 (LHD-LPB-* 8-7)	.....	1	320 6909

Printed in U.S.A.

BRAKES - WHEELS

8.046–2 SPRING, Brake Master Cylinder Secondary Piston Return

67	05-06 (LHD-LPB-* 8-7)	.....	1	320 6907
67	05-06 (LHD-LPB-* 8-8)	.....	1	320 7917
67	07-08-09 (LHD-LPB)	.....	1	320 6907
68/	(LPB-LDB)	.....	1	320 7917
67	10-50-80 (LPB)	.....	1	320 7917
71	70 (LPB-WDB)	.....	1	812 0021
72	01-40-70 (LPB-WDB)	.....	1	812 0021
72	10 (Six-LPB-WDB-LAC)	.....	1	812 0021
67	***01 (RHD)***	.....	1	320 7917

8.046–3 RETAINER, Brake Master Cylinder Piston Cup

67	05-06 (LHD-LPB-* 8-8)	.....	1	320 5110
68/71	01-30-40-70 (LPB-LDB)	.....	1	320 5110
67/71	10-50-80 (LPB)	.....	1	320 5110
71	70 (LPB-WDB)	.....	1	812 0020
72	(LPB-LDB)	.....	1	320 5110
72	01-40-70 (LPB-WDB)	.....	1	812 0020
72	10 (Six-LPB-WDB-LAC)	.....	1	812 0020
67	***01 (RHD)***	.....	1	320 5110

8.046–4 PROTECTOR, Brake Master Cylinder Piston Cup

67	05-06 (LHD-LPB-* 8-8)	.....	1	320 3597
68/71	01-30-70 (LPB)	.....	1	320 3597
67/71	10-40-50-80 (LPB)	.....	1	320 3597
72	(LPB-LDB)	.....	1	320 3597
72	01-40-70 (LPB-WDB)	.....	1	812 1355
72	10 (Six-LPB-WDB-LAC)	.....	1	812 1355
67	***01 (RHD)***	.....	1	320 3597

8.048 REPAIR KIT, Brake Master Cylinder

67	05-06 (LHD-LPB-* 8-7)	.....	1	320 6936
67	05-06 (LHD-LPB-* 8-8)	.....	1	320 5767
67	07-08-09 (LHD-LPB)	.....	1	320 6936
67	10-50-80 (LPB)	.....	1	320 5767
68/	(LPB-LDB)	.....	1	320 5767
71	70 (LPB-WDB)	.....	1	812 0022
72	01-40-70 (LPB-WDB)	.....	1	812 0022
72	10 (Six-LPB-WDB-LAC)	.....	1	812 0022
67	***01 (RHD)***	.....	1	320 5767

8.050–1 BOLT, Brake Master Cylinder Piston Stop

67	05-06 (LHD-LPB-* 8-8)	.....	1	320 4129
68	01-10-70-80 (LPB-* 8-9)	.....	1	320 4129
68	01-10-30-70-80 (LHD-LPB-* 8-10)	.....	1	448 5454
67	10-50-80 (LPB)	.....	1	320 4129
69/	LHD (LPB-LDB)	.....	1	448 5454
71	70 (LPB-WDB)	.....	1	448 9431
72	01-40-70 (LPB-WDB)	.....	1	448 5454
72	10 (Six-LPB-WDB-LAC)	.....	1	448 9431
67/71	***01 (RHD)***	.....	1	320 4129
68/71	***10-80 (RHD-LPB)***	.....	1	320 4129

8.050–2 RING, Brake Master Cylinder Piston Stop Bolt "O"

68	01-10-30-70-80 (LHD-LPB-* 8-10)	.....	1	448 5453
69/	LHD (LPB)	.....	1	448 5453

8.050–3 PLUG, Brake Master Cylinder Primary Piston Stop Hole

68	01–10–30–70–80 (LHD–LPB–* 8–9)	.....	1	448 5457

8.052 BOOT, Brake Master Cylinder

67	05–06 (LHD–LPB–* 8–7)	.....	1	320 6911
67	05–06 (LHD–LPB–* 8–8)	.....	1	320 3691
67	07–08–09 (LHD–LPB–* 8–7)	.....	1	320 6911
68/	01–30–40–70 (LPB)	.....	1	320 3691
67/	10–50–80 (LPB)	.....	1	320 3691
67	***01 (RHD)***	.....	1	320 3691

8.054–1 LINK, Brake Master Cylinder

67	05–06 (LHD–LPB–* 8–7)	.....	1	320 6910
67	05–06 (LHD–LPB–* 8–8) ...(Incl. Retainer)	.....	1	320 5952
67	07–08–09 (LHD–LPB)	.....	1	320 6910
68/71	01–30–40–70 (LPB–LDB)...(Incl. Retainer)	.....	1	320 5952
67/71	10–50–80 (LHD–LPB)...(Incl. Retainer)	.....	1	320 5952
71	70 (LPB–WDB)	.....	1	812 0045
72	(LPB)	.....	1	812 1356
67	***01 (RHD)***...(Incl. Retainer)	.....	1	320 5952
67/70	***10–80 (RHD–LPB)*** ...(Incl. Retainer)	.....	1	320 5953

8.054–2 ATTACHING PARTS, Link To Cylinder

WASHER	67	05–06 (LHD–LPB–* 8–8)	.....	1	320 5107
WASHER	67	07–08–09 (LHD–LPB)	.....	1	320 5107
WASHER	68/71	01–30–40–70 (LPB)	.....	1	320 5107
WASHER	67/71	10–50–80 (LPB)	.....	1	320 5107
WASHER	**67**	***01 (RHD)***	.....	1	320 5104
RETAINER	67	05–06 (LHD–LPB–* 8–8)	.....	1	320 5104
RETAINER	67	07–08–09 (LHD–LPB)	.....	1	320 5104
RETAINER	68/71	01–30–70 (LPB)	.....	1	448 5484
RETAINER	72	01–40–70 (LPB–WDB) ***(Use 320 5104)***	.....	1	448 5484
RETAINER	72	10 (Six–LPB–WDB–LAC) ***(Use 320 5104)***	.....	1	320 5104
RETAINER	67/71	10–50–80 (LPB)	.....	1	320 5104
RETAINER	72	(LPB–LDB)	.....	1	320 5104
RETAINER	**67**	***01 (RHD)***	.....		

8.068–1 CYLINDER ASSEMBLY, Brake Wheel Front

67/	(Left) 01–40–70 (Six–LDB)	.....	1	319 6522
67/	(Left) 01–30–40–70 (V8–LDB)	.....	1	317 6911
67/69	(Left) 15 (Six–LDB–* 8–1–Except Heavy Duty–* 8–4)	.....	1	320 3388
67/69	(Left) 15 (Six–LDB–* 8–2–Except Heavy Duty–* 8–4)	.....	1	319 6522
67/69	(Left) 16–17–19 (Six–LDB–Except Heavy Duty–* 8–4)	.....	1	320 3388
67/	(Left) 10–50–80 (V8–LDB–Except Heavy Duty–* 8–4)	.....	1	317 6911
70/71	(Left) 15–19 (Six–LDB–Except Heavy Duty–* 8–4)	.....	1	317 6913
67/71	(Left) 18 (Six–LDB–Except Heavy Duty–* 8–4)	.....	1	317 6913
67/71	(Left) 50–80 (Six–LDB–Except Heavy Duty–* 8–4)	.....	1	317 6913
72	(Left) 10–80 (Six–LDB–Except Heavy Duty–* 8–4)	.....	1	317 6913
67/68	***(Left) 15-16-17-19 (Heavy Duty-Six-* 8-4)***	.....	1	317 6913
69	***(Left) 15-19 (Heavy Duty-Six-* 8-4 And * 8-35)***	.....	1	320 7699
69/71	***(Left) 15-19 (Heavy Duty-Six-* 8-4 And * 8-36)***	.....	1	320 7691
67/	***(Left) 10-80 (Heavy Duty-V8-LDB-* 8-4)***	.....	1	320 7699
67/71	***(Left) 18 (Heavy Duty-Six-* 8-4)***	.....	1	320 7699
67/71	***(Left) 80 (Heavy Duty-Six-* 8-4)***	.....	1	320 7699
72	***(Left) 10-80 (Heavy Duty-Six-* 8-4)***	.....	1	320 7699

BRAKES - WHEELS

67/71	(Right) 01-40-70 (Six-LDB)	.....	1	316 9665
72	(Right) 01-40-70 (Six-LDB)	.....	1	319 6523
67/	(Right) 01-30-40-70 (V8-LDB)	.....	1	317 6912
72	(Right) 01-40-70 (V8-LDB)	.....	1	317 6912
67/69	(Right) 15 (Six-LDB-* 8-1-Except Heavy Duty-* 8-4)	.....	1	320 3389
67/69	(Right) 15 (Six-LDB-* 8-2-Except Heavy Duty-* 8-4)	.....	1	316 9665
70/71	(Right) 15-19 (Six-LDB-Except Heavy Duty-* 8-4)	.....	1	317 6914
67/69	(Right) 16-17-19 (Six-LDB-* 8-1-Except Heavy Duty-* 8-4)	.....	1	320 3389
67/	(Right) 10-50-80 (V8-LDB-Except Heavy Duty-* 8-4)	.....	1	317 6912
67/71	(Right) 18 (Six-LDB-Except Heavy Duty-* 8-4)	.....	1	317 6914
67/71	(Right) 50-80 (Six-LDB-Except Heavy Duty-* 8-4)	.....	1	317 6914
72	(Right) 10-80 (Six-LDB-Except Heavy Duty-* 8-4)	.....	1	317 6914
67/68	***(Right) 15-16-17-19 (Heavy Duty-Six-* 8-4)***	.....	1	317 6914
69	***(Right) 15-19 (Heavy Duty-Six-* 8-4 And * 8-35)***	.....	1	317 6914
69/71	***(Right) 15-19 (Heavy Duty-Six-* 8-4 And * 8-36)***	.....	1	320 7698
67/	***(Right) 10-80 (Heavy Duty-V8-* 8-4)***	.....	1	320 7690
67/71	***(Right) 18 (Heavy Duty-Six-* 8-4)***	.....	1	320 7698
67/71	***(Right) 80 (Heavy Duty-Six-* 8-4)***	.....	1	320 7698
72	***(Right) 10-80 (Heavy Duty-Six-* 8-4)***	.....	1	320 7698

8.068-2 CYLINDER ASSEMBLY, Brake Wheel Rear

67/69	01-70 (Six-LDB)	.....	2	316 9654
70	01-40-70 (Six-LDB-* 8-45)	.....	2	316 9654
70	01-40-70 (Six-LDB-* 8-46)	.....	2	319 9855
71	01-40-70 (Six-LDB)	.....	2	319 9855
72	01-70 (Six)	.....	1	319 9855
72	40 (Six)	.....	2	320 1977
67/69	15 (Six-LDB-* 8-1-Except Heavy Duty-* 8-4)	.....	2	320 3390
67/69	15 (Six-LDB-* 8-2-Except Heavy Duty-* 8-4)	.....	2	316 9654
67/69	16-17-19 (Six-LDB-Except Heavy Duty-* 8-4)	.....	2	320 3390
67	(Left) 01 (V8-LDB-* 8-11)	.....	1	318 4348
67	(Left) 01 (V8-LDB-* 8-12)	.....	1	320 3311
68/70	(Left) 01-30-70 (V8)	.....	1	320 3311
71	(Left) 01-70 (V8-LDB)	.....	1	320 3311
72	(Left) 01-40-70 (V8)	.....	1	320 3311
67/69	(Left) 15-16-17-19 (V8-LDB-Except Heavy Duty-* 8-4)	.....	1	317 6736
70/71	(Left) 15-19 (LDB-Except Heavy Duty-* 8-4)	.....	1	317 6736
67/71	(Left) 18 (LDB-Except Heavy Duty-* 8-4)	.....	1	317 6736
67/71	(Left) 50-80 (LDB-Except Heavy Duty-* 8-4)	.....	1	317 6736
67	(Left) 01 (V8-WDB)	.....	1	320 6105
71	(Left) 01-70 (WDB)	.....	1	317 6736
67/68	(Left) 10-50-80 (V8-WDB)	.....	1	320 6105
67/70	(Left) 15-16-17-19-59-85-86-87-89 (Six-WDB)	.....	1	320 6101
69/70	(Left) 15-19-85-89 (V8-WDB)	.....	1	317 6736
67/70	(Left) 18-88 (Six-WDB)	.....	1	320 6103
69/70	(Left) 18-88 (V8-WDB)	.....	1	448 6529
71	(Left) 15-19-85-89 (WDB-* 8-53)	.....	1	317 6736
71	(Left) 15-19-85-89 (WDB-* 8-54)	.....	1	448 6529
71	(Left) 18-88 (WDB)	.....	1	448 6529
72	(Left) 10-80 (Except Heavy Duty-* 8-4)	.....	1	317 6736
70	***(Left) 01-70 (Export-Six-WDB)***	.....	1	320 3311
67/68	***(Left) 15-16-17-19 (Heavy Duty-Six-* 8-4)***	.....	1	317 6736
67/71	***(Left) 15-16-17-19 (Heavy Duty-V8-* 8-4)***	.....	1	320 7695
69	***(Left) 15-19 (Heavy Duty-Six-* 8-4 And * 8-35)***	.....	1	317 6736
69/71	***(Left) 15-19 (Heavy Duty-Six-* 8-4 And * 8-36)***	.....	1	320 7695
67/71	***(Left) 18 (Heavy Duty-* 8-4)***	.....	1	320 7695
67/71	***(Left) 80 (Heavy Duty-* 8-4)***	.....	1	320 7695
72	***(Left) 10-80 (Heavy Duty-* 8-4)***	.....	1	320 7695

67	(Right) 01 (V8-LDB-* 8-11)	.....	1	318	4349
67	(Right) 01 (V8-LDB-* 8-12)	.....	1	320	3312
68/70	(Right) 01-30-70 (V8)	.....	1	320	3312
71	(Right) 01-70 (V8-LDB)	.....	1	320	3312
72	(Right) 01-40-70 (V8)	.....	1	320	3312
67/69	(Right) 15-16-17-19 (V8-LDB-Except Heavy Duty-* 8-4)	.....	1	317	6737
70/71	(Right) 15-19 (LDB-Except Heavy Duty-* 8-4)	.....	1	317	6737
67/71	(Right) 18 (LDB-Except Heavy Duty-* 8-4)	.....	1	317	6737
67/71	(Right) 50-80 (LDB-Except Heavy Duty-* 8-4)	.....	1	317	6737
67	(Right) 01 (WDB)	.....	1	320	6104
71	(Right) 01-70 (WDB)	.....	1	317	6737
72	(Right) 10-80 (Except Heavy Duty-* 8-4)	.....	1	317	6737
67/68	(Right) 10-50-80 (V8-WDB)	.....	1	320	6104
67/70	(Right) 15-16-17-19-59-85-86-87-89 (Six-WDB)	.....	1	320	6100
69/70	(Right) 15-19-85-89 (V8-WDB)	.....	1	317	6737
67/70	(Right) 18-88 (Six-WDB)	.....	1	320	6102
69/70	(Right) 18-88 (V8-WDB)	.....	1	448	6528
71	(Right) 15-19-85-89 (WDB-* 8-53)	.....	1	317	6737
71	(Right) 15-19-85-89 (WDB-* 8-54)	.....	1	448	6528
71	(Right) 18-88 (WDB)	.....	1	448	6528
72	***(Right) 10-80 (Heavy Duty-* 8-4)***	.....	1	320	7694
67/71	***(Right) 18 (Heavy Duty-* 8-4)***	.....	1	320	7694
70	***(Right) 01-70 (Export-Six-WDB)***	.....	1	320	3312
69	***(Right) 15-19 (Heavy Duty-Six-* 8-4 And * 8-35)***	.....	1	317	6737
69/71	***(Right) 15-19 (Heavy Duty-Six-* 8-4 And * 8-36)***	.....	1	320	7694
67/71	***(Right) 15-16-17-19 (Heavy Duty-V8-* 8-4)***	.....	1	320	7694
67/68	***(Right) 15-16-17-19 (Heavy Duty-Six-* 8-4)***	.....	1	317	6737
67/71	***(Right) 80 (Heavy Duty-* 8-4)***	.....	1	320	7694

8.068–3 ATTACHING PARTS, Cylinder To Plate

SCREW, Machine	67/71	01-70 (Six-LDB)	17.626	8	G423333
SCREW, Machine	72	01-40-70 (Six)	.....	4	G423333
SCREW, Machine	67/71	01-30-70 (V8-LDB)	.....	8	448 6551
SCREW, Machine	72	01-40-70 (V8)	.....	4	448 6551
SCREW, Machine	67/69	15 (Six-LDB-* 8-1-Except Heavy Duty-* 8-4)	.....	8	320 0266
SCREW, Machine	67/69	15 (Six-LDB-* 8-2-Except Heavy Duty-* 8-4)	17.626	8	G423333
SCREW, Machine	67/69	15-16-17-19 (V8-LDB)	.....	8	448 6551
SCREW, Machine	67/69	16-17-19 (Six-LDB-* 8-1-Except Heavy Duty-* 8-4)	.....	8	320 0266
SCREW, Machine	67/69	18 (LDB)	.....	8	448 6551
SCREW, Machine	67/69	50-80 (LDB)	.....	8	448 6551
SCREW, Machine	70/	10-80 (LDB)	.....	8	448 6551
SCREW, Machine	67	01 (WDB)	.....	4	320 5744
SCREW, Machine	68/71	01-30-70 (V8-WDB)	.....	4	448 6551
SCREW, Machine	67/68	10-50-80 (WDB)	.....	4	320 5744
SCREW, Machine	69/70	10-80 (Six-WDB)	.....	4	320 5744
SCREW, Machine	69/70	10-80 (V8-WDB)	.....	4	448 6551
SCREW, Machine	71	10-80 (WDB)	.....	4	448 6551
SCREW, Machine	***67/69***	***15-16-17-19 (Heavy Duty-Six-* 8-4)***	.....	4	448 6551
SCREW, Machine	***70***	***01-70 (Export-Six-WDB)***	.....	4	448 6551

8.078–1 PISTON SET, Front Brake Wheel Cylinder (Set Of 2)

67/	01-40-70 (Six-LDB)	.....	2	320	9004
67/71	01-30-70 (V8-LDB)	.....	2	320	5759
72	01-40-70 (V8-LDB)	.....	2	320	5759
67/69	15 (Six-LDB-* 8-1-Except Heavy Duty-* 8-4)	.....	2	320	3314
67/69	15 (Six-LDB-* 8-2-Except Heavy Duty-* 8-4)	.....	2	320	9004
67/69	16-17-19 (Six-LDB-* 8-1-Except Heavy Duty-* 8-4)	.....	2	320	3314
67/69	10-50-80 (V8-LDB-Except Heavy Duty-* 8-4)	.....	2	320	5759
67/69	18 (Six-LDB-Except Heavy Duty-* 8-4)	.....	2	320	5755
67/69	50-80 (Six-LDB-Except Heavy Duty-* 8-4)	.....	2	320	5755
70/	10-80 (Six-LDB)	.....	2	320	5755
70/	10-80 (V8-LDB)	.....	2	320	5759
67/69	***10-80 (Heavy Duty-Six-* 8-4)***	.....	2	320	5755
67/69	***10-80 (Heavy Duty-V8-* 8-4)***	.....	2	320	5759

8.078–2 PISTON SET, Rear Brake Wheel Cylinder (Set Of 2)

67/69	01-70 (Six-LDB)	.....	2	320 9010
70	01-70 (Six-LDB-* 8-45)	.....	2	320 9010
70/71	01-40-70 (Six-LDB-* 8-46)	.....	2	448 8446
72	01-70 (Six)	.....	2	448 8446
72	40 (Six)	.....	4	321 6547
67	01 (V8-LDB-* 8-11)	.....	2	320 7493
67	01 (V8-LDB-* 8-12)	.....	2	311 7438
68/	01-30-40-70 (V8)	.....	2	311 7438
72	10-80	.....	2	311 8524
67/69	15 (Six-LDB-* 8-1-Except Heavy Duty-* 8-4)	.....	2	311 8524
67/69	15 (Six-LDB-* 8-2-Except Heavy Duty-* 8-4)	.....	2	320 9010
67/69	16-17-19 (Six-LDB-Except Heavy Duty-* 8-4)	.....	2	311 8524
67/69	15-16-17-19 (V8-LDB)	.....	2	311 8524
67/69	18-50-80 (LDB)	.....	2	311 8524
70/71	10-80 (LDB)	.....	2	311 8524
67	01 (WDB)	.....	2	320 9010
67/68	10-50-80 (V8-WDB)	.....	2	320 9010
69/70	15-19-85-89 (V8-WDB)	.....	2	311 8524
67/70	15-16-17-19-59-85-86-87-89 (Six-WDB)	.....	2	320 1978
67/70	18-88 (Six-WDB)	.....	2	320 9004
69/70	18-88 (V8-WDB)	.....	2	448 6550
71	15-19-85-89 (WDB-* 8-53)	.....	2	311 8524
71	15-19-85-89 (WDB-* 8-54)	.....	2	448 6550
71	18-88 (WDB)	.....	2	448 6550
67/69	***15-16-17-19 (Heavy Duty-Six-* 8-4)***	.....	2	311 8524
70	***01-70 (Export-Six-WDB)***	.....	2	311 7438

8.080–1 REPAIR KIT, Front Brake Wheel Cylinder (Incl. 2 Boots And 2 Cups)

67/	01-40-70 (Six-LDB)	.....	2	320 9005
67/	01-30-40-70 (V8-LDB)	.....	2	320 5760
67/69	15 (Six-LDB-* 8-1-Except Heavy Duty-* 8-4)	.....	2	320 3391
67/69	15 (Six-LDB-* 8-2-Except Heavy Duty-* 8-4)	.....	2	320 9005
67/69	16-17-19 (Six-LDB-Except Heavy Duty-* 8-4)	.....	2	320 3391
67/71	10-50-80 (V8-LDB-Except Heavy Duty-* 8-4)	.....	2	320 5760
72	10-80 (V8-LDB)	.....	2	320 5760
67/69	18 (Six-LDB-Except Heavy Duty-* 8-4)	.....	2	320 5756
67/69	50-80 (Six-LDB-Except Heavy Duty-* 8-4)	.....	2	320 5756
70/	10-80 (Six-LDB-Except Heavy Duty-* 8-4)	.....	2	320 5756
72	10-80 (Six-LDB)	.....	2	320 7700
67/68	***15-16-17-19 (Heavy Duty-Six-* 8-4)***	.....	2	320 5756
69	***15-19 (Heavy Duty-Six-* 8-4 And * 8-35)***	.....	1	320 5756
69/71	***15-19 (Heavy Duty-Six-* 8-4 And * 8-36)***	.....	1	320 7700
67/	***10-50-80 (Heavy Duty-V8-* 8-4)***	.....	2	320 7692
67/71	***18-80 (Heavy Duty-Six-* 8-4)***	.....	2	320 7700

8.080–2 REPAIR KIT, Rear Brake Wheel Cylinder (Incl. 2 Boots And 2 Cups)

67/69	01-70 (Six)	.....	2	320 9011
70	01-70 (Six-LDB-* 8-45)	.....	2	320 9011
70/	01-40-70 (Six-LDB-* 8-46)	.....	2	448 8430
67	01 (V8-LDB-* 8-11)	.....	2	320 7492
67	01 (V8-LDB-* 8-12)	.....	2	311 9141
68/	01-30-40-70 (V80)	.....	2	311 9141
67/69	15 (Six-LDB-* 8-1-Except Heavy Duty-* 8-4)	.....	2	320 3392
67/69	15 (Six-LDB-* 8-2-Except Heavy Duty-* 8-4)	.....	2	320 9011
67/69	16-17-19 (Six-LDB-Except Heavy Duty-* 8-4)	.....	2	320 3392
67/69	15-16-17-19 (V8-LDB-Except Heavy Duty-* 8-4)	.....	2	311 8525
67/69	18 (LDB-Except Heavy Duty-* 8-4)	.....	2	311 8525

67/69	50-80 (LDB-Except Heavy Duty-* 8-4)	2	311	8525
70/71	10-80 (LDB-Except Heavy Duty-* 8-4)	2	311	8525
72	10-80 (Except Heavy Duty-* 8-4)	4	311	8525
67	01 (WDB)	2	320	6109
67/68	10-50-80 (V8-WDB)	2	320	6109
67/70	15-16-17-19-59-85-86-87-89 (Six-WDB)	2	320	1980
69/70	15-19-85-89 (V8-WDB)	2	311	8525
67/70	18-88 (Six-WDB)	2	320	9005
69/70	18-88 (V8-WDB)	2	448	6531
71	15-19-85-89 (WDB-* 8-53)	2	311	8525
71	15-19-85-89 (WDB-* 8-54)	2	448	6531
71	18-88 (WDB)	2	448	6531
72	40 (Six)	2	320	1981
67/68	***15-16-17-19 (Heavy Duty-Six-* 8-4)***	2	311	8525
69	***15-19 (Heavy Duty-Six-* 8-4 And * 8-35)***	2	311	8525
69/71	***15-19 (Heavy Duty-Six-* 8-4 And * 8-36)***	2	320	7693
67/71	***15-16-17-19 (Heavy Duty-V8-* 8-4)***	2	320	7693
67/71	***18 (Heavy Duty-* 8-4)***	2	320	7693
67/71	***80 (Heavy Duty-* 8-4)***	2	320	7693
72	***10-80 (Heavy Duty-* 8-4)***	4	320	7693
70	***01-70 (Export-Six-WDB)***	2	311	9141

8.086–1 SPRING, Front Brake Wheel Cylinder Piston Return

67/	01-40-70 (Six-LDB)	2	311	8521
67/	01-30-40-70 (V8-LDB)	2	320	5813
67/69	15 (Six-LDB-* 8-1-Except Heavy Duty-* 8-4) ***(Use 311 8521)***	2		48 031
67/69	15 (Six-LDB-* 8-2-Except Heavy Duty-* 8-4)	2	311	8521
67/69	16-17-19 (Six-LDB-Except Heavy Duty-* 8-4) ***(Use 311 8521)***	2		48 031
70/	10 (Six-LDB)	2	311	8521
67/	10-50-80 (V8-LDB)	2	320	5813
67/69	18 (Six-LDB)	2	311	8521
67/	50-80 (Six-LDB)	2	311	8521
67/71	***15-16-17-19 (Heavy Duty-Six-* 8-4)***	2	311	8521

8.086–2 SPRING, Rear Brake Wheel Cylinder Piston Return

67/71	01-40-70 (Six)	2	311	8518
72	01-70 (Six)	2	311	8518
72	40 (Six)	2	321	6548
67/	01-30-40-70 (V8)	2	311	8518
67/69	15 (Six-LDB-* 8-1-Except Heavy Duty-* 8-4)	2	310	8071
67/69	15 (Six-LDB-* 8-2-Except Heavy Duty-* 8-4)	2	311	8518
67/69	16-17-19 (Six-LDB-Except Heavy Duty-* 8-4)	2	310	8071
67/69	15-16-17-19 (V8-LDB)	2	311	8518
67/69	18 (LDB)	2	311	8518
67/69	50-80 (LDB)	2	311	8518
70	10-80 (LDB)	2	311	8518
67/70	10-50-80 (V8-WDB)	2	311	8518
67/70	15-16-17-19-59-85-86-87-89 (Six-WDB)	2	311	8518
67/70	18-88 (Six-WDB)	2	311	8521
71	10-80	2	311	8518
67/69	***15-16-17-19 (Heavy Duty-Six-* 8-4)***	2	311	8518
70	***01-70 (Export-Six-WDB)***	2	311	8518

8.088 SCREW, Brake Wheel Cylinder Bleeder

67/	01-40-70 (Six-LDB)	4	311	2184
67/	01-30-70 (V8-LDB)	4	320	3313
67/69	15-16-17-19 (Six-LDB-Except Heavy Duty-* 8-4)	4	311	2184
67/69	15-16-17-19 (V8-LDB)	4	320	3313
67/69	18 (LDB)	4	320	3313

67/69	50-80 (LDB)	.....	4	320 3313
70/	10-80 (LDB)	.....	4	320 3313
67/69	***15-16-17-19 (Heavy Duty-Six-* 8-4)***	.....	4	320 3313
67/	01-30-40-70 (WDB)	.....	2	320 3313
67/	(Rear) 10-50-80 (WDB)	.....	2	320 3313

8.100–1 TUBE, Brake Master Cylinder To Front Fitting

67	05-06 (LHD-LPB-* 8-7)	.....	1	318 2272
67	05-06 (LHD-LPB-* 8-8)	.....	1	318 8844
67	07-08-09 (LHD-LPB)	.....	1	318 2272
68/	01-40 (LHD-LPB)	.....	1	318 8844
67/69	01 (LHD-WPB)	.....	1	318 2709
70/	01-40 (WPB-LDB)	.....	1	319 7317
67	10 (LHD-LPB)	.....	1	318 8651
67	10 (LHD-WPB)	.....	1	318 8650
68	10-30-70 (LHD-LPB-* 8-13)	.....	1	318 8651
68	10-30-70 (LHD-WPB-* 8-13)	.....	1	318 8650
69	10-30-70-80 (LHD-LPB)	.....	1	318 8651
70	10-30-70-80 (LHD-LPB)	.....	1	319 7600
71/	10-70-80 (LPB)	.....	1	321 1646
69	10-30-70-80 (LHD-WPB-LDB)	.....	1	318 8650
70	10-80 (LHD-WPB-LDB)	.....	1	319 8716
71/	10-70-80 (WPB-LDB)	.....	1	321 1648
70	30-70 (LHD-WPB-LDB)	.....	1	319 7621
67	50-80 (LHD-LPB)	.....	1	318 7326
67	50-80 (LHD-WPB)	.....	1	318 8651
68	80 (LHD-LPB-* 8-14)(LHD-WPB-* 8-13)	.....	1	318 8651
68	80 (LHD-LPB-* 8-13)	.....	1	318 7326
68	80 (LHD-WPB-* 8-14)	.....	1	318 8650
68	10-30-70-80 (LHD-WPB-WDB-* 8-14)	.....	1	319 1952
69	10-30-70-80 (LHD-WPB-WDB)	.....	1	319 1952
70	10-80 (LHD-WDB)	.....	1	319 7634
70	30-70 (V8-WDB)	.....	1	319 7634
67/69	***01 (RHD-LPB)***	.....	1	317 2243
67/71	***10 (RHD-LPB)***	.....	1	318 8667
67/69	***10 (RHD-WPB-LDB)***	.....	1	318 8665
67/69	***10 (RHD-WDB)***	.....	1	318 8664
70	***10-80 (RHD-WPB-LDB)***	.....	1	319 8018
67/69	***80 (RHD-WPB)***	.....	1	318 8665
67/68	***80 (RHD-LPB)***	.....	1	318 8715
69	***80 (RHD-LPB)***	.....	1	318 8667
70	***10-80 (RHD-WDB)***	.....	1	319 8015

8.100–2 TUBE, Brake Master Cylinder To Rear Axle

67/69	***01 (RHD-LPB-LCV)***	.....	1	317 2284

8.100–3 TUBE, Brake Master Cylinder To Union

67	***07 (RHD-LPB)***	.....	1	317 6996

8.100–4 TUBE, Union To Rear Brake Hose

67	07	.....	1	317 2184

8.100–5 UNION, Brake Master Cylinder To Rear Hose

67	07	.....	1	316 4092

8.100–5a UNION, Brake Master Cylinder To Tube

70		.....	1	448 7028

8.100–5b TUBE, Brake Master Cylinder Union To Power Unit

70	.....	.....	1	448 7027

8.100–6 TUBE, Brake Master Cylinder To Pressure Differential Valve

67	05–06 (LHD–LPB–* 8–7)	.....	1	318 7685
67	05–06 (LHD–LPB–* 8–8)	.....	1	319 1814
67	07–08–09 (LHD–LPB)	.....	1	318 7685
67	01 (LHD–WPB)	.....	1	318 7743
68/69	01 (LHD–LPB)	.....	1	319 1814
70/	01–40 (LPB)	.....	1	319 7266
68/69	01 (LHD–WPB)	.....	1	319 1797
70	01–40 (WPB)	.....	1	319 7484
71/	01–40 (WPB–LDB)	.....	1	319 7484
67	10–50–80 (LHD–LPB–LDB)	.....	1	318 7417
67	10 (LHD–WPB–LDB)	.....	1	318 7736
68	10–30–70–80 (LHD–LPB–LDB–* 8–13)	.....	1	318 7417
68	10–30–70–80 (LHD–WPB–LDB–* 8–13)	.....	1	318 8780
68	10–30–70–80 (LHD–LPB–* 8–14)	.....	1	319 1820
68	10–30–70–80 (LHD–WPB–LDB–* 8–14)	.....	1	319 1821
69	10–30–70–80 (LHD–LPB)	.....	1	319 1820
70	10–30–70–80 (LHD–LPB)	.....	1	319 7656
69	10–30–70–80 (LHD–WPB–LDB)	.....	1	319 1821
70	10–80 (LHD–WPB–LDB)	.....	1	319 8705
71/	10–70–80 (WPB–LDB)	.....	1	321 1647
68	30–70–80 (LHD–WPB–LDB–* 8–13)	.....	1	318 7736
70	30–70 (LHD–WPB–LDB)	.....	1	319 7715
67	50–80 (LHD–WPB–LDB)	.....	1	318 7418
67	10–50–80 (LHD–WDB)	.....	1	318 8780
68	10–30–70–80 (LHD–WPB–WDB–* 8–14)	.....	1	319 1822
69	10–30–70–80 (LHD–WPB–WDB)	.....	1	319 1822
70	10–80 (LHD–WDB)	.....	1	319 7716
71/	10–70–80 (LPB)	.....	1	321 1655
70	30–70 (V8–WDB)	.....	1	319 7716
67/70	***10–80 (RHD–LPB)***	.....	1	318 8719
67/70	***10–80 (RHD–WPB)***	.....	1	318 8676
67/70	***10–80 (RHD–WDB)***	.....	1	318 8775

8.100–7 TUBE, Brake Pressure Differential Valve To Tee (At Rear Axle)

67/69	01 (LHD–Six–LCV)(LHD–V8–LDB)	.....	1	318 7731
70	01 (LDB–* 8–47)	.....	1	319 7669
70	01 (LDB–* 8–48)	.....	1	321 0882
71	01 (LDB–* 8–59)	.....	1	321 0882
71	01 (* 8–60)	.....	1	321 0882
72	01	.....	1	321 0882
67/68	10–50–80	.....	1	318 7695
69/70	10–80 (LDB)	.....	1	318 7695
71	10–80 (LDB–* 8–59)	.....	1	318 7695
71	10–80 (* 8–60)	.....	1	318 7695
72	10–80	.....	1	318 7695
68/70	30 (LDB)	.....	1	319 0956
70	40 (LDB–* 8–47)	.....	1	321 0152
70/71	40 (LDB–* 8–48)	.....	1	321 0895
72	40	.....	1	321 0895
68/71	70 (LDB–* 8–57)	.....	1	319 0578
71	70 (LDB–* 8–58 And * 8–59)	.....	1	321 2931
71	70 (* 8–60)	.....	1	321 2931
72	70	.....	1	321 2931

BRAKES - WHEELS

8.100–8 TUBE, Brake Pressure Differential Valve To Union

67	07 (Six)	.....	1		318 7732

8.100–9 TUBE, Brake Pressure Differential Valve To Proportioning Valve

69/70	10–80 (V8–WDB)	.....	1		319 4869
69	09 (SC/RAMBLER)	.....	1		319 1065
68	01 (V8–WDB)	.....	1		319 1065
70	01 (V8–WDB–* 8–47)	.....	1		319 7708
70	01 (V8–WDB–* 8–48)	.....	1		321 0890
68/70	30 (WDB)	.....	1		319 0958
68/70	70 (V8–WDB)	.....	1		319 0957
70	***01 (Export-LHD-Six-WDB-* 8-47)***	.....	1		319 7708
70	***01 (Export-LHD-Six-WDB-* 8-48)***	.....	1		321 0890
70	***70 (Export-LHD-Six-WDB)***	.....	1		319 0957

8.100–10 TUBE, Brake Master Cylinder To Pressure Differential Valve Extension

67/70	***10-80 (RHD)***	.....	1		318 8718

8.100–11 TUBE, Proportioning Valve To Rear Axle Hose

68	01 (V8–WDB)	.....	1		319 1080
69	09 (SC/RAMBLER)	.....	1		319 1080
70	01 (V8–WDB)	.....	1		319 7709
69/70	10–80 (V8–WDB)	.....	1		319 4874
68/70	30–70 (V8–WDB)	.....	1		319 0959
70	***01 (Export-LHD-Six-WDB)***	.....	1		319 7709

8.100–12 UNION, Brake Master Cylinder To Pressure Differential Valve Extension

67/70	***10-80 (RHD)***	.....	1		318 7740

8.100–13 TUBE, Brake Pressure Differential Valve To 3-Way Tee

70	***10-80 (RHD-WDB)***	.....	1		319 8014

8.101–1 CLIP, Brake Tube

67/71	(Closed–For Single 1/4" Tube)	17.134	AR		G120521
67/	(Closed–For Single 3/16" Tube)	17.134	AR		G120520
67/	(Closed–For Two 3/16" Tubes)	.....	AR		314 1309
71/	(Closed–For Three 3/16" Tubes)	.....	AR		321 1601
67/71	(Closed–For Single 5/16" Tube)	8.220	AR		400 1802
67/	("S" Shape)	.....	AR		316 8875
67/71	(Push-In-11/16" Wide) ***(Use G120520)***	.....	AR		312 8541
67/71	(Push-In-1-3/32" Wide)	8.102	AR		47 774
67/	(Wrap-A-Round–2" I.D.)	.....	AR		315 4076

8.101–2 ATTACHING PARTS, Clip

SCREW, Tapping.....	67/	(12–11 x 1/2)	17.671	AR	400 1042
SCREW, Tapping.....	67/	(1/4–20 x 1/2)	17.670	AR	G172427

8.101–3 BRACKET, Brake And Gas Tube Support

67	07 (Six)	.....	1		317 2172

8.101–4 ATTACHING PARTS, Bracket To Floor Pan

SCREW, Tapping.....	67	07	17.671	2	400 1042

8.101–5 CLIP, Brake Tube To Brake Tube (At Master Cylinder)

70	.....	.....	1	316 8875

8.102 FITTING, Front Brake Tube

67/71	..... *(Use 319 6997)*	17.756	1	G178654
72	01–10–40–70–80 (LDB–3 Way Fitting)	.....		319 6997
68	***10-80 (RHD-WDB)***	.....	1	319 2349
69/70	***10-80 (RHD-WDB-4 Way Fitting)***	.....	1	319 2349
69	***10-80 (RHD-LDB-3 Way Fitting)*** ..... *(Use 319 6997)*	17.756	1	G178654
70	***10-80 (RHD-WDB-3 Way Fitting)***	.....	1	319 8016

8.104–1 VALVE, Brake Pressure Differential

67/69	.....	.....	1	318 7725
70	LHD	.....	1	318 7725
71/	LDB	.....	1	318 7725
70	***RHD***	.....	1	319 7897

8.104–2 ATTACHING PARTS, Valve To Dash Panel

SCREW, Tapping 67/69	.....	17.671	2	400 1040
SCREW, Tapping 70/	.....	17.671	2	G9414012 NA

8.104–3 SWITCH REPAIR KIT, Brake Failure Warning

67/	.....	.....	1	320 8667

8.106–1 TUBE, Front Brake Fitting To Front Wheels (Incl. Nut)

67/69	(Left) 01 (LHD)	.....	1	318 2913
70/	(Left) 01–40 (LPB)	.....	1	319 7310
67/69	(Left) 10–30–50–70 (LHD)	.....	1	318 7323
70	(Left) 10–30–70 (LHD)	.....	1	319 7695
71/	(Left) 10 (LDB)	.....	1	321 1515
71/	(Left) 70 (LDB)	.....	1	321 0452
67	(Left) 80 (LHD–* 8–13)	.....	1	318 7323
68	(Left) 80 (LHD–* 8–14)	.....	1	319 1951
69	(Left) 80 (LHD)	.....	1	319 3973
70	(Left) 80 (LHD)	.....	1	319 7694
71/	(Left) 80 (LDB)	.....	1	321 1516
67/69	***(Left) 01 (RHD-Six)***	.....	1	318 1157
69	***(Left) 80 (RHD)***	.....	1	319 4430
67/69	***(Right) 01 (RHD-Six)***	.....	1	317 2244
67/69	***(Right) 10 (RHD)***	.....	1	318 7323
70	***(Right) 10 (RHD)***	.....	1	319 8007
69	***(Right) 80 (RHD)***	.....	1	319 4450
70	***(Right) 10 (RHD)***	.....	1	319 8006
67/68	***80 (RHD)***	.....	1	318 7323

8.106–2 TUBE, Brake Pressure Differential Valve To Front Wheels (Incl. Nut)

67/69	***(Left) 10 (RHD)***	.....	1	318 8734
67/69	***(Left) 80 (RHD)***	.....	1	318 8735
70	***(Left) 10 (RHD-LPB)***	.....	1	319 8025
70	***(Left) 80 (RHD-LPB)***	.....	1	319 8024

67/69	(Right) 01 (LHD)	.....	1	318 7672
70/	(Right) 01-40 (LHD)	.....	1	319 7311
67/69	(Right) 10-30-70 (LHD)	.....	1	318 7383
70	(Right) 10-30-70 (LHD)	.....	1	319 7697
71/	(Right) 10 (LDB)	.....	1	321 0453
67/68	(Right) 50-80 (LHD)	.....	1	318 7384
71/	(Right) 70 (LDB)	.....	1	319 7697
69	(Right) 80 (LHD)	.....	1	319 3974
70	(Right) 80 (LHD)	.....	1	319 7696
71/	(Right) 80 (LDB)	.....	1	319 7696

8.106–3 TUBE, Brake Pressure Differential Valve To Front Fitting (Incl. Nut)

67	01 (LHD)	.....	1	318 7726
68/69	01 (LHD)	.....	1	319 1795
70/	01-40 (LHD)	.....	1	319 7224
67	10 (LHD)	.....	1	318 7693
68	10-70 (LHD-* 8-13)	.....	1	318 7693
68	10-30-70-80 (LHD-* 8-14)	.....	1	319 0992
69	10-30-70-80 (LHD)	.....	1	319 0992
70	10-30-70-80 (LHD)	.....	1	319 7657
71/	10-70-80 (LDB)	.....	1	321 1649
67	50-80 (LHD)	.....	1	318 7694
68	80 (LHD-* 8-13)	.....	1	318 7694
67/69	***10 (RHD)***	.....	1	318 8726
67/68	***80 (RHD)***	.....	1	318 8688
69	***80 (RHD)***	.....	1	318 8726
70	***10-80 (RHD-LPB)***	.....	1	319 8010

8.106–4 GROMMET, Brake Tubes (In Wheelhouse)

67/	.....	20.085	2	312 6237

8.108–1 TUBE, Combination Valve To Front Wheels

71	(Left) 01 (WDB)	.....	1	321 1658
72	(Left) 01-40 (WDB)	.....	1	321 1658
71/	(Left) 10 (WDB)	.....	1	321 1677
71/	(Left) 70 (WDB)	.....	1	321 1683
71/	(Left) 80 (WDB)	.....	1	321 1678
71	(Right) 01 (WDB)	.....	1	321 1633
72	(Right) 01-40 (WDB)	.....	1	321 1633
71/	(Right) 10 (WDB)	.....	1	321 1681
71/	(Right) 70 (WDB)	.....	1	321 1676
71/	(Right) 80 (WDB)	.....	1	321 1682

8.110–1 TUBE, Combination Valve To Master Cylinder (Front Port)

71	01 (WDB)	.....	1	321 1656
72	01-40 (LPB-WDB)	.....	1	321 5314
72	01-40 (WPB-WDB)	.....	1	321 1656
71	10-80 (WDB)	.....	1	321 1680
72	10 (Six-LPB-WDB-LAC)	.....	1	321 2528
72	10-80 (WPB-WDB)	.....	1	321 1680
71/	70 (LPB-WDB)	.....	1	321 2528
71	70 (WPB-WDB)	.....	1	321 1685
72	70 (Six-WPB-WDB)	.....	1	321 5711
72	70 (V8-WPB-WDB)	.....	1	321 1685

8.110–2 TUBE, Combination Valve To Master Cylinder (Rear Port)

71	01 (WDB)	.....	1	321 1657
72	01–40 (LPB–WDB)	.....	1	321 5315
72	01–40 (WPB–WDB)	.....	1	321 1657
71	10–80 (WDB)	.....	1	321 1679
72	10 (Six–LPB–WDB–LAC)	.....	1	321 2529
72	10–80 (WPB–WDB)	.....	1	321 1679
71/	70 (LPB–WDB)	.....	1	321 2529
71	70 (WPB–WDB)	.....	1	321 1684
72	70 (Six–WPB–WDB)	.....	1	321 5712
72	70 (V8–WPB–WDB–* 8–65)	.....	1	321 1684
72	70 (V8–WPB–WDB–* 8–66)	.....	1	321 8207

8.110–3 TUBE, Combination Valve To Union

71	01 (WDB–* 8–60)	.....	1	321 3811
72	01–40 (WDB)	.....	1	321 3811
71	10–70–80 (WDB–* 8–60)	.....	1	321 3747
72	10–70–80 (WDB)	.....	1	321 3747

8.110–4 UNION, Combination Valve Tube To Rear Axle Hose

71	WDB (* 8–60)	8.100	1	318 7740
72	WDB	8.100	1	318 7740

8.110–5 ADAPTER, Master Cylinder To Brake Tube

72	70 (Rear)	.....	1	321 8206

8.112–1 BRACKET, Rear Brake Tube

67/69	01	.....	1	316 7937
68/69	30–70	.....	1	359 8672

8.112–2 ATTACHING PARTS, Bracket To Floor Pan

SCREW, Tapping 67/	01	17.671	2	400 1064

8.116–1 HOSE, Brake Tube

67/69	(Front) 01–18–30–50–70–80 (LDB)	.....	2	318 5142
70	(Front) 01–40–70 (Six–LDB)	.....	2	318 5143
71/	(Front) 01–40–70 (Six–LDB)	.....	1	321 3847
70/71	(Front) 01–30–70 (V8–LDB)	.....	2	318 5142
72	(Front) 01–40–70 (V8–LDB)	.....	2	321 3846
67/69	(Front) 15–16–17–19 (Six–LDB–Except Heavy Duty–* 8–4)	.....	2	318 5143
67/69	(Front) 15–16–17–19 (V8–LDB)	.....	2	318 5142
70	(Front) 10–80 (LDB)	.....	2	318 5142
71	(Front) 10–80 (LDB)	.....	1	321 3846
72	(Front) 10–80 (LDB)	.....	2	321 3846
67/69	***(Front) 15–16–17–19 (Heavy Duty–Six–* 8–4)***	.....	2	318 5142
67/69	(Rear) 01	.....	1	310 6725
70	(Rear) 01–40	.....	1	312 5983
71/	(Rear) 01–40 (* 8–73)	.....	1	321 3845
72	(Rear) 01–40 (* 8–74)	.....	1	321 8337
67/70	(Rear) 10–50–80 (Six)	.....	1	318 7806
67/70	(Rear) 10–50–80 (V8)	.....	1	310 6725
71/	(Rear) 10–80 (* 8–73)	.....	1	321 0197
72	(Rear) 10–80 (* 8–74)	.....	1	321 8335
68	(Rear) 30–70	.....	1	319 0707
69/70	(Rear) 30–70	.....	1	312 5983
71/	(Rear) 70 (* 8–73)	.....	1	321 1513
72	(Rear) 70 (* 8–74)	.....	1	321 8336

8.116–2 GASKET, Brake Tube Hose

67/	.....	.....	3	310 7540

8.116–3 CLIP, Brake Tube Fastening

67/			8.102	3	47 774

8.116–4 BRACKET, Front Brake Hose

67/			20.085	2	318 5136

8.116–5 BRACKET, Rear Brake Hose To Floor Pan

70/	01–40–70		.....	1	359 8672

8.118–1 VALVE, Combination (Differential And Proportioning)

71	01–70 (WDB)		.....	1	321 1628
71	10–80 (Six–WDB)		.....	1	321 1629
71	10–80 (V8–WDB)		.....	1	321 1630
72	01–10–40–70–80 (Six–WDB)		.....	1	321 1629
72	01–10–40–70–80 (V8–WDB)		.....	1	321 1630

8.118–2 ATTACHING PARTS, Valve To Wheelhouse

PLATE	71	WDB (* 8–59)	.....	1	321 1793
BOLT, Slotted	71	WDB (* 8–60)	17.018	2	G175188 NA
BOLT, Slotted	72	WDB	.....	2	G175188
NUT, Hexagon	71	WDB (* 8–59)	3.303	1	400 1457
NUT, Push	71	WDB (* 8–59)	4.234	2	400 1702
NUT	72	WDB	.....	2	400 3954
WASHER, Plain	71	WDB (* 8–60)	17.814	2	G120393 NA
WASHER, Plain	71	WDB (* 8–60)	17.814	2	400 1098
WASHER, Plain	72	WDB	.....	2	400 1098

8.120–1 VALVE, Rear Brake Proportioning

68/70	01–30–70 (WDB)		.....	1	319 0928
69/70	10–80 (V8–WDB)		.....	1	319 3798

8.120–2 ATTACHING PARTS, Valve To Sill

SCREW, Tapping	68/69	01–30–70 (V8–WDB)	17.671	1	400 1040
SCREW, Tapping	69	10–80 (V8–WDB)	17.671	1	400 1040
SCREW, Tapping	70	WDB	17.671	1	G9414012 NA

8.122–1 TEE, Rear Brake Tube

67/	01–30–40–70		.....	1	310 6729
67/	10–50–80		.....	1	318 7224

8.122–2 ATTACHING PARTS, Tee To Axle

BOLT, Hexagon	67/	01–30–70	17.038	1	G180022 NA
WASHER, Lock	67/	01–30–70	17.820	1	G120380 NA

8.124–1 TUBE, Combination Valve To Rear Axle Hose

71	01 (WDB–* 8–59)		.....	1	321 1643
71	10–80 (WDB–* 8–59)		.....	1	321 1686
71	70 (WDB–* 8–57)		.....	1	321 1661
71	70 (WDB–* 8–58 And * 8–59)		.....	1	321 2932

8.126–1 TUBE, Left Rear Brake (Incl. Nut)

67/69	01 (Six)	.....	1	317 5777
70/71	01-40 (Six-LDB)	.....	1	319 1193
72	01-40 (Six)	.....	1	319 1193
67	01 (V8-LDB)	.....	1	318 4612
68/69	01 (V8)	.....	1	318 4612
70/	01-30-40 (V8)	.....	1	319 7850
67/68	15-16-17-19 (Six-LDB-Except Heavy Duty-* 8-4)	.....	1	318 7226
69	15-19 (Six-LDB-Except Heavy Duty-* 8-4)	.....	1	319 3838
67/68	15-16-17-19 (V8-LDB)	.....	1	318 7228
69	18 (Six-LDB)	.....	1	319 3840
70	10 (Six-LDB)	.....	1	319 3840
69/70	80 (Six-LDB)	.....	1	319 3840
69/70	10-80 (V8)	.....	1	319 3840
67/68	18 (LDB)	.....	1	318 7228
68/69	30-70 (V8)	.....	1	319 1190
68/69	70 (Six)	.....	1	319 1193
70	70 (Six-LDB)	.....	1	319 1193
71	70 (Six-LDB)	.....	1	321 0984
72	70 (Six)	.....	1	321 0984
70	70 (V8)	.....	1	319 7850
71/	70 (V8)	.....	1	321 0974
67/68	50-80 (LDB)	.....	1	318 7228
67	01 (V8-WDB)	.....	1	318 5939
71	01 (Six-WDB)	.....	1	319 7850
67/70	10-50-80 (WDB)	.....	1	318 7589
69/70	10-80 (Six-WDB)	.....	1	319 3861
71/	10-80	.....	1	319 3840
69	***15-19 (Heavy Duty-Six-* 8-4)***	.....	1	319 3840
67/68	***15-16-17-19 (Heavy Duty-Six-* 8-4)***	.....	1	318 7228
70	***01-70 (Export-LHD-Six-WDB)***	.....	1	319 7850
71	***70 (Export-Six-WDB)***	.....	1	321 0974

8.126–2 TUBE, Right Rear Brake (Incl. Nut)

67/69	01 (Six)	.....	1	317 1222
70/71	01-40 (Six-LDB)	.....	1	319 1192
72	01-40 (Six)	.....	1	321 6606
67	01 (V8-LDB)	.....	1	318 4613
68/69	01 (V8)	.....	1	318 4613
70/	01-30-40 (V8)	.....	1	319 8227
67/68	15-16-17-19 (Six-LDB-Except Heavy Duty-* 8-4)	.....	1	318 7225
69	15-19 (Six-LDB-Except Heavy Duty-* 8-4)	.....	1	319 3839
67/68	15-16-17-19 (V8-LDB)	.....	1	318 7227
69/70	10-80 (V8)	.....	1	319 3841
67/68	18 (LDB)	.....	1	318 7227
68/69	30-70 (V8)	.....	1	319 1191
68/69	70 (Six)	.....	1	319 1192
70	70 (Six-LDB)	.....	1	319 1192
70	70 (V8)	.....	1	319 8227
71	70 (Six-LDB)	.....	1	321 0985
72	70 (Six)	.....	1	321 6605
71/	70 (V8)	.....	1	321 0973
67/68	50-80 (LDB)	.....	1	318 7227
67	01 (V8-WDB)	.....	1	318 5940
71	01 (Six-WDB)	.....	1	319 8227
70	10 (Six-LDB)	.....	1	319 3841
69/70	10-80 (Six-WDB)	.....	1	319 3862
67/70	10-50-80 (WDB)	.....	1	318 7590
69	18 (Six-LDB)	.....	1	319 3841
71/	10-80	.....	1	319 3841
69/70	80 (Six-LDB)	.....	1	319 3841

67/68	***15-16-17-19 (Heavy Duty-Six-* 8-4)***	.....	1	318 7227
69	***15-19 (Heavy Duty-Six-* 8-4)***	.....	1	319 3841
70	***01-70 (Export-LHD-Six-WDB)***	.....	1	319 8227
71	***70 (Export-Six-WDB)***	.....	1	321 0973

8.130 NUT, Brake Tube For 3/16" Tube

67/	(3/8" Hex. Head)	17.446	AR	G137396
67/	(7/16" Hex. Head)	.....	AR	318 7730
67/	(1/2" Hex. Head)	.....	AR	317 2068
71/	(9/16"-18 Hex. Head)	.....	1	321 2522
72	(9/16"-20 Hex. Head)	.....	1	321 8201

8.140–1 PEDAL, Brake

71	WAT (LPB)	.....	1	321 2250
72	(WAT-LPB)	.....	1	321 6207
71	WAT (WPB)	.....	1	321 2251
72	(WAT-WPB)	.....	1	321 6206
67	01 (LHD-WST)(LHD-WOD)(LHD-W4ST)	.....	1	317 1686
68/69	01 (LHD-WST)(LHD-WOD) (LHD-W4ST)	.....	1	319 1604
70	01-40 (WST)(W4ST)	.....	1	319 7338
71	01-40 (WST-LPB)(W4ST-LPB)	.....	1	321 2256
72	01-40 (WST-WPB)	.....	1	321 6210
71	01-40 (WST-WPB)(W4ST-WPB)	.....	1	321 2257
72	01-40 (WST-LPB)	.....	1	321 6211
67	01 (LHD-WAT)	.....	1	316 9339
68/70	01-10-30-70-80 (LHD-WAT)	.....	1	319 1602
67	10-50-80 (LHD-WST)(LHD-WOD)(LHD-W4ST)	.....	1	317 6314
67	10-50-80 (LHD-WAT)	.....	1	317 6302
68/70	10-80 (LHD-WST)(LHD-WOD)(V8-W4ST)	.....	1	319 1606
71	10-70-80 (WST-LPB)(W4ST-LPB)	.....	1	321 2246
71	10-70-80 (WST-WPB)(W4ST-WPB)	.....	1	321 2247
72	10-80 (Six-WST-LPB)	.....	1	321 6209
72	10-80 (Six-WST-WPB)	.....	1	321 6208
68/69	30-70 (WST)(W4ST)	.....	1	318 9286
70	30-70 (WST)(W4ST)	.....	1	319 1606
72	70 (WST-LPB)(W4ST-LPB)	.....	1	321 6209
72	70 (WST-WPB)(W4ST-WPB)	.....	1	321 6208
67/69	***01 (RHD)***	.....	1	317 2504
67/70	***10-80 (RHD)***	.....	1	318 7992

8.140–2 BUSHING, Brake Pedal

67/	.....	.....	2	316 7019

8.148–1 COVER, Brake Pedal Pad Rubber

67/	01-40 (WST)(WOD)(W4ST)	.....	1	317 1670
67/71	01 (WAT-LPB-7-3/8" Long)	.....	1	316 3826
67/71	01 (LHD-WAT-WPB-7-3/8" Long)	.....	1	315 0734
67/	10-30-50-70-80 (WST)(WOD)(W4ST)	.....	1	317 5994
67/71	10 (LHD-WAT-LPB-6-15/16" Long)	.....	1	317 5997
67/71	10 (LHD-WAT-WPB-6-15/16" Long)	.....	1	317 5996
68	30-70 (LHD-WAT-LPB)	.....	1	317 5997
68	30-70 (LHD-WAT-WPB)	.....	1	317 5996
69/70	30 (WAT)...(Incl. Overlay)	.....	1	319 5191
67	50 (WAT-LPB)...(Incl. Overlay)	.....	1	317 6303
67	50 (WAT-WPB)...(Incl. Overlay)	.....	1	319 5191

69/71	70 (Except SST-WAT-LPB-6-15/16" Long)	1	317 5997	
69/71	70 (Except SST-WAT-WPB-6-15/16" Long)	1	317 5996	
71	70 (Except AMX-WAT-LPB-6-15/16" Long)	1	317 5997	
71	70 (Except AMX-WAT-LPB-6-15/16" Long)	1	317 5996	
69/71	70 (SST-WAT-6-15/16" Long)...(Incl. Overlay)	1	319 5191	
71	70 (AMX-WAT-6-15/16" Long)...(Incl. Overlay)	1	319 5191	
67/68	80 (880-WAT-LPB)	1	317 5997	
67/68	80 (880-WAT-WPB)	1	317 5996	
67/68	80 (LHD-990-WAT-LPB)(LHD-DPL-WAT-LPB) ...(Incl. Overlay)	1	317 6303	
67/68	80 (LHD-990-WAT-WPB)(LHD-DPL-WAT-WPB)...(Incl. Overlay)	1	319 5191	
69/70	80 (DPL-WAT)(SST-WAT)...(Incl. Overlay)	1	319 5191	
69/71	80 (Except SST And DPL-WAT-LPB-6-15/16" Long)	1	317 5997	
69/71	80 (Except SST And DPL-WAT-WPB-6-15/16" Long)	1	317 5996	
71/	WAT (6" Long)	1	321 2262	
67	***10-80 (RHD-V8-WAT-LPB)***	1	316 3826	
67	***10-80 (RHD-V8-WAT-WPB)***	1	315 0734	
68/70	***10-80 (RHD)***	1	317 5994	
67	***10-80 (RHD-Six-Post Office)***	1	317 5994	

8.148–2 OVERLAY, Brake Pedal Pad Rubber Cover

72	10 (WAT)	1	321 2263	
69/	30-70 (WST)(WOD)(W4ST)	1	317 6315	
67	50 (WST)(WOD)(W4ST)	1	317 6315	
67/71	80 (990-WST)(990-WOD)(990-W4ST)(DPL-WST)(DPL-WOD)(DPL-W4ST)	1	317 6315	
71/	70 (SST-WAT)(AMX-WAT)	1	321 2263	
71/	80 (SST)(Brougham)	1	321 2263	

8.148–3 ATTACHING PARTS, Pad To Pedal

NUT, Hexagon	67/71	80 (LHD-990-WAT)(LHD-DPL-WAT)	17.412	2	G271172	
NUT, Hexagon	68/71	30-70 (WAT-SST)	17.412	2	G271172	

8.156–1 BOLT, Brake Pedal

67/71	01-30-70	1	317 0588	
67/71	10-50-80 (LHD)	1	317 0588	
72		1	400 4486	
67/70	***10-80 (RHD)***	1	316 7027	

8.156–2 ATTACHING PARTS, Bolt To Pedal

NUT, Lock	67/68	17.416	1	G442828	
NUT, Lock	69/71	17.416	1	G9411783	NA
NUT, Lock	72	17.416	1	400 4008	

8.156–3 BUSHING, Brake Pedal To Link

67/71	01-30-70	2	317 0589	
67/71	10-50-80 (LHD)	2	317 0589	
72		1	321 5922	
67/71	***10-80 (RHD)***	2	314 5487	

8.156–4 SPACER, Break Pedal To Link

72		2	321 5924	

8.160–1 SHAFT, Brake Pedal

67/71	01-40	1	317 2018	
72	01-40 (WST)	1	321 1165	
72	01-40 (WAT)	1	317 2018	

Printed in U.S.A.

67/68	10-50-80 (LHD-Six-Except Heavy Duty-* 8-4)	.....	1	317 2018
67/69	10-50-80 (V8-WST)(V8-WOD)(V8-W4ST)	.....	1	317 3432
67/	10-50-80 (V8-WAT)	.....	1	317 2018
69	10 (Six-WST)(Six-WOD)	.....	1	317 3432
69/	10-80 (Six-WAT)	.....	1	317 2018
70	10-80 (WST)(W4ST)	.....	1	317 2018
71	10-70-80 (WST)(W4ST)	.....	1	321 1165
72	10-80 (Six-WST)	.....	1	321 1165
71/	10-70-80 (WAT)	.....	1	317 2018
68/70	30-70	.....	1	317 2018
72	70 (WST)(W4ST)	.....	1	321 1165
67/69	***10 (Heavy Duty-Six-WST)(Export-Six-WST)***	.....	1	317 3432
67/69	***10 (RHD-Six)***	.....	1	317 3432

8.160-2 ATTACHING PARTS, Shaft To Pedal

BOLT, Hexagon	67/		17.038	1	G181593 NA
WASHER, Lock	67/		17.820	1	G120214 NA
NUT, Hexagon	67/		17.406	1	G120368

8.164-1 SUPPORT, Brake Pedal

67	01 (LHD-LPB)	.....	1	318 6433
67	01 (LHD-WPB)	.....	1	318 6432
68	01 (LHD-LPB)	.....	1	319 1149
68	01 (LHD-WPB)	.....	1	319 1148
69	01 (LHD-LPB-* 8-37)	.....	1	319 1149
69	01 (LHD-WDB-* 8-37)	.....	1	319 1148
69	01 (LHD-* 8-38)	.....	1	319 6309
70/	01-40	.....	1	319 5431
67	10-50-80 (LHD)	.....	1	318 7536
68	10-80 (LHD-Six-* 8-15)	.....	1	319 1172
68	10-80 (LHD-Six-* 8-16) ***(Use 319 1172)***	.....	1	319 3601
68	10-80 (LHD-V8) ***(Use 319 1172)***	.....	1	319 3601
69	10-80 (LHD-* 8-37)	.....	1	319 1172
69	10-80 (LHD-* 8-38)	.....	1	319 6325
70/	10-80 (LHD)	.....	1	319 5435
68	30-70	.....	1	318 9538
69	30-70 (* 8-37)	.....	1	318 9538
69	30-70 (* 8-38)	.....	1	319 6324
70/	30-70	.....	1	319 5434
67/69	***01 (RHD-Six)***	.....	1	317 1197
67/70	***10-80 (RHD)***	.....	1	317 6876

8.164-2 ATTACHING PARTS, Support To Dash

STUD	67/68	01 (WPB-2 Req. -1-9/16" Long)(LPB-4 Req. -1-9/16" Long)	8.035	AR	315 7870
STUD	67/68	01-10-30-50-70-80 (LHD-1-3/8" Long)	8.035	1	317 7692
STUD	69	01-30-70 (LHD-* 8-37)	8.035	1	317 7692
STUD	67/68	10-50-80 (Six-WAT-4 Req. -1-9/16" Long)(V8-4 Req. -1-9/16" Long)	8.035	AR	315 7870
STUD	67/68	10-50-80 (LHD-WST-1-3/4" Long)(LHD-WOD-1-3/4" Long)	8.035	4	318 8527
STUD	69	10-80 (* 8-37)	8.035	4	317 7692
STUD	68	30-70	8.035	4	315 7870
STUD	69	30-70 (WPB-2 Req. -1-9/16" Long-* 8-37)(LPB-4 Req. -1-9/16" Long-* 8-37)	8.035	AR	315 7870
PLATE	69	(* 8-38)...(Incl. 2 Screws-1-9/16" Long)	.....	1	319 4871
PLATE	69	WPB (* 8-38)...(Incl. 2 Screws-1-5/16" Long)	.....	1	319 8599
PLATE	70/	LPB...(Incl. 2 Screws-1-9/16" Long)	.....	1	319 4871
PLATE	70/	WPB...(Incl. 2 Screws-1-5/16" Long)	.....	1	319 8599
STUD	69	30-70 (WPB-2 Req. -1-9/16" Long)(LPB-4 Req. -1-9/16" Long)	8.035	AR	315 7870

WASHER, Lock	67/69	01 (LPB-4 Req.)(WPB-2 Req.)	17.820	AR	G120382 NA
WASHER, Lock	67/69	10-30-50-80	17.820	4	G120382 NA
WASHER, Lock	70	30-70 (LPB-1 Req.)(WPB-3 Req.)	10.260	AR	400 3803
WASHER, Plain	70/		17.814	2	400 1104
NUT, Hexagon	67/69	01 (LPB-4 Req.)(WPB-2 Req.)	17.412	AR	G271193 NA
NUT, Hexagon	67	01 (LPB)	17.412	2	G271193 NA
NUT, Hexagon	67	01 (WPB)	17.406	2	G271190 NA
NUT, Hexagon	70/		17.412	2	G271190 NA
NUT, Hexagon	67/68	10-30-50-70-80	17.406	4	G120369 NA
NUT, Hexagon	70	30-70 (LPB-1 Req.)(WPB-3 Req.)	17.406	AR	G120369 NA
NUT, Speed	69/	(* 8-38)	8.164	1	400 3084
NUT, Lock	69	LPB (* 8-38)	17.417	1	448 6876

8.164–3 ATTACHING PARTS, Support To Instrument Panel

WASHER, Plain	67/69		10.339	2	400 1775
NUT, Speed	67/		8.590	2	400 0235
NUT, Hexagon	67/69		10.340	2	400 1810

8.164–4 ATTACHING PARTS, Support To Instrument Panel Brace

BOLT, Hexagon	***67/69***	***01 (RHD)***	17.038	2	G181635 NA
WASHER, Plain	***67/69***	***01 (RHD)*** ***(Use 400 3808)***	17.814	2	G120394 NA
WASHER, Lock	***67/69***	***01 (RHD)***	17.820	2	G120382 NA
NUT, Hexagon	***67/69***	***01 (RHD)***	17.406	2	G120369 NA

8.180–1 LEVER ASSEMBLY, Foot Operated Parking Brake

70	01-40	.....	1	319 7294
71/	01-40	.....	1	812 0099
67	10-50-80	.....	1	318 6010
68/69	10-80	.....	1	320 8864
70/	10-80	.....	1	319 7368
68/69	30-70	.....	1	318 9350
70	30-70	.....	1	319 7369
71/	70	.....	1	812 0100

8.180–2 ATTACHING PARTS, Lever To Dash

NUT, Hexagon	67/	10-30-70-80	23.039	2	400 2109
NUT, Hexagon	70/	01-40	23.039	2	400 2109

8.180–3 ATTACHING PARTS, Lever To Instrument Panel

BOLT, Hexagon	67/68	10-30-50-70-80	23.020	1	400 0608
SCREW, Tapping	69/71	10-80	23.015	1	400 2070
SCREW, Hexagon Head	70/	01-40	23.008	1	400 4104
SCREW, Hexagon Head	69/	30-70	23.008	1	400 4104
WASHER, Lock	67/68	10-30-50-70-80	17.820	1	G120214 NA
NUT, Hexagon	67/68	10-30-50-70-80	17.406	1	G120368

8.180–4 LEVER, Hand Operated Parking Brake

67/69	01 (LHD)	.....	1	318 1753
67/	***01 (RHD)***	.....	1	316 2333

8.180–5 ATTACHING PARTS, Lever To Brace

STUD	67/69	01	.....	1	315 4677
WASHER, Plain	67/69	01	10.260	2	400 3808
WASHER, Lock	67/69	01	17.820	1	G120382 NA
NUT, Hexagon	67/69	01	17.406	1	G120369 NA

8.180–6 ATTACHING PARTS, Lever To Stud

BOLT, Hexagon	67/69	01	17.038	1	G181608	NA
WASHER, Lock	67/69	01	17.820	1	G120214	NA
NUT, Hexagon	67/69	01	17.406	1	G120368	

8.180–7 COVER, Foot Operated Parking Brake Lever Rubber

70/71	01-40 (Horizontal Grooves)	.....	1	317 5995
67/71	10-30-50-70-80 (Horizontal Grooves)	.....	1	317 5995
71/	(Vertical Grooves)	.....	1	321 2530

8.180–8 OVERLAY, Foot Operated Parking Brake Lever Cover

67	50	.....	1	317 6024
69/71	30-70 (SST-* 8-51)(AMX-* 8-51)	.....	1	317 6024
71/	70 (SST-* 8-52)(AMX-* 8-52)	.....	1	321 2531
67	80 (990)(DPL)	.....	1	317 6024
68/71	80 (DPL-* 8-51)(SST-* 8-51)	.....	1	317 6024

8.180–9 SPRING, Foot Operated Parking Brake Return

70/	(Used With Warning Light)	.....	1	319 7208
67/69	10-30-50-70-80 (LHD-Used With Warning Light)	.....	1	317 7442

8.180–10 GROMMET, Hand Operated Parking Brake Lever

67/69	01	.....	1	317 1663

8.180–11 BRACE, Hand Operated Parking Brake Lever

67/69	01 (LHD)	.....	1	318 1751
67/69	***01 (RHD)***	.....	1	317 0708

8.180–12 ATTACHING PARTS, Brace To Dash Panel

SCREW, Machine	67/69	01	17.598	1	400 1009	NA
WASHER, Sealing	67/69	01	12.125	1	400 0360	
WASHER, Lock	67/69	01	17.820	1	G120380	NA

8.180–13 ATTACHING PARTS, Brace To Instrument Panel

SCREW, Machine	67/69	01	17.610	1	G157728	NA
WASHER, Plain	67/69	01	17.814	1	G120392	
NUT, Hexagon	67/69	01	17.412	1	G271172	

8.182–1 ROD, Parking Brake Release

70/	01-40	.....	1	448 7993
67	10-50-80	.....	1	320 8303
68/	10-30-70-80	.....	1	320 8865

8.182–2 HANDLE, Parking Brake Release Rod

70/	01-40	.....	1	448 7994
67/	10-30-50-70-80	.....	1	320 8302

8.182–3 GROMMET, Parking Brake Release Rod

70/	01-40	.....	1	320 8304
67/	10-30-50-70-80	.....	1	320 8304

8.182–4 SPRING, Parking Brake Release Rod Return

67/	10-30-50-70-80	.....	1	320 8305

8.182–5 ATTACHING PARTS, Rod To Lever Assembly

NUT, Push	67/	10-30-50-70-80	.....	1	320 8306

8.187–1 BELLCRANK, Parking Brake

67/69	01	.....	1	317 2990
67/68	10-50-80 (WDB)	.....	1	318 7528
69/70	***10-80 (Export-LHD-Six-WDB)(RHD-Six-WDB)***	.....	1	318 7528

8.187–2 PIN, Parking Brake Bellcrank

67/69	01	.....	1	317 2033
67/68	10-50-80 (WDB)	.....	1	318 7674
69/70	***10-80 (Export-LHD-Six-WDB)(RHD-Six-WDB)***	.....	1	318 7674

8.187–2a ATTACHING PARTS, Parking Brake Bellcrank Pin

PIN, Cotter	69	01	17.460	1	G103373
***PIN, Cotter	***69/71***	***10-80 (Export-LHD-Six-WDB)(RHD-Six-WDB)***	.....	1	313 4066

8.187–3 RETAINER, Parking Brake Bellcrank Pin

67/69	01	.....	1	313 4066
67/68	10-50-80 (WDB)	.....	1	313 4066
69/70	***10-80 (Export-LHD-Six-WDB)(RHD-Six-WDB)***	.....	1	313 4066

8.189–1 BRACKET, Parking Brake Cable Bellcrank

67/	01	.....	1	317 1979
67/68	10-50-80 (WDB)	.....	1	318 7529
69/	10-80 (Six-WDB)	.....	1	318 7529

8.189–2 ATTACHING PARTS, Bracket To Floor Pan

SCREW, Machine	67/	10-50-80 (WDB)	17.629	2	400 1798

8.192–1 CABLE, Foot Operated Parking Brake Lever To Equalizer

70/71	01 (88-7/8" Overall Length)	.....	1	319 7336
71/	01 (91-9/16" Overall Length)	.....	1	321 2339
67/69	10-50-80 (LHD-LDB)	.....	1	318 6250
68/69	30	.....	1	319 0876
70	30	.....	1	319 8094
70/71	40 (76-7/8" Overall Length)	.....	1	321 0007
71/	40 (79-3/8" Overall Length)	.....	1	321 2340
68/69	70	.....	1	319 0875
70/	70	.....	1	319 8093
67/68	10-50-80 (LHD-WDB)	.....	1	318 7530
69	10-80 (Six-WDB)	.....	1	318 7530
69	10-80 (V8-WDB)	.....	1	318 6250
70/	10-80 (LHD-Six-LDB)(LHD-V8)	.....	1	~~319 8091~~
67/69	***10-80 (RHD-LDB)***	.....	1	318 7944
67/68	***10-80 (RHD-WDB)***	.....	1	318 7945
69/70	***10-80 (RHD-Six-WDB)***	.....	1	318 7945
69	***10-80 (RHD-V8-WDB)***	.....	1	318 7944
70	***10 (Export-LHD-Six-WDB)***	.....	1	318 7530
70	***10-80 (RHD-Six-LDB)***	.....	1	319 8092
70	***10-80 (RHD-V8)***	.....	1	319 8092

321 2339

BRAKES - WHEELS

8.192–2 ATTACHING PARTS, Cable To Lever

CLIP	70/	01-40	8.224	1	316 4299
CLIP	67/	10-30-70-80	8.224	1	316 4299

8.192–3 ATTACHING PARTS, Cable To Floor Pan

CLIP	67/71	15-16-18-19-59-85-86-88-89	.....	2	313 5224
CLIP	67/68	17-87	.....	3	313 5224
CLIP	71	10-80	.....	1	319 8032
CLIP, Closed	68/71	01-30-70 ***(Use 400 1802)***	4.160	2	15 708
CLIP, Closed	72	01-70 ***(Use 400 1802)***	4.160	1	15 708
CLIP, Closed	***67/70***	***10-80 (RHD)*** ***(Use 400 1802)***	4.160	2	15 708
SCREW, Tapping	71	10-80	.....	4	400 1701
SCREW, Tapping	67/69	15-16-18-19-59-85-86-88-89	17.671	2	400 1042
SCREW, Tapping	67/68	17-87	17.671	3	400 1042
SCREW, Tapping	68/71	01-30-70	17.671	2	400 1042
SCREW, Tapping	72	01-70	17.671	1	400 1042
SCREW, Tapping	***67/70***	***10-80 (RHD)***	17.671	2	400 1042

8.192–4 ATTACHING PARTS, Cable To Seat Reinforcement

CLIP	67/	10-30-50-70-80 ***(Use 400 1802)***	4.160	1	15 708
SCREW, Tapping	67/	10-30-50-70-80	17.671	1	400 1042

8.192–5 ATTACHING PARTS, Cable To Fuel Line

CLIP	***67/69***	***01 (RHD)***	.....	1	79 394

8.192–6 ATTACHING PARTS, Cable To Rear Crossmember

CLIP	***67/69***	***10-80 (RHD)*** ***(Use 400 1802)***	4.160	2	15 708
SCREW, Tapping	***67/69***	***10-80 (RHD)***	17.670	2	G172427 NA

8.192–7 ATTACHING PARTS, Cable To Equalizer

WASHER, Plain	67/	10-30-50-70-80	17.814	1	G120393 NA
NUT, Sleeve	67/	10-30-50-70-80	.....	1	313 0642
NUT, Hexagon	67/	10-30-50-70-80	17.406	1	G120368 NA

8.192–7a ATTACHING PARTS, Cable To Bracket

CLIP	70	01	.....	1	316 4299
CLIP	67/	10-50-80	.....	1	316 4299

8.192–7b ATTACHING PARTS, Cable To Bellcrank

PIN, Cotter	67/70	10-50-80 (WDB)	17.460	1	G103373 NA

8.192–8 BRACKET, Foot Operated Parking Brake Cable

70/71	01	.....	1	319 5247
67/	10-50-80	.....	1	318 7088
70/71	40	.....	1	319 8752

8.192–9 ATTACHING PARTS, Bracket To Floor Pan

SCREW, Machine	67/	10-50-80	2.020	3	400 0715

8.192–10 CABLE, Hand Operated Parking Brake Lever To Equalizer

67/69	01 (LHD)	.....	1	317 2036
67/69	***01 (RHD)***	.....	1	317 2997

8.192–11 ATTACHING PARTS, Cable To Lever

CLIP	67/69	01	.....	1	313 0165

8.192–12 ATTACHING PARTS, Cable To Clutch Pivot

CLIP	67/69	01 (LHD) ***(Use 400 1802)***	4.160	1	15 708

8.192–13 ATTACHING PARTS, Cable To Clutch Pivot Bracket

CLIP	67/69	01	.....	1	316 4299

8.192–14 ATTACHING PARTS, Cable To Floor Pan

CLIP	***67/69***	***01 (RHD)***	.....	1	313 5224
SCREW, Tapping	***67/69***	***01 (RHD)***	17.671	1	400 1042

8.192–15 ATTACHING PARTS, Cable To Side Sill

CLIP	67/69	01 (LHD) ***(Use 400 1802)***	4.160	2	15 708
CLIP	72	01 ***(Use 400 1802)***	4.160	1	15 708
CLIP	70/71	01–70	.....	2	313 5224
CLIP	72	01–40	.....	2	313 5224
SCREW, Tapping	67/	01 (LHD–12–11 x 1/2)	17.671	2	400 1042
SCREW, Tapping	69/	01–10–70–80 (LHD–10–16 x 1/2)	15.320	2	400 1701

8.192–16 ATTACHING PARTS, Cable To Seat Reinforcement

CLIP	67/71	01 ***(Use 400 1802)***	4.160	1	15 708
CLIP	72	10–70–80 ***(Use 400 1802)***	4.160	1	15 708
SCREW, Tapping	67/71	01	17.671	1	400 1040
SCREW, Tapping	72	10–70–80	17.671	1	400 1042
NUT, Spring	67/69	01	17.426	1	G447026

8.192–16a ATTACHING PARTS, Cable To Dash Panel

CLIP	69/	30–70	.....	1	319 1064
CLIP	70/	01–40	.....	1	319 8032
CLIP	70/	10–80 (LHD)	8.330	2	313 5224
SCREW, Tapping	70/	01–40 (12–11 x 1/2)	17.671	2	400 1042
SCREW, Tapping	69/	01–10–80 (LHD–10–16 x 1/2)	15.320	2	400 1701
SCREW, Tapping	70/	01–40 (10–16 x 3/4)	17.671	2	400 0774
SCREW, Tapping	69/	30–70	17.671	2	400 1042

8.192–17 BRACKET, Hand Operated Parking Brake Cable

67/	01	.....	1	317 1977

8.192–18 BRACKET, Parking Brake Cable To Floor Pan

69/	30–70	.....	1	318 9696

8.214–1 EQUALIZER, Parking Brake

67/		.....	1	317 2989

Printed in U.S.A.

BRAKES - WHEELS

8.214–2 ATTACHING PARTS, Equalizer To Cable

PIN, Cotter	67/		17.440	2	G103375 NA
WASHER, Plain	67/		17.814	1	400 1116
NUT, Hexagon	67/		17.406	1	G120368 NA
NUT, Sleeve	67/		.....	1	313 0642

8.214–4 ROD, Parking Brake Cable Adjusting

67/69	01	.....	1	318 7209
67/68	10-50-80 (WDB)	.....	1	318 7209
69/70	***10-80 (Export-Six-WDB)***	.....	1	318 7209

8.214–5 ATTACHING PARTS, Rod To Bellcrank

WASHER, Plain	67/69	01 (1/16" Thick)	17.814	1	G120393 NA
WASHER, Plain	67/69	01 (3/16" Thick)	17.814	1	400 1116
WASHER, Plain	67/69	01 (5/16" Thick)	17.814	1	400 1285
WASHER, Plain	67/70	10-50-80 (WDB-1/16" Thick)	17.814	1	G120393 NA
WASHER, Plain	67/70	10-50-80 (WDB-5/16" Thick)	17.814	1	400 1285
WASHER, Plain	67/70	10-50-80 (3/16" Thick)	17.814	1	400 1116
PIN, Cotter	67/69	01	17.460	1	G103362 NA
PIN, Cotter	67/70	10-50-80	17.460	1	G103362 NA

8.214–6 ATTACHING PARTS, Rod To Equalizer

WASHER, Plain	67/71	01-10-50-80	17.814	1	400 1116
NUT, Hexagon	67/71	01-10-50-80	17.406	1	G120368 NA
NUT, Sleeve	67/71	01-10-50-80	.....	1	313 0642
NUT, Sleeve	72		.....	1	313 0642

8.220–1 CABLE, Parking Brake To Rear Wheels

67/69	(Left) 01	.....	1	317 2991
70/	(Left) 01-40 (30-1/8" Overall Length)	.....	1	318 9787
71/	(Left) 01-40 (27-9/16" Overall Length)	.....	1	321 2337
67/68	(Left) 10-50-80	.....	1	318 6248
69	(Left) 10-80 ***(Use 319 6984)***	.....	1	319 4008
70/	(Left) 10-80	.....	1	319 6984
68/70	(Left) 30-70	.....	1	318 9787
71/	(Left) 70	.....	1	321 1054
67/69	(Right) 01	.....	1	317 2992
70/71	(Right) 01-40 (69-1/8" Overall Length)	.....	1	318 9788
71/	(Right) 01-40 (66-3/8" Overall Length-* 8-71)	.....	1	321 2338
72	(Right) 01-40 (66-3/8" Overall Length-* 8-72)	.....	1	321 9349
67/68	(Right) 10-50-80	.....	1	318 6249
69/	(Right) 10-80	.....	1	319 4009
68/70	(Right) 30-70	.....	1	318 9788
71/	(Right) 70 (* 8-71)	.....	1	321 1055
72	(Right) 70 (* 8-72)	.....	1	321 9348

8.220–2 ATTACHING PARTS, Cable To Bracket

CLIP	67/		8.224	2	316 4299

8.220–3 ATTACHING PARTS, Cable To Rear Suspension Crossmember

CLIP	67/	10-50-80	.....	1	317 1840
BOLT, Hexagon	67/68	10-50-80	17.038	2	G181591 NA
SCREW, Tapping	69/	10-80 (5/16"-24 x 3/4")	22.056	2	400 0032
SCREW, Tapping	70	10-80 (5/16"-18 x 3/4")	3.105	2	400 3875
WASHER, Lock	67/68	10-50-80	17.820	2	G120214 NA

Printed in U.S.A.

BRAKES - WHEELS

8.220–4 ATTACHING PARTS, Cable To Rear Axle Housing

CLIP, Closed	67/	01-30-70	17.134	1	G127879
BOLT, Hexagon	67/71	01-30-70	17.038	1	G181595 NA
BOLT, Hexagon	72	01-40-70	17.038	1	G181595 NA
WASHER, Lock	67/71	01-30-70	17.820	1	G120214 NA
WASHER, Lock	72	01-40-70	17.820	1	G120214
NUT, Hexagon	67/71	01-30-70	17.406	1	G120368
NUT, Hexagon	72	01-40-70	17.406	1	G120368

8.220–5 SPRING, Parking Brake Rear Cable Retaining

67/69	01	.....	2	317 8455
67/	10-50-80	.....	1	317 8455

8.220–5a SPRING, Parking Brake Right Rear Pullback

69/		5.190	1	319 0712

8.224–1 BRACKET, Parking Brake Rear Cable Guide

67/69	01	.....	1	317 1976
68/	30-70	.....	1	318 9695
70/	01-40	.....	1	318 9695

8.224–2 ATTACHING PARTS, Bracket To Spring Bracket

CLIP	67	01	.....	2	316 4299

8.240–1 DRUM ASSEMBLY, Front Brake

67	01-70 (Six)	.....	2	315 3621
67/	01-30-40-70 (V8-LDB)	.....	2	317 6894
68	01-70 (Six-* 8-19)	.....	2	315 3621
68	01-70 (Six-* 8-20) ***(Use 319 2308)***	.....	2	318 8994
69/	01-40-70 (Six)	.....	2	315 3621
67	15-16-17-19 (Six-LDB-* 8-17-Except Heavy Duty-* 8-4)	.....	2	315 3621
67	15-16-17-19 (Six-LDB-* 8-18-Except Heavy Duty-* 8-4) ***(Use 319 2308)***	.....	2	318 8994
68/69	15-17-19 (Six-LDB-Except Heavy Duty-* 8-4) ***(Use 319 2308)***	.....	2	318 8994
67/68	15-16-17-19 (V8-LDB)	.....	2	317 6894
67/68	18 (LDB)	.....	2	317 6894
69	10-80 (290-LDB-Except Heavy Duty-* 8-4)	.....	2	317 6894
69	10-80 (343-LDB-* 8-35)(390-LDB-* 8-35)	.....	2	317 6894
69	10-80 (343-LDB-* 8-36)(390-LDB-* 8-36)	.....	2	319 6476
69	18-80 (Six-LDB-Except Heavy Duty-* 8-4)	.....	2	317 6894
67/68	50-80 (LDB)	.....	2	317 6894
70	10-80 (Six-LDB-Except Heavy Duty-* 8-4)	.....	2	317 6894
70/	10 (360-LDB)(390-LDB)(401-LDB)	.....	2	319 6476
70/	80 (V8-LDB)	.....	2	319 6476
70/	18 (304-LDB)	.....	2	319 6476
70/	15-19 (304-LDB-Except Heavy Duty-* 8-4)	.....	2	317 6894
71/	15-19-85 (Six-LDB-Except Heavy Duty-* 8-4)	.....	2	317 6894
71/	18 (Six-LDB)	.....	2	319 6476
69	80 (Six-LDB-Except Heavy Duty-* 8-4)	.....	2	317 6894
69	***10-80 (Heavy Duty-290-LDB-* 8-4 And * 8-35)***	.....	2	317 6894
69	***10-80 (Heavy Duty-LDB-* 8-4 And * 8-36)***	.....	2	319 6476
70/	***10-80 (Heavy Duty-Six-LDB-* 8-4)***	.....	2	319 6476
67/68	***15-16-17-19 (Heavy Duty-Six-* 8-4)***	.....	2	317 6894
69	***18 (Heavy Duty-LDB-* 8-4 And * 8-35)***	.....	2	317 6894
70/	***15-19 (Heavy Duty-304-LDB-* 8-4)***	.....	2	319 6476
70/	***01-40-70 (Export-Six-Finned Type)*** ***(Use 319 2308)***	.....	2	318 8994

8.240–2 DRUM ASSEMBLY. Rear Brake (Incl. Hub And Drum)

67	01 (Six)	.....	2	316 0643
68	01–70 (Six–* 8–19)	.....	2	316 0643
68	01–70 (Six–* 8–20) ***(Use 319 2309)***	.....	2	318 8995
69/70	01–40–70 (Six–LDB)	.....	2	316 0643
71/	01–40–70 (Six–LDB–Used With Styled Wheels)	.....	2	316 0643
70/	01–70 (Six–WDB)	.....	2	317 6961
67	01 (V8–LDB)	.....	2	317 6961
67	01 (V8–WDB)	.....	2	317 7121
68/71	01–30–70 (V8)	.....	2	317 6961
72	01–40–70 (V8–Used Less Styled Wheels)	.....	2	317 6961
72	01 (304–Used With Styled Wheels)(360–Used With Styled Wheels)	.....	2	321 5601
67	15–16–17–19 (Six–LDB–* 8–17–Except Heavy Duty–* 8–4)	.....	2	316 0643
67	15–16–17–19 (Six–LDB–* 8–18–Except Heavy Duty–* 8–4) ***(Use 319 2309)***	.....	2	318 8995
68/69	15–17–19 (Six–LDB–Except Heavy Duty–* 8–4) ***(Use 319 2309)***	.....	2	318 8995
67/68	15–16–17–19 (V8–LDB)	.....	2	317 6961
71/	15–19–85–89 (Six–LDB–Except Heavy Duty–* 8–4)	.....	2	317 6961
67/68	18 (LDB)	.....	2	317 6961
69	18–85–88 (Six–LDB–Except Heavy Duty–* 8–4)	.....	2	317 6961
67/68	10–50–80 (WDB)	.....	2	317 7121
69	10–80 (290–LDB–Except Heavy Duty–* 8–4)	.....	2	317 6961
69/70	10–80 (Six–WDB)	.....	2	317 7121
69	10–80 (V8–WDB)	.....	2	317 6961
69	10–80 (343–LDB–* 8–35)(390–LDB–* 8–35)	.....	2	317 6961
69	10–80 (343–LDB–* 8–36)(390–LDB–* 8–36)	.....	2	319 6477
70	10 (Six–LDB–Except Heavy Duty–* 8–4)	.....	2	317 6961
70/	15–19 (304–Except Heavy Duty–* 8–4)	.....	2	317 6961
72	15–19 (360–WDB)(401–WDB)	.....	2	317 6961
70	10 (360–LDB)(390–LDB)	.....	2	319 6477
71/	15–19 (360–LDB–Except Heavy Duty–* 8–4)(401–LDB–Except Heavy Duty–* 8–4)	.....	2	319 6477
70	15–19 (360–WDB)(390–WDB)	.....	2	317 6961
71	15–19–85–89 (WDB–* 8–53)	.....	2	317 6961
71/	15–19–85–89 (WDB–* 8–54)	.....	2	321 0972
70	18 (304–LDB)	.....	2	319 6477
70	18 (304–WDB)	.....	2	317 6961
71/	18–88	.....	2	321 0972
71/	40 (Six–LDB–Used With Styled Wheels)	.....	2	321 5602
72	40 (304–Used With Styled Wheels)	.....	2	321 5601
67/68	50–80 (LDB)	.....	2	317 6961
72	70 (360–Used With Styled Wheels)(401–Used With Styled Wheels)	.....	2	321 5601
70	80 (Six–LDB–Except Heavy Duty–* 8–4)	.....	2	317 6961
70	80 (V8–LDB)	.....	2	319 6477
70	80 (V8–WDB)	.....	2	317 6961
71/	85–89 (V8–LDB–Except Heavy Duty–* 8–4)	.....	2	319 6477
72	85–89 (V8–WDB–Except Heavy Duty–* 8–4)	.....	2	317 6961
69	***10–80 (Heavy Duty–290–LDB–* 8–4 And * 8–35)***	.....	2	317 6961
69	***10–80 (Heavy Duty–* 8–4 And * 8–36)***	.....	2	319 6477
70	***10–80 (Heavy Duty–Six–* 8–4)***	.....	2	319 6477
67/68	***15–16–17–19 (Heavy Duty–Six–* 8–4)***	.....	2	317 6961
69	***15–19 (Heavy Duty–Six–* 8–4 And * 8–35)***	.....	2	317 6961
70	***15–19 (Heavy Duty–304–* 8–4)***	.....	2	319 6477
71	***15–19–85 (Heavy Duty–* 8–4)***	.....	2	321 0972
72	***15–19–85–89 (With Heavy Duty–* 8–4)***	.....	2	321 0972
69	***18 (Heavy Duty–Six–* 8–4 And * 8–35)***	.....	2	317 6961
70/	***01–70 (Export–Six–WDB)***	.....	2	317 6961
70/	***01–40–70 (Export–Six–Finned Type)*** ***(Use 319 2309)***	.....	2	318 8995
72	***40 (Export–Six–Finned Type)***	.....	2	321 5603

Printed in U.S.A.

8.240–3 ATTACHING PARTS, Drum To Front Wheel Spindle

WASHER, Plain	67/	10.007	2	314 2118
NUT, Hexagon	67/	10.007	2	317 3399
RETAINER	67/	10.007	2	317 3401
PIN, Cotter	67/	17.460	2	G108635 NA

8.240–4 ATTACHING PARTS, Rear Drum To Hub

SCREW, Machine	67/	8.245	6	318 1858

8.240–5 ATTACHING PARTS, Hub And Drum To Rear Axle

KEY, Woodruff	67/	17.344	2	G103905
WASHER, Plain	67/	9.068	2	18 737
NUT, Lock	67/	9.068	2	315 5675
PIN, Cotter	67/	17.460	2	G103387 NA

8.240–6 SPRING, Brake Drum Anti-Squeak

67/	LDB	.....	4	320 2262
67/	WDB	.....	2	320 2262

8.240–7 SPACER, Rear Brake Drum

67/		8.245	AR	320 0966

8.243–1 HUB ASSEMBLY, Rear Brake (Less Drum)

SIX

67	01 (Six)	.....	2	320 4657
68	01-70 (Six-* 8-19)	.....	2	320 4657
68	01-70 (Six-* 8-20)	.....	2	812 1641
69/	01-40-70 (Six-LDB)	.....	2	320 4657
70	10 (Six-LDB-Except Heavy Duty-* 8-4)	.....	2	320 4658
67	15-16-17-19 (Six-LDB)	.....	2	320 4657
68/69	15-16-17-19 (Six-LDB-Except Heavy Duty-* 8-4)	.....	2	320 4657
71/	15-19-85-89 (Six-LDB-Except Heavy Duty-* 8-4)	.....	2	320 4658
67/68	18 (LDB)	.....	2	320 4658
69	18-85-88 (Six-LDB-Except Heavy Duty-* 8-4)	.....	2	320 4658
71/	18-88	.....	2	812 1639
67/68	50-80 (LDB)	.....	2	320 4658
70	80 (Six-LDB-Except Heavy Duty-* 8-4)	.....	2	320 4658
70/	01-70 (Six-WDB)	.....	2	320 4658
67/68	10-50-80 (WDB)	.....	2	320 4658
69/70	10-80 (Six-WDB)	.....	2	320 4658
71	15-19-85-89 (WDB-* 8-53)	.....	2	320 4658
71	15-19-85-89 (WDB-* 8-54)	.....	2	812 1639
69	***10-80 (Heavy Duty-* 8-4 And * 8-36)***	.....	2	812 1637
70	***10-80 (Heavy Duty-Six-* 8-4)***	.....	2	812 1637
67/68	***15-16-17-19 (Heavy Duty-Six-* 8-4)***	.....	2	320 4658
69	***15-19 (Heavy Duty-Six-* 8-4 And * 8-5)***	.....	2	320 4658
71	***15-19-85 (Heavy Duty-* 8-4)***	.....	2	812 1639
72	***15-19-85-89 (Heavy Duty-* 8-4)***	.....	2	812 1639
69	***18 (Heavy Duty-Six-* 8-4 And * 8-35)***	.....	2	320 4658
70/	***01-40-70 (Export-Six-Finned Type)***	.....	2	320 4657
70/	***01-70 (Export-Six-WDB)***	.....	2	320 4658

V8

67/	01-30-40-70 (V8)	.....	2	320 4658
69	10-80 (290-LDB-Except Heavy Duty-* 8-4)	.....	2	320 4658
69	10-80 (343-LDB-* 8-35)(390-LDB-* 8-35)	.....	2	320 4658
69	10-80 (343-LDB-* 8-36)(390-LDB-* 8-36)	.....	2	812 1637
70	10 (360-LDB)(390-LDB)	.....	2	812 1637
67/68	15-16-17-19 (V8-LDB)	.....	2	320 4658

70/	15-19 (304-Except Heavy Duty-* 8-4)	.....	2	320 4658
71/	15-19 (360-LDB-Except Heavy Duty-* 8-4)(401-LDB-Except Heavy Duty-* 8-4)	.....	2	812 1637
67/68	18 (LDB)	.....	2	320 4658
70	18 (304-LDB)	.....	2	812 1637
71/	18-88	.....	2	812 1639
67/68	50-80 (LDB)	.....	2	320 4658
70	80 (V8-LDB)	.....	2	812 1637
71/	85-89 (V8-LDB-Except Heavy Duty-* 8-4)	.....	2	812 1637
67/68	10-50-80 (WDB)	.....	2	320 4658
69	10-80 (V8-WDB)	.....	2	320 4658
70	15-19 (360-WDB)(390-WDB)	.....	2	320 4658
71	15-19-85-89 (WDB-* 8-53)	.....	2	320 4658
71	15-19-85-89 (WDB-* 8-54)	.....	2	812 1639
72	15-19 (360-WDB)(401-WDB)	.....	2	320 4658
70	18 (304-WDB)	.....	2	320 4658
70	80 (V8-WDB)	.....	2	320 4658
72	85-89 (V8-WDB-Except Heavy Duty-* 8-4)	.....	2	320 4658
69	***10-80 (Heavy Duty-290-LDB-* 8-4 And * 8-35)***	.....	2	320 4658
69	***10-80 (Heavy Duty-* 8-4 And * 8-36)***	.....	2	812 1637
70	***15-19 (Heavy Duty-304-* 8-4)***	.....	2	812 1637
71	***15-19-85 (Heavy Duty-* 8-4)***	.....	2	812 1639
72	***15-19-85-89 (Heavy Duty-* 8-4)***	.....	2	812 1639

8.243-2 ATTACHING PARTS, Hub To Axle

KEY, Woodruff	67/	.....	17.344	2	G103905
NUT, Lock	67/	.....	9.068	2	315 5675
PIN, Cotter	67/	.....	17.460	2	G103387 NA
WASHER, Plain	67/	.....	9.068	2	18 737

8.245-1 DRUM ASSEMBLY, Rear Brake (Less Hub)

SIX

67	01 (Six-* 8-63)	.....	2	320 4659
67	01 (Six-* 8-64)	.....	2	320 6708
68	01-70 (Six-* 8-19)	.....	2	320 4659
68	01-70 (Six-* 8-20)	.....	2	320 8335
69/70	01-40-70 (Six-LDB)	.....	2	320 4659
71/ —	01-40-70 (Six-LDB-* 8-63)	..... —	2	320 4659
71/ —	01-40-70 (Six-LDB-* 8-64)	..... —	2	320 6708
70	10 (Six-LDB-Except Heavy Duty-* 8-4)	.....	2	320 4660
67	15-16-17-19 (Six-LDB-Except Heavy Duty-* 8-4 And * 8-18)	.....	2	320 8335
67	15-16-17-19 (Six-LDB-Except Heavy Duty-* 8-4, * 8-17 And * 8-63)	.....	2	320 4659
67	15-16-17-19 (Six-LDB-Except Heavy Duty-* 8-4, * 8-17 And * 8-64)	.....	2	320 6708
68/69	15-17-19 (Six-LDB-Except Heavy Duty-* 8-4)	.....	2	320 8335
71/	15-19-85-89 (Six-LDB-Except Heavy Duty-* 8-4)	.....	2	320 4660
67/68	18 (LDB)	.....	2	320 4660
69	18-85-88 (Six-LDB-Except Heavy Duty-* 8-4)	.....	2	320 4660
71	18-88	.....	2	812 1640
67/68	50-80 (LDB)	.....	2	320 4660
70	80 (Six-LDB-Except Heavy Duty-* 8-4)	.....	2	320 4660
70/	01-70 (Six-WDB)	.....	2	320 4660
67/68	10-50-80 (WDB)	.....	2	320 5809
69/70	10-80 (Six-WDB)	.....	2	320 5809
69	***10-80 (Heavy Duty-* 8-4 And * 8-36)***	.....	2	812 1638
70	***10-80 (Heavy Duty-Six-* 8-4)***	.....	2	812 1638
67/68	***15-16-17-19 (Heavy Duty-* 8-4)***	.....	2	320 4660
69	***15-19 (Heavy Duty-* 8-4 And * 8-35)***	.....	2	320 4660
71	***15-19-85 (Heavy Duty-* 8-4)***	.....	2	812 1640
72	***15-19-85-89 (Heavy Duty-* 8-4)***	.....	2	812 1640
69	***18 (Heavy Duty-Six-* 8-4 And * 8-35)***	.....	2	320 4660
70/	***01-40-70 (Export-Six-Finned)***	.....	2	320 8335
70/	***01-70 (Export-Six-WDB)***	.....	2	320 4660

V8

67	01 (V8-LDB)	.....	2	320	4660
68/	01-30-70 (V8)	.....	2	320	4660
69	10-80 (290-LDB-Except Heavy Duty-* 8-4)	.....	2	320	4660
69	10-80 (343-LDB-* 8-35)(390-LDB-* 8-35)	.....	2	320	4660
69	10-80 (343-LDB-* 8-36)(390-LDB-* 8-36)	.....	2	812	1638
70	10 (360-LDB)(390-LDB)	.....	2	812	1638
67/68	15-16-17-19 (V8-LDB)	.....	2	320	4660
70/	15-19 (304-Except Heavy Duty-* 8-4)	.....	2	320	4660
71/	15-19 (360-LDB-Except Heavy Duty-* 8-4)(401-LDB-Except Heavy Duty-* 8-4)	.....	2	812	1638
67/68	18 (LDB)	.....	2	320	4660
70	18 (304-LDB)	.....	2	812	1638
71	18-88	.....	2	812	1640
72	40 (V8)	.....	2	320	4660
67/68	50-80 (LDB)	.....	2	320	4660
70	80 (V8-LDB)	.....	2	812	1638
71/	85-89 (V8-LDB-Except Heavy Duty-* 8-4)	.....	2	812	1638
67	01 (V8-WDB)	.....	2	320	5809
67/68	10-50-80 (WDB)	.....	2	320	5809
69	10-80 (V8-WDB)	.....	2	320	4660
70	15-19 (360-WDB)(390-WDB)	.....	2	320	4660
71	15-19-85-89 (WDB-* 8-53)	.....	2	320	4660
71/	15-19-85-89 (WDB-* 8-54)	.....	2	812	1640
72	15-19 (360-WDB)(401-WDB)	.....	2	320	4660
70	18 (304-WDB)	.....	2	320	4660
70	80 (V8-WDB)	.....	2	320	4660
72	85-89 (V8-WDB-Except Heavy Duty-* 8-4)	.....	2	320	4660
69	***10-80 (Heavy Duty-290-LDB-* 8-4 And * 8-35)***	.....	2	320	4660
69	***10-80 (Heavy Duty-* 8-4 And * 8-36)***	.....	2	812	1638
67/68	***15-16-17-19 (Heavy Duty-* 8-4)***	.....	2	320	4660
69	***15-19 (Heavy Duty-* 8-4 And * 8-35)***	.....	2	320	4660
70	***15-19 (Heavy Duty-304-* 8-4)***	.....	2	812	1638
71	***15-19-85 (Heavy Duty-* 8-4)***	.....	2	812	1640
72	***15-19-85-89 (Heavy Duty-* 8-4)***	.....	2	812	1640

8.245-2 ATTACHING PARTS. Rear Drum To Hub

SCREW, Hexagon 67/	(Used Less Styled Wheels)	.....	6	318	1858
NUT, Speed 71/	(Used With Styled Wheels)	.....	6	320	0682

8.270-1 WHEEL, Road

1967 Thru 1972 01-40

70/71	(13" x 4.50") 40	.....	5	319	9951
72	(13" x 4.50") 40 (Six-LDB)	.....	5	319	9951
67	(14" x 4.50") 05-06 (199-WST-* 8-21)(199-WAT-LEEP-* 8-21)(199-WAT-WEEP-* 8-21 And * 8-23)	.....	5	316	9756
67	(14" x 4.50") 07-09 (199-WST)(199-WAT-LEEP)(199-WAT-WEEP-* 8-23)	.....	5	316	9756
68/69	(14" x 4.50") 05-06-09 (Six-* 8-21)	.....	5	316	9756
70/71	(14" x 4.50") 01-40	.....	5	316	9756
72	(14" x 4.50") 01-40 (LDB)	.....	5	316	9756
67	(14" x 5.00") 05-06 (199-WST-* 8-22)(199-WAT-LEEP-* 8-22)(199-WAT-WEEP-* 8-22 And * 8-24) ***(Use 318 9155)***	.....	5	316	6732
67	(14" x 5.00") 07-09 (199-WAT-WEEP-* 8-24) ***(Use 318 9155)***	.....	5	316	6732
67	(14" x 5.00") 01 (232) ***(Use 318 9155)***	.....	5	316	6732
68/69	(14" x 5.00") 05-06-09 (Six-* 8-22) ***(Use 318 9155)***	.....	5	316	6732
67/68	(14" x 5.00") 05-06-07-09 (V8-LDB)	.....	5	318	9155
69	(14" x 5.00") 05-09 (Except SC/RAMBLER)	.....	5	318	9155
70	(14" x 5.00") 01 ***(Use 318 9155)***	.....	5	318	8622
67/69	(14" x 5.00") 08 (Six) ***(Use 318 9155)***	.....	5	316	6732
71/72	(14" x 5.00") 01-40 (WDB)	.....	5	321	1540

67/68	(14" x 5.50") 05-06-07-09 (V8-WDB)	.....	5	317 7122
69	(14" x 5.50") 05-09 (Except SC/RAMBLER)	.....	5	317 7122
67/69	(14" x 5.50") 08 (V8)	.....	5	317 7122
70	(14" x 5.50") 01	.....	5	317 7122
70	***(14" x 5.50") 01 (Export-Six-WDB)(Export-304-WDB)***	.....	5	317 7122
69	(14" x 6.00") 09 (SC/RAMBLER)	.....	4	319 4995
69	(14" x 6.00") 09 (SC/RAMBLER-Spare Wheel)	.....	1	319 6511
70/71	(14" x 6.00") 01 (V8)	.....	5	319 6511
70/	(14" x 6.00") 01-40 (Used With Styled Wheels-* 8-55 And * 8-67)	.....	4	319 4995
72	(14" x 6.00") 01-40 (Used With Styled Wheels-* 8-55 And * 8-68)	.....	4	812 1740
71/	(14" x 6.00") 01-40 (Used With Styled Wheels-* 8-56)	.....	4	321 3574
71/	(14" x 6.00") 40 (Used Less Styled Wheels)	.....	4	319 6511
67/	(15" x 5.00") 01	.....	5	316 3151
70	***(15" x 5.00") 01 (Heavy Duty-Six)***	.....	AR	316 3151

1967 Thru 1972 10-50-80

71/	(14" x 5.00") 10-80	.....	5	321 1540
67/70	(14" x 5.50") 10-50-80	.....	5	317 7122
71/	(14" x 5.50") 10-80 ***(Use 317 7122)***	.....	5	321 2501
69/	(14" x 6.00") 10-80 (Used Less Styled Wheels)	.....	5	319 6511
71/	(14" x 6.00") 10-80 (Used With Styled Wheels-* 8-67)	.....	4	319 4995
72	(14" x 6.00") 10-80 (Used With Styled Wheels-* 8-68)	.....	4	812 1740
69	***(14" x 6.00") 18-80 (Heavy Duty)***	.....	5	319 6511
70	***(15" x 5.00") 10-80 (Heavy Duty)***	.....	5	316 3151
67/	***(15" x 5.50") 10-80 (Heavy Duty)***	.....	5	315 7895
70	***(15" x 5.50") 10 (Export)***	.....	5	315 7895
70/	***(15" x 6.00") 10-80 (Heavy Duty)***	.....	5	321 1182
70	(15" x 7.00") 19 (MACHINE)	.....	4	319 8526
71/	(15" x 7.00") 10 (Used With Styled Wheels-* 8-55)	.....	4	321 1393
72	(15" x 7.00") 10 (Used With Styled Wheels-* 8-56)	.....	4	321 7261

1968 Thru 1972 30-70

68/69	(14" x 5.00") 70 (Six) ***(Use 318 9155)***	.....	5	316 6732
70	(14" x 5.00") 70	.....	5	318 8622
71/	(14" x 5.00") 70	.....	5	321 1540
68/70	(14" x 5.50") 30-70 (V8-Used Less Styled Wheels)(Used With Styled Wheels)	.....	AR	317 7122
69/70	(14" x 5.50") 30-70 (Spare Wheel-Used With Space Saver Tire)	.....	1	317 7122
70	(14" x 5.50") 70	.....	5	317 7122
70	***(14" x 5.50") 30 (Export)***	.....	4	317 7122
70	***(14" x 5.50") 70 (Export-Six-WDB)***	.....	5	317 7122
68	(14" x 6.00") 30-70 (V8-Used With Styled Wheels)	.....	4	319 3815
69/	(14" x 6.00") 30-70 (Used Less Styled Wheels)	.....	5	319 6511
69	(14" x 6.00") 30-70 (Used With Styled Wheels-* 8-75)	.....	4	319 3815
69/	(14" x 6.00") 30-70 (Used With Styled Wheels-* 8-55 And * 8-67)	.....	4	319 4995
72	(14" x 6.00") 70 (Used With Styled Wheels-* 8-68)	.....	4	812 1740
70	(14" x 6.00") 30-70 (Spare Wheel-Used With Styled Wheels)	.....	1	319 6511
70/	(14" x 6.00") 70 (Used Less Styled Wheels)	.....	5	319 6511
71/	(14" x 6.00") 70 (Used With Styled Wheels-* 8-56)	.....	4	321 3574
69	***(15" x 5.00") 70 (Heavy Duty-Six)***	.....	5	316 3151
70	(15" x 5.50") 70 (Spare Wheel-Used With Styled Wheels)	.....	1	315 7895
70	(15" x 7.00") 30-70 (Used With Styled Wheels)	.....	4	319 8526
71/	(15" x 7.00") 70 (Used With Styled Wheels-* 8-55)	.....	4	321 1393
72	(15" x 7.00") 70 (Used With Styled Wheels-* 8-56)	.....	4	321 7261

8.270-2 CAP, Road Wheel (Styled)

70/	01 (* 8-55)	.....	4	319 3812
71/	01-10-40-70 (* 8-56)	.....	4	321 3573
70	19 (MACHINE)	.....	4	319 8522
69	09 (SC/RAMBLER)	.....	4	319 3812
68/	30-70 (Used With 14" Wheel-* 8-55)	.....	4	319 3812
70	30-70 (Used With 15" Wheel)	.....	4	319 8522
71/	10-80 (Used With 14" Wheel)	.....	4	319 3812
71/	10-70 (Used With 15" Wheel)	.....	4	321 1392
71/	40 (* 8-55)	.....	4	319 3812

BRAKES - WHEELS

8.270–3 ATTACHING PARTS, Cap To Wheel

SCREW, Machine	70/71	01-10-40-80	8.245	AR	318 1858
SCREW, Tapping	71	(Washer Head) 01-40-70 (Used With 14" Wheel)	.....	AR	400 4316
SCREW, Machine	72	40-70 (Used With 14" Styled Wheels)	8.245	12	318 1858
SCREW, Machine	72	(Used With 14" Styled Wheels)	.....	12	400 3592
SCREW, Machine	69	09 (SC/RAMBLER)	8.245	8	318 1858
SCREW, Machine	70	19 (MACHINE)	29.131	16	400 1814
SCREW, Machine	70/71	30-70 (Used With 15" Wheel)	29.131	16	400 1814
SCREW, Machine	72	10-70 (Used With 15" Styled Wheels)	.....	16	400 1814

8.270–4 ADAPTER, Road Wheel Cap Mounting

70/	01 (* 8-55)	.....	4	319 3813
70	19 (MACHINE)	.....	4	319 8519
68/	30-70 (Used With 14" Wheel-* 8-55)	.....	4	319 3813
70	30-70 (Used With 15" Wheel)	.....	4	319 8519
69	09 (SC/RAMBLER)	.....	4	319 3813
71/	10-70 (Used With 15" Wheel)	.....	4	321 1389
71/	10-40-80	.....	4	319 3813

8.270–5 SPACER, Front Wheel

68/71	30-70 (WDB)	.....	2	319 3546
68/71	40-70 (Six-Used With 14" Styled Wheels)	.....	2	319 3546
69	09 (SC/RAMBLER)	.....	2	319 3546
70/71	01 (WDB-Used With 14" Styled Wheels)	.....	2	319 3546
71	10-80 (WDB-Used With 14" Styled Wheels)	.....	2	319 3546
71/	***10-80 (Heavy Duty-15" Wheel)***	.....	2	319 3546
72	(Used With 14" Styled Wheels)	.....	2	319 3546

8.270–6 ATTACHING PARTS, Spacer To Hub

NUT, Speed	68/71	30-70 (WDB)	8.248	6	320 0682
NUT, Speed	68/71	40-70 (Six-Used With 14" Styled Wheels)	8.248	6	320 0682
NUT, Speed	69	09 (SC/RAMBLER)	8.248	6	320 0682
NUT, Speed	70/71	01 (WDB-Used With 14" Styled Wheels)	8.248	6	320 0682
NUT, Speed	72	.....	8.248	6	320 0682
NUT, Speed	***71/***	***10-80 (Heavy Duty-15" Wheel)***	8.248	6	320 0682

8.274–1 CAP, Wheel Hub

70/	(13" Wheel) 40	.....	4	319 5349
67	(14" Wheel) 01 (Six)	.....	4	318 5845
67	(14" Wheel) 01 (V8)	.....	4	318 5866
68/69	(14" Wheel) 01 (Letter "R")	.....	4	319 1954
68/69	(14" Wheel) 01 ("American Motors")	.....	4	319 1953
67	(14" Wheel) 10	.....	4	318 5866
69	(14" Wheel) 10 (Eagle Crest)	.....	4	318 5868
69	(14" Wheel) 10 (Eagle Crest)	.....	4	318 5868
68/69	(14" Wheel) 10-30-70 ("American Motors")	.....	5	318 5868
67/69	(14" Wheel) 80	.....	4	319 1953
70/	(14" Wheel)	.....	4	318 5868
67/69	(15" Wheel)	.....	4	319 5349
70/71	(15" Wheel) 80	.....	4	316 0278
72	(15" Wheel) 10-80	.....	4	321 1185
		.....	4	321 1185

8.274–2 COVER, Wheel Hub (One Piece)

70/	(13" Wheel) 40	.....	4	319 7872
67	(14" Wheel-Used With Wire Wheel) ***(Ord. 318 6624, 319 1170, 320 9684)***	.....	4	318 6625
68/71	(14" Wheel-Used With Wire Wheel)	.....	4	319 1170
67/71	(14" Wheel-Used With Cast Aluminum Wheel)	.....	4	318 3800
67	(14" Wheel) 01	.....	4	318 5846
68/69	(14" Wheel) 01	.....	4	318 5867
70	(14" Wheel) 01 (* 8-43)	.....	4	319 5351
70	(14" Wheel) 01-40 (* 8-44)	.....	4	319 5352
71	(14" Wheel) 01-40	.....	4	319 5352
72	(14" Wheel) 01	.....	4	321 2712
68	(14" Wheel) 10	.....	4	318 9668

Printed in U.S.A.

67	(14" Wheel) 10	.....	4	318 5867
69	(14" Wheel) 10	.....	4	319 2500
70	(14" Wheel) 10	.....	4	319 5352
71	(14" Wheel) 10	.....	4	319 8363
72	(14" Wheel) 10-80 (Except Brougham)	.....	4	321 2930
68	(14" Wheel) 30-70	.....	4	319 1955
69	(14" Wheel) 30-70 (Used Less Styled Wheels)	.....	4	319 3020
70	(14" Wheel) 30-70	.....	4	319 5353
72	(14" Wheel) 40	.....	4	319 5353
67	(14" Wheel) 50	.....	4	318 5869
71/	(14" Wheel) 70	.....	4	319 8518
67	(14" Wheel) 80	.....	4	318 5870
68	(14" Wheel) 80 (* 8-25)	.....	4	318 9623
68	(14" Wheel) 80 (* 8-26)	.....	4	319 4901
69	(14" Wheel) 80	.....	4	319 2499
70	(14" Wheel) 80	.....	4	319 5354
71	(14" Wheel) 80	.....	4	319 8362
72	(14" Wheel) 80 (Brougham)	.....	4	321 5640
67/	(15" Wheel-E/MACHINE)	.....	4	318 9078

8.274-2a COVER, Wheel Hub (Vaned - Two Piece)

71	(14" Wheel-Custom)...(Incl. Overlay)	.....	4	319 8708
72	(14" Wheel-Custom)	.....	4	321 5639
72	(14" Wheel-Turbo Cast)	.....	4	321 2713

8.274-3 ORNAMENT, Wheel Cover

67	(Used With Wire Wheel) ***(Ord. 318 6624, 320 9684)***	.....	4	320 8248
68/71	(Used With Wire Wheel)	.....	4	320 9684
67/71	(Used With Cast Aluminum Wheel)	.....	4	448 6789

8.274-3a OVERLAY, Wheel Cover (Custom)

71/		.....	4	319 8707

8.274-3b ATTACHING PARTS, Overlay To Cover

SCREW, Machine..... 71/		29.131	20	400 1814

8.274-4 ATTACHING PARTS, Ornament To Wheel Cover

SCREW, Tapping..... 67/71		.....	16	320 8326

8.274-5 EMBLEM, Wheel Cover Ornament

67/71	(Used With Wire Wheel)	.....	4	318 6624

8.274-6 GASKET, Wheel Cover Ornament

67/71	(Used With Wire Wheel)	.....	4	320 8249

8.274-7 EXTENSION, Tire Valve

67/71	(Used With Wire Wheel)(Used With Cast Aluminum Wheel)	.....	4	317 8883

8.274-8 RING, Wheel Trim

70/	01 (Used With 14" Styled Wheel-* 8-55)	.....	4	319 4996
69	09 (SC/RAMBLER)	.....	4	319 4996
72	10-80 (Used With 14" Styled Wheel)	.....	4	319 4996
72	10-70 (V8-Used With 15" Styled Wheels)	.....	4	321 7260
69/	30-70 (Used With 14" Styled Wheel)	.....	4	319 4996
71/	40 (Used With 14" Styled Wheel)	.....	4	319 4996
72	40 (P-38)	.....	4	319 4996

Printed in U.S.A.

8.280 WEIGHT, Wheel Balance

67/	(1/2 Oz.)	AR	316	5949
67/	(1 Oz.)	AR	313	1615
67/	(1-1/2 Oz.)	AR	316	5783
67/	(2 Oz.)	AR	312	3943
67/	(2-1/2 Oz.)	AR	316	5784

8.286 ATTACHING PARTS, Wheel To Hub

STUD	67/71		8.245	10	320 0800
NUT, Hexagon	67/	(Used Less Styled Wheel)	10.002	20	319 1540
NUT, Hexagon	67/69	(Used With Styled Wheel)		20	400 3593
NUT, Hexagon	70	(1/2"-20 x 1-17/64") 30-70 (Used With Styled Wheels)		20	400 3593
NUT, Hexagon	70/71	(1/2"-20 x 1-9/32") 01-30-40-70 (Used With Styled Wheels)		20	400 4067
NUT, Hexagon	70	19 (MACHINE)		20	400 4067
NUT, Hexagon	72	(Used With Styled Wheel)		20	400 4067

8.292 BEARING, Front Wheel

67/	(Inner)		2	314 1139
67/	(Outer)		2	314 1140

8.294 CUP, Front Wheel Bearing

67/	(Inner)		2	314 3329
67/	(Outer)		2	314 3330

8.296-1 RETAINER, Front Wheel Grease

67/			2	317 3532

8.296-2 CAP, Front Wheel Grease Retainer Outer (Incl. "O" Ring)

67/			2	320 6248

8.296-3 RING, Front Wheel Grease Outer Cap "O"

67/	WDB		2	318 0119

8.300 BEARING, Rear Wheel

67/71	01-40-70 (Six-LDB)	8.292	2	314 1139
72	01-40-70 (Six)		2	314 1139
67/	01-30-40-70 (V8)		2	315 0046
67/69	15-16-17-19 (Six-LDB-Except Heavy Duty-* 8-4)	8.292	2	314 1139
67/69	15-16-17-19 (V8)		2	315 0046
67/69	18		2	315 0046
67/69	50-80		2	315 0046
67/69	15-16-17-19 (Six-WDB)		2	315 0046
70/	10-80		2	315 0046
67/69	***15-16-17-19 (Heavy Duty-Six-* 8-4)***		2	315 0046
71	***01-70 (Heavy Duty-LHD-Six-WDB)***		2	315 0046
70/71	***01-70 (Export-LHD-Six-WDB)***		2	315 0046

Printed in U.S.A.

BRAKES - WHEELS

8.302 CUP, Rear Wheel Bearing

67/71	01-40-70 (Six-LDB)	2	314	3329
72	01-40-70 (Six)	2	314	3329
67/	01-30-40-70 (V8)	2	315	0045
67/69	15-16-17-19 (Six-LDB-Except Heavy Duty-* 8-4)	2	314	3329
67/69	15-16-17-19 (V8)	2	315	0045
67/69	18	2	315	0045
67/69	50-80	2	315	0045
67/69	15-16-17-19 (Six-WDB)	2	315	0045
70/	10-80	2	315	0045
67/69	***15-16-17-19 (Heavy Duty-Six-* 8-4)***	2	315	0045
71	***01-70 (Heavy Duty-LHD-Six-WDB)***	2	315	0045
70/71	***01-70 (Export-LHD-Six-WDB)***	2	315	0045

8.310 RETAINER, Rear Wheel Guide

67/		2	318	4573

8.312 SEAL, Rear Wheel Oil

67/71	01-40-70 (Six-LDB)	2	448	5692
72	01-40-70 (Six)	2	448	5692
67/	01-30-40-70 (V8)	2	448	5691
67/69	15-16-17-19 (Six-LDB-Except Heavy Duty-* 8-4)	2	448	5692
67/69	15-16-17-19 (V8)	2	448	5691
67/69	18	2	448	5691
67/69	50-80	2	448	5691
67/69	15-16-17-19 (Six-WDB)	2	448	5691
70/	10-80	2	448	5691
67/69	***15-16-17-19 (Heavy Duty-Six-* 8-4)***	2	448	5691
70	***01-70 (Export-LHD-Six-WDB)***	2	448	5691
71	***LHD (Heavy Duty-WDB)(Export-WDB)***	2	448	5691

8.315 SHIM, Rear Wheel Bearing

67/71	(.003) 01-40-70 (Six-LDB)	AR	316	1352
72	(.003) 01-40-70 (Six)	AR	316	1352
67/	(.003) 01-30-40-70 (V8)	AR	314	1319
67/69	(.003) 15-16-17-19 (Six-LDB-Except Heavy Duty-* 8-4)	AR	316	1352
67/69	(.003) 15-16-17-19 (V8)	AR	314	1319
67/69	(.003) 18	AR	314	1319
67/69	(.003) 50-80	AR	314	1319
67/69	(.003) 15-16-17-19 (Six-WDB)	AR	314	1319
70/	(.003) 10-80	AR	314	1319
67/69	***(.003) 15-16-17-19 (Heavy Duty-Six-* 8-4)***	AR	314	1319
70/71	***(.003) 01-70 (Export-LHD-Six-WDB)***	AR	314	1319
71	***(.003) 01-70 (Heavy Duty-LHD-Six-WDB)***	AR	314	1319
67/71	(.010) 01-40-70 (Six-LDB)	AR	316	1353
72	(.010) 01-40-70 (Six)	AR	316	1353
67/	(.010) 01-30-40-70 (V8)	AR	314	1320
67/69	(.010) 15-16-17-19 (Six-LDB-Except Heavy Duty-* 8-4)	AR	316	1353
67/69	(.010) 15-16-17-19 (V8)	AR	314	1320
67/69	(.010) 18	AR	314	1320
67/69	(.010) 50-80	AR	314	1320
67/69	(.010) 15-16-17-19 (Six-WDB)	AR	314	1320
70/	(.010) 10-80	AR	314	1320
67/69	***(.010) 15-16-17-19 (Heavy Duty-Six-* 8-4)***	AR	314	1320
70/71	***(.010) 01-70 (Export-LHD-Six-WDB)***	AR	314	1320
71	***(.010) 01-70 (Heavy Duty-LHD-Six-WDB)***	AR	314	1320

Printed in U.S.A.

8.330–1 ROD, Spare Wheel Mounting

70	01 (* 8-49)	.....	1	319 8899
70	01 (* 8-50)	.....	1	321 1845
67	05-06-07-09. ***(Use 318 9263)***	.....	1	318 7671
68/69	05-06-09 (Used With 14" x 6.45 Tires)	.....	1	317 0742
68/69	05-06-09 (Used With 14" x 6.95 Tires)(Used With 14" x 6.85 Tires) (Used With 14" x 7.85 Tires)	.....	1	318 9263
71/	05-06	.....	1	321 1845
67/69	08	.....	1	317 1861
71	08	.....	1	321 2497
72	08	.....	1	321 5342
67	15-16-19-85-86-89 (Used Less 14" x 8.25 Tires). ***(Use 318 9263)***	.....	1	318 7671
67	15-16-19-85-86-89 (Used With 14" x 8.25 Tires)	.....	1	318 9263
68/	15-17-19-85-89 (Used Less Space Saver Tire)	.....	1	318 9263
72	15-19 (Used With Space Saver Tire).	.....	1	317 1861
67	17-87.	.....	1	317 0742
67/69	18 (L3S)	.....	1	318 9262
70/	18 (L3S)	.....	1	317 0742
67/69	18 (W3S)	.....	1	318 9263
70/	18 (W3S)	.....	1	321 0503
70/71	19 (Used With Space Saver Tire)	.....	1	317 1861
68/	30-70 (Used With Space Saver Tire).	.....	1	317 1861
70	40.	.....	1	321 0320
71	40 (Used Less Space Saver Tire-With Hole In Bracket)	.....	1	321 0320
71	40 (Used With Space Saver Tire-With Hole In Bracket)	.....	1	321 1845
72	40.	.....	1	321 5342
71	40 (With Slotted Bracket)	.....	1	321 5342
68/70	70 (Used Less Space Saver Tire-* 8-49)	.....	1	319 0796
70	70 (Used Less Space Saver Tire-* 8-50)	.....	1	321 1846
71	70 (Used Less Space Saver Tire)	.....	1	321 1846
72	70 (Used Less Space Saver Tire)	.....	1	321 0503
67/69	88	.....	1	318 9263
70/	88	.....	1	321 0503

8.330–2 WING NUT, Spare Wheel Mounting Rod

67/69		.....	1	315 9865
70/		.....	1	319 8901

8.330–3 PLATE, Spare Wheel Mounting Rod

70/	01	.....	1	319 8902
70	40 (* 8-49)	.....	1	319 8902

8.330–3a WASHER, Spare Wheel Rod

70/	30-40-70	17.814	1	400 1107

8.335–1 INFLATOR, Space Saver Tire

70	19 (MACHINE)	.....	1	319 5408
68/70	30-70.	.....	1	319 5408
71	01-10-40-70 (Used With D-70 And E-78 Space Saver Spare). ***(Use 321 3866)***	.....	1	321 2062
71	01-40 (Used With B-78 And C-78 Space Saver Spare). ***(Use 321 3864)***	.....	1	321 1860
72	01-10-40-70 (Used With D-70 And E-78 Space Saver Tire).	.....	1	321 3866
72	01-40 (Used With B-78 And C-78 Space Saver Tire).	.....	1	321 3864

8.335–2 CLAMP, Space Saver Tire Inflator Hold Down

71/	01	.....	1	319 1443
68/70	30-70 (* 8-49)	.....	1	319 1443

Printed in U.S.A.

8.400–1 POWER UNIT, Power Brake

67/68	01 (LHD-Six)		1	320 5898
69	01 (LHD-Six-* 8-37)		1	320 5898
69	01 (LHD-Six-* 8-38)		1	448 7304
70/	01-40-70 (Six-LDB)		1	448 7304
67/68	01 (LHD-V8-LDB)		1	320 7582
69	01 (LHD-V8-LDB-* 8-37)		1	320 7582
69	01 (LHD-V8-LDB-* 8-38)		1	448 7457
70/71	01-30-40-70 (V8-LDB)		1	448 7457
72	01-40-70 (V8-LDB)		1	448 7457
70/71	10-80 (LHD-LDB)		1	448 8263
72	10-80 (LDB)		1	812 1706
67/68	15-16-17-19 (Six-LDB-Except Heavy Duty-* 8-4)		1	320 5900
69	15-19 (Six-LDB-* 8-37-Except Heavy Duty-* 8-4)		1	320 5900
69	15-19 (Six-LDB-* 8-38-Except Heavy Duty-* 8-4)		1	448 7304
67/68	15-16-17-19 (LHD-V8-LDB)		1	320 5902
69	15-19 (LHD-V8-LDB-* 8-37)		1	320 5902
69	15-19 (LHD-V8-LDB-* 8-38)		1	448 7457
67/68	18 (LHD-LDB)		1	320 5902
69	18 (LHD-LDB-* 8-37)		1	320 5902
69	18 (LHD-LDB-* 8-38)		1	448 7457
68	30-70 (V8-LDB-* 8-29)		1	320 5902
68	30-70 (V8-LDB-* 8-30)		1	320 7582
69	30-70 (V8-LDB-* 8-37)		1	320 7582
69	30-70 (V8-LDB-* 8-38)		1	448 7457
68	70 (Six-* 8-29)		1	320 5900
68	70 (Six-* 8-30)		1	320 5898
69	70 (Six-* 8-37)		1	320 5898
69	70 (Six-* 8-38)		1	448 7304
67/68	50-80 (LHD-LDB)		1	320 5902
69	80 (LHD-LDB-* 8-37)		1	320 5902
69	80 (LHD-LDB-* 8-38)		1	448 7457
67	01 (LHD-V8-WDB)		1	320 7806
68	01 (LHD-V8-WDB-* 8-27)	*(Ord. Component Parts)*	1	448 5450
68	01 (LHD-V8-WDB-* 8-28)		1	448 5544
69	09 (SC/RAMBLER)		1	448 5544
70	01 (WDB)		1	448 5544
71	01 (WDB)		1	812 0061
72	01-40 (WDB)		1	812 1347
67	10-50-80 (WDB)		1	320 8488
68	10-30-70-80 (WDB-* 8-27)		1	320 8488
68	10-30-70-80 (WDB-* 8-28)		1	448 5576
69/70	10-30-70-80 (LHD-WDB)		1	448 5576
71/	10-80 (WDB)		1	448 9434
71	70 (WDB)		1	448 5576
72	70 (Six-WDB)		1	812 1347
72	70 (V8-WDB)		1	448 5576
67/68	***15-16-17-19 (Heavy Duty-Six-* 8-4)***		1	320 5902
69	***15-19 (Heavy Duty-Six-* 8-4 And * 8-37)***		1	320 5902
69	***15-19 (Heavy Duty-Six-* 8-4 And * 8-38)***		1	448 7457
67/69	***15-16-17-19 (RHD-Six-LDB)***		1	320 8538
67/69	***15-16-17-19 (RHD-V8-LDB-* 8-41)***		1	320 8541
67/69	***18 (RHD-LDB-* 8-41)***		1	320 8541
69	***18 (RHD-LDB-* 8-42)***		1	448 6990
70	***10 (RHD-Six-LDB)***		1	448 6990
67/69	***80 (RHD-LDB-* 8-41)***		1	320 8541
69	***10-80 (RHD-V8-LDB-* 8-42)***		1	448 6990
70	***10-80 (RHD-V8-LDB)***		1	448 6990
67	***10-80 (RHD-WDB)***		1	320 8518
68	***10-80 (RHD-WDB-* 8-27)***		1	320 8518
68	***10-80 (RHD-WDB-* 8-28)***		1	448 5589
69/70	***10-80 (RHD-WDB)***		1	448 5589

8.400–2 SPACER, Power Brake Power Unit To Mounting Brackets

67/71	10-30-50-70-80 (LHD-WDB)	.....	4	320 8490
70/71	10-80 (LHD-LDB)	.....	1	448 8339

8.405 REPAIR KIT, Power Brake Power Unit

67/68	01 (LHD-Six)	.....	1	320 5954
69	01 (LHD-Six-* 8-37)	.....	1	320 5954
69	01 (LHD-Six-* 8-38)	.....	1	448 7298
70/71	01-40-70 (Six-LDB)	.....	1	448 7298
67/68	01 (LHD-V8-LDB)	.....	1	320 7581
67	01 (LHD-V8-WDB)	.....	1	320 7804
68	01 (V8-WDB)	.....	1	448 5465
69	01 (LHD-V8-LDB-* 8-37)	.....	1	320 7581
69	01 (LHD-V8-LDB-* 8-38)	.....	1	448 7456
70/71	01-30-70 (V8-LDB)	.....	1	448 7456
70	01 (WDB)	.....	1	448 5465
71	01 (WDB)	.....	1	812 0063
72	01-40 (Six-LDB)	.....	1	448 7298
72	01-40 (V8-LDB)	.....	1	448 7456
72	01-40 (WDB)	.....	1	448 7456
69	09 (SC/RAMBLER)	.....	1	448 5465
67/71	10-30-50-70-80 (LHD-WDB)	.....	1	320 8489
70/	10-80 (LHD-LDB)	.....	1	448 8349
70/71	10-30-70-80 (LHD-WDB)	.....	1	448 5578
72	10-80 (WDB)	.....	1	448 5578
67/68	15-16-17-19 (Six-LDB-Except Heavy Duty-* 8-4) ***(Use 448 5480)***	.....	1	320 5955
69	15-19 (Six-LDB-* 8-37-Except Heavy Duty-* 8-4) ***(Use 448 5480)***	.....	1	320 5955
69	15-19 (Six-LDB-* 8-38-Except Heavy Duty-* 8-4)	.....	1	448 7298
67/68	15-16-17-19 (LHD-V8-LDB)	.....	1	320 5956
69	15-19 (LHD-V8-LDB-* 8-37)	.....	1	320 5956
69	15-19 (LHD-V8-LDB-* 8-38)	.....	1	448 7456
67/68	18 (LHD-LDB)	.....	1	320 5956
69	18 (LHD-LDB-* 8-37)	.....	1	320 5956
69	18 (LHD-LDB-* 8-38)	.....	1	448 7456
68	30-70 (V8-LDB-* 8-29)	.....	1	320 5956
68	30-70 (V8-LDB-* 8-30)	.....	1	320 7581
69	30-70 (V8-LDB-* 8-37)	.....	1	320 7581
69	30-70 (V8-LDB-* 8-38)	.....	1	448 7456
67/68	50-80 (LHD-LDB)	.....	1	320 5956
68	70 (Six-* 8-29) ***(Use 448 5480)***	.....	1	320 5955
68	70 (Six-* 8-30)	.....	1	320 5954
69	70 (Six-* 8-37)	.....	1	320 5954
69	70 (Six-* 8-38)	.....	1	448 7298
72	70 (Six-LDB)	.....	1	448 7298
72	70 (Six-WDB)	.....	1	448 7456
72	70 (V8-LDB)	.....	1	448 7456
72	70 (V8-WDB)	.....	1	448 5578
69	80 (LHD-LDB-* 8-37)	.....	1	320 5956
69	80 (LHD-LDB-* 8-38)	.....	1	448 7456
67/68	***15-16-17-19 (Heavy Duty-Six-* 8-4)***	.....	1	320 5956
69	***15-19 (Heavy Duty-Six-* 8-4 And * 8-37)***	.....	1	320 5956
69	***15-19 (Heavy Duty-Six-* 8-4 And * 8-38)***	.....	1	448 7456
67/69	***15-16-17-19 (RHD-V8-LDB-* 8-41)***	.....	1	320 8540
67/69	***15-16-17-19 (RHD-Six-LDB)***	.....	1	320 8537
70	***10 (RHD-Six-LDB)***	.....	1	448 6989
67/69	***18 (RHD-LDB-* 8-41)***	.....	1	320 8540
69	***18 (RHD-Six-LDB-* 8-42)***	.....	1	448 6989
69/70	***10-80 (RHD-V8-LDB-* 8-42)***	.....	1	448 6989
67/69	***80 (RHD-LDB-* 8-41)***	.....	1	320 8540
67	***10-80 (RHD-WDB)***	.....	1	320 8561
68/70	***10-80 (RHD-WDB)***	.....	1	448 5590

BRAKES - WHEELS

8.410–1 BRACKET, Power Brake Unit Mounting

67/	(Left) 01-40 (LHD)	.....	1	448 5695
67/69	(Left) 10-50-80 (LHD-* 8-37)	.....	1	320 4113
69	(Left) 10-80 (LHD-* 8-38)	.....	1	448 5695
70/	(Left) 10-80 (LHD)	.....	1	448 6159
68	(Left) 30-70 (LDB-* 8-30)	.....	1	448 5695
68	(Left) 30-70 (* 8-29)	.....	1	320 4113
69/	(Left) 30-70 (LDB)	.....	1	448 5695
68	(Left) 30-70 (WDB-* 8-30)	.....	1	448 6159
69/71	(Left) 30-70 (WDB)	.....	1	448 6159
72	(Left) 70 (Six-WDB)	.....	1	448 5695
72	(Left) 70 (V8-WDB)	.....	1	448 6159
67/70	***(Left) 10-80 (RHD)***	.....	1	320 8521
67/69	(Right) 01 (LHD) ***(Use 448 8459)***	.....	1	320 5008
70/	(Right) 01-40	.....	1	448 8459
67/69	(Right) 10-50-80 (LHD-* 8-37)	.....	1	320 4114
69	(Right) 10-80 (LHD-* 8-38) ***(Use 448 8459)***	.....	1	320 5008
70/	(Right) 10-80 (LHD)	.....	1	320 4114
68/71	(Right) 30-70 (WDB)	.....	1	320 4114
68/	(Right) 30-70 (LDB) ***(Use 448 8459)***	.....	1	320 5008
72	(Right) 70 (Six-WDB)	.....	1	448 8459
72	(Right) 70 (V8-WDB)	.....	1	320 4114
67/70	***(Right) 10-80 (RHD)***	.....	1	320 8520

8.410–2 ATTACHING PARTS, Bracket To Dash

STUD	67/71	01	8.035	2	315 7870
STUD	67/71	10-50-80 (Six-WAT)(V8)	8.035	4	315 7870
STUD	67/71	10-50-70-80 (Six-WST)(Six-WOD)	8.035	4	317 7692
STUD	68	30-70 (Six-WAT-* 8-29)(V8-* 8-29)	8.035	2	315 7870
STUD	69	30-70 (Six-WAT)(V8)	8.035	2	315 7870
WASHER, Lock	67/		17.820	4	G120382 NA
NUT, Hexagon	67/70	(3/8"-24 x 21/64")	17.406	4	G120369 NA
NUT, Hexagon	67/	(3/8"-16 x 21/64")	17.406	4	G102635 NA

8.420–1 LINK, Power Brake Bellcrank To Brake Pedal

67/71	01-40 (LHD-LDB)	.....	1	320 5007
67/69	10-50-80 (LHD-LDB-* 8-37)	.....	1	320 8324
69	10-80 (LHD-LDB-* 8-38)	.....	1	320 5007
70/71	10-80 (LHD-LDB)	.....	1	320 8324
72	10-80 (LHD-LDB)	.....	1	812 1707
68	30-70 (LHD-LDB-* 8-29)	.....	1	320 8324
68	30-70 (LHD-LDB-* 8-30)	.....	1	320 5007
69/71	30-70 (LDB)	.....	1	320 5007
72	70 (V8-LDB)	.....	1	812 1348
70	01 (WDB)	.....	1	320 7805
71	01 (WDB)	.....	1	320 5007
72	01-40	.....	1	812 1348
67/68	01 (LHD-V8-WDB)	.....	1	320 7805
69	09 (SC/RAMBLER)	.....	1	320 7805
67/71	10-30-50-70-80 (LHD-WDB)	.....	1	320 8491
72	10-80 (WDB)	.....	1	812 1708
72	70 (Six)	.....	1	812 1348
72	70 (V8-WDB)	.....	1	812 1708
67/70	***10-80 (RHD)***	.....	1	320 8522

8.420–2 ATTACHING PARTS, Link To Bellcrank

PIN, Clevis	67/		.....	1	320 3342
WASHER, Bowed	67/		.....	2	320 3344
PIN, Cotter	67/		17.460	1	G103373

8.420–3 GUARD, Power Brake Bellcrank To Brake Pedal Link

67/		.....	1	320 3341

Printed in U.S.A.

8.430–1 BELLCRANK, Power Brake Operating

67/69	01 (LHD) ... ***(Use 448 8434)***	.....	1	320 5006
70/	01-40	.....	1	448 8434
70/71	30-70 (LDB)	.....	1	448 8434
72	70 (Six-WDB)	.....	1	448 8434
67/69	10-50-80 (LHD-* 8-37)	.....	1	320 4111
69	10-80 (* 8-38) ... ***(Use 448 8434)***	.....	1	320 5006
70/	10-80 (LDB)	.....	1	448 8435
70/	10-30-70-80 (LHD-WDB)	.....	1	448 8436
68	30-70 (* 8-29)	.....	1	320 4111
68	30-70 (* 8-30) ... ***(Use 448 8434)***	.....	1	320 5006
69	30-70 (LDB) ... ***(Use 448 8434)***	.....	1	320 5006
67/69	***10-80 (RHD)***	.....	1	320 8519
70	***10-80 (RHD)***	.....	1	448 8435

8.430–2 ATTACHING PARTS, Bellcrank To Brackets

PIN, Pivot	67/	.....	1	320 3347
PIN, Clevis	67/	..... 8.420	1	320 3342
WASHER, Bowed	67/	.....	1	320 3348
PIN, Cotter	67/	..... 17.460	2	G103373 NA

8.430–3 BUSHING, Power Brake Bellcrank Pivot Pin

70/	.....	.....	2	448 8433

8.450–1 FILTER, Power Brake Air

67/	LDB (LHD-WDB)	.....	1	320 3375
67/70	***10-80 (RHD-WDB)***	.....	1	320 8582

8.450–2 RETAINER, Power Brake Air Filter

67/	.....	.....	1	320 3364

8.460–1 VALVE, Power Brake Vacuum Check

67/68	01 (LHD)	.....	1	320 8711
69	01 (LHD-* 8-37)	.....	1	320 8711
69	01 (LHD-* 8-38)	.....	1	448 7324
70/	01-30-40-70 (LDB)	.....	1	448 7324
70/71	01 (WDB)	.....	1	320 8711
72	01-40 (WDB)	.....	1	448 7324
67/68	10-30-50-70-80 (LDB)	.....	1	320 8711
69	10-30-70-80 (LDB-* 8-37)	.....	1	320 8711
69	10-30-70-80 (LDB-* 8-38)	.....	1	448 7324
70/	10-80 (LHD-LDB)	.....	1	448 8347
67/68	10-30-50-70-80 (WDB) ... ***(Use 448 7455)***	.....	1	320 8509
69	10-30-70-80 (WDB-* 8-37) ... ***(Use 448 7455)***	.....	1	320 8509
69	10-30-70-80 (WDB-* 8-38)	.....	1	448 7455
70/	10-30-70-80 (LHD-WDB)	.....	1	448 7455
72	70 (Six-WDB)	.....	1	448 7324
70	***10-80 (RHD-LDB)***	.....	1	320 8711
70	***10-80 (RHD-WDB)*** ... ***(Use 448 7455)***	.....	1	320 8509

8.460–2 SEAL, Power Brake Vacuum Check Valve

67/71	01 (LHD)	.....	1	320 3561
67/69	10-30-50-70-80 (LDB)	.....	1	320 3561

BRAKES - WHEELS

8.460–3 GROMMET, Power Brake Vacuum Check Valve

70/	01-30-40-70 (LDB)	.....	1	320 8510
70/	10-80 (LHD-LDB)	.....	1	448 8348
67/	10-30-50-70-80 (WDB)	.....	1	320 8510

8.460–4 NIPPLE, Power Brake Vacuum (On Intake Manifold)

70	LHD (Six-WVW)	.....	1	318 5004
71	SIX (WVW)	.....	1	321 1327
71	SIX (WEW) ***(Use 321 6514)***	.....	1	321 1328
72	SIX (WEW)	.....	1	321 6514
67	01-10-50-80 (Six-WVW-LEEP)	.....	1	317 5744
67	01 (Six-WEW-LEEP)	.....	1	315 3667
67	01-10-50-80 (Six-WEEP-WASC)	.....	1	318 4710
67	10-50-80 (Six-WEW-LASC-LEEP)	.....	1	315 3667
67	10-50-80 (Six-WVW-WASC-LEEP)	.....	1	318 4705
68/69	01-10-30-70-80 (Six-WVW)	.....	1	317 5744
68/	01 (Six-WEW)	.....	1	315 3667
68/69	10-70-80 (Six-WEW-LASC)	.....	1	315 3667
70	10-70-80 (LHD-WEW)	.....	1	315 3667
67/71	01-10-30-50-70-80 (LHD-V8-LASC)	.....	1	318 7777
71	01-10-70 (V8-WPB-WEEP)	.....	1	319 3014
71	01-10-70 (V8-WPB-WEEP)	.....	1	319 8019
71	01-10-70-80 (V8-WPB-WASC)	.....	1	319 8019
72	V8 (WPB)	.....	1	321 6512
67/	***10-80 (RHD)***	.....	1	318 7777

8.460–4a FITTING, Power Brake Vacuum (On Intake Manifold)

71	10-80 (V8-WPB-WASC)	.....	1	318 7949

8.460–5 PLUG, Power Brake Vacuum Nipple

67		22.050	1	400 0711

8.460–6 HOSE, Power Brake Vacuum Check Valve To Nipple

67/		.....	1	315 3670

8.460–7 CLAMP, Power Brake Vacuum Check Valve To Nipple Hose

67/		4.141	2	318 0752

8.480–1 ROD, Power Brake Valve Push

67/69	01 (LHD-Six)	.....	1	320 5899
70/	01-40-70 (Six-LDB)	.....	1	448 8351
67/69	01 (LHD-V8-LDB)	.....	1	320 7583
67/68	01 (LHD-V8-WDB)	.....	1	320 7807
70	01 (WDB)	.....	1	320 7807
71	01 (WDB)	.....	1	448 8350
70/71	01-30-70 (V8-LDB)	.....	1	448 8350
72	01-40-70 (V8-LDB)	.....	1	448 8350
72	01-40 (WDB)	.....	1	448 8350
69	09 (SC/RAMBLER)	.....	1	320 7807
67/69	10-30-50-70-80 (LHD-V8-WDB)	.....	1	320 8493
70/	10-30-70-80 (LHD-WDB)	.....	1	320 8493
70/71	10-80 (LHD-LDB)	.....	1	448 8345
72	10-80 (LDB) ***(Use 448 8345)***	.....	1	812 1712
67/69	15-16-17-19 (LHD-Six-LDB-* 8-37)	.....	1	320 5901
67/69	15-16-17-19 (LHD-V8-LDB)	.....	1	320 5903
67/69	18 (LHD-LDB)	.....	1	320 5903
68	30-70 (V8-LDB-* 8-29)	.....	1	320 5903
68	30-70 (V8-LDB-* 8-30)	.....	1	320 7583
69	30-70 (V8-LDB)	.....	1	320 7583
67/69	50-80 (LDB)	.....	1	320 5903

68	70 (Six-* 8-29)	.....	1	320 5901
68	70 (Six-* 8-30)	.....	1	320 5899
69	70 (Six)	.....	1	320 5899
72	70 (Six-WDB)	.....	1	448 8350
67	***10 (RHD-Six-LDB)***	.....	1	320 8539
67/69	***10-80 (RHD-V8-LDB-* 8-41)***	.....	1	320 8542
67/70	***10-80 (RHD-WDB)***	.....	1	320 8535
69	***10-80 (RHD-V8-LDB-* 8-42)***	.....	1	448 7106
70	***10-80 (RHD-LDB)***	.....	1	448 7106
68/70	***15-17-19 (RHD-Six-LDB)***	.....	1	320 8539
68/69	***18 (RHD-Six-LDB-* 8-41)***	.....	1	320 8542
69	***18 (RHD-Six-* 8-42)***	.....	1	448 7106

8.480–2 GUARD, Power Brake Valve Push Rod

67/	01-30-40-50-70 (LHD)	.....	1	320 3345
67/	10-80 (LDB)(LHD-WDB)	.....	1	320 3345
67/70	***10-80 (RHD-WDB)***	.....	1	320 8562

8.480–3 RETAINER, Power Brake Valve Push Rod Guard

67/	01-40	.....	1	320 3346
67/	10-30-50-70-80 (LDB)	.....	1	320 3346

8.480–4 KEY, Power Brake Valve Push Rod Stop

67/	01-40	.....	1	320 3363
67/	10-30-50-70-80 (LDB)	.....	1	320 3363

8.480–5 SPRING, Power Brake Valve Push Rod

67/	10-30-50-70-80 (WDB)	.....	1	320 8496

8.480–6 PLUNGER, Power Brake Valve Push Rod

67/	10-30-50-70-80 (WDB)	.....	1	320 8492

8.480–7 SPRING, Power Brake Valve Push Rod Plunger

67/	10-30-50-70-80 (WDB)	.....	1	320 8508

8.480–8 POPPET, Power Brake Valve Push Rod

67/	10-30-50-70-80 (WDB)	.....	1	320 8494

8.480–9 RETAINER, Power Brake Valve Push Rod Poppet

67/	10-30-50-70-80 (WDB)	.....	1	320 8497

8.485–1 DIAPHRAGM, Power Brake Valve Body

67/	01-40	.....	1	320 3362
67/	30-70 (LDB)	.....	1	320 3362
67/69	10-50-80 (LDB)	.....	1	320 3362
70/	10-80 (LHD-LDB)	.....	1	448 8343
67/	(Front) 10-30-50-70-80 (WDB)	.....	1	320 8501
67/	(Rear) 10-30-50-70-80 (WDB)	.....	1	320 8502

BRAKES - WHEELS

8.485–2 PLATE, Power Brake Valve Body Diaphragm

67/	01-40-70 (LHD-Six-LDB)	.....	1	320 3370
67/	01 (LHD-V8-LDB)	.....	1	320 7801
67/69	15-16-17-19 (Six-LDB-Except Heavy Duty-* 8-4)	.....	1	320 3370
67/69	15-16-17-19 (V8-LDB)	.....	1	320 5976
67/69	18 (LDB)	.....	1	320 5976
68/	30-70 (V8-LDB)	.....	1	320 5976
70/	30-70 (V8-LDB)	.....	1	320 7801
67/69	50-80 (LDB)	.....	1	320 5976
70/	10-80 (LHD-LDB)	.....	1	448 8344
67/	***15-16-17-19 (Heavy Duty-Six-* 8-4)***	.....	1	320 5976
67/68	01 (V8-WDB)	.....	1	320 6146
69	09 (SC/RAMBLER)	.....	1	320 6146
70	01 (WDB)	.....	1	320 6146
71	01 (WDB)	.....	1	320 7801
67/	(Front) 10-30-50-70-80 (WDB)	.....	1	320 8503
67/	(Center) 10-30-50-70-80 (WDB)	.....	1	320 8500
67/	(Rear) 10-30-50-70-80 (WDB)	.....	1	320 8495

8.485–3 SEAL, Power Brake Valve Body Diaphragm Plate To Housing

67/		.....	1	320 3371

8.485–4 SEAL, Power Brake Valve Body Diaphragm Plate (Front) To Diaphragm Plate (Rear)

67/	10-30-50-70-80 (WDB)	.....	1	320 8506

8.485–6 SPRING, Power Brake Valve Body Diaphragm

67/68		.....	1	320 3368
69	(* 8-37)	.....	1	320 3368
69	(* 8-38)	.....	1	448 7308
70/	01-30-40-70	.....	1	448 7308
70/	10-80 (LHD)	.....	1	448 7308
70	***15-19 (RHD-Six)***	.....	1	320 3368
70	***10-80 (RHD-V8-LDB)***	.....	1	448 7308
70	***18 (RHD-Six-LDB)***	.....	1	448 7308
70	***10-80 (RHD-WDB)***	.....	1	320 3368

8.485–7 RETAINER, Power Brake Valve Body Diaphragm

67/	10-30-50-70-80 (WDB)	.....	1	320 8516

8.500–1 HOUSING, Power Brake Power Unit (Master Cylinder End)

67	01 (LHD)	.....	1	320 5000
68	01 (LHD-LDB)(V8-WDB-* 8-27)	.....	1	320 5000
69	01 (LHD)	.....	1	320 5000
70/	01-30-40-70 (LDB)	.....	1	448 7319
67/69	10-50-80 (LDB-* 8-37)	.....	1	320 4121
69	10-80 (LDB-* 8-38)	.....	1	448 7319
70/	10-80 (LHD-LDB)	.....	1	448 8340
68	30-70 (LDB-* 8-29)	.....	1	320 4121
68	30-70 (LDB-* 8-30)	.....	1	320 5000
69	30-70 (LDB)	.....	1	320 5000
68	01 (V8-WDB-* 8-28)	.....	1	448 5575
69	09 (SC/RAMBLER)	.....	1	448 5575
70/	01 (WDB)	.....	1	448 5575
67	10-50-80 (WDB)	.....	1	320 8514
68	10-30-70-80 (WDB-* 8-27)	.....	1	320 8514

68	10-30-70-80 (WDB-* 8-28)	.....	1	448 5579
69/70	10-30-70-80 (WDB)	.....	1	448 5579
71	10-80 (WDB)	.....	1	448 9436
71	70 (WDB)	.....	1	448 5579
70	***10-80 (RHD-LDB)***	.....	1	320 4121

8.500–2 HOUSING, Power Brake Power Unit (Mounting Bracket End)

67/71	01-30-40-70 (LHD-LDB)	.....	1	320 4120
70	01 (WDB)	.....	1	320 4120
71	01 (WDB)	.....	1	812 0062
72	01-40 (WDB)	.....	1	812 0062
67/69	10-50-80 (LHD-LDB)	.....	1	320 4120
70/	10-80 (LHD-LDB)	.....	1	448 8341
67/70	10-30-50-70-80 (LHD-WDB)	.....	1	320 8513
71	10-80 (WDB)	.....	1	448 9435
71	70 (WDB)	.....	1	320 8513
72	70 (Six-WDB)	.....	1	812 0062
67/70	***10-80 (RHD-WDB)***	.....	1	320 8536

8.505–1 ROD, Power Brake Master Cylinder Piston Push

67	01 (LHD)	.....	1	320 4116
68/	01-30-40-70 (LHD-LDB)	.....	1	320 4116
67/69	10-50-80 (LDB)	.....	1	320 4116
70/	10-80 (LHD-LDB)	.....	1	448 8342
68	01 (V8-WDB)	.....	1	448 5451
69	09 (SC/RAMBLER)	.....	1	448 5451
70/	01 (WDB)	.....	1	448 5451
72	01-40 (WDB)	.....	1	448 5451
67/	10-30-50-70-80 (WDB)	.....	1	320 8512
72	70 (Six-WDB)	.....	1	448 5456

8.505–2 DISC KIT, Power Brake Master Cylinder Piston Reaction

67/	01-30-70 (LDB)	.....	1	448 5759
67/69	10-50-80 (LDB)	.....	1	320 4350

8.505–3 PLATE, Power Brake Master Cylinder Piston Push Rod

67/	LDB	.....	1	320 4169
67/	01 (WDB)	.....	1	320 4169

8.505–4 SEAL, Power Brake Master Cylinder Piston Push Rod

72	01-10-40-70-80 (WDB)	.....	1	320 4169
67/71	10-30-50-70-80 (WDB)	.....	1	320 8515

8.510–1 CYLINDER ASSEMBLY, Power Brake Master

67	LDB	8.035	1	320 8311
68/69	LHD (LDB-* 8-41)	.....	1	448 5452
69	LHD (LDB-* 8-42)	.....	1	448 7376
70/	LHD (LDB)	.....	1	448 7376
67	01 (V8-WDB)	.....	1	320 7351
68	01 (V8-WDB-* 8-27)	.....	1	320 8485
68	01 (V8-WDB-* 8-28)	.....	1	448 5577
69	09 (SC/RAMBLER)	.....	1	448 5577
70	01 (WDB)	.....	1	448 5577
71/	01-40-70 (WDB)	.....	1	448 5577

67	10-50-80 (WDB)	.....	1	320 8485
68	10-30-70-80 (WDB-* 8-27)	.....	1	320 8485
68	10-30-70-80 (WDB-* 8-28)	.....	1	448 5577
69/70	10-30-70-80 (WDB)	.....	1	448 5577
71/	10-80 (WDB)	.....	1	448 9427
68/69	***10-80 (RHD-LDB-* 8-41)***	.....	1	320 8311
69	***RHD (LDB-* 8-42)***	.....	1	448 7377
70	***RHD (LDB)***	.....	1	448 7377

8.510–2 COVER, Power Brake Master Cylinder Filler

67/69	LDB (* 8-41)	8.038	1	320 8435
69	LDB (* 8-42)	.....	1	448 8293
70/	LDB	.....	1	448 8293
67	WDB	.....	1	320 7352
68	WDB (* 8-27)	.....	1	320 7352
68	WDB (* 8-28)	.....	1	448 5601
69/	WDB	.....	1	448 5601

8.510–3 ATTACHING PARTS, Cover To Cylinder

BOLT, Hexagon 67/69	LDB (* 8-41)	8.038	1	320 7056

8.510–4 GASKET, Power Brake Master Cylinder Filler Cover

67/69	LDB (* 8-41)	8.038	1	320 7021
69	LDB (* 8-42)	.....	1	448 8291
70/	LDB	.....	1	448 8291
67	WDB	.....	1	320 7353
68	WDB (* 8-27)	.....	1	320 7353
68	WDB (* 8-28)	.....	1	448 5607
69/	WDB	.....	1	448 5607

8.510–5 SHIELD, Power Brake Master Cylinder Dust

67/69	LDB (* 8-41)	.....	1	320 6920

8.510–6 RETAINER, Power Brake Master Cylinder Cover (Wire Bail)

68	WDB (* 8-28)	.....	1	448 5608
69/	WDB	.....	1	448 5608
69	LDB (* 8-42)	.....	1	448 8292
70/	LDB	.....	1	448 8292

8.510–7 DEFLECTOR, Brake Master Cylinder Water

67/	.....	29.010	1	351 0436

8.512 REPAIR KIT, Power Brake Master Cylinder

67	LDB	8.048	1	320 5767
68	LDB (* 8-31)	8.048	1	320 5767
68	LDB (* 8-32)	8.048	1	320 5767
69/	LDB	.....	1	320 5767
67	01 (V8-WDB)	.....	1	320 5772

67	10-50-80 (WDB)	.....	1	320 8486
68	WDB (* 8-27)	.....	1	320 8486
68	WDB (* 8-28)	.....	1	448 5613
69/70	WDB	.....	1	448 5613
71/	01-70 (WDB)	.....	1	448 5613
71/	10-80 (WDB)	.....	1	448 9433

8.515-1 PISTON, Power Brake Master Cylinder Secondary

67/	LDB	8.044	1	320 5768
67	01 (V8-WDB)	8.044	1	320 5768
68	WDB (* 8-27)	.....	1	320 8487
68	WDB (* 8-28)	.....	1	448 5614
69/70	WDB	.....	1	448 5614
71/	01-40-70 (WDB)	.....	1	448 5614
71/	10-80 (WDB)	.....	1	448 9428

8.515-2 BOLT, Power Brake Master Cylinder Piston Stop

67		8.050	1	320 4129
68	LDB (* 8-31)	8.050	1	320 4129
68	LDB (* 8-32)	8.050	1	448 5454
69/	LHD (LDB)	.....	1	448 5454
68	WDB (* 8-27)	8.050	1	320 4129
68	WDB (* 8-28)	.....	1	448 5611
69/70	WDB	.....	1	448 5611
71/	01-40-70 (WDB)	.....	1	448 5611
71/	10-80 (WDB)	.....	1	448 9431
69/70	***RHD (LDB)***	.....	1	320 4129

8.515-3 SEAL, Power Brake Master Cylinder Piston Stop "O" Ring

68	LDB (* 8-32)	8.050	1	448 5453
69/	LHD (LDB)	.....	1	448 5453
68	WDB (* 8-28)	.....	1	448 5612
69/70	WDB	.....	1	448 5612
71/	01-40-70 (WDB)	.....	1	448 5612
71/	10-80 (WDB)	.....	1	448 5453

8.515-4 PLUG, Power Brake Master Cylinder Piston Stop

68	(* 8-31)	8.050	1	448 5457

8.515-5 SPRING, Power Brake Master Cylinder Secondary Piston Return

67		8.046	1	320 7917
68/	LDB	8.046	1	320 7917
68	WDB (* 8-27)	8.046	1	320 7917
68	WDB (* 8-28)	.....	1	448 5609
69/70	WDB	.....	1	448 5609
71/	01-40-70 (WDB)	.....	1	448 5609
71/	10-80 (WDB)	.....	1	448 9430

8.515-6 RETAINER, Power Brake Master Cylinder Secondary Piston Cup

67/70		8.046	1	320 5110
71/	LDB	8.046	1	320 5110
71/	01-40-70 (WDB)	8.046	1	320 5110
71/	10-80 (WDB)	.....	1	448 9429

BRAKES - WHEELS

8.515–7 PROTECTOR, Power Brake Master Cylinder Secondary Piston Cup

67/70		8.046	1	320 3597
71/	LDB	8.046	1	320 3597
71/	01–40–70 (WDB)	8.046	1	320 3597
71/	10–80 (WDB)	.....	1	448 9447

8.517–1 SPRING, Power Brake Master Cylinder Residual Valve

67/		.....	2	320 4994

8.517–2 SEAT, Power Brake Master Cylinder (Front Wheel Brake Tube)

68	WDB (* 8–28)	.....	1	448 5610
69/70	WDB	.....	1	448 5610
71/	01–40–70 (WDB)	.....	1	448 5610

8.805–1 DISC ASSEMBLY, Front Wheel Disc Brake

67/70		.....	2	320 5715
71/		.....	2	321 0408

8.805–2 STUD, Front Wheel Disc Brake Disc Assembly

67/70		.....	10	320 8715
71/		.....	10	321 0691

8.810–1 CALIPER ASSEMBLY, Front Wheel Disc Brake

67	***(Use 448 5653)***	.....	2	317 7056
68	(* 8–33) ***(Use 448 5653)***	.....	2	317 7056
68	(* 8–34)	.....	2	448 5653
69/70		.....	2	448 5653
71	(Left)	.....	1	321 0416
72	(Left) 01–40–70	.....	1	321 6657
72	(Left) 10–80 (Except Heavy Duty)	.....	1	321 6657
72	***(Left) 10-80 (Heavy Duty)***	.....	1	321 8140
71	(Right)	.....	1	321 0417
72	(Right) 01–40–70	.....	1	321 6658
72	(Right) 10–80 (Except Heavy Duty)	.....	1	321 6658
72	***(Right) 10-80 (Heavy Duty)***	.....	1	321 8141

8.810–2 ATTACHING PARTS, Inner Caliper To Outer Caliper Cylinder

BOLT, Hexagon	67/70	.....	6	320 5721

8.810–3 ATTACHING PARTS, Caliper To Mounting Bracket

BOLT, Hexagon	67	.....	1.134	4	317 2308
BOLT, Hexagon	68	(* 8–33)	1.134	4	317 2308
BOLT, Hexagon	68	(* 8–34)	.....	4	319 3050
BOLT, Hexagon	69/70	.....	.....	4	319 3050
BOLT, Hexagon	71/	.....	.....	4	321 0817
WASHER, Lock	67/	.....	17.820	4	G120384 NA

8.810–4 PIN, Disc Brake Caliper Positioner Locating

71		.....	4	321 0808
72		.....	4	321 3930

8.810–5 BUSHING, Front Wheel Disc Brake Caliper

71/	(Inner)	.....	4	321 0801
71/	(Outer)	.....	4	321 0699

8.810–6 POSITIONER, Front Wheel Disc Brake Caliper

71/	(Left) WDB	.....	2	321 0809
71/	(Right) WDB	.....	1	321 0810

Printed in U.S.A.

BRAKES - WHEELS

8.810–7 SPRING, Anti-Rattle And Outbound Shoe Retainer

71/	WDB	.....	2	321 0805

8.815 SHOE SET, Front Wheel Disc Brake (Axle Set Of 4 Shoes)

67/70		.....	1	320 5722
71	(* 8-61)	.....	1	812 0064
72	01-40-70 (* 8-62)	.....	1	812 1321
72	10-80 (Except Heavy Duty-* 8-62)	.....	1	812 1321
72	***10-80 (Heavy Duty-* 8-61)***	.....	1	812 1780

8.820 REPAIR KIT, Front Wheel Disc Brake Caliper

67/70		.....	2	320 5723
71/		.....	2	812 0065

8.830 SCREW, Front Wheel Disc Brake Caliper Bleed

67/70		8.088	2	320 3313
71/		.....	2	321 0802

8.835 BRACKET, Front Wheel Disc Brake Caliper Mounting

67/68	(Left)	.....	1	320 5717
69/70	(Left)	.....	1	319 3791
71/	(Left)	.....	1	321 0412
67/68	(Right)	.....	1	320 5716
69/70	(Right)	.....	1	319 3792
71/	(Right)	.....	1	321 0413

8.840 SHIM, Front Wheel Disc Brake Caliper To Bracket

67/70	(.002)	.....	AR	317 7137
67/70	(.005)	.....	AR	317 7136
67/70	(.010)	.....	AR	317 7135
67/70	(.020)	.....	AR	317 7134
67/70	(.040)	.....	AR	317 7133

8.845 SHIELD, Front Wheel Disc Brake Splash

67/70	(Left)	.....	1	317 7059
71/	(Left)	.....	1	321 0410
67/70	(Right)	.....	1	317 7060
71/	(Right)	.....	1	321 0411

8.850 TUBE, Front Wheel Disc Brake Caliper To Hose

67/70		.....	2	318 5252

8.855–1 HOSE, Front Wheel Disc Brake

67/70		.....	2	318 5139
71/		.....	2	321 0818

8.855–2 CLIP, Front Wheel Disc Brake Hose Fastening

67/70		8.102	2	47 774

8.855–3 WASHER, Front Wheel Disc Brake Hose

71/		.....	2	321 0820

8.860 BRACKET, Front Wheel Disc Brake Inlet Hose

67/70	(Left)	.....	1	318 5188
67/70	(Right)	.....	1	318 5189

SPECIAL INFORMATION

The Engine Build Code Number, Vehicle Identification Number and the information provided on the Unit Body Plate are often necessary when determining the proper replacement parts for your automobile. For their location refer to the General Information Section found at the front of this catalog.

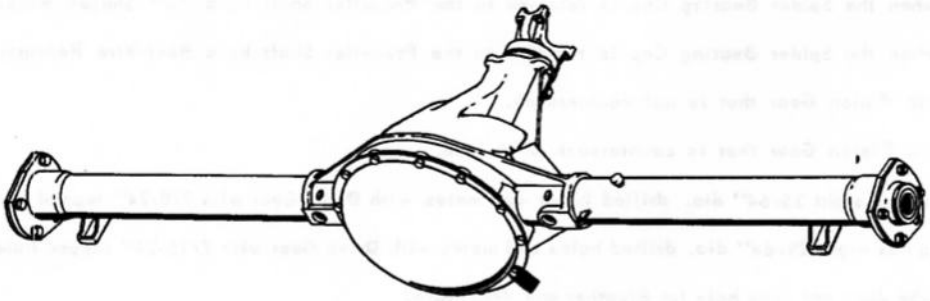

Illustrated is the general location of the rear axle Ratio Tag used on all cars except 70 thru 72 10-80. These cars have a stamped code on the cover flange. "A" is 11/39, "B" is 13/41, "C" is 15/43, "D" is 11/43, "E" is 12/43, "F" is 13/40, "G" is 13/43, "H" is 15/41, "J" is 19/45. This information is necessary to determine the proper components of your rear axle.

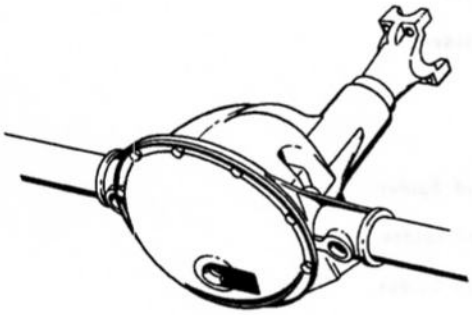

01 (SIX), 70 (SIX)

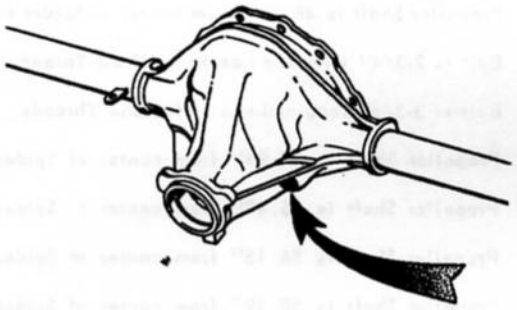

01 (V8), 30 (V8), 70 (V8), 10, 50, 80

Locking Differential or 'Twin Grip' equipped rear axles can be identified by the presence of a metal tag, so stating, attached to the cover filler plug as shown. This fact should be determined prior to seeking components of rear axles.

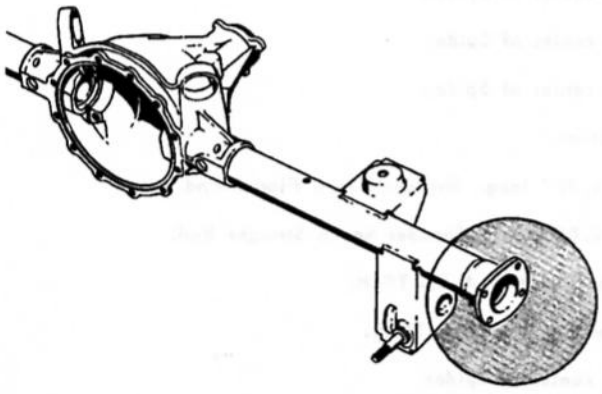

EXCEPT HEAVY DUTY

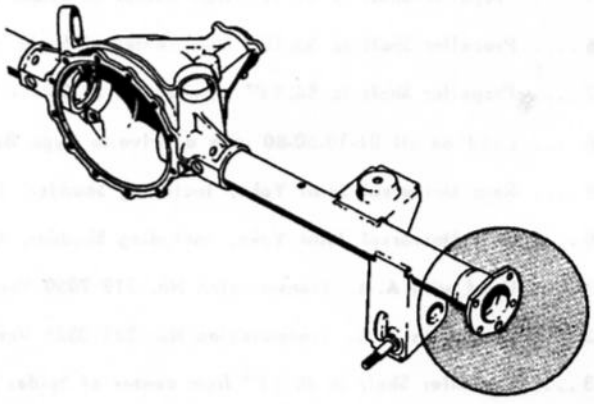

HEAVY DUTY

On the 67 thru 69 15-16-17-19 (Except Heavy Duty-Six) Rear Axle there are four holes on the Tube Flange. On the 67 thru 69 15-16-17-19 (Heavy Duty-Six) Rear Axle there are five holes on the Tube Flange.

NOTES

9–1 ..... Used on all 50 (232-WST) and 80 (232-WST). Also used on all 10 (232-WST) Cars equipped with a Regular Duty Drive Package the length of whose Propeller Shaft is 55. 19 inches from center of Spider to center of Spider.

9–2 ..... Used on all 10 (232-WST) Cars equipped with a Heavy Duty Drive Package the length of whose Propeller Shaft is 50. 59 inches from center of Spider to center of Spider.

9–3 ..... Used when the Spider Bearing Cap is retained to the Propeller Shaft by a "C" Shaped Retainer.

9–4 ..... Used when the Spider Bearing Cap is retained to the Propeller Shaft by a Bent-Wire Retainer.

9–5 ..... Use with Pinion Gear that is not countersunk.

9–6 ..... Use with Pinion Gear that is countersunk 3/16 inch.

9–7 ..... Housing has eight 25/64" dia. drilled holes and mates with Drive Gear with 3/8-24" tapped holes.

9–8 ..... Housing has eight 29/64" dia. drilled holes and mates with Drive Gear with 7/16-24" tapped holes.

9–9 ..... Axle Tube does not have hole for Breather and Vent Hose.

9–10 .... Axle Tube has hole for Breather and Vent Hose.

9–11 .... Used only on Station Wagons.

9–12 .... Used on all Sedans, Convertibles and Hardtops.

9–13 .... Propeller Shaft is 46. 83" from center of Spider to center of Spider.

9–14 .... Propeller Shaft is 49. 08" from center of Spider to center of Spider.

9–15 .... Bolt is 2-3/4" long and has Right Hand Threads.

9–16 .... Bolt is 3-3/4" long and has Left Hand Threads.

9–19 .... Propeller Shaft is 54. 94" from center of Spider to center of Spider.

9–20 .... Propeller Shaft is 56. 40" from center of Spider to center of Spider.

9–21 .... Propeller Shaft is 56. 15" from center of Spider to center of Spider.

9–22 .... Propeller Shaft is 50. 59" from center of Spider to center of Spider.

9–23 .... Propeller Shaft is 50. 34" from center of Spider to center of Spider.

9–24 .... Propeller Shaft is 52. 22" from center of Spider to center of Spider.

9–25 .... Propeller Shaft is 51. 97" from center of Spider to center of Spider.

9–26 .... Propeller Shaft is 55. 18" from center of Spider to center of Spider.

9–27 .... Propeller Shaft is 54. 94" from center of Spider to center of Spider.

9–28 .... Used on all 01-10-50-80 with a Drive-In Type Breather.

9–29 .... Rear Universal Joint Yoke, including Shedder, is 4. 25" long. Shedder has a Flared End.

9–30 .... Rear Universal Joint Yoke, including Shedder, is 4. 06" long. Shedder has a Straight End.

9–31 .... Used with A. M. Transmission No. 319 7050 Vendor Tag No. AS25–T96H.

9–32 .... Used with A. M. Transmission No. 321 0326 Vendor Tag No. AS1–T96K.

9–33 .... Propeller Shaft is 40. 72" from center of Spider to center of Spider.

9–34 .... Propeller Shaft is 38. 41" from center of Spider to center of Spider.

9–35 .... The Base Width of the Bumper is 1. 3".

9–36 .... The Base Width of the Bumper is 1. 6".

Printed in U.S.A.

NOTES

9–37 .... Differential Case Housing is in two pieces.

9–38 .... Differential Case Housing is in one piece.

9–39 .... Plug does not have a Nylon Coating and is used with a Gasket.

9–40 .... Plug has a Nylon Coating and is used without a Gasket.

9–41 .... Gasket is used without a Nylon Coated Plug.

Printed in U.S.A.

2800

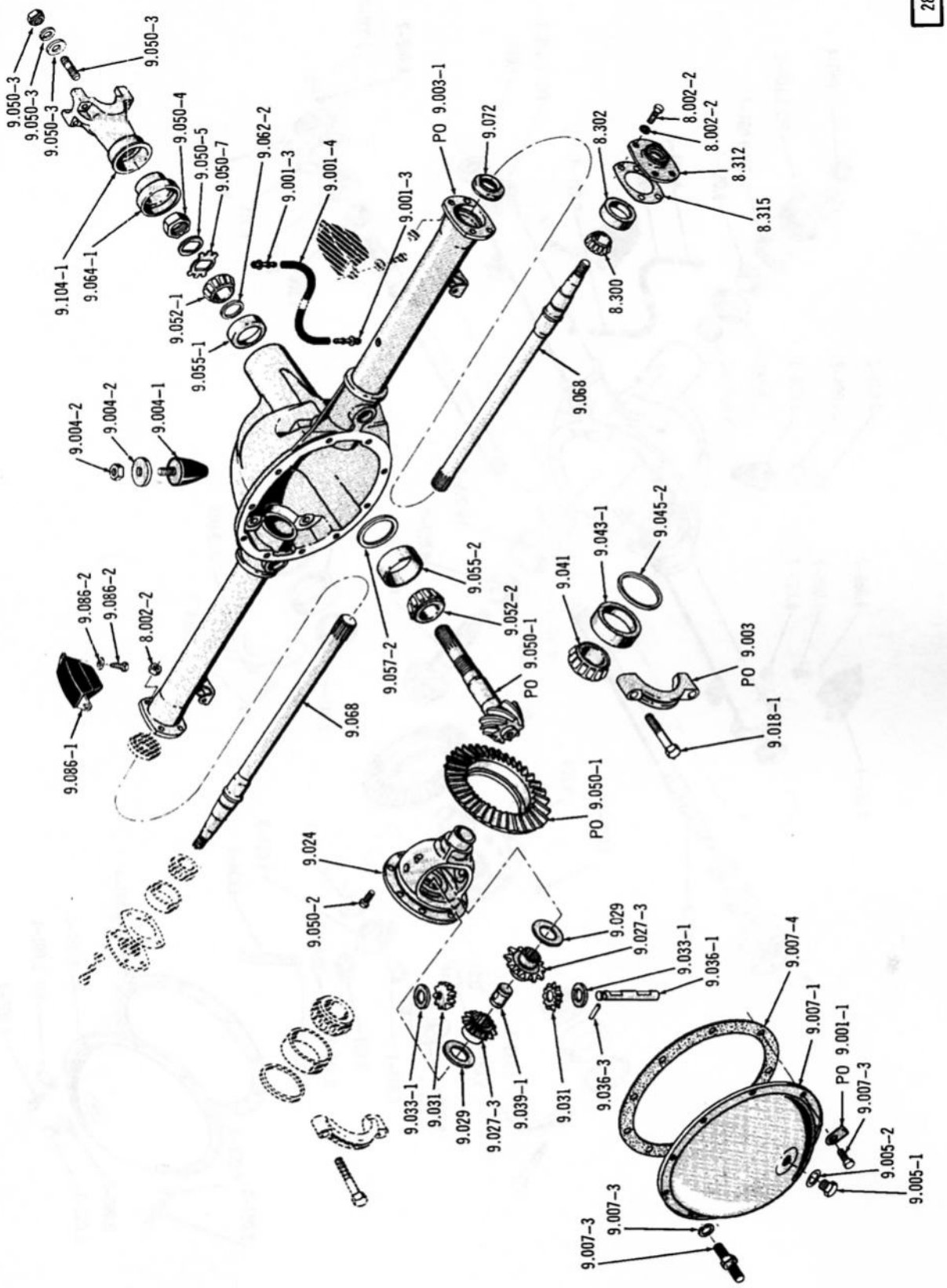

REAR AXLE ... 1967/69-LLD-SIX (01)(70)

3841

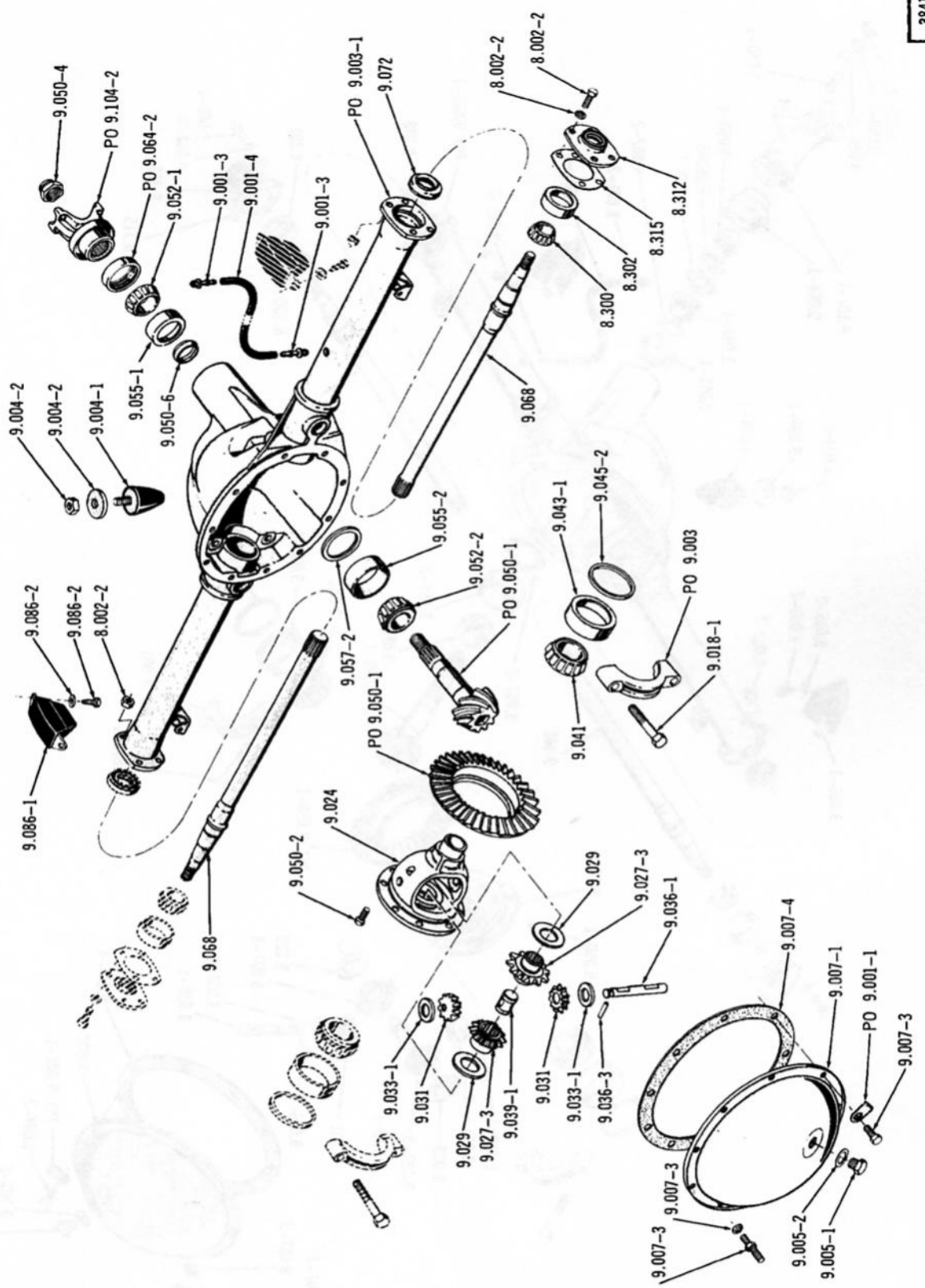

REAR AXLE ... 1970/ -LLD-SIX (01)(40)(70)

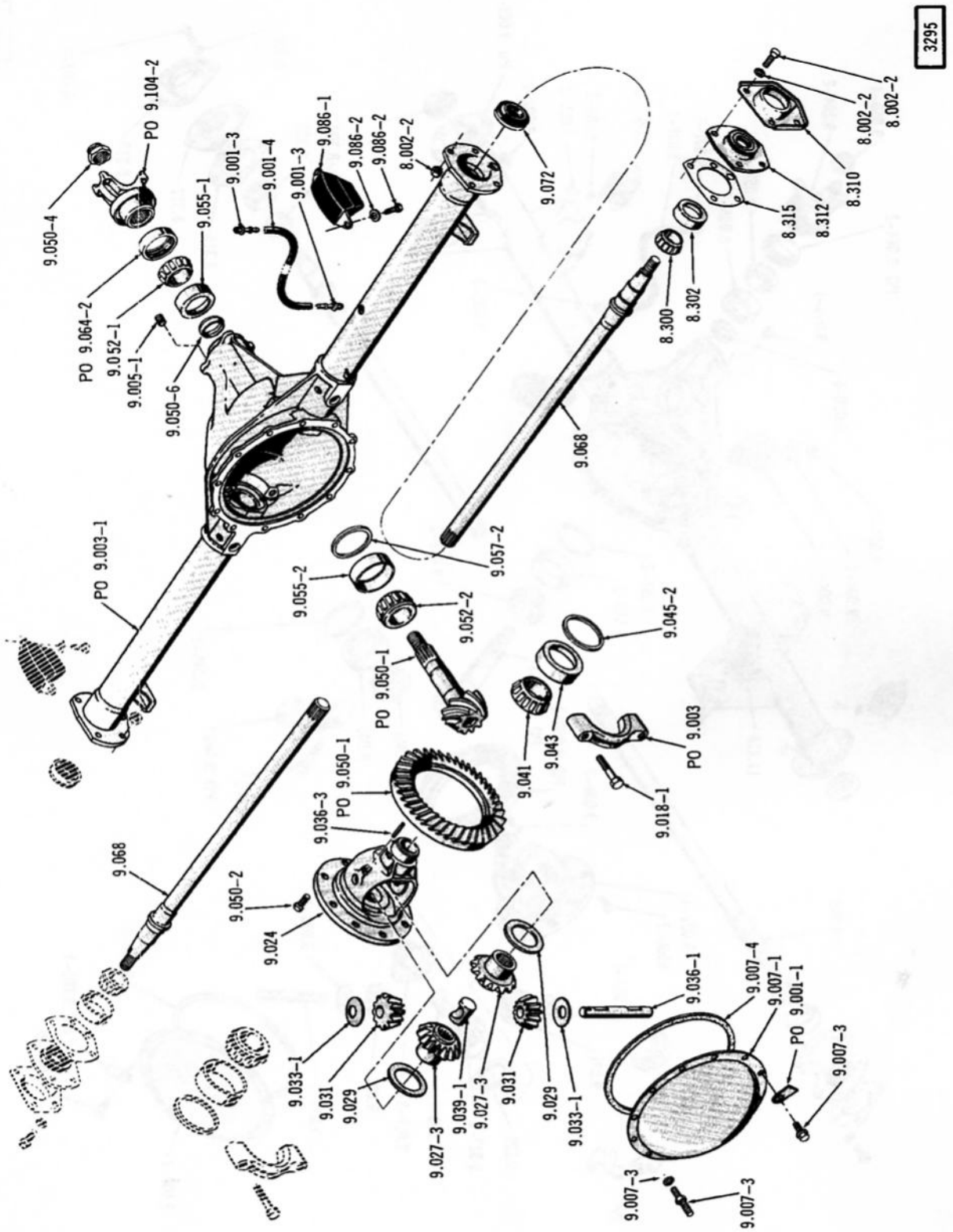

REAR AXLE . . . LLD-V8 (01)(30)(40)(70)

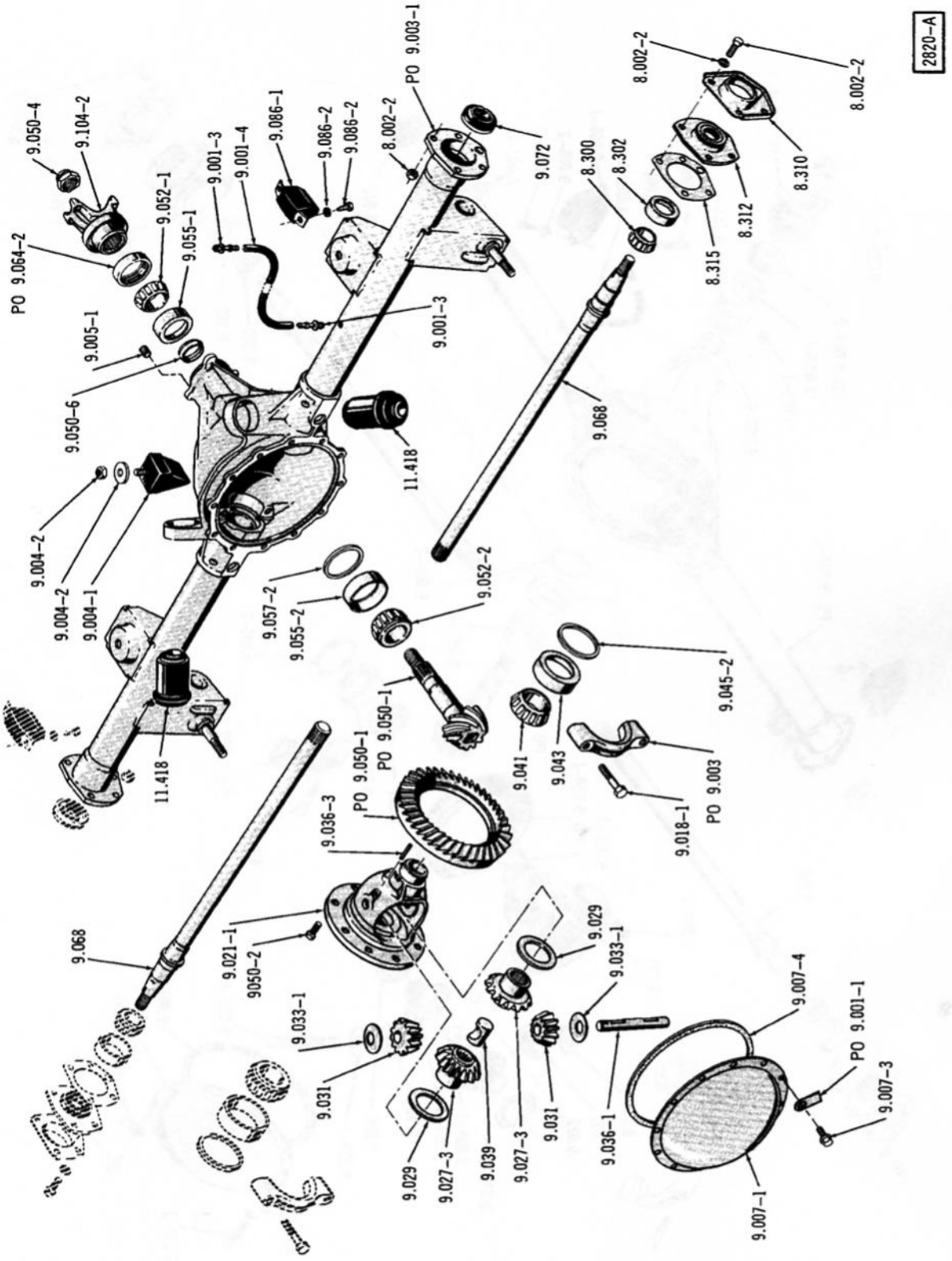

REAR AXLE ... LLD (10)(50)(80)

Printed in U.S.A.

3296

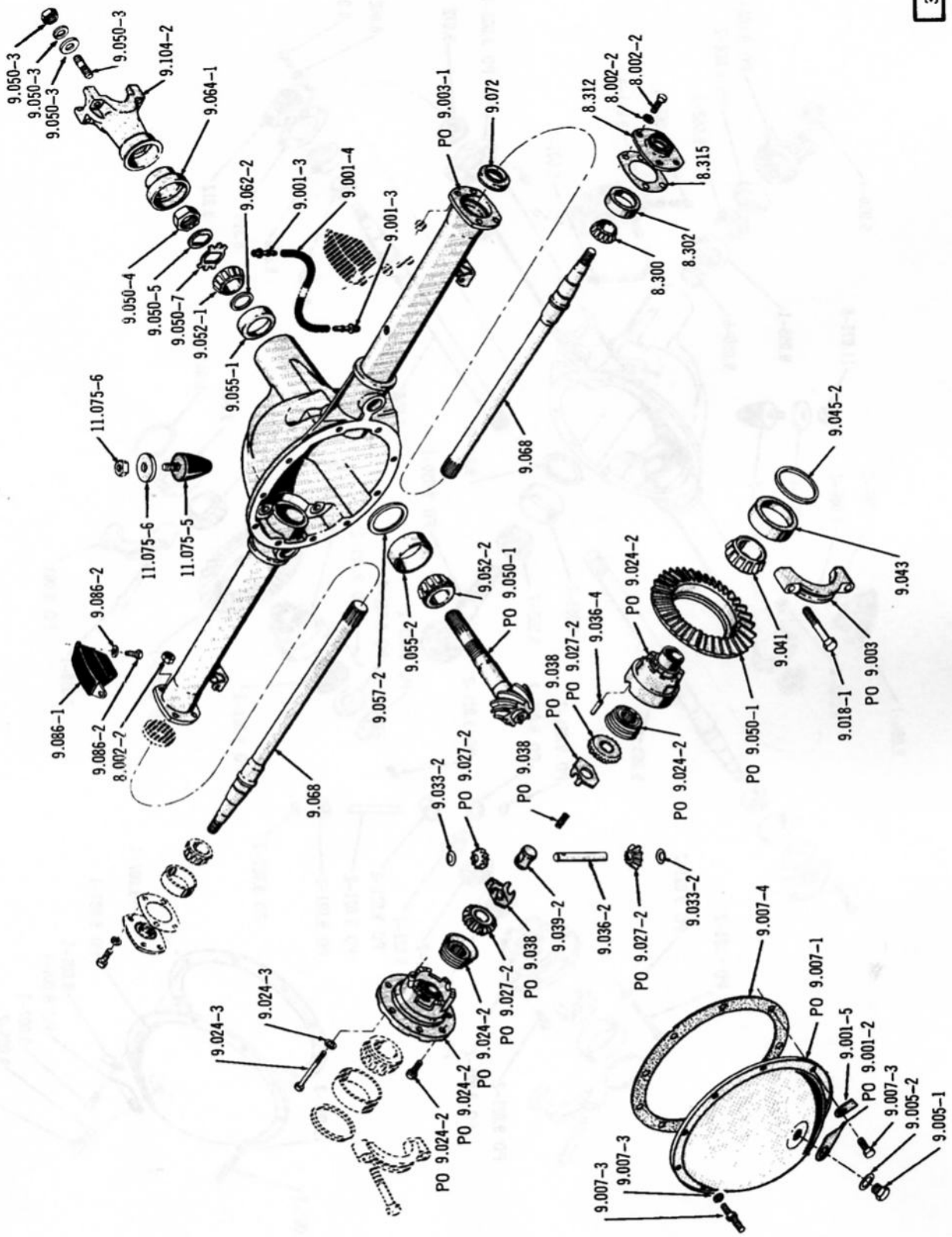

REAR AXLE ... 1967/69-WLD-SIX (01)(70)

3842

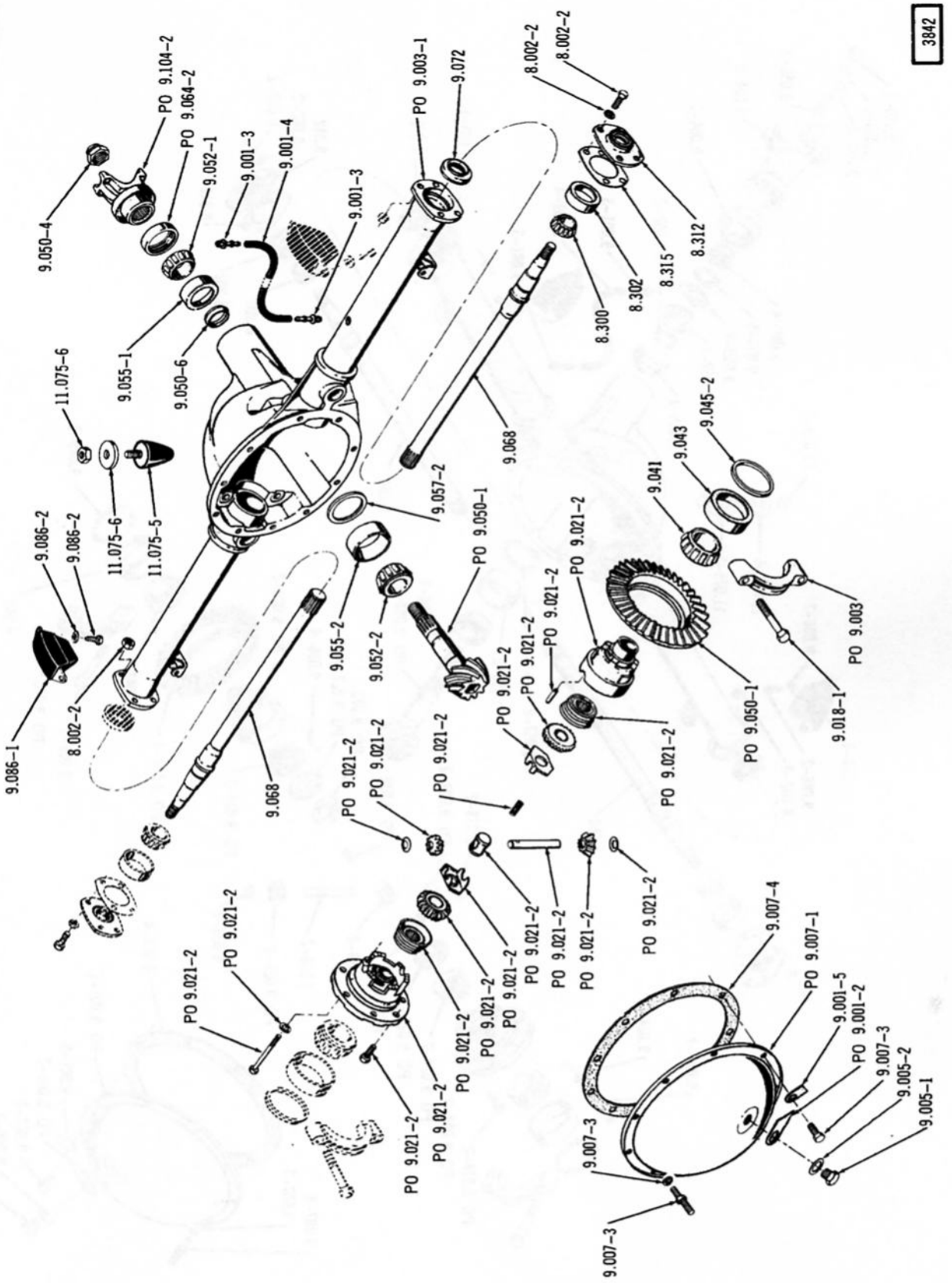

REAR AXLE ... 1970/ -WLD-SIX (01)(40)(70)

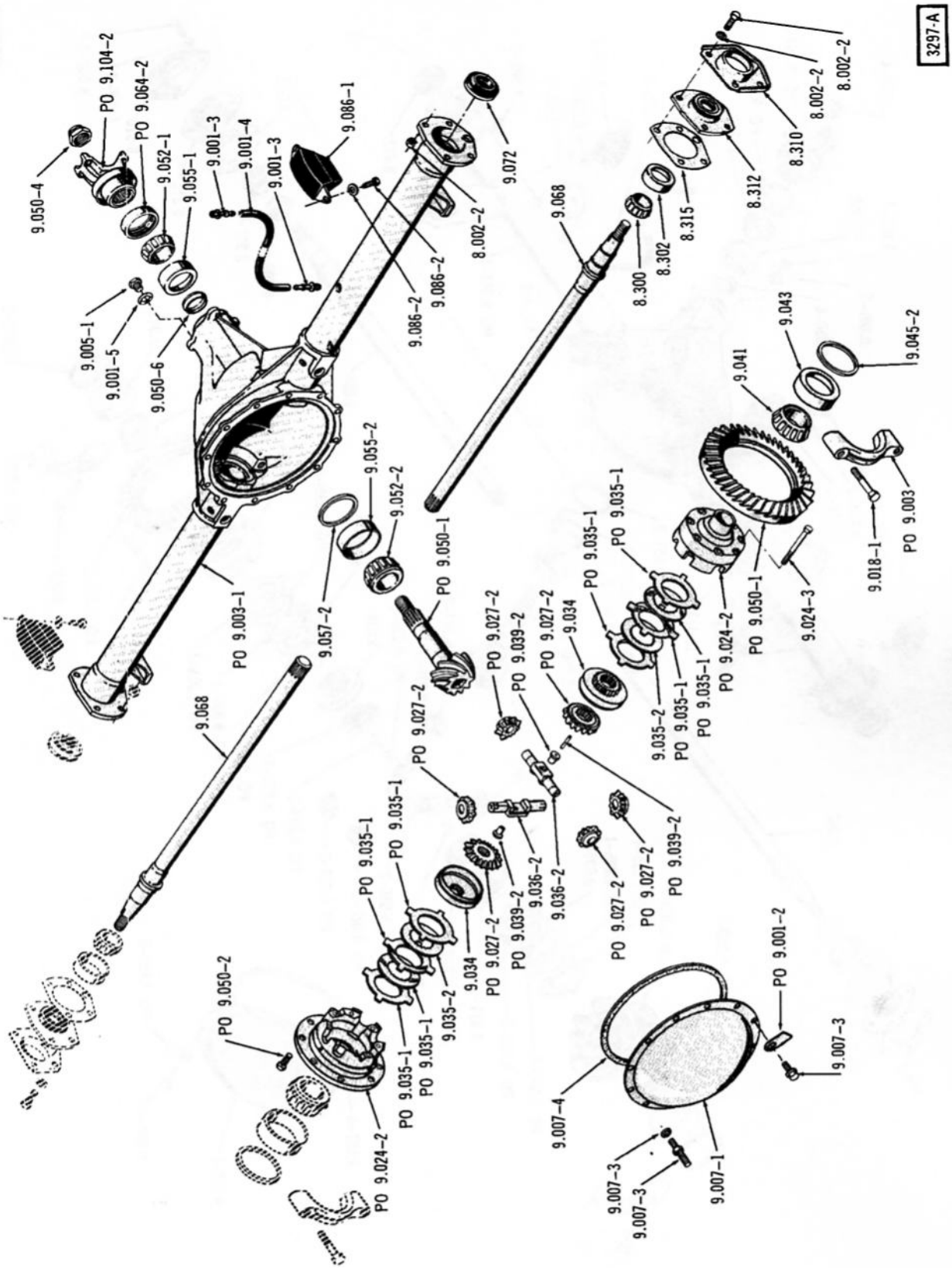

REAR AXLE . . . WLD-V8 (01)(30)(40)(70)

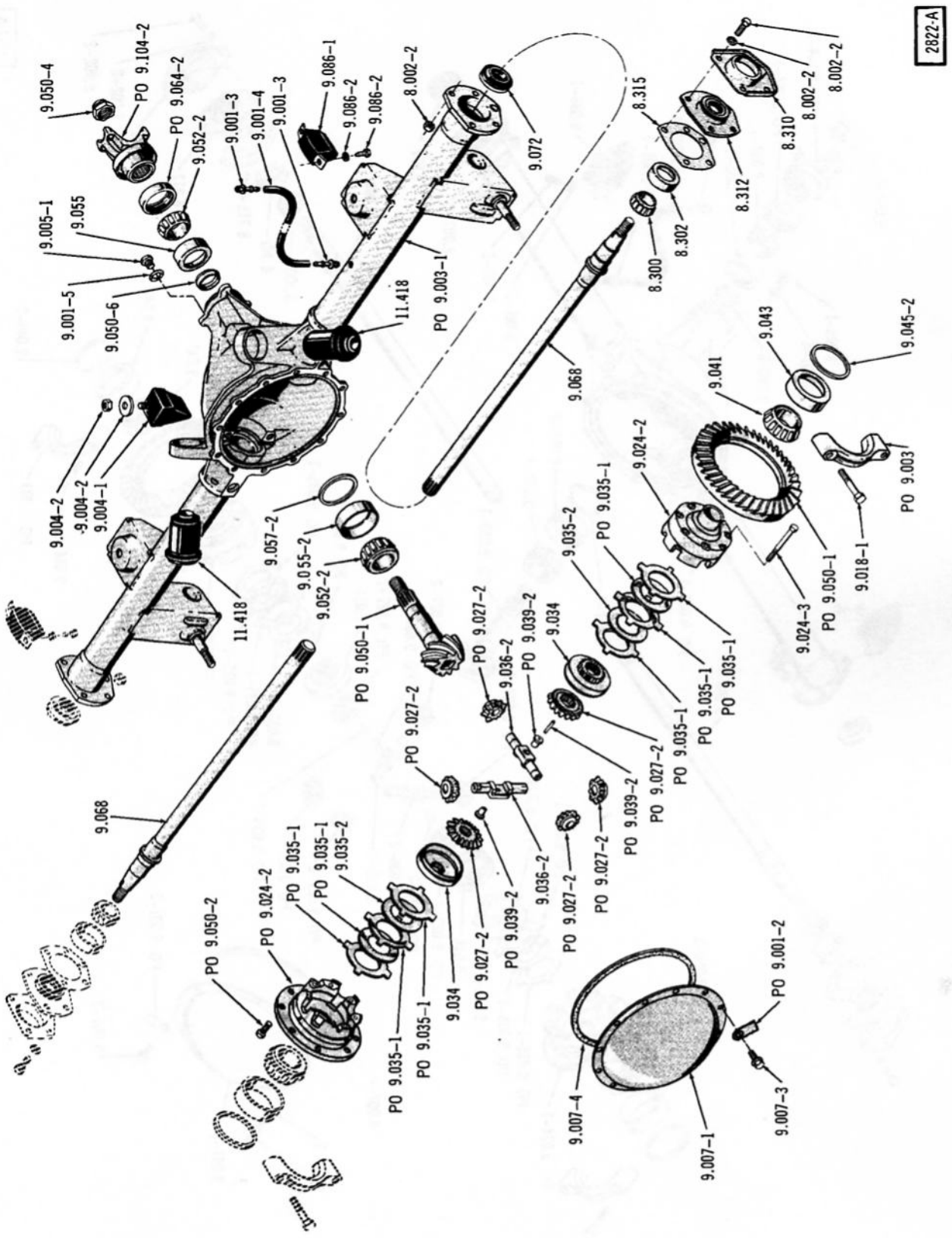

REAR AXLE ... WLD (10)(50)(80)

Printed in U.S.A.

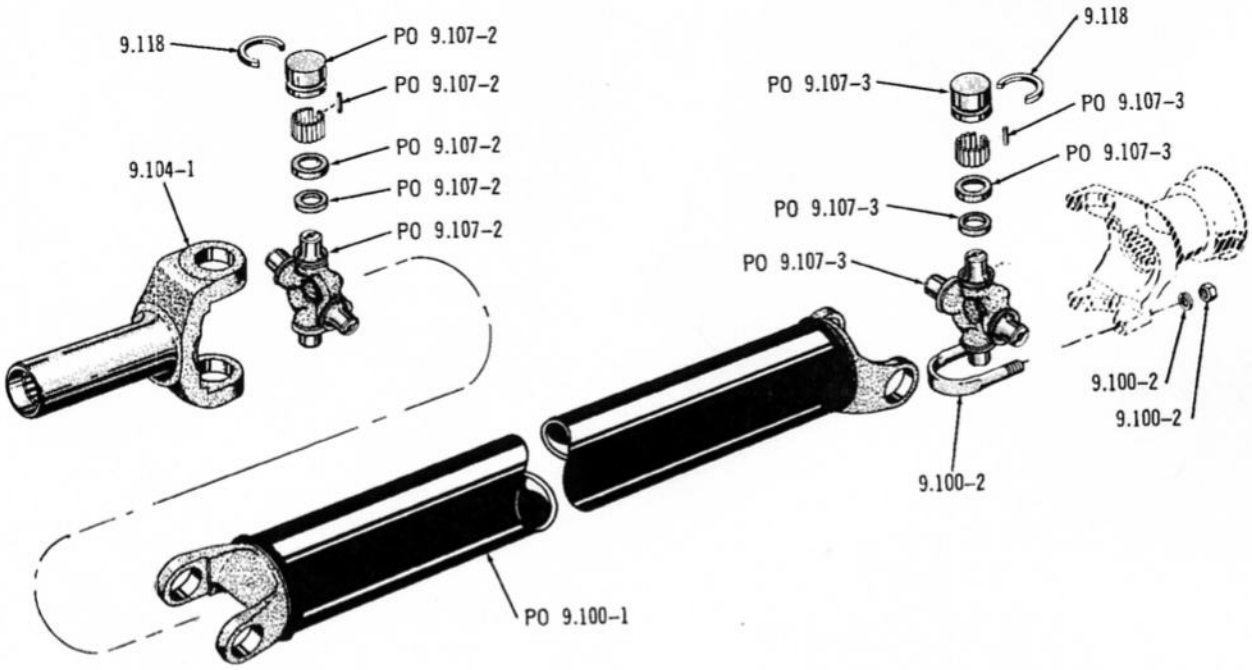

2876

PROPELLER SHAFT ... SIX (1967-01-Type 1)

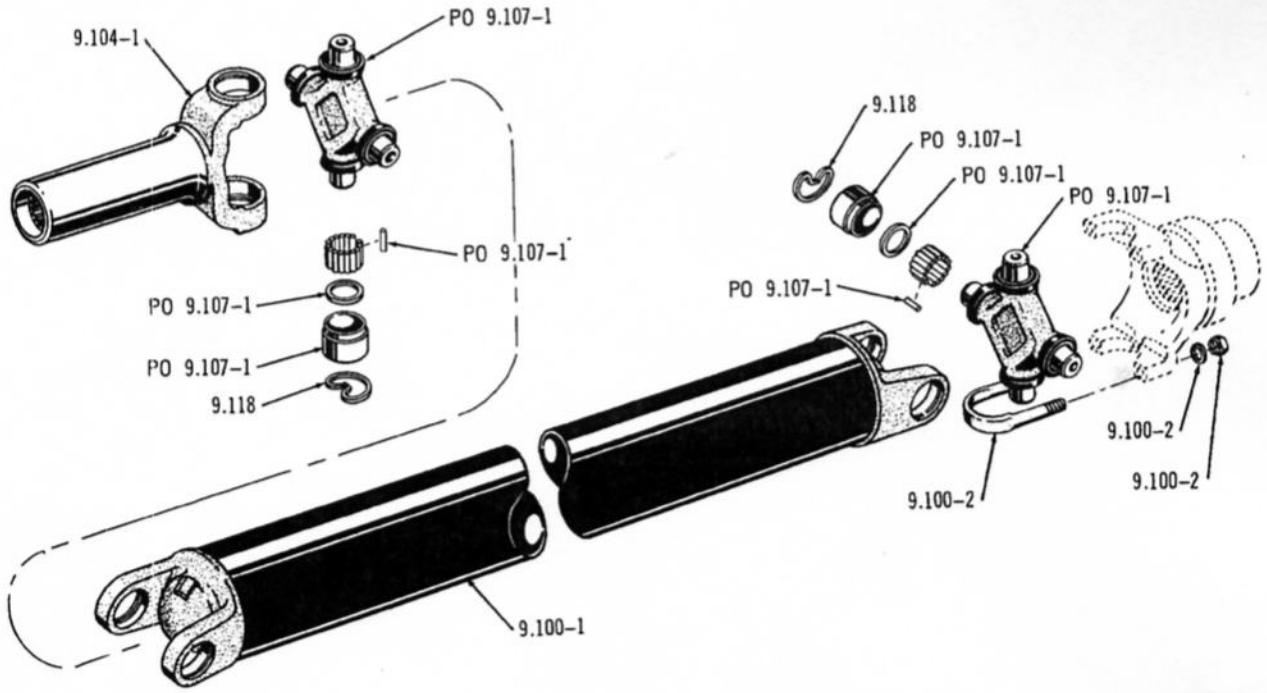

3011

PROPELLER SHAFT ... 1967-SIX (E/01-Type 1), 1967 (V8), 1968/

GROUP NO. — DESCRIPTION — YEAR and MODEL	"L" CODE	PAKS CODE	PRIMARY GROUP NO.	PER CAR	PART NO.	CODE
9.001–1 AXLE, Conventional Differential Rear (LLD)(Less Shafts)						
1967 Thru 1972 01-40						
67 01 (Six–12: 43 Ratio–* 9–9) ..... *(Ord. Component Parts)*		.....		1	320 7155	
67 01 (Six–12: 43 Ratio–* 9–10) ..... *(Use 448 6836)*		.....		1	320 8718	
68/69 01 (Six–12: 43 Ratio) ..... *(Use 448 6836)*		.....		1	320 8718	
70/ 01–40 (Six–12: 43 Ratio)	139	.....		1	448 7783	
67 01 (Six–13: 40 Ratio–* 9–9) ..... *(Ord. Component Parts)*		.....		1	320 8176	
67 01 (Six–13: 40 Ratio–* 9–10)	139	.....		1	320 8719	
68/69 01 (Six–13: 40 Ratio)	139	.....		1	320 8719	
70/ 01–40 (Six–13: 40 Ratio)	139	.....		1	448 7788	
67 01 (Six–13: 43 Ratio–* 9–9) ..... *(Ord. Component Parts)*		.....		1	320 6201	
67 01 (Six–13: 43 Ratio–* 9–10)	139	.....		1	320 8717	
68/69 01 (Six–13: 43 Ratio)	139	.....		1	320 8717	
70/ 01–40 (Six–13: 43 Ratio)	139	.....		1	448 7784	
67 01 (Six–15: 41 Ratio–* 9–9)	139	.....		1	320 8178	
67 01 (Six–15: 41 Ratio–* 9–10)	139	.....		1	320 8720	
68/69 01 (Six–15: 41 Ratio)	139	.....		1	320 8720	
70/ 01–40 (Six–15: 41 Ratio)	139	.....		1	448 7789	
68/69 01 (Six–19: 45 Ratio)	139	.....		1	320 9654	
70/ 01–40 (Six–19: 45 Ratio)	139	.....		1	448 7790	
67 01 (V8–11: 39 Ratio)	114	.....		1	320 8294	
68/69 01 (V8–11: 39 Ratio) ..... *(Ord. Component Parts)*		.....		1	320 9611	
70 01 (V8–11: 39 Ratio)	114	.....		1	448 7805	
71/ 01–40 (V8–11: 39 Ratio)	129	.....		1	448 9193	
67/69 01 (V8–13:41 Ratio)	114	.....		1	320 8179	
70 01 (V8–13: 41 Ratio) ..... *(Use 448 7806)*		.....		1	448 7806	
71/ 01–40 (V8–13: 41 Ratio)	129	.....		1	448 9191	
67/69 01 (V8–15: 43 Ratio)	114	.....		1	320 8181	
70 01 (V8–15: 43 Ratio) ..... *(Use 448 9192)*		.....		1	448 7807	
71/ 01–40 (V8–15: 43 Ratio)	129	.....		1	448 9192	
1967 Thru 1972 10-50-80						
67/68 15–16–17–19 (Six–LDB–11: 39 Ratio–Except Heavy Duty)	129	.....		1	320 7857	
67/68 15–16–17–19 (Six–WDB–11: 39 Ratio–Except Heavy Duty)	129	.....		1	320 7866	
69 15–17–19 (Six–11: 39 Ratio–Except Heavy Duty)	129	.....		1	448 5761	
67/68 18–50–80 (Six–11: 39 Ratio)	129	.....		1	320 7866	
69 18 (Six–11: 39 Ratio)	129	.....		1	448 5763	
70 10–80 (Six–11: 39 Ratio)	129	.....		1	448 5763	
71/ 10–80 (Six–11: 39 Ratio)	129	.....		1	448 9226	
67/68 15-16-17-19 (Heavy Duty-Six-11:39 Ratio)	129	.....		1	320 7866	
69 15-19 (Heavy Duty-Six-11:39 Ratio)	129	.....		1	448 5763	
69 10 (Export-Six-WDB-11:39 Ratio)	129	.....		1	448 5763	
67/68 15–16–17–19 (Six–LDB–13: 41 Ratio–Except Heavy Duty)	129	.....		1	320 7818	
67 15–16–17–19 (Six–WDB–13: 41 Ratio–Except Heavy Duty)	129	.....		1	320 7867	
67 18–50–80 (Six–13: 41 Ratio)	129	.....		1	320 7867	
68 15–16–17–19 (Six–WDB–13: 41 Ratio–Except Heavy Duty)	129	.....		1	320 9628	
68 18–50–80 (Six–13: 41 Ratio)	129	.....		1	320 9628	
69 15–17–19 (Six–13: 41 Ratio–Except Heavy Duty)	129	.....		1	448 5762	
69 18 (Six–13: 41 Ratio)	129	.....		1	448 5764	
70 10–80 (Six–13: 41 Ratio)	129	.....		1	448 5764	
71/ 10–80 (Six–13: 41 Ratio)	129	.....		1	448 9227	
67 15-16-17-19 (Heavy Duty-Six-13:41 Ratio)	129	.....		1	320 7867	
68 15-16-17-19 (Heavy Duty-Six-13:41 Ratio)	129	.....		1	320 9628	
69 15-19 (Heavy Duty-Six-13:41 Ratio)	129	.....		1	448 5764	
69 10 (Export-Six-WDB-13:41 Ratio)	129	.....		1	448 5764	

REAR AXLE - PROP. SHAFT

67	18-50-80 (Six-15: 43 Ratio)	129	.....	1	320 7868
68	18-50-80 (Six-15: 43 Ratio)	129	.....	1	320 9631
67	***15-16-17-19 (Heavy Duty-Six-15:43 Ratio)***	129	.....	1	320 7868
68	***15-16-17-19 (Heavy Duty-Six-15:43 Ratio)***	129	.....	1	320 9631
67/68	10-50-80 (V8-11: 39 Ratio)	129	.....	1	320 7866
69/70	10-80 (V8-11: 39 Ratio)	129	.....	1	448 5763
71/	10 (V8-11: 39 Ratio)	129	.....	1	448 9226
67	10-50-80 (V8-13: 41 Ratio)	129	.....	1	320 7867
68	10-80 (V8-13: 41 Ratio)	129	.....	1	320 9628
69/70	10-80 (V8-13: 41 Ratio)	129	.....	1	448 5764
71/	10-80 (V8-13: 41 Ratio)	129	.....	1	448 9227
67	10-50-80 (V8-15: 43 Ratio)	129	.....	1	320 7868
68	10-80 (V8-15: 43 Ratio)	129	.....	1	320 9631
69/70	10-80 (V8-15:43 Ratio)	129	.....	1	448 5765
71/	10-80 (V8-15: 43 Ratio)	129	.....	1	448 9230

1968 Thru 1972 30-70

68	70 (Six-12: 43 Ratio)	***(Ref. Pr. List)***	.....	1	320 9601
70	70 (Six-12: 43 Ratio)	139	.....	1	448 7783
71/	70 (Six-12: 43 Ratio)	129	.....	1	448 9198
68/69	70 (Six-13: 40 Ratio)	139	.....	1	320 9603
70	70 (Six-13: 40 Ratio)	139	.....	1	448 7788
71/	70 (Six-13: 40 Ratio)	129	.....	1	448 9199
68/69	70 (Six-13: 43 Ratio)	139	.....	1	320 9602
70	70 (Six-13: 43 Ratio)	139	.....	1	448 7784
71/	70 (Six-13: 43 Ratio)	139	.....	1	448 9200
68	70 (Six-15: 41 Ratio)	139	.....	1	320 9604
68/69	30-70 (V8-11: 39 Ratio)	114	.....	1	320 9619
70	30-70 (V8-11: 39 Ratio)	114	.....	1	448 7805
71/	70 (V8-11: 39 Ratio)	139	.....	1	448 9203
68/69	30-70 (V8-13: 41 Ratio)	***(Ref. Pr. List)***	.....	1	320 9620
70	30-70 (V8-13: 41 Ratio)	***(Use 448 9191)***	.....	1	448 7806
71/	70 (V8-13: 41 Ratio)	139	.....	1	448 9201
68/69	30-70 (V8-15: 43 Ratio)	114	.....	1	320 9621
70	30-70 (V8-15: 43 Ratio)	114	.....	1	448 7807
71/	70 (V8-15: 43 Ratio)	139	.....	1	448 9202

9.001-2 AXLE, Locking Differential Rear (WLD)(Less Shafts)

1967 Thru 1972 01-40

67	01 (Six-12: 43 Ratio-* 9-9)	139	.....	1	320 7156
67	01 (Six-12: 43 Ratio-* 9-10)	139	.....	1	320 8722
68/69	01 (Six-12: 43 Ratio)	139	.....	1	320 8722
70/	01-40 (Six-12: 43 Ratio)	139	.....	1	448 7793
67	01 (Six-13: 40 Ratio-* 9-9)	139	.....	1	320 8175
67	01 (Six-13: 40 Ratio- 9-10)	***(Ref. Pr. List)***	.....	1	320 8723
68/69	01 (Six-13: 40 Ratio)	***(Ref. Pr. List)***	.....	1	320 8723
70/	01-40 (Six-13: 40 Ratio)	139	.....	1	448 7795
67	01 (Six-13: 43 Ratio-* 9-9)	139	.....	1	320 6202
67	01 (Six-13: 43 Ratio-* 9-10)	139	.....	1	320 8721
68/69	01 (Six-13: 43 Ratio)	139	.....	1	320 8721
70/	01-40 (Six-13: 43 Ratio)	139	.....	1	448 7794
67	01 (Six-15: 41 Ratio-* 9-9)	139	.....	1	320 8177
67	01 (Six-15: 41 Ratio-* 9-10)	139	.....	1	320 8724
68/69	01 (Six-15: 41 Ratio)	139	.....	1	320 8724
70/	01-40 (Six-15: 41 Ratio)	139	.....	1	448 7796
68/69	01 (Six-19: 45 Ratio)	***(Use 448 6862)***	.....	1	448 5528
70/	01-40 (Six-19: 45 Ratio)	139	.....	1	448 7797

Printed in U.S.A.

REAR AXLE - PROP. SHAFT

67/69	01 (V8-11: 39 Ratio)	114	.....	1	320 8295
70	01 (V8-11: 39 Ratio)	114	.....	1	448 7808
71/	01-40 (V8-11: 39 Ratio)	114	.....	1	448 9196
70	01 (V8-11: 43 Ratio)	114	.....	1	448 8442
71	01 (V8-11: 43 Ratio)	114	.....	1	448 9197
67/69	01 (V8-13: 41 Ratio)	114	.....	1	320 8180
70	01 (V8-13: 41 Ratio)	114	.....	1	448 7809
71/	01-40 (V8-13: 41 Ratio)	114	.....	1	448 9194
67/69	01 (V8-15: 43 Ratio)	114	.....	1	320 8182
70	01 (V8-15: 43 Ratio)	114	.....	1	448 7810
71/	01-40 (V8-15: 43 Ratio)	114	.....	1	448 9195

1967 Thru 1972 10-50-80

SIX

67/68	15-16-17-19 (Six-LDB-11: 39 Ratio-Except Heavy Duty)	129	.....	1	320 7816
67/68	15-16-17-19 (Six-WDB-11: 39 Ratio-Except Heavy Duty)	129	.....	1	320 7869
67	18-50-80 (Six-11: 39 Ratio)	129	.....	1	320 7869
68	10-80 (232-11: 39 Ratio)	129	.....	1	320 7869
69	15-19 (Six-11: 39 Ratio-Except Heavy Duty)	129	.....	1	448 5766
69	18-80 (Six-11: 39 Ratio)	129	.....	1	448 5768
70	10-80 (Six-11: 39 Ratio)	129	.....	1	448 5768
71/	10-80 (Six-11: 39 Ratio)	129	.....	1	448 9354
70	19 (390-MACHINE-11: 39 Ratio)	129	.....	1	448 5768
67	***15-16-17-19 (Heavy Duty-Six-11:39 Ratio)***	129	.....	1	320 7869
69	***15-19 (Heavy Duty-Six-11:39 Ratio)***	129	.....	1	448 5768
69	***10 (Export-Six-11:39 Ratio)***	129	.....	1	448 5768
67/68	15-16-17-19 (Six-LDB-13: 41 Ratio-Except Heavy Duty)	129	.....	1	320 7817
67	15-16-17-19 (Six-WDB-13: 41 Ratio-Except Heavy Duty)	129	.....	1	320 7870
67	18-50-80 (Six-13: 41 Ratio)	129	.....	1	320 7870
68	15-16-17-19 (Six-WDB-13: 41 Ratio-Except Heavy Duty) ***(Ord. Component Parts)***		.....	1	448 5682
68	10-80 (232-13: 41 Ratio) ***(Ord. Component Parts)***		.....	1	448 5682
69	15-19 (Six-13: 41 Ratio-Except Heavy Duty)	129	.....	1	448 5767
69	18-80 (Six-13: 41 Ratio)	129	.....	1	448 5769
70	10-80 (Six-13: 41 Ratio)	129	.....	1	448 5769
71/	10-80 (Six-13: 41 Ratio)	129	.....	1	448 9355
70	19 (390-MACHINE-13: 41 Ratio)	129	.....	1	448 5769
67	***15-16-17-19 (Heavy Duty-Six-13:41 Ratio)***	129	.....	1	320 7870
69	***15-19 (Heavy Duty-Six-13:41 Ratio)***	129	.....	1	448 5769
69	***10 (Export-Six-13:41 Ratio)***	129	.....	1	448 5769
67	18-50-80 (Six-15: 43 Ratio)	129	.....	1	320 7871

V8

67	10-50-80 (V8-11: 39 Ratio)	129	.....	1	320 7869
68	10-80 (290-11: 39 Ratio)(343-11: 39 Ratio)	129	.....	1	320 7869
68	10-80 (390-11: 39 Ratio)	129	.....	1	448 5681
69/70	10-80 (V8-11: 39 Ratio)	129	.....	1	448 5768
71/	10 (V8-11: 39 Ratio)	129	.....	1	448 9354
71	10 (360-11: 43 Ratio)(401-11: 43 Ratio)	129	.....	1	448 9357
67	10-50-80 (V8-13: 41 Ratio)	129	.....	1	320 7870
68	10-80 (290-13: 41 Ratio)(343-13: 41 Ratio) ***(Ord. Component Parts)***		.....	1	448 5682
68	10-80 (390-13: 41 Ratio) ***(Ord. Component Parts)***		.....	1	448 5682
69/70	10-80 (V8-13: 41 Ratio)	129	.....	1	448 5769
71/	10-80 (V8-13: 41 Ratio)	129	.....	1	448 9355
67	10-50-80 (V8-15: 43 Ratio)	129	.....	1	320 7871
68	10-80 (290-15: 43 Ratio)(343-15: 43 Ratio)	129	.....	1	320 7871
68	10-80 (390-15: 43 Ratio)	129	.....	1	448 5683
69/70	10-80 (V8-15: 43 Ratio)	129	.....	1	448 5770
71/	10-80 (V8-15: 43 Ratio)	129	.....	1	448 9356
70	19 (390-MACHINE-11: 43 Ratio) ***(Use 448 9357)***		.....	1	448 8441

REAR AXLE - PROP. SHAFT

1968 Thru 1972 30-70

68	70 (Six-12: 43 Ratio)	139	.....	1	320 8996
70	70 (Six-12: 43 Ratio)	139	.....	1	448 7793
71/	70 (Six-12: 43 Ratio)	139	.....	1	448 9011
68/69	70 (Six-13: 40 Ratio)	139	.....	1	448 6866
70	70 (Six-13: 40 Ratio)	139	.....	1	448 7795
71/	70 (Six-13: 40 Ratio)	139	.....	1	448 9010
68/69	70 (Six-13: 43 Ratio)	*(Ref. Pr. List)*	.....	1	448 6865
70	70 (Six-13: 43 Ratio)	139	.....	1	448 7794
71/	70 (Six-13: 43 Ratio)	139	.....	1	448 9210
68	70 (Six-15: 41 Ratio)	139	.....	1	320 8999
68/69	30-70 (290-11: 39 Ratio)(343-11: 39 Ratio)	114	.....	1	320 9633
68/69	30-70 (390-11: 39 Ratio)	114	.....	1	448 5678
70	30-70 (V8-11: 39 Ratio)	114	.....	1	448 7808
71/	70 (V8-11: 39 Ratio)	114	.....	1	448 9219
70	30-70 (360-11: 43 Ratio)(390-11: 43 Ratio)	114	.....	1	448 8442
71/	70 (V8-11: 43 Ratio)	114	.....	1	448 9222
68/69	30-70 (290-13: 41 Ratio)(343-13: 41 Ratio)	114	.....	1	448 5679
68/69	30-70 (390-13: 41 Ratio)	114	.....	1	448 5679
70	30-70 (V8-13: 41 Ratio)	114	.....	1	448 7809
71/	70 (V8-13: 41 Ratio)	114	.....	1	448 9220
68/69	30-70 (290-15: 43 Ratio)(343-15: 43 Ratio)	114	.....	1	320 9624
68/69	30-70 (390-15: 43 Ratio)	114	.....	1	448 5680
70	30-70 (V8-15: 43 Ratio)	114	.....	1	448 7810
71/	70 (V8-15: 43 Ratio)	114	.....	1	448 9221

9.001-3 BREATHER, Rear Axle

67	01-10-50-80 (* 9-10)		.....	2	318 7999
67	01-10-50-80 (* 9-28)		.....	1	316 7560
68/			.....	2	318 7999

9.001-4 HOSE, Breather

67	01-10-50-80 (* 9-10)		.....	1	318 7627
68/			.....	1	318 7627

9.001-5 PLATE, Filler Plug Instruction

67/69	01-30-70 (Six-WLD)		.....	1	315 5433
67/69	01-30-70 (V8-WLD)		.....	1	317 7202
67/69	10-50-80 (WLD)		.....	1	317 7202

9.002 ABSORBER KIT, Rear Axle Dynamic

67/69	10-80 (WST-15.27 Length)(WOD-15.27 Length)		.....	1	448 7146
67/69	10-80 (WST-11.75 Length)(WOD-11.75 Length)		.....	1	448 7147

9.003-1 HOUSING, Rear Axle (Incl. Tubes)

67	01 (Six-* 9-9)	115	.....	1	320 8443
67	01 (Six-* 9-10)	115	.....	1	320 8443
67	01 (V8)	123	.....	1	320 8442
68/69	01 (Except Six-19: 45 Ratio)	115	.....	1	320 8443
68/69	01 (Six-19: 45 Ratio)	115	.....	1	320 9963
70	01-40-70 (LHD-Six-LDB-Except 19: 45 Ratio)	115	.....	1	448 7835
71	01-40 (LHD-Six-LDB-Except 19: 45 Ratio)	115	.....	1	448 7835
70/71	01-40 (LHD-Six-LDB-19: 45 Ratio)	115	.....	1	448 7834

Printed in U.S.A.

72	01-40 (LHD-Six-Except 19: 45 Ratio)	115	.....	1	448 7835
72	01-40 (LHD-Six-19: 45 Ratio)	115	.....	1	448 7834
68/69	01 (V8)	123	.....	1	320 8442
70	01-30-70 (V8)	123	.....	1	448 7836
71	01 (V8)	123	.....	1	448 7836
72	01-40 (LHD-V8)	123	.....	1	448 7836
67/68	15-16-17-19 (Six-LDB-Except Heavy Duty)	132	.....	1	320 7930
67/68	15-16-17-19 (Six-WDB-Except Heavy Duty)	132	.....	1	320 7931
67/68	18-50-80 (Six)	132	.....	1	320 7931
67/68	10-50-80 (V8)	132	.....	1	320 7931
68/69	70 (Six) ***(Use 448 7835)***		.....	1	320 9605
71	70 (LHD-Six)	115	.....	1	448 9002
72	70 (LHD-Six)	115	.....	1	448 7834
68/69	30-70 (V8)	123	.....	1	320 9634
71/	70 (LHD-V8)	123	.....	1	448 9003
69	15-19 (Six)	132	.....	1	448 6538
69	15-19 (V8)	132	.....	1	448 6539
69	18-80	132	.....	1	448 6539
70/	10-80	132	.....	1	448 6539
67/68	***15-16-17-19 (Heavy Duty-Six)***	132	.....	1	320 7931
70	***01-70 (Heavy Duty-LHD-Six-WDB)(Export-LHD-Six-WDB)***	123	.....	1	448 7836
71	***01 (Heavy Duty-LHD-Six-WDB)(Export-LHD-Six-WDB)***	123	.....	1	448 7836
71	***70 (Export-LHD-Six-WDB)***		.....	1	448 9003

9.003–2 WEDGE KIT, Rear Axle Spring Seat

68	30-70		.....	1	448 5884

9.004–1 BUMPER, Rear Axle Housing

67/69	01 (199)		.....	1	316 9743
67/69	01-70 (232)		.....	1	316 9720
70/	01-40		.....	1	316 9743
70/	70 (Six)		.....	1	316 9720
71/	70 (V8)		.....	1	316 9720
67/	10-80 (V8)		.....	1	318 8819

9.004–2 ATTACHING PARTS, Bumper To Housing

NUT, Hexagon	67/	01-40-70 (Six)	17.412	1	G271193 NA
NUT, Hexagon	67/	10-50-80 (V8)	17.412	1	G271193 NA
WASHER, Plain	67/	01-70 (232)	17.814	1	400 1111

9.005–1 PLUG, Rear Axle Filler

69/	01-40-70 (LHD-Six-* 9-39) ...(Incl. Gasket)	128	.....	1	314 6316
72	01-40-70 (LHD-Six-* 9-40)		.....	1	400 4631
67/69	01-70 (V8-LLD)		17.526	1	G444872
68/69	01-70 (V8-WLD) ...(Incl. Plate)	117	.....	1	317 7203
71/	01 (V8)		17.526	1	G444872
67/69	10-30-50-80 (LLD)		17.526	1	G444872
67/69	10-30-50-80 (WLD) ...(Incl. Plate)	117	.....	1	317 7203
70/	10-30-70-80		17.526	1	G444872
72	40 (V8)		17.526	1	G444872
70/71	***01-70 (Heavy Duty-LHD-Six-WDB)(Export-LHD-Six-WDB)***		17.526	1	G444872

9.005–2 GASKET, Rear Axle Filler Plug

67/69	01-70 (S x)		1.151	1	316 7984
70/	01-40-70 (LHD-Six-* 9-41)		1.151	1	316 7984

Printed in U.S.A.

REAR AXLE - PROP. SHAFT

9.007–1 COVER, Rear Axle Housing

67/69	01-70 (Six)...(Incl. Plug)	.....		1	448 5476
70/	01-40-70 (LHD-Six)...(Incl. Plug)	.....		1	448 5476
67/	01-30-70 (V8)	.....		1	317 2123
67/	10-50-80	.....		1	317 2123
72	40 (V8)	.....		1	317 2123
70/71	***01-70 (Heavy Duty-LHD-Six-WDB)(Export-LHD-Six-WDB)***	.....		1	317 2123

9.007–2 ATTACHING PARTS, Cover To Housing

STUD	67/69	01 (Six)	5.178	1	312 2698	
STUD	68/70	30	5.178	1	312 2698	
STUD	71/	01-40-70	5.178	1	312 2698	
SCREW, Machine	67/69	01-70 (Six) ...(Incl. Washer)	.....	9	400 0722	
SCREW, Machine	70/71	01-40-70 (LHD-Six-Except Export)...(Incl. Washer)	.....	9	400 0722	
SCREW, Machine	72	01-40-70 (LHD-Six)	.....	9	400 0722	
SCREW, Machine	67/	01-70 V8	.....	11	400 0722	
SCREW, Machine	67/	10-30-50-80	.....	11	400 0722	
SCREW, Machine	***70/71***	***01-70 (Heavy Duty-LHD-Six-WDB)(Export-LHD-Six-WDB)***	.....	12	400 0722	
BOLT, Hexagon	67/68	01 V8	17.038	1	G180077	NA
BOLT, Hexagon	69/	10-80	17.038	1	G180077	NA
WASHER, Lock	67/		17.820	2	G120214	

9.007–4 GASKET, Rear Axle Housing Cover

67/69	01-70 (Six)	.....	1	317 2510
70/71	01-40-70 (LHD-Six-Except Export)	.....	1	317 2510
72	01-40-70 (LHD-Six)	.....	1	317 2510
67/	01-40-70 (V8)	.....	1	317 2122
67/	10-30-50-80	.....	1	317 2122
70/71	***01-70 (Heavy Duty-LHD-Six-WDB)(Export-LHD-Six-WDB)***	.....	1	317 2122

9.018–1 SCREW, Rear Axle Differential Side Bearing Cap

67/69	01-70 (Six)	.....	4	22 620
70/71	01-40-70 (LHD-Six-Except Export)	.....	4	22 620
72	01-40-70 (LHD-Six)	.....	4	22 620
67/	01-40-70 (V8)	.....	4	98 536
67/	10-30-50-80	.....	4	98 536
70/71	***01-70 (Heavy Duty-LHD-Six-WDB)(Export-LHD-Six-WDB)***	.....	4	98 536

9.021–1 CASE ASSEMBLY, Rear Axle Differential (LLD)

67/69	01-70 (Six-12:43 Ratio)	142	.....	1	317 1252
67/69	01-70 (Six-13:40 Ratio)	142	.....	1	317 1252
67/69	01-70 (Six-13:43 Ratio)	142	.....	1	317 1252
67/69	01-70 (Six-15:41 Ratio)	142	.....	1	317 1251
67/69	01-70 (Six-19:45 Ratio)	142	.....	1	319 1719
70/71	01-40 (LHD-Six-LDB-12: 43 Ratio)	142	.....	1	317 1252
70/71	01-40 (LHD-Six-LDB-13: 40 Ratio)	142	.....	1	317 1252
70/71	01-40 (LHD-Six-LDB-13: 43 Ratio)	142	.....	1	317 1252
70/71	01-40 (LHD-Six-LDB-19: 45 Ratio)	142	.....	1	319 1719
70	01-40-70 (LHD-Six-LDB-15: 41 Ratio)	142	.....	1	317 1251
71	01-40 (LHD-232-LDB-15: 41 Ratio)	142	.....	1	317 1251
72	01-40-70 (LHD-Six-12: 43 Ratio)	142	.....	1	317 1252

Printed in U.S.A.

72	01-40-70 (LHD-Six-13: 40 Ratio)	142	.....	1	317 1252
72	01-40-70 (LHD-Six-13: 43 Ratio)	142	.....	1	317 1252
72	01-40 (LHD-Six-15: 41 Ratio)	142	.....	1	317 1251
72	01-40 (LHD-232-19: 45 Ratio)	142	.....	1	319 1719
70/71	70 (LHD-Six-12: 43 Ratio-Except Export)	142	.....	1	317 1252
70/71	70 (LHD-Six-13: 40 Ratio-Except Export)	142	.....	1	317 1252
70/71	70 (LHD-Six-13: 43 Ratio-Except Export)	142	.....	1	317 1252
67	01 (V8-* 9-7) ***(Use 600 0023)***		.....	1	317 4532
67	01 (V8-* 9-8)	142	.....	1	319 1373
67	10-50-80 (* 9-7) ***(Use 600 0023)***		.....	1	317 4532
67	10-50-80 (* 9-8)	142	.....	1	319 1373
68/	10-80 (Six)	142	.....	1	319 1373
68/	V8	142	.....	1	319 1373
70/71	***01-70 (Heavy Duty-LHD-Six-WDB)(Export-LHD-Six-WDB)***	142	.....	1	319 1373

9.021–2 CASE ASSEMBLY, Rear Axle Differential (WLD)

67/69	01-70 (Six-12:43 Ratio)	141	.....	1	320 4928
70	01-40-70 (LHD-Six-LDB-12: 43 Ratio) ***(Use 320 4928)***		.....	1	448 6933
71	01-40 (LHD-Six-LDB-12: 43 Ratio)	141	.....	1	448 8407
71	70 (LHD-Six-12: 43 Ratio-Except Export)	141	.....	1	448 8407
67/69	01-70 (Six-13:40 Ratio)	141	.....	1	320 4928
70	01-40-70 (LHD-Six-LDB-13: 40 Ratio) ***(Use 320 4928)***		.....	1	448 6933
71	01-40 (LHD-Six-LDB-13: 40 Ratio)	141	.....	1	448 8407
71	70 (LHD-Six-13: 40 Ratio-Except Export)	141	.....	1	448 8407
67/69	01-70 (Six-13:43 Ratio)	141	.....	1	320 4928
70	01-40-70 (LHD-Six-LDB-13: 43 Ratio) ***(Use 320 4928)***		.....	1	448 6933
71	01-40 (LHD-Six-LDB-13: 43 Ratio)	141	.....	1	448 8407
71	70 (LHD-Six-13: 43 Ratio-Except Export)	141	.....	1	448 8407
67/69	01-70 (Six-15: 41 Ratio) ***(Use 448 8408)***		.....	1	320 4929
70	01-40-70 (LHD-Six-LDB-15: 41 Ratio) ***(Use 448 8408)***		.....	1	448 6932
71	01-40 (LHD-Six-LDB-15: 41 Ratio)	141	.....	1	448 8408
72	01-40-70 (LHD-Six-Except 15: 41 Ratio)	141	.....	1	448 8407
72	01-40 (LHD-Six-15: 41 Ratio)	141	.....	1	448 8408
67/69	01-70 (Six-19: 45 Ratio) ***(Use 448 8406)***		.....	1	448 5514
70	01-40 (LHD-Six-LDB-19: 45 Ratio) ***(Use 448 8406)***		.....	1	448 6929
71	01-40 (LHD-232-LDB-19: 45 Ratio)	141	.....	1	448 8406
72	01-40-70 (LHD-Six-Except 19: 45 Ratio)	141	.....	1	448 8407
72	01-40 (LHD-232-19: 45 Ratio)	141	.....	1	448 8406
70/71	***01-70 (Heavy Duty-LHD-Six-WDB-* 9-37)(Export-LHD-Six-WDB-* 9-37)***	135	.....	1	448 6674
71	***01-70 (Heavy Duty-LHD-Six-WDB-* 9-38)(Export-LHD-Six-WDB-* 9-38)***	135	.....	1	812 0235
67	10-50-80 (Six-* 9-7)	135	.....	1	320 5630
67	15-16-17-19 (Six-* 9-8)	135	.....	1	320 8915
67	18-50-80 (Six-* 9-8)	135	.....	1	320 8915
68	10-80 (Six)	135	.....	1	320 8915
69/71	10-80 (Six)	135	.....	1	448 6674
72	10-80 (Six)	135	.....	1	812 0235
67	01 (V8-* 9-7)	135	.....	1	320 5630
67	01 (V8-* 9-8)	135	.....	1	320 8915
67	10-50-80 (290-* 9-7)(343-* 9-7)	135	.....	1	320 5630
67	10-50-80 (290-* 9-8)(343-* 9-8)	135	.....	1	320 8915
68	290-343	135	.....	1	320 8915
68	390 ***(Use 448 6674)***		.....	1	448 5531
69/71	V8 (* 9-37)	135	.....	1	448 6674
71	V8 (* 9-38)	135	.....	1	812 0235
72	V8	135	.....	1	812 0235

9.024–1 CASE, Rear Axle Differential (LLD)

67/69	01-70 (Six-12:43 Ratio)		.....	1	317 1167
70/71	01-40-70 (LHD-Six-12: 43 Ratio)		.....	1	317 1167
72	01-40-70 (LHD-Six-12: 43 Ratio)		.....	1	321 2345

Printed in U.S.A.

REAR AXLE - PROP. SHAFT

67/69	01-70 (Six-13:40 Ratio)	.....	1	317	1167
70/71	01-40-70 (LHD-Six-LDB-13: 40 Ratio)	.....	1	317	1167
72	01-40-70 (LHD-Six-13: 40 Ratio)	.....	1	321	2345
67/69	01-70 (Six-13:43 Ratio)	.....	1	317	1167
70/71	01-40-70 (LHD-Six-LDB-13: 43 Ratio)	.....	1	317	1167
72	01-40-70 (LHD-Six-13: 43 Ratio)	.....	1	321	2345
67/69	01-70 (Six-15:41 Ratio)	.....	1	317	1195
70	01-40-70 (LHD-Six-LDB-15: 41 Ratio)	.....	1	317	1195
71	01-40 (LHD-Six-LDB-15: 41 Ratio)	.....	1	317	1195
72	01-40 (LHD-Six-15: 41 Ratio)	.....	1	321	2403
67/69	01 (Six-19:45 Ratio)	.....	1	319	1578
70/71	01-40 (Six-19: 45 Ratio)	.....	1	319	1578
72	01-40 (LHD-232-19: 45 Ratio)	.....	1	319	1578
70/	***01-70 (Heavy Duty-LHD-Six-WDB)(Export-LHD-Six-WDB)***	.....	1	319	0440
67	01 (V8-* 9-7)	.....	1	317	4531
67	01 (V8-* 9-8)	.....	1	319	0440
68/71	01-30-70 (V8)	.....	1	319	0440
72	01-40-70 (V8)	.....	1	319	0440
67	10-50-80 (* 9-7)	.....	1	317	4531
67	10-50-80 (* 9-8)	.....	1	319	0440
68/	10-80	.....	1	319	0440

9.024-2 CASE, Rear Axle Differential (WLD)

67/69	01-70 (Six-12:43 Ratio)	137	.....	1	320	4926
67/69	01-70 (Six-13:40 Ratio)	137	.....	1	320	4926
67/69	01-70 (Six-13:43 Ratio)	137	.....	1	320	4926
67/69	01-70 (Six-15:41 Ratio)	137	.....	1	320	4927
67/69	01-70 (Six-19:45 Ratio)	137	.....	1	448	5515
67	01 (V8-* 9-7)	120	.....	1	320	5811
67	01 (V8-* 9-8)	120	.....	1	320	9618
67	10-50-80 (* 9-7)	120	.....	1	320	5811
67	10-50-80 (9-8)	120	.....	1	320	9618
68/69	10-80 (Six)	120	.....	1	320	9618
70/71	10-80 (Six-* 9-37)	120	.....	1	448	5532
71	10-80 (Six-* 9-38)	120	.....	1	812	0280
72	10-80 (Six)	120	.....	1	812	0280
68	01-10-30-70-80 (290)(343)	120	.....	1	320	9618
68	10-30-70-80 (390)	120	.....	1	448	5532
69/71	V8 (* 9-37)	120	.....	1	448	5532
71	V8 (* 9-38)	120	.....	1	812	0280
72	V8	120	.....	1	812	0280
70	***01-70 (Export-LHD-Six-WDB)***	120	.....	1	448	5532

9.024-3 ATTACHING PARTS, Front Half To Rear Half Case

SCREW, Machine.....	67/	01-40-70 (Six)	.....	6	320	2191
WASHER, Lock	67/	01-70 (Six)	17.824	6	G138538	NA
BOLT, Hexagon	67/69	01-30-70 (V8-* 9-15)	.....	8	320	0818
BOLT, Hexagon	67/71	01-30-70 (V8-* 9-16)	.....	8	448	5685
BOLT, Hexagon	67/71	10-50-80 (* 9-15)	.....	8	320	0818
BOLT, Hexagon	67/71	10-50-80 (* 9-16)	.....	8	448	5685

9.027-1 GEAR SET, Rear Axle Differential Side (Incl. Side Gears, Pinion Gears, Thrust Washer, Block, Pin And Shaft)(LLD)

67/69	01-70 (Six)	119	.....	1	320	3394
70/71	01-40-70 (LHD-Six-Except Export)	119	.....	1	320	3394
72	01-40-70 (LHD-Six)	119	.....	1	320	3394
67	10-80 (Six)	***(Use 320 8736)***	.....	1	320	1688
67	V8	***(Use 320 8736)***	.....	1	320	1688
68/	V8	119	.....	1	320	8736
68/	10-80 (Six)	119	.....	1	320	8736
70/71	***01-70 (Heavy Duty-LHD-Six-WDB)(Export-LHD-Six-WDB)***	119	.....	1	320	8736

REAR AXLE - PROP. SHAFT

9.027–2 GEAR SET, Rear Axle Differential Side (Incl. Side Gears, Pinion Gears, Thrust Washers, Block, Pin And Shaft)(WLD)

67/69	01–70 (Six)	*(Ref. Pr. List)*	.....	1	320 4277
67/71	10–80 (Six–* 9–37)	144	.....	1	320 2135
72	10–80 (Six)	144	.....	2	812 0326
71	10–80 (Six–* 9–38)	144	.....	1	812 0326
67/71	V8 (* 9–37)	144	.....	1	320 2135
71	V8 (Six–* 9–38)	144	.....	1	812 0326
72	V8	144	.....	2	812 0326

9.027–3 GEAR, Rear Axle Differential Side (LLD)

67/69	01–70 (Six)	.....	2	315 7664
70/71	01–40–70 (LHD–Six–Except Export)	.....	2	315 7664
72	01–40–70 (LHD–Six)	.....	2	315 7664
67/	01–30–40–70 (V8)	.....	2	315 7773
67/	10–50–80	.....	2	315 7773
70/71	***01-70 (Heavy Duty-LHD-Six-WDB)(Export-LHD-Six-WDB)***	.....	2	315 7773

9.029 WASHER, Rear Axle Differential Side Gear Thrust (LLD)

67/69	01–70 (Six–.0325)	.....	2	310 5325
67/69	01–70 (Six–.0425)	.....	2	320 2272
70/71	01–40–70 (LHD–Six–.0325–Except Export)	.....	2	310 5325
72	01–40–70 (LHD–Six–.0325)	.....	2	310 5325
70/71	01–40–70 (LHD–Six–.0425–Except Export)	.....	2	320 2272
72	01–40–70 (LHD–Six–.0425)	.....	2	320 2272
67/71	01–30–70 (V8–.0635)	.....	2	87 048
72	01–40–70 (V8–.0635)	.....	2	87 048
67/71	01–30–70 (V8–.0735)	.....	2	320 2273
72	01–40–70 (V8–.0735)	.....	2	320 2273
67/	10–50–80 (.0635)	.....	2	87 048
67/	10–50–80 (.0735)	.....	2	320 2273
70/71	***01-70 (Heavy Duty-LHD-Six-WDB-.0635)(Export-LHD-Six-WDB-.0635)***	.....	2	87 048
70/71	***01-70 (Heavy Duty-LHD-Six-WDB-.0735)(Export-LHD-Six-WDB-.0735)***	.....	2	320 2273

9.031 GEAR, Rear Axle Differential Pinion (LLD)

67/69	01–70 (Six)	.....	2	316 4366
70/71	01–40–70 (LHD–Six–Except Export)	.....	2	316 4366
72	01–40–70 (LHD–Six)	.....	2	316 4366
67/71	01–30–70 (V8)	.....	2	318 8893
72	01–40–70 (V8)	.....	2	318 8893
67/	10–50–80	.....	2	318 8893
70/71	***01-70 (Heavy Duty-LHD-Six-WDB)(Export-LHD-Six-WDB)***	.....	1	318 8893

9.033–1 WASHER, Rear Axle Differential Pinion Thrust (LLD)

67/70	01–70 (Six)	.....	2	316 4365
70/71	01–40–70 (LHD–Six–Except Export)	.....	2	316 4365
72	01–40–70 (LHD–Six)	.....	2	316 4365
67	01 (V8–* 9–5)	.....	2	87 044
67	01 (V8–* 9–6)	.....	2	318 9804
67	10–50–80 (* 9–5)	.....	2	87 044
67	10–50–80 (* 9–6)	.....	2	318 9804
68/71	01–30–70 (V8)	.....	2	318 9804
72	01–40–70 (V8)	.....	2	318 9804
68/	10–80	.....	2	318 9804
70/71	***01-70 (Heavy Duty-LHD-Six-WDB)(Export-LHD-Six-WDB)***	.....	2	318 9804

Printed in U.S.A.

REAR AXLE - PROP. SHAFT

9.033–2 WASHER, Rear Axle Differential Pinion Thrust (WLD)

67/69	01–70 (Six)		.....	2	320 2190

9.034 RING, Rear Axle Differential Side Gear (WLD)

67/69	01–30–70 (V8)		.....	2	320 2138
67/69	10–50–80		.....	2	320 2138

9.035–1 DISC KIT, Rear Axle Differential Clutch Friction (Includes Plates)(WLD)

67/71	01 (V8–* 9–37)	145	.....	1	320 4715
71	01 (V8–* 9–38)	145	.....	1	812 0325
67/71	10–30–50–70–80 (* 9–37)	145	.....	1	320 4715
71	10–70–80 (* 9–38)	145	.....	1	812 0325
72	10–80 (Six)	145	.....	1	812 0325
72	V8	145	.....	1	812 0325

9.035–2 DISC, Rear Axle Differential Clutch Friction (WLD)

67/69	01 (V8)	***(Use 320 4715)***	.....	4	320 0812
67/69	10–30–50–70–80	***(Use 320 0812)***	.....	4	320 0812

9.036–1 SHAFT, Rear Axle Differential (LLD)

67/69	01–70 (Six)		.....	1	316 4363
70/71	01–40–70 (LHD–Six–Except Export)		.....	1	316 4363
72	01–40–70–80 (LHD–Six)		.....	1	316 4363
67/71	01–70 (V8)		.....	1	315 3596
67/71	10–30–50–80		.....	1	315 3596
72	01–40–70–80 (V8)		.....	1	315 3596
70/71	***01–70 (Heavy Duty–LHD–Six–WDB)(Export–LHD–Six–WDB)***		.....	1	315 3596

9.036–2 SHAFT, Rear Axle Differential (WLD)

67/69	01–70 (Six)		.....	1	320 2188
67/69	01–70 (V8)		.....	2	320 0810
67/69	10–30–50–80		.....	2	320 0810

9.036–3 PIN, Rear Axle Differential Shaft (LLD)

67/	SIX		.....	1	315 3437
72	V8		.....	1	G455313

9.036–4 PIN, Rear Axle Differential Shaft (WLD)

67/69	01–70 (Six)		.....	1	320 2189

9.038 SPRING KIT, Rear Axle Differential Preload (WLD)

67/69	01–70 (Six)	140	.....	1	320 4275

9.039–1 BLOCK, Rear Axle Differential Pinion Shaft Thrust (LLD)

67/69	01–70 (Six)		.....	1	316 4364
70/71	01–40–70 (LHD–Six–Except Export)		.....	1	316 4364
72	01–40–70 (LHD–Six)		.....	1	316 4364
67/71	01–30–70 (V8)		.....	1	316 2323
72	01–40–70 (V8)		.....	1	316 2323
67/	10–50–80		.....	1	316 2323
70/71	***01–70 (Heavy Duty–LHD–Six–WDB)(Export–LHD–Six–WDB)***		.....	1	316 2323

9.039–2 BLOCK, Rear Axle Differential Pinion Shaft Thrust (WLD)

67/69	01-70 (Six)		.....	1	320 4280
67/69	01-30-70 (V8)	136	.....	1	320 0814
67/69	10-50-80	136	.....	1	320 0814

9.040 RING, Rear Axle Differential Pinion Shaft Snap (WLD)

71	10-70-80 (* 9-38)		.....	2	812 1787
72	V8		.....	2	812 1787

9.041 BEARING, Rear Axle Differential Side

67/69	01-70 (Six)		.....	2	315 6052
70/71	01-40-70 (LHD-Six-Except Export)		.....	2	315 6052
72	01-40-70 (LHD-Six)		.....	2	315 6052
67/71	01-30-70 (V8)		.....	2	317 2565
72	01-40-70 (LHD-V8)		.....	2	317 2565
67/	10-50-80		.....	2	317 2565
70/71	***01-70 (Heavy Duty-LHD-Six-WDB)(Export-LHD-Six-WDB)***		.....	2	317 2565

9.043 CUP, Rear Axle Differential Side Bearing

67/69	01-70 (Six)		.....	2	317 1166
70/71	01-40-70 (LHD-Six-Except Export)		.....	2	317 1166
72	01-40-70 (LHD-Six)		.....	2	317 1166
67/71	01-30-70 (V8)		.....	2	317 2566
72	01-40-70 (LHD-V8)		.....	2	317 2566
67/	10-50-80		.....	2	317 2566
70/71	***01-70 (Heavy Duty-LHD-Six-WDB)(Export-LHD-Six-WDB)***		.....	2	317 2566

9.045–1 SHIM SET, Rear Axle Differential Side Bearing (Incl. 1 each of Shims Listed for Respective Models)

67/69	01-70 (Six)	130	.....	1	320 2344
70/71	01-40-70 (LHD-Six-Except Export)	130	.....	1	320 2344
72	01-40-70 (LHD-Six)	130	.....	1	320 2344
67/	01-30-40-70 (V8)	143	.....	1	320 5532
67/	10-50-80	143	.....	1	320 5532
70/71	***01-70 (Export-LHD-Six-WDB)***	143	.....	1	320 5532

9.045–2 SHIM, Rear Axle Differential Side Bearing

67/	(.080) 01-30-70 (V8): 10-50-80	.....	AR	320 5512
67/	(.082) 01-30-70 (V8): 10-50-80	.....	AR	320 5513
67/	(.084) 01-30-70 (V8): 10-50-80	.....	AR	320 5514
67/	(.086) 01-30-70 (V8): 10-50-80	.....	AR	320 5515
67/	(.088) 01-30-70 (V8): 10-50-80	.....	AR	320 5516
67/	(.090) 01-30-70 (V8): 10-50-80	.....	AR	320 5517
67/	(.092) 01-30-70 (V8): 10-50-80	.....	AR	320 5518
67/	(.094) 01-30-70 (V8): 10-50-80	.....	AR	320 5519
67/	(.096) 01-30-70 (V8): 10-50-80	.....	AR	320 5520
67/	(.098) 01-30-70 (V8): 10-50-80	.....	AR	320 5521
67/	(.100) 01-30-70 (V8): 10-50-80	.....	AR	320 5522
67/	(.102) 01-30-70 (V8): 10-50-80	.....	AR	320 5523
67/	(.104) 0 -30-70 (V8): 10-50-80	.....	AR	320 5524
67/	(.106) 01-30-70 (V8): 10-50-80	.....	AR	320 5525
67/	(.108) 0 -30-70 (V8): 10-50-80	.....	AR	320 5526
67/	(.110) 0 -30-70 (V8): 10-50-80	.....	AR	320 5527
67/69	(.142) 0 -70 (Six)	.....	AR	320 2326
67/69	(.144) 01-70 (Six)	.....	AR	320 2327
67/69	(.146) 01-70 (Six)	.....	AR	320 2328
67/69	(.148) 01-70 (Six)	.....	AR	320 2329
67/69	(.150) 01-70 (Six)	.....	AR	320 2330
67/69	(.152) 01-70 (Six)	.....	AR	320 2331
67/69	(.154) 01-70 (Six)	.....	AR	320 2332
67/69	(.156) 01-70 (Six)	.....	AR	320 2333

REAR AXLE - PROP. SHAFT

67/69	(.158) 01-70 (Six)	.....	AR	320 2334
67/69	(.160) 01-70 (Six)	.....	AR	320 2335
67/69	(.162) 01-70 (Six)	.....	AR	320 2336
67/69	(.164) 01-70 (Six)	.....	AR	320 2337
67/69	(.166) 01-70 (Six)	.....	AR	320 2338
67/69	(.168) 01-70 (Six)	.....	AR	320 2339
67/69	(.170) 01-70 (Six)	.....	AR	320 2340
67/69	(.172) 01-70 (Six)	.....	AR	320 2341
67/69	(.174) 01-70 (Six)	.....	AR	320 2342
67/69	(.176) 01-70 (Six)	.....	AR	320 2343
70/71	(.142) 01-40-70 (LHD-Six-Except Export)	.....	AR	320 2326
70/71	(.144) 01-40-70 (LHD-Six-Except Export)	.....	AR	320 2327
70/71	(.146) 01-40-70 (LHD-Six-Except Export)	.....	AR	320 2328
70/71	(.148) 01-40-70 (LHD-Six-Except Export)	.....	AR	320 2329
70/71	(.150) 01-40-70 (LHD-Six-Except Export)	.....	AR	320 2330
70/71	(.152) 01-40-70 (LHD-Six-Except Export)	.....	AR	320 2331
70/71	(.154) 01-40-70 (LHD-Six-Except Export)	.....	AR	320 2332
70/71	(.156) 01-40-70 (LHD-Six-Except Export)	.....	AR	320 2333
70/71	(.158) 01-40-70 (LHD-Six-Except Export)	.....	AR	320 2334
70/71	(.160) 01-40-70 (LHD-Six-Except Export)	.....	AR	320 2335
70/71	(.162) 01-40-70 (LHD-Six-Except Export)	.....	AR	320 2336
70/71	(.164) 01-40-70 (LHD-Six-Except Export)	.....	AR	320 2337
70/71	(.166) 01-40-70 (LHD-Six-Except Export)	.....	AR	320 2338
70/71	(.168) 01-40-70 (LHD-Six-Except Export)	.....	AR	320 2339
70/71	(.170) 01-40-70 (LHD-Six-Except Export)	.....	AR	320 2340
70/71	(.172) 01-40-70 (LHD-Six-Except Export)	.....	AR	320 2341
70/71	(.174) 01-40-70 (LHD-Six-Except Export)	.....	AR	320 2342
70/71	(.176) 01-40-70 (LHD-Six-Except Export)	.....	AR	320 2343
72	(.142) 01-40-70 (LHD-Six)	.....	AR	320 2326
72	(.144) 01-40-70 (LHD-Six)	.....	AR	320 2327
72	(.146) 01-40-70 (LHD-Six)	.....	AR	320 2328
72	(.148) 01-40-70 (LHD-Six)	.....	AR	320 2329
72	(.150) 01-40-70 (LHD-Six)	.....	AR	320 2330
72	(.152) 01-40-70 (LHD-Six)	.....	AR	320 2331
72	(.154) 01-40-70 (LHD-Six)	.....	AR	320 2332
72	(.156) 01-40-70 (LHD-Six)	.....	AR	320 2333
72	(.158) 01-40-70 (LHD-Six)	.....	AR	320 2334
72	(.160) 01-40-70 (LHD-Six)	.....	AR	320 2335
72	(.162) 01-40-70 (LHD-Six)	.....	AR	320 2336
72	(.164) 01-40-70 (LHD-Six)	.....	AR	320 2337
72	(.166) 01-40-70 (LHD-Six)	.....	AR	320 2338
72	(.168) 01-40-70 (LHD-Six)	.....	AR	320 2339
72	(.170) 01-40-70 (LHD-Six)	.....	AR	320 2340
72	(.172) 01-40-70 (LHD-Six)	.....	AR	320 2341
72	(.174) 01-40-70 (LHD-Six)	.....	AR	320 2342
72	(.176) 01-40-70 (LHD-Six)	.....	AR	320 2343
70/71	***(.080) 01-70 (Export-LHD-Six-WDB)***	.....	AR	320 5512
70/71	***(.082) 01-70 (Export-LHD-Six-WDB)***	.....	AR	320 5513
70/71	***(.084) 01-70 (Export-LHD-Six-WDB)***	.....	AR	320 5514
70/71	***(.086) 01-70 (Export-LHD-Six-WDB)***	.....	AR	320 5515
70/71	***(.088) 01-70 (Export-LHD-Six-WDB)***	.....	AR	320 5516
70/71	***(.090) 01-70 (Export-LHD-Six-WDB)***	.....	AR	320 5517
70/71	***(.092) 01-70 (Export-LHD-Six-WDB)***	.....	AR	320 5518
70/71	***(.094) 01-70 (Export-LHD-Six-WDB)***	.....	AR	320 5519
70/71	***(.096) 01-70 (Export-LHD-Six-WDB)***	.....	AR	320 5520
70/71	***(.098) 01-70 (Export-LHD-Six-WDB)***	.....	AR	320 5521
70/71	***(.100) 01-70 (Export-LHD-Six-WDB)***	.....	AR	320 5522
70/71	***(.102) 01-70 (Export-LHD-Six-WDB)***	.....	AR	320 5523
70/71	***(.104) 01-70 (Export-LHD-Six-WDB)***	.....	AR	320 5524
70/71	***(.106) 01-70 (Export-LHD-Six-WDB)***	.....	AR	320 5525
70/71	***(.108) 01-70 (Export-LHD-Six-WDB)***	.....	AR	320 5526
70/71	***(.110) 01-70 (Export-LHD-Six-WDB)***	.....	AR	320 5527

Printed in U.S.A.

REAR AXLE - PROP. SHAFT

9.050–1 GEAR SET, Rear Axle Ring (Incl. Pinion)

67/68	01–70 (Six–12: 43 Ratio)	124	.....	1	320 7876
69	01 (Six–12: 43 Ratio–* 9–29)	133	.....	1	320 7876
69	01 (Six–12: 43 Ratio–* 9–30)	133	.....	1	448 6831
70/	01–40–70 (LHD–Six–12: 43 Ratio)	133	.....	1	448 7815
67/68	01–70 (Six–13: 40 Ratio)	124	.....	1	320 7874
69	01–70 (Six–13: 40 Ratio–* 9–29)	133	.....	1	320 7874
69	01–70 (Six–13: 40 Ratio–* 9–30)	133	.....	1	448 6832
70/	01–40–70 (LHD–Six–13: 40 Ratio)	133	.....	1	448 7813
67/68	01–70 (Six–13: 43 Ratio)	124	.....	1	320 7875
69	01–70 (Six–13: 43 Ratio–* 9–29)	133	.....	1	320 7875
69	01–70 (Six–13: 43 Ratio–* 9–30)	133	.....	1	448 6833
70/	01–40–70 (LHD–Six–13: 43 Ratio)	133	.....	1	448 7814
67/68	01–70 (Six–15: 41 Ratio)	124	.....	1	320 7873
69	01 (Six–15: 41 Ratio–* 9–29)	133	.....	1	320 7873
69	01 (Six–15: 41 Ratio–* 9–30)	133	.....	1	448 6834
70/	01–40 (LHD–Six–15: 41 Ratio)	133	.....	1	448 7812
67/68	01 (Six–19: 45 Ratio)	124	.....	1	320 9653
69	01 (Six–19: 45 Ratio–* 9–29)	133	.....	1	320 9653
69	01 (Six–19: 45 Ratio–* 9–30)	133	.....	1	448 6835
70/	01 (LHD–Six–19: 45 Ratio)	***(Ord. Component Parts)***	.....	1	448 7811
70	***01–70 (Heavy Duty–LHD–Six–11: 39 Ratio)(Export–LHD–Six–11: 39 Ratio)***	133	.....	1	320 9608
71	***01–70 (Heavy Duty–LHD–Six–11: 39 Ratio)(Export–LHD–Six–11: 39 Ratio)***	133	.....	1	448 6825
70	***01–70 (Heavy Duty–LHD–Six–13: 41 Ratio)(Export–LHD–Six–13: 41 Ratio)*** ***(Use 448 6155)***		.....	1	320 9609
71	***01–70 (Heavy Duty–LHD–Six–13: 41 Ratio)(Export–LHD–Six–13: 41 Ratio)***	133	.....	1	448 6826
67	01–30–70 (V8–11: 39 Ratio–* 9–7)	133	.....	1	320 7877
67	01–30–70 (V8–11: 39 Ratio–* 9–8)	133	.....	1	320 9608
67	10–50–80 (11: 39 Ratio–* 9–7)	133	.....	1	320 7877
67	10–50–80 (11: 39 Ratio–* 9–8)	133	.....	1	320 9608
68/70	01–30–70 (V8–11: 39 Ratio)	133	.....	1	320 9608
68/70	10–80 (11: 39 Ratio)	133	.....	1	320 9608
71/	LHD (11: 39 Ratio)	133	.....	1	448 6825
70	10–30–70 (V8–11: 43 Ratio)		.....	1	448 5750
71/	LHD (V8–11: 43 Ratio)	133	.....	1	448 9075
67	01–30–70 (V8–13: 41 Ratio–* 9–7)	133	.....	1	320 7878
67	01–30–70 (V8–13: 41 Ratio–* 9–8)	***(Use 448 6155)***	.....	1	320 9609
67	10–50–80 (13: 41 Ratio–* 9–7)	133	.....	1	320 7878
67	10–50–80 (13: 41 Ratio–* 9–8)	***(Use 448 6155)***	.....	1	320 9609
68/70	01–30–70 (V8–13: 41 Ratio)	***(Use 448 6155)***	.....	1	320 9609
68/70	10–80 (13: 41 Ratio)	***(Use 448 6155)***	.....	1	320 9609
71/	LHD (13: 41 Ratio)	133	.....	1	448 6826
67	01–30–70 (V8–15: 43 Ratio)	133	.....	1	320 7879
67	01–30–70 (V8–15: 43 Ratio–* 9–8)	***(Use 448 6156)***	.....	1	320 9610
67	10–50–80 (15: 43 Ratio–* 9–7)	133	.....	1	320 7879
67	10–50–80 (15: 43 Ratio–* 9–8)	***(Use 448 6156)***	.....	1	320 9610
68/70	01–30–70 (V8–15: 43 Ratio)	***(Use 448 6156)***	.....	1	320 9610
68/70	10–80 (15: 43 Ratio)	***(Use 448 6156)***	.....	1	320 9610
71/	LHD (V8–15: 43 Ratio)	133	.....	1	448 6827

9.050–2 ATTACHING PARTS, Ring Gear To Differential Case (Incl. 8)

SCREW, Machine.....	67/	01–40–70 (Six–3/8"–24)	118	.....	1	320 2890
SCREW, Machine.....	67/68	01–30–70 (V8–3/8"–24)	118	.....	1	320 2891
SCREW, Machine.....	67/68	10–50–80 (3/8"–24)	118	.....	1	320 2891
SCREW, Machine.....	67/70	7/16"–24 × 7/8"	118	.....	1	448 5991
SCREW, Machine.....	70/	7/16"–20 × 7/8"	118	.....	1	448 6828
SCREW, Machine.....	67/69	7/16"–24 × 13/16"	118	.....	1	320 9607

REAR AXLE - PROP. SHAFT

9.050–3 ATTACHING PARTS, Pinion To Rear Yoke

STUD	67/69	01-70 (Six)	.....	1	318 5872	
WASHER, Lock	67/69	01-70 (Six)	17.820	1	G120384	
WASHER, Plain	67/69	01-70 (Six)	17.814	1	400 1293	NA
NUT, Hexagon	67/69	01-70 (Six)	17.406	1	G120371	NA

9.050–4 NUT, Rear Axle Pinion

67/69	01-70 (Six)	.....	1	310 5331
70/	01-70 (Six)	.....	1	318 2601
67/71	01-30-70 (V8)	.....	1	318 2601
72	01-40-70 (V8)	.....	1	318 2601
67/	10-50-80	.....	1	318 2601

9.050–5 WASHER, Rear Axle Pinion

67/69	01-70 (Six)	.....	1	313 0372

9.050–6 SPACER, Rear Axle Pinion Collapsible

70/71	01-40-70 (LHD-Six-Except Export)	.....	1	317 5779
72	01-40-70 (LHD-Six)	.....	1	317 5779
67/71	01-30-70 (V8) ***(Use 318 5971)***	.....	1	317 2269
72	01-40-70 (V8) ***(Use 318 5971)***	.....	1	317 2269
67/	10-50-80 ***(Use 318 5971)***	.....	1	317 2269
70/71	***01-70 (Export-LHD-Six-WDB)*** ***(Use 318 5971)***	.....	1	317 2269

9.050–7 WASHER, Rear Axle Pinion Lock

67/69	01-70 (Six)	.....	1	313 0373

9.052–1 BEARING, Rear Axle Pinion (Front)

67/69	01-70 (Six)	.....	1	315 6063
70/71	01-40-70 (LHD-Six-Except Export)	.....	1	315 6063
72	01-40-70 (LHD-Six)	.....	1	315 6063
67/71	01-30-70 (V8)	.....	1	317 2135
72	01-40-70 (V8)	.....	1	317 2135
67/	10-50-80	.....	1	317 2135
70/71	***01-70 (Heavy Duty-LHD-Six-WDB)(Export-LHD-Six-WDB)***	.....	1	317 2135

9.052–2 BEARING, Rear Axle Pinion (Rear)

67/69	01-70 (Six)	.....	1	317 0947
70/71	01-40-70 (LHD-Six-Except Export)	.....	1	317 0947
72	01-40-70 (LHD-Six)	.....	1	317 0947
67/71	01-30-70 (V8)	.....	1	317 2563
72	01-40-70 (V8)	.....	1	317 2563
67/	10-50-80	.....	1	317 2563
70/71	***01-70 (Heavy Duty-LHD-Six-WDB)(Export-LHD-Six-WDB)***	.....	1	317 2563

9.055–1 CUP, Rear Axle Pinion Bearing (Front)

67/69	01-70 (Six)	.....	1	315 6062
70/71	01-40-70 (LHD-Six-Except Export)	.....	1	315 6062
72	01-40-70 (LHD-Six)	.....	1	315 6062
67/71	01-30-70 (V8)	.....	1	317 2134
72	01-40-70 (LHD-V8)	.....	1	317 2134
67/	10-50-80	.....	1	317 2134
70/71	***01-70 (Heavy Duty-LHD-Six-WDB)(Export-LHD-Six-WDB)***	.....	1	317 2134

9.055–2 CUP, Rear Axle Pinion Bearing (Rear)

67/69	01-70 (Six)	.....	1	315	6065
70/71	01-40-70 (LHD-Six-Except Export)	.....	1	315	6065
72	01-40-70 (LHD-Six)	.....	1	315	6065
67/71	01-30-70 (V8)	.....	1	317	2564
72	01-40-70 (LHD-V8)	.....	1	317	2564
67/	10-50-80	.....	1	317	2564
70/71	***01-70 (Heavy Duty-LHD-Six-WDB)(Export-LHD-Six-WDB)***	.....	1	317	2564

9.057–1 SHIM SET, Rear Axle Pinion Adjusting (Incl. 1 Each Of Shims Listed For Respective Models)

67/69	01-70 (Six)	134	.....	1	320	2345
70/71	01-40-70 (LHD-Six-Except Export)	134	.....	1	320	2345
72	01-40-70 (LHD-Six)	134	.....	1	320	2345
67/71	01-30-70 (V8)	138	.....	1	320	5567
72	01-40-70 (V8)	138	.....	1	320	5567
67/	10-50-80	138	.....	1	320	5567
70/71	***01-70 (Export-LHD-Six-WDB)***	138	.....	1	320	5567

9.057–2 SHIM, Rear Axle Pinion Shaft Bearing (Rear)

67/69	(.003) 01-70 (Six)	.....	AR	314	4245
67/69	(.005) 01-70 (Six)	.....	AR	314	4246
67/69	(.007) 01-70 (Six)	.....	AR	314	4483
67/69	(.010) 01-70 (Six)	.....	AR	314	4247
67/69	(.020) 01-70 (Six)	.....	AR	314	4248
70/71	(.003) 01-40-70 (LHD-Six-Except Export)	.....	AR	314	4245
70/71	(.005) 01-40-70 (LHD-Six-Except Export)	.....	AR	314	4246
70/71	(.007) 01-40-70 (LHD-Six-Except Export)	.....	AR	314	4483
70/71	(.010) 01-40-70 (LHD-Six-Except Export)	.....	AR	314	4247
70/71	(.020) 01-40-70 (LHD-Six-Except Export)	.....	AR	314	4248
72	(.003) 01-40-70 (LHD-Six)	.....	AR	314	4245
72	(.005) 01-40-70 (LHD-Six)	.....	AR	314	4246
72	(.010) 01-40-70 (LHD-Six)	.....	AR	314	4247
72	(.020) 01-40-70 (LHD-Six)	.....	AR	314	4248
72	(.070) 01-40-70 (LHD-Six)	.....	AR	314	4483
70/71	***(.093) 01-70 (Export-LHD-Six-WDB)***	.....	AR	320	5533
70/71	***(.094) 01-70 (Export-LHD-Six-WDB)***	.....	AR	320	5534
70/71	***(.095) 01-70 (Export-LHD-Six-WDB)***	.....	AR	320	5535
70/71	***(.096) 01-70 (Export-LHD-Six-WDB)***	.....	AR	320	5536
70/71	***(.098) 01-70 (Export-LHD-Six-WDB)***	.....	AR	320	5537
70/71	***(.099) 01-70 (Export-LHD-Six-WDB)***	.....	AR	320	5555
70/71	***(.100) 01-70 (Export-LHD-Six-WDB)***	.....	AR	320	5556
70/71	***(.101) 01-70 (Export-LHD-Six-WDB)***	.....	AR	320	5557
70/71	***(.102)(Export-LHD-Six-WDB)***	.....	AR	320	5558
70/71	***(.103)(Export-LHD-Six-WDB)***	.....	AR	320	5559
70/71	***(.104)(Export-LHD-Six-WDB)***	.....	AR	320	5560
70/71	***(.105)(Export-LHD-Six-WDB)***	.....	AR	320	5561
70/71	***(.106)(Export-LHD-Six-WDB)***	.....	AR	320	5562
70/71	***(.107)(Export-LHD-Six-WDB)***	.....	AR	320	5563
70/71	***(.108)(Export-LHD-Six-WDB)***	.....	AR	320	5564
70/71	***(.109)(Export-LHD-Six-WDB)***	.....	AR	320	5565
70/71	***(.110)(Export-LHD-Six-WDB)***	.....	AR	320	5566
67/	(.093) 01-30-70 (V8): 10-50-80	.....	AR	320	5533
67/	(.094) 01-30-70 (V8): 10-50-80	.....	AR	320	5534
67/	(.095) 01-30-70 (V8): 10-50-80	.....	AR	320	5535
67/	(.096) 01-30-70 (V8): 10-50-80	.....	AR	320	5536
67/	(.098) 01-30-70 (V8): 10-50-80	.....	AR	320	5537
67/	(.099) 01-30-70 (V8): 10-50-80	.....	AR	320	5555

67/	(.100) 01-30-70 (V8): 10-50-80		.....	AR	320 5556
67/	(.101) 01-30-70 (V8): 10-50-80		.....	AR	320 5557
67/	(.102) 01-30-70 (V8): 10-50-80		.....	AR	320 5558
67/	(.103) 01-30-70 (V8): 10-50-80		.....	AR	320 5559
67/	(.104) 01-30-70 (V8): 10-50-80		.....	AR	320 5560
67/	(.105) 01-30-70 (V8): 10-50-80		.....	AR	320 5561
67/	(.106) 01-30-70 (V8): 10-50-80		.....	AR	320 5562
67/	(.107) 01-30-70 (V8): 10-50-80		.....	AR	320 5563
67/	(.108) 01-30-70 (V8): 10-50-80		.....	AR	320 5564
67/	(.109) 01-30-70 (V8): 10-50-80		.....	AR	320 5565
67/	(.110) 01-30-70 (V8): 10-50-80		.....	AR	320 5566

9.062–1 SHIM SET, Rear Axle Pinion Shaft Bearing (Incl. 1 Each Of Shims Listed For Respective Models)

67/69	01-70 (Six)	105	.....	1	320 2290

9.062–2 SHIM, Rear Axle Pinion Shaft Bearing (Front)

67/69	(.002)		.....	AR	320 2286
67/69	(.003)		.....	AR	320 2287
67/69	(.005) 01-70 (Six)		.....	AR	320 2288
67/69	(.010) 01-70 (Six)		.....	AR	320 2289
67/69	(.170) 01-70 (Six)		.....	AR	320 2285

9.064–1 SEAL, Rear Axle Pinion Oil

67/69	01-70 (Six)		.....	1	320 3580

9.064–2 SEAL, Rear Axle Pinion Oil (Incl. Pinion Nut)

70/	01-40-70 (Six)	127	.....	1	320 8474
67/	01-30-70 (V8)	127	.....	1	320 8474
67/	10-50-80	127	.....	1	320 8474
72	40 (V8)	127	.....	1	320 8474

9.068 SHAFT, Rear Axle Drive

67/69	01 (Six)		.....	2	317 8913
70	01-40-70 (LHD-Six-Except Export)		.....	2	320 8830
71	01-40 (LHD-Six-Except Export)		.....	2	320 8830
72	01-40 (LHD-Six)		.....	2	320 8830
68/69	70 (Six)		.....	2	320 8830
71	70 (Six-LDB)		.....	2	448 9266
72	70 (Six)		.....	2	448 9266
67/69	(Left) 01 (V8)		.....	1	317 9739
70/71	(Left) 01 (V8)		.....	1	320 8831
72	(Left) 01-40 (V8)		.....	1	320 8831
70	***(Left) 01-70 (Heavy Duty-LHD-Six-WDB)(Export-LHD-Six-WDB)***		.....	1	320 8831
71	***(Left) 01 (Heavy Duty-LHD-Six-WDB)(Export-LHD-Six-WDB)***		.....	1	320 8831
67/68	(Left) 15-16-17-19 (Six-WOD-LDB-Except Heavy Duty)		.....	1	318 8789
67/68	(Left) 15-16-17-19 (Six-WAT-LDB-Except Heavy Duty)(Six-WST-LDB-Except Heavy Duty)		.....	1	318 4431
67/68	(Left) 15-16-17-19 (Six-WDB-Except Heavy Duty)		.....	1	317 7608
69	(Left) 15-19 (Six-WST-Except Heavy Duty)(Six-WAT-Except Heavy Duty)		.....	1	448 5771
69	(Left) 15-19 (Six-WOD-Except Heavy Duty)		.....	1	448 5773
67/68	(Left) 18-50-80 (Six-WOD)		.....	1	318 8791
67/68	(Left) 18-50-80 (Six-WAT)(Six-WST)		.....	1	317 7608
69	(Left) 18 (Six-WST)(Six-WAT)		.....	1	448 5754
69	(Left) 18 (WOD)		.....	1	448 5775

REAR AXLE - PROP. SHAFT

67/68	***(Left) 15-16-17-19 (Heavy Duty-Six-WST)(Heavy Duty-Six-WAT)***	.....	1	317 7608
67/68	***(Left) 15-16-17-19 (Heavy Duty-Six-WOD)***	.....	1	318 8791
69	***(Left) 15-19 (Heavy Duty-Six-WOD)***	.....	1	448 5775
69	***(Left) 15-19 (Heavy Duty-Six-WST)(Heavy Duty-Six-WAT)***	.....	1	448 5754
69	***(Left) 10 (Export-LHD-Six-WDB)(RHD-Six-WDB)***	.....	1	448 5754
67/68	(Left) 10-50-80 (V8)	.....	1	317 7608
69	(Left) 10 (V8-WST)(V8-WAT)	.....	1	448 5754
70/	(Left) 10-80	.....	1	448 5754
68/70	(Left) 30-70 (V8)	.....	1	320 8831
71/	(Left) 70 (V8)	.....	1	448 5754
71	***(Left) 70 (Export-LHD-Six-WDB)***	.....	1	448 5754
69	(Left) 80	.....	1	448 5754
67/69	(Right) 01 (V8)	.....	1	317 7607
70	(Right) 01 (V8)	.....	1	317 7608
72	(Right) 01-40 (V8)	.....	1	812 0124
71	***(Right) 01 (Heavy Duty-LHD-Six-WDB)(Export-LHD-Six-WDB)***	.....	1	317 7608
70	***(Right) 01-70 (Heavy Duty-LHD-Six-WDB)(Export-LHD-Six-WDB)***	.....	1	317 7608
67/68	(Right) 15-16-17-19 (Six-WAT-LDB-Except Heavy Duty)(Six-WST-LDB-Except Heavy Duty)	.....	1	318 4432
67/68	(Right) 15-16-17-19 (Six-WOD-LDB-Except Heavy Duty)	.....	1	318 8790
67/68	(Right) 15-16-17-19 (Six-WDB-Except Heavy Duty)	.....	1	318 2413
67/68	(Right) 10-50-80 (V8)	.....	1	318 2413
67/68	(Right) 18-50-80 (Six-WAT)(Six-WST)	.....	1	318 2413
67/68	(Right) 18-50-80 (Six-WOD)	.....	1	318 8792
69	(Right) 15-19 (Six-WST-Except Heavy Duty)(Six-WAT-Except Heavy Duty)	.....	1	448 5772
69	(Right) 15-19 (WOD-Except Heavy Duty)	.....	1	448 5774
67/68	***(Right) 15-16-17-19 (Heavy Duty-Six-WAT)(Heavy Duty-Six-WST)***	.....	1	318 2413
67/68	***(Right) 15-16-17-19 (Heavy Duty-Six-WOD)***	.....	1	318 8792
69	***(Right) 15-19 (Heavy Duty-Six-WOD)***	.....	1	448 5776
69	***(Right) 15-19 (Heavy Duty-Six-WST)(Heavy Duty-Six-WAT)***	.....	1	448 5755
69	***(Right) 10 (Export-LHD-Six-WDB)(RHD-Six-WDB)***	.....	1	448 5755
69	(Right) 10 (V8-WST)(V8-WAT)	.....	1	448 5755
69	(Right) 18 (Six-WST)(Six-WAT)	.....	1	448 5755
69	(Right) 18 (WOD)	.....	1	448 5776
70/	(Right) 10-80	.....	1	448 5755
68/69	(Right) 30-70 (V8)	.....	1	318 2413
70	(Right) 30-70 (V8)	.....	1	317 7608
71/	(Right) 70 (V8)	.....	1	448 5755
71	***(Right) 70 (Export-LHD-Six-WDB)***	.....	1	448 5755
69	(Right) 80	.....	1	448 5755

9.072 SEAL, Rear Axle Drive Shaft Inner Oil

67/69	01-70 (Six)	.....	1	317 0699
70/71	01-40-70 (LHD-Six-Except Export)	.....	2	317 0699
72	01-40-70 (LHD-Six)	.....	2	317 0699
67/	V8	.....	1	317 0700
67/69	15-16-17-19 (Six-LDB-Except Heavy Duty)	.....	1	317 0699
67/69	15-16-17-19 (Six-WDB-Except Heavy Duty)	.....	1	317 0700
67/69	18-50-80 (Six)	.....	1	317 0700
70/	10-80 (Six)	.....	2	317 0700
67/69	***15-16-17-19 (Heavy Duty-Six)***	.....	1	317 0700
70	***01-70 (Heavy Duty-LHD-Six-WDB)(Export-LHD-Six-WDB)***	.....	2	317 0700

9.086-1 BUMPER, Rear Axle

67/	01-30-40	.....	2	316 9750
67/71	15-16-17-19-50-85-89	.....	2	319 1369
67/71	18-88	.....	2	318 3788
71	70 (* 9-35)	.....	2	316 9750
71	70 (* 9-36)	.....	2	319 1369
72	10-70-80	.....	2	319 1369

Printed in U.S.A.

REAR AXLE - PROP. SHAFT

9.086–2 ATTACHING PARTS, Rear Axle Bumper

SCREW, Machine.....	67/	.....	17.670	4	G172475 NA
WASHER, Plain	67/68	.....	17.814	4	G120393 NA
WASHER, Plain	69/	10-80	17.814	4	G120393 NA

9.100–1 SHAFT ASSEMBLY, Propeller

1967 Thru 1971 01-40

67	01 (Six-WST-* 9-3)	126	.....	1	320 7687
67	01 (Six-WST-* 9-4)	116	.....	1	318 8630
68/70	01 (LHD-WST-199)	116	.....	1	318 8630
70	01 (199-WST-* 9-31-Except Export)	116	.....	1	319 4437
70	01 (199-WST-* 9-32-Except Export)	116	.....	1	319 4907
68	01 (232-WST-* 9-13)	116	.....	1	318 8630
68	01 (232-WST-* 9-14)	116	.....	1	319 1307
69	01 (232-WST)	116	.....	1	319 1307
70/71	01 (LHD-232-WST-LDB)	116	.....	1	319 4907
72	01 (LHD-Six-WST)	116	.....	1	319 4907
67	01 (Six-WOD-* 9-3)	126	.....	1	320 7688
67/68	01 (Six-WOD-* 9-4)	116	.....	1	318 8631
69	01 (199-WOD)	116	.....	1	318 8631
70	***01 (Heavy Duty-LHD-Six-WST-WDB)(Export-LHD-Six-WST-WDB)***	116	.....	1	319 8320
70	***01 (Export-LHD-199-WST-LDB)***	116	.....	1	319 4907
71	***01 (Heavy Duty-LHD-232-WST-WDB)(Export-LHD-232-WST-WDB)***	116	.....	1	319 8320
68/70	***01 (RHD-WST-199)***	116	.....	1	319 1307
67	01 (Six-WAT-* 9-3)	126	.....	1	320 6688
67/68	01 (Six-WAT-* 9-4)	116	.....	1	318 8629
69	01 (Six-WAT)	116	.....	1	318 8629
70/71	01 (LHD-Six-WAT-LDB)	116	.....	1	319 7036
72	01 (LHD-Six-WAT)	116	.....	1	321 2789
70	***01 (Export-LHD-Six-WAT-WDB)***	116	.....	1	318 8630
71	***01 (Heavy Duty-LHD-Six-WAT-WDB)(Export-LHD-Six-WAT-WDB)***	116	.....	1	319 9802
67/68	01 (V8-WST)	116	.....	1	320 7612
67/70	01 (V8-W4ST-Except SC/RAMBLER)	116	.....	1	320 7611
69	09 (SC/RAMBLER-V8-W4ST)	116	.....	1	319 8057
72	01 (304-WST)	116	.....	1	319 8320
71	01 (360-WST)	116	.....	1	319 9802
71	01 (360-W4ST)	116	.....	1	319 7037
67/69	01 (V8-WAT)	116	.....	1	320 7612
70	01 (304-WAT)	116	.....	1	318 8630
71	01 (304-WAT)	116	.....	1	319 9802
72	01 (304-WAT)	116	.....	1	321 2790
71	01 (360-WAT)	116	.....	1	319 7037
72	01 (360-WAT)	116	.....	1	321 2791
70	40 (199-WST-* 9-33)	116	.....	1	319 7882
70	40 (199-WST-* 9-34)	116	.....	1	321 1529
70/	40 (Six-WST)	116	.....	1	319 7882
70/71	40 (WAT)	116	.....	1	319 7881
72	40 (Six-WAT)	116	.....	1	321 2788
72	40 (304-WST)	116	.....	1	321 5828
72	40 (304-WAT)	116	.....	1	321 5827

1967 Thru 1971 10-50-80

67/68	10-50-80 (Six-WST-* 9-1)	116	.....	1	318 6119
67/68	10-50-80 (Six-WST-* 9-2)	116	.....	1	318 6121
68	10-80 (Six-WST-* 9-19)	116	.....	1	319 4436
69/70	10 (Six-WST-Except Heavy Duty)	116	.....	1	319 4436
69	***10 (Heavy Duty-Six-WST)***	116	.....	1	319 4437
71/	10 (Six-WST)	116	.....	1	319 1598

REAR AXLE - PROP. SHAFT

69/70	80 (232-WST)	116	.....	1	319 1598
72	80 (Six-WST)	116	.....	1	319 1598
71	***80 (Heavy Duty-Six-WST)***	116	.....	1	319 1598
67	10-50-80 (Six-WOD)	116	.....	1	318 6120
68	10-80 (Six-WOD-* 9-20)	116	.....	1	319 1308
68	10-80 (Six-WOD-* 9-21)	116	.....	1	319 4438
69	10 (Six-WOD)	116	.....	1	319 4438
67/68	10-50-80 (Six-WAT-* 9-22)	116	.....	1	318 6121
68	10-80 (Six-WAT-* 9-23)	116	.....	1	319 4437
69/70	10 (Six-WAT)	116	.....	1	319 4437
69/70	80 (232-WAT)	116	.....	1	319 3176
71	10-80 (Six-WAT)	116	.....	1	319 3176
72	10-80 (Six-WAT)	116	.....	1	321 2794
67/68	10-50-80 (290-WST-* 9-24)	116	.....	1	318 6122
68	10-80 (290-WST-* 9-25)	116	.....	1	319 4439
67/68	10-50-80 (290-W4ST-* 9-26) ***(Use 319 4440)***		.....	1	318 6123
68	10-80 (290-W4ST-* 9-27)	116	.....	1	319 4440
67/68	10-50-80 (343-W4ST-* 9-26) ***(Use 319 4440)***		.....	1	318 6123
68	10-80 (343-W4ST-* 9-27)	116	.....	1	319 4440
69	10 (343-W4ST)	116	.....	1	319 4440
68	10-80 (390-W4ST-* 9-26)	116	.....	1	319 1349
68	10-80 (390-W4ST-* 9-27)	116	.....	1	319 4442
69/70	10 (390-W4ST)	116	.....	1	319 4442
71/	10 (360-W4ST)	116	.....	1	321 2000
71/	10 (401-W4ST)	116	.....	1	321 2000
67	10-50-80 (V8-WOD)	116	.....	1	318 6122
68	10-80 (V8-WOD)	116	.....	1	319 1309
67/68	10-50-80 (290-WAT-* 9-24)	116	.....	1	318 6122
68	10-80 (290-WAT-* 9-25)	116	.....	1	319 4439
69	10 (290-WAT)	116	.....	1	319 4439
69	80 (290-WAT)	116	.....	1	319 1596
67/68	10-50-80 (290-W4ST-* 9-26) ***(Use 319 4440)***		.....	1	318 6123
68	10-80 (343-WAT-* 9-27)	116	.....	1	319 4440
69	10 (343-WAT)	116	.....	1	319 4440
69	80 (343-WAT)	116	.....	1	319 1652
70	10 (304-WAT)	116	.....	1	319 4439
71	10 (304-WAT)	116	.....	1	319 1596
72	10 (304-WAT)	116	.....	1	321 2795
70/71	80 (304-WAT)	116	.....	1	319 1596
72	80 (304-WAT)	116	.....	1	321 2795
70	10 (360-WAT-13: 41 Ratio)	116	.....	1	319 4440
70	10 (360-WAT-11: 39 Ratio)	116	.....	1	319 4441
71	10 (360-WAT)	116	.....	1	319 1652
72	10 (360-WAT)	116	.....	1	321 2796
72	***10 (Heavy Duty-360-WAT)***		.....	1	321 7756
70	10 (360-WAT-15: 43 Ratio)	116	.....	1	319 4440
70	80 (360-WAT-11: 39 Ratio)	116	.....	1	319 2249
70	80 (360-WAT-15: 43 Ratio)	116	.....	1	319 1652
70/71	80 (360-WAT-13: 41 Ratio)	116	.....	1	319 1652
72	80 (360-WAT)	116	.....	1	321 2796
68	10-80 (390-WAT-* 9-26)	116	.....	1	319 2248
68	10-80 (390-WAT-* 9-27)	116	.....	1	319 4441
69/70	10 (390-WAT)	116	.....	1	319 4441
69/70	80 (390-WAT)	116	.....	1	319 2249
71	10-80 (401-WAT)	116	.....	1	319 2249
72	10-80 (401-WAT)	116	.....	1	321 2797

Printed in U.S.A.

REAR AXLE - PROP. SHAFT

1968 Thru 1971 30-70

68/70	30 (W4ST)	116	.....	1	319 0587
68/69	30 (290-WAT)(343-WAT)	116	.....	1	319 0587
70	30 (360-WAT)	116	.....	1	319 0587
70	30 (360-WAT-11:39 Ratio)	116	.....	1	319 2246
68/70	30 (390-WAT)	116	.....	1	319 2246
68	70 (Six-WST-* 9-13)	116	.....	1	318 8630
68	70 (Six-WST-* 9-14)	116	.....	1	319 1307
69	70 (232-WST)	116	.....	1	319 1307
70	70 (Six-WST-LDB)	116	.....	1	319 7038
71	70 (LHD-232-WST-Except Export)	116	.....	1	319 4907
72	70 (LHD-232-WST)	116	.....	1	319 4907
70	***70 (Export-Six-WST-WDB)***	116	.....	1	319 4437
71	***70 (Heavy Duty-LHD-Six-WST-WDB)(Export-LHD-Six-WST-WDB)***	116	.....	1	319 8320
68	70 (Six-WAT)	116	.....	1	318 8629
69	70 (Six-WAT)	116	.....	1	318 8629
70	70 (Six-WAT-LDB)	116	.....	1	318 9176
71	70 (LHD-Six-WAT-Except Export)	116	.....	1	319 7036
72	70 (LHD-Six-WAT)	116	.....	1	321 2789
70	***70 (Export-Six-WAT-WDB)***	116	.....	1	319 8253
71	***70 (Heavy Duty-LHD-Six-WAT-WDB)(Export-LHD-Six-WAT-WDB)***	116	.....	1	319 9802
68/69	70 (290-WST)	116	.....	1	318 9176
70	70 (304-WST)	116	.....	1	318 9176
71	70 (304-WST)	116	.....	1	319 8320
72	70 (304-WST)	116	.....	1	319 4907
71	70 (360-WST)	116	.....	1	319 7036
68/69	70 (290-W4ST)	116	.....	1	318 9174
68/69	70 (343-W4ST)	116	.....	1	318 9174
70	70 (360-W4ST)	116	.....	1	318 9174
71/	70 (360-W4ST)	116	.....	1	319 9800
70	70 (390-W4ST)	116	.....	1	318 9174
71/	70 (401-W4ST)	116	.....	1	319 9800
68/69	70 (290-WAT)	116	.....	1	318 9176
68/69	70 (343-WAT)	116	.....	1	318 9174
70	70 (304-WAT)	116	.....	1	318 9176
71	70 (304-WAT)	116	.....	1	319 7036
72	70 (304-WAT)	116	.....	1	321 2789
70	70 (360-WAT)	116	.....	1	318 9174
71	70 (360-WAT)	116	.....	1	319 9800
72	70 (360-WAT)	116	.....	1	321 2793
68/70	70 (390-WAT)	116	.....	1	319 2247
71	70 (401-WAT)	116	.....	1	319 9801
72	70 (401-WAT)	116	.....	1	321 2793

9.100-2 ATTACHING PARTS, Propeller Shaft To Pinion Yoke

BOLT "U"	67	01 (Six-* 9-3)	.....	2	317 8343
BOLT "U"	67	01 (Six-* 9-4)	.....	2	317 6946
BOLT "U"	67	01 (V8)	.....	2	317 6946
BOLT "U"	67/	10-30-50-70-80	.....	2	317 6946
BOLT "U"	68/	01-40	.....	2	317 6946
WASHER, Lock	67/		17.820	4	G120214
NUT, Hexagon	67/		27.208	4	400 2117

9.104-1 YOKE, Universal Joint (Front)

67/69	V8 (W4ST)	.....	1	320 7887
67	01 (Six-* 9-3)	.....	1	320 6120
67	01 (Six-* 9-4)	.....	1	320 7888
68/71	01-40-70 (Six)	.....	1	320 7888
72	01-40 (Six-WST)	.....	1	320 7888
72	01-40 (Six-WAT)	.....	1	321 2805

67/69	01 (V8-WST)(V8-WAT)		.....	1	320 7888
71	01-70 (W4ST)		.....	1	320 7887
70/71	01-10-80 (304-WST)(304-WAT)		.....	1	320 7888
71	01-70 (360-WST)		.....	1	320 7888
72	01-10-40-70-80 (304-WAT)		.....	1	321 2805
72	01 (304-WST)		.....	1	320 7887
72	10-70-80 (360-WAT)		.....	1	321 2804
67/71	10-50-80 (Six)		.....	1	320 7888
72	10-80 (Six-WST)		.....	1	320 7888
72	10-70-80 (Six-WAT)		.....	1	321 2805
67/69	10-50-80 (290-WST)(290-WOD)(290-WAT)		.....	1	320 7888
67/69	10-50-80 (343)		.....	1	320 7887
70	10 (360-WAT)(360-W4ST)		.....	1	448 5622
71	10 (360-WAT)		.....	1	320 7887
70/71	10 (390-W4ST)(401-W4ST)		.....	1	320 7887
68/70	10-30-70-80 (390-WAT)		.....	1	448 5622
71	10-80 (401-WAT)		.....	1	448 5622
72	10-70-80 (401-WAT)		.....	1	321 2804
70	30-70 (W4ST)		.....	1	320 7887
70/71	30-70-80 (360-WAT)		.....	1	320 7887
68/69	30 (290-WAT)(343-WAT)		.....	1	320 7887
72	40 (304-WST)		.....	1	320 7888
68/69	70 (290-WST)(290-WAT)		.....	1	320 7888
70	70 (304-WST)(304-WAT)		.....	1	320 7887
71	70 (304-WST)(304-WAT)		.....	1	320 7888
68/69	70 (343-WAT)		.....	1	320 7887
72	70 (360-W4ST)		.....	1	320 7887
71	70 (401-WAT)		.....	1	448 5622
72	70 (401-W4ST)		.....	1	320 7887
72	***10 (Heavy Duty-258)***		.....	1	321 2804

9.104-2 YOKE, Universal Joint (Rear)

67	01 (Six-* 9-3)		.....	1	320 7773
67	01 (Six-* 9-4)		.....	1	318 8632
67/71	01-30-70 (V8)...(Incl. Nut)	125	.....	1	320 8473
72	01...(Incl. Nut)	125	.....	1	320 8473
68/69	01-70 (Six-* 9-29)		.....	1	318 8632
69	01-70 (Six-* 9-30)		.....	1	319 5054
70/71	01-40-70 (LHD-Six-Except Export)...(Incl. Nut)		.....	1	448 7847
72	01-40-70 (LHD-Six)		.....	1	448 7847
67/	10-50-80...(Incl. Nut)	125	.....	1	320 8473
72	40-70 (V8)...(Incl. Nut)	125	.....	1	320 8473
70	***01-70 (Heavy Duty-LHD-Six-WDB)(Export-LHD-Six-WDB)***	125	.....	1	320 8473

9.107-1 SPIDER ASSEMBLY, Universal Joint (Incl. Retainer And Seals)

67	01 (Six-* 9-4)(V8)	122	.....	2	320 7885
68/70	01-40 (Except SC/SCRAMBLER): 30-70	122	.....	2	320 7885
69	09 (SC/RAMBLER)	122	.....	1	448 7436
67/69	10-50-80 (Six)(290)(343)	122	.....	2	320 7885
70	10-80 (Six)(304)(360)	122	.....	2	320 7885
68/69	10-80 (390)	122	.....	2	448 5624
70	10-80 (390)	122	.....	2	448 7436
71/	SIX (304)(360)	122	.....	2	320 7885
71/	10-70 (401-W4ST)	122	.....	2	320 7885
71	10-70-80 (401-WAT)	122	.....	2	448 7436
72	10 (401-WAT)	122	.....	2	448 7436

9.107-2 SPIDER ASSEMBLY, Universal Joint (Incl. Retainer And Seals)(Front)

67	01 (Six-* 9-3)	131	.....	1	320 6121

9.107–3 SPIDER ASSEMBLY. Universal Joint (Incl. Retainer And Seals)(Rear)

67	01 (Six–* 9–3)	131	.....	1	320 7077

9.118 RETAINER, Universal Joint Bearing

67	01 (Six–I.D. 7/8"–* 9–3)		.....	2	310 8182
67	01 (Six–I.D. 1"–* 9–3)		.....	2	311 9733
67	01 (Six–* 9–4)		.....	4	320 7886
68/70	01–30–40–70		.....	4	320 7886
67/70	10–50–80		.....	4	320 7886
71/			.....	4	320 7886

NOTES

10–23 ... When installed on 68 80 (Six), also order 317 4225 Pitman Arm and 448 6873 Brace Kit.

10–24 ... When installed on 68-69 01 (V8), also order 320 9838 Adapter Kit and 318 6011 Hose.

10–25 ... When installed on 68-69 10 (V8), also order 318 7788 Pitman Arm and 318 6016 Hose.

10–26 ... When installed on 68 80 (V8), also order 317 4225 Pitman Arm and 318 6016 Hose.

10–27 ... The Power Steering Pump Brace Rod is 10-1/4" long.

10–28 ... The Power Steering Pump Brace Rod is 10-9/16" long.

10–29 ... The Steering Gear Shaft uses a Plastic Adjuster Kit for Shaft Adjustment.

10–30 ... The Steering Gear Shaft uses a Clamp, Bolt and Nut for Shaft Adjustment.

10–31 ... Has a Steering Column where the Hazard Warning Light Lever is located at the top of the Directional Signal Switch Cover.

10–32 ... Has a Steering Column where the Hazard Warning Light Lever is located at the center of the Directional Signal Switch Cover and has the Symbols D-8-67 stamped on the face of the Switch.

10–33 ... The 69 15-19 (Six-Heavy Duty Brakes) can be identified as follows:
The length of the Spindle Bolts for the 69 15-19 (Six-LDB) is 2-1/2" and 3-5/8" long.
The length of the Spindle Bolts for the 69 15-19 (Six-Heavy Duty Brakes) is 2-7/8" and 4" long.

10–34 ... The Steering Shaft used is a Two Piece Type.

10–35 ... The Steering Shaft used is a One Piece Type.

10–36 ... When installed on 69 80 (Six), also order 318 7788 Pitman Arm.

10–37 ... When installed on 69 80 (V8), also order 318 7788 Pitman Arm and 318 6016 Hose.

10–38 ... Strut Rod Mounting Bracket has a Single Bushing and is pressed in Bracket.

10–39 ... Strut Rod Mounting has Two Bushings and is not pressed in Bracket.

10–40 ... The Toeboard Seal Hole for Jacket Tube is 1-7/8.

10–41 ... The Toeboard Seal Hole for Jacket Tube is 1-45/64.

10–42 ... When installed on 70-71 01 (V8), also order 318 6011 Hose; when installed on 70-71 10-30-70-80 (V8), also order 318 6016 Hose.

10–43 ... Used on Cars having Tire Size 6: 00 x 13, 6: 45 x 14, 6: 95 x 14, 78 x 14, and 60 x 15.

10–44 ... Used on Cars having Tire Size 70 x 14.

10–45 ... On 70 30-70 used prior to Car Sequence No. E-8701.

10–46 ... On 70 30-70 used beginning with Car Sequence No. E-8701.

10–47 ... On 70 10 (LHD) used prior to Car Sequence No. W-6318; beginning with W-072978 and prior to W-073326.

10–48 ... On 70 10 (LHD) used beginning with Car Sequence No. W-6318; prior to W-072978 and beginning with W-073326.

10–49 ... Used on Cars having a Steering Gear Shaft Flange that is bolted to Shaft; used prior to Car Sequence No. E-063459.

10–50 ... Used on Cars having a Steering Gear Shaft Flange that is welded to Shaft; used beginning with Car Sequence No. E-063459.

10–51 ... On 70 01 (LHD-Six-WST-WCGS) used prior to Car Sequence No. E-052905; on 70 01 (LHD-WAT-WCGS) used prior to Car Sequence No. E-063564; on 70 01 (LHD-V8-WAT-WCGS) used prior to Car Sequence No. E-056346; on 70 40 (Six-WST-WCGS) used prior to Car Sequence No. E-052905; on 70 40 (Six-WAT-WCGS) used prior to Car Sequence No. E-063564.

Printed in U.S.A.

NOTES

10–52 ... On 70 01 (LHD-Six-WST-WCGS) used beginning with Car Sequence No. E-052905; on 70 01 (LHD-WAT-WCGS) used beginning with Car Sequence No. E-063564; on 70 01 (LHD-V8-WAT-WCGS) used beginning with Car Sequence No. E-056346; on 70 40 (Six-WST-WCGS) used beginning with Car Sequence No. E-052905; on 70 40 (Six-WAT-WCGS) used beginning with Car Sequence No. E-063564.

10–53 ... On 70 10 (LHD-WAT-WCGS-LAW) used prior to Car Sequence No. W-050474; on 70 10 (LHD-Six-WST-WCGS-LAW) used prior to Car Sequence No. W-052109; on 70 10 (LHD-WFGS-WAW) used prior to Car Sequence No. W-065766; on 70 10 (LHD-WFGS-LAW) used prior to Car Sequence No. W-066003; on 70 10 (LHD-WAT-WCGS-WAW) used prior to Car Sequence No. W-065805.

10–54 ... On 70 10 (LHD-WAT-WCGS-LAW) used beginning with Car Sequence No. W-050474; on 70 10 (LHD-Six-WST-WCGS-LAW) used beginning with Car Sequence No. W-052109; on 70 10 (LHD-WFGS-WAW) used beginning with Car Sequence No. W-065766; on 70 10 (LHD-WFGS-WAW) used beginning with Car Sequence No. W-066003; on 70 10 (LHD-WAT-WCGS-WAW) used beginning with Car Sequence No. W-065805.

10–55 ... On 70 30-70 (LHD-WFGS-LAW) used prior to Car Sequence No. E-061666; on 70 70 (LHD-WAT-WCGS-LAW) used prior to Car Sequence No. E-064120; on 70 30-70 (LHD-WFGS-WAW) used prior to Car Sequence No. E-067507; on 70 70 (LHD-WAT-WCGS-WAW) used prior to Car Sequence No. E-069627.

10–56 ... On 70 30-70 (LHD-WFGS-LAW) used beginning with Car Sequence No. E-061666; on 70 70 (LHD-WAT-WCGS-LAW) used beginning with Car Sequence No. E-064120; on 70 30-70 (LHD-WFGS-WAW) used beginning with Car Sequence No. E-067507; on 70 70 (LHD-WAT-WCGS-WAW) used beginning with Car Sequence No. E-069627.

10–57 ... On 70 80 (LHD-WAT-WCGS-LAW) used prior to Car Sequence No. W-049936; on 70 80 (LHD-WAT-WCGS-LAW) used prior to Car Sequence No. W-059219; on 70 80 (LHD-Six-WST-WCGS-LAW) used prior to Car Sequence No. W-065472; on 70 80 (LHD-WFGS-LAW) used prior to Car Sequence No. W-066360; on 70 80 (LHD-WFGS-WAW) used prior to Car Sequence No. W-065728.

10–58 ... On 70 80 (LHD-WAT-WCGS-WAW) used beginning with Car Sequence No. W-049936; on 70 80 (LHD-WAT-WCGS-LAW) used beginning with Car Sequence No. W-059219; on 70 80 (LHD-Six-WST-WCGS-LAW) used beginning with Car Sequence No. W-065472; on 70 80 (LHD-WFGS-LAW) used beginning with Car Sequence No. W-066360; on 70 80 (LHD-WFGS-WAW) used beginning with Car Sequence No. W-065728.

10–60 ... On 70 10-30-70 (LHD-LPS), the Steering Gear Shaft (in Gear Box) has 30 serrations and is used prior to Car Sequence No. W-051063 and beginning with Car Sequence No. W-052193 on 70 10 (LHD-LPS); used prior to Car Sequence No. E-056204 and beginning with E-058155 on 70 30-70 (LPS).

10–61 ... On 70 10-30-70 (LHD-LPS), the Steering Gear Shaft (in Gear Box) has 36 serrations and is used beginning with Car Sequence No. W-051063 and prior to Car Sequence No. W-052193 on 70 10 (LHD-LPS); used beginning with Car Sequence No. E-056204 and prior to E-058155 on 70 30-70 (LPS).

10–62 ... The Trunnion to Lever Grommet has an I. D. of 33/64" and an O. D. of 49/64"; also uses a Bushing (or Sleeve) between the Grommet and Trunnion.

10–63 ... The Trunnion to Lever Grommet has an I. D. of 25/64" and an O. D. of 5/8" and does not use a Bushing (or Sleeve).

10–66 ... Has a Column to Transmission Anti-Theft Rod.

10–67 ... Has a finger operated Lever Lock Inhibitor at Upper Column instead of an Anti-Theft Rod at Transmission.

10–68 ... Used on a Steering Gear Having Part No. 780 6688 embossed on the outside of Housing End Plug and a Label on the Pitman Shaft Cover (side) with the letters "LX" stamped.

10–69 ... Used on a Steering Gear having Part No. 568 9010 embossed on the inside of Housing End Plug and a Label on the Pitman Shaft Cover (side) with the letters "LT" stamped.

10–70 ... The Horn Button has an Insert that is plain or has "AM" stamped with a Red, White and Blue Border Stripe. The Wheel is Rubber.

10–71 ... The Horn Button has an Insert with "AMERICAN MOTORS" stamped. The Rim is Vinyl covered with a Stainless Steel Spoke.

10–72 ... Used prior to Car Sequence No. E-038958.

10–73 ... Used beginning with Car Sequence No. E-038958.

NOTES

10–74 ... The Car is equipped with a 2-piece Front Suspension Lower Control Arm Strut Rod Bushing and is used prior to Car Sequence No. W-024348.

10–75 ... The Car is equipped with a 1-piece Front Suspension Lower Control Arm Strut Rod Bushing and is used beginning with Car Sequence No. W-024348.

10–76 ... The Car is equipped with a 2-piece Front Suspension Lower Control Arm Strut Rod Bushing and is used prior to Car Sequence No. W-55852.

10–77 ... The Car is equipped with a 2-piece Front Suspension Lower Control Arm Strut Rod Bushing and is used beginning with Car Sequence No. W-55852.

10–78 ... Used prior to Car Sequence No. E-88606.

10–79 ... Used beginning with Car Sequence No. E-88606.

10–80 ... Used with Steering Gear in which the Steering Wheel can be turned 6-9/64 complete turns with Pitman Arm disconnected.

10–81 ... Used on Cars having a Turning Radius Stop Plate and Bracket, and is used prior to Car Sequence No. E-024582 and W-024531.

10–82 ... Used on Cars not having a Turning Radius Stop Plate and Bracket. The Stop is part of Steering Knuckle Arm and is used beginning with Car Sequence No. E-024582 and W-024531.

10–83 ... The Power Steering Pump Oil Reservoir is round and has a Filler Neck that is 3-1/8" Long.

10–84 ... The Power Steering Pump Oil Reservoir is Lobe shaped and has a Filler Neck that is 1-1/4" Long.

10–85 ... When installed on 72 40-70 (V8-WEEP), also order 1 - 321 5945 Pressure Hose.

10–86 ... Used prior to Car Sequence No. E-016755 and W-015796.

10–87 ... Used beginning with Car Sequence No. E-016755 and W-015796.

10–88 ... On 71-72 10-80 (V8-LEEP) and (V8-WPS-LEEP-WAT) used on cars equipped with a Saginaw Steering Pump that has a lobe shaped Reservoir mounted in back of the Pump and has a Filler Cap and Gauge.

10–89 ... On 71-72 10-80 (V8-LEEP) and (V8-WPS-LEEP-WAT) used on cars equipped with an Eaton Steering Pump that has a round Reservoir mounted on top of the Pump and has a Reservoir Cover that is 4-1/4" in diameter and is fastened with a Wing Nut.

10–90 ... The "Rallye Package" has front Bucket Seats and "Rallye" name Decal located on both sides of the rear quarter Panel.

10–91 ... Used prior to Car Sequence No. E-74172 and W-78948.

10–92 ... Used beginning with Car Sequence No. E-74172 and W-78948.

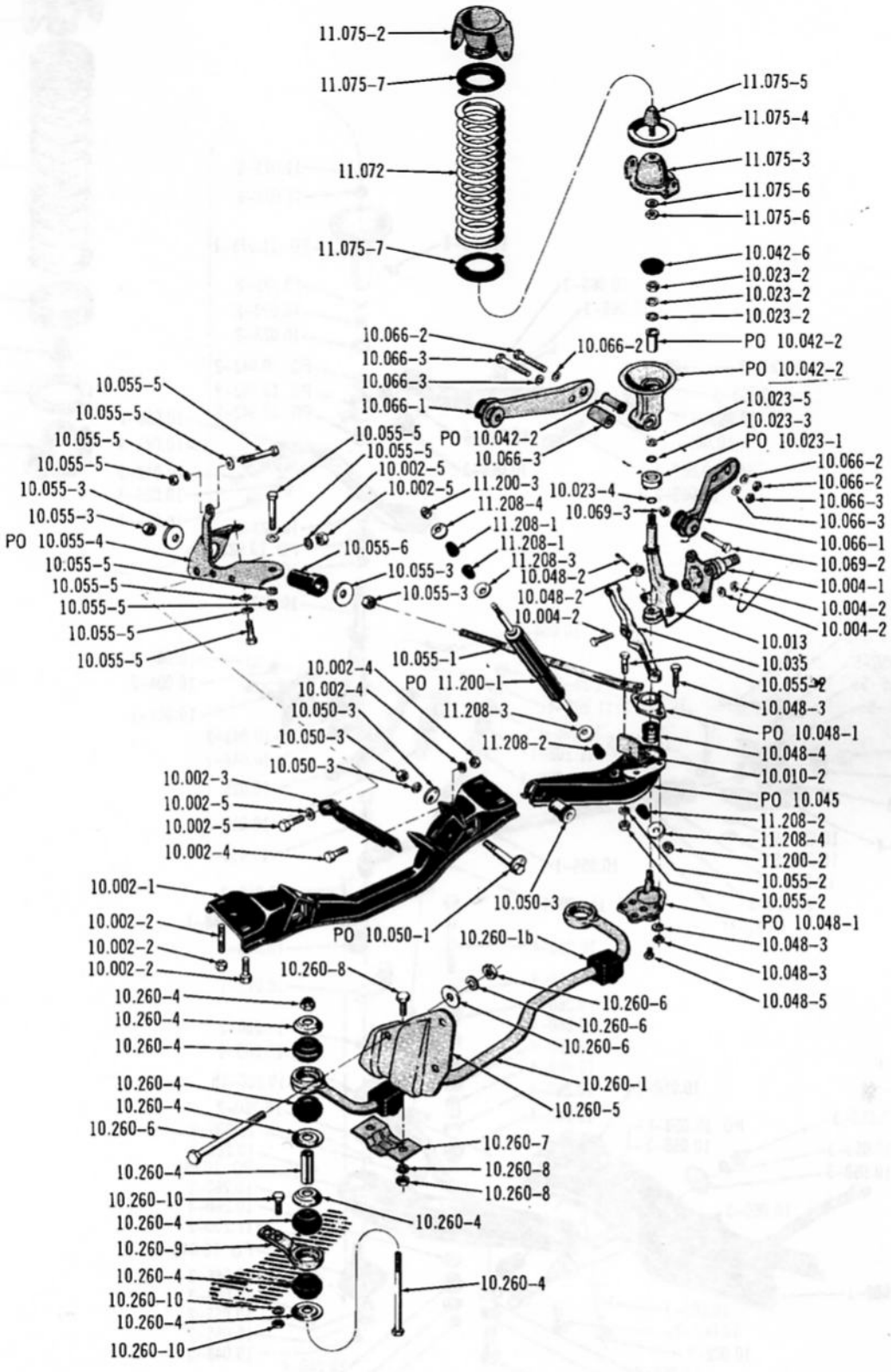

FRONT SUSPENSION ... 1967/69 (01)(30)(70)

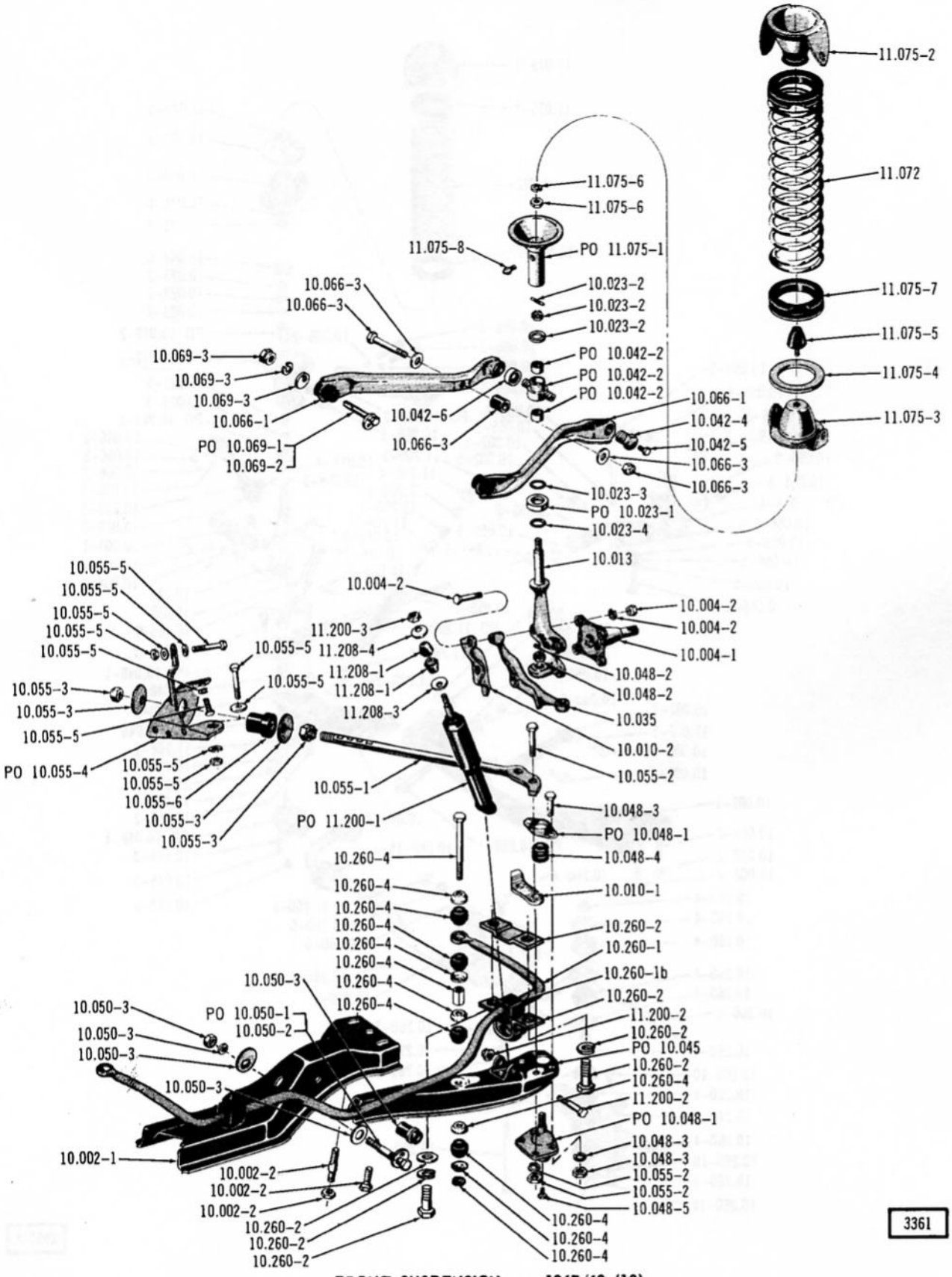

FRONT SUSPENSION ... 1967/69 (10)

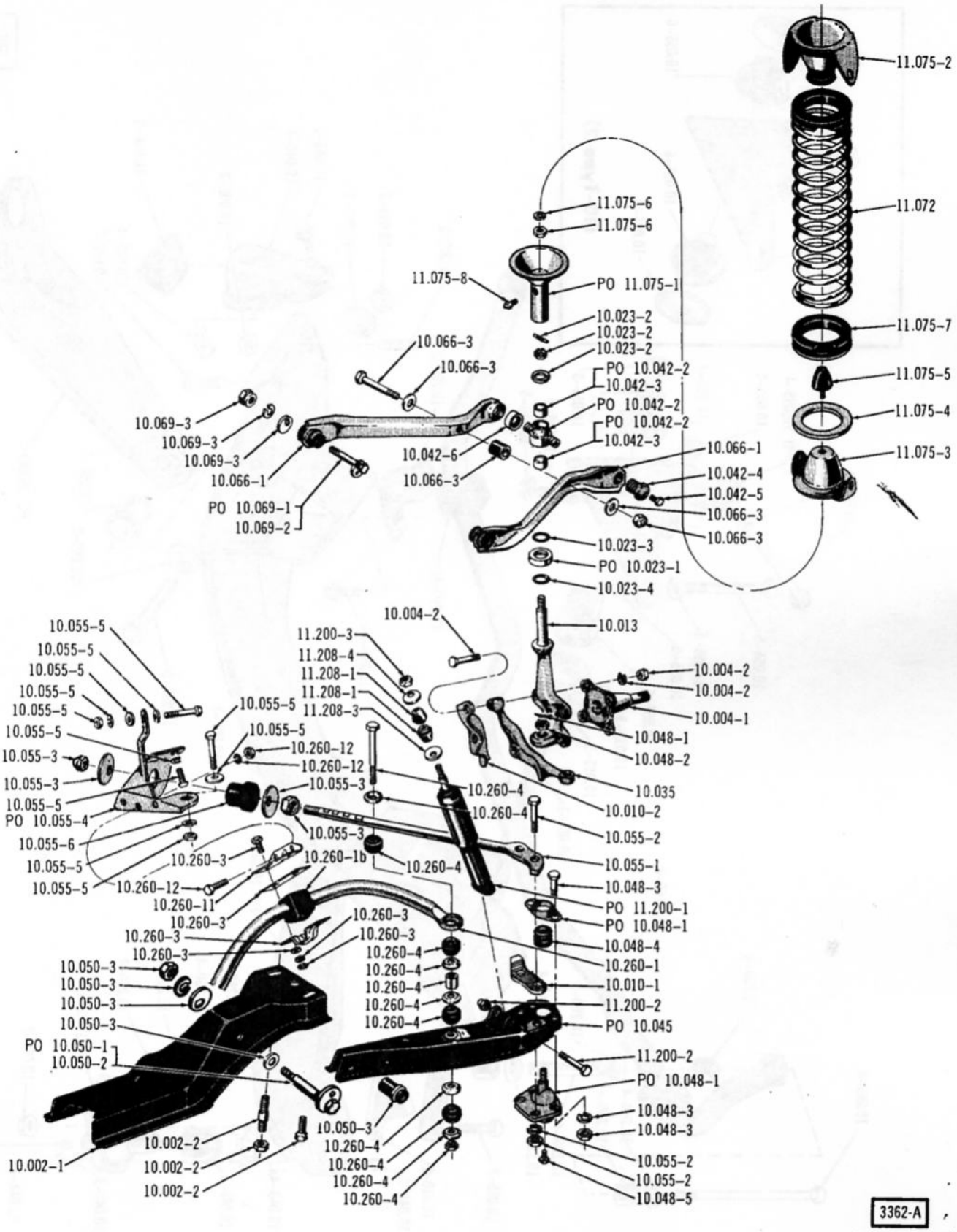

FRONT SUSPENSION ... 1967/69 (50)(80)

Printed in U.S.A.

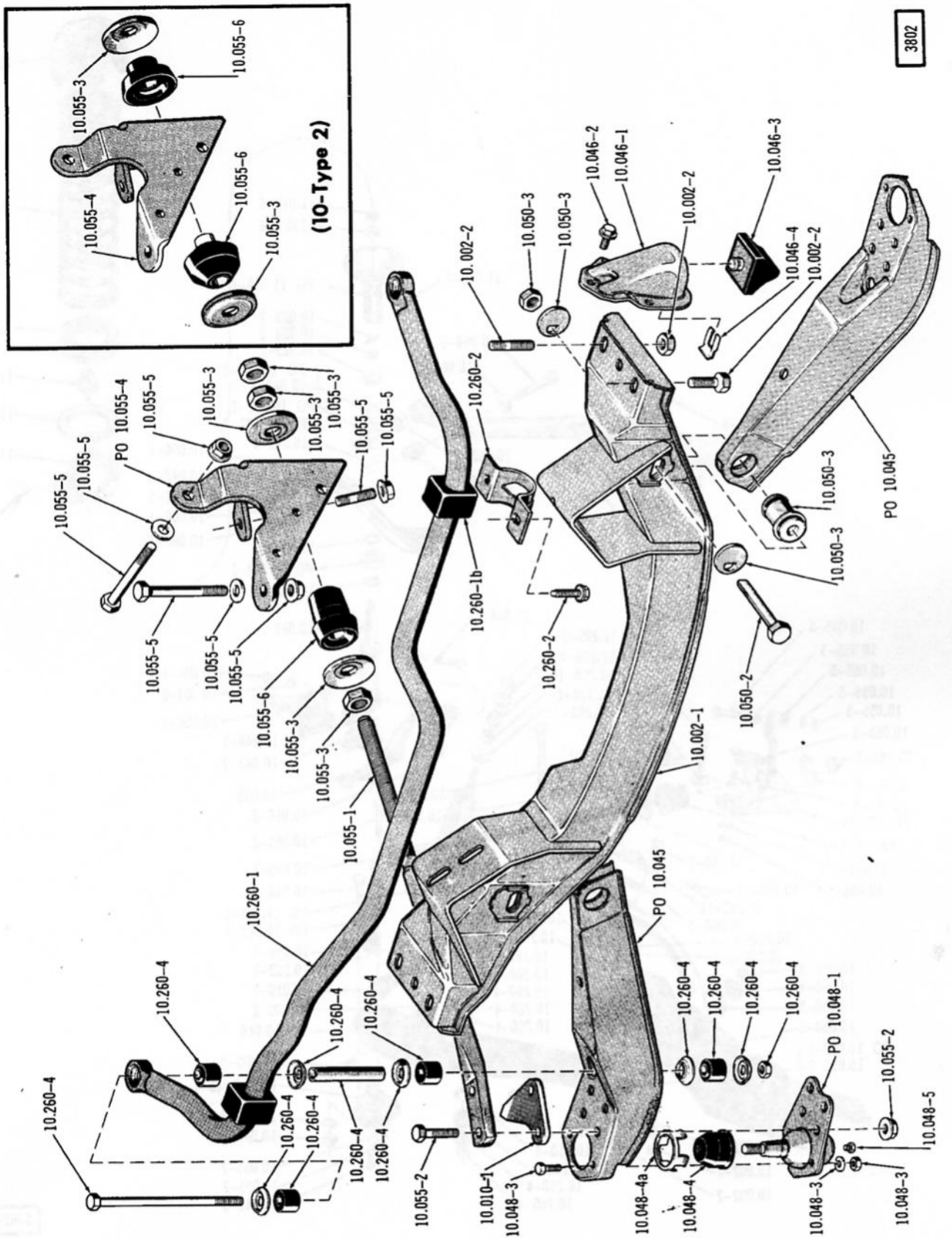

FRONT SUSPENSION (LOWER) ... 1970/ (01)(10)(30)(40)(70)

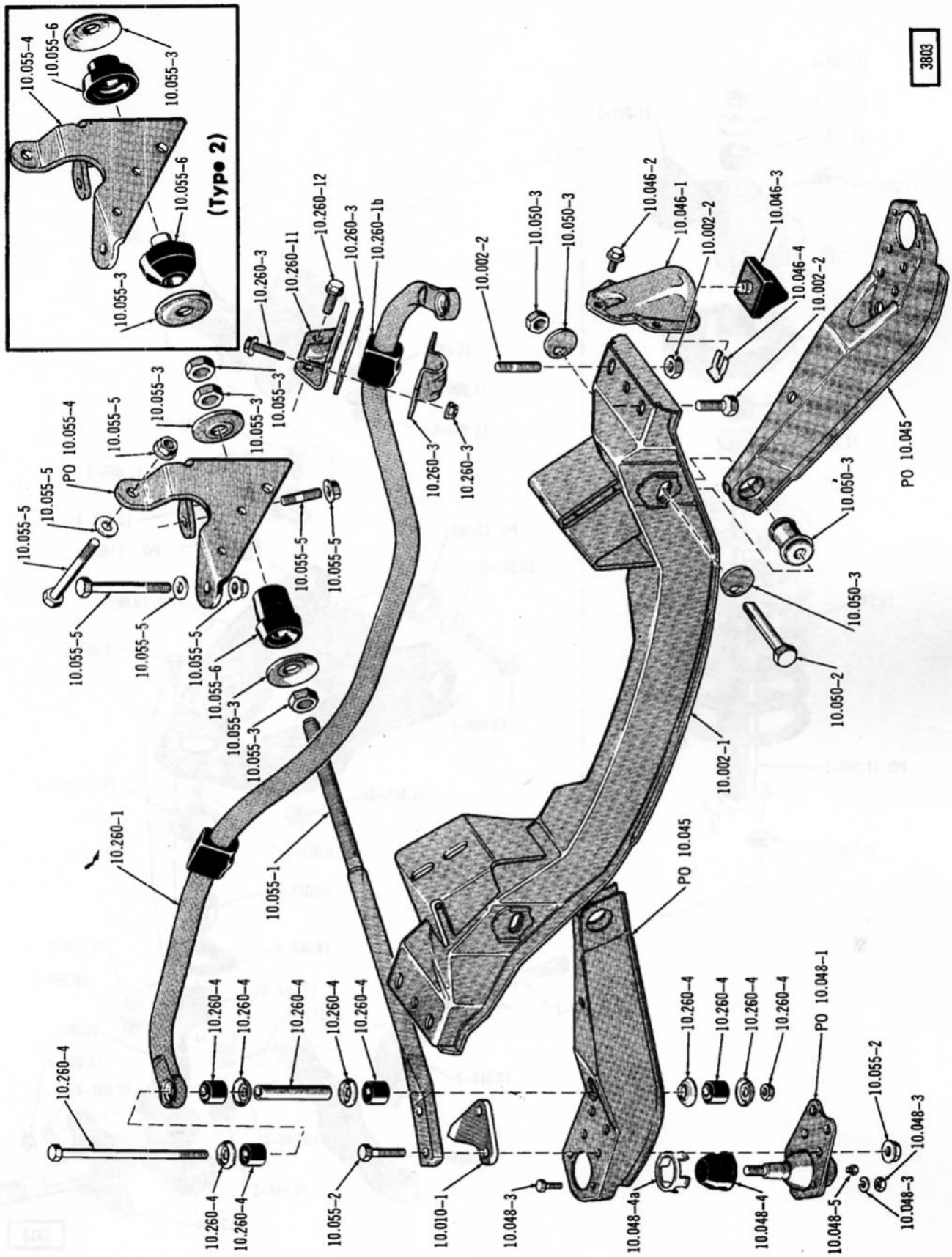

FRONT SUSPENSION (LOWER) ... 1970/ (80)

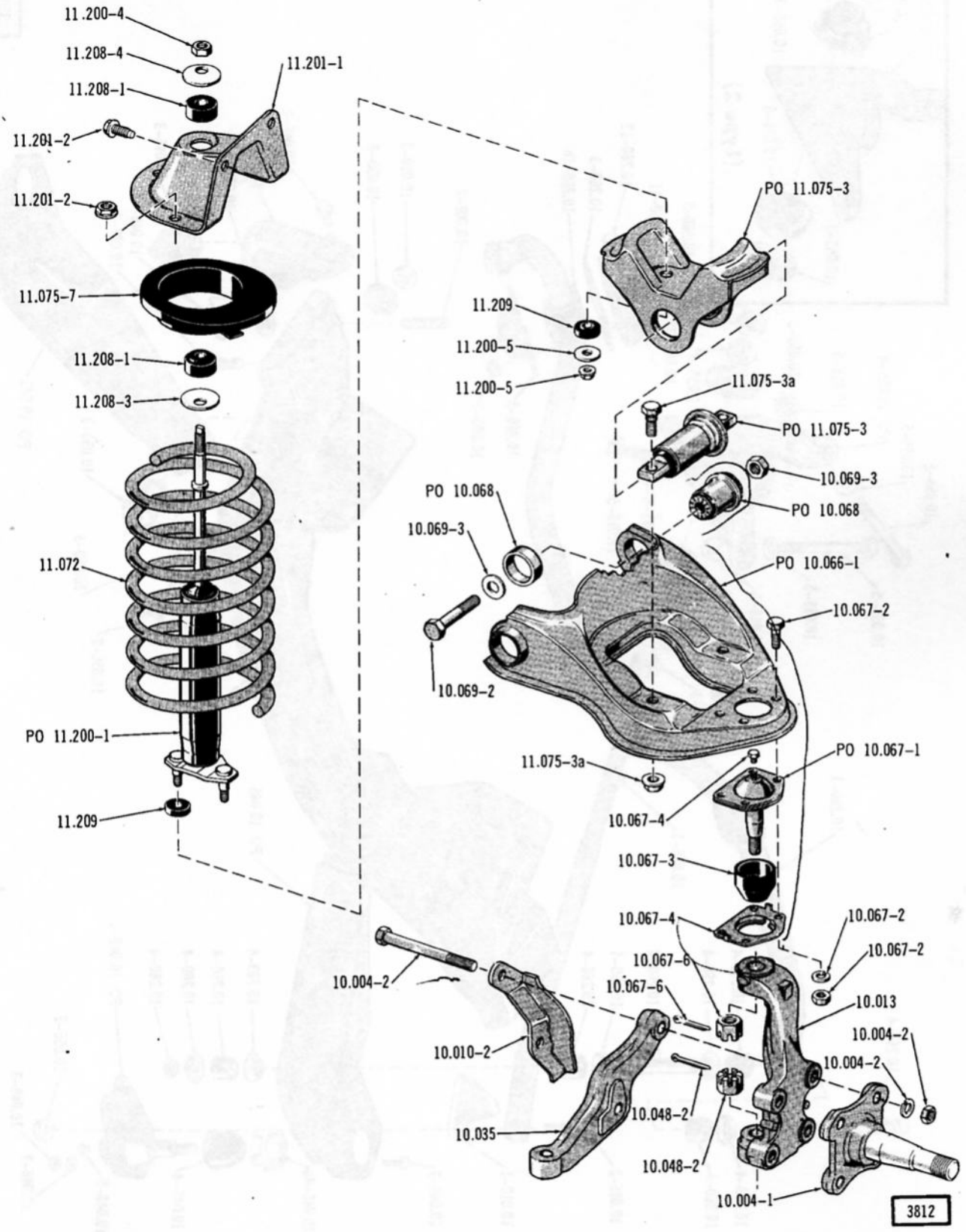

FRONT SUSPENSION (UPPER) ... 1970/

1845

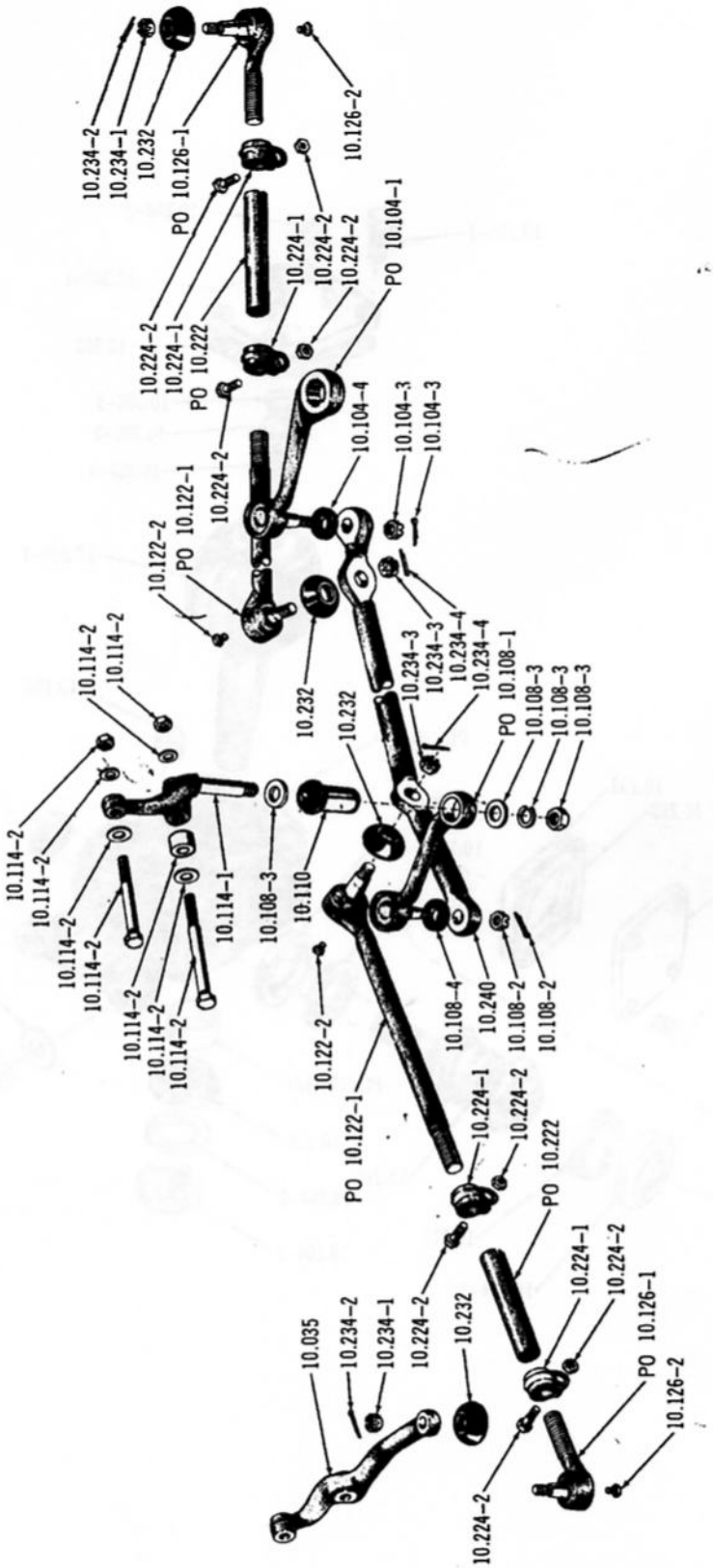

STEERING LINKAGE

Printed in U.S.A.

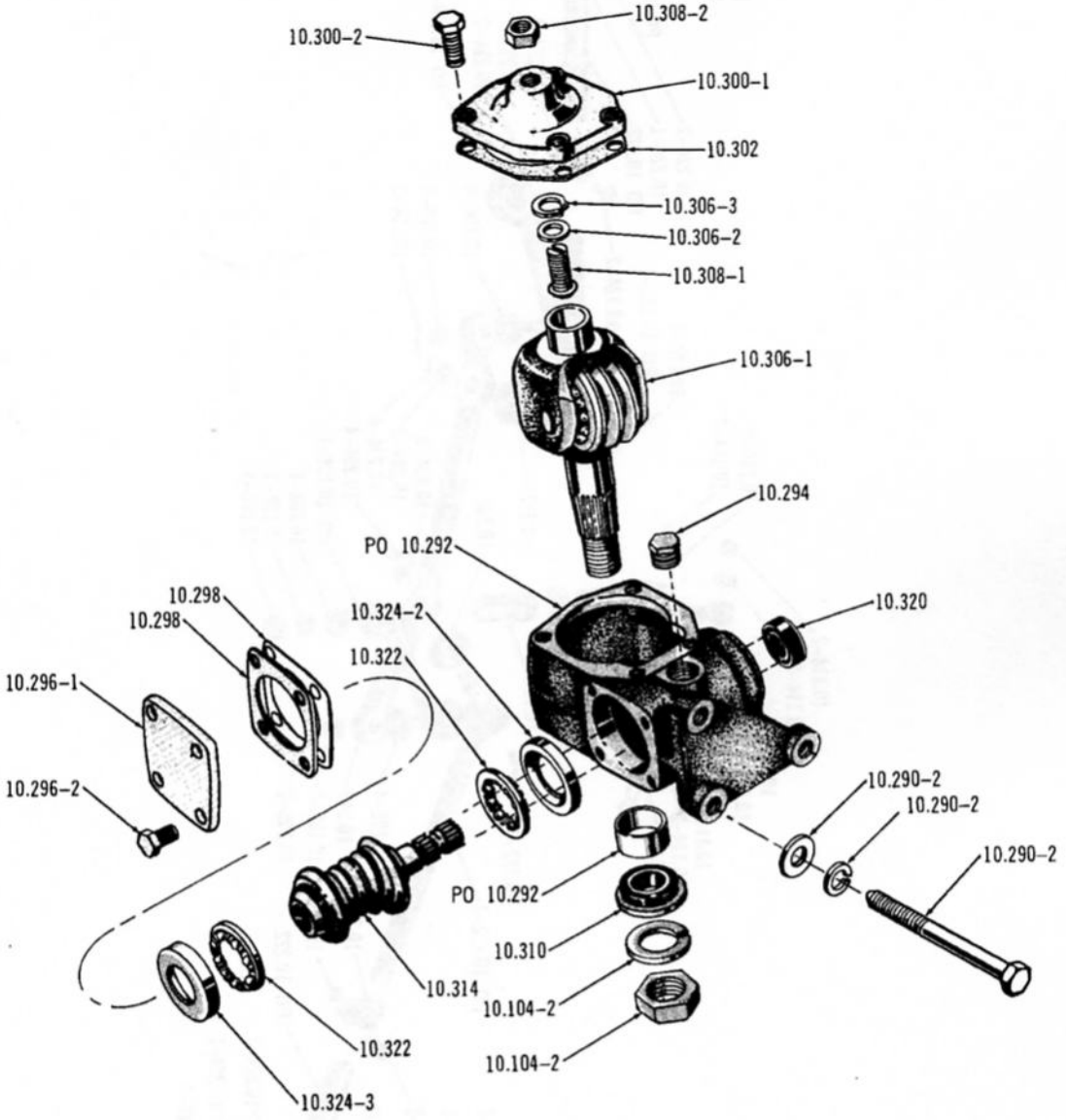

2957

STEERING GEAR ... LHD-LPS (1967-01-Type 1), RHD-LPS (1968-01)(1969-01-Type 1)

2958

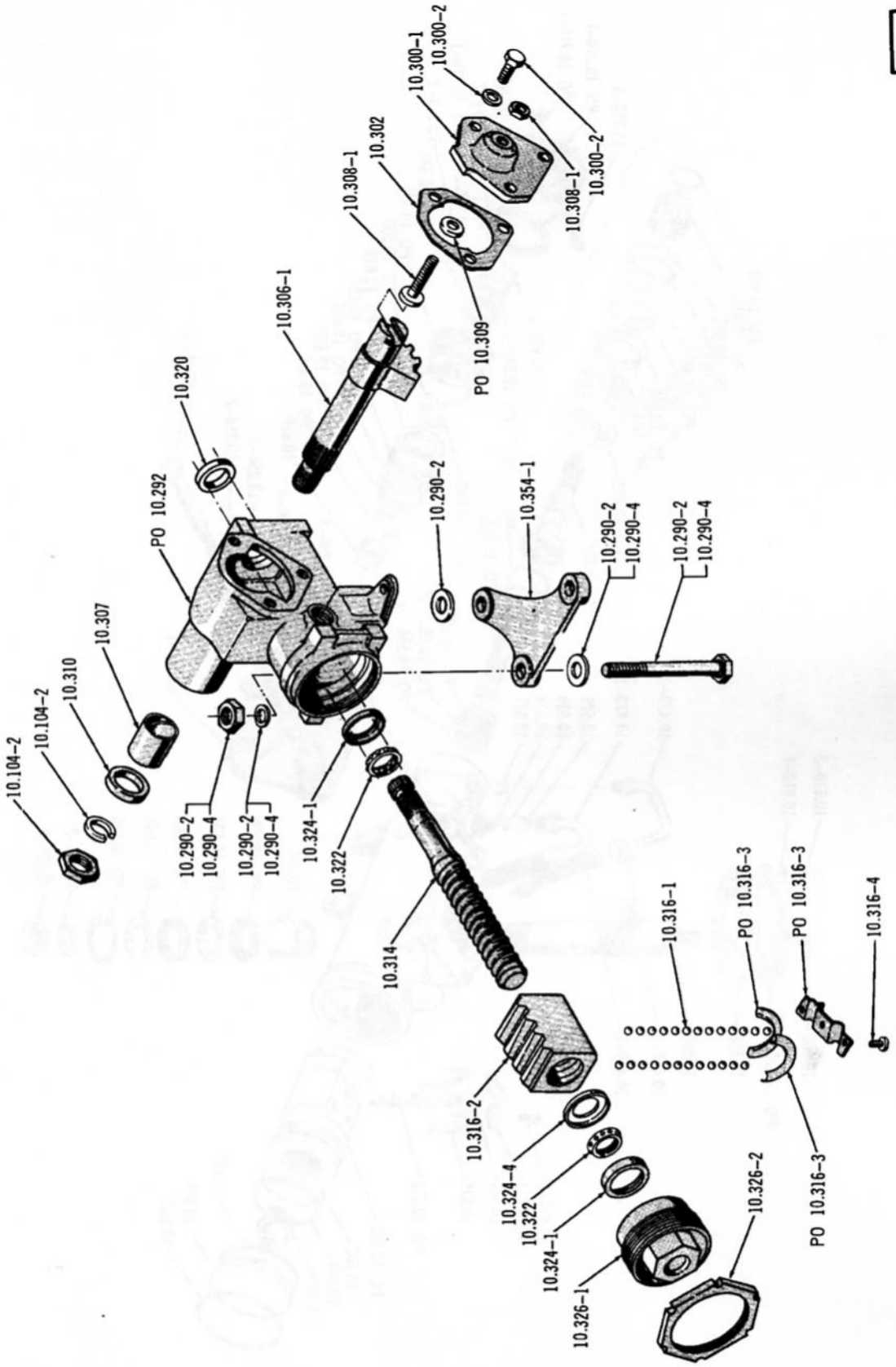

STEERING GEAR ... LHD-LPS (1967-01-Type 2)(1968-01)(1969-01), RHD-LPS (1969-01-Type 2), LPS (1970/)

2959

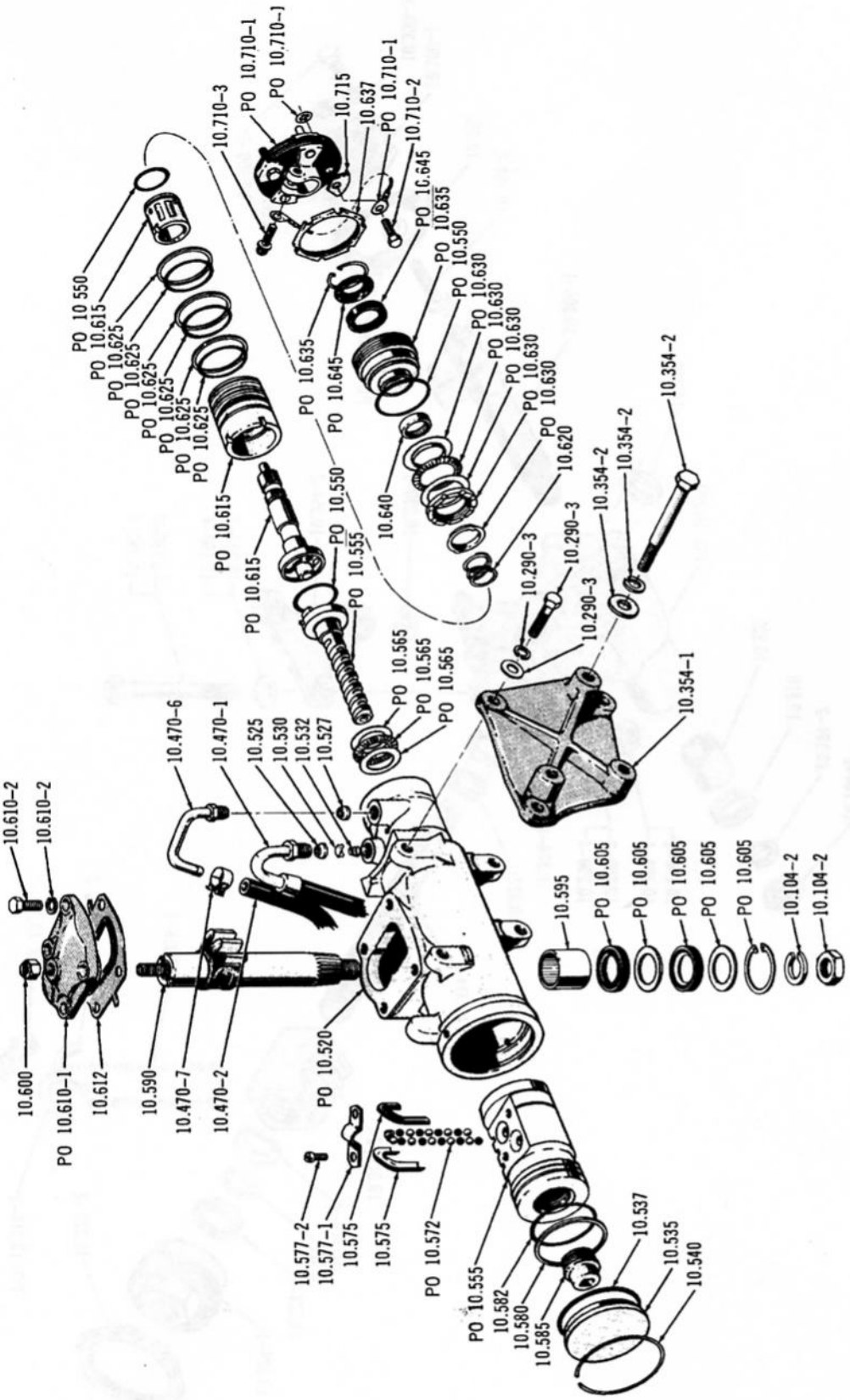

STEERING GEAR ... WPS

2961

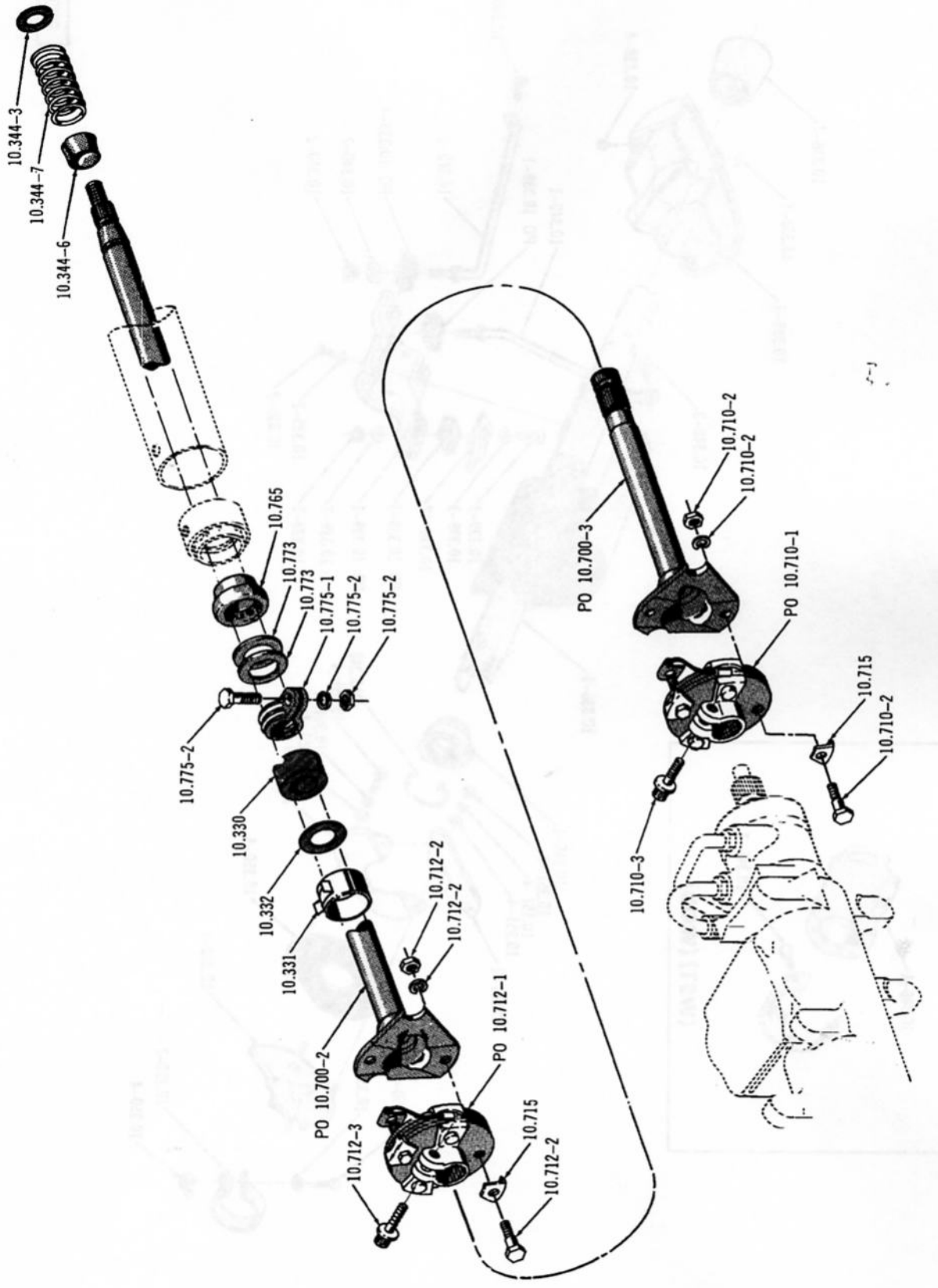

STEERING GEAR SHAFT ... RHD (1967/69-01)

Printed in U.S.A.

2880

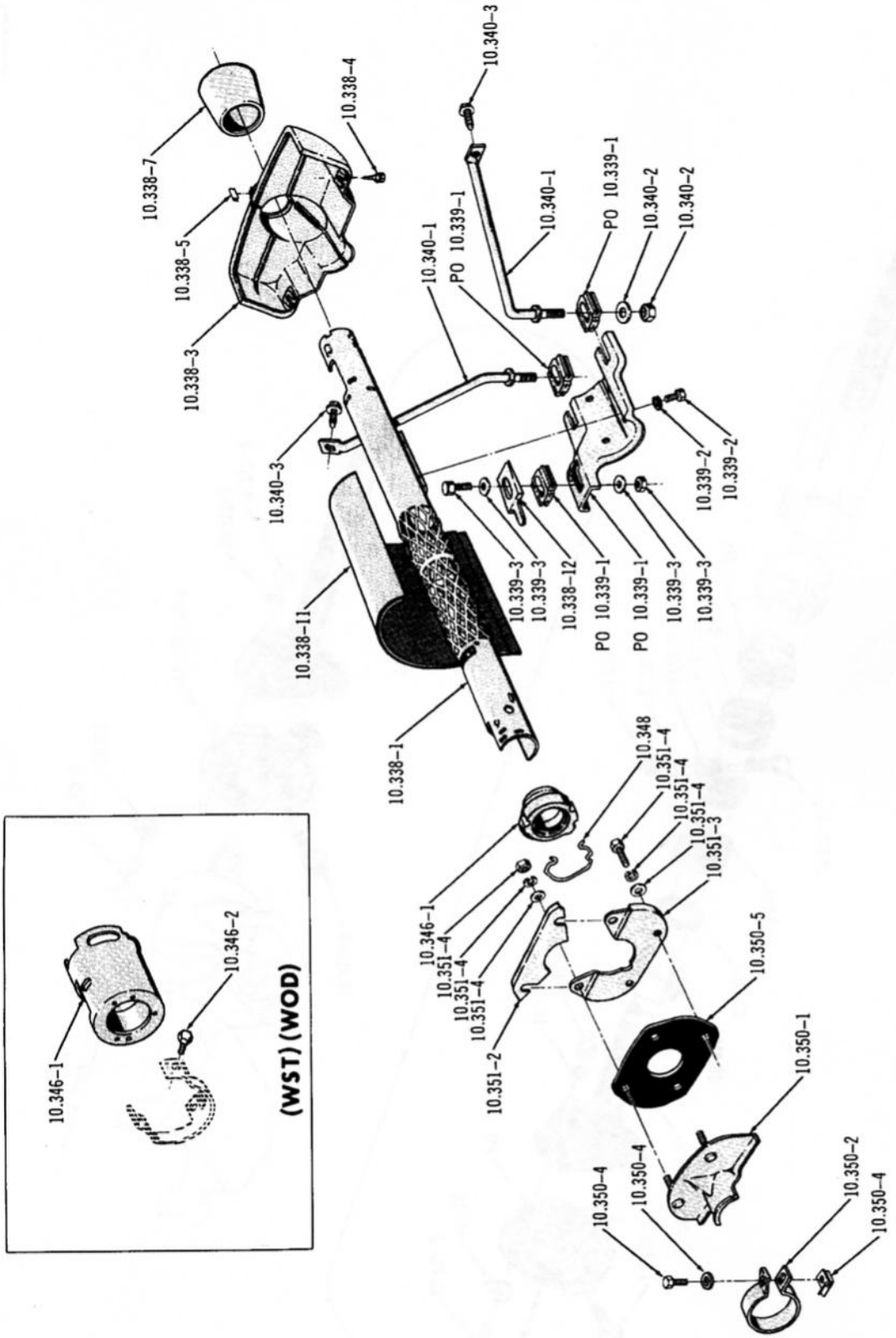

STEERING COLUMN ... LHD (1967/69-01)

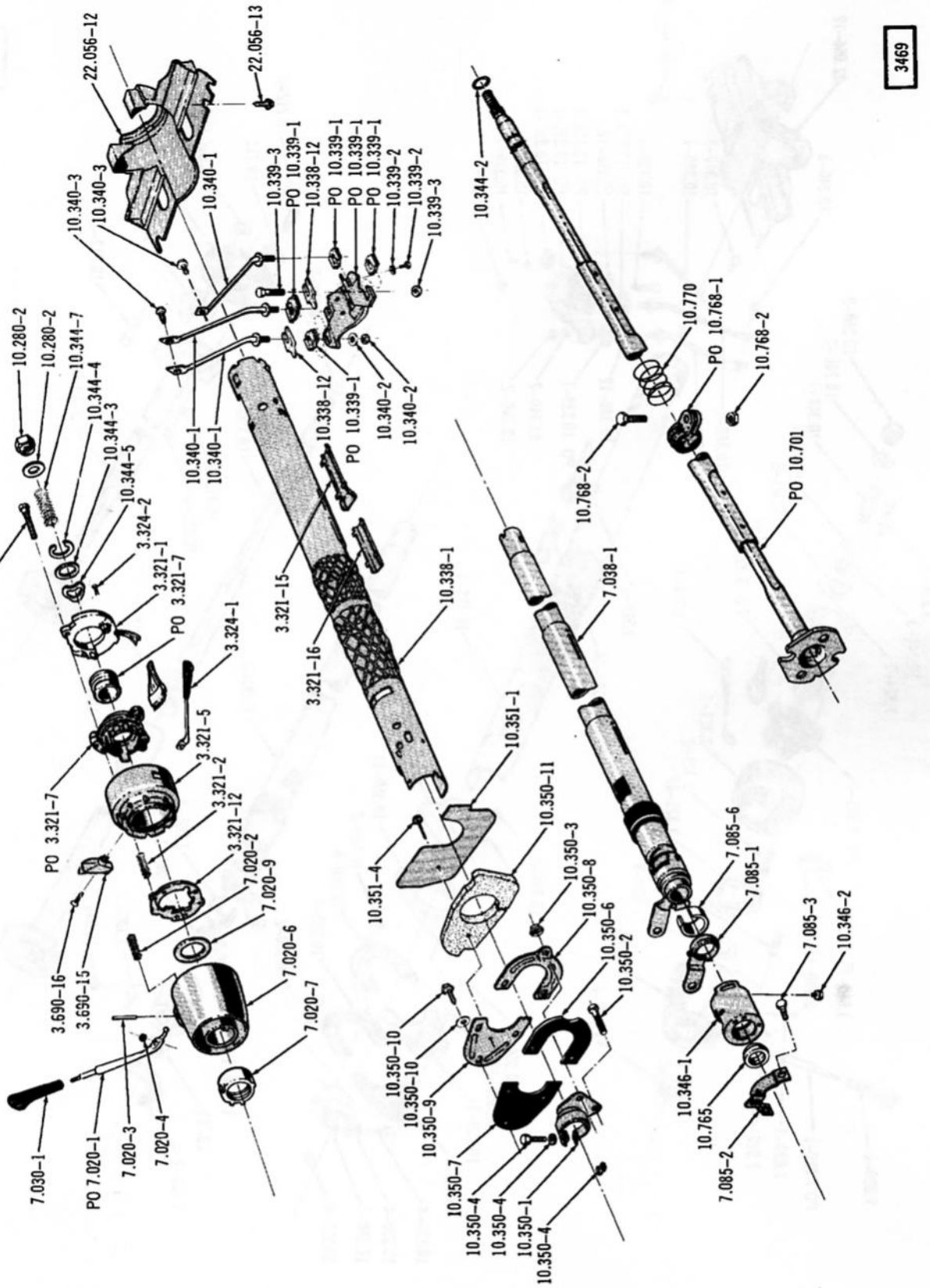

STEERING COLUMN ... LHD-WST-LAW (1967/69-10), LHD-WOD-LAW (1967/69-10)

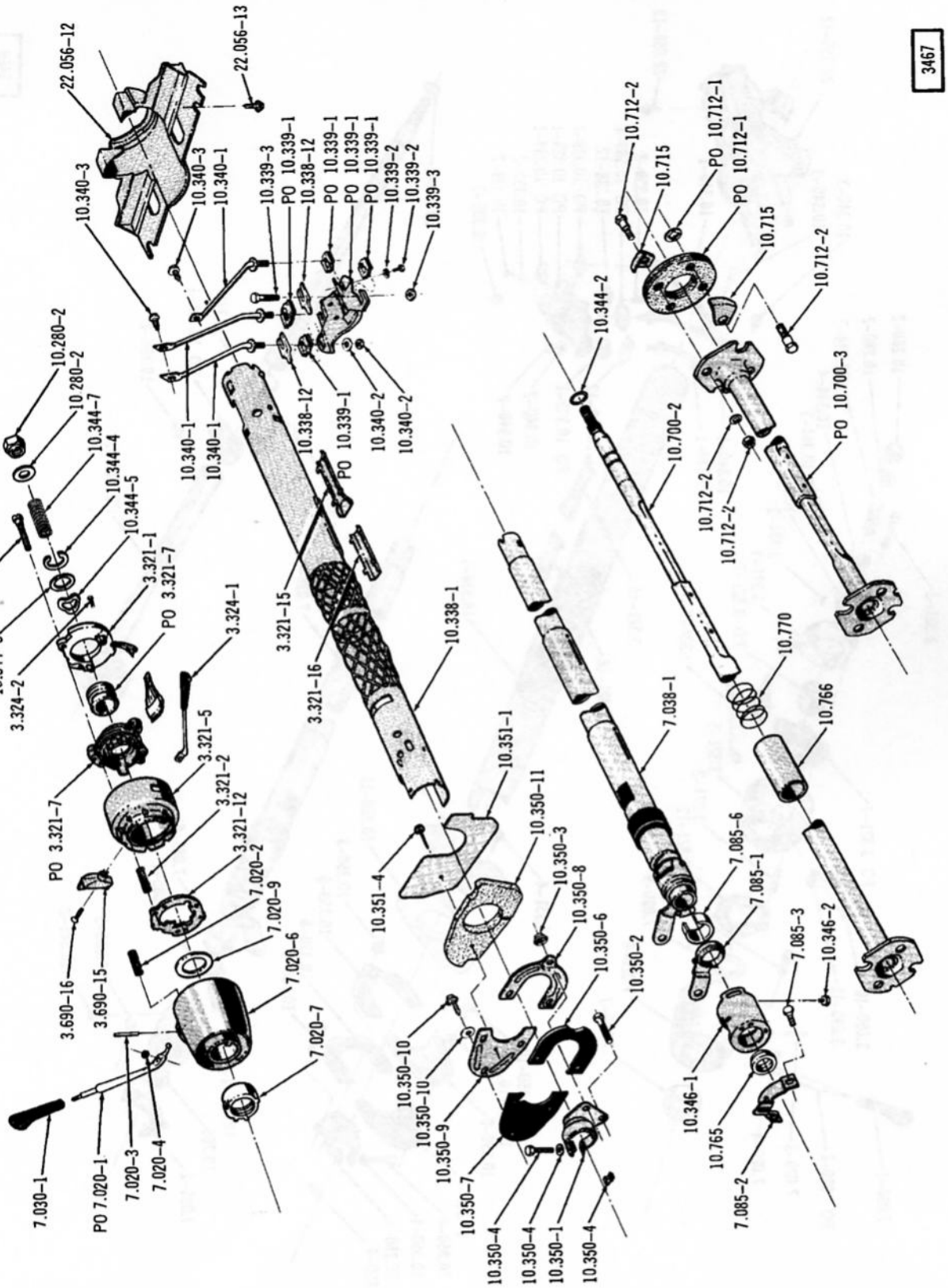

STEERING COLUMN ... LHD-WST-LAW (1967/69-80), LHD-WOD-LAW (1967/69-80)

3470

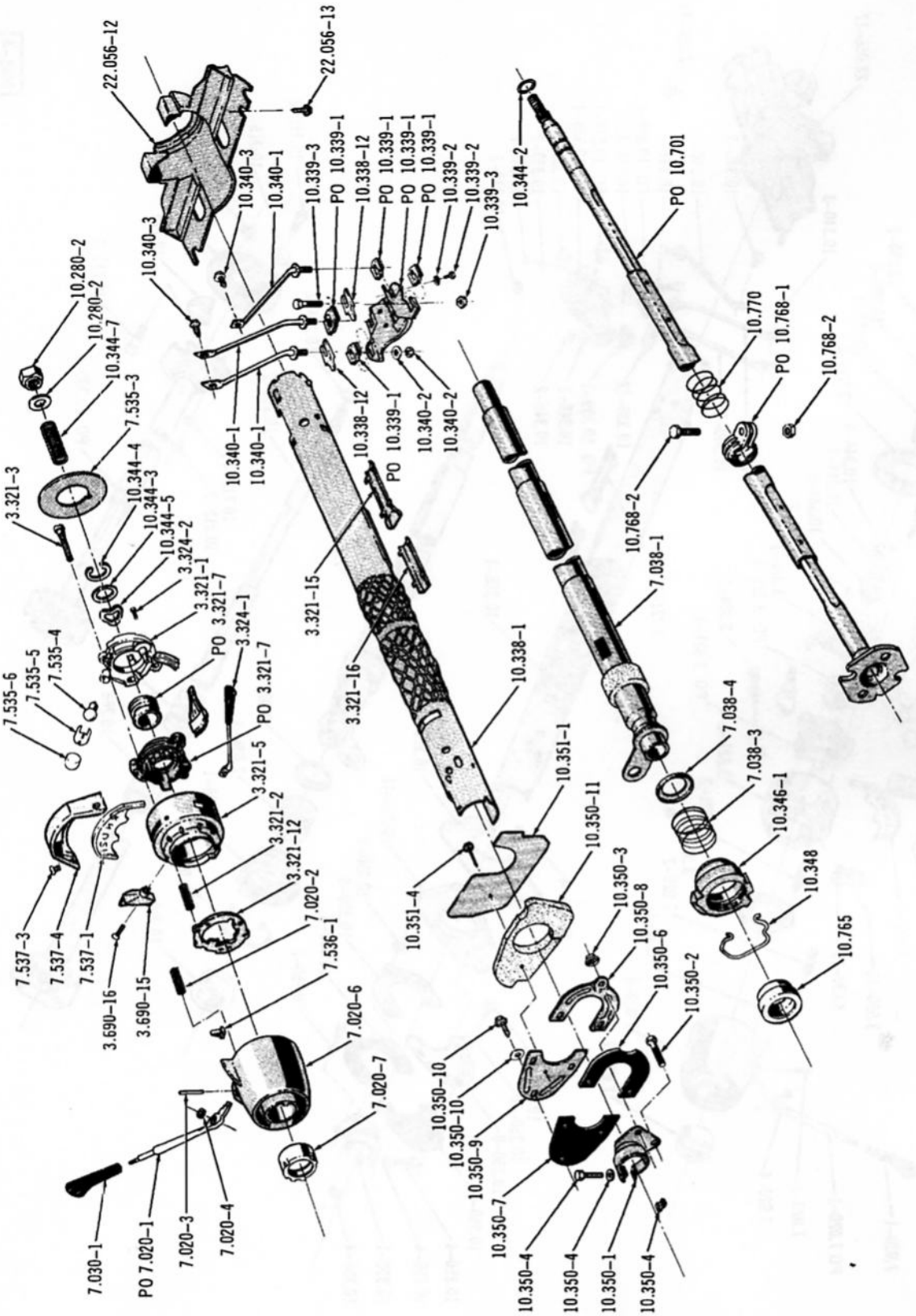

STEERING COLUMN ... LHD-WAT-LAW (1967/69-10)

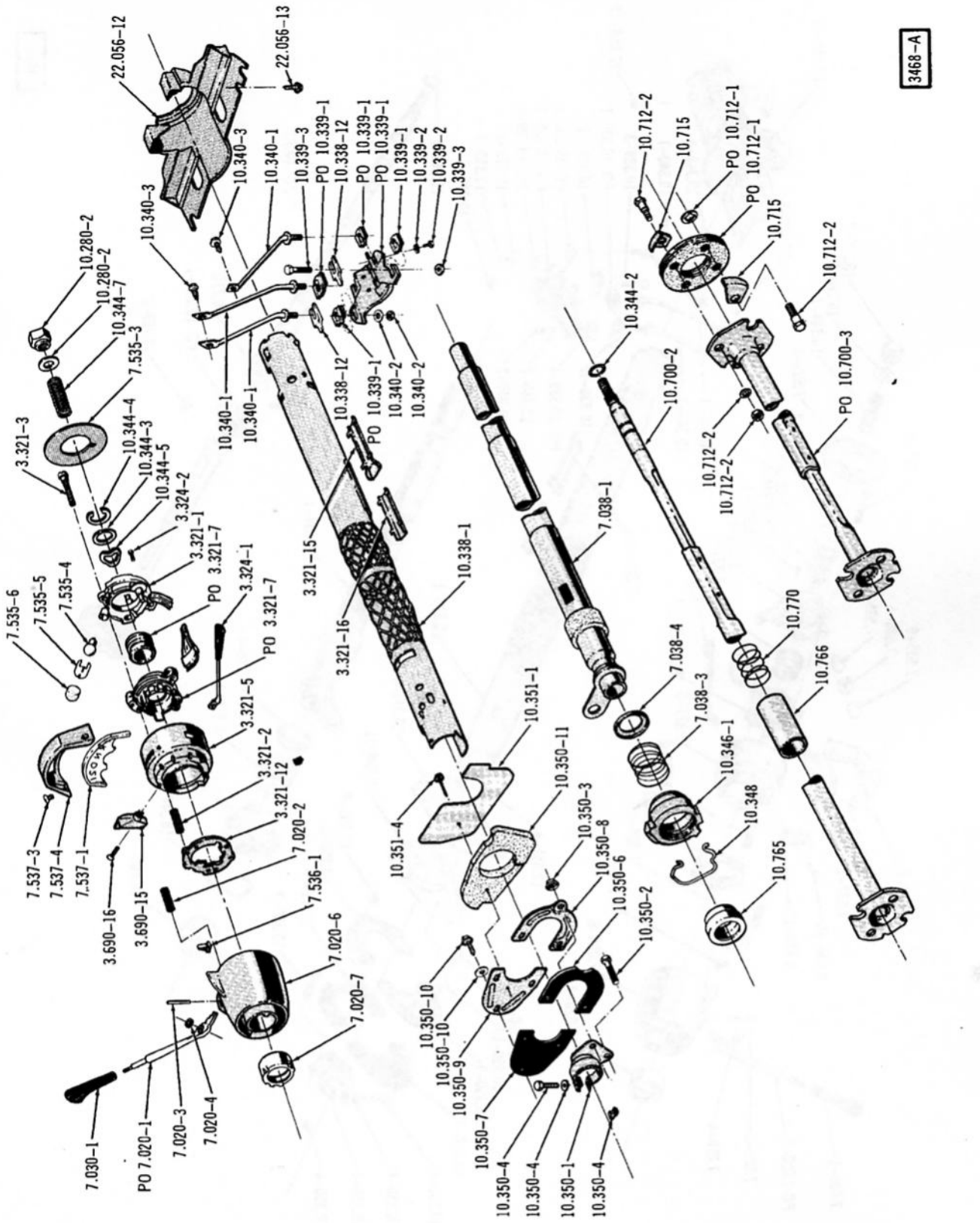

STEERING COLUMN ... LHD-WAT-WCGS-LAW (1967/69-80)

3472

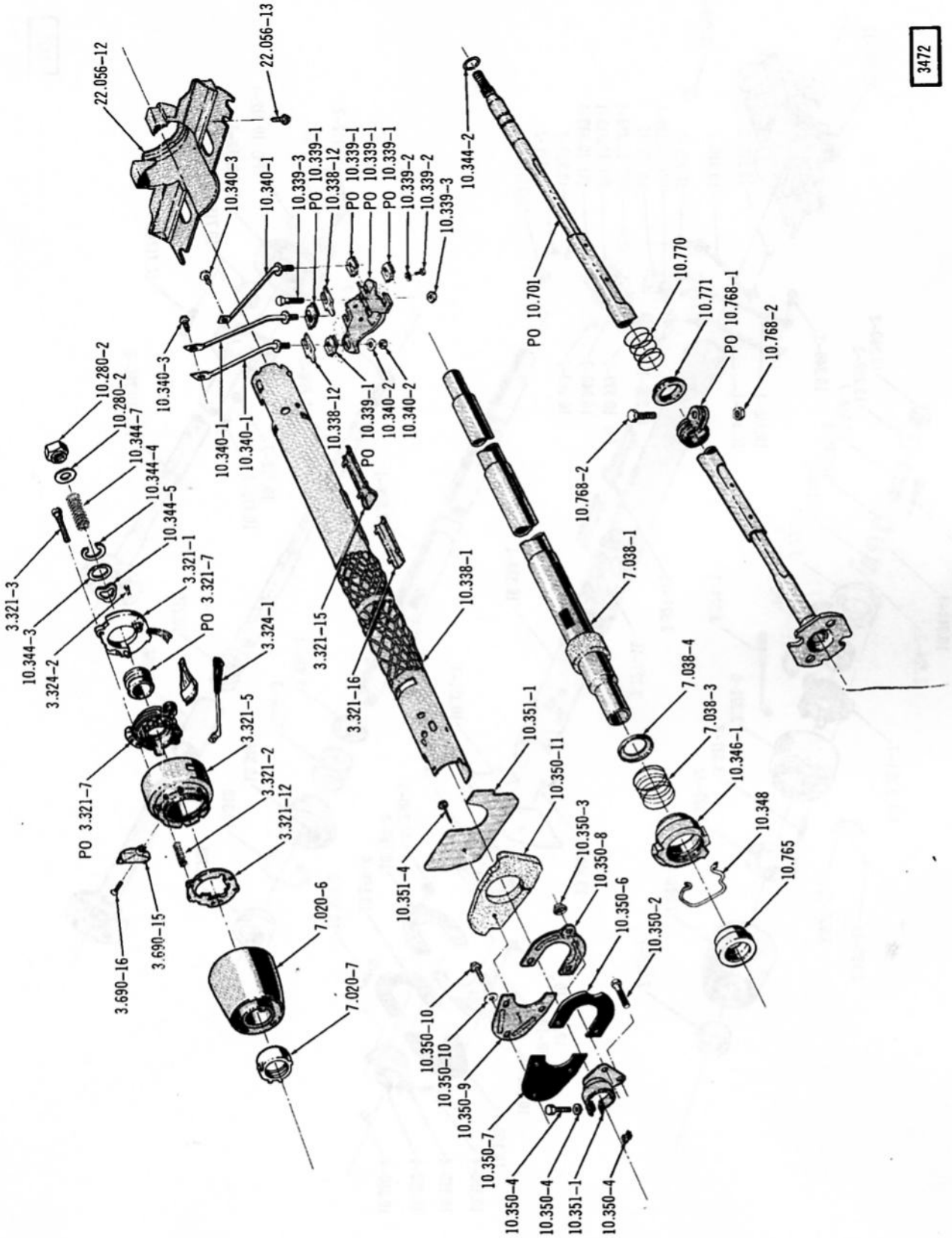

STEERING COLUMN ... LHD-WFGS-LAW (1967/69-10)

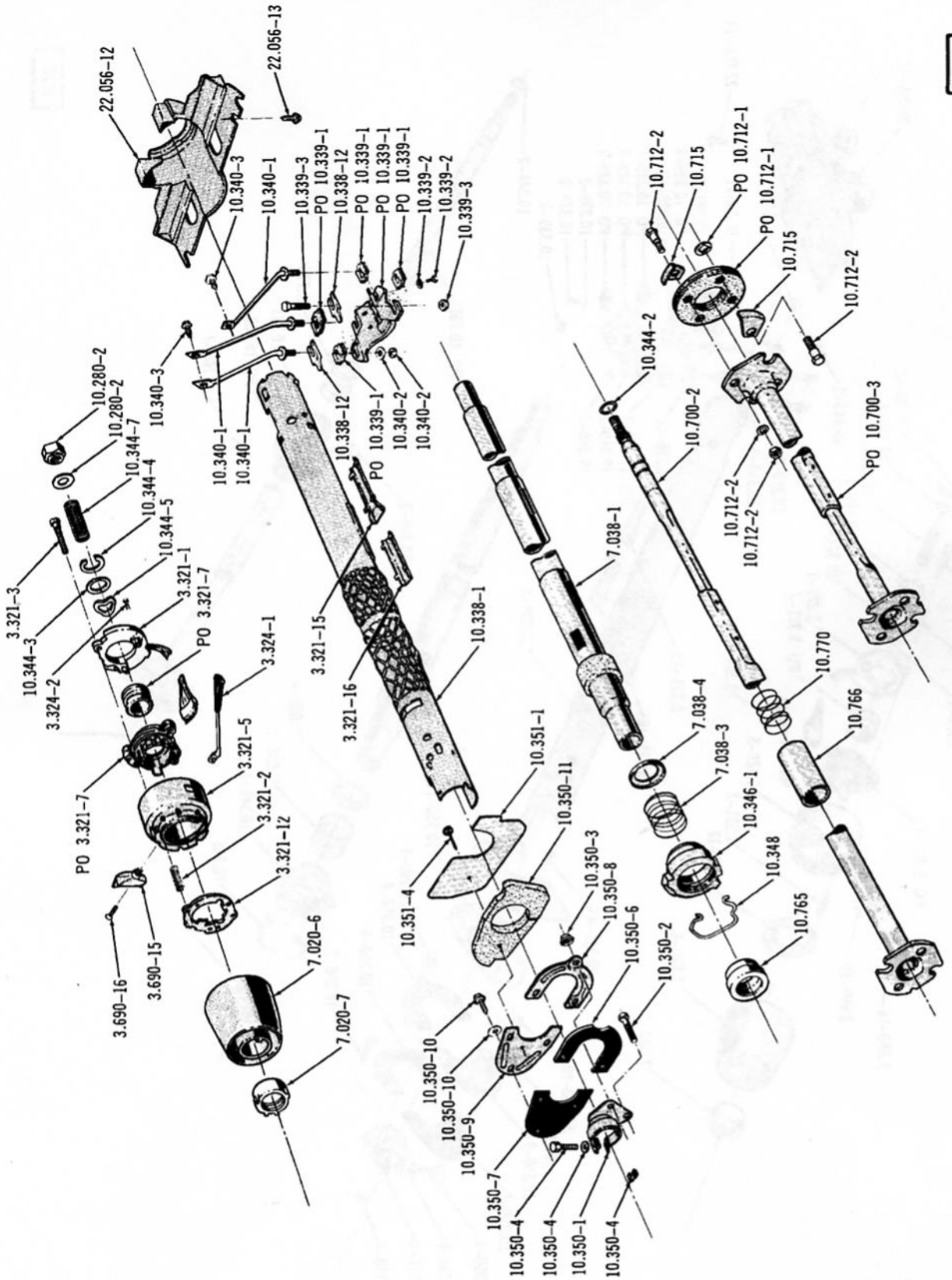

STEERING COLUMN ... LHD-WAT-WFGS-LAW (1967/69-80)

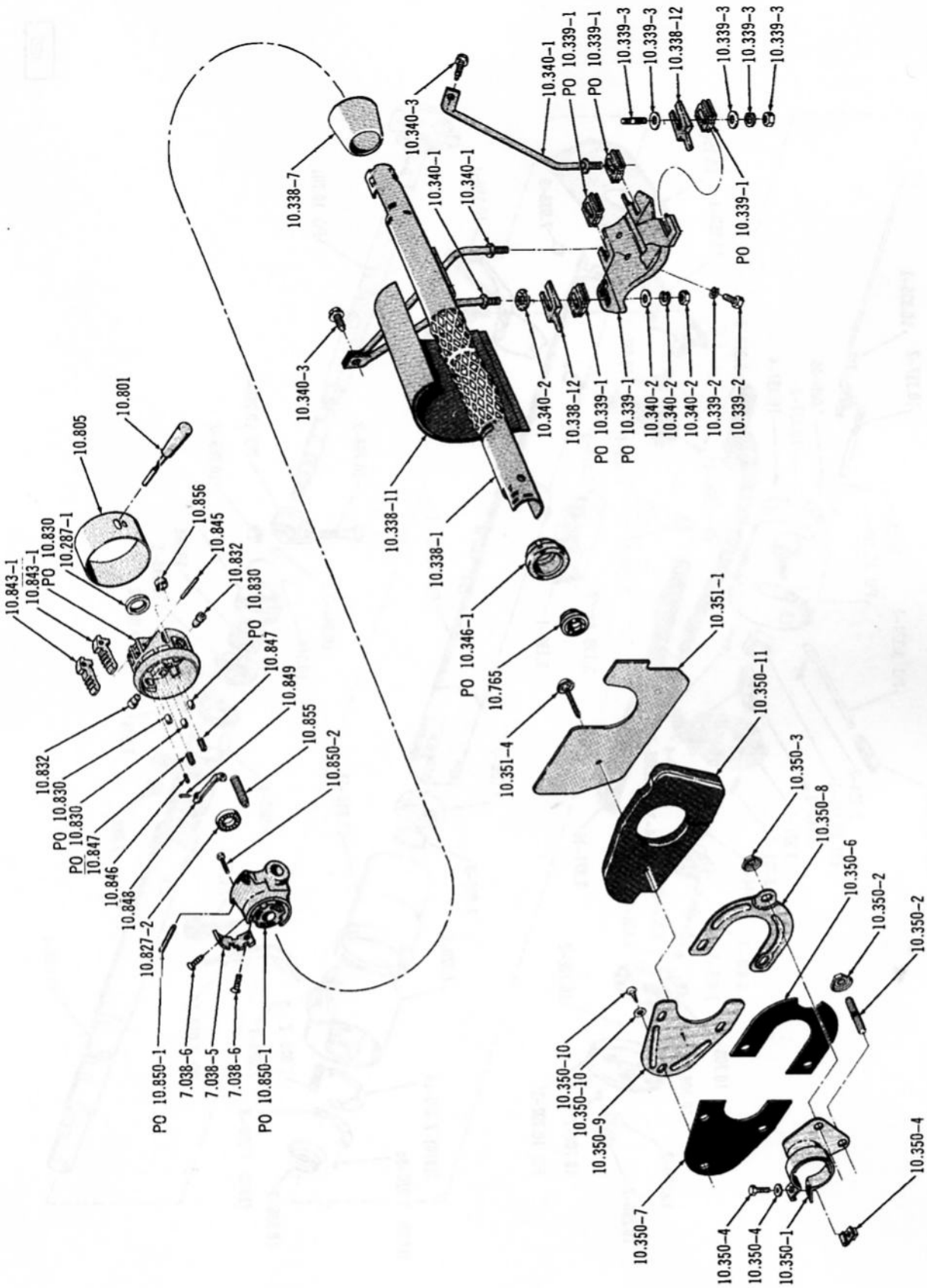

STEERING COLUMN ... LHD-WAW (1967/69)

3822

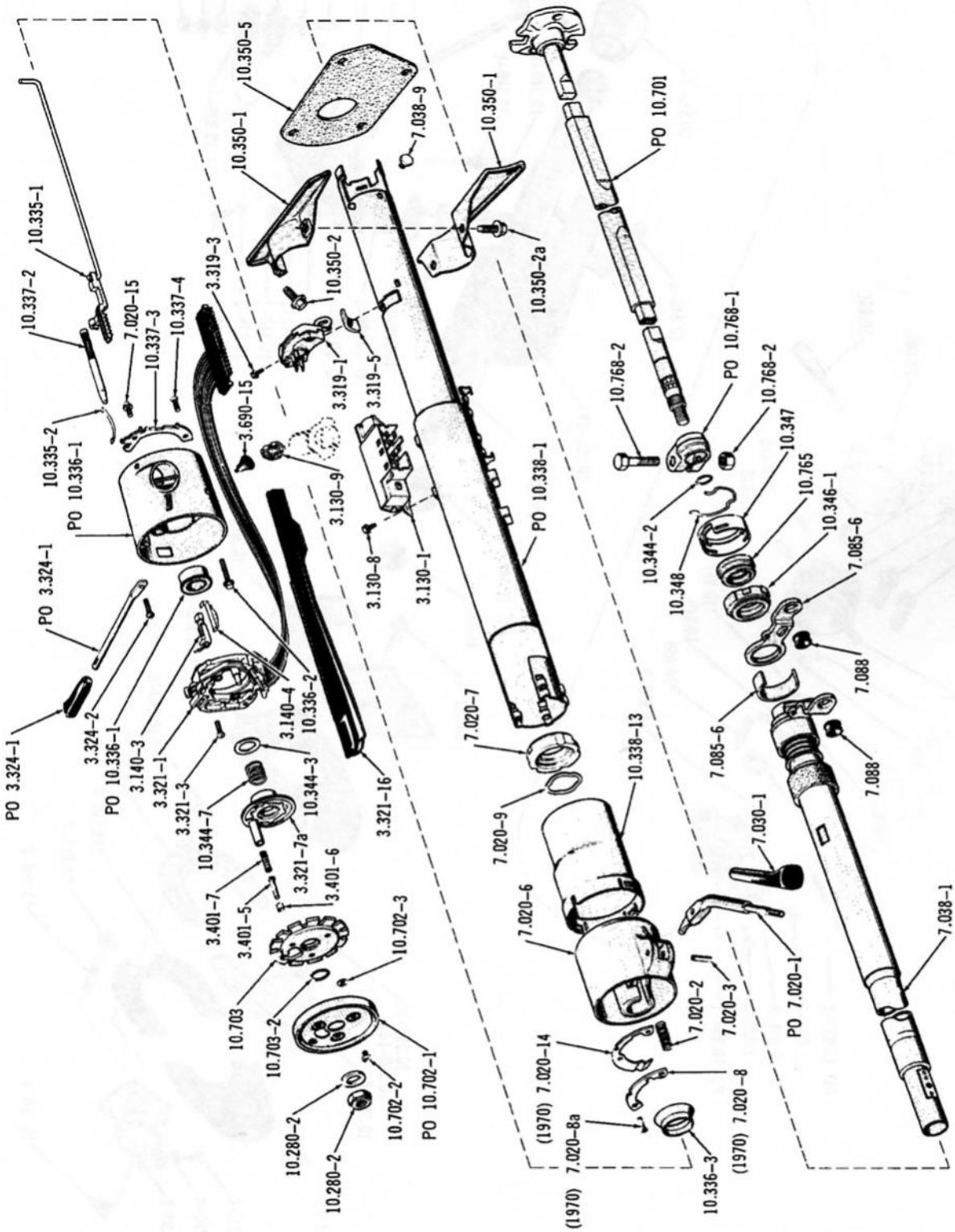

STEERING COLUMN (LHD-WST-WCGS-LAW) . . . 1970 (01)(10)(40), 1971/ (01)(40)

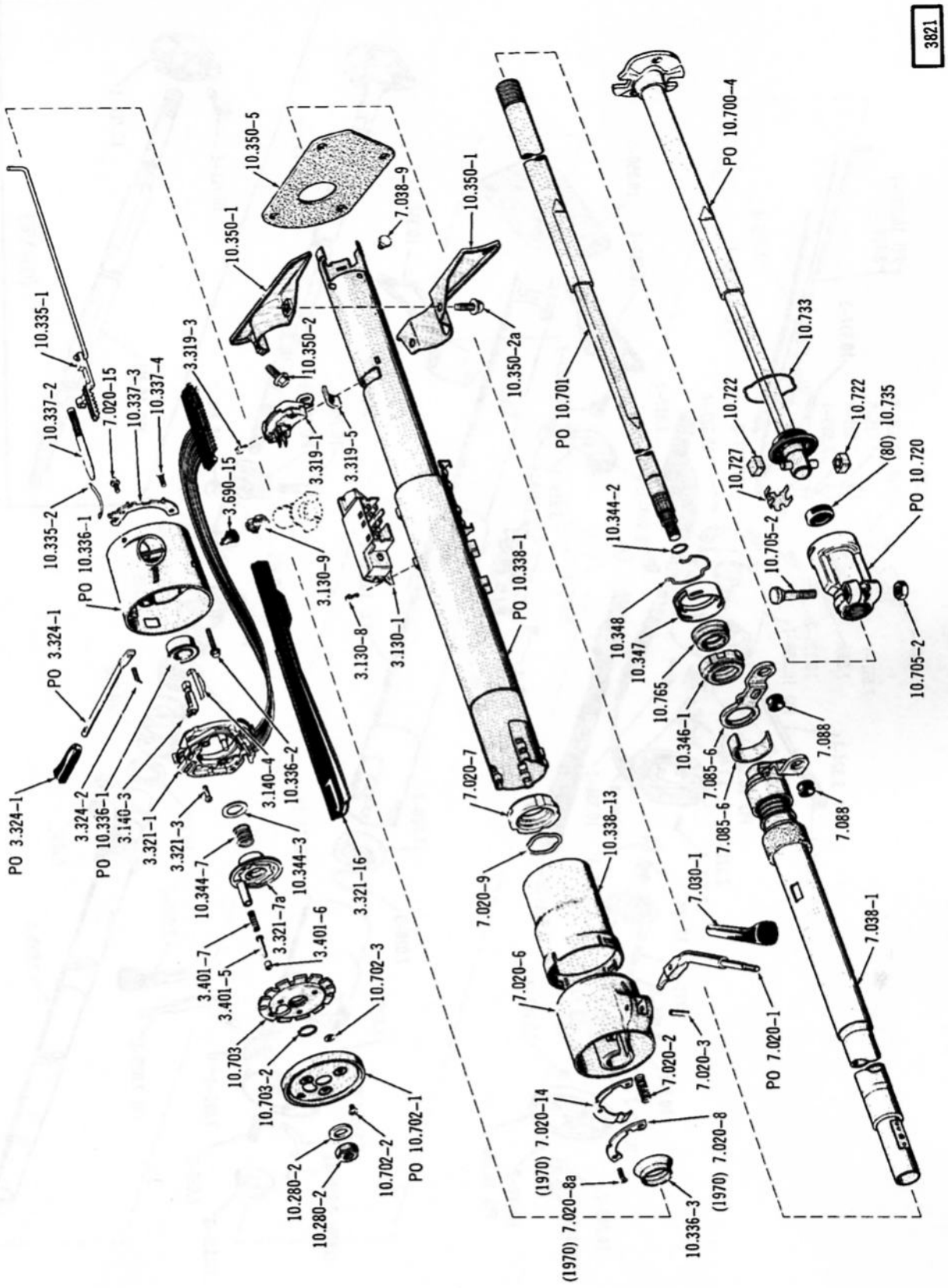

STEERING COLUMN (LHD-WST-WCGS-LAW) . . . 1970 (80), 1971/ (10)(80)

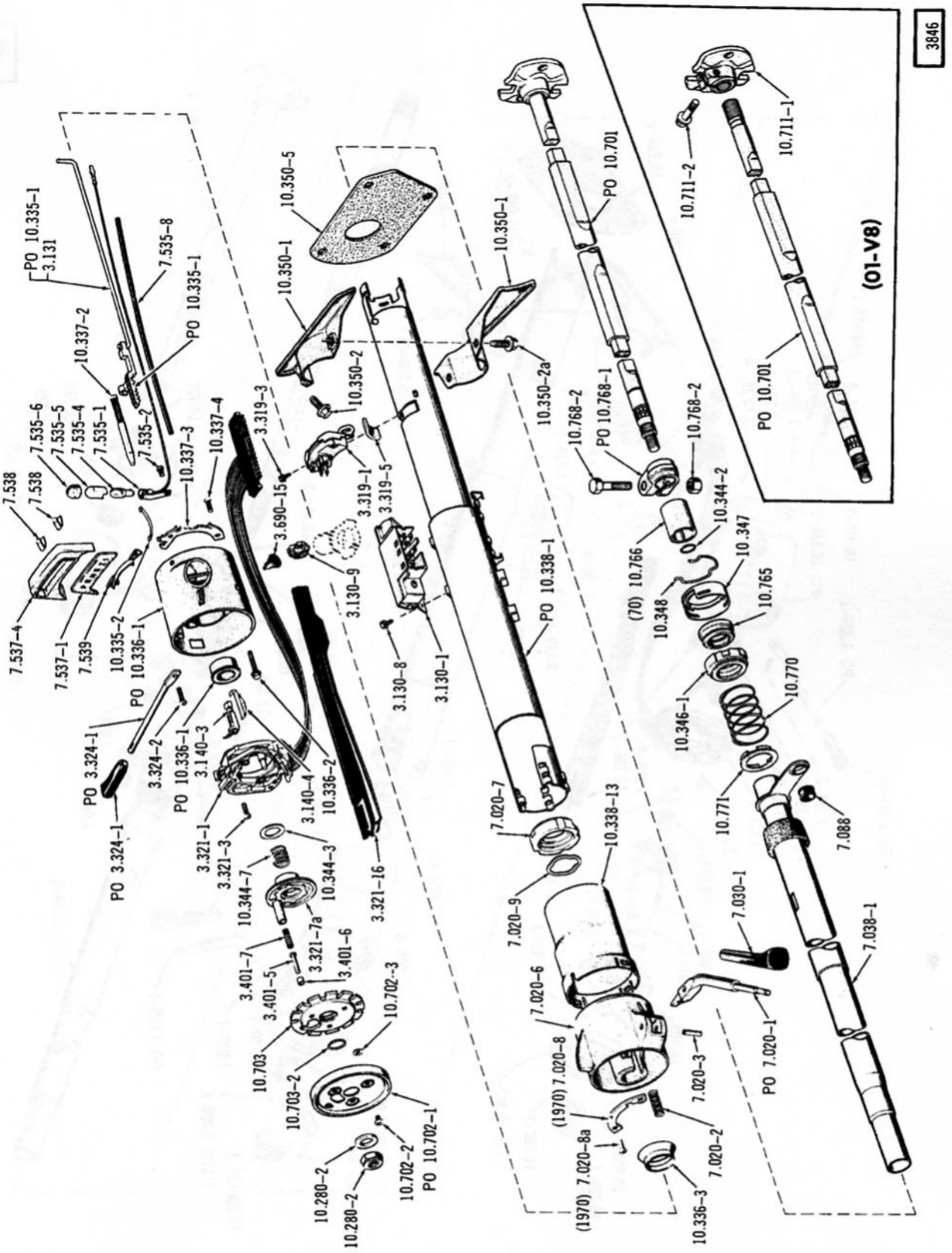

STEERING COLUMN (LHD-WAT-WCGS-LAW) ... 1970 (01)(10)(40)(70), 1971/ (01)(40)(70)

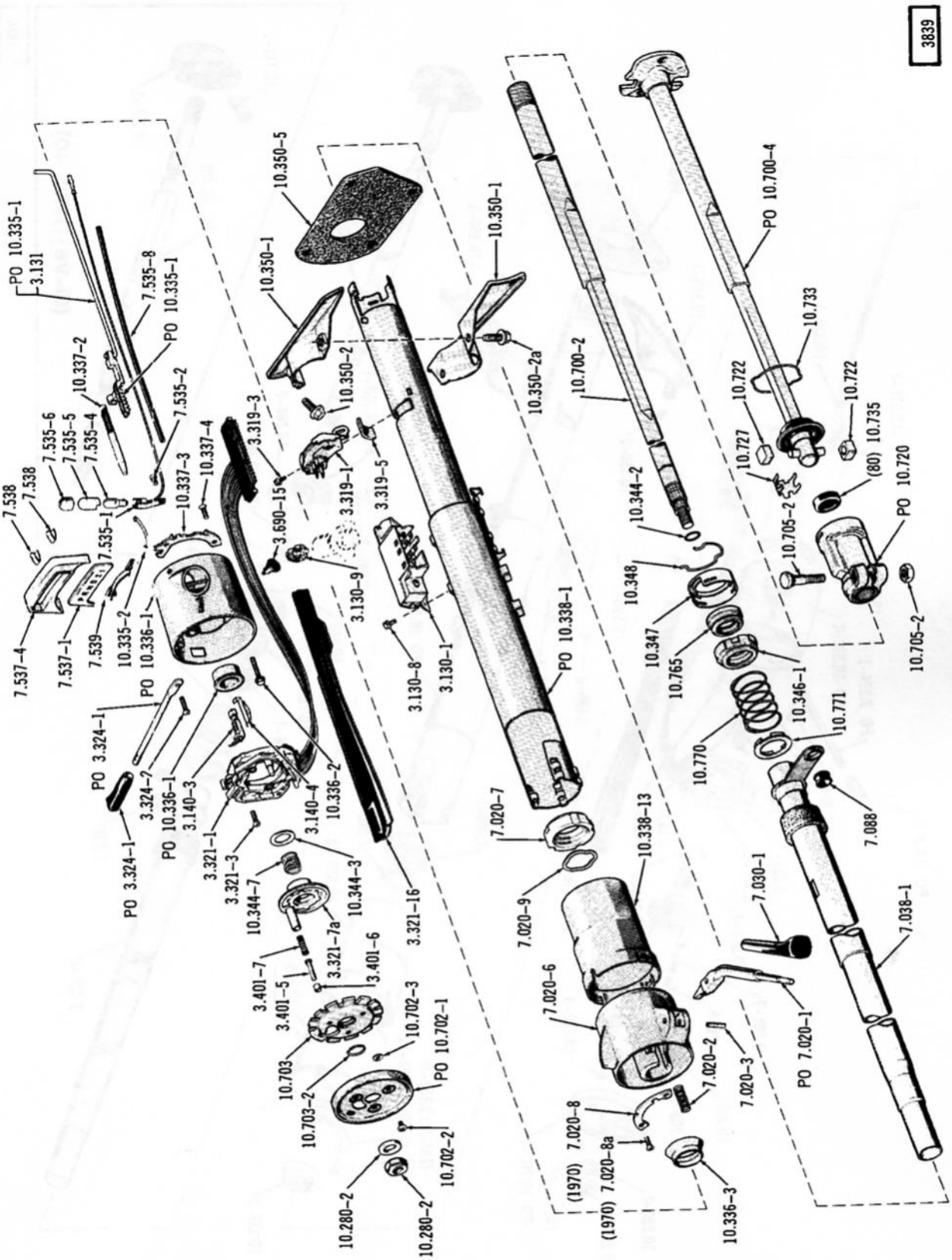

STEERING COLUMN (LHD-WAT-WCGS-LAW) . . . 1970 (80), 1971/ (10)(80)

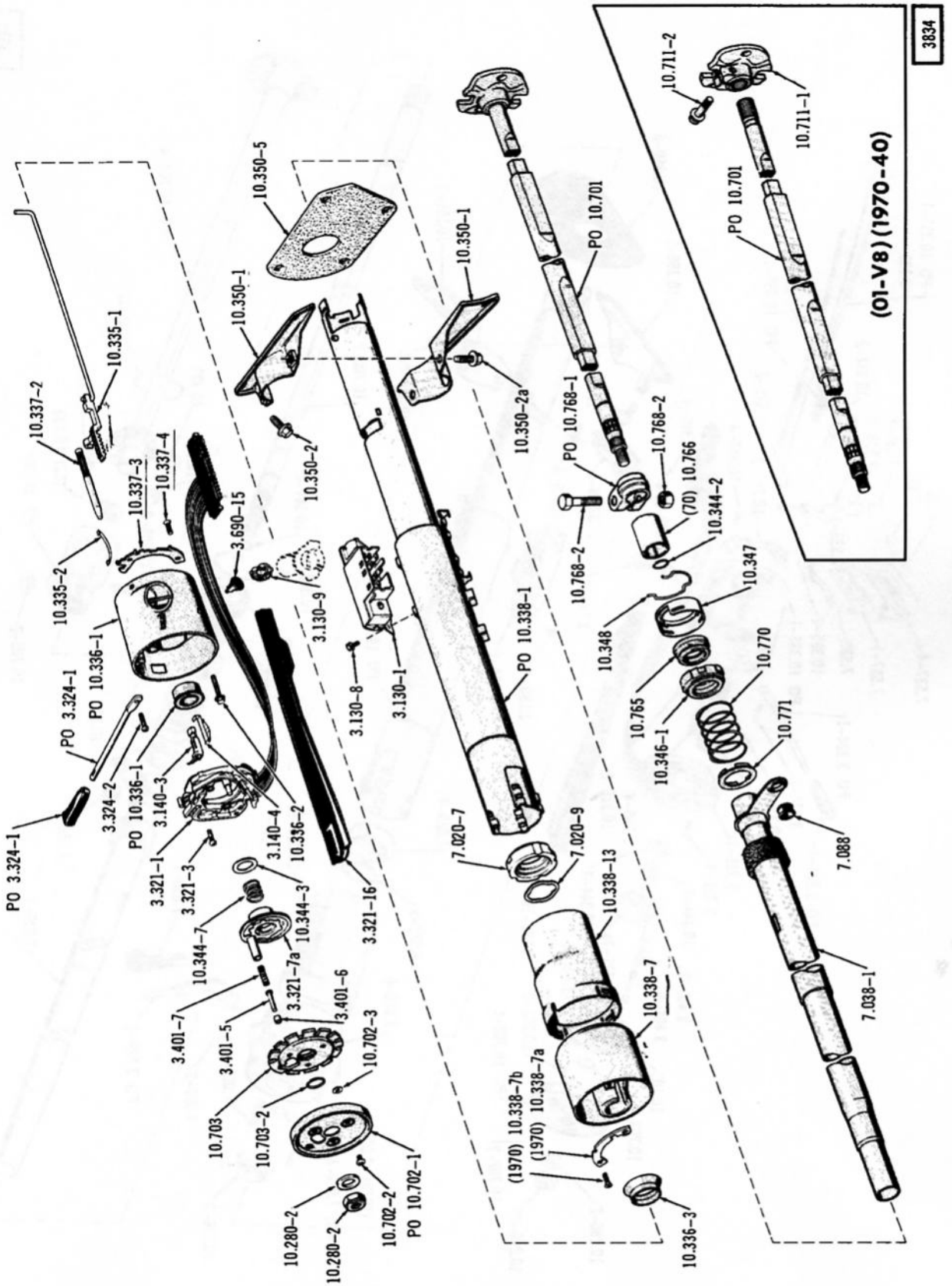

STEERING COLUMN (LHD-WFGS-LAW) . . . 1970 (01)(10)(30)(40)(70), 1971-TYPE 1 (01)(40)(70)

5035

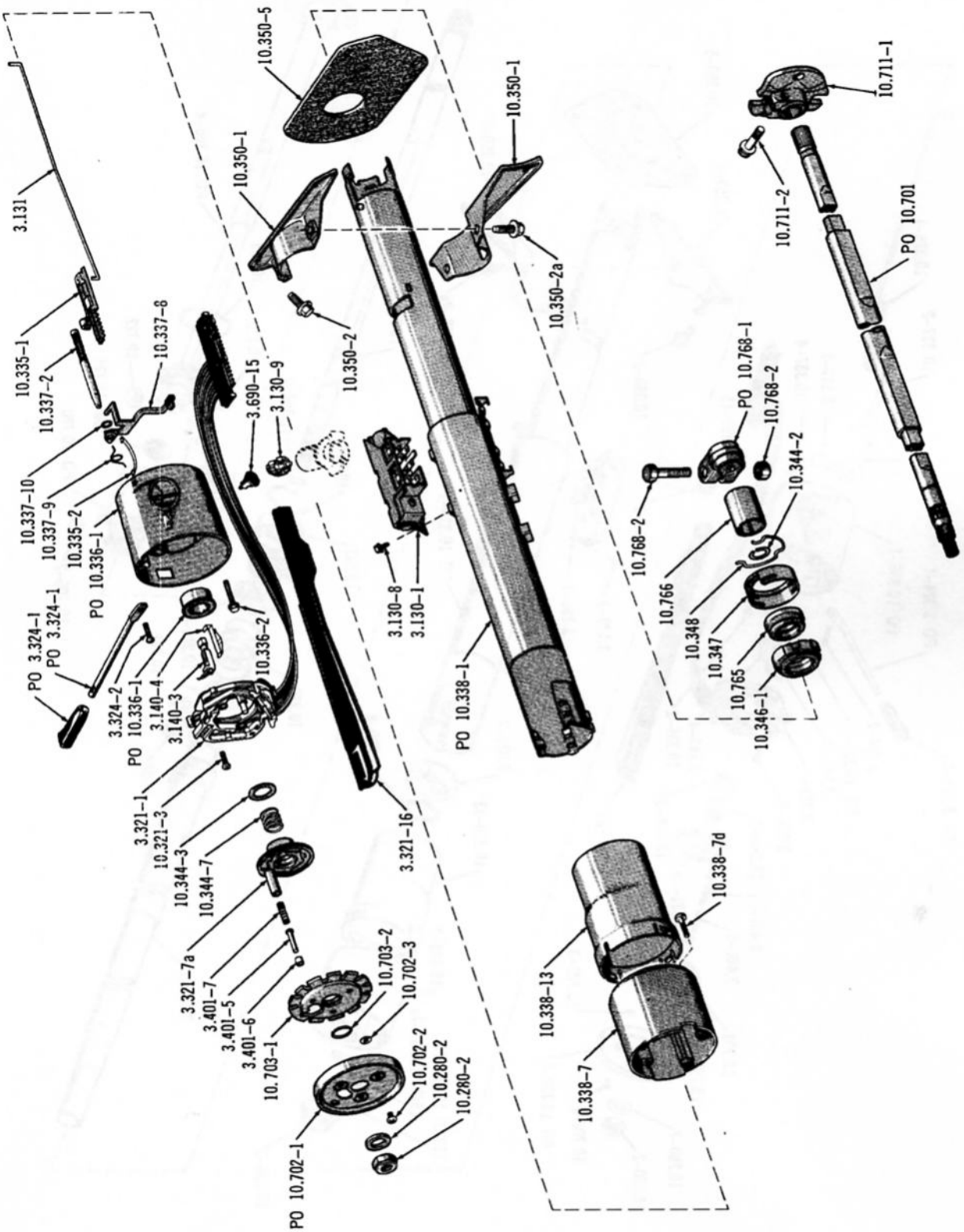

STEERING COLUMN (LHD-WFGS-LAW) . . . 1971-TYPE 2 (01)(40)(70), 1972 (01)(40)(70)

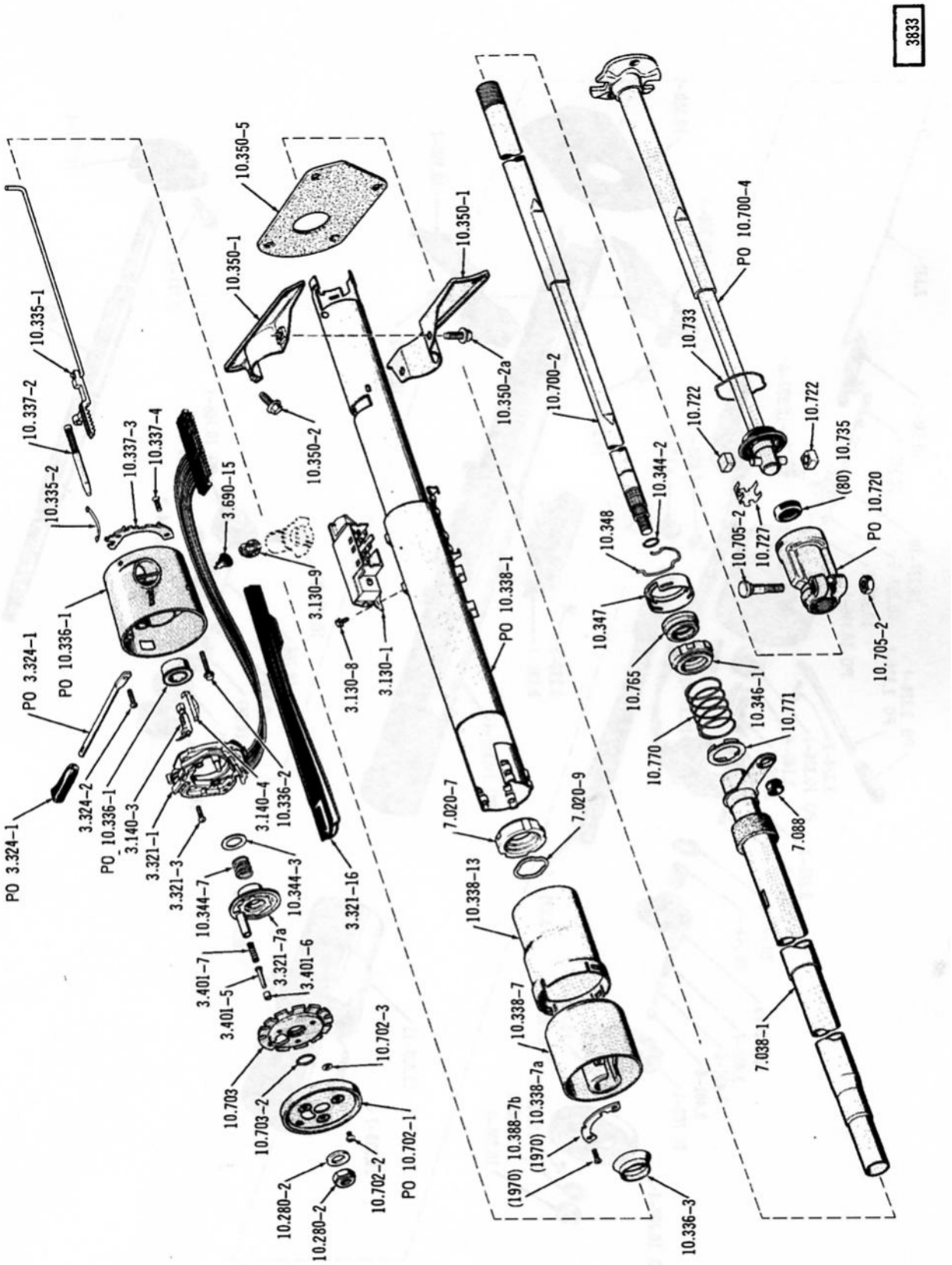

STEERING COLUMN (LHD-WFGS-LAW) . . . 1970 (80), 1971-TYPE 1 (10)(80)

Printed in U.S.A.

5034

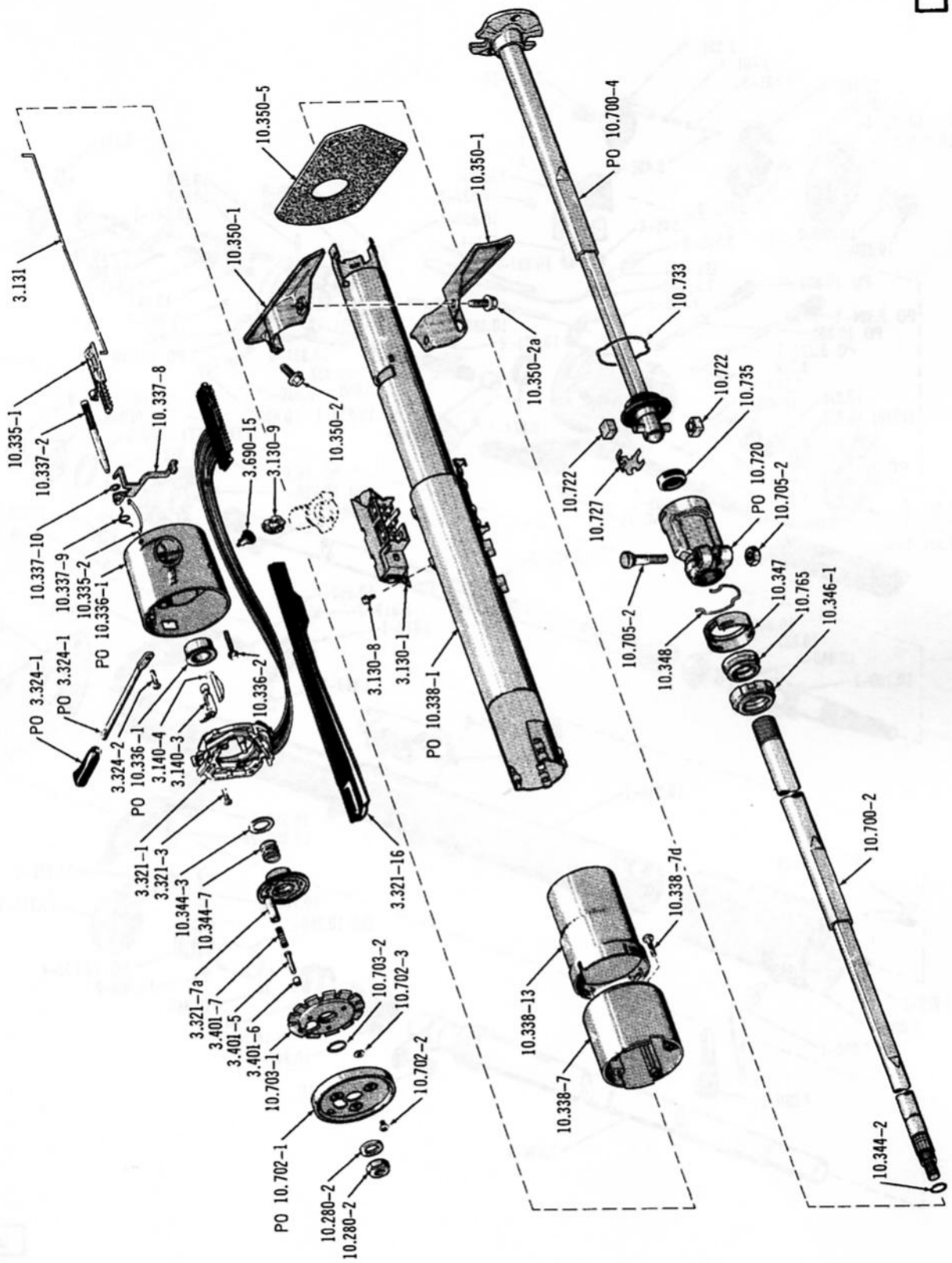

STEERING COLUMN (LHD–WFGS–LAW) . . . 1971–TYPE 2 (10)(80)

Printed in U.S.A.

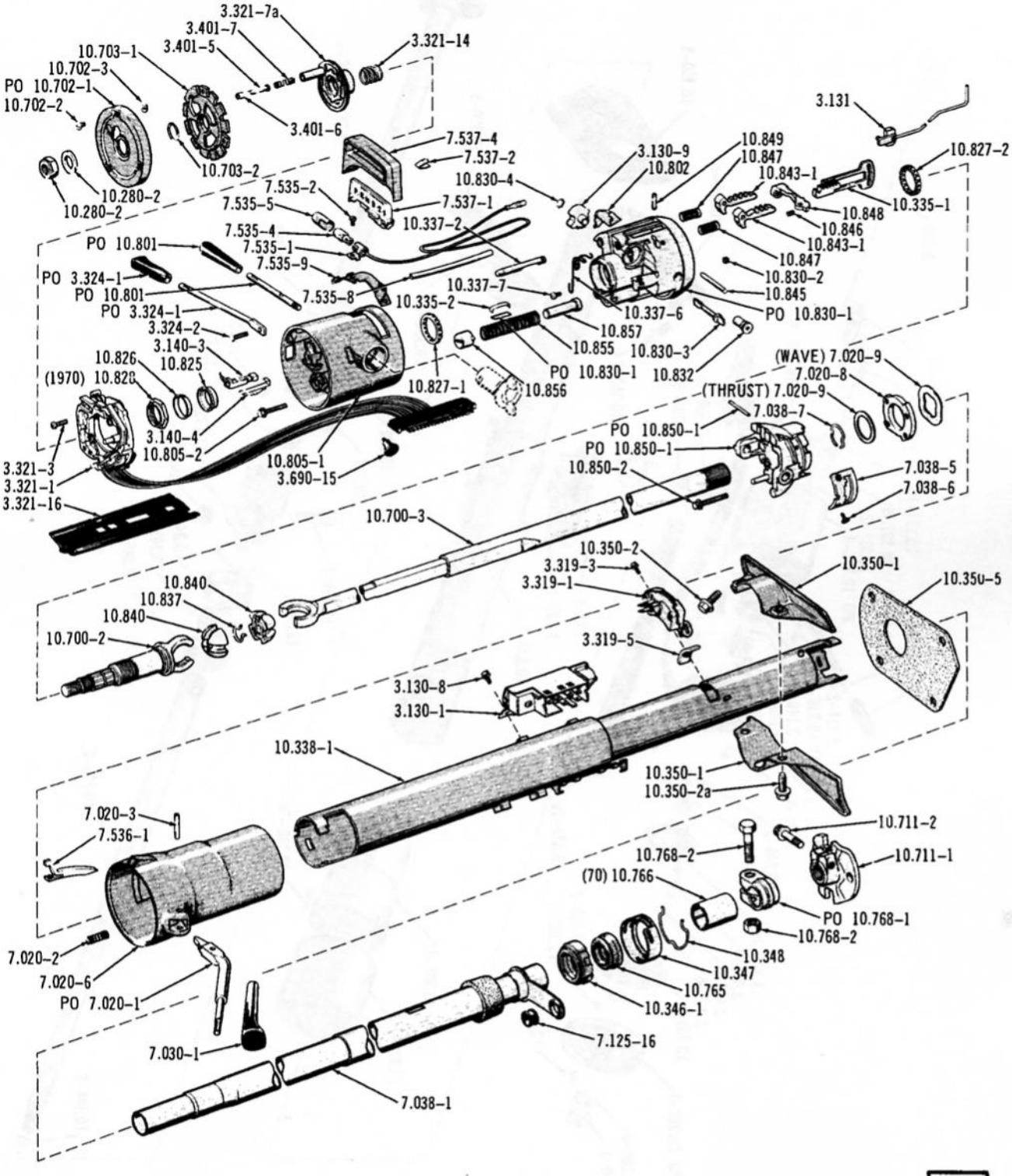

3856

STEERING COLUMN (WAT-WCGS-WAW) ... 1970 (10), 1970/ (01)(40)(70)

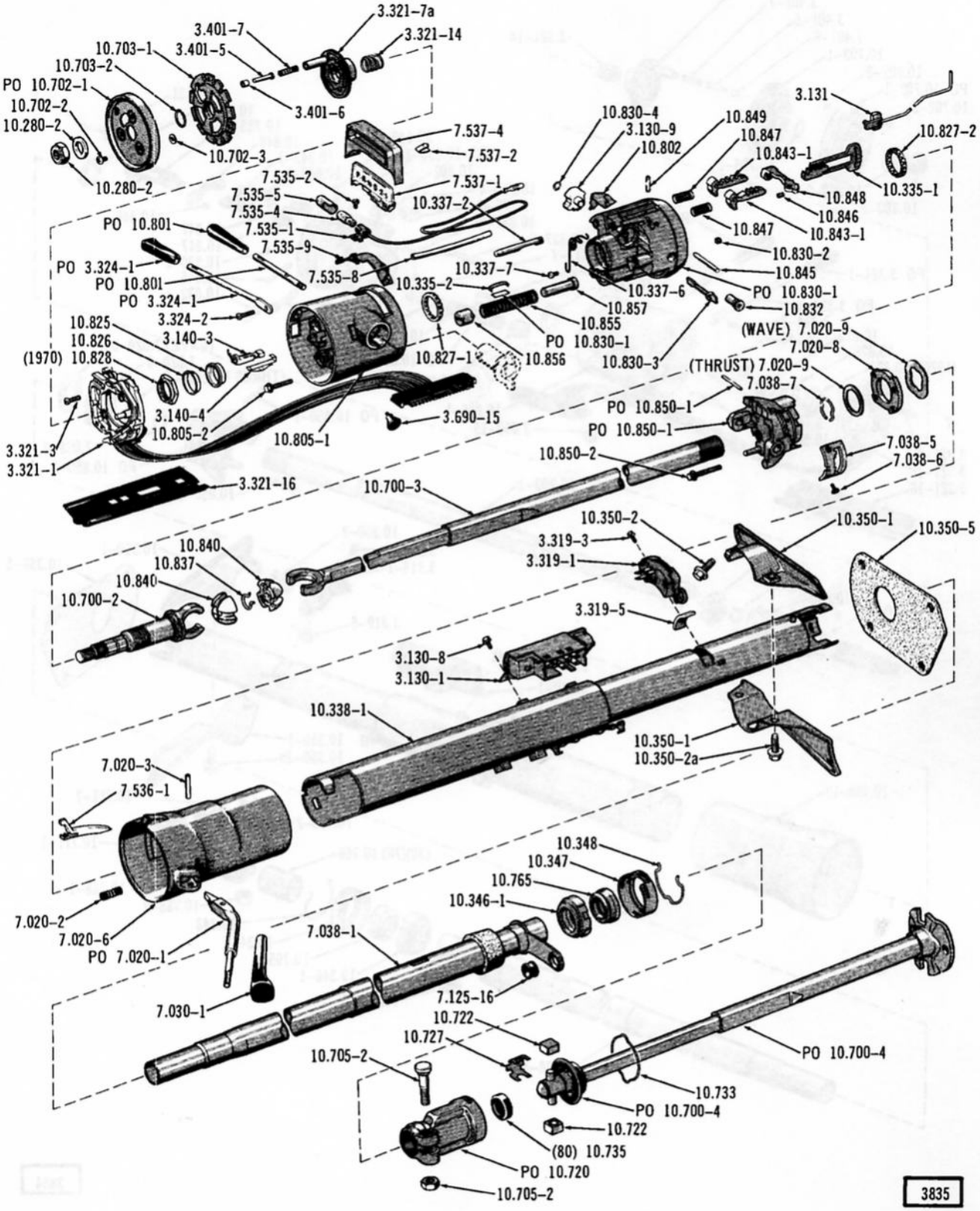

STEERING COLUMN (WAT-WCGS-WAW) ... 1970 (80), 1971/ (10)(80)

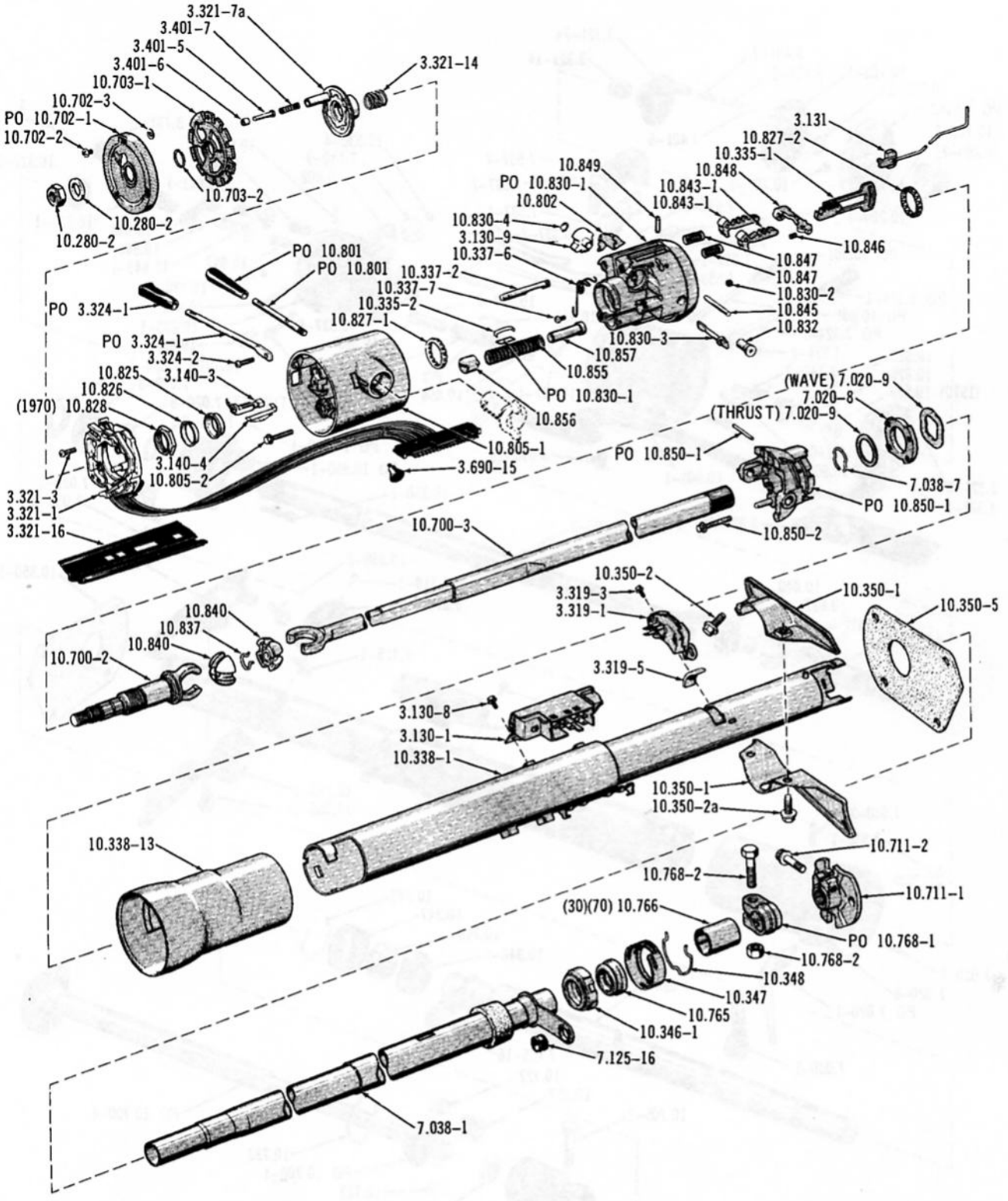

3854

STEERING COLUMN (WFGS-WAW) ... 1970 (10)(30)(70), 1971/ (70)

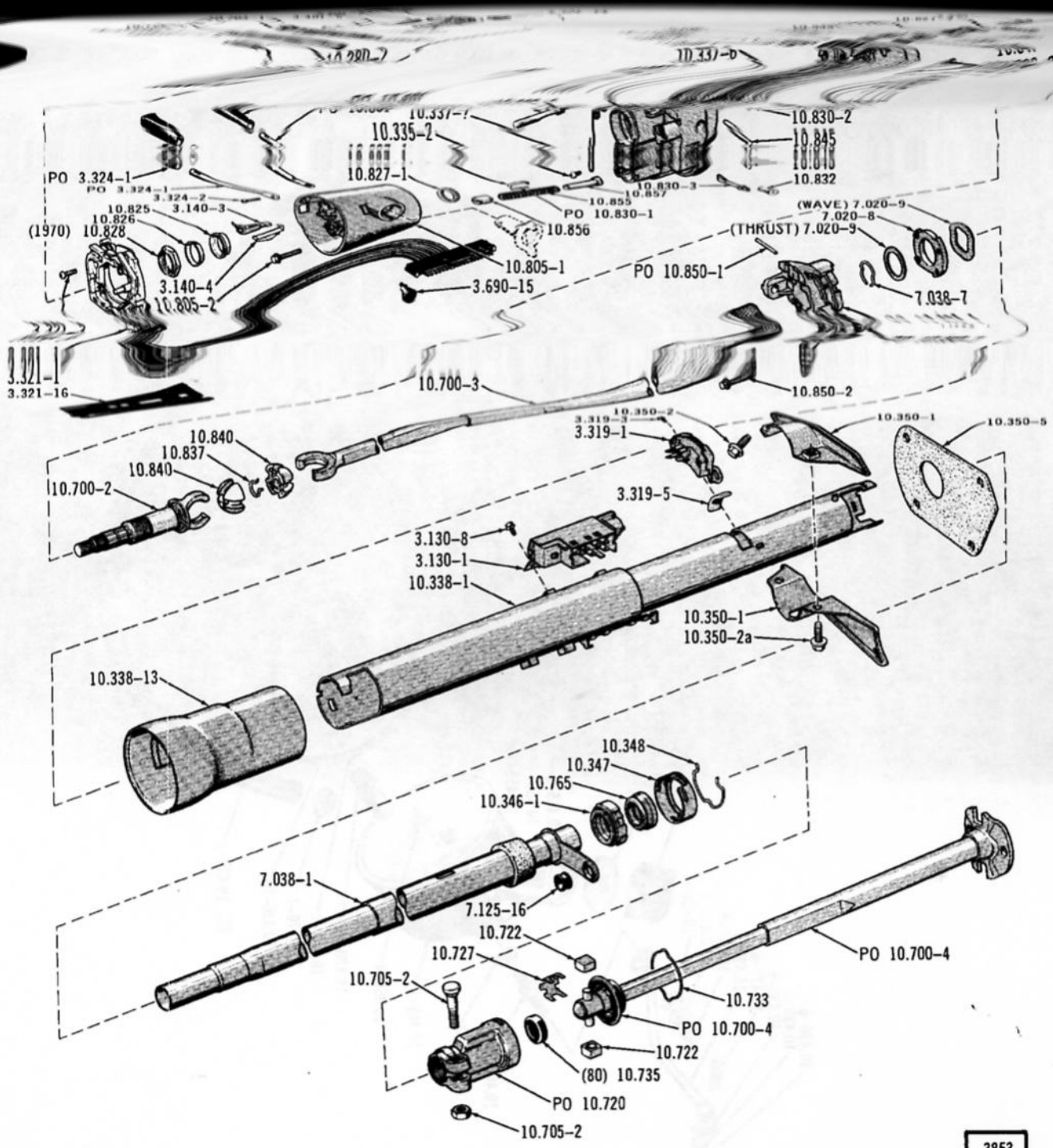

STEERING COLUMN (WFGS-WAW) ... 1970 (80), 1971 (10)(80)

Printed in U.S.A.

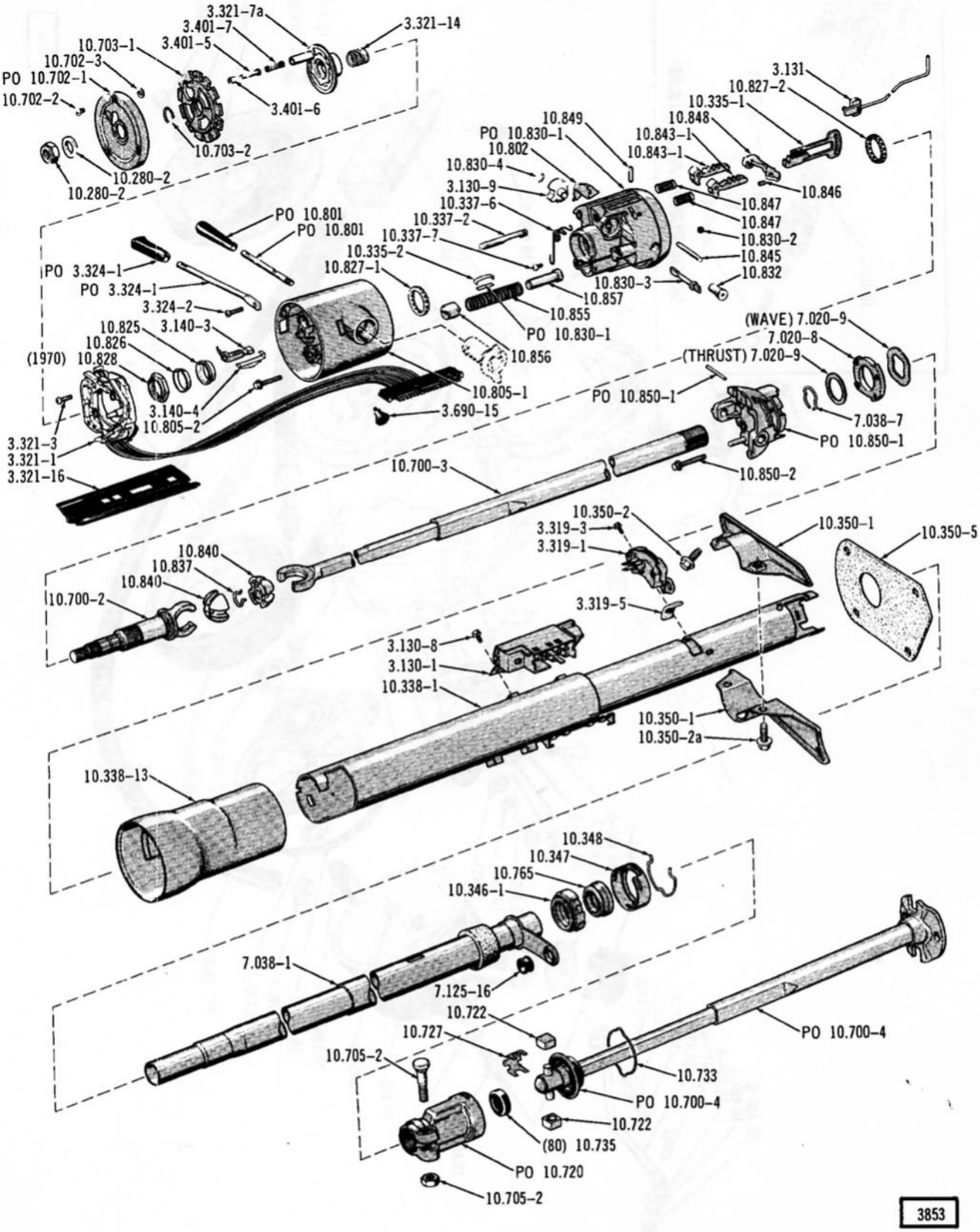

STEERING COLUMN (WFGS-WAW) ... 1970 (80), 1971 (10)(80)

Printed in U.S.A.

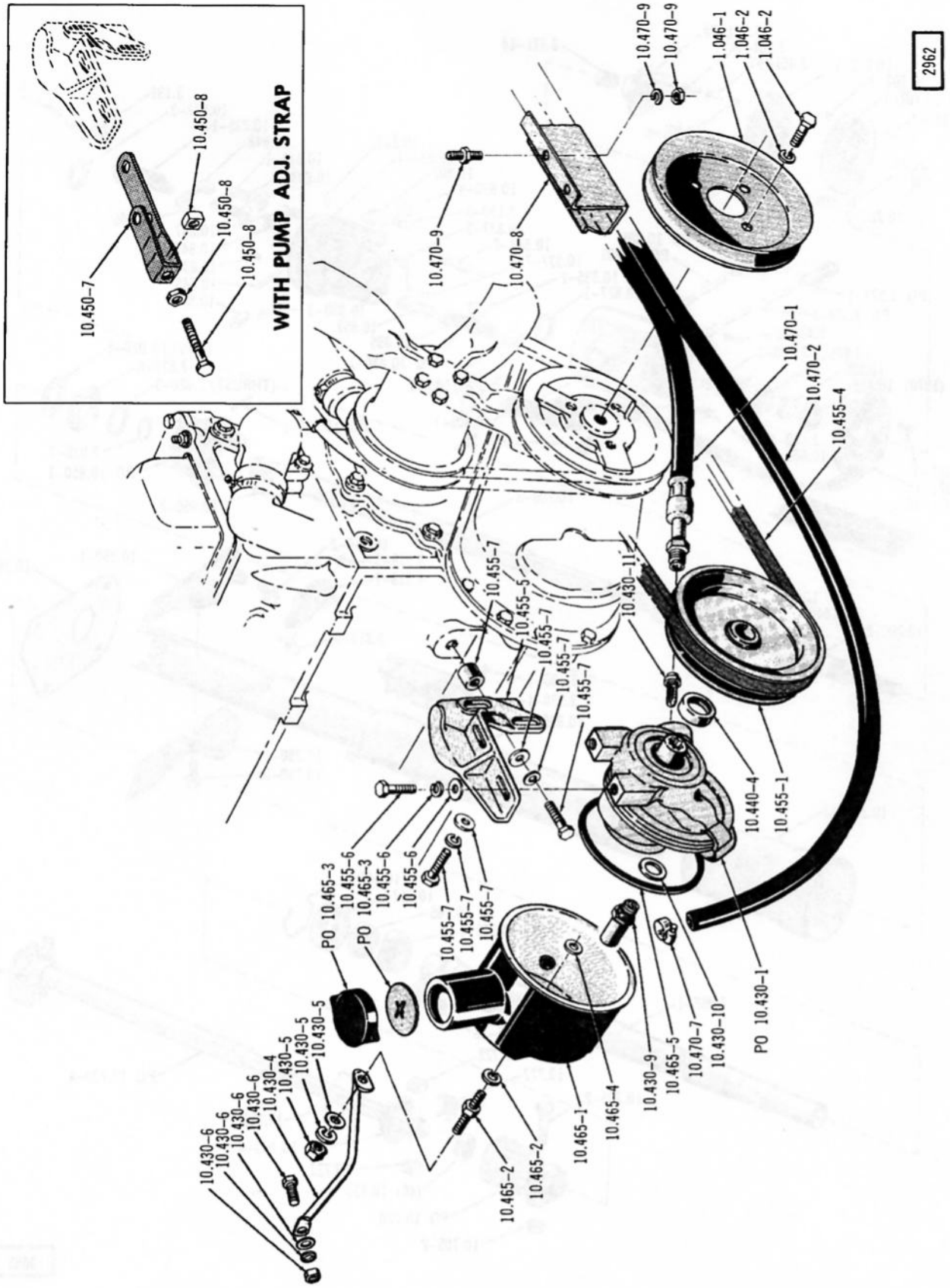

POWER STEERING PUMP, RESERVOIR AND HOSES ... LHD-SIX (1967)

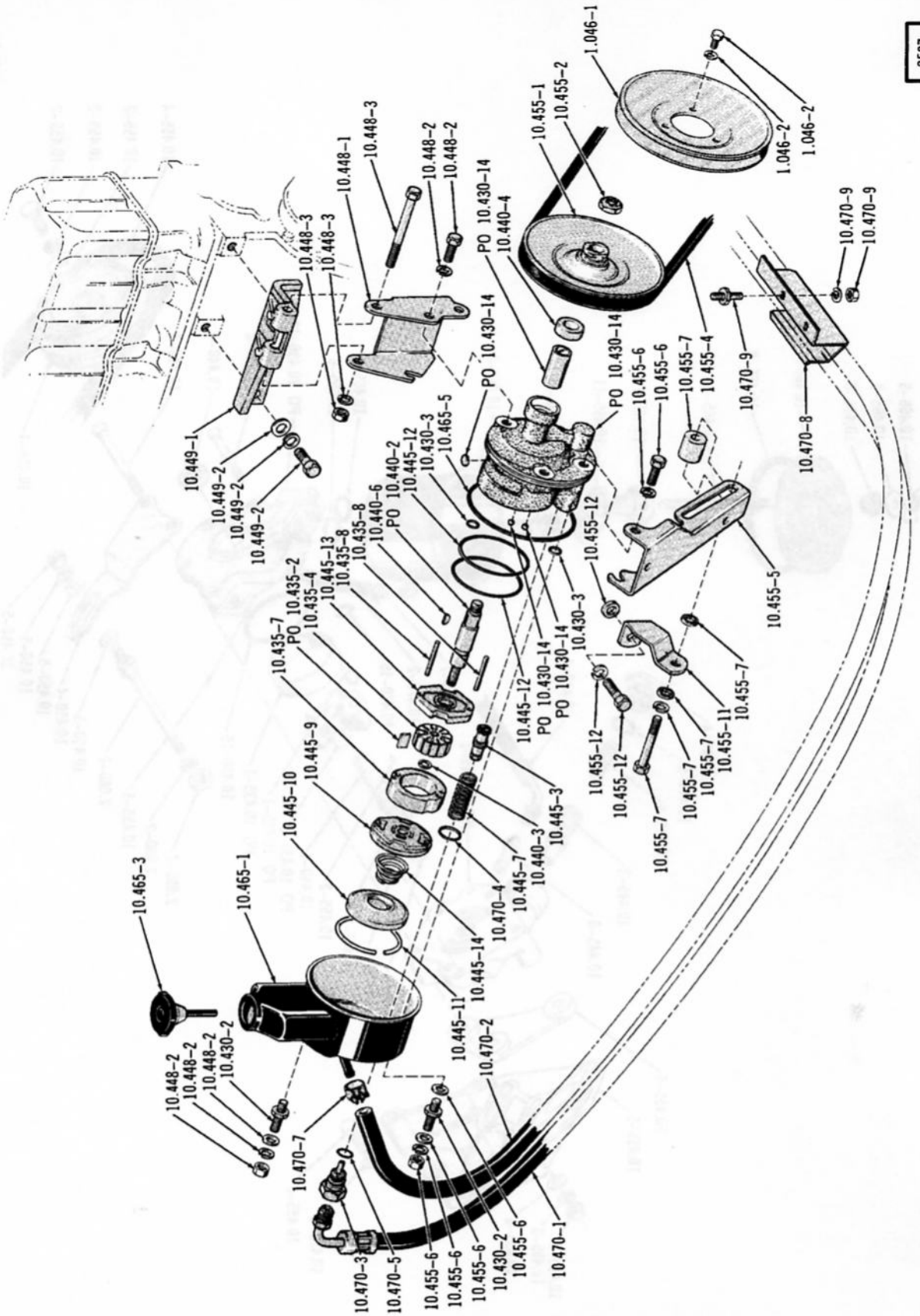

POWER STEERING PUMP, RESERVOIR AND HOSES ... LHD-SIX (1968/)

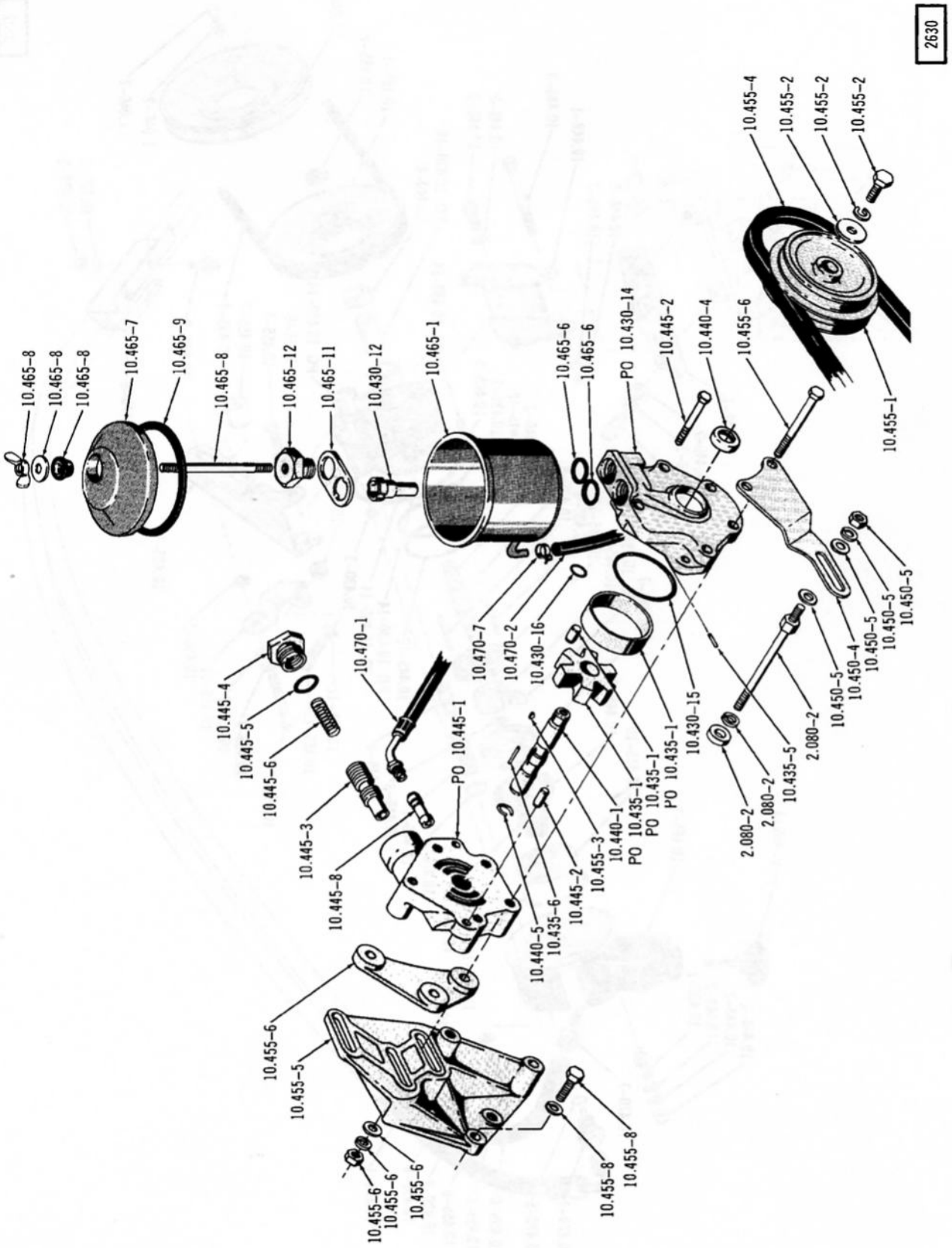

POWER STEERING PUMP, RESERVOIR AND PULLEY ... V8 (1967/71) (1972-TYPE 1)

4170

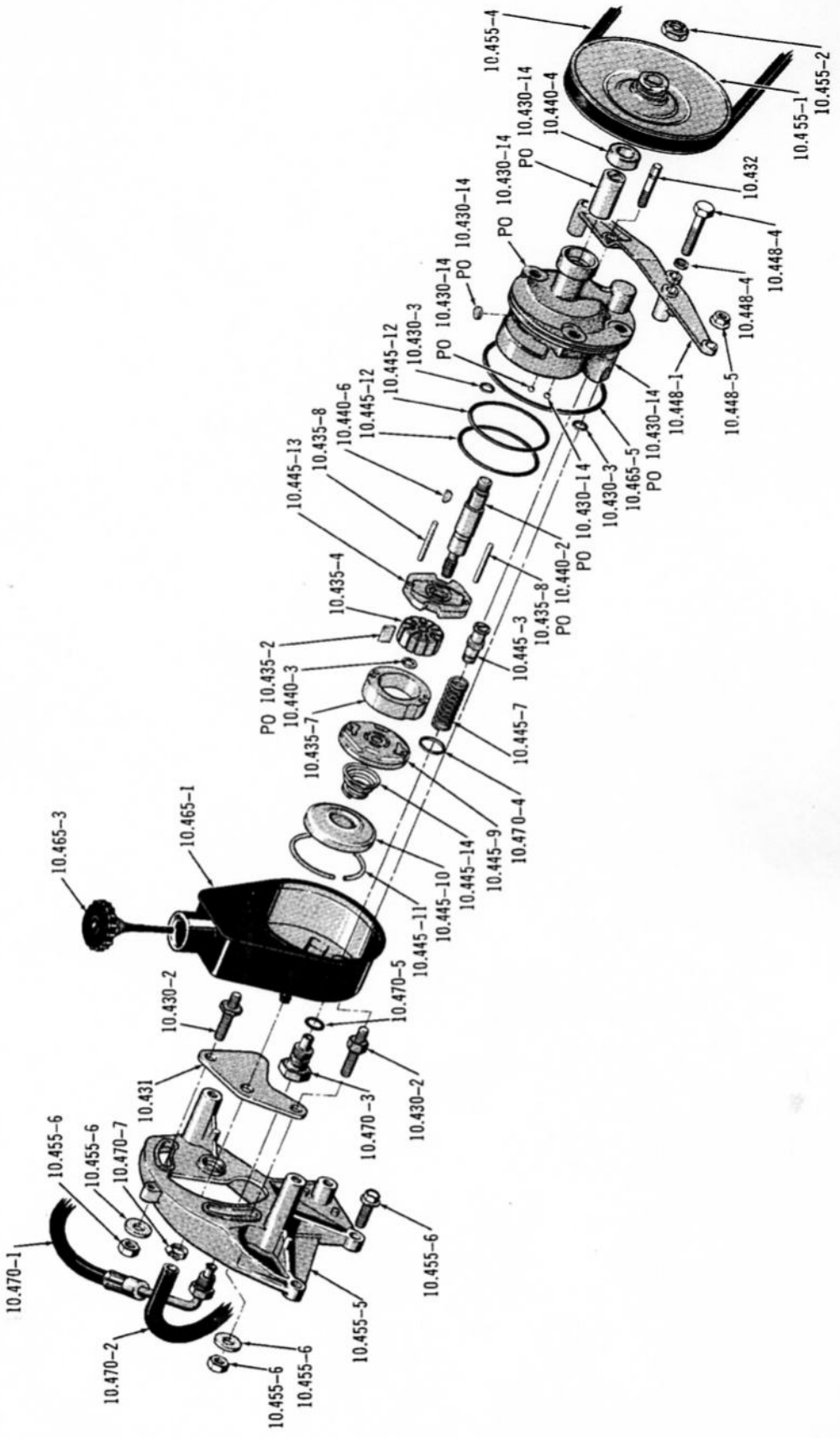

POWER STEERING PUMP, RESERVOIR AND HOSES . . . V8 (1972-TYPE 2)

GROUP NO. — DESCRIPTION — YEAR and MODEL	"L" CODE	PAKS CODE	PRIMARY GROUP NO.	PER CAR	PART NO.	CODE
10.002–1 CROSSMEMBER, Front Suspension						
67/69 01 (Six)			.....	1	318 1671	
70 01–40 (Six)			.....	1	319 5479	
71/ 01–40 (Six)			.....	1	321 1186	
67/69 01 (V8)			.....	1	318 2245	
70 01 (V8)			.....	1	319 5133	
71/ 01–40 (V8)			.....	1	321 1187	
67 10 (Six–LAC) *(Use 319 1199)*			.....	1	318 6458	
67 10 (Six–WAC)			.....	1	318 6448	
68 10 (Six–LAC–* 10–1)			.....	1	319 1199	
68 10 (Six–LAC–* 10–2)			.....	1	319 0902	
68 10 (Six–WAC–* 10–1)			.....	1	318 6448	
68 10 (Six–WAC–* 10–2) *(Use 319 0902)*			.....	1	319 0913	
69/70 10 (Six) *(Ref. Pr. List)*			.....	1	318 9237	
71/ 10–70 (Six)			.....	1	321 1188	
67 10 (V8)			.....	1	318 6531	
68 10 (V8–* 10–1)			.....	1	318 6531	
68 10 (V8–* 10–2)			.....	1	319 0903	
69/70 10 (V8) *(Ref. Pr. List)*			.....	1	318 9238	
71/ 10–70 (V8) 3218703			USE	1	~~321 1189~~	
68/70 30–70 (V8) *(Ref. Pr. List)*			.....	1	318 9238	
67 50–80 (Six) *(Use 319 1200)*			.....	1	318 6474	
67 50–80 (V8)			.....	1	318 6532	
68/70 70 (Six)			.....	1	318 9237	
68 80 (Six–* 10–1)			.....	1	319 1200	
68 80 (Six–* 10–2)			.....	1	319 0905	
69/70 80 (Six)			.....	1	319 3217	
71/ 80 (Six)			.....	1	321 1191	
68 80 (V8–* 10–1)			.....	1	319 1201	
68 80 (V8–* 10–2)			.....	1	319 0904	
69/70 80 (V8)			.....	1	319 3216	
71/ 80 (V8)			.....	1	321 1190	
10.002–2 ATTACHING PARTS, Crossmember To Side Sill						
BOLT, Hexagon ..... 67/68 (1/2" Dia.)			.....	2	317 8643	
BOLT, Hexagon ..... 67/ (9/16" Dia. –Oversize)			.....	2	318 2121	
BOLT, Hexagon ..... 69 (1/2" Dia.)			.....	2	319 6530	
BOLT, Hexagon ..... 70/71 (1/2–20 x 1–5/16)			.....	2	319 6530	
BOLT, Hexagon ..... 70/ (1/2–20 x 1–1/4)			17.038	2	G181698	
STUD ..... 67/68 *(Use 319 6430)*			.....	2	317 8644	
STUD 69/			.....	2	319 6430	
WASHER, Plain 70/			.....	2	400 4134	
NUT, Lock 67/			.....	2	319 1540	
10.002–3 BRACE, Front Suspension Crossmember To Strut Rod Bracket						
67/69 01 (Six)			.....	1	317 8380	
10.002–4 ATTACHING PARTS, Brace To Crossmember						
BOLT, Hexagon ..... 67/69 01 (Six)			17.038	2	G181636	NA
WASHER, Lock ..... 67/69 01 (Six)			10.260	2	400 3803	
NUT, Hexagon ..... 67/69 01 (Six)			17.406	2	G120369	NA

FRONT SUSPENSION - POWER STEERING - STEERING GEAR

10.002–5 ATTACHING PARTS, Brace To Strut Rod Bracket

BOLT, Hexagon	67/69	01 (Six)	***(Use G448695)***	17.038	1	G181637 NA
WASHER, Plain	67/69	01 (Six)		17.814	1	400 1104
WASHER, Lock	67/69	01 (Six)		10.260	1	400 3803
NUT, Hexagon	67/69	01 (Six)		17.406	1	G120369 NA

10.004–1 SPINDLE, Steering Knuckle

67	01 (Six)	***(Use 319 1581)***	2	317 3440
68	01-70 (Six)		2	319 1581
69	01 (Six-LDB)		2	319 3823
70	01-40 (LHD-Six-LDB)		2	321 0154
71	01-40 (LHD-Six-LDB-* 10-43)		2	321 0154
71	01-40 (Six-LDB-* 10-44 And * 10-73)		2	321 1323
71	01-40 (Six-LDB-* 10-44 And * 10-72)		2	321 1325
72	01-40 (LHD-Six-LDB-* 10-43 And * 10-91)		2	321 0154
72	01-40 (LHD-Six-LDB-* 10-43 And * 10-92)		2	321 8886
72	01-40 (Six-LDB-* 10-44)		2	321 1323
67	01-10 (V8-LDB)		2	317 3441
67/68	01 (V8-WDB)	***(Use 319 3823)***	2	317 7129
68	01-10-30-70 (V8-LDB)		2	319 1582
69	01 (V8-Except SC/RAMBLER)		2	319 3711
69	09 (SC/RAMBLER)		2	319 4845
69	01-30-70 (V8-WDB)		2	319 4845
70	01 (V8-LDB-* 10-43)		2	321 0155
70	01 (V8-LDB-* 10-44)		2	321 1325
71/	01-40 (V8-LDB-* 10-43)		2	321 1323
71/	01 (V8-LDB-* 10-44)		2	321 1325
70	01-10-30-70-80 (WDB)		2	321 0153
67/68	10-50-80 (WDB)	***(Use 319 3823)***	2	317 7129
69	10-30-70 (V8-LDB)		2	319 1484
69	10 (V8-WDB)		2	319 4845
70/	10-80 (Six-LDB)(304-LDB)		2	321 0156
70/	10-80 (360-LDB)(390-LDB)(401-LDB)		2	321 1325
67	15-16-17-19 (Six-LDB-Except Heavy Duty Brakes)	***(Use 319 1581)***	2	317 3440
68	15-17-19 (Six-LDB)		2	319 1581
69	15-19 (Six-LDB)		2	319 3711
67	18 (Six-LDB)		2	317 3441
68	18 (Six-LDB)		2	319 1582
69	18 (Six-LDB)		2	319 1484
70	19 (MACHINE)		2	321 0153
68	30-70 (V8-WDB)	***(Use 319 3823)***	2	317 7129
70	30-70 (V8-LDB)		2	321 1325
67	50-80 (LDB)		2	317 3441
69	70 (Six-LDB-Used With Red Line Tires)		2	319 1484
69	70 (Six-LDB-Used Less Red Line Tires)		2	319 3823
70/	70 (Six-LDB-* 10-44)		2	321 0156
70	70 (Six-LDB-* 10-43)		2	321 0154
72	70 (Six-LDB-* 10-43 And * 10-91)		2	321 0154
72	70 (Six-LDB-* 10-43 And * 10-92)		2	321 8886
71/	70 (V8-LDB)		2	321 1325
68	80 (LDB)		2	319 1582
69	80 (LDB)		2	319 1484
69	80 (V8-WDB)		2	319 4845
71/	WDB		2	321 0404
67	***15-16-17-19 (Heavy Duty Brakes-Six-* 10-3)***		2	317 3441
68	***15-17-19 (Heavy Duty Brakes-Six-* 10-3)***		2	319 1582
69	***10-80 (Export-LHD-Six-WDB)***		2	319 4845
69	***15-19 (Heavy Duty Brakes-Six-* 10-33)***		2	319 1484
69	***10 (RHD-Six-WDB)***		2	319 4845

FRONT SUSPENSION - POWER STEERING - STEERING GEAR

10.004–2 ATTACHING PARTS, Spindle To Steering Knuckle Pin

01-40

BOLT, Hexagon	70/71	(3" Long) 01-40 (WDB)	.....	4	316 2998
BOLT, Hexagon	70	(4-1/4" Long) 01 (WDB)	.....	4	319 7010
BOLT, Hexagon	71	(4-1/8" Long) 01-40 (WDB)	.....	4	321 0816
BOLT, Hexagon	72	(2-3/4" Long) 01-40 (WDB-* 10-82).....	.....	4	812 1240
BOLT, Hexagon	72	(3" Long) 01-40 (WDB-* 10-81).....	.....	4	316 2998
BOLT, Hexagon	72	(4" Long) 01-40 (WDB-* 10-82).....	.....	4	812 1241
BOLT, Hexagon	72	(4-1/8" Long) 01-40 (WDB-* 10-81).....	.....	4	321 0816
BOLT, Hexagon	67/69	(1-7/8" Long) 01 (Six).....	.....	4	313 9892
BOLT, Hexagon	67/68	(3" Long) 01 (Six).....	.....	4	316 2998
BOLT, Hexagon	69	(2-1/2" Long) 01 (V8)	.....	4	317 0319
BOLT, Hexagon	69	(2-7/8" Long) 01 (Six).....	.....	4	319 3931
BOLT, Hexagon	69	(3-5/8" Long) 01 (V8)	.....	4	318 5474
BOLT, Hexagon	70/71	(2-11/32" Long) 01-40 (LHD-Six-LDB-* 10-43)	.....	4	319 7009
BOLT, Hexagon	70/71	(3-1/2" Long) 01-40 (LHD-Six-LDB-* 10-43)	.....	4	319 7008
BOLT, Hexagon	70	(4-1/4" Long) 01 (V8)	.....	4	319 7010
***BOLT, Hexagon	70	(3" Long) 01-40 (Export-Six-LDB)***	.....	4	316 2998
***BOLT, Hexagon	70	(4-1/4" Long) 01 (Export-Six-WDB)***	.....	4	319 7010
BOLT, Hexagon	71	(2-3/4" Long) 01-40 (LHD-Six-LDB-* 10-44)	.....	4	318 9823
BOLT, Hexagon	71	(3-7/8" Long) 01-40 (LHD-Six-LDB-* 10-44)	.....	4	318 9822
BOLT, Hexagon	72	(2-1/8" Long) 01-40 (LHD-Six-LDB-* 10-43 And * 10-82)	.....	4	812 1242
BOLT, Hexagon	72	(2-11/32" Long) 01-40 (LHD-Six-LDB-* 10-43) And * 10-81)	.....	4	319 7009
BOLT, Hexagon	72	(2-1/2" Long) 01-40 (LHD-Six-LDB-* 10-44 And * 10-82)	.....	4	812 1244
BOLT, Hexagon	72	(2-3/4" Long) 01-40 (LHD-Six-LDB-* 10-44 And * 10-81)	.....	4	318 9823
BOLT, Hexagon	72	(3-1/4" Long) 01-40 (LHD-Six-LDB-* 10-43 And * 10-82)	.....	4	812 1243
BOLT, Hexagon	72	(3-1/2" Long) 01-40 (LHD-Six-LDB-* 10-43 And * 10-81)	.....	4	319 7008
BOLT, Hexagon	72	(3-3/4" Long) 01-40 (LHD-Six-LDB-* 10-44 And * 10-82)	.....	4	812 1245
BOLT, Hexagon	72	(3-7/8" Long) 01-40 (LHD-Six-LDB-* 10-44 And * 10-81)	.....	4	318 9822
BOLT, Hexagon	67/68	(2-1/8" Long) 01 (V8)	.....	4	317 0316
BOLT, Hexagon	67/68	(3-1/4" Long) 01 (V8)	.....	4	317 0317
BOLT, Hexagon	70/71	(2-3/4" Long) 01-40 (V8-LDB-* 10-43)	.....	4	318 9823
BOLT, Hexagon	70/71	(3" Long) 01 (V8-* 10-44)	.....	4	316 2998
BOLT, Hexagon	70/71	(3-7/8" Long) 01-40 (V8-LDB-* 10-43)	.....	4	318 9822
BOLT, Hexagon	71	(4-1/8" Long) 01 (V8-* 10-44)	.....	4	321 0816
BOLT, Hexagon	72	(2-1/2" Long) 01-40 (V8-LDB-* 10-43 And * 10-82)	.....	4	812 1244
BOLT, Hexagon	72	(2-3/4" Long) 01-40 (V8-LDB-* 10-43 And * 10-81)	.....	4	318 9823
BOLT, Hexagon	72	(2-3/4" Long) 01-40 (V8-LDB-* 10-44 And * 10-82)	.....	4	812 1240
BOLT, Hexagon	72	(3" Long) 01-40 (V8-LDB-* 10-44 And * 10-81)	.....	4	316 2998
BOLT, Hexagon	72	(3-3/4" Long) 01-40 (V8-LDB-* 10-43 And * 10-82)	.....	4	812 1245
BOLT, Hexagon	72	(3-7/8" Long) 01-40 (V8-LDB-* 10-43 And * 10-81)	.....	4	318 9822
BOLT, Hexagon	72	(4" Long) 01-40 (V8-LDB-* 10-44 And * 10-82)	.....	4	812 1241
BOLT, Hexagon	72	(4-1/8" Long) 01-40 (V8-LDB-* 10-44 And * 10-81)	.....	4	321 0816

30-70

BOLT, Hexagon	67/68	(3" Long) 70 (Six).....	.....	4	316 2998
BOLT, Hexagon	68	(1-7/8" Long) 70 (Six).....	.....	4	313 9892
BOLT, Hexagon	69	(1-7/8" Long) 70 (Six-Used Less Red Line Tires) ..	.....	4	313 9892
BOLT, Hexagon	69	(2-1/2" Long) 70 (Six-Used With Red Line Tires)...	.....	4	317 0319

FRONT SUSPENSION - POWER STEERING - STEERING GEAR

BOLT, Hexagon	69	(2-7/8" Long) 70 (Six-Used Less Red Line Tires) ..	.....	4	319 3931
BOLT, Hexagon	69	(3-5/8" Long) 70 (Six-Used With Red Line Tires) ...	.....	4	318 5474
BOLT, Hexagon	70/71	(2-11/32" Long) 70 (LHD-Six-LDB-* 10-43)	.....	4	319 7009
BOLT, Hexagon	70/71	(3" Long) 70 (Six-LDB-* 10-44)	.....	4	316 2998
BOLT, Hexagon	70/71	(3-1/2" Long) 70 (LHD-Six-LDB-* 10-43)	.....	4	319 7008
BOLT, Hexagon	70	(4-1/4" Long) 70 (Six-* 10-44)	.....	4	319 7010
***BOLT, Hexagon	***70	***(3" Long) 70 (Export-Six-LDB)***.....	.....	4	316 2998
***BOLT, Hexagon	***70	***(3" Long)(Export-Six-WDB)***.....	.....	4	316 2998
BOLT, Hexagon	71	(4-1/8" Long) 70 (Six-LDB-* 10-44)	.....	4	321 0816
BOLT, Hexagon	72	(2-1/8" Long) 70 (LHD-Six-LDB-* 10-43 And * 10-82)	.....	4	812 1242
BOLT, Hexagon	72	(2-11/32" Long) 70 (LHD-Six-LDB-* 10-43 And * 10-81)	.....	4	319 7009
BOLT, Hexagon	72	(2-3/4" Long) 70 (Six-LDB-* 10-44 And * 10-82)...	.....	4	812 1240
BOLT, Hexagon	72	(2-3/4" Long) 70 (Six-WDB-* 10-82)	.....	4	812 1240
BOLT, Hexagon	72	(3" Long) 70 (Six-LDB-* 10-44 And * 10-81).....	.....	4	316 2998
BOLT, Hexagon	72	(3" Long) 70 (Six-WDB-* 10-81)	.....	4	316 2998
BOLT, Hexagon	72	(3-1/4" Long) 70 (LHD-Six-LDB-* 10-43 And * 10-82)	.....	4	812 1243
BOLT, Hexagon	72	(3-1/2" Long) 70 (LHD-Six-LDB-* 10-43 And * 10-81)	.....	4	319 7008
BOLT, Hexagon	72	(4" Long) 70 (Six-LDB-* 10-44 And * 10-82).....	.....	4	812 1241
BOLT, Hexagon	72	(4" Long) 70 (Six-WDB-* 10-82)	.....	4	812 1241
BOLT, Hexagon	72	(4-1/4" Long) 70 (Six-LDB-* 10-44 And * 10-81)...	.....	4	321 0816
BOLT, Hexagon	72	(4-1/4" Long) 70 (Six-WDB-* 10-81)	.....	4	321 0816
BOLT, Hexagon	67/68	(2-1/8" Long) 70 (V8)	.....	4	317 0316
BOLT, Hexagon	67/68	(3-1/4" Long) 70 (V8)	.....	4	317 0317
BOLT, Hexagon	68/69	(2-1/2" Long) 30-70 (V8)	.....	4	317 0319
BOLT, Hexagon	68/69	(3-5/8" Long) 30-70 (V8)	.....	4	318 5474
BOLT, Hexagon	70	(4-1/4" Long) 30-70 (V8)	.....	4	319 7010
BOLT, Hexagon	70/71	(3" Long) 30-70 (V8)	.....	4	316 2998
BOLT, Hexagon	71	(4-1/8" Long) 70 (V8)	.....	4	321 0816
BOLT, Hexagon	72	(2-3/4" Long) 70 (V8-* 10-82)	.....	4	812 1240
BOLT, Hexagon	72	(3" Long) 70 (V8-* 10-81)	.....	4	316 2998
BOLT, Hexagon	72	(4" Long) 70 (V8-* 10-82)	.....	4	812 1241
BOLT, Hexagon	72	(4-1/4" Long) 70 (V8-* 10-81)	.....	4	321 0816

10-50-80

BOLT, Hexagon	67/68	(2-1/2" Long) 50-80	.....	4	317 0319
BOLT, Hexagon	67/68	(3-5/8" Long) 50-80	.....	4	318 5474
***BOLT, Hexagon.....	***67/68	***(2-1/2" Long) 10-50-80 (Export-LHD-WDB)***	.....	4	317 0319
BOLT, Hexagon	69	(2-7/8" Long) 80	.....	4	319 3931
BOLT, Hexagon	69	(4" Long) 80	.....	4	319 3932
BOLT, Hexagon	70	(4-1/4" Long) 10-80	.....	4	319 7010
BOLT, Hexagon	70/71	(3" Long) 10-80	.....	4	316 2998
BOLT, Hexagon	71	(4-1/8" Long) 10-80	.....	4	321 0816
BOLT, Hexagon	72	(2-3/4" Long) 10-80 (* 10-82).....	.....	4	812 1240
BOLT, Hexagon	72	(3" Long) 10-80 (* 10-81).....	.....	4	316 2998
BOLT, Hexagon	72	(4" Long) 10-80 (* 10-82).....	.....	4	812 1241
BOLT, Hexagon	72	(4-1/8" Long) 10-80 (* 10-81).....	.....	4	321 0816
BOLT, Hexagon	67/68	(2-1/8" Long) 15-16-17-19 (Six-LDB)	.....	4	317 0316
BOLT, Hexagon	67/68	(2-1/2" Long) 18 (Six-LDB)	.....	4	317 0319
BOLT, Hexagon	67/68	(3-1/4" Long) 15-16-17-19 (Six-LDB)	.....	4	317 0317
BOLT, Hexagon	67/68	(3-5/8" Long) 18 (Six-LDB)	.....	4	318 5474
***BOLT, Hexagon	***67/68	***(2-1/2" Long) 10 (RHD-Six-WDB)***	.....	4	317 0319
***BOLT, Hexagon	***67/68	***(3-5/8" Long) 10 (RHD-Six-WDB)***	.....	4	318 5474
***BOLT, Hexagon	***67/68	***(3-5/8" Long) 15-16-17-19 (Heavy Duty Brakes-Six-* 10-3)***	.....	4	318 5474

FRONT SUSPENSION - POWER STEERING - STEERING GEAR

BOLT, Hexagon	69	(2-1/2" Long) 15-19 (Six-LDB)		4	317 0319
BOLT, Hexagon	69	(2-7/8" Long) 18 (Six)		4	319 3931
BOLT, Hexagon	69	(3-5/8" Long) 15-19 (Six-LDB)		4	318 5474
BOLT, Hexagon	69	(4" Long) 18 (Six)		4	319 3932
BOLT, Hexagon	***67/68***	***(2-1/2" Long) 15-16-17-19 (Heavy Duty Brakes-Six-* 10-3)***		4	317 0319
BOLT, Hexagon	***67/68***	***(3-5/8" Long) 10-50-80 (Export-LHD-Six-WDB)***		4	318 5474
BOLT, Hexagon	***69***	***(2-7/8" Long) 15-19 (Heavy Duty Brakes-Six-* 10-33)***		4	319 3931
BOLT, Hexagon	***69***	***(2-7/8" Long) 15-19 (Export-LHD-Six-WDB)***		4	319 3931
BOLT, Hexagon	***69***	***(2-7/8" Long) 15-19 (RHD-Six-WDB)***		4	319 3931
BOLT, Hexagon	***69***	***(4" Long) 15-19 (Export-LHD-Six-WDB)***		4	319 3932
BOLT, Hexagon	***69***	***(4" Long) 15-19 (Heavy Duty Brakes-Six-* 10-33)***		4	319 3932
BOLT, Hexagon	***69***	***(4" Long) 15-19 (RHD-Six-WDB)***		4	319 3932
BOLT, Hexagon	***70***	***(3" Long) 10 (RHD-Six)***		4	316 2998
BOLT, Hexagon	***70***	***(3" Long) 10-80 (Export-Six-LDB)***		4	316 2998
BOLT, Hexagon	***70***	***(4-1/4" Long) 10 (RHD-Six)***		4	319 7010
BOLT, Hexagon	67/68	(3-7/8" Long) 10-50-80 (V8)		4	318 9822
BOLT, Hexagon	67/68	(2-1/2" Long) 10 (V8)		4	317 0319
BOLT, Hexagon	67/68	(2-3/4" Long) 10-50-80 (V8)		4	318 9823
BOLT, Hexagon	69	(2-7/8" Long) 10 (V8)		4	319 3931
BOLT, Hexagon	69	(4" Long) 10 (V8)		4	319 3932
SPACER	67/68	10-50-80 (V8)		4	316 6546
SPACER	68	18-80 (Six)		4	316 6546
SPACER	68	30-70		4	316 6546
WASHER, Lock	67/		17.820	8	G103328 NA
NUT, Hexagon	67/71		17.406	8	400 1241
NUT, Hexagon	72			8	400 4563

10.010–1 PLATE, Turning Radius Stop

67/69	10-50-80		2	317 0315
70/71			2	319 4884
72	(* 10-81)		2	319 4884
67	(Left) 01	***(Use 319 1073)***	1	317 1014
68/69	(Left) 01		1	319 1073
68/69	(Left) 30-70		1	319 1062
67	(Right) 01		1	317 1015
68/69	(Right) 01		1	319 1074
68/69	(Right) 30-70		1	319 1063

10.010–1a STOP KIT, Turning Radius

72	10-80...(Incl. Brackets, Plates And Bolts)		1	812 3079

10.010–2 BRACKET, Turning Radius Stop

67/69	(Left) 10-50-80		1	317 0313
70/71	(Left)		1	317 0313
72	(Left)(* 10-81)		1	317 0313
67/69	(Right) 10-50-80		1	317 0314
70/71	(Right)		1	317 0314
72	(Right)(* 10-81)		1	317 0314

10.013 PIN, Steering Knuckle

67	01	***(Use 319 1580)***	2	318 2572
68/69	01-30-70		2	319 1580
67	10-50-80		2	316 2825
68/69	10-80		2	319 1579
70		***(Use 321 3951)***	2	319 4725
71	LDB	***(Use 321 3951)***	2	319 4725
71	WDB		2	321 3951
72			2	321 3951

FRONT SUSPENSION - POWER STEERING - STEERING GEAR

10.023–1 BEARING KIT, Steering Knuckle Pin Thrust

67/69	01–30–70...(Incl. Bearing, "O" Rings And Washers)	.....	2	320 4934
67/69	10–50–80...(Incl. Bearing, "O" Rings And Washers)	.....	2	320 4935

10.023–2 ATTACHING PARTS, Bearing To Steering Knuckle Pin

WASHER, Plain	67/69		.....	2	316 5955
WASHER, Lock	67/69	01–30–70	17.820	2	G120384
NUT, Hexagon	67/69	01–30–70	17.406	2	G120371 NA
NUT, Hexagon	67/69	10–50–80	17.408	2	G102647 NA
PIN, Groove	67/69	10–50–80	.....	2	313 5387

10.023–3 "O" RING, Steering Knuckle Pin Thrust Bearing Upper

67/69	.....	.....	2	317 1678

10.023–4 "O" RING, Steering Knuckle Pin Thrust Bearing Lower

67/69	.....	23.081	2	344 6974

10.023–5 WASHER, Steering Knuckle Pin Thrust Bearing Upper (Delrin)

67/69	01–30–70.....	.....	2	317 1679

10.035 ARM, Steering Knuckle

71	(Left).....	.....	1	319 5197
72	(Left)(* 10–81).....	.....	1	319 5197
72	(Left)(* 10–82).....	.....	1	321 5164
67/69	(Left) 01–30–70	.....	1	318 2588
70	(Left) 01–30–40–70	.....	1	319 5197
67	(Left) 10–50–80 (* 10–4)	.....	1	317 0309
67	(Left) 10–50–80 (* 10–5)	.....	1	318 8817
68/69	(Left) 10–80	.....	1	318 8817
70	(Left) 10–80 (LHD)	.....	1	319 5197
70	***(Left) 10–80 (RHD)***	.....	1	318 8817
71	(Right).....	.....	1	319 5198
72	(Right)(* 10–81).....	.....	1	319 5198
72	(Right)(* 10–82).....	.....	1	321 5165
67/69	(Right) 01–30–70	.....	1	318 2589
70	(Right) 01–30–40–70	.....	1	319 5198
67	(Right) 10–50–80 (* 10–4)	.....	1	317 0310
67	(Right) 10–50–80 (* 10–5)	.....	1	318 8818
68/69	(Right) 10–80	.....	1	318 8818
70	(Right) 10–80 (LHD)	.....	1	319 5198
70	***(Right) 10–80 (RHD)***	.....	1	318 8818

10.042–1 TRUNNION KIT, Front Suspension Upper Control Arm

67/69	(Bushing Type) 10–50–80...(Incl. Trunnion, Bushing, Seal And Plugs)	.....	2	320 3970
67	(Needle Bearing Type) 10–50–80...(Incl. Trunnion, Bushing, Seal And Plugs) ..... ***(Ref. Pr. List)***	.....	2	320 3924

10.042–2 TRUNNION, Front Suspension Upper Control Arm

67/69	01–30–70...(Incl. Bushing)	.....	2	318 4708
67	10–50–80 (Six) ...(Incl. Oil Groove Bronze Bushing).....	.....	2	316 7698
67	10–50–80 (V8)...(Incl. Needle Bearing)..... ***(Use 316 7698)***	.....	2	313 4705
68/69	10–80...(Incl. Oil Groove Bronze Bushing).....	.....	2	316 7698
68	80...(Incl. Needle Bearing) ..... ***(Use 316 7698)***	.....	2	313 4705

FRONT SUSPENSION - POWER STEERING - STEERING GEAR

10.042–3 BEARING, Front Suspension Upper Control Arm Trunnion Needle

67	10-50-80 (V8)	.....	.....	4	313 3514
68	80	.....	.....	4	313 3514

10.042–4 BUSHING, Front Suspension Upper Control Arm Trunnion

67/69	10-50-80	.....	.....	4	315 3531

10.042–5 PLUG, Front Suspension Upper Control Arm Trunnion Bushing Lubrication Fitting Hole

67/69	10-50-80	.....	5.170	4	316 4636

10.042–6 SEAL, Front Suspension Upper Control Arm Trunnion Dirt

67/69	01-30-70 (In Trunnion)	.....	.....	2	317 2032
67/69	10-50-80	.....	.....	4	316 3689

10.045 ARM, Front Suspension Lower Control (Incl. Ball Joint And Pivot Bushing)

67	01 ***(Use 319 0939)***	.....	.....	2	318 2593
68/69	01-30-70	351	.....	2	319 0939
70/	01-40	351	.....	2	319 5098
67	10-50-80	351	.....	2	318 6473
68	10-80 (* 10-1)	351	.....	2	318 6473
68	10-80 (* 10-2)	351	.....	2	319 0941
69	10-80	351	.....	2	319 4018
70/	10-30-70-80	351	USE	2	~~812 0138~~ →
72	***(Heavy Duty)(Export)(Police)***		.....	2	321 8990

10.046–1 BRACKET, Front Suspension Lower Control Arm Jounce Bumper

70/	.....		.....	2	319 5192

10.046–2 ATTACHING PARTS, Lower Control Arm Jounce Bumper Bracket To Sill

BOLT, Hexagon	70	.....	.....	6	400 3847
SCREW, Machine.....	71/	.....	17.629	6	G273573

10.046–3 BUMPER, Front Suspension Lower Control Arm Jounce

70/	.....		.....	2	319 6498

10.046–4 ATTACHING PARTS, Bumper To Jounce Bumper Bracket

CLIP	70/	.....	8.224	2	316 4299

10.048–1 BALL JOINT KIT, Front Suspension Lower Control Arm (Incl. Retainer, Bolt, Lockwashers And Nuts)

67/69	01-30-70	355	.....	2	320 6709
70/	01-40	355	.....	2	~~448 7648~~
67/69	10-50-80	355	.....	2	320 6784
70/	10-30-70-80	355	.....	2	~~812 0140~~

10.048–2 ATTACHING PARTS, Ball Joint To Steering Knuckle Pin

NUT, Hexagon.....	67/69	.....	17.408	2	G119255 NA
NUT, Hexagon.....	70/	.....	.....	2	400 3959
PIN, Cotter	67/	.....	17.460	2	G108630 NA

Printed in U.S.A.

FRONT SUSPENSION - POWER STEERING - STEERING GEAR

10.048–3 ATTACHING PARTS, Ball Joint To Lower Control Arm

BOLT, Hexagon	67/		17.038	4	G454884	NA
WASHER, Lock	67/		17.820	4	G120214	NA
NUT, Hexagon	67/		17.406	4	G120368	

10.048–4 COVER, Front Suspension Lower Control Arm Ball Joint Dust

67/69		.....	2	320	5867
70/		.....	2	448	7895

10.048–4a RETAINER, Front Suspension Lower Control Arm Ball Joint Dust Cover

70/		.....	2	448	7896

10.048–5 PLUG, Front Suspension Lower Control Arm Ball Joint Lubrication Fitting Hole

67/		5.170	2	316	4636

10.050–1 BOLT KIT, Front Suspension Lower Control Arm Pivot Eccentric (Incl. Bolt Washer, Lockwasher And Nut)

67/69	01-30-70	.....	2	320	5113
68	10-80 (* 10-2)	.....	2	320	5113
69	10-80	.....	2	320	5113

10.050–2 BOLT, Front Suspension Lower Control Arm Pivot

67	10-50-80	17.038	2	G181737	NA
68	10-80 (* 10-1)	17.038	2	G181737	NA
70/		.....	2	319	5144

10.050–3 ATTACHING PARTS, Pivot Bolt To Front Suspension Crossmember

BUSHING	67	01	.....	2	316	9723
BUSHING	68/	01-30-70	.....	2	319	0911
BUSHING	67	10-50-80	.....	2	318	6437
BUSHING	68	10-80 (* 10-1)	.....	2	318	6437
BUSHING	68	10-80 (* 10-2)	.....	2	319	0911
BUSHING	69/	10-80	.....	2	319	0911
BUSHING	***72***	***(Heavy Duty)(Police)(Export)***	.....	2	321	8997
WASHER, Eccentric	67/69	01-30-70	.....	2	316	9732
WASHER, Eccentric	68	10-80 (* 10-2)	.....	2	316	9732
WASHER, Eccentric	69	10-80	.....	2	316	9732
WASHER, Eccentric	70/		.....	4	318	9578
WASHER, Plain	67	10-50-80	17.814	4	400	1165
WASHER, Plain	68	10-80 (* 10-1)	17.814	4	400	1165
WASHER, Lock	67/69		17.820	2	G120898	NA
NUT, Hexagon	67/69	01-30-70	.....	2	316	9731
NUT, Hexagon	68	10-80 (* 10-2)	.....	2	316	9731
NUT, Hexagon	69	10-80	.....	2	316	9731
NUT, Hexagon	70/		.....	2	400	3979
NUT, Lock	67	10-50-80	17.416	2	G442834	
NUT, Lock	68	10-80 (* 10-1)	17.416	2	G442834	

10.055–1 ROD, Front Suspension Lower Control Arm To Side Sill Strut

70		.....	2	319	4723
71	01-40	.....	2	319	4723
72	01-40 (* 10-81)	.....	2	319	4723
71	10-70-80	.....	2	321	2464
72	10-70-80 (* 10-81)	.....	2	321	2464

67/68	(Left) 01 ..... *(Use 319 6440)*	.....	1	316 9734	
69	(Left) 01	.....	1	319 6440	
72	(Left) 01-40 (* 10-82)	.....	1	321 5891	
67	(Left) 10-50-80	.....	1	317 9301	
68	(Left) 10-80 (* 10-1)	.....	1	317 9301	
68	(Left) 10-80 (* 10-2)	.....	1	318 7867	
69	(Left) 10-80	.....	1	319 2106	
72	(Left) 10-70-80 (* 10-82)	.....	1	321 5156	
68	(Left) 30-70	.....	1	318 9244	
69	(Left) 30-70	.....	1	319 6441	
67/68	(Right) 01 ..... *(Use 319 6440)*	.....	1	316 9734	
69	(Right) 01	.....	1	319 6440	
72	(Right) 01-40 (* 10-82)	.....	1	321 5892	
67	(Right) 10-50-80	.....	1	317 9302	
68	(Right) 10-80 (* 10-1)	.....	1	317 9302	
68	(Right) 10-80 (* 10-2)	.....	1	318 7868	
69	(Right) 10-80	.....	1	319 2107	
72	(Right) 10-70-80 (* 10-82)	.....	1	321 5157	
68	(Right) 30-70 ..... *(Use 319 6442)*	.....	1	318 9245	
69	(Right) 30-70	.....	1	319 6442	

10.055-2 ATTACHING PARTS, Rod To Lower Control Arm

BOLT, Hexagon	67/69	01-30-70	17.038	4	G454975	NA
BOLT, Hexagon	67/69	10-50-80	17.038	4	G454977	NA
BOLT, Hexagon	70/71	.....	.....	4	400 4006	
BOLT, Hexagon	72	(1-1/2" Long	17.038	4	G427555	NA
BOLT, Hexagon	72	(1-3/4" Long)	.....	4	400 4006	
WASHER, Lock	67/69	.....	17.820	4	G131100	
NUT, Hexagon	67/69	.....	17.412	4	G9415570	NA
NUT, Hexagon	70/	.....	.....	4	400 4005	

10.055-3 ATTACHING PARTS, Rod To Bracket (At Side Sill)

WASHER, Dished	67/69	.....	.....	4	317 1581
WASHER, Dished	70/	01-40	.....	4	317 1581
WASHER, Dished	70	10-30-70-80 (* 10-38)	.....	4	317 1581
WASHER, Dished	71	10-80	.....	4	317 1581
WASHER, Dished	70	10-30-70-80 (Rear Bushing-* 10-39)	.....	4	317 1581
WASHER, Dished	71/	10-70-80 (Rear Bushing)(Except Fleet) (Except Export)	.....	4	319 4397
***WASHER, Dished	71/***	***10-80 (Fleet-* 10-39)(Export-* 10-39)(Rear Bushing)*** .	.....	4	317 1581
NUT, Hexagon	67/68	01	.....	4	317 2207
NUT, Hexagon	67	10-50-80	.....	2	317 2207
NUT, Hexagon	68	10-80 (* 10-1)	.....	2	317 2207
NUT, Hexagon	68	10-80 (* 10-2)	.....	4	317 2207
NUT, Hexagon	69/	(11/16-18 x 11/16)	.....	4	317 2207
NUT, Jam	69/	(11/16-18 x 13/32)	.....	2	400 3919

10.055-4 BRACKET, Front Suspension Lower Control Arm Strut Rod To Side Sill (Incl. Bushing-Except on Parts Noted)

67/68	(Left) 01 (Six)(V8-WAT) ..... *(Use 448 5627)*	.....	1	318 1797
67/69	(Left) 01 (V8-WST)(V8-W4ST)	.....	1	318 3549
69	(Left) 01 (V8-WAT)	.....	1	448 5627
69	(Left) 01 (Six)	.....	1	448 5627
70/	(Left) 01-40 (WST)(W4ST)	.....	1	319 7742
70/	(Left) 01 (WAT-Except Rallye Package)	.....	1	319 8005
72	(Left) 06 (WAT-Rallye Package-* 10-90)	.....	1	319 7742

FRONT SUSPENSION - POWER STEERING - STEERING GEAR

70	(Left) 10-30-70-80 (WAT-* 10-38)	.....	1	319 8005
70	(Left) 10-30-70-80 (WAT-* 10-39)...(Less Bushing)	.....	1	319 8004
67	(Left) 10	.....	1	318 1797
68	(Left) 10-70 (* 10-6)	.....	1	318 1797
68	(Left) 10-70 (* 10-7)	.....	1	448 5627
69	(Left) 10-70	.....	1	448 5627
70	(Left) 10-30-70 (WST-* 10-38)(W4ST-* 10-38)...(Less Bushing)	.....	1	319 7743
70	(Left) 10-30-70 (WST-* 10-39)(W4ST-* 10-39)...(Less Bushing)	.....	1	319 7248
71	(Left) 10 (WST-Except Fleet-* 10-76)(WST-Except Export-* 10-76)	.....	1	321 0925
71	(Left) 10 (WST-Except Fleet-* 10-77)(WST-Except Export-* 10-77)	.....	1	321 4861
72	(Left) 10 (WST-Except Fleet)(WST-Except Export)	.....	1	321 4861
71	(Left) 10 (W4ST-Except Fleet-* 10-76)(W4ST-Except Export-* 10-76)	.....	1	321 0925
71	(Left) 10 (W4ST-Except Fleet-* 10-77)(W4ST-Except Export-* 10-77)	.....	1	321 4861
71	(Left) 10-80 (WAT-Except Fleet-* 10-76)(WAT-Except Export-* 10-76)	.....	1	321 0928
71	(Left) 10-80 (WAT-Except Fleet-* 10-77)(WAT-Except Export-* 10-77)	.....	1	321 4862
72	(Left) 10-80 (WAT-Except Fleet)(WAT-Except Export)	.....	1	321 4862
71	***(Left) 10-80 (Fleet-WAT-* 10-74)(Export-WAT-* 10-74)***	.....	1	321 0928
71	***(Left) 10-80 (Fleet-WAT-* 10-75)(Export-WAT-* 10-75)***	.....	1	319 8005
72	***(Left) 10-80 (Fleet-WAT-* 10-38)(Export-WAT-* 10-38)***	.....	1	319 8005
71	***(Left) 10 (Fleet-WST-* 10-74)(Export-WST-* 10-74)***	.....	1	321 0925
71	***(Left) 10 (Fleet-WFGS-* 10-74)(Export-WFGS-* 10-74)***	.....	1	321 0925
71	***(Left) 10 (Fleet-WST-* 10-75)(Export-WST-* 10-75)***	.....	1	321 4719
72	***(Left) 10 (Fleet-WST-* 10-38)(Export-WST-* 10-38)***	.....	1	321 4719
71	***(Left) 10 (Fleet-WFGS-* 10-75)(Export-WFGS-* 10-75)***	.....	1	321 4719
68/69	(Left) 30	.....	1	448 5627
70/	(Left) 40 (WAT)	.....	1	319 8005
67	(Left) 50-80 (WST)(WOD)(W4ST)	.....	1	318 1933
67	(Left) 50-80 (WAT)	.....	1	318 1797
68	(Left) 70 (* 10-6)	.....	1	318 1797
71	(Left) 70 (WST-* 10-78)(W4ST-* 10-78)	.....	1	321 0925
71	(Left) 70 (WST-* 10-79)(W4ST-* 10-79)	.....	1	321 4861
72	(Left) 70 (WST)(W4ST)	.....	1	321 4861
71	(Left) 70 (WAT-* 10-78)	.....	1	321 0928
71	(Left) 70 (WAT-* 10-79)	.....	1	321 4862
72	(Left) 70 (WAT)	.....	1	321 4862
68	(Left) 80 (WAT-* 10-6)	.....	1	318 1797
68	(Left) 80 (WAT-* 10-7)	.....	1	448 5627
68	(Left) 80 (WST-* 10-6)(WOD-* 10-6)(W4ST-* 10-6)	.....	1	318 1933
68	(Left) 80 (WST-* 10-7)(WOD-* 10-7)(W4ST-* 10-7)	.....	1	448 5629
69	(Left) 80 (WAT)	.....	1	448 5627
69	(Left) 80 (Six-WST)	.....	1	448 5629
70	(Left) 80 (WST-* 10-38)...(Less Bushing) ***(Ord. 319 7249, 319 8756, 319 8757)***	.....	1	319 7744
70	(Left) 80 (WST-* 10-39)...(Less Bushing)	.....	1	319 7249
71	***(Left) 80 (Fleet-Six-WST-* 10-74)***	.....	1	321 0927
71	***(Left) 80 (Fleet-Six-WST-* 10-75)***	.....	1	321 4726
72	***(Left) 80 (Fleet-Six-WST-* 10-38)***	.....	1	321 4726
67/68	(Right) 01 (LHD-Six)	.....	1	317 6751
70/	(Right) 01-40 (Six)	.....	1	319 7865
67/69	(Right) 01 (V8)	.....	1	318 2455
70/	(Right) 01-40 (V8)	.....	1	319 7867
69	(Right) 01 (LHD-Six)	.....	1	448 5628
67	***(Right) 01 (RHD-WST)***	.....	1	317 4256
68	***(Right) 01 (RHD-WST)***	.....	1	317 6751
67/69	***(Right) 01 (RHD-Six-WAT)***	.....	1	317 4294
69	***(Right) 01 (RHD-Six-WST)***	.....	1	448 5628
67	(Right) 10 (Six)(LHD-V8)	.....	1	317 6751
68	(Right) 10 (Six-* 10-6)(LHD-V8-* 10-6)	.....	1	317 6751
68	(Right) 10 (Six-* 10-7)(LHD-V8-* 10-7)	.....	1	448 5628
69	(Right) 10 (Six)	.....	1	448 5628
69	(Right) 10 (LHD-290)	.....	1	448 5628

FRONT SUSPENSION - POWER STEERING - STEERING GEAR

69	(Right) 10 (343)(390)	.....	1	448 5628	
70	(Right) 10-80 (LHD-* 10-38)	.....	1	319 7865	
70	(Right) 10-30-70-80 (LHD-* 10-39)...(Less Bushing)	.....	1	319 7927	
71	(Right) 10-80 (Except Fleet-* 10-76)(Except Export-* 10-76)	.....	1	321 0926	
71	(Right) 10-80 (Except Fleet-* 10-77)(Except Export-* 10-77)	.....	1	321 4863	
72	(Right) 10-80 (Except Fleet)(Except Export)	.....	1	321 4863	
67/69	***(Right) 10 (RHD-V8)***	.....	1	318 2455	
70	***(Right) 10 (RHD-V8-* 10-38)***	.....	1	319 7867	
70	***(Right) 10 (RHD-V8-* 10-39)***	.....	1	319 7866	
71	***(Right) 10-80 (Fleet-* 10-74)(Export-* 10-74)***	.....	1	321 0926	
71	***(Right) 10-80 (Fleet-* 10-75)(Export-* 10-75)***	.....	1	319 7865	
72	***(Right) 10-80 (Fleet-* 10-38)(Export-* 10-38)***	.....	1	319 7865	
68	(Right) 30-70-80 (* 10-7)	.....	1	448 5628	
69	(Right) 30-70-80	.....	1	448 5628	
70	(Right) 30-70 (* 10-38)	.....	1	319 7865	
67	(Right) 50-80	.....	1	317 6751	
68	(Right) 70-80 (* 10-6)	.....	1	317 6751	
71	(Right) 70 (* 10-78)	.....	1	321 0926	
71	(Right) 70 (* 10-79)	.....	1	321 4863	
72	(Right) 70	.....	1	321 4863	

10.055–5 ATTACHING PARTS, Bracket To Side Sill

BOLT, Hexagon	67/69	01 (V8-3-3/4" Long)	.....	1	318 2462	
BOLT, Hexagon	67	01-50-80 (1-1/8" Long)	17.038	2	G181667	NA
BOLT, Hexagon	67/69	(4-1/4" Long)	17.038	2	G193490	NA
BOLT, Hexagon	67/69	(4" Long)	17.038	2	G454985	NA
BOLT, Hexagon	70	(7/16-14 x 4) ***(Use 400 4071)***	.....	2	400 4001	
BOLT, Hexagon	70/	(7/16-14 x 4-1/8)	.....	2	400 4071	
BOLT, Hexagon	70	(7/16-14 x 4-1/4) ***(Use 400 4071)***	.....	2	400 4002	
BOLT, Hexagon	70/	01 (V8-7/16-14 x 3-3/4)	.....	1	400 4000	
BOLT, Hexagon	70	01 (V8-7/16-14 x 4-1/4) ***(Use 400 4071)***	.....	1	400 4002	
BOLT, Hexagon 70		***01-10 (Canada-7/16-20 x 1-1/8)***	17.038	2	G454972	NA
BOLT, Hexagon 70		***(Canada-7/16-20 x 4)***	17.038	2	G454985	NA
BOLT, Hexagon 68/69		***10 (RHD-V8)(3-3/4" Long)***	.....	1	318 2462	
BOLT, Hexagon 70		***10 (RHD-V8-7/16-14 x 3-3/4)***	.....	1	400 4000	
BOLT, Hexagon 70		***10 (RHD-V8-7/16-14 x 4-1/4) ..... (Use 400 4071)***	.....	1	400 4002	
BOLT, Hexagon 70		***10 (RHD-7/16-14 x 4-1/8)***	.....	2	400 4071	
STUD	67/69		.....	2	318 9724	
STUD	70/		.....	2	319 7925	
WASHER, Plain	67/68	(15/32 x1-1/8)	17.814	4	400 1120	
WASHER, Plain	67/68	(15/32 x1-1/4)	17.814	2	400 1188	
WASHER, Plain	69/	(29/64 x 1 x 9/64)	.....	AR	400 3926	
WASHER, Plain 70		***(Canada-15/32 x 1 x 1-1/8)***	17.814	2	400 1120	
WASHER, Lock	67/69		17.820	6	G131100	
WASHER, Lock 70		***(Canada-7/16 x 15/64)***	9.002	2	400 1898	
WASHER, Lock 70		***10 (RHD)***	17.820	1	G131100	
NUT, Washer Base	70/	(7/16-16 x 29/64)	.....	6	400 4005	
NUT, Hexagon 69		***01-10 (RHD-290)***	17.412	5	G9415570	NA
NUT, Hexagon 70		***(Canada-7/16-20 x 3/8)***	17.406	2	G271506	NA
NUT, Washer Base 70		***10 (RHD-V8)***	.....	5	400 4005	

10.055–6 BUSHING, Front Suspension Lower Control Arm Strut Rod

67/69	.....	.....	2	317 1493
70/	01-40	.....	2	317 1493
70	10-30-70-80 (* 10-38)	.....	2	317 1493
71/	***10-80 (Fleet-* 10-38)(Export-* 10-38)***	.....	2	317 1493

70	(Front) 10-30-70-80 (* 10-39)		.....	2	319 8756
71	(Front) 10-80 (Except Fleet-* 10-39 And * 10-77)(Except Export-* 10-39 And * 10-77)		.....	2	321 4770
71	(Front) 10-80 (Except Fleet-* 10-39 And * 10-76)(Except Export-* 10-39 And * 10-76)		.....	2	319 8756
72	(Front) 10-80 (Except Fleet-* 10-39)(Except Export-* 10-39)		.....	2	321 4770
71	(Front) 70 (* 10-39 And * 10-78)		.....	2	319 8756
71	(Front) 70 (* 10-39 And * 10-79)		.....	2	321 4770
71	***(Front) 10-80 (Fleet-* 10-39)(Export-* 10-39)***		.....	2	319 8756
70	(Rear) 10-30-70-80 (* 10-39)		.....	2	319 8757
71/	(Rear) 10-70-80 (Except Fleet-* 10-39)(Except Export-* 10-39)		.....	2	319 8757
71	***(Rear) 10-80 (Fleet-* 10-39)(Export-* 10-39)***		.....	2	319 8757

10.066-1 ARM, Front Suspension Upper Control (Incl. Bushing)

67/69	01-30-70		.....	4	317 6088
67	10-50-80 ***(Use 319 3351)***		.....	4	317 6087
68	10-80		.....	4	319 3351
69	10-80		.....	4	319 4024
70/71	(Left) 01-30-40-70...(Incl. Ball Joint And Bushing)	352	.....	1	448 8810
72	(Left) 01-40-70 (* 10-86)	352	.....	1	448 8810
72	(Left) 01-40-70 (* 10-87)	352	.....	1	812 1303
70	(Left) 10-80...(Incl. Ball Joint And Bushing) 812 1305	352	.....	1	~~319 5316~~
71	(Left) 10-80 (Except Fleet)(Except Export) ...(Incl. Ball Joint And Bushing) 322 0135 ~~[illegible]~~	352	.....	1	~~448 8810~~
72	(Left) 10-80 (Except Fleet-* 10-86)(Except Export-* 10-86)...(Incl. Ball Joint And Bushing) 322 0135	352	.....	1	448 8810
72	(Left) 10-80 (Except Fleet-* 10-87)(Except Export-* 10-87)...(Incl. Ball Joint And Bushing)	352	.....	1	812 1303
70/71	***(Left) 10-80 (Fleet)(Export)***...(Incl. Ball Joint And Bushing)	352	.....	1	321 4897
72	***(Left) 10-80 (Fleet-* 10-86)(Export-* 10-86)***...(Incl. Ball Joint And Bushing)	352	.....	1	321 4897
72	***(Left) 10-80 (Fleet-* 10-87)(Export-* 10-87)***...(Incl. Ball Joint And Bushing)	352	.....	1	812 1305
70/71	(Right) 01-30-40-70...(Incl. Ball Joint And Bushing)	352	.....	1	448 8811
72	(Right) 01-40-70 (* 10-86)...(Incl. Ball Joint And Bushing)	352	.....	1	448 8811
72	(Right) 01-40-70 (* 10-87)...(Incl. Ball Joint And Bushing)	352	.....	1	812 1304
70	(Right) 10-80...(Incl. Ball Joint And Bushing)	352	.....	1	319 7915
71/	(Right) 10-80 (Except Fleet)(Except Export) ...(Incl. Ball Joint And Bushing)	352	.....	1	448 8811
72	(Right) 10-80 (Except Fleet-* 10-86)(Except Export-* 10-86) ...(Incl. Arm And Bushing) 322 0134	352	.....	1	448 8811
72	(Right) 10-80 (Except Fleet-* 10-87)(Except Export-* 10-87) ...(Incl. Arm And Bushing)	352	.....	1	812 1304
70/71	***(Right) 10-80 (Fleet)(Export)***		.....	1	321 4898
72	***(Right) 10-80 (Fleet-* 10-86)(Export-* 10-86)***...(Incl. Arm And Bushing)	352	.....	1	321 4898
72	***(Right) 10-80 (Fleet-* 10-87)(Export-* 10-87)***...(Incl. Arm And Bushing)	352	.....	1	812 1306

10.066-2 ATTACHING PARTS, Arm To Trunnion

BOLT, Hexagon	67/69	01-30-70 (1/2-20 x 3-1/2)	17.038	2	G455032
BOLT, Hexagon	69	01-30-70 (1/2-20 x 3-1/4)	17.038	2	G454465
WASHER, Plain	67/69	01-30-70	.....	2	317 0473
WASHER, Lock	67/68	01-30-70	17.820	2	G120384
NUT, Lock	67/68	01-30-70	17.416	2	G442832
NUT, Hexagon	69	01-30-70	17.416	2	320 9586

10.066-3 ATTACHING PARTS, Left Control Arm To Right Control Arm

BOLT, Hexagon	67/69	01-30-70	17.038	2	G455032
BOLT, Hexagon	67/69	10-50-80	17.038	2	G455017

Printed in U.S.A.

SPACER	67/69	01-30-70	.....	2	317 1492
SPACER	67/69	10-50-80	.....	2	316 9234
WASHER, Plain	67/69		.....	4	317 0473
WASHER, Lock	67/69		17.820	2	G120384
NUT, Hexagon	67/69		17.416	2	320 9586

10.067–1 BALL JOINT KIT, Front Suspension Upper Control Arm (Incl. Bolts, Nuts and Washers)

70/71	01-30-40-70	812302 353	.....	2	~~448 8667~~
70	10-80	*(Use 448 8667)*	.....	2	448 7652
71	10-80	812302 353	.....	2	~~448 8667~~
72	(* 10-86)	353	.....	2	~~448 8667~~
72	(* 10-87)	353	.....	2	812 1302

10.067–2 ATTACHING PARTS, Upper Ball Joint To Upper Control Arm

BOLT, Hexagon	70/	.....	17.038	4	G454884 NA
WASHER, Plain	70/	.....	17.820	4	G120214
NUT, Hexagon	70/	.....	17.406	4	G120368

10.067–3 COVER, Front Suspension Upper Control Arm Ball Joint Dust

70/	*(Use 319 7844)*	.....	2	448 7893

10.067–4 RETAINER, Front Suspension Upper Control Arm Ball Joint Dust Cover

70/	.....	.....	2	448 7894

10.067–5 PLUG, Front Suspension Upper Control Arm Ball Joint Lubrication Fitting Hole

70/	.....	5.170	2	316 4636

10.067–6 ATTACHING PARTS, Upper Control Arm Ball Joint To Knuckle Pin

NUT, Slotted Hexagon	70/	.....	10.048	2	400 3959
PIN, Cotter	70/	.....	17.460	2	G108630 NA

10.068 BUSHING KIT, Front Suspension Upper Control Arm Pivot (Incl. Bushings and Ring)

70/	.....	.....	2	448 8310

10.069–1 BOLT KIT, Front Suspension Upper Control Arm Pivot Eccentric (Incl. Bolt, Washer, Lockwasher And Nut)

67	10-50-80	.....	4	320 5112
68	10-80 (* 10-1)	.....	4	320 5112

10.069–2 ATTACHING PARTS, Upper Control Arm Pivot

BOLT, Hexagon	67/69	30-70	.....	4	400 3821
BOLT, Hexagon	67	10-80	.....	4	400 3821
BOLT, Hexagon	68	10-80 (3-1/2" Long-* 10-2)	.....	4	400 3821
BOLT, Hexagon	69	10-80	.....	4	400 3821
BOLT, Hexagon	70/	.....	.....	4	400 3978

FRONT SUSPENSION - POWER STEERING - STEERING GEAR

10.069–3 ATTACHING PARTS, Pivot Bolt To Wheelhouse Panel

WASHER, Eccentric	67	10-50-80	.....	4	316 3431
WASHER, Eccentric	68	10-80 (* 10-1)	.....	4	316 3431
WASHER, Lock	67/68	.....	17.820	4	G120384 NA
WASHER, Plain	70/	.....	.....	8	400 4014
NUT, Lock	67/68	01-30-70	17.416	4	G442832
NUT, Lock	67	10-50-80	.....	4	316 3433
NUT, Lock	68	10-80 (* 10-1)	.....	4	316 3433
NUT, Lock	68	10-80 (* 10-2)	17.416	4	G442832
NUT, Lock	70/	.....	.....	4	400 4025
NUT, Hexagon	69	.....	17.416	4	320 9586

10.100 LINKAGE ASSEMBLY, Steering (Incl. Pitman And Idler Arm)

67/69	01 (LHD-LPS)	.....	1	318 7663
70/	01-40 (LHD-LPS)	.....	1	319 5173
67/69	01 (WPS)	.....	1	318 7664
70/	01-40 (LHD-WPS)	.....	1	319 5172
67	10 (LHD-LPS)	.....	1	318 7666
67	10 (LHD-WPS) ..... ***(Use 318 8828)***	.....	1	318 7667
68	10 (LHD-LPS)	.....	1	318 8826
68	10 (LHD-WPS)	.....	1	318 8827
69	10-80 (LHD-LPS)	.....	1	319 3833
70/	10-30-70-80 (LHD-LPS)	.....	1	321 0105
69	10-80 (LHD-WPS)	.....	1	319 3832
70/	10-30-70-80 (LHD-WPS)	.....	1	321 0106
68/69	30-70 (LPS) ..... ***(Use 321 0105)***	.....	1	318 9248
68/69	30-70 (WPS) ..... ***(Use 321 0106)***	.....	1	318 9247
67	50-80 (LHD-LPS) ..... ***(Use 318 8829)***	.....	1	318 7669
67	50-80 (LHD-WPS) ..... ***(Use 318 8830)***	.....	1	318 7670
68	80 (LHD-LPS)	.....	1	318 8829
68	80 (LHD-WPS)	.....	1	318 8830
67/68	***01 (RHD)***	.....	1	318 7665
69	***01 (RHD-* 10-34)***	.....	1	318 7665
69	***01 (RHD-* 10-35)***	.....	1	319 4334
67	***10 (RHD-LPS)*** ..... ***(Use 318 8828)***	.....	1	318 7668
68	***10 (RHD-LPS)***	.....	1	318 8828
67/68	***10 (RHD-WPS)***	.....	1	318 7886
69	***10 (RHD-LPS)***	.....	1	319 3737
70	***10 (RHD-LPS)***	.....	1	319 6851
69	***10 (RHD-WPS)***	.....	1	319 3738
70	***10 (RHD-WPS)***	.....	1	319 6852
67/68	***80 (RHD-LPS)***	.....	1	318 7850
67/68	***80 (RHD-WPS)***	.....	1	318 7809
69	***80 (RHD-WPS)***	.....	1	319 3740
70	***80 (RHD-WPS)***	.....	1	319 6911

10.104–1 ARM, Steering Linkage Pitman (Incl. Stud Nut And Seal)

67/	01-30-40-70 (LHD-LPS)...(Incl. Seal) 3224137	.....	1	318 7783
67/	01-30-40-70 (LHD-WPS)...(Incl. Seal)	.....	1	318 7784
67/69	10 (LHD-LPS) ...(Incl. Seal)	.....	1	318 7786
70/	10-80 (LHD-LPS)...(Incl. Seal)	.....	1	318 7783
67/68	10 (LHD-WPS)...(Incl. Seal And Nut) ..... ***(Use 318 7788)***	.....	1	317 0433
69	10-80 (LHD-WPS) ...(Incl. Seal And Nut)	.....	1	318 7788
67/68	50-80 (LHD-LPS)...(Incl. Seal And Nut) ..... ***(Use 318 7790)***	.....	1	317 4626
67/68	50-80 (LHD-WPS)...(Incl. Seal And Nut) ..... ***(Use 318 7789)***	.....	1	317 4225
69	80 (LHD-LPS) ...(Incl. Seal)	.....	1	318 7786
70/	10-80 (LHD-WPS)...(Incl. Seal)	.....	1	318 7784

67/68	***01 (RHD)*** ...(Incl. Seal And Nut)	.....	1	318 7785	
69	***01 (RHD-* 10-34)*** ...(Incl. Seal And Nut)	.....	1	318 7785	
69	***01 (RHD-* 10-35)*** ...(Incl. Seal And Nut)	.....	1	319 4335	
67/70	***10 (RHD-LPS)*** ...(Incl. Seal And Nut)	.....	1	318 7787	
67/70	***10 (RHD-WPS)*** ...(Incl. Seal And Nut)	.....	1	318 7885	
67/68	***80 (RHD-LPS)*** ...(Incl. Seal And Nut)	.....	1	318 7849	
67/70	***80 (RHD-WPS)*** ...(Incl. Seal And Nut)	.....	1	318 7808	

10.104–2 ATTACHING PARTS, Pitman Arm To Cross Shaft

WASHER, Lock	67	01 (LPS-* 10-12 And * 10-13)	.....	1	320 0956	
WASHER, Lock	67	01 (LHD-* 10-14)	17.820	1	G103336	NA
WASHER, Lock	68/	01-40 (LHD)	17.820	1	G103336	NA
WASHER, Lock	67/	10-30-50-70-80	17.820	1	G103336	NA
WASHER, Lock	67	50	.....	1	320 0956	
***WASHER, Lock	***68***	***01 (RHD)***	.....	1	320 0956	
***WASHER, Lock	***69***	***01 (RHD)***	17.820	1	G103336	
***WASHER, Lock	***69***	***01 (RHD-* 10-34)***	.....	1	320 0956	
NUT, Jam	67	01 (LPS-* 10-12 And * 10-13)	10.334	1	56 642	
***NUT, Jam	***69***	***01 (RHD-* 10-34)***	10.334	1	56 642	
***NUT, Jam	***68***	***01 (RHD)***	10.334	1	56 642	
NUT, Hexagon	67	01 (LHD-* 10-14)	.....	1	320 0501	
NUT, Hexagon	68/	01-40 (LHD)	.....	1	320 0501	
NUT, Hexagon	67/	10-50-80	.....	1	320 0501	
NUT, Hexagon	68/71	30-70 (* 10-15)	.....	1	320 3306	
NUT, Hexagon	68/71	30-70 (* 10-16)	.....	1	320 0501	
***NUT, Hexagon	***67/70***	***10 (Export-LHD-LPS-Special Equipment-20 to 1 Ratio)***	.....	1	320 3306	
***NUT, Hexagon	***69***	***RHD (* 10-35)***	.....	1	320 0501	
NUT, Hexagon	72	70	.....	1	320 0501	

10.104–3 ATTACHING PARTS, Pitman Arm Stud To Center Cross Link

NUT, Slotted	67/69	01-30-70	17.408	1	G272073	NA
NUT, Slotted	67/69	10-50-80	10.234	1	311 3061	
NUT, Slotted	70/	LHD	10.234	1	319 7824	
PIN, Cotter	67/69		17.406	1	G103374	NA
PIN, Cotter	70/	LHD	10.234	1	319 8491	

10.104–4 SEAL, Pitman Arm Stud To Center Cross Link Dust

67/	01-30-40-70	.....	1	320 4741	
67/68	10-50-70	10.232	1	315 8345	
69/	10-80	.....	1	320 4741	

10.108–1 ARM, Steering Linkage Idler

67/69	01 ...(Incl. Bushing, Stud Nut And Seal)	.....	1	318 7863
70/	01-40 (LHD) ...(Incl. Bushing, Stud Nut And Seal)	.....	1	319 5174
67/69	10 ...(Incl. Bushing, Stud Nut And Seal)	.....	1	318 7864
70/	10-80 (LHD) ...(Incl. Bushing And Seal	.....	1	318 9512
67/68	50-80 ...(Incl. Bushing, Stud Nut And Seal)	.....	1	318 7865
68/	30-70 ...(Incl. Bushing And Seal)	.....	1	318 9512
69	80 (LHD) ...(Incl. Bushing, Stud Nut And Seal)	.....	1	318 7864
70	***10 (RHD)*** ...(Incl. Bushing, Stud Nut And Seal)	.....	1	318 7864
69/70	***80 (RHD-WPS)*** ...(Incl. Bushing, Stud Nut And Seal)	.....	1	318 7865

FRONT SUSPENSION - POWER STEERING - STEERING GEAR

10.108–2 ATTACHING PARTS, Idler Arm To Center Cross Link

NUT, Hexagon	67/69	01-30-70	17.408	1	G272073 NA
NUT, Hexagon	67/69	10-50-80	10.234	1	311 3061
NUT, Hexagon	70/	LHD	10.234	1	319 7824
PIN, Cotter	67/69		17.406	1	G103374 NA
PIN, Cotter	70/	LHD	10.234	1	319 8491

10.108–3 ATTACHING PARTS, Idler Arm To Bracket

BUSHING	67/		10.110	1	316 3094
WASHER, Plain	67	(1-3/8" O.D.) 01	17.814	1	400 1186
WASHER, Plain	68	(1-3/8" O.D.) 01 (* 10-8)	17.814	1	400 1186
WASHER, Plain	67/	(1-15/16" O.D.)	17.814	1	G131016 NA
WASHER, Plain	67/	(1-3/8" O.D.) 10-50-80	17.814	1	400 1186
WASHER, Lock	67/		17.820	1	G121574 NA
NUT, Jam	67	01	17.410	1	G124944 NA
NUT, Jam	68	01 (* 10-8)	17.410	1	G124944 NA
NUT, Jam	67/69	10-50-80	17.410	1	G124944 NA
NUT, Jam	68	01 (* 10-9)	17.410	1	G124847 NA
NUT, Jam	69/	01-40	17.410	1	G124847 NA
NUT, Jam	68/	30-70	17.410	1	G124847 NA
NUT, Jam	70/	10-80 (LHD)	17.410	1	G124847 NA
NUT, Jam	***70***	***10-80 (RHD)***	17.410	1	G124944 NA

10.108–4 SEAL, Steering Linkage Idler Arm Stud To Center Cross Link

67/	01-30-70	10.104	1	320 4741
67/68	10-50-80	10.232	1	315 8345
69/	10-80	10.104	1	320 4741

10.110 BUSHING, Steering Linkage Idler Arm

67/		.....	1	316 3094

10.114–1 BRACKET, Steering Linkage Idler Arm

67	01	.....	1	316 9789
68	01 (* 10-8)	.....	1	316 9789
68	01 (* 10-9)	.....	1	318 9513
69	01	.....	1	318 9513
70/	01-40	.....	1	349 5633
67/69	10 (LHD)	.....	1	317 1886
70	10 (LHD)	.....	1	318 9513
71/	10 (LHD)	.....	1	319 6923
68/	30-70	.....	1	318 9513
67/69	50-80 (LHD)	.....	1	317 5120
70/	80 (LHD)	.....	1	319 6923
67/70	***10 (RHD)***	.....	1	317 1885
67/70	***80 (RHD)***	.....	1	318 7807

10.114–2 ATTACHING PARTS, Bracket To Side Sill

BOLT, Hexagon	69	(7/16-20 x 4-1/4) 01	17.038	1	G193490 NA
BOLT, Hexagon	69	(7/16-20 x 3-1/2) 01	17.038	1	G181680 NA
BOLT, Hexagon	67	(7/16-20 x 3-3/4) 01	17.038	1	G181681 NA
BOLT, Hexagon	67	(7/16-20 x 4) 01-10-50-80	12.175	1	316 8028
BOLT, Hexagon	67	(7/16-20 x 4-3/4) 01	17.038	1	G187317 NA
BOLT, Hexagon	68	(7/16-20 x 3-3/4) 01 (* 10-8)	17.038	1	G181681 NA

Printed in U.S.A.

BOLT, Hexagon	68	(7/16-20 x 4-3/4) 01 (* 10-8)	17.038	1	G187317 NA
BOLT, Hexagon	68	(7/16-20 x 3-1/2) 01 (* 10-9)	17.038	1	G181680 NA
BOLT, Hexagon	68	(7/16-20 x 4-1/4) 01 (* 10-9)	17.038	1	G193490 NA
BOLT, Hexagon	70/	(7/16-14 x 3-1/2) 01-30-40-70 (LHD	.....	1	400 3966
BOLT, Hexagon	70/	(7/16-14 x 4) 01-30-40-70 (LHD)	.....	1	400 3968
BOLT, Hexagon	67/69	(7/16-20 x 3-3/4) 10-50-80	17.038	1	G181681 NA
BOLT, Hexagon	67/69	(7/16-20 x 4-3/4) 10	17.038	1	G187317 NA
BOLT, Hexagon	70	(7/16-14 x 3-1/2) 10	.....	1	400 3966
BOLT, Hexagon	70	(7/16-14 x 4) 10	.....	1	400 3968
BOLT, Hexagon	71/	(7/16-14 x 3-3/4) 10	.....	1	400 3967
BOLT, Hexagon	71/	(7/16-14 x 5) 10	.....	1	400 3970
BOLT, Hexagon	68/69	(7/16-20 x 3-1/2) 30-70	17.038	1	G181680 NA
BOLT, Hexagon	68/69	(7/16-20 x 4-1/4) 30-70	17.038	1	G193490 NA
BOLT, Hexagon	67	(7/16-14 x 5) 50-80	10.290	1	317 5302
BOLT, Hexagon	67/69	(7/16-20 x 5) 50-80	17.038	1	G180796 NA
BOLT, Hexagon	70/	(7/16-14 x 3-3/4) 80	.....	1	400 3967
BOLT, Hexagon	70/	(7/16-14 x 5) 80 (LHD)	.....	1	400 3970
***BOLT, Hexagon	***70***	***(7/16-14 x 3-3/4) 10 (RHD)***	.....	1	400 3967
***BOLT, Hexagon	***70***	***(7/16-14 x 4-3/4) 10-80 (RHD)***	.....	1	400 3969
SPACER	68	01 (* 10-9)	.....	1	319 0790
SPACER	69/	01-40	.....	1	319 0790
SPACER	70	10 (LHD)	.....	1	319 0790
SPACER	68/	30-70	.....	1	319 0790
WASHER, Plain.....	67/	.....	10.055	2	400 3926
***WASHER, Plain	***67***	***80 (RHD)***	1.063	2	314 4507
WASHER, Lock	67/69	.....	17.820	2	G131100
NUT, Hexagon	67	(7/16-14) 50-80	17.406	2	G124573 NA
NUT, Hexagon	67/69	(7/16-14) 10-50-80	17.406	2	G120370
NUT, Hexagon	67/69	01-30-70	17.406	2	G120370
NUT, Hexagon	70/	.....	.....	2	400 4050

10.122–1 ROD ASSEMBLY, Steering Linkage Tie (Incl. Cover, Nut And Plug)

67/	01-40	.....	2	320 5500
67/68	10-50-80 ..... ***(Use 448 6536)***	.....	2	320 8372
69	10-80	.....	2	448 6536
70	10-80 (LHD-5/8-18 Thread)...(Incl. Cover, Plug And Nut)	.....	2	320 5500
70	10-80 (LHD-11/16-18 Thread)...(Incl. Cover, Plug And Nut)	.....	2	448 6536
71/	10-80 (LHD)	.....	2	320 9636
68/	30-70	.....	2	320 9636
69	***01 (RHD-* 10-34)***	.....	2	320 5500
69	***01 (RHD-* 10-35)***	.....	2	448 6537
70	***10-80 (RHD)***	.....	2	319 8452

10.122–2 PLUG, Steering Linkage Tie Rod Lubrication Fitting Hole

67/69	.....	5.170	2	316 4636
70/	.....	.....	2	319 7847

10.126–1 END ASSEMBLY, Steering Linkage Tie Rod

67/	01-30-40-70...(Incl. Cover, Plug And Nut)	.....	2	320 8342
67/69	10-50-80...(Incl. Cover, Plug And Nut)	.....	2	320 8373
70	10-80 (5/8-18 Thread)...(Incl. Cover, Plug And Nut)	.....	2	320 8342
70	10-80 (11/16-18 Thread)...(Incl. Cover, Plug And Nut)	.....	2	320 8373
71/	(LHD)...(Incl. Cover, Plug And Nut)	.....	1	320 8342
70	***10-80 (RHD)*** ...(Incl. Cover, Plug And Nut)	.....	2	319 8410

10.126–2 PLUG, Steering Linkage Tie Rod End Lubrication Fitting Hole

67	.....	5.170	2	316 4636
70	***10-80 (RHD)***	.....	2	319 7847

FRONT SUSPENSION - POWER STEERING - STEERING GEAR

10.222 TUBE ASSEMBLY, Steering Linkage Tie Rod Adjusting (Incl. Clamps, Bolts And Nuts)

67/	01-30-40-70	.....	2	320 4745	
67/69	10-50-80	.....	2	320 0671	
70	10-80 (LHD-5/18-18 Thread)	.....	2	320 4745	
70	10-80 (LHD-11/16-18 Thread)	.....	2	320 0671	
71/	10-80 (LHD)	.....	2	320 4745	
70	***10-80 (RHD)*** ..... ***(Use 320 0671)***	.....	2	319 8409	

10.224-1 CLAMP, Steering Linkage Tie Rod Adjusting Tube)

67/	01-30-40-70	.....	4	320 4746	
67/69	10-50-80	.....	4	91 607	
70/	10-80 (LHD)	.....	2	320 4746	
70	***10-80 (RHD)***	.....	4	319 8407	

10.224-2 ATTACHING PARTS, Clamp To Adjusting Tube

BOLT, Hexagon	67/	(5/16"-24 x 1-7/16")	.....	4	319 8432	
BOLT, Hexagon	72	(5/16"-18 x 1-1/2")	.....	4	G180083	NA
NUT, Nylock	67/	(5/16"-24)	.....	4	320 1068	
NUT, Hexagon	72	(5/16"-18)	.....	4	G118614	NA

10.232 COVER, Steering Linkage Tie Rod End Dust (Rubber)

67/	01-30-40-70 (Part No. 13-5 Molded on Part-On Tie Rod)	.....	2	320 4742
67/	01-30-40-70 (Part No. 12-18 Molded on Part-On Tie Rod End)	.....	2	320 8273
67/69	10-50-80 (Part No. 14-81 Molded on Part-On Tie Rod)	.....	2	320 1597
67/69	10-50-80 (Part No. 14-170 Molded on Part-On Tie Rod End)	.....	2	320 8374
70/	10-80 (LHD)(Part No. 13-5 Molded on Part-On Tie Rod)	.....	2	320 4742
70/	10-80 (LHD)(Part No. 12-18 Molded on Part-On Tie Rod End)	.....	2	320 8273
70	***10-80 (RHD)(On Tie Rod)***	.....	2	319 8457
70	***10-80 (RHD)(On Tie Rod End)***	.....	2	319 8489

10.234-1 ATTACHING PARTS, Steering Linkage Tie Rod End To Steering Arm

NUT, Slotted	67/69	01-30-70	17.408	2	G272073	NA
NUT, Slotted	67/69	10-50-80	.....	2	311 3061	
NUT, Slotted	70/	LHD	.....	2	319 7824	
***NUT, Slotted	***70***	***10-80 (RHD)***	.....	2	319 8422	

10.234-2 ATTACHING PARTS, Nut To Tie Rod End

PIN, Cotter	67/69	.....	.....	2	319 8491	
PIN, Cotter	70	(1-1/4" Long) LHD	17.460	2	G103375	NA
PIN, Cotter	70/	(1" Long) LHD	.....	2	319 8491	
***PIN, Cotter	***70***	***10-80 (RHD)***	.....	2	319 8423	

10.234-3 ATTACHING PARTS, Steering Linkage Tie Rod To Center Cross Link

NUT, Slotted	67/69	01-30-70	14.408	2	G272073	NA
NUT, Slotted	70/	LHD	.....	2	319 7824	
NUT, Slotted	67/69	10-50-80	.....	2	311 3061	
***NUT, Slotted	***70***	***10-80 (RHD)***	.....	2	319 8422	

10.234-4 ATTACHING PARTS, Nut To Tie Rod

PIN, Cotter	67/69	.....	.....	2	319 8491
PIN, Cotter	70/	LHD	.....	2	319 8491
***PIN, Cotter	***70***	***10-80 (RHD)***	.....	2	319 8423

FRONT SUSPENSION - POWER STEERING - STEERING GEAR

10.240 LINK, Steering Linkage Center Cross

67/	01-40 (LHD)	1	320	4739
67/69	10-50-80 (LHD)	1	320	4036
70/	10-30-70-80 (LHD)	1	321	0107
68/69	30-70	1	320	9635
67/69	***01 (RHD)***	1	320	4749
67/69	***10-80 (RHD)***	1	320	4019
70	***10-80 (RHD)***	1	319	8418

10.260–1 STABILIZER, Front Suspension Sway

67/68	01 (Six) ***(Use 318 9449)***	1	317	8930
67/68	01 (V8-* 10-10) ***(Use 318 9449)***	1	317	8930
67/68	01 (V8-* 10-11)	1	318	9449
69	01	1	318	9449
70/	01-40 (LHD)	1	319	5175
67/68	10 (LHD)	1	318	5817
69	10 (LHD)	1	319	2230
70	10 (LHD)	1	319	4808
71/	10 (LHD)	1	319	9810
68/69	30-70	1	319	1472
70/	30-70 (LHD)	1	319	4808
67/68	50-80	1	317	4224
69	80	1	319	2231
70/	80	1	319	4807

10.260–1a STABILIZER KIT, Front Suspension Sway

67/68	10 (LHD-Six)	1	448	6991

10.260–1b CUSHION, Front Suspension Sway Stabilizer

67/68	01 (Six)	2	812	0223
67/68	01 (V8-* 10-10)	2	812	0223
67/68	01 (V8-* 10-11)	2	812	0224
69	01	2	812	0224
70/	01-40	2	812	0208
67/69	10 (LHD)	2	812	0208
70	10 (LHD)	2	812	0225
71/	10 (LHD)	2	812	0208
68/69	30-70	2	812	0208
70/	30-70 (LHD)	2	812	0225
67/68	50	2	812	0208
67/	80	2	812	0208

10.260–2 ATTACHING PARTS, Stabilizer To Side Sill

CLAMP	70/	01-40 (LHD)	2	319	5092
CLAMP	67/69	10 (LHD)	2	318	5815
CLAMP	70	10 (LHD-* 10-47)	2	318	5815
CLAMP	70	10 (LHD-* 10-48)	2	319	7702
CLAMP	71/	10 (LHD)	2	319	9809
CLAMP	68/69	30-70	2	318	5815
CLAMP	70	30-70 (* 10-45)	2	318	5815
CLAMP	70/	30-70 (* 10-46)	2	319	7702
PLATE, Reinforcement	67/69	10 (LHD)	2	318	5816
PLATE, Reinforcement	70	10 (LHD-* 10-47)	2	318	5816
PLATE, Reinforcement	68/69	30-70	2	318	5816
PLATE, Reinforcement	70	30-70 (* 10-45)	2	318	5816

Printed in U.S.A.

FRONT SUSPENSION - POWER STEERING - STEERING GEAR

BOLT, Hexagon	70/	01-40 (LHD-5/16-18 x 1-3/8)	.....	4	400 3930
BOLT, Hexagon	67	10 (LHD-Six)	17.038	4	G180123 NA
BOLT, Hexagon	67	10 (LHD-V8)	17.038	4	G180125 NA
BOLT, Hexagon	68/69	10 (LHD-3/8-16 x 1-3/8)	17.038	4	G180125 NA
BOLT, Hexagon	69/	10-30-70 (LHD-5/16-18 x 1-3/8)	.....	4	400 3930
BOLT, Hexagon	68/69	30-70-3/8-16 x 1-3/8)	17.038	4	G180125 NA
WASHER, Plain	67/69	10 (LHD) ***(Use 400 3808)***	17.814	2	G120394 NA
WASHER, Plain	68/69	30-70 ***(Use 400 3808)***	17.814	2	G120394 NA
WASHER, Lock	67/69	10 (LHD)	17.820	2	G120382
WASHER, Lock	68/69	30-70	17.820	2	G120382

10.260–3 ATTACHING PARTS, Stabilizer To Support

CLAMP	67/	50-80	.....	2	316 3127
PLATE, Reinforcement	67/	50-80	.....	2	316 3125
BOLT, Hexagon	67/69	50-80	8.035	4	316 2760
BOLT, Hexagon	70/	80	.....	4	400 4009
WASHER, Plain	67/69	50-80	17.814	4	400 1102
WASHER, Lock	67/69	50-80	17.820	4	G120382
NUT, Hexagon	67/69	50-80	17.406	4	G120369 NA
NUT, Lock	70/	80	.....	4	400 3909

10.260–4 ATTACHING PARTS, Stabilizer To Lower Control Arm

BOLT KIT	70/	...(Incl. Grommets, Retainers, Spacer And Nut) 357	.....	2	812 0305
BOLT, Hexagon	70/	LHD	.....	2	400 3982
BOLT, Hexagon	69	80	17.038	2	G192406
BOLT, Hexagon	69	10 (LHD)	.....	2	400 1890
BOLT, Hexagon	67/69	01	17.038	2	G189308
BOLT, Hexagon	67/68	10 (Six-LHD)	17.038	2	G189308
BOLT, Hexagon	67/68	10 (V8)	17.038	2	G215511
BOLT, Hexagon	67/68	50-80	17.038	2	G454497
BOLT, Hexagon	68/69	30-70	17.038	2	G455751
GROMMET	67/		11.208	8	316 3485
RETAINER	67/		.....	8	315 2907
RETAINER	67/	10-50-80 (For Grommet At Underside Of Control Arm)	1.017	2	316 3498
RETAINER	70/	01-30-40-70 (LHD)	1.017	2	316 3498
SPACER	70/	LHD	.....	2	319 4783
SPACER	67/69	01	.....	2	317 8933
SPACER	67/68	10 (LHD)	.....	2	317 8933
SPACER	69	10 (LHD)	.....	2	319 2232
SPACER	68/69	30-70	.....	2	318 9687
SPACER	67/68	50-80	.....	2	316 3120
SPACER	69	80	.....	2	319 2233
NUT, Lock	67/71		17.416	2	G443827
NUT, Lock	72		.....	2	400 4075

10.260–5 BRACKET, Front Suspension Sway Stabilizer To Side Sill

67/69	(Left) 01	.....	1	317 8701
67/69	(Right) 01	.....	1	317 8702

10.260–6 ATTACHING PARTS, Bracket To Side Sill

BOLT, Hexagon	67/69	01 (7/16-20 x 3-1/4)	17.038	1	G181679 NA
BOLT, Hexagon	69	01 (7/16-20 x 3-1/2)	17.038	1	G181680 NA
WASHER, Plain	67/69	01	17.814	1	400 1188
WASHER, Lock	67/69	01	17.820	1	G131100
NUT, Hexagon	67/69	01	17.406	1	G120370

FRONT SUSPENSION - POWER STEERING - STEERING GEAR

10.260–7 CLAMP, Front Suspension Sway Stabilizer To Bracket

67/69	01			2	317 8703

10.260–8 ATTACHING PARTS, Clamp To Bracket

BOLT, Hexagon	67/69	01	17.038	4	G181636 NA
WASHER, Lock	67/69	01	17.820	4	G120382
NUT, Hexagon	67/69	01	17.406	4	G120369 NA

10.260–9 BRACKET, Front Suspension Sway Stabilizer To Lower Control Arm

67/69	(Left) 01-30-70		1	317 8931
67/69	(Right) 01-30-70		1	317 8932

10.260–10 ATTACHING PARTS, Bracket To Lower Control Arm

BOLT, Hexagon	67	01	17.038	4	G180079 NA
BOLT, Hexagon	68/69	01-30-70	17.038	4	G180080 NA
WASHER, Lock	67/69	01-30-70	17.820	4	G120214
NUT, Hexagon	67/69	01-30-70 ***(Use 400 2117)***	17.406	4	G120376 NA

10.260–11 SUPPORT, Front Suspension Sway Stabilizer To Strut Rod Bracket

67/	50-80			2	316 7636

10.260–12 ATTACHING PARTS, Support To Strut Rod Bracket

BOLT, Hexagon	67/69	50-80	17.038	4	G181638 NA
BOLT, Hexagon	70/	80		4	400 4010
WASHER, Lock	67/69	50-80	17.820	4	G120382
NUT, Hexagon	67/69	50-80	17.406	4	G120369 NA
NUT, Lock	70/	80		4	400 3909

10.280–1 WHEEL, Steering

(T-723)(LHD-With Center Horn Button)		1	318 6985
(T-723)(LHD-With Spoke Horn Button-Except Wood Grain)		1	318 7450
(T-723)(LHD-With Spoke Horn Button-Wood Grain)		1	318 7456
(T-723)***(RHD-220-WST)***...(Incl. Canceling Pin) ***(Use 318 7938)***		1	318 7937
(T-723)***(RHD-220-WAT)***...(Incl. Canceling Pin)		1	317 3307
(T-728)(LHD-With Center Horn Button)		1	318 6986
(T-728)(LHD-With Spoke Horn Button-Except Wood Grain)		1	318 7198
(T-728)(LHD-With Spoke Horn Button-Wood Grain)		1	318 7197
(T-728)***(RHD-220-WST)***...(Incl. Canceling Pin) ***(Use 318 7938)***		1	318 7937
(T-728)***(RHD-220-WAT)***...(Incl. Canceling Pin)		1	317 3307
(T-729)(LHD-With Center Horn Button)		1	318 6984
(T-729)(LHD-With Spoke Horn Button-Except Wood Grain)		1	318 7451
(T-729)(LHD-With Spoke Horn Button-Wood Grain)		1	318 7458
(T-729)***(RHD-220-WST)*** ***(Use 318 7938)***		1	318 7937
(T-729)***(RHD-220-WAT)***...(Incl. Canceling Pin)		1	317 3307
(T-741)(LHD-Except Wood Grain)		1	318 7198
(T-741)(LHD-Wood Grain)		1	318 7197
(T-741)***(RHD-440-WST)(RHD-Rogue-WST)***...(Incl. Canceling Pin) ***(Use 317 4353)***		1	318 7935
(T-741)***(RHD-440-WAT)(RHD-Rogue-WAT)***...(Incl. Canceling Pin) ***(Use 319 0749)***		1	318 7933
(T-743)(LHD-Except Wood Grain)		1	318 7450
(T-743)(LHD-Wood Grain)		1	318 7456
(T-743)***(RHD-440-WST)(RHD-Rogue-WST)***...(Incl. Canceling Pin) ***(Use 318 8884)***		1	318 7025
(T-743)***(RHD-440-WAT)(RHD-Rogue-WAT)***...(Incl. Canceling Pin) ***(Use 318 8876)***		1	318 7006

FRONT SUSPENSION - POWER STEERING - STEERING GEAR

(T-744)(LHD-Except Wood Grain)	.....	1	318 7452
(T-744)(LHD-Wood Grain)	.....	1	318 7197
(T-744)***(RHD-440-WST)***...(Incl. Canceling Pin) ***(Use 318 8886)***	.....	1	318 7964
(T-744)***(RHD-440-WAT)***...(Incl. Canceling Pin) ***(Use 318 8878)***	.....	1	318 7962
(T-745)(LHD-Except Wood Grain)	.....	1	318 7453
(T-745)(LHD-Wood Grain)	.....	1	318 7457
(T-747)(LHD-Except Wood Grain)	.....	1	318 7454
(T-747)(LHD-Wood Grain)	.....	1	318 7197
(T-748)(LHD-Except Wood Grain)	.....	1	318 7198
(T-748)(LHD-Wood Grain)	.....	1	318 7197
(T-748)***(RHD-440-WST)(RHD-Rogue-WST)***...(Incl. Canceling Pin) ***(Use 317 4353)***	.....	1	318 7935
(T-748)***(RHD-440-WAT)(RHD-Rogue-WAT)***...(Incl. Canceling Pin)***(Use 319 0749)***	.....	1	318 7933
(T-749)(LHD-Except Wood Grain)	.....	1	318 7451
(T-749)(LHD-Wood Grain)	.....	1	318 7458
(T-749)***(RHD-440-WST)(RHD-Rogue-WST)***...(Incl. Canceling Pin) ***(Use 318 8882)***	.....	1	318 7027
(T-749)***(RHD-440-WAT)(RHD-Rogue-WAT)***...(Incl. Canceling Pin)***(Use 318 8874)***	.....	1	318 7008
(T-753)(LHD-With Center Horn Button And Less Spoke Trim Plates)	.....	1	318 6985
(T-753)(LHD-15-16-18 With Center Horn Button And Spoke Trim Plates)	.....	1	318 6981
(T-753)(LHD-With Spoke Horn Button-Except Wood Grain)	.....	1	318 7450
(T-753)(LHD-With Spoke Horn Button-Wood Grain)	.....	1	318 7456
(T-753)***(RHD-550-WST-LHR)***...(Incl. Canceling Pin)	.....	1	318 7532
(T-753)***(RHD-550-WST-WHR)***...(Incl. Canceling Pin)	.....	1	318 7034
(T-753)***(RHD-550-WAT-LHR)***...(Incl. Canceling Pin)	.....	1	318 7531
(T-753)***(RHD-550-WAT-WHR)***...(Incl. Canceling Pin)	.....	1	318 7540
(T-758)(LHD-With Center Horn Button)	.....	1	318 6986
(T-758)(LHD-With Spoke Horn Button-Except Wood Grain)	.....	1	318 7198
(T-758)(LHD-With Spoke Horn Button-Wood Grain)	.....	1	318 7197
(T-758)***(RHD-550-WST-LHR)***...(Incl. Canceling Pin)	.....	1	318 7532
(T-758)***(RHD-550-WST-WHR)***...(Incl. Canceling Pin)	.....	1	318 7534
(T-758)***(RHD-550-WAT-LHR)***...(Incl. Canceling Pin)	.....	1	318 7531
(T-758)***(RHD-550-WAT-WHR)***...(Incl. Canceling Pin)	.....	1	318 7533
(T-759)(LHD-With Center Horn Button)	.....	1	318 6984
(T-759)(LHD-With Spoke Horn Button-Except Wood Grain)	.....	1	318 7451
(T-759)(LHD-With Spoke Horn Button-Wood Grain)	.....	1	318 7458
(T-759)***(RHD-550-WST-LHR)***...(Incl. Canceling Pin)	.....	1	318 7532
(T-759)***(RHD-550-WST-WHR)***...(Incl. Canceling Pin)	.....	1	318 7539
(T-759)***(RHD-550-WAT-LHR)***...(Incl. Canceling Pin)	.....	1	318 7531
(T-759)***(RHD-550-WAT-WHR)***...(Incl. Canceling Pin)	.....	1	318 7015
(T-771)(LHD-Except Wood Grain)	.....	1	318 7198
(T-771)(LHD-Wood Grain)	.....	1	318 7197
(T-771)***(RHD-770-WST)***...(Incl. Canceling Pin)	.....	1	318 7534
(T-771)***(RHD-770-WAT)***...(Incl. Canceling Pin)	.....	1	318 7533
(T-771S)(LHD-With Spoke Horn Button)	.....	1	318 7199
(T-773)(LHD-Except Wood Grain)	.....	1	318 7450
(T-773)(LHD-Wood Grain)	.....	1	318 7456
(T-773)***(RHD-770-WST)***...(Incl. Canceling Pin)	.....	1	318 7034
(T-773)***(RHD-770-WAT)***...(Incl. Canceling Pin)	.....	1	318 7015
(T-773S)(LHD-With Spoke Horn Button)	.....	1	318 7460
(T-774)(LHD-Except Wood Grain)	.....	1	318 7452
(T-774)(LHD-Wood Grain)	.....	1	318 7197
(T-774)***(RHD-770-WST)***...(Incl. Canceling Pin)	.....	1	318 7035
(T-774)***(RHD-770-WAT)***...(Incl. Canceling Pin)	.....	1	318 7016
(T-775)(LHD-Except Wood Grain)	.....	1	318 7453
(T-775)(LHD-Wood Grain)	.....	1	318 7457
(T-775)***(RHD-770-WST)***...(Incl. Canceling Pin)	.....	1	318 7036
(T-775)***(RHD-770-WAT)*** ...(Incl. Canceling Pin)	.....	1	318 7533
(T-776)(LHD-Except Wood Grain)	.....	1	318 7455
(T-776)(LHD-Wood Grain)	.....	1	318 7459
(T-776)***(RHD-770-WST)***...(Incl. Canceling Pin)	.....	1	318 7038
(T-776)***(RHD-770-WAT)*** ...(Incl. Canceling Pin)	.....	1	318 7533

Printed in U.S.A.

FRONT SUSPENSION - POWER STEERING - STEERING GEAR

(T-777)(LHD-Except Wood Grain)	.....	1	318 7454
(T-777)(LHD-Wood Grain)	.....	1	318 7197
(T-777)***(RHD-770-WST)***...(Incl. Canceling Pin)	.....	1	318 7037
(T-777)***(RHD-770-WAT)*** ...(Incl. Canceling Pin)	.....	1	318 7533
(T-778)(LHD-Except Wood Grain)	.....	1	318 7198
(T-778)(LHD-Wood Grain)	.....	1	318 7197
(T-778)***(RHD-770-WST)***...(Incl. Canceling Pin)	.....	1	318 7534
(T-778)***(RHD-770-WAT)*** ...(Incl. Canceling Pin)	.....	1	318 7533
(T-779)(LHD-Except Wood Grain)	.....	1	318 7451
(T-779)(LHD-Wood Grain)	.....	1	318 7458
(T-779)***(RHD-770-WST)***...(Incl. Canceling Pin)	.....	1	318 7539
(T-779)***(RHD-770-WAT)***...(Incl. Canceling Pin)	.....	1	318 7540
(T-779S)(LHD-With Spoke Horn Button)	.....	1	318 7464
(T-781)(LHD-With Center Horn Button)	.....	1	318 6983
(T-781)(LHD-With Spoke Horn Button-Except Wood Grain)	.....	1	318 7199
(T-781)(LHD-With Spoke Horn Button-Wood Grain)	.....	1	318 7197
(T-781)***(RHD-880-LHR)***...(Incl. Canceling Pin)	.....	1	318 7531
(T-781)***(RHD-880-WHR)***...(Incl. Canceling Pin)	.....	1	318 7533
(T-783)(LHD-With Center Horn Button)	.....	1	318 6981
(T-783)(LHD-With Spoke Horn Button-Except Wood Grain)	.....	1	318 7460
(T-783)(LHD-With Spoke Horn Button-Wood Grain)	.....	1	318 7456
(T-783)***(RHD-880-LHR)***...(Incl. Canceling Pin)	.....	1	318 7531
(T-783)***(RHD-880-WHR)***...(Incl. Canceling Pin)	.....	1	318 7015
(T-787)(LHD-With Center Horn Button)	.....	1	318 6982
(T-787)(LHD-With Spoke Horn Button-Except Wood Grain)	.....	1	318 7463
(T-787)(LHD-With Spoke Horn Button-Wood Grain)	.....	1	318 7197
(T-787)***(RHD-880-LHR)***...(Incl. Canceling Pin)	.....	1	318 7531
(T-789)(LHD-With Center Horn Button)	.....	1	318 6980
(T-789)(LHD-With Spoke Horn Button-Except Wood Grain)	.....	1	318 7464
(T-789)(LHD-With Spoke Horn Button-Wood Grain)	.....	1	318 7458
(T-789)***(RHD-880-LHR)***...(Incl. Canceling Pin)	.....	1	318 7531
(T-789)***(RHD-880-WHR)***...(Incl. Canceling Pin)	.....	1	318 7540
(T-791)(LHD-Except Wood Grain)	.....	1	318 7199
(T-791)(LHD-Wood Grain)	.....	1	318 7197
(T-791)***(RHD)***...(Incl. Canceling Pin)	.....	1	318 7533
(T-793)(LHD-Except Wood Grain)	.....	1	318 7460
(T-793)(LHD-Wood Grain)	.....	1	318 7456
(T-793)***(RHD)***...(Incl. Canceling Pin)	.....	1	318 7015
(T-794)(LHD-Except Wood Grain)	.....	1	318 7461
(T-794)(LHD-Wood Grain)	.....	1	318 7197
(T-794)***(RHD)***...(Incl. Canceling Pin)	.....	1	318 7016
(T-795)(LHD-Except Wood Grain)	.....	1	318 7462
(T-795)(LHD-Wood Grain)	.....	1	318 7457
(T-795)***(RHD)***...(Incl. Canceling Pin)	.....	1	318 7533
(T-796)(LHD-Except Wood Grain)	.....	1	318 7465
(T-796)(LHD-Wood Grain)	.....	1	318 7459
(T-796)***(RHD)***...(Incl. Canceling Pin)	.....	1	318 7533
(T-797)(LHD-Except Wood Grain)	.....	1	318 7463
(T-797)(LHD-Wood Grain)	.....	1	318 7197
(T-797)***(RHD)***...(Incl. Canceling Pin)	.....	1	318 7533
(T-798)(LHD-Except Wood Grain)	.....	1	318 7199
(T-798)(LHD-Wood Grain)	.....	1	318 7197
(T-798)***(RHD)***...(Incl. Canceling Pin)	.....	1	318 7533
(T-799)(LHD-Except Wood Grain)	.....	1	318 7464
(T-799)***(RHD)***...(Incl. Canceling Pin)	.....	1	318 7540
(T-799)(LHD-Wood Grain)	.....	1	318 7458

Printed in U.S.A.

FRONT SUSPENSION - POWER STEERING - STEERING GEAR

(T-828)(LHD-With Center Horn Button)	.....	1	319 0528
(T-828)(LHD-With Spoke Horn Button)	.....	1	319 0540
(T-828)***(RHD-WST-WHR)***	.....	1	319 0743
(T-828)***(RHD-WAT-WHR)***	.....	1	319 0749
(T-828)***(RHD-WST-LHR)***	.....	1	318 7938
(T-828)***(RHD-WAT-LHR)***	.....	1	317 3355
(T-831)(LHD-Except Wood Grain)	.....	1	319 0540
(T-831)(LHD-Wood Grain And Black)	.....	1	319 1608
(T-832)(LHD-Except Wood Grain)	.....	1	319 0540
(T-832)(LHD-Wood Grain And Black)	.....	1	319 1608
(T-832)(LHD-Wood Grain And Tan)	.....	1	319 1043
(T-835)(LHD-Except Wood Grain)	.....	1	319 0544
(T-835)(LHD-Wood Grain And Black)	.....	1	319 1608
(T-835)(LHD-Wood Grain And Red)	.....	1	319 1609
(T-838)(LHD-Except Wood Grain)	.....	1	319 0540
(T-838)(LHD-Wood Grain)	.....	1	319 1608
(T-843)(LHD-Except Wood Grain)	.....	1	319 0541
(T-843)(LHD-Wood Grain)	.....	1	319 1608
(T-843)***(RHD-WST-WHR)***	.....	1	319 0744
(T-843)***(RHD-WAT-WHR)***	.....	1	319 0750
(T-844)(LHD-Except Wood Grain)	.....	1	319 0543
(T-844)(LHD-Wood Grain)	.....	1	319 1608
(T-844)***(RHD-WST-WHR)***	.....	1	319 0743
(T-844)***(RHD-WAT-WHR)***	.....	1	319 0849
(T-845)(LHD-Except Wood Grain)	.....	1	319 0544
(T-845)(LHD-Wood Grain)	.....	1	319 1609
(T-845)***(RHD-WST-LHR)***	.....	1	318 7938
(T-845)***(RHD-WST-WHR)***	.....	1	319 0743
(T-845)***(RHD-WAT-LHR)***	.....	1	317 3355
(T-845)***(RHD-WAT-WHR)***	.....	1	319 0749
(T-848)(LHD-Except Wood Grain)	.....	1	319 0540
(T-848)(LHD-Wood Grain)	.....	1	319 1608
(T-848)***(RHD-WST-LHR)***	.....	1	318 7938
(T-848)***(RHD-WST-WHR)***	.....	1	319 0743
(T-848)***(RHD-WAT-LHR)***	.....	1	317 3355
(T-848)***(RHD-WAT-WHR)***	.....	1	319 0749
(T-851)(LHD-With Center Horn Button)	.....	1	319 0528
(T-851)(LHD-With Spoke Horn Button)	.....	1	319 0540
(T-851)***(RHD-WST-LHR)***	.....	1	318 7532
(T-851)***(RHD-WST-WHR)***	.....	1	318 7534
(T-851)***(RHD-WAT-LHR)***	.....	1	318 7531
(T-851)***(RHD-WAT-WHR)***	.....	1	318 7533
(T-853)(LHD-With Center Horn Button)	.....	1	319 0529
(T-853)(LHD-With Spoke Horn Button)	.....	1	319 0541
(T-853)***(RHD-WST-LHR)***	.....	1	318 7532
(T-853)***(RHD-WST-WHR)***	.....	1	318 7534
(T-853)***(RHD-WAT-LHR)***	.....	1	318 7531
(T-853)***(RHD-WAT-WHR)***	.....	1	318 7533
(T-855)(LHD-With Center Horn Button)	.....	1	319 1095
(T-855)(LHD-With Spoke Horn Button)	.....	1	319 0544
(T-855)***(RHD-WST-LHR)***	.....	1	318 7532
(T-855)***(RHD-WST-WHR)***	.....	1	318 7534
(T-855)***(RHD-WAT-LHR)***	.....	1	318 7531
(T-855)***(RHD-WAT-WHR)***	.....	1	318 7534
(T-871)(LHD-Except Wood Grain)	.....	1	319 0540
(T-871)(LHD-Wood Grain)	.....	1	319 1608
(T-871)***(RHD-WST-LHR)***	.....	1	318 7532
(T-871)***(RHD-WST-WHR)***	.....	1	318 7534
(T-871)***(RHD-WAT-LHR)***	.....	1	318 7531
(T-871)***(RHD-WAT-WHR)***	.....	1	318 7533

(T-873)(LHD-Except Wood Grain)	.....	1	319 0541
(T-873)(LHD-Wood Grain)	.....	1	319 1608
(T-873)***(RHD-WST)***	.....	1	319 0757
(T-873)***(RHD-WAT)***	.....	1	319 0761
(T-874)(LHD-Except Wood Grain)	.....	1	319 0543
(T-874)(LHD-Wood Grain)	.....	1	319 1608
(T-874)***(RHD-WST)***	.....	1	318 7534
(T-874)***(RHD-WAT)***	.....	1	318 7533
(T-875)(LHD-Except Wood Grain)	.....	1	319 0544
(T-875)(LHD-Wood Grain)	.....	1	319 1609
(T-875)***(RHD-WST-LHR)***	.....	1	318 7532
(T-875)***(RHD-WST-WHR)***	.....	1	318 7534
(T-875)***(RHD-WAT-LHR)***	.....	1	318 7531
(T-875)***(RHD-WAT-WHR)***	.....	1	318 7533
(T-876)(LHD-Except Wood Grain)	.....	1	319 0545
(T-876)(LHD-Wood Grain)	.....	1	319 1610
(T-876)***(RHD-WST)***	.....	1	319 0758
(T-876)***(RHD-WAT)***	.....	1	319 0762
(T-879)(LHD-Except Wood Grain)	.....	1	319 0542
(T-879)(LHD-Wood Grain)	.....	1	319 1608
(T-879)***(RHD-WST-LHR)***	.....	1	318 7532
(T-879)***(RHD-WST-WHR)***	.....	1	318 7534
(T-879)***(RHD-WAT-LHR)***	.....	1	318 7531
(T-879)***(RHD-WAT-WHR)***	.....	1	318 7533
(T-881)(LHD-With Center Horn Button)	.....	1	319 0532
(T-881)(LHD-With Spoke Horn Button)	.....	1	319 0540
(T-881)***(RHD)***	.....	1	318 7533
(T-883)(LHD-With Spoke Horn Button)	.....	1	319 0541
(T-883)***(RHD)***	.....	1	319 0761
(T-885)(LHD-With Spoke Horn Button)	.....	1	319 0544
(T-885)***(RHD)***	.....	1	318 7533
(T-891)(LHD-Except Wood Grain)	.....	1	319 0540
(T-891)(LHD-Wood Grain)	.....	1	319 1608
(T-891)***(RHD)***	.....	1	318 7533
(T-893)(LHD-Except Wood Grain)	.....	1	319 0541
(T-893)(LHD-Wood Grain)	.....	1	319 1608
(T-893)***(RHD)***	.....	1	319 0761
(T-894)(LHD-Except Wood Grain)	.....	1	319 0543
(T-894)(LHD-Wood Grain)	.....	1	319 1608
(T-894)***(RHD)***	.....	1	318 7533
(T-895)(LHD-Except Wood Grain)	.....	1	319 0544
(T-895)(LHD-Wood Grain)	.....	1	319 1609
(T-895)***(RHD)***	.....	1	318 7533
(T-896) (LHD-Except Wood Grain)	.....	1	319 0545
(T-896)(LHD-Wood Grain)	.....	1	319 1610
(T-896)***(RHD)***	.....	1	319 0762
(T-899)(LHD-Except Wood Grain)	.....	1	319 0542
(T-899)(LHD-Wood Grain)	.....	1	319 1608
(T-899)***(RHD)***	.....	1	318 7533
(T-923)(LHD-With Center Horn Button)	.....	1	319 4372
(T-923)(LHD-With Spoke Horn Button)	.....	1	319 4376
(T-923)(RHD-WST)	.....	1	319 4388
(T-928) (LHD-With Center Horn Button)	.....	1	319 4371
(T-928)(LHD-With Spoke Horn Button) ***(Use 319 4379)***	.....	1	319 4375
(T-928)(RHD-WST)	.....	1	319 4386
(T-928)(RHD-WAT)	.....	1	319 4392
(T-931)	.....	1	319 3651
(T-932)	.....	1	319 3651

FRONT SUSPENSION - POWER STEERING - STEERING GEAR

(T-935)	.....	1	319 4740
(T-936)	***(Use 319 3654)***	1	319 3658
(T-941)(LHD-Except Wood Grain-Rubber)	***(Use 319 4379)***	1	319 4375
(T-941)(LHD-Wood Grain-Plastic)	.....	1	319 3651
(T-941)(RHD-WST)	.....	1	319 4386
(T-941)(RHD-WAT)	.....	1	319 4392
(T-943)(LHD-Except Wood Grain-Rubber)	.....	1	319 4376
(T-943)(LHD-Wood Grain-Plastic)	.....	1	319 3652
(T-943)(RHD-WST)	.....	1	319 4386
(T-943)(RHD-WAT)	.....	1	319 4392
(T-944)(LHD-Except Wood Grain-Rubber)	.....	1	319 4377
(T-944)(LHD-Wood Grain-Plastic)	.....	1	319 3651
(T-944)(RHD-WST)	.....	1	319 4386
(T-944)(RHD-WAT)	.....	1	319 4392
(T-945)(LHD-Except Wood Grain-Rubber)	.....	1	319 4378
(T-945)(LHD-Wood Grain-Plastic)	.....	1	319 4740
(T-945)(RHD-WST)	.....	1	319 4386
(T-945)(RHD-WAT)	.....	1	319 4392
(T-951)(LHD-With Center Horn Button)	.....	1	319 4371
(T-951)(LHD-With Spoke Horn Button)	***(Use 319 4379)***	1	319 4375
(T-951)(RHD-WAT)	.....	1	319 3663
(T-953)(LHD-With Center Horn Button)	.....	1	319 4372
(T-953)(LHD-With Spoke Horn Button)	.....	1	319 4376
(T-953)(RHD-WAT)	.....	1	319 3663
(T-956)(LHD-With Center Horn Button)	.....	1	319 4373
(T-956)(LHD-With Spoke Horn Button)	.....	1	319 4729
(T-956)(RHD-WAT)	.....	1	319 3663
(T-957)(LHD-With Center Horn Button)	.....	1	319 4374
(T-957)(LHD-With Spoke Horn Button)	.....	1	319 4728
(T-957)(RHD-WAT)	.....	1	319 3663
(T-961)(LHD-Except Wood Grain-Rubber)	***(Use 319 4379)***	1	319 4375
(T-961)(LHD-Wood Grain-Plastic)	.....	1	319 3651
(T-962)	.....	1	319 3651
(T-963)	.....	1	319 3652
(T-965)	.....	1	319 4740
(T-966)	.....	1	319 3654
(T-968)	***(Use 319 4379)***	1	319 4375
(T-972)(LHD-Charcoal-Rubber)	.....	1	319 4371
(T-972)(LHD-Charcoal-Plastic)	.....	1	319 4925
(T-972)(RHD-WAT)	.....	1	319 3663
(T-973)(LHD-Blue-Rubber)	.....	1	319 4376
(T-973)(LHD-Charcoal-Plastic)	.....	1	319 4925
(T-973)(RHD-WAT)	.....	1	319 3663
(T-975)(LHD-Red-Rubber)	.....	1	319 4378
(T-975)(LHD-Charcoal-Plastic)	.....	1	319 4925
(T-975)(RHD-WAT)	.....	1	319 3663
(T-976)(LHD-Brown-Rubber)	.....	1	319 4729
(T-976)(LHD-Charcoal-Plastic)	.....	1	319 4925
(T-976)(RHD-WAT)	.....	1	319 3663
(T-977)(LHD-Avocado-Rubber)	.....	1	319 4728
(T-977)(LHD-Charcoal-Plastic)	.....	1	319 4925
(T-977)(RHD-WAT)	.....	1	319 3663
(T-979)(LHD-Avocado-Rubber)	***(Use 319 4379)***	1	319 4375
(T-979)(LHD-Charcoal-Plastic)	.....	1	319 4925
(T-979)(RHD-WAT)	.....	1	319 3663
(T-981)(LHD-Except Wood Grain-Rubber)	***(Use 319 4379)***	1	319 4375
(T-981)(LHD-Wood Grain-Plastic)	.....	1	319 3651
(T-981)(RHD-WAT)	.....	1	319 3663
(T-983)(LHD-Except Wood Grain-Rubber)	.....	1	319 4376
(T-983)(LHD-Wood Grain-Plastic)	.....	1	319 3652
(T-983)(RHD-WAT)	.....	1	319 3663

FRONT SUSPENSION - POWER STEERING - STEERING GEAR

(T-986)(LHD-Except Wood Grain-Rubber)	.....	1	319 4729
(T-986)(LHD-Wood Grain-Plastic)	.....	1	319 3654
(T-986)(RHD-WAT)	.....	1	319 3663
(T-987)(LHD-Except Wood Grain-Rubber)	.....	1	319 4728
(T-987)(LHD-Wood Grain-Plastic)	.....	1	319 3653
(T-987)(RHD-WAT)	.....	1	319 3663
(T-991)(LHD-Except Wood Grain-Rubber) ***(Use 319 4379)***	.....	1	319 4375
(T-991)(LHD-Wood Grain-Plastic)	.....	1	319 3651
(T-991)(RHD-WAT)	.....	1	319 3663
(T-992)(LHD-Except Wood Grain-Rubber) ***(Use 319 4379)***	.....	1	319 4375
(T-992)(LHD-Wood Grain-Plastic)	.....	1	319 3651
(T-992)(RHD-WAT)	.....	1	319 3663
(T-993)(LHD-Except Wood Grain-Rubber)	.....	1	319 4376
(T-993)(LHD-Wood Grain-Plastic)	.....	1	319 3652
(T-993)(RHD-WAT)	.....	1	319 3663
(T-995)(LHD-Except Wood Grain-Rubber)	.....	1	319 4378
(T-995)(LHD-Wood Grain-Plastic)	.....	1	319 4740
(T-995)(RHD-WAT)	.....	1	319 3663
(T-996)(LHD-Except Wood Grain-Rubber)	.....	1	319 4729
(T-996)(LHD-Wood Grain-Plastic)	.....	1	319 3654
(T-996)(RHD-WAT)	.....	1	319 3663
(T-997)(LHD-Except Wood Grain-Rubber)	.....	1	319 4728
(T-997)(LHD-Wood Grain-Plastic)	.....	1	319 3653
(T-997)(RHD-WAT)	.....	1	319 3663
(T-999)(LHD-Except Wood Grain-Rubber)	.....	1	319 4728
(T-999)(LHD-Wood Grain-Plastic)	.....	1	319 3653
(T-999)(RHD-WAT)	.....	1	319 3663
(T-001)(With Center Horn Button)	.....	1	319 6491
(T-001)(With Spoke Horn)	.....	1	319 6879
(T-008)(With Center Horn Button)	.....	1	319 6491
(T-008)(With Spoke Horn)	.....	1	319 6879
(T-011)(With Center Horn Button)	.....	1	319 6491
(T-011)(With Spoke Horn)	.....	1	319 6879
(T-013)(With Center Horn Button)	.....	1	319 7061
(T-013)(With Spoke Horn)	.....	1	319 7069
(T-014)(With Center Horn Button)	.....	1	319 7062
(T-014)(With Spoke Horn)	.....	1	319 7070
(T-015)(With Center Horn Button)	.....	1	319 7063
(T-015)(With Spoke Horn)	.....	1	319 7071
(T-021)(With Center Horn Button)	.....	1	319 6491
(T-021)(With Spoke Horn)	.....	1	319 6879
(T-023)(With Center Horn Button)	.....	1	319 7061
(T-023)(With Spoke Horn)	.....	1	319 7069
(T-024)(With Center Horn Button)	.....	1	319 7062
(T-024)(With Spoke Horn)	.....	1	319 7070
(T-025)(With Center Horn Button)	.....	1	319 7063
(T-025)(With Spoke Horn)	.....	1	319 7071
(T-031) ***(Use 321 3621)***	.....	1	319 7275
(T-033)	.....	1	319 7276
(T-035)	.....	1	319 7278
(T-036)	.....	1	319 7279
(T-041)(With Spoke Horn)	.....	1	319 6879
(T-041)(With Rim Horn Blowing) ***(Use 321 3621)***	.....	1	319 7275
(T-043) (With Spoke Horn)	.....	1	319 7069
(T-043)(With Rim Horn Blowing)	.....	1	319 7276
(T-044)(With Spoke Horn)	.....	1	319 7070
(T-044)(With Rim Horn Blowing)	.....	1	319 7277
(T-045) (With Spoke Horn)	.....	1	319 7071
(T-045)(With Rim Horn Blowing)	.....	1	319 7278
(T-051) (LHD-With Horn Button)	.....	1	319 6491
(T-051)(LHD-With Spoke Horn)	.....	1	319 6879

Printed in U.S.A.

FRONT SUSPENSION - POWER STEERING - STEERING GEAR

(T-053)(LHD-With Horn Button)	.....	1	319 7061
(T-053)(LHD-With Spoke Horn)	.....	1	319 7069
(T-054)(LHD-With Horn Button)	.....	1	319 7062
(T-054)(LHD-With Spoke Horn)	.....	1	319 7070
(T-056)(LHD-With Horn Button)	.....	1	319 8754
(T-056)(LHD-With Spoke Horn)	.....	1	319 7072
(T-061)(LHD-With Spoke Horn)	.....	1	319 6879
T-061)(With Rim Horn Blowing) ***(Use 321 3621)***	.....	1	319 7275
(T-063)(With Spoke Horn)	.....	1	319 7069
(T-063)(With Rim Horn Blowing)	.....	1	319 7276
(T-064) (With Spoke Horn)	.....	1	319 7070
(T-064)(With Rim Horn Blowing)	.....	1	319 7277
(T-065)(With Spoke Horn)	.....	1	319 7071
(T-065)(With Rim Horn Blowing)	.....	1	319 7278
(T-066)(With Spoke Horn)	.....	1	319 7072
(T-066)(With Rim Horn Blowing)	.....	1	319 7279
(T-071)(LHD-With Spoke Horn)	.....	1	319 6879
(T-071)(LHD-With Rim Horn Blowing) ***(Use 321 3621)***	.....	1	319 7275
(T-073)(LHD-With Spoke Horn)	.....	1	319 7069
(T-073)(LHD-With Rim Horn Blowing)	.....	1	319 7276
(T-074)(LHD-With Spoke Horn)	.....	1	319 7070
(T-074)(LHD-With Rim Horn Blowing)	.....	1	319 7277
(T-075)(LHD-With Spoke Horn)	.....	1	319 7071
(T-075)(LHD-With Rim Horn Blowing)	.....	1	319 7278
(T-076)(LHD-With Spoke Horn)	.....	1	319 7072
(T-076)(LHD-With Rim Horn Blowing)	.....	1	319 7279
(T-081)(LHD-With Spoke Horn)	.....	1	319 6879
(T-081)(LHD-With Rim Horn Blowing) ***(Use 321 3621)***	.....	1	319 7275
(T-083)(LHD-With Spoke Horn)	.....	1	319 7069
(T-083)(LHD-With Rim Horn Blowing)	.....	1	319 7276
(T-084)(LHD-With Spoke Horn)	.....	1	319 7070
(T-084)(LHD-With Rim Horn Blowing)	.....	1	319 7277
(T-086)(LHD-With Spoke Horn)	.....	1	319 7072
(T-086)(LHD-With Rim Horn Blowing)	.....	1	319 7279
(T-091)(LHD-With Spoke Horn)	.....	1	319 6879
(T-091)(LHD-With Rim Horn Blowing) ***(Use 321 3621)***	.....	1	319 7275
(T-093) (LHD-With Spoke Horn)	.....	1	319 7069
(T-093) (LHD-With Rim Horn Blowing)	.....	1	319 7276
(T-094)(LHD-With Spoke Horn)	.....	1	319 7070
(T-094)(LHD-With Rim Horn Blowing)	.....	1	319 7277
(T-095)(LHD-With Spoke Horn)	.....	1	319 7071
(T-095)(LHD-With Rim Horn Blowing)	.....	1	319 7278
(T-096)(LHD-With Spoke Horn)	.....	1	319 7072
(T-096)(LHD-With Rim Horn Blowing)	.....	1	319 7279
70 10-80 (RHD)	.....	1	318 7533
(T-101)(With Center Horn Button-* 10-70)	.....	1	321 2672
(T-101)(With Center Horn Button-* 10-71)	.....	1	321 3906
(T-101)(With Spoke Horn)	.....	1	321 2664
(T-101)(With Rim Horn Blowing) ***(Use 321 3621)***	.....	1	319 7275
(T-103)(With Center Horn Button-* 10-70)	.....	1	321 2673
(T-103)(With Center Horn Button-* 10-71)	.....	1	321 3907
(T-103)(With Spoke Horn)	.....	1	321 2665
(T-103)(With Rim Horn Blowing) ***(Use 321 3622)***	.....	1	321 1222
(T-108)(With Center Horn Button-* 10-70)	.....	1	321 2672
(T-108)(With Spoke Horn)	.....	1	321 2664
(T-108)(With Center Horn Button-* 10-71)	.....	1	321 3906
(T-111)(With Center Horn Button-* 10-70)	.....	1	321 2672
(T-111)(With Center Horn Button-* 10-71)	.....	1	321 3906
(T-111)(With Spoke Horn)	.....	1	321 2664
(T-111)(With Rim Horn Blowing) ***(Use 321 3621)***	.....	1	319 7275

(T-113)(With Center Horn Button-* 10-70)	.....	1	321 2673
(T-113)(With Center Horn Button-* 10-71)	.....	1	321 3907
(T-113)(With Spoke Horn)	.....	1	321 2665
(T-113)(With Rim Horn Blowing) ***(Use 321 3622)***	.....	1	321 1222
(T-114)(With Center Horn Button)	.....	1	321 3908
(T-114)(With Spoke Horn)	.....	1	321 2666
(T-114)(With Rim Horn Blowing) ***(Use 321 3623)***	.....	1	321 1223
(T-115)(With Center Horn Button)	.....	1	321 3909
(T-115)(With Spoke Horn)	.....	1	321 2667
(T-115)(With Rim Horn Blowing) ***(Use 321 3624)***	.....	1	321 1224
(T-121)(With Center Horn Button)	.....	1	321 2672
(T-121)(With Spoke Horn)	.....	1	321 2664
(T-123)(With Center Horn Button)	.....	1	321 2673
(T-123)(With Spoke Horn)	.....	1	321 2665
(T-124)(With Center Horn Button)	.....	1	321 2674
(T-124)(With Spoke Horn)	.....	1	321 2666
(T-128)(With Center Horn Button)	.....	1	321 2672
(T-128)(With Spoke Horn)	.....	1	321 2664
(T-141)(With Center Horn Button)	.....	1	321 3906
(T-141)(With Spoke Horn)	.....	1	321 2664
(T-141)(With Rim Horn Blowing) ***(Use 321 3621)***	.....	1	319 7275
(T-143)(With Center Horn Button)	.....	1	321 3907
(T-143)(With Spoke Horn)	.....	1	321 2665
(T-143)(With Rim Horn Blowing) ***(Use 321 3622)***	.....	1	321 1222
(T-144)(With Center Horn Button)	.....	1	321 3908
(T-144)(With Spoke Horn)	.....	1	321 2666
(T-144)(With Rim Horn Blowing) ***(Use 321 3623)***	.....	1	321 1223
(T-145)(With Center Horn Button)	.....	1	321 3909
(T-145)(With Spoke Horn)	.....	1	321 2667
(T-145)(With Rim Horn Blowing) ***(Use 321 3624)***	.....	1	321 1224
(T-151)(With Center Horn Button)	.....	1	319 6491
(T-151)(With Spoke Horn)	.....	1	319 6879
(T-153)(With Center Horn Button)	.....	1	321 1270
(T-153)(With Spoke Horn)	.....	1	321 1264
(T-154)(With Center Horn Button)	.....	1	321 1271
(T-154)(With Spoke Horn)	.....	1	321 1265
(T-161)(With Center Horn Button)	.....	1	321 3906
(T-161)(With Spoke Horn)	.....	1	319 6879
(T-161)(With Rim Horn Blowing) ***(Use 321 3621)***	.....	1	319 7275
(T-163)(With Center Horn Button)	.....	1	321 3907
(T-163)(With Spoke Horn)	.....	1	321 1264
(T-163)(With Rim Horn Blowing) ***(Use 321 3622)***	.....	1	321 1222
(T-164)(With Center Horn Button)	.....	1	321 3908
(T-164)(With Spoke Horn)	.....	1	321 1265
(T-164)(With Rim Horn Blowing) ***(Use 321 3623)***	.....	1	321 1223
(T-165)(With Center Horn Button)	.....	1	321 3909
(T-165)(With Spoke Horn)	.....	1	321 1266
(T-165)(With Rim Horn Blowing) ***(Use 321 3624)***	.....	1	321 1224
(T-168)(With Center Horn Button)	.....	1	321 3906
(T-168)(With Spoke Horn)	.....	1	319 6879
(T-168)(With Rim Horn Blowing) ***(Use 321 3621)***	.....	1	319 7275
(T-171)(With Center Horn Button-* 10-70)	.....	1	319 6491
(T-171)(With Center Horn Button-* 10-71)	.....	1	321 3906
(T-171)(With Spoke Horn)	.....	1	319 6879
(T-171)(With Rim Horn Blowing) ***(Use 321 3621)***	.....	1	319 7275
(T-173)(With Center Horn Button-* 10-70)	.....	1	321 1270
(T-173)(With Center Horn Button-* 10-71)	.....	1	321 3907
(T-173)(With Spoke Horn)	.....	1	321 1264
(T-173)(With Rim Horn Blowing) ***(Use 321 3622)***	.....	1	321 1222
(T-174)(With Center Horn Button-* 10-70)	.....	1	321 1271
(T-174)(With Center Horn Button-* 10-71)	.....	1	321 3908
(T-174)(With Spoke Horn)	.....	1	321 1265
(T-174)(With Rim Horn Blowing) ***(Use 321 3624)***	.....	1	321 1223
(T-175)(With Center Horn Button-* 10-70)	.....	1	319 6491
(T-175)(With Center Horn Button-* 10-71)	.....	1	321 3909
(T-175)(With Spoke Horn)	.....	1	321 1266
(T-175)(With Rim Horn Blowing) ***(Use 321 3624)***	.....	1	321 1224

Printed in U.S.A.

FRONT SUSPENSION - POWER STEERING - STEERING GEAR

(T-176)(With Center Horn Button-* 10-70)	.....	1	319 6491
(T-176)(With Center Horn Button)	.....	1	321 3906
(T-176)(With Spoke Horn)	.....	1	319 6879
(T-176)(With Rim Horn Blowing) ***(Use 321 3621)***	.....	1	319 7275
(T-181)(With Center Horn Button)	.....	1	321 3906
(T-181)(With Spoke Horn)	.....	1	319 6879
(T-181)(With Rim Horn Blowing) ***(Use 321 3621)***	.....	1	319 7275
(T-183)(With Center Horn Button)	.....	1	321 3907
(T-183)(With Spoke Horn)	.....	1	321 1264
(T-183)(With Rim Horn Blowing) ***(Use 321 3622)***	.....	1	321 1222
(T-184)(With Center Horn Button)	.....	1	321 3908
(T-184)(With Spoke Horn)	.....	1	321 1265
(T-184)(With Rim Horn Blowing) ***(Use 321 3623)***	.....	1	321 1223
(T-186)(With Center Horn Button)	.....	1	321 3906
(T-186)(With Spoke Horn)	.....	1	319 6879
(T-186)(With Rim Horn Blowing) ***(Use 321 3621)***	.....	1	319 7275
(T-191)(With Center Horn Button)	.....	1	321 3906
(T-191)(With Spoke Horn)	.....	1	319 6879
(T-191)(With Rim Horn Blowing) ***(Use 321 3621)***	.....	1	319 7275
(T-193)(With Center Horn Button)	.....	1	321 3907
(T-193)(With Spoke Horn)	.....	1	321 1264
(T-193)(With Rim Horn Blowing) ***(Use 321 3622)***	.....	1	321 1222
(T-194)(With Center Horn Button)	.....	1	321 3908
(T-194)(With Spoke Horn)	.....	1	321 1265
(T-194)(With Rim Horn Blowing) ***(Use 321 3623)***	.....	1	321 1223
(T-195)(With Center Horn Button)	.....	1	321 3909
(T-195)(With Spoke Horn)	.....	1	321 1266
(T-195)(With Rim Horn Blowing) ***(Use 321 3624)***	.....	1	321 1224
(T-196)(With Center Horn Button)	.....	1	321 3906
(T-196)(With Spoke Horn)	.....	1	319 6879
(T-196)(With Rim Horn Blowing) ***(Use 321 3621)***	.....	1	319 7275
(T-201)(With Center Horn Button-* 10-70)	.....	1	321 5450
(T-201)(With Center Horn Button-* 10-71)	.....	1	321 3906
(T-201)(With Spoke Horn)	.....	1	321 5442
(T-203)(With Center Horn Button-* 10-70)	.....	1	321 5451
(T-203)(With Center Horn Button-* 10-71)	.....	1	321 5416
(T-203)(With Spoke Horn)	.....	1	321 5443
(T-206)(With Center Horn Button-* 10-70)	.....	1	321 5453
(T-206)(With Center Horn Button-* 10-71)	.....	1	321 5419
(T-206)(With Spoke Horn)	.....	1	321 5445
(T-208)(With Center Horn Button-* 10-70)	.....	1	321 5450
(T-208)(With Center Horn Button-* 10-71)	.....	1	321 3906
(T-208)(With Spoke Horn)	.....	1	321 5442
(T-211)(With Center Horn Button-* 10-70)	.....	1	321 5450
(T-211)(With Center Horn Button-* 10-71)	.....	1	321 3906
(T-211)(With Spoke Horn)	.....	1	321 5442
(T-213)(With Center Horn Button-* 10-70)	.....	1	321 5451
(T-213)(With Center Horn Button-* 10-71)	.....	1	321 5416
(T-213)(With Spoke Horn)	.....	1	321 5443
(T-215)(With Center Horn Button-* 10-71)	.....	1	321 3906
(T-215)(With Spoke Horn)	.....	1	321 5442
(T-216)(With Center Horn Button-* 10-71)	.....	1	321 5419
(T-216)(With Center Horn Button-* 10-70)	.....	1	321 5453
(T-216)(With Spoke Horn)	.....	1	321 5445
(T-218)(With Center Horn Button)	.....	1	321 3906
(T-218)(With Spoke Horn)	.....	1	321 5442
(T-221)(With Center Horn Button)	.....	1	321 5450
(T-221)(With Spoke Horn)	.....	1	321 5442
(T-223)(With Center Horn Button)	.....	1	321 5451
(T-223)(With Spoke Horn)	.....	1	321 5443
(T-224)(With Center Horn Button)	.....	1	321 5452
(T-224)(With Spoke Horn)	.....	1	321 5444
(T-226)(With Center Horn Button)	.....	1	321 5453
(T-226)(With Spoke Horn)	.....	1	321 5445
(T-241)(With Center Horn Button)	.....	1	321 3906
(T-241)(With Spoke Horn)	.....	1	321 5442

(T-243)(With Center Horn Button)	.....	1	321	5416
(T-243)(With Spoke Horn)	.....	1	321	5443
(T-244)(With Center Horn Button)	.....	1	321	5417
(T-244)(With Spoke Horn)	.....	1	321	5444
(T-245)(With Center Horn Button)	.....	1	321	3906
(T-246)(With Center Horn Button)	.....	1	321	5419
(T-246)(With Spoke Horn)	.....	1	321	5445
(T-248)(With Center Horn Button)	.....	1	321	3906
(T-248)(With Spoke Horn)	.....	1	321	5442
(T-261)(With Center Horn Button)	.....	1	321	3906
(T-261)(With Spoke Horn)	.....	1	321	5434
(T-263)(With Center Horn Button)	.....	1	321	5416
(T-263)(With Spoke Horn)	.....	1	321	5435
(T-264)(With Center Horn Button)	.....	1	321	5417
(T-264)(With Spoke Horn)	.....	1	321	5436
(T-265)(With Center Horn Button)	.....	1	321	3906
(T-265)(With Spoke Horn)	.....	1	321	5434
(T-266)(With Center Horn Button)	.....	1	321	5419
(T-266)(With Spoke Horn)	.....	1	321	5437
(T-268)(With Spoke Horn)	.....	1	321	5434
(T-268)(With Center Horn Button)	.....	1	321	3906
(T-271)(With Center Horn Button)	.....	1	321	3906
(T-271B)(With Center Horn Button)	.....	1	319	6491
(T-271)(With Spoke Horn)	.....	1	321	5434
(T-273)(With Center Horn Button)	.....	1	321	5416
(T-273B)(With Center Horn Button)	.....	1	319	6491
(T-273)(With Spoke Horn)	.....	1	321	5435
(T-274)(With Center Horn Button)	.....	1	321	5417
(T-274)(With Spoke Horn)	.....	1	321	5436
(T-274B)(With Center Horn Button)	.....	1	319	7491
(T-276)(With Center Horn Button)	.....	1	321	5419
(T-276)(With Spoke Horn)	.....	1	321	5437
(T-281)(With Center Horn Button)	.....	1	321	3906
(T-281B)(With Center Horn Button)	.....	1	319	6491
(T-281)(With Spoke Horn)	.....	1	321	5434
(T-283)(With Center Horn Button)	.....	1	321	5416
(T-283B)(With Center Horn Button)	.....	1	319	6491
(T-283)(With Spoke Horn)	.....	1	321	5435
(T-284)(With Center Horn Button)	.....	1	321	5417
(T-284B)(With Center Horn Button)	.....	1	319	6491
(T-284)(With Spoke Horn)	.....	1	321	5436
(T-291)(With Center Horn Button)	.....	1	321	3906
(T-291B)(With Center Horn Button)	.....	1	319	6491
(T-291)(With Spoke Horn)	.....	1	321	5434
(T-293)(With Center Horn Button)	.....	1	321	5416
(T-293B)(With Center Horn Button)	.....	1	319	6491
(T-293)(With Spoke Horn)	.....	1	321	5435
(T-294)(With Center Horn Button)	.....	1	321	5417
(T-294B)(With Center Horn Button)	.....	1	319	6491
(T-294)(With Spoke Horn)	.....	1	321	5436
(T-296)(With Center Horn Button)	.....	1	321	5419
(T-296)(With Spoke Horn)	.....	1	321	5437

10.280–2 ATTACHING PARTS, Steering Wheel To Steering Gear Shaft

WASHER, Plain	67/69	.....	17.814	1	G103343 NA
WASHER, Plain	70/	LHD	.....	1	400 3976
WASHER, Plain 70		***10-80 (RHD)***	17.814	1	G103343 NA
NUT, Hexagon	67/69	.....	.....	1	316 7245
NUT, Hexagon 70		***10-80 (RHD)***	.....	1	316 7245
NUT, Lock	70/	LHD	.....	1	400 3977

10.280–2a ATTACHING PARTS, Steering Wheel To Skirt

SCREW, Tapping	71	LHD (* 10–71)	17.660	3	812 2359
SCREW, Tapping	72	LHD	17.660	3	812 2359

FRONT SUSPENSION - POWER STEERING - STEERING GEAR

10.280–3 COVER, Steering Wheel

68/69	"AM" (Chrome With Black Depressions)	.....	1	319 1630
67	01	.....	1	318 7270
67	01-10 (LHD-With Sport Type Wheel) ***(Use 319 1630)***	.....	1	318 7268
68/69	01 "RAMBLER"	.....	1	319 1627
70/	01 (Hornet Emblem)	.....	1	319 7490
72	01 (Hornet Emblem With Black Cover)	.....	1	321 6004
72	01 (Hornet Emblem With Blue Cover)	.....	1	321 6005
72	01 (Hornet Emblem With Green Cover)	.....	1	321 6006
72	01 (Hornet Emblem With Tan Cover)	.....	1	321 6007
70/71	01-10-80 "AMERICAN MOTORS" (Used With Rim Horn Blowing)	.....	1	319 7502
67	10 "RAMBLER"	.....	1	318 7271
67/69	10 "REBEL"	.....	1	319 1629
70	10 "REBEL" (E/MACHINE)	.....	1	319 7491
71	10 (Target Emblem With 3 Colors And Black Cover)	.....	1	321 3653
71	10 (Target Emblem With 3 Colors And Blue Cover)	.....	1	321 3606
71	10 (Target Emblem With 3 Colors And Green Cover)	.....	1	321 3607
71	10 (Target Emblem With 3 Colors And Red Cover)	.....	1	321 3608
72	10 "MATADOR" (With Black Cover)	.....	1	321 6015
72	10 "MATADOR" (With Blue Cover)	.....	1	321 6016
72	10 "MATADOR" (With Green Cover)	.....	1	321 6017
72	10 "MATADOR" (With Tan Cover)	.....	1	321 6018
70	19 (MACHINE)(Target Emblem With 3 Colors)	.....	1	319 7492
70	30 "AMX"	.....	1	319 7503
71	40 "AMERICAN MOTORS" (Used With Rim Horn Blowing)	.....	1	319 7502
70/71	40 "GREMLIN"	.....	1	319 9807
72	40 (Gremlin Emblem With Black Cover)	.....	1	321 6008
72	40 (Gremlin Emblem With Blue Cover)	.....	1	321 6009
72	40 (Gremlin Emblem With Tan Cover)	.....	1	321 6010
67	50 (LHD) ***(Use 319 1630)***	.....	1	318 7268
68/71	70 "JAVELIN"	.....	1	319 1628
70/71	70 (Target Emblem With 4 Colors)	.....	1	319 7504
70/71	70 (Target Emblem With 3 Colors)	.....	1	319 7492
72	70 (Target Emblem With 3 Colors And Black Cover)	.....	1	321 6011
72	70 (Target Emblem With 3 Colors And Blue Cover)	.....	1	321 6012
72	70 (Target Emblem With 3 Colors And Green Cover)	.....	1	321 6013
72	70 (Target Emblem With 3 Colors And Tan Cover)	.....	1	321 6014
67	80 (880-Bright Polish Surface) ***(Use 319 1630)***	.....	1	318 7268
67	80 (880-Wood Grain Surface)	.....	1	318 7397
67	80 (990)(DPL)	.....	1	318 7397
68/69	80 (All Chrome)...(Less Decal)	.....	1	319 1632
68	80 (Crest-With Wood Grain Background) ...(Incl. Decal)	.....	1	319 1631
68	85-89 (Crest-With Black Background) ...(Incl. Decal)	.....	1	319 2941
70/	80 (Crest-With Black Cover)	.....	1	319 7493
70	80 (Crest-With Wood Grain Cover)	.....	1	319 7494
71	80 (Crest-With Blue Cover)	.....	1	321 1520
71	80 (Crest-With Green Cover)	.....	1	321 1521
71	80 (Crest-With Red Cover)	.....	1	321 1522
72	80 (Eagle Emblem With Black Cover)	.....	1	321 6019
72	80 (Eagle Emblem With Blue Cover)	.....	1	321 6020
72	80 (Eagle Emblem With Green Cover)	.....	1	321 6021
72	80 (Eagle Emblem With Tan Cover)	.....	1	321 6022

10.280–4 ATTACHING PARTS, Cover To Wheel

SCREW, Machine	67/69	.....	.....	3	400 2092
SCREW, Tapping	70/	.....	.....	2	400 3949
WASHER, Plain	67/69	.....	.....	3	318 7200
WASHER, Plain	70/	.....	.....	2	319 7015
WASHER, Lock	70/	.....	17.822	1	G125751 NA

10.280–5 DECAL, Steering Wheel Cover

69	85 (Crest-With Black Background)	.....	1	319 2942
68	80 (Crest-With Wood Grain Backaround)	.....	1	319 1633
68	85-89 (Crest-With Black Backaround)	.....	1	319 2942
69	80 (Crest-With Wood Grain Background)	.....	1	319 5305

10.280–6 PLATE, Steering Wheel Spoke Trim

67	80	.....	3	318 6966

10.283–1 SKIRT, Steering Wheel

71	LHD (* 10-71) ***(Use 321 5420)***	.....	1	321 3911 NC
72	(* 10-71)	.....	1	321 5420 NC

10.290–1 GEAR ASSEMBLY, Steering

70	LHD (WPS)...(Incl. Flange)	.....	1	319 8261
71/	LHD (WPS)...(Incl. Flange)	.....	1	321 2296
67	01 (LHD-LPS-* 10-12)...(Incl. Flange) ***(Use 318 9131)***	.....	1	318 6671
67	01 (LHD-LPS-* 10-13) ...(Incl. Flange)	.....	1	318 9131
67	01 (LHD-LPS-* 10-14) ...(Incl. Flange)	.....	1	318 7502
68	01 (LHD-LPS) ...(Incl. Flange)	.....	1	318 7502
67/69	01-10-50-80 (LHD-WPS) ...(Incl. Flange)	.....	1	318 7500
69	01 (LHD-LPS-Except SC/RAMBLER): 10 (LHD-LPS)...(Incl. Flange)	.....	1	319 3544
70	01-40 (LHD-LPS)...(Incl. Flange)	.....	1	319 8046
71	01 (LHD-Six-LPS-24 To 1 Ratio-* 10-80)(LHD-304-LPS-24 To 1 Ratio-* 10-80)	.....	1	319 8046
71	01 (LHD-Six-LPS-20 To 1 Ratio-* 10-15)(LHD-304-LPS-20 To 1-* 10-15)	.....	1	319 9895
72	01-10-40-80 (LHD-LPS-24 To 1 Ratio-* 10-80)...(Incl. Flange)	.....	1	321 5916
72	01-10-40 (LHD-LPS-20 To 1 Ratio-* 10-15)...(Incl. Flange)	.....	1	321 5917
71	06 (SC-360-LPS)...(Incl. Flange)	.....	1	319 9895
69	09 (SC/RAMBLER)	.....	1	319 3543
67/68	10 (LHD-LPS) ...(Incl. Flange)	.....	1	318 7502
70	10 (LHD-LPS-24 To 1 Ratio-* 10-80)	.....	1	319 8044
71	10 (LHD-LPS-24 To 1 Ratio-* 10-80)...(Incl. Flange)	.....	1	319 8046
68	30-70 (LHD-LPS-20 to 1 Ratio-* 10-15) ...(Incl. Flange)	.....	1	318 7503
68	30-70 (LHD-LPS-16 to 1 Ratio-* 10-16) ...(Incl. Flange)	.....	1	319 1841
68/69	30-70 (LHD-WPS)	.....	1	319 1686
69	30-70 (LPS-20 to 1 Ratio-* 10-15) ...(Incl. Flange)	.....	1	319 3543
70/71	30-70 (_HD-LPS-20 To 1 Ratio-* 10-15)	.....	1	319 8043
69	30-70 (LPS-16 to 1 Ratio-* 10-16) ...(Incl. Flange)	.....	1	319 3542
70/71	30-70 (_HD-LPS-16 To 1 Ratio)	.....	1	319 8042
71	40 (LHD-LPS-24 To 1 Ratio-* 10-80)	.....	1	319 8046
71	40 (LHD-LPS-20 To 1 Ratio-* 10-15)	.....	1	319 9895
72	70 (LHD-LPS-20 To 1 Ratio-* 10-15)...(Incl. Flange)	.....	1	321 5919
72	70 (LHD-LPS-16 To 1 Ratio-* 10-16)...(Incl. Flange)	.....	1	321 5918
70/71	80 (LHD-LPS)...(Incl. Flange)	.....	1	319 8046
67/68	80 (LHD-LPS) ...(Incl. Flange)	.....	1	318 7501
69	80 (LHD-LPS)	.....	1	319 3868
67	***01 (RHD-* 10-12)***	.....	1	317 4443
67	***01 (RHD-* 10-13)***	.....	1	318 9130
68	***01 (RHD)***	.....	1	318 9130
69	***01 (RHD-* 10-34)***	.....	1	318 9130
69	***01 (RHD-* 10-35)*** ...(Incl. Flange)	.....	1	319 3591
67/68	***10 (Export-LHD-LPS-Special Equipment-20 To 1 Ratio)*** ...(Incl. Flange)	.....	1	318 7503
69	***10 (Export-LHD-LPS-Special Equipment-20 To 1 Ratio)*** ...(Incl. Flange)	.....	1	319 3543
70	***10 (Export-LHD-LPS-20 To 1 Ratio)***	.....	1	319 8043
71	***10-80 (Export-LHD-LPS-20 to 1 Ratio)***...(Incl. Flange)	.....	1	319 9895
67/68	***10 (RHD-LPS)*** ...(Incl. Flange)	.....	1	318 7646
67/69	***10-80 (RHD-WPS)***...(Incl. Flange)	.....	1	318 6240
70	***10-80 (RHD-WPS)***...(Incl. Flange)	.....	1	319 8040
69	***10 (RHD-LPS)*** ...(Incl. Flange)	.....	1	319 3591
70	***10 (RHD-LPS)***	.....	1	319 8039
67/68	***80 (RHD-LPS)*** ...(Incl. Flange)	.....	1	318 7699
72	***10 (Export-LHD-LPS-20 To 1 Ratio-* 10-15)***...(Incl. Flange)	.....	1	321 5917

FRONT SUSPENSION - POWER STEERING - STEERING GEAR

10.290–2 ATTACHING PARTS, Gear To Sill

BOLT, Hexagon	67	01 (LPS-* 10-12 And * 10-13)	.....	2	317 1667
BOLT, Hexagon	67	01 (LPS-3-3/4" Long-* 10-14)	17.038	2	G454966
BOLT, Hexagon	67	01 (LPS-4" Long-* 10-14)	17.038	1	G454985 NA
BOLT, Hexagon	68	01 (LPS-3-3/4" Long)	17.038	2	G454966
BOLT, Hexagon	68	01 (LPS-4" Long)	17.038	1	G454985 NA
BOLT, Hexagon	69	01 (3-7/8" Long)	.....	1	400 3866
BOLT, Hexagon	69	01 (LPS-3-7/8" Long)	.....	2	400 3866
SPACER	67	01 (LPS-* 10-14)	.....	1	400 1861
SPACER	68	01 (LHD-LPS)	.....	1	400 1861
SPACER	69	01 (LHD-LPS)	.....	1	400 1861
***SPACER	***69	***01 (RHD-* 10-35)**	.....	1	400 1861
WASHER, Plain.....	67/69	01 (LPS)	10.055	3	400 3926
WASHER, Lock	67/69	01 (LPS)	17.820	3	G131100
NUT, Hexagon.....	67	01 (LPS-* 10-14)	17.406	3	G120370
NUT, Hexagon.....	68/69	01 (LPS)	17.406	3	G9415570 NA

10.290–3 ATTACHING PARTS, Gear To Spacer

BOLT, Hexagon	67/69	01 (LHD-WPS)	17.038	3	G179860
BOLT, Hexagon	67/70	10 (LHD-WPS)	17.038	3	G179860
BOLT, Hexagon	68/70	30-70 (LHD-WPS)	17.038	3	G179860
BOLT, Hexagon	71/	70 (LHD-WPS)	17.038	3	G180147 NA
WASHER, Lock	67/69	01 (LHD-WPS)	17.820	3	G131100
WASHER, Lock	67/70	10 (LHD-WPS)	9.002	3	400 1896
WASHER, Lock	68/	30-70 (LHD-WPS)	9.002	3	400 1898
***WASHER, Plain	***67**	***10 (RHD-WPS)**	17.814	3	400 1120

10.290–4 ATTACHING PARTS, Gear And Spacer To Sill

BOLT, Hexagon	70/	01-40 (LHD)	.....	3	400 3972
BOLT, Hexagon	67/69	10-30-70 (LPS)	.....	3	400 0719
BOLT, Hexagon	70	10 (LPS)	.....	3	400 3972
BOLT, Hexagon	71/	10	.....	3	400 3974
BOLT, Hexagon	70/	30-70 (LPS)	.....	3	400 3972
BOLT, Hexagon	67/69	50-80	.....	3	317 5302
BOLT, Hexagon	70/	80	.....	3	400 3974
WASHER, Plain.....	70/	01-40 (LHD-29/64" x 1" x 9/64")	10.055	3	400 3926
WASHER, Plain.....	71/	01-40 (15/32" x 7/8" x 1/16"- Between Gear And Sill)	17.814	1	400 1116
WASHER, Plain.....	72	01-40 (LPS-15/32" x 7/8" x 3/16"- Between Spacer And Sill)	17.824	1	400 1289 NA
WASHER, Plain.....	68/	30-70 (LPS)	10.055	3	400 3926
WASHER, Plain.....	67	10 (Six-LPS-Used Less Stabilizer)	17.814	1	400 1122
WASHER, Plain.....	67	10 (V8)	17.814	1	400 1122
WASHER, Plain.....	67/70	10 (LPS)	10.055	3	400 3926
WASHER, Plain.....	71/	10	10.055	3	400 3926
WASHER, Plain.....	67/	80	10.055	3	400 3926
WASHER, Lock	67/69	10-30-70 (LPS)	17.820	3	G131100
WASHER, Lock	67/69	80	17.820	3	G131100
NUT, Hexagon.....	67/69	10-30-70 (LPS)	17.406	3	G9415570 NA
NUT, Hexagon.....	70	10 (LPS)	.....	3	400 3975
NUT, Hexagon.....	70/	30-70 (LPS)	.....	3	400 3975

10.292 HOUSING ASSEMBLY, Steering Gear

67	01 (LHD-LPS-* 10-12) ...(Incl. Bushing And Filler Plug)	.....	1	320 4723
67	01 (LHD-LPS-* 10-13) ...(Incl. Bushing And Filler Plug)	.....	1	320 8456
67	01 (LHD-LPS-* 10-14) ...(Incl. Bearing Cup And Cross Shaft Bushing)	.....	1	320 4794
68/69	01 (LHD-LPS) ...(Incl. Bearing Cup And Cross Shaft Bushing)	.....	1	320 4794
70/	01-40 (LHD-LPS)...(Incl. Bearing Cup And Cross Shaft Bushing).....	.....	1	320 5675
67/70	10 (LHD-LPS) ...(Incl. Bearing Cup And Cross Shaft Bushing)	.....	1	320 4794
71/	10 (LHD-LPS)...(Incl. Bearing Cup And Cross Shaft Bushing).....	.....	1	320 5675
68/	30-70 (LHD-LPS) ...(Incl. Bearing Cup And Cross Shaft Bushing).....	.....	1	320 4794
67/	50-80 (LHD-LPS) ...(Incl. Bearing Cup And Cross Shaft Bushing)	.....	1	320 5675

67	01 (RHD-* 10-12) ...(Incl. Bushing And Filler Plug)	.....	1	320 4789
67	01 (RHD-* 10-13) ...(Incl. Bushing And Filler Plug)	.....	1	320 8459
68	01 (RHD) ...(Incl. Bushing And Filler Plug)	.....	1	320 8459
69	01 (RHD-* 10-34) ...(Incl. Bushing And Filler Plug)	.....	1	320 8459
69	01 (RHD-* 10-35) ...(Incl. Bearing Cup And Cross Shaft Bushing)	.....	1	320 4795
68/71	10 (RHD-LPS) ...(Incl. Bearing Cup And Cross Shaft Bushing)	.....	1	320 4795
67/68	80 (RHD-LPS) ...(Incl. Bearing Cup And Cross Shaft Bushing)	.....	1	320 8187

10.294 PLUG, Steering Gear Housing Oil Filler Piper

67	01 (LPS-* 10-12 And * 10-13) ...(Incl. Cotter Pin)	10.292	1	311 4016
68	01 (RHD) ...(Incl. Cotter Pin)	10.292	1	311 4016
69	01 (RHD-* 10-34) ...(Incl. Cotter Pin)	10.292	1	311 4016

10.296–1 COVER, Steering Gear Housing Worm

67	01 (LPS-* 10-12 And * 10-13)	.....	1	320 4727
68	01 (RHD)	.....	1	320 4727
69	01 (RHD-* 10-34)	.....	1	320 4727

10.296–2 ATTACHING PARTS, Cover To Housing

BOLT, Hexagon	67	01 (LPS-* 10-12 And * 10-13)	17.038	4	G180073	NA
BOLT, Hexagon	68	01 (RHD)	17.038	4	G180073	NA
BOLT, Hexagon	69	01 (RHD-* 10-34)	17.038	4	G180073	NA

10.298 SHIM, Steering Gear Housing Worm Cover

67	01 (LPS-.006 Thick-* 10-12 And * 10-13)	.....	AR	24 405
67	01 (LPS-.010 Thick-* 10-12 And * 10-13)	.....	AR	24 404
68	01 (RHD-.006 Thick)	.....	AR	24 405
68	01 (RHD-.010 Thick)	.....	AR	24 404
69	01 (RHD-.006 Thick-* 10-34)	.....	AR	24 405
69	01 (RHD-.010 Thick-* 10-34)	.....	AR	24 404

10.300–1 COVER, Steering Gear Housing Cross Shaft (Side)

67	01 (LPS-* 10-12 And * 10-13) ...(Incl. Cross Shaft Bearing)	.....	1	320 4725
67	01 (LPS-* 10-14) ...(Incl. Cross Shaft Bearing)	.....	1	320 0494
68	01-30-70 (LHD-LPS) ...(Incl. Cross Shaft Bearing)	.....	1	320 0494
69	01-30-70 (LHD-LPS) (Use 448 6846)	.....	1	448 6134
70/	LPS	.....	1	448 6846
67/68	10-50-80 (LPS) ...(Incl. Cross Shaft Bearing)	.....	1	320 0494
69	10-80 (LPS) (Use 448 6846)	.....	1	448 6134
68	01 (RHD)	.....	1	320 4725
69	01 (RHD-* 10-34) ...(Incl. Cross Shaft Bearing)	.....	1	320 4725
69	01 (RHD-* 10-35) (Use 448 6846)	.....	1	448 6134

10.300–2 ATTACHING PARTS, Cover To Housing

BOLT, Hexagon	67	01 (LPS-* 10-12 And * 10-13)	17.038	4	G180077	NA
BOLT, Hexagon	67	01 (LPS-* 10-14)	.....	3	320 0499	
BOLT, Hexagon	69	01-30-70 (LHD-LPS)	.....	3	448 6138	
BOLT, Hexagon	68	01-30-70 (LHD-LPS)	.....	3	320 0499	
BOLT, Hexagon	70/	LPS	.....	3	448 6981	
BOLT, Hexagon	67/68	10-50-80 (LPS)	.....	3	320 0499	
BOLT, Hexagon	69	10-80 (LPS)	.....	3	448 6138	
BOLT, Hexagon	68	01 (RHD)	17.038	4	G180077	NA
BOLT, Hexagon	69	01 (RHD-* 10-34)	17.038	4	G180077	NA
BOLT, Hexagon	69	01 (RHD-* 10-35)	.....	3	448 6138	
WASHER, Lock	67	01 (LPS-14)	17.820	3	G187120	NA
WASHER, Lock	68	01-30-70 (LHD-LPS)	17.820	3	G187120	NA
WASHER, Lock	67/68	10-50-80 (LPS)	17.820	3	G187120	NA

FRONT SUSPENSION - POWER STEERING - STEERING GEAR

10.302 GASKET, Steering Gear Housing Cross Shaft Cover

67	01 (LPS-* 10-12 And * 10-13)	.....	1	320 4731
67	01 (LPS-* 10-14)	.....	1	320 0500
68	01-30-70 (LHD-LPS)	.....	1	320 0500
69/	01-30-40-70 (LHD-LPS)	.....	1	448 6139
67/68	10-50-80 (LPS)	.....	1	320 0500
69/	10-80 (LPS)	.....	1	448 6139
68	***01 (RHD)***	.....	1	320 4731
69	***01 (RHD-* 10-34)***	.....	1	320 4731
69	***01 (RHD-* 10-35)***	.....	1	448 6139

10.306–1 SHAFT, Steering Gear Cross (Pitman Shaft)

67	01 (LHD-LPS-* 10-12)	.....	1	320 4724
67	01 (LHD-LPS-* 10-13)	.....	1	320 8458
67	01 (LHD-LPS-* 10-14)	.....	1	320 0503
68/71	01-30-40-70 (LHD-LPS)	.....	1	320 0503
67/71	10-50-80 (LPS)	.....	1	320 0503
72	LPS	.....	1	812 0221
67	***01 (RHD-* 10-12)***	.....	1	320 4790
67	***01 (RHD-* 10-13)***	.....	1	320 8460
68	***01 (RHD)***	.....	1	320 8460
69	***01 (RHD-* 10-34)***	.....	1	320 8460
69	***01 (RHD-* 10-35)***	.....	1	320 0503

10.306–2 WASHER, Steering Gear Cross Shaft Adjusting Screw Thrust

67	01 (LPS-* 10-12 And * 10-13)	.....	1	320 0389
68	***01 (RHD)***	.....	1	320 0389
69	***01 (RHD-* 10-34)***	.....	1	320 0389

10.306–3 RING, Steering Gear Cross Shaft Adjusting Screw Snap

67	01 (LPS-* 10-12 And * 10-13)	.....	1	320 0390
68	***01 (RHD)***	.....	1	320 0390
69	***01 (RHD-* 10-34)***	.....	1	320 0390

10.307 BUSHING, Steering Gear Housing Cross Shaft

67	01 (LPS-* 10-13)	.....	1	320 8457
67	01 (LPS-* 10-14)	.....	1	320 0496
68/	01-30-40-70 (LHD-LPS)	.....	1	320 0496
67/	10-50-80 (LPS)	.....	1	320 0496
68	***01 (RHD)***	.....	1	320 8457
69	***01 (RHD-* 10-34)***	.....	1	320 8457
69	***01 (RHD-* 10-35)***	.....	1	320 0496

10.308–1 SCREW, Steering Gear Cross Shaft Adjusting

67	01 (LPS-* 10-12 And * 10-13)	.....	1	320 2616
67	01 (LPS-* 10-14)	.....	1	320 0498
68	01-30-70 (LHD-LPS)	.....	1	320 0498
69	01-30-70 (LHD-LPS)	.....	1	448 6135
70/	LPS	.....	1	448 6135
67/68	10-50-80 (LPS)	.....	1	320 0498
69	10-80 (LPS)	.....	1	448 6135
68	***01 (RHD)***	.....	1	320 2616
69	***01 (RHD-* 10-34)***	.....	1	320 2616
69	***01 (RHD-* 10-35)***	.....	1	448 6135

Printed in U.S.A.

10.308–2 NUT, Steering Gear Cross Shaft Adjusting Screw

67	01 (LPS-* 10-12 And * 10-13)	.....	1	311 9269
67	01 (LPS-* 10-14)	17.410	1	G124929 NA
68/	01-30-40-70 (LHD-LPS)	17.410	1	G124929 NA
67/	10-50-80 (LPS)	17.410	1	G124929 NA
68	***01 (RHD)***	.....	1	311 9269
69	***01 (RHD-* 10-34)***	.....	1	311 9216
69	***01 (RHD-* 10-35)***	17.410	1	G124929 NA

10.309 SHIM KIT, Steering Gear Cross Shaft Adjusting Screw

67	01 (LPS-* 10-14)	.....	1	320 0507
68/	01-30-40-70 (LHD-LPS)	.....	1	320 0507
67/	10-50-80 (LPS)	.....	1	320 0507
69	***01 (RHD-* 10-35)***	.....	1	320 0507

10.310 SEAL, Steering Gear Cross Shaft

67	01 (LPS-* 10-12 And * 10-13) ...(Incl. Retainer)	.....	1	320 3459
67	01 (LPS-* 10-14) ...(Incl. Retainer)	.....	1	320 0514
68	01-30-70 (LHD-LPS)	.....	1	320 0514
69/	01-30-40-70 (LHD-LPS)	.....	1	448 6140
67/68	10-50-80 (LPS)	.....	1	320 0514
69/	10-80 (LPS)	.....	1	448 6140
68	***01 (RHD)***	.....	1	320 3459
69	***01 (RHD-* 10-34)***	.....	1	320 3459
69	***01 (RHD-* 10-35)***	.....	1	448 6140

10.314 SHAFT, Steering Gear (Incl. Worm)

67	01 (LHD-LPS-* 10-12 And * 10-13)	.....	1	320 7940
67	01 (LHD-LPS-* 10-14) ...(Incl. Worm, Ball Bearings, Bolts, Clamp, Guides And Nut)	.....	1	320 5676
68/69	01 (LHD-LPS) ...(Incl. Worm, Ball Bearings, Bolts, Clamp, Guides And Nut)..	.....	1	320 5676
71	01 (LHD-Six-LPS-24 To 1 Ratio-* 10-80)(LHD-304-LPS-24 To 1 Ratio-* 10-80)...(Incl. Worm, Ball Bearings, Bolts, Clamp, Guides And Nut)	.....	1	448 7879
71	01 (LHD-Six-LPS-20 To 1 Ratio-* 10-15)(LHD-304-LPS-20 To 1 Ratio-* 10-15)...(Incl. Worm, Ball Bearings, Bolts, Clamp, Guides And Nut) ..... ***(Use 448 7881)***	.....	1	448 8391
72	01-40 (LHD-LPS-24 To 1 Ratio-* 10-80)	.....	1	448 9094
72	01-40 (LHD-LPS-20 To 1 Ratio-* 10-15)	.....	1	812 1209
70	01 (LHD-Six-LPS)(LHD-304-LPS)...(Incl. Worm, Ball Bearings, Bolts, Clamp, Guides And Nut)	.....	1	448 7879
71	06 (SC-360-LPS)...(Incl. Worm, Ball Bearings, Bolts, Clamp, Guides And Nut) ..... ***(Use 448 7881)***	.....	1	448 8391
67/69	10-50-80 (LHD-LPS) ...(Incl. Worm, Ball Bearings, Bolts, Clamp, Guides And Nut)	.....	1	320 5676
70	10 (LHD-LPS-* 10-61)	.....	1	320 5676
70	10 (LHD-LPS-* 10-60)	.....	1	448 7879
71	10 (LHD-LPS)...(Incl. Worm, Ball Bearings, Bolts, Clamp, Guides And Nut)..	.....	1	448 7879
72	10-80 (LHD-LPS)	.....	1	448 9094
68/69	30-70 (LPS-* 10-15) ...(Incl. Worm, Ball Bearings, Bolts, Clamp, Guides And Nut)	.....	1	320 5960
68/69	30-70 (LPS-* 10-16) ...(Incl. Worm, Ball Bearings, Bolts, Clamp, Guides And Nut)	.....	1	320 9809
70	30-70 (LHD-LPS-* 10-16) ...(Incl. Worm, Ball Bearings, Bolts, Clamp, Guides And Nut)	.....	1	448 7882
70	30-70 (LHD-LPS-* 10-15 And * 10-61)	.....	1	320 5960

FRONT SUSPENSION - POWER STEERING - STEERING GEAR

70	30-70 (LHD-LPS-* 10-15 And * 10-60)...(Incl. Worm, Ball Bearings, Bolts, Clamp, Guides And Nut)	.....	1	448 7881
70	80 (LHD-LPS)...(Incl. Worm, Ball Bearings, Bolts, Clamp, Guides And Nut)..	.....	1	448 7879
70	40 (LHD-LPS)...(Incl. Worm, Ball Bearings, Bolts, Clamp, Guides And Nut)..	.....	1	448 7879
71	40 (LHD-LPS-24 To 1 Ratio-* 10-80)...(Incl. Worm, Ball Bearings, Bolts, Clamp, Guides And Nut)	.....	1	448 7879
71	40 (LHD-LPS-20 To 1 Ratio-* 10-15)...(Incl. Worm, Ball Bearings, Bolts, Clamp, Guides And Nut)	.....	1	448 8391
71	70 (LHD-LPS-20 to 1 Ratio-* 10-15)	.....	1	448 7881
71	70 (LHD-LPS-16 to 1 Ratio-* 10-16)	.....	1	448 7882
72	70 (LPS-20 To 1 Ratio-* 10-15)	.....	1	812 1209
72	70 (LPS-16 To 1 Ratio-* 10-16)	.....	1	812 1211
67/69	***10 (Export-LHD-LCV-LPS-Special Equipment-20 To 1 Ratio-* 10-15)*** ...(Incl. Worm, Ball Bearings, Bolts, Clamp, Guides And Nut)	.....	1	320 5960
70	***10 (Export-LHD-LPS-20 To 1 Ratio-* 10-15)***...(Incl. Worm, Ball Bearings, Bolts, Clamp, Guides And Nut)	.....	1	448 7881
71	***10-80 (Export-LHD-LPS-20 To 1 Ratio-* 10-15)***...(Incl. Worm, Ball Bearings, Bolts, Clamp, Guides And Nut) ***(Use 448 7881)***	.....	1	448 8391
72	***10 (Export-LHD-LPS-20 To 1 Ratio- * 10-15)***	.....	1	812 1209
67/68	***01 (RHD)***	.....	1	320 4791
69	***01 (RHD-* 10-34)***	.....	1	320 4791
69	***01 (RHD-* 10-35)***...(Incl. Worm, Ball Bearings, Bolts, Clamp, Guides And Nut)	.....	1	320 8188
67/69	***10-80 (RHD-LPS)***...(Incl. Worm, Ball Bearings, Bolts, Clamp, Guides And Nut)	.....	1	320 8188
70	***10 (RHD-LPS)*** ...(Incl. Worm, Ball Bearings, Bolts, Clamp, Guides And Nut)..	.....	1	448 7880

10.316–1 BEARING, Steering Gear Worm Ball

67	01 (LHD-LPS-* 10-14)	.....	AR	320 0517
68/	01-30-40-70 (LHD-LPS)	.....	AR	320 0517
67/	10-50-80 (LPS)	.....	AR	320 0517
67/68	***10 (Export-LHD-Special Equipment-20 To 1 Ratio-* 10-15)***	.....	AR	320 0517
69	***01 (RHD-* 10-35)***	.....	AR	320 0517

10.316–2 NUT, Steering Gear Worm Ball Bearing (Follower)

67	01 (LHD-LPS-* 10-14)	.....	1	320 3303
68/70	01-40 (LHD-LPS)	.....	1	320 3303
71	01 (LHD-Six-LPS-24 To 1 Ratio-* 10-80)(LHD-304-LPS-24 To 1 Ratio -* 10-80)	.....	1	320 3303
71	01 (LHD-Six-LPS-20 To 1 Ratio-* 10-15)(LHD-304-LPS-20 To 1 Ratio - *10-15)	.....	3	320 0638
71	06 (LHD-SC-360-LPS)	.....	1	320 0638
67/70	10-50-80 (LHD-LPS)	.....	1	320 3303
71	10-80 (LHD-LPS)	.....	1	320 3303
68/71	30-70 (LPS-* 10-15)	.....	1	320 0638
68/71	30-70 (LPS-* 10-16)	.....	1	320 9810
70	40 (LHD-LPS)	.....	1	320 3303
71	40 (LHD-LPS-24 To 1 Ratio-* 10-80)	.....	3	320 3303
71	40 (LHD-LPS-20 To 1 Ratio-* 10-15)	.....	3	320 0638
67/70	***10 (Export-LHD-LPS-Special Equipment-20 To 1 Ratio-* 10-15)***	.....	1	320 0638
71	***10-80 (Export-LHD-LPS-20 To 1 Ratio-* 10-15)***	.....	1	320 0638
67/70	***10-80 (RHD-LPS)***	.....	1	320 2130
69	***01 (RHD-* 10-35)***	.....	1	320 2130

10.316–3 GUIDE AND CLAMP KIT, Steering Gear Worm Ball Bearing Return (Incl. Guide, Clamp And Bolt)

67	01 (LHD-LPS-* 10-14)	.....	1	320 5677
68/	01-40 (LHD-LPS)	.....	1	320 5677
67/	10-50-80 (LHD-LPS)	.....	1	320 5677

68/	30-70 (LPS-20 To 1 Ratio-* 10-15)	.....	1	320 4800
68/	30-70 (LPS-16 To 1 Ratio-* 10-16)	.....	1	448 5665
67/70	***10 (Export-LHD-LPS-Special Equipment-20 To 1 Ratio-* 10-15)***	.....	1	320 4800
71	***10-80 (Export-LHD-LPS)***	.....	1	320 5677
69	***01 (RHD-* 10-35)***	.....	1	320 4801
67/71	***10-80 (RHD-LPS)***	.....	1	320 4801

10.316–4 ATTACHING PARTS, Clamp To Nut (Follower)

SCREW, Machine	67	01 (LHD-LPS-* 10-14)	.....	3	320 2128
SCREW, Machine	68/70	01-40 (LHD-LPS)	.....	3	320 2128
SCREW, Machine	71	01 (LHD-Six-LPS-24 To 1 Ratio-* 10-80) (LHD-304-LPS-24 To 1 Ratio-* 10-80)	.....	3	321 2128
SCREW, Machine	71	01 (LHD-Six-LPS-20 To 1 Ratio-* 10-15) (LHD-304-LPS-20 To 1 Ratio-* 10-15)	.....	3	321 0637
SCREW, Machine	71	06 (LHD-SC-360-LPS)	.....	1	320 0637
SCREW, Machine	67/70	10-50-80 (LPS)	.....	3	320 2128
SCREW, Machine	71	10-80 (LHD-LPS)	.....	3	320 2128
SCREW, Machine	68/	30-70 (LPS-* 10-16)	.....	3	320 2128
SCREW, Machine	68/	30-70 (LPS-* 10-15)	.....	1	320 0637
SCREW, Machine	70	40 (LHD-LPS)	.....	3	320 2128
SCREW, Machine	71	40 (LHD-LPS-24 To 1 Ratio-* 10-80)	.....	3	320 2128
SCREW, Machine	71	40 (LHD-LPS-20 To 1 Ratio-* 10-15)	.....	3	320 0637
SCREW, Machine	***67/71***	***10 (Export-LHD-Special Equipment-20 To 1 Ratio-* 10-15)***	.....	1	320 0637
SCREW, Machine	***71***	***10-80 (Export-LHD-LPS-20 To Ratio-* 10-15)***	.....	1	320 0637
SCREW, Machine	***69***	***01 (RHD-* 10-35)***	.....	3	320 2128

10.320 SEAL, Steering Gear Shaft Oil

67	01 (LPS-* 10-12 And * 10-13)	.....	1	320 2618
67	01 (LHD-LPS-* 10-14)	.....	1	320 0636
68	01 (LHD-LPS)	.....	1	320 0636
69/	01-30-40-70 (LHD-LPS)	.....	1	448 6141
67/68	10-50-80 (LPS)	.....	1	320 0636
69/	10-80 (LPS)	.....	1	448 6141
68	***01 (RHD)***	.....	1	320 2618
69	***01 (RHD-* 10-35)***	.....	1	320 2618
69	***01 (RHD-* 10-35)***	.....	1	448 6141

10.322 BEARING, Steering Gear Worm

67	01 (LPS-* 10-12 And * 10-13) ...(Incl. Cage)	.....	2	320 4730
67	01 (LHD-LPS-* 10-14)	.....	2	320 0491
68/	01-30-40-70 (LHD-LPS)	.....	2	320 0491
67/	10-50-80 (LPS)	.....	2	320 0491
68	***01 (RHD)*** ...(Incl. Cage)	.....	2	320 4730
69	***01 (RHD-* 10-34)*** ...(Incl. Cage)	.....	2	320 4730
69	***01 (RHD-* 10-35)***	.....	2	320 0491

10.324–1 CUP, Steering Worm Bearing

67	01 (LHD-LPS-* 10-14)	.....	2	320 0492
68/	01-30-40-70 (LHD-LPS)	.....	2	320 0492
67/	10-50-80 (LPS)	.....	2	320 0492
69	***01 (RHD-* 10-35)***	.....	2	320 0492

10.324–2 CUP, Steering Worm Bearing Upper

67	01 (LPS-* 10-12 And * 10-13)	.....	1	320 4729
68	***01 (RHD)***	.....	1	320 4729
69	***01 (RHD-* 10-34)***	.....	1	320 4729

FRONT SUSPENSION - POWER STEERING - STEERING GEAR

10.324–3 CUP, Steering Worm Bearing Lower

67	01 (LPS-* 10-12 And * 10-13)	.....	1	320 4728
68	***01 (RHD)***	.....	1	320 4728
69	***01 (RHD-* 10-34)***	.....	1	320 4728

10.324–4 RETAINER, Steering Gear Worm Bearing

67	01 (LHD-LPS-* 10-14)	.....	1	320 0493
68/	01-30-40-70 (LHD-LPS)	.....	1	320 0493
67/	10-50-80 (LPS)	.....	1	320 0493
69	***01 (RHD-* 10-35)***	.....	1	320 0493

10.326–1 ADJUSTER, Steering Gear Worm Ball Bearing

67	01 (LHD-LPS-* 10-14) ***(Use 320 6119)***	.....	1	320 0490
68/	01-30-40-70 (LHD-LPS) ***(Use 320 6119)***	.....	1	320 0490
67/	10-50-80 (LPS) ***(Use 320 6119)***	.....	1	320 0490
69	***01 (RHD-* 10-35)*** ***(Use 320 6119)***	.....	1	320 0490

10.326–2 NUT, Steering Gear Worm Ball Bearing Adjuster Lock

67	01 (LHD-LPS-* 10-14)	.....	1	320 0502
68/	01-30-40-70 (LHD-LPS)	.....	1	320 0502
67/	10-50-80 (LPS)	.....	1	320 0502
69	***01 (RHD-* 10-35)***	.....	1	320 0502

10.330 SEAL, Steering Shaft (Foam)

67/68	***01-10-80 (RHD)***	.....	1	317 7457

10.331 RETAINER, Steering Shaft Seal (Clip)

67/68	***01-10-80 (RHD)***	.....	1	317 8454

10.332 WASHER, Steering Shaft Seal Retainer

67/68	***01-10-80 (RHD)***	.....	1	317 8441

10.335–1 RACK, Steering Column Housing

70	LHD (WCGS-LAW)...(Incl. Rod)	.....	1	448 7754
70	LHD (WFGS-LAW)...(Incl. Rod)	.....	1	448 7755
71/	01-40 (LHD-Six-WAT-WCGS-LAW)	.....	1	448 7755
71/	01-40 (LHD-V8-WAT-WCGS-LAW)	.....	1	448 7754
71	01-10-40-70-80 (WFGS-LAW-* 10-66)...(Incl. Rod)	.....	1	448 7755
71	01-10-40-70-80 (WFGS-LAW-* 10-67)...(Less Rod)	.....	1	812 1437
72	01-40-70 (WFGS-LAW)...(Less Rod)	.....	1	812 1437
71/	10-70-80 (LHD-WAT-WCGS-LAW)	.....	1	448 7755
70/	WAW...(Less Rod)	.....	1	448 7823

10.335–2 SPRING, Steering Column Housing Rack Preload

70/	LHD (LAW)	.....	1	448 7774
70/	WAW	.....	1	448 7831

10.336–1 HOUSING, Steering Column

70	LHD (WST-WCGS-LAW)(WFGS-LAW)	.....	1	448 7760
70	LHD (WAT-WCGS-LAW) ***(Use 448 9046)***	.....	1	448 7762
71	LHD (WST-WCGS-LAW-* 10-62)(WFGS-LAW-* 10-62)	.....	1	448 7760
72	LHD (WST-WCGS-LAW)	.....	1	448 9038

Printed in U.S.A.

71	LHD (WST-WCGS-LAW-* 10-63)	.....	1	448 9038
71	LHD (WAT-WCGS-LAW-* 10-62) ***(Use 448 9046)***	.....	1	448 7762
71	LHD (WAT-WCGS-* 10-63)	.....	1	448 9046
71	01-40-70 (LHD-WFGS-LAW-* 10-63 And * 10-66)	.....	1	448 9038
71	LHD (WFGS-LAW-* 10-67)	.....	1	812 0188
72	01-40 (LHD-Six-WAT-WCGS-LAW)	.....	1	448 9046
72	01-40 (LHD-V8-WAT-WCGS-LAW-* 10-62) ***(Use 448 9046)***	.....	1	448 7762
72	01-40 (LHD-V8-WAT-WCGS-LAW-* 10-63)	.....	1	448 9046
72	01-40-70 (LHD-WFGS-LAW)	.....	1	812 0188
71	10-80 (LHD-WFGS-LAW-* 10-63)	.....	1	448 9038
72	10-70-80 (LHD-WAT-WCGS-LAW)	.....	1	448 9046

10.336-2 ATTACHING PARTS, Housing To Jacket Tube

SCREW, Tapping 70/	LHD	.....	4	448 7761

10.336-3 CUP, Steering Column Housing Thrust

70	LHD (LAW)	.....	1	448 7714
71/	LHD (WCGS)	.....	1	448 7714
71	01-10-40-70-80 (WFGS-LAW-* 10-66)	.....	1	448 7714

10.337-1 COLUMN ASSEMBLY, Steering

67	01 (LHD-V8-WAT-WCGS-LAW)	.....	1	318 7986
67	01 (LHD-Six-WST-WCGS)	.....	1	318 6351
67	01 (LHD-V8-WAT-WFGS)	.....	1	318 6354
67	01 (LHD-Six-WAT-WCGS)	.....	1	318 6353
67	01 (LHD-V8-WST-WCGS)	.....	1	318 6352
67	01 (LHD-Six-WOD-WCGS)	.....	1	318 6351
67	01 (LHD-V8-W4ST)	.....	1	318 6354
68	01 (LHD-Six-WOD-WCGS-* 10-17)	.....	1	318 6351
68	01 (LHD-Six-WOD-WCGS-* 10-18)	.....	1	319 1551
68	01 (LHD-V8-WST-WCGS)	.....	1	319 1552
68	01 (LHD-Six-WST-WCGS-* 10-18)	.....	1	319 1551
68	01 (LHD-Six-WST-WCGS-* 10-17)	.....	1	318 6351
68	01 (LHD-V8-WAT-WCGS-LAW-* 10-17)	.....	1	318 7986
68	01 (LHD-V8-W4ST-* 10-17)	.....	1	318 6354
68	01 (LHD-Six-WAT-WCGS-* 10-17)	.....	1	318 6353
68	01 (LHD-Six-WAT-WCGS-* 10-18)	.....	1	319 1553
68	01 (LHD-V8-WAT-WFGS-* 10-17)	.....	1	318 6354
68	01 (LHD-V8-W4ST-* 10-18)	.....	1	319 1554
68	01 (LHD-V8-WAT-WFGS-* 10-18)	.....	1	319 1554
68	01 (LHD-V8-WAT-WCGS-* 10-18)	.....	1	319 1555
69	01 (LHD-Six-WST-WCGS)	.....	1	319 1551
69	01 (LHD-Six-WOD-WCGS)	.....	1	319 1551
69	01 (LHD-Six-WAT-WCGS)	.....	1	319 4702
69	01 (LHD-V8-WFGS)	.....	1	319 1554
69	01 (LHD-V8-WAT-WCGS)	.....	1	319 4703
70	01 (LHD-Six-WST-WCGS-* 10-51)	.....	1	319 5637
70	01 (LHD-Six-WST-WCGS-* 10-52)	.....	1	321 1367
70	01 (LHD-Six-WAT-WCGS-* 10-51)	.....	1	319 5638
70	01 (LHD-Six-WAT-WCGS-* 10-52)	.....	1	321 1366
70	01 (LHD-V8-WAT-WCGS-* 10-51) ***(Use 321 1369)***	.....	1	319 5639
70	01 (LHD-V8-WAT-WCGS-* 10-52)	.....	1	321 1369
71/	01-40 (LHD-Six-WST-WCGS-LAW)	.....	1	321 1147
71	01 (LHD-Six-WFGS-LAW-* 10-66)	.....	1	321 1482
71	01 (LHD-Six-WFGS-LAW-* 10-67)	.....	1	321 2927
72	01-40 (LHD-Six-WFGS)	.....	1	321 2927
71/	01-40 (LHD-Six-WAT-WCGS-LAW)	.....	1	321 1146
71/	01-40 (Six-WAT-WCGS-WAW)	.....	1	321 5750
71/	01-40 (LHD-V8-WAT-WCGS-LAW)	.....	1	321 1149

Printed in U.S.A.

FRONT SUSPENSION - POWER STEERING - STEERING GEAR

71	01 (LHD-V8-WFGS-* 10-66)	.....	1	321 1148
71	01 (LHD-V8-WFGS-* 10-67)	.....	1	321 2926
71/	01-40 (V8-WAT-WCGS-WAW)	.....	1	321 5749
72	01-40 (LHD-V8-WFGS)	.....	1	321 2926
67	10 (LHD-WST-WCGS-LAW)	.....	1	318 6356
67	10 (LHD-WOD-WCGS-LAW)	.....	1	318 6356
67	10 (LHD-WAT-WCGS-LAW)	.....	1	318 6357
67	10 (LHD-WAT-WCGS-WAW)	.....	1	318 6627
67	10 (LHD-WAT-WFGS-LAW)	.....	1	318 6358
67	10 (LHD-V8-WAT-WFGS-WAW)	.....	1	318 6628
67	10 (LHD-V8-W4ST-WAW)	.....	1	318 6628
68	10 (LHD-Six-WST-WCGS-LAW-* 10-19)	.....	1	318 6356
68	10 (LHD-Six-WST-WCGS-LAW-* 10-20)	.....	1	319 1556
68	10 (LHD-Six-WOD-WCGS-LAW-* 10-19)	.....	1	318 6356
68	10 (LHD-Six-WOD-WCGS-LAW-* 10-20)	.....	1	319 1556
68	10 (LHD-WAT-WCGS-LAW-* 10-19)	.....	1	318 6357
68	10 (LHD-WAT-WCGS-LAW-* 10-20)	.....	1	319 1557
68	10 (LHD-WAT-WCGS-WAW)	.....	1	319 1562
68	10 (LHD-290-WST-WCGS-LAW-* 10-19)	.....	1	318 6356
68	10 (LHD-290-WST-WCGS-LAW-* 10-20)	.....	1	319 1556
68	10 (LHD-290-WOD-WCGS-LAW-* 10-19)	.....	1	318 6356
68	10 (LHD-290-WOD-WCGS-LAW-* 10-20)	.....	1	319 1556
68	10 (LHD-V8-WAT-WFGS-LAW-* 10-19)	.....	1	318 6358
68	10 (LHD-V8-WAT-WFGS-LAW-* 10-20)	.....	1	319 1558
68	10 (LHD-V8-WAT-WFGS-WAW-* 10-19)	.....	1	318 6628
68	10 (LHD-V8-WAT-WFGS-WAW-* 10-20)	.....	1	319 1563
68	10 (LHD-V8-W4ST-LAW-* 10-19)	.....	1	318 6358
68	10 (LHD-V8-W4ST-LAW-* 10-20)	.....	1	319 1558
68	10 (LHD-V8-W4ST-WAW-* 10-19)	.....	1	318 6628
68	10 (LHD-V8-W4ST-WAW-* 10-20)	.....	1	319 1563
69	10 (V8-WFGS-WAW)	.....	1	319 1563
69	10 (LHD-Six-WST-WCGS-LAW)	.....	1	319 1556
69	10 (LHD-Six-WOD-WCGS-LAW)	.....	1	319 1556
69	10 (LHD-WAT-WCGS-LAW)	.....	1	319 4704
69	10 (LHD-V8-WAT-WFGS-LAW)	.....	1	319 1558
69	10 (LHD-WAT-WCGS-WAW)	.....	1	319 4708
71/	10-80 (LHD-Six-WST-WCGS-LAW)	.....	1	321 1152
70	10 (LHD-Six-WST-WCGS-LAW-* 10-53)	.....	1	319 5642
70	10 (LHD-Six-WST-WCGS-LAW-* 10-54)	.....	1	321 1372
70	10 (LHD-WAT-WCGS-LAW-* 10-53) ***(Use 321 1371)***	.....	1	319 5643
70	10 (LHD-WAT-WCGS-LAW-* 10-54)	.....	1	321 1371
70	10 (LHD-WFGS-LAW-* 10-53)	.....	1	319 5644
70	10 (LHD-WFGS-LAW-* 10-54)	.....	1	321 1373
70	10 (LHD-WAT-WCGS-WAW-* 10-53)	.....	1	319 5652
70	10 (LHD-WAT-WCGS-WAW-* 10-54)	.....	1	321 1381
70	10 (LHD-WFGS-WAW-* 10-53) ***(Ord. 321 1382, 448 9225)***	.....	1	319 5653
70	10 (LHD-WFGS-WAW-* 10-54)	.....	1	321 1382
71/	10-80 (LHD-WAT-WCGS-LAW)	.....	1	321 1151
71	10-80 (LHD-V8-WFGS-LAW-* 10-66)	.....	1	321 1153
71	10-80 (LHD-V8-WFGS-LAW-* 10-67)	.....	1	321 3966
71/	10-80 (LHD-WAT-WCGS-WAW)	.....	1	321 1156
71	10-80 (LHD-WFGS-WAW)	.....	1	321 1157
68/69	30-70 (V8-WFGS-WAW)	.....	1	318 9274
68/69	30-70 (V8-LAW-WFGS)	.....	1	318 9228
70	30-70 (LHD-WFGS-LAW-* 10-55)	.....	1	319 5641
70	30-70 (LHD-WFGS-LAW-* 10-56)	.....	1	321 1378
70	30-70 (LHD-WFGS-WAW-* 10-55) ***(Ord. 321 1386, 448 9225)***	.....	1	319 5651
70	30-70 (LHD-WFGS-WAW-* 10-56)	.....	1	321 1386
70	40 (WFGS-* 10-49)	.....	1	319 6517
70	40 (WFGS-* 10-50)	.....	1	321 1473
70	40 (Six-WST-WCGS-* 10-51)	.....	1	319 5637

Printed in U.S.A.

FRONT SUSPENSION - POWER STEERING - STEERING GEAR

70	40 (Six-WST-WCGS-* 10-52)	.....	1	321 1367
70	40 (Six-WAT-WCGS-* 10-51)	.....	1	319 5638
70	40 (Six-WAT-WCGS-* 10-52)	.....	1	321 1366
71	40 (LHD-Six-WFGS-* 10-66)	.....	1	321 1482
71	40 (LHD-Six-WFGS-LAW-* 10-67)	.....	1	321 2927
67	50-80 (LHD-232-WST-WCGS-LAW-* 10-55)	.....	1	318 6360
67	50-80 (LHD-232-WOD-WCGS-LAW)	.....	1	318 6360
67	50-80 (LHD-290-WST-WCGS-LAW)	.....	1	318 6360
67	50-80 (LHD-290-WOD-WCGS-LAW)	.....	1	318 6360
67	50-80 (LHD-V8-WAT-WFGS-WAW)	.....	1	318 6630
67	50-80 (LHD-V8-W4ST-WAW)	.....	1	318 6630
67	50-80 (LHD-WAT-WCGS-WAW)	.....	1	318 6629
67	50-80 (LHD-V8-W4ST-LAW)	.....	1	318 6362
67	50-80 (LHD-V8-WAT-WFGS-LAW)	.....	1	318 6362
67	50-80 (LHD-WAT-WCGS-LAW)	.....	1	318 6361
68	70 (WAT-LAW)	.....	1	318 9249
68	70 (Six-WST-WCGS-LAW)	.....	1	318 9250
68	70 (290-WST-WCGS-LAW)	.....	1	318 9250
68	70 (WCGS-WAW)	.....	1	318 9273
69	70 (V8-WAT-WCGS-LAW)	.....	1	319 4706
69	70 (WAT-WCGS-WAW)	.....	1	319 4710
69	70 (WCGS-WAT-WAW)	.....	1	319 4710
70	70 (LHD-WAT-WCGS-LAW-* 10-56)	.....	1	321 1377
70	70 (LHD-WAT-WCGS-LAW-* 10-55)	.....	1	319 5640
70	70 (LHD-WCGS-WAT-WAW-* 10-55)	.....	1	319 5650
70	70 (LHD-WAT-WCGS-WAW-* 10-56)	.....	1	321 1385
71/	70 (LHD-WAT-WCGS-LAW)	.....	1	321 1154
71	70 (LHD-WFGS-LAW-* 10-66)	.....	1	321 1155
71	70 (LHD-WFGS-LAW-* 10-67)	.....	1	321 3965
71/	70 (LHD-WAT-WCGS-WAW)	.....	1	321 1158
71/	70 (LHD-WFGS-WAW)	.....	1	321 1159
72	70 (LHD-WFGS-LAW)	.....	1	321 3965
68	80 (LHD-Six-WOD-WCGS-LAW)	.....	1	319 1559
68	80 (LHD-Six-WST-WCGS-LAW)	.....	1	319 1559
68	80 (LHD-290-WST-WCGS-LAW)	.....	1	319 1559
68	80 (LHD-290-WOD-WCGS-LAW)	.....	1	319 1559
68	80 (LHD-WAT-WCGS-LAW-* 10-19)	.....	1	318 6361
68	80 (LHD-WAT-WCGS-LAW-* 10-20)	.....	1	319 1560
68	80 (LHD-V8-WAT-WFGS-LAW-* 10-19)	.....	1	318 6362
68	80 (LHD-V8-WAT-WFGS-LAW-* 10-20)	.....	1	319 1561
68	80 (LHD-V8-W4ST-LAW-* 10-19)	.....	1	318 6362
68	80 (LHD-V8-W4ST-LAW-* 10-20)	.....	1	319 1561
68	80 (LHD-WAT-WCGS-WAW-* 10-19)	.....	1	318 6629
68	80 (LHD-WAT-WCGS-WAW-* 10-20)	.....	1	319 1564
68	80 (LHD-V8-WAT-WFGS-WAW-* 10-19)	.....	1	318 6630
68	80 (LHD-V8-WAT-WFGS-WAW-* 10-20)	.....	1	319 1565
68	80 (LHD-V8-W4ST-WAW-* 10-19)	.....	1	318 6630
68	80 (LHD-V8-W4ST-WAW-* 10-20)	.....	1	319 1565
69	80 (LHD-Six-WST-WCGS-LAW)	.....	1	319 1830
69	80 (LHD-V8-WAT-WCGS-LAW)	.....	1	319 4705
69	80 (LHD-V8-WFGS-LAW)	.....	1	319 1832
69	80 (LHD-WAT-WCGS-WAW)	.....	1	319 4709
69	80 (LHD-V8-WAT-WFGS-WAW)	.....	1	319 1834
70	80 (LHD-Six-WST-WCGS-LAW-* 10-57)	.....	1	319 5645
70	80 (LHD-Six-WST-WCGS-LAW-* 10-58)	.....	1	321 1375
70	80 (LHD-WAT-WCGS-LAW-* 10-57) ***(Use 321 1374)***	.....	1	319 5646
70	80 (LHD-WAT-WCGS-LAW-* 10-58)	.....	1	321 1374
70	80 (LHD-WFGS-LAW-* 10-57)	.....	1	319 5647
70	80 (LHD-WFGS-LAW-* 10-58)	.....	1	321 1376
70	80 (LHD-WAT-WCGS-WAW-* 10-57)	.....	1	319 5654
70	80 (LHD-WAT-WCGS-WAW-* 10-58)	.....	1	321 1383
70	80 (LHD-WFGS-WAW-* 10-57)	.....	1	319 5655
70	80 (LHD-WFGS-WAW-* 10-58)	.....	1	321 1384

Printed in U.S.A.

FRONT SUSPENSION - POWER STEERING - STEERING GEAR

10.337–2 BOLT, Steering Column Locking

71	LHD (LAW-* 10-62)	.....	1	448 7897
70/	LHD (WAW)	.....	1	448 7819
71	LHD (LAW-* 10-63) ***(Use 448 7897)***	.....	1	448 9033
72	LHD (LAW) ***(Use 448 7897)***	.....	1	448 9033
70	01-10-30-70-80 (LHD-LAW)	.....	1	448 7897
70	40 (WCGS)	.....	1	448 7897
70	40 (WFGS-* 10-62)	.....	1	448 7897
70	40 (WFGS-* 10-63) ***(Use 448 7897)***	.....	1	448 9033

10.337–3 GATE, Steering Column Locking

71/	LHD (WST-WCGS-LAW)	.....	1	321 0151
70	LHD (WST-WCGS-LAW)	.....	1	448 7756
70/	LHD (WAT-WCGS-LAW)	.....	1	448 7799
70	LHD (WFGS-LAW) ***(Use 321 0151)***	.....	1	448 7800
71	01-10-40-70-80 (WFGS-* 10-66)	.....	1	321 0151

10.337–4 ATTACHING PARTS, Gate To Housing

SCREW, Machine	70	LHD	.....	1	448 7801
SCREW, Machine	71/	LHD (WCGS)	.....	1	448 7801
SCREW, Machine	71	01-10-40-70-80 (WFGS-* 10-66)	.....	1	448 7801

10.337–5 WASHER, Steering Column Locking Bolt Spring Thrust

71/	LHD (LAW)	.....	1	448 7777
70	01-10-30-70-80 (LHD-LAW)	.....	1	448 7777
70	40 (WCGS)	.....	1	448 7777
70	40 (WFGS-* 10-62)	.....	1	448 7777
70	40 (WFGS-* 10-63)	.....	1	448 9036

10.337–6 SPRING, Steering Column Locking Bolt

70/	WAW	.....	1	448 7830

10.337–7 SCREW, Steering Column Locking Bolt Spring To Actuator

70/	WAW	.....	1	448 7827

10.337–8 INHIBITOR, Steering Column Lock

71	01-40-70 (WFGS-LAW-* 10-67)	.....	1	812 0182
72	WFGS-LAW	.....	1	812 0182

10.337–9 SPRING, Steering Column Lock Inhibitor

71	01-40-70 (WFGS-LAW-* 10-67)	.....	1	812 0185
72	WFGS-LAW	.....	1	812 0185

10.337–10 WASHER, Steering Column Lock Inhibitor Wave

71	01-40-70 (WFGS-LAW-* 10-67)	.....	1	812 0186
72	WFGS-LAW	.....	1	812 0186

Printed in U.S.A.

FRONT SUSPENSION - POWER STEERING - STEERING GEAR

10.338–1 TUBE, Steering Gear Jacket

68/69	LHD (LAW)	1	448 5458	
70	LHD (LAW)	1	448 7715	
70/	WAW	1	448 7837	
67	01-10-50-80 (LHD-LAW)	1	320 7982	
71/	LHD (WCGS)	1	448 7715	
67	10-50-80 (WAW)	1	320 8012	
68/69	10-30-70-80 (WAW)	1	448 5459	
71	01-40-70 (WFGS-LAW-* 10-66)	1	448 7715	
7	WFGS-LAW (* 10-67)	1	812 0187	
72	40-70 (LHD-WFGS-LAW)	1	812 0187	
71	10-80 (WFGS-LAW)	1	448 7715	
67	***01 (RHD-WAT)***	1	320 6118	
68/69	***01 (RHD-WAT)***	1	448 5486	
67/69	***01 (RHD-WST)***	1	320 6116	
67/69	***10 (RHD-V8-WCGS-WAT)***	1	320 8251	
67/68	***10 (RHD-232-WST)***	1	320 8243	
67/69	***10 (RHD-232-WCGS-WAT)***	1	320 8241	
67/69	***10-80 (RHD-V8-WFGS-WAT)***	1	320 8252	
67	***80 (RHD-232-WCGS-WAT)***	1	320 8251	
67/69	***80 (RHD-V8-WCGS-WAT)***	1	320 8251	
69	***10 (RHD-290-WCGS-WAT)***	1	448 6533	

10.338–2 ATTACHING PARTS, Tube To Instrument Panel

SPACER	***67/***	***10-80 (RHD)***	11.228	2	313 5017
WASHER, Plain	***67/69***	***01 (RHD)***	17.814	2	400 1188
WASHER, Plain	***67/***	***10-80 (RHD)***	17.814	2	400 1188
WASHER, Lock	***70***	***10-80 (RHD)***	17.822	2	G120930
WASHER, Lock	***67/69***	***01-10-80 (RHD)***	17.822	2	G114606 NA
NUT, Hexagon	***67/69***	***RHD***	17.406	2	G120369 NA
NUT, Hexagon	***67/***	***10-80 (RHD)***	17.406	2	G120369 NA

10.338–3 COVER, Steering Gear Jacket Tube

69	01 (LHD)	1	319 3694	NC
70/	01-40	1	361 6397	NC
69	30-70	1	319 3700	NC
70	30-70	1	361 6307	NC
70/	10-80 (LHD)	1	361 6791	NC
71	70	1	363 2615	NC
72	70	1	365 1768	
(T-723)(LHD)		1	359 2114	
(T-728)(LHD)	***(Use 319 3694)***	1	359 2113	
(T-729)(LHD)		1	359 2118	
(T-741)(LHD)	***(Use 319 3694)***	1	359 2113	
(T-743)(LHD)		1	359 2114	
(T-744)(LHD)		1	359 2115	
(T-745)(LHD)		1	359 2116	
(T-747)(LHD)		1	359 2117	
(T-748)(LHD)	***(Use 319 3694)***	1	359 2113	
(T-749)(LHD)		1	359 2118	
(T-828)(LHD)	***(Use 319 3694)***	1	359 2113	
(T-831)(LHD)		1	360 2631	
(T-832)(LHD)		1	360 2637	
(T-835)(LHD)	***(Use 360 2631)***	1	360 2634	
(T-838)(LHD)		1	360 2631	
(T-843)(LHD)		1	318 9778	
(T-844)(LHD)		1	318 9779	
(T-845)(LHD)		1	359 2116	
(T-848)(LHD)	***(Use 319 3694)***	1	359 2113	

FRONT SUSPENSION - POWER STEERING - STEERING GEAR

10.338–4 ATTACHING PARTS, Cover To Instrument Panel

SCREW, Tapping	67/69	01 (LHD)	.....	2	400 1782
SCREW, Tapping	70/	01-40	22.100	2	400 3671
SCREW, Tapping	70/	10-80 (LHD)	2.050	4	400 2334
SCREW, Tapping	68/69	30-70	29.023	2	400 1309
SCREW, Tapping	70	30-70	17.669	2	400 1267 NA
SCREW, Tapping	71	70	15.320	3	400 2309
SCREW, Tapping	72	70	.....	3	400 2337
NUT (Nylon)	68/	30-70	14.108	2	400 0141
NUT, Speed	71/	70	22.100	2	400 3841

10.338–4a ATTACHING PARTS, Cover To Control Housing

SCREW, Tapping	71/	70	7.014	4	400 2809
NUT, Speed	71/	70	22.100	4	400 3841

10.338–5 ATTACHING PARTS, Cover To Jacket Tube

CLIP, Speed	67/69	01 (LHD)	.....	1	400 1783

10.338–6 FILLER, Steering Gear Jacket Tube Cover To Steering Column

69	10-80 (LHD)	.....	1	361 5001
70/	10-80 (LHD)	.....	1	361 6672
(T-831)		.....	1	360 2895
(T-832)		.....	1	360 2897
(T-835)		.....	1	360 2896
(T-838)		.....	1	360 2895
(T-931)		.....	1	319 4514
(T-932)		.....	1	319 4514
(T-935)		.....	1	319 4742
(T-936)		.....	1	319 4514
(T-961)		.....	1	319 4514
(T-962)		.....	1	319 4514
(T-963)		.....	1	319 4516
(T-965)		.....	1	319 4742
(T-966)		.....	1	319 4714
(T-968)		.....	1	319 4514

10.338–7 JACKET, Steering Gear Jacket Tube

67/69	LHD (WFGS-LAW)	7.020	1	320 8073
71	LHD (WFGS-LAW-* 10-62)	.....	1	448 7768
70	01-10-30-70-80 (LHD-WFGS-LAW)	.....	1	448 7768
67/69	10-30-50-70-80 (WFGS-WAW)	.....	1	320 8154
71	01-40-70 (WFGS-LAW-* 10-63 And * 10-66)	.....	1	448 9047
71	WFGS (* 10-67)	.....	1	812 0181
72	01-40-70 (WFGS-LAW)	.....	1	812 0181
71	10-80 (WFGS-LAW-* 10-63)	.....	1	448 9047
70	40 (WFGS-* 10-62)	.....	1	448 7768
70	40 (WFGS-* 10-63)	.....	1	448 9047

10.338–7a PLATE, Steering Gear Jacket Tube Jacket Lock

70	LHD (WFGS-LAW)	.....	1	448 7787
71	LHD (WFGS-LAW-* 10-62)	.....	1	448 7787

Printed in U.S.A.

10.338–7b ATTACHING PARTS, Plate To Jacket

SCREW, Tapping	70	LHD (WFGS-LAW)	.....	2	448 7707
SCREW, Tapping	71	LHD (WFGS-LAW-* 10-62)	.....	2	448 7707

10.338–7c WASHER, Steering Gear Jacket Tube Jacket (Wave)

70	LHD (WFGS-LAW)	.....	1	448 7769

10.338–7d ATTACHING PARTS, Steering Gear Jacket Tube Jacket To Housing

SCREW, Tapping	71	01-40-70 (WFGS-LAW-* 10-67)	3.321	3	448 7763
SCREW, Tapping	72	WFGS-LAW	3.321	3	448 7763

10.338–8 JACKET, Steering Gear Jacket Tube Upper

67/71	***10-80 (RHD)***	.....	1	320 8242

10.338–9 JACKET, Steering Gear Jacket Tube Lower

67/71	***10-80 (RHD-V8-WAT-WFGS)***	.....	1	320 4052

10.338–10 ATTACHING PARTS, Lower Jacket To Tube

SCREW, Tapping	***67/71***	***10-80 (RHD-V8-WAT-WFGS)***	17.660	1	G449623 NA

10.338–11 COVER, Steering Gear Jacket Tube Mesh (Polyvinyl)

67	01-10-50-80 (LHD)	.....	1	320 8205
68	01-10-80 (LHD-* 10-19)	.....	1	320 8205

10.338–12 WEDGE, Steering Gear Jacket Tube

67/69	01 (LHD-Closed Slot) ***(Use 319 0325)***	.....	1	318 8589
68/69	01 (LHD-Open Slot-Except SC/RAMBLER)	.....	1	319 0325
69	09 (SC/RAMBLER) ***(Use 319 0325)***	.....	1	318 8589
67	10-50-80 (LHD-Closed Slot) ***(Use 319 0325)***	.....	2	318 8589
68/69	10-30-70-80 (LHD-Open Slot)	.....	2	319 0325

10.338–13 SHROUD, Steering Column Bowl

70	LHD (LAW)	.....	1	319 5630
71	LHD (WCGS-LAW-* 10-62)	.....	1	319 5630
71	LHD (WCGS-LAW-* 10-63)	.....	1	321 1169
71	LHD (WFGS-LAW-* 10-62)	.....	1	319 5630
70	01-10-30-70-80 (LHD-LAW)	.....	1	319 5630
71	01-40-70 (WFGS-LAW-* 10-63 And * 10-66)	.....	1	321 1169
71	WFGS-LAW (* 10-67)	.....	1	812 0184
72	01-40-70 (WFGS-LAW)	.....	1	812 0184
72	01-40 (LHD-Six-WCGS-LAW)	.....	1	321 1169
72	01-40 (LHD-V8-WAT-WCGS-LAW-* 10-62)	.....	1	319 5630
72	01-40 (LHD-V8-WAT-WCGS-LAW-* 10-63)	.....	1	321 1169
71	10-80 (WFGS-LAW-* 10-63)	.....	1	321 1169
72	10-70-80 (LHD-WCGS-LAW)	.....	1	321 1169
70/	WFGS-WAW	.....	1	319 6539
70	40 (WCGS)	.....	1	319 5630
70	40 (WFGS-* 10-62)	.....	1	319 5630
70	40 (WFGS-* 10-63)	.....	1	321 1169

FRONT SUSPENSION - POWER STEERING - STEERING GEAR

10.339–1 BRACKET, Steering Gear Jacket Tube To Instrument Panel

67/69	01-30-70 (LHD)		.....	1	318 5930	
70/	01-30-40-70		.....	1	319 5279	
67/69	10-50-80 (LHD)		.....	1	318 7517	
70/	10-80 (LHD)		.....	1	319 5280	

10.339–2 ATTACHING PARTS, Bracket To Jacket Tube

BOLT, Hexagon	67/69	***(Use G180073)***	17.038	4	G179812	NA
WASHER, Lock	67/69		17.824	4	G138538	NA
SCREW, Machine	70/	LHD	.....	4	400 3915	

10.339–3 ATTACHING PARTS, Bracket To Brake Pedal Bracket

STUD	67/69	10-50-80 (LHD)	8.035	1	317 7693	
SCREW, Machine	69	01-30-70	.....	1	400 3983	
SCREW, Machine	69	10-80	.....	2	400 3983	
WASHER, Plain	67/69	01 (LHD)	.....	2	400 1775	
WASHER, Plain	69	30-70	.....	1	400 1775	
WASHER, Lock	67/69	01-30-70 (LHD)	17.822	1	G114606	NA
NUT, Hexagon	67/69	01 (LHD)	17.410	1	G124925	
NUT, Hexagon	68/69	10-80	.....	1	400 1863	

10.340–1 ROD, Steering Gear Jacket Tube Support

67/69	(Left) 01 (LHD)	.....	1	318 7675	
70/	(Left) 01-40 (LHD)	.....	1	363 1183	
67	(Left) 10-50-80 (LHD) ***(Use 318 9832)***	.....	1	318 7544	
68/69	(Left) 10-80 (LHD)	.....	1	318 9832	
70/	(Left) 10-80 (LHD)	.....	1	361 6299	
68/69	(Left) 30-70	.....	1	360 1125	
70	(Left) 30-70 (LHD)	.....	1	363 1181	
71/	(Left) 70	.....	1	363 2167	
67/71	***(Left) 10-80 (RHD)***	.....	1	357 4019	
67/69	(Right) 01 (LHD)	.....	1	318 7676	
70/	(Right) 01-40 (LHD)	.....	1	363 1182	
67	(Right) 10-50-80 (LHD-10-7/8" Long) ***(Use 318 9328)***	.....	1	318 7545	
67	(Right) 10-50-80 (LHD-8-29/32" Long) ***(Use 318 9329)***	.....	1	318 8528	
68/69	(Right) 10-80 (LHD-9-11/16" Long)	.....	1	318 9844	
68/69	(Right) 10-80 (LHD-11-5/8" Long)	.....	1	318 9328	
70/	(Right) 10-80 (LHD)	.....	1	361 6298	
68/69	(Right) 30-70	.....	1	360 1124	
70	(Right) 30-70 (LHD)	.....	1	363 1180	
71/	(Right) 70	.....	1	363 2166	
67/71	***(Right) 10-80 (RHD)***	.....	1	357 4018	

10.340–2 ATTACHING PARTS, Rod To Steering Gear Jacket Tube Bracket

WASHER, Plain	67	01 (LHD)	.....	2	400 1775	
WASHER, Plain	67	10-50-80 (LHD)	.....	3	400 1775	
WASHER, Bite	67	10-50-80 (LHD)	23.039	3	400 1497	
WASHER, Lock	67	01 (LHD)	17.822	2	G114606	NA
WASHER, Lock	67	10-50-80 (LHD)	17.822	3	G114606	NA
NUT, Hexagon	67/	01-30-70 (LHD)	.....	2	400 1863	
NUT, Hexagon	67/69	10-50-80 (LHD)	.....	4	400 1863	
NUT, Hexagon	70/	10-40-80 (LHD)	.....	2	400 1863	

Printed in U.S.A.

FRONT SUSPENSION - POWER STEERING - STEERING GEAR

10.340–3 ATTACHING PARTS, Rod To Cowl Vent Chamber

BOLT, Hexagon	67/69	01-30-70 (LHD)	17.038	1	G181646 NA
BOLT, Hexagon	67	(7/8" Long) 10-50-80	17.038	1	G181596 NA
BOLT, Hexagon	67	(1-1/4" Long) 10-50-80	17.038	2	G181610
SCREW, Machine.....	67/	.....	.....	2	400 1896
WASHER, Plain.....	67	(21/64" I.D.) 10-50-80	.....	2	400 1388
WASHER, Plain.....	67	(13/32" I.D.) 10-50-80..... **(Use 400 3808)**	17.814	3	G120394 NA
WASHER, Lock	67	10-50-80.....	17.820	2	G120214
WASHER, Plain.....	71/	01-40-70.....	12.075	2	400 0082
NUT, Jam.....	71/	70	17.410	2	G451520 NA

10.344–1 BEARING, Steering Gear Jacket Tube Upper (In D.S. Switch Housing)

	.....	1	320 2304
67/68 01 (RHD)	3.406	1	320 4049
67/71 10-80 (RHD) ...(Incl. Horn Wire)			

10.344–2 RING, Steering Gear Jacket Tube Upper Bearing Retaining

67/ LHD (LAW).....	.....	1	320 8377

10.344–3 WASHER, Steering Gear Jacket Tube Upper Bearing Thrust

67/ LHD (LAW).....	.....	1	320 8008
67/69 01 (RHD).....	.....	1	317 0968

10.344–4 WASHER, Steering Gear Jacket Tube Upper Bearing "C"

67/69 LHD (LAW).....	.....	1	320 8059

10.344–5 WASHER, Steering Gear Jacket Tube Upper Bearing Wave

67/69 LHD (LAW).....	.....	1	320 8009

10.344–6 SLEEVE, Steering Gear Jacket Tube Upper Bearing (Cone Shape)

67/69 01 (RHD).....	.....	1	315 7942

10.344–7 SPRING, Steering Gear Jacket Tube Upper Bearing

67	01-10-50-80 (LHD-LAW)	.....	1	318 7266
68/69	LHD (LAW).....	.....	1	316 8103
70/	LHD (LAW).....	.....	1	448 7765
67/69	***01 (RHD)***	.....	1	317 6025
67/71	***10-80 (RHD)***	.....	1	316 8103

10.344–8 SEAT, Steering Gear Jacket Tube Upper Bearing Spring

67/71 10-80 (RHD)	.....	1	316 8104

10.346–1 BUSHING, Steering Gear Jacket Tube Lower

67/68	01-10-50-70 (LHD-WST-WCGS-LAW)	.....	1	320 7990
67/68	01-10-50-70 (LHD-WOD-WCGS-LAW).....	.....	1	320 7990
67/68	01-10-50 (LHD-WAT-LAW).....	.....	1	320 7993
67/68	01-10-50-70 (LHD-WFGS-LAW).....	.....	1	320 7993
69	01-10 (LHD-WST-WCGS-LAW)	.....	1	448 6731
69	01-10 (LHD-WOD-WCGS-LAW).....	.....	1	448 6731
69	01-10 (LHD-WAT-WCGS-LAW).....	.....	1	448 6738
69	01-10 (LHD-WFGS-LAW).....	.....	1	448 6738

FRONT SUSPENSION - POWER STEERING - STEERING GEAR

70/	LHD	.....	1	448 7696	
67/68	10-30-70 (WAW)...(Incl. Bearing)	.....	1	320 8162	
69	10-30-70 (WAW)...(Incl. Bearing)	.....	1	448 6712	
69	30-70 (LAW)	.....	1	448 6738	
67/68	50-80 (WAW)...(Incl. Bearing)	.....	1	320 8162	
69	80 (LHD-WST-WCGS-LAW) ..... ***(Use 448 6731)***	.....	1	448 7141	
67/68	80 (LHD-WST-WCGS-LAW)	.....	1	320 7990	
67/68	80 (LHD-WOD-WCGS-LAW)	.....	1	320 7990	
67/68	80 (LHD-WAT-LAW)	.....	1	320 7993	
69	80 (LHD-WAT-LAW)(LHD-WFGS-LAW) ..... ***(Use 448 6738)***	.....	1	448 7140	
67/68	80 (LHD-WFGS-LAW)	.....	1	320 7993	
69	80 (WAW)...(Incl. Bearing)	.....	1	448 7137	
67/69	***01-10-80 (RHD)***	.....	1	317 5542	

10.346–2 ATTACHING PARTS, Bushing To Tube

BOLT, Hexagon	67/69	01-10-50-70-80 (LHD-WST-WCGS-LAW)	7.085	2	320 8270	
BOLT, Hexagon	67/69	01-10-50-70-80 (LHD-WOD-WCGS-LAW)	7.085	2	320 8270	
BOLT, Hexagon	67/69	01-10-50-70-80 (LHD-WST-WCGS-LAW)...(Incl. Lockwasher)	7.038	1	320 8379	
BOLT, Hexagon	67/69	01-10-50-70-80 (LHD-WOD-WCGS-LAW)...(Incl. Lockwasher)	7.038	1	320 8379	
***SCREW, Machine	67/69	01-10-80 (RHD)***	.....	2	320 3603	

10.346–3 SEAL, Steering Gear Operating Shaft To Jacket

67/69	***01 (RHD)***	7.038	1	317 7560
67/71	***10-80 (RHD-WCGS)***	7.038	1	317 7560
70	***10-80 (RHD-WCGS)***	7.038	2	448 8024

10.347 RETAINER, Steering Gear Jacket Tube Lower Bearing

70/	LHD	.....	1	448 7743

10.348 CLIP, Steering Gear Jacket Tube Lower Bushing To Jacket Tube

67/69	LHD (WAT-LAW)	.....	1	320 8007
67/69	LHD (WFGS-LAW)	.....	1	320 8007
70/	LHD (LAW)	.....	1	448 7739
70/	WAW	.....	1	448 7739

10.350–1 PLATE, Steering Gear Jacket Tube To Toeboard Support

67/69	01 (LHD)	.....	1	318 9000
67/69	10-50-80 (LHD)	.....	1	318 8937
68/69	30-70	.....	1	318 9688
67/69	***01 (RHD)***	.....	1	320 4695
67/71	***10-80 (RHD)***	.....	1	317 3213
70/	(Upper) 01-40	.....	1	319 6882
70/	(Upper) 10-80 (LHD)	.....	1	319 6895
70/	(Upper) 30-70	.....	1	319 6870
70/	(Lower) 01-40	.....	1	319 6754
70	(Lower) 10-80 (LHD-* 10-40)	.....	1	319 6814
70/71	(Lower) 10-80 (LHD-* 10-41)	.....	1	319 7799
72	(Lower) 10-80 (LHD)	.....	1	319 7799
70/	(Lower) 30-70	.....	1	319 6897

10.350–2 ATTACHING PARTS, Plate To Toeboard

BOLT, Hexagon	68/69	10-80 (LHD)	17.038	1	G180022
***BOLT, Hexagon	67/69	01 (RHD)***	17.038	3	G181595 NA
CLAMP	67/69	01 (LHD)	.....	1	318 6464
STUD	67	10-50-80 (LHD)	22.056	1	400 0059

Printed in U.S.A.

FRONT SUSPENSION - POWER STEERING - STEERING GEAR

SCREW, Tapping.....	67	10-50-80 (LHD).....	22.056	1	400 0058
SCREW, Tapping.....	70	LHD (5/16-18 x 13/16).....	29.131	4	400 1933
SCREW, Tapping.....	70/	01-30-40-70 (5/16-12 x 1).....	.....	4	400 4085
SCREW, Tapping.....	70/	10-80 (LHD-5/16-12 x 1).....	.....	3	400 4085
SCREW, Tapping.....	70/	10-80 (LHD-5/16-12 x 5/8).....	.....	1	400 4086
SCREW, Tapping	***67/69***	***(3/4" Long) 10-80 (RHD)***.....	22.058	2	400 0058
SCREW, Tapping	***67/70***	***(5/8" Long) 10-80 (RHD)***.....	22.150	1	400 1740
SCREW, Tapping	***70***	***10-80 (RHD)***.....	22.056	2	400 0457
NUT, Hexagon.....	67/69	10-50-80 (LHD).....	12.001	1	400 0566
NUT, Hexagon	***67/69***	***01 (RHD)***.....	17.406	3	G120368
WASHER, Plain.....	70	10-80 (LHD)(11/32" I.D.).....	17.814	4	G120393 NA
WASHER, Plain.....	70	10 (LHD)(13/32" I.D.).....	17.814	4	400 1766
WASHER, Plain	***67/69***	***01 (RHD)***.....	17.814	2	400 1093
WASHER, Plain	***67/71***	***10-80 (RHD)***.....	17.814	1	400 1081
WASHER, Lock	***67/69***	***01 (RHD)***.....	17.820	3	G120214 NA

10.350–2a ATTACHING PARTS, Lower Toeboard Support Plate To Upper

BOLT, Hexagon.....	70	LHD.....	2.020	2	400 3847
SCREW, Machine.....	71/	.....	17.620	2	G273573

10.350–3 ATTACHING PARTS, Plate To Brace Rod

NUT, Hexagon.....	67	10-50-80 (LHD).....	12.001	1	400 0566

10.350–4 ATTACHING PARTS, Plate Clamp To Jacket Tube

BOLT, Hexagon.....	67/69	01-30-70 (LHD).....	17.038	1	G180080 NA
BOLT, Hexagon.....	67/69	(1-1/8" Long) 10-50-80.....	17.038	1	G180080 NA
BOLT, Hexagon.....	67	(1-1/2" Long) 10-50-80.....	17.038	1	G180083 NA
BOLT, Hexagon	***67/69***	***01-10-80 (RHD)***.....	17.038	1	G182689 NA
WASHER, Plain.....	67/69	LHD.....	17.814	1	G120393 NA
NUT, Spring.....	67/69	LHD.....	.....	1	318 8642
NUT, Hexagon	***67/69***	***01-10-80 (RHD)***.....	17.406	1	G115729 NA

10.350–5 SEAL, Steering Gear Jacket Tube To Toeboard

67/69	01 (LHD).....	.....	1	318 6462
69	01 (LHD).....	.....	1	319 3221
67/69	***01 (RHD)***.....	.....	1	320 4696
67/71	***10-80 (RHD)***.....	.....	1	316 7327
68/69	10-30-70-80 (LHD).....	.....	1	319 3173
70/	01-40 (LHD).....	.....	1	319 5267
70	10-80 (LHD-* 10-40).....	.....	1	319 6819
70/71	10-80 (LHD-* 10-41).....	.....	1	319 7798
72	10-80 (LHD).....	.....	1	319 7798
70/	30-70 (LHD).....	.....	1	319 6896

10.350–6 SEAL, Steering Gear Jacket Tube To Toeboard Outer

67/68	10-50-80 (LHD).....	.....	1	318 8590
68	30-70.....	.....	1	318 9635

10.350–7 SEAL, Steering Gear Jacket Tube To Toeboard Inner

67/68	10-50-80 (LHD).....	.....	1	318 8591
68	30-70.....	.....	1	318 9638

FRONT SUSPENSION - POWER STEERING - STEERING GEAR

10.350–8 RETAINER, Steering Gear Jacket Tube To Toeboard Seal Outer

67/68	10-50-80 (LHD)...(Incl. Seal)	.....	1	318 8592
69	10-80	.....	1	318 6140
68	30-70...(Incl. Seal) ***(Ord. 318 9637, 319 3173)***	.....	1	318 9640
69	30-70	.....	1	318 9637

10.350–9 RETAINER, Steering Gear Jacket Tube To Toeboard Seal Inner

67/68	10-50-80 (LHD)...(Incl. Seal)	.....	1	318 8593
68	30-70...(Incl. Seal)	.....	1	318 9639
69	10-30-70-80 (LHD)	.....	1	318 6141

10.350–10 ATTACHING PARTS, Retainer To Toeboard

BOLT, Hexagon	68	10-80	17.038	1	G180022
SCREW, Machine	67/69	(1/4-20 x 3/4) 10-30-50-70-80 (LHD)	22.056	2	400 0457
SCREW, Tapping	67/69	(#10-12 x 3/4) 10-30-50-70-80 (LHD)	17.671	3	400 0774
SCREW, Tapping	68	(#10-16 x 1) 10-50-80 (LHD)	.....	3	400 1878
WASHER, Plain	67/69	10-30-50-70-80 (LHD)	17.814	3	400 1081
NUT, Hexagon	67/68	10-50-80 (LHD)	12.001	1	400 0566

10.350–11 INSULATOR, Steering Gear Jacket Tube To Toeboard Support Plate

67/69	10-50-80 (LHD)	.....	1	358 6318

10.351–1 COVER, Steering Gear Jacket Tube To Toeboard

67/69	10-50-80 (LHD)	.....	1	318 7818

10.351–2 COVER, Steering Gear Jacket Tube To Toeboard Upper

67/69	01 (LHD)	.....	1	318 6461

10.351–3 COVER, Steering Gear Jacket Tube To Toeboard Lower

67/69	01 (LHD)	.....	1	318 6460

10.351–4 ATTACHING PARTS, Cover To Toeboard

SCREW, Tapping	67/69	01 (LHD)	12.075	2	400 0493
SCREW, Tapping	68/69	10-80 (LHD)	22.150	1	400 1740
SCREW, Drilling	67/68	10-50-80 (LHD)	17.814	1	400 1804
WASHER, Plain	67/69	01 (LHD)	17.814	4	400 1093
WASHER, Lock	67/69	01 (LHD)	17.820	4	G120214
NUT, Hexagon	67/69	01 (LHD) ***(Use 400 2117)***	17.406	2	G120376

10.354–1 SPACER, Steering Gear To Side Sill

67/69	01 (LHD-WPS)	.....	1	317 0971
70/	01-40 (LHD)	.....	1	319 4954
67	10 (LHD-LPS)	.....	1	316 7108
68/70	10 (LHD-LPS)	.....	1	319 1326
67/70	10 (LHD-WPS)	.....	1	317 1331
71/	10 (LHD)	.....	1	318 9505
67/71	***10 (RHD-LPS)***	.....	1	316 7109
67/71	***10 (RHD-WPS)***	.....	1	318 7737
68/	30-70 (LHD-WPS)	.....	1	317 1331
68/	30-70 (LHD-LPS)	.....	1	319 1326

67	50-80 (LHD) ..... *(Use 318 9505)*	.....	1	317 5119
68/	80 (LHD)	.....	1	318 9505
67/71	***80 (RHD)***	.....	1	318 7810

10.354–2 ATTACHING PARTS, Spacer To Sill

BOLT, Hexagon	67/68	01 (WPS)	17.038	3	G454936
BOLT, Hexagon	67/69	(3-1/4" Long) 10-30-70 (LHD-WPS)	17.038	2	G454936
BOLT, Hexagon	67/69	(3-1/2" Long) 10-30-70 (LHD-WPS)	.....	1	317 1667
BOLT, Hexagon	70	10 (LHD-WPS)	.....	3	400 3971
BOLT, Hexagon	70/	30-70 (LHD-WPS)	.....	3	400 3971
BOLT, Hexagon	67/69	50-80	10.290	3	317 5302
WASHER, Plain	67/69	01-10-30-70 (LHD-WPS)	10.055	3	400 3926
WASHER, Plain	67/69	50-80	10.055	3	400 3926
WASHER, Lock	67/69	01-10-30-70 (LHD-WPS)	17.820	3	G131100
WASHER, Lock	67/69	50-80	17.820	3	G131100

10.360–1 POWER STEERING KIT

67	01 (199-LAC-LEEP-LPS) ..... *(Ord. Component Parts)*	.....	1	320 8436
67	01 (232-LAC-LSFC-LPS) ..... *(Ord. Component Parts)*	.....	1	320 8436
67	01 (199-WAC-LEEP-LPS) ..... *(Ord. Component Parts)*	.....	1	320 8437
67	01 (232-WAC-LSFC-LPS) ..... *(Ord. Component Parts)*	.....	1	320 8437
67	01 (199-WAC-WEEP-LPS)	.....	1	318 9492
67	01 (199-LAC-WEEP-LPS)	.....	1	318 9493
67	01 (V8-LEEP-LPS)	.....	1	318 9496
67	01 (V8-WEEP-LAC-LPS)	.....	1	318 9497
68/69	01 (LHD-Six-LPS-* 10-21)	.....	1	320 9837
68/69	01 (LHD-V8-LEEP-LPS-* 10-24)	.....	1	320 9841
68/69	01 (LHD-V8-WEEP-LPS-* 10-24)	.....	1	320 9839
67	10 (LHD-232-LAC-LPS)	.....	1	320 8438
67	10 (LHD-232-WAC-LPS)	.....	1	320 8439
67	10 (LHD-V8-LEEP-LPS)	.....	1	318 9498
67	10 (LHD-V8-WEEP-LAC-LPS) ..... *(Ord. Component Parts)*	.....	1	318 9499
68/69	10 (LHD-Six-LPS-* 10-22)	.....	1	320 9837
68/69	10 (LHD-V8-WEEP-LPS-* 10-25)	.....	1	320 9839
68/69	10 (LHD-V8-LEEP-LPS-* 10-25)	.....	1	320 9841
68/69	30-70 (LHD-V8-LEEP-LPS)	.....	1	320 9948
68/69	30-70 (LHD-V8-WEEP-LPS) ..... *(Ord. Component Parts)*	.....	1	320 9949
68/69	30-70 (LHD-V8-WEEP-LPS) ..... *(Ord. Component Parts)*	.....	1	320 9949
67	50-80 (232-LAC-LPS) ..... *(Ord. Component Parts)*	.....	1	320 8440
67	50-80 (232-WAC-LPS)	.....	1	320 8441
67	50-80 (LHD-V8-LEEP-LPS)	.....	1	318 9500
67	50-80 (LHD-V8-WEEP-LAC-LPS)	.....	1	318 9501
68/69	70 (LHD-Six-LPS)	.....	1	320 9947
68	80 (LHD-Six-LPS-* 10-23)	.....	1	320 9837
68	80 (LHD-V8-LEEP-LPS-* 10-26)	.....	1	320 9841
68	80 (LHD-V8-WEEP-LPS-* 10-26)	.....	1	320 9839
69	80 (LHD-Six-LPS-* 10-36)	.....	1	320 9837
69	80 (LHD-V8-LEEP-LPS-* 10-37)	.....	1	320 9841
69	80 (LHD-V8-WEEP-LPS-* 10-37)	.....	1	320 9839
70	LHD (Six-LPS)	.....	1	448 7214
70	LHD (V8-LEEP-LPS-* 10-42)	.....	1	448 7215
70	LHD (V8-WEEP-LPS-* 10-42)	.....	1	448 7216
71/	LHD (Six-LPS) 8/20808	.....	1	~~448 9467~~
71	LHD (V8-LEEP-LPS-* 10-42)	.....	1	448 9468
71	LHD (V8-WEEP-LPS-* 10-42)	.....	1	448 9469
72	LHD (V8-LEEP-LPS)	.....	1	812 0812
72	LHD (V8-WEEP-LPS-* 10-85)	.....	1	812 0813

Printed in U.S.A.

FRONT SUSPENSION - POWER STEERING - STEERING GEAR

10.360–2 ADAPTER KIT, Power Steering (Used Only When Installing Power Steering Kit)

68/69	01 (LHD-LPS)	.....	.....	1	320 9838

10.430–1 PUMP ASSEMBLY, Power Steering

67	01 (LHD-199-WEEP-LAC) ...(Incl. Reservoir And Pulley)	.....	.....	1	318 2265
67	01-10-50-80 (LHD-Six-WAC) ...(Incl. Reservoir And Pulley)	.....	.....	1	318 0375
67	01-10-50-80 (LHD-Six-LAC-LEEP) ...(Incl. Reservoir And Pulley)	.....	.....	1	318 0374
68	SIX (LHD)	313	.....	1	319 1037
69	SIX (LHD)	313	.....	1	319 4989
70/71	SIX (LHD)	.....	.....	1	319 8313
72	SIX (* 10-83)	.....	.....	1	319 8313
72	SIX (* 10-84)	.....	.....	1	321 6094
67/69	V8 (LEEP)	.....	.....	1	320 7044
70	V8 (LEEP)	.....	.....	1	448 8076
71	V8 (LEEP-* 10-88)	.....	.....	1	321 3992
71	V8 (LEEP-* 10-89)	.....	.....	1	448 8076
72	10-80 (V8-LEEP-WAT-* 10-89)	.....	.....	1	448 8076
67/69	V8 (WEEP)	.....	.....	1	320 7048
70/71	V8 (WEEP)	.....	.....	1	448 8077
72	01-40-70 (V8)	.....	.....	1	321 3992
72	10-80 V8 (* 10-88)	.....	.....	1	321 3992
67/70	***10 (RHD-Six)*** ...(Incl. Reservoir And Pulley)	.....	.....	1	318 0374

10.430–2 STUD, Power Steering Pump Mounting

68/	SIX (LHD)	.....	.....	2	320 9675
71/	10-80 (V8-1-15/16" Long-* 10-88)	.....	.....	1	812 0528
71/	10-80 (V8-2-7/32" Long-* 10-88)	.....	.....	1	812 0529
72	01-40-70 (V8-1-15/16" Long)	.....	.....	1	812 0528
72	01-40-70 (V8-2-7/32" Long)	.....	.....	1	812 0529

10.430–3 SEAL, Power Steering Pump Mounting Stud

68/	SIX (LHD)	.....	.....	2	320 9672
71/	V8 (* 10-88)	.....	.....	2	320 9672

10.430–4 ROD, Power Steering Pump Reservoir To Engine Front Mounting Bracket Brace

67	01-10-50-80 (LHD-Six-WAC-* 10-27)	.....	.....	1	320 7797
67	01-10-50-80 (LHD-Six-WAC-* 10-28)	***(Use 320 8161)***	.....	1	320 7786
67	01-10-50-80 (LHD-Six-WEEP)	***(Use 320 8161)***	.....	1	320 7786

10.430–5 ATTACHING PARTS, Rod To Reservoir

STUD	67	01-10-50-80 (LHD-Six-WAC)	10.465	1	315 9434	
STUD	67	01-10-50-80 (LHD-Six-WEEP)	10.465	1	315 9434	
WASHER, Plain	67	01-10-50-80 (LHD-Six-WAC)	17.814	1	G120393	NA
WASHER, Plain	67	01-10-50-80 (LHD-Six-WEEP)	17.814	1	G120393	NA
WASHER, Lock	67	01-10-50-80 (LHD-Six-WAC)	17.820	1	G120214	
WASHER, Lock	67	01-10-50-80 (LHD-Six-WEEP)	17.820	1	G120214	
NUT, Hexagon	67	01-10-50-80 (LHD-Six-WAC)	17.406	1	G120368	
NUT, Hexagon	67	01-10-50-80 (LHD-Six-WEEP)	17.406	1	G120368	
NUT, Hexagon	67	01-10-50-80 (LHD-Six-WAC-WEEP)	17.406	1	G120368	

10.430–6 ATTACHING PARTS, Rod To Engine Front Support Mounting Bracket

STUD	67	01 (LHD-Six-WAC)	1.004	1	318 7993	
STUD	67	01 (LHD-Six-WEEP)	1.004	1	318 7993	
BOLT, Hexagon	67	10-50-80 (LHD-Six-WAC)	17.038	1	G180122	NA
BOLT, Hexagon	67	10-50-80 (LHD-Six-WEEP)	17.038	1	G180122	NA
WASHER, Plain	67	01-10-50-80 (LHD-Six-WAC)	17.814	1	400 1102	
WASHER, Plain	67	01-10-50-80 (LHD-Six-WEEP)	17.814	1	400 1102	
WASHER, Lock	67	01-10-50-80 (LHD-Six-WAC)	17.820	1	G120382	
WASHER, Lock	67	01-10-50-80 (LHD-Six-WEEP)	17.820	1	G120382	
NUT, Hexagon	67	01-10-50-80 (LHD-Six-WAC)	17.406	1	G120377	NA
NUT, Hexagon	67	01-10-50-80 (LHD-Six-WEEP)	17.406	1	G120377	NA

10.430–7 BRACKET, Power Steering Pump Reservoir To Mounting Bracket Support

67/71	*10 (RHD-Six)*	.....		1	318 8936

10.430–8 ATTACHING PARTS, Bracket To Reservoir

WASHER, Plain	*67/70*	*10 (RHD-232)*	17.814	2	G120393 NA
WASHER, Lock	*67/70*	*10 (RHD-232)*	17.820	1	G120214
NUT, Hexagon	*67/70*	*10 (RHD-232)*	17.406	1	G120368

10.430–9 VALVE, Power Steering Pump Pressure Relief

67	01-10-50-80 (Six)	.....	1	320 3283
68/70	*10 (RHD-Six)*	.....	1	320 3283

10.430–10 GASKET, Power Steering Pump Pressure Relief Valve

67	01-10-50-80 (Six)	.....	1	320 2169
68/70	*10 (RHD)*	.....	1	320 2169

10.430–11 SEAT, Power Steering Pump Discharge Tube (For Pressure Hose)

67	01-10-50-80 (Six)	.....	1	320 5221
68/71	*10 (RHD)*	.....	1	320 5221

10.430–12 VENTURI, Power Steering Pump Flow Director

67/70	V8	.....	1	320 4043
71	V8 (* 10-89)	.....	1	320 4043
72	10-80 (V8-LEEP-WAT-* 10-89)	.....	1	320 4043

10.430–13 SEAL KIT, Power Steering Pump

68/	SIX (LHD) 316	.....	1	320 9678
72	10-80 (V8-LEEP-WAT-* 10-89) ...(Incl. 2-311 8849, 1-311 6438, 1-320 0866, 1-320 0867, 1-320 5298 And 1-320 5302)	.....	1	320 5299
67/70	V8...(Incl. 2-311 8849, 1-311 6438, 1-320 9866, 1-320 0867, 1-320 5298, 1-320 5302)	.....	1	320 5299
71/	V8 (* 10-88)	.....	1	320 9678
71	V8 (* 10-89)...(Incl. 2-311 8849, 1-311 6438, 1-320 0866, 1-320 0867, 1-320 5302)	.....	1	320 5299

10.430–14 BODY, Power Steering Pump

68/69	SIX (LHD) 314	.....	1	320 9656
70/	SIX (LHD) 314	.....	1	448 7899
67/70	V8...(Incl. Shaft Bearing And Venturi)	.....	1	320 7052
71	V8 (* 10-89)...(Incl. Shaft Bearing And Venturi)	.....	1	320 7052
72	10-80 (V8-LEEP-WAT-* 10-89)	.....	1	320 7052
71/	V8 (* 10-88)	.....	1	812 0527

10.430–15 GASKET, Power Steering Pump Body To Cover

67/70	V8	.....	1	320 0866
71	V8 (* 10-89)	.....	1	320 0866
72	10-80 (V8-LEEP-WAT-* 10-89)	.....	1	320 0866

10.430–16 SEAL, Power Steering Pump By-Pass ("O" Ring)

67/70	V8	.....	1	320 0867
71	V8 (* 10-89)	.....	1	320 0867
72	10-80 (V8-LEEP-WAT-* 10-89)	.....	1	320 0867

10.431 BRACKET, Power Steering Pump Pivot

71/	V8 (* 10-88)	.....	1	321 5106

10.432 STUD, Power Steering Pump Pivot

71/	V8 (* 10-88)	.....	1	321 5103

FRONT SUSPENSION - POWER STEERING - STEERING GEAR

10.435–1 CARRIER KIT, Power Steering Pump

67/70	V8...(Incl. Cam And Rollers)		.....	1	320 1143
71	V8 (* 10-89)...(Incl. Cam And Rollers)		.....	1	320 1143
72	10-80 (V8-LEEP-WAT-* 10-89) ...(Incl. Cam And Rollers)		.....	1	320 1143

10.435–2 VANE KIT, Power Steering Pump Rotor

68/	SIX (LHD)	318	.....	1	320 9680
71/	V8 (* 10-88)		.....	1	320 9680

10.435–3 ROTOR - VANE - RING KIT, Power Steering Pump

68/	SIX (LHD)	317	.....	1	320 9677
70/	V8 (* 10-88)		.....	1	320 9677

10.435–4 ROTOR, Power Steering Pump

68/	SIX (LHD)		.....	1	320 9667
71/	V8 (* 10-88)		.....	1	320 9667

10.435–5 PIN, Power Steering Pump Rotor Lock

67/70	V8		.....	1	311 6443
71	V8 (* 10-89)		.....	1	311 6443
72	10-80 (V8-LEEP-WAT-* 10-89)		.....	1	311 6443

10.435–6 PIN, Power Steering Pump Cam To Body Lock

67/70	V8		.....	1	320 0874
71	V8 (* 10-89)		.....	1	320 0874
72	10-80 (V8-LEEP-WAT-* 10-89)		.....	1	320 0874

10.435–7 RING, Power Steering Pump

68/	SIX (LHD)		.....	1	320 9665
71/	V8 (* 10-88)		.....	1	320 9665

10.435–8 PIN, Power Steering Pump Ring To Body Dowel

68/	SIX (LHD)		.....	2	320 9660
71/	V8 (* 10-88)		.....	2	320 9660

10.440–1 SHAFT, Power Steering Pump Drive

68	SIX (LHD)		.....	1	320 9657
67/70	V8 (LEEP)		.....	1	320 7047
71	V8 (LEEP-* 10-89)		.....	1	320 7047
72	10-80 (V8-LEEP-WAT-* 10-89)		.....	1	320 7047
67/71	V8 (WEEP)		.....	1	320 7049

10.440–2 SHAFT KIT, Power Steering Pump Drive (Incl. Ring)

69/70	SIX (LHD)	315	.....	1	448 6724
71/	SIX (LHD)	315	.....	1	448 8423
71/	V8 (* 10-88)	315	.....	1	448 8423

10.440–3 RING, Power Steering Pump Drive Shaft Retaining

68	SIX (LHD)		.....	1	320 9666
69/	SIX (LHD)		.....	1	448 6725
71/	V8 (* 10-88)		.....	1	448 6725

10.440–4 SEAL, Power Steering Pump Drive Shaft Oil

67	SIX (01-10-50-80)		.....	1	320 2387
68/69	SIX (LHD)		.....	1	320 9658
70/	SIX (LHD)		.....	1	448 8330

67/70	V8	.....	1	320 5298	
71	V8 (* 10-89)	.....	1	320 5298	
72	10-80 (V8-LEEP-WAT-* 10-89)	.....	1	320 5298	
71/	V8 (* 10-88)	.....	1	448 8330	
68/70	***SIX (RHD-10)***	.....	1	320 2387	

10.440-5 RING, Power Steering Pump Drive Shaft Retainer Snap

67/70	V8	.....	1	320 0868	
71	V8 (* 10-89)	.....	1	320 0868	
72	10-80 (V8-LEEP-WAT-* 10-89)	.....	1	320 0868	

10.440-6 KEY, Power Steering Pump Drive Shaft

68/	SIX (LHD)	.....	1	320 9659	
71/	V8 (* 10-88)	.....	1	320 9659	

10.445-1 COVER, Power Steering Pump Body

67	V8 (WEEP) ...(Incl. Dowel, Bushing And Seat)	.....	1	320 7046	
67	V8 (LEEP) ...(Incl. Dowel, Bushing And Seat)	.....	1	320 8204	
68/69	V8 ...(Incl. Dowel, Bushing And Seat)	.....	1	320 8204	
70	V8 ...(Incl. Dowel, Bushing And Seat)	.....	1	448 8079	
71	V8 (* 10-89)...(Incl. Dowel, Bushing And Seat)	.....	1	448 8079	
72	10-80 (V8-LEEP-WAT-* 10-89) ...(Incl. Dowel, Bushing And Seat)	.....	1	448 8079	

10.445-2 ATTACHING PARTS, Cover To Pump Body

PIN, Dowel	67/70	V8	.....	2	311 8832	
PIN, Dowel	71	V8 (* 10-89)	.....	2	311 8832	
PIN, Dowel	72	10-80 (V8-WAT-* 10-89)	.....	2	311 8832	
BOLT, Hexagon	67/70	(2" Long) V8	17.038	AR	G179847	NA
BOLT, Hexagon	71	(2" Long) V8 (* 10-89)	17.038	AR	G179847	NA
BOLT, Hexagon	67/71	(2-1/8" Long) V8 (WEEP)	17.038	1	G186276	
BOLT, Hexagon	72	(2" Long) 10-80 (V8-WAT-* 10-89)	17.038	2	G179847	NA

10.445-3 VALVE, Power Steering Pump Control

68	SIX (LHD)	.....	1	320 9679	
69	SIX (LHD)	.....	1	448 7370	
70/71	SIX (LHD)	.....	1	448 8026	
72	SIX	.....	1	448 8026	
67/69	V8	.....	1	320 5296	
70	V8	.....	1	448 8078	
71/	V8 (* 10-88)	.....	1	812 0531	
71	V8 (* 10-89)	.....	1	448 8078	
72	10-80 (V8-LEEP-WAT-* 10-89)	.....	1	448 8078	

10.445-4 PLUG, Power Steering Pump Control Valve Retaining

67/70	V8	.....	1	320 0865	
71	V8 (* 10-89)	.....	1	320 0865	
72	10-80 (V8-LEEP-WAT-* 10-89)	.....	1	320 0865	

10.445-5 SEAL, Power Steering Pump Control Valve Retaining Plug

67/70	V8	.....	1	311 6438	
71	V8 (* 10-89)	.....	1	311 6438	
72	10-80 (V8-LEEP-WAT-* 10-89)	.....	1	311 6438	

10.445-6 SPRING, Power Steering Pump Control Valve Relief Valve

67/70	V8	.....	1	320 5297	
71	V8 (* 10-89)	.....	1	320 5297	
72	10-80 (V8-LEEP-WAT-* 10-89)	.....	1	320 5297	

10.445-7 SPRING, Power Steering Pump Flow Control Valve

68/	SIX (LHD)	.....	1	320 9673	
71/	V8 (* 10-88)	.....	1	320 9673	

FRONT SUSPENSION - POWER STEERING - STEERING GEAR

10.445–8 SEAT, Power Steering Pump Discharge (In Cover)(For Pressure Hose)

67/69	V8	.....	1	320 4044
70	V8	.....	1	448 8080
71	V8 (* 10-89)	.....	1	448 8080
72	10-80 (V8-LEEP-WAT-* 10-89)	.....	1	448 8080

10.445–9 PLATE, Power Steering Pump Pressure

68/	SIX (LHD)	.....	1	320 9662
71/	V8 (* 10-88)	.....	1	320 9662

10.445–10 PLATE, Power Steering Pump End

68/	SIX (LHD)	.....	1	320 9661
71/	V8 (* 10-88)	.....	1	320 9661

10.445–11 RING, Power Steering Pump End Plate Retaining

68/	SIX (LHD)	.....	1	320 9664
71/	V8 (* 10-88)	.....	1	320 9664

10.445–12 SEAL, Power Steering Pump End And Pressure Plate

68/	SIX (LHD)	.....	2	320 9668
71/	V8 (* 10-88)	.....	2	320 9668

10.445–13 PLATE, Power Steering Pump Thrust

68/	SIX (LHD)	.....	1	320 9663
71/	V8 (* 10-88)	.....	1	320 9663

10.445–14 SPRING, Power Steering Pump Pressure Plate

68/	SIX (LHD)	.....	1	320 9674
71/	V8 (* 10-88)	.....	1	320 9674

10.448–1 BRACKET, Power Steering Pump

68/71	SIX (LHD)	.....	1	319 0996
72	SIX (* 10-83)	.....	1	319 0996
72	SIX (* 10-84)	.....	1	321 6089
71/	V8 (* 10-88)	.....	1	321 4732

10.448–2 ATTACHING PARTS, Bracket To Pump

BOLT, Hexagon	68/	SIX (LHD)	17.038	2	G180118 NA
WASHER, Plain.....	68/	SIX (LHD) ***(Use 400 3804)***	.....	1	G120394
WASHER, Lock	68/	SIX (LHD)	17.820	3	G120382
NUT, Hexagon.....	68/	SIX (LHD)	17.406	1	G120377 NA

10.448–3 ATTACHING PARTS, Pump Bracket To Support Bracket

BOLT, Hexagon	68/	SIX (LHD)	17.038	1	G109443
WASHER, Lock	68/	SIX (LHD)	17.820	1	G120382
NUT, Hexagon.....	68/	SIX (LHD)	17.406	1	G120377 NA

10.448–4 ATTACHING PARTS, Bracket To Adjusting Plate

BOLT, Hexagon	71/	V8 (LEEP-* 10-88)	17.038	2	G180134 NA
BOLT, Hexagon	72	40-70 (V8-WEEP)	17.038	2	G180137 NA
WASHER, Lock	71/	V8 (* 10-88)	17.820	2	G120382

10.448–5 ATTACHING PARTS, Bracket To Water Pump Stud

NUT, Lock.....	71/	V8 (* 10-88)	1.010	1	400 3869

FRONT SUSPENSION - POWER STEERING - STEERING GEAR

10.449–1 BRACKET, Power Steering Pump Bracket To Cylinder Head

68/	SIX (LHD)	.....	1	319 1003	

10.449–2 ATTACHING PARTS, Bracket To Cylinder Head

BOLT, Hexagon	68/	SIX (LHD)	17.038	2	G180123	NA
WASHER, Plain.....	68/	SIX (LHD)	10.260	2	400 3808	
WASHER, Lock	68/	SIX (LHD)	17.820	2	G120382	

10.450–1 BRACKET, Power Steering Pump Adjusting Plate Mounting

67/71	*10 (RHD-Six)*	.....	1	318 8939	

10.450–2 ATTACHING PARTS, Bracket To Cylinder Head

BOLT, Hexagon 67/70	*10 (RHD-Six)*	17.038	2	G180123	NA
WASHER, Plain..... 67/70	*10 (RHD-Six)*	17.814	2	400 1102	
WASHER, Lock 67/70	*10 (RHD-Six)*	17.820	2	G120382	

10.450–3 ATTACHING PARTS, Bracket To Cylinder Block

BOLT, Hexagon 67/70	*10 (RHD-Six)*	17.038	1	G180128	NA
WASHER, Plain..... 67/70	*10 (RHD-Six)*	17.814	1	400 1102	
WASHER, Lock 67/70	*10 (RHD-Six)*	17.820	1	G120382	

10.450–4 BRACE, Power Steering Pump To Water Pump

67/69	V8	.....	1	318 5529
70	V8	.....	1	319 8775
71	V8 (* 10-89)	.....	1	319 8775
72	10-80 (V8-WAT-* 10-89)	.....	1	319 8775

10.450–5 ATTACHING PARTS, Brace To Water Pump

WASHER, Plain.....	67/71	V8	.....	2	400 1107	
WASHER, Plain.....	71	V8 (* 10-89)	.....	2	400 1107	
WASHER, Plain.....	72	10-80 (V8-LEEP-WAT-* 10-89)	.....	2	400 1107	
WASHER, Lock	67/70	V8	17.820	1	G120382	
WASHER, Lock	71	V8 (* 10-89)	17.820	1	G120382	
WASHER, Lock	72	10-80 (V8-LEEP-WAT-* 10-89)	17.820	1	G120382	
NUT, Hexagon.....	67/70	V8	17.406	1	G120369	NA
NUT, Hexagon.....	71	V8 (* 10-89)	17.406	1	G120369	NA
NUT, Hexagon.....	72	10-80 (V8-LEEP-WAT-* 10-89)	17.406	1	G120369	NA

10.450–6 ATTACHING PARTS, Brace To Power Steering Pump

BOLT, Hexagon	67	V8	10.455	2	320 7548

10.450–7 STRAP, Power Steering Pump Adjusting

67	SIX	.....	1	318 4318	

10.450–8 ATTACHING PARTS, Strap To Adjusting Plate

BOLT, Hexagon	67	SIX	17.038	1	400 1931
NUT, Hexagon.....	67	SIX	17.410	1	G124829
NUT, Square	67	SIX	17.413	1	G120374

10.455–1 PULLEY, Power Steering Pump

67	SIX (LAC-LEEP)	.....	1	316 1448
67	SIX (LHD-WAC)	.....	1	316 3009
67	01 (LHD-199-WEEP-LAC)	.....	1	318 2262
68/	SIX (LHD)	.....	1	319 0981
67/69	V8 (LEEP)	.....	1	320 5293
70	V8 (LEEP)	.....	1	448 8075
71/	V8 (LEEP-* 10-88)	.....	1	321 5100
71	V8 (LEEP-* 10-89)	.....	1	448 8075
72	10-80 (V8-LEEP-WAT-* 10-89)	.....	1	448 8075

Printed in U.S.A.

67	V8 (WEEP)	.....	1	318 1664
68/71	V8 (WEEP)	.....	1	319 1802
72	01-40-70 (V8-WEEP)	.....	1	321 5101
67/70	***10 (RHD-Six)***	.....	1	316 1448

10.455–2 ATTACHING PARTS, Pulley To Pump

BOLT, Hexagon	67/70	V8	.....	1	320 7573
BOLT, Hexagon	71	V8 (* 10-89)	.....	1	320 7573
BOLT, Hexagon	72	10-80 (V8-LEEP-WAT-* 10-89)	.....	1	320 7573
WASHER, Plain.....	67/70	V8	.....	1	314 1080
WASHER, Plain.....	71	V8 (* 10-89)	.....	1	314 1080
WASHER, Plain.....	72	10-80 (V8-LEEP-WAT-* 10-89)	.....	1	314 1080
NUT, Hexagon.....	68/	SIX (LHD)	.....	1	400 0221
NUT, Hexagon.....	71/	V8 (* 10-88)	.....	1	400 0221

10.455–3 KEY, Power Steering Pump Pulley

67/70	V8	17.344	1	G106749
71	V8 (* 10-89)	17.344	1	G106749
72	10-80 (V8-WAT-* 10-89)	17.344	1	G106749

10.455–4 BELT, Power Steering Pump

67	SIX (LHD)	.....	1	316 9177
68/	SIX (LHD-LAC)	.....	1	319 1158
68/71	SIX (WAC)	.....	1	319 1030
72	SIX (WAC)	.....	1	319 1320
67/70	V8 (LAC)	.....	1	318 0921
71/	V8 (LAC-* 10-88)	4.612	1	318 1133
71	V8 (LAC-* 10-89)	.....	1	318 0921
72	10-80 (V8-WAT-LAC)	.....	1	318 0921
67/68	V8 (WAC)	***(Use 321 2069)***	1	318 1275
69/70	V8 (WAC)	***(Use 321 2069)***	1	317 5222
71/	V8 (WAC-* 10-88)	.....	1	321 5365
71	V8 (WAC-* 10-89)	.....	1	321 2069
72	10-80 (V8-LEEP-WAT-WAC-* 10-89)	.....	1	321 2069
67/70	***10 (RHD-Six)***	.....	1	318 8943

10.455–5 PLATE, Power Steering Pump Pulley Belt Adjusting

67	SIX (LHD-LAC-LEEP)(LHD-WAC)	.....	1	318 0323
67	01 (LHD-199-WEEP-LAC)(LHD-199-WAC)	.....	1	318 0323
68/71	SIX (LHD)	.....	1	319 0983
72	SIX (* 10-83)	.....	1	319 0983
72	SIX (* 10-84)	.....	1	321 6093
67/70	V8	.....	1	318 6475
71	V8 (* 10-89)	.....	1	318 6475
71/	V8 (* 10-88)	.....	1	321 4710
72	10-80 (V8-WAT-* 10-89)	.....	1	318 6475
67/70	***10 (RHD-Six)***	.....	1	318 8935

10.455–6 ATTACHING PARTS, Plate To Pump

BOLT, Hexagon	67	SIX (LHD-WAC)	17.038	2	G180080 NA
BOLT, Hexagon	67	SIX (LHD-LAC-LEEP)	17.038	2	G180079 NA
BOLT, Hexagon	67	01 (Six-199-WEEP-LAC)	17.038	2	G180080 NA
BOLT, Hexagon	68/	SIX (LHD)	17.038	1	G180118 NA
BOLT, Hexagon	67/70	(4-3/4" Long) V8	.....	1	320 7547
BOLT, Hexagon	71	(4-3/4" Long) V8 (* 10-89)	.....	1	320 7547
BOLT, Hexagon	72	(4-3/4" Long) 10-80 (V8-LEEP-WAT-* 10-89)	.....	1	320 7547
BOLT, Hexagon	67/70	(4-5/8" Long) V8	.....	1	320 7548
BOLT, Hexagon	71	(4-5/8" Long) V8 (* 10-89)	.....	1	320 7548
BOLT, Hexagon	72	(4-5/8" Long) 10-80 (V8-LEEP-WAT-* 10-89)	.....	1	320 7548
BOLT, Hexagon 67/70		***10 (RHD-Six)***	17.038	2	G180079
SPACER	67/70	V8	.....	1	318 5532
SPACER	71	V8 (* 10-89)	.....	1	318 5532
SPACER	72	10-80 (V8-LEEP-WAT-* 10-89)	.....	1	318 5532

WASHER, Plain	67	SIX (LHD-WAC)	17.814	2	400 1760	
WASHER, Plain	67	SIX (LAC-LEEP)	.....	2	400 1095	
WASHER, Plain	67	01 (LHD-199-LAC)	17.814	2	400 1760	
WASHER, Plain	68/	SIX (LHD) ***(Use 400 3808)***	17.814	2	G120394	
WASHER, Plain	67/70	V8	17.814	3	400 1104	
WASHER, Plain	71	V8 (* 10-89)	17.814	3	400 1104	
WASHER, Plain	72	10-80 (V8-LEEP-WAT-* 10-89)	17.814	3	400 1104	
WASHER, Plain	***67/70***	***10 (RHD)***	17.814	2	400 1760	
WASHER, Bite	71/	V8 (* 10-88)	10.003	2	310 8995	
WASHER, Lock	68/	SIX (LHD)	17.820	2	G120382	
WASHER, Lock	67	SIX	17.820	2	G120214	
WASHER, Lock	67/70	V8	17.820	3	G120382	
WASHER, Lock	71	V8 (* 10-89)	17.820	3	G120382	
WASHER, Lock	72	10-80 (V8-Leep-WAT-* 10-89)	17.820	3	G120382	
WASHER, Lock	***67/70***	***10 (RHD)***	17.820	2	G120214	
NUT, Hexagon	68/	SIX (LHD)	17.406	1	G120377	NA
NUT, Hexagon	67/70	V8	17.406	3	G120377	NA
NUT, Hexagon	71	V8 (* 10-89)	17.406	3	G120377	NA
NUT, Hexagon	72	10-80 (V8-LEEP-WAT-* 10-89)	17.406	3	G120377	NA
NUT, Hexagon	71/	V8 (* 10-88)	17.406	2	G120377	NA

10.455–7 ATTACHING PARTS, Adjusting Plate To Cylinder Block

BOLT, Hexagon	67	(1-3/8" Long) SIX (LHD)	17.038	2	G180125	NA
BOLT, Hexagon	67	(2" Long) SIX (LHD)	17.038	1	G180130	NA
BOLT, Hexagon	67	(2-1/8" Long) SIX (LHD)	17.038	1	G187069	NA
BOLT, Hexagon	68/	(2-1/4" Long) SIX (LHD-LAC)	17.038	1	G180132	NA
BOLT, Hexagon	69/	(2-1/2" Long) SIX (LHD-WAC)	17.038	1	G427589	NA
SPACER	67	SIX (LHD-LAC)	.....	1	318 0461	
SPACER	68/	SIX (LHD)	.....	1	317 4400	
WASHER, Bite	69/	SIX (WPS-WAC)	10.003	2	310 8995	
WASHER, Plain	67	SIX (LHD)	17.814	3	400 1762	
WASHER, Plain	69/	(7/8" O.D.) SIX (LHD-LAC)	17.814	1	400 1104	
WASHER, Plain	68/69	(13/16" O.D.) SIX (LHD) ***(Use 400 3808)***	.....	1	G120394	
WASHER, Lock	67/69	SIX (LHD)	17.820	3	G120382	
WASHER, Lock	68/	SIX (LHD)	17.820	1	G120382	

10.455–8 ATTACHING PARTS, Plate To Cylinder Head

BOLT, Hexagon	67/70	(2-1/2" Long) V8	17.038	2	G180134	NA
BOLT, Hexagon	71	(2-1/2" Long) V8 (* 10-89)	17.038	2	G180134	NA
BOLT, Hexagon	72	(2-1/2" Long) 10-80 (V8-LEEP-WAT-* 10-89)	17.038	2	G180134	NA
BOLT, Hexagon	67/70	(1-1/2" Long) V8	17.038	2	G180123	NA
BOLT, Hexagon	71	(1-1/2" Long) V8 (* 10-89)	17.038	2	G180123	NA
BOLT, Hexagon	72	(1-1/2" Long) 10-80 (V8-LEEP-WAT-* 10-89)	17.038	2	G180123	NA
BOLT, Hexagon	67	(2-3/4" Long) V8 (WEEP)	17.038	1	G180137	NA
BOLT, Hexagon	71/	V8 (* 10-88)	10.260	3	400 4010	
WASHER, Lock	67/70	V8	.....	3	400 3803	
WASHER, Lock	71	V8 (* 10-89)	.....	3	400 3803	
WASHER, Lock	72	10-80 (V8-LEEP-WAT-* 10-89)	.....	3	400 3803	

10.455–9 ATTACHING PARTS, Adjusting Plate To Mounting Bracket

BOLT, Hexagon	***67/70***	***10 (RHD)***	17.038	3	G181641	NA
WASHER, Plain	***67/70***	***10 (RHD)***	17.814	3	400 1102	
WASHER, Lock	***67/70***	***10 (RHD)***	17.820	3	G120382	NA
NUT, Hexagon	***67/70***	***10 (RHD)***	17.406	3	G120369	NA

10.455–10 BRACE KIT, Power Steering Pump Adjusting Plate To Cylinder Block (Incl. Bolts, Washers And Spacer)

69	SIX (WPS-WAC)	312	.....	1	448 6873	

10.455–11 BRACE, Power Steering Pump Adjusting Plate To Cylinder Block

69/	SIX (WPS-WAC)		.....	1	319 6431	

FRONT SUSPENSION - POWER STEERING - STEERING GEAR

10.455–12 ATTACHING PARTS, Brace To Cylinder Block

BOLT, Hexagon	69/	SIX (WPS-WAC)	17.038	1	G180123 NA
WASHER, Plain	69/	SIX (WPS-WAC)	17.814	1	400 1161
WASHER, Lock	69/	SIX (WPS-WAC)	17.820	1	G120382

10.465–1 RESERVOIR, Power Steering Pump Oil

67	SIX	.....	1	320 7211
68/71	SIX (LHD)	.....	1	320 9676
72	SIX (* 10-83)	.....	1	320 9676
72	SIX (* 10-84)	.....	1	812 1207
67/70	V8	.....	1	320 5616
71	V8 (* 10-89)	.....	1	320 5616
72	10-80 (V8-WAT-* 10-89)	.....	1	320 5616
71/	V8 (* 10-88)	.....	1	812 0530
68/70	***10 (RHD-Six)***	.....	1	320 7211

10.465–2 ATTACHING PARTS, Reservoir And Brace To Pump

STUD	67	SIX	.....	1	315 9434
STUD	***68/70***	***10 (RHD-Six)***	.....	1	315 9434
WASHER, Lock	67	SIX	17.820	1	G120214
WASHER, Lock	***68/70***	***10 (RHD-Six)***	17.820	1	G120214
NUT, Hexagon	67	SIX	17.406	1	G120368
NUT, Hexagon	***68/70***	***10 (RHD-Six)***	17.406	1	G120368

10.465–3 CAP, Power Steering Pump Oil Reservoir Filler

67	SIX ...(Incl. Gasket)	.....	1	320 7210
68/69	SIX (LHD)	.....	1	320 9970
70/	SIX (LHD)	.....	1	448 8304
71/	V8 (* 10-88)	.....	1	448 8304
68/70	***10 (RHD-Six)*** ...(Incl. Gasket)	.....	1	320 7210

10.465–4 GASKET, Power Steering Pump Oil Reservoir To Pump Stud Or Bolt

67	SIX	.....	1	320 2658
68/70	***10 (RHD-Six)***	.....	1	320 2658

10.465–5 SEAL, Power Steering Pump Oil Reservoir To Pump ("O" Ring)

67	SIX	.....	1	320 2385
68/	SIX (LHD)	.....	1	320 9669
71/	V8 (* 10-88)	.....	1	320 9669
68/70	***10 (RHD-Six)***	.....	1	320 2385

10.465–6 SEAL, Power Steering Pump Oil Reservoir To Pump Stud

67/70	V8	.....	2	311 8849
71	V8 (* 10-89)	.....	2	311 8849
72	10-80 (V8-WAT-* 10-89)	.....	2	311 8849

10.465–7 COVER, Power Steering Pump Oil Reservoir

67/70	V8	.....	1	320 5301
71	V8 (* 10-89)	.....	1	320 5301
72	10-80 (V8-WAT-* 10-89)	.....	1	320 5301

10.465–8 ATTACHING PARTS, Cover To Reservoir

STUD	67/70	V8	.....	1	320 0887
STUD	71	V8 (* 10-89)	.....	1	320 0887
STUD	72	10-80 (V8-LEEP-WAT-* 10-89)	.....	1	320 0887
GROMMET	67/69	V8	.....	1	320 5617
GROMMET	70	V8	.....	1	448 8074
GROMMET	71	V8 (* 10-89)	.....	1	448 8074
GROMMET	72	10-80 (V8-LEEP-WAT-* 10-89)	.....	1	448 8074

Printed in U.S.A.

WASHER, Plain	67/70	V8	1		320 0885
WASHER, Plain	71	V8 (* 10-89)	1		320 0885
WASHER, Plain	72	10-80 (V8-LEEP-WAT-* 10-89)	1		320 0885
NUT, Wing	67/70	V8	1		320 0884
NUT, Wing	71	V8 (* 10-89)	1		320 0884
NUT, Wing	72	10-80 (V8-LEEP-WAT-* 10-89)	1		320 0884

10.465-9 GASKET, Power Steering Pump Oil Reservoir Cover

67	LHD (Six)	1		320 2149
67/70	V8	1		320 5302
71	V8 (* 10-89)	1		320 5302
72	10-80 (V8-WAT-* 10-89)	1		320 5302
67/69	***10 (RHD-Six)***	1		320 2149

10.465-10 BAFFLE, Power Steering Pump Oil Reservoir

67	SIX	1		320 3775
68/70	***10 (RHD-Six)***	1		320 3775

10.465-11 PLATE, Power Steering Pump Oil Reservoir Reinforcement

67/70	V8	1		320 0883
71	V8 (* 10-89)	1		320 0883
72	10-80 (V8-WAT-* 10-89)	1		320 0883

10.465-12 ATTACHING PARTS, Reinforcement Plate To Reservoir

STUD	67/70	V8	1		311 9931
STUD	71	V8 (* 10-89)	1		311 9931
STUD	72	10-80 (V8-LEEP-WAT-* 10-89)	1		311 9931

10.470-1 HOSE, Power Steering Pump Pressure

67	SIX	1		318 2368
68/	SIX (LHD)	1		319 1350
67/70	01 (V8)	1		318 6011
71	01 (V8-* 10-89)	1		318 6011
67/70	10-30-50-70-80 (LHD-V8)	1		318 6016
71	10-70-80 (V8-* 10-89)	1		318 6016
71/	V8 (LEEP-* 10-88)	1		321 6520
72	01-40-70 (V8-LEEP)	1		321 6520
72	10-80 (V8-WAT-LEEP-* 10-89)	1		321 4066
72	01-40-70 (V8-WEEP)	1		321 5945
67/70	***10 (RHD-Six)***	1		318 8989
67/70	***10 (RHD-V8)***	1		318 8823
67/70	***80 (RHD-V8)***	1		318 8993

10.470-2 HOSE, Power Steering Pump Return (Bulk-Order In Feet)

67/		AR		320 2182

10.470-3 FITTING, Power Steering Pump Pressure Hose (In Pump)

68/69	SIX (LHD)	1		320 9655
70	SIX (LHD)	1		448 8027
71/	SIX (LHD)	1		448 8897
71/	V8 (* 10-88)	1		448 8897

10.470-4 SEAL, Power Steering Pump Pressure Hose Union Inner

68/	SIX (LHD)	1		320 9671
71/	V8 (* 10-88)	1		320 9671

10.470-5 SEAL, Power Steering Pump Pressure Hose Union Outer

68/	SIX (LHD)	1		320 9670
71/	V8 (* 10-88)	1		320 9670

Printed in U.S.A.

FRONT SUSPENSION - POWER STEERING - STEERING GEAR

10.470–6 TUBE, Power Steering Pump Return Hose To Steering Gear (Adapter)

67/	SIX (LHD)	.....	1	317 1960
67/71	01 (V8)	10.460	1	315 5312
67/70	10-30-50-70-80 (LHD-V8)	.....	1	318 7866
71	10-70-80 (V8-* 10-89)	.....	1	318 7866
72	01-40-70 (V8-WEEP)	.....	1	318 7866
71/	V8 (LEEP-* 10-88)	10.460	1	315 5312
67/70	***10 (RHD-Six)***	10.460	1	315 5312
67/70	***10 (RHD-V8)***	.....	1	318 8824
67/70	***80 (RHD-V8)***	.....	1	318 8991

10.470–7 CLAMP, Power Steering Pump To Steering Gear Return Hose

67/		.....	2	315 5600

10.470–8 CRADLE, Power Steering Pump Hose

67/	SIX	.....	1	317 6336

10.470–9 ATTACHING PARTS, Cradle To Oil Pan

STUD	67/	SIX (LHD)	.....	2	317 6335
WASHER, Lock	67/	SIX (LHD)	17.820	2	G120380 NA
NUT, Hexagon	67/	SIX (LHD)	17.406	2	G120367

10.470–10 CLIP, Power Steering Pump Hose

67/70	***10 (RHD-V8)***	.....	2	318 8825

10.470–11 ATTACHING PARTS, Clip To Oil Pan

STUD	***67/70***	***10 (RHD-V8)***	.....	2	312 2698
WASHER, Lock	***67/70***	***10 (RHD-V8)***	17.820	2	G120214
NUT, Hexagon	***67/70***	***10 (RHD-V8)***	17.406	2	G120368

10.470–12 CLIP, Power Steering Pump Return Hose

68/	V8 (LHD-WEEP)	3.196	1	318 1008

10.470–13 CLIP, Power Steering Pump Pressure Hose

67/70	***10 (RHD-Six)***	13.440	1	400 0443
67/70	***80 (RHD-V8)***	3.165	1	310 8779

10.470–14 ATTACHING PARTS, Clip To Bracket

SCREW, Tapping	***67/70***	***10 (RHD-Six)***	17.671	1	G443794 NA
SCREW, Tapping	***67/70***	***80 (RHD-V8)***	17.671	1	G443794 NA
NUT, Speed	***67/70***	***10 (RHD-Six)***	4.040	1	316 3893
NUT, Speed	***67/70***	***80 (RHD-V8)***	4.040	1	316 3893

10.470–15 BRACKET, Power Steering Pump Hose Clip

67/70	***10 (RHD-Six)***	13.440	1	315 8227
67/70	***80 (RHD-V8)***	13.440	1	315 8227

10.520 HOUSING ASSEMBLY, Power Steering Gear (Incl. Pitman Shaft Bearing, Connector Seats, Check Valve Poppet And Spring)

67/69	LHD	.....	1	320 4805
70	LHD (* 10-68)	.....	1	448 7891
70	LHD (* 10-69)	.....	1	448 7153
71/	LHD (Except Canada) ***(Use 448 7153)***	.....	1	812 1739
71	***01-40 (Canada-* 10-68)***	.....	1	448 7891
71	***01-40 (Canada-* 10-69)***	.....	1	448 7153
67/70	***10-80 (RHD)***	.....	1	320 8036

10.524 CHECK VALVE KIT, Power Steering Gear Pressure (Incl. Seat, Poppet And Spring)

67/		.....	1	320 4825

Printed in U.S.A.

FRONT SUSPENSION - POWER STEERING - STEERING GEAR

10.525 SEAT, Power Steering Gear Pressure Hose Connector (In Housing)

67/			1	320 4808

10.527 SEAT, Power Steering Gear Return Hose Connector (In Housing)

67/			1	320 4807

10.530 POPPET, Power Steering Gear Pressure Check Valve (In Housing)

67/			1	320 4809

10.532 SPRING, Power Steering Gear Pressure Check Valve Poppet (In Housing)

67/			1	320 4810

10.535 PLUG, Power Steering Gear Housing End

67/69			1	320 4820
70	LHD (* 10-68)		1	448 7888
70	LHD (* 10-69)		1	320 4820
71/	LHD (Except Canada)		1	320 4820
71	***01-40 (Canada-* 10-68)***		1	448 7888
71	***01-40 (Canada-* 10-69)***		1	320 4820
70	***10-80 (RHD)***		1	320 4820

10.537 RING, Power Steering Gear Housing End Plug Seal "O"

67/71			1	320 4823
72			1	812 0011

10.540 RING, Power Steering Gear Housing End Plug Retaining

67/69			1	320 4822

10.545 SEAL AND RING KIT, Power Steering Gear

67/69	...(Incl. 320 4828 Kit)		1	320 4827
70	...(Incl. 320 4828 Kit)	***(Use 448 7208)***	1	448 7892
7 /	...(Incl. 448 9073 Kit)		1	448 9074

10.550 RING KIT, Power Steering Gear "O"

67/69			1	320 4828
70/			1	448 9073

10.555 RACK - PISTON - NUT ASSEMBLY, Power Steering Gear (Incl. Worm, Balls, Guides, Clamp, Piston Ring And "O" Ring

67/69	01-10-50-80 (LHD)		1	320 4811
68/69	30-70		1	448 5583
70/	LHD		1	448 7886
67/70	***10-80 (RHD)***		1	320 8037

10.556 RING, Power Steering Gear Rack Spacing

70	LHD (* 10-68)		1	448 7889
71	***01-40 (Canada-* 10-68)***		1	448 7889

10.565 BEARING KIT, Power Steering Gear Lower Thrust (Incl. Races)

67/			1	320 4826

FRONT SUSPENSION - POWER STEERING - STEERING GEAR

10.572 BALL KIT, Power Steering Gear Rack-Piston (Incl. Black And Silver Balls)

67/	(Size Code #6)(.28117 Dia.)	.....	1	320 4835
67/	(Size Code #7)(.28125 Dia.)	.....	1	320 4836
67/	(Size Code #8)(.28133 Dia.)	.....	1	320 4837
67/	(Size Code #9)(.28141 Dia.)	.....	1	320 4838
67/	(Size Code #10)(.28149 Dia.)	.....	1	320 4839
67/	(Size Code #11)(.28157 Dia.)	.....	1	320 4840

10.575 GUIDE, Power Steering Gear Worm Ball Bearing Return

67/69	01-10-50-80 (LHD)	.....	2	320 4813
68/69	30-70	.....	2	448 5585
70/	LHD	.....	1	448 7887
67/70	***10-80 (RHD)***	.....	2	320 8038

10.577–1 CLAMP, Power Steering Gear Worm Ball Bearing Return Guide

67/69	01-10-50-80	.....	1	320 4812
68/69	30-70	.....	1	448 5584
70/		.....	1	320 4812

10.577–2 ATTACHING PARTS, Clamp To Rack Piston

SCREW, Machine	67/	.....	1	320 7057

10.580 RING, Power Steering Gear Rack-Piston (Teflon)

67/		.....	1	320 4814

10.582 RING, Power Steering Gear Rack-Piston Back-Up Seal "O"

67/		.....	1	320 4815

10.585 PLUG, Power Steering Gear Rack-Piston End

67/		.....	1	320 4821

10.590 SHAFT ASSEMBLY, Power Steering Gear Pitman (Incl. Adjusting Screw And Washer)

67/69		.....	1	320 4829
70	LHD (* 10-68)	.....	1	448 7890
70	LHD (* 10-69)	.....	1	448 9366
71	***01-40 (Canada-* 10-68)***	.....	1	448 7890
71	***01-40 (Canada-* 10-69)***	.....	1	448 9366
71/	LHD (Except Canada)	.....	1	448 9366
70	***RHD***	.....	1	320 4829

10.595 BEARING, Power Steering Gear Pitman Shaft Needle

67/69		.....	1	320 4806
70/		.....	1	448 7154

10.600 NUT, Power Steering Gear Pitman Shaft Adjusting Screw

67/		.....	1	320 4818

10.605 SEAL KIT, Power Steering Gear Pitman Shaft

67/		.....	1	320 4830

10.610–1 COVER, Power Steering Gear Pitman Shaft (Side)(Incl. Bushing)

67/69		.....	1	320 4804
70		.....	1	448 6751
71/		.....	1	812 0248

FRONT SUSPENSION - POWER STEERING - STEERING GEAR

10.610–2 ATTACHING PARTS, Cover To Housing

BOLT, Hexagon 67/	17.038	4	448 6979
WASHER, Lock 67/68	17.820	4	G103321 NA

10.612–1 GASKET, Power Steering Gear Pitman Shaft Cover

71/	(Rubber With Steel Insert)	.....	1	812 0249

10.612–2 "O" RING, Power Steering Gear Pitman Shaft Cover

70/	.....	.....	1	812 2966

10.615 VALVE ASSEMBLY, Power Steering Gear

67/69	LHD	.....	1	320 7058
70	LHD (* 10–68)	.....	1	320 7058
70	LHD (* 10–69)	.....	1	448 9365
71/	LHD (Except Canada)	.....	1	448 9365
71	***01-40 (Canada-* 10-68)***	.....	1	320 7058
71	***01-40 (Canada-* 10-69)***	.....	1	448 9365
67/69	***10-80 (RHD)***	.....	1	320 8039
70/71	***10-80 (RHD)***	.....	1	812 0818

10.620 SPRING, Power Steering Gear Valve Spool

67/69	.....	.....	1	320 4816
70	(* 10–68)	.....	1	320 4816
71	***01-40 (Canada-* 10-68)***	.....	1	320 4816

10.625 RING AND SEAL KIT, Power Steering Gear Valve (Incl. Piston Rings, Teflon Rings And Back-Up Rings)

67/	.....	.....	1	320 4833

10.630 BEARING KIT, Power Steering Gear Upper Thrust (Incl. Races, Retainers And Spacers)

67/	.....	.....	1	320 4832

10.635 ADJUSTER ASSEMBLY, Power Steering Gear Upper Thrust Bearing (Incl. Bearings, Races, Seals, Retainer And Spacer)

67/	.....	.....	1	320 4802

10.637 NUT, Power Steering Gear Upper Thrust Bearing Adjuster Lock

67/	.....	.....	1	320 4817

10.640 BEARING, Power Steering Gear Upper Thrust Bearing Adjuster Needle

67/	.....	.....	1	320 4803

10.645 SEAL KIT, Power Steering Gear Upper Thrust Bearing Adjuster

67/	.....	.....	1	320 4824

10.700–1 SHAFT, Steering Gear

67	01 (LHD-V8-* 10-29) ..... ***(Use 320 9700)***	.....	1	320 8238
67	01 (LHD-V8-* 10-29) ..... ***(Use 320 9701)***	.....	1	320 7983
67	10 (LHD-LAW-* 10-29) ..... ***(Use 320 9702)***	.....	1	320 8507
68	10 (WAW-* 10-20)	10.835	1	320 9759
69	10 (WAW)	10.835	1	448 7156
68	30-70 (LAW)	.....	1	320 9789
68/69	30-70 (WAW)	10.835	1	320 9799
69	***01 (RHD-* 10-35)***	.....	1	319 4351
67/69	***10 (RHD)***	.....	1	318 7698
70	***10 (RHD)***	.....	1	319 8065

FRONT SUSPENSION - POWER STEERING - STEERING GEAR

10.700–2 SHAFT, Steering Gear Upper

67	10-50-80 (WAW)	10.835	1	320 8014
71/	10 (LHD-LAW)	.....	1	448 7727
67	50-80 (LHD-LAW)	.....	1	320 7986
68	80 (LHD-LAW-* 10-19)	.....	1	320 7986
68	80 (LHD-LAW-* 10-20)	.....	1	320 9777
68	80 (WAW-* 10-19)	10.835	1	320 8785
68	80 (WAW-* 10-20)	10.835	1	320 9762
69	80 (LHD-LAW)	.....	1	448 6542
69	80 (WAW) ***(Use 448 7136)***	.....	1	448 6716
70/	80 (LHD-LAW)	.....	1	448 7727
70	WAW	.....	1	448 7841
71	WAW (* 10-62)	.....	1	448 7841
71	WAW (* 10-63)	.....	1	448 9058
72	WAW	.....	1	448 9058
67/68	***01 (RHD)*** ...(Incl. Flange)	.....	1	317 8492
69	***01 (RHD-* 10-34)***	.....	1	317 8492
67/68	***80 (RHD)*** ...(Incl. Coupling)	.....	1	318 7772
69	***80 (RHD)***	.....	1	319 3608
70	***80 (RHD)***	.....	1	319 9991

10.700–3 SHAFT, Steering Gear Lower

71/	01-40 (WAW)	.....	1	812 1276
67	10 (WAW-* 10-29) ***(Ord. 320 9703)***	10.835	1	320 8469
70	10 (WAW)	.....	1	448 7838
71/	10 (WAW)	.....	1	448 7840
71/	10 (LHD-LAW)...(Incl. Coupling)	.....	1	321 0078
70/	30-70 (WAW)	.....	1	448 7839
67	50-80 (LHD-LAW)	.....	1	318 7504
67	50-80 (WAW)	10.835	1	320 8017
70/	80 (WAW)	.....	1	448 7840
68	80 (LHD-* 10-19)	.....	1	318 7504
68	80 (LHD-* 10-20) ...(Incl. Flange)	.....	1	319 1539
69	80 (LHD)...(Incl. Coupling)	.....	1	319 1829
70/	80 (LHD-LAW)...(Incl. Coupling)	.....	1	319 1829
67/68	***01 (RHD)***	.....	1	317 8491
69	***01 (RHD-* 10-34)***	.....	1	317 8491
67/68	***80 (RHD)***	.....	1	318 7771
69	***80 (RHD)*** ...(Incl. Coupling)	.....	1	319 3609
70	***80 (RHD)*** ...(Incl. Coupling)	.....	1	319 8066

10.700–4 SHAFT, Steering Gear Intermediate

71/	10 (WAW)...(Incl. Coupling)	.....	1	321 0078
67	50-80 (LHD-WAW)	.....	1	318 7504
68	80 (WAW-* 10-19)	.....	1	318 7504
70/	80 (LHD-WAW)...(Incl. Coupling)	.....	1	319 1829

10.701 SHAFT KIT, Steering Gear (Incl. Clamp, Bolt And Nut)

67	01 (LHD-Six-* 10-30)	.....	1	320 9701
67	01 (LHD-V8-* 10-30)	.....	1	320 9700
68	01 (LHD-Six-LAW-* 10-17)	.....	1	320 9701
68	01 (LHD-Six-LAW-* 10-18)	.....	1	320 9764
68	01 (LHD-V8-LAW-* 10-17)	.....	1	320 9700
68	01 (LHD-V8-LAW-* 10-18)	.....	1	320 9765
69	01 (LHD-Six-LAW)	.....	1	448 6732
69	01 (LHD-V8-LAW)	.....	1	448 6739
70/	01-40 (LHD-Six-LAW)	.....	1	448 7721

70/	01 (LHD-V8-WAT-WCGS-LAW)	.....	1	448 7722
70/	01 (LHD-V8-WFGS-LAW)	.....	1	448 7724
67	10 (LHD-LAW-* 10-30)	.....	1	320 9702
67	10 (WAW-* 10-30)	10.835	1	320 9703
68	10 (LHD-LAW-* 10-19)	.....	1	320 9702
68	10 (WAW-* 10-19)	10.835	1	320 9703
68	10 (LHD-LAW-* 10-20)	.....	1	320 9788
69	10 (LHD-LAW)	.....	1	448 6734
70	10 (LHD-LAW)	.....	1	448 7726
68	30-70 (LAW)	.....	1	320 9789
69	30-70 (LAW)	.....	1	448 6743
70/	30-70 (LHD-LAW)	.....	1	448 7725
70	40 (WFGS-LAW-* 10-49)	.....	1	448 7724
70/71	40 (WFGS-LAW-* 10-50)	.....	1	448 7721
72	40 (LHD-V8- WAT-WCGS-LAW)	.....	1	448 7722
72	40 (LHD-V8-WFGS-LAW)	.....	1	448 7724

10.702–1 COVER, Steering Gear Shaft Lock

70/	LHD (LAW)	.....	1	319 5591
70/	WAW	.....	1	319 6587

10.702–2 SCREW, Steering Gear Shaft Lock Cover

70/	LHD	10.321	3	400 3928

10.702–3 RETAINER, Steering Gear Shaft Lock Cover Screw

70/	LHD	.....	3	319 5589

10.703–1 LOCK, Steering Gear Shaft

70/	LHD (LAW)	.....	1	448 7740
70/	LHD (WAW)	.....	1	448 7856

10.703–2 RING, Steering Gear Shaft Lock Retaining

70/	LHD	10.344	1	320 8377

10.705–1 CLAMP, Steering Gear Upper Shaft To Lower Shaft Coupling

71/	10 (LHD)	.....	1	319 1827
69/	80 (LHD)	.....	1	319 1827
67/68	***80 (RHD)***	.....	1	317 1981

10.705–2 ATTACHING PARTS, Clamp To Lower Shaft

BOLT, Hexagon	71/	10 (LHD)	.....	1	319 4110
BOLT, Hexagon	69/	80 (LHD)	.....	1	319 4110
***BOLT, Hexagon	***67/69***	***80 (RHD)***	17.038	1	G274842 NA
***BOLT, Hexagon	***70***	***80 (RHD)(Round Head)***	.....	1	319 4110
***BOLT, Hexagon	***70***	***80 (RHD)(Hexagon Head)***	17.038	1	G274842 NA
NUT, Lock	71/	10 (LHD)	.....	1	448 8431
NUT, Lock	69/	80	.....	1	448 8431
***NUT, Lock	***67/69***	***80 (RHD)***	17.416	1	G274841 NA
***NUT, Lock	***70***	***80 (RHD)***	.....	1	448 8431

10.710–1 FLANGE, Steering Gear To Shaft

70	LPS (* 10-60)	.....	1	448 7878
71	LPS	.....	1	448 7878
72	LPS	.....	1	812 1208

FRONT SUSPENSION - POWER STEERING - STEERING GEAR

67/69	WPS	*(Use 320 9754)*	.....	1	320 8022
70	LHD (WPS)	*(Use 448 7885)*	.....	1	448 7929
71/	LHD (WPS)		.....	1	448 7885
67/68	01 (LHD-LPS)		.....	1	318 6669
69	01 (LHD-LPS)		.....	1	448 6980
67/68	10-30-50-70-80 (LPS)		.....	1	318 6669
69	10-30-70-80 (LPS)		.....	1	448 6980
70	10-30-70 (LPS-* 10-61)		.....	1	448 6980
70	40 (LPS)		.....	1	448 7878
67/68	***01 (RHD)*** ...(Incl. Bolts, Washers And Nuts)		.....	1	320 7022
69	***01 (RHD-* 10-34)*** ...(Incl. Bolts, Washers And Nuts)		.....	1	320 7022
69	***01 (RHD-* 10-35)***		.....	1	318 6669
70	***10-80 (RHD-WPS)***		.....	1	448 7885

10.710–2 ATTACHING PARTS, Flange To Upper Flange (On Shaft)

BOLT, Hexagon	67/68	(5/16-24 x 1) 01 (LHD)	.....	1	320 5848
BOLT, Hexagon	67/68	(3/8-24 x 1) 01 (LHD)	.....	1	320 8200
BOLT, Hexagon	69	(5/16-24 x 1) 01 (LHD)	.....	1	448 6976
BOLT, Hexagon	69	(3/8-24 x 1) 01 (LHD)	.....	1	448 6977
BOLT, Hexagon	67/68	(5/16-24 x 1) 10-30-50-70-80	.....	1	320 5848
BOLT, Hexagon	67/68	(3/8-24 x1) 10-30-50-70-80	.....	1	320 8200
BOLT, Hexagon	69	(5/16-24 x 1) 10-30-70-80	.....	1	448 6976
BOLT, Hexagon	69	(3/8-24 x 1) 10-30-70-80	.....	1	448 6977
BOLT, Hexagon	70/	(5/16-24 x 1)	.....	1	448 6976
BOLT, Hexagon	70/	(3/8-24 x 1)	.....	1	448 6977
BOLT, Hexagon	70	(5/16-24 x 1)(LHD-WPS)	.....	1	320 5848
BOLT, Hexagon	70	(3/8-24 x 1)(LHD-WPS)	.....	1	320 8200
***BOLT, Hexagon	***67/68***	***01 (RHD)***	.....	2	320 5848
***BOLT, Hexagon	***69***	***(5/16-24 x 1) 01 (RHD-* 10-34)***	.....	2	448 6976
***BOLT, Hexagon	***69***	***(3/8-24 x 1) 01 (RHD-* 10-34)***	.....	2	448 6977
***BOLT, Hexagon	***69***	***(5/16-24 x 1) 01 (RHD-* 10-35)***	.....	1	448 6976
***BOLT, Hexagon	***69***	***(3/8-24 x 1) 01 (RHD-* 10-35)***	.....	1	448 6977
***BOLT, Hexagon	***70***	***(5/16-24 x 1)(RHD-WPS)***	.....	1	448 6976
***BOLT, Hexagon	***70***	***(3/8-24 x 1)(RHD-WPS)***	.....	1	448 6977
WASHER, Lock	67/	(5/16) 01 (LHD)	17.820	1	G120214
WASHER, Lock	67/	(3/8) 01 (LHD)	17.820	1	G120382
WASHER, Lock	67/	(5/16) 10-30-40-50-70-80	17.820	1	G120214
WASHER, Lock	67/	(3/8) 10-30-40-50-70-80	17.820	1	G120382
***WASHER, Lock	***67/68***	***01 (RHD)***	17.820	2	G120214
***WASHER, Lock	***69***	***(3/8) 01 (RHD-* 10-34)***	.....	2	G120382
***WASHER, Lock	***69***	***01 (RHD-* 10-34)***	17.820	2	G120214
***WASHER, Lock	***69***	***(3/8) 01 (RHD-* 10-34)***	.....	2	G120382
***WASHER, Lock	***69***	***(5/16) 01 (RHD-* 10-34)***	17.820	1	G120214
NUT, Hexagon	67/	(5/16-24) 01 (LHD)	17.406	1	G451399 NA
NUT, Hexagon	67/	(3/8-24) 01 (LHD)	.....	1	400 1800
NUT, Hexagon	67/	(5/16-24) 10-30-40-50-70-80	17.406	1	G451399 NA
NUT, Hexagon	67/	(3/8-24) 10-30-40-50-70-80	.....	1	400 1800
***NUT, Hexagon	***67/68***	***01 (RHD)***	17.406	2	G451399 NA
***NUT, Hexagon	***69***	***01 (RHD-* 10-34)***	17.406	2	G451399 NA
***NUT, Hexagon	***69***	***(3/8-24) 01 (RHD-* 10-35)***	.....	1	400 1800
***NUT, Hexagon	***69***	***(5/16-24) 01 (RHD-* 10-35)***	17.406	1	G451399 NA

10.710–3 ATTACHING PARTS, Lower Flange Clamp To Stub Shaft

BOLT, Twelve Point ...	67/68	.....	10.505	1	317 1980
BOLT, Twelve Point ...	69/	.....	.....	1	400 3934

10.711–1 FLANGE, Steering Gear Lower Shaft To Flange On Steering Gear

67	01 (LHD-V8)	.....	1	318 7989	
68	01 (LHD-V8-20 Serrations)	.....	1	318 7989	
68/69	01 (LHD-V8-16 Serrations)	.....	1	320 9771	
70/	01-40 (LHD-V8-LAW)	.....	1	319 6443	
72	01-40 (LHD-WAW)	.....	1	319 6443	
67/68	10 (WAW)	.....	1	320 8470	
69	10 (WAW)	.....	1	320 9771	
70	10 (WAW)	.....	1	319 6443	
70/	30-70 (WAW)	.....	1	319 6443	
68/69	30-70 (WFGS-WAW)	.....	1	320 9771	
70	40 (WFGS-LAW-* 10-49)	.....	1	319 6443	
68	70 (WCGS-WAW)	.....	1	320 8470	
69	70 (WCGS-WAW)	.....	1	320 9771	
68	80 (WAW)	.....	1	320 8116	

10.711–2 ATTACHING PARTS, Flange To Lower Shaft

BOLT, Twelve Point ...	67/69	01 (LHD-V8-Except SC/RAMBLER)	10.505	1	317 1980	
BOLT, Twelve Point ...	69	09 (SC/RAMBLER)	.....	1	400 3934	
BOLT, Twelve Point ...	70/	01-40 (LHD-V8-LAW)	.....	1	400 3934	
BOLT, Twelve Point ...	72	01-40 (LHD-WAW)	.....	1	400 3934	
BOLT, Twelve Point ...	70/	30-70 (WAW)	.....	1	400 3934	
BOLT, Twelve Point ...	67/69	10-30-70-80 (WAW)	10.505	1	317 1980	
BOLT, Twelve Point ...	70	10 (WAW)	.....	1	400 3934	
BOLT, Twelve Point ...	70	40 (WFGS-LAW-* 10-49)	.....	1	400 3934	

10.712–1 FLANGE, Steering Gear Upper Shaft To Lower Shaft

67	50-80 (LHD-LAW)	.....	1	318 6669	
68	80 (LHD-LAW-* 10-19)	.....	1	318 6669	
68	80 (LHD-* 10-20)	.....	1	448 5655	
67/68	***01 (RHD)*** ...(Incl. Bolts, Washers And Nuts)	10.710	1	320 7022	
69	***01 (RHD-* 10-34)*** ...(Incl. Bolts, Washers And Nuts)	10.710	1	320 7022	

10.712–2 ATTACHING PARTS, Flange To Upper Shaft

BOLT, Hexagon	67/68	(5/16-24 x 1) 50-80 (LHD-LAW)	10.710	1	320 5848	
BOLT, Hexagon	68	(5/16-24 x 1) 80 (LHD)	10.710	1	320 5848	
BOLT, Hexagon	67/68	(3/8-24 x 1) 50-80 (LHD-LAW)	10.710	1	320 8200	
BOLT, Hexagon	68	(3/8-24 x 1) 80	10.710	1	320 8200	
***BOLT, Hexagon	***67/68***	***01 (RHD)***	10.710	2	320 5848	
***BOLT, Hexagon	***69***	***01 (RHD-* 10-34)***	10.710	2	320 5848	
WASHER, Lock	67/68	(5/16) 50-80 (LHD-LAW)	17.820	1	G120214	
WASHER, Lock	67/68	(3/8) 50-80 (LHD-LAW)	17.820	1	G120382	
WASHER, Lock	68	(5/16) 80 (LHD)	17.820	1	G120214	
WASHER, Lock	68	(3/8) 80 (LHD)	17.820	1	G120382	
***WASHER, Lock	***67/68***	***01 (RHD)***	17.820	2	G120214	
***WASHER, Lock	***69***	***01 (RHD-* 10-34)***	17.820	1	G120382	
NUT, Hexagon	67/68	(5/16-24) 50-80 (LHD-LAW)	17.406	1	G451399	NA
NUT, Hexagon	67/68	(3/8-24) 50-80 (LHD-LAW)	10.710	1	400 1800	
NUT, Hexagon	68	(5/16-24) 80 (LHD)	17.406	1	G451399	NA
NUT, Hexagon	68	(3/8-24) 80 (LHD)	10.710	1	400 1800	
***NUT, Hexagon	***67/68***	***01 (RHD)***	17.406	2	G451399	NA
***NUT, Hexagon	***69***	***01 (RHD-* 10-34)***	17.406	2	G451399	NA

FRONT SUSPENSION - POWER STEERING - STEERING GEAR

10.712–3 ATTACHING PARTS, Flange To Lower Shaft

BOLT, Twelve Point ...	67/68	50-80 (LHD-LAW)	10.505	1	317 1980
BOLT, Twelve Point ...	68	80 (LHD-LAW-* 10-19)	10.505	1	317 1980
BOLT, Twelve Point ...	***67/68***	***01 (RHD)***	10.505	1	317 1980
BOLT, Twelve Point ...	***69***	***01 (RHD-* 10-34)***	10.505	1	317 1980
BOLT, Hexagon	68	80 (LHD-LAW-* 10-20)	.....	1	320 9807
***BOLT, Hexagon	***69***	***01 (RHD-* 10-34)***	10.505	1	317 1980
WASHER, Internal Tooth	68	80 (LHD-* 10-20)	.....	1	320 9808
WASHER, Lock	68	80 (LHD-* 10-20)	17.820	2	G120214
NUT, Hexagon	68	80 (LHD-* 10-20)	17.406	2	G120368

10.713–1 FLANGE, Steering Gear Intermediate Shaft To Flange On Lower Shaft

67	50-80 (WAW)	.....	1	318 6669
68	80 (WAW-* 10-19)	.....	1	318 6669

10.713–2 ATTACHING PARTS, Flange To Lower Shaft Flange

BOLT, Hexagon	67	(5/16-24 x 1) 50-80 (WAW)	10.710	1	320 5848
BOLT, Hexagon	67	(3/8-24 x 1) 50-80 (WAW)	10.710	1	320 8200
BOLT, Hexagon	68	(5/16-24 x 1) 80 (WAW-* 10-19)	10.710	1	320 5848
BOLT, Hexagon	68	(3/8-24 x 1) 80 (WAW-* 10-19)	10.710	1	320 8200
WASHER, Lock	67	(5/16) 50-80 (WAW)	17.820	1	G120214
WASHER, Lock	67	(3/8) 50-80 (WAW)	17.820	1	G120382
WASHER, Lock	68	(5/16) 80 (WAW-* 10-19)	17.820	1	G120214
WASHER, Lock	68	(3/8) 80 (WAW-* 10-19)	17.820	1	G120382
NUT, Hexagon	67	(5/16-24) 50-80 (WAW)	17.406	1	G451399 NA
NUT, Hexagon	67	(3/8-24) 50-80 (WAW)	10.710	1	400 1800
NUT, Hexagon	68	(5/16-24) 80 (WAW-* 10-19)	17.406	1	G451399 NA
NUT, Hexagon	68	(3/8-24) 80 (WAW)	10.710	1	400 1800

10.713–3 ATTACHING PARTS, Flange To Intermediate Shaft

BOLT, Twelve Point ...	67	50-80 (WAW)	10.505	1	317 1980
BOLT, Twelve Point ...	68	80 (WAW-* 10-19)	10.505	1	317 1980

10.714–1 FLANGE, Steering Gear Lower Shaft Flange To Flange On Intermediate Shaft

67	50-80 (WAW)		10.711	1	320 8116
70/	LHD (LAW)		.....	1	448 7739
70/	WAW		.....	1	448 7739

10.714–2 ATTACHING PARTS, Flange To Lower Shaft

BOLT, Twelve Point ...	67	50-80 (WAW)	10.505	1	317 1980

10.714–3 ATTACHING PARTS, Flange To Intermediate Shaft Flange

BOLT, Hexagon	67	(5/16-24 x 1) 50-80 (WAW)	10.710	1	320 5848
BOLT, Hexagon	67	(3/8-24 x 1) 50-80 (WAW)	10.710	1	320 8200
WASHER, Lock	67	(5/16) 50-80 (WAW)	17.820	1	G120214
WASHER, Lock	67	(3/8) 50-80 (WAW)	17.820	1	G120382
WASHER, Lock	67	(3/8) 50-80 (WAW)	17.820	1	G120382
NUT, Hexagon	67	(5/16-24) 50-80 (WAW)	17.406	1	G451399 NA
NUT, Hexagon	67	(3/8-24) 50-80 (WAW)	10.710	1	400 1800

10.715 REINFORCEMENT, Steering Gear Shaft Flange

67/68		.....	2	320 4882
69	***01 (RHD-* 10-34)***	.....	2	320 4882

FRONT SUSPENSION - POWER STEERING - STEERING GEAR

10.720 COUPLING, Steering Gear Upper Shaft To Lower Shaft

71/	10 (LHD)	.....	1	448 6677
69/	80 (LHD)	.....	1	448 6677
67/68	***80 (RHD)***	.....	1	320 4873
69	***80 (RHD)***	.....	1	448 7134
70	***80 (RHD)***	.....	1	448 8070

10.722 BEARING, Steering Gear Upper Shaft To Lower Shaft Coupling

71/	10 (LHD)	.....	1	320 4875
69/	80 (LHD)	.....	1	320 4875
67/70	***80 (RHD)***	.....	1	320 4875

10.725 SEAL KIT, Steering Gear Upper Shaft To Lower Shaft Coupling (Incl. Washer And Spring)

67/68	***80 (RHD)***	.....	1	320 4877

10.727 SPRING, Steering Gear Upper Shaft To Lower Shaft Coupling

71/	10 (LHD)	.....	1	320 4878
69/	80 (LHD)	.....	1	320 4878
67/70	***80 (RHD)***	.....	1	320 4878

10.730 WASHER, Steering Gear Upper Shaft To Lower Shaft Coupling Bearing Retainer

67/68	***80 (RHD)***	.....	1	320 4879

10.733 RING, Steering Gear Upper Shaft To Lower Shaft Coupling Seal Retainer

71/	10 (LHD)	.....	1	448 6679
69/	80 (LHD)	.....	1	448 6679
67/68	***80 (RHD)***	.....	1	320 4876

10.735 PLUG, Steering Upper Shaft To Lower Shaft Coupling Spacer

69/	80	.....	1	448 6678

10.765 BEARING, Steering Gear Shaft Lower (Ball)

67/68	01-10-30-70 (LHD)	.....	1	320 7984
67/69	50-80 (LHD)	.....	1	320 7984
69	01-10-30-70 (LHD)	.....	1	448 6713
70/	LHD	.....	1	448 6713
67/69	***01 (RHD)***	.....	1	317 2588
67/69	***10-80 (RHD)***	.....	1	317 2588
70	***10-80 (RHD)***	.....	1	319 9681

10.766 SPACER, Steering Gear Shaft Lower Bearing

69	01 (LHD-S x-WAT-WCGS-LAW)	.....	1	448 6737
68	01 (LHD-WFGS-LAW-* 10-18)	.....	1	448 5510
69	01 (LHD-V8-WAT-WCGS-LAW)	.....	1	448 6740
69	01 (LHD-WFGS-LAW)	.....	1	448 6742
70/	01 (LHD-WFGS)	.....	1	448 5510
69	10 (LHD-WAT-WCGS-LAW)	.....	1	448 6737
68	30-70 (LHD-WFGS)	.....	1	320 9787
69	30-70 (V8-WFGS)	.....	1	448 7155
70/	30-70 (LAW)	.....	1	448 7780
70/	70 (WAW)	.....	1	448 7876
70	40 (WFGS-LAW-* 10-49)	.....	1	448 5510
72	40 (LHD-WFGS-LAW)	.....	1	448 5510
68/69	70 (WAT-WCGS)	.....	1	320 9786
68	80 (LHD-LAW-* 10-20)	.....	1	320 9786
68	80 (WAW-* 10-20)	.....	1	320 9763

10.767 ADJUSTER KIT, Steering Gear Shaft Lower Bearing

67	01-10 (LHD-LAW-* 10-29)	.....	1	320 8368
67	10 (WAW-* 10-29)	.....	1	320 8368
67	50-80 (LHD-LAW)	.....	1	320 8368
67	80 (WAW)	.....	1	320 8368
68	80 (LHD-* 10-19)	.....	1	320 8368

10.768-1 CLAMP KIT, Steering Gear Shaft Lower Bearing (Incl. Bolt And Nut)

67	01-10 (LHD-* 10-30)	.....	1	320 9606
68/	01-30-40-70 (LHD)	.....	1	320 9606
68/70	10 (LHD)	.....	1	320 9606

10.768-2 ATTACHING PARTS, Clamp To Shaft

BOLT, Hexagon	67	01-10 (LHD-* 10-30)	17.038	1	G454915 NA
BOLT, Hexagon	68/	01-30-40-70 (LHD)	17.038	1	G454915 NA
BOLT, Hexagon	68/70	10 (LHD)	17.038	1	G454915 NA
NUT, Hexagon	67	01-10 (LHD-* 10-30)	17.406	1	G103026 NA
NUT, Hexagon	68/	01-30-40-70 (LHD)	17.406	1	G103026 NA
NUT, Hexagon	68/70	10 (LHD)	17.406	1	G103026 NA

10.769 RING, Steering Gear Shaft Lower Bearing Retaining Ring

67	01-10 (LHD-LAW-* 10-29) ..... ***(Use 320 8387)***	17.038	1	320 8157
67	10 (WAW-* 10-29) ..... ***(Use 320 8387)***	17.038	1	320 8157
67	50-80 (LHD-LAW) ..... ***(Use 320 8387)***	17.038	1	320 8157
67	50-80 (WAW) ..... ***(Use 320 8387)***	17.038	1	320 8157
68	80 (LHD-* 10-19) ..... ***(Use 320 8387)***	17.038	1	320 8157

10.770 SPRING, Steering Gear Shaft Lower Bearing

70	LHD (WAT-LAW)	.....	1	448 7778
71/	LHD (WAT-WCGS-LAW)	.....	1	448 9045
67	01-10 (LHD-LAW-* 10-29)	.....	1	320 7987
67	01-10 (LHD-LAW-* 10-30)	.....	1	320 9652
68	01-10-30-70 (LHD-LAW)	.....	1	320 9652
69	01 (LHD-WFGS-LAW)	.....	1	320 9652
70	01-10-30-70-80 (WFGS-LAW)	.....	1	448 7778
71	01 (WFGS-* 10-66)	.....	1	448 9045
67	10 (LHD-WAW-* 10-30)	.....	1	320 9639
68	10-30-70 (WAW)	.....	1	320 9639
69	10 (V8-WFGS)	.....	1	320 9652
71	10-70-80 (LHD-WFGS-LAW)	.....	1	448 9045
69	30-70 (V8-WFGS)	.....	1	320 9652
70	40 (WFGS-* 10-62)	.....	1	448 7778
70	40 (WFGS-* 10-63)	.....	1	448 9045
67	80 (LHD-LAW)	.....	1	320 7987
68	80 (LHD-LAW-* 10-19)	.....	1	320 7987
68	80 (LHD-LAW-* 10-20)	.....	1	320 9652
68	80 (WAW-* 10-20)	.....	1	320 9639

10.771 WASHER, Steering Gear Shaft Lower Bearing Spring Thrust

70	LHD (WFGS-LAW)	.....	1	448 7779
70/	LHD (WAT-LAW)	.....	1	448 7779
67	01 (LHD-LAW)	.....	1	320 8505
68/69	01 (LHD-WFGS-LAW)	.....	1	320 8505
67	10 (LHD)	.....	1	320 8505
68/69	10-30-70 (LHD-WFGS)	.....	1	320 8505
71	01-10-70-80 (LHD-WFGS-LAW-* 10-66)	.....	1	448 7779

10.772 ADAPTER, Steering Gear Shaft Lower Bearing

69	LHD (Six-WST-WCGS-LAW)	.....	1	448 7142

10.773 WASHER, Steering Gear Lower Shaft Stabilizer

67/69	*01 (RHD)*	.....	2	317 0968
67/71	*10-80 (RHD)*	.....	2	317 0968

10.775–1 STOP, Steering Gear Lower Shaft Stabilizer (Clamp)

67/69	*01 (RHD)*	.....	1	317 0966
67/71	*10 (RHD)*	.....	1	317 0966
67/68	*80 (RHD)*	.....	1	317 0966

10.775–2 ATTACHING PARTS, Stop To Steering Gear Shaft

BOLT, Hexagon	*67/69*	*10 (RHD)*	17.038	1	G181610
BOLT, Hexagon	*67/71*	*10 (RHD)*	17.038	1	G181610
BOLT, Hexagon	*67/68*	*80 (RHD)*	17.038	1	G181610
WASHER, Lock	*67/69*	*01 (RHD)*	17.820	1	G120214
WASHER, Lock	*67/71*	*10 (RHD)*	17.820	1	G120214
WASHER, Lock, ...	*69*	*80 (RHD)*	17.820	1	G120214
NUT, Hexagon	*67/69*	*01 (RHD)*	17.406	1	G120368
NUT, Hexagon	*67/71*	*10 (RHD)*	17.406	1	G120368
NUT, Hexagon	*69*	*80 (RHD)*	17.406	1	G120368

10.801 LEVER, Steering Wheel Release

71/	01-40 (WAW)	.....	1	318 6523
67/	10-30-50-70-80 (WAW)	.....	1	318 6523

10.802 SHIELD, Steering Wheel Release Lever

70/	WAW	.....	1	448 7869

10.805–1 COVER, Steering Wheel Actuator And Directional Signal Switch

67	10-50-80 (WCGS-WAW-* 10-31)	3.321	1	320 8093
67	10-50-80 (WCGS-WAW-* 10-32) ***(Use 320 8093)***	3.321	1	320 8375
67/68	10-30-50-70-80 (WFGS-WAW-* 10-31)	3.321	1	320 8092
67/68	10-30-50-70-80 (WFGS-WAW-* 10-32)	3.321	1	320 8376
68	10-70-80 (WCGS-WAW)	3.321	1	320 8093
69	10-70-80 (WCGS-WAW)	.....	1	448 6714
70/	WCGS (WAW)	.....	1	448 7850
69	10-30-70-80 (WFGS-WAW)	3.321	1	320 8376
70/	WFGS (WAW)	.....	1	448 7875

10.805–2 ATTACHING PARTS, Cover To Actuator

SCREW, Cross Recess ..	70/ WAW	.....	3	448 7866

10.825 RACE, Steering Gear Shaft Upper Bearing Inner

67/69	WAW	.....	1	320 8124
70/	WAW	.....	1	448 7862

FRONT SUSPENSION - POWER STEERING - STEERING GEAR

10.826 SEAT, Steering Gear Shaft Upper Bearing Inner Race

67/69	WAW	.....	1	320 8145
70	WAW	.....	1	448 7868
71	WAW (* 10-62)	.....	1	448 7868
71	WAW (* 10-63)	.....	1	448 9061
72	WAW	.....	1	448 9061

10.827-1 BEARING, Steering Gear Shaft Upper (Roller)

67/69	WAW	.....	1	320 8361
70/	WAW	.....	1	320 8362

10.827-2 BEARING, Steering Gear Shaft Lower (Roller)

67/	WAW	.....	1	320 8362

10.828 NUT, Steering Gear Shaft Roller Bearing Lock

67/69	WAW	.....	1	320 8121
70	WAW	.....	1	448 7874
71	WAW (* 10-62)	.....	1	448 7874

10.830-1 ACTUATOR, Steering Wheel

67/69	WAW	.....	1	320 8040
70/	WAW (WCGS)	.....	1	448 8211
70/	WAW (WFGS)	.....	1	448 8212

10.830-2 BUMPER, Steering Wheel Actuator

70/	WAW	.....	3	448 7820

10.830-3 SHAFT, Steering Wheel Actuator Drive

70/	WAW	.....	1	448 8213

10.830-4 RING, Steering Wheel Actuator Drive Shaft Retaining

70/	WAW	.....	1	448 7824

10.832 PIN, Steering Wheel Actuator Pivot

67/69	WAW	.....	2	320 8122
70	WAW	.....	2	448 7857
71/	WAW	.....	1	448 8418

10.837 SPRING, Steering Gear Upper Shaft To Lower Shaft Preload

67/68	WAW	.....	1	320 5031
70/	WAW	.....	1	448 7843

10.839 SPHERE KIT, Steering Gear Shaft Centering

67/	.....	.....	1	448 8465

10.840 SPHERE, Steering Gear Shaft Centering

67	WAW	.....	2	320 8199
70	WAW	.....	2	448 7842

FRONT SUSPENSION - POWER STEERING - STEERING GEAR

10.841 WASHER, Steering Gear Shaft Centering Sphere Wave

67/68	WAW	.....		320 8197

10.843–1 SHOE, Steering Wheel Actuator Lock

67/69	(3 Position) WAW ..... *(Use 448 7828)*	.....	1	320 8044
67/69	(4 Position) WAW	.....	1	320 8045
70/	(Left–3 Grooves) WAW	.....	1	812 2716
70/	(Left–4 Grooves) WAW	.....	1	448 7829
70/	(Right–3 Grooves) WAW	.....	1	448 7828

10.843–2 SHOE KIT, Steering Wheel Actuator Lock (Incl. Shoes, Spacers And Shoe Springs)

67/	WAW	.....	1	812 2460

10.844 SPACER, Steering Wheel Actuator Lock Shoe

67/69	WAW	.....	2	448 5927

10.845 PIN, Steering Wheel Actuator Lock Shoe Retaining

67/69	WAW	.....	1	320 8042
70/	WAW	.....	1	448 7822

10.846 SPRING, Steering Wheel Actuator Shoe Release Lever

67/	WAW	.....	1	320 8047

10.847 SPRING, Steering Wheel Actuator Lock Shoe

67/69	WAW	.....	2	320 8048
70/	WAW	.....	2	448 7832

10.848 LEVER, Steering Wheel Actuator Shoe Release

67/69	WAW	.....	1	320 8041
70/	WAW	.....	1	448 7821

10.849 PIN, Steering Wheel Actuator Shoe Release Lever

67/	WAW	.....	1	320 8043

10.850–1 SUPPORT, Steering Wheel And Directional Signal Actuator

67	10–50–80 (WCGS–WAW)	.....	1	320 8049
68/69	10–70–80 (WCGS–WAW)	.....	1	320 9760
67/69	WFGS (WAW)...(Incl. Pin)	.....	1	320 8050
70/	WCGS (WAW)	.....	1	448 7845
70/	WFGS (WAW)	.....	1	448 7844

10.850–2 ATTACHING PARTS, Support To Gear Shift Tube Lock Plate

SCREW, Machine	67/69	WAW	.....	4	320 8146
SCREW, Machine	70/	WAW	.....	4	448 7867

10.852 PLATE, Steering Wheel And Directional Signal Actuator Support Lock

67/69	WAW	.....	7.020	1	320 8155

FRONT SUSPENSION - POWER STEERING - STEERING GEAR

10.855 SPRING, Steering Wheel Tilt

67/69	WAW	.....	1	320 8147
70	WAW	.....	1	448 7855
71/	WAW	.....	1	812 0252

10.856 RETAINER, Steering Wheel Tilt Spring

67/	WAW	.....	1	320 8143

10.857 GUIDE, Steering Wheel Tilt Spring

70/	WAW	.....	1	448 7854

SPECIAL INFORMATION

The Engine Build Code Number, Vehicle Identification Number and the information provided on the Unit Body Plate are often necessary when determining the proper replacement parts for your automobile. For their location refer to the General Information Section found at the front of this catalog.

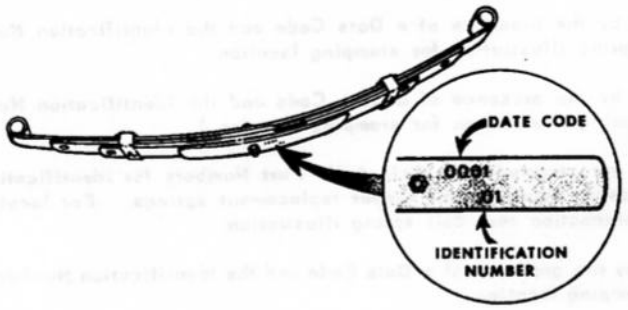

Illustrated are the locations of the two pertinent code numbers usually found on all leaf springs. This information is necessary to assure obtaining the proper replacement springs or components.



The rear coil spring can be identified by the A.M. Part No. stamped at either of the above locations or a white or yellow plastic tape located in center of spring with a full number or last three digits. The 1970 and 1971 front springs can be identified by a white or yellow plastic tape located in center of spring with a full number or last three digits.

NOTES

11–1 .... Can be identified by the presence of a Date Code only. (Refer Special Information leaf spring illustration for stamping location.)

11–2 .... Can be identified by the presence of a Date Code and the Identification Number 94. (Refer Special Information leaf spring illustration for stamping location.)

11–3 .... Can be identified by the presence of a Date Code and the Identification Number 44. (Refer Special Information leaf spring illustration for stamping location.

11–4 .... Can be identified by the presence of a Date Code and the Identification Number 83. (Refer Special Information leaf spring illustration for stamping location.)

11–5 .... Rear coil springs are stamped with their A. M. Part Numbers for identification purposes. This information is necessary to assure obtaining the proper replacement springs. For location of stamping on springs, refer to Special Information rear coil spring illustration.

11–6 .... Can be identified by the presence of a Date Code and the Identification Number 80. (Refer Special Information illustration for stamping location.)

11–7 .... Can be identified by the presence of a Date Code and the Identification Number 82. (Refer Special Information leaf spring illustration for stamping location.)

11–8 .... Can be identified by the presence of a Date Code and the Identification Number 81. (Refer Special Information leaf spring illustration for stamping location.)

11–9 .... Can be identified by the presence of a Date Code and the Identification Number 67. (Refer Special Information leaf spring illustration for stamping location.)

11–10 ... On 67 05-06-07-09 (V8-290) used prior to Car Sequence No. E-000138.

11–11 ... On 67 05-06-07-09 (V8-290) used beginning with Car Sequence No. E-000138.

11–12 ... Can be identified by the presence of a Date Code and the Identification Number 48. (Refer Special Information leaf spring illustration for stamping location.)

11–13 ... Can be identified by the presence of a Date Code and the Identification Number 98. (Refer Special Information leaf spring illustration for stamping location.)

11–14 ... On 68 01 (V8-E/08-Right Side) used prior to Car Sequence No. E-48461, on 68 70 (V8-Right Side) used prior to Car Sequence No. E-48461.

11–15 ... On 68 01 (V8-E/08-Right Side) used beginning with Car Sequence No. E-48461, on 68 70 (V8-Right Side) used beginning with Car Sequence No. E-48461.

11–16 .... On 68 01 (Six-WAC) used prior to Car Sequence No. E-018982.

11–17 .... On 68 01 (Six-WAC) used beginning with Car Sequence No. E-018982.

11–18 ... Can be identified by the presence of a Date Code and the Identification Number 64. (Refer Special Information illustration for stamping location.)

11–19 ... Can be identified by the presence of a Date Code and the Identification Number 66. (Refer Special Information leaf spring illustration for stamping location.)

11–20 ... Can be identified by the presence of a Date Code and the Identification Number 65. (Refer Special Information leaf spring illustration for stamping location.)

11–21 ... Can be identified by the presence of a Date Code and the Identification Number 67. (Refer Special Information leaf spring illustration for stamping location.)

11–22 ... On 68 70 (Six-Light) used prior to Car Sequence No. E-096075.

11–23 ... On 68 70 (Six-Light) used beginning with Car Sequence No. E-096075.

11–24 ... On 68 70 (Six-Heavy) used prior to Car Sequence No. E-103966.

Printed in U.S.A.

11–25 ... On 68 70 (Six-Heavy) used beginning with Car Sequence No. E-103966.

11–26 ... On 68 70 (V8-Light) used prior to Car Sequence No. E-095458.

11–27 ... On 68 70 (V8-Light) used beginning with Car Sequence No. E-095458.

11–28 ... On 68 70 (V8-Heavy) used prior to Car Sequence No. E-097809.

11–29 ... On 68 70 (V8-Heavy) used beginning with Car Sequence No. E-097809.

11–30 ... Can be identified by the presence of a Date Code and the Identification Number 41. (Refer Special Information illustration for stamping location.)

11–31 ... Can be identified by the presence of a Date Code and the Identification Number 69. (Refer Special Information leaf spring illustration for stamping location.)

11–32 ... Can be identified by the presence of a Date Code and the Identification Number 68. (Refer Special Information leaf spring illustration for stamping location.)

11–33 ... On 68 30 used prior to Car Sequence No. E-084506.

11–34 ... On 68 30 used beginning with Car Sequence No. E-084506.

11–35 ... On 68 30 used prior to Car Sequence No. E-052490.

11–36 ... On 68 30 used beginning with Car Sequence No. E-052490.

11–37 ... Can be identified by the Identification Number 01. (Refer Special Information leaf spring illustration for stamping location.)

11–38 ... Can be identified by the Identification Number 02. (Refer Special Information leaf spring illustration for stamping location.)

11–39 ... Can be identified by the Identification Number 88. (Refer Special Information leaf spring illustration for stamping location.)

11–40 ... Can be identified by the Identification Number 84. (Refer Special Information leaf spring illustration for stamping location.)

11–42 ... Can be identified by the Identification Number 85. (Refer Special Information leaf spring illustration for stamping location.)

11–43 ... Can be identified by the Identification Number 03. (Refer Special Information leaf spring illustration for stamping location.)

11–44 ... Can be identified by the Identification Number 22 or 86. (Refer Special Information leaf spring illustration for stamping location.)

11–45 ... Can be identified by the Identification Number 04. (Refer Special Information leaf spring illustration for stamping location.)

11–46 ... Can be identified by the Identification Number 18 or 87. (Refer Special Information leaf spring illustration for stamping location.)

11–47 ... Can be identidied by the Identification Number 19 or 89. (Refer Special Information leaf spring illustration for stamping location.)

11–48 ... On 69 70 (Six-Light) used prior to Car Sequence No. E-111964 and beginning with E-112249.

11–49 ... On 69 70 (Six-Light) used beginning with Car Sequence No. E-111964 and prior to E-112249.

11–50 ... On 70 30 (Light) used prior to Car Sequence No. E-066597.

11–51 ... On 70 70 (V8-Heavy) used prior to Car Sequence No. E-066597.

11–52 ... Can be identified by the Identification Number 16 or 43. (Refer Special Information leaf spring illustration for stamping location.)

11–53 ... On 70 30 (Light) used beginning with Car Sequence No. E-066597; on 70 70 (V8-Heavy) used beginning with Car Sequence No. E-066597.

11–54 ... Can be identified by the Identification Number 00. (Refer Special Information leaf spring illustration for stamping location.)

11–55 ... Can be identified by the Identification Number 01 or 001. (Refer Special Information leaf spring illustration for stamping location.)

11–56 ... Can be identified by the Identification Number 02 or 002. (Refer Special Information leaf spring illustration for stamping location.)

11–57 ... Can be identified by the Identification Number 03 or 003. (Refer Special Information leaf spring illustration for stamping location.)

11–58 ... Used on Cars having Rear Leaf Spring with 1-1/2" O.D. Front Eye Bushing.

11–59 ... Used on Cars having Rear Leaf Spring with 2" O.D. Front Eye Bushing.

11–60 ... Used Prior to Car Sequence No. E-14882 and beginning with E-16568.

11–61 ... Used beginning with Car Sequence No. E-14882 and prior to E-16568.

11–62 ... Used on Cars having Plate with 7/16-20 Thread on Shock Anchor Stud.

11–63 ... Used on Cars having Plate with 1/2-20 Thread on Shock Anchor Stud.

11–64 ... Used Prior to Car Sequence No. E-20434 and beginning with E-021536.

11–65 ... Used beginning with Car Sequence No. E-20434 and prior to E-021536.

11–66 ... Can be identified by the Identification Number 84 or 284. (Refer Special Information leaf spring illustration for stamping location.)

11–67 ... Can be identified by the Identification Number 85 or 285. (Refer Special Information leaf spring illustration for stamping location.)

11–68 ... Used prior to Car Sequence No. W-035253 and beginning with W-035521; prior to W-073818 and beginning with W-075982; prior to W-081508 and beginning with W-082088.

11–69 ... Used beginning with Car Sequence No. W-035253 and prior to W-035521; beginning with W-073818 and prior to W-075982; beginning with W-081508 and prior to W-082088.

11–70 ... Can be identified by the Identification Number 40 or 040. (Refer Special Information leaf spring illustration for stamping location.)

11–71 ... On 70 15-19 (Six) used prior to Car Sequence No. W-014666 and beginning with W-018118; on 70 15-19 (V8-E/MACHINE) used prior to Car Sequence No. W-014704 and beginning with W-015123.

11–72 ... On 70 15-19 (Six) used beginning with Car Sequence No. W-014666 and prior to W-018118; on 70 15-19 (V8-E/MACHINE) used beginning with Car Sequence No. W-014704 and prior to W-015123.

11–73 ... Used prior to Car Sequence No. W-049105 and beginning with W-049458.

11–74 ... Used beginning with Car Sequence No. W-049105 and prior to W-049458.

11–75 ... Used prior to Car Sequence No. E-051827 and beginning with E-051993.

11–76 ... Used beginning with Car Sequence No. E-051827 and prior to E-051993.

11–77 ... Can be identified by the Identification Number 34 or 434. (Refer Special Information leaf spring illustration for stamping location.)

11–78 ... Can be identified by the Identification Number 35 or 435. (Refer Special Information leaf spring illustration for stamping location.)

11–79 ... Can be identified by the Identification Number 36. (Refer Special Information leaf spring illustration for stamping location.)

NOTES

11–80 ... Can be identified by the Identification Number 37. (Refer Special Information leaf spring illustration for stamping location.)

11–81 ... Can be identified by the Identification Number 38 or 438. (Refer Special Information leaf spring illustration for stamping location.)

11–82 ... Can be identified by the Identification Number 39 or 439. (Refer Special Information leaf spring illustration for stamping location.)

11–83 ... Used with 4 Leaf Springs.

11–84 ... Used with 3 Leaf Springs.

11–85 ... The Upper End of the Shock has a "Cross Pin" Type Mounting and the Lower End of the Shock has an "Eye" Type Mounting and is used prior to Car Sequence No. E-1068.

11–86 ... The Upper and Lower End of the Shock has a "Bayonet" Type Mounting and is used beginning with Car Sequence No. E-1068.

11–87 ... Used prior to Car Sequence No. E-086451 and beginning with E-087002.

11–88 ... Used beginning with Car Sequence No. E-086451 and prior to E-087002.

11–89 ... Used prior to Car Sequence No. W-087167.

11–90 ... Used beginning with Car Sequence No. W-087167.

11–91 ... Used prior to Car Sequence No. W-088655.

11–92 ... Used beginning with Car Sequence No. 088655.

11–93 ... Can be identified by the Identification Number 86 or 886. (Refer Special Information leaf spring illustration for stamping location.)

11–94 ... Can be identified by the Identification Number 87. (Refer Special Information leaf spring illustration for stamping location.)

11–97 ... Used prior to Car Sequence No. W-014588 and beginning with W-015034.

11–98 ... Used beginning with Car Sequence No. W-014588 and prior to W-015034.

11–99 ... Used prior to Car Sequence No. W-021057 and beginning with W-022070.

11–100 .. Used beginning with Car Sequence No. W-021057 and prior to W-022070.

11–101 .. Used prior to Car Sequence No. W-035075 and beginning with W-042307.

11–102 .. Used beginning with Car Sequence No. W-035075 and prior to W-042307.

11–103 .. Used prior to Car Sequence No. E-087675 at Kenosha and 33875 at Brampton.

11–104 .. Used beginning with Car Sequence No. E-087675 at Kenosha and 33875 at Brampton.

11–105 .. Used prior to Car Sequence No. E-087675 at Kenosha and 33875 at Brampton.

11–106 .. Used beginning with Car Sequence No. E-087675 at Kenosha and 33875 at Brampton.

11–107 .. Used prior to Car Sequence No. E-087675 at Kenosha and 33875 at Brampton.

11–108 .. Used beginning with Car Sequence No. E-087675 at Kenosha and 33875 at Brampton.

11–109 .. Used prior to Car Sequence No. E-087675 at Kenosha and 33875 at Brampton.

11–110 .. Used beginning with Car Sequence No. E-087675 at Kenosha and 33875 at Brampton.

NOTES

11–111 .. Used prior to Car Sequence No. E-087675 at Kenosha and 33875 at Brampton.

11–112 .. Used beginning with Car Sequence No. E-087675 at Kenosha and 33875 at Brampton.

11–113 .. Used prior to Car Sequence No. E-087675. at Kenosha and 33875 at Brampton.

11–114 .. Used beginning with Car Sequence No. E-087675 at Kenosha and 33875 at Brampton.

11–115 .. Used prior to Car Sequence No. E-110836 and beginning with E-112377.

11–116 .. Used beginning with Car Sequence No. E-110836 and prior to E-112377.

11–117 .. The "Rallye Package" has front Bucket Seats and "Rallye" name Decal located on both sides of the rear quarter panel.

11–118 .. Used prior to Car Sequence No. E-018277 and beginning with E-018509.

11–119 .. Used beginning with Car Sequence No. E-018277 and prior to E-018509.

11–120 .. Used prior to Car Sequence No. E-018876 and beginning with E-019959.

11–121 .. Used beginning with Car Sequence No. E-018876 and prior to E-019959.

11–122 .. Used prior to Car Sequence No. E-82115 and W-82115.

11–123 .. Used beginning with Car Sequence No. E-82115 and W-82115.

11–124 .. Used prior to Car Sequence No. E-036537 and beginning with E-036537.

11–125 .. Used beginning with Car Sequence No. E-034309 and prior to E-036537.

11–126 .. Used prior to Car Sequence No. E-045851 and beginning with E-046182.

11–127 .. Used beginning with Car Sequence No. E-045851 and prior to E-046182.

2801

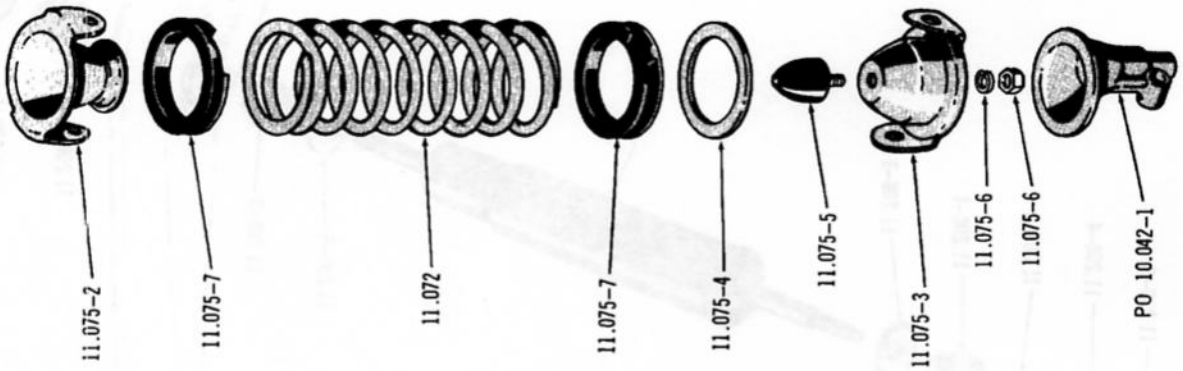

FRONT COIL SPRING ... 1967/69 (01)(30)(70)

2802

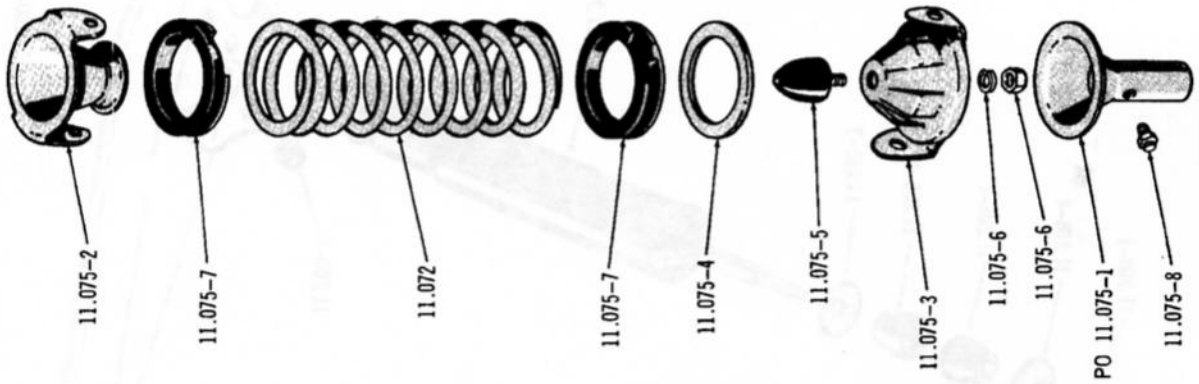

FRONT COIL SPRING ... 1967/69 (10)(50)(80)

2804

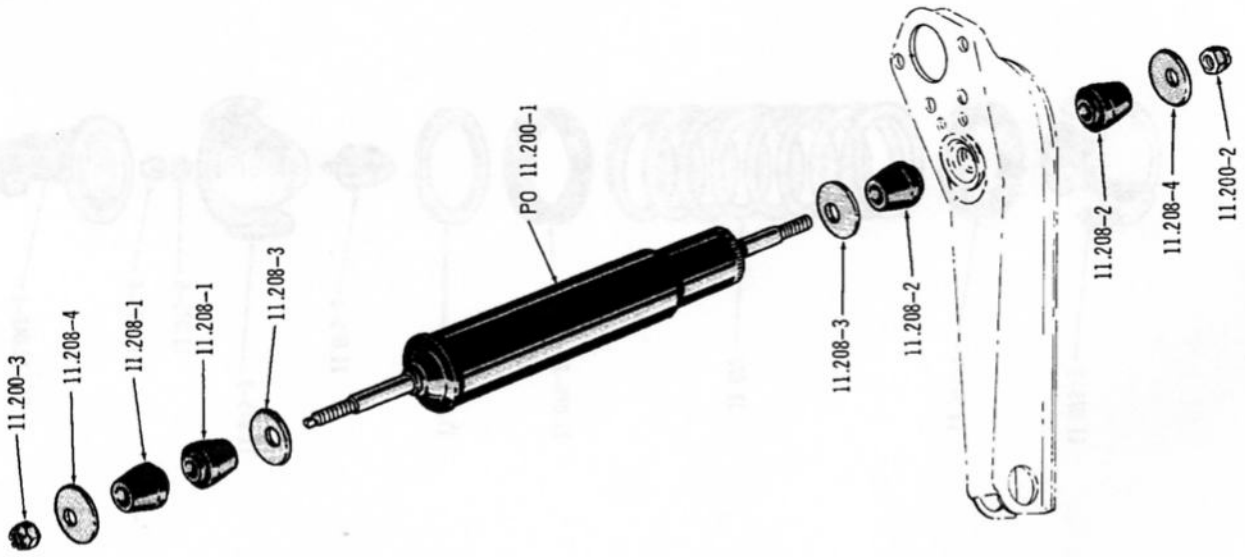

FRONT SHOCK ... 1967/69 (01)(30)(70)

2805

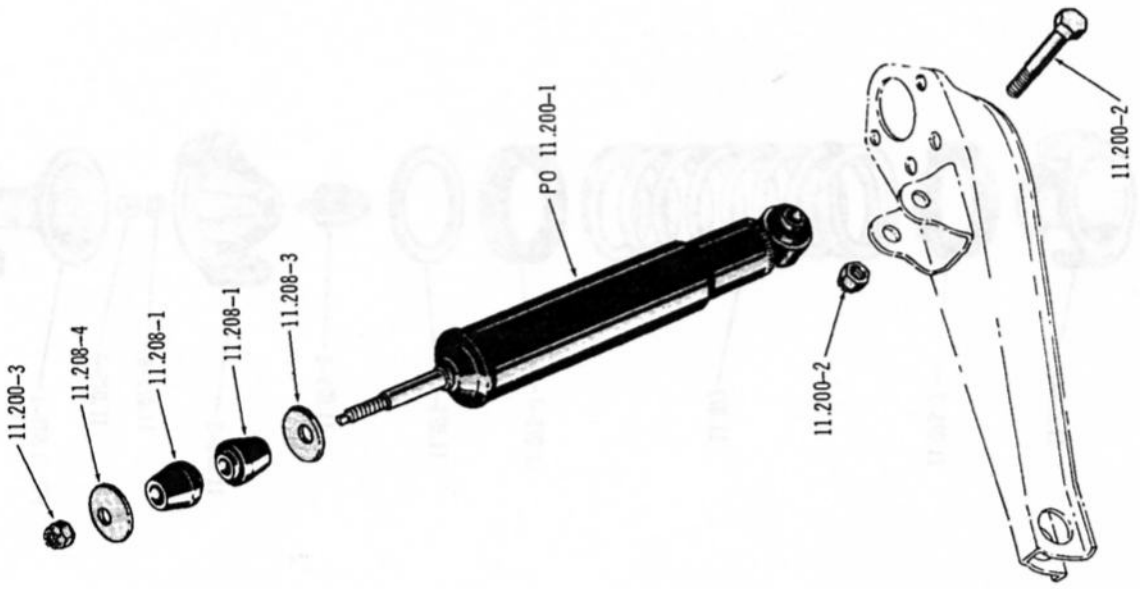

FRONT SHOCK ... 1967/69 (10)(50)(80)

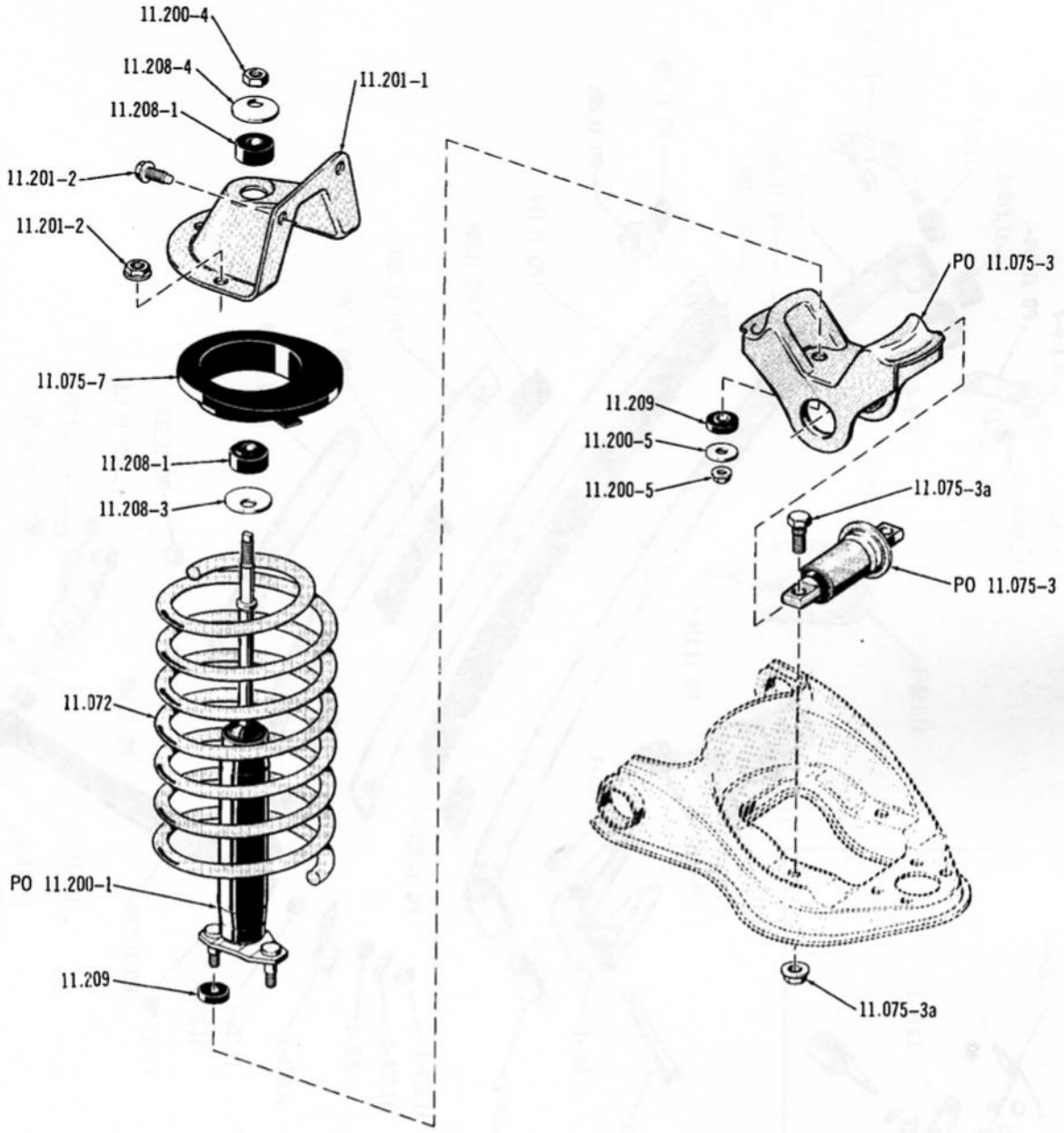

3843

FRONT COIL SPRING AND SHOCK ... 1970/

2806

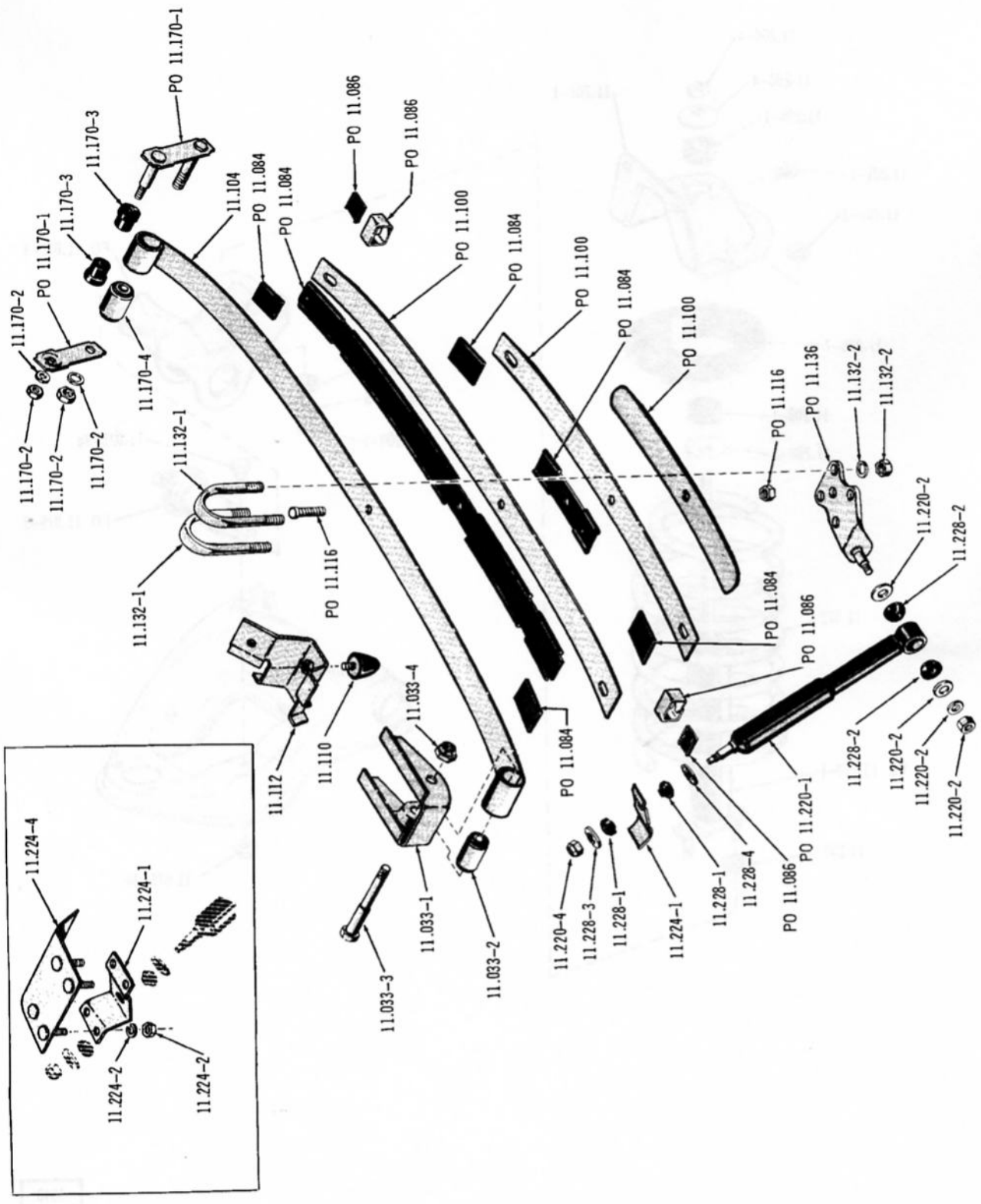

REAR LEAF SPRING AND SHOCK (4 LEAF) ... 1967/69 (01), 1968 (70)

Printed in U.S.A.

2807

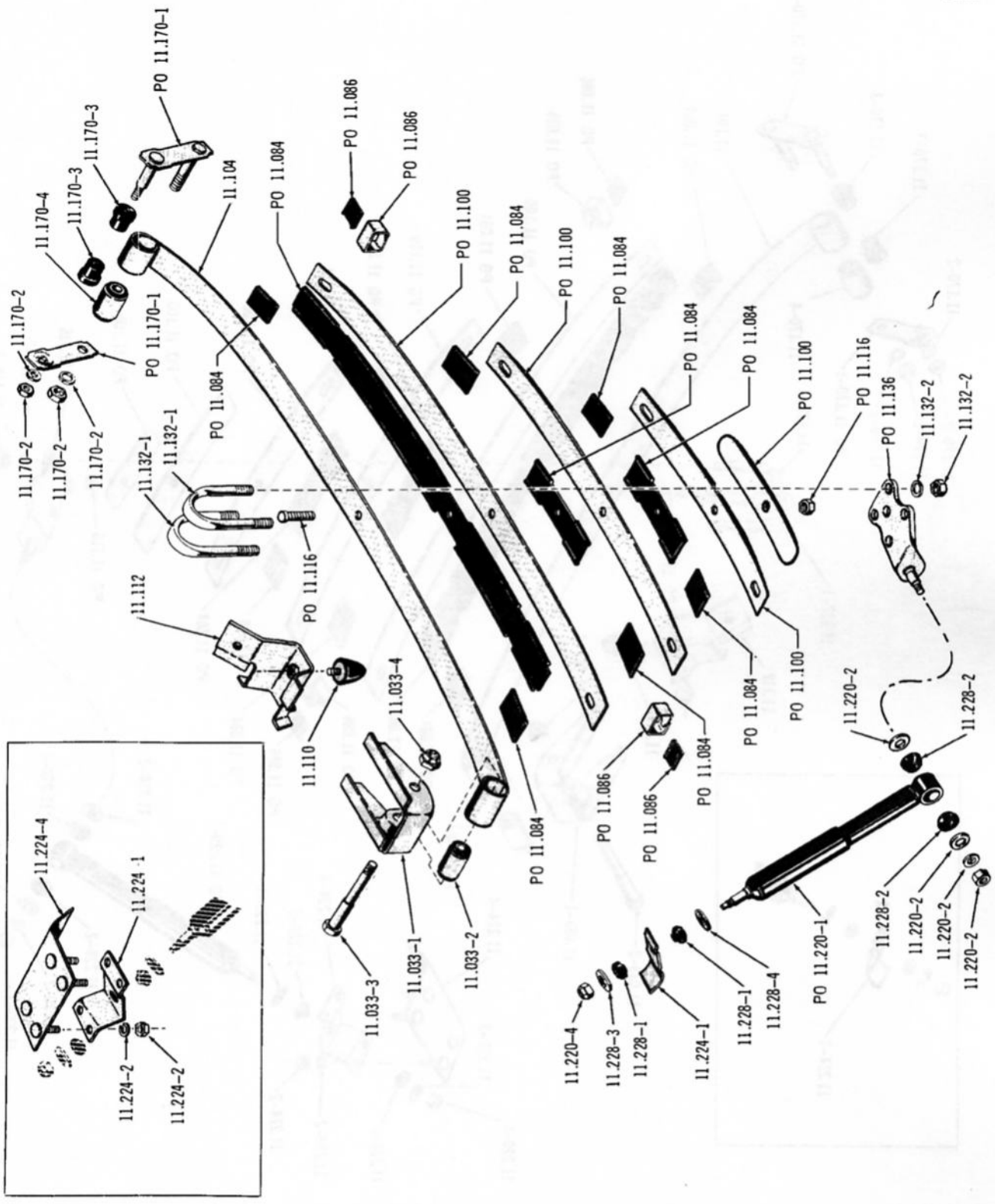

REAR LEAF SPRING AND SHOCK (5 LEAF) ... 1967/69 (01), 1968/ (30)(70)

3142

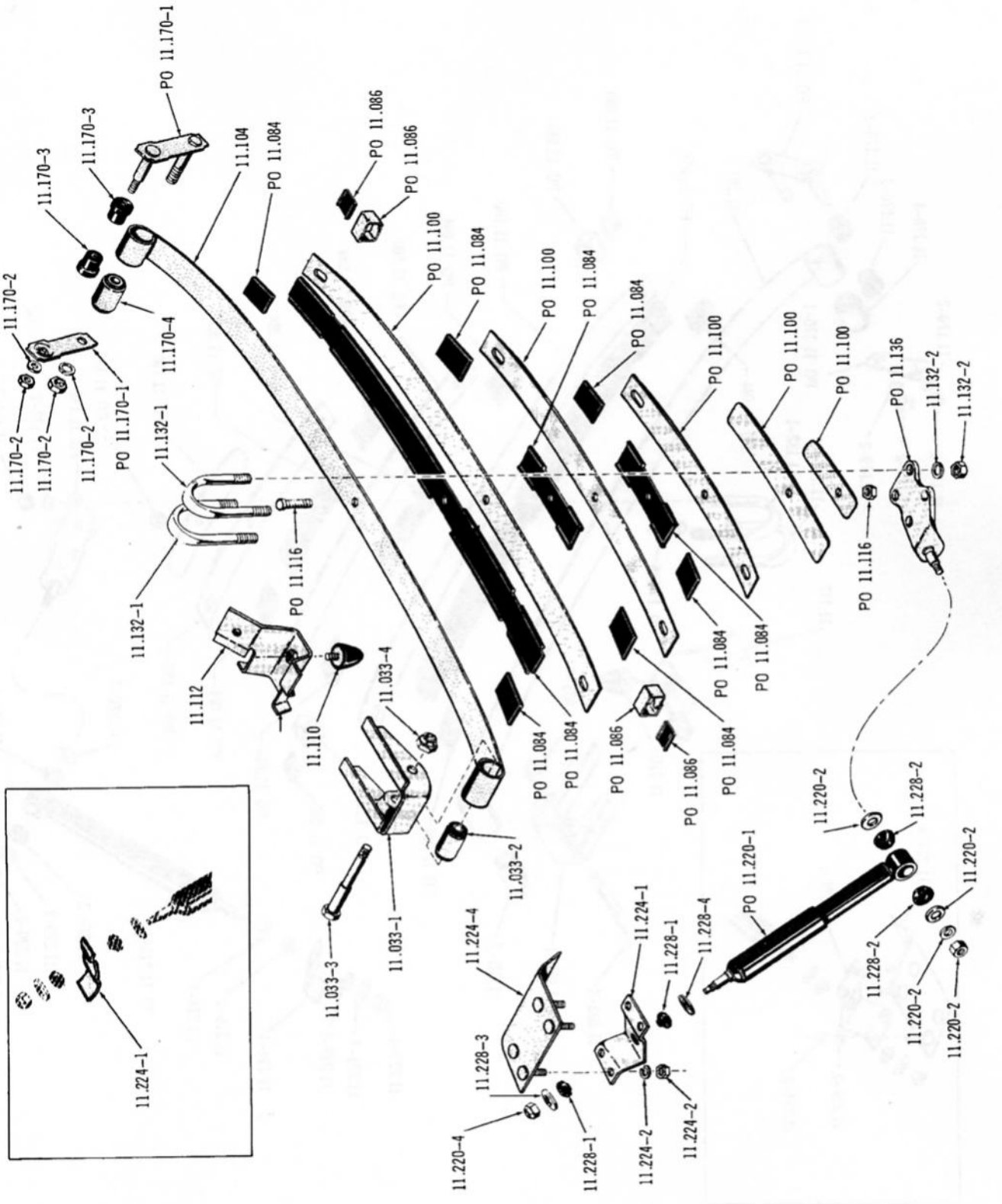

REAR LEAF SPRING AND SHOCK (6 LEAF) ... 1967/69 (01)

3914

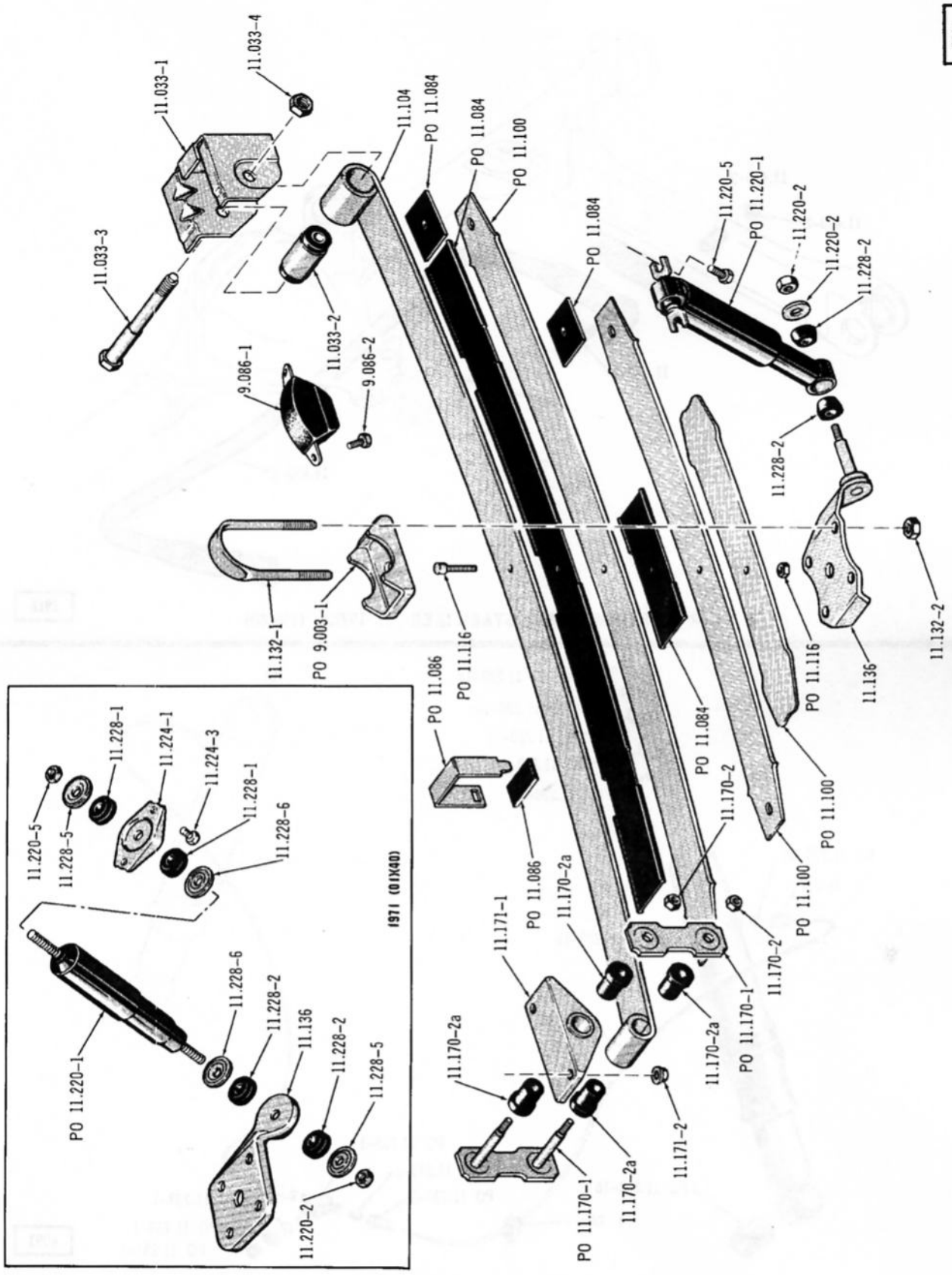

REAR LEAF SPRING AND SHOCK ... 1970/ (01)(40)

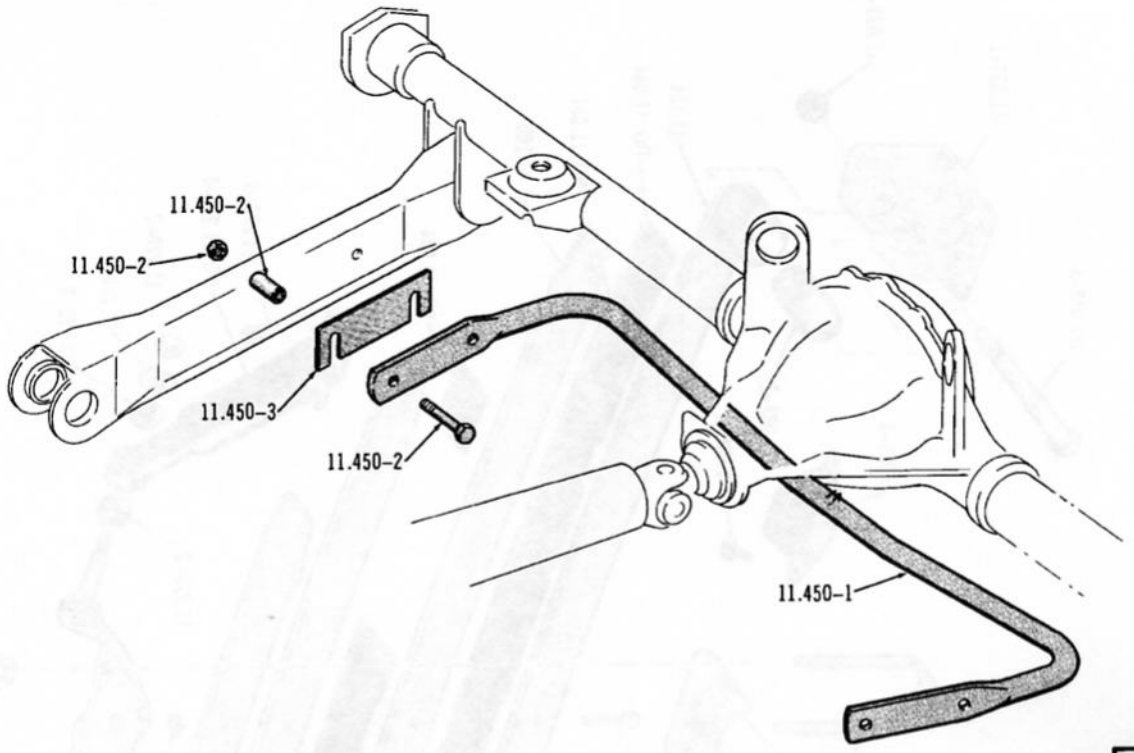

3918

REAR SUSPENSION SWAY STABILIZER ... 1970/ (10)(80)

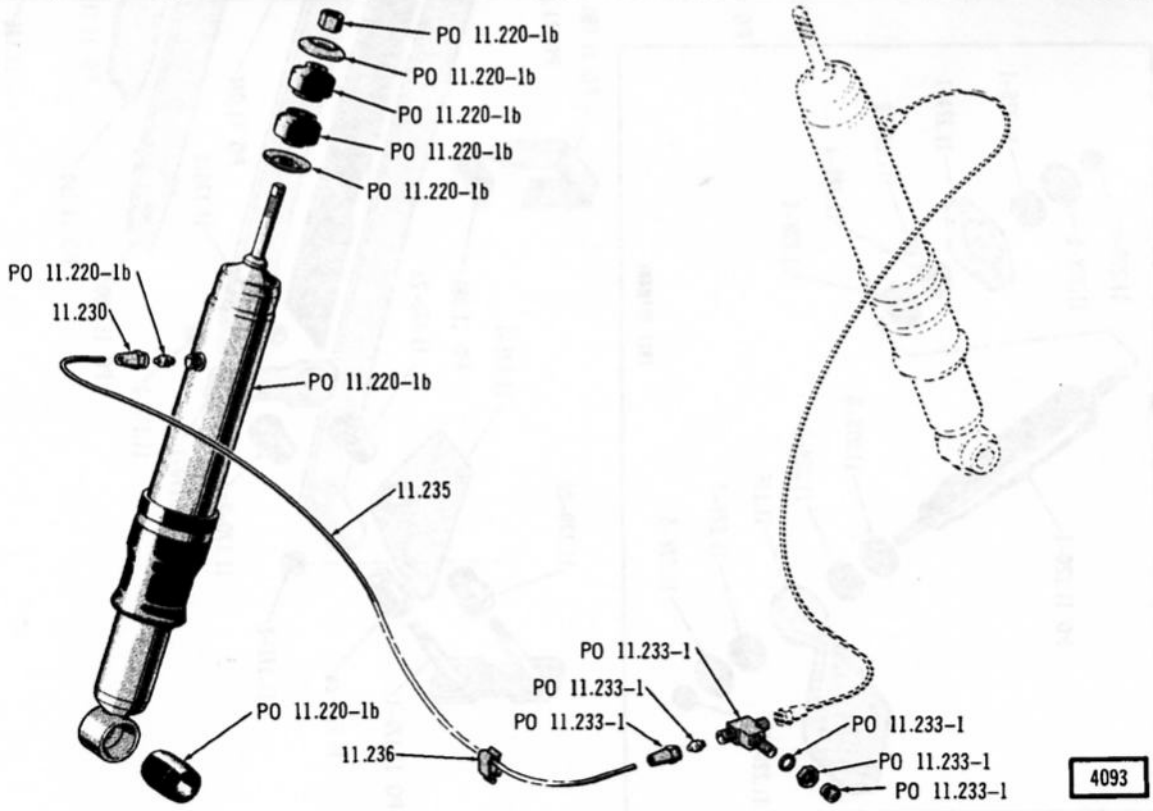

4093

SUPER LIFT SHOCK ABSORBERS

2803

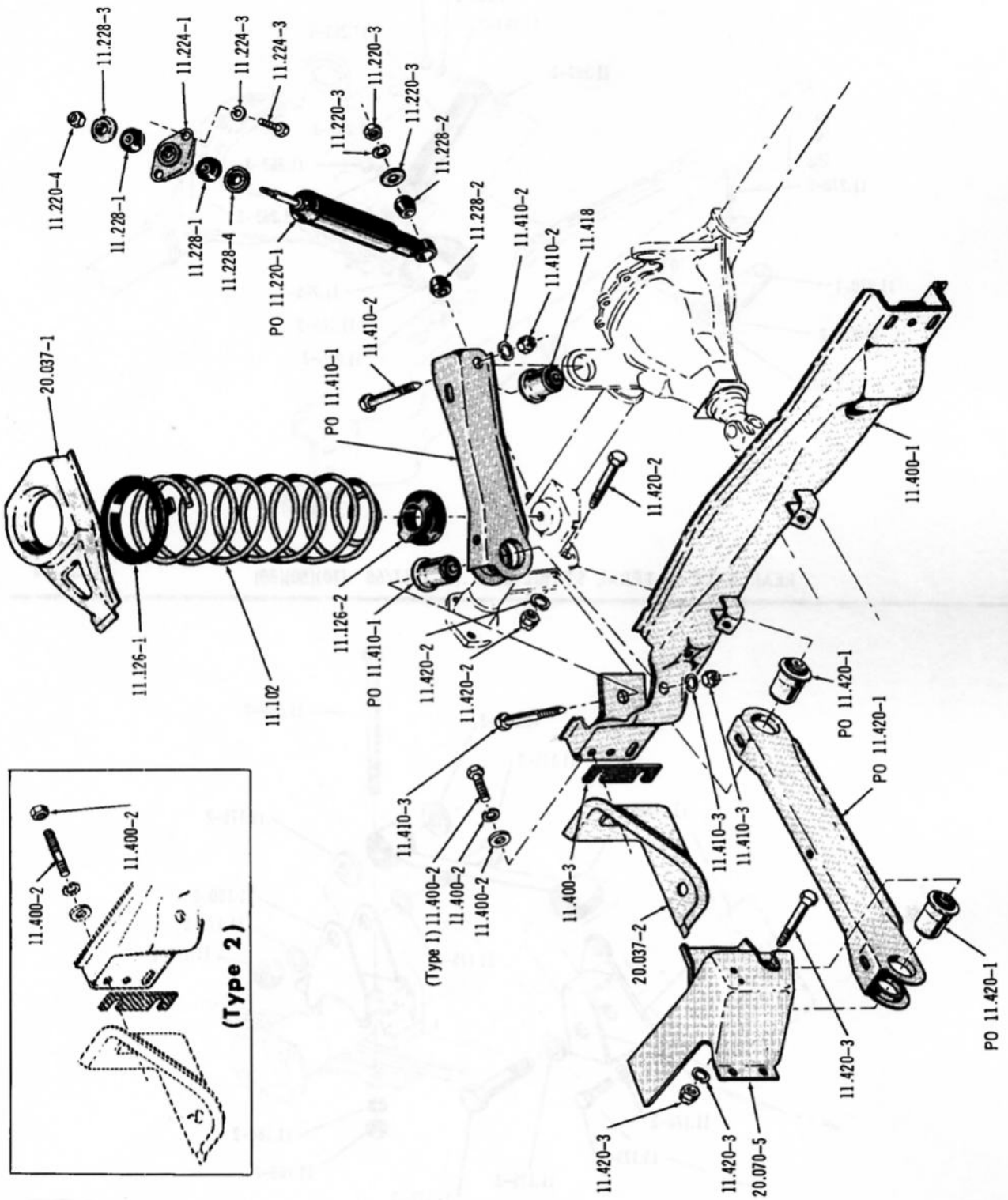

REAR SUSPENSION ... 10, 50, 80

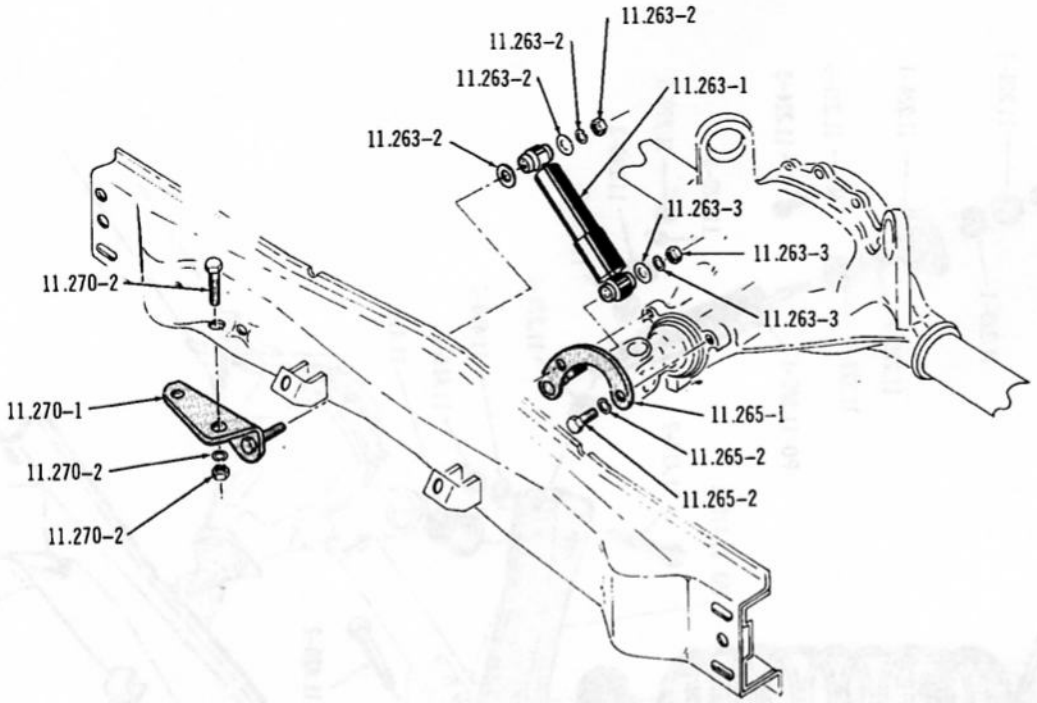

3434

REAR AXLE LATERAL STABILIZER ... 1967/68 (10)(50)(80)

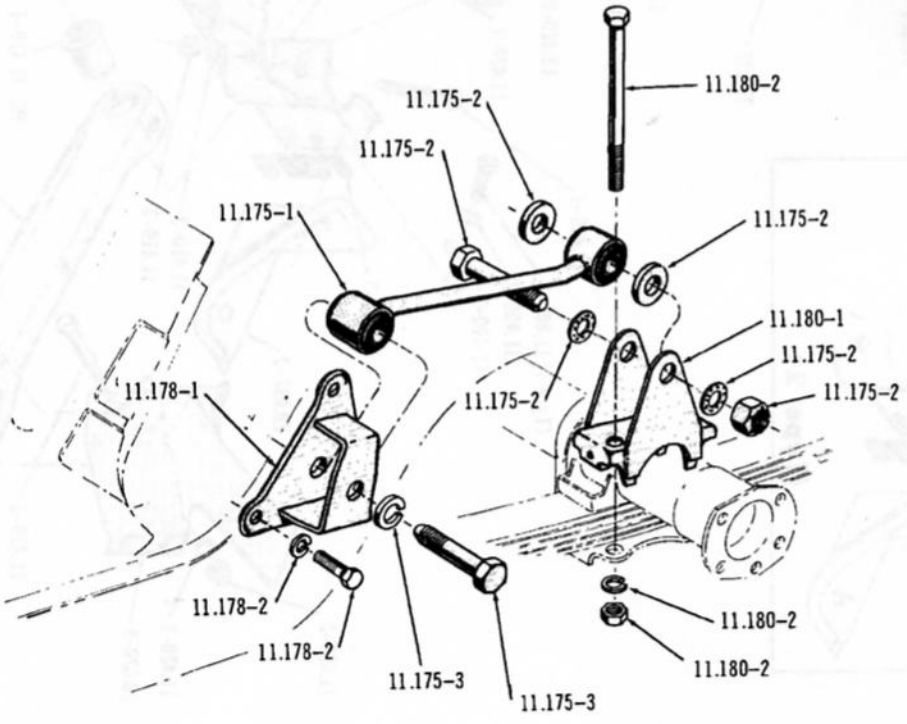

3529

REAR AXLE TORQUE LINK ... 1968/70 (30), 1969 (09-SCRAMBLER)

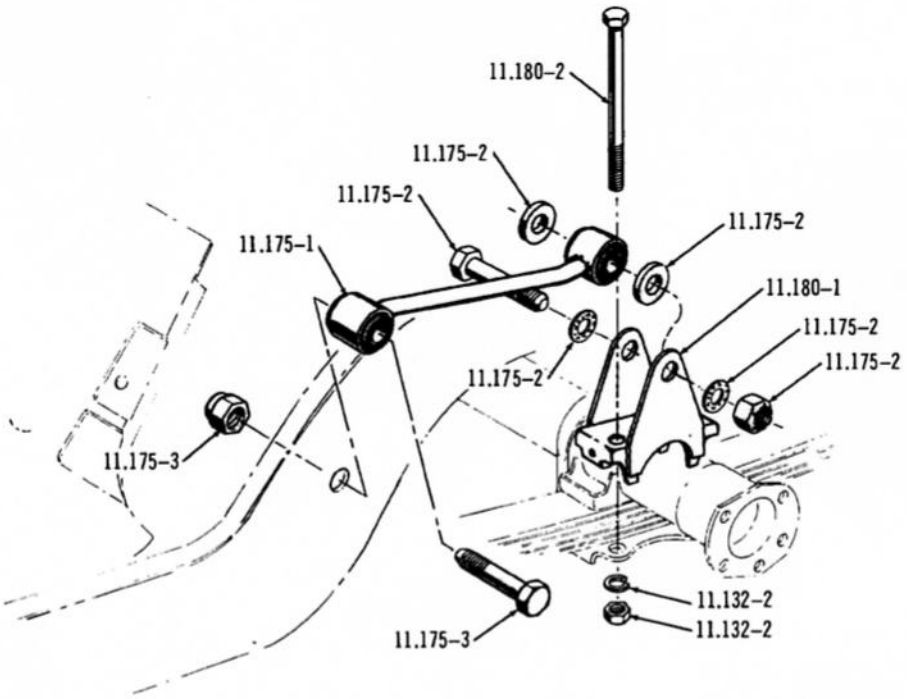

5058

REAR AXLE TORQUE LINK . . . 1972–V8 (40)

Printed in U.S.A.

ROAD SPRINGS - SHOCKS - REAR SUSPENSION

GROUP NO. — DESCRIPTION — YEAR and MODEL	"L" CODE	PAKS CODE	PRIMARY GROUP NO.	PER CAR	PART NO.	CODE
11.033–1 BRACKET, Rear Leaf Spring Front Mounting (Welded To Underbody)						
67/69 (Left) 05–06–08–09			20.043	1	350 0087	
67 (Left) 07			20.043	1	350 0057	
70/ (Left) 01–40			20.043	1	361 5223	
68/ (Left) 39–79			20.043	1	360 0137	
67/69 (Right) 05–06–08–09			20.043	1	350 0086	
67 (Right) 07			20.043	1	350 0056	
70/ (Right) 01–40			20.043	1	361 5222	
68/ (Right) 39–79			20.043	1	360 0136	
11.033–2 BUSHING, Rear Leaf Spring Front Eye						
67/69 (1–1/2" O. D.) 01			.....	2	317 1345	
70 (1–1/2" O. D.) 01			.....	2	318 9087	
70 (2" O. D.) 01			.....	2	319 9993	
71 (2" O. D.) 01–40 (Six–232–WAT)			.....	2	319 9993	
71 (2" O. D.) 01–40 (Export-Six-232-WST)			.....	2	319 9993	
71 (2" O. D.) 01–40 (Six–258)			.....	2	319 9993	
72 (2" O. D.) 01–40 (Six–232–WST)			.....	2	321 5340	
72 (2" O. D.) 01 (Six–232–WAT–Except Rallye Package)			.....	2	319 9993	
72 (2" O. D.) 01 (Six–258–Except Rallye Package)			.....	2	319 9993	
72 (2" O. D.) 01 (V8–Except Rallye Package)			.....	2	319 9993	
72 (2" O. D.) 06 (Rallye Package–* 11–117)			.....	2	321 5340	
71 (Light–3 Leaf–2" O. D.) 05–06 (Six–232–WST–Except Export–* 11–103)			.....	2	319 9993	
71 (Light–3 Leaf–2" O. D.) 05–06 (Six–232–WST–Except Export–* 11–104)			.....	2	321 5340	
71 (Heavy-4 Leaf-2" O. D.) 05-06 (Six-232-WST-Except Export-* 11-107)			.....	2	319 9993	
71 (Heavy-4 Leaf-2" O. D.) 05-06 (Six-232-WST-Except Export-* 11-108)			.....	2	321 5340	
71 (Light–4 Leaf–2" O. D.) 08 (Six–232–WST–Except Export–* 11–105)			.....	2	319 9993	
71 (Light–4 Leaf–2" O. D.) 08 (Six–232–WST–Except Export–* 11–106)			.....	2	321 5340	
71 (Heavy-4 Leaf-2" O. D.) 05-06 (Six-232-WST-Except Export-* 11-108)			.....	2	321 5340	
71 (Heavy-5 Leaf-2" O. D.) 08 (Six-232-WST-Except Export-* 11-109)			.....	2	319 9993	
71 (Heavy-5 Leaf-2" O. D.) 08 (Six-232-WST-Except Export-* 11-110)			.....	2	321 5340	
68/ (1–1/2" O. D.) 30–70			.....	2	318 9087	*
70/71 (1–1/2" O. D.) 40			.....	2	318 9087	
72 (1–1/2" O. D.) 40 (Six–232–WAT)			.....	2	318 9087	
72 (1–1/2" O. D.) 40 (Six–258)			.....	2	318 9087	
72 (1–1/2" O. D.) 40 (V8)			.....	2	318 9087	
71 (Light–4 Leaf–2" O. D.) 40 (Six–232–WST–Except Export–* 11–111)			.....	2	319 9993	
71 (Light–4 Leaf–2" O. D.) 40 (Six–232–WST–Except Export–* 11–112)			.....	2	321 5340	
71 (Heavy-5 Leaf-2" O. D.) 40 (Six-232-WST-Except Export-* 11-113)			.....	2	319 9993	
71 (Heavy-5 Leaf-2" O. D.) 40 (Six-232-WST-Except Export-* 11-114)			.....	2	321 5340	
11.033–3 PIN, Rear Leaf Spring Front Eye Bushing						
67/69 01			.....	2	317 1344	
70 01–30–40–70 (6–7/8" Long)			.....	2	319 6846	
70/ 01–30–40–70 (4–1/2" Long)			.....	2	400 4120	
68/69 30–70			.....	2	318 9088	
11.033–4 ATTACHING PARTS, Pin To Bracket						
NUT, Lock..... 67/69 01–30–70			17.416	2	G442834	
NUT, Lock..... 70/ 01–30–40–70			.....	2	400 4439	

11.035 REINFORCEMENT, Rear Leaf Spring Front Mounting Bracket

67/69	(Left) 05-06-08-09	20.043	1	350 0059
67	(Left) 07	20.043	1	350 0617
68/	(Left) 39-79	20.043	1	360 0147
67/69	(Right) 05-06-08-09	20.043	1	350 0058
67	(Right) 07	20.043	1	350 0616
68/	(Right) 39-79	20.043	1	360 0146

11.072 SPRING, Front Coil

1967 Thru 1972 01-40 (Six)

67	01 (Six-WAC)	.....	2	317 2894
68	01 (Six-WAC-* 11-16)	.....	2	317 2894
68	01 (Six-WAC-* 11-17)	.....	2	317 8923
69	01 (Six-WAC)	.....	2	317 8923
67	***01 (Six-Heavy)*** ***(Use 319 1069)***	.....	2	316 9814
68/69	***01 (Six-Heavy)***	.....	2	319 1069
72	***01 (Six-Heavy-* 11-118)***	.....	2	319 7447
72	***01 (Six-Heavy-* 11-119)***	.....	2	319 7446
72	***40 (Six-Heavy-* 11-118)***	.....	2	319 7447
72	***40 (Six-Heavy-* 11-119)***	.....	2	319 7446
68	(Left) 01 (Six-Light-LAC)	.....	1	317 2894
69	(Left) 01 (Six-Light-LAC)	.....	1	317 8923
70	(Left) 01 (Six-Light-LAC-* 11-64)	.....	1	319 7428
70	(Left) 01 (Six-Light-LAC-* 11-65)	.....	1	319 7429
70/71	***(Left) 01 (Six-Heavy)***	.....	1	319 7448
67	(Left) 05-06-08-09 (Six-Light-LAC)	.....	1	316 9815
67	(Left) 07 (Six-Light-LAC)	.....	1	317 2894
70	(Left) 01 (Six-Light-WAC-* 11-60)	.....	1	319 7430
70	(Left) 01 (Six-Light-WAC-* 11-61)	.....	1	319 7431
71	(Left) 01 (LHD-Six-Light-LAC)	.....	1	319 7428
71	(Left) 01 (Six-Light-WAC)	.....	1	319 7430
72	(Left) 01 (LHD-Six-Light-LAC)	.....	1	319 7427
72	(Left) 01 (Six-Light-WAC)	.....	1	319 7429
70/71	(Left) 40 (Light-LAC)	.....	1	319 7427
70/71	(Left) 40 (Light-WAC)	.....	1	319 7429
72	(Left) 40 (Six-Light-WAC)	.....	1	319 7428
72	(Left) 40 (Six-Light-LAC)	.....	1	319 7426
70/71	***(Left) 40 (Six-Heavy)***	.....	1	319 7448
68/69	(Right) 01 (Six-Light-LAC)	.....	1	316 9815
67	(Right) 05-06-08-09 (Six-Light-LAC)	.....	1	317 2895
67	(Right) 07 (Six-Light-LAC)	.....	1	316 9815
70	(Right) 01 (Six-Light-LAC-* 11-64)	.....	1	319 7441
70	(Right) 01 (Six-Light-LAC-* 11-65)	.....	1	319 7426
71	(Right) 01 (LHD-Six-Light-LAC)	.....	1	319 7441
70/71	(Right) 01 (Six-Light-WAC)	.....	1	319 7427
72	(Right) 01 (LHD-Six-Light-LAC)	.....	1	319 7426
72	(Right) 01 (Six-Light-WAC)	.....	1	319 7428
70/71	***(Right) 01 (Six-Heavy)***	.....	1	319 7446
70/71	(Right) 40 (Light-LAC)	.....	1	319 7440
70/71	(Right) 40 (Light-WAC)	.....	1	319 7426
72	(Right) 40 (Six-Light-LAC-* 11-120)	.....	1	319 7441
72	(Right) 40 (Six-Light-LAC-* 11-121)	.....	1	319 7440
72	(Right) 40 (Six-Light-WAC)	.....	1	319 7427
70/71	***(Right) 40 (Six-Heavy)***	.....	1	319 7446

ROAD SPRINGS - SHOCKS - REAR SUSPENSION

1967 Thru 1972 01-40 (V8)

67/68	08 (V8-Light-LAC)	.....	2	317 8922
67/69	07-08 (V8-WAC)	.....	2	318 5128
67/69	***01 (V8-Heavy)***	.....	2	318 5129
70/71	01 (304-Light-LAC)	.....	2	319 7431
70/71	01 (304-Light-WAC)	.....	2	319 7432
72	01 (304-Light-LAC)	.....	2	319 7431
72	01 (304-Light-WAC-* 11-126)	.....	2	319 7432
72	01 (304-Light-WAC-* 11-127)	.....	2	319 7431
70	***01 (304-Heavy)***	.....	2	319 7451
71	***01 (304-Heavy-* 11-115)***	.....	2	319 7451
71	***01 (304-Heavy-* 11-116)***	.....	2	319 7452
71	01 (360-Light-LAC)	.....	2	319 7432
71	01 (360-Light-WAC)	.....	2	319 7433
72	01 (360-Light-LAC-* 11-126)	.....	2	319 7432
72	01 (360-Light-LAC-* 11-127)	.....	2	319 7431
72	01 (360-Light-WAC)	.....	2	319 7433
71	***01 (360-Heavy-* 11-115)***	.....	2	319 7451
71	***01 (360-Heavy-* 11-116)***	.....	2	319 7452
72	***01 (V8-Heavy-* 11-124)***	.....	2	319 7451
72	***01 (V8-Heavy-* 11-125)***	.....	2	319 7452
72	40 (304-Light-LAC)	.....	2	319 7430
72	40 (304-Light-WAC)	.....	2	319 7431
72	***40 (V8-Heavy-* 11-124)***	.....	2	319 7451
72	***40 (V8-Heavy-* 11-125)***	.....	2	319 7452
67/69	(Left) 05-06-08-09 (V8-Light-LAC)	.....	1	317 8923
67	(Left) 07 (V8-Light-LAC)	.....	1	317 8922
67/69	(Left) 05-06-08-09 (V8-WAC)	.....	1	317 8922
67/69	(Right) 05-06-08-09 (V8-Light-LAC)	.....	1	317 8922
67	(Right) 07 (V8-Light-LAC)	.....	1	318 5128
67/69	(Right) 05-06-08-09 (V8-WAC)	.....	1	318 5128

1967 Thru 1972 10-50-80 (Six)

72	***10-80 (Six-Fleet-Heavy)(Six-Export-Heavy)***	.....	2	321 8933
72	***19 (Six-Heavy)***	.....	2	319 7448
67	(Left) 15-16-17-19 (LHD-Six-Light-LAC)	.....	1	318 0128
67	(Left) 15-16-17-19 (Six-WAC) ***(Use 319 1441)***	.....	1	318 0134
67	***(Left) 15-16-17-19 (Six-Heavy)***	.....	1	318 0131
67	***(Left) 15-16-17-19 (RHD-Six-Light)***	.....	1	318 0129
67	(Left) 18 (LHD-Six-Light-LAC) ***(Use 319 1441)***	.....	1	318 0134
67	(Left) 18 (Six-WAC)	.....	1	318 8743
67	***(Left) 18 (LHD-Six-Heavy)*** ***(Use 318 1994)***	.....	1	317 9145
67	***(Left) 18 (RHD-Six-Light)***	.....	1	316 7232
67	***(Left) 10 (RHD-Six-Heavy)***	.....	1	316 7239
67	(Left) 59-85-86-87-89 (Six-Light-LAC)	.....	1	318 8745
67	(Left) 50-80 (Six-WAC)	.....	1	318 8743
67	***(Left) 59-85-86-87-89 (Six-Heavy)***	.....	1	318 8749
67	(Left) 88 (Six-Light-LAC) ***(Use 319 1441)***	.....	1	318 0134
67	***(Left) 88 (Six-Heavy)*** ***(Use 318 1994)***	.....	1	317 9145
67	(Right) 15-16-17-19 (LHD-Six-Light-LAC)	.....	1	316 7232
67	(Right) 15-16-17-19 (Six-WAC)	.....	1	318 0128
67	***(Right) 15-16-17-19 (Six-Heavy)***	.....	1	316 7239
67	***(Right) 15-16-17-19 (RHD-Six-Light)***	.....	1	318 0128
67	***(Right) 15-16-17-19 (RHD-Six-Heavy)***	.....	1	318 0131
67	(Right) 18 (LHD-Six-Light-LAC)	.....	1	316 7232
67	(Right) 18 (Six-WAC)	.....	1	318 0129
67	***(Right) 18 (LHD-Six-Heavy)***	.....	1	316 7239
67	***(Right) 18 (RHD-Six-Light)*** ***(Use 319 1441)***	.....	1	318 0134
67	***(Right) 18 (RHD-Six-Heavy)*** ***(Use 318 1994)***	.....	1	317 9145
67	(Right) 59-85-86-87-89 (Six-Light-LAC)	.....	1	316 7232
67	(Right) 59-85-86-87-89 (Six-WAC)	.....	1	318 8745
67	***(Right) 59-85-86-87-89 (Six-Heavy)***	.....	1	318 8746
67	(Right) 88 (Six-Light-LAC)	.....	1	316 7232
67	(Right) 88 (Six-WAC)	.....	1	318 0129
67	***(Right) 88 (Six-Heavy)***	.....	1	316 7239

Printed in U.S.A.

ROAD SPRINGS - SHOCKS - REAR SUSPENSION

68/69	(Left) 10-80 (LHD-Six-Light-LAC)	.....	1	319 1441
68/69	(Left) 15-17-19-85-89 (Six-WAC)	.....	1	319 1442
68/69	(Left) 18-88 (Six-WAC)	.....	1	318 8743
68	***(Left) 10-80 (LHD-Six-Heavy) ..... (Use 318 1994)***	.....	1	317 9145
69	***(Left) 10-80 (LHD-Six-Heavy)***	.....	1	318 1994
68/69	***(Left) 15-17-19 (RHD-Six-Light-LAC)***	.....	1	318 0129
68/69	***(Left) 18 (RHD-Six-Light-LAC)***	.....	1	316 7232
68/69	***(Left) 15-17-19 (RHD-Six-Heavy)***	.....	1	318 8746
68/69	***(Left) 18 (RHD-Six-Heavy)***	.....	1	316 7239
68/69	(Right) 15-17-19-85-89 (LHD-Six-Light-LAC)	.....	1	318 0129
68/69	(Right) 15-17-19-85-89 (Six-WAC)	.....	1	319 1441
68/69	***(Right) 15-17-19-85-89 (LHD-Six-Heavy)***	.....	1	318 8746
68/69	(Right) 18-88 (LHD-Six-Light-LAC)	.....	1	316 7232
68/69	(Right) 18-88 (Six-WAC)	.....	1	318 0129
68/69	***(Right) 18-88 (LHD-Six-Heavy)***	.....	1	316 7239
68/69	***(Right) 10 (RHD-Six-Light-LAC)***	.....	1	319 1441
68/69	***(Right) 10 (RHD-Six-Heavy) ..... (Use 318 1994)***	.....	1	317 9145
70	(Left) 10 (LHD-Six-Light-LAC)	.....	1	319 7431
70	(Left) 10 (Six-Light-WAC)	.....	1	319 7433
70	***(Left) 15-18-19-85-89 (LHD-Six-Heavy)***	.....	1	319 7451
70	***(Left) 15-19 (RHD-Six-Light)***	.....	1	319 7431
70	***(Left) 18 (RHD-Six-Light)***	.....	1	319 7431
70	***(Left) 10-80 (RHD-Six-Heavy)***	.....	1	319 7451
70	(Left) 85 (LHD-Six-Light-LAC-* 11-91)	.....	1	319 7417
70	(Left) 85 (LHD-Six-Light-LAC-* 11-92)	.....	1	319 7432
70	(Left) 85 (Six-Light-WAC)	.....	1	319 7418
70	(Right) 15-19 (LHD-Six-Light-LAC)	.....	1	319 7428
70	(Right) 15-19 (Six-Light-WAC)	.....	1	319 7430
70	***(Right) 15-19-85-89 (LHD-Six-Heavy-* 11-87)***	.....	1	319 7448
70	***(Right) 15-19-85-89 (LHD-Six-Heavy-* 11-88)***	.....	1	319 7465
70	***(Right) 15-19 (RHD-Six-Light)***	.....	1	319 7428
70	***(Right) 15-19 (RHD-Six-Heavy)***	.....	1	319 7448
70/71	(Right) 18 (Six-Light-WAC)	.....	1	319 7429
70/71	(Right) 18 (LHD-Six-Light-LAC)	.....	1	319 7426
70/71	***(Right) 18 (LHD-Six-Heavy)***	.....	1	319 7446
70	***(Right) 18 (RHD-Six-Light)***	.....	1	319 7426
70	***(Right) 18 (RHD-Six-Heavy)***	.....	1	319 7446
70	(Right) 85 (LHD-Six-Light-LAC-* 11-89)	.....	1	319 7415
70	(Right) 85 (LHD-Six-Light-LAC-* 11-90)	.....	1	319 7429
70	(Right) 85 (Six-Light-WAC)	.....	1	319 7416
71	(Left) 15 (LHD-Six-Light-LAC)	.....	1	319 7431
71	(Left) 15 (Six-Light-WAC)	.....	1	319 7433
71	***(Left) 15 (LHD-Six-Heavy)***	.....	1	319 7451
71	(Left) 18 (LHD-Six-Light-LAC)	.....	1	319 7431
71	(Left) 18 (LHD-Six-Light-WAC)	.....	1	319 7433
71	***(Left) 18 (LHD-Six-Heavy)***	.....	1	319 7451
71	(Left) 19 (LHD-Six-Light-LAC)	.....	1	319 7430
71	(Left) 19 (Six-Light-WAC)	.....	1	319 7431
71	***(Left) 19 (LHD-Six-Heavy)***	.....	1	319 7449
71	(Left) 85 (Six-Light-LAC)	.....	1	319 7432
71	(Left) 85 (Six-Light-WAC)	.....	1	319 7433
71	***(Left) 85 (LHD-Six-Heavy)***	.....	1	319 7451
71	(Right) 15 (LHD-Six-Light-LAC)	.....	1	319 7428
71	(Right) 15 (Six-Light-WAC)	.....	1	319 7430
71	***(Right) 15 (LHD-Six-Heavy)***	.....	1	319 7448
71	(Right) 19 (LHD-Six-Light-LAC)	.....	1	319 7427
71	(Right) 19 (Six-Light-WAC)	.....	1	319 7428
71	***(Right) 19 (LHD-Six-Heavy)***	.....	1	319 7447
71	(Right) 85 (Six-Light-LAC)	.....	1	319 7429
71	(Right) 85 (Six-Light-WAC)	.....	1	319 7430
71	***(Right) 85 (LHD-Six-Heavy)***	.....	1	319 7448

Printed in U.S.A.

ROAD SPRINGS - SHOCKS - REAR SUSPENSION

72	(Left) 15 (Six-Light-LAC)	.....	1	319 7430
72	(Left) 15 (Six-Light-WAC)	.....	1	319 7432
72	***(Left) 15 (Six-Heavy)***	.....	1	319 7450
72	(Left) 18 (Six-Light-LAC)	.....	1	319 7430
72	(Left) 18 (Six-Light-WAC)	.....	1	319 7432
72	***(Left) 18 (Six-Heavy)***	.....	1	319 7450
72	(Left) 19 (Six-Light-LAC)	.....	1	319 7429
72	(Left) 19 (Six-Light-WAC)	.....	1	319 7430
72	(Left) 85 (Six-Light-LAC)	.....	1	319 7431
72	(Left) 85-89 (Six-Light-WAC)	.....	1	319 7432
72	***(Left) 85 (Six-Heavy)***	.....	1	319 7450
71	***(Left) 88 (Six-Fleet)***	.....	1	319 7431
72	(Right) 15 (Six-Light-LAC)	.....	1	319 7429
72	(Right) 15 (Six-Light-WAC)	.....	1	319 7431
72	***(Right) 15 (Six-Heavy)***	.....	1	319 7449
72	(Right) 18 (Six-Light-LAC)	.....	1	319 7427
72	(Right) 18 (Six-Light-WAC)	.....	1	319 7430
72	***(Right) 18 (Six-Heavy)***	.....	1	319 7447
72	(Right) 19 (Six-Light-LAC)	.....	1	319 7428
72	(Right) 19 (Six-Light-WAC)	.....	1	319 7429
72	(Right) 85 (Six-Light-LAC)	.....	1	319 7430
72	(Right) 85 (Six-Light-WAC)	.....	1	319 7431
72	***(Right) 85 (Six-Heavy)***	.....	1	319 7449
71	***(Right) 88 (Six-Fleet)***	.....	1	319 7431

1967 Thru 1969 10-50-80 (V8)

67	15-16-17-19 (LHD-290-Light-LAC)	.....	2	318 1994
67	50-80 (LHD-290-Light-LAC)	.....	2	318 1994
67	10-50-80 (290-WAC)	.....	2	318 1995
67	***10 (LHD-290-Heavy)*** ..... ***(Use 317 9146)***	.....	2	316 7238
67	***50-80 (290-Heavy)*** ..... ***(Use 317 9146)***	.....	2	316 7238
67	15-16-17-19 (LHD-343-Light-LAC)	.....	2	318 0137
67	50-80 (LHD-343-Light-LAC)	.....	2	318 0137
67	10-50-80 (343-WAC)	.....	2	318 0136
67	***10-50-80 (343-Heavy)***	.....	2	317 9146
67	***(Left) 10-80 (RHD-290-Light)*** ..... ***(Use 318 1994)***	.....	1	317 9145
67	***(Left) 10-80 (RHD-290-Heavy)*** ..... ***(Use 317 9146)***	.....	1	316 7238
67	***(Left) 80 (RHD-343-Light)*** ..... ***(Use 318 1995)***	.....	1	317 9147
67	***(Left) 80 (RHD-343-Heavy)***	.....	1	317 9146
67	***(Right) 10-80 (RHD-290-Light)***	.....	1	318 1995
67	***(Right) 10-80 (RHD-290-Heavy)***	.....	1	317 9146
67	***(Right) 80 (RHD-343-Light)***	.....	1	318 0136
67	***(Right) 80 (RHD-343-Heavy)***	.....	1	318 0133
68/69	10-80 (LHD-290-Light-LAC)	.....	2	318 0137
68/69	10-80 (290-WAC)	.....	2	318 0136
68/69	***10-80 (LHD-290-Heavy)***	.....	2	317 9146
68	10-80 (LHD-343-Light-LAC)	.....	2	318 0136
69	10-80 (LHD-343-Light-LAC)	.....	2	318 0137
68/69	10-80 (343-WAC) ..... ***(Use 318 0136)***	.....	2	318 8750
68/69	***10-80 (LHD-343-Heavy)(LHD-390-Heavy)***	.....	2	318 0133
68/69	10-80 (LHD-390-Light-LAC)	.....	2	318 0136
68/69	10-80 (390-WAC) ..... ***(Use 318 0136)***	.....	2	318 8750
68/69	***(Left) 10 (RHD-290-Light)*** ..... ***(Use 318 1995)***	.....	1	317 9147
68	***(Left) 80 (RHD-290-Light)*** ..... ***(Use 318 1995)***	.....	1	317 9147
68/69	***(Left) 10 (RHD-290-Heavy)***	.....	1	317 9146
68	***(Left) 80 (RHD-290-Heavy)***	.....	1	317 9146
68/69	***(Left) 80 (RHD-343-Light)***	.....	1	318 0137
68/69	***(Left) 80 (RHD-343-Heavy)***	.....	1	317 9146

Printed in U.S.A.

ROAD SPRINGS - SHOCKS - REAR SUSPENSION

68/69	***(Right) 10 (RHD-290-Light)***	.....	1	318 0136
68	***(Right) 80 (RHD-290-Light)***	.....	1	318 0136
68/69	***(Right) 10 (RHD-290-Heavy)***	.....	1	318 0133
68	***(Right) 80 (RHD-290-Heavy)***	.....	1	318 0133
68/69	***(Right) 80 (RHD-343-Light)*** ..... ***(Use 318 0136)***	.....	1	318 8750
68/69	***(Right) 80 (RHD-343-Heavy)***	.....	1	318 0133

1970 Thru 1972 10-80 (V8)

70	15-19 (LHD-V8-304-LAC-* 11-73)	.....	2	319 7418
70	15-19 (LHD-V8-304-LAC-* 11-74)	.....	2	319 7419
70	15 (V8-304-Light-WAC)	.....	2	319 7419
70	15-19 (LHD-V8-360-LAC)(LHD-V8-390-LAC-E/MACHINE)	.....	2	319 7419
70/71	15 (V8-360-Light-WAC)(V8-390-Light-WAC)(V8-401-Light-WAC)	.....	2	319 7420
70	***15-19 (RHD-304-Light)***	.....	2	319 7418
70	***15-19-85-89 (RHD-V8-Heavy)***	.....	2	319 7453
71/	15 (V8-304-Light-LAC)	.....	2	319 7418
71	15 (V8-304-Light-WAC-* 11-99)	.....	2	319 7419
71	15 (V8-304-Light-WAC-* 11-100)	.....	2	319 7418
71	15 (V8-360-Light-LAC-* 11-99)(V8-401-Light-LAC-* 11-99)	.....	2	319 7419
71	15 (V8-360-Light-LAC-* 11-100)(V8-401-Light-LAC-* 11-100)	.....	2	319 7418
72	15 (V8-304-Light-WAC)	.....	2	319 7419
72	15 (V8-360-Light-LAC-Except Police)(V8-401-Light-LAC-Except Police)	.....	2	319 7419
72	15 (V8-360-Light-WAC-Except Police)(V8-401-Light-WAC-Except Police)	.....	2	319 7420
70/71	***15-85-89 (LHD-V8-Heavy)***	.....	2	319 7453
72	***15-85-89 (LHD-V8-Heavy-Except Police)***	.....	2	319 7453
72	***10-80 (Police-V8)***	.....	2	321 8130
72	***10-80 (V8-Fleet-Heavy)(V8-Export-Heavy)***	.....	2	321 8130
70	18 (LHD-V8-304-LAC)	.....	2	319 7417
70/	18 (V8-304-Light-WAC)	.....	2	319 7418
70	18 (LHD-V8-360-Light-LAC)(LHD-V8-390-Light-LAC)	.....	2	319 7418
70	18 (V8-360-Light-WAC)(V8-390-Light-WAC)	.....	2	319 7419
70	***18-88 (LHD-V8-Heavy-* 11-68)***	.....	2	319 7452
70	***18-88 (LHD-V8-Heavy-* 11-69)***	.....	2	319 7453
72	***18-88 (LHD-V8-Heavy-Except Police)***	.....	2	319 7452
70	***18 (RHD-304-Light)***	.....	2	319 7417
71/	18 (V8-304-Light-LAC)	.....	2	319 7417
71	18 (V8-360-Light-WAC-* 11-99)(V8-401-Light-WAC-* 11-99)	.....	2	319 7419
71	18 (V8-360-Light-WAC-* 11-100)(V8-401-Light-WAC-* 11-100)	.....	2	319 7418
71	18 (LHD-V8-360-Light-LAC-* 11-101)(LHD-V8-401-Light-LAC-* 11-101)	.....	2	319 7418
71	18 (LHD-V8-360-Light-LAC-* 11-102)(LHD-V8-401-Light-LAC-* 11-102)	.....	2	319 7434
71	***18-88 (LHD-V8-Heavy)***	.....	2	319 7452
72	18 (V8-360-Light-LAC-Except Police)(V8-401-Light-LAC-Except Police)	.....	2	319 7418
72	18 (V8-360-Light-WAC-Except Police)(V8-401-Light-WAC-Except Police)	.....	2	319 7419
70	19 (V8-304-Light-WAC)	.....	2	319 7419
70	19 (V8-360-Light-WAC)(V8-390-Light-WAC-E/MACHINE)	.....	2	319 7420
70	19 (MACHINE)	.....	2	319 7453
70	***19 (LHD-V8-Heavy)***	.....	2	319 7453
71/	19 (V8-304-Light-LAC)	.....	2	319 7416
71/	19 (V8-304-Light-WAC)	.....	2	319 7417
71	19 (V8-360-Light-LAC)(V8-401-Light-LAC)	.....	2	319 7417
72	19 (V8-360-Light-LAC-Except Police)(V8-401-Light-LAC-Except Police)	.....	2	319 7417
71	19 (V8-360-Light-WAC)(V8-401-Light-WAC)	.....	2	319 7418
72	19 (V8-360-Light-WAC-Except Police)(V8-401-Light-WAC-Except Police)	.....	2	319 7418
71	19 (MACHINE)	.....	2	319 7453
71	***19 (LHD-V8-Heavy-E/MACHINE)***	.....	2	319 7451
72	***19 (V8-Heavy-Except Police-* 11-124)***	.....	2	319 7451
72	***19 (V8-Heavy-Except Police-* 11-125)***	.....	2	319 7452
70	85-89 (LHD-V8-304-Light-LAC)	.....	2	319 7419
70/71	85-89 (V8-304-Light-WAC)	.....	2	319 7420
70/71	85-89 (LHD-V8-360-Light-LAC)(LHD-V8-390-Light-LAC) (LHD-V8-401-Light-LAC)	.....	2	319 7420
70/71	85-89 (V8-360-Light-WAC)(V8-390-Light-WAC)(V8-401-Light-WAC)	.....	2	319 7421
72	85-89 (V8-360-Light-WAC-Except Police)(V8-401-Light-WAC-Except Police)	.....	2	319 7421
70	***85-89 (RHD-360-Light)***	.....	2	319 7420
71	85-89 (V8-304-Light-LAC-* 11-99)	.....	2	319 7419
71	85-89 (V8-304-Light-LAC-* 11-100)	.....	2	319 7418

ROAD SPRINGS - SHOCKS - REAR SUSPENSION

72	85-89 (V8-304-Light-LAC)	.....	2	319 7419
72	85-89 (V8-304-Light-WAC)	.....	2	319 7420
72	85-89 (V8-360-Light-LAC-Except Police)(V8-401-Light-LAC-Except Police)	.....	2	319 7420
70/	(Left) 88 (LHD-V8-304-Light-LAC)	.....	1	319 7417
70/	(Left) 88 (V8-304-Light-WAC)	.....	1	319 7418
70/71	(Left) 88 (LHD-V8-360-Light-LAC)(LHD-V8-390-Light-LAC) (LHD-V8-401-Light-LAC)	.....	1	319 7418
70	(Left) 88 (V8-360-Light-WAC)(V8-390-Light-WAC)	.....	1	319 7419
70	***(Left) 18-88 (RHD-V8-360-Light)***	.....	1	319 7418
71	(Left) 88 (V8-360-Light-WAC-* 11-99)(V8-401-Light-WAC-* 11-99)	.....	1	319 7419
71	(Left) 88 (V8-360-Light-WAC-* 11-100)(V8-401-Light-WAC-* 11-100)	.....	1	319 7418
72	(Left) 88 (V8-360-Light-LAC-Except Police) (V8-401-Light-LAC-Except Police)	.....	1	319 7418
72	(Left) 88 (V8-360-Light-WAC-Except Police) (V8-401-Light-WAC-Except Police)	.....	1	319 7419
70	(Right) 88 (LHD-V8-304-Light-LAC)	.....	1	319 7419
70/	(Right) 88 (V8-304-Light-WAC)	.....	1	319 7420
70/71	(Right) 88 (LHD-V8-360-Light-LAC)(LHD-V8-390-Light-LAC) (LHD-V8-401-Light-LAC)	.....	1	319 7420
70/71	(Right) 88 (V8-360-Light-WAC)(V8-390-Light-WAC)(V8-401-Light-WAC)	.....	1	319 7421
72	(Right) 88 (V8-360-Light-WAC-Except Police) (V8-401-Light-WAC-Except Police)	.....	1	319 7421
70	***(Right) 18-88 (RHD-V8-360-Light)***	.....	1	319 7420
71	(Right) 88 (V8-304-Light-LAC-* 11-99)	.....	1	319 7419
71	(Right) 88 (V8-304-Light-LAC-* 11-100)	.....	1	319 7418
72	(Right) 88 (V8-304-Light-LAC)	.....	1	319 7419
72	(Right) 88 (V8-360-Light-LAC-Except Police) (V8-401-Light-LAC-Except Police)	.....	1	319 7420

1968 Thru 1972 70 (Six)

68/69	***70 (Six-Heavy)***	.....	2	319 1069
68	(Left) 70 (Six-Light-LAC)	.....	1	317 8923
69	(Left) 70 (Six-Light-LAC)	.....	1	319 1040
68/69	(Left) 70 (Six-WAC)	.....	1	317 8922
68/69	(Right) 70 (Six-Light-LAC)	.....	1	319 1040
68/69	(Right) 70 (Six-WAC)	.....	1	317 8923
70	(Left) 70 (Six-Light-LAC-* 11-60)	.....	1	319 7430
70	(Left) 70 (Six-Light-LAC-* 11-61)	.....	1	319 7431
70	(Left) 70 (Six-Light-WAC)	.....	1	319 7432
70	***(Left) 70 (Six-Heavy)***	.....	1	319 7448
70	(Right) 70 (Six-Light-LAC)	.....	1	319 7427
70	(Right) 70 (Six-Light-WAC)	.....	1	319 7429
70	***(Right) 70 (Six-Heavy)***	.....	1	319 7446
71	(Left) 70 (Six-Light-LAC)	.....	1	319 7428
71	(Left) 70 (Six-Light-WAC)	.....	1	319 7430
72	(Left) 70 (LHD-Six-Light-LAC)	.....	1	319 7427
72	(Left) 70 (Six-Light-WAC)	.....	1	319 7429
71	***(Left) 70 (Six-Heavy)***	.....	1	319 7447
72	***(Left) 70 (Six-Heavy)***	.....	1	319 7446
71	(Right) 70 (Six-Light-LAC)	.....	1	319 7441
71	(Right) 70 (Six-Light-WAC)	.....	1	319 7427
72	(Right) 70 (LHD-Six-Light-LAC)	.....	1	319 7426
72	(Right) 70 (Six-Light-WAC)	.....	1	319 7428
71	***(Right) 70 (Six-Heavy)***	.....	1	319 7444
72	***(Right) 70 (Six-Heavy)***	.....	1	319 7445

Printed in U.S.A.

ROAD SPRINGS - SHOCKS - REAR SUSPENSION

1968 Thru 1972 30-70 (V8)

68/69	30 (Light-LAC)	.....	2	319 1069
68/69	30 (WAC)	.....	2	318 5128
68/69	***30 (Heavy)***	.....	2	318 5129
70	30 (Light-LAC)	.....	2	319 7447
70	30 (Light-WAC)	.....	2	319 7448
70	***30 (Heavy)***	.....	2	319 7465
68	70 (V8-Light-LAC)	.....	2	319 1038
68/69	***70 (V8-Heavy-LAC)***	.....	2	319 1471
69	70 (V8-Light-LAC)	.....	2	318 5128
68/69	70 (V8-WAC)	.....	2	319 1039
68/69	***70 (V8-Heavy-WAC)***	.....	2	319 1039
70	70 (V8-304-Light-LAC)	.....	2	319 7432
70	70 (V8-304-Light-WAC)	.....	2	319 7433
70	70 (V8-360-Light-LAC)(V8-390-Light-LAC)	.....	2	319 7433
70	70 (V8-360-Light-WAC)(V8-390-Light-WAC)	.....	2	319 7434
70	***70 (V8-Heavy)***	.....	2	319 7451
71	70 (V8-304-Light-LAC)	.....	2	319 7430
71	70 (V8-304-Light-WAC)	.....	2	319 7431
71	70 (V8-360-Light-LAC)(V8-401-Light-LAC)	.....	2	319 7431
71	70 (V8-360-Light-WAC)(V8-401-Light-WAC)	.....	2	319 7432
72	70 (304-Light-LAC)	.....	2	319 7430
72	70 (304-Light-WAC)	.....	2	319 7431
72	70 (360-Light-LAC)(401-Light-LAC)	.....	2	319 7431
72	70 (360-Light-WAC)(401-Light-WAC)	.....	2	319 7432
71/	***70 (V8-Heavy)***	.....	2	319 7449

11.074 INSULATOR KIT, Front Coil Spring

70	...(Incl. Plates, Shields, Screws And Nuts)	.....	1	448 8548

11.075-1 SUPPORT, Front Coil Spring (Incl. Vent Valve)

67/69	10-50-80 150	.....	2	320 6297

11.075-2 SEAT, Front Coil Spring Upper

67/69	01-30-70	.....	2	316 9712
67/69	10-50-80	.....	2	316 3005

11.075-3 SEAT, Front Coil Spring Lower

70/		.....	2	319 7016
67/69	01-30-70	.....	2	316 9724
67/69	10-50-80	.....	2	318 1166

11.075-3a ATTACHING PARTS, Front Spring Seat Bushing To Upper Control Arm

BOLT, Hexagon	70/	.....	4	318 9575
NUT, Washer Base	70/	.....	4	400 4008

11.075-4 SPACER, Front Coil Spring

67/69	01-30-70	.....	AR	320 5381
67/69	10-50-80	.....	AR	320 2359

ROAD SPRINGS - SHOCKS - REAR SUSPENSION

11.075–5 BUMPER, Front Coil Spring Seat

67/69	01–30–70			2	316 9720
67/69	10–50–80			2	312 9527

11.075–6 ATTACHING PARTS, Bumper To Seat

WASHER, Lock	67/69		17.820	2	G120382 NA
NUT, Hexagon	67/69		17.406	2	G120369 NA

11.075–7 CUSHION, Front Coil Spring

67/69	01–30–70			4	317 1893
67/69	10–50–80			4	314 4895
70/		**(Use 321 0133)**		2	319 4761

11.075–8 VALVE, Front Coil Spring Support Air Vent

67/69	10–50–80			2	316 5765

11.084–1 INSERT KIT, Rear Leaf Spring

67	(Light–4 Leaf) 05–06–07–09 (* 11–1)	159		2	320 5247
68/69	(Light–4 Leaf) 05–06–09 (Six–* 11–1) (290–* 11–1)	159		2	320 5247
70	(Light–4 Leaf) 01 (Six–* 11–37 and * 11–58)	159		2	448 8374
68	(Light–4 Leaf) 70 (Six–* 11–6 and * 11–22)	159		2	320 9824
68	(Light–4 Leaf) 70 (Six–* 11–18 and * 11–23)	159		2	448 5988
69	(Light–4 Leaf) 70 (Six–* 11–18 and * 11–48)	159		2	448 5988
70	(Light–4 Leaf) 70 (Six–* 11–40 and * 11–75)	159		2	448 5988
71/	(Light–4 Leaf) 70 (Six–* 11–79)			2	812 0119
67	***(Heavy-4 Leaf) 05-06-07-09 (Six-* 11-2)(290-* 11-2)***	159		2	320 7840
68/69	***(Heavy-4 Leaf) 05-06-09 (Six-* 11-2)***	159		2	320 7840
70	***(Heavy-4 Leaf) 01 (Six-* 11-43 and * 11-58)***	159		2	448 8384
68	***(Heavy-4 Leaf) 70 (Six-* 11-7 and * 11-24)***	159		2	320 9822
68	***(Heavy-4 Leaf) 70 (Six-* 11-19 and * 11-25)***	159		2	448 5988
69	***(Heavy-4 Leaf) 70 (Six-* 11-19)***	159		2	448 5988
70	***(Heavy-4 Leaf) 70 (Six-* 11-44)***	159		2	448 5988
71/	***(Heavy-4 Leaf) 70 (Six-* 11-81)***			2	812 0119
67/69	(Light–5 Leaf) 08 (Six–* 11–3) (290–* 11–3)	158		2	320 7503
68	(Light–5 Leaf) 30 (* 11–13 and * 11–33)	158		2	320 9820
68	(Light–5 Leaf) 30 (* 11–32 and * 11–34)	158		2	448 5966
69	(Light–5 Leaf) 30 (V8–* 11–32)	158		2	448 5966
70	(Light–5 Leaf) 30 (* 11–39)	158		2	448 5966
68	(Light–5 Leaf) 70 (V8–* 11–8 and * 11–26)	158		2	320 9820
68	(Light–5 Leaf) 70 (V8–* 11–20 and * 11–27)	158		2	448 5966
69	(Light–5 Leaf) 70 (V8–* 11–20)(Six–* 11–20 and * 11–49)	158		2	448 5966
70	(Light–5 Leaf) 70 (Six–* 11–42 and * 11–76)	158		2	448 5966
70	(Light–5 Leaf) 70 (V8–* 11–42)	158		2	448 5966
71/	(Light–5 Leaf) 70 (V8–* 11–80)	158		2	812 0123
67/69	***(Heavy-5 Leaf) 08 (Six-* 11-4)(290-* 11-4)***	158		2	320 7378
68	***(Heavy-5 Leaf) 30 (* 11-12 and * 11-35)***	158		2	320 9820
68	***(Heavy-5 Leaf) 30 (* 11-31 and * 11-36)***	158		2	448 5966
70	***(Heavy-5 Leaf) 30 (* 11-47)***	158		2	448 5966
68	***(Heavy-5 Leaf) 70 (V8-* 11-9 and * 11-28)***	158		2	320 9820
68	***(Heavy-5 Leaf) 70 (V8-* 11-21 and * 11-29)***	158		2	448 5966
69	***(Heavy-5 Leaf) 70 (* 11-31)***	158		2	448 5966
70	***(Heavy-5 Leaf) 70 (V8-* 11-46)***	158		2	448 5966
71/	***(Heavy-5 Leaf) 70 (V8-* 11-82)***	158		2	812 0123

ROAD SPRINGS - SHOCKS - REAR SUSPENSION

70	(Light-6 Leaf) 01 (V8-* 11-38 and * 11-58)	158	.....	2	448 8382
67	***(Heavy-6 Leaf) 01 (343-* 11-30)***	158	.....	2	320 8748
68/69	***(Heavy-6 Leaf) 05-06-09 (290-* 11-30)***	158	.....	2	320 8748
69	***(Heavy-6 Leaf) 09 (SC/RAMBLER)***	158	.....	2	320 8748
70	***(Heavy-6 Leaf) 01 (V8-* 11-45 and * 11-58)***	158	.....	2	448 8386

11.084–2 INSERT, Rear Leaf Spring

70/	01 (Six-* 11-54 and * 11-59)(Six-* 11-56 and * 11-59)(Six-* 11-70)(V8-* 11-55 and * 11-59)(V8-* 11-57 and * 11-59)(* 11-77)(V8-* 11-78)	.....	.....	AR	448 9359
70/	40 (* 11-66 and * 11-67)(* 11-93)(* 11-94)	.....	.....	4	448 9359

11.086 CLIP KIT, Rear Leaf Spring

71/	(Light-3 Leaf) 05-06 (Six-* 11-70)	152	.....	2	812 0118
67	(Light-4 Leaf) 05-06-07-09 (* 11-1)	152	.....	2	320 4735
68/69	(Light-4 Leaf) 05-06-09 (Six-* 11-1) (290-* 11-1)	152	.....	2	320 4735
72	(4 Leaf) 06 (Rallye Package-* 11-56 And * 11-117)	.....	.....	2	448 8380
70	(Light-4 Leaf) 01 (Six-* 11-37 and * 11-58)	152	.....	2	448 8372
70	(Light-4 Leaf) 01 (Six-* 11-54 and * 11-59)(Six-* 11-56 and * 11-59)	152	.....	2	448 8380
71/	(Light-4 Leaf) 08	152	.....	2	448 8372
70/	(Light-4 Leaf) 40	152	.....	2	448 8380
68	(Light-4 Leaf) 70 (Six-* 11-6)	152	.....	2	320 9816
68	(Light-4 Leaf) 70 (Six-* 11-18)	152	.....	2	320 9816
69	(Light-4 Leaf) 70 (Six-* 11-18 and * 11-48)	152	.....	2	320 9816
70	(Light-4 Leaf) 70 (Six-* 11-40 and * 11-75)	152	.....	2	320 9816
71/	(Light-4 Leaf) 70 (Six-* 11-79)	152	.....	2	812 0114
67	***(Heavy-4 Leaf) 05-06-07-09 (Six-* 11-2) (290-* 11-2)***	152	.....	2	320 7839
68/69	***(Heavy-4 Leaf) 05-06-09 (Six-* 11-2)***	152	.....	2	320 7839
70	***(Heavy-4 Leaf) 01 (Six-* 11-43 and * 11-58)***	152	.....	2	448 8372
71	***(Heavy-4 Leaf) 05-06 (Six)***	152	.....	2	448 8380
68	***(Heavy-4 Leaf) 70 (Six-* 11-7)***	152	.....	2	320 9814
68	***(Heavy-4 Leaf) 70 (Six-* 11-19)***	152	.....	2	320 9814
69	***(Heavy-4 Leaf) 70 (Six-* 11-19)***	152	.....	2	320 9814
70	***(Heavy-4 Leaf) 70 (Six-* 11-44)***	152	.....	2	448 9351
71/	***(Heavy-4 Leaf) 70 (Six-* 11-81)***	152	.....	2	812 0111
67/69	(Light-5 Leaf) 08 (* 11-3)	152	.....	2	320 7496
70	(Light-5 Leaf) 01 (V8-* 11-55 and * 11-59)(V8-* 11-57 and * 11-59)	152	.....	2	448 8533
71/	(Light-5 Leaf) 05-06 (V8-* 11-55)	152	.....	2	448 8533
68	(Light-5 Leaf) 30 (* 11-13 and * 11-33)	152	.....	2	448 5557
68	(Light-5 Leaf) 30 (* 11-32 and * 11-34)	152	.....	2	448 5557
69	(Light-5 Leaf) 30 (V8-* 11-32)	152	.....	2	448 5557
70	(Light-5 Leaf) 30 (* 11-39)	152	.....	2	448 5557
68	(Light-5 Leaf) 70 (V8-* 11-8)	152	.....	2	320 9814
68	(Light-5 Leaf) 70 (V8-* 11-20 and * 11-27)	152	.....	2	320 9814
69	(Light-5 Leaf) 70 (V8-* 11-20)(Six-* 11-20 and * 11-49)	152	.....	2	320 9814
70	(Light-5 Leaf) 70 (Six-* 11-42 and * 11-76)	152	.....	2	320 9814
70	(Light-5 Leaf) 70 (V8-* 11-42)	152	.....	2	320 9814
71/	(Light-5 Leaf) 70 (V8-* 11-80)	152	.....	2	812 0115
67/69	***(Heavy-5 Leaf) 08 (Six-* 11-4) (290-* 11-4)***	152	.....	2	320 7373
71/	***(Heavy-5 Leaf) 05-06 (Six-* 11-57)***	152	.....	2	448 8533
71	***(Heavy-5 Leaf) 05-06 (V8-* 11-57)***	152	.....	2	448 8533
71/	***(Heavy-5 Leaf) 08***	152	.....	2	448 8380
68	***(Heavy-5 Leaf) 30 (* 11-12 and * 11-35)***	152	.....	2	320 9814
68	***(Heavy-5 Leaf) 30 (* 11-31 and * 11-36)***	152	.....	2	320 9814
68	***(Heavy-5 Leaf) 70 (V8-* 11-9 and * 11-28)***	152	.....	2	320 9814
69	***(Heavy-5 Leaf) 30 (* 11-31)***	152	.....	2	320 9814
70	***(Heavy-5 Leaf) 30 (* 11-47)***	152	.....	2	320 9814
70/71	***(Heavy-5 Leaf) 40 (* 11-67)***	152	.....	2	448 8380
68	***(Heavy-5 Leaf) 70 (V8-* 11-21 and * 11-29)***	152	.....	2	448 5557
69	***(Heavy-5 Leaf) 70 (V8-* 11-21)***	152	.....	2	448 5557
70	***(Heavy-5 Leaf) 70 (V8-* 11-46)***	152	.....	2	448 5557
71/	***(Heavy-5 Leaf) 70 (V8-* 11-82)***	152	.....	2	812 0113

70	(Light-6 Leaf) 01 (V8-304-* 11-38 and * 11-58)	152	.....	2	448 8378
67	***(Heavy-6 Leaf) 01 (343-* 11-30)***	152	.....	2	320 7496
68/69	***(Heavy-6 Leaf) 05-06-09 (290-* 11-30)***	152	.....	2	320 7496
69	***(Heavy-6 Leaf) 09 (SC/RAMBLER)***	152	.....	2	320 7496
70	***(Heavy-6 Leaf) 01 (V8-* 11-45 and * 11-58)***	152	.....	2	448 8380

11.100 SPRING ASSEMBLY, Rear Leaf (Incl. Bushings)

70	(Light-3 Leaf) 01 (Six-* 11-70)		.....	2	448 9157
71	(Light-3 Leaf) 05-06 (Six-232-WST-Except Export-* 11-70 and * 11-103)		.....	2	448 9157
71	(Light-3 Leaf) 05-06 (Six-232-WST-Except Export-* 11-70 and * 11-104)		.....	2	812 0492
72	(Light-3 Leaf) 05-06 (Six-232-WST-* 11-70)		.....	2	812 0492
71/	(Light-3 Leaf) 05-06 (Six-232-WAT-* 11-70)		.....	2	448 9157
71/	(Light-3 Leaf) 05-06 (Six-258-* 11-70)		.....	2	448 9157
71	***(Light-3 Leaf) 05-06 (Export-Six-232-WST-* 11-70)***		.....	2	448 9157
70	(Light-4 Leaf) 01 (Six-* 11-37 and * 11-58)	156	.....	2	448 7908
70	(Light-4 Leaf) 01 (Six-* 11-54 and * 11-59)	156	.....	2	448 8402
67	(Light-4 Leaf) 05-06-07-09 (* 11-1)	156	.....	2	320 7593
68/69	(Light-4 Leaf) 05-06-09 (Six-* 11-1) (290-* 11-1)	156	.....	2	320 7593
72	(4 Leaf) 06 (Rallye Package-* 11-56 And * 11-117)		.....	2	812 0493
71	(Light-4 Leaf) 08 (Six-232-WST-Except Export-* 11-77 and * 11-105)	156	.....	2	448 9382
71	(Light-4 Leaf) 08 (Six-232-WST-Except Export-* 11.77 and * 11-106)	156	.....	2	812 0494
72	(Light-4 Leaf) 08 (Six-232-WST-* 11-77)		.....	2	812 0494
71/	(Light-4 Leaf) 08 (Six-232-WAT-* 11-77)	156	.....	2	448 9382
71/	(Light-4 Leaf) 08 (Six-258-* 11-77)	156	.....	2	448 9382
71/	(Light-4 Leaf) 08 (V8-* 11-77)	156	.....	2	448 9382
71	***(Light-4 Leaf) 08 (Export-Six-232-WST-* 11-77)***	156	.....	2	448 9382
70	(Light-4 Leaf) 40 (* 11-66)	156	.....	2	448 8444
71	(Light-4 Leaf) 40 (Six-232-WST-Except Export-* 11-58 and * 11-66)	155	.....	2	448 8444
71	(Light-4 Leaf) 40 (Six-232-WST-Except Export-* 11-59, * 11-93 and * 11-111)	155	.....	2	812 0290
71	(Light-4 Leaf) 40 (Six-232-WST-Except Export-* 11-59, * 11-93 and * 11-112)	155	.....	2	812 0490
72	(Light-4 Leaf) 40 (Six-232-WST-* 11-93)		.....	2	812 0490
71	(Light-4 Leaf) 40 (Six-232-WAT-* 11-58 and * 11-66)	155	.....	2	448 8444
71	(Light-4 Leaf) 40 (Six-232-WAT-* 11-59 and * 11-93)	155	.....	2	812 0290
72	(Light-4 Leaf) 40 (Six-232-WAT-* 11-66)		.....	2	448 8444
71	(Light-4 Leaf) 40 (Six-258-* 11-58 and * 11-66)	155	.....	2	448 8444
71	(Light-4 Leaf) 40 (Six-258-* 11-59 and * 11-93)	155	.....	2	812 0290
72	(Light-4 Leaf) 40 (Six-258-* 11-66)		.....	2	448 8444
72	(Light-4 Leaf) 40 (V8-304-* 11-66)		.....	2	448 8444
71	***(Light-4 Leaf) 40 (Export-Six-232-WST-* 11-58 and * 11-66)***	155	.....	2	448 8444
71	***(Light-4 Leaf) 40 (Export-Six-232-WST-* 11-59 and * 11-93)***	155	.....	2	812 0290
68	(Light-4 Leaf) 70 (Six-* 11-6 and * 11-22)	156	.....	2	320 8866
68	(Light-4 Leaf) 70 (Six-* 11-18 and * 11-23)	156	.....	2	448 5975
69	(Light-4 Leaf) 70 (Six-* 11-18 and * 11-48)	156	.....	2	448 5975
70	(Light-4 Leaf) 70 (Six-* 11-40 and * 11-75)	156	.....	2	448 7990
71/	(Light-4 Leaf) 70 (Six-* 11-79) ***(Use 448 8642)***		.....	2	448 9384
67	***(Heavy-4 Leaf) 05-06-07-09 (Six-* 11-2)(290-* 11-2)***	156	.....	2	320 7596
68/69	***(Heavy-4 Leaf) 05-06-09 (Six-* 11-2)***	156	.....	2	320 7596
70	***(Heavy-4 Leaf) 01 (Six-* 11-43 and * 11-58)***	156	.....	2	448 8071
70	***(Heavy-4 Leaf) 01 (Six-* 11-56 and * 11-59)***	156	.....	2	448 8404
71	***(Heavy-4 Leaf) 05-06 (Six-232-WST-Except Export-* 11-56 and * 11-107)***	156	.....	2	448 8404
71	***(Heavy-4 Leaf) 05-06 (Six-232-WST-Except Export-* 11-56 and * 11-108)***	156	.....	2	812 0493
72	***(Heavy-4 Leaf) 05-06 (Six-232-WST-* 11-56)***		.....	2	812 0493
71/	***(Heavy-4 Leaf) 05-06 (Six-232-WAT-* 11-56)***	156	.....	2	448 8404
71/	***(Heavy-4 Leaf) 05-06 (Six-258-* 11-56)***	156	.....	2	448 8404
71	***(Heavy-4 Leaf) 05-06 (Export-Six-232-WST-* 11-56)***	156	.....	2	448 8404
68	***(Heavy-4 Leaf) 70 (Six-* 11-7 and * 11-24)***	156	.....	2	320 8868
68	***(Heavy-4 Leaf) 70 (Six-* 11-19 and * 11-25)***	156	.....	2	448 5980
69	***(Heavy-4 Leaf) 70 (Six-* 11-19)***	156	.....	2	448 5980
70	***(Heavy-4 Leaf) 70 (Six-* 11-44)***	156	.....	2	448 8022
71/	***(Heavy-4 Leaf) 70 (Six-* 11-81)***	156	.....	2	448 9386

ROAD SPRINGS - SHOCKS - REAR SUSPENSION

70	(Light-5 Leaf) 01 (V8-* 11-55 and * 11-59)	157	.....	2	448 8403
71/	(Light-5 Leaf) 05-06 (V8-* 11-55)	157	.....	2	448 8403
67/69	(Light-5 Leaf) 08 (Six-* 11-3)(290-* 11-3)	157	.....	2	320 7594
68	(Light-5 Leaf) 30 (* 11-13 and * 11-33)	157	.....	2	448 5553
68	(Light-5 Leaf) 30 (* 11-32 and * 11-34)	157	.....	2	448 5751
69	(Light-5 Leaf) 30 (* 11-32)	157	.....	2	448 5751
70	(Light-5 Leaf) 30 (* 11-39 and * 11-50)	157	.....	2	448 7992
70	(Light-5 Leaf) 30 (* 11-52 and * 11-53)	157	.....	2	448 8416
68	(Light-5 Leaf) 70 (V8-* 11-8 and * 11-26)	157	.....	2	320 8867
68	(Light-5 Leaf) 70 (V8-* 11-20 and * 11-27)	157	.....	2	448 5981
69	(Light-5 Leaf) 70 (V8-* 11-20)(Six-* 11-20 and * 11-49)	157	.....	2	448 5981
70	(Light-5 Leaf) 70 (Six-* 11-42 and * 11-76)	157	.....	2	448 7991
70	(Light-5 Leaf) 70 (V8-* 11-42)	157	.....	2	448 7991
71/	(Light-5 Leaf) 70 (V8-* 11-80) ***(Use 448 8643)***		.....	2	448 9385
70	***(Heavy-5 Leaf) 01 (V8-* 11-57 and * 11-59)***	157	.....	2	448 8405
71	***(Heavy-5 Leaf) 05-06 (Six-* 11-57)***	157	.....	2	448 8405
71/	***(Heavy-5 Leaf) 05-06 (V8-* 11-57)***	157	.....	2	448 8405
67/69	***(Heavy-5 Leaf) 08 (Six-* 11-4)(290-* 11-4)***	157	.....	2	320 7595
71	***(Heavy-5 Leaf) 08 (Six-232-WST-Except Export-* 11-78 and * 11-109)***	157	.....	2	448 9383
71	***(Heavy-5 Leaf) 08 (Six-232-WST-Except Export-* 11-78 and * 11-110)***	157	.....	2	812 0495
72	***(Heavy-5 Leaf) 08 (Six-232-WST-* 11-78)***		.....	2	812 0495
71/	***(Heavy-5 Leaf) 08 (Six-232-WAT-* 11-78)***	157	.....	2	448 9383
71/	***(Heavy-5 Leaf) 08 (Six-258-* 11-78)***	157	.....	2	448 9383
71/	***(Heavy-5 Leaf) 08 (V8-* 11-78)***	157	.....	2	448 9383
71	***(Heavy-5 Leaf) 08 (Export-Six-232-WST-* 11-78)***	157	.....	2	448 9383
68	***(Heavy-5 Leaf) 30 (* 11-12 and * 11-35)***	157	.....	2	448 5509
68	***(Heavy-5 Leaf) 30 (* 11-31 and * 11-36)***	157	.....	2	448 5752
69	***(Heavy-5 Leaf) 30-70 (* 11-31)***	157	.....	2	448 5752
70	***(Heavy-5 Leaf) 30 (* 11-47)***	157	.....	2	448 8019
70	***(Heavy-5 Leaf) 40 (* 11-67)***	156	.....	2	448 8494
71	***(Heavy-5 Leaf) 40 (Six-232-WST-Except Export-* 11-58 and * 11-67)***	157	.....	2	448 8494
71	***(Heavy-5 Leaf) 40 (Six-232-WST-Except Export-* 11-59, * 11-94 and * 11-113)***	157	.....	2	812 0291
71	***(Heavy-5 Leaf) 40 (Six-232-WST-Except Export-* 11-59, * 11-94 and * 11-114)***	157	.....	2	812 0491
72	***(Heavy-5 Leaf) 40 (Six-232-WST-* 11-94)***	157	.....	2	812 0491
71	***(Heavy-5 Leaf) 40 (Six-232-WAT-* 11-58 and * 11-67)***	157	.....	2	448 8494
71	***(Heavy-5 Leaf) 40 (Six-232-WAT-* 11-59 and * 11-94)***	157	.....	2	812 0291
71	***(Heavy-5 Leaf) 40 (Six-258-* 11-58 and * 11-67)***	157	.....	2	448 8494
71	***(Heavy-5 Leaf) 40 (Six-258-* 11-59 and * 11-94)***	157	.....	2	812 0291
72	***(Heavy-5 Leaf) 40 (Six-232-WAT-* 11-67)***		.....	2	448 8494
72	***(Heavy-5 Leaf) 40 (Six-258-* 11-67)***		.....	2	448 8494
72	***(Heavy-5 Leaf) 40 (V8-* 11-67)***		.....	2	448 8494
71	***(Heavy-5 Leaf) 40 (Export-Six-232-WST-* 11-58 and * 11-67)***	157	.....	2	448 8494
71	***(Heavy-5 Leaf) 40 (Export-Six-232-WST-* 11-59 and * 11-94)***	157	.....	2	812 0291
68	***(Heavy-5 Leaf) 70 (V8-* 11-9 and * 11-28)***	157	.....	2	320 8988
68	***(Heavy-5 Leaf) 70 (V8-* 11-21 and * 11-29)***	157	.....	2	448 5982
69	***(Heavy-5 Leaf) 70 (V8-* 11-21)***	157	.....	2	448 5982
70	***(Heavy-5 Leaf) 70 (V8-* 11-46 and * 11-51)***	157	.....	2	448 8018
70	***(Heavy-5 Leaf) 70 (* 11-52 and * 11-53)***	157	.....	2	448 8416
71/	***(Heavy-5 Leaf) 70 (V8-* 11-82)***	157	.....	2	448 8644
70	(Light-6 Leaf) 01 (V8-* 11-38 and * 11-58)	148	.....	2	448 7909
67	***(Heavy-6 Leaf) 01 (343-* 11-30)***	148	.....	2	320 8481
68	***(Heavy-6 Leaf) 05-06-09 (290-* 11-30)***	148	.....	2	320 8481
69	***(Heavy-6 Leaf) 05-09 (290-* 11-30)***	148	.....	2	320 8481
69	***(Heavy-6 Leaf) 09 (SC/RAMBLER)***	148	.....	2	320 8481
70	***(Heavy-6 Leaf) 01 (V8-* 11-45 and * 11-58)*** ***(Use 448 8405)***		.....	2	448 7910

ROAD SPRINGS - SHOCKS - REAR SUSPENSION

11.102 SPRING, REAR COIL (* 11-5)

67	(Light) 15-16-17-19	.....	2	318 8643
68/69	(Light) 15-17-19	.....	2	319 1411
70/71	19 (MACHINE)	.....	2	319 5134
70	(Light) 15-19 (E/MACHINE-* 11-71)	.....	2	319 8126
70	(Light) 15-19 (Six-* 11-72)	.....	2	319 1411
70	(Light) 15-19 (V8-E/MACHINE-* 11-72)	.....	2	319 1412
71	(Light) 15 (* 11-97)	.....	2	319 8126
71	(Light) 15 (* 11-98)	.....	2	319 8127
72	(Light) 15 (Except Police)	.....	2	319 8126
71	(Light) 19	.....	2	321 2936
72	(Light) 19 (Except Police)	.....	2	321 2936
67/68	(Light) 18-88	.....	2	318 8645
69/71	(Light) 18-88	.....	2	319 5134
72	(Light) 18-88 (Except Police)	.....	2	319 5134
67	(Light) 59-85-86-89	.....	2	318 8644
68/69	(Light) 85-89	.....	2	319 1412
70/71	(Light) 85-89	.....	2	319 8127
72	(Light) 85-89 (Except Police)	.....	2	319 8127
67/69	***(Heavy) 15-16-17-19-59-85-86-87-89***	.....	2	318 9318
70/71	***(Heavy) 15-85-89***	.....	2	319 8174
72	***(Heavy) 15-85-89 (Except Police)***	.....	2	319 8174
72	***(Heavy) 15-19-85-89 (Fleet)(Police)(Export)***	.....	2	321 8131
67/68	***(Heavy) 18-88***	.....	2	318 8731
69/71	***(Heavy) 18-88***	.....	2	319 5135
72	***(Heavy) 18-88 (Except Police)***	.....	2	319 5135
72	***(Heavy) 18-88 (Fleet)(Police)(Export)***	.....	2	319 5135
70	***(Heavy) 19 (E/MACHINE)***	.....	2	319 8174
72	***(Heavy) 19 (Except Police)***	.....	2	321 2938
72	***(Heavy) 19***	.....	2	321 2938

11.103 BOOM DESENSITIZER KIT, Body Vibration

72	10-80...(Incl. Weights, Clamps, Bolts, Washers And Nuts)	.....	1	812 2680

11.104 LEAF, Rear Leaf Spring Main

70	(Light-3 Leaf) 01 (Six-* 11-70)	.....	2	448 9388
71	(Light-3 Leaf) 05-06 (Six-232-WST-Except Export-* 11-70 and * 11-103)	.....	2	448 9388
71	(Light-3 Leaf) 05-06 (Six-232-WST-Except Export-* 11-70 and * 11-104)	.....	2	812 0498
72	(Light-3 Leaf) 05-06 (Six-232-WST-* 11-70)	.....	2	812 0498
71	(Light-3 Leaf) 05-06 (Six-232-WAT-* 11-70)	.....	2	448 9388
71	(Light-3 Leaf) 05-06 (Six-258-* 11-70)	.....	2	448 9388
71	***(Light-3 Leaf) 05-06 (Export-Six-232-WST-* 11-70)***	.....	2	448 9388
70	(Light-4 Leaf) 01 (Six-* 11-37 and * 11-58)	.....	2	448 8362
70	(Light-4 Leaf) 01 (Six-* 11-54 and * 11-59)	.....	2	448 8536
67	(Light-4 Leaf) 05-06-07-09 (* 11-1)	.....	2	320 4720
68/69	(Light-4 Leaf) 05-06-09 (Six-* 11-1) (290-* 11-1)	.....	2	320 4720
72	(4 Leaf) 06 (Rallye Package-* 11-56 And * 11-117)	.....	2	812 0499
71	(Light-4 Leaf) 08 (Six-232-WST-Except Export-* 11-77 and * 11-105)	.....	2	448 9389
71	(Light-4 Leaf) 08 (Six-232-WST-Except Export-* 11-77 and * 11-106)	.....	2	812 0500
72	(Light-4 Leaf) 08 (Six-232-WST-* 11-77)	.....	2	812 0500
71/	(Light-4 Leaf) 08 (Six-232-WAT-* 11-77)	.....	2	448 9389
71/	(Light-4 Leaf) 08 (Six-258-* 11-77)	.....	2	448 9389
71/	(Light-4 Leaf) 08 (V8-* 11-77)	.....	2	448 9389
71	***(Light-4 Leaf) 08 (Export-Six-232-WST-* 11-77)***	.....	2	448 9389
70	(Light-4 Leaf) 40 (* 11-66)	.....	2	448 8538
71	(Light-4 Leaf) 40 (Six-232-WST-Except Export-* 11-58 and * 11-66)	.....	2	448 8538
71	(Light-4 Leaf) 40 (Six-232-WST-Except Export-* 11-59, * 11-93 and * 11-111)	.....	2	812 0327
71	(Light-4 Leaf) 40 (Six-232-WST-Except Export-* 11-59, * 11-93 and * 11-112)	.....	2	812 0496
72	(Light-4 Leaf) 40 (Six-232-WST-* 11-93)	.....	2	812 0496
71	(Light-4 Leaf) 40 (Six-232-WAT-* 11-58 and * 11-66)	.....	2	448 8538
71	(Light-4 Leaf) 40 (Six-232-WAT-* 11-59 and * 11-93)	.....	2	812 0327
72	(Light-4 Leaf) 40 (Six-232-WAT-* 11-66)	.....	2	448 8538
71	(Light-4 Leaf) 40 (Six-258-* 11-58 and * 11-66)	.....	2	448 8538
71	(Light-4 Leaf) 40 (Six-258-* 11-59 and * 11-93)	.....	2	812 0327
72	(Light-4 Leaf) 40 (Six-258-* 11-66)	.....	2	448 8538
71	***(Light-4 Leaf) 40 (Export-Six-232-WST-* 11-58 and * 11-66)***	.....	2	448 8538
71	***(Light-4 Leaf) 40 (Export-Six-232-WST-* 11-59 and * 11-93)***	.....	2	812 0327
72	(Light-4 Leaf) 40 (V8-* 11-66)	.....	2	448 8538

ROAD SPRINGS - SHOCKS - REAR SUSPENSION

68	(Light-4 Leaf) 70 (Six-* 11-6 and * 11-22)	.....	2	320	9828
68	(Light-4 Leaf) 70 (Six-* 11-18 and * 11-23)	.....	2	448	5984
69	(Light-4 Leaf) 70 (Six-* 11-18 and * 11-48)	.....	2	448	5984
70	(Light-4 Leaf) 70 (Six-* 11-40 and * 11-75)	.....	2	448	8249
71/	(Light-4 Leaf) 70 (Six-* 11-79)	.....	2	448	9391
67	***(Heavy-4 Leaf) 05-06-07-09 (Six-* 11-2) (290-* 11-2)***	.....	2	320	7842
68/69	***(Heavy-4 Leaf) 05-06-09 (Six-* 11-2)***	.....	2	320	7842
70	***(Heavy-4 Leaf) 01 (Six-* 11-43 and * 11-58)..... (Ord. 319 9993, 448 8536)***	.....	2	448	8364
70	***(Heavy-4 Leaf) 01 (V8-* 11-56 and * 11-59)***	.....	2	448	8536
71	***(Heavy-4 Leaf) 05-06 (Six-232-WST-Except Export-* 11-56 and * 11-107)***	.....	2	448	8536
71	***(Heavy-4 Leaf) 05-06 (Six-232-WST-Except Export-* 11-56 and * 11-108)***	.....	2	812	0499
71/	***(Heavy-4 Leaf) 05-06 (Six-232-WAT-* 11-56)***	.....	2	448	8536
71/	***(Heavy-4 Leaf) 05-06 (Six-258-* 11-56)***	.....	2	448	8536
71	***(Heavy-4 Leaf) 05-06 (Export-Six-232-WST-* 11-56)***	.....	2	448	8536
72	***(Heavy-4 Leaf) 05-06 (Six-232-WST-* 11-56)***	.....	2	812	0499
68	***(Heavy-4 Leaf) 70 (Six-* 11-7 and * 11-24)***	.....	2	320	9825
68	***(Heavy-4 Leaf) 70 (Six-* 11-19 and * 11-25)***	.....	2	448	5985
69	***(Heavy-4 Leaf) 70 (Six-* 11-19)***	.....	2	448	5985
70	***(Heavy-4 Leaf) 70 (Six-* 11-44)***	.....	2	448	8251
71/	***(Heavy-4 Leaf) 70 (Six-* 11-81)***	.....	2	448	9393
70	(5 Leaf) 01 (V8-360-* 11-57)	.....	2	448	8537
70	(Light-5 Leaf) 01 (V8-* 11-55 and * 11-59)	.....	2	448	8535
71/	(Light-5 Leaf) 05-06 (V8-* 11-55)	.....	2	448	8535
67/69	(Light-5 Leaf) 08 (* 11-3)	.....	2	320	7504
68	(Light-5 Leaf) 30 (* 11-13 and * 11-33)	.....	2	448	5558
68	(Light-5 Leaf) 30 (* 11-32 and * 11-34)	.....	2	448	5965
69	(Light-5 Leaf) 30 (V8-* 11-32)	.....	2	448	5965
70	(Light-5 Leaf) 30 (* 11-39 and * 11-50)	.....	2	448	8253
70	(Light-5 Leaf) 30 (* 11-52 and * 11-53)	.....	2	448	8424
68	(Light-5 Leaf) 70 (V8-* 11-8 and * 11-26)	.....	2	320	9827
68	(Light-5 Leaf) 70 (V8-* 11-20 and * 11-27)	.....	2	448	5986
69	(Light-5 Leaf) 70 (V8-* 11-20)(Six-* 11-20 and * 11-49)	.....	2	448	5986
70	(Light-5 Leaf) 70 (Six-* 11-42 and * 11-76)	.....	2	448	8250
70	(Light-5 Leaf) 70 (V8-* 11-42)	.....	2	448	8250
71/	(Light-5 Leaf) 70 (V8-* 11-80)	.....	2	448	9392
70	***(Heavy-5 Leaf) 01 (V8-* 11-57 and * 11-59)***	.....	2	448	8537
71	***(Heavy-5 Leaf) 05-06 (Six-* 11-57)***	.....	2	448	8537
71/	***(Heavy-5 Leaf) 05-06 (V8-* 11-57)***	.....	2	448	8537
67/69	***(Heavy-5 Leaf) 08 (Six-* 11-4) (290-* 11-4)***	.....	2	320	7377
71	***(Heavy-5 Leaf) 08 (Six-232-WST-Except Export-* 11-78 and * 11-109)***	.....	2	448	9390
71	***(Heavy-5 Leaf) 08 (Six-232-WST-Except Export-* 11-78 and * 11-110)***	.....	2	812	0501
72	***(Heavy-5 Leaf) 08 (Six-232-WST-* 11-78)***	.....	2	812	0501
71/	***(Heavy-5 Leaf) 08 (Six-232-WAT-* 11-78)***	.....	2	448	9390
71/	***(Heavy-5 Leaf) 08 (Six-258-* 11-78)***	.....	2	448	9390
71/	***(Heavy-5 Leaf) 08 (V8-* 11-78)***	.....	2	448	9390
71	***(Heavy-5 Leaf) 08 (Export-Six-232-WST-* 11-78)***	.....	2	448	9390
68	***(Heavy-5 Leaf) 30 (* 11-12 and * 11-35)***	.....	2	448	5508
68	***(Heavy-5 Leaf) 30 (* 11-31 and * 11-36)***	.....	2	448	5968
69	***(Heavy-5 Leaf) 30 (* 11-31)***	.....	2	448	5968
70	***(Heavy-5 Leaf) 30 (* 11-47)***	.....	2	448	8254
70	***(Heavy-5 Leaf) 40 (* 11-67)***	.....	2	448	9342
71	***(Heavy-5 Leaf) 40 (Six-232-WST-Except Export-*11-58 and * 11-67)***	.....	2	448	9342
71	***(Heavy-5 Leaf) 40 (Six-232-WST-Except Export-* 11-59, * 11-94 and * 11-113)***	.....	2	812	0328
71	***(Heavy-5 Leaf) 40 (Six-232-WST-Except Export-* 11-59, * 11-94 and * 11-114)***	.....	2	812	0497
72	***(Heavy-5 Leaf) 40 (Six-232-WST-* 11-94)***	.....	2	812	0497
71	***(Heavy-5 Leaf) 40 (Six-232-WAT-* 11-58 and * 11-67)***	.....	2	448	9342
71	***(Heavy-5 Leaf) 40 (Six-232-WAT-* 11-59 and * 11-94)***	.....	2	812	0328
71	***(Heavy-5 Leaf) 40 (Six-258-* 11-58 and * 11-67)***	.....	2	448	9342
71	***(Heavy-5 Leaf) 40 (Six-258-* 11-58 and * 11-94)***	.....	2	812	0328
72	***(Heavy-5 Leaf) 40 (Six-258-* 11-67)***	.....	2	448	9342

71	*(Heavy-5 Leaf) 40 (Export-Six-232-WST-* 11-58 and * 11-67)*	.....	2	448	9343
71	*(Heavy-5 Leaf) 40 (Export-Six-232-WST-* 11-59 and * 11-94)*	.....	2	812	0328
72	*(Heavy-5 Leaf) 40 (V8-* 11-67)*	.....	2	448	9342
68	*(Heavy-5 Leaf) 70 (V8-* 11-9 and * 11-28)*	.....	2	320	9826
68	*(Heavy-5 Leaf) 70 (V8-* 11-21 and * 11-29)*	.....	2	448	5987
69	*(Heavy-5 Leaf) 70 (V8-* 11-21)*	.....	2	448	5985
70	*(Heavy-5 Leaf) 70 (V8-* 11-46 and * 11-51)*	.....	2	448	8252
70	*(Heavy-5 Leaf) 70 (V8-* 11-52 and * 11-53)*	.....	2	448	8424
71/	*(Heavy-5 Leaf) 70 (V8-* 11-82)*	.....	2	448	9394
70	(Light-6 Leaf) 01 (V8-* 11-38 and * 11-58)	.....	2	448	8363
67	*(Heavy-6 Leaf) 01 (343-* 11-30)*	.....	2	320	8746
68/69	*(Heavy-6 Leaf) 05-06-09 (290-* 11-30)*	.....	2	320	8746
69	*(Heavy-6 Leaf) 09 (SC/RAMBLER)*	.....	2	320	8746
70	*(Heavy-6 Leaf) 01 (V8-* 11-45 and * 11-58)*	.....	2	448	8365

11.110 BUMPER, Rear Leaf Spring

67/69	01 (V8)	.....	2	318	4531

11.112 BRACKET, Rear Leaf Spring Bumper

67/69	(Left) 01 (V8)	.....	1	318	4392
67/69	(Right) 01 (V8)	.....	1	318	4393

11.116 BOLT KIT, Rear Leaf Spring Center (Incl. Nut)

67/	01 (1-1/2" Long) 153	.....	2	311	8517
70	01 (2" Long) 153	.....	2	448	5885
70/	40 (1-1/2" Long) 153	.....	2	311	8517
68/	30-70 (2" Long) 153	.....	2	448	5885

11.126–1 CUSHION, Rear Coil Spring Upper

67/	10-50-80	.....	2	318	6661

11.126–2 CUSHION, Rear Coil Spring Lower

67/	10-50-80	.....	2	318	4240

11.132–1 U-BOLT, Rear Leaf Spring To Axle

67/69	01-70 *(Ord. 319 8104, 400 4025)*	.....	4	313	9294
70	01 (* 11-83)	.....	4	319	8104
70	01 (* 11-84) U.S.C. 322.7632	.....	4	321	2417
71/	01-40-70	.....	4	321	2417
70	40-70	.....	4	319	8104
68/69	30 *(Ord. 319 8104, 400 4025)*	.....	2	313	9294
70	30	.....	2	319	8104

11.132–2 ATTACHING PARTS, U-Bolt To Plate

WASHER, Lock	67/69	01-70	17.820	8	G103323	NA
WASHER, Lock	68/69	30	17.820	4	G103323	NA
NUT, Hexagon	67/69	01-70	17.406	8	400 1245	
NUT, Hexagon	68/69	30	17.406	4	400 1245	
NUT, Lock	70/	01-40-70	.....	8	400 4025	
NUT, Lock	70	30	.....	4	400 4025	

Printed in U.S.A.

ROAD SPRINGS - SHOCKS - REAR SUSPENSION

11.136 PLATE ASSEMBLY, Rear Leaf Spring To Axle U-Bolt Tie (Shock Absorber Lower Mounting)(Incl. Washer)

71	01-40 (* 11-86)		.....	2	321	1867
72	01-40		.....	2	321	1867
67/69	(Left) 01 (Six)	161	.....	1	316	9746
67	(Left) 05-06-07-09 (290-* 11-10)	161	.....	1	316	9746
67	(Left) 05-06-07-09 (290-* 11-11)	161	.....	1	318	9222
67/69	(Left) 08 (290)	161	.....	1	316	9746
68/69	(Left) 05-06-07-09 (290)	161	.....	1	318	9222
69	(Left) 09 (SC/RAMBLER)	161	.....	1	318	9222
67	(Left) 01 (343)	161	.....	1	318	9222
70	(Left) 01-10	161	.....	1	319	6423
71	(Left) 01-40 (* 11-85)	161	.....	1	319	6423
68/69	(Left) 30-70 (V8)	***(Ord. 321 0878, 316 7602, G103028)***	.....	1	318	9332
70	(Left) 30-70 (V8-* 11-62)	***(Ord. 321 0878, 316 7602, G103028)***	.....	1	318	9332
70/71	(Left) 30-70 (V8-* 11-63)	161	.....	1	321	0878
68/69	(Left) 70 (Six)	161	.....	1	318	9083
70	(Left) 70 (Six-* 11-62)	161	.....	1	318	9083
70	(Left) 70 (Six-* 11-63)	161	.....	1	321	0880
71/	(Left) 70 (Six)		.....	1	321	0875
72	(Left) 70 (V8)		.....	1	321	0878
67/69	(Right) 01 (Six)	161	.....	1	316	9747
67	(Right) 05-06-07-09 (290-* 11-10)	161	.....	1	316	9747
67	(Right) 05-06-07-09 (290-* 11-11)	161	.....	1	318	9223
67/69	(Right) 08 (290)	161	.....	1	316	9747
68	(Right) 05-06-07-09 (290-* 11-14)	161	.....	1	318	9223
68	(Right) 05-06-07-09 (290-* 11-15)	161	.....	1	316	9747
69	(Right) 05-09 (290)	161	.....	1	316	9747
69	(Right) 09 (SC/RAMBLER)	161	.....	1	316	9747
67	(Right) 01 (343)	161	.....	1	318	9223
70	(Right) 01-40	161	.....	1	319	6424
71	(Right) 01-40 (* 11-85)	161	.....	1	319	6424
68/69	(Right) 30	***(Ord. 321 0897, 316 7602, G103028)***	.....	1	318	9333
70	(Right) 30 (* 11-62)	***(Ord. 321 0897, 316 7602, G103028)***	.....	1	318	9333
70	(Right) 30 (* 11-63)	161	.....	1	321	0879
68/70	(Right) 70 (Six)	161	.....	1	318	9084
68	(Right) 70 (V8-* 11-14)	***(Ord. 321 0897, 316 7602, G103028)***	.....	1	318	9333
68	(Right) 70 (V8-* 11-15)	161	.....	1	318	9084
69	(Right) 70 (V8)	161	.....	1	318	9084
70	(Right) 70 (V8-* 11-62)	161	.....	1	318	9084
70	(Right) 70 (V8-* 11-63)		.....	1	321	0881
71/	(Right) 70	161	.....	1	319	8033

11.170-1 SHACKLE KIT, Rear Leaf Spring (Incl. Shackle, Bolt, Plate, Bushings, Washers and Nuts)

67/69	01	149	.....	2	320	5181
70/	01-30-40-70		.....	2	448	7545
68/69	30-70	149	.....	2	320	8869

11.170-2 ATTACHING PARTS, Plate To Shackle

WASHER, Lock	67/69	(3/8"-I. D.)	17.820	2	G103321	NA
WASHER, Lock	67/69	(7/16" I. D.)	17.820	2	G131100	
NUT, Hexagon	67/69	(3/8-24)	17.406	2	G103026	NA
NUT, Hexagon	67/69	(7/16-20)	17.406	2	G120370	
NUT, Hexagon	70	01-30-40-70	17.406	4	448	7549
NUT, Hexagon	71	01-40-70	10.260	4	400	4075
NUT, Hexagon	72	01-40-70	17.406	4	448	7549

ROAD SPRINGS - SHOCKS - REAR SUSPENSION

11.170–2a BUSHING, Rear Leaf Spring Shackle

70/	01-30-40-70	.....	8	319 6419	

11.170–3 BUSHING, Rear Leaf Spring Shackle Upper

67/69	01	.....	4	316 9741	
68/69	30-70	.....	4	318 9092	

11.170–4 BUSHING, Rear Leaf Spring Shackle Lower

67/69	01	.....	2	317 1346	
68/69	30-70	.....	2	318 9093	

11.171–1 BRACKET, Rear Spring Shackle Mounting

70/	01-40	.....	2	319 5314	

11.171–2 ATTACHING PARTS, Mounting Bracket To Sill

BOLT, Hexagon	70	01-40	17.038	2	G180120	NA
WASHER, Plain	70	01-40	17.814	2	G120394	NA
WASHER, Lock	70	01-40	17.820	2	G120382	
NUT, Hexagon	70	01-40	17.406	2	G429607	NA
NUT, Hexagon	70/	01-40	10.260	4	400 3909	

11.175–1 LINK, Rear Axle Torque

67/69	01 (V8)	.....	2	319 3066	
69	09 (SC/RAMBLER)	.....	2	319 3066	
68/70	30	.....	2	319 3066	
68/69	70	.....	2	319 3066	
72	40 (V8)	.....	2	321 3979	

11.175–2 ATTACHING PARTS, Link To Rear Axle

BOLT, Hexagon	67/69	01 (V8)	17.038	2	G271778	
BOLT, Hexagon	68/70	30	17.038	2	G271778	
BOLT, Hexagon	69	09 (SC/RAMBLER)	17.038	2	G271778	
BOLT, Hexagon	68/70	70	17.038	2	G271778	
BOLT, Hexagon	72	40 (V8)	.....	2	812 1255	
SPACER (Inner)	67/69	01 (V8)	.....	2	319 4029	
SPACER (Inner)	69	09 (SC/RAMBLER)	.....	2	319 4029	
SPACER (Inner)	68/70	30	.....	2	319 4029	
SPACER (Inner)	68/70	70	.....	2	319 4029	
SPACER (Inner)	72	40 (V8)	.....	2	319 4029	
SPACER (Outer)	67/69	01 (V8)	.....	2	319 4028	
SPACER (Outer)	69	09 (SC/RAMBLER)	.....	2	319 4028	
SPACER (Outer)	68/70	30	.....	2	319 4028	
SPACER (Outer)	68/70	70	.....	2	319 4028	
SPACER (Outer)	72	40 (V8)	.....	2	319 4028	
WASHER, Bite	67/69	01 (V8)	.....	4	319 4030	
WASHER, Bite	68/70	30	.....	4	319 4030	
WASHER, Bite	69	09 (SC/RAMBLER)	.....	4	319 4030	
WASHER, Bite	68/70	70	.....	4	319 4030	
WASHER, Bite	72	40 (V8)	.....	4	319 4030	
NUT, Lock	67/69	01 (V8)	17.416	2	G272713	
NUT, Lock	69	09 (SC/RAMBLER)	17.416	2	G272713	
NUT, Lock	68/70	30	17.416	2	G272713	
NUT, Lock	68/70	70	17.416	2	G272713	
NUT, Hexagon	72	40 (V8)	17.406	2	G220086	NA

Printed in U.S.A.

ROAD SPRINGS - SHOCKS - REAR SUSPENSION

11.175–3 ATTACHING PARTS, Link To Side Sill

BOLT, Hexagon	67/69	01 (V8)	.....	2	400 1895	
BOLT, Hexagon	69	09 (SC/RAMBLER)	.....	2	400 1895	
BOLT, Hexagon	68/70	30	.....	2	400 1895	
BOLT, Hexagon	68/70	70	.....	2	400 1895	
BOLT, Hexagon	72	40 (V8)	17.038	2	G271940	
WASHER, Lock	67/69	01 (V8)	17.820	2	G131046	NA
WASHER, Lock	69	09 (SC/RAMBLER)	17.820	2	G131046	NA
WASHER, Lock	68/70	30	17.820	2	G131046	NA
WASHER, Lock	68/70	70	17.820	2	G131046	NA
SPACER	69	09 (SC/RAMBLER)	.....	2	319 3620	
NUT, Lock	72	40 (V8)	17.406	2	G220086	NA

11.178–1 BRACKET, Rear Axle Torque Link To Side Sill

67/69	(Left) 01 (V8)...(Incl. Outer Plate)	19.174	1	319 3617	
69	(Left) 09 (SC/RAMBLER)...(Incl. Outer Plate)	19.174	1	319 3617	
68/70	(Left) 30	.....	1	319 3346	
68/70	(Left) 70	.....	1	319 3346	
67/69	(Right) 01 (V8)...(Incl. Outer Plate)	19.174	1	319 3618	
69	(Right) 09 (SC/RAMBLER)...(Incl. Outer Plate)	19.174	1	319 3618	
68/70	(Right) 30	.....	1	319 3347	
68/70	(Right) 70	.....	1	319 3347	

11.178–2 ATTACHING PARTS, Bracket To Side Sill

BOLT, Hexagon	67/69	01 (V8)	17.038	6	G180122	NA
BOLT, Hexagon	69	09 (SC/RAMBLER)	17.038	6	G180122	NA
BOLT, Hexagon	68/70	30	17.038	6	G180122	NA
BOLT, Hexagon	68/70	70	17.038	6	G180122	NA
WASHER, Lock	67/69	01 (V8)	10.260	6	400 3803	
WASHER, Lock	69	09 (SC/RAMBLER)	10.260	6	400 3803	
WASHER, Lock	68	30	17.820	6	G120382	
WASHER, Lock	69/70	30	10.260	6	400 3803	
WASHER, Lock	68/70	70	10.260	6	400 3803	

11.179 PLATE, Torque Link To Side Sill (Inner)

69	09 (SC/RAMBLER)	.....	2	319 8051	

11.180–1 BRACKET, Torque Link To Rear Axle

67/69	01 (V8)	.....	2	319 4032	
69	09 (SC/RAMBLER)	.....	2	319 4032	
68/70	30	.....	2	319 4032	
68/70	70	.....	2	319 4032	
72	40 (V8)	.....	2	319 4032	

11.180–2 ATTACHING PARTS, Bracket To Rear Axle

BOLT, Hexagon	67/69	01 (V8) ***(Ord. 400 4019, 400 4025)***	.....	4	400 1889	
BOLT, Hexagon	69	09 (SC/RAMBLER) ***(Ord. 400 4019, 400 4025)***	.....	4	400 1889	
BOLT, Hexagon	68/69	30 ***(Ord. 400 4019, 400 4025)***	.....	4	400 1889	
BOLT, Hexagon	70	30	.....	4	400 4019	
BOLT, Hexagon	68/70	70 ***(Ord. 400 4019, 400 4025)***	.....	4	400 1889	
BOLT, Hexagon	72	40 (V8)	.....	4	400 4453	
WASHER, Lock	67/69	01 (V8)	17.820	4	G103323	
WASHER, Lock	69	09 (SC/RAMBLER)	17.820	4	G103323	
WASHER, Lock	68/70	30	4.178	4	315 7616	
WASHER, Lock	68/70	70	17.820	4	G103323	

NUT, Hexagon	67/69	01 (V8)	17.406	4	400	1245
NUT, Hexagon	69	09 (SC/RAMBLER)	17.406	4	400	1245
NUT, Hexagon	68/69	30	17.406	4	400	1245
NUT, Lock	70	30	.....	4	400	4025
NUT, Hexagon	68/70	70	17.406	4	400	1245

11.182 PLATE, Rear Axle Torque Link To Side Sill Bracket Mounting (Inner)

67/69	01 (V8)	19.174	2	319	3621
68/70	70 ***(Use 319 3621)***	19.174	2	319	3519

11.200–1 SHOCK ASSEMBLY, Front (Incl. Grommets)

67/69	(Regular) 01-30-70 146	.....	2	320	4931
70/	(Regular) 01 354	.....	2	448	7575
67/69	(Regular) 10-50-80 146	.....	2	320	8056
70/71	(Regular) 10-80 (E/MACHINE)	.....	2	448	7579
72	(Regular) 10-80 (Except Police)	.....	2	448	7579
70	19 (MACHINE)	.....	2	448	7580
70/	(Regular) 30-40-70	.....	2	~~448~~	~~7575~~
67/69	***(Heavy) 01-30-70*** 146	.....	2	320	8052
70/	***(Heavy) 01-30-40-70***	.....	2	448	7578
67/69	***(Heavy) 10-50-80*** 146	.....	2	320	8054
70/71	***(Heavy) 10-80***	.....	2	448	7580
72	***(Heavy) 10-80 (Except Police)***	.....	2	448	7580
72	***(Heavy) 10-80 (Fleet)(Police)(Export)***	.....	2	812	1742

11.200–2 ATTACHING PARTS, Shock To Control Arm

BOLT, Hexagon	67/69	10-50-80	.....	2	317	9149
NUT, Lock	67/69	01-30-70	17.416	2	G442828	
NUT, Lock	67/69	10-50-80	.....	2	318	1513

11.200–3 ATTACHING PARTS, Shock To Wheelhouse Panel

NUT, Hexagon	67/69	.....	17.416	2	G442828

11.200–4 ATTACHING PARTS, Shock To Mounting Bracket

NUT, Hexagon	70/	(3/8-16)	17.406	2	G120377	NA
NUT, Hexagon	70/	(3/8-24)	17.406	2	G120369	NA

11.200–5 ATTACHING PARTS, Shock To Lower Spring Seat

WASHER, Plain	70/	.....	.....	4	400	3933
NUT, Lock	70/	.....	.....	4	400	4007

11.201–1 BRACKET, Front Shock Absorber Mounting

70/	(Left)	.....	1	319	6992
70/	(Right)	.....	1	319	6993

11.201–2 ATTACHING PARTS, Bracket To Wheelhouse Panel

SCREW, Hexagon	70/	.....	12.060	4	400	3872
NUT, Hexagon	70/	.....	3.303	6	400	1457

11.208–1 GROMMET, Front Shock Upper

67/69	.....	.....	4	316	9112
70/	.....	.....	4	319	5059

ROAD SPRINGS - SHOCKS - REAR SUSPENSION

11.208–2 GROMMET, Front Shock Lower

67/69	01-30-70		.....	4	316 9112

11.208–3 RETAINER, Front Shock Grommet Inner

67/69	01-30-70		.....	4	316 9111
67/69	10-50-80		.....	2	316 9111
70/			.....	2	319 5222

11.208–4 RETAINER, Front Shock Grommet Outer

67/69	01-30-70		.....	4	316 5076
67/69	10-50-80		.....	2	316 5076
70/			.....	2	316 5076

11.209 BUSHING, Front Shock Absorber

70/			.....	4	319 4905

11.220–1 SHOCK ASSEMBLY, Rear

67	(Regular) 01 (Six)(290)	155	.....	2	320 2201
67	(Regular) 01 (343)	155	.....	2	320 8483
68/69	(Regular) 01-70	155	.....	2	320 2201
70	(Regular) 01-40		.....	2	448 7584
71	(Regular) 01-40 (* 11-85)		.....	2	448 7584
71	(Regular) 01-40 (* 11-86)		.....	2	812 0038
72	(Regular) 01-40		.....	2	812 0038
67/68	(Regular) 10-50-80	155	.....	2	320 8057
69	(Regular) 10-80	155	.....	2	448 6490
70/71	(Regular) 10-80 (LAAS)		.....	2	448 7588
72	(Regular) 10-80 (LAAS-Except Police)		.....	2	448 7588
71/	10-80 (WAAS)		.....	2	812 0238
68/69	30	155	.....	2	320 5018
70/	(Regular) 30-70		.....	2	448 7586
67	***(Heavy) 01 (Six)(290)***	155	.....	2	320 5018
67	***(Heavy) 01 (343)***	155	.....	2	320 8484
68/69	***(Heavy) 01-70***	155	.....	2	320 5018
70	***(Heavy) 01-40***		.....	2	448 7585
71	***(Heavy) 01-40 (* 11-85)***		.....	2	448 7585
71	***(Heavy) 01-40 (* 11-86)***		.....	2	812 0039
72	***(Heavy) 01-40***		.....	2	812 0039
67/68	***(Heavy) 10-50-80***	155	.....	2	320 8055
69	***(Heavy) 10-80***	155	.....	2	448 6108
70/71	***(Heavy) 10-80 (LAAS)***		.....	2	448 7589
72	***(Heavy) 10-80 (LAAS-Except Police)***		.....	2	448 7589
72	***(Heavy) 10-80 (Fleet)(Police)(Export)***		.....	2	812 1743
70/	***(Heavy) 30-70***		.....	2	448 7587

11.220–1a GROMMET KIT, Shock To Rear Suspension Crossmember

70	01-40...(Incl. Studs, Insulators, Washers And Nuts)		.....	1	812 0175
71	01-40 (* 11-85)...(Incl. Studs, Insulators, Washers And Nuts)		.....	1	812 0175

11.220–1b SHOCK KIT, Rear Adjustable Air

71/	10-80 (WAAS)		.....	1	321 2750

ROAD SPRINGS - SHOCKS - REAR SUSPENSION

11.220–2 ATTACHING PARTS, Shock To Tie Plate

WASHER, Plain	70	01-40	11.228	2	316 7602
WASHER, Plain	71	01-40 (* 11-85)	11.228	2	316 7602
WASHER, Plain (Inner)	67/69	01-30-70	11.228	2	313 5016
WASHER, Plain (Inner)	70	30-70 (* 11-62)	11.228	2	313 5016
WASHER, Plain (Outer)	67/69	01-30-70	11.228	2	313 5017
WASHER, Plain (Outer)	70	30-70 (* 11-62)	11.228	2	313 5017
WASHER, Plain (Outer)	70/71	30-70 (* 11-63)	11.228	2	316 7602
WASHER, Plain (Outer)	72	70	11.228	2	316 7602
WASHER, Lock	67/	01-30-70	17.820	2	G131100
NUT, Hexagon	67/69	01	17.406	2	G120370
NUT, Hexagon	70	01-40	17.406	2	G103028
NUT, Hexagon	71	01-40 (* 11-85)	17.406	2	G103028
NUT, Hexagon	71	01-40 (3/8-16-* 11-86)	17.406	2	G120377 NA
NUT, Hexagon	71	01-40 (3/8-24-* 11-86)	17.406	2	G120369 NA
NUT, Hexagon	72	01-40 (3/8-16)	17.406	2	G120377 NA
NUT, Hexagon	72	01-40 (3/8-24)	17.406	2	G120369 NA
NUT, Hexagon	67/69	30-70	17.406	2	G120370
NUT, Hexagon	70	30-70 (* 11-62)	17.406	2	G120370
NUT, Hexagon	70/71	30-70 (* 11-63)	17.406	2	G103028
NUT, Hexagon	72	70	17.406	2	G103028

11.220–3 ATTACHING PARTS, Shock To Axle Tube

WASHER, Plain	67/	10-50-80	11.228	2	316 7602
WASHER, Lock	67/69	10-50-80	4.178	2	315 7616
NUT, Hexagon	67/	10-50-80	17.406	2	G103028

11.220–4 ATTACHING PARTS, Shock To Upper Mounting Bracket

NUT, Hexagon	67/69		17.416	2	G442828
NUT, Hexagon	70	10-30-70-80 (LAAS)	17.406	2	G120377 NA
NUT, Hexagon	71/	10-30-70-80 (LAAS-3/8-16)	17.406	2	G120377 NA
NUT, Hexagon	71/	10-30-70-80 (LAAS-3/8-24)	17.406	2	G120369 NA
NUT, Hexagon	71/	10-80 (WAAS)	17.406	2	G120369 NA

11.220–5 ATTACHING PARTS, Shock To Rear Suspension Crossmember

SCREW, Machine	70	01-40	2.020	4	400 3847
SCREW, Machine	71	01-40 (* 11-85)	2.020	4	400 3847
NUT, Hexagon	71	01-40 (3/8-16-* 11-86)	17.406	2	G120377 NA
NUT, Hexagon	71	01-40 (3/8-24* 11-86)	17.406	2	G120369 NA
NUT, Hexagon	72	01-40 (3/8-16)	17.406	2	G120377 NA
NUT, Hexagon	72	01-40 (3/8-24)	17.406	2	G120369 NA

11.224–1 BRACKET, Rear Shock Upper Mounting

67/69	01 (Six)	.....	2	350 0064
67	05-06-07-09 (290-* 11-10)	.....	2	350 0064
67/69	08 (290)	.....	2	350 0064
71	01-40 (* 11-86)	.....	2	321 2305
72	01-40	.....	2	321 2305
67/70	10-50-80	.....	2	318 4024
71/	10-80	.....	2	321 2305
67	(Left) 05-06-07-09 (290-* 11-11)	.....	1	359 2493
68	(Left) 05-06-09	.....	1	359 2493
69	(Left) 05-09-70 (V8)	.....	1	359 2493
68/70	(Left) 30	.....	1	359 2493
68	(Left) 70	.....	1	359 2493
70/	(Left) 70 (V8)	.....	1	359 2493

67	(Right) 05-06-07-09 (290-* 11-11)	.....	1	359 2492	
68	(Right) 05-06-09 (290-* 11-14)	.....	1	359 2492	
68	(Right) 05-06-09 (290-* 11-15)	.....	1	350 0064	
69	(Right) 05-09-70 (V8)	.....	1	350 0064	
68/70	(Right) 30	.....	1	359 2492	
68	(Right) 70 (Six)	.....	1	359 2492	
68	(Right) 70 (V8-* 11-14)	.....	1	359 2492	
68	(Right) 70 (V8-* 11-15)	.....	1	350 0064	
70	(Right) 70	.....	1	350 0064	

11.224–2 ATTACHING PARTS, Bracket To Reinforcement

WASHER, Lock	67/69	05-06-07-09-30-70	17.820	AR	G120382	
WASHER, Lock	70	30	10.260	8	400 3803	
WASHER, Lock	70/	70 (V8)	10.260	4	400 3803	
NUT, Hexagon	67/69	05-06-07-09-30-70	17.406	AR	G120377	NA
NUT, Hexagon	70	30	17.406	8	G120377	NA
NUT, Hexagon	70/	70 (V8)	17.406	8	G120377	NA
NUT, Lock	72	70 (V8)	10.260	4	400 3909	

11.224–3 ATTACHING PARTS, Bracket To Floor Pan

BOLT, Hexagon	67/70	10-50-80 (5/16-18 x 3/4)	17.038	4	G180077	NA
SCREW, Machine	71	01-40 (* 11-86)	17.629	4	G273573	
SCREW, Machine	72	01-40	17.629	4	G273573	
SCREW, Machine	70/	10-80 (5/16-18 x 5/8)...(Incl. Serrated Washer)	17.629	4	G273573	
WASHER, Lock	67/70	10-50-80	17.820	4	G120214	

11.224–4 REINFORCEMENT, Rear Shock Upper Mounting Bracket (Incl. Studs)

67	05-06-07-09 (290-* 11-11)	.....	2	630 0014
68/70	30	.....	2	630 0014
68	70 (Six)	.....	2	630 0014
68	(Left) 05-06-09	.....	1	630 0014
69	(Left) 05-09-70 (V8)	.....	1	630 0014
68	(Left) 70 (V8)	.....	1	630 0014
70/	(Left) 70	.....	1	630 0014
68	(Right) 05-06-09 (290-* 11-14)	.....	1	630 0014
68	(Right) 70 (V8-* 11-14)	.....	1	630 0014

11.224–5 REINFORCEMENT, Rear Shock Upper Mounting Bracket (Less Studs)

71	70 (V8-Used On Left Side)	.....	1	365 1749

11.228–1 GROMMET, Rear Shock Upper

67/69		1.017	4	315 6228
71	01-40 (* 11-86)	1.017	4	315 6228
72	01-40	.....	4	315 6228
70/	10-30-70-80 (LAAS)	1.017	4	315 6228

11.228–2 GROMMET, Rear Shock Lower

67/70		11.208	4	95 205
71	01-40 (* 11-85)	11.208	4	95 205
71	01-40 (* 11-86)	1.017	4	315 6228
72	01-40	.....	4	315 6228
71/	10-70-80	11.208	4	95 205

ROAD SPRINGS - SHOCKS - REAR SUSPENSION

11.228–3 RETAINER, Rear Shock Grommet Upper

67/69			11.208	2	316 1146
70/	10-30-70-80 (LAAS)		11.208	2	316 1146

11.228–4 RETAINER, Rear Shock Grommet Lower

67/69			.....	2	314 6809
70/	10-30-70-80		.....	2	314 6809

11.228–5 RETAINER, Rear Shock Grommet Outer

71	01-40 (* 11-86)		11.208	4	316 1146
72	01-40		11.208	4	316 1146

11.228–6 RETAINER, Rear Shock Grommet Inner

71	01-40 (* 11-86)		.....	4	314 6809
72	01-40		.....	4	314 6809

11.230 FITTING, Rear Adjustable Air Shock Tube (At Shock)

71	10-80 (WAAS)		.....	2	812 0239

11.233–1 VALVE KIT, Rear Adjustable Air Shock

71/	10-80 (WAAS)...(Incl. Washer And Nut)		.....	1	812 0242

11.235 TUBE, Rear Adjustable Air Shock To Valve (Nylon)

71/	10-80 (WAAS)		.....	1	812 0246

11.236 CLIP KIT, Rear Adjustable Air Shock Tube

71/	10-80 (WAAS)...(Incl. Nut)		.....	1	812 0245

11.260 STABILIZER KIT, Rear Axle Lateral

67	10-50-80	154	.....	1	320 9986

11.263–1 STABILIZER, Rear Axle Lateral (Shock)

67/68	10-50-80		11.252	1	318 5113

11.263–2 ATTACHING PARTS, Stabilizer To Plate (On Crossmember)

WASHER, Plain.....	67/68	10-50-80	11.228	2	316 7602
WASHER, Lock.....	67/68	10-50-80	17.820	1	G120384 NA
NUT, Hexagon.....	67/68	10-50-80	17.406	1	G120371 NA

11.263–3 ATTACHING PARTS, Stabilizer To Plate (On Axle Housing)

WASHER, Plain.....	67/68	10-50-80	11.228	1	316 7602
WASHER, Lock.....	67/68	10-50-80	17.820	1	G120384 NA
NUT, Hexagon.....	67/68	10-50-80	17.406	1	G120371 NA

11.265–1 PLATE, Rear Axle Lateral Stabilizer To Axle Housing

67/68	10-50-80		.....	1	320 9987

ROAD SPRINGS - SHOCKS - REAR SUSPENSION

11.265–2 ATTACHING PARTS, Plate To Axle Housing

BOLT, Hexagon	67/68	10-50-80	17.038	2	G179860 NA
WASHER, Lock	67/68	10-50-80	17.820	2	G103328 NA

11.270–1 PLATE, Rear Axle Lateral Stabilizer To Crossmember

67/68	10-50-80			1	320 9990

11.270–2 ATTACHING PARTS, Plate To Crossmember

BOLT, Hexagon	67/68	10-50-80	17.038	2	G181636 NA
WASHER, Lock	67/68	10-50-80	17.820	2	G120382
NUT, Hexagon	67/68	10-50-80	17.406	2	G120369 NA

11.400–1 CROSSMEMBER, Rear Suspension

67/68	10-50-80 (Six-WOD)		1	318 2642
67/68	10-50-80 (Six-WST)		1	318 8594
67/68	10-50-80 (Six-WAT)		1	318 8594
67/68	10-50-80 (V8)		1	318 8594
69/71	10-80		1	319 4550
72	10-80 (LSBW)		1	319 4550
72	10-80 (WSBW)		1	365 7796

11.400–2 ATTACHING PARTS, Crossmember To Side Sill

STUD	67	10-50-80		4	400 1831
BOLT, Hexagon	67/69	10-50-80 (1-7/8)		4	400 3005
BOLT, Hexagon	69/	10-80 (2-1/8)		4	400 3997
WASHER, Plain	67/	10-50-80		4	400 1780
WASHER, Lock	67/	10-50-80	17.820	4	G120384
NUT, Hexagon	67	10-50-80	17.406	4	G120371 NA

11.400–3 SHIM, Rear Suspension Crossmember To Side Sill

67/	(1/32" thick) 10-50-80		AR	318 4087
67/	(1/16" thick) 10-50-80		AR	318 5265
67/	(1/8" thick) 10-50-80		AR	318 4088

11.410–1 ARM, Rear Suspension Upper Control (Incl. Bushing)

67/71	10-50-80	151		2	318 2638
72	10-80 (Except Police)	151		2	318 2638
72	***10-80 (Police-* 11-122)***	151		2	321 7575
72	***(Left) 10-80 (Fleet-Heavy-* 11-123)(Export-Heavy-* 11-123)***	151		1	321 8245
72	***(Right) 10-80 (Fleet-Heavy-* 11-123)(Export-Heavy-* 11-123)***			1	321 8246

11.410–2 ATTACHING PARTS, Arm To Rear Axle Housing

BOLT, Hexagon	67/	10-50-80		2	318 6626
WASHER, Lock	67/68	10-50-80	17.820	2	G120384
NUT, Lock	67	10-50-80 ***(Ord. G442832, 320 9586)***		2	318 8660
NUT, Lock	68/	10-50-80	17.416	2	320 9586

11.410–3 ATTACHING PARTS, Arm To Crossmember

BOLT, Hexagon	67/	10-50-80		2	318 6626
WASHER, Lock	67/68	10-50-80	17.820	2	G120384
WASHER, Lock	69/70	10-80	17.820	2	G120898 NA
NUT, Lock	67	10-50-80 ***(Ord. G442832, 320 9586)***		2	318 8660
NUT, Lock	68/	10-50-80	17.416	2	320 9586

11.418 BUSHING, Rear Suspension Upper Control Arm To Rear Axle Housing (In Axle Housing)

67/68	10-50-80		.....	2	318 5827
69	10-50-80		.....	2	318 5828
70/71	10-80		.....	2	318 5826
72	10-80 (Except Police)(Except Export)		.....	2	318 5826
72	***10-80 (Police-* 11-122)***		.....	2	318 2630
72	***10-80 (Police-* 11-123)***		.....	2	321 8849
72	***(Heavy) 10-80 (Export)***		.....	2	321 8849

11.420–1 ARM, Rear Suspension Lower Control (Incl. Bushing)

67/69	10-50-80	162	.....	2	318 2640
70	80 (Used On Cars Less Stabilizer)	162	.....	2	319 9597
70	10 (E/MACHINE)(Used On Cars Less Stabilizer)	162	.....	2	319 9597
70	19 (MACHINE)	162	.....	2	448 8440
70	10 (E/MACHINE)(Used On Cars With Stabilizer)	162	.....	2	448 8440
70	80 (Used On Cars With Stabilizer)	162	.....	2	448 8440
71	10-80	162	.....	2	448 8440
72	10-80 (Except Fleet)(Except Export)	162	.....	2	448 8440
72	***(Heavy) 10-80 (Fleet)(Export)***	162	.....	2	321 7568

11.420–2 ATTACHING PARTS, Arm To Axle Tube

BOLT, Hexagon	67/	10-50-80	10.410	2	318 6626	
WASHER, Lock	67/68	10-50-80	17.820	2	G120384	
NUT, Lock	67	10-50-80 ***(Ord. G442832, 320 9586)***	10.410	2	318 8660	
WASHER, Lock	69/70	10-80	17.820	2	G120898	NA
NUT, Lock	68/	10-50-80	17.416	2	320 9586	

11.420–3 ATTACHING PARTS, Arm To Mounting Bracket (On Side Sill)

BOLT, Hexagon	67/	10-50-80	10.410	2	318 6626	
WASHER, Plain	68/	10-80	10.066	2	317 0473	
WASHER, Lock	67/68	10-50-80	17.820	2	G120384	
WASHER, Lock	69/70	10-80	17.820	2	G120898	NA
NUT, Lock	67	10-50-80 ***(Ord. G442832, 320 9586)***	10.410	2	318 8660	
NUT, Lock	68/	10-50-80	17.416	2	320 9586	

11.450–1 STABILIZER, Rear Suspension Sway

70	19 (MACHINE)	.....	1	319 9849
70/	***10-80 (Heavy-Used On Cars With Rear Sway Bar)***	.....	1	319 9849

11.450–2 ATTACHING PARTS, Stabilizer To Lower Control Arm

BOLT, Hexagon	70	19 (MACHINE)	.....	4	812 1785
BOLT, Hexagon 70/		***10-80 (Heavy-Used On Cars With Rear Sway Bar)***	.....	4	812 1785
SLEEVE	70	19 (MACHINE)	.....	4	319 9851
SLEEVE 70/		***10-80 (Heavy-Used On Cars With Rear Sway Bar)***	.....	4	319 9851
NUT, Lock	70	19 (MACHINE)	10.114	4	400 4050
NUT, Lock 70/		***10-80 (Heavy-Used On Cars With Rear Sway Bar)***	10.114	4	400 4050

11.450–3 SPACER, Rear Suspension Sway Stabilizer To Lower Control Arm

70	19 (MACHINE)	.....	AR	319 9852
70/	***10-80 (Heavy-Used On Cars With Rear Sway Bar)***	.....	AR	319 9852

SPECIAL INFORMATION

The Engine Build Code Number, Vehicle Identification Number and the information provided on the Unit Body Plate are often necessary when determining the proper replacement parts for your automobile. For their location refer to the General Information Section found at the front of this catalog.

NOTES

12–1 .... Bracket has one hole on Fender End.

12–2 .... Bracket has two holes on Fender End.

12–3 .... With Chrome Bumpers.

12–4 .... With Painted Bumpers.

12–5 .... Hood Latch Release Lever welds to lower side of Hood Latch Release Rod.

12–6 .... Hood Latch Release Lever welds to upper side of Hood Latch Release Rod.

12–7 .... Back Bar is used in conjunction with a Plate with a diamond burr finish and the Flange on the Back Bar measures 5/8" wide.

12–8 .... Back Bar is used in conjunction with a Spacer (Washer) and the Flange on the Back Bar measures 1-1/4" wide.

12–9 .... Used on Cars prior to Body No. 19656.

12–10 ... Used on Cars beginning with Body No. 19656.

12–11 ... Hood Hinge to Hood Stud is 3/8"-24.

12–12 ... Hood Hinge to Hood Stud is 3/8"-16.

12–13 ... Used on Cars when Hood Lock Release Handle is located below Bumper Rail.

12–14 ... Used on Cars when Hood Lock Release Handle is located in Grille.

Printed in U.S.A.

2981

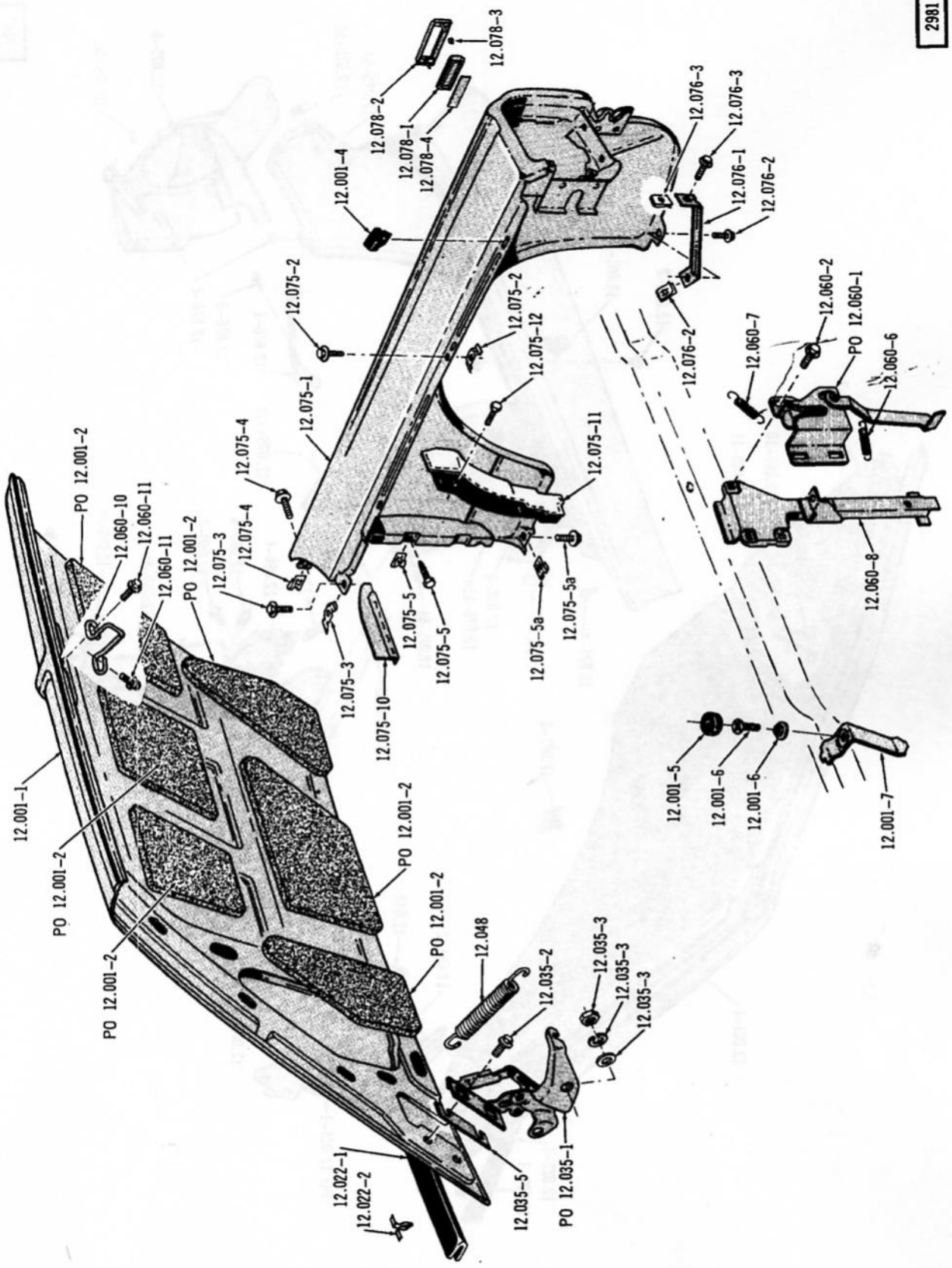

HOOD AND FRONT FENDER ... 1967/69 (01)

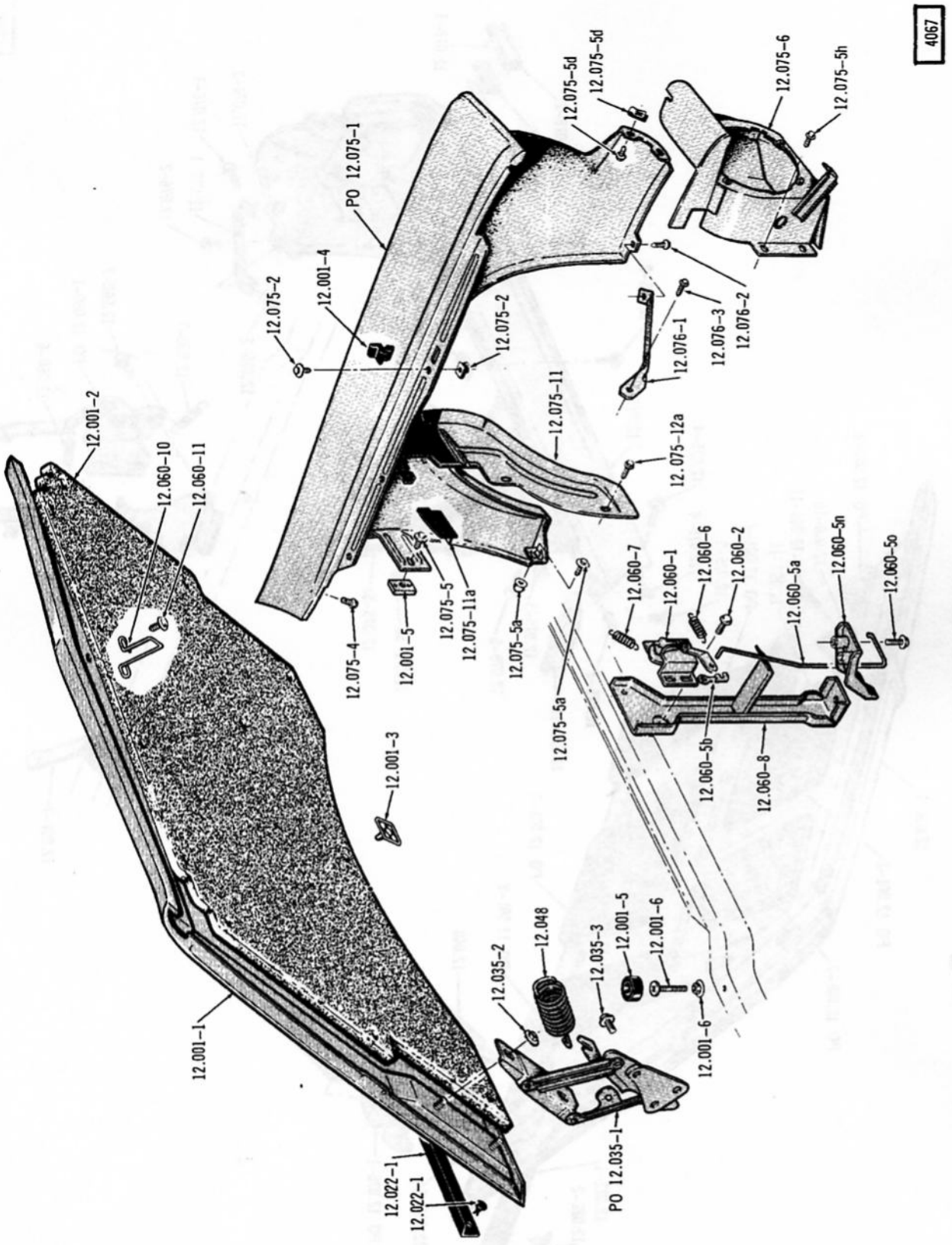

HOOD AND FRONT FENDER ... 1970/ (01)(40)

2985

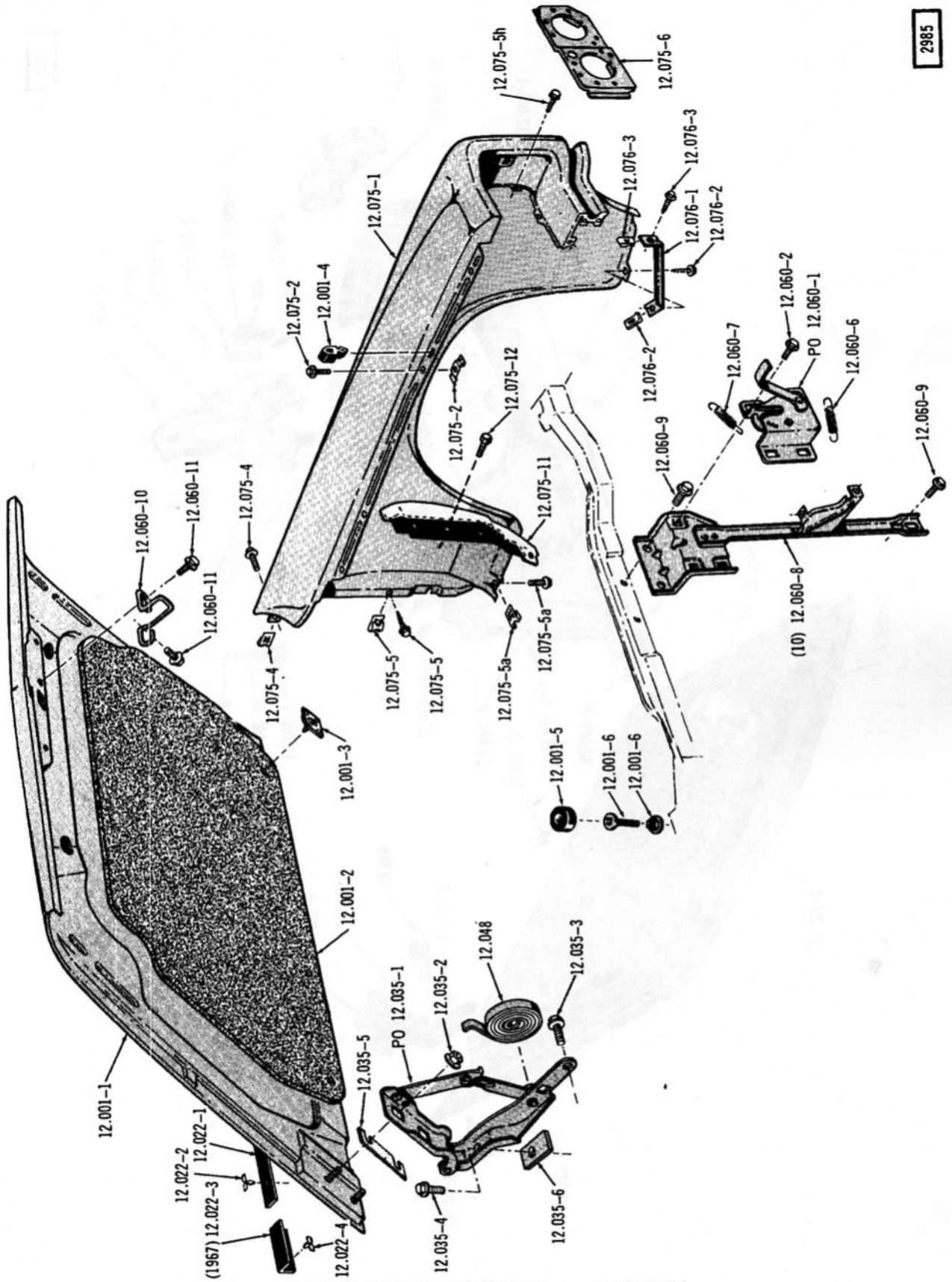

HOOD AND FRONT FENDER ... 1967/70 (10)

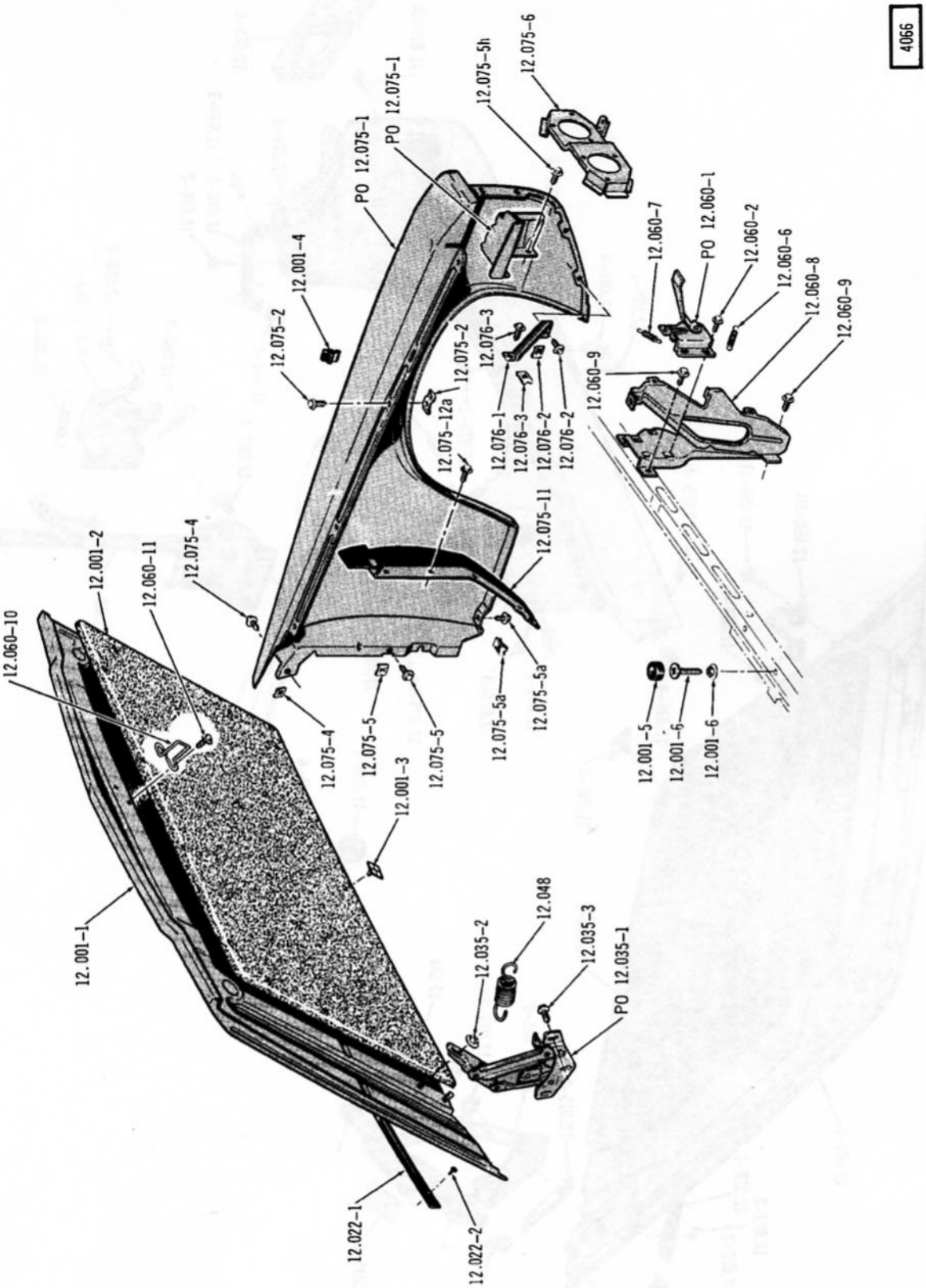

HOOD AND FRONT FENDER ... 1971/ (10)

3204

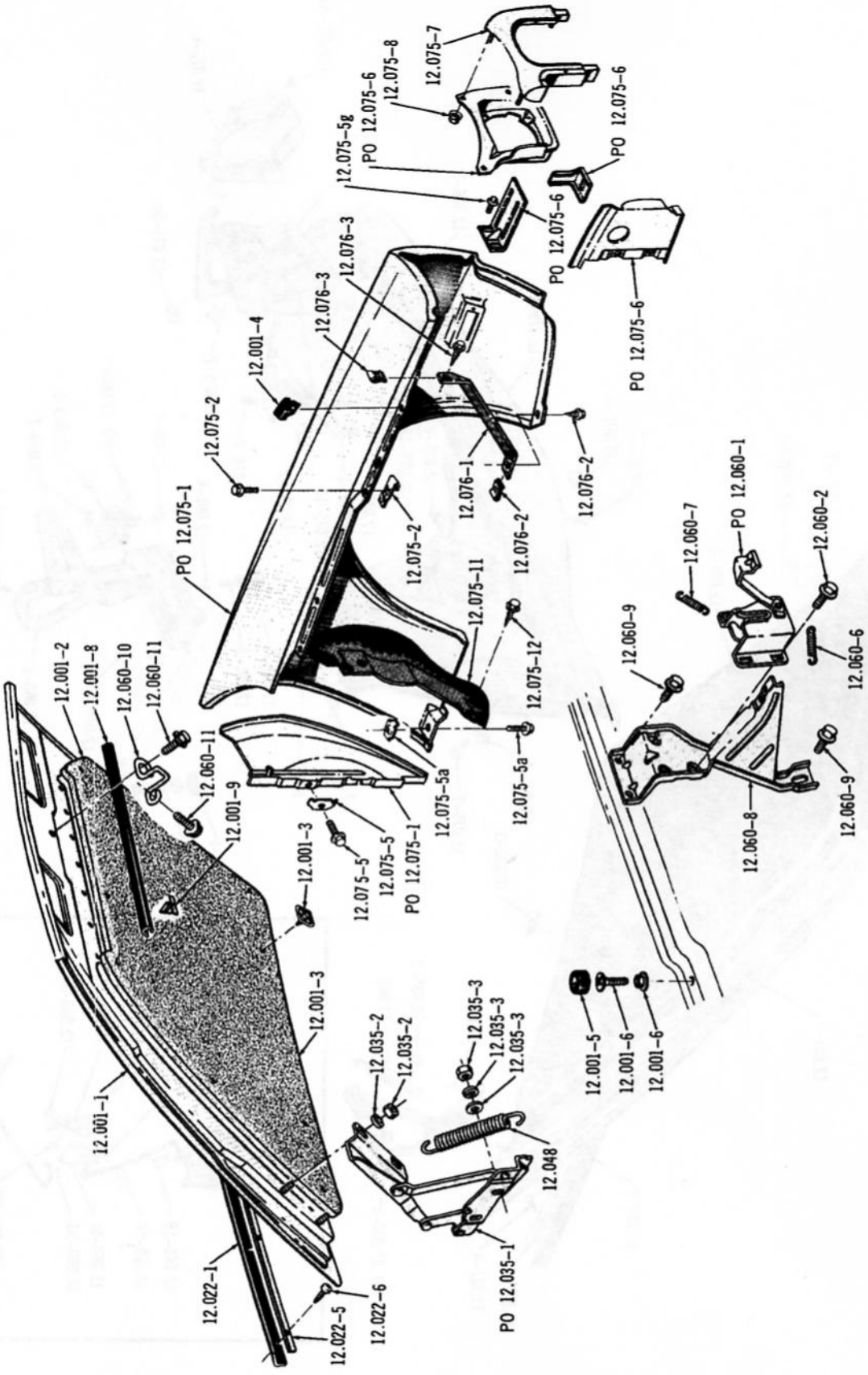

HOOD AND FRONT FENDER ... 1968/70 (30)(70)

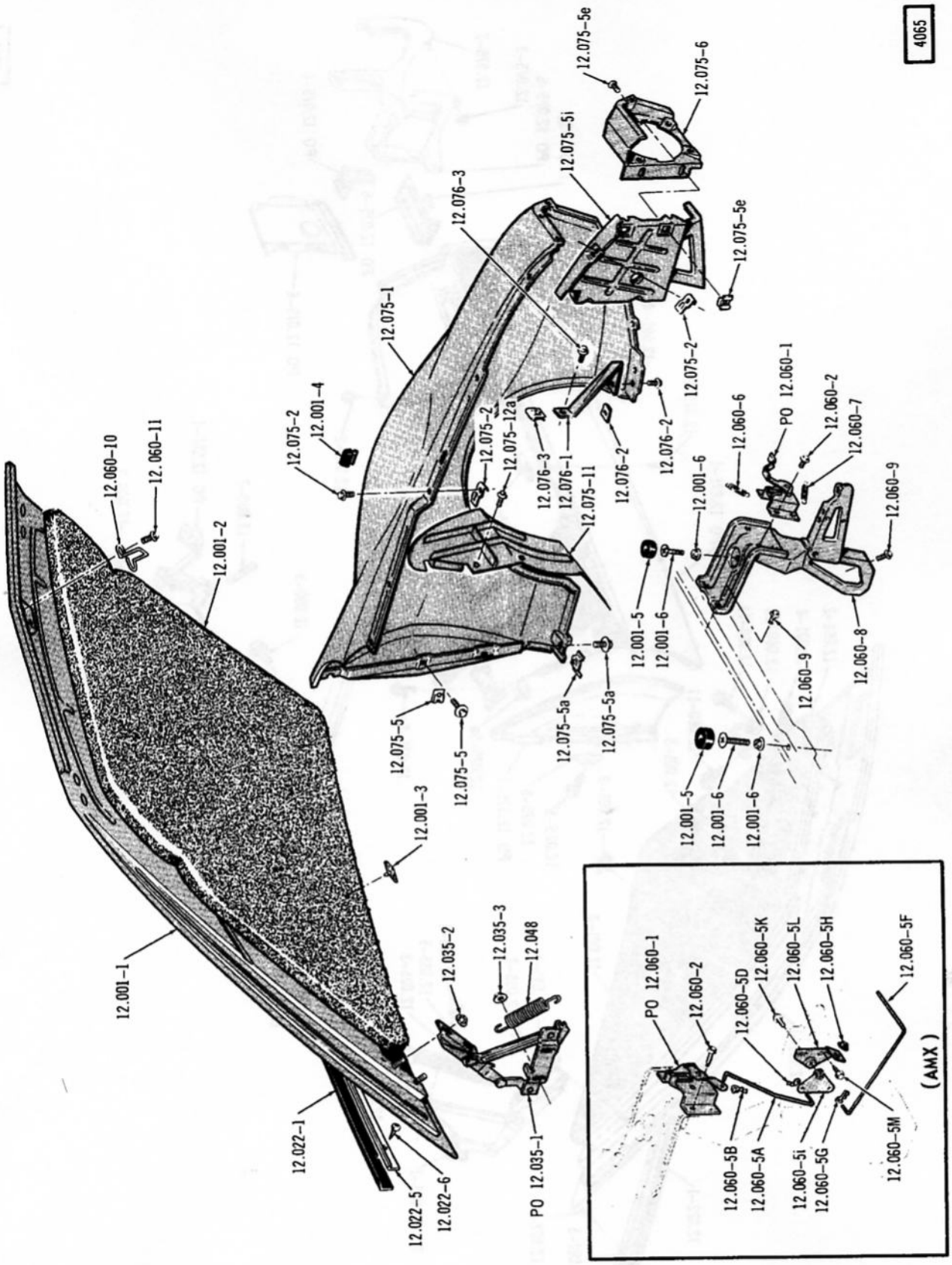

HOOD AND FRONT FENDER ... 1971/ (70)

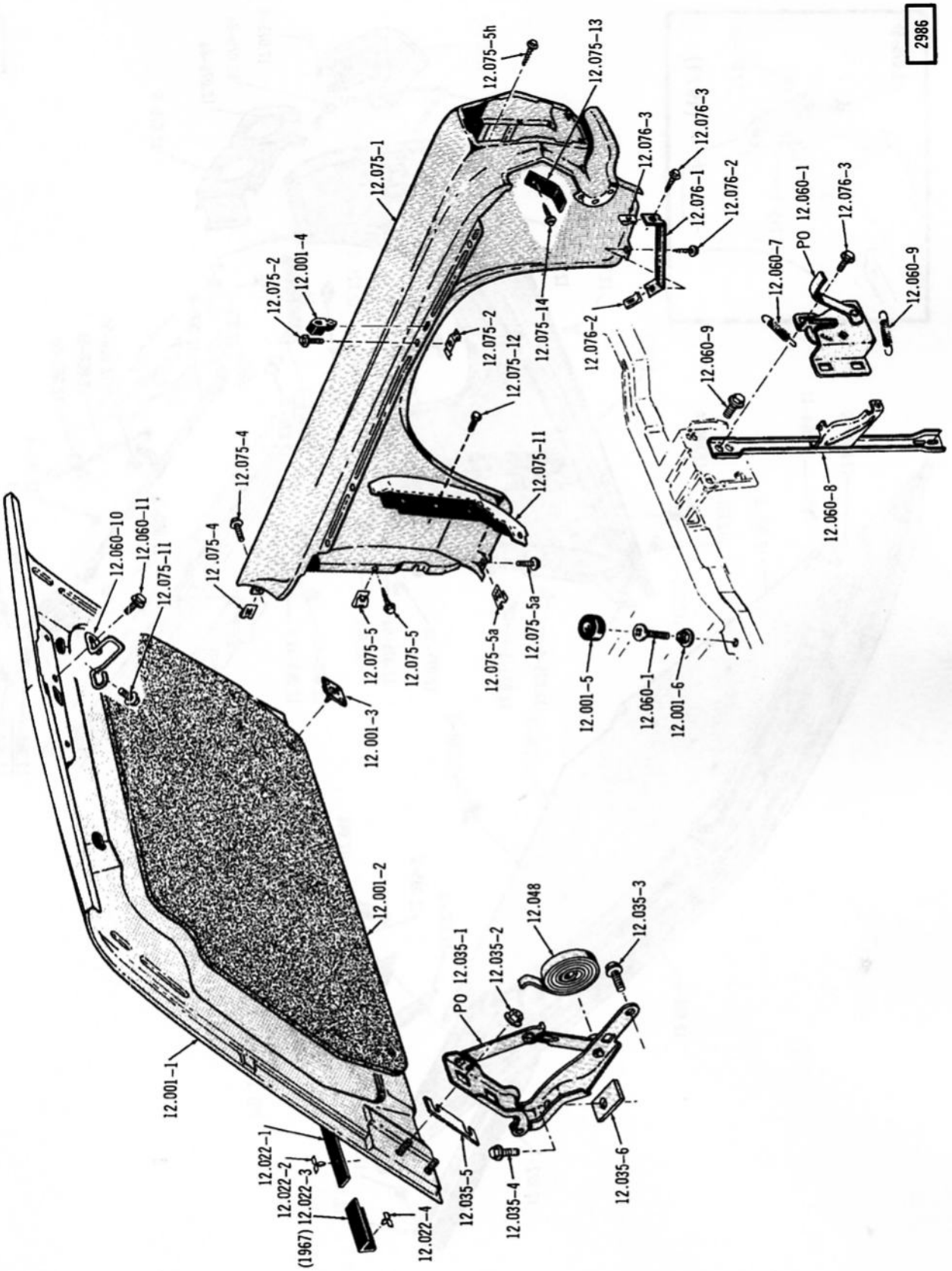

HOOD AND FRONT FENDER ... 1967/68 (50)(80)

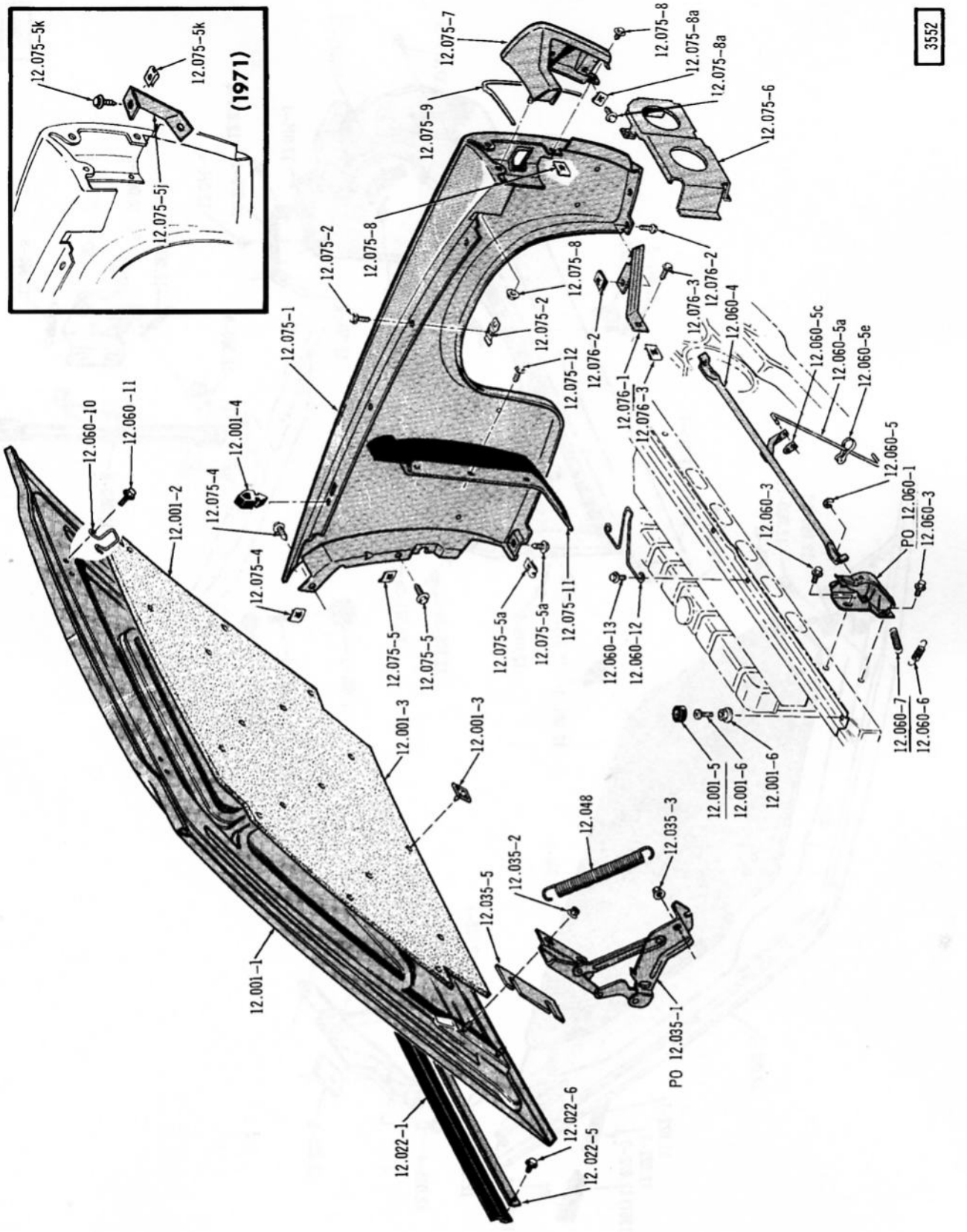

HOOD AND FRONT FENDER ... 1969/71 (80)

3663

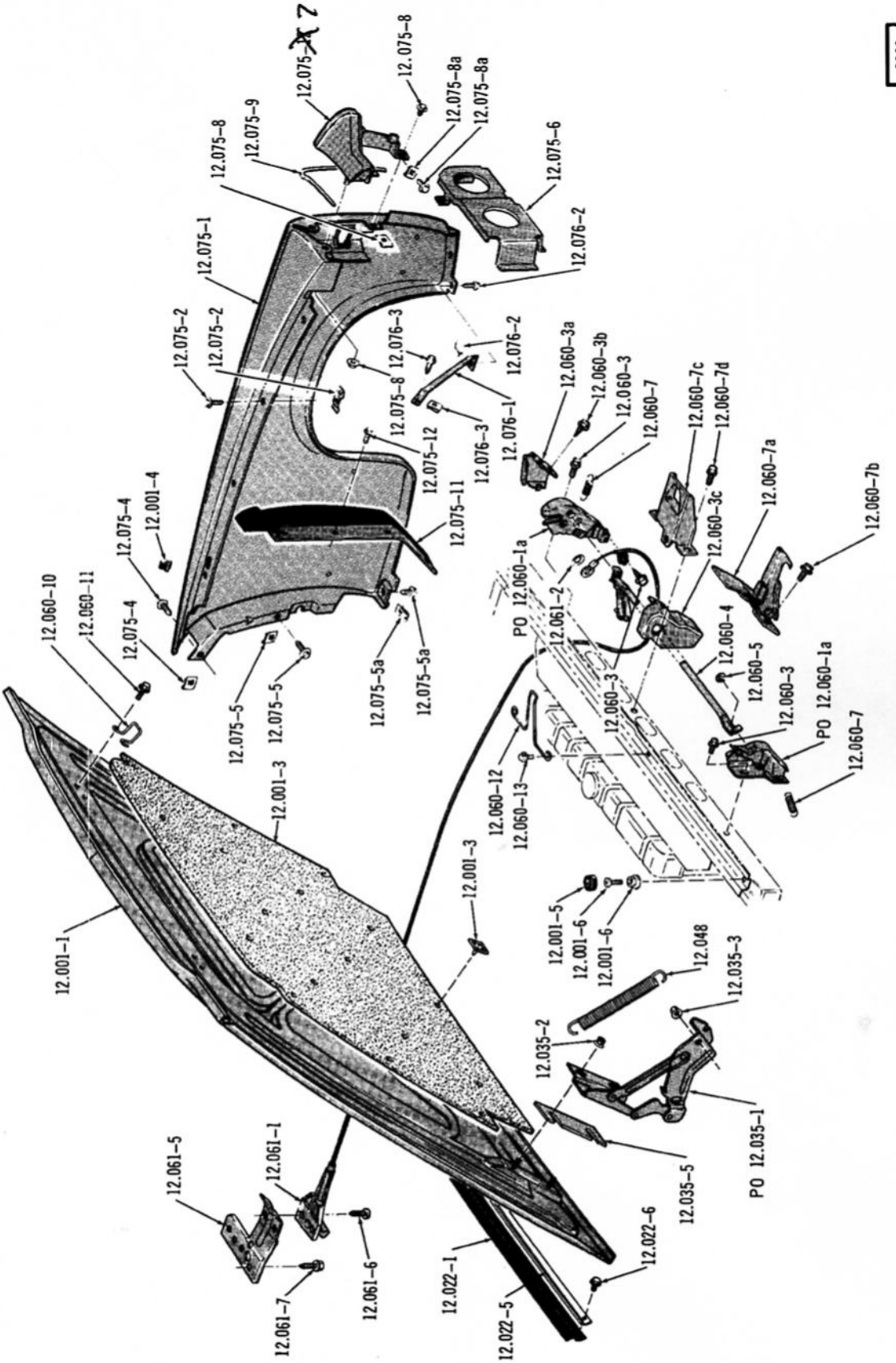

HOOD AND FRONT FENDER . . . 1972 (80)

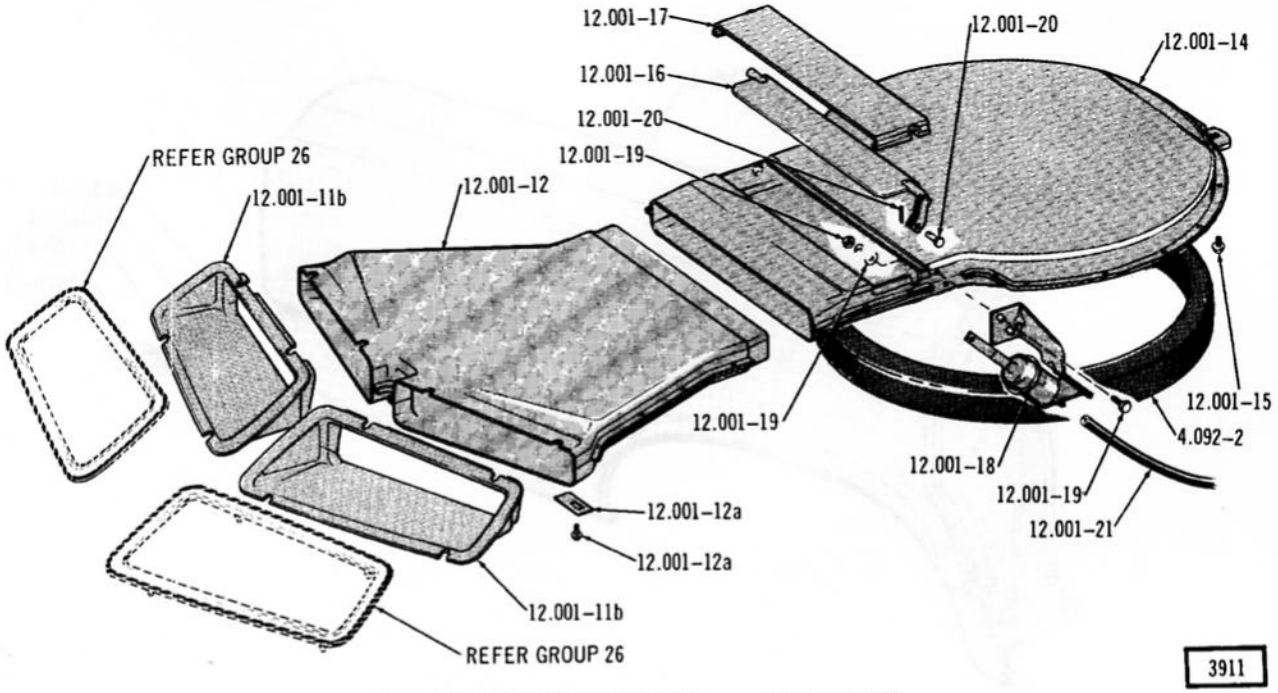

3911

COLD AIR INDUCTION SYSTEM ... 1970 (30)(70)

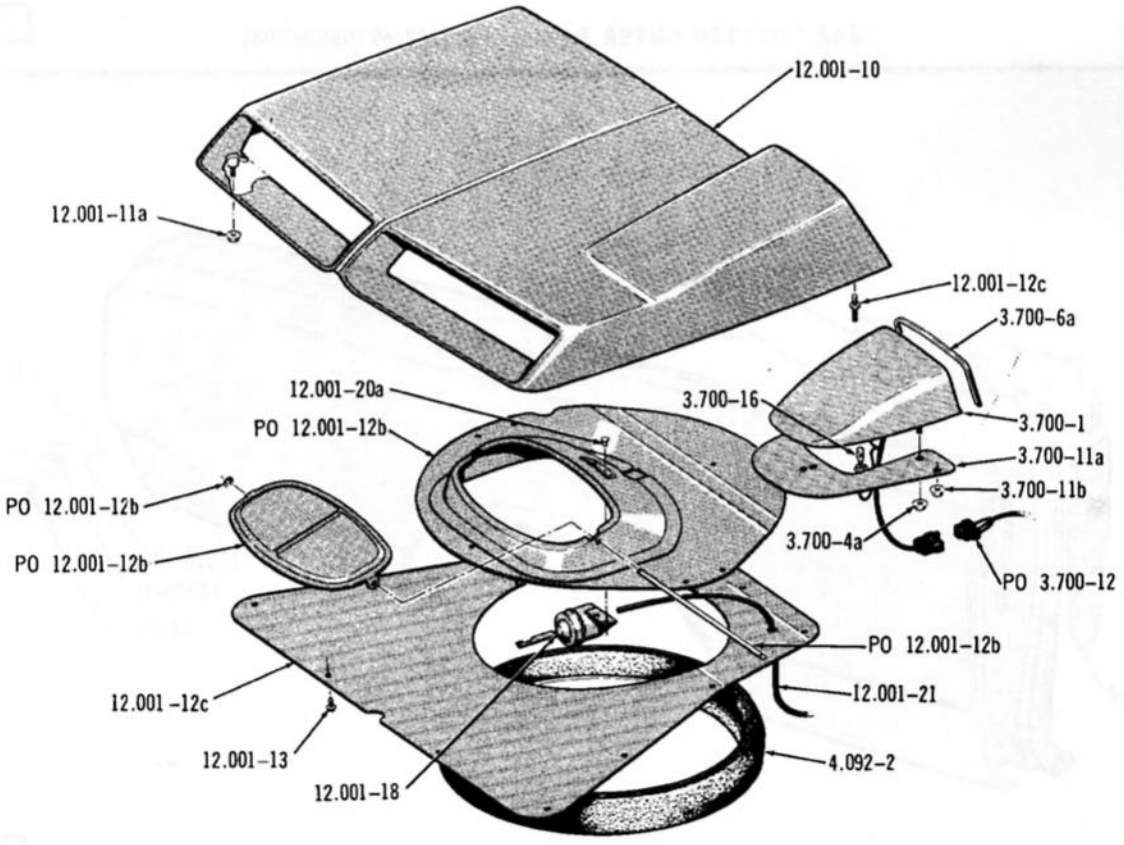

3919

COLD AIR INDUCTION SYSTEM ... 1970 - 19 (MACHINE)

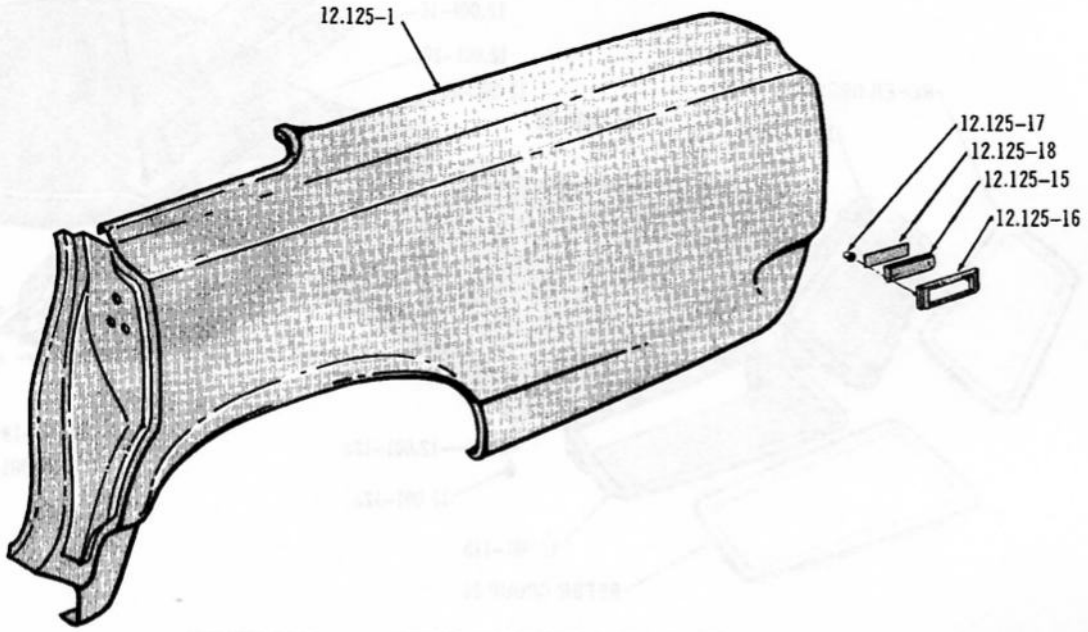

2996

REAR QUARTER OUTER PANEL ... 1967/69 (05)(06)(08)

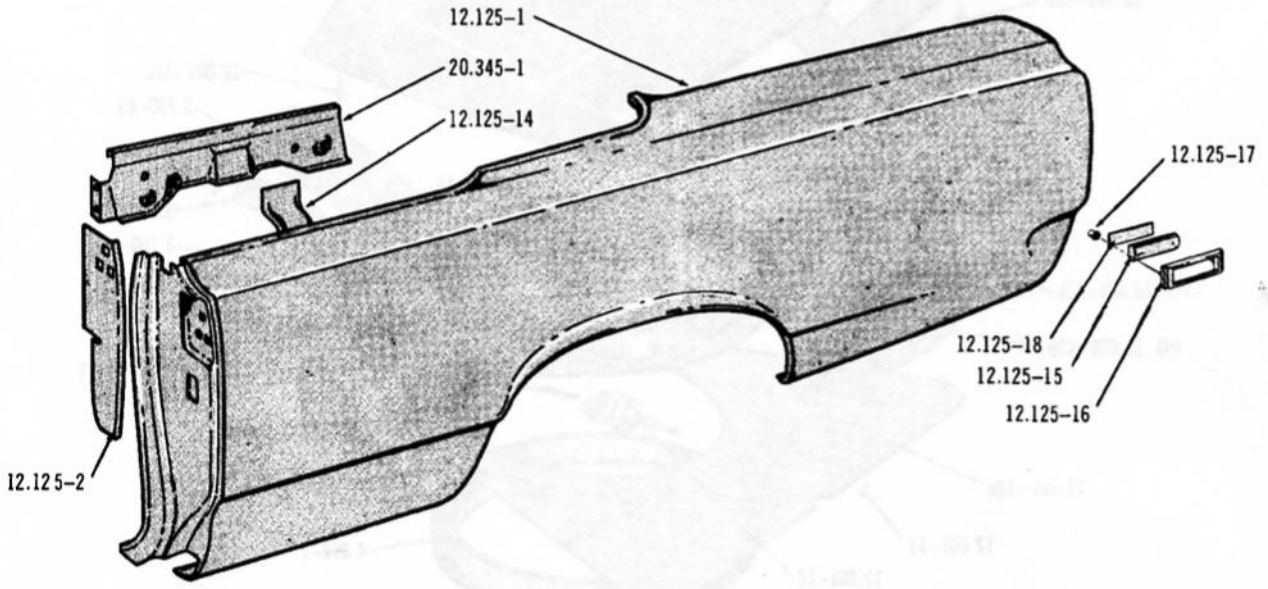

2995

REAR QUARTER OUTER PANEL ... 1967/69 (07)(09)

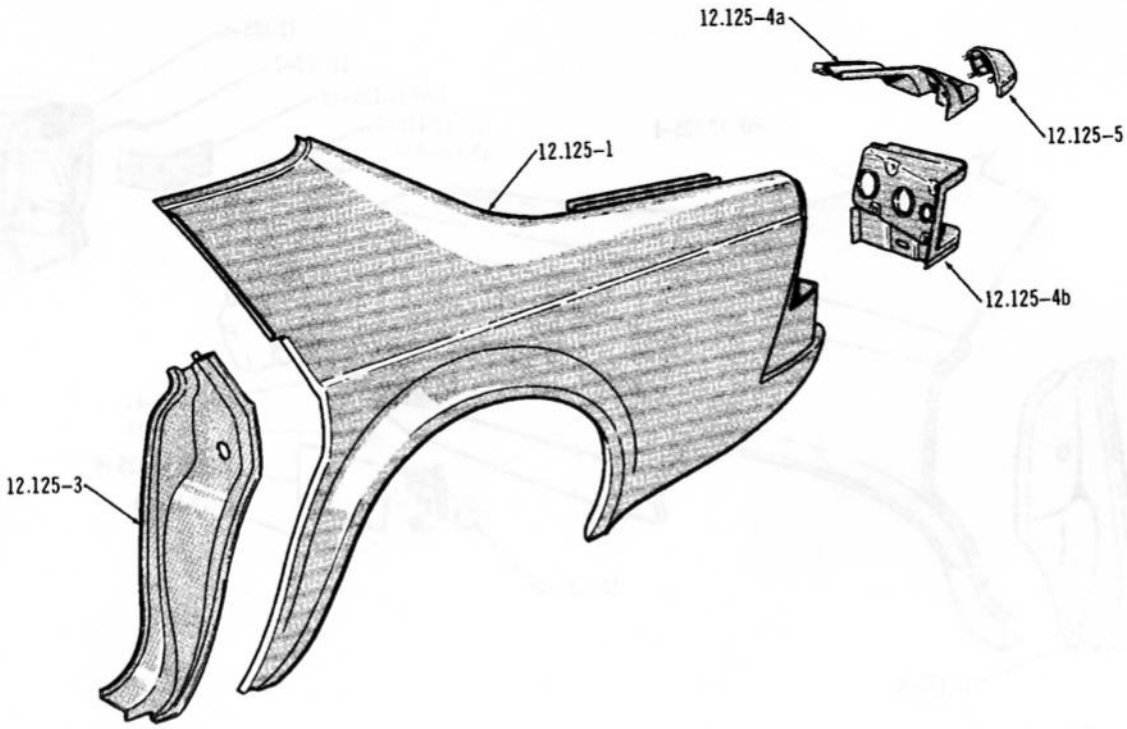

3829

REAR QUARTER OUTER PANEL ... 1970/ (05)

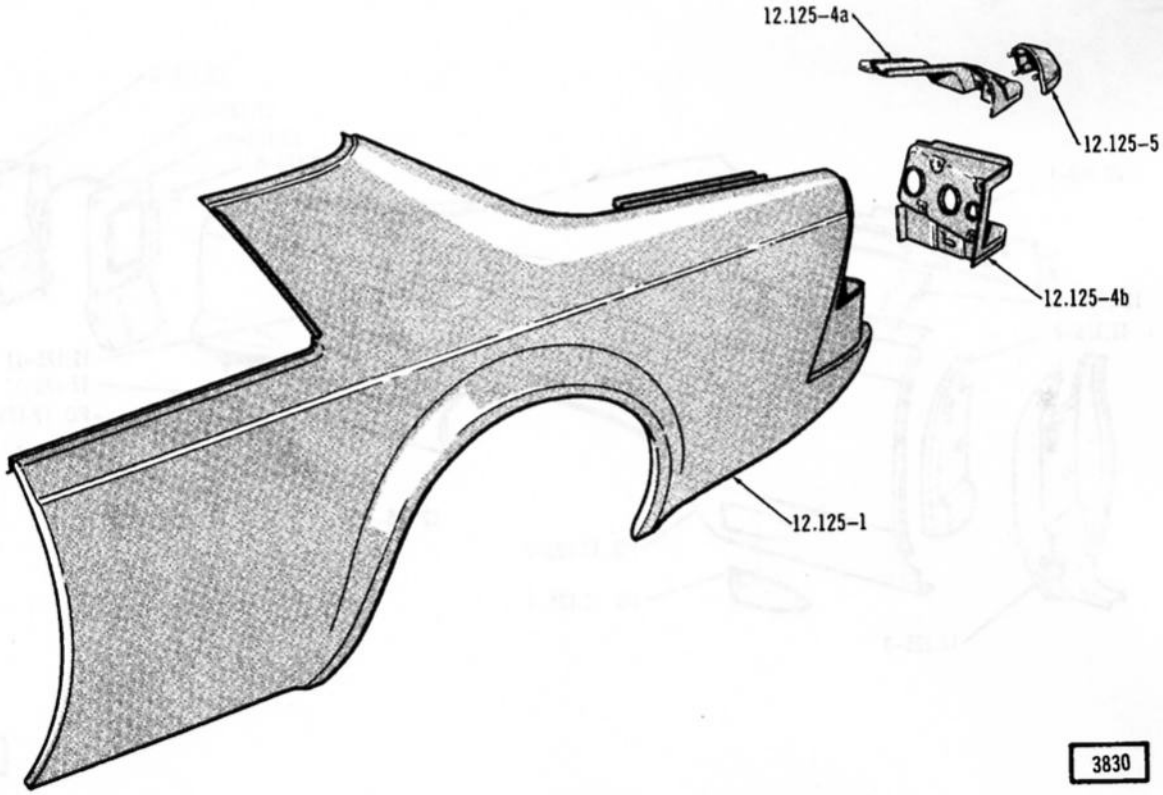

3830

REAR QUARTER OUTER PANEL ... 1970/ (06)

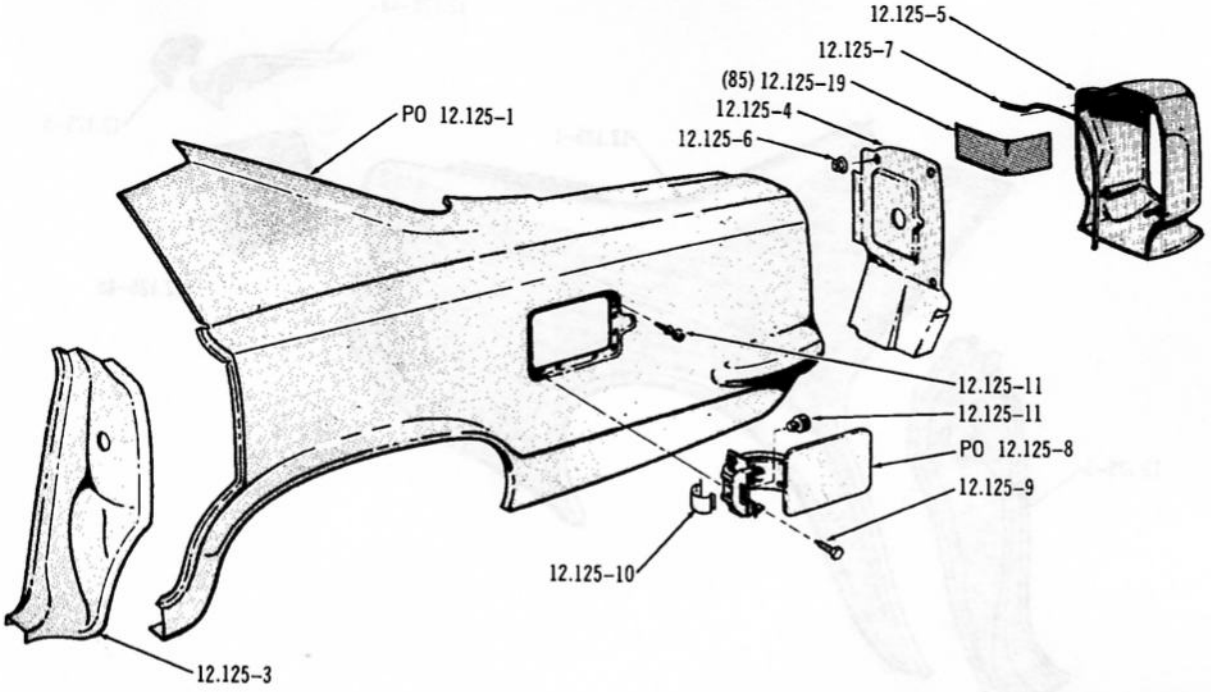

REAR QUARTER OUTER PANEL ... 1967/69 (15)(85)

2991

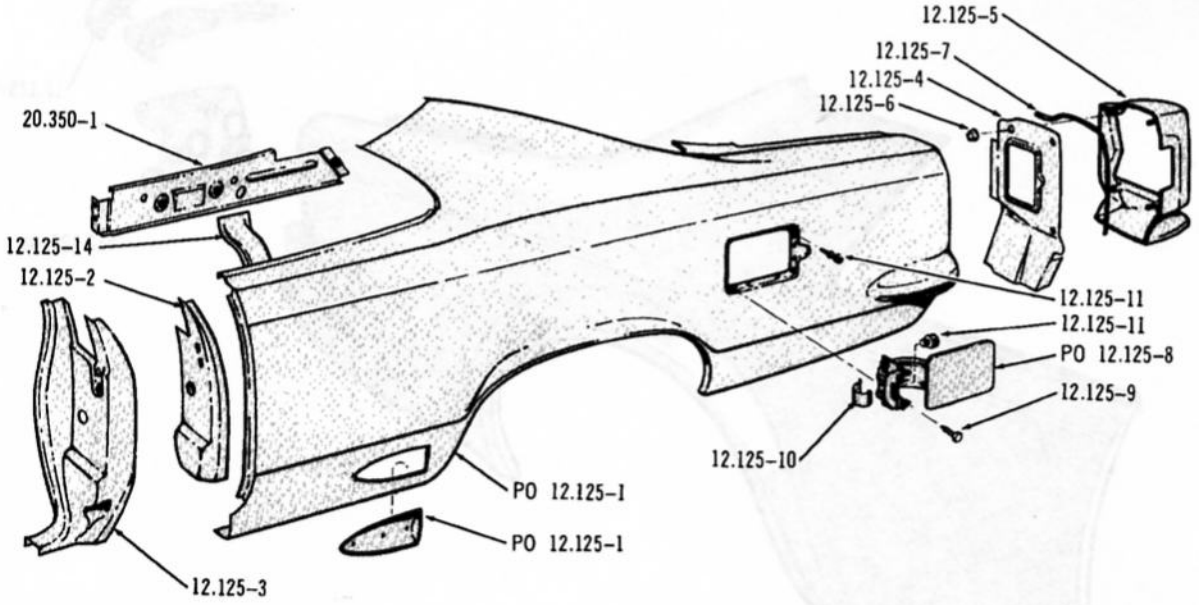

2999

REAR QUARTER OUTER PANEL ... 1967/69 (16)(19)(86)(89)

Printed in U.S.A.

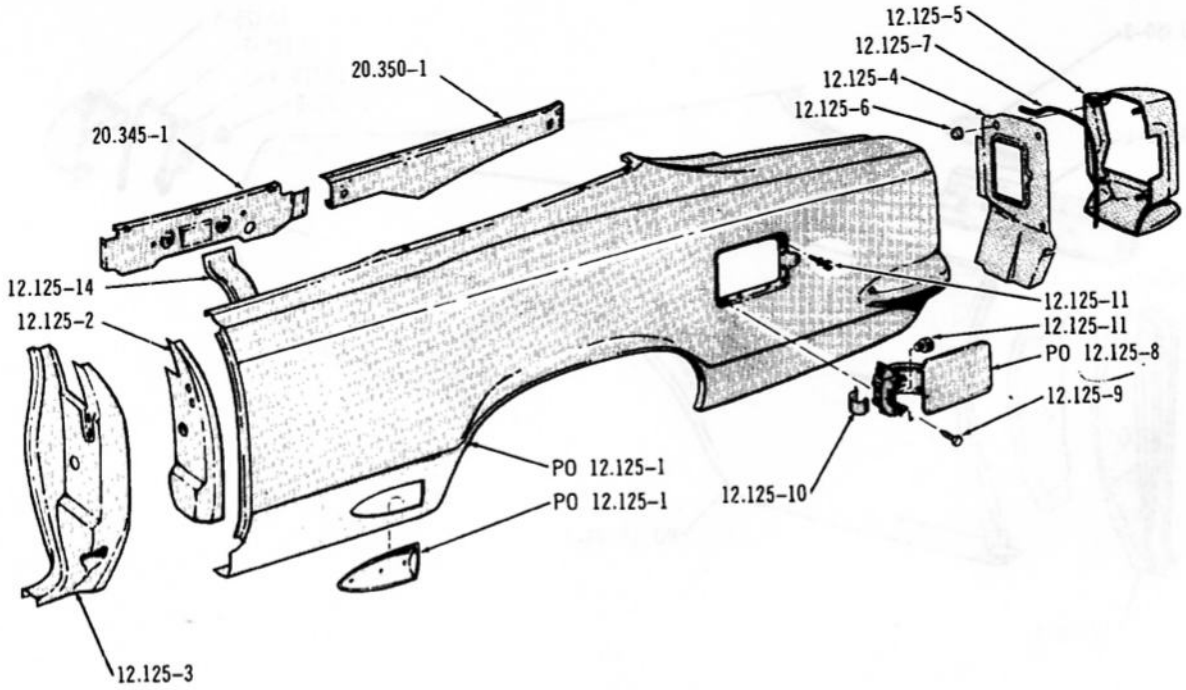

2992

REAR QUARTER OUTER PANEL ... 17, 87

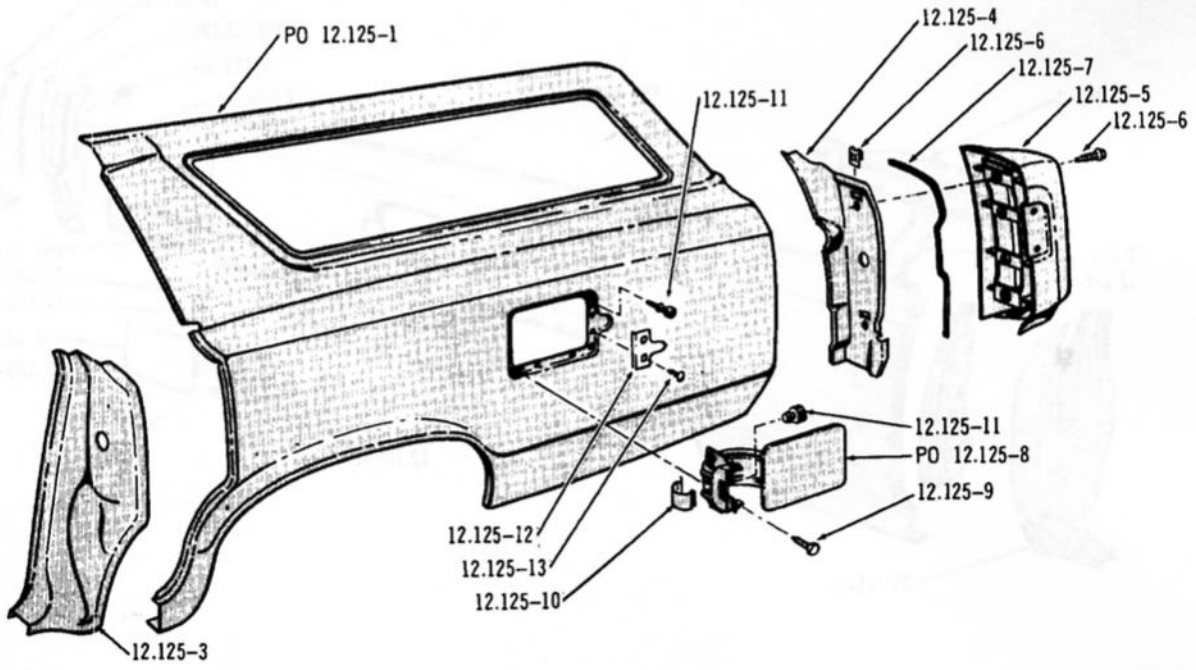

2990

REAR QUARTER OUTER PANEL ... 18, 88

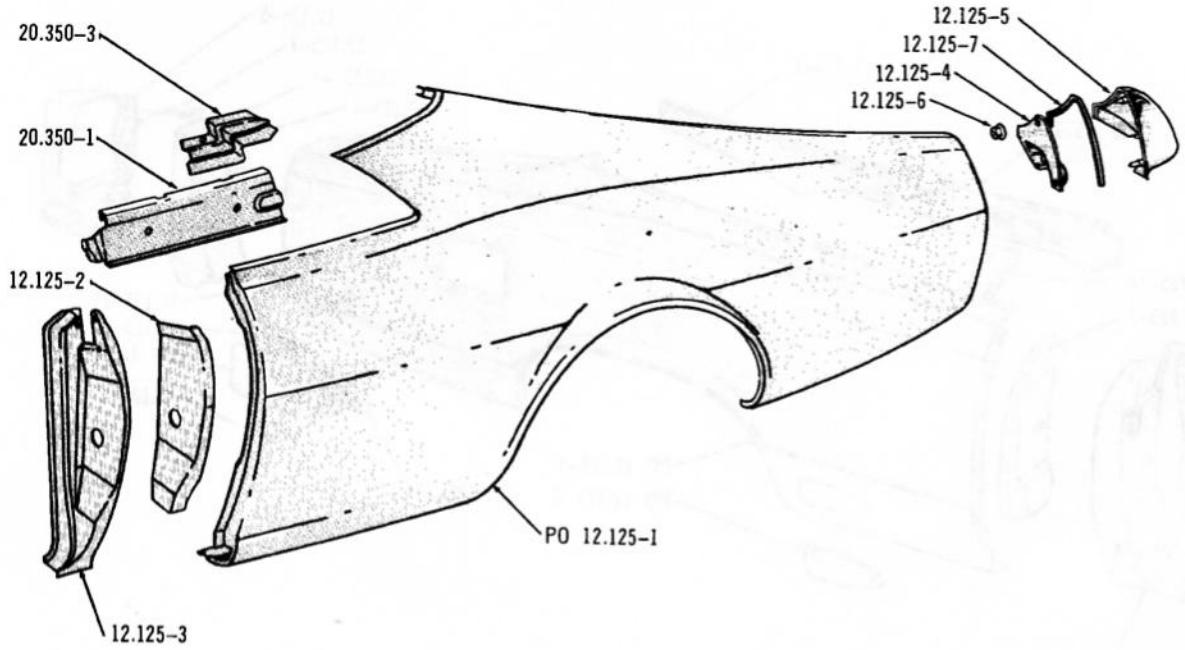

REAR QUARTER OUTER PANEL ... 1968/70 (30)(70) 3205

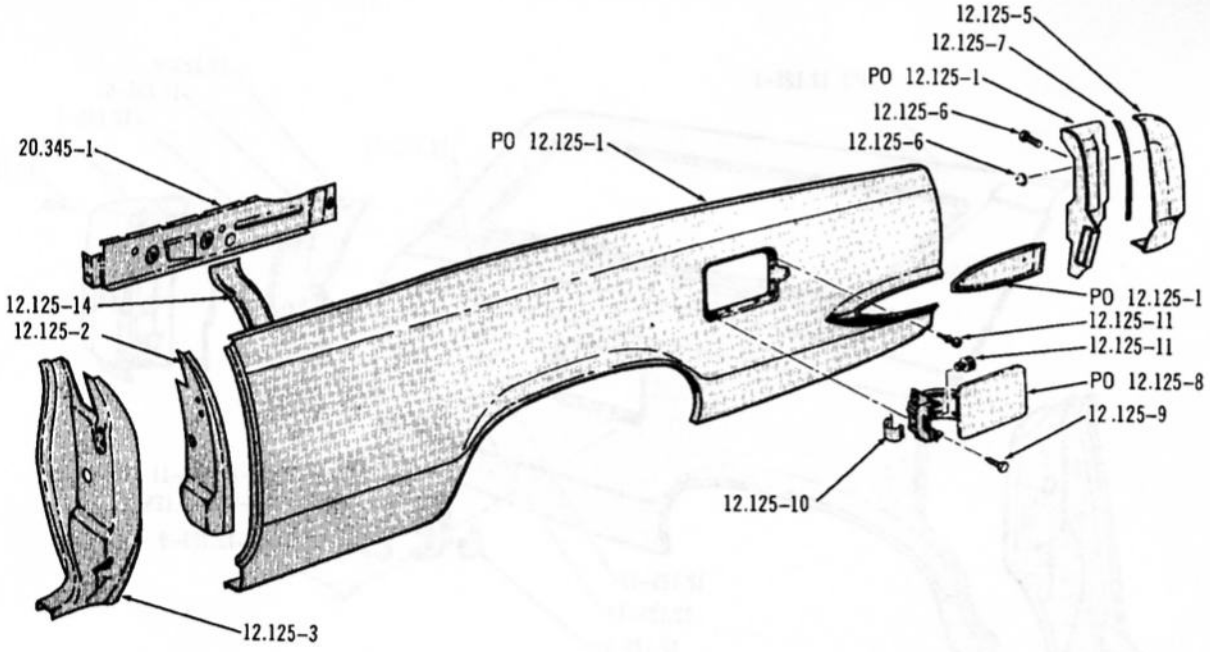

2994

REAR QUARTER OUTER PANEL ... 50

Printed in U.S.A.

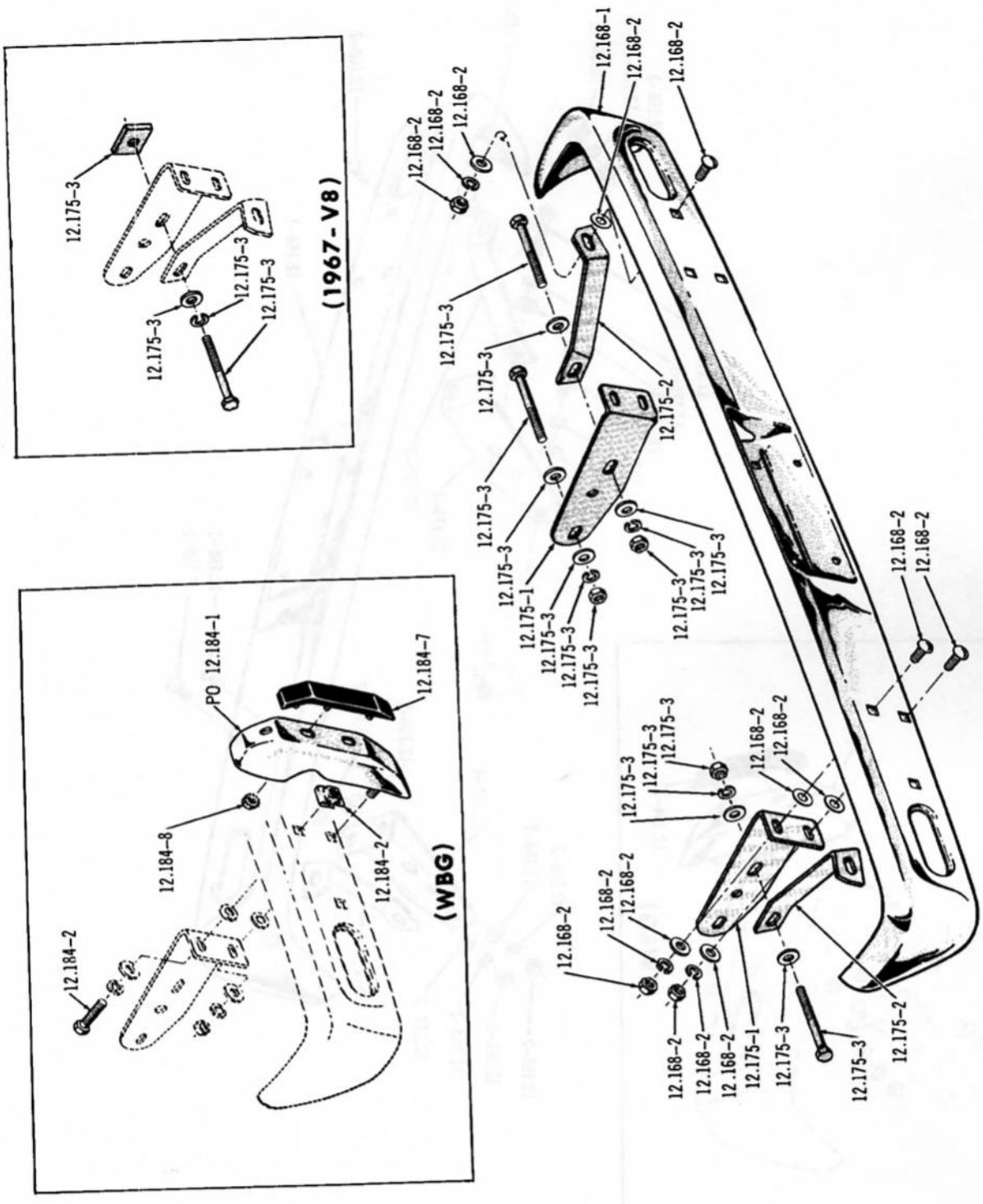

FRONT BUMPER ... 1967 (01), 1968 - Type 1 (01)

3423

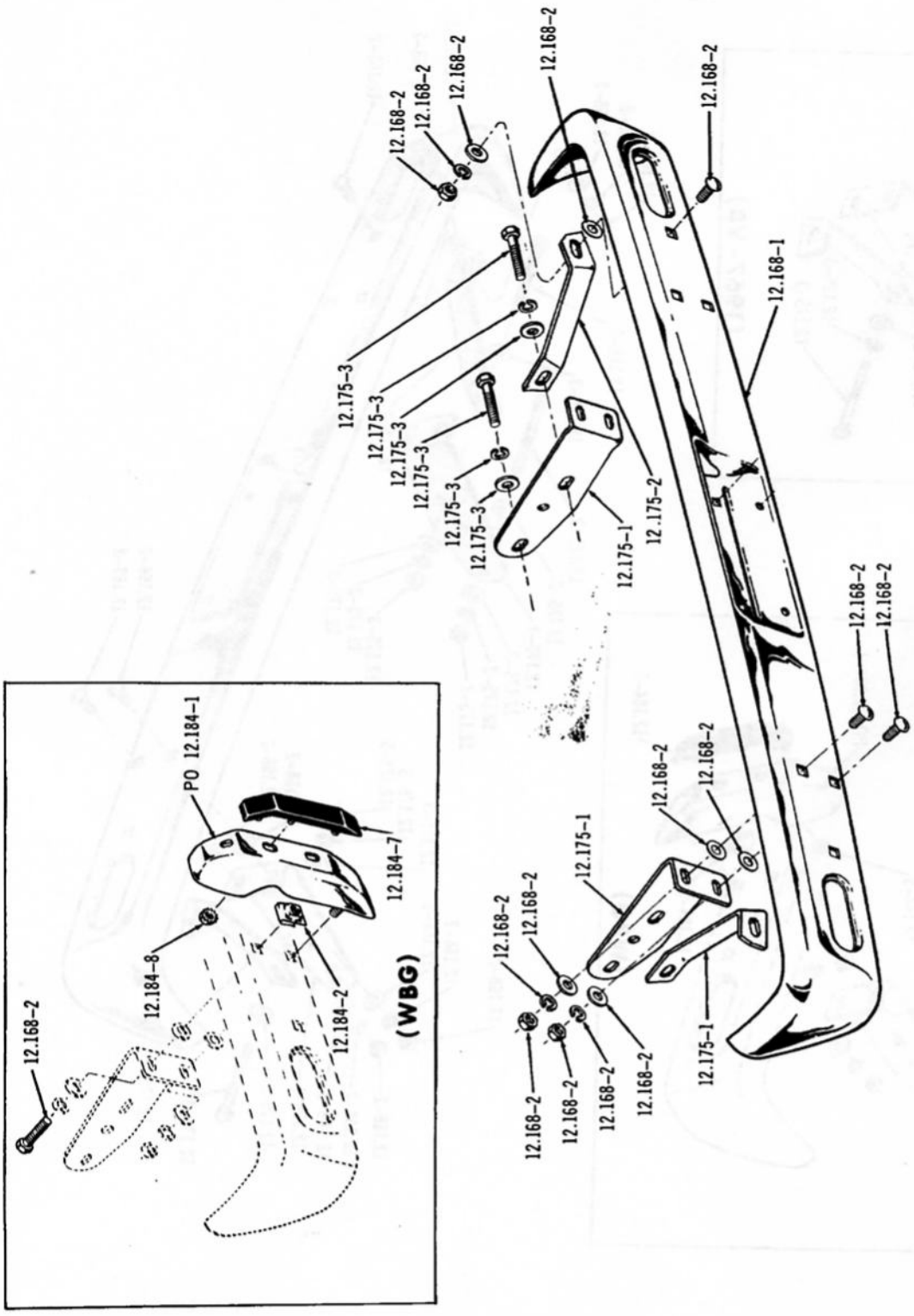

FRONT BUMPER ... 1968- Type 2 (01), 1969 (01)

3805

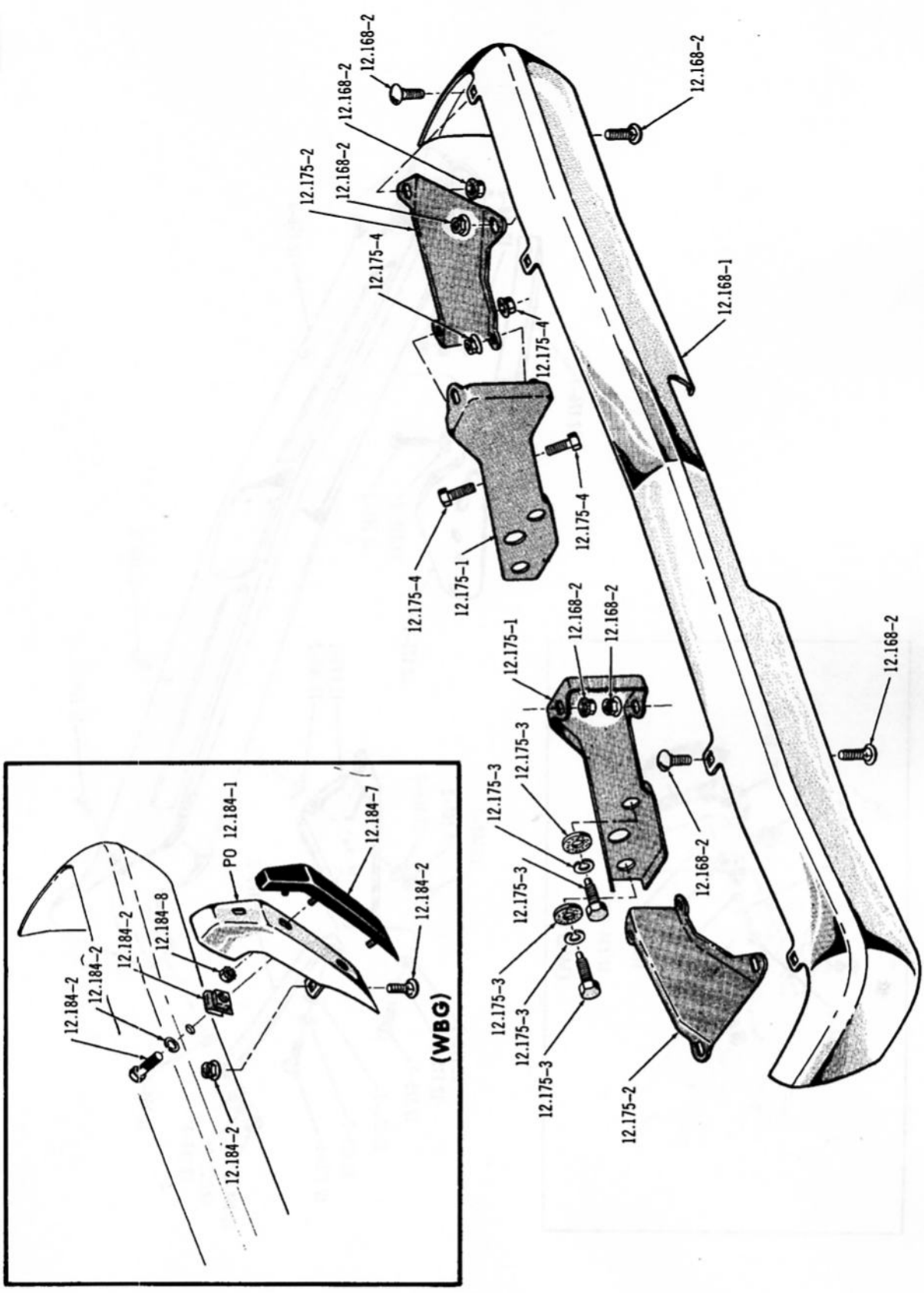

FRONT BUMPER ... 1970/ (01)(40)

3002

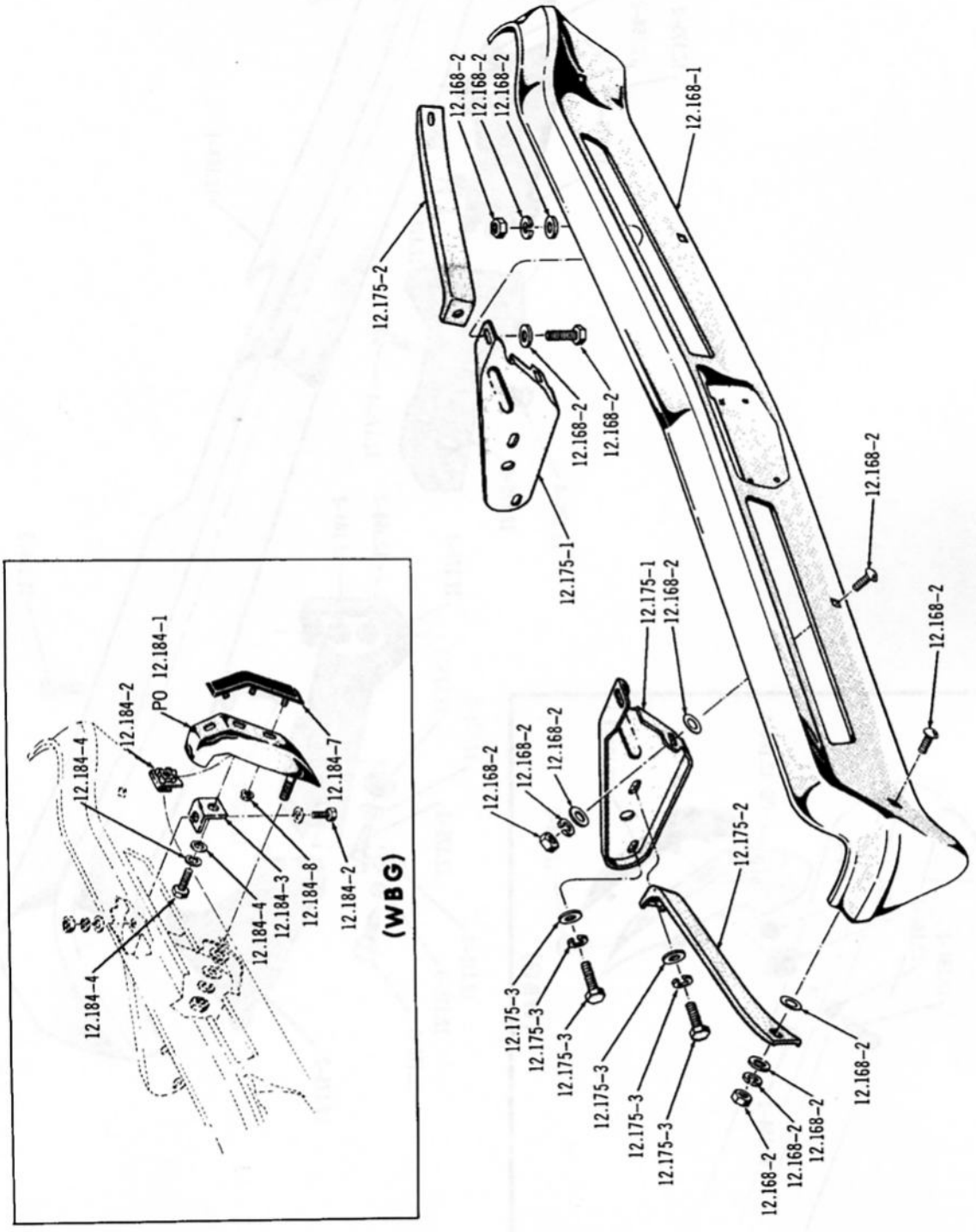

FRONT BUMPER ... 1967/70 (10)

4050

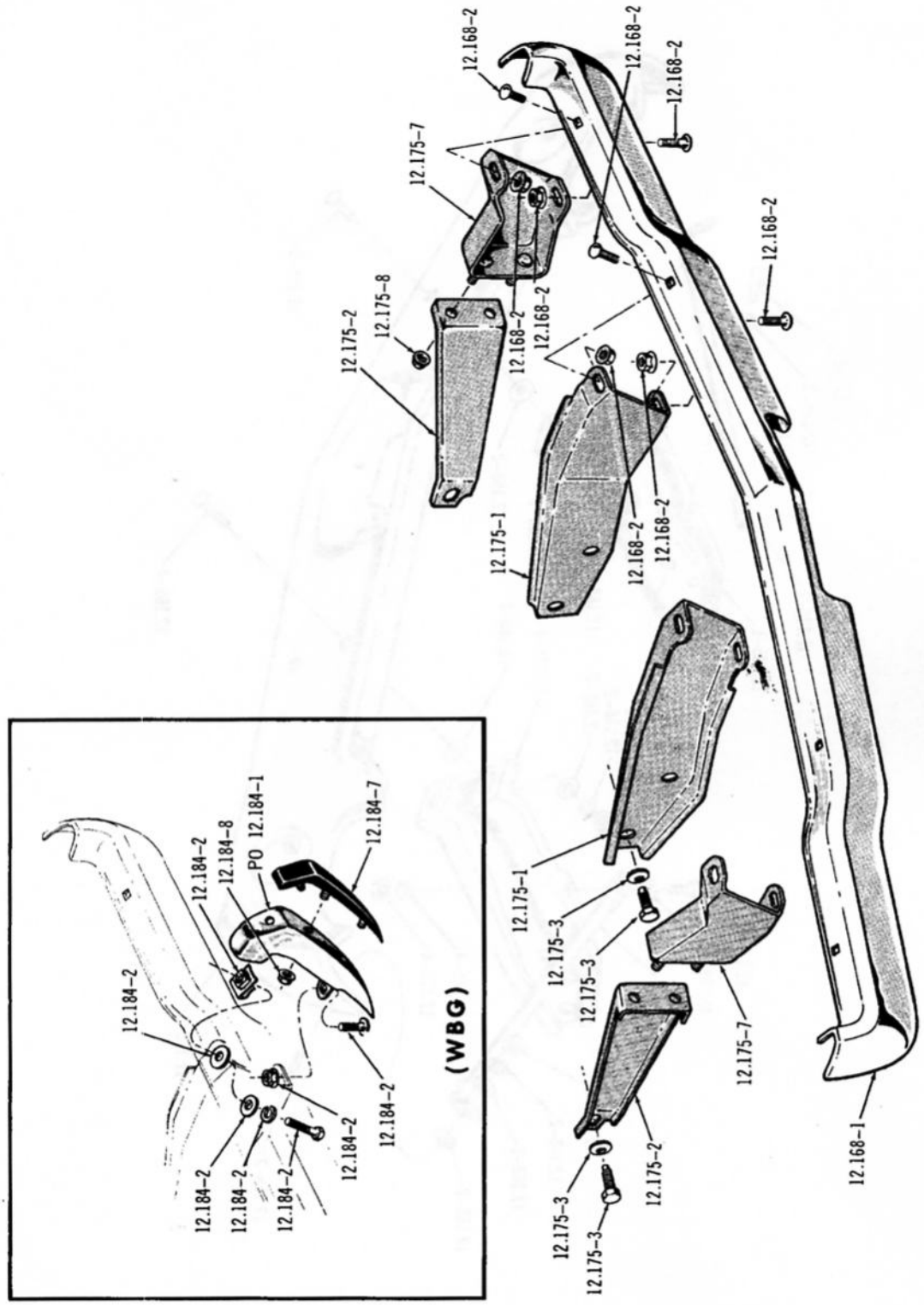

FRONT BUMPER ... 1971/ (10)

3202

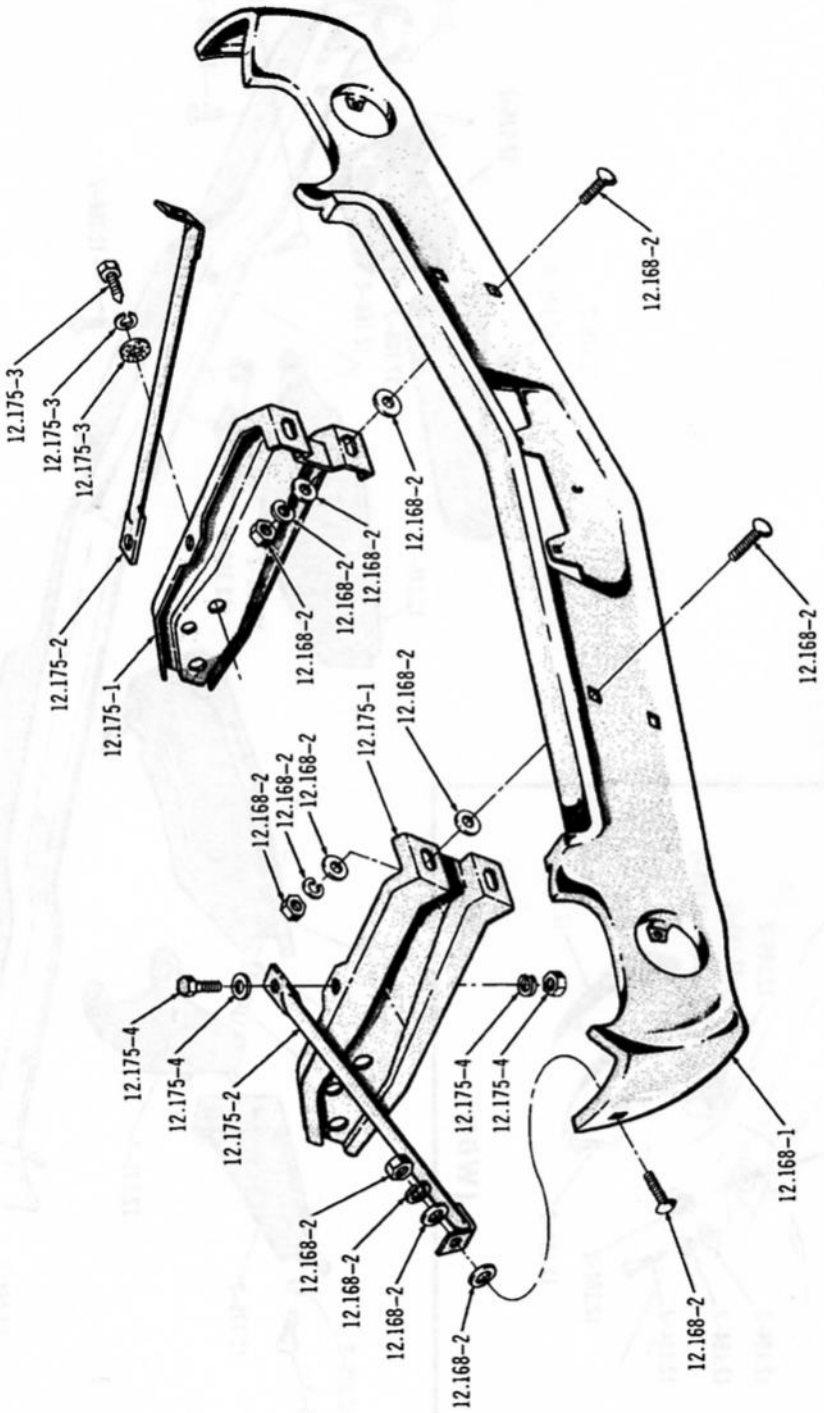

FRONT BUMPER ... 1968/69 (30)(70)

3801

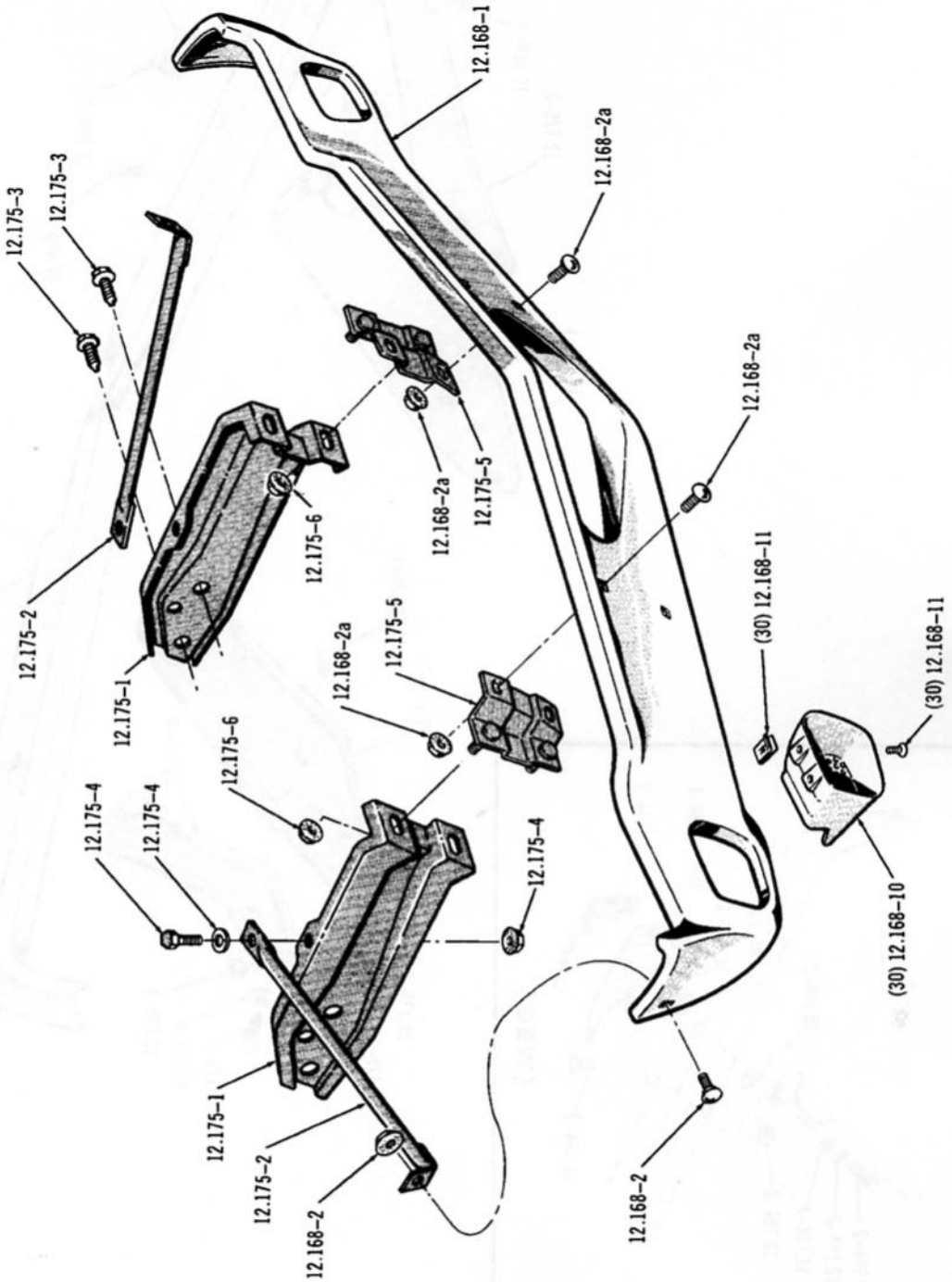

FRONT BUMPER ... 1970 (30)(70)

4053

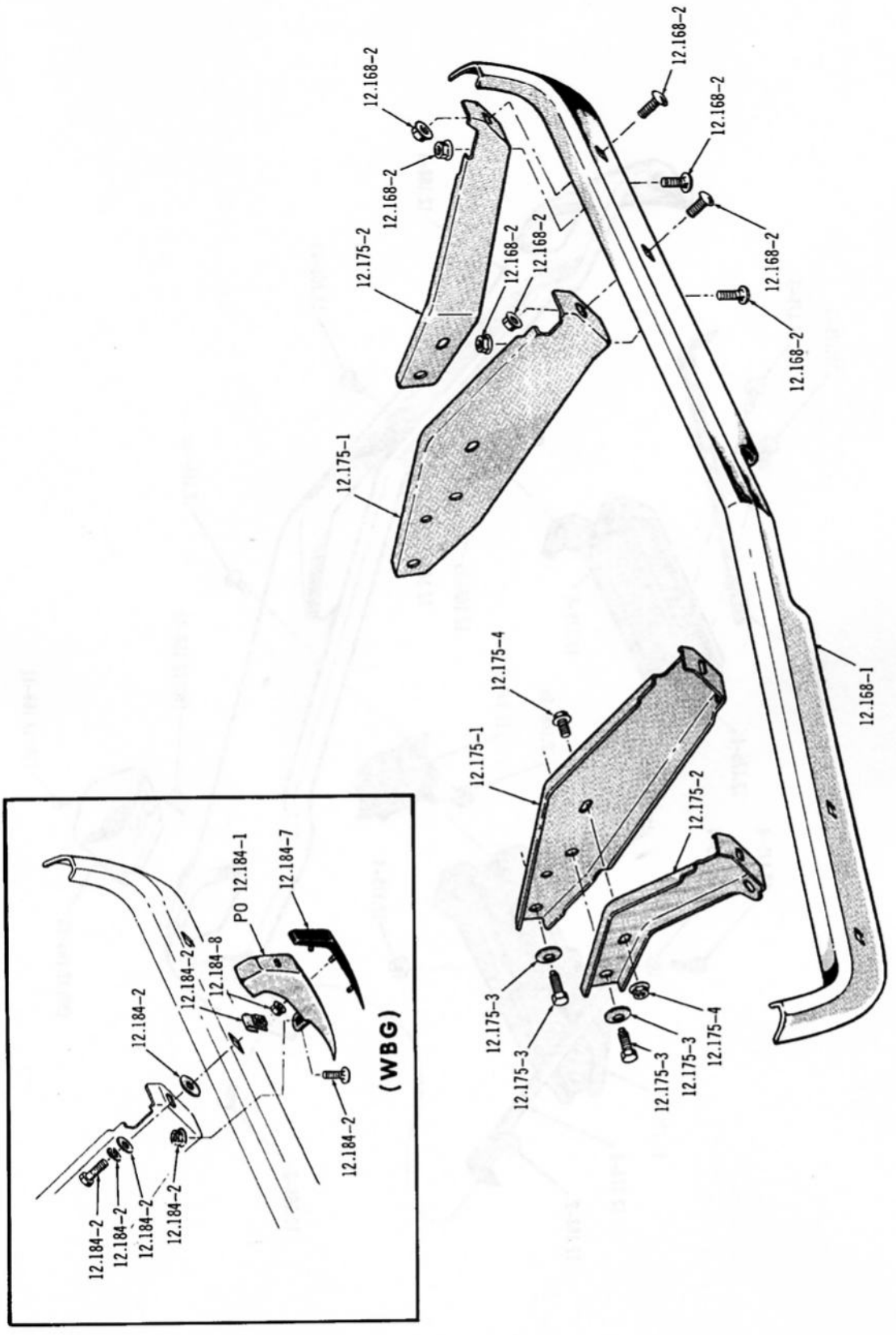

FRONT BUMPER ... 1971/ (70)

3050

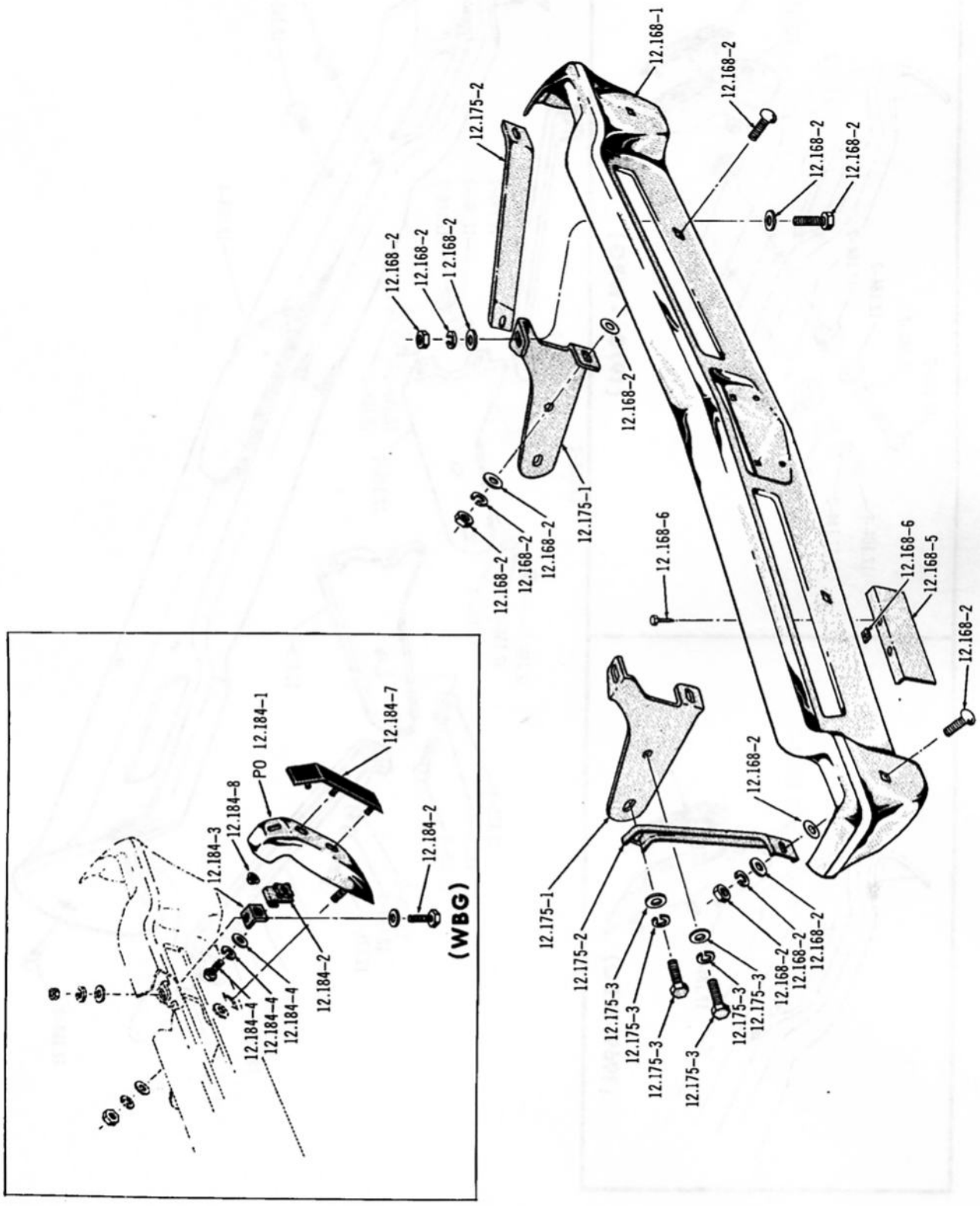

FRONT BUMPER ... 50, 1967/68 (80)

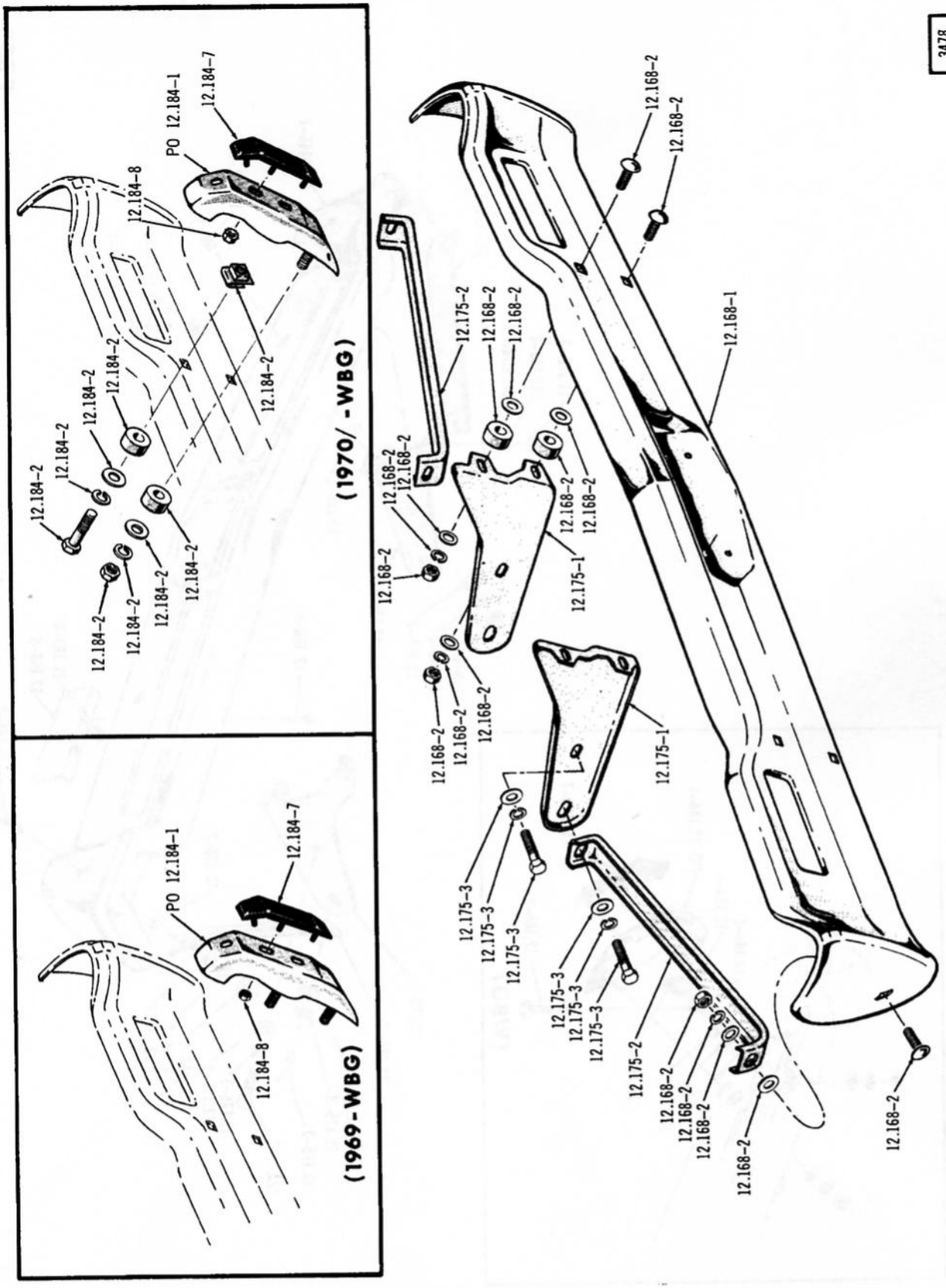

FRONT BUMPER ... 80 (1969/)

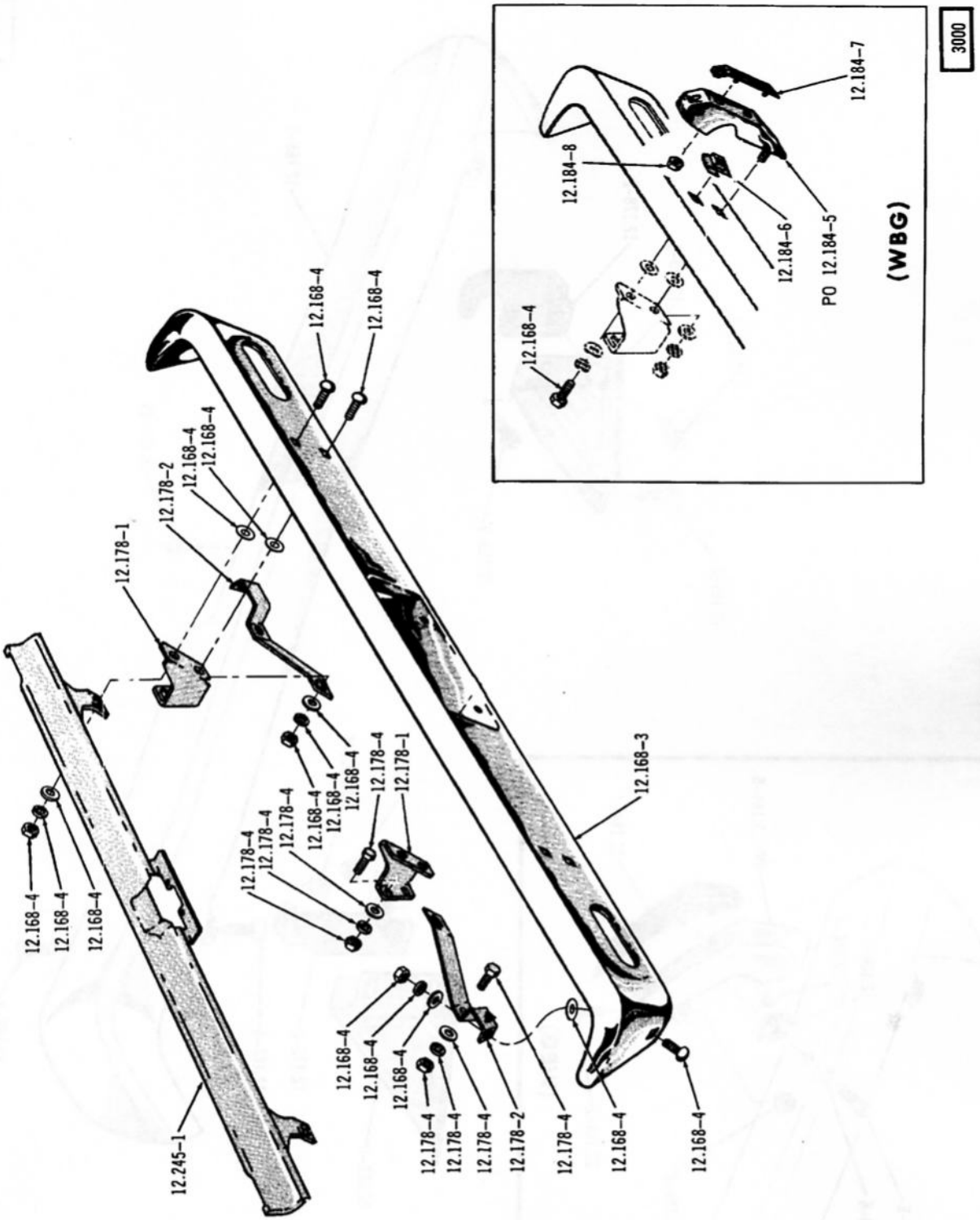

REAR BUMPER ... 1967/69 (01)

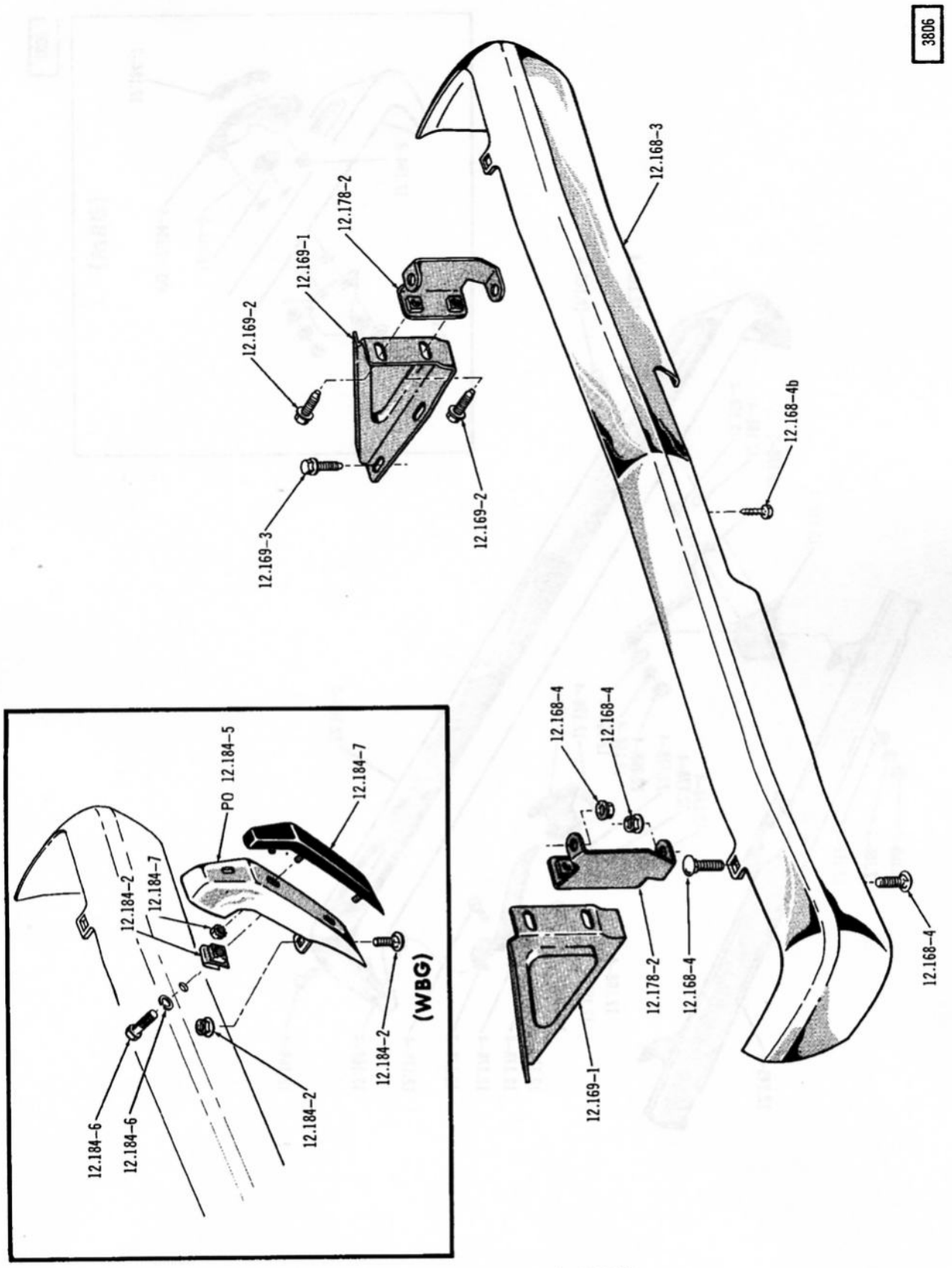

REAR BUMPER ... 1970/ (01)(40)

3003

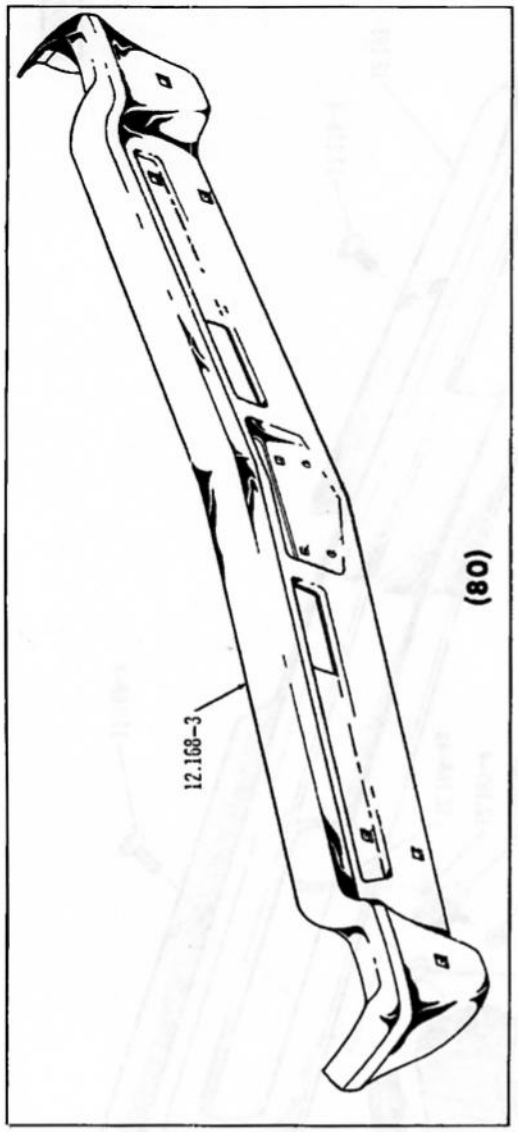

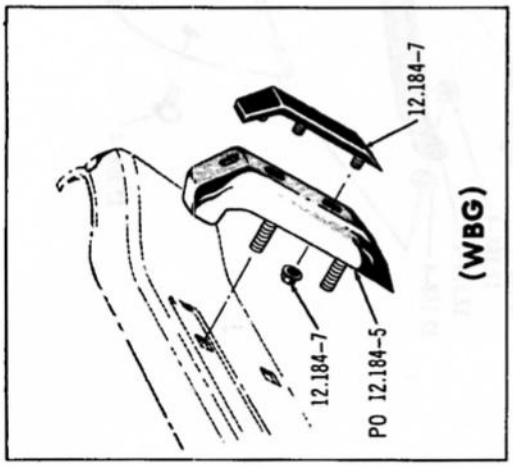

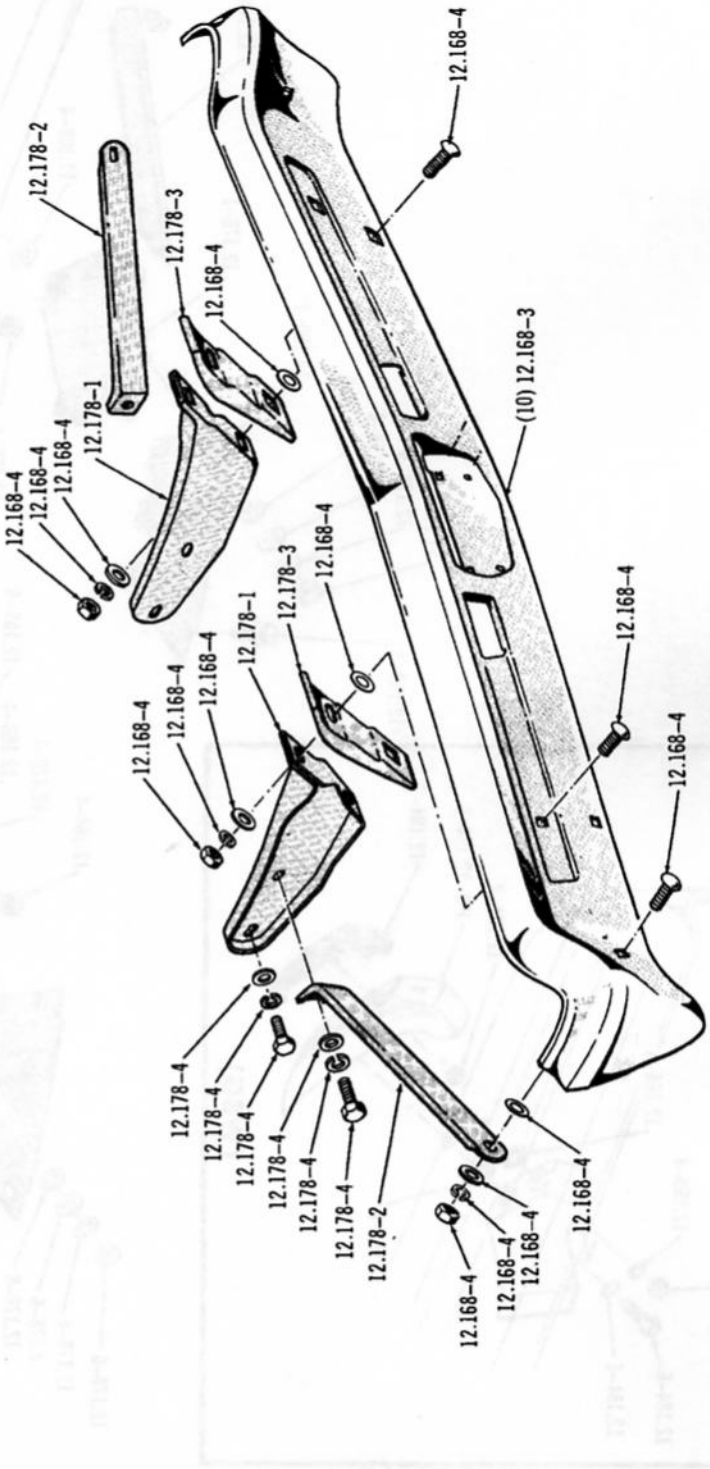

REAR BUMPER ... 1967/69 (10-E/18)(80-E/88)

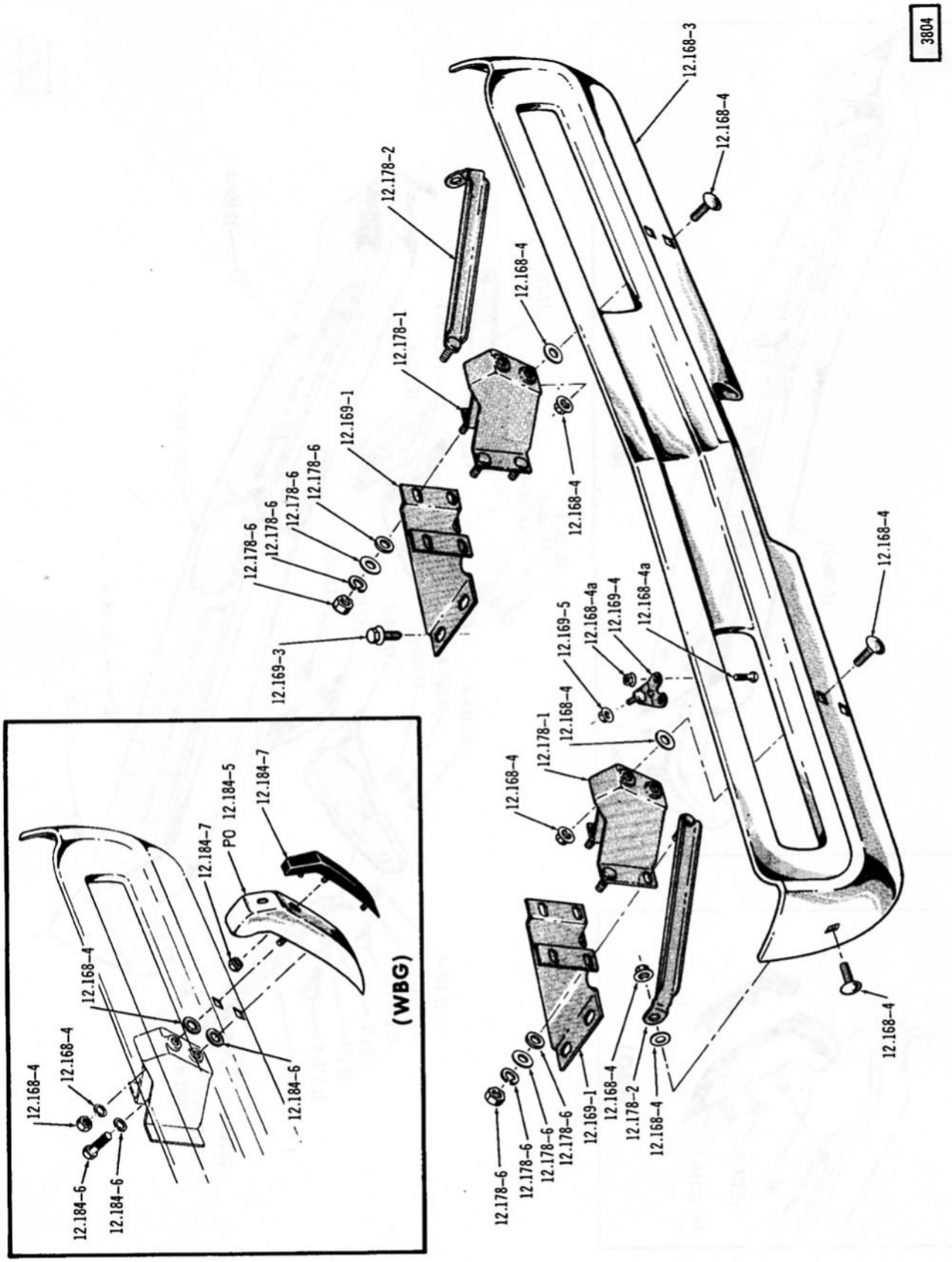

REAR BUMPER ... 1970/ (15)(19)(85)(89)

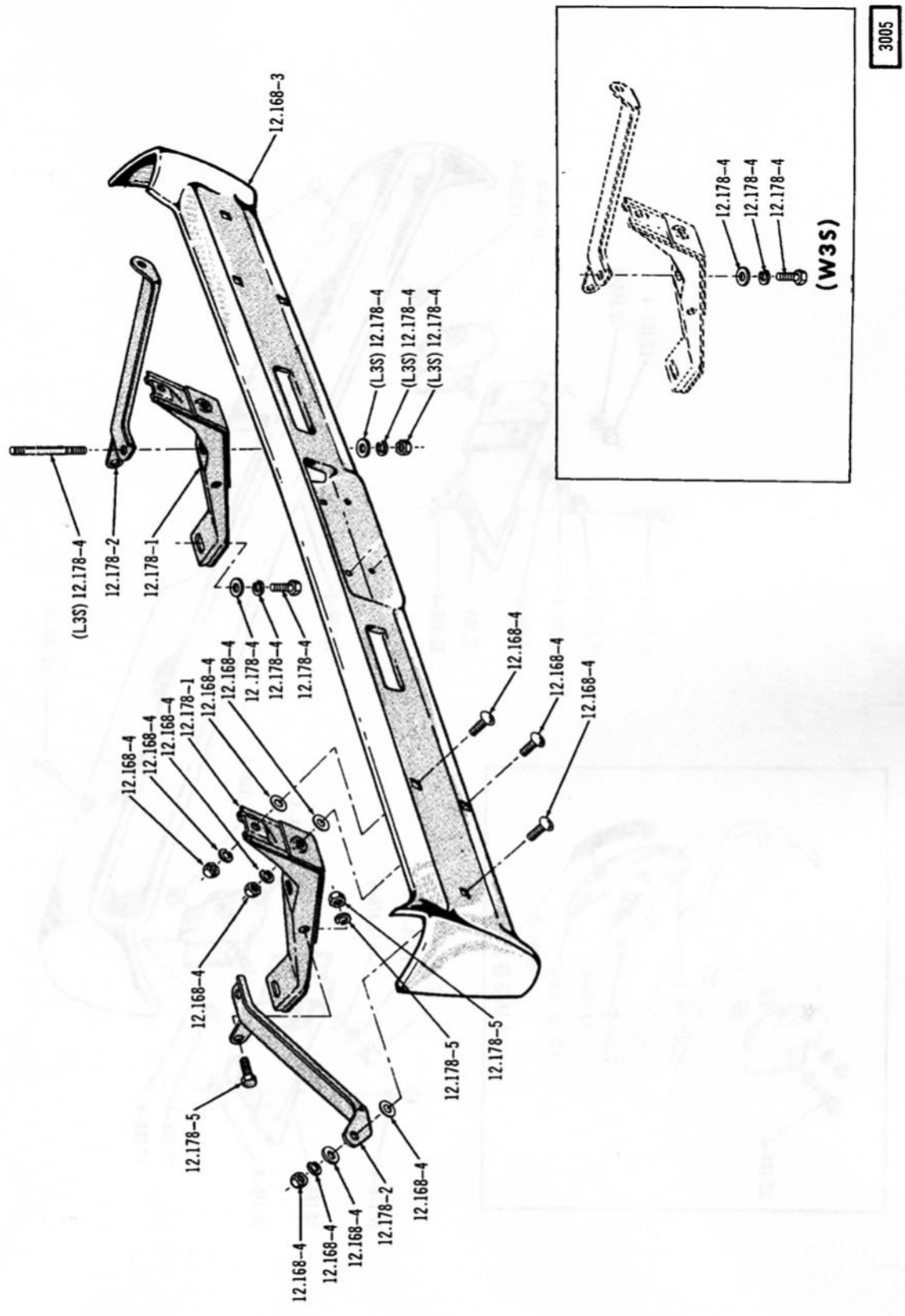

REAR BUMPER ... 18, 88

3199-A

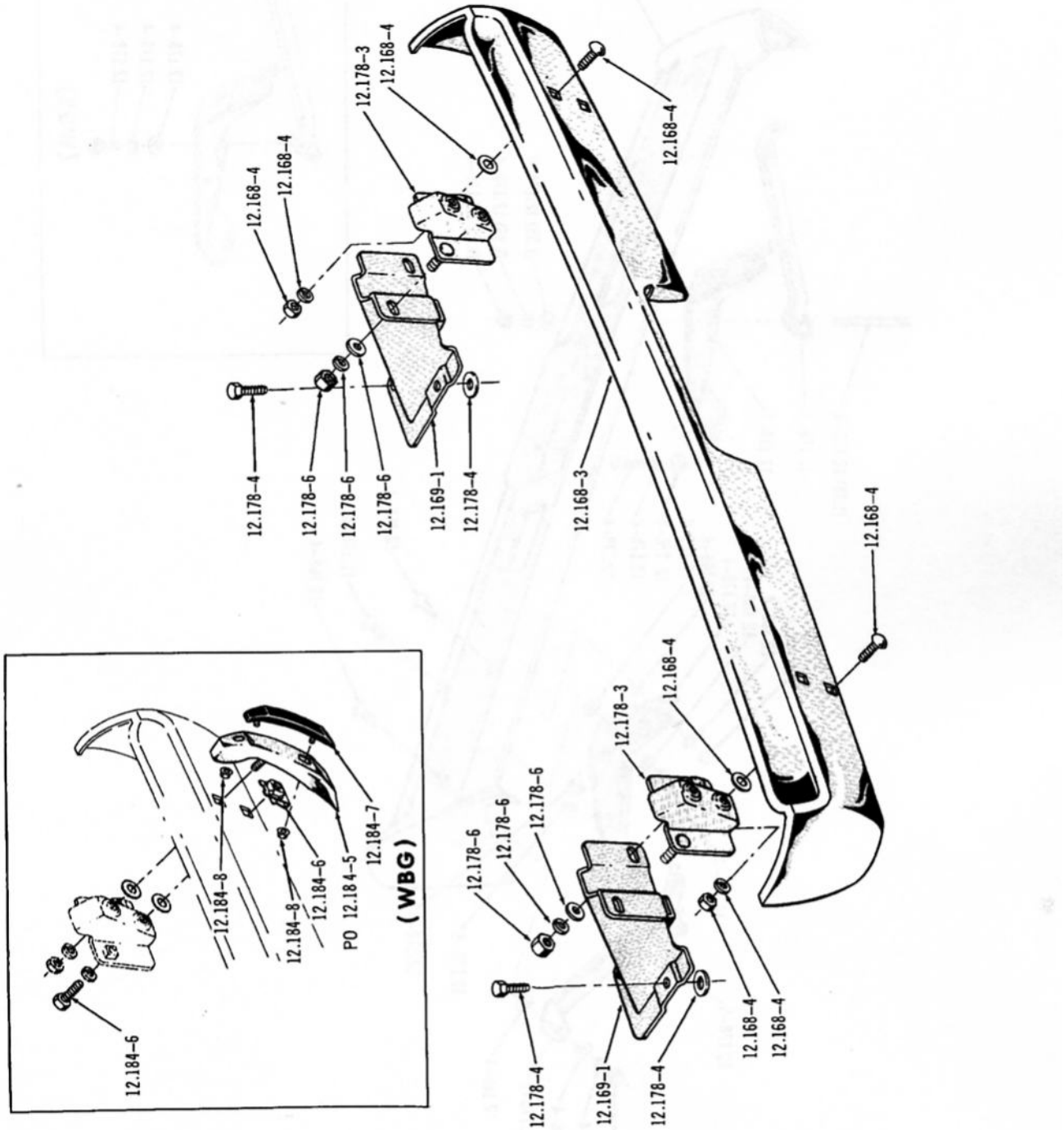

REAR BUMPER ... 30, 70

3004

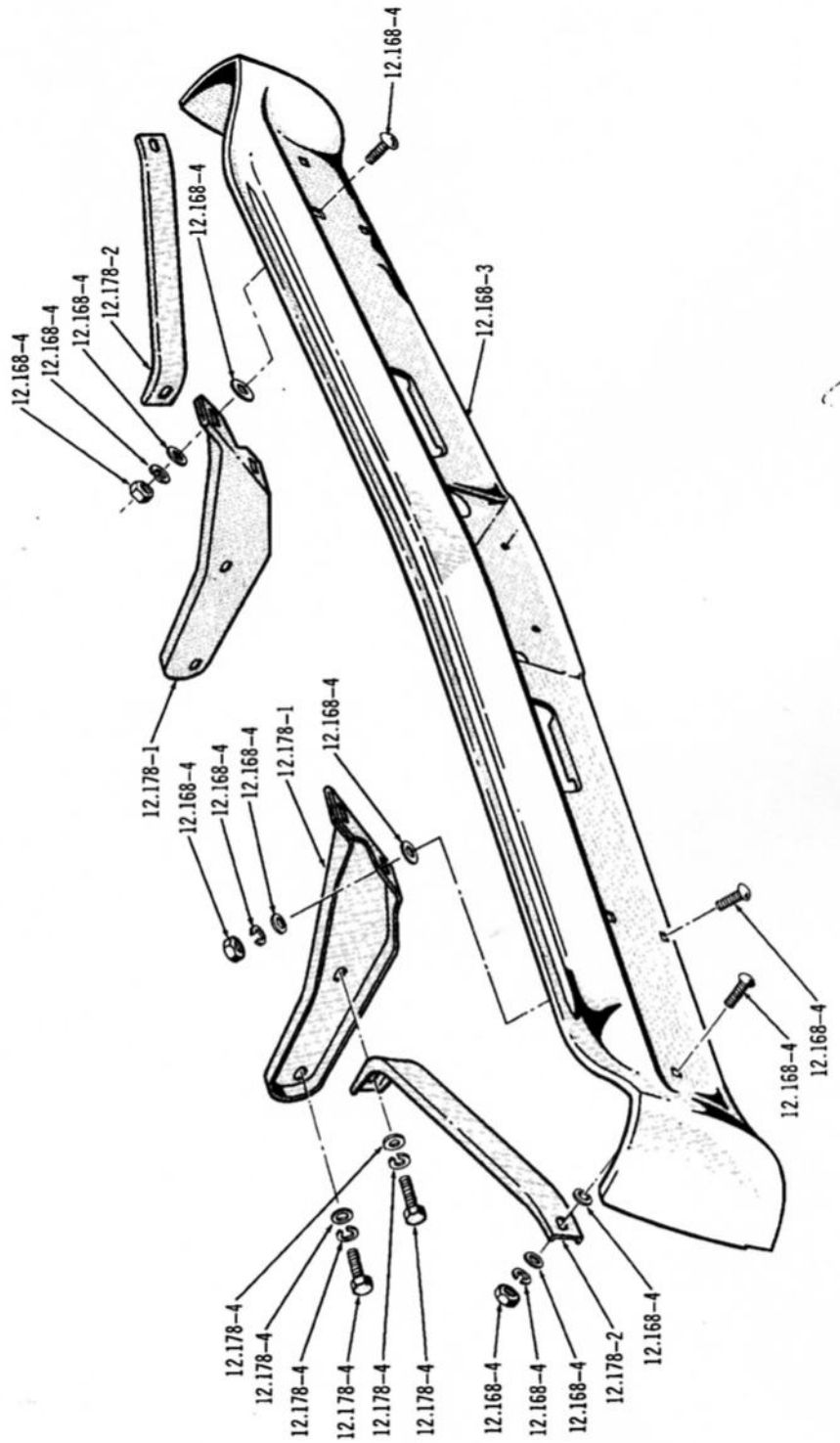

REAR BUMPER ... 50

GROUP NO. — DESCRIPTION — YEAR and MODEL		PAKS CODE	PRIMARY GROUP NO.	PER CAR	PART NO.	CODE
12.001–1 HOOD						
67/68	01 ..... *(Ref. Pr. List)*		.....	1	354 8887	MR
69	01		.....	1	630 3389	MR
70/	01		.....	1	630 4040	MR
67	10 ..... *(Use 448 5011)*		.....	1	448 4819	MR
68	10		.....	1	448 5050	MR
69	10		.....	1	448 6254	MR
70	10 (E/MACHINE)		.....	1	448 7590	MR
70	19 (MACHINE)		.....	1	448 8366	MR
71/	10		.....	1	448 8705	MR
68	30 ..... *(Ref. Pr. List)*		.....	1	448 5494	MR
69	30		.....	1	448 6910	MR
70	30		.....	1	448 7720	MR
70/	40		.....	1	448 8395	MR
67	50-80		.....	1	448 4816	MR
68	70 ..... *(Ref. Pr. List)*		.....	1	448 5266	MR
69	70		.....	1	448 6909	MR
70	70 (LCA)		.....	1	448 7718	MR
70	70 (WCA)		.....	1	448 7720	MR
71	70 (Except AMX-* 12-11)		.....	1	448 8622	MR
71	70 (Except AMX-* 12-12)		.....	1	812 0472	
72	70 (Except AMX)		.....	1	812 0472	
71	70 (AMX-LCAI-* 12-11)		.....	1	812 0024	MR
71	70 (AMX-LCAI-* 12-12)		.....	1	812 0475	
72	70 (AMX-LCAI)		.....	1	812 0475	
71	70 (AMX-WCAI-* 12-11)		.....	1	812 0025	MR
71	70 (AMX-WCAI-* 12-12)		.....	1	812 0476	
72	70 (AMX-WCAI)		.....	1	812 0476	
68	80		.....	1	448 5053	MR
69/71	80		.....	1	600 1144	MR
72	80		.....	1	812 0642	MR
12.001–2 INSULATION, Hood						
67/69	01 171		.....	1	358 3842	
70/	01-40		.....	1	363 5230	
67	10		.....	1	357 5646	
68/70	10		.....	1	360 8050	
71/	10		.....	1	360 9854	
68/69	30-70		.....	1	359 2524	
70	30-70 (LCAI)		.....	1	364 1182	
70	30-70 (WCAI)		.....	1	363 5743	
67	50-80		.....	1	357 5647	
71/	70 (LCAI)		.....	1	365 0436	
71/	70 (WCAI)		.....	1	365 0932	
68	80		.....	1	360 8051	
69/	80		.....	1	360 8537	
12.001–3 ATTACHING PARTS, Insulation To Hood						
FASTENER	70/ 01-40		.....	15	400 1752	
FASTENER	67/ 10-30-50-70-80		.....	AR	400 1752	
FASTENER	68/70 10		.....	2	400 3053	

Printed in U.S.A.

HOOD - FENDERS - BUMPERS

12.001–4 BUMPER, Hood (Stationary)

67	01	.....	2	351 5198
68/69	01	.....	2	359 2528
70/	01–40	.....	2	360 3811
67/70	10	.....	2	351 5198
71/	10	.....	4	360 3811
67/	30–50–70	.....	2	351 5199
67/68	80	.....	2	351 5199
69/	80	.....	4	360 3811

12.001–5 BUMPER, Hood Adjustable

67/		.....	AR	400 0256

12.001–6 ATTACHING PARTS, Bumper To Fender

SCREW, Machine	67/	.....	.....	AR	400 0476
NUT, Hexagon	67/	.....	.....	AR	400 0566

12.001–7 BRACKET, Hood Bumper Mounting

67/69	01	.....	2	350 1173

12.001–8 SEAL, Hood Inner Panel

68/70	30–70 (WAC)	.....	1	360 0394

12.001–9 ATTACHING PARTS, Seal To Inner Panel

CLIP	68/70	30–70 (WAC)	.....	7	400 0085

12.001–10 SCOOP, Hood Air

69	09 (SC/RAMBLER)(Functional)	.....	1	363 5758
70	19 (MACHINE)(Functional)	.....	1	360 9624
71	06 (Functional)	.....	1	363 1666
69	(Left) 70 (Non-Functional) ***(Use 361 4635)***	.....	1	361 6955
69	(Right) 70 (Non-Functional) ***(Use 361 4634)***	.....	1	361 6954

12.001–11 ATTACHING PARTS, Scoop To Hood (Non-Functional Scoop)

SCREW, Tapping	69	70 (3/4" Long)	17.671	2	400 1037
SCREW, Tapping	69	70 (1/2" Long) ***(Use 812 0054)***	17.671	14	G274773
NUT, Hexagon	69	70	29.222	14	400 1458
NUT, Angle	69	70	.....	2	400 3660

12.001–11a ATTACHING PARTS, Scoop To Hood (Functional Scoop)

SCREW, Tapping	71	06 (SC–360)	.....	7	400 4042
NUT, Hexagon	70	19 (MACHINE)	23.074	8	400 3018

12.001–11b BAFFLE, Hood Air Scoop

70	(Left) 30 (LCAI)	.....	1	361 6217
70	(Left) 30–70 (WCAI)	.....	1	361 6413
70	(Right) 30 (LCAI)	.....	1	361 6216
70	(Right) 30–70 (WCAI)	.....	1	361 6412

Printed in U.S.A.

HOOD - FENDERS - BUMPERS

12.001–11c ATTACHING PARTS, Baffle To Hood

NUT, Speed	70	30-70		17.428	6	320 9552
CLIP, Tubulator	70	30-70		23.006	2	400 1335

12.001–11d SCREEN, Hood Air Scoop Baffle

70	30 (LCAI)	.....	1	361 6268

12.001–12 DUCT, Hood Air Scoop Front

70	30-70 (WCAI)	.....	1	319 8381

12.001–12a ATTACHING PARTS, Front Duct To Hood Inner Panel

SCREW, Tapping	70	30-70 (WCA1)	***(Use 812 0054)***	17.671	2	G274773
CLIP (Metal)	70	30-70 (WCAI)		.....	2	319 8372

12.001–12b DAMPER, Hood Air Scoop

69	09 (SC/RAMBLER)	.....	1	319 8689
71	06 (SC-360)	.....	1	448 8335
70	19 (MACHINE)	.....	1	448 8368

12.001–12c COVER, Hood Air Scoop Damper

70	19 (MACHINE)	.....	1	319 9743

12.001–13 ATTACHING PARTS, Cover To Hood Inner Panel

SCREW, Tapping	70	19 (MACHINE)		17.660	11	G162003 NA
SCREW, Tapping	71	06 (SC-360)		15.320	6	400 1701
STUD	70	19 (MACHINE)		3.700	8	400 3753

12.001–14 DUCT, Hood Air Scoop Rear

70	30-70 (WCAI)	.....	1	319 8378

12.001–15 ATTACHING PARTS, Rear Duct To Hood

SCREW, Tapping	70	30-70 (WCAI)		13.017	1	400 0616

12.001–16 DOOR, Hood Air Scoop Rear Duct

70	30-70 (WCAI)	.....	1	319 8374

12.001–17 RETAINER, Hood Air Scoop Rear Duct Door

70	30-70 (WCAI)	.....	1	319 8375

12.001–18 CONTROL, Hood Air Scoop Damper

69	09 (SC/RAMBLER)	.....	1	319 8690
71	06 (SC-360)	.....	1	319 9613
70	19 (MACHINE)	.....	1	319 9613
70	30-70 (WCAI)	.....	1	319 8370

12.001–18a BRACKET, Hood Air Scoop Rear Duct Mounting Reinforcement

70	30-70 (WCAI)	.....	1	321 2322

Printed in U.S.A.

HOOD - FENDERS - BUMPERS

12.001–19 ATTACHING PARTS, Damper Control Bracket To Rear Air Duct

BOLT, Machine	70	30-70 (WCAI)	17.626	2	G443874	NA
WASHER, Plain	70	30-70 (WCAI)	17.814	2	G120391	NA
NUT, Hexagon	70	30-70 (WCAI)	17.412	2	G271166	NA

12.001–20 ATTACHING PARTS, Damper Control Motor Arm To Door

PIN, Clevis	70	30-70 (WCAI)	17.474	1	G121547	NA
PIN, Cotter	70	30-70 (WCAI)	17.460	1	G456171	NA

12.001–20a ATTACHING PARTS, Damper Control To Damper

RIVET	70	19 (MACHINE)	.....	2	400 3116	NA

12.001–21 HOSE, Hood Air Scoop Damper Control To Manifold (Bulk)

69	09 (SC/RAMBLER)	13.020	AR	320 2247	
71	06 (SC-360)	5.260	AR	320 3440	
70	19 (MACHINE)	5.260	AR	320 3440	
70/	30-70 (WCAI)	5.260	AR	320 3440	

12.001–21a NIPPLE, Hood Air Scoop Damper Control Hose

69	09 (SC/RAMBLER)	.....	1	319 8692	
70	W4ST (WCAI-Used Less Decel Valve)	.....	1	319 3014	
71	01-10 (WST-WCAI)(W4ST-WCAI)	.....	1	319 3014	
71	70 (W4ST-WCAI-LAC)	.....	1	319 3014	
72	70 (V8-LAC-WCAI)	.....	1	319 3014	

12.001–21b TEE, Hood Air Scoop Damper Control

70	W4ST (WCAI-Used With Decel Valve)	.....	1	319 8373	
70/71	WAT (WCAI)	.....	1	319 8373	
72	70 (V8-LAC-WCAI)	3.050	1	321 0891	
72	70 (V8-WAC-WCAI)	.....	1	321 6516	

12.001–21c ADAPTER, Manifold To Hood Air Scoop

70/71	W4ST (WCAI-Used With Decel Valve)	.....	1	319 8506	
70/71	WAT (WCAI)	.....	1	319 8506	

12.001–22 STUD, Hood Tie Down

69	09 (SC/RAMBLER)	.....	2	363 5759	

12.001–23 PIN, Hood Tie Down (Incl. Cable)

69	09 (SC/RAMBLER)	.....	2	363 5760	

12.001–24 PLATE, Hood Tie Down

69	09 (SC/RAMBLER)	.....	2	363 5761	

12.001–25 NUT, Hood Tie Down Stud

69	09 (SC/RAMBLER)	.....	4	363 5767	

HOOD - FENDERS - BUMPERS

12.022–1 LACING, Cowl (Inner On 67 10-50-80 Models Only)

67/69	01	.....	1	352 1054
70/	01-40	.....	1	363 1058
69/70	10	.....	1	360 0740
71/	10	.....	1	363 3070
67	10-50-80	.....	1	357 5964
68	10-80	.....	1	360 0740
68/	30-70	.....	1	360 0906
69/	80	.....	1	361 4353

12.022–2 ATTACHING PARTS, Inner Lacing To Cowl

SCREW, Tapping	68/70	10	17.671	5	G274773
SCREW, Tapping	68	80	17.671	5	G274773
CLIP	67	10-50-80	.....	AR	400 0085
FASTENER	67/69	01	23.012	6	400 1839
FASTENER	70/	01-40	23.012	11	400 2284
FASTENER	71/	10	23.012	10	400 2284

12.022–3 LACING, Cowl Outer

67	10-50-80	.....	2	357 5966

12.022–4 ATTACHING PARTS, Outer Lacing To Cowl

CLIP	67	10-50-80	.....	4	400 0085

12.022–5 RETAINER, Cowl Lacing

68/	30-70	.....	1	360 0907
69/71	80	.....	1	361 4357

12.022–6 ATTACHING PARTS, Retainer To Cowl

SCREW, Tapping	68/70	30-70	17.660	6	G161895
SCREW, Tapping	71/	70	.....	4	G9414722 NA
SCREW, Tapping	69/	80	17.671	5	G274773

12.035–1 HINGE, Hood (Incl. Spring)

67/69	(Left) 01	164	.....	1	355 2475
70	(Left) 01-40	*(Use 812 0095)*	.....	1	363 1041
71/	(Left) 01-40		.....	1	812 0095
67	(Left) 10	165	.....	1	357 4503
68/70	(Left) 10	165	.....	1	360 0551
71/	(Left) 10		.....	1	360 9683
68/69	(Left) 30-70	*(Use 363 5235)*	.....	1	360 0261
70/	(Left) 30-70		.....	1	363 5235
67	(Left) 50-80	*(Use 357 4503)*	.....	1	357 4535
68	(Left) 80	165	.....	1	360 0553
69/	(Left) 80	343	.....	1	361 4021
67/69	(Right) 01	164	.....	1	355 2474
70	(Right) 01-40	*(Use 812 0094)*	.....	1	363 1040
71/	(Right) 01-40		.....	1	812 0094
67	(Right) 10	165	.....	1	357 4502
68/70	(Right) 10	165	.....	1	360 0550
71/	(Right) 10		.....	1	360 9682
68/69	(Right) 30-70	*(Use 363 5234)*	.....	1	360 0260
70/	(Right) 30-70		.....	1	363 5234
67	(Right) 50-80	*(Use 357 4502)*	.....	1	357 4534
68	(Right) 80	165	.....	1	360 0552
69/	(Right) 80	343	.....	1	361 4020

HOOD - FENDERS - BUMPERS

12.035–2 ATTACHING PARTS, Hinge To Hood

SCREW, Machine	67/68	01	17.629	4	G9412076 NA
SCREW, Machine	69	01	12.060	4	400 3872
WASHER, Lock	68/69	30-70	17.820	4	G120382 NA
NUT, Hexagon	70/	01-40	10.260	4	400 3909
NUT, Hexagon	67	10-50-80	.....	4	400 0596
NUT, Hexagon	68	10-50-80	.....	4	400 1845
NUT, Hexagon	69	10	.....	4	400 1845
NUT, Hexagon	70	10	12.060	4	400 3062
NUT, Hexagon	71/	10	.....	4	400 2256
NUT, Hexagon	68/69	30-70	17.406	4	G120369 NA
NUT, Hexagon	70	30-70	1.010	4	400 3869
NUT, Hexagon	71	70 (3/8-24)	1.010	4	400 3869
NUT, Hexagon	71	70 (3/8-16)	10.260	4	400 3909
NUT, Hexagon	72	70	10.260	4	400 3909
NUT, Hexagon	69/	80	.....	4	400 2256

12.035–3 ATTACHING PARTS, Hinge To Wheelhouse

SCREW, Machine	70/	01-40	23.015	6	400 2070
SCREW, Machine	67/68	10-50-80	23.020	2	400 0608
SCREW, Machine	69	10 (5/16-24)	23.020	2	400 0608
SCREW, Machine	69/70	10 (5/16-18)	12.068	2	400 3069
SCREW, Machine	71/	10	23.015	6	400 2070
WASHER, Plain	67/69	01-30-70	17.814	4	400 1107
WASHER, Plain	70	30-70	17.814	4	400 1107
WASHER, Lock	67/69	01-30-70	17.820	4	G120382 NA
NUT, Hexagon	67/68	01-30-70	17.406	4	G120369 NA
NUT, Hexagon	69	01-30-70	1.010	4	400 3869
NUT, Hexagon	70	30-70	1.010	4	400 3869
NUT, Hexagon	71	70 (3/8-24)	1.010	4	400 3869
NUT, Hexagon	71	70 (3/8-16)	10.260	4	400 3909
NUT, Hexagon	72	70	10.260	4	400 3909
NUT, Hexagon	69/	80	.....	4	400 2256

12.035–4 ATTACHING PARTS, Hinge To Cowl Panel

SCREW, Machine	67	10-50-80	23.020	2	400 0608
SCREW, Machine	68	10-80	29.131	2	400 1933
SCREW, Machine	69/	10	29.131	2	400 1933

12.035–5 SHIM, Hood Hinge To Hood

67/69	01	.....	AR	350 0184
67/69	10-80	.....	AR	347 2245
70	10	.....	AR	347 2245
71/	80	.....	AR	347 2245

12.035–6 SHIM, Hood Hinge To Cowl Panel

67	10	.....	2	357 5018
68	10-80	.....	2	360 8201

12.048 SPRING, Hood Hinge

67/69	01	164	.....	2	355 2476
70/	01-40		.....	2	363 1054

Printed in U.S.A.

67/68	10-50-80	165	.....	2	351 9939
69/70	10	165	.....	2	351 9939
71/	10		.....	2	363 3348
68/69	30-70	185	.....	2	360 0575
70/	30-70		.....	2	363 5232
69/	80		.....	2	361 6836

12.060-1 LOCK, Hood (Outside Release)

67/69	01	160	.....	1	358 3885
70/71	01	160	.....	1	363 1060
72	01-40-70 (Except AMX)		.....	1	365 7084
67/68	10-50-80	163	.....	1	357 5620
69/70	10	163	.....	1	357 5620
71	10		.....	1	360 9862
72	10		.....	1	365 7080
68/69	30		.....	1	362 4887
70	30		.....	1	363 1060
70	40		.....	1	363 1060
71	40 (* 12-13)		.....	1	363 1060
71	40 (* 12-14)		.....	1	365 7084
68	70		***(Use 362 3447)***	1	359 9190
69/70	70		.....	1	362 3447
71	70 (Except AMX)		.....	1	363 2360
71/	70 (AMX)		.....	1	363 1060
69/71	(Left) 80		.....	1	361 4223
69/71	(Right) 80		.....	1	361 4222

12.060-1a LOCK, Hood (Inside Release)

72	01-40-70 (Except AMX)		.....	1	365 7085
72	10		.....	1	365 7081
72	70 (AMX)		.....	1	365 7088
72	(Left) 80		.....	1	365 7241
72	(Right) 80		.....	1	365 7240

12.060-2 ATTACHING PARTS, Lock To Support

BOLT, Hexagon	67/68	01	23.020	3	400 0608
BOLT, Hexagon	70/	01-40	.....	3	400 3556
BOLT, Hexagon	69	01-10-80 (1-1/4" Long)	.....	AR	400 3556
BOLT, Hexagon	67/68	10	23.017	3	400 0659
BOLT, Hexagon	68	30-70	23.017	3	400 0659
SCREW, Hexagon	70/	01-40	.....	1	400 3872
SCREW, Hexagon	69	01-30-70 (7/8" Long)	.....	3	400 3872
SCREW, Hexagon	70/	10	12.068	4	400 3069
SCREW, Hexagon	70	30-70	.....	3	400 3872
SCREW, Hexagon	71/	70	.....	3	400 3872

12.060-3 ATTACHING PARTS, Lock To Baffle

BOLT, Hexagon	67/68	50-80	23.017	3	400 0659
SCREW, Hexagon	69/	80	.....	4	400 3069

12.060-3a SHIELD, Hood Lock Mechanism

72	80		.....	1	365 7580

HOOD - FENDERS - BUMPERS

12.060–3b ATTACHING PARTS, Hood Latch Shield To Left Hood Lock

SCREW	72	80	.....	2	G9419699	NA

12.060–3c COVER, Hood Latch Assembly (Left)

72	80	.....	1	365	7243

12.060–4 ROD, Hood Lock Release

69	80	.....	1	361	4227
70	80 (* 12-5)	.....	1	361	5777
70	80 (* 12-6)	.....	1	363	6634
71	80	.....	1	363	6634
72	80	.....	1	365	7096

12.060–5 ATTACHING PARTS, Rod To Lock

RETAINER	69/	80	.....	2	400	3560

12.060–5a ROD, Hood Lock Release Operating

70/71	01-40	.....	1	363	1062
70	30	.....	1	363	1652
71/	70 (AMX)	.....	1	363	1652
70	80 (* 12-5)	*(Ref. Pr. List)*	1	361	5780
70	80 (* 12-6)	.....	1	363	6632
71	80	.....	1	363	6632

12.060–5b ATTACHING PARTS, Operating Rod To Hood Lock

CLIP, Spring	70/71	01-30-40	23.055	1	400	2253
CLIP, Spring	71/	70 (AMX)	23.055	1	400	2253

12.060–5c ATTACHING PARTS, Operating Rod To Hood Lock Release Rod

CLIP, Spring	70	80 (* 12-5)	.....	1	400	3634
FASTENER, Push-On	70	80 (* 12-6)	13.071	1	400	0271
FASTENER, Push-On	71	80	13.071	1	400	0271

12.060–5d ATTACHING PARTS, Operating Rod To Bellcrank

CLIP, Spring	70	30	23.055	1	400	2252
CLIP, Spring	71/	70 (AMX)	23.055	1	400	2252

12.060–5e ATTACHING PARTS, Operating Rod To Radiator Grille Bracket

FASTENER, Cable	70/71	80 (Nylon)	3.166	1	400	0713

12.060–5f HANDLE, Hood Lock Operating Rod

70	30	.....	1	363	1653
71/	70 (AMX)	.....	1	364	6519

12.060–5g ATTACHING PARTS, Handle To Bellcrank

CLIP, Spring	70	30	23.055	1	400	2253
CLIP, Spring	71/	70 (AMX)	23.055	1	400	2253

Printed in U.S.A.

HOOD - FENDERS - BUMPERS

12.060–5h BUMPER, Hood Lock Handle

71/	70 (AMX)			1	364 6515

12.060–5i BELLCRANK, Hood Lock Release

70	30			1	363 1654
71/	70 (AMX)			1	363 1654

12.060–5j ATTACHING PARTS, Bellcrank To Radiator Grille Bracket

SCREW, Tapping	70	30	23.040	1	400 0413

12.060–5k ATTACHING PARTS, Bellcrank To Bracket

SCREW, Tapping	71/	70 (AMX)	23.040	1	400 0413

12.060–5l BRACKET, Hood Lock Bellcrank Mounting

71/	70 (AMX)			1	364 6518

12.060–5m ATTACHING PARTS, Bracket To Hood Lock Support

SCREW, Tapping	71/	70 (AMX)	2.050	2	400 2328

12.060–5n BRACKET, Hood Lock Operating Rod And Handle

70	01-30-40			1	363 1657
71	01-40			1	321 3687

12.060–5o ATTACHING PARTS, Bracket To Bumper Rail Back Bar

SCREW, Tapping	70/71	01-30-40		2	400 2339

12.060–6 SPRING, Hood Lock Lower (Safety)

67/				1	350 9555

12.060–7 SPRING, Hood Lock Lower (Latch)

67/71				1	350 9556
72	80			2	365 7249

12.060–7a CATCH, Hood Lock Safety

72	80			1	365 7248

12.060–7b ATTACHING PARTS, Hood Lock Safety Catch To Hood

SCREW, Tapping	72	80	25.054	2	400 1951

12.060–7c STRIKER, Hood Lock Safety Catch

72	80			1	365 7245

12.060–7d ATTACHING PARTS, Striker To Upper Crossmember

SCREW	72	80		2	400 3069

Printed in U.S.A.

HOOD - FENDERS - BUMPERS

12.060–8 SUPPORT, Hood Lock

67/68	01	.....	1	620 0024
69	01	.....	1	630 3068
70/	01-40	.....	1	361 5355
67	10	.....	1	357 4521
68	10	.....	1	651 0198
69/70	10	.....	1	651 8434
71	10 (* 12-9)	.....	1	360 9699
71/	10 (* 12-10)	.....	1	360 9981
68	30-70	.....	1	630 1407
69	30-70	.....	1	630 3355
70	30-70	.....	1	630 4362
71/	70	.....	1	630 6062
67/68	50-80	.....	1	357 4528

12.060–9 ATTACHING PARTS, Support To Baffle

BOLT, Hexagon	67/68	.....	23.017	3	400 0659
BOLT, Hexagon	70/	01-40	.....	3	400 3556
BOLT, Hexagon	69	10 (1-1/4" Long)	.....	3	400 3556
BOLT, Hexagon	69/	10 (1" Long)	12.068	3	400 3069
BOLT, Hexagon	69/	30-70	.....	1	400 3872

12.060–9a ATTACHING PARTS, Support To Grille Panel

SCREW, Tapping	69/70	10	12.075	2	400 0424
NUT, Speed	69/70	10	2.051	2	400 1321

12.060–10 STRIKER, Hood Lock

67/68	.....	.....	1	350 0200
69	01-10-30-70	.....	1	350 0200
70/	01-40	.....	1	363 1056
70	10-30-70	.....	1	350 0200
71/	10-70	.....	1	363 2370
69/	80	.....	2	360 3796

12.060–11 ATTACHING PARTS, Striker To Hood

BOLT, Hexagon	67/68	.....	23.020	2	400 0608
BOLT, Hexagon	69/	01-10-30-40-70	.....	2	400 3556
BOLT, Hexagon	69/	80	.....	4	400 3556

12.060–12 ROD, Hood Lock Torque

69/	80	.....	1	361 4213

12.060–13 ATTACHING PARTS, Rod To Upper Baffle

BOLT, Hexagon	69/	80	23.110	2	400 2203

12.061–1 CABLE ASSEMBLY, Hood Inside Release (Incl. Handle)

72	01-40	366 8694		1	~~365 7190~~
72	10-70-80	366 8695		1	~~365 7191~~

12.061–2 ATTACHING PARTS, Cable To Lock

NUT	72	.....	13.017	1	400 0271

HOOD - FENDERS - BUMPERS

12.061–3 ATTACHING PARTS, Cable To Bracket

SCREW, Tapping.....	72	01–40–70.....	.....	1	400 1724	
SCREW, Tapping.....	72	10–80.....	17.671		G9419699	NA

12.061–4 ATTACHING PARTS, Cable Bracket To Instrument Panel

SCREW, Tapping.....	72	01–40 (3/4" Long).....	.....	2	400 4426	
SCREW, Tapping.....	72	01–40 (7/8" Long).....	.....	2	400 4425	
WASHER, Plain.....	72	01–40.....	.....	1	400 1107	

12.061–5 BRACKET, Cable Bracket To Instrument Panel

72	10–70–80.....	.....	1	365 7192	

12.061–6 ATTACHING PARTS, Bracket To Instrument Panel

SCREW, Tapping.....	72	10–70–80.....	.....	2	G9423829	

12.061–7 ATTACHING PARTS, Cable Bracket To Instrument Panel Bracket

SCREW, Tapping.....	72	10–70–80.....	.....	2	400 4426	

12.061–8 GROMMET, Cable To Dash

72	.....	27.038	1	400 0329	

12.075–1 FENDER, Front

67/69	(Left) 01 (For SC/RAMBLER–Also Order Fender Rework Drawing 363 5636)	.....	1	620 0035	MR
70/	(Left) 01–40.....	.....	1	~~448 7382~~	~~MR~~
67	(Left) 10.....	.....	1	448 4169	MR
68	(Left) 10..... ***(Use 448 7133)***	.....	1	~~448 5351~~	~~MR~~
69	(Left) 10..... ***(Use 448 7133)***	.....	1	~~448 6581~~	~~MR~~
70	(Left) 10.....	.....	1	448 7597	MR
71/	(Left) 10.....	.....	1	448 8711	MR
68/69	(Left) 30–70..... 176	.....	1	448 5279	MR
70	(Left) 30–70.....	.....	1	448 7731	MR
67	(Left) 50–80.....	.....	1	448 4823	MR
71/	(Left) 70.....	.....	1	448 8625	MR
68	(Left) 80..... ***(Use 651 0191)***	.....	1	~~448 5055~~	~~MR~~
69	(Left) 80.....	.....	1	448 6577	MR
70	(Left) 80.....	.....	1	448 7601	MR
71/	(Left) 80.....	.....	1	448 8715	MR
67/69	(Right) 01 (For SC/RAMBLER–Also Order Fender Rework Drawing 363 5636)	.....	1	620 0034	MR
70/	(Right) 01–40.....	.....	1	~~448 7382~~	~~MR~~
67	(Right) 10.....	.....	1	448 4168	MR
68	(Right) 10..... ***(Use 448 7132)***	.....	1	~~448 5350~~	~~MR~~
69	(Right) 10..... ***(Use 448 7132)***	.....	1	~~448 6580~~	~~MR~~
70	(Right) 10.....	.....	1	448 7596	MR
71/	(Right) 10.....	.....	1	448 8710	MR
68/69	(Right) 30–70..... 176	.....	1	448 5278	MR
70	(Right) 30–70.....	.....	1	448 7730	MR
67	(Right) 50–80.....	.....	1	448 4822	MR
71/	(Right) 70.....	.....	1	448 8624	MR
68	(Right) 80.....	.....	1	448 5054	MR
69	(Right) 80.....	.....	1	448 6576	MR
70	(Right) 80.....	.....	1	448 7600	MR
71/	(Right) 80.....	.....	1	448 8714	MR



Printed in U.S.A.

HOOD - FENDERS - BUMPERS

12.075–2 ATTACHING PARTS, Fender To Wheelhouse

BOLT, Hexagon	67/69	01	.....	6	400 0493
BOLT, Hexagon	70/	01-40	23.015	8	400 2070
BOLT, Hexagon	67/70	10-50-80	.....	8	400 0493
BOLT, Hexagon	71/	10-80	.....	8	400 4321
BOLT, Hexagon	68/70	30-70	.....	6	400 0493
BOLT, Hexagon	71/	70	.....	8	435 5574
WASHER, Plain	69	80	17.814	2	400 0481
NUT, Speed	67/69	01	.....	6	400 0049
NUT, Speed	67/	10-50-80	.....	8	400 0049
NUT, Speed	68/70	30-70	.....	6	400 1589
NUT, Speed	71/	70	.....	8	400 1589
NUT, Spring	70/	01-40	.....	8	400 3645

12.075–3 ATTACHING PARTS, Fender To Cowl Top Panel

BOLT, Hexagon	67/69	01	.....	2	400 0493
SCREW, Tapping	67	10	17.660	4	G161895 NA
SCREW, Tapping	68	10	17.654	4	G162457 NA
SCREW, Tapping	69/70	10	17.671	4	G274773
SCREW, Tapping	67	50-80	.....	4	G274723
SCREW, Tapping	68	80	.....	4	G162453
NUT, Speed	67/69	01	.....	2	400 0568

12.075–4 ATTACHING PARTS, Fender To Front Body Pillar (Upper)

BOLT, Hexagon	67/69	01	.....	2	400 0493
BOLT, Hexagon	67/	10-50-80	.....	2	400 0493
SCREW, Tapping	70	01	15.320	2	400 1701
NUT, Speed	67	05-06-08-09	.....	2	400 0568
NUT, Speed	67	07	.....	2	400 0199
NUT, Speed	68/69	01	.....	2	400 0568
NUT, Speed	67/	10-50-80	.....	2	400 0568
SHIM	70/	80	.....	AR	360 9697

12.075–5 ATTACHING PARTS, Fender To Front Body Pillar (Center)

BOLT, Hexagon	67/69	01	.....	2	400 0493
BOLT, Hexagon	70/	01-40	23.015	2	400 2070
BOLT, Hexagon	67/	10-50-80	.....	2	400 0493
BOLT, Hexagon	68/70	30-70	.....	2	400 0493
BOLT, Hexagon	71	70	.....	2	435 5574
NUT, Cage	70/	01-40	22.056	2	400 3700
NUT, Speed	67/69	01	20.085	2	400 0300
NUT, Speed	67/	10-50-80	20.085	2	400 0300
NUT, Speed	68/	30-70	20.085	2	400 0300

12.075–5a ATTACHING PARTS, Fender To Body Pillar (Lower)

BOLT, Hexagon	67/69	01-10-30-50-70-80	.....	2	400 0493
BOLT, Hexagon	70/	01-40	23.015	2	400 2070
BOLT, Hexagon	70/	10-30-70-80	.....	2	400 0493
NUT, Cage	70/	01-40	22.056	2	400 3700
NUT, Speed	67	01	20.085	2	400 0300
NUT, Speed	68/69	01	.....	2	400 0568
NUT, Speed	67/	10-30-50-70-80	.....	2	400 0568

12.075–5b ATTACHING PARTS, Fender To Grille Panel

SCREW, Tapping	67/69	01	.....	4	400 0424
SCREW, Tapping	67/70	10	.....	6	400 0424
SCREW, Tapping	67	50-80	17.671	6	400 1040
SCREW, Tapping	68	80	.....	6	400 0424
NUT, Speed	67/69	01	17.426	4	G447026
NUT, Speed	67/70	10	2.051	6	400 1321
NUT, Speed	67/68	50-80	2.051	6	400 1321

Printed in U.S.A.

12.075–5c ATTACHING PARTS, Fender Headlamp Panel To Grille Panel

SCREW, Tapping.....	67	01.....	12.060	4	400 0734
SCREW, Tapping.....	68/69	01.....	2.050	4	400 2334
SCREW, Tapping.....	68	30-70.....	2.050	2	400 2334
SCREW, Tapping.....	69	30-70.....	17.671	2	400 1040
SCREW, Tapping.....	70	30-70.....	.....	2	400 0424
NUT, Speed	67	01.....	17.426	4	G447026
NUT, Speed	68	01.....	17.426	4	G445435
NUT, Speed	69	01.....	17.426	4	400 1999
NUT, Speed	68/70	30-70.....	17.426	2	G447026

12.075–5d ATTACHING PARTS, Fender To Splash Panel

SCREW, Tapping.....	70/	01-40.....	17.671	4	400 1040
SCREW, Tapping.....	71/	10.....	.....	4	400 0424
SCREW, Tapping.....	71/	70.....	2.050	6	400 2359
NUT, Speed	70/	01-40.....	17.426	4	G447026
NUT, Speed	71/	10.....	17.426	4	G447026
NUT, Spring.....	71/	70.....	2.050	6	400 2002

12.075–5e ATTACHING PARTS, Fender Headlamp Panel To Inner Extension

SCREW, Tapping.....	71/	70.....	.....	4	400 0424
NUT, Spring.....	71/	70.....	.....	4	400 4058

12.075–5f ATTACHING PARTS, Fender Headlamp Panel Inner Extension To Radiator Side Baffle Bracket

SCREW, Tapping.....	68/70	30-70.....	2.050	4	400 2334
NUT, Speed.....	68/69	30-70.....	2.050	4	400 1999
NUT, Speed	70	30-70.....	17.426	4	G447026

12.075–5g ATTACHING PARTS, Fender Headlamp Panel Bracket To Radiator Side Baffle

SCREW, Tapping.....	68/70	30-70.....	17.671	4	400 1040

12.075–5h ATTACHING PARTS, Fender To Radiator Side Baffle

SCREW, Tapping.....	67/69	01.....	.....	4	400 0424
SCREW, Tapping.....	70/	01-40.....	.....	8	400 2353
SCREW, Tapping.....	67/68	10.....	.....	6	400 0424
SCREW, Tapping.....	69/	10-80.....	.....	6	400 0424
SCREW, Tapping.....	67	80.....	17.671	4	400 1040
SCREW, Tapping.....	68	80.....	.....	4	400 0424

12.075–5i PANEL, Front Fender Front Extension (Inner)

71/	(Left) 70.....	.....	1	630 6365
71/	(Right) 70.....	.....	1	630 6364

12.075–5j SUPPORT, Front Fender To Grille Panel

71/	(Left) 80.....	.....	1	363 3437
71/	(Right) 80.....	.....	1	363 3436

12.075–5k ATTACHING PARTS, Support To Grille Panel

SCREW, Tapping.....	71/	80.....	.....	2	400 0424
NUT, Speed	71/	80.....	2.050	2	400 1999

Printed in U.S.A.

HOOD - FENDERS - BUMPERS

12.075–6 PANEL, Headlamp Mounting

68	(Left) 10		.....	1	360 1667 MR
70/	(Left) 01–40		.....	1	630 4427
69	(Left) 10		.....	1	360 3849 MR
70	(Left) 10		.....	1	360 1667 MR
71/	(Left) 10		.....	1	653 1303 MR
68/69	(Left) 30–70	166	.....	1	360 0277 MR
70	(Left) 30–70		.....	1	361 5999 MR
71/	(Left) 70		.....	1	630 5093 MR
69	(Left) 80		.....	1	360 3851 MR
70	(Left) 80		.....	1	361 6133 MR
71/	(Left) 80		.....	1	360 3851 MR
70/	(Right) 01–40		.....	1	630 4426
68	(Right) 10		.....	1	360 1666 MR
69	(Right) 10		.....	1	360 3848 MR
70	(Right) 10		.....	1	360 1666 MR
71/	(Right) 10		.....	1	653 1302 MR
68/69	(Right) 30–70	166	.....	1	360 0276 MR
70	(Right) 30–70		.....	1	361 5998 MR
71/	(Right) 70		.....	1	630 5092 MR
69	(Right) 80		.....	1	360 3850 MR
70	(Right) 80		.....	1	361 6132 MR
71/	(Right) 80		.....	1	360 3850 MR

12.075–7 EXTENSION, Front Fender Headlamp Housing

68/69	(Left) 30–70	.....	1	360 1671
70	(Left) 30–70	.....	1	361 5945
69/70	(Left) 80	.....	1	360 3843
71	(Left) 80	.....	1	363 2053
72	(Left) 85–89	.....	1	366 1493
72	(Left) 88 (LTT)(LWO)	.....	1	366 1493
72	(Left) 88 (WTT)(WWO)	.....	1	366 1495
68/69	(Right) 30–70	.....	1	360 1670
70	(Right) 30–70	.....	1	361 5944
69/70	(Right) 80	.....	1	360 3842
71	(Right) 80	.....	1	363 2052
72	(Right) 85–89	.....	1	366 1492
72	(Right) 88 (LTT)(LWO)	.....	1	366 1492
72	(Right) 88 (WTT)(WWO)	.....	1	366 1494

12.075–8 ATTACHING PARTS, Extension To Fender

SCREW, Hexagon	69	80 (1/4–14 x 5/8)	2.050	4	400 2359
SCREW, Tapping	70	30–70	15.320	4	400 1701
SCREW, Tapping	69/	80 (14–10 x 3/4)	.....	2	400 0424
WASHER, Plain	70	30–70	17.814	5	400 1098
NUT, Hexagon	68/70	30–70	3.303	6	400 1982
NUT, Hexagon	69	80	3.303	4	400 1982
NUT, Spring	70	30–70	.....	2	400 4023
NUT, Spring	69/70	30–70	17.426	2	G447026
NUT, Spring	69/	80	17.426	2	G447026
NUT, Stamped	71/	80	17.428	4	812 0141

12.075–8a ATTACHING PARTS, Extension To Radiator Grille Panel

SCREW, Tapping	69/70	80	.....	4	400 0424
NUT, Spring	69/70	80	17.426	4	G447026
NUT, Lock	69/70	80	17.417	4	448 7145

12.075–9 GASKET, Front Fender Headlamp Housing Extension

69/	80	.....	2	358 6532

Printed in U.S.A.

12.075–9a FILLER, Front Fender Front

71/	(Left) 80	.....	1	363	3363
71/	(Right) 80	.....	1	363	3362

12.075–9b ATTACHING PARTS, Front Fender Front Filler

SCREW, Drilling	71	80 (#8-18 × 5/8")	.....	1	400	4356
SCREW, Tapping	71	80 (#10-16 × 5/8")	.....	AR	400	2726
NUT, Speed	71	80	.....	2	400	1999

12.075–10 SEAL, Front Fender To Cowl Panel

67/69	(Left) 01...(Incl. Retainer)	.....	1	350	6949
67/69	(Right) 01...(Incl. Retainer)	.....	1	350	6948

12.075–11 GUARD ASSEMBLY, Front Fender Lower Splash

67/69	(Left) 01	.....	1	350	9105
70/	(Left) 01-40	.....	1	363	1957
67/68	(Left) 10-80	.....	1	357	6333
69/70	(Left) 10	.....	1	357	6333
71/	(Left) 10	.....	1	361	4819
68/70	(Left) 30-70	.....	1	360	2311
71/	(Left) 70	.....	1	363	2921
69/	(Left) 80	.....	1	361	4819
67/69	(Right) 01	.....	1	350	9104
70/	(Right) 01-40	.....	1	363	1956
67/68	(Right) 10-80	.....	1	357	6332
69/70	(Right) 10	.....	1	357	6332
71/	(Right) 10	.....	1	361	4818
68/70	(Right) 30-70	.....	1	360	2310
71/	(Right) 70	.....	1	363	2920
69/	(Right) 80	.....	1	361	4818

12.075–11a GUARD ASSEMBLY, Front Fender Lower Splash Upper Extension

70/	(Left) 01-40	.....	1	364	1983
70/	(Right) 01-40	.....	1	364	1982

12.075–11b GUARD ASSEMBLY, Front Fender Upper Splash

70/	(Left) 01-40	.....	1	363	5871
70/	(Right) 01-40	.....	1	363	5870

12.075–12 ATTACHING PARTS, Splash Guard To Uniside

BOLT, Hexagon	67/68	01	22.056	8	400	0058
BOLT, Hexagon	67/68	10-50-80	.....	8	400	1040
SCREW, Tapping	69	.....	.....	8	400	1042

12.075–12a ATTACHING PARTS, Splash Guard To Fender Extension

SCREW, Tapping	70/	(#10-16 × 1/2") 01-40	15.320	6	400	1701
SCREW, Tapping	72	(#12-11 × 1/2") 01-40	17.671	6	400	1042
SCREW, Tapping	70/	10-30-70-80	17.671	8	400	1042
SCREW, Tapping	72	(#14-10 × 3/4") 10	.....	4	400	0424

12.075–12b ATTACHING PARTS, Splash Guard To Center Grill Support

SCREW, Tapping	72	10	3.252	4	400	3663

12.075–12c ATTACHING PARTS, Splash Guard To Radiator Lower Baffle

SCREW, Tapping	72	10	15.320	4	400	1701

12.075–13 FILLER, Front Fender To Radiator Grille

67/68	50-80	.....	2	359	2523

HOOD - FENDERS - BUMPERS

12.075–14 ATTACHING PARTS, Filler To Front Fender

SCREW, Tapping.....	67/68	50-80.....	12.060	2	400 0734

12.076–1 BRACKET, Front Fender To Baffle

67/68	(Left) 01-10-50-80.....	.....	1	349 2671
69	(Left) 01.....	.....	1	349 2671
70/	(Left) 01-40.....	.....	1	363 5581
69/70	(Left) 10.....	.....	1	349 2671
71/	(Left) 10.....	.....	1	360 9873
68	(Left) 30-70 (* 12-1).....	.....	1	349 2671
68/69	(Left) 30-70 (* 12-2).....	.....	1	362 3173
70/	(Left) 30-70.....	.....	1	362 3173
69/	(Left) 80.....	.....	1	362 4925
67/68	(Right) 01-10-50-80.....	.....	1	349 2670
69	(Right) 01.....	.....	1	349 2670
70/	(Right) 01-40.....	.....	1	363 5580
69/70	(Right) 10.....	.....	1	349 2670
71/	(Right) 10.....	.....	1	360 9872
68	(Right) 30-70 (* 12-1).....	.....	1	349 2670
68/69	(Right) 30-70 (* 12-2).....	.....	1	362 3172
70/	(Right) 30-70.....	.....	1	362 3172
69/	(Right) 80.....	.....	1	362 4924

12.076–2 ATTACHING PARTS, Bracket To Fender

SCREW, Tapping.....	67/69	01-10-80 (14-10 x 5/8).....	17.671	AR	400 1040
SCREW, Tapping.....	69	01-10-80 (14-10 x 3/4).....	12.075	4	400 0424
SCREW, Tapping.....	70/	01-40.....	17.671	2	G456322
SCREW, Tapping.....	70/	80.....	12.075	4	400 0424
SCREW, Tapping.....	70/	10.....	12.075	2	400 0424
SCREW, Tapping.....	69/	30-70 (1/4-20 x 5/8).....	17.671	4	G456322
NUT, Speed.....	67/69	01 (4 Req.): 30-70 (6 Req.)..... ***(Use 400 1459)***	12.065	AR	400 1345
NUT, Speed.....	67/	50-80.....	12.075	4	400 1459
NUT, Speed.....	67/	10.....	2.050	2	400 2002
NUT, Hexagon.....	68/	30-70.....	.....	6	400 1982

12.076–3 ATTACHING PARTS, Bracket To Radiator Side Baffle

SCREW, Tapping.....	69/	01-30-40-70.....	17.671	2	G456322
SCREW, Tapping.....	69/	10-80.....	12.075	2	400 0424
NUT, Speed.....	71/	10.....	2.050	2	400 2002
NUT, Speed.....	67/	50-80.....	12.075	2	400 1459

12.076–4 BRACKET, Front Fender To Grille

71/	(Left) 70.....	.....	1	364 1963
71/	(Right) 70.....	.....	1	364 1962

12.076–5 ATTACHING PARTS, Bracket To Fender Extension

SCREW, Tapping.....	71/	70.....	17.671	4	400 1822 NA

12.078–1 REFLECTOR, Front Fender Side

68/69	01.....	.....	2	360 1954

12.078–2 BEZEL, Front Fender Side Reflector

68/69	01.....	.....	2	360 1956

12.078–3 ATTACHING PARTS, Bezel To Fender

CLIP, Tubular	68/69	01		23.006	4	400	1335

12.078–4 GASKET, Front Fender Side Reflector

68/69	01			.....	2	360	1958

12.125–1 PANEL, Rear Quarter Outer

67/69	(Left) 05			.....	1	355	2259 MR
70/	(Left) 05			.....	1	448	7411 MR
67/69	(Left) 06			.....	1	355	2271 MR
70/	(Left) 06			.....	1	448	7415 MR
67	(Left) 07			.....	1	448	3363 MR
67/69	(Left) 08			.....	1	448	3365 MR
71/	(Left) 08			.....	1	448	8721 MR
67/69	(Left) 09 (For SC/RAMBLER–Also Order Fender Rework Drawing 363 5636)			.....	1	448	3367 MR
67	(Left) 15		184	.....	1	448	4175 MR
68	(Left) 15		184	.....	1	448	5421 MR
69	(Left) 15			.....	1	448	6463 MR
70/	(Left) 15–85			.....	1	448	7701 MR
67	(Left) 16–19 (550)(770)		182	.....	1	448	4185 MR
67	(Left) 17		181	.....	1	448	4189 MR
68	(Left) 17 (550)		180	.....	1	448	5427 MR
68	(Left) 17 (SST)		181	.....	1	448	5429 MR
67/68	(Left) 18–88		178	.....	1	448	4281 MR
69/	(Left) 18–88			.....	1	448	6467 MR
67	(Left) 19 (SST)		183	.....	1	448	4177 MR
68	(Left) 19 (550)(770)		182	.....	1	448	5423 MR
68	(Left) 19 (SST)		183	.....	1	448	5425 MR
69	(Left) 19			.....	1	448	6469 MR
70/	(Left) 19–89			.....	1	448	7703 MR
68/69	(Left) 30		177	.....	1	448	5287 MR
70	(Left) 30			.....	1	448	7751 MR
70/	(Left) 40			.....	1	448	8401 MR
67	(Left) 59			.....	1	448	4787 MR
68/69	(Left) 70		177	.....	1	448	5285 MR
70	(Left) 70			.....	1	448	7749 MR
71/	(Left) 70			.....	1	448	8639 MR
67/68	(Left) 85		184	.....	1	448	4175 MR
69	(Left) 85			.....	1	448	6465 MR
67/68	(Left) 86–89		182	.....	1	448	4185 MR
67/68	(Left) 87		180	.....	1	448	4191 MR
69	(Left) 89			.....	1	448	6471 MR
67/69	(Right) 05			.....	1	355	2258 MR
70/	(Right) 05			.....	1	448	7410 MR
67/69	(Right) 06			.....	1	355	2270 MR
70/	(Right) 06			.....	1	448	7414 MR
67	(Right) 07			.....	1	448	3362 MR
67/69	(Right) 08			.....	1	448	3364 MR
71/	(Right) 08			.....	1	448	8720 MR
67/69	(Right) 09 (For SC/RAMBLER–Also Order Fender Rework Drawing 363 5636)			.....	1	448	3366 MR
67	(Right) 15		185	.....	1	448	4174 MR
68	(Right) 15		184	.....	1	448	5420 MR
69	(Right) 15			.....	1	448	6462 MR
70/	(Right) 15–85			.....	1	448	7700 MR

Printed in U.S.A.

67	(Right) 16-19 (550)(770)	182	.....	1	448 4184 MR
67	(Right) 17	181	.....	1	448 4188 MR
68	(Right) 17 (550)	180	.....	1	448 5426 MR
68	(Right) 17 (SST)	181	.....	1	448 5428 MR
67/68	(Right) 18-88	178	.....	1	448 4280 MR
69/	(Right) 18-88		.....	1	448 6466 MR
68	(Right) 19 (550)(770)	182	.....	1	448 5422 MR
67	(Right) 19 (SST)	183	.....	1	448 4176 MR
68	(Right) 19 (SST)	183	.....	1	448 5424 MR
69	(Right) 19		.....	1	448 6468 MR
70/	(Right) 19-89		.....	1	448 7702 MR
68/69	(Right) 30	177	.....	1	448 5286 MR
70	(Right) 30		.....	1	448 7750 MR
70/	(Right) 40		.....	1	448 8400 MR
67	(Right) 59		.....	1	448 4786 MR
68/69	(Right) 70	177	.....	1	448 5284 MR
70	(Right) 70		.....	1	448 7748 MR
71/	(Right) 70		.....	1	448 8638 MR
67/68	(Right) 85	184	.....	1	448 4174 MR
69	(Right) 85		.....	1	448 6464 MR
67/68	(Right) 86-89	182	.....	1	448 4184 MR
67/68	(Right) 87	180	.....	1	448 4190 MR
69	(Right) 89		.....	1	448 6470 MR

12.125-1a ATTACHING PARTS, Panel To Tailgate Pillar

SCREW, Machine	67/69	08-18-88	23.020	4	400 0608

12.125-2 REINFORCEMENT, Rear Quarter Outer Panel To Uniside

67	(Left) 07		.....	1	350 1005
67/69	(Left) 09		.....	1	350 9381
67/68	(Left) 16-17-19-59-86-87-89		.....	1	650 0685
69/	(Left) 19-89		.....	1	650 0685
68/	(Left) 30-70		.....	1	360 0493
67	(Right) 07		.....	1	350 1004
67/69	(Right) 09		.....	1	350 9380
67/68	(Right) 16-17-19-59-86-87-89		.....	1	650 0684
69/	(Right) 19-89		.....	1	650 0684
68/	(Right) 30-70		.....	1	360 0492

12.125-3 EXTENSION, Rear Quarter Panel Front

70/	(Left) 05-08		.....	1	630 4527
67/69	(Left) 15-18-85-88		.....	1	357 4861
70/	(Left) 15-85		.....	1	361 5673
67	(Left) 16-86		.....	1	357 4869
67/69	(Left) 17-19-59-87-89		.....	1	357 4871
70/	(Left) 18-88		.....	1	357 4861
70/	(Left) 19-89		.....	1	357 4871
68/70	(Left) 30		.....	1	359 9449
68/	(Left) 70		.....	1	360 0473
70/	(Right) 05-08		.....	1	630 4526
67/69	(Right) 15-18-85-88		.....	1	357 4860
70/	(Right) 15-85		.....	1	361 5672
67	(Right) 16-86		.....	1	357 4868
67/69	(Right) 17-19-59-87-89		.....	1	357 4870
70/	(Right) 18-88		.....	1	357 4860
70/	(Right) 19-89		.....	1	357 4870
68/70	(Right) 30		.....	1	359 9448
68/	(Right) 70		.....	1	360 0472

HOOD - FENDERS - BUMPERS

12.125–4 EXTENSION, Rear Quarter Panel Rear

67	(Left) 15-16-17-19 ***(Use 360 0583)***	.....	1	357 5445 MR
68	(Left) 15-17-19	.....	1	360 0583 MR
69	(Left) 15-19	.....	1	361 4123 MR
67/68	(Left) 18-88	.....	1	357 5497 MR
69/	(Left) 18-88	.....	1	360 9055 MR
68/70	(Left) 30	.....	1	360 2555 MR
68/70	(Left) 70 ***(Use 360 0508)***	.....	1	360 0465 MR
67	(Left) 85-86-87-89	.....	1	357 5449 MR
68	(Left) 80	.....	1	360 0585 MR
69	(Left) 85-89	.....	1	361 4127 MR
67	(Right) 15-16-17-19 ***(Use 360 0582)***	.....	1	357 5444 MR
68	(Right) 15-17-19	.....	1	360 0582 MR
69	(Right) 15-19	.....	1	361 4122 MR
67/68	(Right) 18-88	.....	1	357 5496 MR
69/	(Right) 18-88	.....	1	361 4130 MR
68/70	(Right) 30	.....	1	360 2554 MR
68/70	(Right) 70 ***(Use 360 0584)***	.....	1	360 0464 MR
67	(Right) 85-86-87-89	.....	1	357 5448 MR
68	(Right) 80	.....	1	360 0584 MR
69	(Right) 85-89	.....	1	361 4126 MR

12.125–4a EXTENSION, Rear Quarter Panel Rear Upper

70/	(Left) 05-06	.....	1	363 1161
70/	(Right) 05-06	.....	1	363 1160

12.125–4b EXTENSION, Rear Quarter Panel Rear Lower

70/	(Left) 05-06-08	.....	1	363 1249
70/	(Right) 05-06-08	.....	1	363 1248

12.125–5 EXTENSION, Rear Quarter Panel Tail Lamp Mounting

70/	(Left) 05-06	.....	1	363 1159
67	(Left) 15-16-17-19	.....	1	357 4841
68	(Left) 15-17-19 (550)	.....	1	360 0587
68	(Left) 15-17-19 (770)(SST)	.....	1	360 8545
69	(Left) 15-19 ***(Use 363 6415)***	.....	1	360 3863
70/71	(Left) 15-19-85-89	.....	1	361 5683
72	(Left) 15-19-85-89	.....	1	365 7255
67	(Left) 18-88 (LWO)	.....	1	357 4873
67	(Left) 18-88 (WWO)	.....	1	357 4875
68	(Left) 18-88 (LTT)(LWO)	.....	1	360 0655
68	(Left) 18-88 (WTT)(WWO)	.....	1	360 8539
69/	(Left) 18-88	.....	1	360 3867
68/69	(Left) 30	.....	1	360 2557
70	(Left) 30	.....	1	363 6417
67	(Left) 59	.....	1	357 4219
68/69	(Left) 70	.....	1	360 1247
70	(Left) 70	.....	1	363 6419
67	(Left) 85-86 (880)	.....	1	358 6779
67	(Left) 85 (990): 87-89	.....	1	357 4843
68	(Left) 85 (Except DPL And SST)	.....	1	360 8669
68	(Left) 85-89 (DPL)	.....	1	360 0589
68	(Left) 85-89 (SST)	.....	1	360 0653
69	(Left) 85-89	.....	1	360 3865

70/	(Right) 05-06	.....	1	363	1158
67	(Right) 15-16-17-19	.....	1	357	4840
68	(Right) 15-17-19 (550)	.....	1	360	0586
68	(Right) 15-17-19 (770) (SST)	.....	1	360	8544
69	(Right) 15-19	.....	1	360	3862
70/71	(Right) 15-19-85-89 ***(Use 363 6414)***	.....	1	361	5682
72	(Right) 15-19-85-89	.....	1	365	7254
67	(Right) 18-88 (LWO)	.....	1	357	4872
67	(Right) 18-88 (WWO)	.....	1	357	4874
68	(Right) 18-88 (LTT)(LWO)	.....	1	360	0654
68	(Right) 18-88 (WTT)(WWO)	.....	1	360	8538
69/	(Right) 18-88	.....	1	360	3866
68/69	(Right) 30	.....	1	360	2556
70	(Right) 30	.....	1	363	6416
67	(Right) 59	.....	1	357	4218
68/69	(Right) 70	.....	1	360	1246
70	(Right) 70	.....	1	363	6418
67	(Right) 85-86 (880)	.....	1	358	6778
67	(Right) 85 (990): 87-89	.....	1	357	4842
68	(Right) 85 (Except DPL And SST)	.....	1	360	8668
68	(Right) 85-89 (DPL)	.....	1	360	0588
68	(Right) 85-89 (SST)	.....	1	360	0652
69	(Right) 85-89	.....	1	360	3864

12.125-6 ATTACHING PARTS, Tail Lamp Mounting Extension To Panel

SCREW, Tapping	70/	15-19-85-89	3.740	2	400	3096
SCREW, Hexagon	70	39-79 ***(Use 400 4080)***	.....	6	400	4053
SCREW, Hexagon	70	39-79	15.320	2	400	1701
SCREW, Hexagon	67/69	18-88 (15/16" Long)	.....	4	400	2015
SCREW, Hexagon	69	18-88 (1-3/16" Long)	.....	4	400	3066
SCREW, Hexagon	69/	18-88 (14-10 x 1-1/4)	17.671	4	448	8032
NUT, Hexagon	70/	05-06-15-19-85-89	3.303	6	400	1982
NUT, Hexagon	70/71	15-19-85-89	.....	6	400	3114
NUT, Hexagon	72	15-19-85-89	.....	6	812	1965
NUT, Hexagon	67/69	15-16-17-19-39-59-79-85-86-87-89	3.303	AR	400	1982
NUT, Speed	67/69	18-88 (1/2" Wide)	3.303	4	400	1341
NUT, Speed	69/	18-88 (9/16" Wide)	.....	4	400	3081
NUT, Speed	70	39-79	.....	6	400	4049

12.125-7 GASKET, Rear Quarter Panel Tail Lamp Mounting Extension

67/69	.....	.....	2	358	6532
72	.....	.....	2	366	2619

12.125-7a COVER, Rear Quarter Panel Side Lamp Access Hole

69	85-89	.....	2	317	7315

12.125-8 DOOR, Rear Quarter Panel Gasoline Filler

67/	10-80 174	.....	1	357	4876

12.125-9 ATTACHING PARTS, Door To Rear Quarter Panel

SCREW, Hexagon	67/	10-50-80	.....	2	400	2015

12.125-10 SPRING, Rear Quarter Panel Gasoline Filler Door

67/	10-50-80	.....	1	357	4846

12.125-11 BUMPER, Rear Quarter Panel Gasoline Filler Door

67/	10-50-80 (In Gas Door)	15.320	1	400	0154
67/	10-50-80 (In Quarter Panel)	.....	2	400	2003

12.125–12 GUARD, Rear Quarter Panel Wood Grain Overlay

67/	18–88 (WWO)	12.128	1	359 0999

12.125–13 ATTACHING PARTS, Guard To Quarter Panel

SCREW, Tapping	67/	18–88 (WWO)	17.671	2	400 1037

12.125–14 BRACE, Rear Quarter Panel Center

67/69	07–09	20.345	2	350 0324
67/69	16–17–19–59–86–87–89	20.345	2	357 5460

12.125–15 REFLECTOR, Rear Quarter Panel Side

68/69	01	12.078	2	360 1955

12.125–16 BEZEL, Rear Quarter Panel Side Reflector

68/69	01	12.078	2	360 1956

12.125–17 ATTACHING PARTS, Bezel To Panel

NUT, Hexagon	68/69	05–06–09	.....	4	400 0674
CLIP, Tubular	68/69	08	23.006	4	400 1335

12.125–18 GASKET, Rear Quarter Panel Side Reflector

68/69		12.078	2	360 1958

12.125–19 DECAL, Rear Quarter Panel Rear

67	***(Left) 85 (RHD–Post Office)***	.....	1	360 8643
67	***(Right) 85 (RHD–Post Office)***	.....	1	360 8642

12.125–20 CUSHION, Bumper Back Bar To Rear Quarter Panel

70/	(Left) 15–19–85–89	.....	1	319 7761
70/	(Right) 15–19–85–89	.....	1	319 7760

12.125–21 ATTACHING PARTS, Cushion To Rear Quarter Panel

SCREW, Tapping	70/	15–19–85–89	29.060	6	400 1776
WASHER, Plain	70	15–19–85–89	17.814	6	G120391 NA

12.168–1 RAIL, Bumper (Front)

67/69	01	.....	1	350 0900
70/	01–40	.....	1	361 5704
67/70	10	.....	1	357 5540
71/	10	.....	1	363 2140
68	30–70	.....	1	360 1650
69	30–70 (* 12–3)	.....	1	360 1650
69	30–70 (* 12–4)	.....	1	319 7505
70	30–70	.....	1	361 6040
71/	70	.....	1	363 2930 –
67/68	50–80	.....	1	357 5550
69/70	80	.....	1	361 4272
71/	80	.....	1	319 9639

Printed in U.S.A.

HOOD - FENDERS - BUMPERS

12.168–2 ATTACHING PARTS, Front Rail To Back Bar

BOLT, Carriage	67/69	01 (LBG).....	.....	6	318 6376	
BOLT, Carriage	67/69	01 (WBG).....	.....	2	318 6376	
BOLT, Carriage	70/	01-40.....	.....	8	400 3911	
BOLT, Carriage	67/68	10-50-80 (LBG-4 Req.)(WBG-2 Req.)	.....	AR	318 6376	
BOLT, Carriage	69/70	10 (LBG-4 Req.)(WBG-2 Req.)	.....	AR	318 6376	
BOLT, Carriage	71	10-70 (LBG-8 Req.)(WBG-6 Req.)	.....	AR	400 3911	
BOLT, Carriage	68	30-70.....	.....	6	318 6376	
BOLT, Carriage	69	30-70 (* 12-3).....	.....	6	318 6376	
BOLT, Carriage	69	30-70 (* 12-4) ..... ***(Use 400 4027)***	.....	6	400 3962	
BOLT, Carriage	70	30-70.....	.....	2	400 3911	
BOLT, Carriage	69/	80 (LBG-6 Reg.)(1" Long)	.....	AR	318 6376	
BOLT, Carriage	71/	80 (1-3/8" Long)	.....	2	319 9871	
BOLT, Hexagon	67/69	01 (WBG).....	12.175	2	400 1793	
BOLT, Hexagon	67/68	10-50-80 (LBG).....	.....	2	400 1763	
BOLT, Hexagon	67/68	10-50-80 (WBG).....	12.175	2	400 1793	
BOLT, Hexagon	69/70	10 (LBG).....	.....	2	400 1763	
BOLT, Hexagon	69/70	10 (WBG).....	12.175	2	400 1793	
WASHER, Plain.....	71/	70.....	1.067	AR	400 3938	
WASHER, Plain.....	67/70	.....	17.814	AR	400 1116	
WASHER, Plain.....	71/	80.....	17.814	6	400 1116	
WASHER, Lock	67/69	(7/16 x 51/64)	17.820	AR	G131100	
WASHER, Lock	69	30-70 (3/8 x 11/16)	17.820	2	G120382	
WASHER, Lock	69	30-70 (1/2" I.D.).....	17.822	2	G135629	NA
WASHER, Lock	70	10-80.....	9.002	6	400 1898	
WASHER, Lock	71/	80.....	.....	6	400 1898	
WASHER (Fibre)	67/	.....	25.030	AR	400 0326	
NUT, Hexagon.....	67/	.....	17.406	AR	G124573	NA
NUT, Hexagon.....	71/	80.....	17.406	6	G124573	NA
NUT, Lock.....	70/	01-40.....	10.260	8	400 3909	
NUT, Lock.....	71/	10-70 (LBG-8 Req.)(WBG-6 Req.)	10.260	AR	400 3909	
SPACER	71/	80 (1/2" Thick).....	.....	4	319 9607	
SPACER	71/	80 (1/4" Thick).....	.....	2	321 2691	

12.168–2a ATTACHING PARTS, Front Rail To Inner Back Bar Extension Bracket

BOLT, Carriage	70	30-70.....	.....	4	400 3911
NUT, Lock.....	70	30-70.....	10.260	4	400 3909

12.168–3 RAIL, Bumper (Rear)

67/69	01.....	.....	1	350 0901
70/	01-40.....	.....	1	361 5706
67/68	15-16-17-19.....	.....	1	357 5541
69	15-16-17-19.....	.....	1	361 4274
70/	15-19.....	.....	1	361 5940
67/68	18-88.....	.....	1	357 5542
69/	18-88.....	.....	1	361 4650
68	30-70.....	.....	1	360 1651
69	30-70 (* 12-3).....	.....	1	360 1651
69	30-70 (* 12-4).....	.....	1	319 7107
70/	30-70.....	.....	1	319 5459
67	50.....	.....	1	357 4042
67/68	85-86-87-89.....	.....	1	357 5551
69	85-89.....	.....	1	361 4275
70	85-89 (Except DPL And SST)	.....	1	361 5940
70	85-89 (DPL)(SST)	.....	1	361 5941
71	85 (Except SST And Brougham).....	.....	1	361 5940
71	85-89 (SST And Brougham)	.....	1	361 5941
72	85-89.....	.....	1	361 5941

HOOD - FENDERS - BUMPERS

12.168–4 ATTACHING PARTS, Rear Bumper Rail To Back Bar

BOLT, Carriage	67/69	(1-1/4" Long) 01-10-50-80	.....	4	318 6377
BOLT, Carriage	67/69	(1" Long) 01-10-50-80	.....	2	318 6376
BOLT, Carriage	70/	(3/8"-16 x 27/32") 01-40.....	.....	4	400 3911
BOLT, Carriage	70/	(1" Long) 10-80	.....	6	318 6376
BOLT, Carriage	68/69	30-70.....	.....	4	318 6376
BOLT, Carriage	70/	30-70 (LBG).....	.....	4	400 3911
BOLT, Hexagon	67/69	01 (WBG).....	12.175	2	400 1793
BOLT, Hexagon	68/69	30-70 (WBG).....	17.038	2	G180147 NA
WASHER (Fibre)	67/69	.....	25.030	AR	400 0326
WASHER (Fibre)	70	01-40.....	25.030	2	400 0326
WASHER (Fibre)	70/	30-70.....	25.030	4	400 0326
WASHER (Fibre)	70/	10-80.....	25.030	6	400 0326
WASHER, Plain.....	67/69	01.....	17.814	6	400 1120
WASHER, Plain.....	67/	(7/8" O.D.).....	17.814	AR	400 1116
WASHER, Plain.....	67/69	(1-1/8" O.D) 15-16-17-19	.....	2	400 1827
WASHER, Plain.....	70/	(15/32" O.D.).....	17.814	AR	400 1122
WASHER, Lock	67/69	(7/16" I.D.)	17.820	AR	G131100
WASHER, Lock	70/	10-80	9.002	6	400 1898
WASHER, Lock	69	(1/2" I.D.) 30-70.....	17.822	2	G135629 NA
NUT, Hexagon.....	67/69	.....	17.406	AR	G124573 NA
NUT, Hexagon.....	70/	01-40.....	10.260	4	400 3909
NUT, Hexagon.....	70/	30-70 (LBG).....	10.260	4	400 3909
NUT, Hexagon.....	70/	10-80 (LBG).....	17.406	6	G124573 NA

12.168–4a ATTACHING PARTS, Rear Bumper Rail To Deck Panel Brace

BOLT, Hexagon	70/	15-19-85-89.....	1.164	4	400 1730
NUT, Hexagon.....	70	15-19-85-89.....	.....	4	400 3953
NUT, Lock.....	70/	15-19-85-89.....	17.417	4	G273801

12.168–4b ATTACHING PARTS, Rear Bumper Rail To Lower Deck Panel Reinforcement

SCREW, Tapping.....	70	01-40.....	17.671	2	400 1031

12.168–5 COVER, Bumper Rail Directional Light Hole

67/68	50-80 (DPL).....	.....	2	359 2465

12.168–6 ATTACHING PARTS, Cover To Rail

SCREW, Tapping.....	67/68	50-80 (DPL).....	17.671	4	400 1046
NUT, Speed	67/68	50-80 (DPL).....	15.320	4	342 8613

12.168–7 PAD, Front Bumper Rail To Back Bar

69	30-70 (* 12-4)	.....	6	319 7131

12.168–8 MOULDING, Front Bumper Rail

69	30-70 (* 12-4)	.....	1	448 7129

12.168–9 ATTACHING PARTS, Front Bumper Rail Moulding

NUT, Stamped	69	30-70 (* 12-4)	.....	9	448 7128

HOOD - FENDERS - BUMPERS

12.168–10 SCOOP, Front Bumper Rail Air

70	(Left) 30	.....	1	361	6039
70	(Right) 30	.....	1	361	6038
71/	70 (AMX)...(Less Front Spoiler)	.....	2	363	3508

12.168–11 ATTACHING PARTS, Air Scoop To Bumper Rail

SCREW, Machine	70	30	.....	4	400	2731
SCREW, Tapping	71/	70 (AMX)...(Less Front Spoiler)	17.669	4	448	9283
NUT, Speed	70	30	.....	4	400	3609
NUT, Speed	71/	70 (AMX)...(Less Front Spoiler)	2.050	4	400	1999

12.169–1 BRACKET, Rear Bumper Rail Back Bar Mounting

70/	15-19-85-89	12.168	2	319	5140
68/	30-70	12.178	2	360	0798
70/	(Left) 01-40	.....	1	319	5364
70/	(Right) 01-40	.....	1	319	5365

12.169–2 ATTACHING PARTS, Mounting Bracket To Bumper Rail Back Bar

BOLT, Carriage	70/	01-40 (1-1/4" Long)	.....	4	400	4003
STUD	70	01	1.010	4	400	3917
NUT, Lock	70	01-40 (3/8-24)	1.010	4	400	3869
NUT, Lock	70/	01-40 (3/8-16)	10.260	4	400	3909
BOLT, Machine	70	01 (1-1/8" Long)	10.260	4	400	4010
WASHER, Sealing	70/	01-40	12.178	4	362	4361

12.169–3 ATTACHING PARTS, Mounting Bracket To Rear Side Sill

BOLT, Carriage	70/	01-40	.....	4	400	4003
BOLT, Hexagon	70	15-19-30-70-85-89...(Less Serrated Washer)	12.176	6	400	3832
BOLT, Hexagon	70/	15-19-39-70-85-89...(Incl. Serrated Washer)	.....	6	400	3955
WASHER, Plain	70/	15-19-85-89	17.814	6	400	1116

12.169–4 BRACE, Rear Bumper Rail To Deck Panel

70/	15-19-85-89	12.168	2	319	6567

12.169–5 ATTACHING PARTS, Brace To Deck Panel

WASHER, Sealing	70/	15-19-85-89	3.303	2	400	4066
NUT, Hexagon	70	15-19-85-89	3.303	2	400	1457
NUT, Hexagon	71/	15-19-85-89	3.303	2	400	1457

12.175–1 BAR, Front Bumper Back (Inner)

67/69	(Left) 01	.....	1	317	0974
70/	(Left) 01-40	.....	1	319	8365
67/70	(Left) 10	.....	1	318	5109
71/	(Left) 10	.....	1	321	0079
68/70	(Left) 30-70	.....	1	319	0506
67/68	(Left) 50-80	.....	1	318	6335
71/	(Left) 70	.....	1	319	9634
69/70	(Left) 80	.....	1	319	5101
71	(Left) 80 (* 12-7)	.....	1	319	5101
71	(Left) 80 (* 12-8)	.....	1	321	2693
72	(Left) 80	.....	1	321	2693

Printed in U.S.A.

67/69	(Right) 01	.....	1	317 0975	
70/	(Right) 01-40	.....	1	319 8366	
67/70	(Right) 10	.....	1	318 5110	
71/	(Right) 10	.....	1	321 0080	
68/70	(Right) 30-70	.....	1	319 0507	
67/68	(Right) 50-80	.....	1	318 6336	
71/	(Right) 70	.....	1	319 9635	
69/70	(Right) 80	.....	1	319 5102	
71	(Right) 8C (* 12-7)	.....	1	319 5102	
71	(Right) 8C (* 12-8)	.....	1	321 2694	
72	(Right) 80	.....	1	321 2694	

12.175-2 BAR, Front Bumper Back (Outer)

67/69	(Left) 01	.....	1	317 0972	
70/	(Left) 01-40	.....	1	319 5260	–
67/70	(Left) 10	.....	1	318 5076	
71/	(Left) 10	.....	1	321 0081	
68/70	(Left) 30-70	.....	1	319 0697	
71/	(Left) 70	.....	1	319 9636	
67/68	(Left) 50-80	.....	1	318 5206	
69/	(Left) 80	.....	1	319 2256	
67/69	(Right) 01	.....	1	317 0973	
70/	(Right) 01-40	.....	1	319 5261	
67/70	(Right) 10	.....	1	318 5077	
71/	(Right) 10	.....	1	321 0082	
68/70	(Right) 30-70	.....	1	319 0698	
71/	(Right) 70	.....	1	319 9637	
67/68	(Right) 50-80	.....	1	318 5207	
69/	(Right) 80	.....	1	319 2257	

12.175-3 ATTACHING PARTS, Back Bar To Side Sill

BOLT, Hexagon	68	(4" Long) 01	.....	4	316 8028	
BOLT, Hexagon	67	(4" Long) 01 (Six-4 Req.)(V8-3 Req.)	.....	AR	316 8028	
BOLT, Hexagon	67	(3-5/8" Long) 01 (V8)	10.427	1	313 1165	
BOLT, Hexagon	68/69	(1-1/2" Long) 01	12.178	4	400 1897	
BOLT, Hexagon	67/69	(7/16"-14) 10-30-50-70-80	12.178	4	400 1897	
BOLT, Hexagon	67/68	(7/16"-20) 10-30-50-70-80	12.178	4	400 1825	
BOLT, Hexagon	70	.....	12.178	4	400 1897	
BOLT, Hexagon	71/	01-40-70-80	12.178	4	400 1897	
BOLT, Hexagon	71/	10	12.178	6	400 1897	
PLATE, Tapping	67	01 (V8)	12.168	1	318 6746	
WASHER, Plain	67/69	01-10-50-80	17.814	AR	400 1122	
WASHER, Plain	70	10-80	17.814	4	400 1122	
WASHER, Plain	71/	80	17.814	4	400 1122	
WASHER, Lock	67/69	.....	17.820	AR	G131100	NA
WASHER, Lock	70	.....	9.002	4	400 1898	
WASHER, Lock	71/	80	9.002	4	400 1898	
WASHER, Bite	70	01-30-70 (Diamond Burr)	12.178	4	400 1854	
WASHER, Bite	70/	(Conical Toothed)	.....	6	400 4070	
WASHER, Bite	68/69	30-70	12.178	4	400 1854	
NUT, Hexagon	67/68	01	17.406	4	400 1241	

12.175-4 ATTACHING PARTS, Inner Bar To Outer Bar

BOLT, Hexagon	68/70	30-70	17.038	2	G181636	NA
BOLT, Hexagon	70	01-40	17.038	4	G181636	NA
BOLT, Hexagon	71/	01-40	17.038	4	G180121	NA

SCREW, Machine.....	71/	70.....	17.630	2	G273773
WASHER, Plain.....	70	01-40.....	10.260	4	400 3808
WASHER, Plain.....	68/70	30-70.....	17.814	2	G120394 NA
WASHER, Lock.....	68/69	30-70.....	17.820	2	G120382 NA
NUT, Hexagon.....	70/	01-30-40-70.....	10.260	2	400 3909
NUT, Hexagon.....	68/69	30-70.....	17.406	2	G120369 NA

12.175–5 BRACKET, Front Bumper Inner Back Bar Extension

70	(Left) 30-70.....	.....	1	319 8181
70	(Right) 30-70.....	.....	1	319 8182

12.175–6 ATTACHING PARTS, Extension Bracket To Inner Back Bar

NUT, Hexagon.....	70	01.....	10.260	4	400 3909
NUT, Hexagon.....	70	30-70.....	10.260	2	400 3909

12.175–7 BAR, Front Bumper Outer Back (Extension)

71/	(Left) 10.....	.....	1	321 0085
71/	(Right) 10.....	.....	1	321 0086

12.175–8 ATTACHING PARTS, Outer Extension Bar To Outer Back Bar

NUT, Hexagon.....	71/	10.....	10.260	4	400 3909

12.178–1 BAR, Rear Bumper Back (Inner)

67/	18-88.....	.....	2	318 5273
67/69	(Left) 01.....	.....	1	317 9988
67/69	(Left) 15-16-17-19.....	.....	1	318 5101
70/	(Left) 15-19-85-89.....	.....	1	319 6867
67	(Left) 50.....	.....	1	318 5253
67/69	(Left) 85-86-87-89.....	.....	1	318 5123
67/69	(Right) 01.....	.....	1	317 9989
67/69	(Right) 15-16-17-19.....	.....	1	318 5102
70/	(Right) 15-19-85-89.....	.....	1	319 6868
67	(Right) 50.....	.....	1	318 5254
67/69	(Right) 85-86-87-89.....	.....	1	318 5124

12.178–2 BAR, Rear Bumper Back (Outer)

67/69	(Left) 01.....	.....	1	317 9985
70/	(Left) 01-40.....	.....	1	319 5391
67/69	(Left) 15-16-17-19.....	.....	1	318 5081
70/	(Left) 15-19-85-89.....	.....	1	319 6863
67/	(Left) 18-88.....	.....	1	318 5134
67	(Left) 50.....	.....	1	318 5247
67/69	(Left) 85-86-87-89.....	.....	1	318 5121
67/69	(Right) 01.....	.....	1	317 9986
70/	(Right) 01-40.....	.....	1	319 5392
67/69	(Right) 15-16-17-19.....	.....	1	318 5082
70/	(Right) 15-19-85-89.....	.....	1	319 6864
67/	(Right) 18-88.....	.....	1	318 5135
67	(Right) 50.....	.....	1	318 5248
67/69	(Right) 85-86-87-89.....	.....	1	318 5122

12.178–3 BAR, Rear Bumper Back (Auxiliary)

67/69	15-16-17-19-85-86-87-89.....	.....	2	318 7950
68/	(Left) 30-70.....	.....	1	318 9702
68/	(Right) 30-70.....	.....	1	318 9704

HOOD - FENDERS - BUMPERS

12.178–4 ATTACHING PARTS, Bar To Side Sill

BOLT, Hexagon	67/68	(7/16"-20) 01	17.038	6	G181668	NA
BOLT, Hexagon	67/69	(7/16"-14) 01	12.175	6	400 1793	
BOLT, Hexagon	67	(7/16"-14) 10-50-80		AR	400 1897	
BOLT, Hexagon	68/69	(7/16"-14) 10-80		AR	400 1897	
BOLT, Hexagon	67/68	(7/16"-20) 10-50-80		AR	400 1825	
BOLT, Hexagon	70/	18 (L3S)		2	400 1897	
BOLT, Hexagon	70/	18 (W3S)		4	400 1897	
BOLT, Hexagon	70/	88		4	400 1897	
BOLT, Hexagon	68/69	30-70		4	400 3832	
STUD	67/69	18-88 (L3S)		2	318 5537	
STUD	70/	18 (L3S)		2	318 5537	
WASHER, Plain	67/69	01-10-50-80		AR	400 1120	
WASHER, Plain	70/	18-88	17.814	4	400 1120	
WASHER, Lock	67/69	01-10-50-80	17.820	AR	G131100	
WASHER, Lock	70/	18-88	17.824	4	G115550	
WASHER, Sealing	67/69	30-70		4	362 4361	
NUT, Hexagon	67/69	(7/16"-14) 01	17.406	6	G124573	NA
NUT, Hexagon	67/68	(7/16"-20) 01	17.406	6	400 1241	
NUT, Hexagon	67/69	18-88 (L3S)	17.406	2	G124573	NA
NUT, Hexagon	70/	18 (L3S)		2	G124573	NA

12.178–5 ATTACHING PARTS, Inner Bar To Outer Bar

BOLT, Hexagon	67/	18-88	17.038	2	G180121	
WASHER, Lock	67/69	18-88	17.820	2	G120382	
WASHER, Lock	70/	18-88	10.260	2	400 3803	
NUT, Hexagon	67/69	18-88	17.406	2	G120377	NA
NUT, Hexagon	70/	18-88	17.406	2	G102635	

12.178–6 ATTACHING PARTS, Inner Bar To Bumper Rail Mounting Bracket

WASHER, Sealing	70/	15-19-85-89		8	362 4361	
WASHER, Sealing	68/	30-70		4	362 4361	
WASHER, Plain	70/	15-19-85-89		8	400 1122	
WASHER, Plain	68/	30-70		4	400 1122	
WASHER, Lock	70/	15-19-85-89	17.824	8	G115550	NA
WASHER, Lock	68/69	30-70	17.820	4	G131100	
WASHER, Lock	70	30-70	17.824	4	G115550	NA
NUT, Hexagon	70/	15-19-85-89	17.406	8	G124573	NA
NUT, Hexagon	68/	30-70	17.406	4	G124573	NA
NUT, Push	70/	15-19-85-89		2	400 4175	

12.184–1 BAR, Vertical (Front)

67/69	01 167		2	354 9053	
70/	(Left) 01-40		1	319 7092	
67/70	(Left) 10 167		1	318 7071	
71/	(Left) 10		1	321 014C	
67/68	(Left) 50-80 167		1	318 7073	
71/	(Left) 70		1	321 0282	
69	(Left) 80		1	319 4076	
70	(Left) 80		1	319 7086	
71/	(Left) 80		1	321 0110	

70/	(Right) 01-40	.....	1	319 7093	
67/70	(Right) 10 167	.....	1	318 7072	
71/	(Right) 10	.....	1	321 0141	
67/68	(Right) 50-80 167	.....	1	318 7074	
71/	(Right) 70	.....	1	321 0283	
69	(Right) 80	.....	1	319 4077	
70	(Right) 80	.....	1	319 7087	
71/	(Right) 80	.....	1	321 0111	

12.184-2 ATTACHING PARTS, Vertical Bar To Front Bumper Rail

BOLT, Carriage	70/	01-10-40	10.260	2	400 3911	
BOLT, Hexagon	67/68	01	17.038	2	G180149	
BOLT, Hexagon	69	01-10	12.175	2	400 1793	
BOLT, Hexagon	70	(7/8" Long) 01-40	17. 88	2	G180121	
BOLT, Hexagon	70	(7/16" Long) 80	12.175	2	400 1793	
BOLT, Hexagon	71/	(3/8" Long) 10-70-80	17.038	2	G180124	
BOLT, Hexagon	71/	80	17.038	2	G179864	NA
SCREW, Machine	70/	01-40	17.629	2	G274195	
WASHER, Plain	67/	(15/32 x 1-1/4 x 3/16)	17.814	2	400 1116	
WASHER, Plain	71/	10-70 (13/32 x 13/16 x 1/16)	10.260	2	400 3808	
WASHER, Lock	67/69	01-10-50-80	17.820	4	G131100	
WASHER, Lock	70/	01-40	10.260	2	400 3803	
WASHER, Lock	71/	10-70	10.260	2	400 3803	
WASHER (Fibre)	71/	10-70	25.030	2	400 0326	
SPACER	71/	80	12.168	4	319 9607	
NUT, Hexagon	67/69	01-10-50-80	17.406	AR	G124573	NA
NUT, Hexagon	70/	01-40-70	12.168	2	400 3909	
NUT, Hexagon	70/	80	17.406	4	G124573	NA
NUT, Retainer	70/	01-40	.....	2	319 6299	
NUT, Retainer	67/68	01-10-50-80	.....	2	318 1975	
NUT, Retainer	69	01-10	.....	2	318 1975	
NUT, Retainer	70	10	.....	2	318 1975	
NUT, Retainer	71/	10-70	.....	2	319 6299	
NUT, Retainer	70	80	.....	2	319 6299	
NUT, Retainer	71/	80	.....	2	318 1975	

12.184-3 BRACKET, Vertical Bar To Rail

67/68	10-50-80	.....	2	318 7052	
69/70	10	.....	2	318 7052	

12.184-4 ATTACHING PARTS, Guard To Bracket

BOLT, Hexagon	67/69	10	.....	2	400 1792	
BOLT, Hexagon	70	10	12.175	2	400 1793	
BOLT, Hexagon	67/68	50-80	.....	2	400 1794	
WASHER, Plain	67/68	10-50-80	12.168	2	400 1764	
WASHER, Plain	69	10	12.168	2	400 1764	
WASHER, Lock	67/68	10-50-80	17.820	2	G131100	
WASHER, Lock	69	10	17.820	2	G131100	
WASHER, Lock	70	10	9.002	2	400 1898	

Printed in U.S.A.

12.184–5 BAR. Vertical (Rear)

67/69	01	167	.....	2	354 9052
70/	(Left) 01–40		.....	1	319 7093
67/69	(Left) 15–16–17–19	173	.....	1	318 7075
70/	(Left) 15–19–85–89		.....	1	319 7080
68	(Left) 30–70	168	.....	1	319 0925
69	(Left) 30–70 (* 12–3)	168	.....	1	319 0925
69	(Left) 30–70 (* 12–4)	168	.....	1	319 7113
70/	(Left) 30–70		.....	1	319 6317
67/69	(Left) 85–86–87–89	173	.....	1	318 7077
70/	(Right) 01–40		.....	1	319 7092
67/69	(Right) 15–16–17–19	173	.....	1	318 7076
70/	(Right) 15–19–85–89		.....	1	319 7081
68	(Right) 30–70	168	.....	1	319 0926
69	(Right) 30–70 (* 12–3)	168	.....	1	319 0926
69	(Right) 30–70 (* 12–4)	168	.....	1	319 7114
70/	(Right) 30–70		.....	1	319 6318
67/69	(Right) 85–86–87–89	173	.....	1	318 7078

12.184–6 ATTACHING PARTS. Vertical Bar To Rear Bumper Rail

BOLT, Carriage	70/	01–10–40	10.260	2	400 3911	
BOLT, Hexagon	67/69	01	17.038	2	G180149	
BOLT, Hexagon	70	(7/8" Long) 01–40	17.038	2	G180121	
BOLT, Hexagon	71/	15–19–85–89	17.038	2	G179861	NA
BOLT, Hexagon	70	10–80	12.175	2	400 1793	
BOLT, Hexagon	68	30–70	17.038	2	G180147	NA
BOLT, Hexagon	69	30–70	12.175	2	400 1793	
BOLT, Hexagon	70/	(3/8"–16 × 1–1/4") 30–70	17.038	2	G180124	
BOLT, Hexagon	72	(7/16"–14 × 1–1/8") 70	17.038	2	G180146	NA
WASHER, Plain	67/69	01	17.814	4	400 1120	
WASHER, Plain	67/	10–80	17.814	4	400 1116	
WASHER, Lock	67/69	01–10–30–70–80	17.820	4	G131100	
WASHER, Lock	70/	01–40	10.260	2	400 3803	
WASHER, Lock	70/	(3/8" I.D.) 30–70	10.260	4	400 3803	
WASHER, Lock	72	(7/16" I.D.) 70	.....	2	400 1898	
NUT, Hexagon	67/69		17.406	4	G124573	NA
NUT, Hexagon	70/	10–80	17.406	2	G124573	NA
NUT, Hexagon	70/	30–70	17.406	2	G120377	NA
NUT, Retainer	67/69	01–30–70	.....	2	318 1975	
NUT, Retainer	70/	(3/8"–16) 01–30–40–70	.....	2	319 6299	
NUT, Retainer	70/	10–80	.....	2	318 1975	
NUT, Retainer	72	(7/16"–14) 70	.....	2	318 1975	
SPACER	72	01–10–40–80	17.814	2	400 1122	

12.184–7 OVERLAY. Front Vertical Bar

67/69	01–10–50–80	.....	2	354 9066	
70/	01–40–80	.....	2	319 6999	
70	10	.....	2	354 9066	
71/	10–70	.....	2	319 6999	

12.184–7a OVERLAY. Rear Vertical Bar

67/69	01–10–50–80	.....	2	354 9066	
70/	01–10–40–80	.....	2	319 6999	
68/	30–70	.....	2	319 0932	

12.184–8 ATTACHING PARTS. Overlay To Vertical Bar

NUT, Hexagon	67/		17.412	AR	G271172	
NUT, Speed	70/	01–40	.....	4	321 5179	

HOOD - FENDERS - BUMPERS

12.184–9 SPACER, Vertical Guard To Bumper Rail

69	30–70 (* 12–4)	4	363	5399

12.245–1 SHIELD, Rear Rail To Body (Incl. Brackets)

67/69	08	1	355	2325

SPECIAL INFORMATION

The Engine Build Code Number, Vehicle Identification Number and the information provided on the Unit Body Plate are often necessary when determining the proper replacement parts for your automobile. For their location refer to the General Information Section found at the front of this catalog.

NOTES

13–1 .... Knob is 1-7/16" long.

13–2 .... Knob is 7/8" long.

13–3 .... Used on 68 70 (V8) prior to Body Number 36090 and Heater Valve is mounted on the Dash Panel.

13–4 .... Used on 68 70 (V8) beginning with Body Number 36090 and Heater Valve Screws into the Intake Manifold.

13–5 .... The Blower Motor is of Delco Manufacture and the Blower Motor Exhaust Tube is Rubber and is a separate part.

13–6 .... The Blower Motor is of Leece-Neville Manufacture and the Blower Motor Exhaust Tube is Metal and is part of the Blower Motor.

13–7 .... Blower Motor does not have a Rubber Tube to Blower Housing.

13–8 .... Blower Motor has a Rubber Tube to Blower Housing for Cooling Motor.

13–9 .... Compressor is of York Manufacture.

13–10 ... Compressor is of Tecumseh Manufacture.

13–11 ... Compressor is painted Black.

13–12 ... Compressor is painted Silver.

13–13 ... Mounting Bracket is a Malleable Iron Casting.

13–14 ... Mounting Bracket is an Aluminum Casting.

13–15 ... Clutch is of Electro-Lock Manufacture with unpainted Metal Finish.

13–16 ... Clutch is of Warner Electric Manufacture with painted Black Finish.

13–17 ... Condenser Core is a McCord Unit. The Compressor to Condenser Outlet is a 90 degree angle fitting and the Receiver Check Valve does not have a Swivel Nut.

13–18 ... Condenser Core is a Modine Unit. The Compressor to Condenser Outlet is a straight fitting and the Receiver Check Valve has a Swivel Nut.

13–19 ... Thermostat Knob is fastened to the Control Shaft with a Set Screw.

13–20 ... Thermostat Knob is fastened to the Control Shaft with a self-locking Clip, which is molded into the Knob.

13–21 ... Bezel has four Finger Grips.

13–22 ... Bezel has 180 Serrations instead of Finger Grips.

13–23 .. On 69 10, the length of Compressor to Condenser Hose minus Steel Tube is 35 inches.

13–24 .. On 69 10, the length of Compressor to Condenser Hose minus Steel Tube is 24 inches.

13–25 ... On 69 80, the length of Compressor to Condenser Hose minus Steel Tube is 37-3/4 inches.

13–26 ... On 69 80, the length of Compressor to Condenser Hose minus Steel Tube is 26-3/4 inches.

13–27 ... Used on 69 01 (V8) when Heater Valve is mounted on the Dash Panel.

13–28 ... Used on 69 01 (V8) when Heater Valve screws into the Intake Manifold.

Printed in U.S.A.

NOTES

13–29 ... Five Types of Louvers are used on the 70 01. (Refer Louver Illustrations Listed Below.)

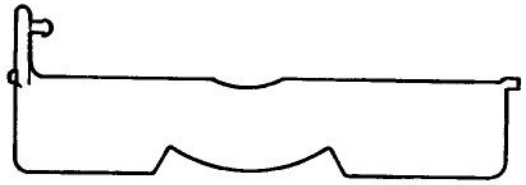

HORIZONTAL No. 1

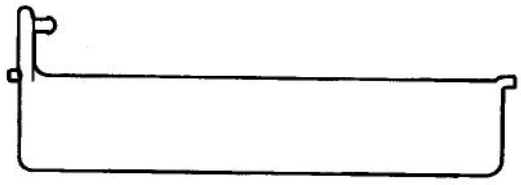

HORIZONTAL No. 2

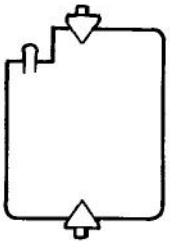

VERTICAL No. 1

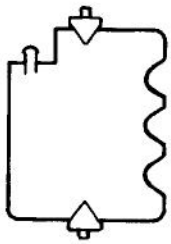

VERTICAL No. 2

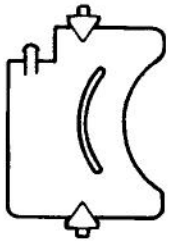

VERTICAL No. 3

13–30 ... Motor Shaft is 3/4" long. The Motor Wheel has a flat Back Plate.

13–31 ... Motor Shaft is 1-1/4" long. The Motor Wheel has a flat Back Plate.

13–32 ... Motor Shaft is 1-1/2" long. The Motor Wheel has a cone shaped Back Plate.

13–33 ... Used with Alternator End Plate Connectors as illustrated in Type 1 and a. Air Conditioning Motor Relay is used.

13–34 ... Used with Alternator End Plate Connectors as illustrated in Type 2. No Air Conditioning Motor Relay is used.

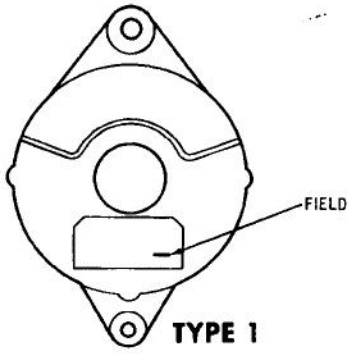

TYPE 1

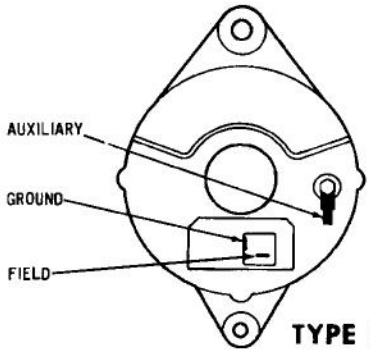

TYPE 2

Printed in U.S.A.

NOTES

13–35 ... Used on cars which have a "one-piece" Chassis Wire Harness without a disconnect at the dash panel and on 70 30-70 series there are "Six" metal terminals at the Body Harness Connector.

13–36 ... Used on cars which have a "two or three-piece" Chassis Wire Harness with a disconnect at the dash panel.

13–37 ... The Compressor to Condenser Hose minus the Steel Tubing is 18 inches in length. The Receiver has a Check Valve as part of it. (See Type 1 Illustration below.)

13–38 ... The Compressor to Condenser Hose minus the Steel Tubing is 17 inches in length. The Receiver does not have a Check Valve incorporated as part of it. (See Type 2 Illustration below.)

13–39 ... The Compressor to Condenser Hose minus the Steel Tubing is 17-1/8 inches in length. The Receiver has a Check Valve as part of it. (See Type 1 Illustration below.)

13–40 ... The Compressor to Condenser Hose minus the Steel Tubing is 16.5 inches in length. The Receiver does not have a Check Valve incorporated as part of it. (See Type 2 Illustration below.)

13–41 ... The Compressor to Condenser Hose minus the Steel Tubing is 24 inches in length. The Receiver has a Check Valve as part of it. (See Type 1 Illustration below.)

13–42 ... The Compressor to Condenser Hose minus the Steel Tubing is 20 inches in length. The Receiver does not have a Check Valve incorporated as part of it. (See Type 2 Illustration below.)

13–43 ... The Compressor to Condenser Hose minus the Steel Tubing is 26-3/4 inches in length. The Receiver has a Check Valve as part of it. (See Type 1 Illustration below.)

13–44 ... The Compressor to Condenser Hose minus the Steel Tubing is 20 inches in length. The Receiver does not have a Check Valve incorporated as part of it. (See Type 2 Illustration below.)

13–45 ... The Compressor to Condenser Hose minus the Steel Tubing is 24 inches in length. The Receiver has a Check Valve as part of it. (See Type 1 Illustration below.)

13–46 ... The Compressor to Condenser Hose minus the Steel Tubing is 20 inches in length. The Receiver does not have a Check Valve incorporated as part of it. (See Type 2 Illustration below.)

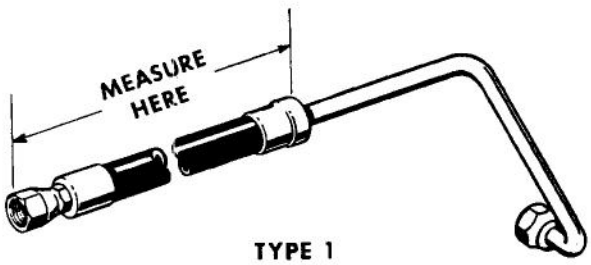

TYPE 1

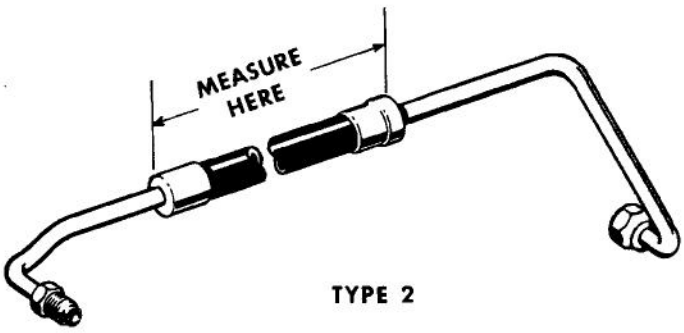

TYPE 2

13–47 ... On 1970 (232) used prior to Engine Build Code Number 307E20.

13–48 On 1970 (232) used on cars with Engine Build Code Number 307E20.

NOTES

13–49 ... The Compressor to Condenser Hose does not have a Rubber "O" Ring at Evaporator Core End. (See Type 1 Illustration below.)

13–50 ... The Compressor to Condenser Hose has a Rubber "O" Ring at Evaporator Core End. (See Type 2 Illustration below.)

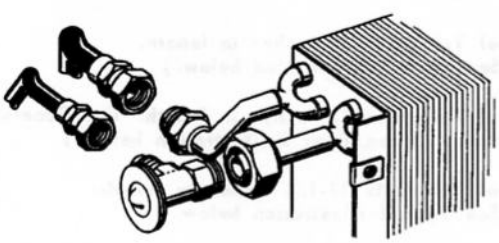

TYPE 1

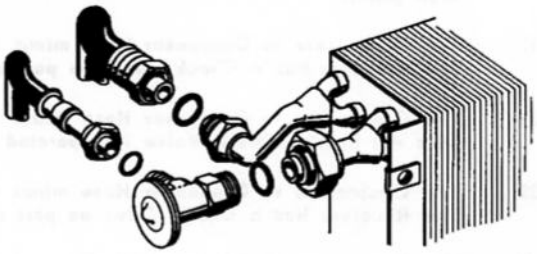

TYPE 2

13–51 ... The Center Air Discharge Duct has 12 Vertical Louvers and 6 Horizontal Louvers.

13–52 ... The Center Air Discharge Duct has 10 Vertical Louvers and no Horizontal Louvers.

13–53 ... The Wire from the Resistor to Blower Motor is white and 14" long.

13–54 ... The Wire from the Resistor to Blower Motor is black and 19.5" long.

13–55 ... Resistor has 4 Prong Type Terminals.

13–56 ... Resistor has 3 Prong Type Terminals. A Relay is also used.

13–57 ... On 72 10-80 (V8-WPS-WAT) Used on Cars equipped with a Saginaw Steering Pump that has a lobe shaped Reservoir mounted in back of the Pump and has a Filler Cap and Gauge.

13–58 ... On 72 10-80 (V8-WPS-WAT) Used on Cars equipped with an Eaton Steering Pump that has a round Reservoir mounted on top of the Pump and has a Reservoir Cover that is 4-1/4" in diameter and is fastened with a Wing Nut.

13–59 ... Heater operation is controlled by 4 Cables on Heater Control.

13–60 ... Heater operation is controlled by 3 Cables on Heater Control.

13–61 ... Used prior to Body No. 06596 on 1972 01-40 (Six) and 02571 on (V8).

13–62 ... Used beginning with Body No. 06596 on 1972 01-40 (Six) and 02571 on (V8).

13–63 ... Used on cars with Evaporator Core as Illustrated for Type 1.

13–64 ... Used on cars with Evaporator Core as Illustrated for Type 2.

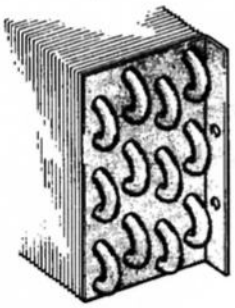

TYPE 1

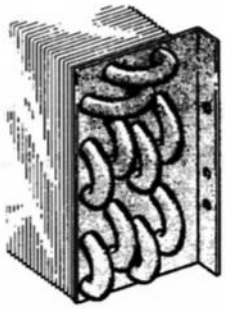

TYPE 2

13–65 ... Used on 1972 10-80 (WAC)(WHLV) prior to Body No. A-103114 and H-103145.

13–66 ... Used on 1972 10-80 (WAC)(WHLV) beginning with Body No. A-103114 and H-10345.

Printed in U.S.A.

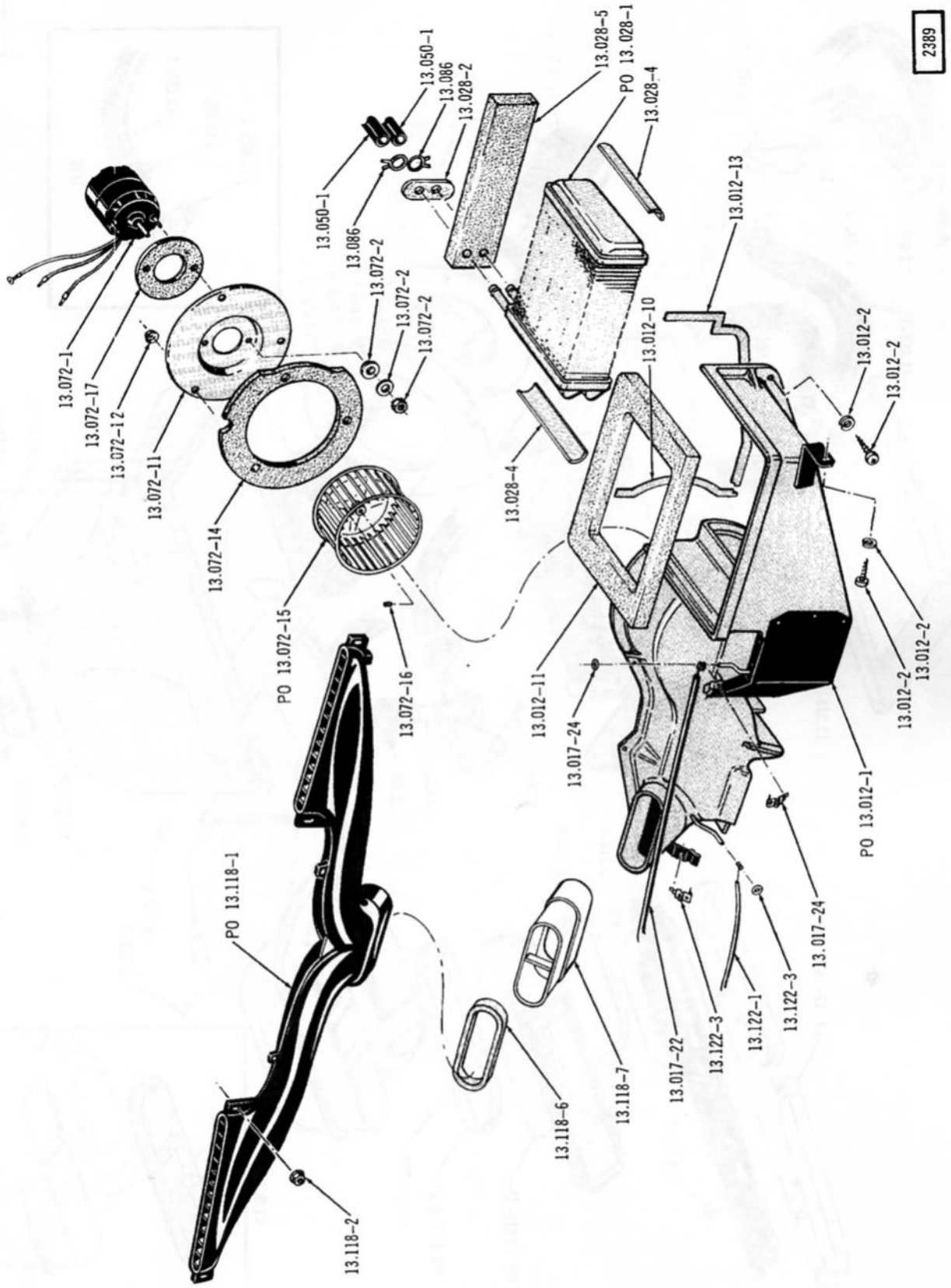

HEATER AND BLOWER HOUSINGS ... 1967/69 (01-LAC)

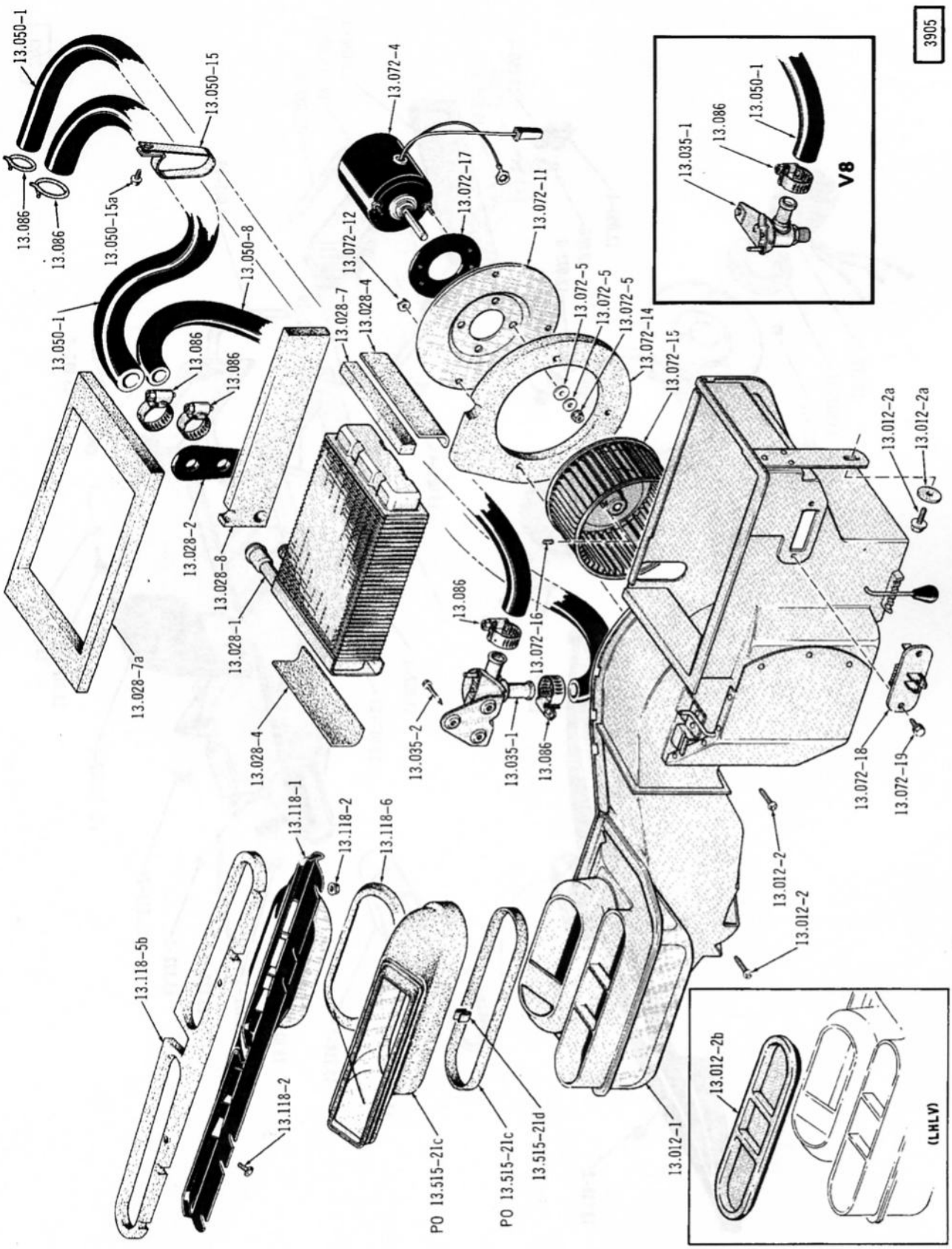

HEATER AND BLOWER HOUSING ... 1970/ -LAC (01)(40)

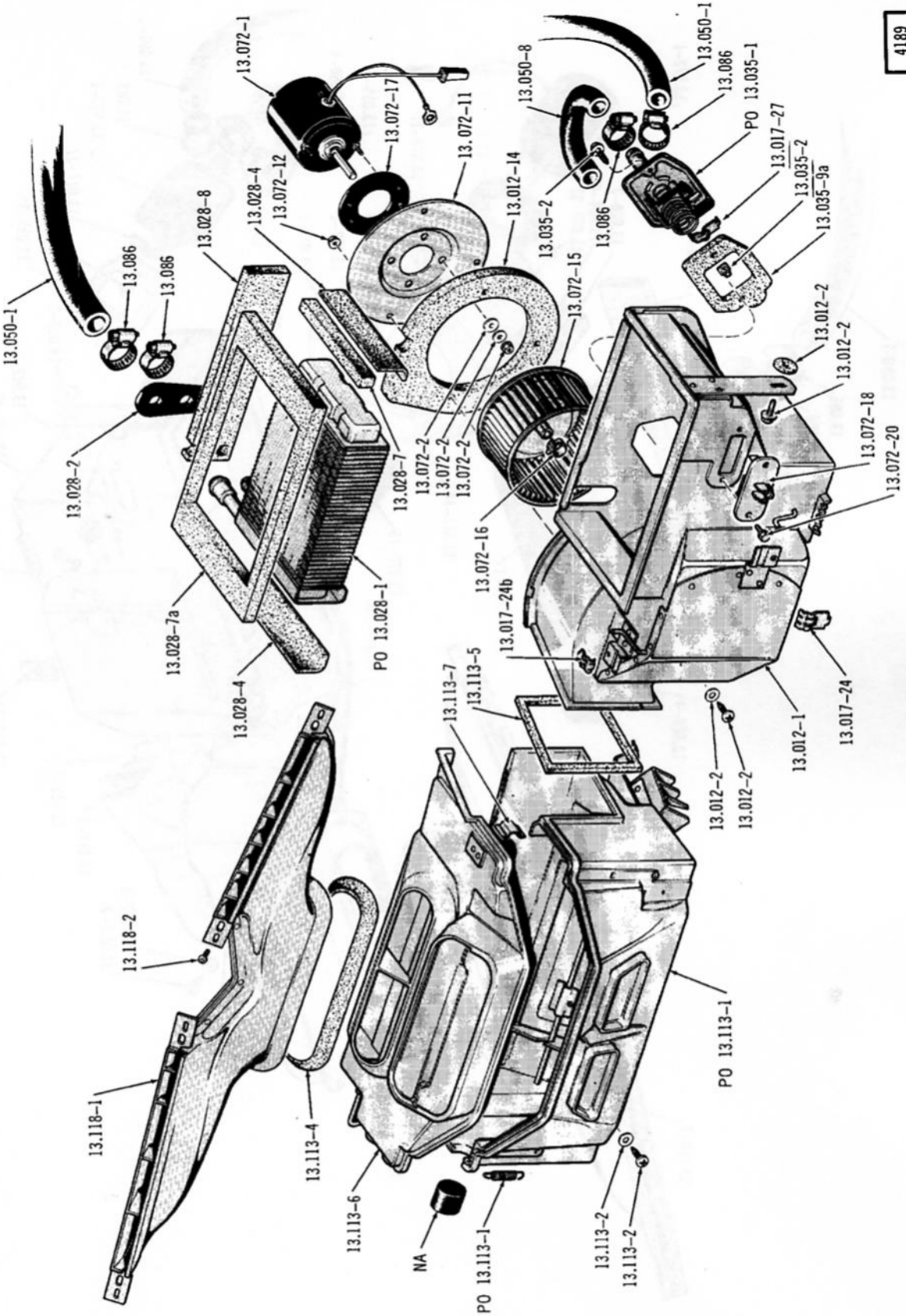

HEATER AND BLOWER HOUSING . . . 1971 (70-LAC), 1972-TYPE 1 (70-LAC)

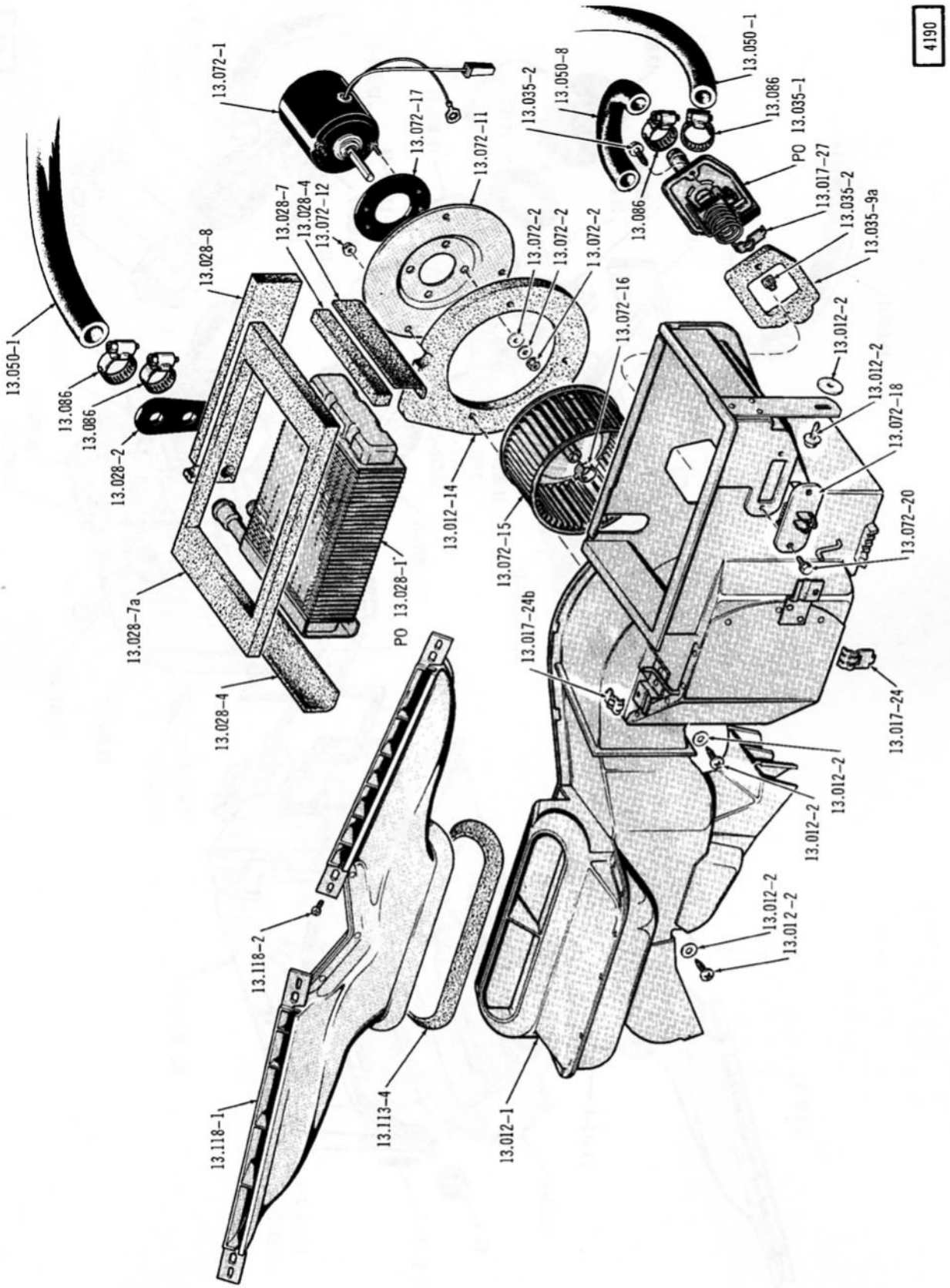

HEATER AND BLOWER HOUSING . . . 1972–TYPE 2 (70–LAC)

Printed in U.S.A.

SMD

2864

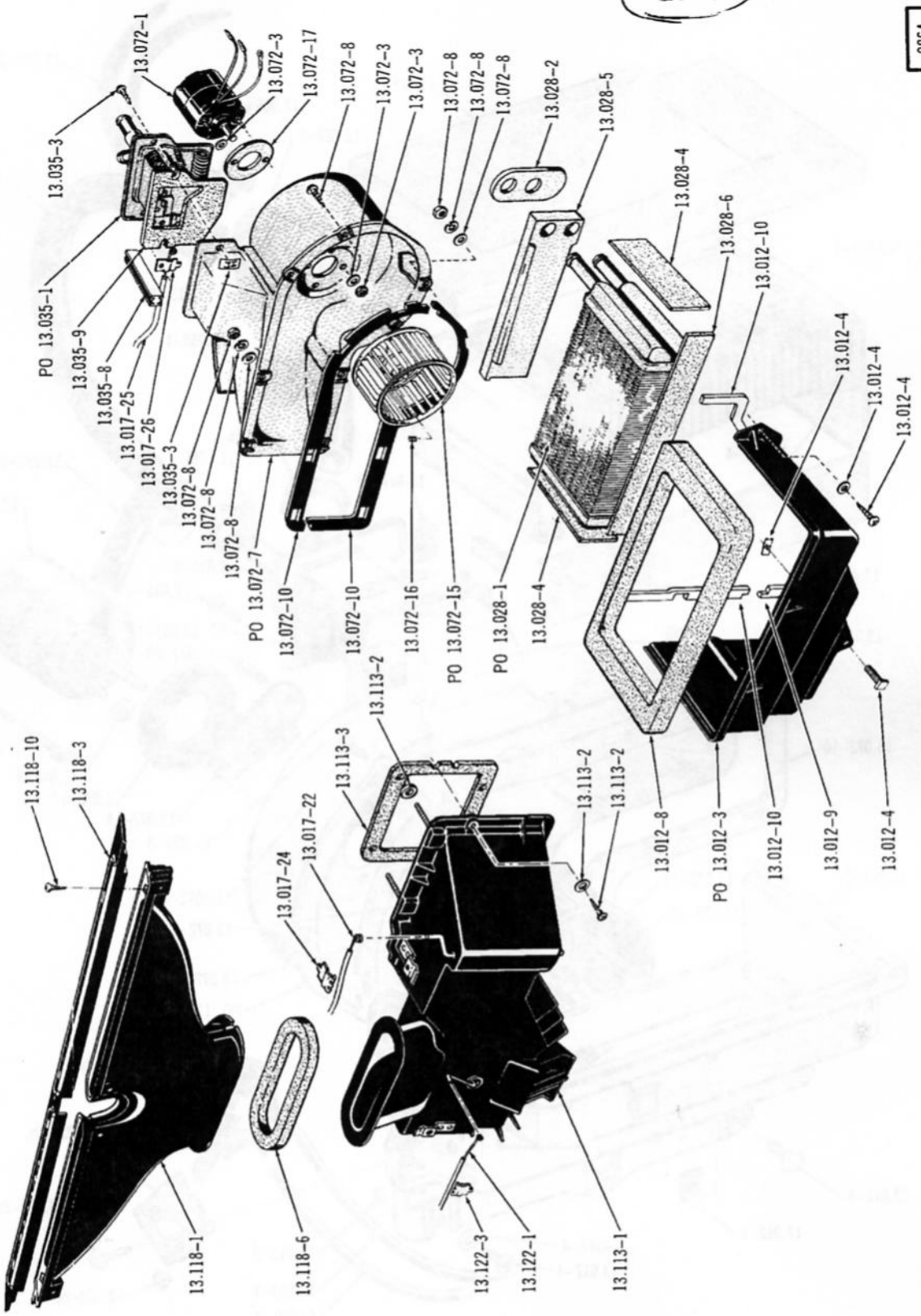

HEATER AND BLOWER HOUSINGS ... 1967/71 LHD-LAC-LHLV (10)(50)(80)

Printed in U.S.A.

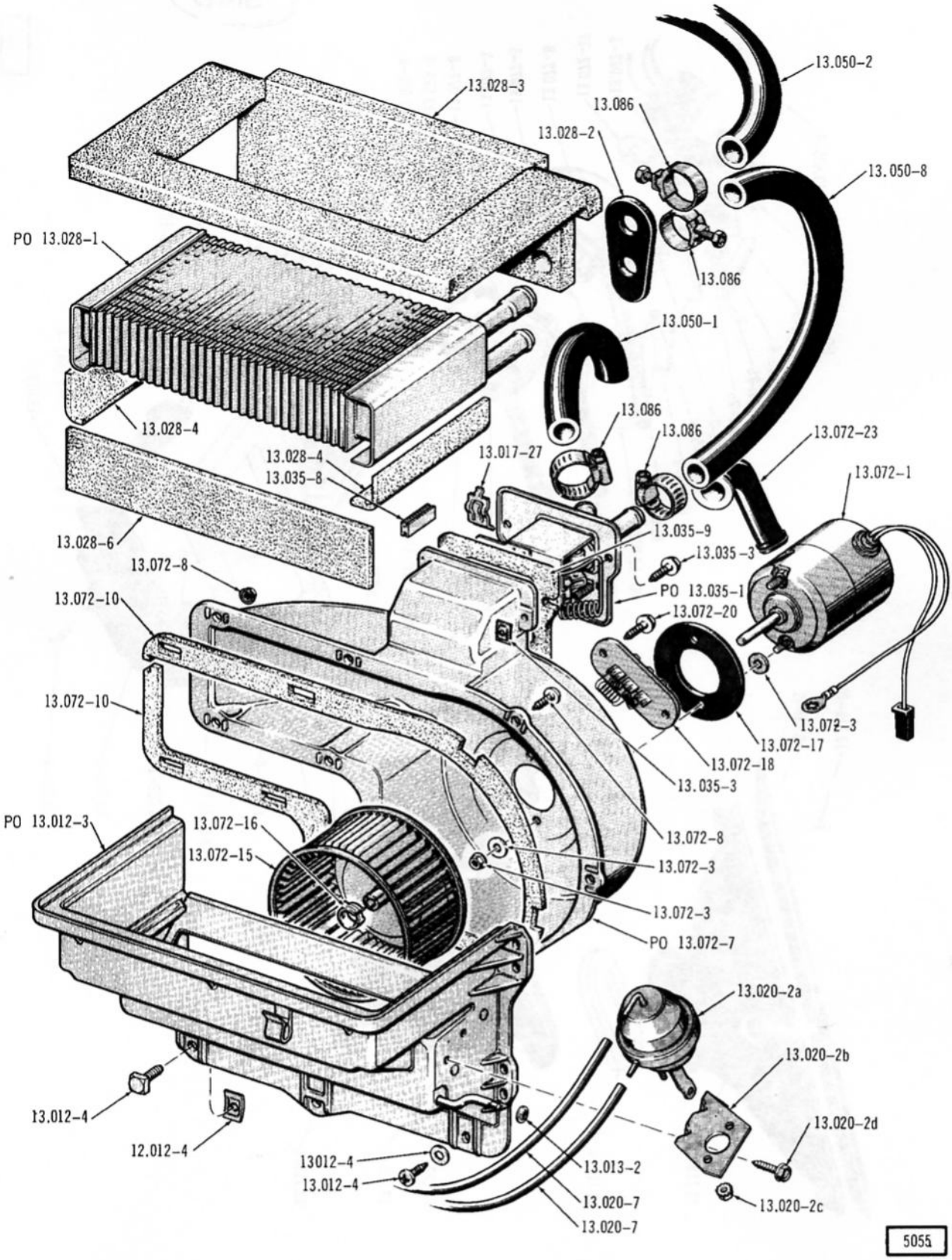

HEATER AND BLOWER HOUSING . . . 1972 (10)(80)

Printed in U.S.A.

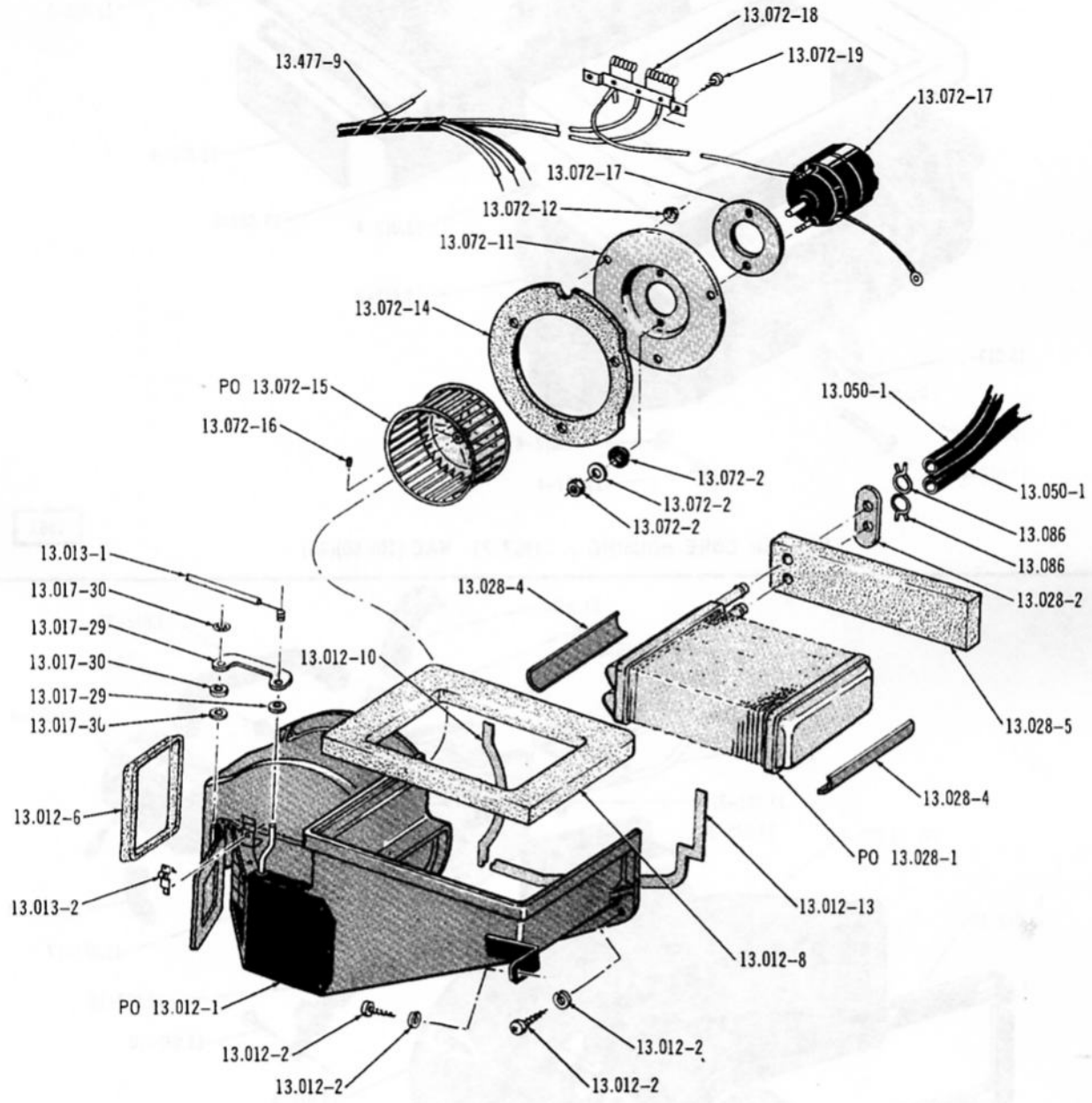

2394

AIR CONDITIONING BLOWER AND HEATER CORE HOUSING ... 1967/69 (01-WAC)

Printed in U.S.A.

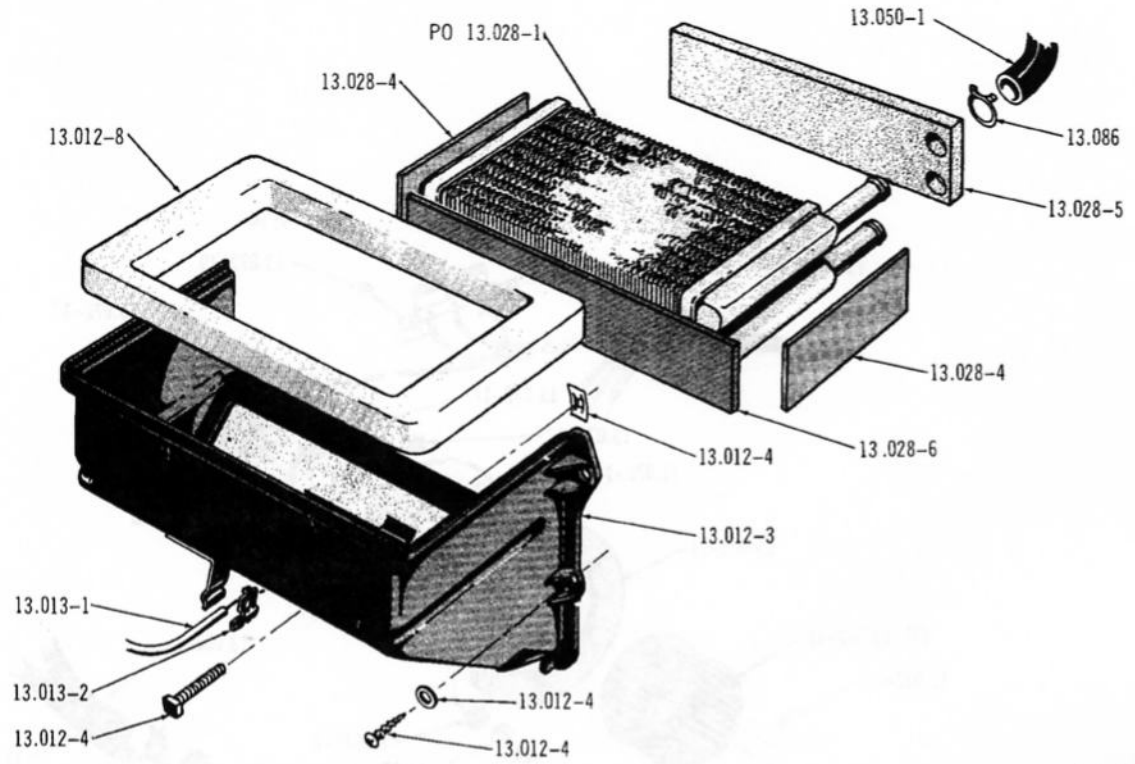

2963

HEATER CORE HOUSING ... 1967/71 WAC (10)(50)(80)

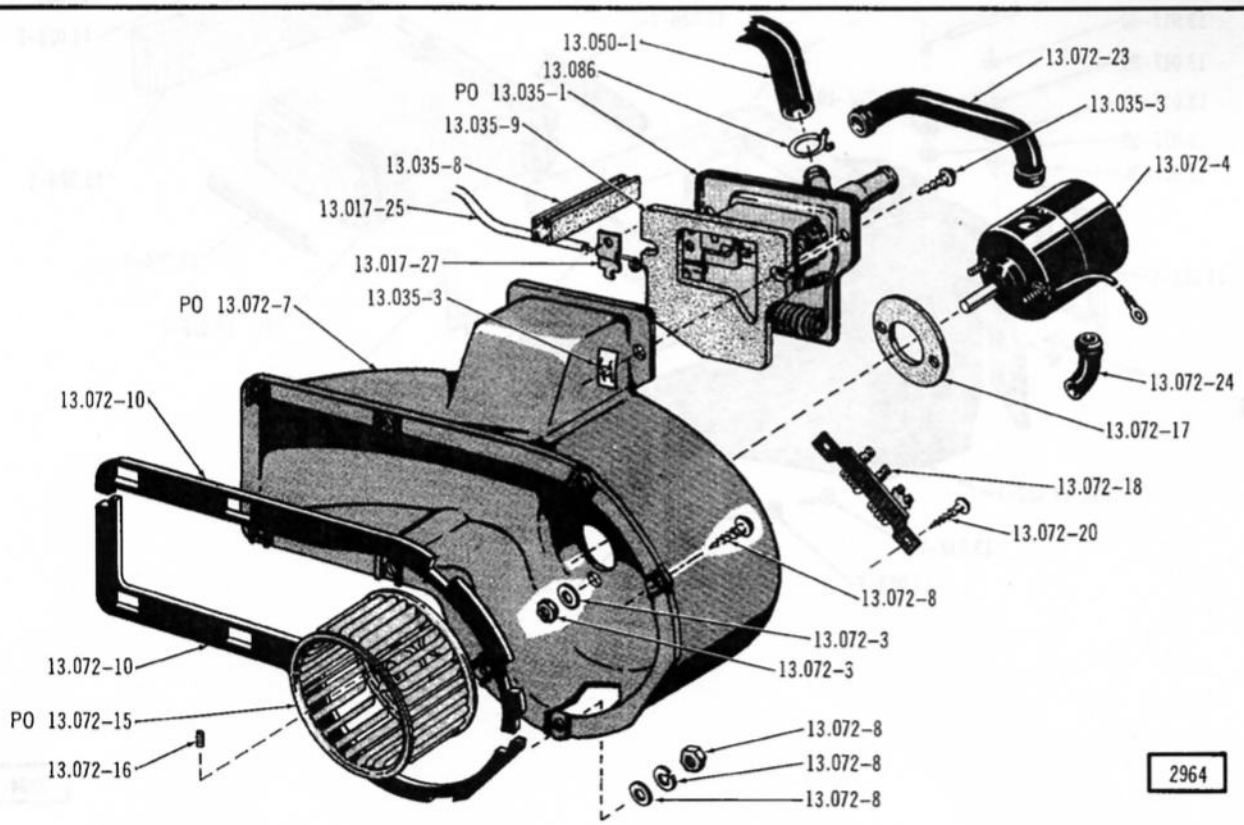

2964

BLOWER HOUSING ... 1967/71 WAC-WHLV (10)(50)(80)

Printed in U.S.A.

2353

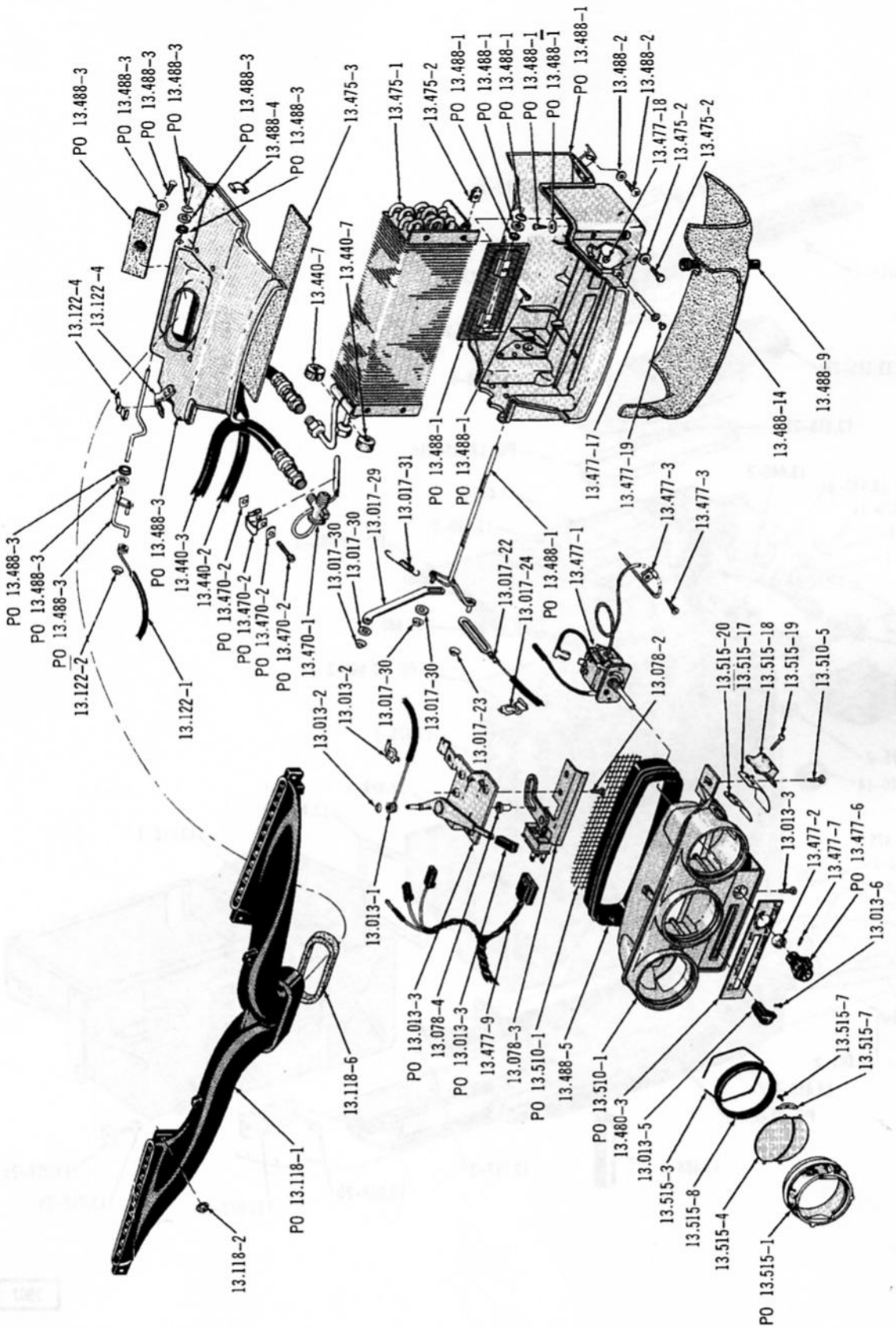

AIR CONDITIONING EVAPORATOR HOUSING AND DUCTS ... 1967/69 (01)

Printed in U.S.A.

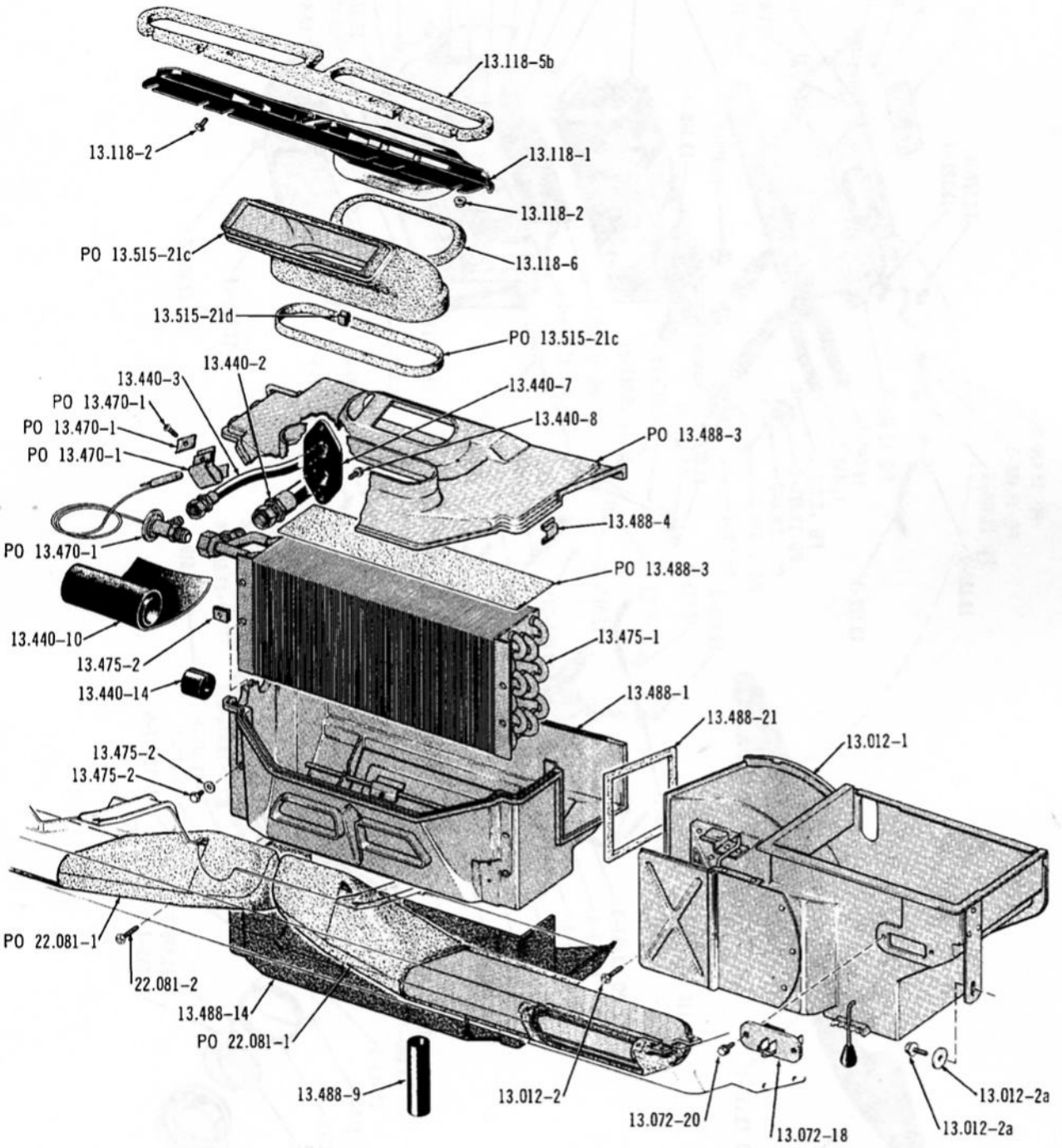

3907

AIR CONDITIONING EVAPORATOR HOUSING AND DUCTS ... 1970/ (01)(40)

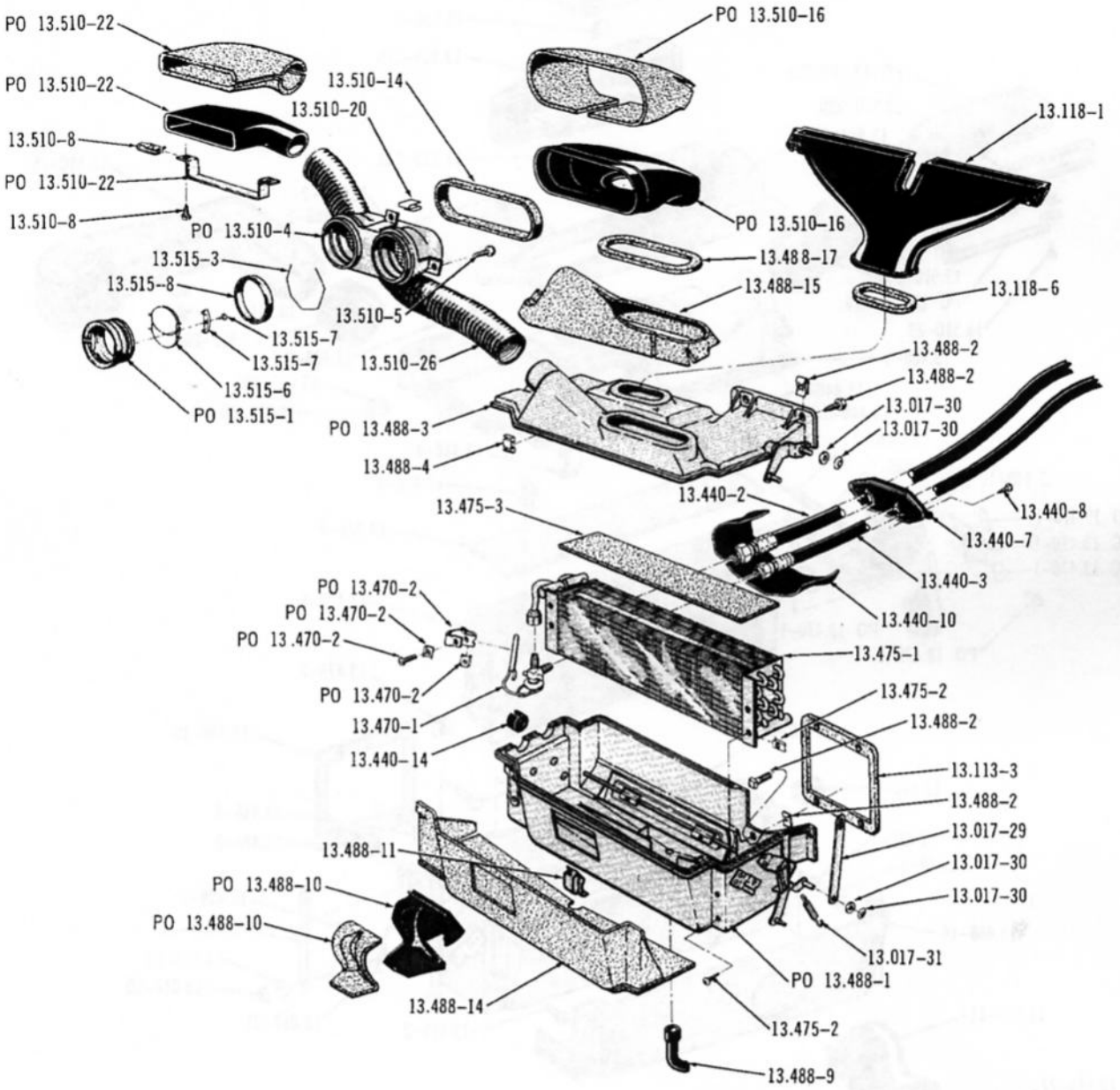

3008

AIR CONDITIONING EVAPORATOR HOUSING AND DUCTS ... 1967 (10)(50)(80), 1968 (10)(80)

Printed in U.S.A.

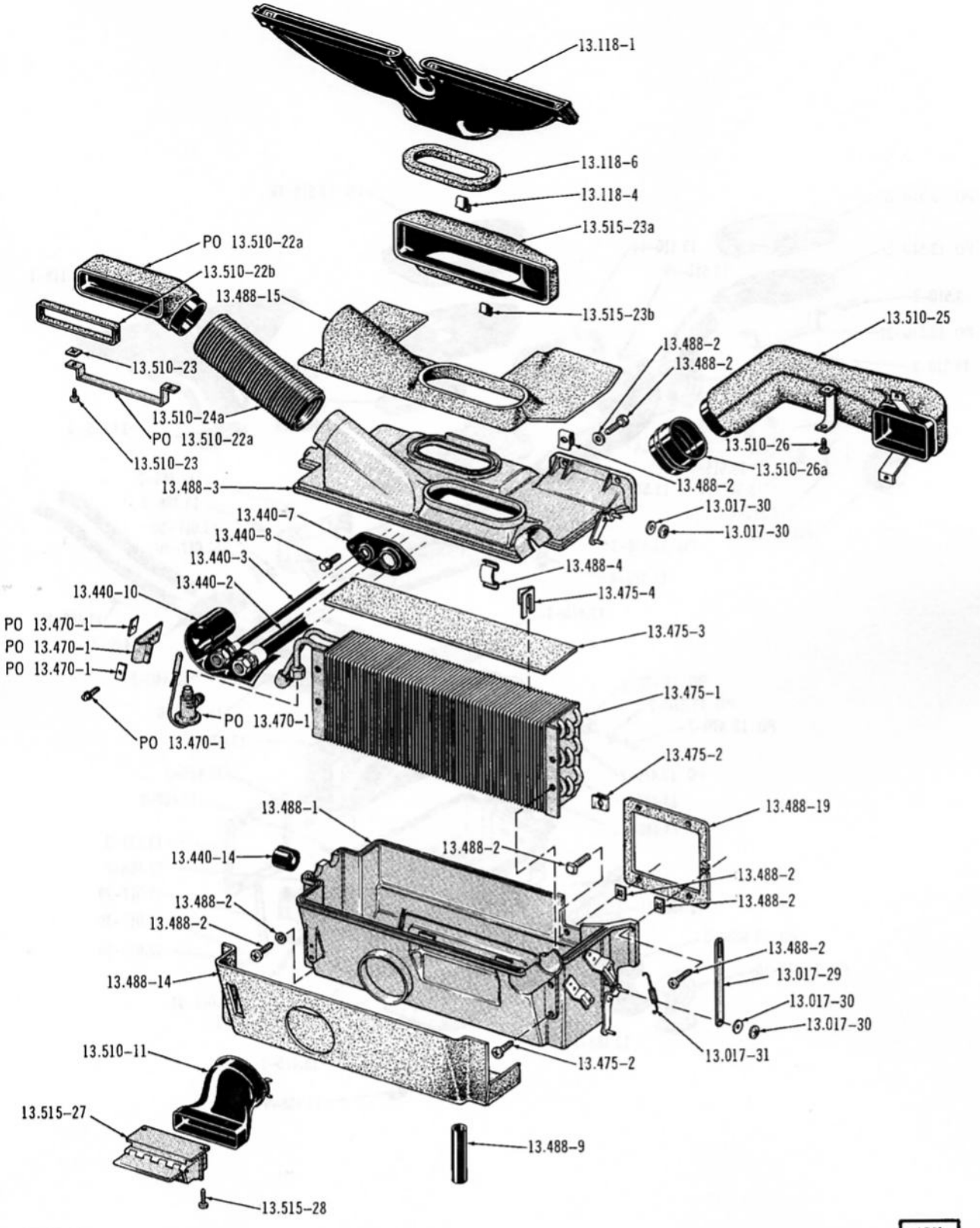

3541

AIR CONDITIONING EVAPORATOR HOUSING AND DUCTS ... 1969/71 (10)(80)

Printed in U.S.A.

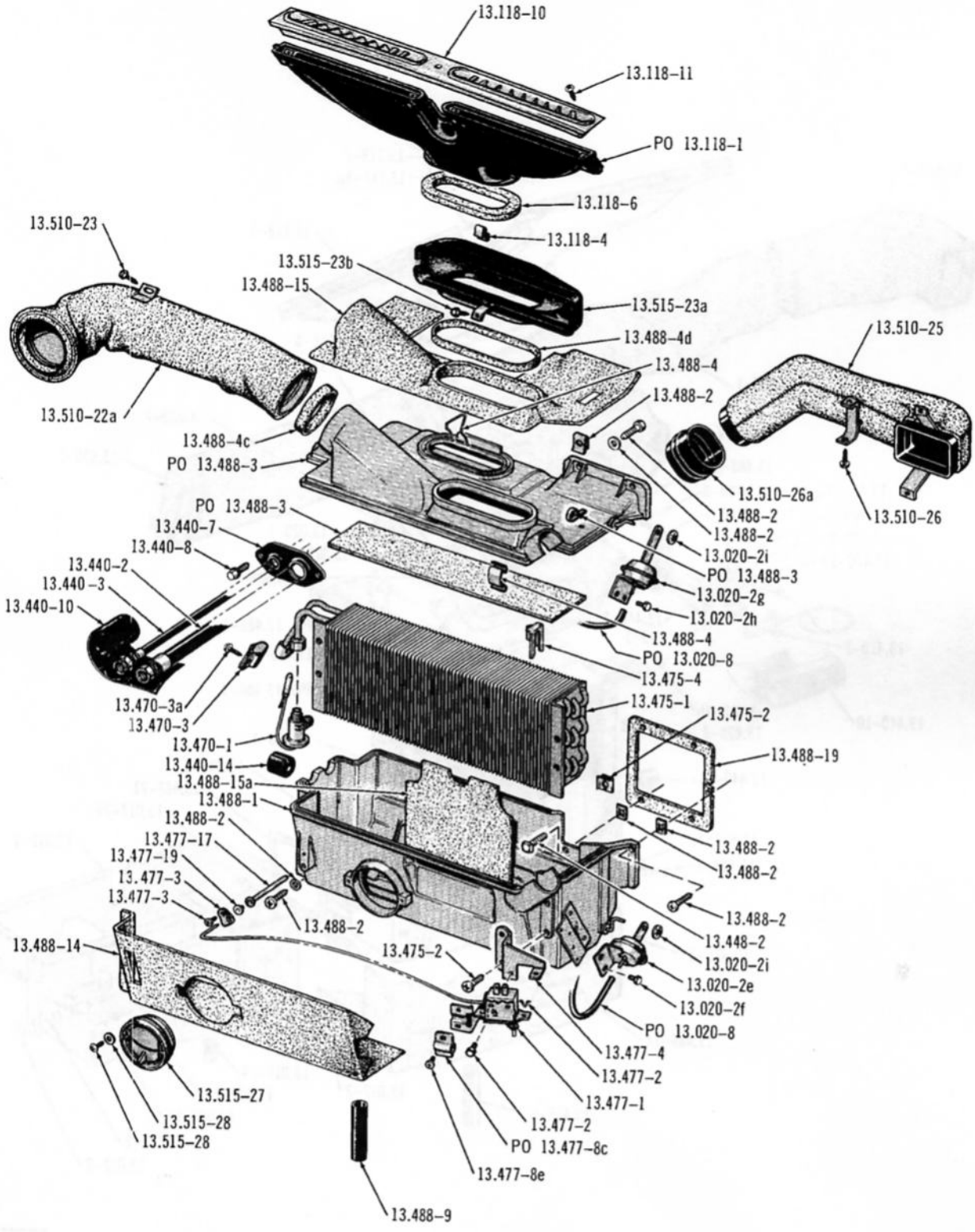

5027

AIR CONDITIONING EVAPORATOR HOUSING AND DUCTS . . . 1972 (10)(80)

Printed in U.S.A.

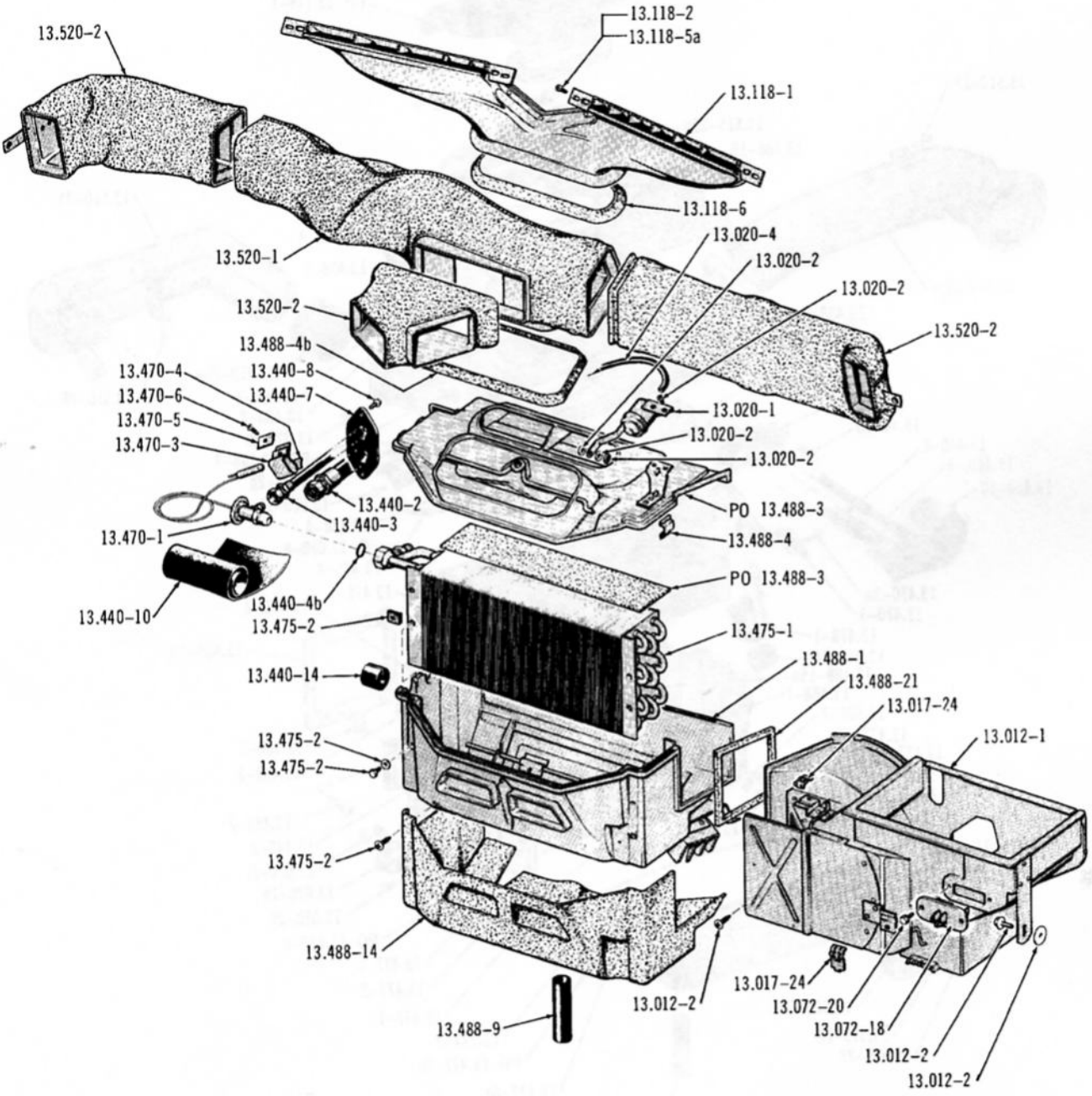

AIR CONDITIONING EVAPORATOR HOUSING AND DUCTS . . . 1971/ (70)

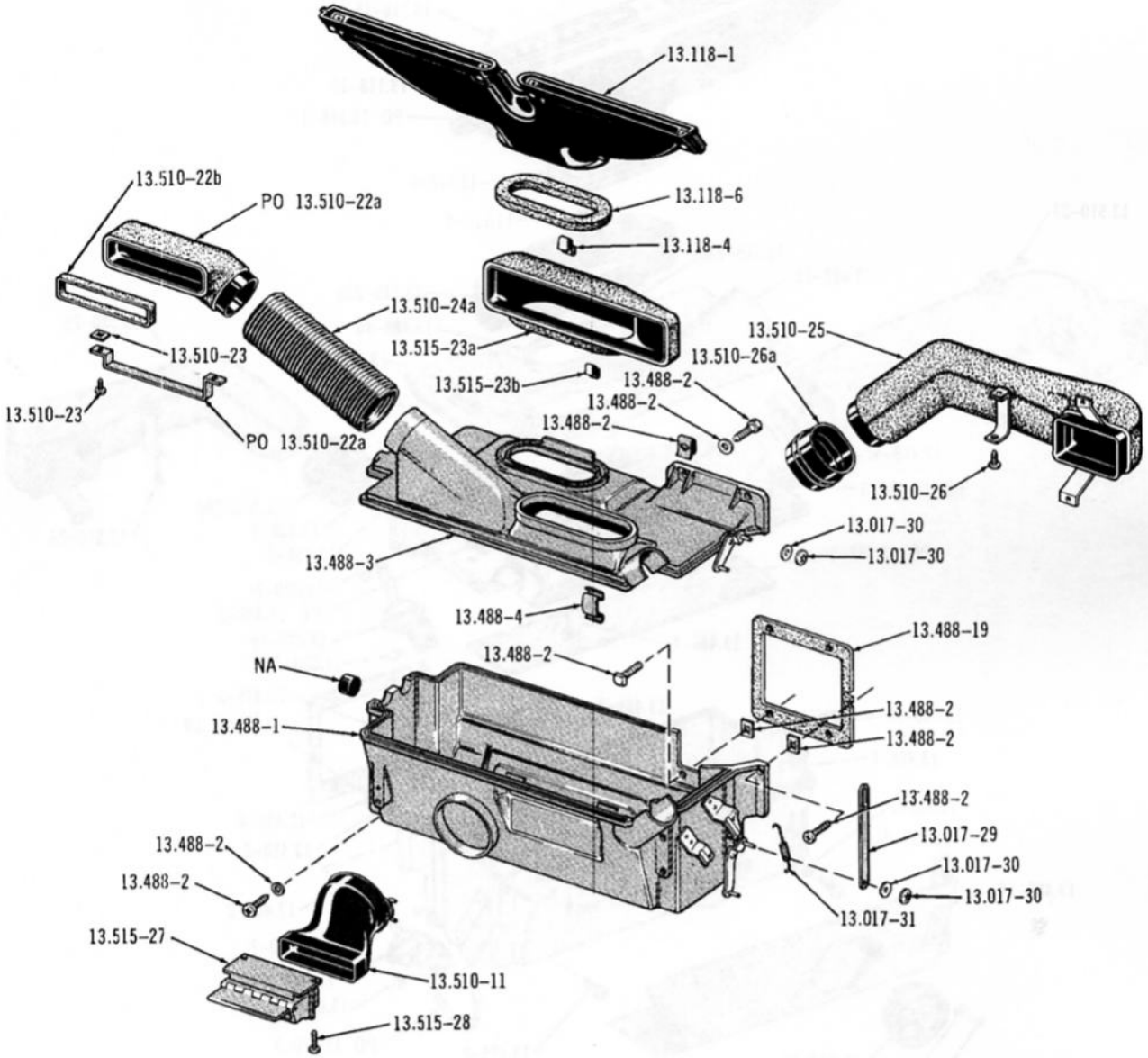

3542

HIGH LEVEL VENTILATION HOUSING AND DUCTS ... 1969/71 (10)(80)

Printed in U.S.A.

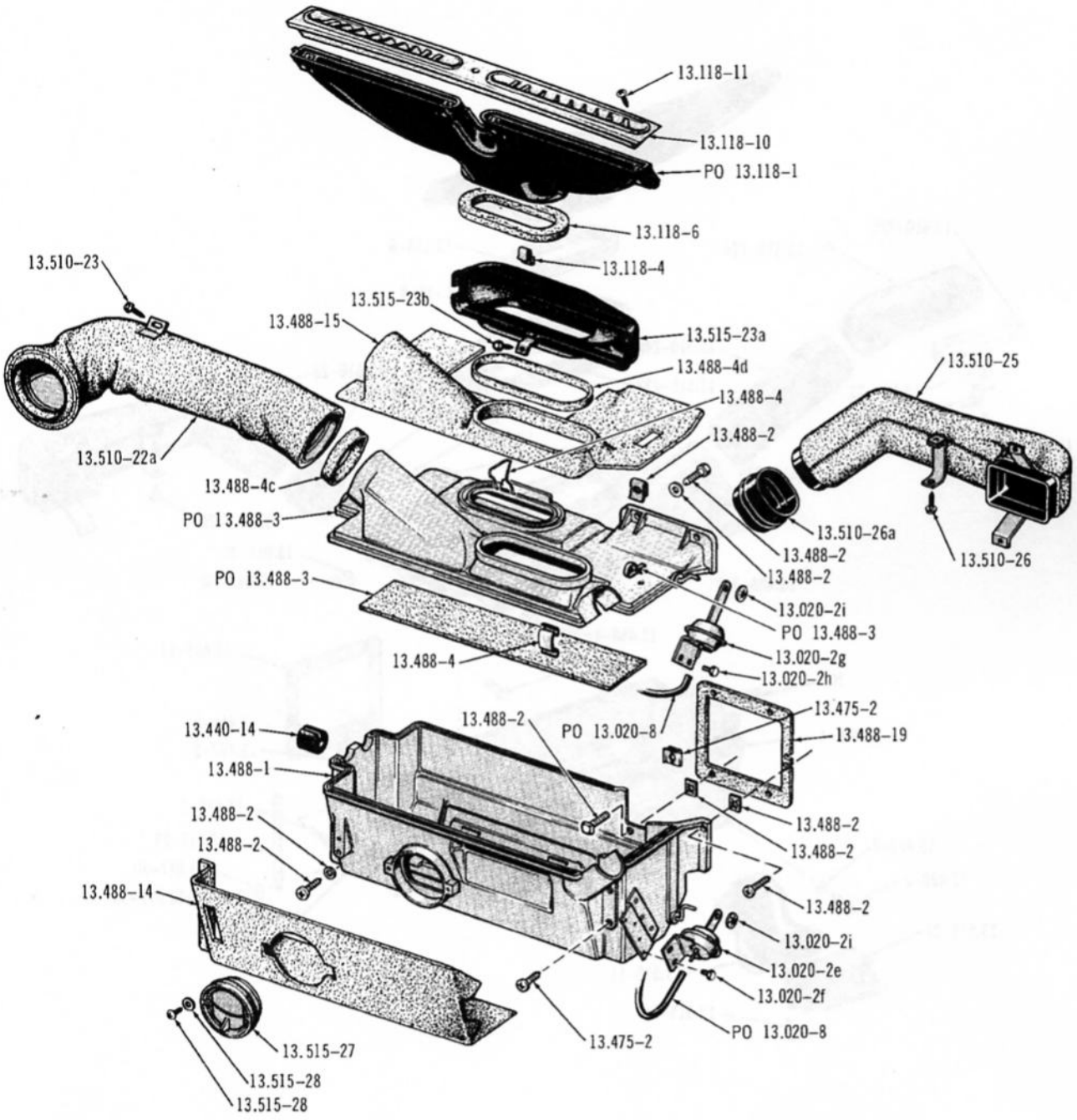

5029

HIGH LEVEL VENTILATION HOUSING AND DUCTS . . . 1972 (80)

3908

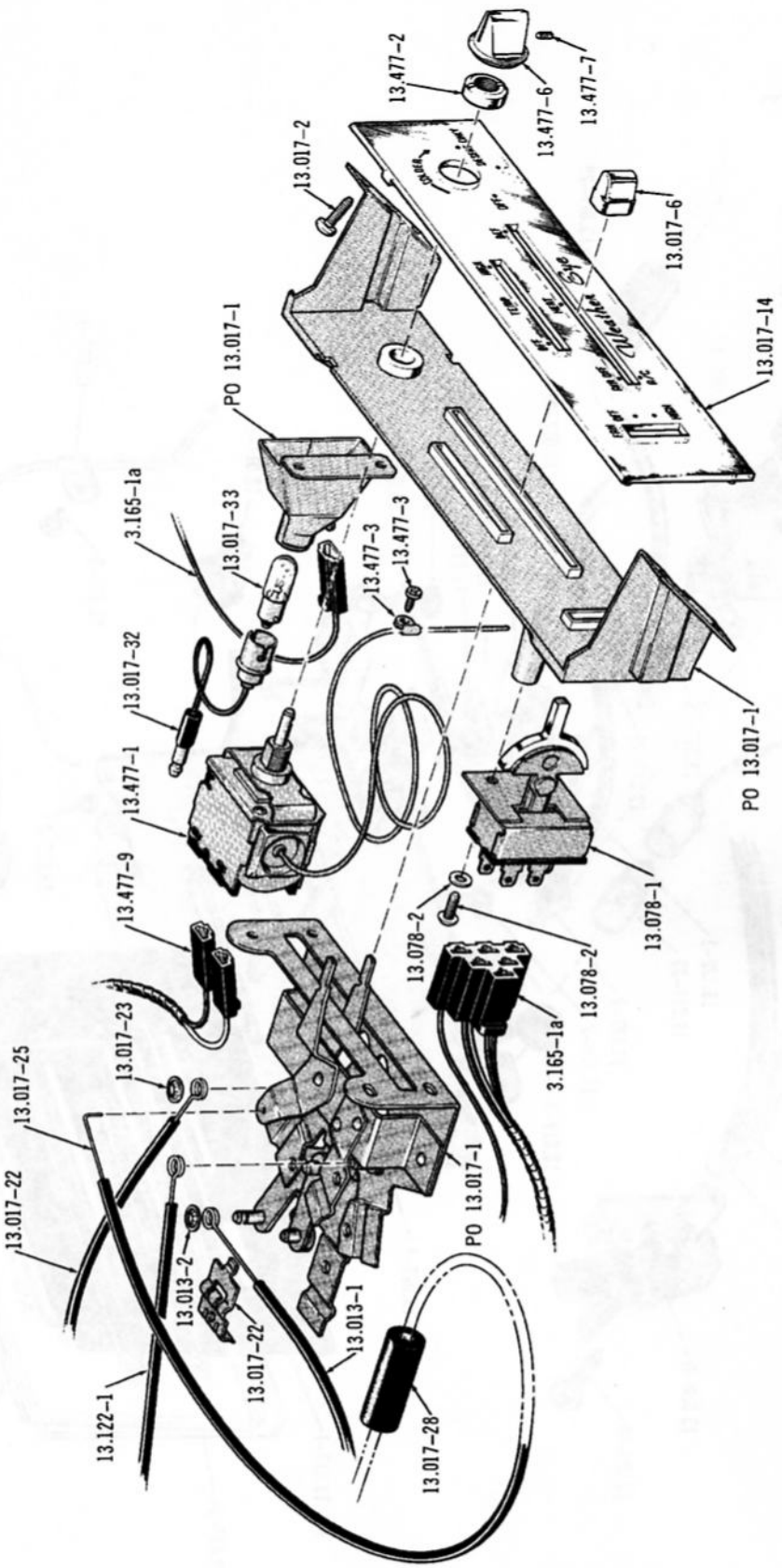

HEATER, AIR CONDITIONING AND HIGH LEVEL VENTILATION CONTROLS ... 1970/ (01)(40)

4157

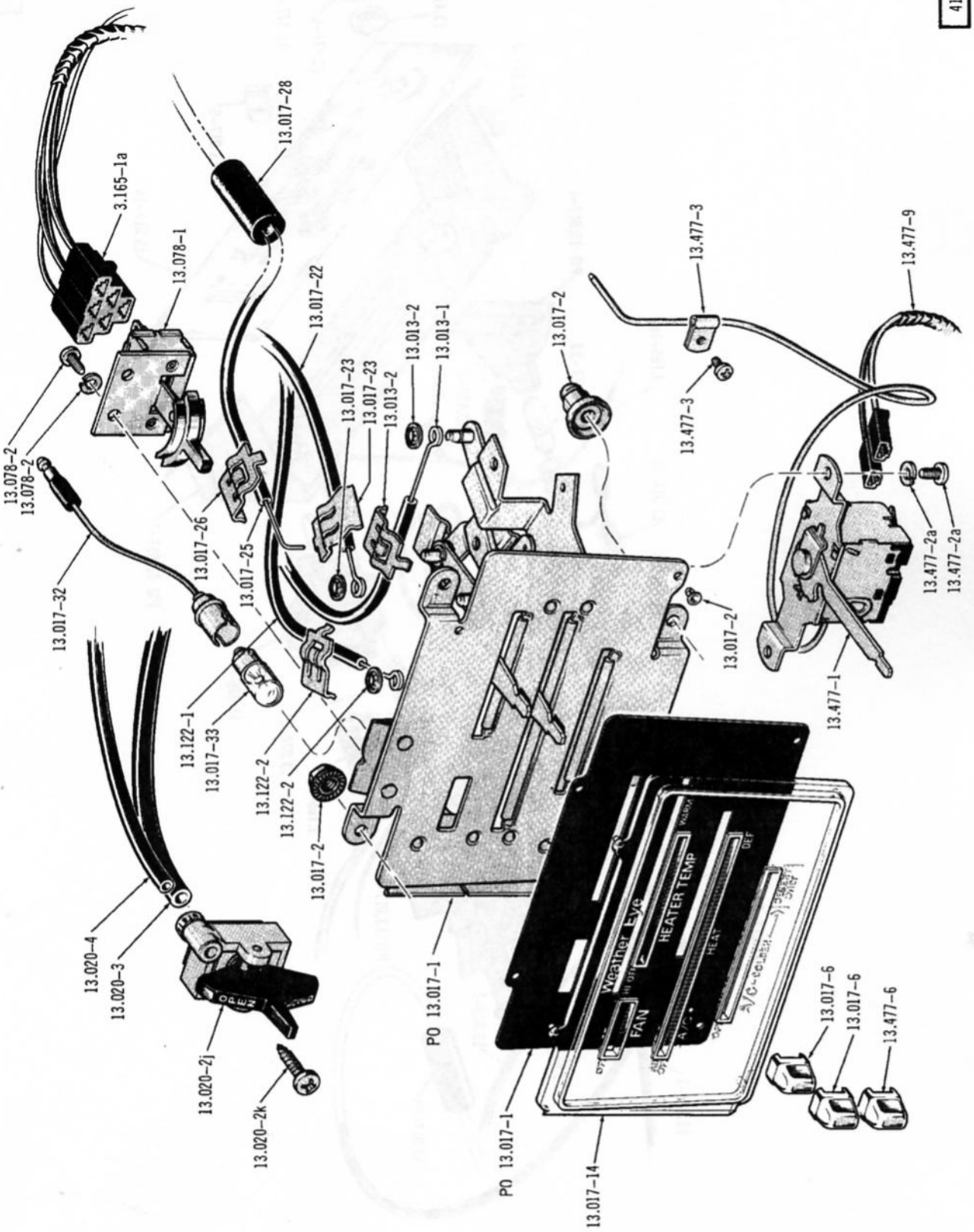

HEATER AND AIR CONDITIONING CONTROLS . . . 1971/ (70)

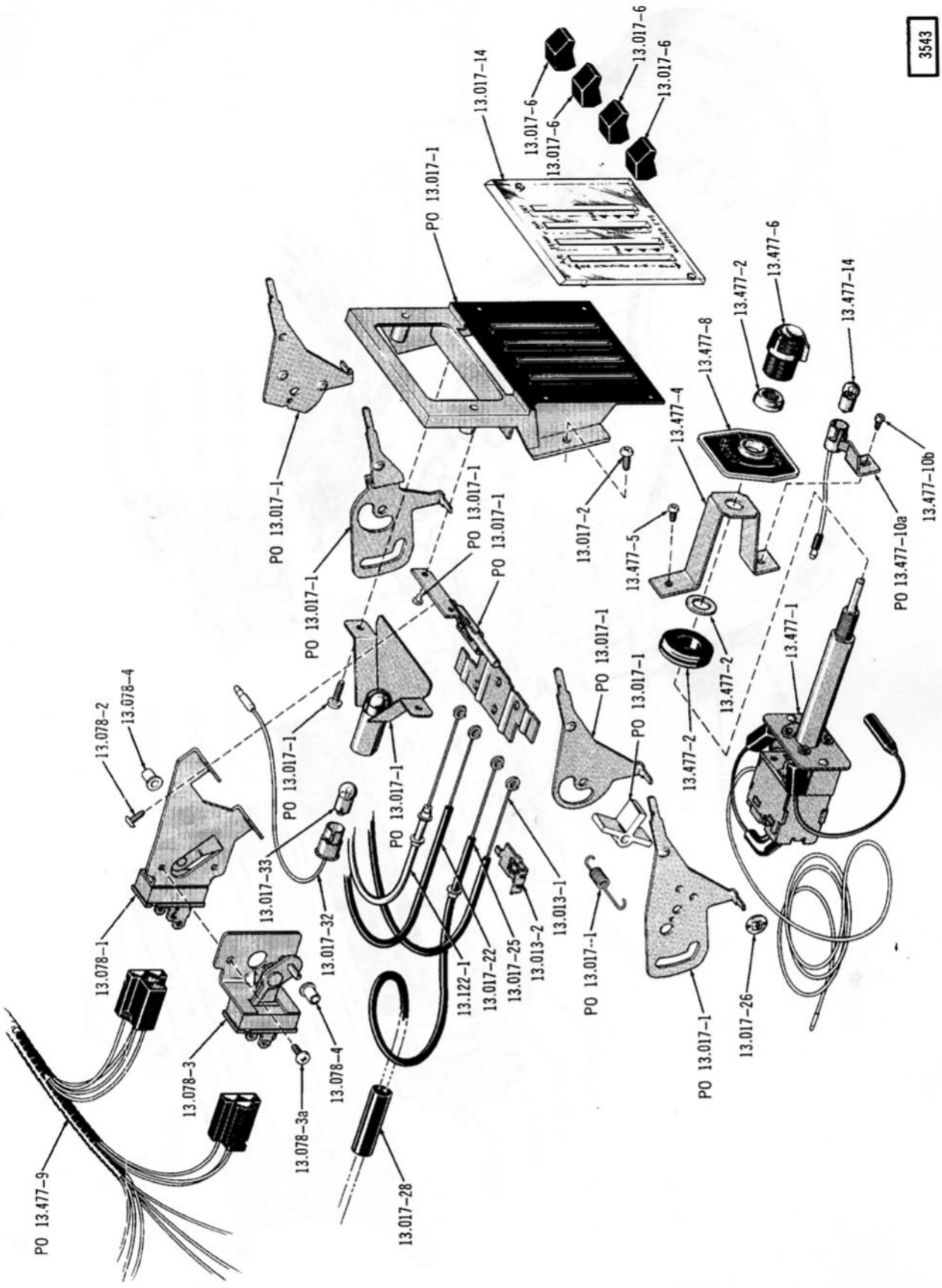
3543
13.017-6
13.017-6
13.017-6
13.017-6
13.017-14
PO 13.017-1
13.477-2
13.477-6
13.477-14
13.477-8
13.477-4
13.017-2
13.477-5
PO 13.017-1
PO 13.017-1
PO 13.017-1

5030

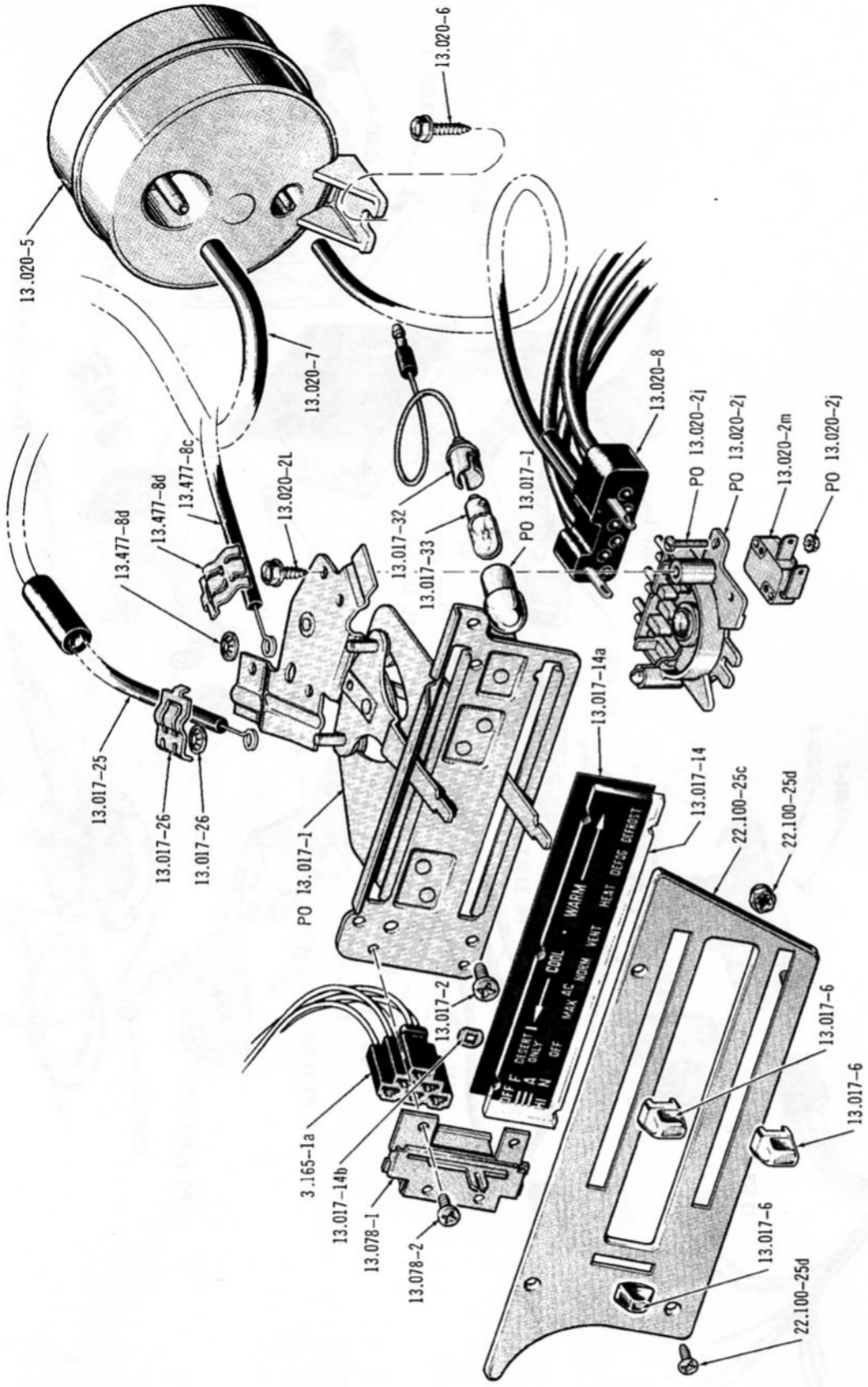

HEATER, AIR CONDITIONING AND HIGH LEVEL VENTILATION CONTROLS . . . 1972 (10)(80)

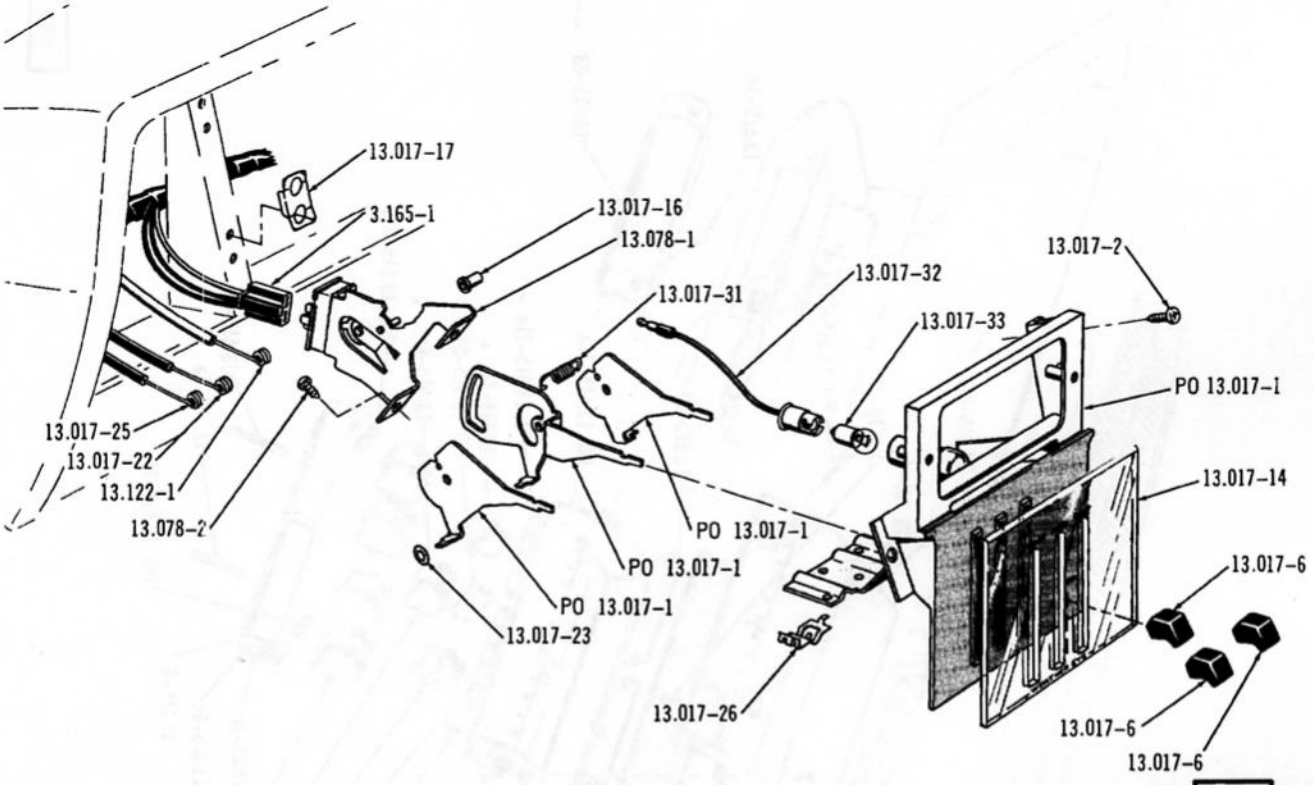

HEATER CONTROLS ... 1967/71 (10)(50)(80)

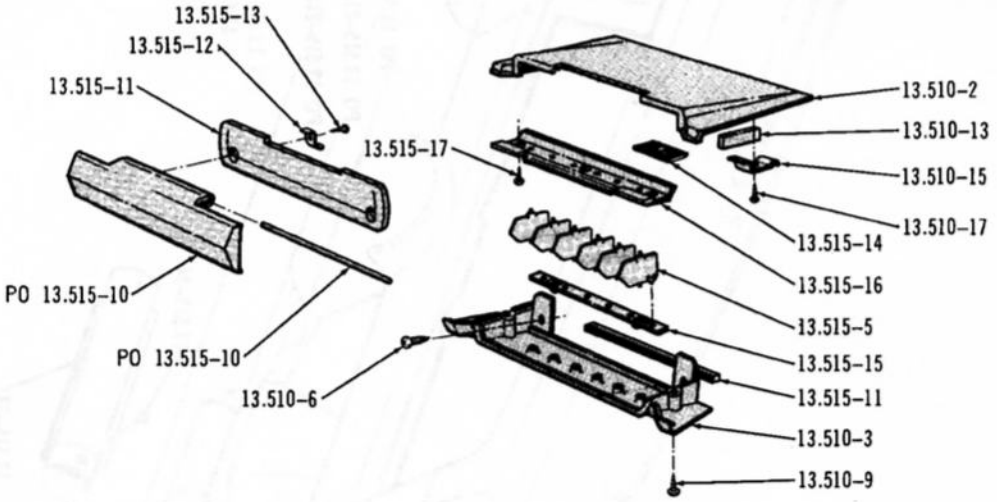

AIR CONDITIONING DUCT ... 1967 (10)(50)(80), 1968 (10)(80)

Printed in U.S.A.

3909

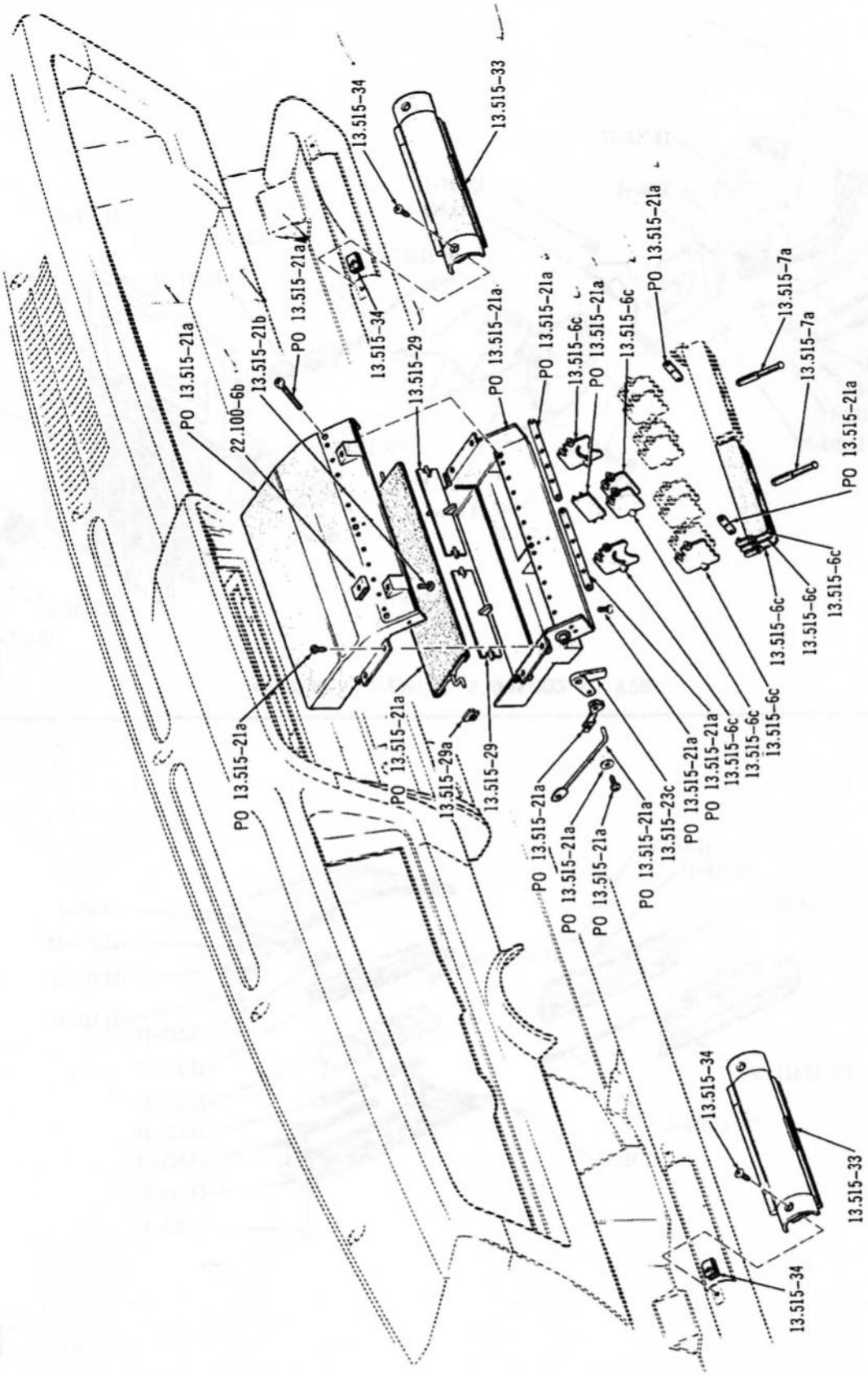

AIR DISCHARGE DUCTS . . . 1970 (01)(40), 1971–TYPE 1 (01)(40)

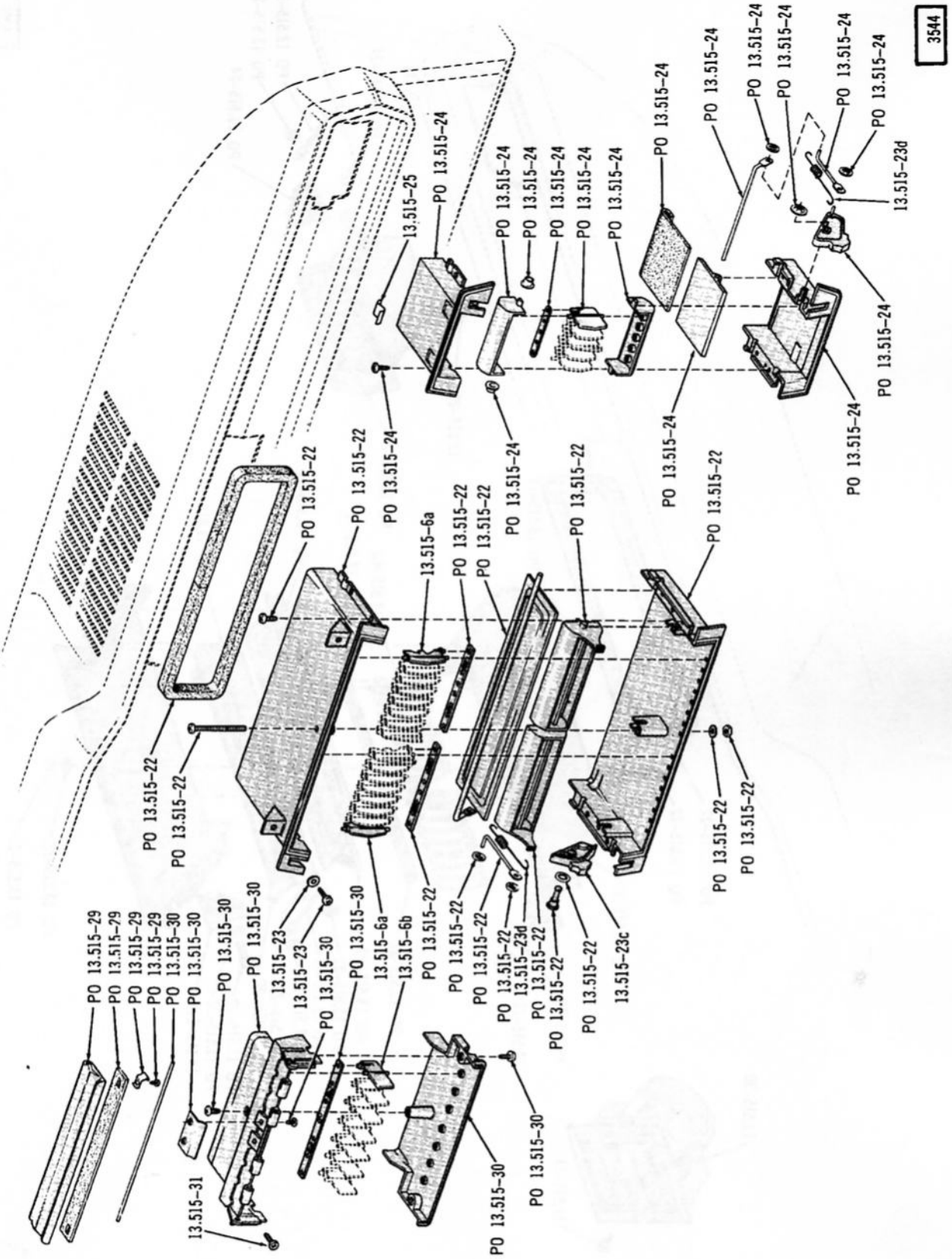

AIR DISCHARGE DUCTS ... 1969/71 (10)(80)

Printed in U.S.A.

5028

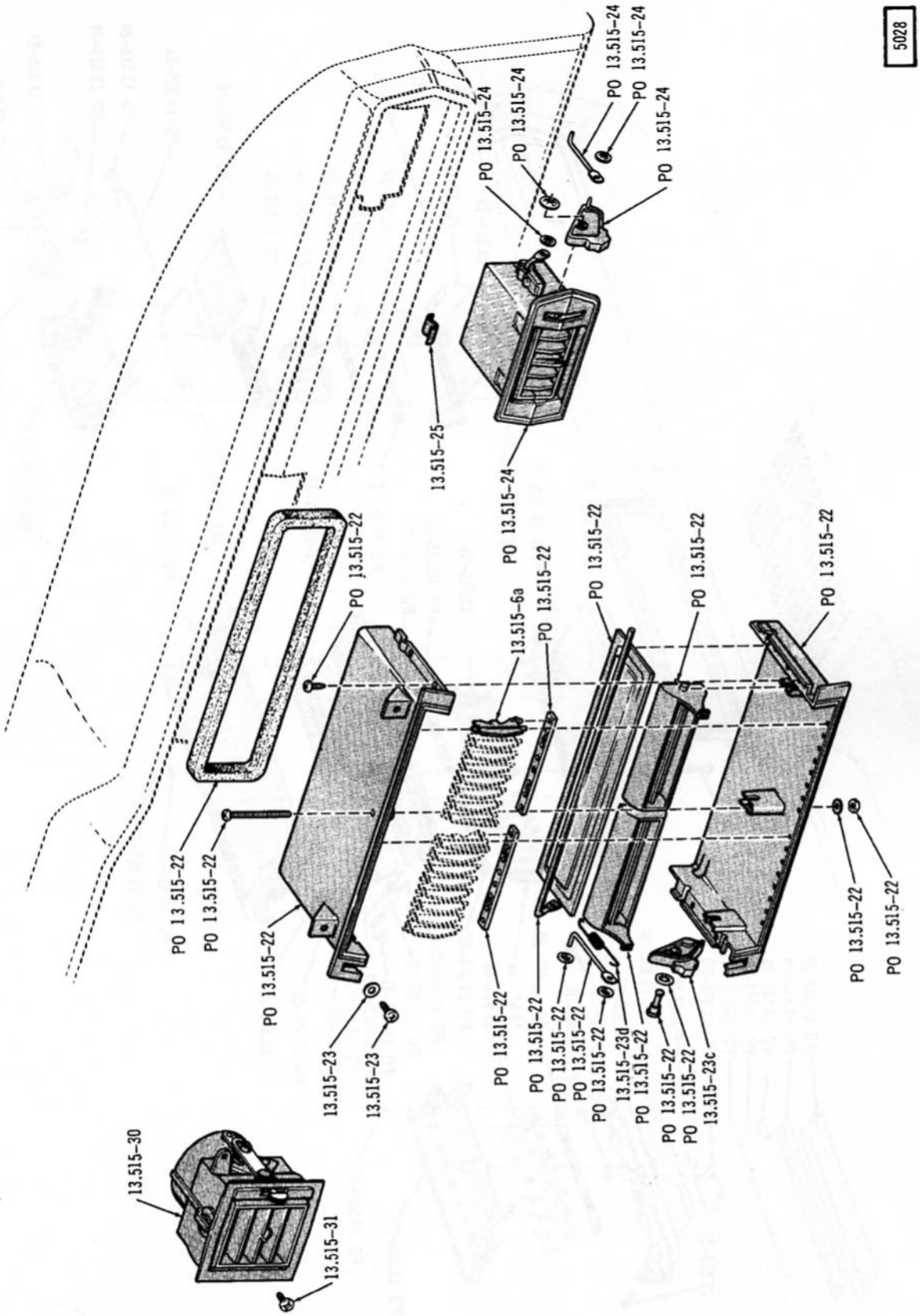

AIR DISCHARGE DUCTS . . . 1972 (10)(80)

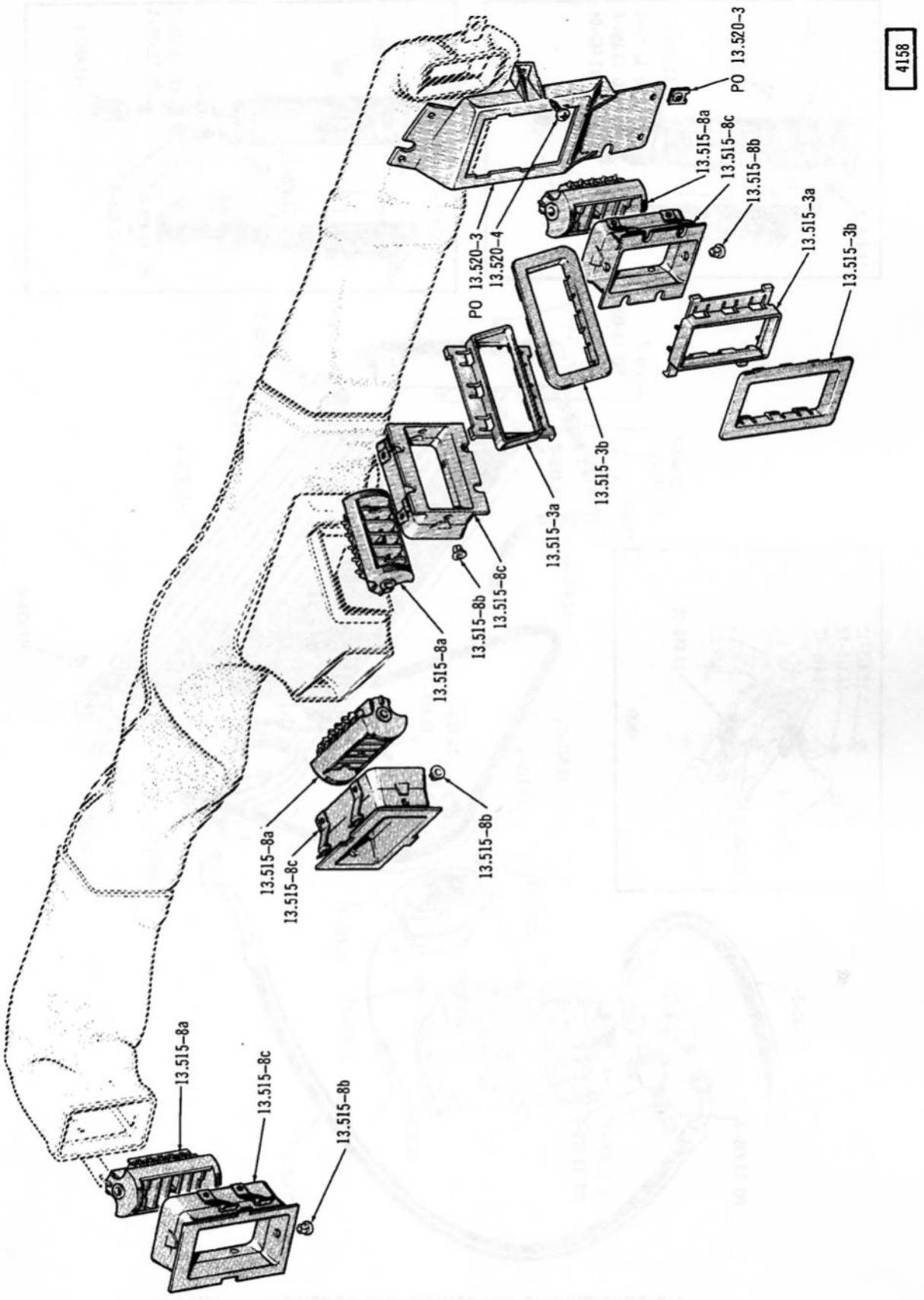

AIR DISCHARGE DUCTS . . . 1971/ (70)

Printed in U.S.A.

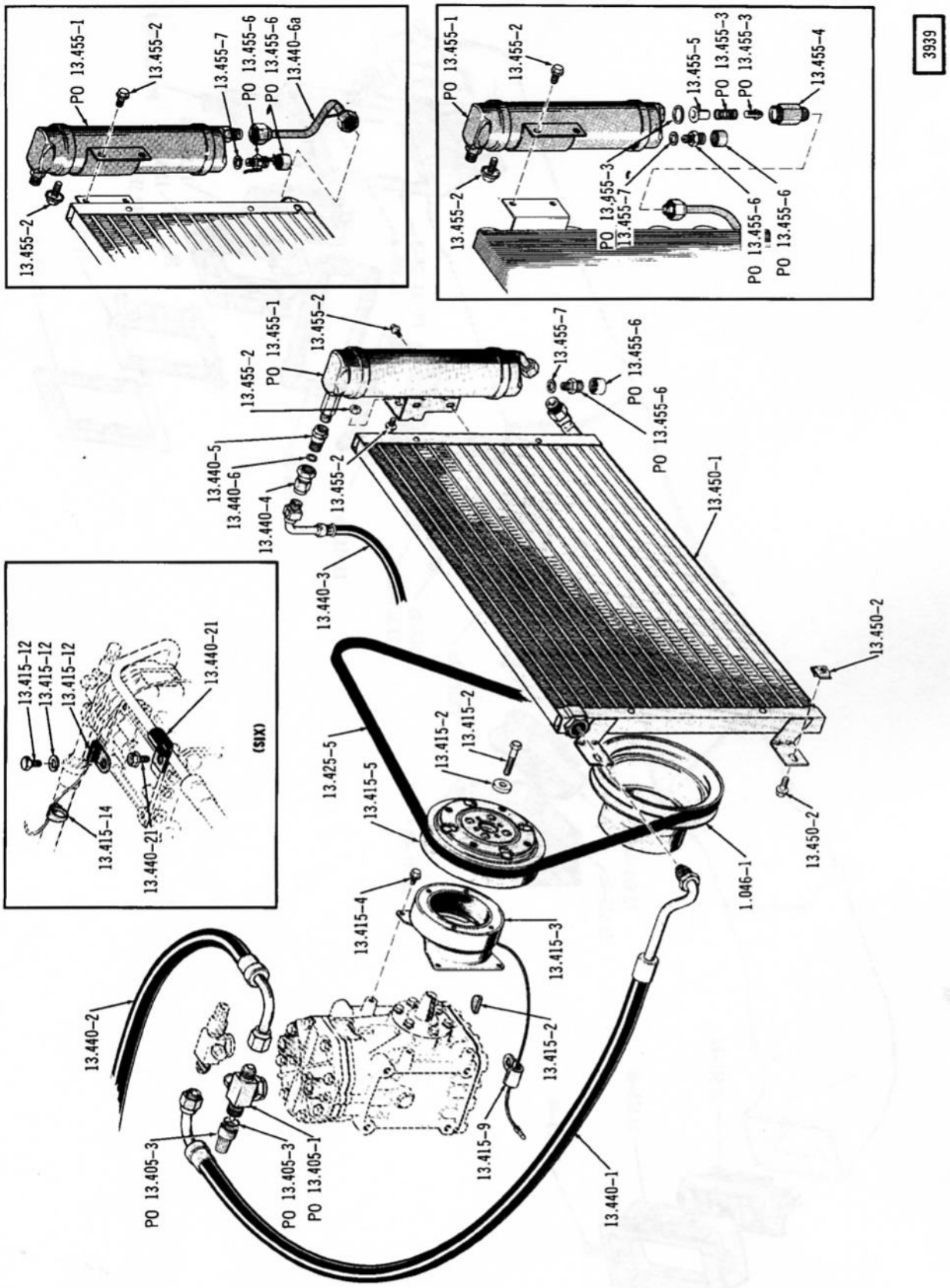

AIR CONDITIONING CONDENSER AND RECEIVER ... 1969/

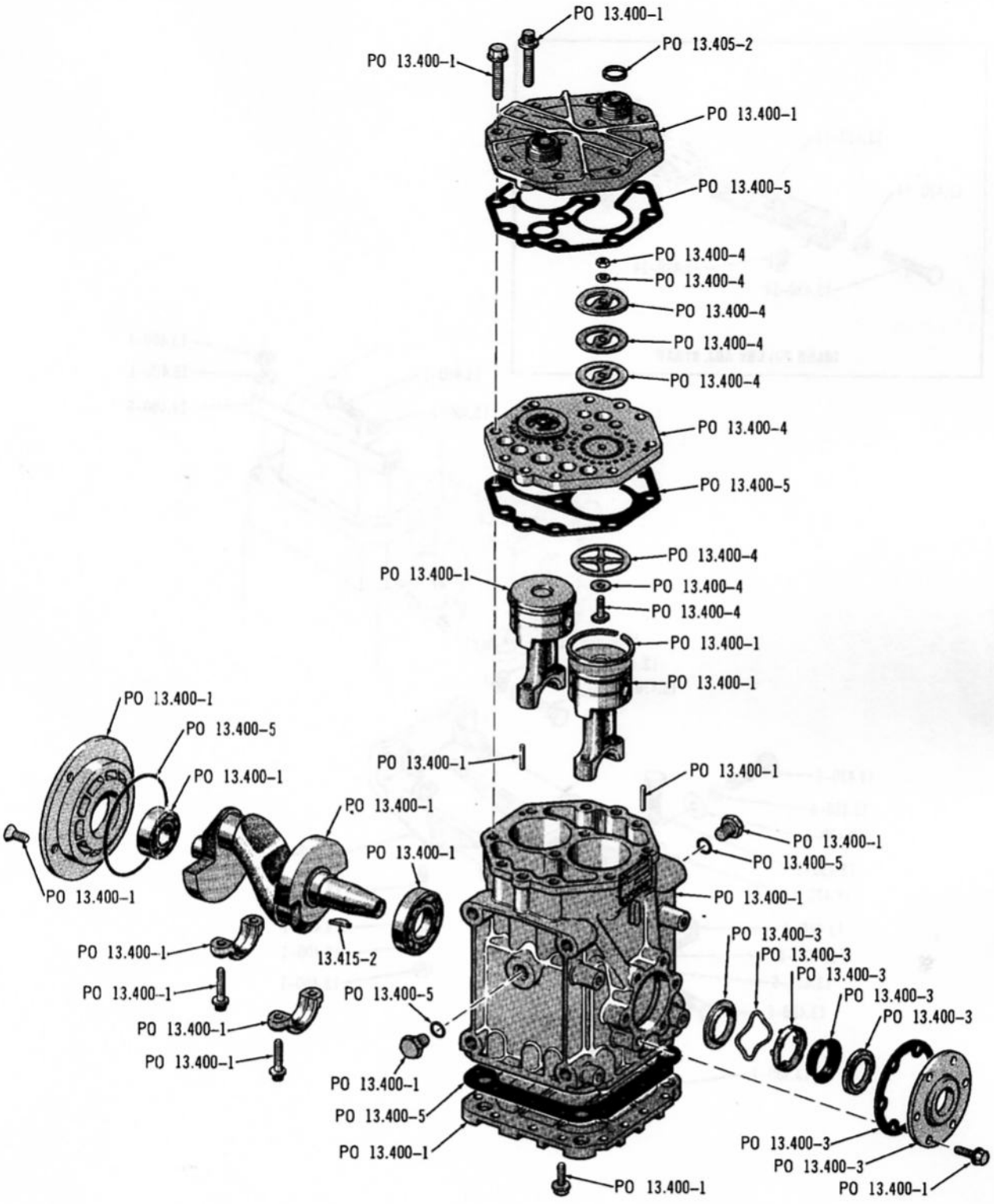

3940

AIR CONDITIONING COMPRESSOR

Printed in U.S.A.

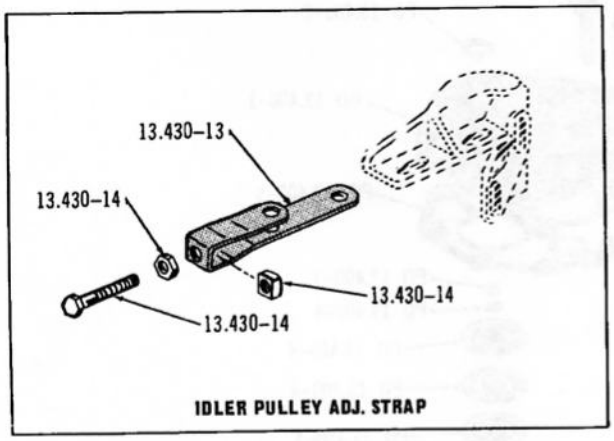

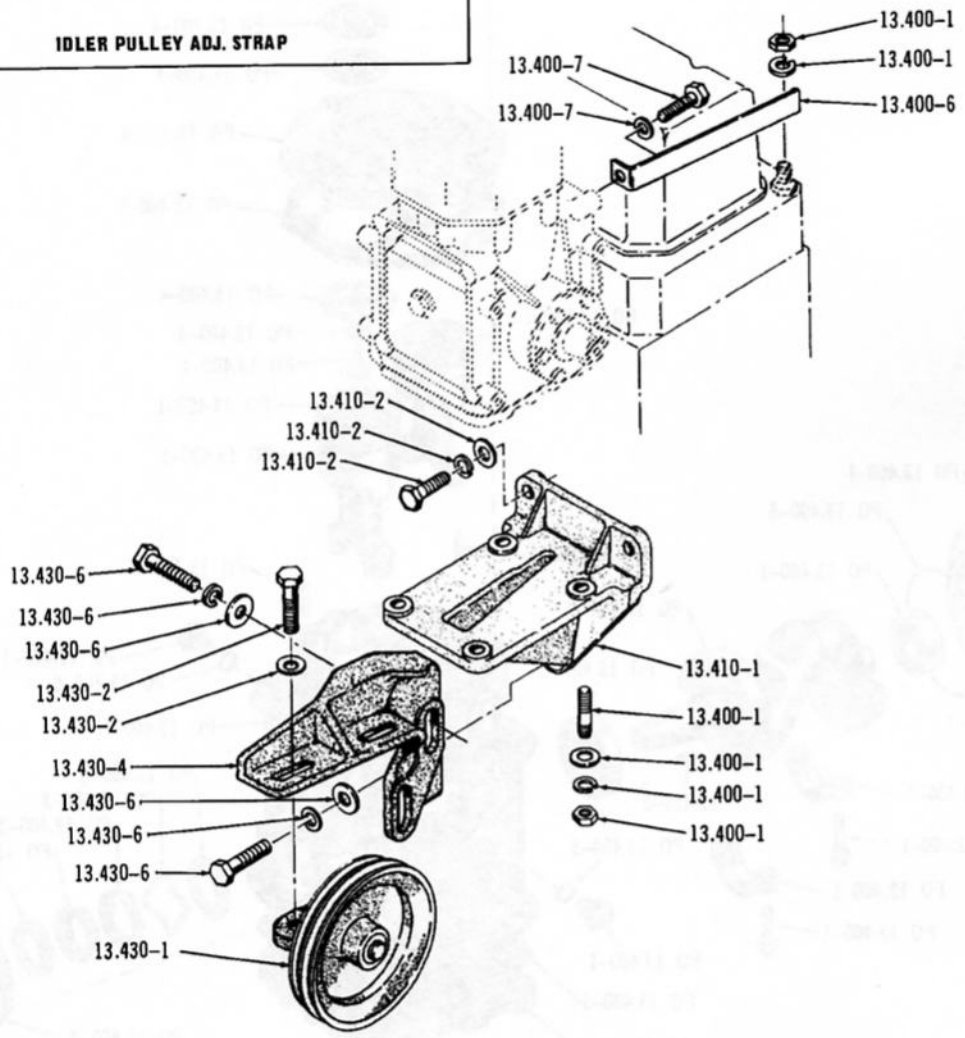

2561

AIR CONDITIONING COMPRESSOR MOUNTING ... 1967 (SIX-LPS)

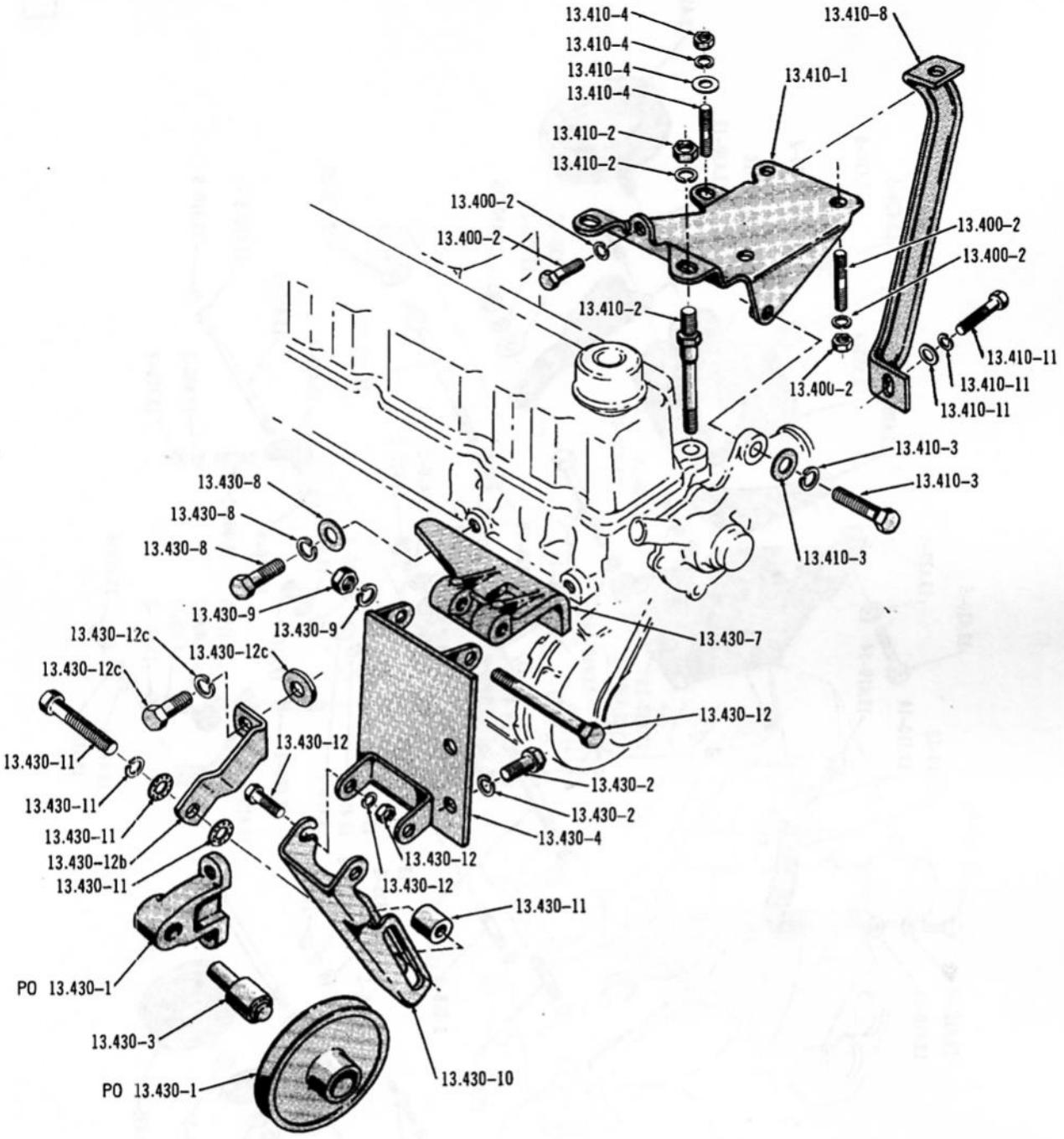

3333-A

AIR CONDITIONING COMPRESSOR MOUNTING ... 1968/ (SIX-LPS)

2631

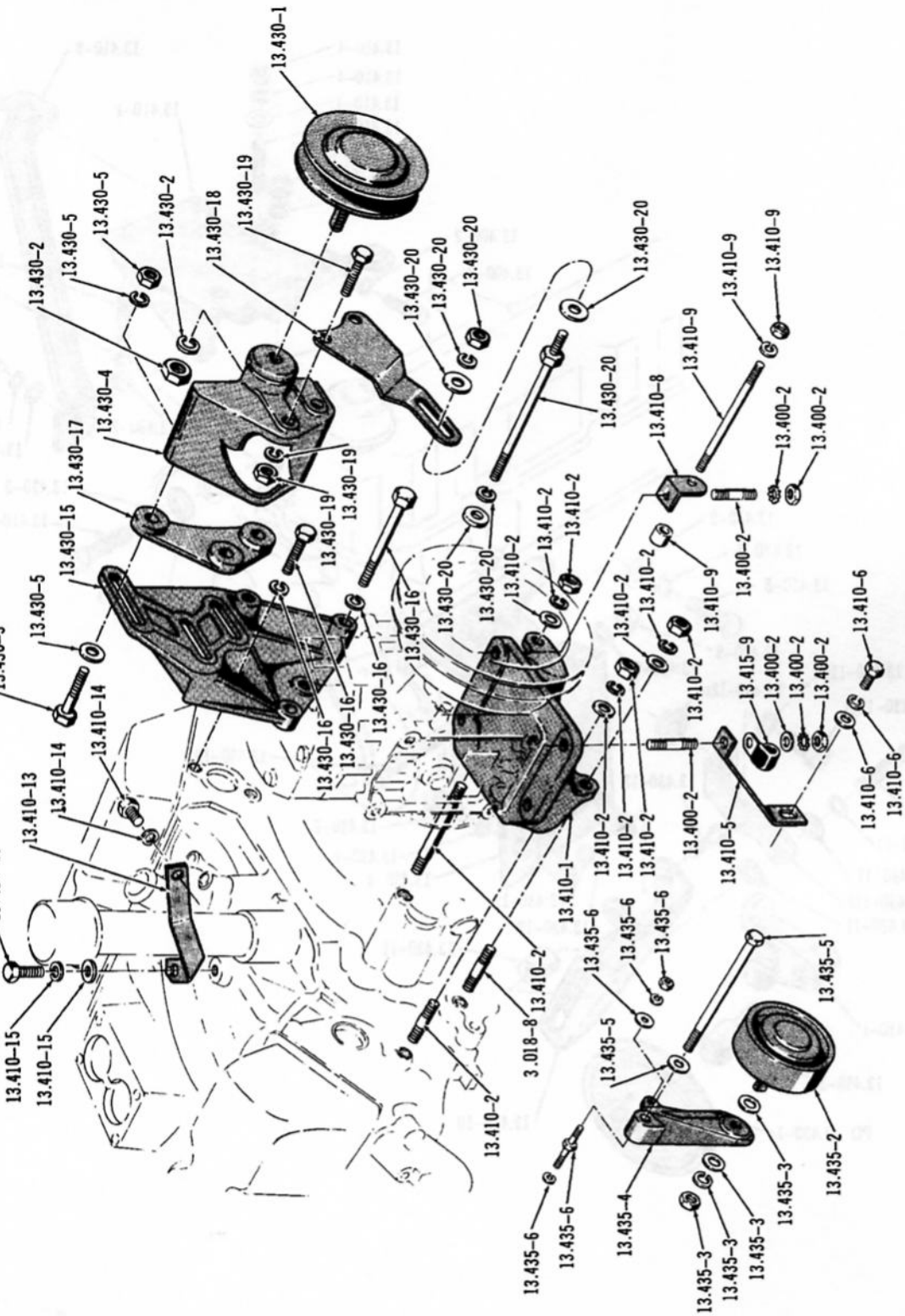

AIR CONDITIONING COMPRESSOR MOUNTING . . . 1967/69 (V8-LPS)

Printed in U.S.A.

4081

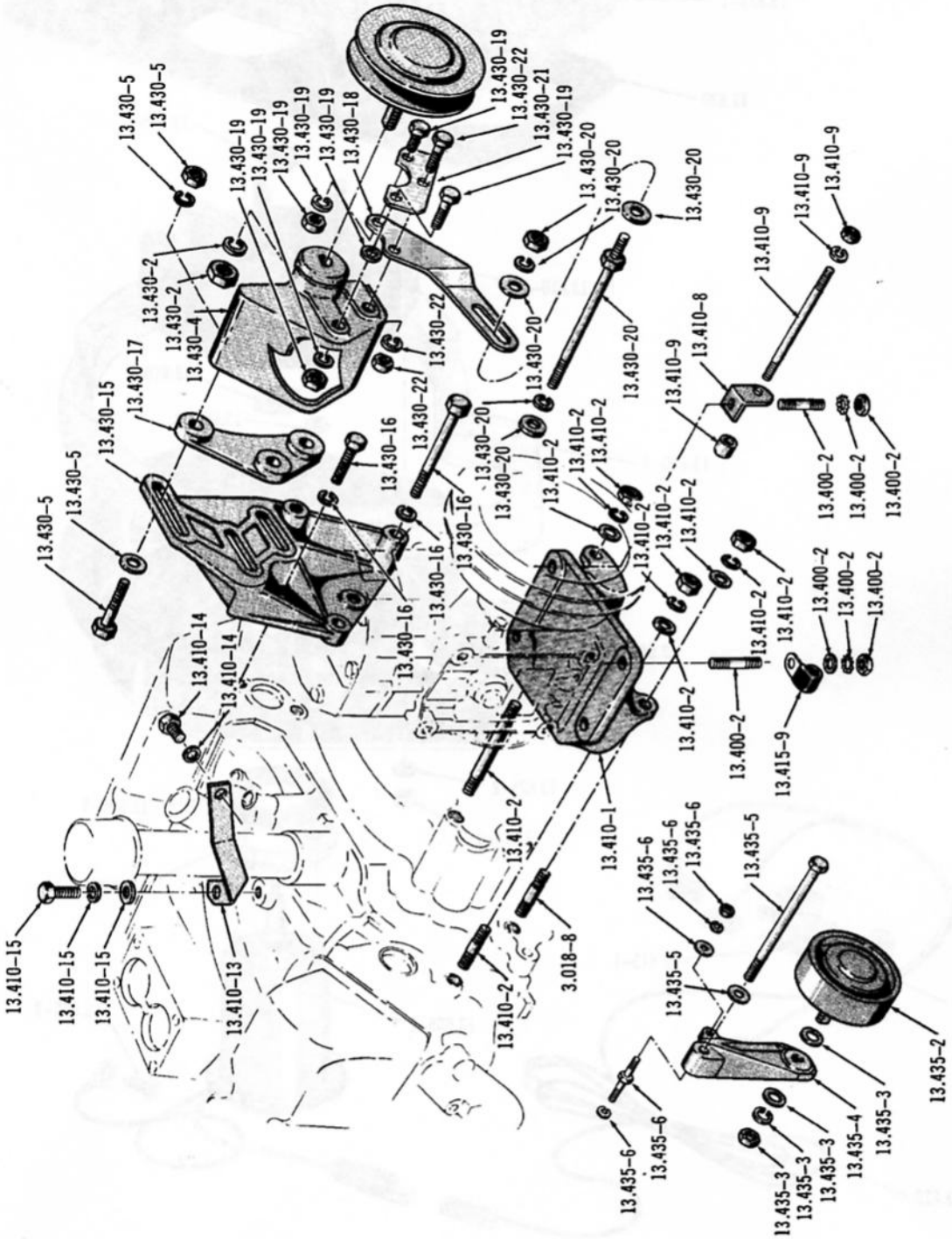

AIR CONDITIONING COMPRESSOR MOUNTING . . . 1970/ (V8–LPS)

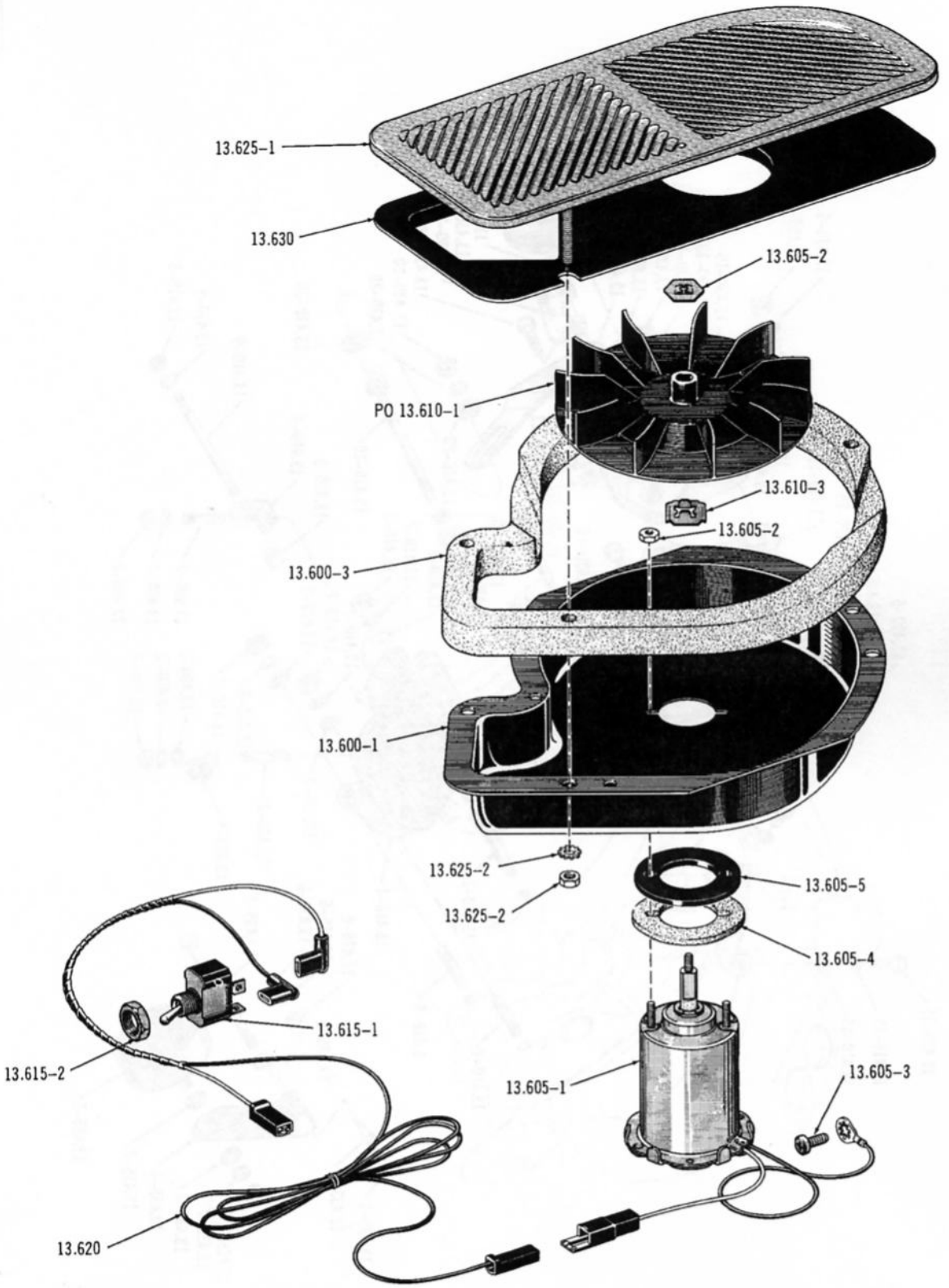

3524

REAR WINDOW DEFOGGER ... 1968/70 (10)(70)(80), 1971 (10)(80)

GROUP NO. — DESCRIPTION — YEAR and MODEL	"L" CODE	PAKS CODE	PRIMARY GROUP NO.	PER CAR	PART NO.	CODE
13.001–1 HEATER (Weathereye)(For Air Conditioning Kit Refer Gr. 15.015 Of Accessories Catalog And Price List)						
67/69 01 (LHD)			.....	1	320 6750	
69 10 (LWH)			.....	1	448 6907	
67/68 10-50-80 (LHD) *(Ord. Component Parts)*			.....	1	320 8329	
68/69 30-70			.....	1	448 5671	
67/69 01 (RHD) *(Ord. Component Parts)*			.....	1	448 5670	
13.012–1 HOUSING, Heater Core And Blower (Incl. Dampers And Gaskets)						
67 01 (LHD-LAC) *(Use 318 9738)*			.....	1	318 5626	
68/69 01 (LHD-LAC)			.....	1	318 9738	
70/ 01-40 (LAC-WHLV)			.....	1	319 6483	
71/ 01 (LAC-LHLV)			.....	1	319 7374	
67/69 01 (LHD-WAC)			.....	1	318 5627	
70/ 01-40 (WAC)			.....	1	319 6837	
68/70 30-70 (LAC-LHLV)			.....	1	318 9651	
68/70 30-70 (WAC)			.....	1	318 9618	
69/70 30-70 (LAC-WHLV)			.....	1	319 5060	
70/ 40 (LAC-LHLV)			.....	1	319 7374	
71/ 70 (LAC-* 13-59)			.....	1	321 0618	
72 70 (LAC-* 13-60)			.....	1	321 5876	
71/ 70 (WAC)			.....	1	321 0617	
67/70 RHD			.....	1	318 6223	
70 01 (Export)			.....	1	448 9037	
13.012–2 ATTACHING PARTS, Housing To Dash Panel						
SCREW, Tapping ..... 67/69 01 (LHD-3/4" Long)			28.015	1	400 0216	
SCREW, Tapping ..... 67/69 01 (LHD-1-1/4" Long)			17.660	AR	G161930	
SCREW, Tapping ..... 68/69 01 (3/4" Long)			28.015	1	400 0216	
SCREW, Tapping ..... 68/69 01 (1-1/4" Long)			17.660	4	G161930	
SCREW, Tapping ..... 68/70 30-70 (3/4" Long)			28.015	1	400 0216	
SCREW, Tapping ..... 68/ 30-70 (1-1/4" Long)			17.660	AR	G161930	
SCREW, Tapping ..... 70/ 01 (WHLV-12-11 x 1)			17.660	1	G162017	
SCREW, Tapping ..... 70 01 (WAC-10-12 x 1-1/4)			17.660	1	G161930	
SCREW, Tapping ..... 70/ 01-40 (10-16 x 1-1/4)			.....	1	400 4059	
SCREW, Tapping ..... 71/ 70 (Right Side)			12.075	1	400 0424	
SCREW, Tapping ..... 72 70 (Center)			17.660	1	G9414723	NA
SCREW, Tapping ..... 72 70 (Left Side)			17.660	1	812 0060	
SCREW, Tapping ..... 67/70 RHD			17.660	4	G161909	
SCREW, Posi-Drive 72 01-40			.....	1	400 4632	
WASHER, Bite ..... 67/69 01 (LHD-WAC)			25.029	1	400 0690	
WASHER, Bite ..... 68/70 30-70 (LHD-WAC)(WHLV)			25.029	1	400 0690	
WASHER, Bite 71/ 70			25.029	1	400 0690	
WASHER, Plain ..... 67/ 01 (LHD)			17.814	AR	G120391	NA
WASHER, Plain 68/ 30-70			17.814	AR	G120391	NA
WASHER, Plain ..... 70/ 01-40 (WHLV)(LAC)			17.814	1	G446170	NA
WASHER, Plain ..... 70 01 (WAC)			17.814	1	G120391	NA
WASHER, Plain ..... 67/70 RHD			17.814	1	G120391	NA
WASHER, Lock ..... 68 01 (LHD)			17.826	1	G178388	NA
WASHER, Lock 68 30-70			17.826	1	G178388	NA
NUT, Hexagon ..... 67 01 (LHD)			17.412	1	G271166	NA
NUT, Hexagon ..... 68/69 01 (LHD)			17.412	1	G120361	NA
NUT, Hexagon 68 30-70			17.412	1	G120361	NA
NUT, Sealed 70/ 01-30-40-70			13.012	4	400 0703	
13.012–2a ATTACHING PARTS, Housing To Front Pillar						
SCREW, Tapping 70/ 01-40			12.075	1	400 0424	
WASHER, Bite 70/ 01-40			25.029	1	400 0690	
NUT, Sealed ..... 67/70 RHD			13.012	4	400 0703	

Printed in U.S.A.

HEATER - AIR CONDITIONING

13.012–2b CAP, High Level Ventilation Outlet

70/	40 (WWH-LHLV)	.....	1	319 7372	

13.012–3 HOUSING, Heater Core

67/71	10-50-80 (LHD-LAC)...(Incl. Gaskets)	.....	1	318 5290	
67/71	10-50-80 (LHD-WAC)...(Incl. Damper, Gaskets And Spring)	.....	1	318 5682	
72	10 (LAC)	.....	1	318 5290	
72	10-80 (WAC)	.....	1	812 0796	
72	80 (WHLV)	.....	1	812 0797	

13.012–4 ATTACHING PARTS, Housing To Dash Panel

BOLT, Square	67/	10-50-80 (LHD)	.....	2	400 3118	
SCREW, Tapping	69/	10-80 (WAC)	29.010	2	400 2192	
SCREW, Tapping	67/	10-50-80 (LHD)	17.660	AR	G161909	
NUT, Speed	67	10-50-80	.....	2	400 0268	
NUT, Stamped	68/	10-80	17.428	2	G107806	
WASHER, Plain	67/	10-50-80 (LHD)	17.814	AR	G120391	NA

13.012–5 SPRING, Recirculating Air Damper

67/	10-50-80 (WAC)	.....	1	316 6987	

13.012–6 SEAL, Heater Core And Blower Housing To Evaporator Housing

67/69	01 (LHD-WAC)	.....	1	318 5746	
67/70	30-70 (LHD-WAC)	.....	1	318 5746	

13.012–7 GASKET, Heater Core Housing

68/	10-80	.....	1	319 0100	

13.012–8 GASKET, Heater Core Housing (Upper)

67	10-50-80 (LHD)	.....	1	318 5291	

13.012–9 GASKET, Heater Core Housing (Lower)

67	10-50-80 (LHD-LAC)	.....	1	316 6395	
67	10-50-80 (LHD-WAC)	.....	1	316 6988	

13.012–10 GASKET, Heater Core Housing (Side)

67	(Left) 10-50-80 (LHD)	.....	1	316 6396	
67	(Right) 10-50-80 (LHD-LAC)	.....	1	316 6397	
67	(Right) 10-50-80 (LHD-WAC)	.....	1	316 6989	

13.012–11 GASKET, Heater Core And Blower Housing (Upper)

67/69	01	.....	1	317 1443	
68/70	30-70	.....	1	317 1443	

13.012–12 GASKET, Heater Core And Blower Housing (Side)

67	01 (LHD)	.....	1	316 9218	
67/70	***01-10-80 (RHD)***	.....	1	316 9218	

13.012–13 GASKET, Heater Core And Blower Housing (Bottom)

67/69	01 (LHD)	.....	1	316 9219	
67/70	***01-10-80 (RHD)***	.....	1	316 9219	

HEATER - AIR CONDITIONING

13.012–14 GASKET, Heater Core And Blower Housing To Dash

67/69	01	.....		1	318 5614
70/	01–40 (WHLV–LAC)	***(Use 319 4166)***	.....	1	318 9748
70/	01–40 (WAC)	.....	.....	1	319 6396
68/70	30–70	***(Use 319 4166)***	.....	1	318 9748
71/	70 (LAC)	***(Use 319 4166)***	.....	1	318 9748
71/	70 (WAC)	.....	.....	1	319 6396

13.012–15 INSULATION, Heater Core And Blower Housing To Dash

67/69	01 (LHD)	.....	.....	1	355 2793
67/69	***01 (RHD)***	.....	.....	1	355 2794

13.012–16 PLUG, Heater And Blower Housing Capillary Tube

67	***01 (RHD)***	.....	.....	1	316 9296

13.012–17 SEAL, Heater and Blower Housing to Air Discharge Duct

70	01 (WHLV)(LAC)	.....	13.488	1	319 6406

13.013–1 CABLE, Recirculating Air Damper

67/69	01 (LHD–WAC)	.....	.....	1	352 0896
70/	01–40 (WAC)	.....	.....	1	363 1628
67	10–50–80 (LHD–WAC–Except OAC)	.....	.....	1	358 6851
67	10–50–80 (LHD–OAC)	.....	.....	1	320 8296
68/71	10–50–80 (LHD–WAC)	.....	.....	1	358 6851
68/69	30–70 (WAC)(WHLV)	.....	.....	1	360 1566
70	30–70 (WWH)(WAC)(WHLV)	.....	.....	1	360 1566
71/	70 (WAC)	.....	.....	1	321 1907

13.013–2 ATTACHING PARTS, Cable To Control

CLIP	.....	67/	WAC	.....	13.017	1	400 0417
NUT, Speed	.....	67/	WAC	.....	13.017	1	400 1323

13.013–3 CONTROL, Air Conditioning Recirculated Air

67/69	01 (LHD–WAC)	.....	.....	1	355 4368
67	10–50–80 (LHD–OAC)	.....	.....	1	355 4362

13.013–3a ATTACHING PARTS, Control To Duct

SCREW, Tapping	.....	67/69	01 (LHD–WAC)	.....	17.660	2	G161901

13.013–4 ATTACHING PARTS, Control To Mounting Bracket

SCREW, Tapping	.....	67	10–50–80 (LHD–OAC)	.....	17.660	2	G161901

13.013–5 KNOB, Air Conditioning Recirculated Air Control

67/69	01 (LHD–WAC)	.....	.....	1	359 8650
67	10–50–80 (LHD–WAC–Except OAC–Chrome)	***(Ref. Pr. List)***	13.017	1	357 7074
67	10–50–80 (LHD–WAC–Black)	.....	13.017	1	358 6006
67	10–50–80 (LHD–OAC)	.....	.....	1	350 9546
68/71	10–80	.....	13.017	1	358 6006
68/	30–70	.....	13.017	1	360 1632

HEATER - AIR CONDITIONING

13.013–6 ATTACHING PARTS, Knob To Control

SCREW, Machine	67/69	01 (LHD-WAC)	17.598	1	G159028	
SCREW, Tapping	67	10-50-80 (LHD-OAC)	17.654	1	G443824	

13.017–1 CONTROL ASSEMBLY, Heater

70/71	01-40 (LAC-WHLV)		1	361 6448	
70/	01-40 (WAC)		1	361 6450	
71/	01-40 (WWH-LHLV)		1	363 6226	
67/68	10-50-80 (LAC)		1	358 6008	
67/68	10-50-80 (WAC)		1	358 6007	
69/71	10 (LHD-LAC-LHLV)		1	361 4460	
69/71	10-80 (LHD-LAC-WHLV)		1	361 3540	
69	10-80 (WAC)		1	361 4461	
70/71	10-80 (WAC)		1	360 9497	
72	10 (LAC)		1	321 5326	
68/70	30-70 (LAC-LHLV)		1	360 1540	
68/70	30-70 (WAC)		1	360 1541	
69	30-70 (WHLV)		1	363 0361	
70	40 (WWH-LHLV)		1	363 6226	
71/	70 (LAC-* 13-59)		1	363 2780	
72	70 (LAC-* 13-60)		1	321 5833	
71/	70 (WAC)		1	363 2782	
72	80 (WHLV)(LAC)		1	321 5364	
72	10-80 (WAC)		1	321 4748	
69/70	***10-80 (RHD)***		1	361 4460	

13.017–2 ATTACHING PARTS, Control To Instrument Panel

CLIP	71/	70	2.050	2	314 8566	
SCREW, Tapping	69	01 (LHD-8-32)	17.654	2	G168980	
SCREW, Tapping	69	01 (LHD-1/4"-20)	17.598	2	400 1009	NA
SCREW, Tapping	70/71	01-40 (1/2" Long)	17.660	4	G161860	
SCREW, Tapping	71	01-40 (5/8" Long)	17.658	4	G9426092	NA
SCREW, Tapping	67/	10-50-80 (LHD-10-12 × 1/2") ***(Use 812 0054)***	17.671	3	G274773	
SCREW, Tapping	68/70	30-70	17.660	4	G161901	
SCREW, Tapping	71	10-80 (10-16 × 1/2")	17.671	3	812 0054	
SCREW, Tapping	72	10-80	17.660	3	812 0052	NA
SCREW, Tapping	68/70	30-70	17.660	4	G161901	NA
SCREW, Tapping	***68/70***	***10-80 (RHD)***	29.120	3	400 0575	
NUT, Speed	70/	01-40	13.072	4	400 0383	
NUT, Acorn	71/	70	3.303	1	400 1632	
NUT, Whizlock	71/	70	23.074	AR	400 3018	

13.017–3 LEVER, Heater Controls (Defroster)

67/69	01 (LHD)		1	355 2596	

13.017–4 LEVER, Heater Controls (Air)

67/69	01 (LHD)		1	355 3140	

13.017–5 LEVER, Heater Controls (Temperature)

67/69	01 (LHD)		1	355 2595	

13.017–6 KNOB, Heater And Air Conditioning Controls

70/	01-40		2	360 1632	
67/69	***01 (RHD)***		2	358 4977	
67	(Chrome) 10-50-80	***(Ref. Pr. List)***	AR	357 7074	
67	(Black) 10-50-80		AR	358 6006	

68/71	(Block) 10-80	.....	AR	358 6006	
72	10-80 (Vent And Temperature)	.....	2	360 1632	
72	10-80 (Blower Switch)	.....	1	321 6351	
68/	70	.....	2	360 1632	

13.017-7 KNOB, Heater Controls (Defroster)

67	01 (LHD-* 13-1)	.....	1	355 3104
67	01 (LHD-* 13-2)	.....	1	359 8284
68/69	01 (LHD)	.....	1	359 8284

13.017-8 KNOB, Heater Controls (Air)

67	01 (LHD-* 13-1)	.....	1	355 3103
67	01 (LHD-* 13-2)	.....	1	359 8283
68/69	01 (LHD)	.....	1	359 8283

13.017-9 KNOB, Heater Controls (Temperature)

67	01 (LHD-* 13-1)	.....	1	355 3102
67	01 (LHD-* 13-2)	.....	1	359 8282
68/69	01 (LHD)	.....	1	359 8282

13.017-10 ATTACHING PARTS, Knob To Lever

PIN, Spring	67/69	01 (LHD)	17.472	2	G455735 NA
***SCREW, Machine	***67/69***	***01 (RHD)***	17.598	2	G159028

13.017-11 SPRING, Heater And Defroster Control

67/69	01 (LHD)	.....	1	351 6781
67/71	10-30-50-70-80 (LAC)(WHLV)	.....	1	351 6781
67/71	10-30-50-70-80 (WAC)(LHLV)	.....	1	357 7091

13.017-12 BEZEL, Heater And Defroster Control

67/69	01 (LHD)	.....	1	448 4153

13.017-13 ATTACHING PARTS, Bezel To Instrument Panel

SCREW, Machine	67/69	01 (LHD)	17.598	2	400 1009 NA
SCREW, Tapping	67/69	01 (LHD)	17.654	2	G168980
WASHER, Plain	67	01 (LHD)	17.814	2	G120392
NUT, Hexagon	67	01 (LHD)	17.412	2	G271172

13.017-14 LENS, Heater Control Bezel

70/71	01-40 (LAC-WHLV)	.....	1	363 1600
70/	01-40 (WAC)	.....	1	363 1601
71/	01 (WWH-LHLV)	.....	1	363 6224
67/68	10-50-80 (LAC)	.....	1	357 7044
67/68	10-50-80 (WAC)	.....	1	357 7045
69/71	10-80 (LAC)(WHLV)	.....	1	361 4458
69	10-80 (WAC)	.....	1	361 4459
70/71	10-80 (WAC)	.....	1	363 6386
72	10 (LAC)	.....	1	321 5336
72	10-80 (WAC)	.....	1	321 4750
68/70	30-70 (LAC)	.....	1	360 1544
68/70	30-70 (WAC)	.....	1	360 1545
70/	40 (WWH-LHLV)	.....	1	363 6224
71/	70 (LAC)	.....	1	363 2688
71/	70 (WAC)	.....	1	363 2689
72	80 (WHLV-LAC)	.....	1	321 5395

Printed in U.S.A.

HEATER - AIR CONDITIONING

13.017–14a INSERT, Heater Control Bezel Lens

72	10-80	.....	1	321 4749

13.017–14b ATTACHING PARTS, Lens And Dial To Control

NUT, Push..... 72	10-80	.....	5	400 1336 NA

13.017–15 DECAL, Heater And Defroster Control

68/69	01 (LHD)	.....	1	359 8107

13.017–16 BUSHING, Heater Control Lever

67/69	01	.....	1	355 3143
67/71	10-30-50-70-80	.....	1	355 3143

13.017–17 STRAP, Heater Control Panel To Instrument Cluster Ground

67/68	10-50-80	.....	1	357 6869
68/69	30-70	.....	1	362 3157
69/70	***10-80 (RHD)***	.....	1	357 6869

13.017–17a ATTACHING PARTS, Strap To Instrument Cluster

SCREW, Tapping..... 68/69	30-70	17.660	1	G161895

13.017–18 CONTROL, Heater Water Valve

67/69	***01 (RHD)***...(Incl. Switch And Cable)	13.078	1	358 4979

13.017–19 ATTACHING PARTS, Control To Mounting Panel

SCREW, Tapping..... 67/69	***01 (RHD)***	.....	2	400 1781

13.017–20 KNOB, Heater Air Damper Control

67/69	***01 (RHD)***	.....	2	358 4977

13.017–21 ATTACHING PARTS, Knob To Control

SCREW, Machine..... 67/69	***01 (RHD)***	17.598	2	G159028

13.017–22 CABLE, Heater Air Damper Control

67/68	01 (LHD-LAC)	.....	1	355 3106
67/69	01 (LHD-WAC)	.....	1	355 3109
69	01-30-70 (LHD-LAC)	.....	1	360 1566
70/	01-40 (LAC)	.....	1	363 1628
70/	01-40 (WAC)	.....	1	363 1625
67/71	10-50-80 (LHD-LAC)	.....	1	358 6855
67/71	10-50-80 (LHD-WAC)(LHD-WHLV)	.....	1	358 6857
72	10	.....	1	321 5324
68	30-70 (LAC) ***(Use 360 1566)***	.....	1	360 1562
68/70	30-70 (WAC)(WHLV)	.....	1	360 1563
71/	70	.....	1	363 1625
67/69	***01 (RHD)***	.....	1	359 2387
67/70	***10-80 (RHD)***	.....	1	358 6856

Printed in U.S.A.

HEATER - AIR CONDITIONING

13.017–23 ATTACHING PARTS, Cable To Control

CLIP	67/		.....	1	400 0417
NUT, Speed	67/		.....	1	400 1323

13.017–24 ATTACHING PARTS, Cable To Damper

CLIP	67/		.....	1	400 0417
WASHER, Plain	67/69	01	17.814	2	G446152 NA
WASHER, Plain	70/	01-40	17.814	2	G147579 NA
WASHER, Plain	67/	10-50-80	17.814	2	G446152 NA
WASHER, Plain	71/	70	17.814	2	G147579 NA
WASHER, Plain	68/70	30-70	17.814	2	G446152 NA
NUT, Push	71/	70	.....	1	400 0271
NUT, Push	67/69	01 ***(Use 400 0328)***	.....	1	400 0714
NUT, Push	70/	01-40	.....	1	400 0271
NUT, Speed	67/71	10-30-50-70-80	.....	1	400 1714

13.017–24a CABLE, Outside Air Damper

72	10 (LAC)	.....	1	321 5322

13.017–24b ATTACHING PARTS, Cable To Control

CLIP	72	10 (LAC)	.....	1	400 0417

13.017–24c KNOB, Outside Air Damper Cable

72	10 (LAC)	.....	1	360 1632

13.017–25 CABLE, Heater Water Valve Control

67/68	01 (LHD)	.....	1	355 3106
69	01 (LHD-Six)	.....	1	360 1566
70/	01-40 (Six)	.....	1	363 1624
69	01 (V8-* 13-27)	.....	1	360 1566
69	01 (V8-* 13-28)	.....	1	360 8746
70/	01-40 (V8)	.....	1	319 7751
67/71	10-50-80 (LHD)	.....	1	358 6853
72	10 (LAC)	.....	1	321 5323
72	10 (WAC)	.....	1	321 4764
68	30-70 (Six)(V8-* 13-3)	.....	1	360 1561
68	30-70 (V8-* 13-4)	.....	1	360 8746
69/70	70 (Six)	.....	1	360 1566
69/70	30-70 (V8)	.....	1	360 8746
71	70	.....	1	321 1908
72	70	.....	1	321 7288
72	80	.....	1	321 4764
67/70	***10-80 (RHD-Six)***	.....	1	358 6783
67/70	***10-80 (RHD-V8)***	.....	1	358 6784

13.017–26 ATTACHING PARTS, Cable To Control

CLIP	67/		.....	AR	400 0417
NUT, Push	67/		.....	1	400 1323

13.017–27 ATTACHING PARTS, Cable To Valve

CLIP	70/	01-40-70	.....	1	400 0417
NUT, Push	67/		.....	1	400 1323

Printed in U.S.A.

HEATER - AIR CONDITIONING

13.017–28 GROMMET, Heater Water Valve Control Cable (At Dash)

70/	01–40	.....	1	319 4308	
67/	10–50–80	22.038	1	345 8043	
68/71	30–70	.....	1	319 4308	

13.017–29 LINK, Heater Air Damper Idler Lever

67/70	(On Evaporator Housing) 30–70 (LHD–WAC)(WHLV)	.....	1	317 9873	
67/69	(On Evaporator Housing) 01 (LHD–WAC)	.....	1	317 9873	
67/70	(On Blower Housing) 30–70 (LHD–WAC)	.....	1	317 0415	
67/69	(On Blower Housing) 01 (LHD–WAC)	.....	1	317 0415	
67/68	(On Evaporator Housing) 10–50–80 (LHD–WAC)	.....	1	318 5496	
69/71	(On Evaporator Housing) 10–80 (LHD–WAC)(WHLV)	.....	1	319 4114	

13.017–30 ATTACHING PARTS, Link To Shafts

NUT, Speed	67/69	01 (LHD–WAC)	.....	2	317 0407	
NUT, Speed	68	30–70 (LHD–WAC)	.....	2	317 0407	
NUT, Speed	67/	10–50–80 (LHD–WAC)(WHLV)	.....	2	400 1714	
NUT, Speed	67/70	01 (LHD–WAC)	.....	2	400 0369	
NUT, Speed	68/70	30–70 (WAC)(WHLV)	.....	2	400 0369	
WASHER, Plain	67/69	(WAC)(WHLV)	17.814	2	G446152	NA
WASHER, Plain	67/69	30–70 (LHD–WAC)	17.814	1	G446170	NA
WASHER, Plain	70	10–30–70–80 (WAC)(WHLV)	17.814	2	G446152	NA
WASHER (Felt)	67/70	30–70 (LHD–WAC)	13.113	1	317 0406	

13.017–31 SPRING, Heater Air Damper Idler Lever Return

67/68	LHD (WAC)	.....	1	317 8974
68/70	30–70 (LHD–WAC)	.....	1	317 8974
69/71	10–80 (LHD–WAC)(LHD–WHLV)	.....	1	319 4113

13.017–32 SOCKET, Heater And Air Conditioning Control Light

70/	01–40	*(Ord. 359 0887)*	22.092	1	320 7881
67/	10–30–50–80	*(Ord. 359 0887)*	22.092	1	320 7881
68/70	70	*(Ord. 359 0887)*	22.092	1	320 7881
71/	70	.....	.....	1	363 2787

13.017–32a ATTACHING PARTS, Socket To Control

SCREW, Tapping	67/	10–30–50–70–80	3.303	2	400 1629

13.017–33 BULB, Heater And Air Conditioning Control Light

70/	01–40	3.215	1	320 4552	
67/	10–30–50–70–80	3.215	1	320 4552	

13.017–34 COVER, Heater Control Lamp

67/68	01	7.535	1	358 3920	

13.017–35 CONTROL, Heater And Defroster

67/69	*01 (RHD)*	.....	1	358 4981	

13.017–36 ATTACHING PARTS, Control To Mounting Panel

SCREW, Tapping	*67/69*	*01 (RHD)*	22.150	2	400 1297

HEATER - AIR CONDITIONING

13.017–37 PANEL, Heater And Defroster Control Mounting

67/69	*01 (RHD)*	.....	1	358 4978

13.017–38 ATTACHING PARTS, Mounting Panel To Instrument Panel

SCREW, Tapping	*67/69*	*01 (RHD)*	17.671	3	400 1037
NUT, Speed	*67/69*	*01 (RHD)*	22.092	1	400 0512

13.020–1 MOTOR, Air Outlet Damper Vacuum (On Evaporator Housing)

71/	70	.....	1	321 2075

13.020–2 ATTACHING PARTS, Motor To Housing

SCREW, Tapping	71/	70	2.050	2	400 2328
WASHER, Plain	71/	70	17.814	2	448 6667 NA
NUT, Speed	71/	70	13.017	1	400 1714

13.020–2a MOTOR, Recirculating Air Damper Vacuum (On Heater Core Housing)

72	10–80 (WAC)	.....	1	321 4419
72	80 (WHLV)	.....	1	321 5151

13.020–2b BRACKET, Recirculating Air Damper Vacuum Motor

72	10–80 (WAC)(WHLV)	.....	1	321 5108

13.020–2c ATTACHING PARTS, Bracket To Motor

SCREW, Tapping	72	10–80 (WAC) (WHLV)	17.660	2	G9417855 NA

13.020–2d ATTACHING PARTS, Bracket To Housing

SCREW, Tapping	72	10–80 (WAC) (WHLV)	17.412	2	G271166 NA

13.020–2e MOTOR, Heater Air Damper Vacuum (On Evaporator Housing)

72	10–80 (WAC)(WHLV)	.....	1	321 4424

13.020–2f ATTACHING PARTS, Motor To Housing

SCREW, Tapping	72	10–80 (WAC)(WHLV)	17.671	2	G9415162 NA

13.020–2g MOTOR, Defroster Air Damper (On Evaporator Housing)

72	10–80 (WAC)(WHLV)	.....	1	321 4425

13.020–2h ATTACHING PARTS, Motor To Housing

SCREW, Tapping	72	10–80	17.671	2	G9415162 NA

13.020–2i NUT, Vacuum Motor To Damper

72	10–80	13.017	2	400 0271

13.020–2j SWITCH, Air Outlet Damper Vacuum (On Instrument Panel)

71/	70	.....	1	321 2629
72	80 (LAC)	.....	1	321 5396
72	10–80 (WAC)	.....	1	321 4751

Printed in U.S.A.

HEATER - AIR CONDITIONING

13.020–2k ATTACHING PARTS, Switch To Panel

SCREW, Tapping.....	71/	70.....	17.660	2	G9414717	NA

13.020–2l ATTACHING PARTS, Switch To Control

SCREW, Machine.....	72	10-80.....	17.598	1	G188749	NA

13.020–2m SWITCH, Micro (Electric)(On Vacuum Switch)

72	10-80 (WAC)(WHLV).....	.....	1	812 1452

13.020–3 HOSE, Air Conditioning Air Damper Vacuum Switch To Check Valve

71	70 (Bulk).....	4.141	AR	320 6752
72	70.....	.....	1	321 5819

13.020–4 HOSE, Air Damper Vacuum Switch To Vacuum Motor

71/	70.....	.....	1	321 2439

13.020–5 TANK, Vacuum Storage

72	10-80 (WAC)(WHLV).....	.....	1	321 4443

13.020–6 ATTACHING PARTS, Tank To Wheelhouse Panel

SCREW, Tapping.....	72	10-80.....	2.050	2	400 2359

13.020–7 HOSE, Vacuum Storage Tank To Manifold (Bulk)

72	10-80 (WAC)(WHLV).....	4.141	AR	320 6752

13.020–8 CONNECTOR, Vacuum Switch To Vacuum Motors (Incl. Hoses)

72	10-80 (WAC).....	.....	1	321 4428
72	80 (WHLV).....	.....	1	321 5560

13.028–1 CORE, Heater

67	01 (LHD).....	.....	1	318 0991
68/69	01 (LHD).....	.....	1	319 1278
70/	01-40.....	.....	1	319 6370
67	10-50-80 (LHD).....	.....	1	318 0968
68/	10-80 (LHD).....	.....	1	319 1264
68/70	30-70.....	.....	1	319 1278
71/	70.....	.....	1	319 6370
67/70	***RHD***.....	.....	1	318 0989

13.028–2 SEAL, Heater Core Tube

67	.....	.....	1	316 9200
68/	LHD.....	.....	1	319 1230
68/70	***RHD***.....	.....	1	316 9200

13.028–3 GASKET, Heater Core (Upper)

67/69	01.....	.....	1	317 1443
67/70	30-70.....	.....	1	317 1443
67	10-50-80 (LHD).....	13.012	1	318 5291
68/	10-80 (LHD).....	.....	1	319 0100
67/70	***10-80 (RHD)***.....	.....	1	317 1446

13.028–4 GASKET, Heater Core (End)

67/	.....	.....	2	316 6450

HEATER - AIR CONDITIONING

13.028–5 GASKET, Heater Core (Front)

67	LHD ..... *(Ord. 319 0100)*	.....	1	348 8915
69	01 (WAC)	.....	1	317 1442
68/70	30–70	.....	1	317 1442
67/70	***01-10-80 (RHD)***	.....	1	317 1442

13.028–6 GASKET, Heater Core (Rear)

67/	10–50–80	.....	1	318 5410

13.028–7 GASKET, Heater Core To Plenum Chamber Filler

70/	01–40 (1/2" × 6–5/8)	.....	1	319 6405
71/	70 (1/2" × 6–5/8)	.....	1	319 6405

13.028–7a GASKET, Heater Core To Plenum Chamber

70/	01–40	.....	1	319 6397
71/	70	.....	1	321 0626

13.028–8 GASKET, Heater To Cover Plate (At Heater Core Tubes)

70/	01–40	.....	1	319 6404
71/	70	.....	1	319 6404

13.035–1 VALVE, Heater Water

67/68	01 (LHD)	.....	1	318 0162
69	01 (LHD–Six)	.....	1	318 0162
70/	01–40 (Six)	.....	1	319 7003
69	01 (V8–* 13–27)	.....	1	318 0162
69	01 (V8–* 13–28)	.....	1	319 3388
70/	01–40 (V8)	.....	1	319 3388
67/71	10–50–80 (LHD)	.....	1	317 6023
72	10–80	.....	1	321 4442
68	30–70 (Six)(V8–* 13–3)	.....	1	318 0162
68	30–70 (V8–* 13–4)	.....	1	319 3388
69	70 (Six)	.....	1	318 0162
69/70	30–70 (V8)	.....	1	319 3388
71/	70	.....	1	321 0289
67/69	***01 (RHD-Six)***	.....	1	318 1834
67/70	***10-80 (RHD-Six)*** ..(Incl. Bracket)	.....	1	318 6636
67/70	***10-80 (RHD-V8)***	.....	1	318 6637

13.035–2 ATTACHING PARTS, Valve To Dash Panel

SCREW, Tapping	67/68	01 (LHD)	17.671	3	400 1042
SCREW, Tapping	69	01 (LHD–Six)	17.671	3	400 1042
SCREW, Tapping	70/	01–40–70 (10–12 × 3/8")	17.671	3	400 1031
SCREW, Tapping	71/	01–40 (10–16 × 3/8")	2.050	3	400 2328
SCREW, Tapping	69	01 (V8–* 3–27)	17.671	3	400 1042
SCREW, Tapping	68/	30–70 (12–11 × 1/2")	17.671	3	400 1042
NUT (Plastic)	71/	70	14.108	2	400 0141

13.035–3 ATTACHING PARTS, Valve To Blower Housing

SCREW, Tapping	67/68	10–50–80 (LHD) ..... ***(Use 318 9013)***	17.671	2	400 0478
SCREW, Tapping	69/	10–80 (LHD)	17.671	2	400 1037
NUT, Speed	67/	10–50–80 (LHD)	.....	2	400 0278

HEATER - AIR CONDITIONING

13.035–5 BRACKET, Heater Water Valve Mounting

67/70	*10-80 (RHD-Six)*	.....	1	320 6151	

13.035–6 ATTACHING PARTS, Valve To Bracket

SCREW, Tapping	*67/70*	*10-80 (RHD-Six)*	.....	2	320 5657	

13.035–7 ATTACHING PARTS, Valve Bracket To Engine Bracket

BOLT, Hexagon	*67/70*	*10-80 (RHD-Six)*	17.038	1	G180018	NA
WASHER, Lock	*67/70*	*10-80 (RHD-Six)*	17.820	1	G120380	NA
NUT, Hexagon	*67/70*	*10-80 (RHD-Six)*	17.406	1	G120375	

13.035–8 SEAL, Heater Water Valve Cable Slot

67/	10-50-80	.....	1	316 6578	

13.035–9 GASKET, Heater Water Valve To Housing

67/	10-50-80 (LHD)	.....	1	320 4365	
71/	70	.....	1	321 0288	

13.035–10 BRACKET, Heater Water Valve Bracket To Engine

67/70	*RHD (Six)*	.....	1	317 9134	

13.050–1 HOSE, Heater Water (Bulk)

67/	(5/8" I. D. -25 Ft. Roll)	.....	1	320 3739	
68/	(3/4" I. D. -50 Ft. Roll)	.....	1	448 6763	

13.050–2 HOSE, Heater Core To Water Pump

67	01 (V8) ***(Use 318 8840)***	.....	1	318 3889	
67	01-10-50-80 (LHD-Six) ***(Use 318 8840)***	.....	1	318 7146	
68	01-30-70 (LHD)	.....	1	319 2122	
69	01-30-70	.....	1	319 3794	
67	10-50-80 (LHD-V8-WDT) ***(Use 318 8840)***	.....	1	318 3889	
67	10-50-80 (LHD-V8-W4B-Except 65 Amp. Alternator)	.....	1	318 8840	
67	10-80 (LHD-V8-W4B-Used With 65 Amp. Alternator)	.....	1	319 2055	
68	10-80	.....	1	318 8840	
69	10-80 (Six)	.....	1	319 3794	
69/71	10-80 (LHD-V8-Except 65 Amp. Alternator)	.....	1	319 3794	
72	10-80 (LHD-V8)	.....	1	319 3794	
69	10 (LHD-V8-Used With 65 Amp. Alternator)	.....	1	319 2122	
67/70	*01-10 (RHD-Six)*	.....	1	318 3728	

13.050–3 ATTACHING PARTS, Hose To Wheel House

CLIP	67/68	10-50-80 (LHD-290)	3.165	1	400 1870	
CLIP	67/68	01-30-70 (LHD-V8)	3.165	1	400 1870	
CLIP	69	01-70 (Six)	3.165	1	400 1870	
BOLT, Hexagon	67	01	17.038	1	G180018	NA
SCREW, Tapping	69	01-70 (Six)	17.671	1	400 1042	
SCREW, Tapping	67/68	10-50-80 (LHD-290)	17.671	1	400 1042	
WASHER, Lock	67	01	17.820	1	G120380	NA
NUT, Hexagon	67	01	17.406	1	G120375	

HEATER - AIR CONDITIONING

13.050–4 ATTACHING PARTS, Hose To Alternator Bracket

CLIP	67/68	10-30-50-80 (LHD-V8)	.....	1	400 1870
CLIP	68/	70 (WDT-WST-LAC)	.....	1	400 1870
BOLT, Hexagon	67/68	10-30-50-80 (LHD-V8)	17.038	1	G180018 NA
BOLT, Hexagon	68/69	70 (290-WDT-WST-LAC)	17.038	1	G180018 NA
BOLT, Hexagon	70/	304 (WDT-WST-LAC)	17.038	1	G180018 NA
WASHER, Lock	67/68	10-30-50-80 (LHD-V8)	17.820	1	G120380 NA
WASHER, Lock	68/69	70 (290-WDT-WST-LAC)	17.820	1	G120380 NA
WASHER, Lock	70/	304 (WDT-WST-LAC)	17.038	1	G180018 NA
NUT, Hexagon	67/68	10-30-50-80 (LHD-V8)	17.406	1	G120375
NUT, Hexagon	68/69	70 (290-WDT-WST-LAC)	17.406	1	G120275
NUT, Hexagon	70/	304 (WDT-WST-LAC)	17.406	1	G120375

13.050–5 ATTACHING PARTS, Hose To Valve Cover

CLIP, Closed	***67/70***	***80 (RHD-V8)***	17.134	1	G120527 NA

13.050–6 ATTACHING PARTS, Hose To Fuel Line

CLIP	68	10-80 (Six-LAC)	3.312	1	79 394
CLIP	69/	01-40-70 (LAC)	3.312	1	79 394

13.050–7 HOSE, Heater Water Valve To Thermostat Housing

67	01 (232)	.....	1	318 2722
68	05-06-08-70 (Six)	.....	1	318 2722
68	09 (199)	.....	1	318 2722
69	01-70 (Six)	.....	1	318 2722

13.050–8 HOSE, Heater Water Valve To Core

67/	10-50-80 (LHD)	.....	1	316 7898
67/	01-40 (LHD-Six)	.....	1	316 7898
67/69	01 (V8-* 13-27)	.....	1	316 7898
68	70 (Six)(V8-* 13-3)	.....	1	316 7898
69/70	70 (Six)	.....	1	316 7898
71/	70	.....	1	321 1512

13.050–9 HOSE, Heater Water Valve To Intake Manifold

67/69	01 (V8-* 13-27)	.....	1	318 3534
68	30 (V8-* 13-3)	.....	1	318 3534

13.050–10 HOSE, Thermostat Housing To Intake Manifold

67	01 (199)	.....	1	318 2685
68/69	09 (LHD-232-LAC-Rogue)	.....	1	318 2685
69	***01 (RHD-Rogue)***	.....	1	318 2685

13.050–11 HOSE, Water Pump To Tube (Molded)

67/70	***10-80 (RHD-V8)***	.....	1	318 8865

13.050–12 TUBE, Heater Core To Water Pump

67/70	***10-80 (RHD-V8)***	.....	1	318 8864

13.050–13 TUBE, Thermostat Housing To Intake Manifold

68/69	09 (LHD-232-WAC-Rogue)	.....	1	319 2026

Printed in U.S.A.

HEATER - AIR CONDITIONING

13.050–14 ATTACHING PARTS, Tube To Head

CLIP, Closed	68	09 (LHD-232-WAC-Rogue)	1.116	1	317 8717	
CLIP, Closed	68/69	09 (LHD-232-WAC-Rogue) ***(Use 317 8717)***	.....	1	319 3340	
BOLT, Hexagon	68/69	09 (LHD-232-WAC-Rogue)	17.038	1	G180118	NA
WASHER, Lock	68/69	09 (LHD-232-WAC-Rogue)	17.820	1	G120382	

13.050–15 CLIP, Heater Hose (Double Hose)

67/68	01 (Six)	.....	1	318 3640
70/	01-10-40-70 (Six-Snap-In)	.....	1	318 3897
70/	01-40-70 (Six-Screw Type)	.....	1	319 7896

13.050–15a ATTACHING PARTS, Clip To Wheelhouse

SCREW, Tapping	70/	01-40-70	17.671	1	400 1042	
SCREW, Tapping	71	70	29.471	6	400 0471	

13.050–16 BRACKET, Heater Core To Water Pump Tube Support

67/70	***01-10 (RHD-Six)***	.....	1	317 9134

13.072–1 MOTOR, Heater And Defroster

67/68	LHD (LAC)	.....	1	316 4111
69	LHD (LAC)	.....	1	319 4646
71/	01-40 (LAC-LHLV)	.....	1	319 8978
70	10-30-70 (LHD-LAC-LHLV-* 13-30)	.....	1	319 4646
70	10-30-70 (LHD-LAC-LHLV-* 13-32)	.....	1	319 8992
71	10 (LAC)	.....	1	319 8992
72	10 (LAC)	.....	1	321 5722
71/	70 (LAC)	.....	1	319 8978
67/70	***RHD***	.....	1	316 9233

13.072–2 ATTACHING PARTS, Motor To Mounting Plate

WASHER, Plain	67/	01-30-40-70 (LAC)	17.814	2	G120391	NA
WASHER, Plain	***67/70***	***10-80 (RHD)***	17.814	2	G120391	NA
NUT, Hexagon	67/	01-30-40-70 (LAC)	17.412	2	G271169	
NUT, Hexagon	***67/70***	***10-80 (RHD)***	17.412	2	G271169	
GROMMET	67/	01-30-40-70 (LHD-LAC) ***(Use 314 7287)***	.....	2	400 0350	
GROMMET	***67/70***	***RHD*** ***(Use 314 7287)***	.....	2	400 0350	

13.072–3 ATTACHING PARTS, Motor To Blower Housing

WASHER, Plain	67/	10-50-80 (LHD-LAC)	17.814	4	G120391	NA
NUT, Hexagon	67/	10-50-80 (LHD-LAC)	17.412	2	G271169	

13.072–4 MOTOR, Heater - Defroster - Air Conditioner Or High Level Ventilation Blower

67/68	01 (WAC)	.....	1	318 1124
69	01 (WAC)	.....	1	319 4647
70	01-40 (WAC-LHLV-* 13-30)	.....	1	319 4648
70	01-40 (WAC-LHLV-* 13-32)	.....	1	319 8956
70	01-40 (WHLV-LAC-* 13-31)	.....	1	319 4646
70	01-40 (WHLV-LAC-* 13-32)	.....	1	319 8978
71/	01-40 (LAC-WHLV)	.....	1	319 8978
72	01-40-70 (WAC)	.....	1	321 7296
67/68	10-50-80 (WAC-* 13-5) ***(Use 318 8975)***	.....	1	316 9614
67/68	10-50-80 (WAC-* 13-6)	.....	1	318 8975
69/70	10-30-70-80 (LHD-WAC-* 13-31)(LHD-WHLV-* 13-31)	.....	1	319 4648
70	10-30-70-80 (LHD-WAC-* 13-32)(LHD-WHLV-* 13-32)	.....	1	319 8956

72	10-80 (WAC)	.....	1	321 0893	
68	70 (WAC-* 13-7)	.....	1	318 1124	
68	70 (WAC-* 13-8)	.....	1	318 8975	
71/	80 (LAC-WHLV)	.....	1	321 0893	
71	(WAC)	.....	1	321 0893	

13.072–5 ATTACHING PARTS, Motor To Mounting Plate

WASHER, Plain.....	67/	01-30-40-70 (WAC) (WHLV-LAC)	17.814	2	G120391	NA
NUT, Hexagon.....	67/	01-30-40-70 (WAC) (WHLV-LAC)	17.412	2	G271169	
GROMMET	67/	01-30-40-70 (WAC)(WHLV-LAC) .... ***(Use 314 7287)***	.....	2	400 0350	

13.072–6 ATTACHING PARTS, Motor To Blower Housing

WASHER, Plain.....	67/69	10-50-80 (WAC-* 13-5)	17.814	4	G131015	NA
WASHER, Plain.....	67/	10-50-80 (WAC-* 13-6)	17.814	4	G120391	NA
NUT, Hexagon.....	67/70	10-50-80 (WAC-8-32)	17.412	2	G272263	NA
NUT, Hexagon.....	67/	10-50-80 (WAC-10-32)	17.412	2	G271169	

13.072–6a ATTACHING PARTS, Motor Wire To Dash Panel

SCREW, Tapping.....	70/	10-80	17.671	1	G9426241	NA

13.072–7 HOUSING, Heater - Defroster - Air Conditioner And High Level Ventilation Blower

67/71	10-50-80 (LHD)	.....	1	318 5413	
72	10 (LAC-* 13-65)	.....	1	321 4896	
72	10 (LAC-* 13-66)	.....	1	321 7351	
72	10-80 (WAC-* 13-65)(WHLV-* 13-65)	.....	1	318 5413	
72	10-80 (WAC-* 13-66)(WHLV-* 13-66)	.....	1	321 7348	

13.072–8 ATTACHING PARTS, Housing To Dash Panel

BOLT, Hexagon	69/	10-80 (WAC)	.....	2	400 3097	
SCREW, Tapping.....	67/	(1" Long) 10-50-80 (LHD)	17.660	AR	G161909	
SCREW, Tapping.....	67/	(3/4" Long) 10-50-80 (LHD-WAC)	17.660	1	G443946	NA
WASHER, Plain.....	67/	10-50-80 (LHD)	17.814	4	G120392	
NUT, Hexagon.....	67/70	10-50-80 (LHD)	17.412	6	G271172	
NUT, Lock.....	71/	10-80	.....	6	400 4307	

13.072–9a WIRE, Air Conditioner Blower Motor Extension

69/70	10-80 (WAC-* 13-5)	.....	1	319 4638	

13.072–10 GASKET, Heater - Defroster - Air Conditioner And High Level Ventilation Blower Housing

67/	(Upper) 10-50-80	.....	1	316 6390	
67/	(Lower) 10-50-80	.....	1	316 6391	

13.072–11 PLATE, Heater And Defroster Motor Mounting

67/	01-30-40-70 (LHD)	.....	1	316 9229	
67/70	***RHD*** ...(Incl. Seals)	.....	1	316 9220	

13.072–12 ATTACHING PARTS, Plate To Heater Housing

NUT, Hexagon.....	67/	01-30-40-70 (LHD)	17.412	3	G271166	NA
NUT, Hexagon	***67/70***	***RHD***	17.412	3	G271166	NA

13.072–13 ATTACHING PARTS, Plate To Dash Panel

NUT, Stamped	67/69	01 (LHD)	.....	3	400 0703
NUT, Stamped	68/	30-70 (LHD)	.....	3	400 0703
NUT, Stamped	***67/70***	***RHD***	.....	3	400 0703

Printed in U.S.A.

HEATER - AIR CONDITIONING

13.072–14 GASKET, Heater - Defroster Motor Mounting Panel To Dash

67	01 (LHD)	.....	1	318 4080
68/69	01	***(Use 319 4166)***	.....	1	318 9748
70	01-30-40-70 (LAC)	***(Use 319 4166)***	.....	1	318 9748
70/	01-30-40-70 (WAC)(WHLV)		13.012	1	319 6396
68/69	30-70	***(Use 319 4166)***	.....	1	318 9748
67/70	***RHD***		.....	1	316 9203

13.072–15 WHEEL, Heater - Defroster - Air Conditioner And High Level Ventilation Blower Motor

71/	(Metal)	.....	1	319 8898
71/	(Plastic)	.....	1	321 2883
67/69	01 (LHD)	.....	1	317 0899
70	01-10-40-80 (* 13-30 And * 13-31)	.....	1	316 6576
70	01-10-40-80 (* 13-32)	.....	1	319 8898
67/69	10-50-80 (LHD)	.....	1	316 6576
68/70	30-70 (LHD)	.....	1	317 0899
67/70	***RHD***	.....	1	316 9214

13.072–16 ATTACHING PARTS, Wheel To Motor Shaft

SCREW, Set	67/	.....	17.640	2	G222421 NA
CLIP, Ring	71/	.....	.....	1	400 4302

13.072–17 INSULATOR, Heater - Defroster - Air Conditioner And High Level Ventilation Blower Motor

67/	.....	.....	1	314 7288

13.072–18 RESISTOR, Heater - Defroster - Air Contitioner - High Level Ventilation Blower Motor

67/68	01	.....	1	316 6528
69	01	.....	1	319 4823
70	01-40 (* 13-53)	.....	1	319 8492
70/71	01-40 (* 13-54)	.....	1	321 2001
72	01-40	.....	1	321 2001
68	30-70 (* 13-7)	.....	1	316 6528
68	30-70 (* 13-8)	.....	1	317 5886
69/70	30-70	.....	1	319 4824
67/68	10-50-80	.....	1	317 8645
69/70	10-80	.....	1	319 4825
71	10-80 (* 13-55)	.....	1	319 4825
71	10-80 (* 13-56)	.....	1	321 3878
72	10 (LAC)	.....	1	321 4447
72	10-80 (WAC)(WHLV)	.....	1	321 4445
71/	70	.....	1	321 1239

13.072–19 ATTACHING PARTS, Resistor To Dash

SCREW, Tapping	67/69	01	17.671	1	400 1042
SCREW, Tapping.....	68	30-70.....	17.671	2	400 1031

13.072–20 ATTACHING PARTS, Resistor To Blower Housing

SCREW, Tapping.....	69/	(WAC)(WHLV)..... ***(Use 812 0054)***	17.671	2	G274773
SCREW, Tapping.....	67/68	10-50-80 (WAC).....	17.671	2	G455380
SCREW, Tapping.....	72	10-70-80.....	17.671	2	812 0054

HEATER - AIR CONDITIONING

13.072–22a WIRE, Resistor To Blower Motor

70	01–40 (* 13–53)	1	319	8603
70/71	01–40 (* 13–54)	1	321	2022
72	01–40	1	321	2022
68	70 (WAC–* 13–18)	1	319	4183

13.072–23 TUBE, Blower Housing To Blower Motor

70/	01–40 (WAC)	1	318	9747
67/	10–50–80 (WAC)(WHLV)	1	317	3206
68	30–70 (WAC–* 13–8)	1	318	9747
69/	30–70 (WAC)(WHLV)	1	318	9747

13.072–24 TUBE, Blower Motor Exhaust

67/70	10–50–80 (WAC–* 13–5)(WHLV–* 13–5)	1	316	9612

13.073–1 HARNESS, High Level Ventilation

69/70	10–80	1	319	4641
69/70	30–70	1	319	5090

13.075–1 RELAY, Air Conditioning Blower Motor

68/69	10–80	1	319	4044
70	01–30–70 (* 13–33)	1	319	4044
71/	10–80 (* 13–56)	1	319	4044
71/	70	1	319	4044

13.075–2 ATTACHING PARTS, Relay To Wheelhouse Panel

SCREW, Tapping	70	01–30–70 (* 13–33)	17.671	1	400	1031
SCREW, Tapping	68	10–80 ***(Use 812 0054)***	17.671	2		G274773
SCREW, Tapping	69	10–80	17.660	2	320	9584
SCREW, Tapping	71/	10–80 (* 13–56)	2.050	2	400	2328
SCREW, Tapping	71/	70	15.320	2	400	1701

13.075–3 HARNESS, Air Conditioning Blower Motor Relay

68	10–80 (Six)	1	319	4046
68	10–80 (V8)	1	319	4045

13.078–1 SWITCH, Heater - Defroster - High Level Ventilation Blower Control

67/69	01 (LHD)	1	355	3152
70/	01–40	1	363	1605
67	10–50–80 (LHD–OAC)	1	320	8685
67/71	10–50–80 (LAC)(LHLV)	1	320	8685
67/71	10–50–80 (WAC)(WHLV)	1	320	8686
72	10 (LAC)	1	321	5675
72	10–80 (WAC)	1	321	5627
68/70	30–70 (LAC)(LHLV)	1	320	8685
68/70	30–70	1	320	8686
71/	70	1	363	1605
72	80 (WHLV–LAC)	1	321	5627
67/69	***01 (RHD)*** ...(Incl. Cable)	1	358	4979

Printed in U.S.A.

HEATER - AIR CONDITIONING

13.078–2 ATTACHING PARTS, Switch To Heater Control Bracket

SCREW, Tapping.....	67/69	01 (LHD).....	17.660	2	G190075 NA
SCREW, Tapping.....	70/	01-40.....	17.660	2	G9414711 NA
SCREW, Tapping.....	67/	10-50-80.....	17.660	2	G161860
SCREW, Tapping.....	72	10-80.....	17.660	2	G9414711 NA
SCREW, Tapping.....	68/70	30-70.....	17.660	2	G161860
SCREW, Tapping.....	71/	70.....	17.660	2	G9414711 NA
***SCREW, Tapping.....	***67/69	***01 (RHD)***.....	13.017	2	400 1781
WASHER, Lock.....	70/	01-40.....	17.820	2	G121841 NA
WASHER, Lock.....	72	10-80.....	17.820	2	G121841 NA
WASHER, Lock.....	71/	70.....	17.820	2	G121841 NA

13.078–3 SWITCH, Air Conditioner Blower Control

67/69	01 (LHD).....	.....	1	355 4369
67	10-50-80 (LHD-Except OAC).....	.....	1	320 8687
67	10-50-80 (OAC).....	.....	1	355 4363
68/71	10-80.....	.....	1	320 8687
68/70	30-70.....	.....	1	320 8687

13.078–3a ATTACHING PARTS, Switch To Heater Switch

SCREW, Tapping.....	67/	10-30-50-70-80.....	17.660	2	G161860

13.078–4 BUSHING, Heater - Defroster Or Air Conditioner Switch Lever

67/	.....	13.017	1	355 3143

13.080–1 KNOB, Heater - Defroster Blower Switch

67/69	***01 (RHD)***.....	.....	1	350 9462

13.080–2 ATTACHING PARTS, Knob To Switch

***SCREW, Set.....	***67/68***	***01 (RHD)***.....	17.640	1	G435145

13.086 CLAMP, Heater Hose

67/	(Adjustable-9/16" To 1-1/16").....	17.108	AR	320 3076
67/	(Adjustable-13/16" To 1-3/4").....	17.108	AR	320 3077
67/	(Corbin Twist-7/8").....	.....	AR	315 5795
70/	(Corbin Twist-15/16").....	17.108	AR	G272850

13.088–1 NIPPLE, Heater Hose To Manifold

67	01 (V8)..... ***(Use 319 0444)***	.....	1	318 2717
68/69	01 (V8-* 13-27).....	.....	1	319 0444
67/68	10-50-80 (V8).....	.....	1	316 0900
69/	10-80 (LHD-V8).....	.....	1	314 2368
68	70 (V8-* 13-3).....	.....	1	319 0444
71/	70.....	.....	1	314 2368

13.113–1 HOUSING ASSEMBLY, Heater And Defroster Damper

67/71	10-50-80 (LHD-LAC)...(Incl. Damper And Cover).....	.....	1	318 5411
72	10 (LAC).....	.....	1	321 4455
71/	70 (LAC-* 13-59).....	13.488	1	321 0602

HEATER - AIR CONDITIONING

13.113–2 ATTACHING PARTS, Housing To Dash Panel

SCREW, Tapping	67/	10-50-80 (LHD-LAC-1-3/4" Long)	17.660	1	G161942	NA
SCREW, Tapping	67/	10-50-80 (LHD-LAC-1" Long)	17.660	1	G161909	
SCREW, Tapping	72	10 (LAC)	17.660	1	812 0615	NA
SCREW, Tapping	71	70	13.488	3	400 2182	
WASHER, Plain	67/	10-50-80 (LHD-LAC)	17.814	2	G120391	NA
WASHER, Plain	71	70	17.814	3	G120391	NA
SPACER	67/	10-50-80 (LAC)	.....	2	316 6571	

13.113–3 SEAL, Heater And Defroster Damper Housing To Blower Housing

67/	10-50-80	.....	1	316 6572	

13.113–4 GASKET, Heater And Defroster Housing To Defroster Duct

71/	70 (Strip-22-3/4" Long)	13.488	1	321 0615	
72	70 (Formed-Oval Shape)	13.188	1	321 2822	

13.113–5 GASKET, Heater And Defroster Housing To Heater Housing

71/	70 (* 13-59)	13.488	1	319 6831	

13.113–6 COVER, Heater And Defroster Housing

71/	70 (LAC-* 13-59)	.....	1	321 0608	

13.113–7 ATTACHING PARTS, Cover To Housing

CLIP	71	70	13.488	6	400 0438	

13.118–1 DUCT, Heater And Defroster Air

67/69	01...(Incl. Gasket)	.....	1	320 6692	
70/	01-40	.....	1	361 6374	
67/	10-50-80	.....	1	357 6597	
68/69	30-70	.....	1	360 1385	
70	30-70	.....	1	363 1323	
71/	70	.....	1	363 2732	

13.118–2 ATTACHING PARTS, Duct To Instrument Panel

FASTENER (Center)	70	30-70	.....	1	361 6259	
FASTENER (Right)	70	30-70	.....	1	361 6258	
STUD	70	01-40 (LHD)	.....	6	400 4063	
SCREW, Tapping	71/	(8-18 x 1/2") 70	25.029	4	400 3814	
SCREW, Tapping	71/	(8-15 x 7/8") 70	17.660	4	G161875	
SCREW, Tapping	71/	(8-18 x 1") 70	27.292	4	400 2214	
BOLT, Tee	68/	(10-24 x 1-3/8") 30-70	.....	3	400 2273	
BOLT, Tee	69	(10-24 x 3/4") 30-70	.....	3	400 3819	
BOLT, Tee	70	(10-24 x 1-5/8") 30-70	.....	1	400 3538	
NUT, Stamped	67/69	01	17.428	4	320 9549	
NUT, Hexagon	70/	01-40	17.417	6	448 7145	
NUT, Hexagon	68	30-70	25.052	3	439 0742	
NUT, Whiz	69	30-70	23.074	3	400 3018	
NUT, Push-on	70	30-70	.....	2	400 1331	
NUT, Self-threading	70	30-70	.....	2	400 0392	

13.118–3 ATTACHING PARTS, Duct To Bezel

SCREW, Tapping	67/	10-50-80	17.660	4	448 9494	

Printed in U.S.A.

HEATER - AIR CONDITIONING

13.118–4 ATTACHING PARTS. Duct To Housing

CLIP, Speed	67/	10-50-80	.....	1	400 3002
CLIP	69/71	10-80 (WAC)	.....	1	319 4538

13.118–5 ATTACHING PARTS. Duct To Adapter

CLIP, "U" Type	68/	30-70	.....	2	400 3504

13.118–5a ATTACHING PARTS. Duct To Dash Panel

SCREW, Tapping	70/	01-40	17.671	3	448 9486
SCREW, Tapping	71	70	29.471	6	400 0471
SCREW, Tapping	72	70	17.660	6	812 0059

13.118–5b SEAL. Defroster Air Duct To Instrument Panel

70/	01-40 (LHD)	.....	1	361 6370

13.118–6 SEAL. Heater And Defroster Air Duct To Housing

67/69	01	.....	1	347 2560
70/	01-40	.....	1	319 6400
67/68	10-50-80	.....	1	357 6598
69/	10-80	.....	1	360 3723
68/70	30-70	.....	1	360 1386
71/	70 (Strip-22-3/4" Long)	.....	1	321 0615
72	70 (Formed-Oval Shape)	.....	1	321 2822

13.118–7 TUBE. Heater - Defroster Air Duct To Damper Housing

67/69	01 (LHD-LAC)	.....	1	347 2561
67/69	***01 (RHD)***	.....	1	350 0666
67/70	***10-80 (RHD)***	.....	1	318 6221

13.118–8 ADAPTER. Heater - Defroster Air Duct To Damper Housing (Incl. Tube)

68/69	30-70 (LHLV)(LAC)	.....	1	359 8987
70	30-70 (LHLV)(LAC)	.....	1	319 5437

13.118–9 ADAPTER. Heater - Defroster Air Duct Tube

68/69	30-70	.....	1	318 9611

13.118–10 BEZEL. Heater And Defroster Air Duct

67/	10-50-80	.....	1	359 0951
68/69	(Left) 30-70	.....	1	360 2221
70	(Left) 30-70 ***(Use 363 1323)***	.....	1	363 1967
68/69	(Right) 30-70	.....	1	360 2220
70	(Right) 30-70	.....	1	363 1966

13.118–10a ATTACHING PARTS. Bezel To Duct

CLIP	69	30-70	13.012	2	313 7319
SCREW, Tapping	67/	10-50-80	17.660	4	448 9494

13.118–11 PANEL. Defroster Duct Mounting

67/70	***10-80 (RHD)***	.....	1	357 6868

HEATER - AIR CONDITIONING

13.118–12 ATTACHING PARTS, Panel To Instrument Panel

SCREW, Tapping	***67/70***	***10-80 (RHD)***	17.660	8	G167038	NA

13.122–1 CABLE, Defroster Damper Control

67/69	01 (LHD-LAC)	.....	1	355 3107	
67/68	01 (LHD-WAC)	.....	1	355 3105	
69	01 (LHD-WAC)	.....	1	362 3019	
70/71	01-40 (LAC)	.....	1	363 1627	
70/	01-40 (WAC)	.....	1	363 1626	
72	01-40 (LAC)	.....	1	321 6078	
67/71	10-50-80 (LHD-LAC)(LHD-LHLV)	.....	1	358 6854	
67/71	10-50-80 (LHD-WAC)(LHD-WHLV)	.....	1	358 6852	
68/70	30-70 (LAC)	.....	1	360 1564	
68/70	30-70 (WAC)(WHLV)	.....	1	362 3019	
71	70	.....	1	363 1626	
72	70 (LAC-* 13-59)	.....	1	363 1627	
72	70 (LAC-* 13-60)	.....	1	321 6078	
72	70 (WAC)	.....	1	363 1626	
67/69	***01 (RHD)***	13.013	1	352 0896	
67/70	***10-80 (RHD)***	.....	1	358 6858	

13.122–2 ATTACHING PARTS, Cable To Control

NUT, Speed	67/	.....	13.017	1	400 1323

13.122–3 ATTACHING PARTS, Cable To Housing

NUT, Speed	67/	01-40	13.017	1	400 0271
NUT, Speed	68/	30-70 (WAC)	13.017	1	400 0271
CLIP	67/	.....	13.017	1	400 0417

13.122–4 ATTACHING PARTS, Cable To Evaporator

CLIP	67/68	10-50-80 (WAC)	.....	2	400 1554
CLIP	69/	10-80 (WAC)	3.210	1	400 0788

13.122–5 ATTACHING PARTS, Cable To Bracket

SCREW, Tapping	69	01 (WAC)	17.660	1	G161895
SCREW, Tapping	69/	30-70 (WAC)(WHLV)	17.660	1	G161895

13.400–1 COMPRESSOR, Air Conditioning

67	.....	***(Use 319 0368)***	.....	1	317 1662
68	(* 13-11)		.....	1	319 0368
68	(* 13-12)		.....	1	319 1066
69/70	.....		.....	1	319 5190
71/	.....		.....	1	321 0922

13.400–2 ATTACHING PARTS, Compressor To Mounting Bracket

STUD	67	.....	17.718	4	G107290	
STUD	68/	(1-5/16) SIX	17.718	2	G113237	
STUD	69/	(1-9/16) SIX	1.010	1	400 3917	
STUD	68	(3/8 x 2-1/16) V8	17.718	4	G107290	
STUD	68/	(3/8 x 2-1/4) V8	.....	4	400 1879	
BOLT, Hexagon	68/	SIX	17.038	1	G180125	NA
SCREW, Nylok	71/	(3/8-16 x 11/16)	15.015	1	400 4072	
WASHER, Plain	67	.....	17.814	4	400 1102	
WASHER, Plain	68/	(11/16" O.D.) V8	17.814	3	400 1102	
WASHER, Plain	69/	(7/8" O.D.)	17.814	1	400 1104	
WASHER, Spring Lock ..	67/	.....	17.820	AR	G120382	
WASHER, Tooth Lock ..	68/	V8	17.822	4	G120930	NA
NUT, Hexagon	67/	.....	17.406	AR	G120369	

HEATER - AIR CONDITIONING

13.400–3 SEAL KIT, Air Conditioning Compressor

67	(* 13-9)	1	320	5646
67/68	(* 13-10)	1	320	5070
68	(* 13-9)	1	320	8712
69/70		1	320	8712
71/		1	812	0180

13.400–4 VALVE PLATE KIT, Air Conditioning Compressor

67	(* 13-9)	1	320	8713
67/68	(* 13-10)	1	320	5072
68	(* 13-9)	1	448	5641
69/		1	448	5641

13.400–5 GASKET KIT, Air Conditioning Compressor

67	(* 13-9)	1	320	8714
67/68	(* 13-10)	1	320	5073
68	(* 13-9)	1	448	5642
69/71		1	448	5642
72		1	812	2073

13.400–6 BRACE, Air Conditioning Compressor To Cylinder Head

67	SIX	1	318	2376

13.400–7 ATTACHING PARTS, Brace To Compressor

BOLT, Hexagon	67	SIX	17.038	1	G180120 NA
WASHER, Lock	67	SIX	17.820	1	G120382

13.405–1 VALVE, Air Conditioning Compressor Suction And Discharge

67/71		2	317	2734
72	01-40-70	2	317	2734
72	10-80 (Suction Valve)	1	321	6285
72	10-80 (Discharge Valve)	1	317	2734

13.405–2 GASKET SET, Air Conditioning Compressor Suction And Discharge Valve

67/	...(Incl. 2)	1	320	5084

13.405–3 CAP, Air Conditioning Compressor Suction And Discharge Valve Stem (Incl. Gasket)

67/		1	448	8331

13.410–1 BRACKET, Air Conditioning Compressor Mounting

67	SIX	1	318	0325
68/69	SIX	1	319	1000
70	SIX (* 13-47)	1	319	1000
70	SIX (* 13-48)	1	319	9820
71	SIX	1	319	9820
72	SIX (Weldnut Thread Is 3/8"-24)	1	319	9820
72	SIX (Weldnut Thread Is 3/8"-16)	1	812	2611
67	V8	1	318	1694
69	V8 ***(Use 319 7134)***	1	319	1835
68	V8 (* 13-14) ***(Use 319 7134)***	1	319	1835
69	V8 ***(Use 319 7134)***	1	319	1835
70/	V8	1	319	7134

HEATER - AIR CONDITIONING

13.410–2 ATTACHING PARTS, Bracket To Cylinder Head

BOLT, Stud Head	68/	SIX	1.063	2	318 4092	
BOLT, Hexagon	67	(2-1/8" Long) SIX	17.038	1	G187069	NA
BOLT, Hexagon	67	(1-1/8" Long) SIX	17.038	2	G180123	NA
BOLT, Hexagon	68	V8 (1 Req. -* 13-13)(2 Req. -* 13-14)	12.175	AR	400 1793	
BOLT, Hexagon	69/	V8	12.175	1	400 1793	
STUD	67	(5-1/2" Long) V8	17.718	1	G273369	
STUD	67	(1-13/16" Long) V8	17.718	1	G273369	
STUD	68	V8 (* 13-13)	17.718	2	G109426	
STUD	68	V8 (* 13-14)	17.718	1	G441975	
STUD	69/70	(7/16 x 2-1/2) V8	17.718	1	G441975	
STUD	70/	(3/8 x 2-5/16) V8	17.718	1	G103199	
WASHER, Plain	67	(11/16" O.D.)	17.814	AR	400 1102	
WASHER, Plain	68	V8 (* 13-12)	12.168	1	400 1764	
WASHER, Plain	68/	(7/8" O.D.) V8	.....	2	400 1116	
WASHER, Plain	70/	(11/16" O.D.) V8	17.814	1	400 1102	
WASHER, Lock	70	(11/16" O.D.) V8	17.820	1	G120382	
WASHER, Lock	67/	(11/16" O.D.)	17.820	AR	G120382	
WASHER, Lock	67/	(51/64" O.D.) V8	.....	2	400 1898	
WASHER, Lock	68/	SIX	.....	2	400 1898	
NUT, Hexagon	67/	(3/8-24 x 21/64) V8	17.406	1	G120369	NA
NUT, Hexagon	67	(7/16-20 x 3/8) V8	17.406	2	G120370	
NUT, Hexagon	68/	(7/16-20 x 3/8)	17.406	AR	G120370	

13.410–3 ATTACHING PARTS, Bracket To Water Pump

BOLT, Hexagon	68/71	SIX	17.038	1	G181641	NA
BOLT, Hexagon	72	SIX (3/8"-24)	17.038	1	G181641	NA
BOLT, Hexagon	72	SIX (3/8"-16)	17.038	1	G180125	
WASHER, Lock	68/	SIX	17.820	1	G120382	
WASHER, Lock	68/	V8	17.820	1	G120382	
WASHER, Plain	68/	SIX	17.814	1	400 1766	
WASHER, Plain	68/	V8	17.814	1	400 1102	
WASHER, Plain	69/70	SIX ***(Use 400 3808)***	17.814	1	G120394	
NUT, Hexagon	68/	V8	17.406	1	G120369	NA

13.410–4 ATTACHING PARTS, Bracket To Intake Manifold

STUD	68/	SIX	17.814	1	G113237	
WASHER, Lock	68/	SIX	17.820	1	G120382	
WASHER, Plain	68/	SIX ***(Use 400 3808)***	17.814	1	G120394	
NUT, Hexagon	68/	SIX	17.406	1	G120369	NA

13.410–5 BRACE, Air Conditioning Compressor Mounting Bracket

68	V8 (* 13-12)	.....	1	319 3283	
69	V8	.....	1	319 3283	

13.410–6 ATTACHING PARTS, Brace To Block

BOLT, Hexagon	68	V8 (* 13-12)	17.038	1	G180144	NA
BOLT, Hexagon	69	V8	17.038	1	G180144	NA
WASHER, Plain	68	V8 (* 13-12)	12.168	1	400 1764	
WASHER, Plain	69	V8	.....	2	400 1116	
WASHER, Lock	68	V8 (* 13-12)	17.820	1	G120383	NA
WASHER, Lock	69	V8	17.820	2	G131100	

13.410–7 ATTACHING PARTS, Brace To Compressor Mounting Bracket

BOLT, Hexagon	68	V8 (* 13-12 And * 13-13)	17.038	1	G180129
WASHER, Lock	68	V8 (* 13-12)	17.820	1	G120382

HEATER - AIR CONDITIONING

13.410–8 SUPPORT, Air Conditioning Compressor Mounting Bracket

68	SIX (* 13-12)	.....	1	319 4425	
69	SIX	.....	1	319 4425	
70	SIX (* 13-47)	.....	1	319 7914	
70	SIX (* 13-48)	.....	1	319 9940	
71/	SIX	.....	1	319 9940	
68	V8 (* 13-14)	.....	1	319 1836	
69/	V8	.....	1	319 1836	

13.410–9 ATTACHING PARTS, Support To Water Pump Housing

STUD	68	V8 (* 13-14)	2.080	1	400 1877	
STUD	69/	V8	2.080	1	400 1877	
WASHER, Lock	68	V8 (* 13-14)	10.260	1	400 3803	
WASHER, Lock	69/	V8	10.260	1	400 3803	
NUT, Hexagon	68	V8 (* 13-14)	17.406	1	G120369	NA
NUT, Hexagon	69/	V8	17.406	1	G120369	NA
SPACER	68	V8 (* 13-14)	10.114	1	319 0790	
SPACER	69/	V8	10.114	1	319 0790	

13.410–10 ATTACHING PARTS, Support To Mounting Bracket

STUD	68	SIX (* 13-12)	1.067	1	400 0794	
STUD	69/	SIX	1.067	1	400 3917	
WASHER, Lock	68	SIX (* 13-12)	17.820	1	G120382	
WASHER, Lock	69/	SIX	17.820	1	G120382	
NUT, Hexagon	68	SIX (* 13-12)	17.406	1	G120369	NA
NUT, Hexagon	69/	SIX	17.406	1	G120369	NA

13.410–11 ATTACHING PARTS, Support To Block (At Alternator Bracket)

BOLT, Hexagon	68	SIX (* 13-12)	17.038	1	G180125	NA
BOLT, Hexagon	69/	SIX (1-3/8" Long)	17.038	1	G180125	NA
BOLT, Hexagon	70	SIX (01)(70)(80)	17.038	1	G180148	NA
BOLT, Hexagon	70/	SIX (1-1/8" Long)	17.038	1	G180123	NA
WASHER, Plain	68	SIX (* 13-12)	17.814	1	400 1102	
WASHER, Plain	69/	SIX	17.814	1	400 1102	
WASHER, Lock	68	SIX (* 13-12)	17.820	1	G120382	
WASHER, Lock	69	SIX	17.820	1	G120382	

13.410–12 BRACE KIT, Compressor Mounting Bracket To Manifold

69	V8	.....	1	448 6872	

13.410–13 BRACE, Compressor Mounting Bracket To Manifold

69	V8	.....	1	319 5505	
70/	V8	.....	1	319 7135	

13.410–14 ATTACHING PARTS, Brace To Compressor

BOLT, Hexagon	69/	(3/8"-16 x 3/4") V8	17.038	1	G180120	NA
SCREW, Machine	70/	(3/8"-16 x 5/8") V8	17.629	1	G274882	NA
WASHER, Lock	69/	V8	17.820	1	G120382	
WASHER, Plain	70	V8	17.814	1	400 1104	

HEATER - AIR CONDITIONING

13.410–15 ATTACHING PARTS, Brace To Manifold

BOLT, Hexagon	69/	V8	17.038	1	G180173 NA
WASHER, Lock	69/	V8	17.820	1	G120384
WASHER, Plain	69/	V8	17.814	1	G103343 NA

13.415–1 CLUTCH, Air Conditioning Compressor Drive (Incl. Coil And Pulley)

67/68		.....	1	318 6607
69/71	SIX	.....	1	318 6607
72	SIX	.....	1	321 7290
69/71	V8	.....	1	319 5189
72	V8 (The O.D. Of The Pulley Assembly Is 6.08")	.....	1	319 5189
72	V8 (The O.D. Of The Pulley Assembly Is 7.50")	.....	1	321 7215

13.415–2 ATTACHING PARTS, Clutch To Compressor

KEY, Woodruff	67/		13.400	1	314 9417
BOLT, Nylok	67/		.....	1	400 0207
WASHER, Plain	67/		.....	1	400 0208
WASHER, Lock	70/		17.820	1	G120214

13.415–3 COIL, Air Conditioning Compressor Drive Pulley (Driven)

67/68	(* 13-15)	.....	1	320 8169
67/68	(* 13-16)	.....	1	320 5702
69/71	SIX (* 13-15)	.....	1	320 8169
69/71	SIX (* 13-16)	.....	1	320 5702
72	SIX	.....	1	320 5702
69/71	V8	.....	1	448 6588
72	V8 (The O.D. Of The Pulley Assembly Is 6.08")	.....	1	448 6588
72	V8 (The O.D. Of The Pulley Assembly Is 7.50")	.....	1	812 1283

13.415–4 ATTACHING PARTS, Coil To Compressor

SCREW, Machine	67/		25.020	4	400 0741

13.415–5 PULLEY, Air Conditioning Compressor Drive

67/68	(* 13-15)	.....	1	320 8168
67/68	(* 13-16)	.....	1	320 5703
69/71	SIX (* 13-15)	.....	1	320 8168
69/71	SIX (* 13-16)	.....	1	320 5703
72	SIX	.....	1	320 5703
69/71	V8	.....	1	448 6589
72	V8 (The O.D. Of The Pulley Assembly Is 6.08")	.....	1	448 6589
72	V8 (The O.D. Of The Pulley Assembly Is 7.50")	.....	1	812 1282

13.415–6 HARNESS, Air Conditioning Resistor To Motor Relay To Compressor Clutch

70	01 (Six-* 13-33)	.....	1	319 7974
70	01 (V8-* 13-33)	.....	1	319 7975

13.415–7 WIRE, Air Conditioning Compressor Drive Clutch Extension

68	SIX	.....	1	319 1576
69/70	01-40-70 (Six)	.....	1	319 1576
72	SIX	.....	1	319 1576

13.415–8 CLIP, Air Conditioning Compressor Drive Clutch Extension Wire (To Main Wire Harness)

67	10		3.210	1	63 045

HEATER - AIR CONDITIONING

13.415–9 CLIP, Air Conditioning Compressor Drive Clutch Extension Wire (To Compressor Mounting Bracket)

67		.....	1	317 7208
68/	V8	3.610	1	400 0785

13.415–10 CLIP, Air Conditioning Compressor Drive Clutch Extension Wire (Under Cylinder Head Bolt)

68	SIX	.....	1	317 7208
69/70	01-70 (Six)	.....	1	317 7208
70/71	10-80 (Six-* 13-55)	.....	1	317 7208
72	01-40-70-80 (Six)	.....	1	317 7208

13.415–11 CLIP, Air Conditioning Compressor Drive Clutch Wire To Heater Hose

69/	01-40-70 (Six)	3.312	1	79 394
70/	10-80 (Six)	3.312	1	79 394

13.415–12 CLIP, Air Conditioning Compressor Drive Clutch Wire To Compressor

70	01-70 (Six)	3.610	1	400 0785
69/71	10-80 (Six-* 13-55)	3.610	1	400 0785
72	10 (Six)	.....	1	400 0785
72	V8	.....	1	400 0785

13.415–13 ATTACHING PARTS, Wire Clip To Compressor

BOLT, Hexagon	70/71	01-40-70 (Six)	17.038	1	G180118 NA
BOLT, Hexagon	69/71	10-80 (Six-* 13-55)	17.038	1	G180118 NA
WASHER, Lock	70	01-40-70 (Six)	10.260	1	400 3803
WASHER, Lock	69/71	10-80 (Six-* 13-55)	10.260	1	400 3803

13.415–14 CLIP, Air Conditioning Drive Clutch Wire To Air Conditioning Hose

70	01 (Six)	3.312	1	79 394

13.420 SWITCH, Air Conditioning Temperature Override

72	10-80	.....	1	321 4709

13.420–2 ATTACHING PARTS, Air Conditioning Temperature Override Switch

SCREW, Hexagon	72	10-80	.....	1	400 2334
NUT, Nylon	72	10-80	.....	1	400 0141

13.425–1 BELT, Air Conditioning Compressor (Crankshaft To Intermediate Pulley)

67	SIX (LPS)	.....	1	316 9176

13.425–2 BELT, Air Conditioning (Crankshaft To Intermediate Pulley To Compressor)

68/	SIX (LPS)	.....	1	319 1320
67/68	V8 (LPS-LEEP)	.....	1	316 4113
69/70	V8 (LPS-LEEP)	.....	1	316 6915
71/	V8 (LPS-LEEP)	.....	1	321 2070

13.425–3 BELT, Air Conditioning Compressor (Intermediate Pulley To Compressor Pulley)

67	SIX (LPS-LEEP)	.....	1	318 3590

13.425–4 BELT, Air Conditioning Compressor (Compressor To Power Steering Pump Pulley)

67	SIX (WPS-LEEP)	.....	1	317 4406

HEATER - AIR CONDITIONING

13.425–5 BELT, Air Conditioning Compressor (Crankshaft To Power Steering Pump To Compressor)

68/70	SIX (WPS)	10.455	1	319	1030
71/	SIX (WPS)	.....	1	319	1320
67/68	V8 (WPS)	*(Use 321 2069)*	.....	1	318 1275
69/70	V8 (WPS)	*(Use 321 2069)*	.....	1	317 5222
71	V8 (WPS)	.....	1	321	2069
72	V8 (WPS-* 13-57)	.....	1	321	5365
72	V8 (WPS-* 13-58)	.....	1	321	2069

13.425–6 BELT, Air Conditioning Compressor (Intermediate Pulley To Exhaust Emission Air Pump Pulley To Compressor)

67	SIX (LPS-WEEP)	.....	1	317	2681

13.425–7 BELT, Air Conditioning (Crankshaft To Compressor To Exhaust Emission Air Pump Pulley)

67/68	V8 (LPS-WEEP)	4.620	1	318	1777

13.425–8 BELT, Air Conditioning Compressor (Compressor To Power Steering Pump Pulley To Exhaust Emission Air Pump Pulley)

67	SIX (WPS-WEEP)	.....	1	316	9177

13.430–1 PULLEY, Air Conditioning Intermediate

67	SIX (LPS) ...(Incl. Mounting Bracket)	.....	1	318	3555
68/	SIX (LPS) ...(Incl. Mounting Bracket)	.....	1	319	1232
67/	V8 (LPS)	.....	1	314	3732

13.430–2 ATTACHING PARTS, Pulley To Intermediate Pulley Bracket

BOLT, Hexagon	67	SIX (LPS)	17.038	2	G180080	NA
BOLT, Hexagon	68/	SIX (LPS)	17.038	2	G180077	NA
WASHER, Plain	67	SIX (LPS)	17.814	2	400 1760	
WASHER, Lock	67/	SIX (LPS)	17.820	2	G120214	
WASHER, Lock	67/	V8 (LPS)	17.820	1	G131100	
NUT, Hexagon	67/	V8 (LPS)	17.406	1	G120370	

13.430–3 BEARING, Air Conditioning Intermediate Pulley

67/	SIX (LPS)	.....	1	313	8567

13.430–4 BRACKET, Air Conditioning Intermediate Pulley Mounting

67	SIX (LPS)	10.455	1	318	0323
68/69	SIX (LPS)	.....	1	319	1300
70	SIX (LPS-* 13-47)	.....	1	319	1300
70	SIX (LPS-* 13-48)	.....	1	319	9817
71/	SIX (LPS)	.....	1	319	9817
67/	V8 (LPS)	.....	1	318	1277

13.430–5 ATTACHING PARTS, Bracket To Plate

BOLT, Hexagon	67/	V8 (LPS)	17.038	2	G180129	
WASHER, Plain	67/	V8 (LPS)	17.814	2	400 1104	
WASHER, Lock	67/	V8 (LPS)	17.820	2	G120382	
NUT, Hexagon	67/	V8 (LPS)	17.406	2	G120377	NA

Printed in U.S.A.

HEATER - AIR CONDITIONING

13.430–6 ATTACHING PARTS, Bracket To Engine

BOLT, Hexagon	67	SIX (LPS-1-3/8" Long)	17.038	2	G180125	NA
BOLT, Hexagon	67	SIX (LPS-2-1/8" Long)	17.038	1	G187069	NA
WASHER, Plain	67	SIX (LPS)	17.814	3	400 1762	
WASHER, Lock	67	SIX (LPS)	17.820	3	G120382	

13.430–7 BRACKET, Air Conditioning Intermediate Pulley Adjusting (Upper)

68/		SIX (LPS)	10.449	1	319 1003	

13.430–8 ATTACHING PARTS, Upper Bracket To Head

BOLT, Hexagon	68/	SIX (LPS)	17.038	2	G180123	NA
WASHER, Lock	68/	SIX (LPS)	17.820	2	G120382	
WASHER, Plain	68/	SIX (LPS) ***(Use 400 3808)***	17.814	2	G120394	NA

13.430–9 ATTACHING PARTS, Upper Bracket To Mounting Bracket

BOLT, Hexagon	68/	SIX (LPS)	17.038	1	G109443	
WASHER, Lock	68/	SIX (LPS)	17.820	2	G120382	
NUT, Hexagon	68/	SIX (LPS)	17.406	1	G120377	NA

13.430–10 BRACKET, Air Conditioning Intermediate Pulley Adjusting (Lower)

68/71		SIX (LPS)	10.455	1	319 0983	
72		SIX (LPS)	.....	1	321 6093	

13.430–11 ATTACHING PARTS, Lower Bracket To Engine

*SPACER	68/	SIX (LPS)	10.455	1	317 4400	
BOLT, Hexagon	68/69	SIX (LPS-2-1/4" Long)	17.038	1	G180132	NA
BOLT, Hexagon	69/	SIX (LPS-2-1/2" Long)	17.038	1	G427589	NA
WASHER, Plain	68/69	SIX (LPS) ***(Use 400 3808)***	17.814	1	G120394	
WASHER, Lock	68/	SIX (LPS)	17.820	1	G120382	
WASHER, Bite	69/	SIX (LPS)	10.003	2	310 8995	

13.430–12 ATTACHING PARTS, Lower Bracket To Mounting Bracket

BOLT, Hexagon	68/	SIX (LPS)	17.038	2	G180121	
WASHER, Lock	68/	SIX (LPS)	17.814	2	G120382	
NUT, Hexagon	68/	SIX (LPS)	17.406	2	G120377	
WASHER, Plain	68/	SIX (LPS) ***(Use 400 3808)***	17.814	2	G120394	

13.430–12a BRACE KIT, Air Conditioning Intermediate Pulley Adjusting Lower Bracket

69		SIX (LPS)	10.455	1	448 6873	

13.430–12b BRACE, Air Conditioning Intermediate Pulley Adjusting Lower Bracket

69/		SIX (LPS)	10.455	1	319 6431	

13.430–12c ATTACHING PARTS, Brace To Block

SPACER	69/	SIX (LPS)	17.814	1	400 1161	
BOLT, Hexagon	69/	SIX (LPS)	17.038	1	G180123	NA
WASHER, Lock	69/	SIX (LPS)	17.820	1	G120382	

13.430–13 STRAP, Air Conditioning Intermediate Pulley Adjusting

67		SIX (LPS)	10.450	1	318 4318	

Printed in U.S.A.

HEATER - AIR CONDITIONING

13.430–14 ATTACHING PARTS, Strap To Bracket

BOLT, Hexagon	67	SIX (LPS)	17.038	1	400 1931 NA
NUT, Jam	67	SIX (LPS)	17.410	1	G124829
NUT, Square	67	SIX (LPS)	17.413	1	G120374 NA

13.430–15 PLATE, Air Conditioning Intermediate Pulley Bracket Adjusting

67/	V8 (LPS)	10.455	1	318 6475

13.430–16 ATTACHING PARTS, Plate To Block

BOLT, Hexagon	67/	V8 (LPS-1-1/8" Long)	17.038	2	G180123
BOLT, Hexagon	67/	V8 (LPS-2-1/2" Long)	17.038	1	G180134
WASHER, Lock	67/	V8 (LPS)	17.820	3	G120382

13.430–17 SPACER, Air Conditioning Intermediate Pulley Bracket Mounting

67/	V8 (LPS)	10.455	1	318 5532

13.430–18 BRACE, Air Conditioning Intermediate Pulley Adjusting

67/69	V8 (LPS)	10.450	1	318 5529
70/	V8 (LPS)	10.450	1	319 8775

13.430–19 ATTACHING PARTS, Brace To Bracket

BOLT, Hexagon	67/	V8 (LPS)	17.038	2	G180126 NA
WASHER, Lock	67/	V8 (LPS)	17.820	2	G120382
NUT, Hexagon	67/	V8 (LPS)	17.406	2	G120377 NA

13.430–20 ATTACHING PARTS, Brace To Block

BOLT	67/	V8 (LPS)	2.080	1	318 5530
WASHER, Plain	67/	V8 (LPS-13/32 x 1-1/8 x 1/8)	17.814	2	400 1107
WASHER, Plain	67/	V8 (LPS-13/32 x 7/8 x 3/16)	17.814	1	400 1161
WASHER, Lock	67/	V8 (LPS)	17.820	1	G120382
NUT, Hexagon	67/	V8 (LPS)	17.406	1	G120369 NA

13.430–21 EXTENSION, Air Conditioning Intermediate Pulley Adjusting Brace

70/	V8 (LPS)	.....	1	319 9675

13.430–22 ATTACHING PARTS, Extension To Brace

BOLT, Hexagon	70/	V8	17.038	1	G180122 NA
WASHER, Plain	70/	V8	17.814	2	400 1104
WASHER, Lock	70/	V8	17.820	1	G120382
NUT, Hexagon	70/	V8	17.406	1	G120377 NA

13.435–1 PULLEY KIT, Air Conditioning Drive Belt Back Idler

68/69	V8	.....	1	448 6982

13.435–2 PULLEY, Air Conditioning Drive Belt Back Idler

68/71	V8	.....	1	319 7605
72	V8 (Pulley O.D. On Clutch Assembly Is 6.08")	.....	1	319 7605
72	V8 (Pulley O.D. On Clutch Assembly Is 7.50") 322.20.27		1	319 7165

HEATER - AIR CONDITIONING

13.435–3 ATTACHING PARTS, Pulley To Bracket

NUT, Hexagon	68/	V8	17.406	1	G120370	
WASHER, Lock	68/	V8	17.820	1	400 1116	
WASHER, Plain	68/	V8	17.814	2	G131100	

13.435–4 BRACKET, Air Conditioning Drive Belt Back Idler Pulley

68/	V8	.....	1	319 7606	

13.435–5 ATTACHING PARTS, Bracket To Engine Block

BOLT, Hexagon	68/	V8	17.038	2	G215511	
WASHER, Plain	68/	V8	17.814	1	400 1102	

13.435–6 ATTACHING PARTS, Bracket To Water Pump And Engine Block

STUD	68/	V8	.....	1	319 7013	
WASHER, Plain	68/	V8	17.646	1	G147579	NA
WASHER, Lock	68/	V8	17.820	2	G120380	NA
NUT, Hexagon	68/	V8	17.406	1	G120375	

13.440–1 HOSE, Air Conditioning (Compressor To Condenser)

68	01-10 (Six-McCord-* 13-17)	.....	1	319 1594
67	01-10 (Six)	.....	1	318 4029
68	01-10 (Six-Modine-* 13-18)	.....	1	318 0586
67/69	01 (V8)	.....	1	318 1779
69	01-70 (Six)	.....	1	319 1594
70/	01-40 (Six)	.....	1	319 9978
70	01 (V8)	.....	1	319 9989
71/	01-40 (V8)	.....	1	321 2534
69	10 (Six)	.....	1	319 1594
70	10 (Six-* 13-41)	.....	1	319 6681
70	10 (Six-* 13-42)	.....	1	319 9978
71/	10-70-80 (SIX)	.....	1	319 9978
67/68	10-50-80 (V8-McCord-* 13-17)	.....	1	318 5415
67/68	10-50-80 (V8-Modine-* 13-18)	.....	1	318 5747
69	10 (V8)	.....	1	318 5415
70	10 (V8)	.....	1	319 9990
71/	10-70 (V8)	.....	1	321 2933
69	30-70 (V8)	.....	1	318 1779
70	30-70 (V8-* 13-37)	.....	1	318 1779
70	30-70 (V8-* 13-38)	.....	1	319 9990
67	50-80 (Six-McCord-* 13-17)	.....	1	318 4033
67	50-80 (Six-Modine-* 13-18)	.....	1	318 4030
70	70 (Six-* 13-45)	.....	1	319 6681
70	70 (Six-* 13-46)	.....	1	319 9978
68	80 (Six-McCord-* 13-17)	.....	1	319 1594
68	80 (Six-Modine-* 13-18)	.....	1	316 8037
69	80 (Six)	.....	1	319 1594
70	80 (Six-* 13-43)	.....	1	319 6682
70	80 (Six-* 13-44)	.....	1	319 9978
69	80 (V8)	.....	1	319 5186
70	80 (V8-* 13-39)	.....	1	319 5186
70	80 (V8-* 13-40)	.....	1	321 0076
71/	80 (V8)	.....	1	321 2537

Printed in U.S.A.

HEATER - AIR CONDITIONING

13.440–2 HOSE, Air Conditioning (Evaporator To Compressor)

67		.....	1	319 3858
68	SIX ..... *(Use 319 3859)*	.....	1	319 1318
68/70	V8	.....	1	319 3858
69/70	01–40 (Six–* 13–49) ..... *(Use 319 3859)*	.....	1	319 1318
70	01–40 (Six–* 13–50)	.....	1	321 2120
71/	01–40–70 (Six)	.....	1	321 2120
71	01 (V8–* 13–49)	.....	1	319 3858
71	01 (V8–* 13–50)	.....	1	321 2121
72	01–40 (V8)	.....	1	321 2121
69/71	10–80 (Six)	.....	1	319 3859
72	10–80 (Six)	.....	1	321 6289
71	10–80 (V8)	.....	1	321 2539
72	10–80 (V8)	.....	1	321 6291
69/70	70 (Six) ..... *(Use 319 3859)*	.....	1	319 1318
71/	70 (V8)	.....	1	321 2121

13.440–3 HOSE, Air Conditioning (Receiver To Evaporator)

67/69	01–30–70 (Used Less Sight Glass)	.....	1	318 4079
70	01–40 (* 13–49)	.....	1	319 4233
70/71	01–40 (* 13–50)	.....	1	321 2119
72	01–40	.....	1	321 2119
69/70	10–30–70 (Used With Sight Glass)	.....	1	319 4233
67/68	10–80	.....	1	318 4079
72	10–80 (55" Long)	.....	1	321 9234
71/	10–80 (60" Long)	.....	1	319 4234
71/	70	.....	1	321 2119
69/70	80	.....	1	319 4234

13.440–4 COUPLING, Air Conditioning Hose Disconnect (Female Half)

67/		.....	1	317 1795

13.440–4a "O" RING, Air Conditioning Evaporator Hose (At Expansion Valve)(5/16" I.D.)

70/71	01–40 (* 13–50)	.....	1	321 2113
72	01–40	.....	1	321 2113
71/	70	.....	1	321 2113

13.440–4b "O" RING, Air Conditioning Evaporator Hose (At Evaporator)(7/16" I.D.)

70/71	01–40 (* 13–50)	.....	1	321 2112
72	01–40	.....	1	321 2112
71/	70	.....	1	321 2112

13.440–5 COUPLING, Air Conditioning Hose Disconnect (Male Half)

67/		.....	1	317 1794

13.440–6 RING, Air Conditioning Hose Disconnect Coupling (Rubber)

67/		.....	2	317 1788

13.440–6a TUBE, Air Conditioning Condenser Core To Receiver (Jumper)

69/	10–30–70	.....	1	448 8889
69/	80	.....	1	448 8890

13.440–7 GROMMET, Air Conditioning Hose (In Dash)

67/69	01	.....	1	317 3303
70/	01–40	.....	1	318 5484
67/	10–30–50–70–80	.....	1	318 5484

HEATER - AIR CONDITIONING

13.440–8 ATTACHING PARTS, Grommet To Dash

SCREW, Tapping.....	70/	01–40–70.....	15.320	2	400 1701	
SCREW, Tapping.....	67/68	10–50–80.....	15.320	2	400 1701	
SCREW, Tapping.....	69/	10–80.....	17.671	2	400 0774	
SCREW, Tapping.....	68/	30–70.....	17.666	2	G161673	NA
WASHER, Plain.....	68/	30–70.....	17.814	2	G446152	NA

13.440–10 INSULATION, Air Conditioning Hose

70/	01–40 (Tape–20" Long).....	.....	1	315 8337
67/	10–50–80 (Cut Piece).....	.....	1	318 9680
67/	10–50–80 (Tape–20" Long).....	.....	1	315 8337

13.440–11 BRACKET, Air Conditioning Evaporator To Receiver Hose Clip (At Manifold)

67	V8.....	.....	1	315 8227

13.440–12 ATTACHING PARTS, Bracket To Intake Manifold Baffle

CLIP.....	67/69	SIX (01)(10)(40)(50)(80).....	.....	1	400 0443
SCREW, Tapping.....	69	V8.....	2.050	1	400 2331
WASHER, Lock.....	67/68	SIX (01)(10)(50)(80).....	17.820	1	G120380 NA
NUT, Speed.....	67/68	SIX (01)(10)(50)(80).....	4.050	1	316 3893
NUT, Speed.....	68/	V8.....	17.426	1	G445446
NUT, Hexagon.....	67/68	SIX (01)(10)(50)(80).....	17.406	1	G120367

13.440–13 BRACKET, Air Conditioning Evaporator To Receiver Hose Clip (At Power Steering Pump On Idler)

68/71	V8.....	.....	1	315 8227
72	V8 (Bracket Is 2.03" Long–* 13–57).....	.....	1	321 5572
72	V8 (Bracket Is 2.78" Long–* 13–57).....	.....	1	812 2252
72	V8 (* 13–58).....	.....	1	315 8227

13.440–14 SEAL, Air Conditioning Evaporator Hose To Housing

67/	.....	.....	2	318 6134

13.440–15 BRACKET, Air Conditioning Compressor To Condenser Hose Clip

67/	.....	.....	2	315 8227

13.440–16 ATTACHING PARTS, Bracket To Condenser

CLIP, Closed.....	67/	01–10–50–80..... ***(Use 400 3015)***	17.134	1	G120525
SCREW, Tapping.....	67/	01–10–50–80..... ***(Use 812 0054)***	17.671	1	G274773
NUT, Speed.....	67/	01–10–50–80.....	17.426	1	G445446

13.440–16a ATTACHING PARTS, Bracket To Power Steering Pump Bracket

SCREW, Hexagon.....	72	V8 (* 13–57).....	.....	1	400 4077

13.440–16b STRAP, Air Conditioning Hose

69/	10–30–70–80 (3/16" x 6–3/4).....	3.196	1	318 1008

13.440–17 CLIP, Air Conditioning Hose

69/	01 (LPB–1/2" Wide–Wrap–A–Round).....	13.050	1	318 3897
70/	(1/2" I.D.) 01–40–70.....	3.165	1	400 0553
67/68	01–30–70 (V8).....	13.050	1	400 1735
67	..... ***(Use 400 3015)***	17.134	1	G120525
69/	(1/2" I.D.) 10–80.....	3.165	1	400 0553
67/	(13/16" I.D.).....	.....	AR	400 0443

HEATER - AIR CONDITIONING

13.440–18 ATTACHING PARTS, Clip To Front Suspension Mounting Bracket

SCREW, Tapping	67/69	01-30-70	17.671	3	400 1066
SCREW, Tapping	67/	10-80 ***(Use 318 9013)***	17.671	2	400 0478
SCREW, Tapping	70/	01-40 ***(Use 318 9013)***	17.671	2	400 0478
SCREW, Tapping	68/	30-70	17.671	3	400 1066

13.440–19 ATTACHING PARTS, Clip To Left Front Wheelhouse Panel

SCREW, Tapping	67/	10-80 (V8) ***(Use 318 9013)***	17.671	1	400 0478

13.440–20 CLIP, Air Conditioning Hoses To Radiator Grille Panel (Bundling)

69/			3.165	1	343 9909

13.440–21 ATTACHING PARTS, Compressor To Condenser Hose To Condenser

CLIP	69/	10-80 (Six)	13.440	1	400 3993
CLIP	70/	01-40-70 (Six)	13.440	1	400 3993
WASHER, Lock	69/	10-80 (Six)	17.820	1	G120382
WASHER, Lock	70/	01-40-70 (Six)	17.820	1	G120382
BOLT, Hexagon	69/	10-80 (Six)	17.038	1	G180118 NA
BOLT, Hexagon	70/	01-40-70 (Six)	17.038	1	G180018 NA

13.450–1 CORE, Air Conditioning Condenser

67	01 (Six-Modine)	.....	1	317 5850
68	01 (Six-Modine-* 13-18)	.....	1	317 5850
68	01-70 (Six-McCord-* 13-17)	.....	1	319 2054
67/69	01-30-70 (V8)	.....	1	318 1780
69	01-70 (Six)	.....	1	319 2054
70/	01-40	.....	1	319 6675
67/68	10 (McCord-* 13-17)	.....	1	317 5260
67/68	10 (Modine-* 13-18)	.....	1	317 5850
69	10	.....	1	317 5260
68	70 (Six-Modine)	.....	1	317 5850
70	10 (Six-* 13-41)	.....	1	317 5260
70	10 (Six-* 13-42)	.....	1	319 7526
70	10 (V8)	.....	1	319 7526
71/	10-70	.....	1	319 7526
70	30-70 (V8-* 13-37)	.....	1	318 1780
70	30-70 (V8-* 13-38)	.....	1	319 7526
67/68	50-80	.....	1	317 5232
70	70 (Six-* 13-45)	.....	1	319 2054
70	70 (Six-* 13-46)	.....	1	319 7526
69	80	.....	1	317 5232
70	80 (Six-* 13-43)	.....	1	317 5232
70	80 (V8-* 13-39)	.....	1	317 5232
70	80 (Six-* 13-44)	.....	1	319 7523
70	80 (V8-* 13-40)	.....	1	319 7523
71/	80	.....	1	319 7523

13.450–2 ATTACHING PARTS, Core To Side Baffle

BOLT, Hexagon	69		23.017	5	400 0659
BOLT, Hexagon	70	01-40	2.020	4	400 3847
SCREW, Machine	71/	01-40	17.629	4	G273573
BOLT, Hexagon	70/	10-30-70-80	23.017	5	400 0659
SCREW, Machine	67/69	01-10-50-80	.....	5	400 1798
WASHER, Plain	67/69	01-10-50-80	17.814	5	400 1093
NUT, Retainer	70/	01-40	.....	4	400 3957

Printed in U.S.A.

HEATER - AIR CONDITIONING

13.455–1 RECEIVER, Air Conditioning

69		.....	1	317 5233
67/68	01-10-50-80 (McCord-* 13-17)	.....	1	317 5233
67/68	01-10-50-80 (Modine-* 13-18)	.....	1	317 5849
70/	01-40	.....	1	319 6676
70	10 (Six-* 13-41)	.....	1	317 5233
70	10-30-70-80 (* 13-38, * 13-40, * 13-42, * 13-44 And * 13-46)	.....	1	319 7567
71/	10-70-80	.....	1	319 7567
68	30-70 (V8)	.....	1	317 5233
70	30-70 (V8-* 13-37)	.....	1	317 5233
68	70 (Six-Modine-* 13-18)	.....	1	317 5849
68	70 (Six-McCord-* 13-17)	.....	1	317 5233
70	70 (Six-* 13-45)	.....	1	317 5233
70	80 (Six-* 13-43)	.....	1	317 5233
70	80 (V8-* 13-39)	.....	1	317 5233

13.455–2 ATTACHING PARTS, Receiver To Condenser Core

SCREW, Machine 67/		17.629	2	G274683

13.455–3 REPAIR KIT, Air Conditioning Receiver Check Valve

67/70		.....	1	320 7920

13.455–4 BODY, Air Conditioning Receiver Check Valve

67/68	(Modine-* 13-18)...(Incl. Swivel Nut)	.....	1	320 5810
69/70		.....	1	320 1289
67/68	01-10-50-80 (McCord-* 13-17)	.....	1	320 1289
68	30-70 (V8)(Six-McCord-* 13-17)	.....	1	320 1289

13.455–5 GUIDE, Air Conditioning Receiver Check Valve

67/70		.....	1	320 1291

13.455–6 VALVE, Air Conditioning Receiver Pressure Relief

67/		.....	1	320 1430

13.455–7 GASKET, Air Conditioning Receiver Pressure Relief Valve

67/		.....	1	320 1300

13.470–1 VALVE, Air Conditioning Expansion

67	01	.....	1	320 5085
68/69	01-30-70	.....	1	316 6968
70/71	01-40 (* 13-49)	***(Use 317 6453)***	1	316 2784
71	01-40-70 (* 13-50)	.....	1	321 2116
72	01-40-70 (* 13-61 And * 13-63)	.....	1	321 2116
72	01-40-70 (* 13-62 And * 13-64)	.....	1	321 6522
70	30-70	.....	1	317 1974
67/71	10-50-80	326	1	317 6453
72	10-80	.....	1	321 6282

13.470–1a "O" RING, Expansion Valve To Evaporator Core

70	01-40 (* 13-50)	.....	1	321 2112
71/	01-40-70	.....	1	321 2112

Printed in U.S.A.

HEATER - AIR CONDITIONING

13.470–2 CLIP KIT, Air Conditioning Expansion Valve Capillary Tube (Incl. 3 Clips And Screws)

67		.....		1	320 5086

13.470–3 CLAMP, Air Conditioning Expansion Valve

70/71	01–40 (* 13–50)	.....		1	321 2316
72	01–40–70 (* 13–61 And * 13–62)	.....		1	321 2316
72	01–40–70 (* 13–62 And * 13–64)	.....		1	321 6429
72	10–80	.....		1	321 6429
71	70	.....		1	321 2316

13.470–3a ATTACHING PARTS, Clamp To Housing

SCREW, Tapping.....	72	.....		1	400 4471

13.470–4 RETAINER, Air Conditioning Expansion Valve

70/71	01–40 (* 13–50)	.....		1	321 2317
72	01–40–70 (* 13–61 And * 13–63)	.....		1	321 2317
71	70	.....		1	321 2317

13.470–5 REINFORCEMENT, Air Conditioning Expansion Valve

70/71	01–40 (* 13–50)	.....		1	321 2315
72	01–40–70 (* 13–61 And * 13–63)	.....		1	321 2315
71	70	.....		1	321 2315

13.470–6 ATTACHING PARTS, Reinforcement

SCREW, Tapping.....	70/71	01–40 (* 13–50)		1	400 4141
SCREW, Tapping.....	72	01–40.....		1	400 0141
SCREW, Tapping.....	71/	70.....		1	400 4141

13.475–1 CORE, Air Conditioning Evaporator

67/69	01	.....		1	317 0514
70/71	01–40 (* 13–49)	.....		1	319 6832
71	01–40–70 (* 13–50)	.....		1	321 2114
72	01–40–70 (* 13–61 And * 13–63)	.....		1	321 2114
72	01–40–70 (* 13–62 And * 13–64)	.....		1	321 6524
67/68	10–50–80	.....		1	318 5483
69/71	10–80	.....		1	319 4115
72	10–80	.....		1	321 6281
68/70	30–70	.....		1	318 9670

13.475–2 ATTACHING PARTS, Core To Housing

SCREW, Machine.....	67/68	01–30–70	17.626	4	G431942 NA
SCREW, Machine.....	70/	01–40.....	17.626	4	G431942 NA
SCREW, Tapping.....	67/69	01.....	17.660	4	G162009 NA
SCREW, Tapping.....	69/	10–30–50–70–80	17.660	4	G162009 NA
SCREW, Machine.....	71	70.....	17.626	4	G431942 NA
WASHER, Plain.....	67/68	01–30–70.....	17.814	4	G120391 NA
WASHER, Plain.....	70/	01–40.....	17.814	4	G120391 NA
WASHER, Plain.....	71	70.....	17.814	4	G120391 NA
NUT, Speed	67/	.....	.....	4	400 0425

13.475–3 SEAL, Evaporator Core To Cover

67/70	10–50–80	.....		1	318 5501

13.475–4 BAFFLE, Evaporator Core Air

69/71	10–80	.....		1	319 7105
72	10–80	.....		1	321 6280

HEATER - AIR CONDITIONING

13.477–1 THERMOSTAT, Air Conditioning Temperature Control

67	01 (* 13-19)	.....	1	355 3321	
67	01 (* 13-20)	.....	1	359 8652	
68/69	01	.....	1	359 8652	
70/	01-40 (* 13-61)	.....	1	363 1622	
72	01-40 (* 13-62)	.....	1	321 6519	
67	10-50-80 (Except OAC)	.....	1	357 7145	
67	10-50-80 (OAC)	.....	1	320 7880	
68	10-80	.....	1	357 7145	
69	10-80	.....	1	361 4454	
70/71	10-80	.....	1	363 1751	
72	10-80	.....	1	321 4426	
68/70	30-70	.....	1	318 9655	
71/	70 (* 13-63)	.....	1	363 2784	
72	70 (* 13-64)	.....	1	321 6518	

13.477–2 ATTACHING PARTS, Thermostat To Panel Or Bracket

CLIP, Speed	72	10-80 (WAC)	.....	1	400 4545	
GROMMET (Rubber)	69/	10-80	4.141	1	318 7296	
NUT, Lock	67/		3.145	1	400 0056	
WASHER (Nylon)	67	10-50-80 (Except OAC)	23.039	1	400 2073	
WASHER (Nylon)	68	10-80	23.039	1	400 2073	
WASHER, Lock	69/70	10-80	17.824	1	G138542	NA

13.477–2a ATTACHING PARTS, Thermostat To Control

SCREW, Tapping	71/	70	17.660	2	G9414711	NA
WASHER, Lock	71/	70	17.820	2	G121841	NA

13.477–3 ATTACHING PARTS, Thermostat Capillary Tube To Evaporator Housing

CLIP	67/		.....	1	317 7100	
SCREW, Tapping	67/		17.660	1	G161860	

13.477–4 BRACKET, Air Conditioning Thermostat Control

69/71	10-80	.....	1	361 4904	
72	10-80	.....	1	321 4427	

13.477–5 ATTACHING PARTS, Bracket To Instrument Panel

SCREW, Tapping	69/71	10-80	17.598	2	448 6657	NA

13.477–6 KNOB, Air Conditioning Thermostat Control

67	01 (* 13-19)	13.080	1	350 9462	
67	01 (* 13-20)	22.039	1	357 6976	
68	01 (Chrome)	22.039	1	357 6976	
68/69	01 (Black)	.....	1	359 9967	
70/	01-40	.....	1	361 6466	
67	10-50-80	.....	1	357 6961	
68	10-80	.....	1	360 8551	
69/71	10-80	.....	1	361 4456	
68/69	30-70	.....	1	360 8551	
70	30-70	22.039	1	350 9540	
71/	70	13.017	1	360 1632	

13.477–7 ATTACHING PARTS, Knob To Thermostat

NUT, Hexagon	70/	10-80	3.145	1	400 0056	
SCREW, Set	67	01 (* 13-19)	17.640	1	G147450	NA
SCREW, Set	70/	01-40	17.640	1	G147450	NA

HEATER - AIR CONDITIONING

13.477–8 ESCUTCHEON, Air Conditioning Thermostat Control

67	10-50-80 (Except OAC)	.....	1	357	7143
68	10-80	.....	1	357	7143
69	10-80	.....	1	361	4450

13.477–8a BEZEL, Air Conditioning Thermostat Control

70/71	10-80 (LHD-WAC)	.....	1	363	1748

13.477–8b LENS, Air Conditioning Thermostat Control

70/71	10-80 (LHD-WAC)	.....	1	363	1750

13.477–8c CABLE, Air Conditioning Thermostat Control

72	10-80	.....	1	321	4765

13.477–8d ATTACHING PARTS, Cable To Control

CLIP	72	10-80	13.017	1	400	0417

13.477–8e ATTACHING PARTS, Cable To Bracket

SCREW, Tapping	72	10-80	17.660	1	812	0052

13.477–9 HARNESS, Air Conditioning Thermostat To Switch And Clutch Wire

67/68	01	.....	1	318	6843
69	01	.....	1	319	4634
70	01 (* 13-33)	.....	1	319	7973
70	01-40 (* 13-34)	.....	1	319	9563
71/	01-40	.....	1	321	1583
67	10-50-80 (Except OAC)	.....	1	318	6844
67	10-50-80 (OAC)	.....	1	320	8818
68	10-80	.....	1	318	6844
69	10-80 (Six)	.....	1	319	4636
70	10-80	.....	1	319	9570
71	10 (* 13-55)	.....	1	319	9570
71	10 (Six-* 13-56)	.....	1	321	3740
71	10 (V8-* 13-56)	.....	1	321	3739
72	10 (WAC)	.....	1	321	5543
69	10-80 (V8)	.....	1	319	4637
68	30-70	.....	1	319	0612
69/70	30-70 (* 13-34 And * 13-35)	.....	1	319	4635
70	70 (Six-* 13-33)	.....	1	319	8387
70	30-70 (V8-* 13-33)	.....	1	319	8388
71	70 (SIX)	.....	1	321	1578
71	70 (V8)	.....	1	321	1579
72	70	.....	1	321	1579

13.477–10 ATTACHING PARTS, Harness To Instrument Panel

CLIP	67/68	01-30-70	3.165	1	400	1704
CLIP	68	30-70	13.440	2	400	0443
SCREW, Tapping	68	30-70	17.671	2	400	1042

13.477–10a LAMP, Air Conditioning Thermostat Control

70/71	10-80 (LHD)	.....	1	363	1755

13.477–10b ATTACHING PARTS, Lamp To Bezel

SCREW, Tapping	70/71	10-80	17.598	2	448	6657 NA

HEATER - AIR CONDITIONING

13.477–11 BRACKET, Air Conditioning Thermostat Control Lamp (Includes Filter And Shield)

67	10-50-80 (Except OAC)	.....	1	357 6573
68	10-80	.....	1	357 6573

13.477–12 SHIELD, Air Conditioning Thermostat Control Lamp (Includes Bracket And Filter)

67	10-50-80 (Except OAC)	.....	1	357 7563
68	10-80	.....	1	357 7563

13.477–13 SOCKET, Air Conditioning Thermostat Control Lamp

67	10-50-80 (Except OAC)	.....	1	320 7968
68	10-80	.....	1	320 7968

13.477–14 BULB, Air Conditioning Thermostat Control Lamp

67/71	10-50-80	3.215	1	320 4552

13.477–15 FILTER, Air Conditioning Thermostat Control Lamp

67	10-50-80 (Except OAC)	3.510	1	352 0871
68	10-80	3.510	1	352 0871

13.477–15a SEAL, Air Conditioning Thermostat Control Lamp

70/71	10-80	3.306	1	360 9296

13.477–16 CLIP, Air Conditioning Thermostat Capillary Tube To Cowl Chamber

67/69	10-50-80	3.165	1	400 1801

13.477–16a ATTACHING PARTS, Clip To Evaporator Housing

SCREW, Tapping.....	67/69	10-50-80	20.280	1	400 1724

13.477–17 GUIDE, Air Conditioning Thermostat Capillary Tube

67/70	01-40	.....	1	316 6971
72	01-40-70 (* 13-62 And * 13-64)	.....	1	321 6534
69/71	10-80	.....	1	316 6971
72	10-80	.....	1	321 6279

13.477–18 ATTACHING PARTS, Tube To Housing

FASTENER	67/70	01	13.017	1	400 0271

13.477–19 GROMMET, Air Conditioning Thermostat Control Capillary Tube

67/69	.....	.....	1	316 6972
70/	10-30-70-80	.....	1	316 6972

13.480–1 PANEL, Air Conditioning Controls Mounting

67	10-50-80 (OAC)	.....	1	355 4354

13.480–2 ATTACHING PARTS, Panel To Instrument Panel

SCREW, Tapping.....	67	10-50-80 (OAC)..... ***(Use 448 9492)***	27.005	2	400 1407

13.480–3 OVERLAY, Air Conditioning Control

67/69	01	.....	1	355 3078

13.480–4 BRACKET, Air Conditioning Controls Mounting

67	10-50-80 (LHD-OAC)	.....	1	320 7656

HEATER - AIR CONDITIONING

13.488–1 HOUSING, Air Conditioning Evaporator Or High Level Ventilation

67/69	01	.....	1	317 9854	
70/	01–40 (* 13–61)	.....	1	319 6909	
72	01–40 (* 13–62)	.....	1	321 6531	
67/68	10–50–80	.....	1	318 5503	
69/71	10–80	.....	1	319 4201	
72	10–80	.....	1	321 4438	
68/70	30–70 (WAC)	.....	1	318 9615	
69/70	30–70 (LAC–WHLV)	.....	1	319 5064	
71/	70 (* 13–63)	.....	1	321 0602	
72	70 (* 13–64)	.....	1	321 6527	

13.488–2 ATTACHING PARTS, Housing To Dash Panel

SCREW, Tapping	67/69	01	17.660	3	G162487	NA
SCREW, Tapping	70/	01–40	.....	3	400 2182	
SCREW, Tapping	67/	10–50–80 (1" Long)	17.660	1	G161909	
SCREW, Tapping	67/	10–50–80 (10–16 x 1–1/2" Long)	.....	1	400 2182	
SCREW, Tapping	69/	10–80 (WAC–10–12 x 1–1/2" Long)	17.660	1	G162487	NA
SCREW, Tapping	68/	30–70	17.660	3	G162487	NA
SCREW, Tapping	71/	70	.....	3	400 2182	
BOLT, Square	67/	10–50–80	.....	2	400 3118	
BOLT, Hexagon	67/	10–50–80	17.038	2	G180024	
WASHER, Plain	67/		17.814	3	G120391	NA
NUT, Spring	67/	10–50–80	.....	2	400 1949	
NUT, Speed	67/	10–50–80	13.012	2	400 0268	
NUT, Hexagon	67/69	10–50–80	17.412	2	G271172	

13.488–3 COVER, Air Conditioning Evaporator Or High Level Ventilation Housing Upper (Incl. Defroster Damper)

67/69	01	.....	1	317 9866	
70/	01–40 (* 13–61)	.....	1	319 6835	
72	01–40 (* 13–62)	.....	1	321 6533	
67/68	10–50–80	.....	1	318 5507	
69/71	10–80	.....	1	319 4224	
72	10–80	.....	1	321 4432	
68/69	30–70 (WAC)	.....	1	318 9616	
70	30–70 (WAC)	.....	1	319 5438	
69	30–70 (WHLV)	.....	1	319 5077	
70	30–70 (WHLV)	.....	1	319 5442	
71/	70 (* 13–63)	.....	1	321 0607	
72	70 (* 13–64)	.....	1	321 6529	

13.488–4 ATTACHING PARTS, Cover To Housing

CLIP	67/	.....	.....	AR	400 0438
CLIP (Music Wire)	70/	10–80	.....	1	321 0206

13.488–4a ATTACHING PARTS, Cover To Heater Housing

CLIP ("U" Type)	70/	01–40	13.515	4	400 4037

13.488–4b GASKET, Air Conditioning Evaporator Housing Cover To Air Outlet

71/	70	.....	1	321 0616	

13.488–4c SEAL, Evaporator Cover To Duct

72	10–80	.....	1	316 8866	

13.488–4d SEAL, Evaporator Cover To Connector

72	10–80	.....	1	316 8866	

13.488–5 CONNECTOR, Air Conditioning Evaporator Housing To Duct

67/69	01	.....	1	350 0784	

HEATER - AIR CONDITIONING

13.488–6 CONNECTOR, Air Conditioning Evaporator Housing To Duct (Single)

67	10–50–80 (Except OAC)	13.510	1	357 7071
68	10–80	13.510	1	357 7071

13.488–7 CONNECTOR, Air Conditioning Evaporator Housing To Duct (Dual)

67/68	10–50–80	13.510	1	357 7070

13.488–8 ATTACHING PARTS, Tube To Evaporator

CLIP	67/68 10–50–80	.....	2	400 2201

13.488–9 TUBE, Air Conditioning Evaporator Drain

67/69	01	.....	1	316 6957
70/	01–40	.....	1	319 4118
67/68	10–50–80	.....	1	318 5500
69/	10–80	.....	1	319 4118
68/70	30–70	.....	1	316 6957
71/	70	.....	1	319 4118

13.488–10 DOOR, Air Conditioning Floor Cooling

67/68	10–50–80	.....	1	318 8659

13.488–11 ATTACHING PARTS, Door To Evaporator

CLIP	67/68 10–50–80	3.615	2	310 8634

13.488–12 TUBE, Air Conditioning Or High Level Ventilation Floor Cooling

68/70	30–70 (WAC)(WHLV)	.....	2	319 0391

13.488–13 RETAINER, Air Conditioning Floor Cooling Door

67	10–50–80	.....	1	359 8109

13.488–14 INSULATION, Air Conditioning Evaporator Or High Level Ventilation Housing

67/69	01	.....	1	317 0495
70/	01–40	.....	1	319 6839
67/68	10–50–80	.....	1	318 5683
69/71	10–80	.....	1	319 4146
72	10–80	.....	1	321 6434
68/70	30–70	.....	2	318 9669
71/	70	.....	1	319 6839

13.488–15 INSULATION, Air Conditioning Evaporator Or High Level Ventilation Housing Cover (Upper)

67/68	10–50–80	.....	1	318 5684
69/71	10–80	.....	1	319 4147
72	10–80	.....	1	321 6433

13.488–15a INSULATOR, Air Conditioning Evaporator Housing Sound

72	10–80	.....	1	321 6696

13.488–16 GASKET, Air Conditioning Evaporator Housing To Dash Panel

67	10–50–80	13.113	1	316 6572

13.488–16a GASKET, Air Conditioning Evaporator Housing To Defroster Duct

71/	70	.....	1	321 0615

HEATER - AIR CONDITIONING

13.488–17 SEAL, Air Conditioning Upper Cover To Connector

67/68	10–50–80	.....	1	318 5501	

13.488–19 SEAL, Air Conditioning Evaporator Or High Level Ventilation Housing To Blower Housing

67/	10–50–80	13.113	1	316 6572	

13.488–20 SEAL, Air Conditioning Evaporator Outlet To Center Duct

70/	01–40	.....	1	319 6406	

13.488–21 SEAL, Air Conditioning Evaporator Housing To Heater Housing

70/	01–40	.....	1	319 6831	
71/	70	.....	1	319 6831	

13.510–1 DUCT, Air Conditioning Evaporator Air Discharge

67/69	01 ...(Incl. Screen And Retainer)	.....	1	362 3626	

13.510–2 DUCT, Air Conditioning Evaporator Air Discharge (Single - Upper)

67	10–50–80 (Except OAC)	.....	1	357 7111	
68	10–80	.....	1	360 8465	

13.510–3 DUCT, Air Conditioning Evaporator Air Discharge (Single - Lower)

67	10–50–80 (Except OAC)	.....	1	357 7121	
68	10–80	.....	1	360 8467	

13.510–4 DUCT, Air Conditioning Evaporator Or High Level Ventilation Air Discharge (Dual)

67/68	10–30–50–70–80	.....	1	357 7051	
69	30–70	.....	1	362 4692	
70	30–70	.....	1	363 0795	

13.510–5 ATTACHING PARTS, Duct To Instrument Panel

SCREW, Tapping	67/69	01	17.671	AR	400 1037	

13.510–6 ATTACHING PARTS, Single Duct To Instrument Cluster

SCREW, Tapping	67/68	10–50–80	17.660	2	G161871	

13.510–7 ATTACHING PARTS, Single Duct To Instrument Panel

SCREW, Tapping	67/68	10–50–80	17.671	2	G456794	NA

13.510–8 ATTACHING PARTS, Dual Duct To Instrument Panel

SCREW, Tapping	67/68	10–30–50–70–80	17.660	3	G9411535	NA
SCREW, Tapping	69/70	30–70	17.660	3	G161901	
NUT, Speed	67/69	01	.....	1	400 0512	
NUT, Spring	68/70	30–70	2.050	3	400 3841	

13.510–9 ATTACHING PARTS, Single Upper Duct To Lower Duct

SCREW, Tapping	67/68	10–50–80	17.660	2	G163158	

HEATER - AIR CONDITIONING

13.510–11 TUBE, Air Conditioning Evaporator Or High Level Ventilation (Center - Lower)

69/71	10–80	.....	1	361 5080	

13.510–12 SEAL, Air Conditioning Air Discharge Duct To Instrument Cluster

67	10–50–80 (Except OAC)	.....	1	357 7166	
68	10–80	.....	1	357 7166	

13.510–13 SEAL, Air Conditioning Evaporator Air Discharge Duct Single Outlet

67	10–50–80 (Except OAC)	.....	2	357 7167	
68	10–80	.....	2	357 7167	

13.510–14 SEAL, Air Conditioning Or High Level Ventilation Air Discharge Duct Dual To Connector

67/68	10–50–80	.....	1	359 0988	
68/70	30–70	.....	1	360 1576	

13.510–15 RETAINER, Air Conditioning Evaporator Air Discharge Duct Single Outlet

67	10–80 (Except OAC)	.....	2	357 7163	
68	10–80	.....	2	357 7163	

13.510–16 CONNECTOR, Duct To Evaporator Housing (Dual)

67/68	10–50–80	.....	1	357 7070	

13.510–17 ATTACHING PARTS, Retainer To Duct

SCREW, Machine	67/68	10–50–80	17.598	2	G163024	NA

13.510–18 RETAINER, Air Conditioning Air Discharge Grille Dual Outlet

67/68	10–50–80	13.515	2	351 6653	

13.510–19 CONNECTOR, Duct To Evaporator Or High Level Ventilation Housing

67/69	01	13.488	1	350 0784	
68/69	30–70	.....	1	360 1574	
70	30–70	.....	1	361 6276	
67/68	10–50–80	.....	1	357 7070	

13.510–20 ATTACHING PARTS, Connector To Duct

CLIP	67/	10–30–50–70–80	13.488	2	400 2201	

13.510–21 ATTACHING PARTS, Connector To Defroster Duct

SCREW, Tapping	67/68	10–50–80	17.660	2	G161860	
NUT, Spring	67/68	10–50–80	17.422	2	G445109	NA

13.510–22 TUBE, Air Conditioning Evaporator To Single Outlet

67	10–50–80 (Except OAC) 327	.....	1	357 7060	
68	10–80 327	.....	1	357 7060	

13.510–22a TUBE, Air Conditioning Evaporator Or High Level Ventilation Housing To Left Single Outlet

69/71	10–80 327	.....	1	357 7060	
72	10–80	.....	1	364 6117	

13.510–22b ATTACHING PARTS, Tube To Panel

SCREW, Tapping	72	10–80	17.660	1	G9414711	NA

HEATER - AIR CONDITIONING

13.510–22c SEAL, Air Conditioning Or High Level Ventilation Housing Left Single Tube To Bezel

69/71	10–80	.....	1	357 7062	

13.510–23 ATTACHING PARTS, Tube To Instrument Panel

SCREW, Tapping	67	10–50–80 (Except OAC)	17.671	2	G456794	
SCREW, Tapping	68/69	10–80	17.671	2	G456794	
SCREW, Tapping	70/	10–80 (10–12 × 1/2) ***(Use 812 0054)***	17.671	2	G274773	
SCREW, Tapping	71	10–80 (10–16 × 1/2)	17.671	2	812 0054	
NUT, Speed	67	10–50–80 (Except OAC)	3.505	2	400 0895	
NUT, Speed	68/71	10–80	3.505	2	400 0895	

13.510–24 HOSE, Air Conditioning Evaporator To Single Outlet

67	10–50–80 (Except OAC)	.....	1	358 6005
68	10–80	.....	1	358 6005

13.510–24a HOSE, Air Conditioning Evaporator Or High Level Ventilation Air Discharge To Left Single Outlet

69/71	10–80	.....	1	358 6005

13.510–25 TUBE, Air Conditioning Evaporator Or High Level Ventilation Air Discharge To Right Outlet

69/	10–80	.....	1	361 5097

13.510–26 ATTACHING PARTS, Tube To Instrument Panel

SCREW, Tapping	69	10–80	17.660	2	G161860	
SCREW, Tapping	70/71	10–80 (10–12 × 1/2) ***(Use 812 0054)***	17.671	2	G274773	
SCREW, Tapping	71	10–80 (10–16 × 1/2)	17.671	2	812 0054	
SCREW, Tapping	72	10–80	17.660	1	G9414711	NA

13.510–26a CONNECTOR, Air Conditioning Evaporator Or High Level Ventilation Housing To Right Outlet Tube

69/	10–80	.....	1	361 5095

13.515–1 BEZEL, Air Conditioning Air Discharge (Incl. Louvers)

67	01 (* 13–21)	.....	3	353 0860
67	01 (* 13–22) ***(Use 362 3631)***	.....	3	359 9294
68/69	01 ***(Use 362 3631)***	.....	3	359 9294

13.515–1a ATTACHING PARTS, Bezel To Duct

RETAINER, Wire	67/69	01	.....	3	349 0226

13.515–2 BEZEL, Air Conditioning Evaporator Or High Level Ventilation Air Discharge (Incl. Louvers)(Dual)

67	10–50–80 ***(Use 360 8620)***	.....	2	357 7371
68	10–30–50–70–80	.....	2	360 8620
69	30–70	.....	2	362 4697
70	30–70	.....	1	363 0797

13.515–3 ATTACHING PARTS, Bezel To Duct

RETAINER (Wire)	67/68	10–30–50–70–80	.....	2	351 6653
RETAINER (Wire)	69/70	30–70	.....	2	351 6653

13.515–3a BEZEL, Air Conditioning Air Discharge (Inner)

71/	(Left) 70	.....	1	363 2769
71/	(Right) 70	.....	1	363 2768

HEATER - AIR CONDITIONING

13.515–3b BEZEL, Air Conditioning Air Discharge (Outer)

71	(Left) 70	.....	1	363	3526
72	(Left) 70	.....	1	365	1150
71	(Right) 70	.....	1	363	3520
72	(Right) 70	.....	1	365	1143

13.515–4 LOUVERS, Air Conditioning Air Discharge Bezel

67/69	01	.....	3	320	5880

13.515–5 LOUVERS, Air Conditioning Air Discharge Bezel (Single)

67	10-50-80 (Except OAC)	.....	6	357	7140
68	10-80	.....	6	357	7140

13.515–6 LOUVERS, Air Conditioning Air Discharge Bezel (Dual)

67/68	10-80	.....	2	320	5971

13.515–6a LOUVERS, Air Conditioning Evaporator Or High Level Ventilation Air Discharge Duct (Center - Upper)

69/	10-80 (Plain)	.....	14	361	4312
69/	10-80 (Grooved)	.....	2	361	4338

13.515–6b LOUVERS, Air Conditioning Evaporator Or High Level Ventilation Air Discharge Left Duct (In Instrument Cluster Case)

69/71	10-80	13.510	7	361	4311

13.515–6c LOUVERS, Air Conditioning Evaporator Or High Level Ventilation Air Discharge (Center Duct)

70/71	01-40 (Vertical No. 1-* 13-29 And * 13-51)	.....	2	361	6456
70/71	01-40 (Vertical No. 2-* 13-29 And * 13-51)	.....	8	361	6457
70/71	01-40 (Vertical No. 3-* 13-29 And * 13-51)	.....	2	361	6458
70/71	01-40 (Horizontal No. 1-* 13-29 And * 13-51)	.....	2	361	6459
70/71	01-40 (Horizontal No. 2-* 13-29 And * 13-51)	.....	4	361	6460

13.515–7 ATTACHING PARTS, Louvers To Bezel

RETAINER (Nylon)	67/69	01 ***(Use 320 7678)***	.....	6	320	5451
RETAINER (Nylon)	67/68	10-50-80	.....	4	320	7678
SCREW, Machine	67/69		.....	4	400	1316

13.515–7a LEVER, Air Discharge Duct Louvers Adjusting

70/71	01-40 (WAC-* 13-51)(WHLV-* 13-51)	.....	2	361	6463

13.515–8 SEAL, Air Conditioning Air Discharge Bezel To Duct

67/	01	.....	2	349	0228
67/68	10-80	.....	3	349	0228
68/70	30-70	13.488	1	316	8866

13.515–8a DEFLECTOR, Air Conditioning Or High Level Ventilation Air Discharge

71	(Center) 01-40 (* 13-52)	.....	2	364	6539
72	(Center) 01-40	.....	2	364	6539
71/	(Left) 70...(Incl. Louvers)	.....	2	363	2757
71/	(Right) 70...(Incl. Louvers)	.....	2	363	2756

13.515–8b ATTACHING PARTS, Deflector To Housing

NUT (Plastic)	71/	70			4	363 2752

13.515–8c HOUSING, Air Conditioning Or High Level Ventilation Air Discharge Deflector

71/	(Left) 70			2	363 2773
71/	(Right) 70			2	363 2772

13.515–9 DUCT ASSEMBLY, Air Conditioning Single Outlet (Including Doors)

67	10-50-80 (Except OAC)			1	357 7151
68	10-80			1	360 8471

13.515–10 DOOR, Air Conditioning Evaporator Air Discharge Single Outlet

67	10-50-80 (Except OAC)			1	357 7131
68	10-80			1	360 8469

13.515–11 SEAL, Air Conditioning Evaporator Air Discharge Single Duct Door

67	10-50-80 (Except OAC)			1	357 7165
68	10-80			1	357 7165

13.515–12 CATCH, Air Conditioning Evaporator Air Discharge Single Duct Door

67	10-50-80 (Except OAC)			2	357 7164
68	10-80			2	357 7164

13.515–13 ATTACHING PARTS, Catch To Door

SCREW, Machine	67	10-50-80 (Except OAC)	17.598	2	G163024 NA
SCREW, Machine	68	10-80	17.598	2	G163024 NA

13.515–14 STRIP, Air Conditioning Evaporator Air Discharge Duct Single Duct Door Friction

67	10-50-80 (Except OAC)			2	359 1144
68	10-80			2	359 1144

13.515–15 SLIDE, Air Conditioning Evaporator Air Discharge Single Duct Outlet Louvers

67	10-50-80 (Except OAC)			1	357 7160
68	10-80			1	357 7160

13.515–16 RETAINER, Air Conditioning Evaporator Air Discharge Single Duct Louvers

67	10-50-80 (Except OAC)			1	357 7161
68	10-80			1	357 7161

13.515–17 ATTACHING PARTS, Retainer To Duct

SCREW, Machine	67/68	10-50-80	17.598	5	G163024 NA

13.515–18 DOOR, Air Conditioning Air Discharge Lower

67/69	01			2	350 0754

13.515–19 KNOB, Air Conditioning Air Discharge Lower

67/69	01			2	350 0764

Printed in U.S.A.

13.515–20 ATTACHING PARTS, Knob To Door

SCREW, Tapping.....	67/69	01.....	17.666	2	G161599	NA

13.515–21 RETAINER, Air Conditioner Air Discharge Lower Door

67/69	01.....	.....	2	350 0755	

13.515–21a DUCT ASSEMBLY, Air Conditioning Evaporator Or High Level Ventilation Air Discharge (Incl. Louvers)(Center)

70	(Black) 01-40.....	.....	1	363 1756	
71	(Black) 01-40 (* 13-51).....	.....	1	363 1756	
70	(Blue) 01-40.....	.....	1	363 1757	
71	(Blue) 01-40 (* 13-51).....	.....	1	364 1569	
70	(Green) 01-40.....	.....	1	363 1758	
71	(Green) 01-40 (* 13-51).....	.....	1	364 1570	
70	(Red) 01-40.....	.....	1	363 1759	
71	(Red) 01-40 (* 13-51).....	.....	1	364 1571	
71	01-40 (* 13-52).....	.....	1	364 6523	
72	01-40.....	.....	1	364 6523	

13.515–21b ATTACHING PARTS, Duct To Instrument Panel

SCREW, Trim.....	70/	01-40.....	22.056	2	400 3590	
SCREW, Tapping.....	70	01-40.....	17.660	2	G161860	
SCREW, Tapping.....	71/	01-40.....	17.658	2	G9426092	NA

13.515–21c CONNECTOR, Air Conditioning Evaporator Or High Level Ventilation Housing To Center Duct

70/	01-40.....	.....	1	361 6383	

13.515–21d ATTACHING PARTS, Connector To Center Duct

CLIP.....	70/	01-40.....	13.488	1	400 2201	

13.515–22 DUCT, Air Conditioning Evaporator Or High Level Ventilation Air Discharge (Center - Upper)

69/	10-80.....	.....	1	361 4308	

13.515–23 ATTACHING PARTS, Duct To Instrument Panel

SCREW, Tapping.....	69/	10-80.....	17.660	4	G163216	NA
WASHER, Plain.....	69/	10-80.....	17.814	4	G9416128	NA

13.515–23a CONNECTOR, Air Conditioning Evaporator Or High Level Ventilation Housing To Center Upper Duct

69/	10-80.....	.....	1	361 4328	

13.515–23b ATTACHING PARTS, Connector To Housing

CLIP.....	69/	10-80.....	13.488	1	400 2201	

13.515–23c BELLCRANK, Air Conditioning Evaporator Or High Level Ventilation Air Discharge Duct (Center - Upper)

70/71	01-40 (* 13-51).....	.....	1	361 6465	
71	01-40 (* 13-52).....	.....	1	364 6545	
72	01-40.....	.....	1	364 6545	
69/	10-80.....	.....	1	361 4324	

HEATER - AIR CONDITIONING

13.515–23d SPRING, Air Conditioning Evaporator Or High Level Ventilation Air Discharge Center Duct

69/	10-80		13.017	1	319 4113

13.515–24 DUCT, Air Conditioning Evaporator Or High Level Ventilation Air Discharge (Right)

69/	10-80		.....	1	361 5082

13.515–25 ATTACHING PARTS, Duct To Instrument Panel

CLIP	69/	10-80	.....	4	361 5094

13.515–27 DUCT ASSY., Air Conditioning Evaporator Or High Level Ventilation Housing Discharge (Center - Lower)

69	10-80		.....	1	361 6915
70/71	10-80		.....	1	362 1356
72	10-80		.....	1	321 5953

13.515–28 ATTACHING PARTS, Duct To Evaporator

SCREW, Tapping	69	10-80	.....	2	400 2461
SCREW, Tapping	70/71	10-80 ..... *(Use 812 0054)*	17.671	2	G274773
SCREW, Tapping	72	10-80	17.671	2	G9426433 NA

13.515–29 DOOR, Air Conditioning Or High Level Ventilation Air Discharge

70/71	01 (Lower-* 13-51)	.....	2	363 1467
69/71	10-80 (Left-Single Outlet)	.....	1	361 4333

13.515–29a CLIP, Air Conditioning Or High Level Ventilation Air Discharge Door

70/71	01-40 (* 13-51)		.....	4	364 1867

13.515–29b SPACER, Air Conditioning Center Duct To Housing

72	10-80		.....	1	321 4441

13.515–30 DUCT, Air Conditioning Evaporator Or High Level Ventilation Air Discharge Left Single (In Instrument Cluster Case)

69/71	10-80		13.510	1	361 4309
72	10-80		.....	1	364 6103

13.515–31 ATTACHING PARTS, Duct To Instrument Cluster Case

SCREW, Tapping	69/71	10-80	13.510	2	400 2457
SCREW, Tapping	72	10-80 (WAC)(WHLV)	17.660	3	448 9487

13.515–32 SEAL, Air Conditioning Evaporator Or High Level Ventilation Housing Left Single Duct To Tube

69/71	10-80		13.510	1	357 7062

Printed in U.S.A.

HEATER - AIR CONDITIONING

13.515–33 BEZEL, Air Conditioning Or High Level Ventilation Air Discharge (In Package Tray)

70/	(Black) 01-40 (Rectangular)	2	363 1788	NC
70	(Blue) 01-40	2	363 1789	
71	(Blue) 01-40	2	364 1557	
70	(Green) 01-40	2	363 1790	
71	(Green) 01-40	2	364 1558	
70	(Red) 01-40	2	363 1791	
71	(Red) 01-40	2	364 1559	
72	(Chrome) 01-40 (Round)	2	365 7280	

13.515–34 ATTACHING PARTS, Bezel To Tray

SCREW, Tapping	70/	01-40 (W/Rectangular Bezel)	17.654	4	G163405	NA
SCREW, Tapping	72	01-40	17.660	2	G163216	
NUT, Spring	70/	01-40 (W/Rectangular Bezel)	15.015	4	400 3699	
RIVET, Tubular	72	01-40 (WAC)	17.558	4	G148592	

13.520–1 HOUSING, Air Conditioning Air Distribution

71/	70	1	363 3306	

13.520–2 DUCT, Air Conditioning Air Distribution Housing

71/	(Left) 70	1	363 3311	
71/	(Right) 70	1	363 3310	
71/	(Center) 70	1	363 3303	

13.520–3 SUPPORT, Air Conditioning Air Distribution Right Duct

71/	70	1	365 0673	

13.520–4 ATTACHING PARTS, Support To Panel

SCREW, Tapping	71/	70	25.029	4	400 3814	

13.590 BLOWER ASSEMBLY, Rear Window Defogger

72	01	1	366 5724	
72	*10-80 (Fleet)*	1	366 5724	

13.600–1 HOUSING, Rear Window Defogger Blower Motor Mounting

68/	10-80	1	448 6091	
68/70	70	1	448 6091	

13.600–2 ATTACHING PARTS, Housing To Rear Shelf

NUT, Hexagon	68/	10-80	17.412	3	G120361	NA
NUT, Hexagon	68/70	70	17.412	3	G120361	NA
WASHER, Lock	68/	10-80	17.822	3	G138479	NA
WASHER, Lock	68/70	70	17.822	3	G138479	NA

13.600–3 GASKET, Rear Window Defogger Blower Motor Housing

68/	15-85	1	448 6115	
68/	19-89	1	360 9061	

13.605–1 MOTOR, Rear Window Defogger Blower

68/	10-80 . . .(Less Housing)	1	448 6104	
68/70	70 . . .(Less Housing)	1	448 6104	
71/	70 . . .(Incl. Housing)	1	448 7047	

13.605–2 ATTACHING PARTS, Motor To Housing

NUT, Hexagon	68/	10-80	17.412	2	G120622	NA
NUT, Hexagon	68/70	70	17.412	2	G120622	NA

HEATER - AIR CONDITIONING

13.605–3 ATTACHING PARTS, Blower Motor Ground Wire To Brace

SCREW, Tapping.....	68/	10-80.....	17.660	2	G163216 NA
SCREW, Tapping.....	68/70	70.....	17.660	2	G163216 NA

13.605–4 GASKET, Rear Window Defogger Blower Motor

68/	10-80.....	.....	1	448 7322
68/70	70.....	.....	1	448 7322

13.605–5 INSULATOR, Rear Window Defogger Blower Motor

68/	10-80.....	.....	1	448 7323
68/70	70.....	.....	1	448 7323

13.610–1 WHEEL, Rear Window Defogger Blower Motor

68/	10-80 (Incl. Nut)	.....	1	448 6105
68/70	70.....	.....	1	448 6105

13.610–2 ATTACHING PARTS, Wheel To Motor

NUT.....	68/	10-80.....	.....	1	448 6113
NUT.....	68/70	70.....	.....	1	448 6113

13.610–3 SPACER, Rear Window Defogger Blower Motor Wheel

68/	10-80.....	.....	1	448 6114
68/70	70.....	.....	1	448 6114

13.615–1 SWITCH, Rear Window Defogger Blower Motor

72	01.....	.....	1	365 7911
68/	10-80.....	.....	1	448 6106
68/70	70.....	.....	1	448 6106
71/	70.....	.....	1	812 0256
72	***10-80 (Fleet)***	.....	1	365 7638

13.615–2 ATTACHING PARTS, Switch To Instrument Panel

NUT, Hexagon.....	72	01.....	.....	1	365 7913
NUT, Hexagon.....	68/	10-80.....	3.145	1	400 1797
NUT, Hexagon.....	68/70	70.....	3.145	1	400 1797

13.615–3 BEZEL, Rear Window Defogger Switch

72	01.....	.....	1	365 7912
71/	70.....	.....	1	812 0257

13.615–4 BRACKET, Rear Window Defogger Switch

71/	70.....	.....	1	812 0258
71/	70.....	.....	1	812 0259

13.615–5 NUT, Rear Window Defogger Switch

71/	70.....	.....	1	812 0261

13.618 KNOB ASSEMBLY, Air Control, Rear Window Defogger

71/	70.....	.....	1	812 0260

Printed in U.S.A.

HEATER - AIR CONDITIONING

13.620–1 HARNESS, Rear Window Defogger Wire

72	01	.....	1	321 9037
68/	10–80	.....	1	448 6111
68/70	70	.....	1	448 6111
71/	70	.....	1	812 0255
72	***10-80 (Fleet)***	.....	1	321 9038

13.620–2 JUMPER HARNESS, Rear Window Defogger

71/	70	.....	1	448 7052

13.620–3 LEAD, Wire Assembly Rear Window Defogger

71/	70	.....	1	812 0254

13.625–1 GRILLE, Rear Window Defogger Outlet

68/	10–80	.....	1	448 6110
68/70	70	.....	1	448 6110
71/	70	.....	1	448 7046
72	***05-06-15-85 (Fleet)***	.....	1	365 7881

13.625–2 ATTACHING PARTS, Grille To Rear Shelf

NUT, Hexagon.....	68/	10–80.....	17.412	3	G120361 NA
NUT, Hexagon.....	68/70	70.....	17.412	3	G120361 NA
WASHER, Lock.....	68/	10–80.....	17.822	3	G138479 NA
WASHER, Lock.....	68/70	70.....	17.822	3	G138479 NA

13.630 COVER, Rear Window Defogger Outlet

68/	10–80	.....	1	448 6109
68/70	70	.....	1	448 6109

SPECIAL INFORMATION

The Engine Build Code Number, Vehicle Identification Number and the information provided on the Unit Body Plate are often necessary when determining the proper replacement parts for your automobile. For their location refer to the General Information Section found at the front of this catalog.

NOTES

14–1 .... Used on cars equipped with Canadian Filters Limited Air Cleaner.

14–2 .... Used on cars equipped with United Air Cleaner.

14–3 .... Bracket attached to Splash Panel with three Screws.

14–4 .... Bracket attached with Hood Lock Support Bolt.

14–5 .... Jack Handle is two pieces Swivel Type riveted together.

14–6 .... Jack Handle is a one piece Forged Type.

14–7 .... Vertical Extension Portion of the Bracket Assembly is 3-3/8" long and 1-5/8" wide.

14–8 .... Vertical Extension Portion of the Bracket Assembly is 2-3/8" long and 3-1/4" wide.

Printed in U.S.A.

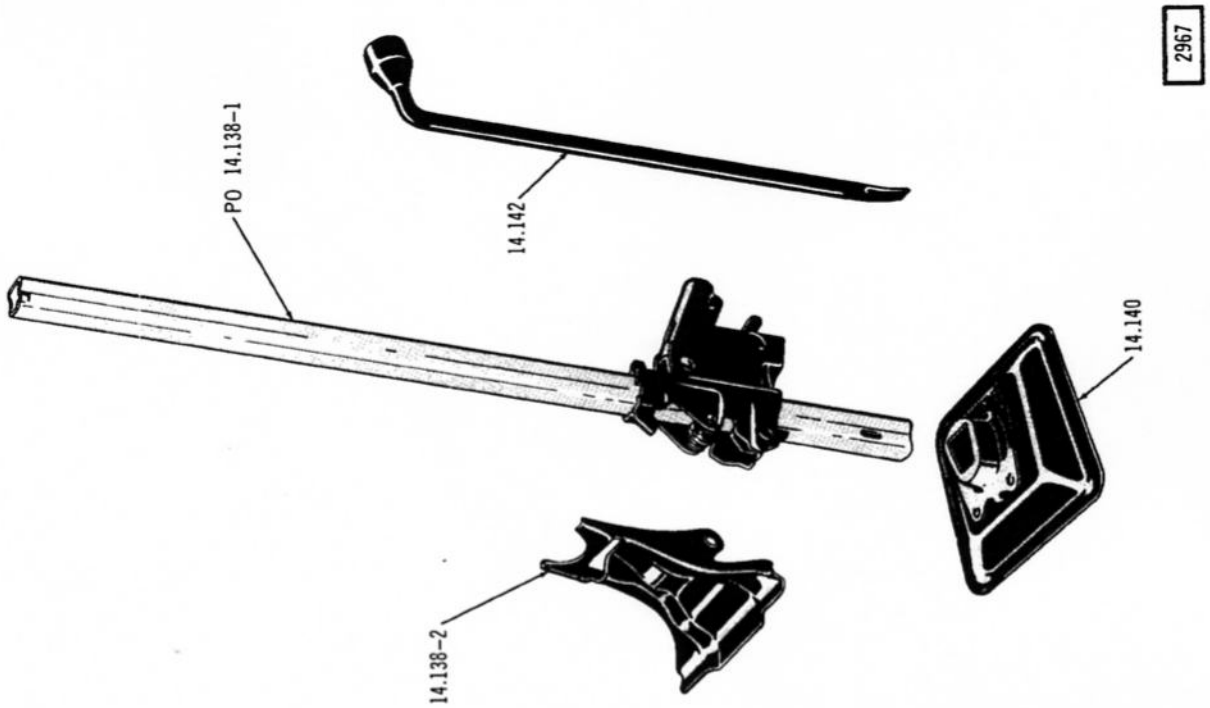

BUMPER JACK ... 1967/69 (01)(10)(50)(80)

CHASSIS MISCELLANEOUS

GROUP NO. — DESCRIPTION — YEAR and MODEL	PAKS CODE	PRIMARY GROUP NO.	PER CAR	PART NO.	CODE
14.098–1 BRACKET, Front License Plate					
70 01 (* 14-3) ***(Use 321 0634)***		.....	1	363 1064	
70 01-40 (* 14-4)		.....	1	321 0634	
71/ 01-40		.....	1	321 0634	
71/ 10		.....	1	363 2138	
70 30-70		.....	1	319 8999	
71 70 (Except AMX-With Front Spoiler-* 14-7)		.....	1	321 1688	
71 70 (Except AMX-* 14-8)		.....	1	321 3525	
71 70 (AMX With Front Spoiler)		.....	1	321 2700	
72 70 (Except AMX-With Front Spoiler)		.....	1	321 3525	
72 70 (AMX With Front Spoiler)		.....	1	321 2700	
14.098–2 ATTACHING PARTS, Bracket To Body					
SCREW, Hexagon	70	01 (10-12 x 5/8)(* 14-3) ***(Use 318 9013)***	17.671	3	400 0478
SCREW, Hexagon	70	01 (10-16 x 5/8)(* 14-3)	2.050	3	400 2334
SCREW, Tapping.....	71/	10	14.108	2	400 0272
SCREW, Tapping.....	70	30-70	14.108	2	400 0272
SCREW, Tapping.....	71/	70 (14-10 x 5/8)	17.671	2	400 1040
SCREW, Tapping.....	71	70 (10-16 x 3/4)	17.671	3	400 0774
NUT, Spring.....	71/	10	14.108	2	400 0141
NUT, Spring.....	70	30-70	14.108	2	400 0141
NUT, Spring.....	71/	70	.....	2	400 4146
14.108–1 ATTACHING PARTS, License Plate To Rail					
SCREW, Tapping.....	67/	.....	14.108	AR	400 0272
NUT, Spring	67/	.....	14.108	AR	400 0141
14.108–2 BUMPER, Front License Plate					
70 01-30-70 (11/32" Long)		.....	25.054	1	400 3508
71/ 10		.....	25.054	1	400 3508
67/70 (1-1/8" Long)		.....	.....	AR	313 2458
71/ 70		.....	.....	1	321 0833
71/ 80		.....	.....	2	313 2458
14.108–3 BUMPER, Rear License Plate					
70/ 01-40		.....	25.054	1	400 3508
67/69 10-80		.....	.....	AR	313 2458
70/ 15-19-85-89 (Lower Rear Center Panel) ***(Use 400 3754)***		.....	.....	1	400 4156
14.110 TOOL KIT					
67/ (Export)		.....	.....	1	314 6610
14.115–1 PLATE ASSEMBLY, Rear License Plate Mounting					
68/ 30-70		.....	.....	1	318 9656
14.115–2 ATTACHING PARTS, Mounting Plate To Body					
BOLT, Hexagon	68/	30-70 (Non-Washer Head)	17.038	2	G180018 NA
SCREW, Tapping.....	70/	30-70 (Washer Head)	17.671	2	G456322
WASHER, Lock	68/	30-70	17.820	2	G120380 NA

CHASSIS MISCELLANEOUS

14.115–3 SPRING, Rear License Plate Mounting Plate

68/	(Left) 30-70	.....	1	318 9660
68/	(Right) 30-70	.....	1	319 0362

14.115–4 STOP, Rear License Plate Mounting Plate

68/	30-70	.....	2	318 9661

14.115–5 PIN, Rear License Plate Hinge

68/	30-70	.....	1	319 0716

14.138–1 JACK (Includes Lift)

67/68	05-06-07-09 (Six)	.....	1	318 2746
67/68	08 (Six)	.....	1	318 6391
67/68	01 (V8)	.....	1	318 6391
69	01	.....	1	318 6391
70/	01-40	.....	1	319 7046
67/69	10-50-80	.....	1	318 6395
70	15-19-80	.....	1	319 7773
71/	15-19-80	.....	1	321 1733
70	18 (L3S) ***(Use 321 0244)***	.....	1	321 0088
71/	18 (L3S)	.....	1	321 1735
70	18 (W3S)	.....	1	319 7773
71/	18 (W3S)	.....	1	321 1733
68/69	30-70	.....	1	319 0363
70/	30-70	.....	1	319 7045
69/	***01 (Can)***	.....	1	319 6872
69/	***10-80 (Can)***	.....	1	319 6768

14.138–2 LIFT, Jack

67/68	01 (V8)	.....	1	318 6388
69	01	.....	1	318 6388
67/68	05-06-07-09 (Six)	.....	1	320 5258
67/68	08 (Six)	.....	1	318 6388
67/69	10-50-80	.....	1	318 6392
70	10-80	.....	1	319 7770
71/	10-80	.....	1	321 1731

14.138–3 CLAMP, Jack Hold Down

67/68	08-18-88 (L3S)	.....	1	317 9099
67/69	15-16-17-19-59-85-86-87-89	.....	1	318 6396
70/	18 (W3S)	.....	1	319 7859
69/	18 (L3S)	.....	1	317 9099
67/69	18-88 (W3S)	.....	1	318 7089
69	88 (L3S)	.....	1	318 7089
70/	88	.....	1	319 7859

14.138–3a WASHER, Clamp To Jack

70/	10-80	17.814	1	G120393 NA

14.138–4 WING NUT, Clamp To Jack

67/69	08	17.432	1	G148312
71/	08	4.088	1	315 1735
67/	15-16-17-19-59-85-86-87-89	.....	1	400 0789
67/	18-88	17.432	1	G148312

CHASSIS MISCELLANEOUS

14.138–4a WASHER, Jack Hold Down

71/	08	13.017	1	400 0271
69/	10-80	17.814	1	G120393 NA

14.138–5 HOOK, Jack Hold Down

71/	08	.....	1	321 1650
67/	15-16-17-19-59-85-86-87-89	.....	1	318 8717
69/	***01 (Can)***	.....	1	319 6873
69/	***10-80 (Can)***	.....	1	318 6392

14.138–6 SPACER, Jack Hold Down Hook

67/69	15-16-17-19-59-85-86-87-89	.....	1	318 8716

14.138–7 PAD, Bumper Jack

69	05-06-09	29.010	2	351 0436

14.140 BASE, Jack

67/68	05-06-07-09 (Six)	.....	1	317 5193
67/68	08 (Six)	.....	1	318 6393
67/68	01 (V8)	.....	1	318 6393
69	01	.....	1	318 6393
67/69	10-50-80	.....	1	318 6393
70/	10-80	.....	1	319 7771
69/	***01-10-80 (Can)***	.....	1	319 6766

14.142 HANDLE, Jack

67/69	01-10-50-80	.....	1	314 0947
70	01-30-70 (* 14-5) ***(Use 319 4163)***	.....	1	319 0416
70	01-30-70 (* 14-6)	.....	1	314 0947
70	10-80	.....	1	314 0947
68/69	30-70 ***(Use 319 4163)***	.....	1	319 0416
70	40 (* 14-5) ***(Use 319 4163)***	.....	1	319 0416
70	40 (* 14-6)	.....	1	314 0947
71/		.....	1	314 0947

14.145–1 STICKER, Information

67/69	(Battery Warning)	.....	1	317 3693
67/	(Engine Coolant)	.....	1	318 7588
67/69	(Fasten Seat Belts)	.....	1	355 3535
67/	(Locking Differential)	.....	1	315 7268

14.145–2 STICKER, Valve Cover

67	01-10-50-80 (232-LFFC)	.....	1	318 9699

14.145–3 STICKER, Air Cleaner

67/70	(199 Torque Command 6)	.....	1	318 8927
67/69	(232 Torque Command 6)	.....	1	318 8926
70	232	.....	1	319 7584
70	(232 Two Barrel)	.....	1	319 7585
71/	232	.....	1	321 1702
71/	258	.....	1	321 1703
67	(Typhoon 290) WDT (Used With Canadian Filters Limited Cleaner)	.....	1	318 9698

CHASSIS MISCELLANEOUS

67	(Typhoon 290) WDT (Used With United Cleaner)	.....	1	318 8924
68/69	(Typhoon 290) WDT	.....	1	318 8924
70	(304 Two Barrel)	.....	1	319 7581
71/	(304 Two Barrel)	.....	1	321 1704
67	(Typhoon 343) WDT (Used With Canadian Filters Limited Cleaner)	.....	1	318 9705
67	(Typhoon 343) WDT (Used With United Cleaner)	.....	1	318 9730
68/69	(Typhoon 343) WDT	.....	1	318 9730
70	(360 Two Barrel)	.....	1	319 7582
71/	(360 Two Barrel)	.....	1	321 1705
67	(Typhoon 290) W4B	.....	1	318 8968
67/69	(Typhoon 343) W4B	.....	1	318 8925
68/69	(Typhoon 290) W4B	.....	1	319 1449
70	(360 Four Barrel)	.....	1	319 7583
71	(360 Four Barrel)	.....	1	321 1706
72	(360 Four Barrel)	.....	1	321 5573
68/70	(AMX 390)	.....	1	319 2210
71	(401 Four Barrel)	.....	1	321 1707
72	(401 Four Barrel)	.....	1	321 5596

14.145–4 STICKER, Jack Storage And Instruction

70	01 (Used Less Space Saver Tire–* 14-5)	.....	1	319 6965
70	01 (Used Less Space Saver Tire–* 14-6)	.....	1	321 2044
70	01 (Used With Space Saver Tire–* 14-5)	.....	1	321 0391
70	01 (Used With Space Saver Tire–* 14-6)	.....	1	321 2049
67/68	05-06-07-09	.....	1	318 8982
69	05-06-09	.....	1	319 7296
71/	05-06 (Used Less Space Saver Tire)	.....	1	321 2044
71/	05-06 (Used With Space Saver Tire)	.....	1	321 2049
67/69	08	.....	1	318 8981
71	08	.....	1	321 1829
72	08	.....	1	321 6541
67/68	15-16-17-19-59-85-86-87-89	.....	1	318 8841
69	15-19-85-89	.....	1	319 6765
70	15-19-85-89 (E/MACHINE)	.....	1	319 8238
71	15-19-85-89 (Used Less Space Saver Tire)	.....	1	321 2047
72	15-19-85-89 (Used Less Space Saver Tire)	.....	1	321 3626
72	15-19-85-89 (Used With Space Saver Tire)	.....	1	321 3627
67/68	18-88	.....	1	318 8842
69	18-88	.....	1	319 6764
70	18-88	.....	1	319 8239
71	18-88 ***(Use 321 3625)***	.....	1	321 2048
72	18-88	.....	1	321 3625
70	19 (MACHINE)	.....	1	321 0150
71	19 (Used With Space Saver Tire)	.....	1	321 3627
68/69	30-70 (Used With Space Saver Tire)	.....	1	319 1229
70	30-70 (Used With Space Saver Tire–* 14-5)	.....	1	319 8136
70	30-70 (Used With Space Saver Tire–* 14-6)	.....	1	321 2045
70	40 (Used Less Space Saver Tire–* 14-5)	.....	1	321 0497
70/	40 (Used With Space Saver Tire)	.....	1	321 2043
70/	40 (Used Less Space Saver Tire–* 14-6)	.....	1	321 2043
71	40	.....	1	321 2043
72	40	.....	1	321 5344
68/69	70 (Used Less Space Saver Tire)	.....	1	319 1228
70	70 (Used Less Space Saver Tire–* 14-5)	.....	1	319 8135
70	70 (Used Less Space Saver Tire–* 14-6)	.....	1	321 2046
71/	70 (Used Less Space Saver Tire)	.....	1	321 2046
71/	70 (Used With Space Saver Tire)	.....	1	321 2045

CHASSIS MISCELLANEOUS

14.145–5 STICKER, Tire Air Pressure

67	01	.....	1	318 9292
68	01	.....	1	319 3152
69	01 (Except SC/RAMBLER)	.....	1	319 5065
69	09 (SC/RAMBLER)	.....	1	319 8450
70	01	.....	1	321 0479
71	01	.....	1	321 3597
72	01	.....	1	321 4068
67	10-50-80	.....	1	318 9293
68	10 ***(Use 319 7254)***	.....	1	319 3153
69	10 ***(Use 319 7254)***	.....	1	319 4787
70	10 (Except MACHINE) ***(Use 321 1024)***	.....	1	319 8759
70	19 (MACHINE)	.....	1	321 1110
71	10 (Except High Performance)	.....	1	321 3596
71	10 (With High Performance)	.....	1	321 1110
72	10	.....	1	321 7211
68	30	.....	1	319 3193
69	30-70	.....	1	319 4786
70	30-70 ***(Use 321 1023)***	.....	1	319 8761
70	40	.....	1	319 9898
71	40	.....	1	321 3598
72	40	.....	1	321 7212
68	70	.....	1	319 3154
71	70	.....	1	321 3595
72	70	.....	1	321 7210
68	80 ***(Use 319 4785)***	.....	1	319 3155
69	80 ***(Use 319 7253)***	.....	1	319 4796
70	80	.....	1	319 8760
71/	80	.....	1	321 3858

14.145–6 STICKER, Exhaust Emission Maintenance Instruction

68/69	SIX (WST)(WOD)	.....	1	319 2320
70	199 (WST)	.....	1	321 1837
70	232 (WST)	.....	1	321 1839
71	232 (WST-For Installation Except California)	.....	1	321 1651
72	232 (WST-For Installation Except California)	.....	1	321 6107
71	232 (WST-For Installation In California)	.....	1	321 3585
72	232 (WST-For Installation In California)	.....	1	321 6111
71	258 (WST-For Installation Except California)	.....	1	321 1653
72	258 (WST-For Installation Except California)	.....	1	321 6100
71	258 (WST-For Installation In California)	.....	1	321 3592
72	258 (WST-For Installation In California)	.....	1	321 6118
68/69	SIX (10-WAT)(70-WAT)(80-WAT)	.....	1	319 2323
70	SIX (WAT)(Green Lettering)	.....	1	319 8083
70	199 (WAT)(Black Lettering)	.....	1	321 1836
68/69	199 (01-WAT)	.....	1	319 2319
70	232 (WAT)(Black Lettering)	.....	1	321 1838
68/69	232 (05-WAT)(06-WAT)(08-WAT)	.....	1	319 2323
68/69	232 (09-WAT)	.....	1	319 2319
71	232 (WAT-For Installation Except California)	.....	1	321 1664
72	232 (WAT-For Installation Except California)	.....	1	321 6102
71	232 (WAT-For Installation In California)	.....	1	321 3586
72	232 (WAT-For Installation In California)	.....	1	321 6112
71	258 (WAT-For Installation Except California)	.....	1	321 1654
72	258 (WAT-For Installation Except California)	.....	1	321 6101
71	258 (WAT-For Installation In California)	.....	1	321 3584
72	258 (WAT-For Installation In California)	.....	1	321 6110
68/69	V8 (WST)(WOD)(W4ST)	.....	1	319 2321
70	304 (WST)(W4ST)	.....	1	321 1831
71	304 (WST-For Installation Except California)	.....	1	321 1887
71	304 (WST-For Installation In California)	.....	1	321 3591

CHASSIS MISCELLANEOUS

72	304 (WST-For Installation Except California)	.....	1	321 6103
72	304 (WST-For Installation In California)	.....	1	321 6117
70	360 (WST)(W4ST)	.....	1	321 1833
71	360 (WST-For Installation Except California)	.....	1	321 1889
71	360 (WST-For Installation In California)	.....	1	321 3589
72	360 (WST-For Installation Except California)	.....	1	321 6105
72	360 (WST-For Installation In California)	.....	1	321 6115
70	390 (W4ST)	.....	1	321 1835
71	401 (WST-For Installation Except California)	.....	1	321 1891
72	401 (WST-For Installation Except California)	.....	1	321 6109
71	401 (WST-For Installation In California)	.....	1	321 3593
72	401 (WST-For Installation Except California)	.....	1	321 6119
68/69	V8 (WAT)	.....	1	319 2322
70	304 (WAT)	.....	1	321 1830
71	304 (WAT)	.....	1	321 3588
72	304 (WAT-For Installation Except California)	.....	1	321 6104
72	304 (WAT-For Installation In California)	.....	1	321 6114
70	360 (WAT)	.....	1	321 1832
71	360 (WAT-For Installation Except California)	.....	1	321 1888
72	360 (WAT-For Installation Except California)	.....	1	321 6108
71	360 (WAT-For Installation In California)	.....	1	321 3590
72	360 (WAT-For Installation In California)	.....	1	321 6116
70	390 (WAT)	.....	1	321 1834
71	401 (WAT-For Installation Except California)	.....	1	321 1890
72	401 (WAT-For Installation Except California)	.....	1	321 6106
71	401 (WAT-For Installation In California)	.....	1	321 3587
72	401 (WAT-For Installation In California)	.....	1	321 6113

14.145–7 PLATE, Post Office Vehicle Name

67	*80 (Post Office)*	.....	1	360 8649

14.145–8 DECAL, Look Before Backing

67	*80 (Post Office)*	.....	1	360 8650

14.145–9 DECAL, Tire Pressure

67	*80 (Post Office)(22 PSI)*	.....	1	360 8652
67	*80 (Post Office)(28 PSI)*	.....	1	360 8654
69	*18 (Post Office)(24 PSI)*	.....	1	360 9447
69	*18 (Post Office)(30 PSI)*	.....	1	360 9445

14.145–10 DECAL, Space Saver Tire

71	.....	.....	1	321 3964
72	.....	.....	1	321 6472

14.145–11 STICKER, Compressor Valve Warning

72	WAC	.....	1	321 6475

Printed in U.S.A.

SPECIAL INFORMATION

The Engine Build Code Number, Vehicle Identification Number and the information provided on the Unit Body Plate are often necessary when determining the proper replacement parts for your automobile. For their location refer to the General Information Section found at the front of this catalog.

NOTES

15–1 .... Included as part of Filter Assembly, Group 15.190. (Refer to Accessory Catalog Price List.)

15–2 .... Included as part of Engine Heater Assembly, Group 15.145. (Refer to Accessory Catalog Price List).

15–3 .... Included as part of Mirror Assembly, Group 15.270. (Refer to Accessory Catalog Price List).

15–4 .... Used on 50 Amp. Battery.

15–5 .... Used on 60 and 70 Amp. Battery.

15–6 .... Used on State of Wisconsin Motor Vehicle Department Cars.

15–7 .... Used with 65 Amp. Alternator.

15–8 .... Mounting holes are 2-5/8" apart.

15–9 .... Mounting holes are 3-1/2" apart.

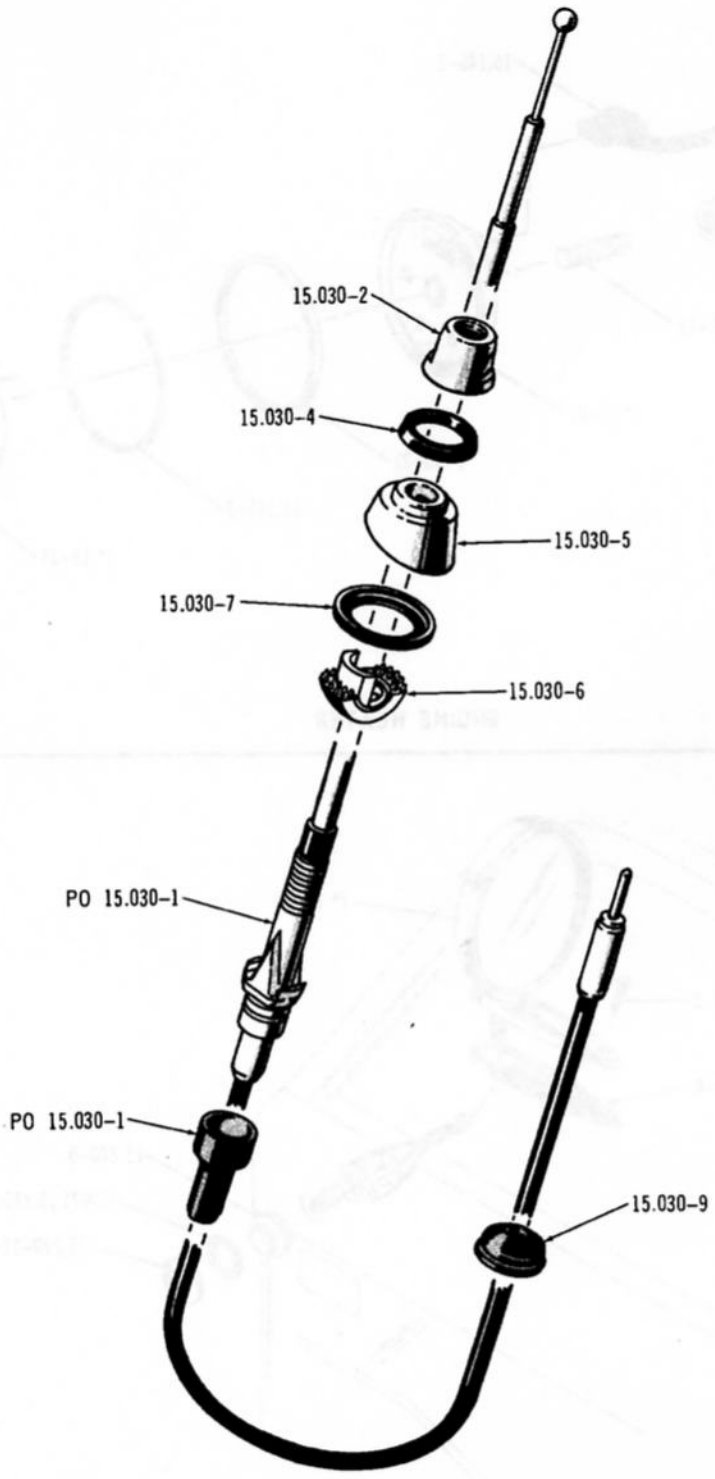

2177

MANUAL ANTENNA

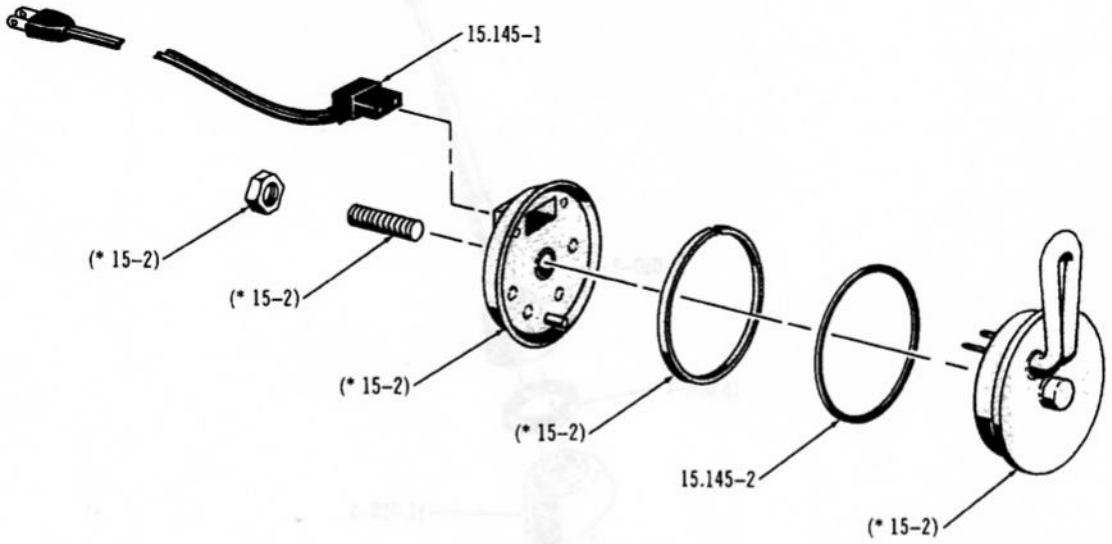

2543

ENGINE HEATER

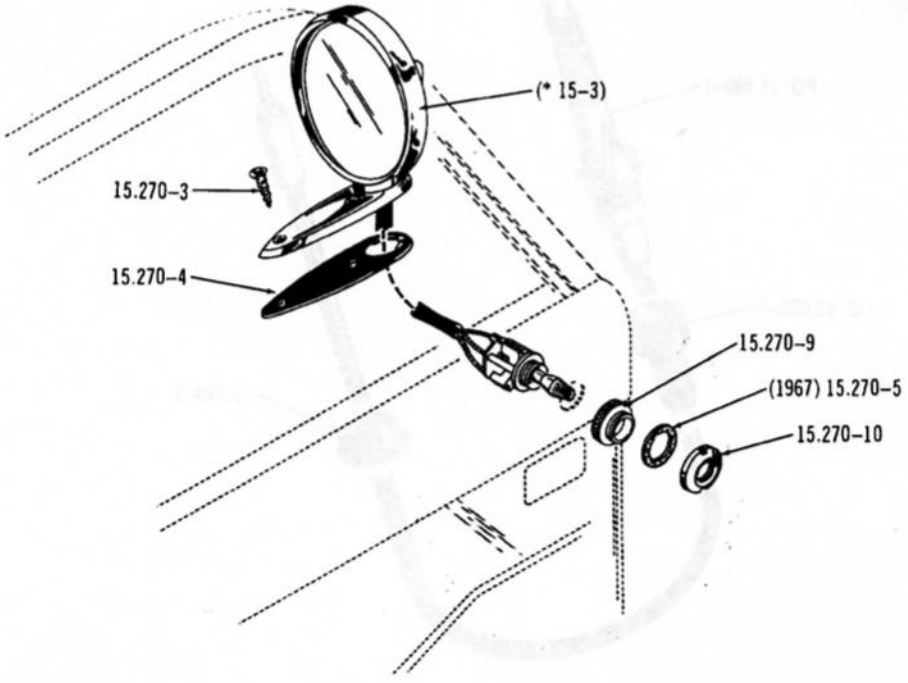

1874-A

REMOTE CONTROL MIRROR ... 1967/69

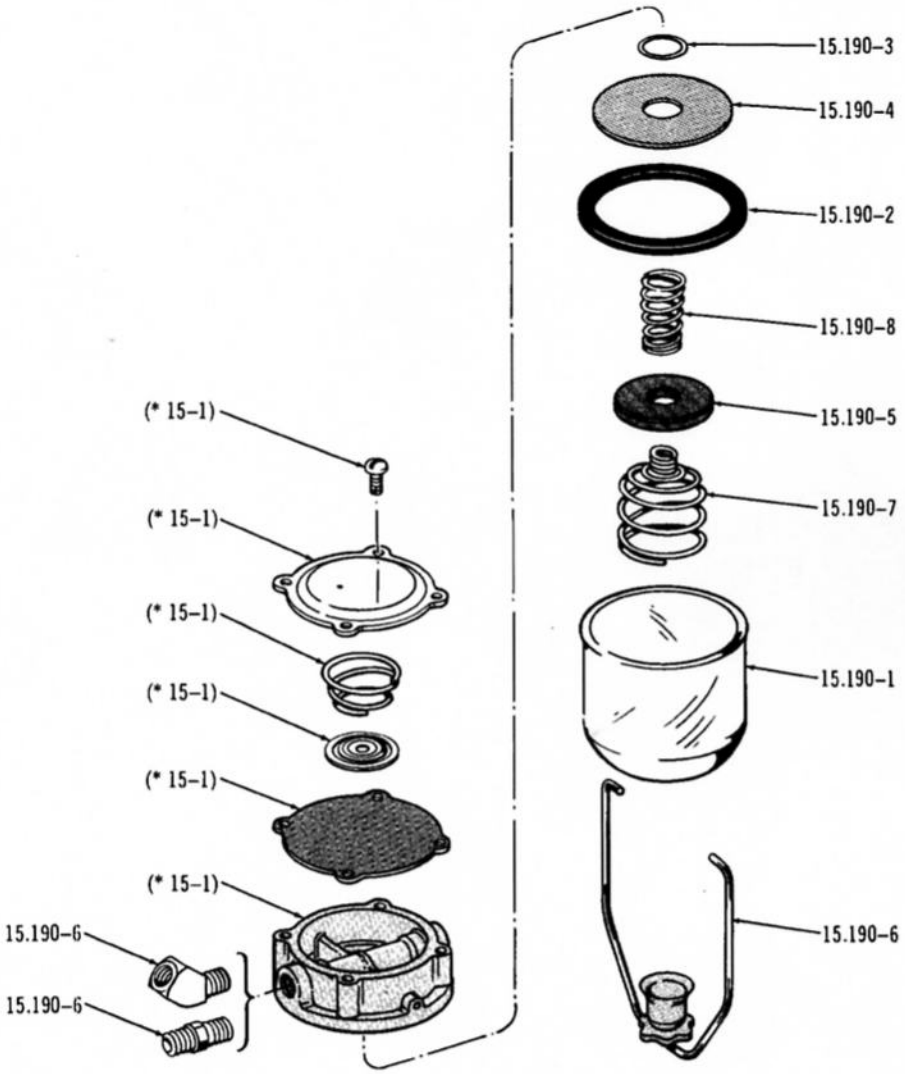

1504

GASOLINE FILTER ... 1967/69

GROUP NO. — DESCRIPTION — YEAR and MODEL	"L" CODE	PAKS CODE	PRIMARY GROUP NO.	PER CAR	PART NO.	CODE
15.030–1 ANTENNA, Radio Front Fender (Incl. Cable)						
			.....	1	352 0866	
67/69 01			.....	1	363 1952	
70/71 01–40			.....	1	448 7070	
72 01–40			.....	1	357 7278	
67/68 10–50–80			.....	1	361 4976	
69/70 10–80			.....	1	448 7051	
71 10–80			.....	1	448 7068	
72 10–80 (Except Multiplex Radio)			.....	1	812 2502	
72 10–80 (With Multiplex Radio)			.....	1	360 1215	
68/70 30–70			.....	1	321 2512	
71 70			.....	1	448 7069	
72 70 (Except Multiplex Radio)			.....	1	812 2504	
72 70 (With Multiplex Radio)			.....			
15.030–1a EXTENSION, Antenna Lead						
71 70			.....	1	321 2506	
15.030–1b MAST, Radio Front Fender Antenna						
72 10–70–80 (With Multiplex Radio)			.....	1	365 7386	
15.030–2 NUT, Front Fender Radio Antenna Dress						
67/			.....	1	320 3528	
15.030–3 INSULATOR, Front Fender Radio Antenna Sleeve						
67/			.....	1	320 4571	
15.030–4 SPACER, Front Fender Radio Antenna Dress Nut						
67/			.....	1	320 3529	
15.030–5 BEZEL, Front Fender Radio Antenna						
			.....	1	352 0873	
67/69 01			.....	1	365 7630	
72 01–40			.....	1	352 0873	
68/71 30–70			.....	1	320 4276	
67/70 10–50–80			.....	1	448 7050	
71 10			.....	1	365 7631	
72 10–70			.....	1	320 4276	
71 80			.....	1	365 7632	
72 80			.....			
15.030–6 SUPPORT, Front Fender Radio Antenna						
67/			.....	1	320 2271	
15.030–7 PAD, Front Fender Radio Antenna To Fender						
			.....	1	320 3531	
67/71			.....	1	361 0096	
72			.....			
15.030–8 SEAL, Front Fender Radio Antenna (Between Fender And Cowl Top Panel)						
			.....	1	357 5150	
67/70 10			.....	1	357 5151	
67/68 50–80			.....	1	361 4049	
69 80			.....			
15.030–9 GROMMET, Front Fender Radio Antenna Lead Cable						
67/70 01–10–50–80			3.615	1	400 0336	
72			.....	1	313 5435	

ACCESSORIES

15.030–10 GROMMET, Front Fender Radio Antenna

72	10–80	27.038	1	400 0329	

15.030–11 ATTACHING PARTS, Antenna To Fender Support Bracket

BUSHING	72	01–40	3.165	1	319 7998	
CLIP	72	01–40	13.440	1	400 0443	
SCREW, Tapping	72	01–40	17.660	1	812 0059	NA

15.040 COOLANT RECOVERY SYSTEM KIT

**Replacement parts for this kit must be ordered direct from: Saf-Gard Products, Inc.
1852 East Third Street
Tempe, Arizona 85281**

15.072 CAP, Rambler Brand Battery Vent Filler

67	.....	6	320 3701	
67/68	.....	2	320 8581	
69/	(* 15–5)	1	448 7103	
69/	(* 15–4)	1	448 7104	

15.095 PLATE, Plastic Adhesive Mounting (Incl. Bolt And Lockwasher)

67	.....	1	320 7642	

15.120–1 MOULDING, Door And Panel Protective (Plastic)(94" Length)

69/70	(Black–White Pin Stripe)	AR	448 7200	
69/70	(Black–Red Pin Stripe)	AR	448 7201	
69/70	(White–Black Pin Stripe)	AR	448 7202	
69/70	(White–Red Pin Stripe)	AR	448 7203	
69/70	(Silver–White Pin Stripe)	AR	448 7204	
69/70	(Silver–Black Pin Stripe)	AR	448 7205	
69/70	(Black–Mylar Insert)	AR	448 7206	

15.120–2 ATTACHING PARTS, Gas Door Guard Moulding Kit To Panel

SCREW, Tapping	67/	10–50–80	17.658	2	G144813 NA
NUT, Spring	67/	10–50–80	17.422	2	G445103 NA

15.120–3 MOULDING, Door And Fender Protective (Vinyl - Bulk)(Order In Feet)

70/	Red	AR	448 8866	
70/	White	AR	448 8867	
70/	Dark Blue	AR	448 8868	
70/	Light Green	AR	448 8869	
70/	Silver	AR	448 8870	
70/	Tan	AR	448 8871	
70/	Mylar	AR	448 8872	

15.125 ATTACHING PARTS, Door Packet

SCREW, Tapping	69	.....	29.019	4	439 5412
NUT, Spring	69	.....	17.422	4	G445109 NA

15.145–1 CORD, Engine Heater

67	.....	1	318 9672
68/	.....	1	319 1256

15.145–2 "O" RING, Engine Heater

67/	SIX	1	320 8743
67/	V8	1	320 8744

ACCESSORIES

15.145–3 CLIP, Engine Heater Cord Retaining (On License Plate Screw)

67/		.....	1	400 1828

15.180 SEAL, Locking Gas Cap

67/	10-80	.....	1	448 8428
68/69	01-30-70	.....	1	448 8427
70/	30-70	.....	1	448 8428

15.190–1 BOWL, Gasoline Filter Glass

67/69		.....	1	320 2817

15.190–2 GASKET, Gasoline Filter Glass Bowl

67/69		.....	1	320 2818

15.190–3 GASKET, Gasoline Filter Element

67/69		.....	1	320 2821

15.190–4 ELEMENT, Gasoline Filter Bronze

67/69		.....	1	320 2820

15.190–5 MAGNET, Gasoline Filter

67/69		.....	1	320 2822

15.190–6 RETAINER, Gasoline Filter Bowl Wire

67/69		.....	1	320 2819

15.190–7 SPRING, Gasoline Filter Magnet (Lower)

67/69		.....	1	320 2824

15.190–8 SPRING, Gasoline Filter Magnet And Filter (Upper)

67/69		.....	1	320 2823

15.190–9 FITTING, Gasoline Filter (Straight)

67/69		17.394	1	G443976

15.190–10 FITTING, Gasoline Filter (Angle)

67/69	..... *(Use 320 9530)*	17.230	1	G9409927

15.245–1 BAG, Air Lifts Cylinder (Sedan)

68/	10-80	.....	2	448 6540

15.245–2 BAG, Air Lifts Cylinder (Wagon)

68/	10-80	.....	2	448 6541

15.245–3 HOSE, Air Lift Inflator

68/	10-80	.....	1	448 6985

ACCESSORIES

15.245–4 SHOCK, Load Leveler Replacement

67/69	01	.....	1	320 3631

15.270–1 MIRROR, Outside Rear View

67	01 (Remote)	.....	1	359 0905
69	09 (SC/RAMBLER–Not Remote)	.....	2	363 5765
70/	10–80 (Remote–Chrome)	.....	1	363 1811

15.270–1a ATTACHING PARTS, Mirror To Door

SCREW, Tapping	67/68	01	.....	AR	400 0232
SCREW, Tapping.....	69/70	01–30–70	.....	AR	400 2074
SCREW, Tapping.....	71/	(#10–16 x 3/4") 01–40–70 (Right Side)	.....	2	400 2898
SCREW, Tapping.....	72	(#10–16 x 7/8") 01–40–70	.....	2	400 2903
SCREW, Tapping.....	67	10–50–80	.....	AR	400 2074
SCREW, Tapping.....	68/	10–80	.....	AR	400 2903

15.270–2 GASKET, Outside Rear View Mirror Mounting

69	09 (SC/RAMBLER)	.....	2	363 5768
67	(Left)	.....	1	349 0248
68/69	(Left)	.....	1	353 0548
70/71	(Left) 01 (* 15–8)	.....	1	363 1448
70	(Left) 01–40 (* 15–9)	.....	1	363 6817
72	(Left) 01–40	.....	1	365 7536
71	(Left) 10–80	.....	1	363 1792
72	(Left) 10–80	.....	1	365 7537
70/71	(Left) 30–70	.....	1	363 1797
72	(Left) 70	.....	1	365 7538
70	***(Left) 10–80 (RHD)***	.....	1	353 0549
67/69	(Right)	.....	1	353 0549
70	(Right) 01	.....	1	363 1448
70/	(Right) 10–80	.....	1	363 1792
70/71	(Right) 30–70	.....	1	363 1797
70	***(Right) 01 (RHD)***	.....	1	363 1448
67	**(Right) 80 (RHD–Post Office)**	.....	1	349 0248

15.270–3 ATTACHING PARTS, Outside Rear View Remote Control Mirror Mounting

SCREW, Tapping.....	67/	.....	.....	2	400 2074

15.270–4 GASKET, Outside Rear View Mirror Mounting (Remote Control)

67/69	(Left)	.....	1	359 0917
70/	(Left) 01–40	.....	1	363 1448
70/	(Left) 10–80	.....	1	363 1792
70/71	(Left) 30–70	.....	1	363 1797
72	(Left) 70	.....	1	363 1792
67	(Right)	.....	1	359 0916
72	(Right) 70 (Right Hand Mirror)	.....	1	363 1797

15.270–5 GASKET, Outside Rear View Remote Control Mirror Trim Nut

67	01–10–50–80	.....	1	320 4384

15.270–6 BRACKET, Outside Rear View Remote Control Cable Mounting

70/	01	.....	1	363 1444
72	10–70–80	.....	1	364 6718
68/70	30–70	.....	1	360 2676
71	70	.....	1	364 6718

Printed in U.S.A.

ACCESSORIES

15.270–7 ATTACHING PARTS, Bracket To Door Inner Panel

SCREW, Machine	70/	01	17.626	2	400 0922	NA
SCREW, Machine	68/	30–70	17.626	2	400 0922	NA

15.270–8 ESCUTCHEON, Outside Rear View Remote Control Cable

70/	01	.....	1	360 2678	
68/	30–70	.....	1	360 2678	

15.270–9 EXTENSION, Outside Rear View Remote Control Mirror

67	10–50–80	.....	1	320 5633	
68/		.....	1	448 6548	

15.270–10 NUT, Outside Rear View Remote Control Mirror Trim

67		.....	1	320 4380	
68/		.....	1	448 5883	

15.270–11 CLIP, Outside Rear View Remote Control Cable

71/	01	.....	1	400 2289	
68/	30–70	.....	1	400 2289	

15.270–12 GLASS, Mirror Visor

67		.....	1	448 6847	

15.270–13 ATTACHING PARTS, Mirror To Visor

SCREW, Machine	67		17.592	2	G156690	NA
NUT, Tee	67		.....	2	400 0890	

15.270–14 PLATE, Outside Rear View Remote Control Actuator Mounting

72	10–80	.....	1	365 7910	

15.270–15 ATTACHING PARTS, Actuator Mounting Plate To Panel

SCREW, Tapping	72	10–80	23.330	2	400 2268	

15.300–1 GAUGE, Rally Pak Vacuum

69/70	30–70	.....	1	448 6750	

15.300–2 FITTING, Rally Pak Manifold Vacuum

69/70	30–70	.....	1	448 6945	

15.300–3 HOSE, Rally Pak Vacuum Gauge

69/70	30–70	.....	1	448 6946	

15.300–4 ATTACHING PARTS, Front Underbody Spoiler To Baffle

BOLT, Hexagon	69/70	30–70	17.038	3	G180020	NA
WASHER, Lock	69/70	30–70	17.820	3	G120380	
NUT, Hexagon	69/70	30–70	17.406	3	G120375	

15.320–1 ATTACHING PARTS, Radio To Instrument Panel

PLATE, Bolt	67/68	10–50–80	.....	1	357 6582	
SCREW, Hexagon	67/68	10–50–80	17.660	3	G161901	
SCREW, Hexagon	67/68	10–50–80	17.660	1	G163162	NA
SCREW, Hexagon	**67/68**	**10-80 (RHD)**	17.598	1	G160536	NA
SCREW, Tapping	68/	30–70 (Used With Tape Player)	17.660	1	G161895	
SCREW, Tapping	70	30–70 (Used Less Tape Player)	.....	1	812 0052	

ACCESSORIES

WASHER, Plain	68/	30-70 (With Tape Player)	17.814	2	400 1142	
WASHER, Plain	70	30-70 (Less Tape Player)	17.814	1	400 1085	
WASHER, Plain	**67/68**	**10-80 (RHD)**	17.814	1	400 1170	NA
NUT, Hexagon	67/	01-30-70	.....	2	400 0099	
NUT, Hexagon	**67/68**	**10-80 (RHD)**	.....	2	400 2079	
NUT, Spring	67/68	10-50-80	.....	1	400 2018	

15.320-2 ATTACHING PARTS, Radio To Instrument Cluster Housing

SCREW, Tapping	69/	10-80 (LHD)	.....	3	812 0052

15.320-2a BULB, Radio Dial (Includes Shield)

67/	.....	.....	1	320 9598

15.320-3 KNOB, Radio Tone (Outer)

67/69	01 (LHD)	.....	1	358 3896
70/71	01	.....	1	361 6094
72	01-40	.....	1	363 2728
67/70	10-30-50-70-80 (LHD)	.....	AR	357 5959
71/	10-80	.....	1	357 5959
71/	70	.....	2	363 2728
67/68	**01 (RHD)**	.....	1	350 0747
67/68	**10-80 (RHD)**	.....	1	357 5959

15.320-4 KNOB, Stereo Tape Tone

67/71	15-16-19-30-70-85-86-89	.....	2	359 1053

15.320-5 KNOB, Radio Station Selector (Outer)

67/69	01 (LHD)	.....	1	358 3895
70/71	01	.....	1	361 6094
72	01-40	.....	2	363 2730
67/	10-50-80 (LHD)	.....	1	357 5975
68/70	30-70	.....	1	357 5959
71/	70	.....	2	363 2730
67/68	**01 (RHD)**	.....	1	350 0747

15.320-6 INSERT, Radio Knob

67/69	01 (LHD)	.....	1	358 3899
70/71	01	.....	2	361 6097
67/71	10-80	.....	2	357 5957
72	10-80	.....	2	361 6097
67/69	30-70	.....	2	357 5957
70	30-70	.....	2	352 0851
67/68	**01 (RHD)**	.....	1	350 9465

15.320-7 INSERT, Stereo Tape Knob

67/71	15-16-19-59-85-89	.....	2	357 5957
67/69	30-70	.....	2	357 5957
70	30-70	.....	2	352 0851
71/	70	.....	2	363 2728

Printed in U.S.A.

ACCESSORIES

15.320–43 HARNESS, Rear Speaker To Tape Player Or FM Multiplex Radio (Cable)

67/71	15-16-19-85-86-89	.....	1	359	1054
72	15-18-85-89	.....	1	321	6584
68/70	30	.....	1	319	2141
68/70	70	.....	1	319	2142
71/	70	.....	1	321	1577

15.320–44 CLIP, Radio Rear Speaker Cable

67	10-50-80	.....	2	400	1548
69	10-80	3.165	2	400	1801
70/	15-19-70-85-89	.....	5	400	1598

15.320–44a ATTACHING PARTS, Clip To Cowl Chamber

SCREW, Tapping..... 69	10-80	20.280	1	400	1724

15.320–45 RETAINER, Radio Rear Speaker Cable (Under Scuff Plate)

67	10-50-80	.....	1	357	6882

15.320–46 ATTACHING PARTS, Retainer To Side Sill

SCREW, Tapping..... 67	10-50-80	23.198	7	400	1923

15.320–46a HARNESS, FM Multiplex Radio Speaker Jumper (10 ohm/.001-mfd)

72	15-18-85-89	.....	1	321	8614

15.320–47 SPEAKER, Front Door

67/71	15-16-19-59-85-86-89	.....	2	360	2884
72	10-80	.....	2	365	7682

15.320–48 GRILLE, Front Door Speaker

67/71	15-16-19-85-86-89 ***(Use 360 2884)***	.....	2	320	8585
72	10-80 (Black)	.....	2	365	7684
72	10-80 (Blue)	.....	2	365	7685
72	10-80 (Green)	.....	2	365	7686
72	10-80 (Tan)	.....	2	365	7687

15.320–49 ATTACHING PARTS, Grille To Speaker

SCREW, Tapping..... 67/71	15-16-19-85-86-89	3.252	8	400	1603
NUT, Hexagon..... 67/71	15-16-19-59-85-86-89	17.426	8	400	1556
SCREW, Tapping..... 72	10-80	17.660	8	G9414711	NA

15.320–49a BRACKET, Front Door Speaker

72	10-80	.....	2	365	7680

15.320–49b ATTACHING PARTS, Bracket To Door

SCREW, Tapping..... 72	10-80	17.660	8	G9414711	NA

15.320–50 HARNESS, Front Door Speaker Wire

67/71	15-16-19-59-85-86-89	.....	1	320	8692
72	10-80 (LEW)	.....	1	321	6583

15.320–51 CLAMP, Front Door Speaker Cable Hose

67/71	15-16-19-59-85-86-89	13.086	2	315	5795

15.320–52 GROMMET, Front Door Speaker Cable

67/	15-16-19-59-85-86-89	.....	2	400	0094

Printed in U.S.A.

ACCESSORIES

15.320–53 FERRULE, Front Door Speaker Cable

67/ 15-16-19-59-85-86-89	23.320	2	358 6721

15.320–54 ATTACHING PARTS, Ferrule To Pillar

SCREW, Tapping..... 67/ 15-16-19-59-85-86-89	17.660	6	G161860

15.320–55 SPEAKER, Radio Rear Compartment

69/ 18-88	.....	1	360 2884

15.320–56 ATTACHING PARTS, Speaker To Panel

SCREW, Tapping..... 69/ 18-88	3.252	4	400 1603
NUT, Spring..... 69/ 18-88	17.422	4	G445109 NA

15.320–57 GRILLE, Rear Compartment Radio Speaker

69/ 18-88 ***(Use 360 2885)***	.....	1	320 8585

15.320–58 CABLE, Rear Compartment Radio Speaker

69/ 18-88	.....	1	318 6842

15.320–59 EXTENSION, Rear Compartment Radio Speaker Cable

69/ 18-88	.....	1	448 6718

15.320–60 CHOKE, Radio Interference Suppression (At Instrument Cluster)

67/	.....	1	353 0506

15.320–61 CAPACITOR, Radio Interference Suppression (At Ignition Switch)(Used With Suppression Kit)

67/	.....	1	318 6891

15.320–61a CONNECTOR, Ignition Switch Capacitor

67/	.....	1	318 6888

15.320–62 ATTACHING PARTS, Capacitor To Instrument Panel

SCREW, Tapping..... 67/71	17.660	1	G161901

15.320–63 CAPACITOR, Radio Interference Suppression (At Alternator)(Used With Suppression Kit)

67/ (Used With Wire Connector)	.....	1	318 1090
69/ (Used With Terminal Connector)	.....	1	315 9969

15.320–63a WIRE, Capacitor To Alternator (Used With Suppression Kit)

69/ (* 15-6)	.....	1	318 5784

15.320–64 ATTACHING PARTS, Capacitor To Bracket

SCREW, Machine..... 67/	17.614	1	G431586 NA
WASHER, Lock..... 67/	17.820	1	G131096 NA
NUT, Hexagon..... 67	17..412	1	G120614 NA

SPECIAL INFORMATION

The Engine Build Code Number, Vehicle Identification Number and the information provided on the Unit Body Plate are often necessary when determining the proper replacement parts for your automobile. For their location refer to the General Information Section found at the front of this catalog.

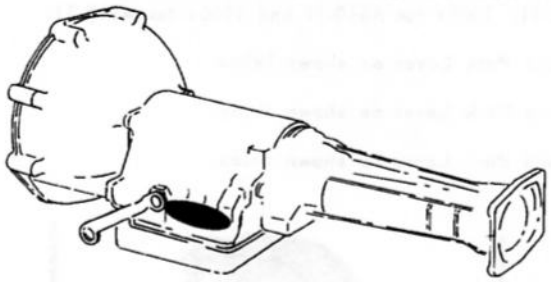

This illustration points out the general location of the Transmission Identification Tag which carries the Vendor Part Number. This information is necessary to determine the proper components of your transmission.

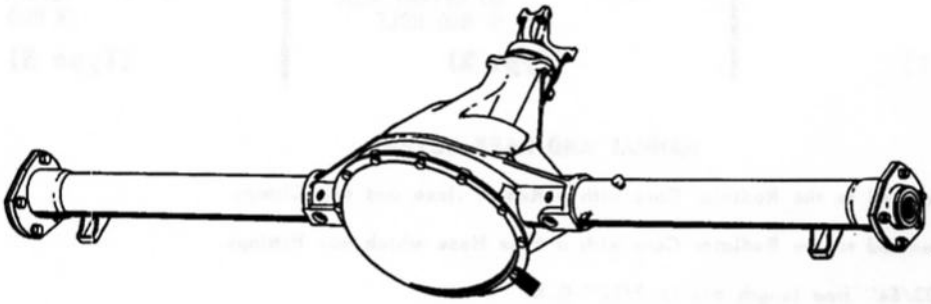

Illustrated is the general location of the rear axle Ratio Tag used on all cars except 70 10-80. These cars have a stamped code on the cover flange. "A" is 11/39, "B" is 13/41, "C" is 15/43, "D" is 11/43. This information is necessary to determine the proper components of your transmission.

NOTES

16–1 .... Used with Bellcrank Type Shifting System.

16–2 .... Used with Single Rod Type Shifting System.

16–3 .... Lever has a single hole for Gear Shift Rod.

16–4 .... Lever has two holes for Gear Shift Rod.

16–5 .... Transmission Case uses Manual Control Lever which has Sealing Ring Groove 1-1/64" from Front Lever and has 5/16-24" Threads.

16–6 .... Transmission Case uses Manual Control Lever which has Sealing Ring Groove 5/8" from Front Lever and has 3/8-24" Threads.

16–7 .... Use with Four Plate Assy. (Four Drive and Four Driven).

16–8 .... Use with Five Plate Assy. (Five Drive and Five Driven).

16–9 .... Use with Trans. AS2-36A, AS4-36A, AS6-36A, AS8-36A, AS10-36A, AS12-36A or with Front Brake Band that is 1-17/32" wide.

Printed in U.S.A.

NOTES

16–10 ... Use with Trans. AS14-36A, AS16-36A, AS18-36A, AS20-36A, AS22-36A, AS24-36A, AS26-36A, AS28-36A, AS30-36A or with Front Brake Band that is 1-27/32" wide.

16–11 ... Use prior to Transmission Serial Number 25415 for Transmission AS2-11, 16027 for AS4-11, 11491 for AS6-11, 12011 for AS8-11, 10054 for AS10-11 and 10001 for AS12-11-

16–12 ... Use beginning with Transmission Serial Number 25415 for Transmission AS2-11, 16027 for AS4-11, 11491 for AS6-11, 12011 for AS8-11, 10054 for AS10-11 and 10001 for AS12-11.

16–13 ... Use with Type 1 Manual and Park Lever as shown below.

16–14 ... Use with Type 2 Manual and Park Lever as shown below.

16–15 ... Use with Type 3 Manual and Park Lever as shown below.



(Type 1)



(Type 2)



(Type 3)

MANUAL AND PARK LEVER

16–16 ... Tube is connected to the Radiator Core with a Rubber Hose and two Clamps.

16–17 ... Tube is connected to the Radiator Core with a Flex Hose which has Fittings.

16–18 ... Spring is 1-23/64" free length and is 9/32" O. D.

16–19 ... Spring is 1-3/32" free length and is 15/64" O. D.

16–20 ... Spring is 1-9/16" free length.

16–21 ... Spring is 1-7/32" free length.

16–22 ... Spring is 2-1/32" free length.

16–23 ... Spring is 2-17/64" free length.

16–24 ... When Transmission is equipped with a Spring .065" thick, order Spring Kit 448 6217 which includes Spring 319 4897 and Snap Ring 319 4872.

16–25 ... Valve Assembly has Number "1" imprinted on Top Surface.

16–26 ... Valve Assembly has Number "10" imprinted on Top Surface.

16–27 ... Use with Transmission AS2-11, AS2-12, AS4-12, AS6-11, AS14-11, AS16-11 or AS24-11, according to Engine Cubic Inch.

16–28 ... Use with Transmission AS2-11B, AS4-11B, AS6-11B or AS6-12, according to Engine Cubic Inch.

16–29 ... Oil Filler Tube is inserted thru a Bracket which is attached to left side Cylinder Head by Exhaust Manifold Bolt.

16–30 ... Oil Filler Tube on the 290 Engine has a welded-on Bracket which is attached to the Right Cylinder Head.

16–31 ... Oil Filler Tube on the SIX Engines has a welded-on Bracket and is attached to the Converter Housing Spacer.

Printed in U.S.A.

NOTES

16–32 ... Filler Caps have American Motors Part Number embossed on Gauge.

16–33 ... Oil Cooler Tube is connected to the Radiator Core with a Rubber Hose.
16–34 ... Oil Cooler Tube is connected directly to the Radiator Core.

16–37 ... On 1970 (390) used prior to Engine Build Code Number 210Y10 and beginning with Engine Build Code Number 212Y10.

16–38 ... On 1970 (390) used beginning with Engine Build Code Number 210Y10 and prior to Engine Build Code Number 212Y10.

16–39 ... Thickness of the Clutch Drum Pressure Plate is 9/32".
16–40 ... Thickness of the Clutch Drum Pressure Plate is 13/32".

16–41 ... Have twenty four Sprag.
16–42 ... Have eighteen Sprag.

16–43 ... Use prior to Engine Build Code Number 209A25 on domestic built Cars and Engine Build Code Number 210A03 on Canadian built Cars.

16–44 ... Use beginning with Engine Code Number 209A25 on domestic built Cars and Engine Build Code Number 210A03 on Canadian built Cars.

16–45 ... Gear, Output Shaft Ring has 49 External Teeth.
16–46 ... Gear, Output Shaft Ring has 30 External Teeth.

16–47 ... Use prior to Transmission Serial Number .

16–50 ... Use with Transmission 10-03-000-005.
16–51 ... Use with Transmissions 10-03-000-003, 10-03-000-004, 10-03-000-008 and 10-03-000-009.

16–52 ... Width of Cooling Fin area is 18-11/16" on Blackstone Radiator Core and 17-1/4" on the Modine Radiator Core.

16–53 ... Width of Cooling Fin area of Radiator Core is 24-3/8".

16–54 ... Use with Modulator Control Push Rod length 3.444".
16–55 ... Use with Modulator Control Push Rod length 2.944".

16–56 ... Modulator Control Push Rod length is 3.444".
16–57 ... Modulator Control Push Rod length is 2.944".

16–58 ... Used with Transmission Vendor Part No. AS2-43 and A.M. Part No. 319 5604.
16–59 ... Used with Transmission Vendor Part No. AS4-43 and A.M. Part No. 319 5603.

16–60 ... Used with Transmission Vendor Part No. 10-02-003 and A.M. Part No. 321 0855.

16–61 ... Used with Front Servo Strut, has two slots and the overall length of the Strut is 1-5/8".
16–62 ... Used with Front Servo Strut, has one slot and the overall length of the Strut is 1-3/4".

16–63 ... Front Servo Strut has two slots and the overall length is 1-5/8".
16–64 ... Front Servo Strut has one slot and the overall length is 1-3/4".

16–65 ... Has threaded end.
16–66 ... Has slotted hole end.

16–67 ... Used with threaded type Link End.
16–68 ... Used with slotted hole type Link End.

16–69 ... The O.D. of the Thrust Washer is 2-3/8".
16–70 ... The O.D. of the Thrust Washer is 2-3/4".

16–71 ... The O.D. of the Thrust Washer is 2-9/16".
16–72 ... The O.D. of the Thrust Washer is 2-7/8".

16–73 ... Fastening Bracket Oil Filler Tube is angled and the total length of Dip Stick from Cap to the End is 17".

16–74 ... Fastening Bracket Oil Filler Tube is straight and the total length of Dip Stick from Cap to the End is 18.44".

NOTES

16–75 ... Clamp has a Plain Hole in the End.

16–76 ... Clamp has a Threaded Hole in the Center.

16–77 ... Used with Clamp. Has a Plain Hole in the Center and an extra Nut is used to tighten the Clamp.

16–78 ... Used with Clamp. Has a Plain Hole in the Center and no extra Nut is used to tighten the Clamp.

16–79 ... Lever does not have a Nylon Bushing for Shift Rod.

16–80 ... Lever has a Nylon Bushing for Shift Rod.

16–81 ... Transmissions, except heavy duty, for 258 Engines can be identified by A.M. Part No. 321 5484, 321 5617, 321 9185 and 321 9225. For part number location, see Illustration after Note 16–84.

16–82 ... Heavy Duty Transmissions for 258 Engines can be identified by A.M. Part No. 321 8135, 321 7751, 321 9187 and 321 9227. For part number location, see Illustration after Note 16–84.

16–83 ... Transmissions, except heavy duty, for 360 Engines can be identified by A.M. Part No. 321 3958, 321 3961, 321 4067, 321 7751, 321 8135, 321 8137, 321 9187, 321 9227 and 321 9230; for 401 Engines by A.M. Part No. 321 5485, 321 5618, 321 7752, 321 8136, 321 9188 and 321 9228. For part number location, see Illustration after Note 16–84.

16–84 ... Heavy Duty Transmissions for 360 Engines can be identified by A.M. Part No. 321 7752, 321 8136, 321 9188 and 321 9228; for 401 Engines by A.M. Part No. 321 7753, 321 8139, 321 9189 and 321 9229. For part number location, see Illustration below.

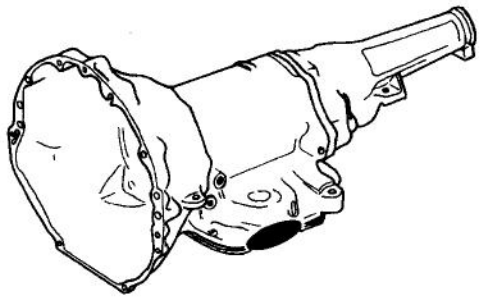

16–85 ... Seal has a Rolled Lip and with a number 2400163 molded on the Seal.

16–86 ... Seal has a Flat Flanged Lip without a number molded on the Seal.

2901

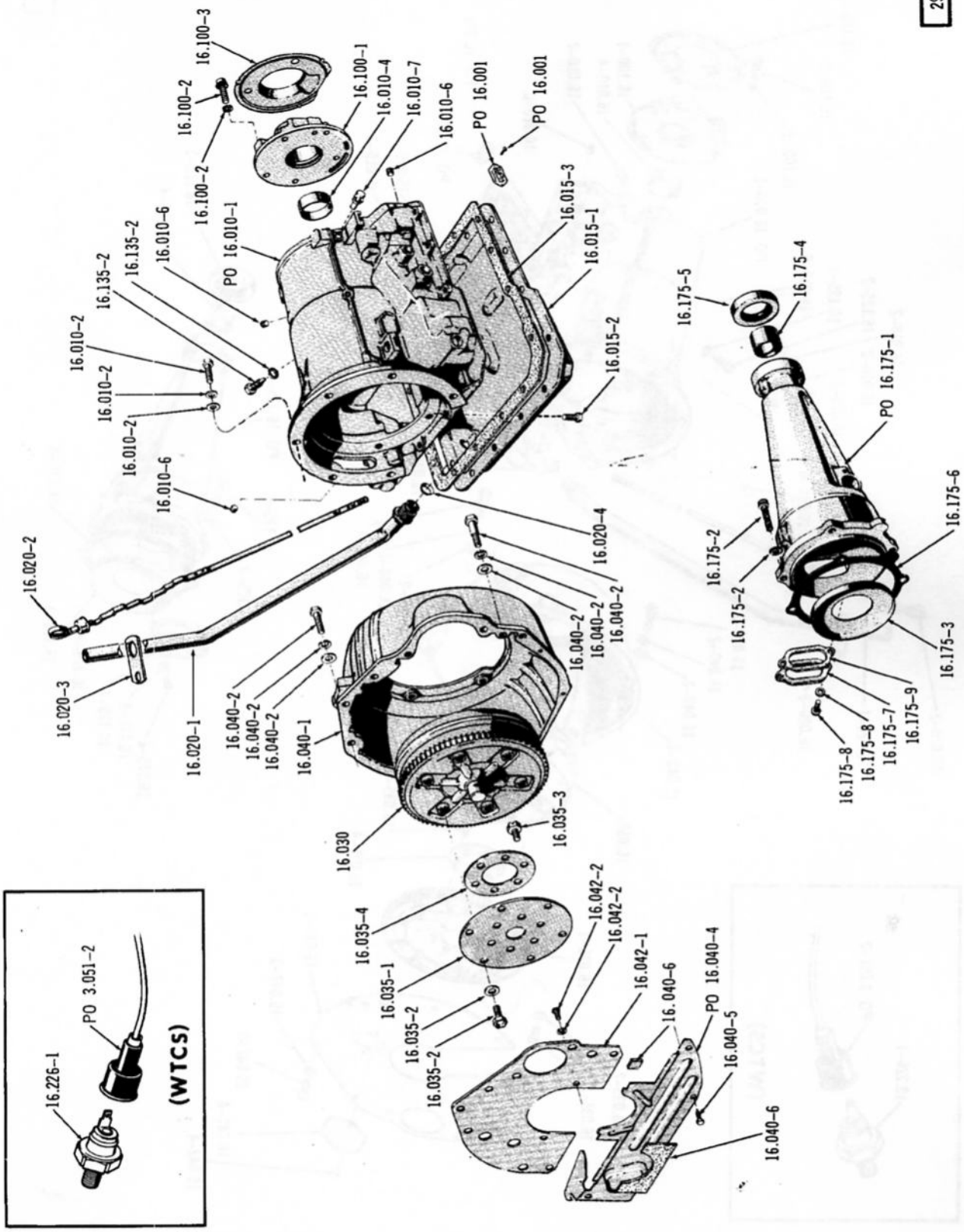

CONVERTER HOUSING, CASE AND EXTENSION ... 1967/71 (SIX)

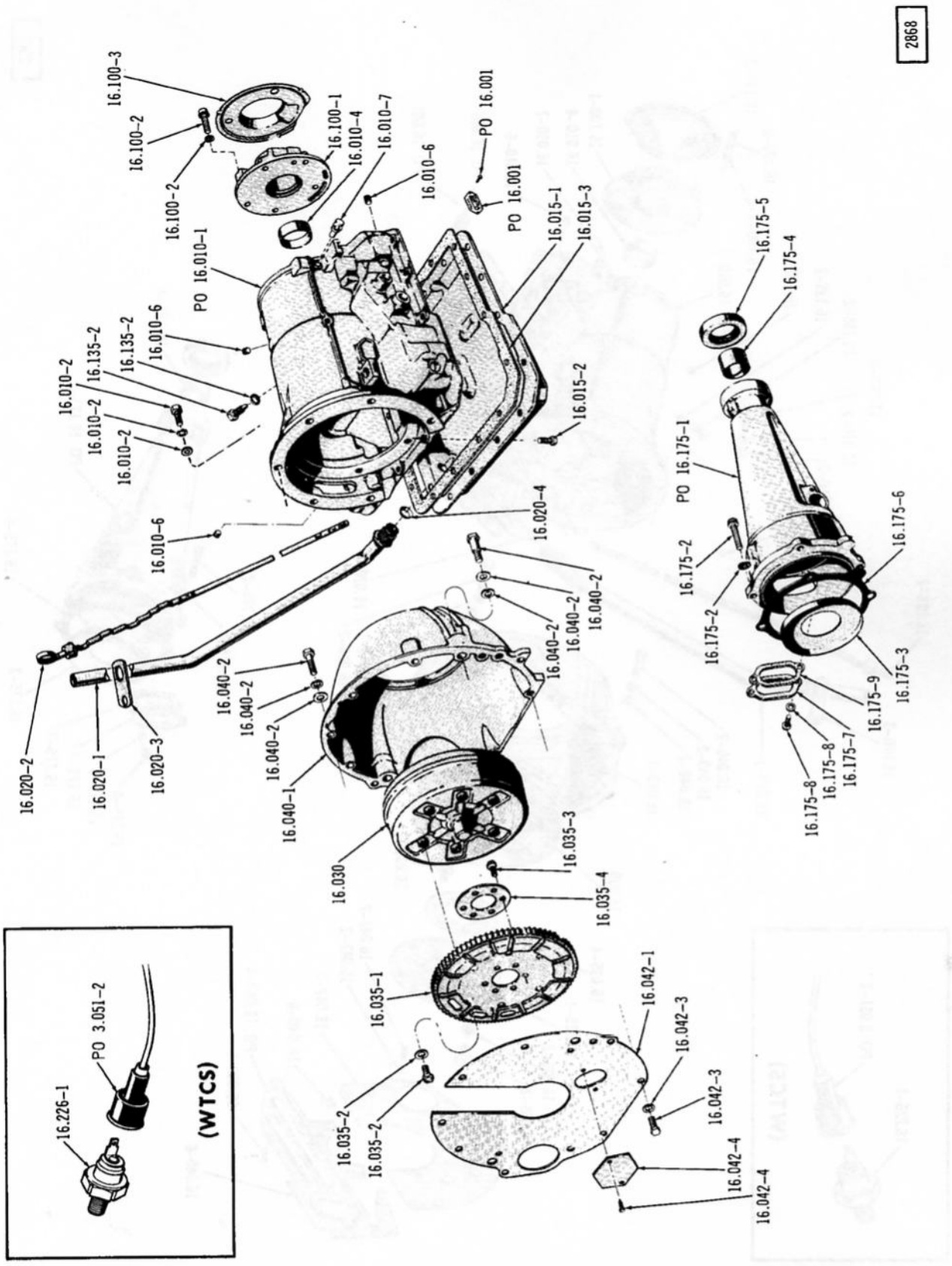

CONVERTER HOUSING, CASE AND EXTENSION . . . 1967/71 (290-E/30)(304)

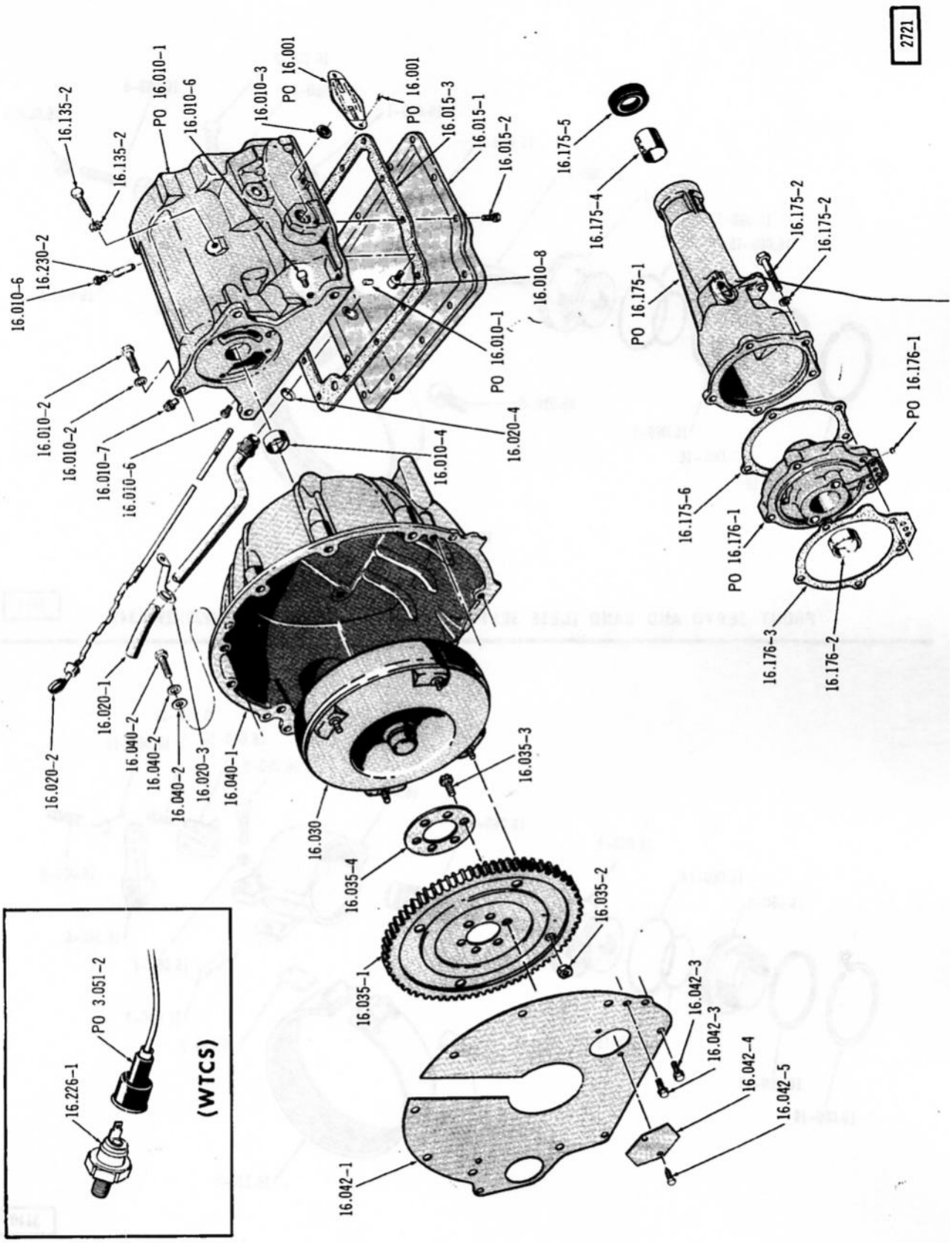

CONVERTER HOUSING, CASE AND EXTENSION . . . 1967/71 (290-30)(343)(360)(390)(401)

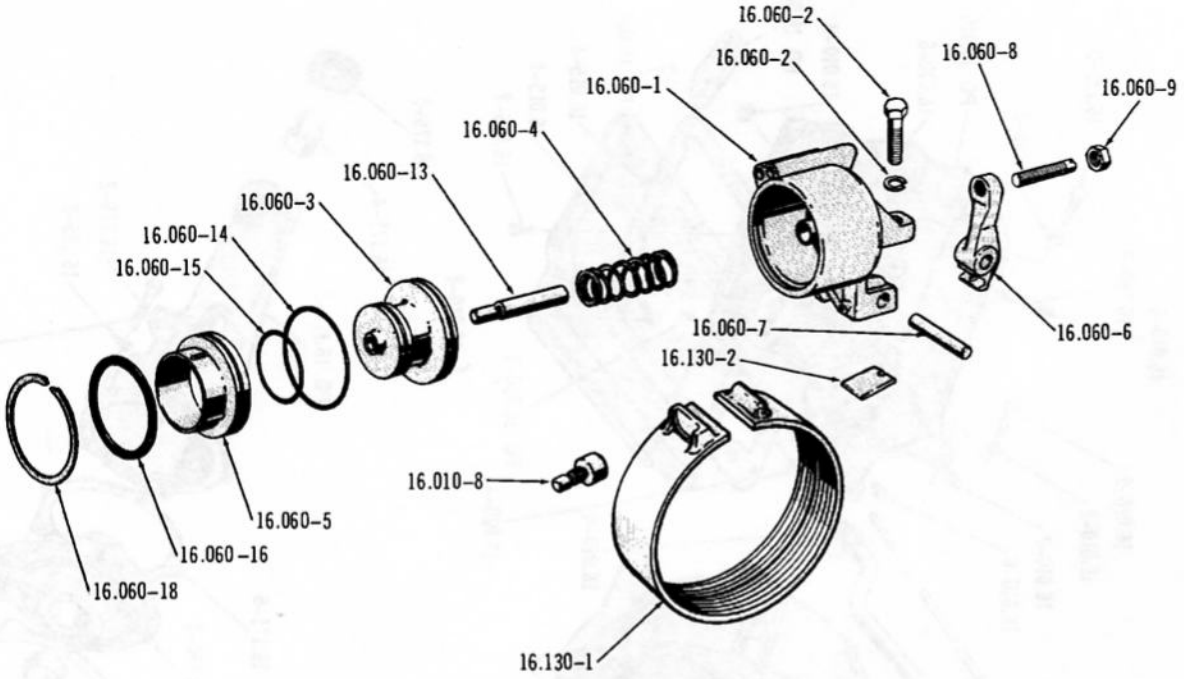

2917

FRONT SERVO AND BAND (LESS SELF ADJUSTING) . . . 1967/70 (199)(232)(290)(343)

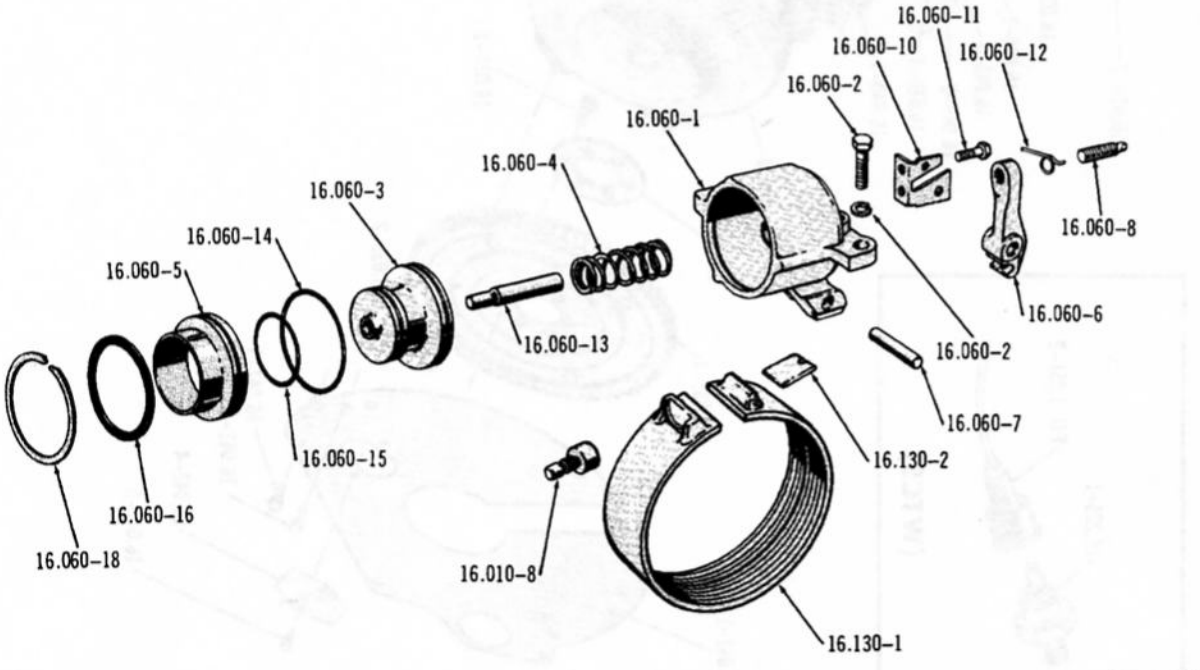

3110

FRONT SERVO AND BAND (SELF ADJUSTING) . . . 1967/71 (199)(232)(258)(290)(304)(360)

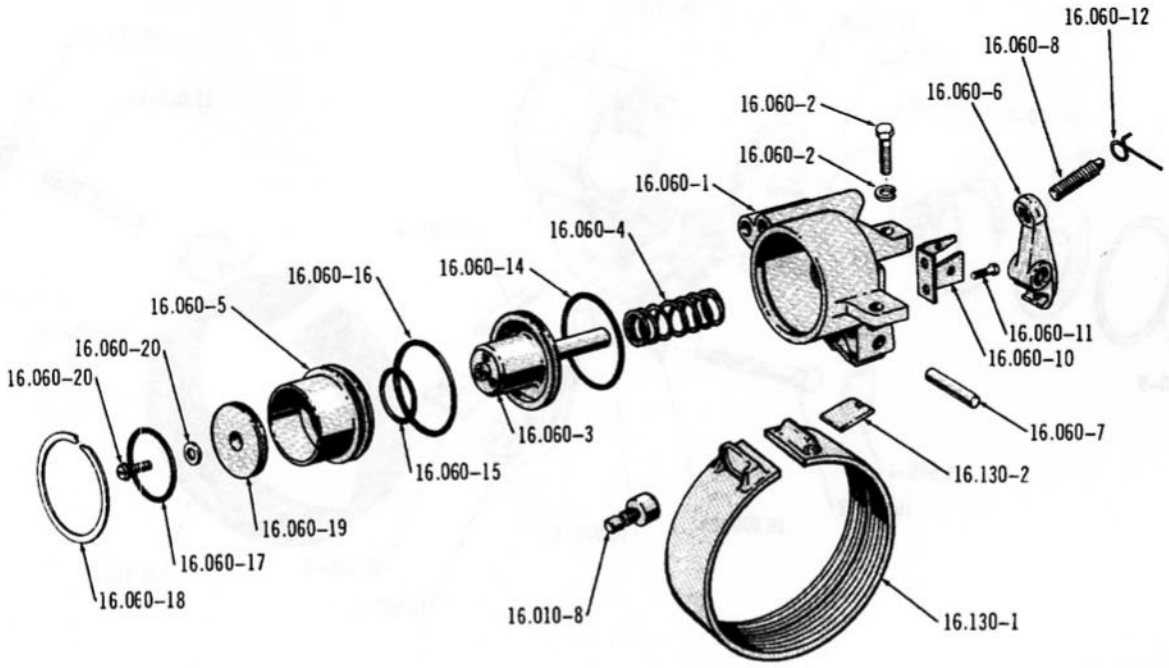

3455

FRONT SERVO AND BAND . . . 1968/71 (390)(401)

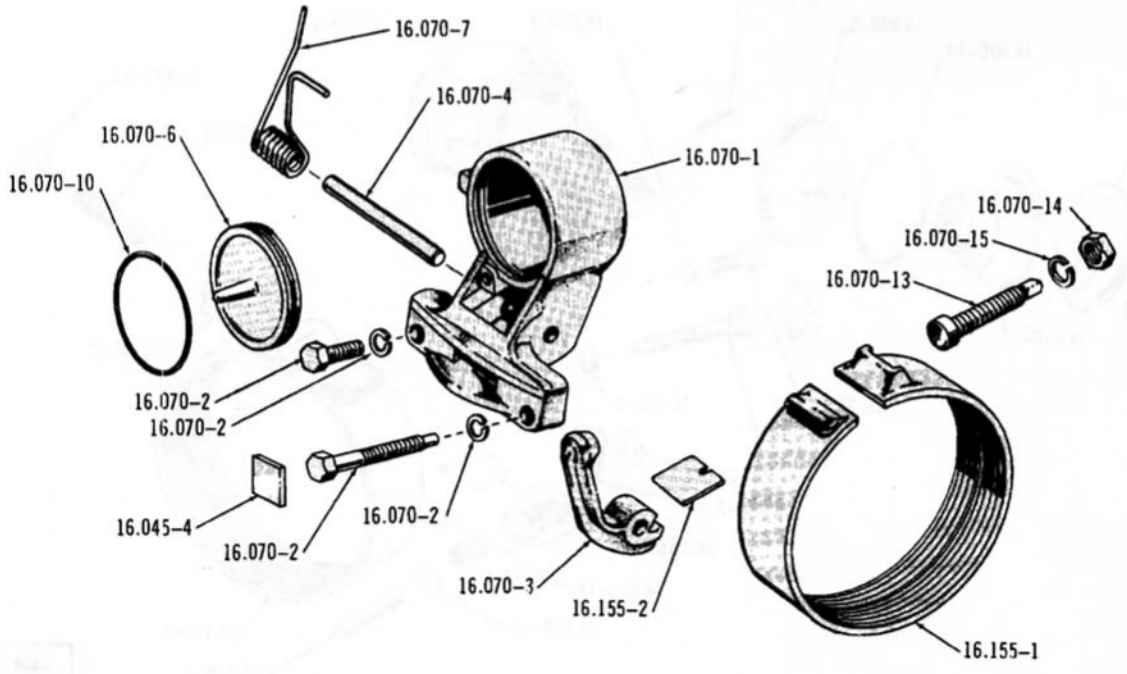

2919

REAR SERVO AND BAND . . . 1967/71 (199)(232)(258)(290-E/30)(304)

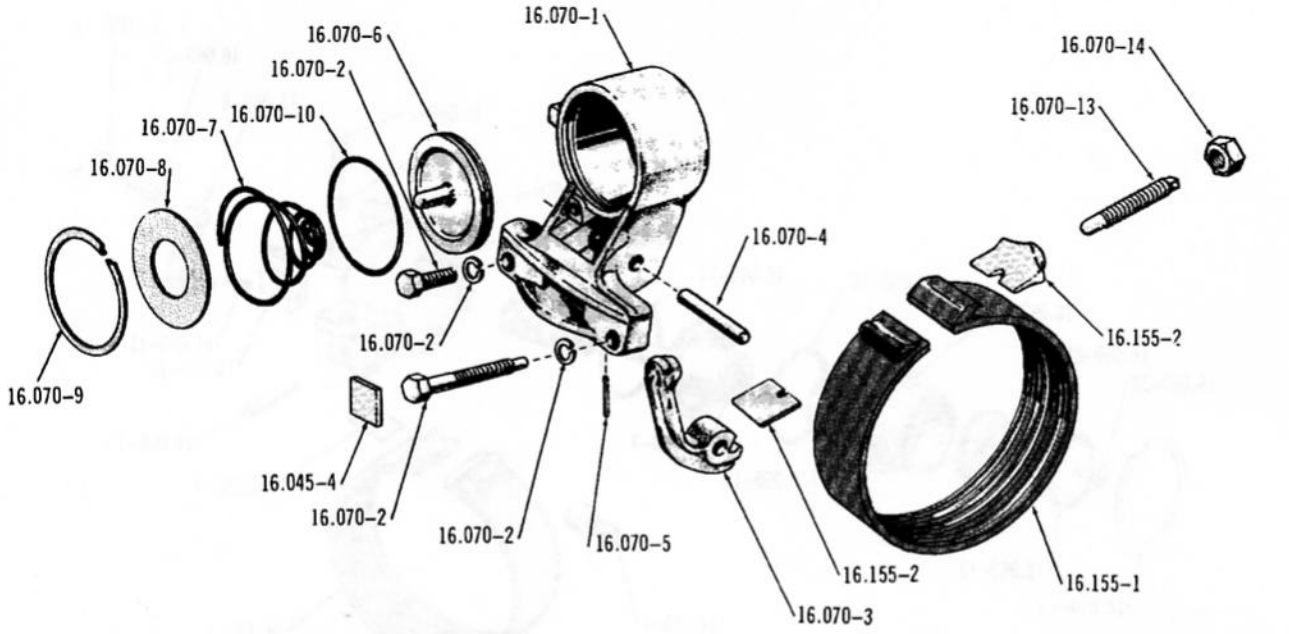

REAR SERVO AND BAND . . . 1967/71 (290-30)(343)(360)

2873

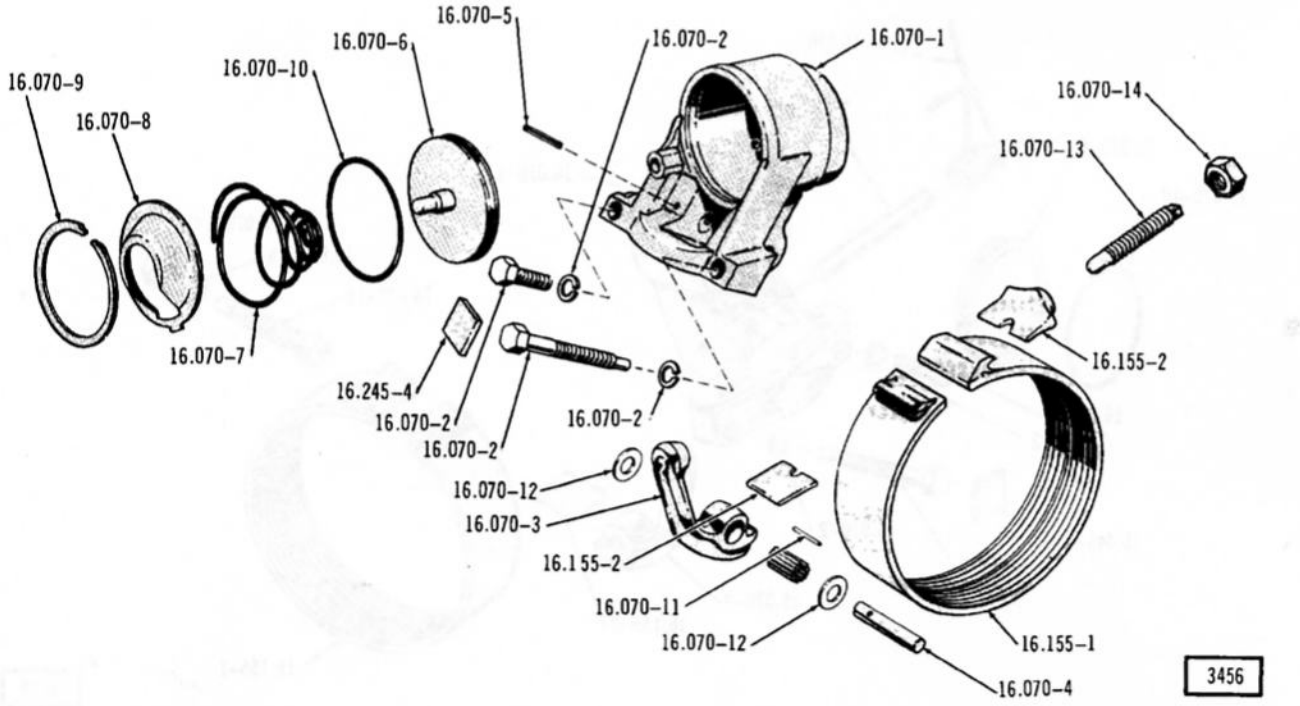

REAR SERVO AND BAND . . . 1968/71 (390)(401)

3456

3348

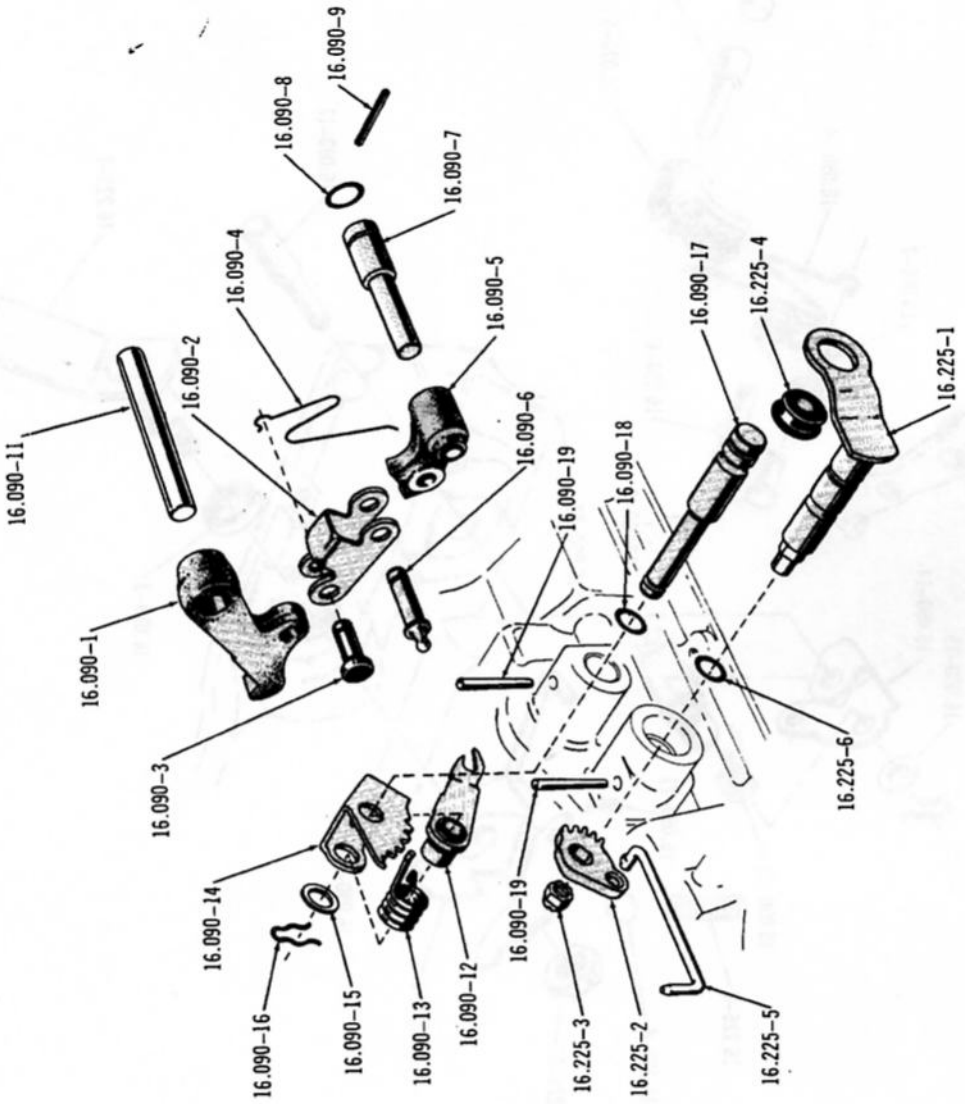

PARKING LOCK AND MANUAL CONTROL . . . 1967/71 (199)(232)(258)(290-E/30)(304)

2725

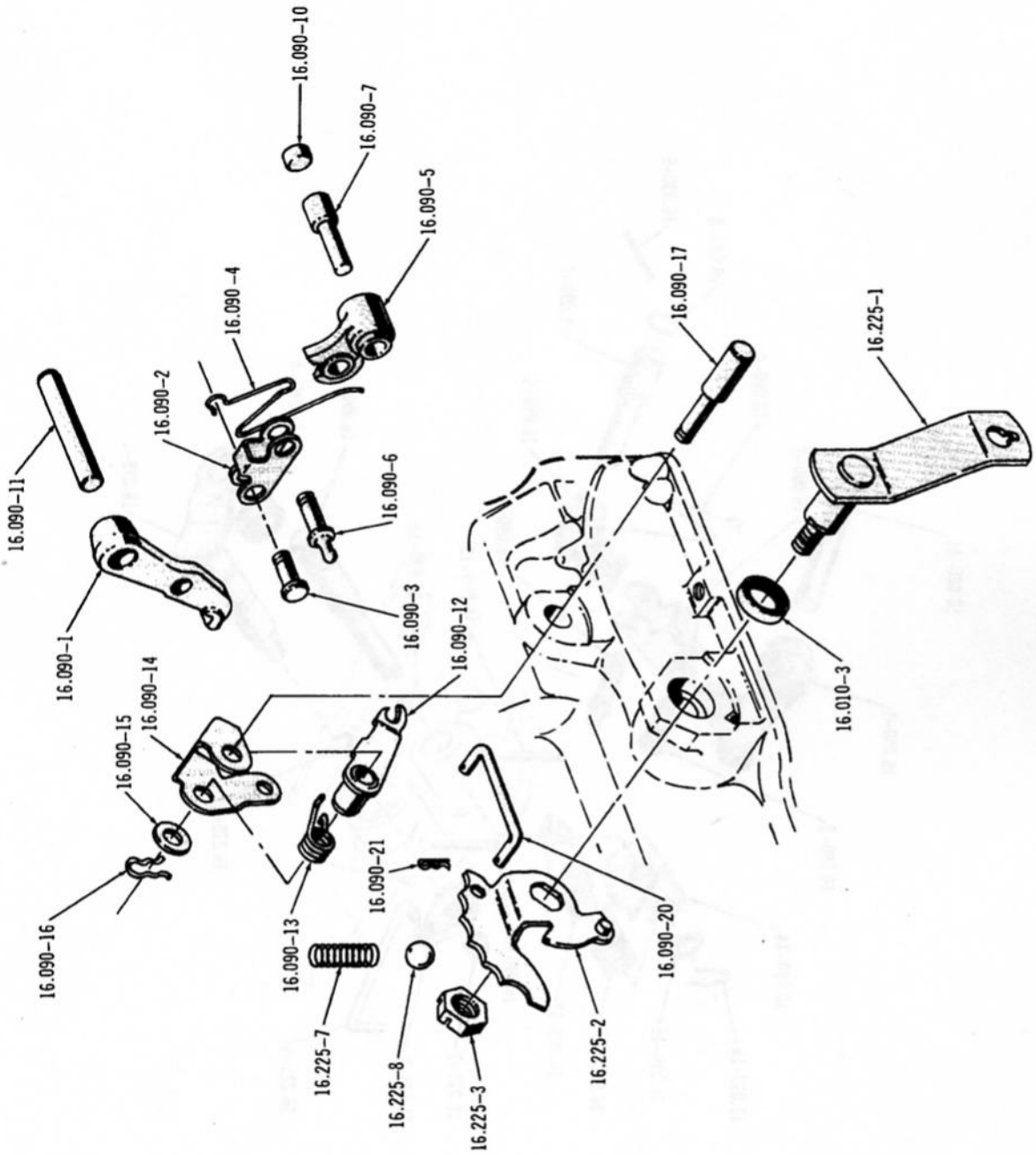

PARKING LOCK AND MANUAL CONTROL . . . 1967/71 (290-30)(343)(360)(390)(401)

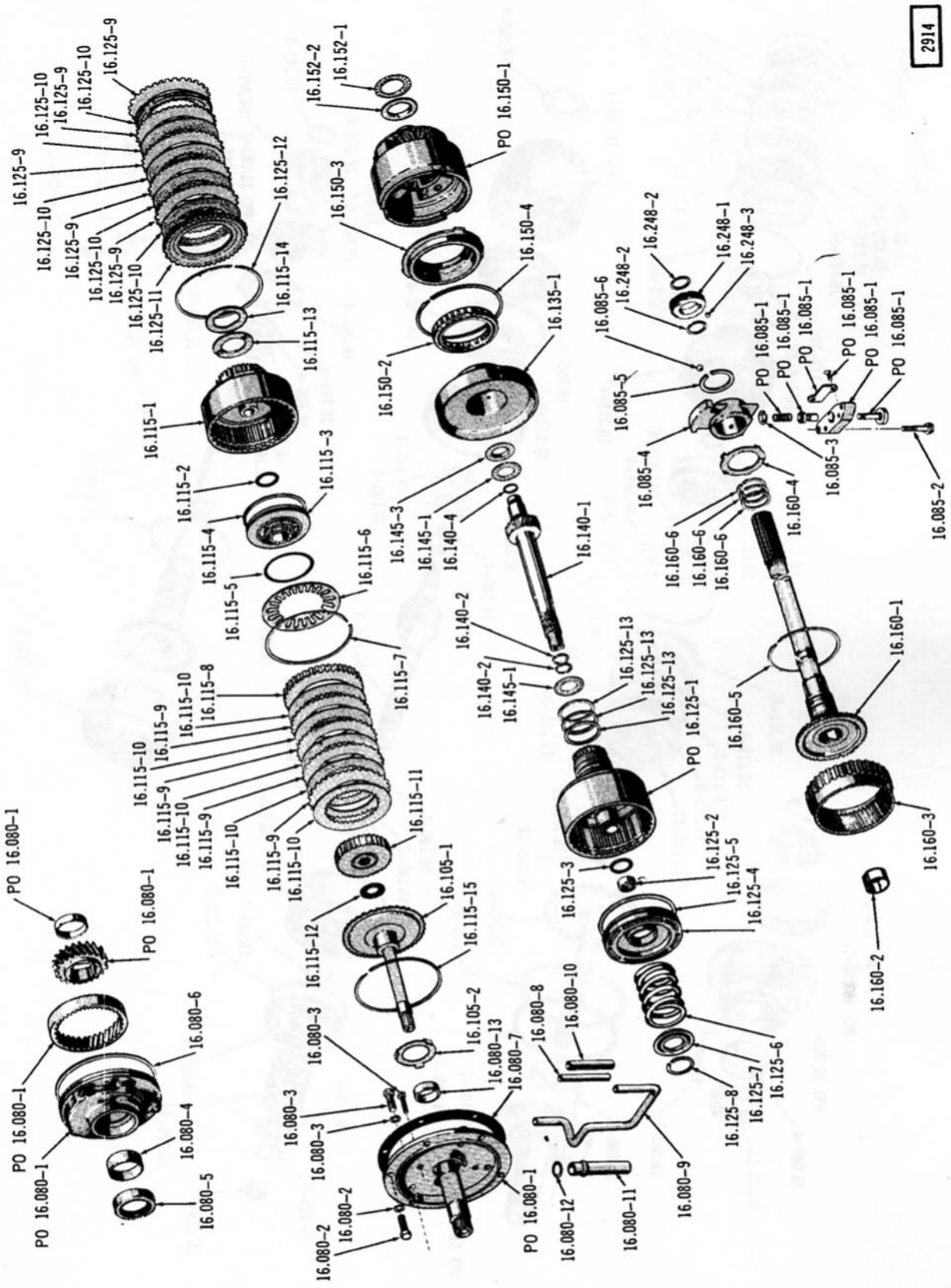

FRONT PUMP, CLUTCHES AND CARRIER . . . 1967/71 (199)(232)(258)(290-E/30)(304)

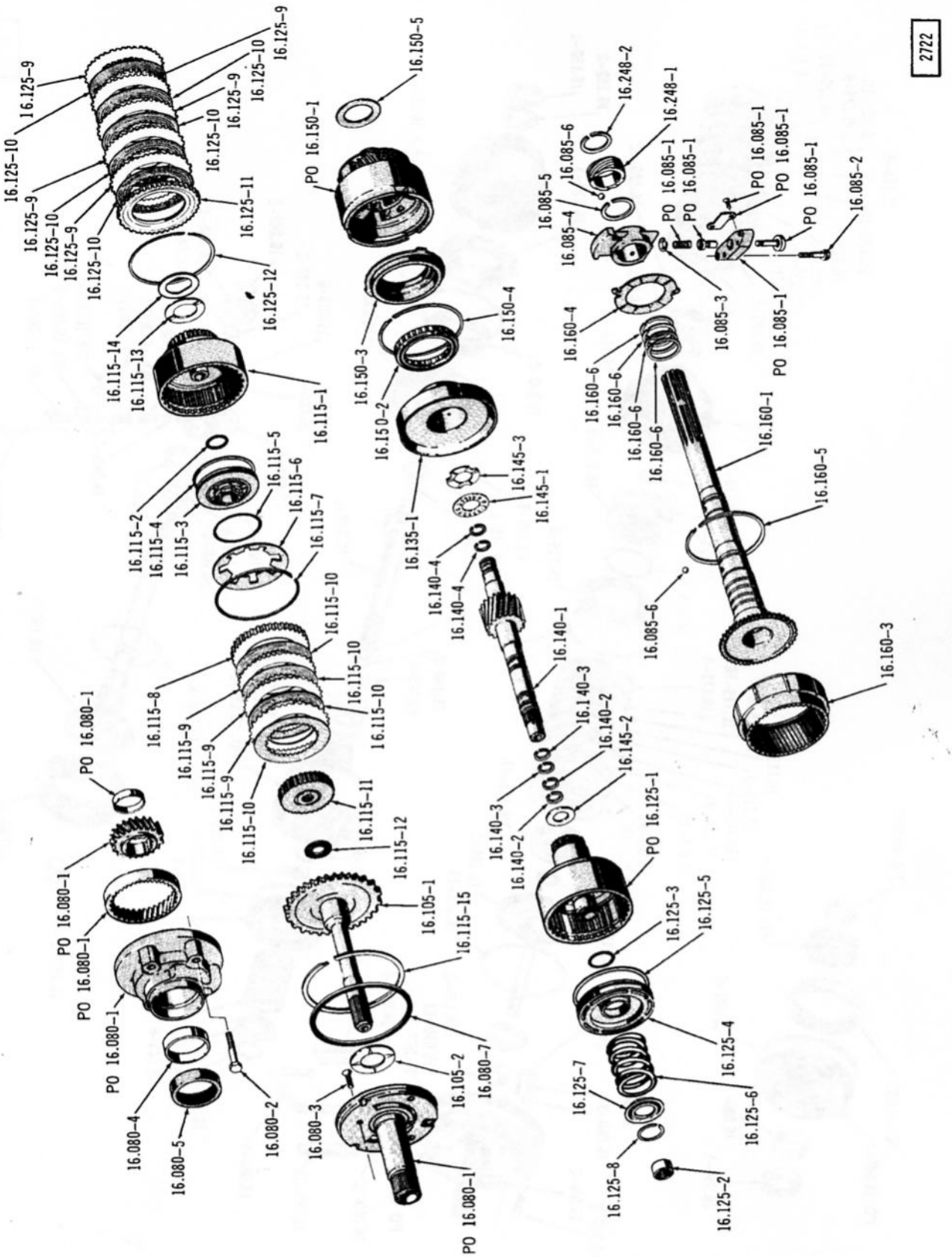

FRONT PUMP, CLUTCHES AND CARRIER . . . 1967/71 (290-30)(343)(360)(390)(401)

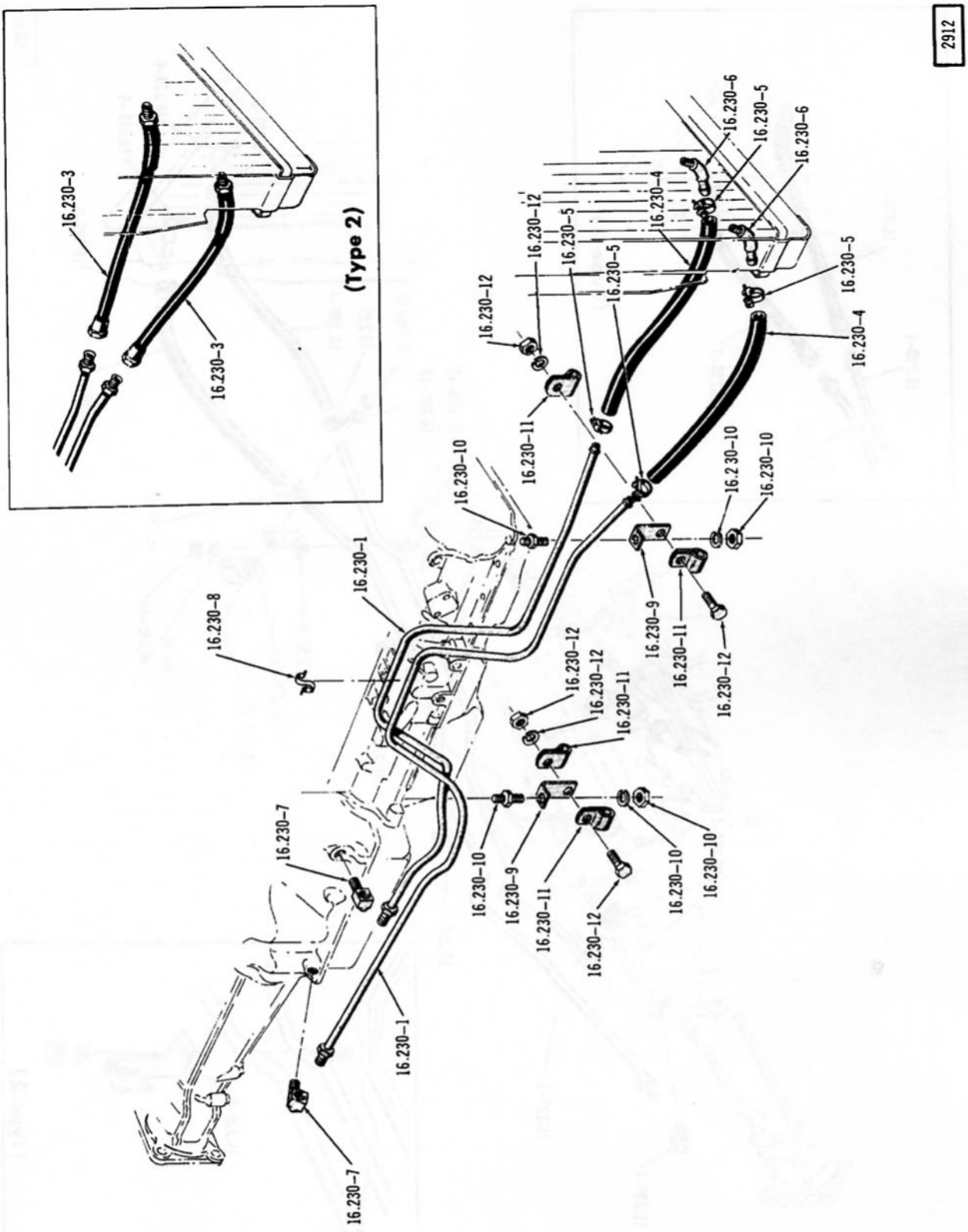

OIL COOLER TUBES . . . 1967/71 (SIX)

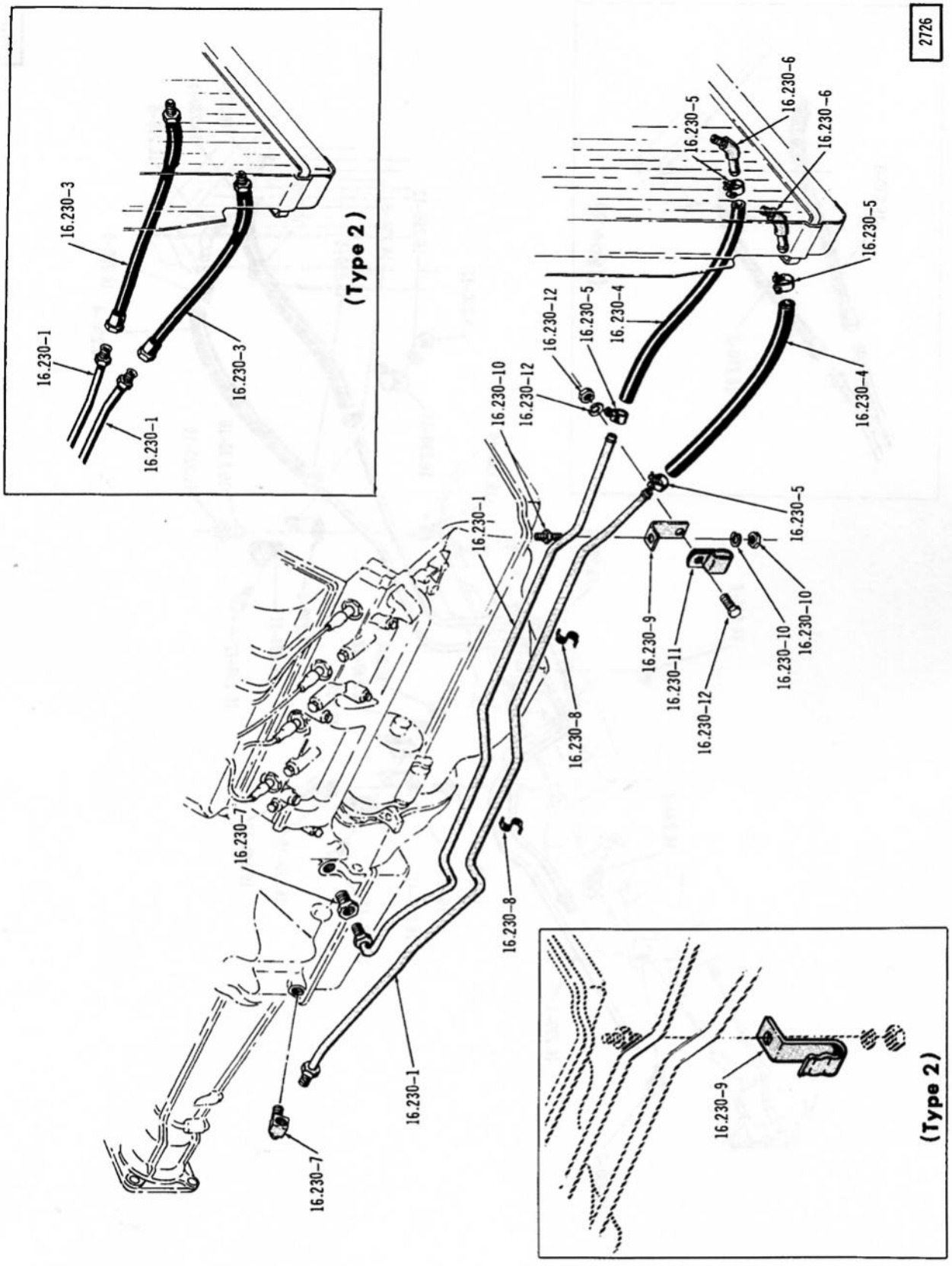

OIL COOLER TUBES . . . 1967/71 (V8)

2904

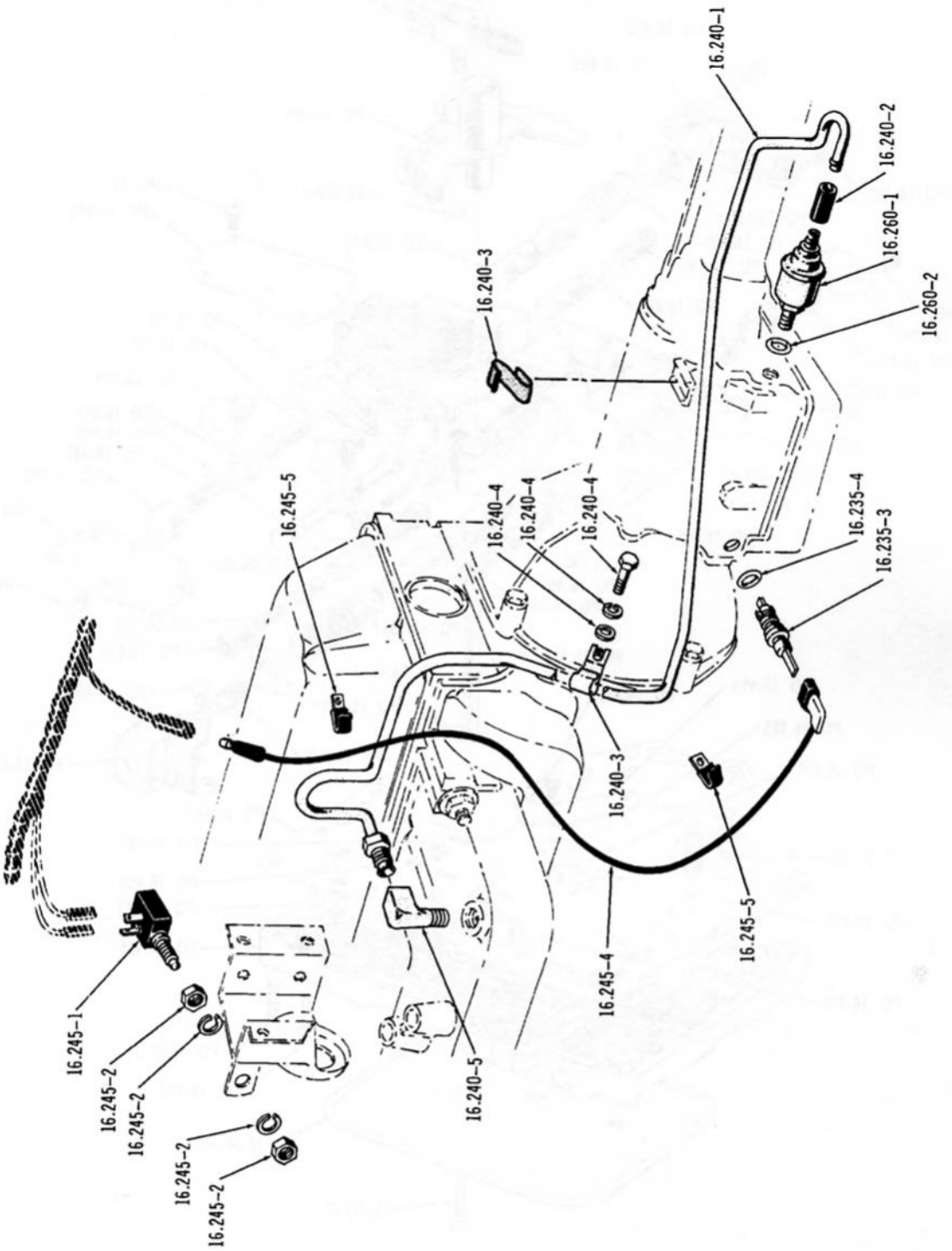

THROTTLE CONTROL VACUUM TUBE . . . 1967/71

Printed in U.S.A.

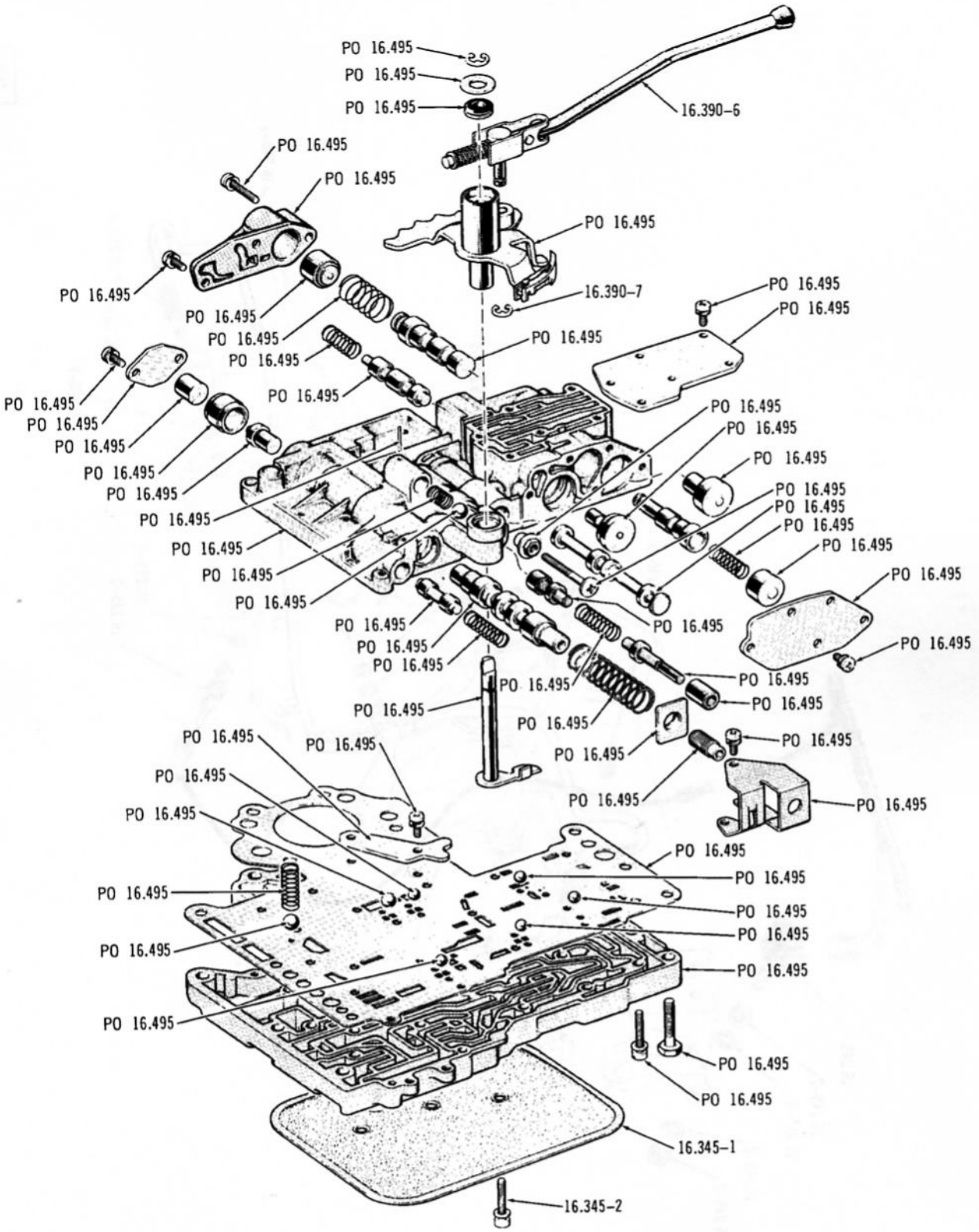

VALVE ASSEMBLY . . . 1972 (SIX-E/HEAVY DUTY)

Printed in U.S.A.

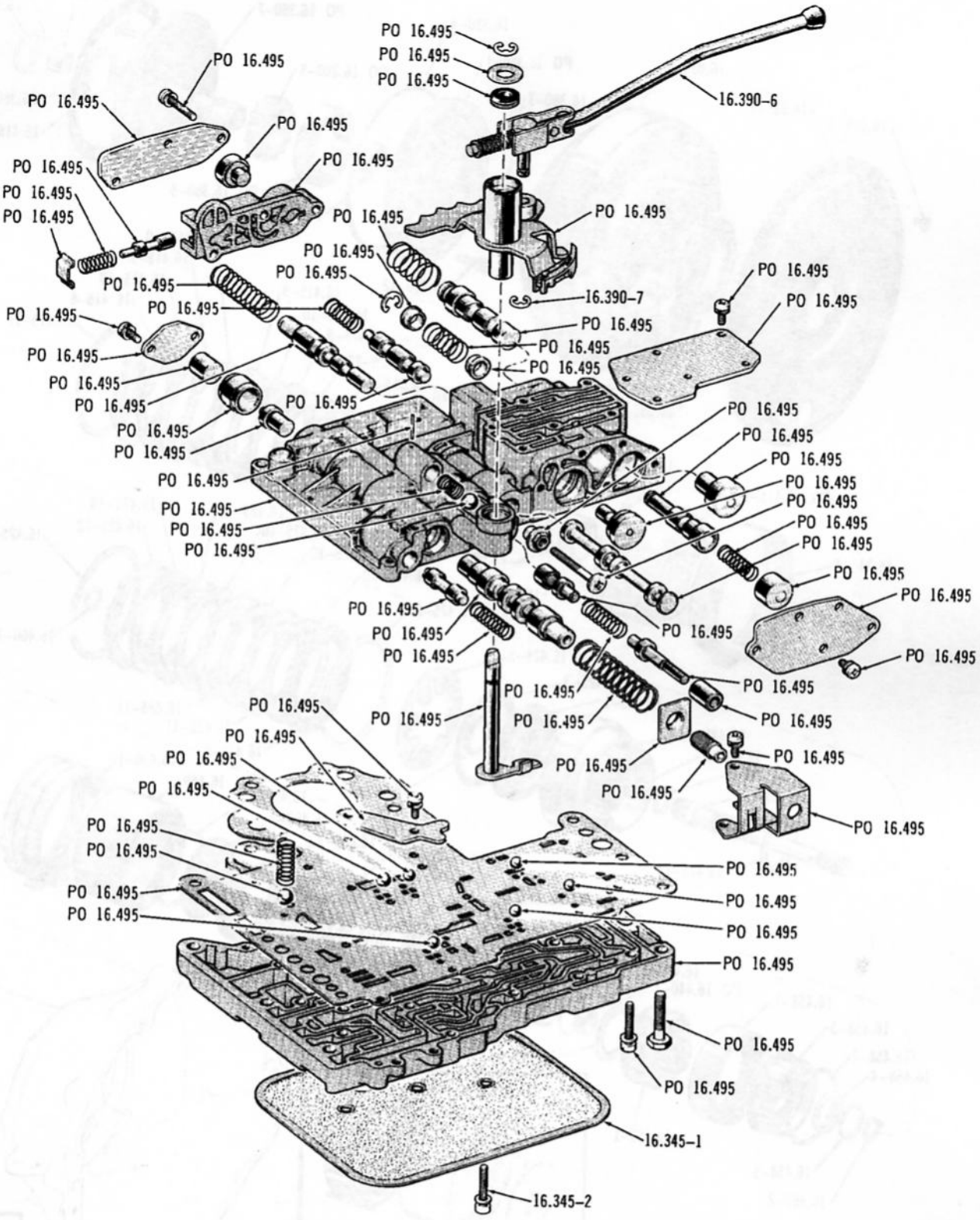

VALVE ASSEMBLY . . . 1972 (SIX–HEAVY DUTY)(V8)

Printed in U.S.A.

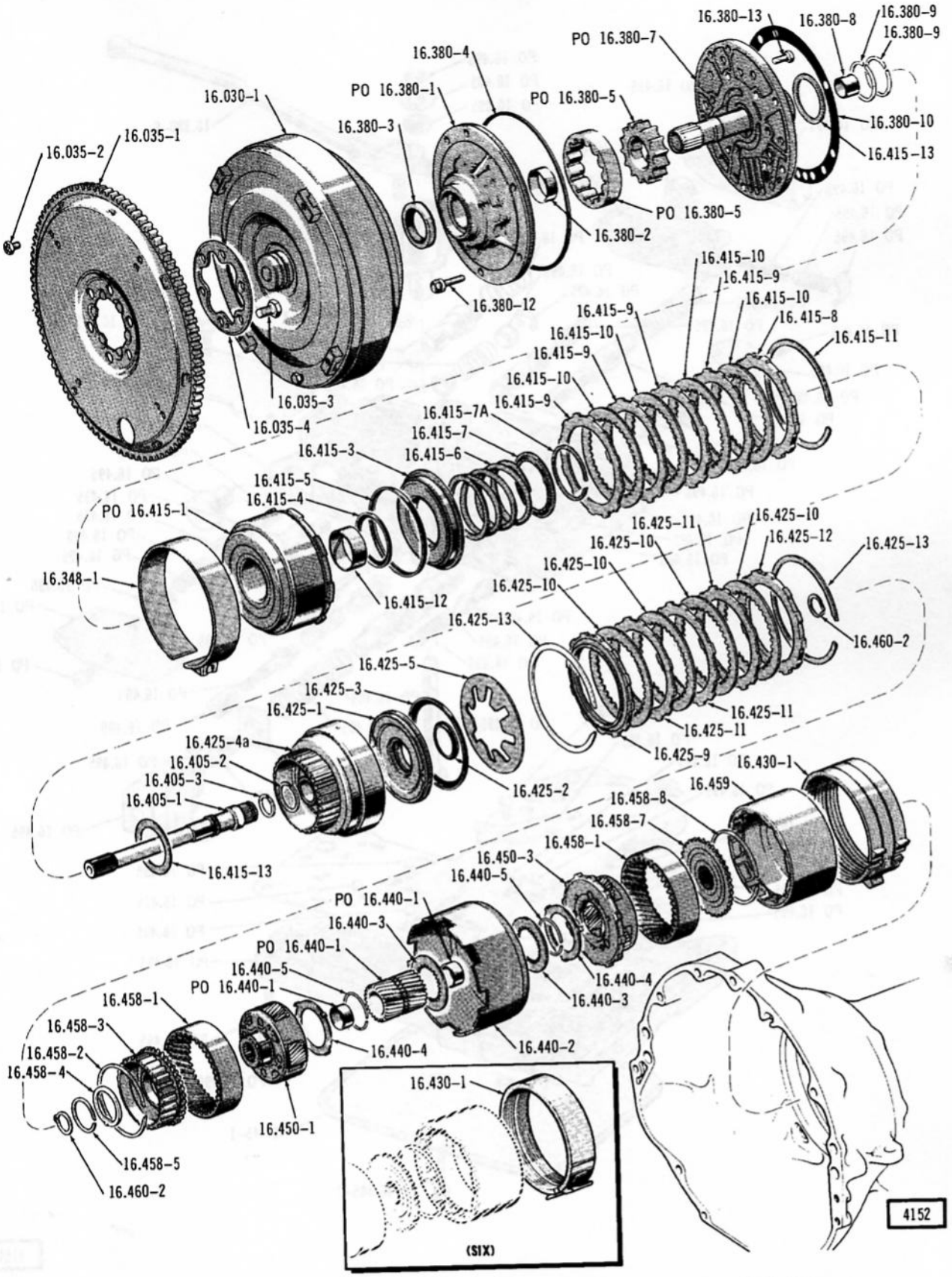

CONVERTER, PUMP AND CLUTCHES . . . 1972 (SIX-E/HEAVY DUTY)(V8-304)

Printed in U.S.A.

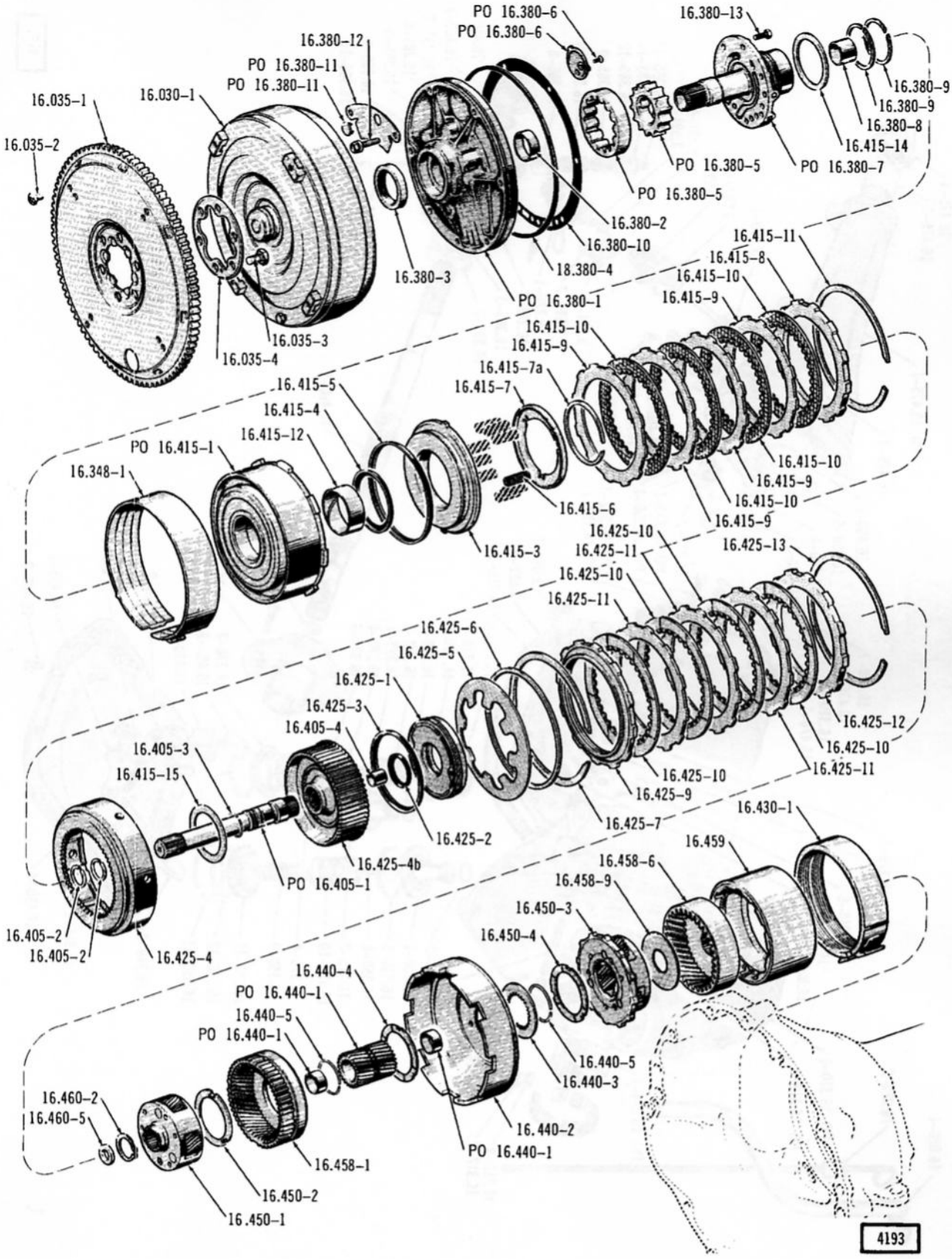

CONVERTER, PUMP AND CLUTCHES . . . 1972 (SIX–HEAVY DUTY)(V8–360)(V8–401)

Printed in U.S.A.

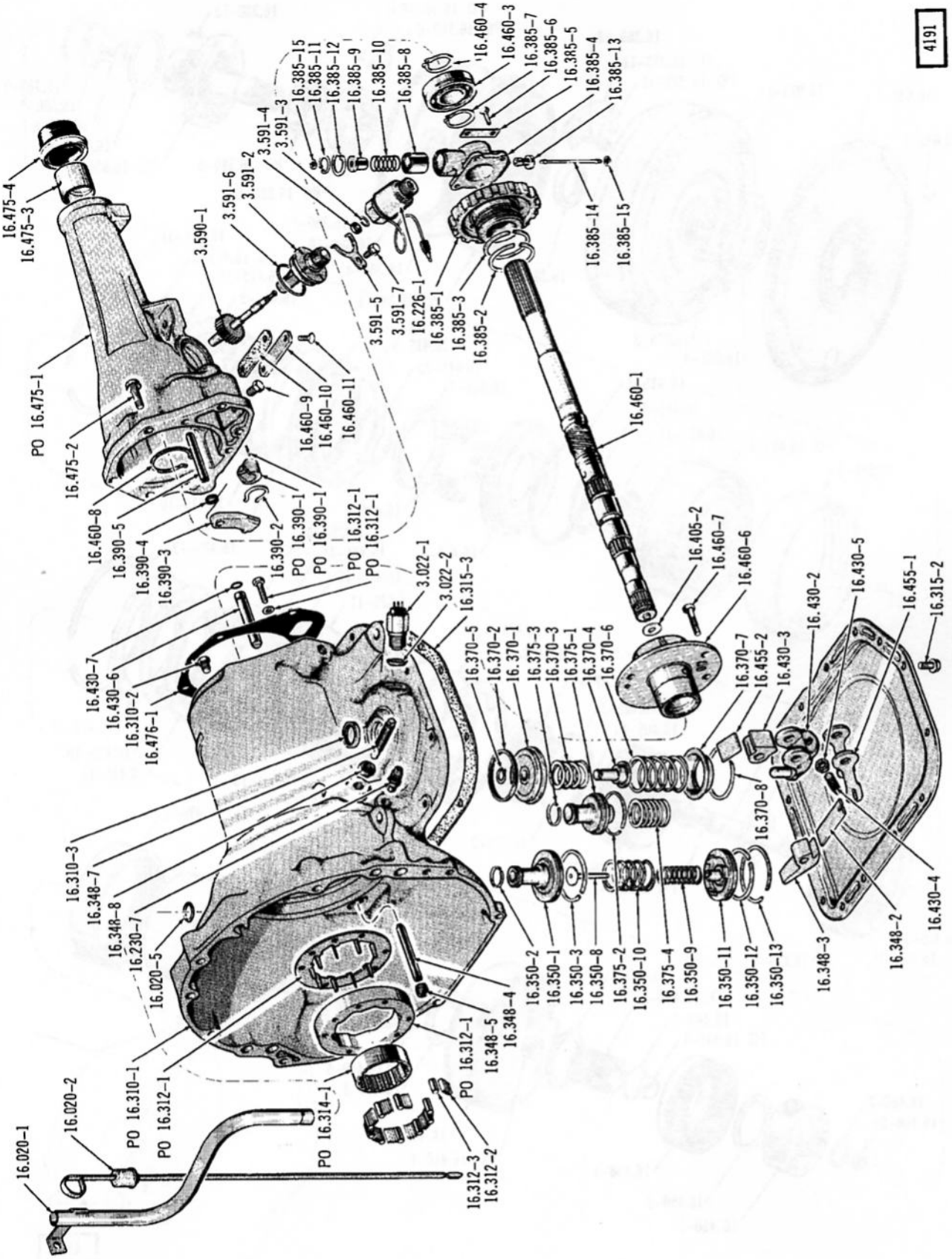

CASE, RETAINER AND SERVOS . . . 1972 (SIX-E/HEAVY DUTY)

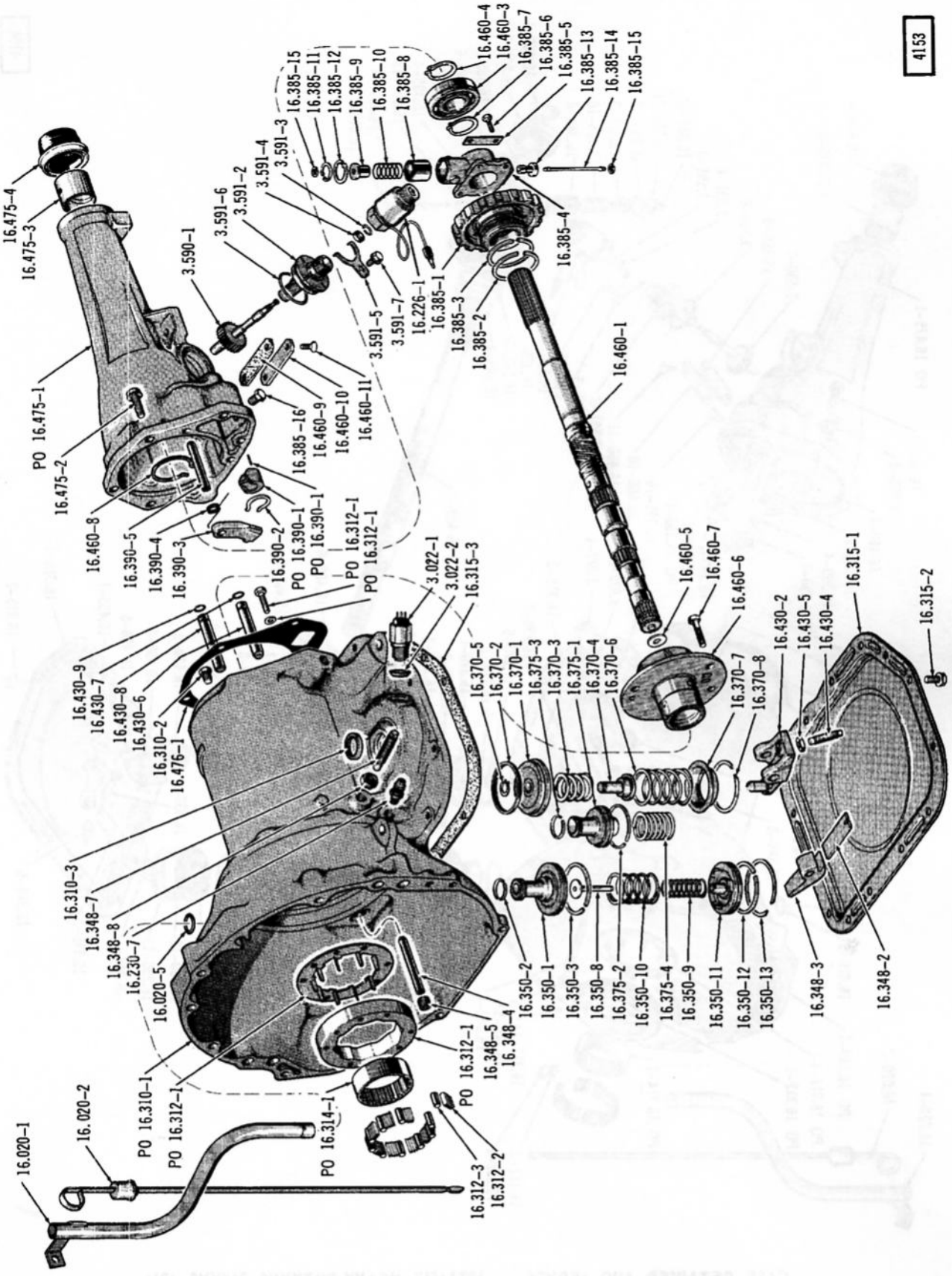

CASE, RETAINER AND SERVOS . . . 1972 (V8-304)

Printed in U.S.A.

4194

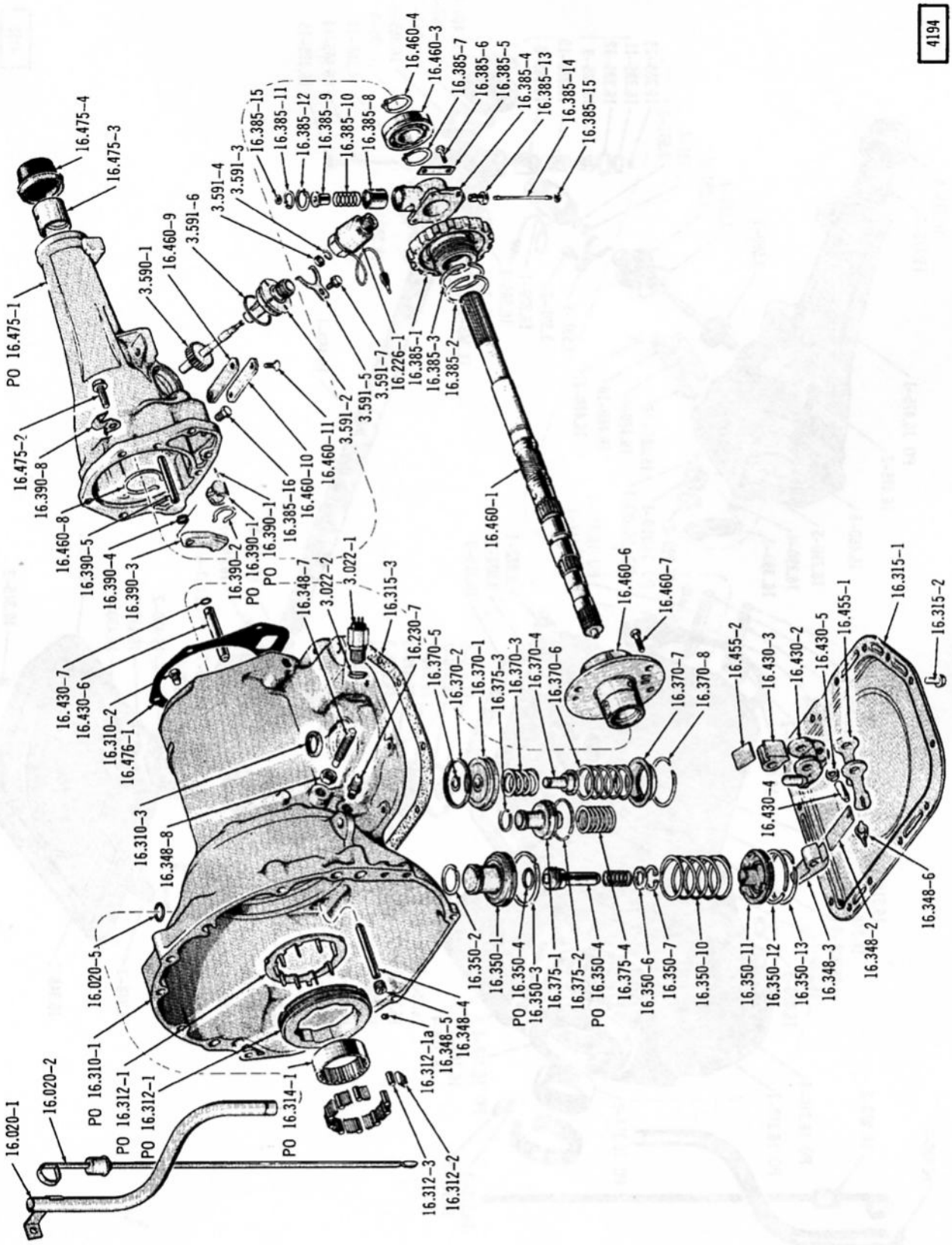

CASE, RETAINER AND SERVOS . . . 1972 (SIX-HEAVY DUTY)(V8-360)(V8-401)

Printed in U.S.A.

4155

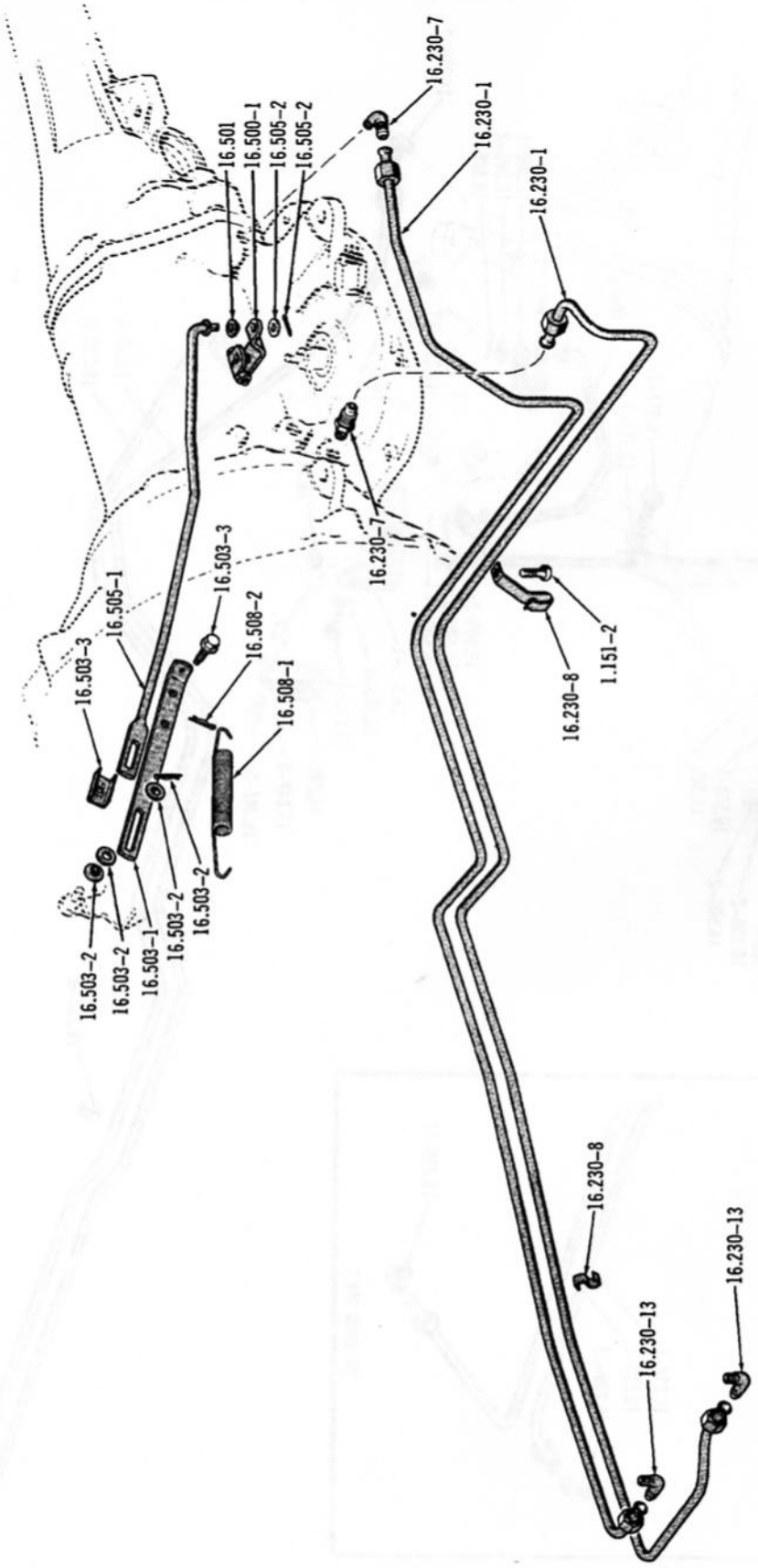

THROTTLE VALVE LINKAGE AND OIL COOLING LINES . . . 1972 (SJX)

Printed in U.S.A.

4154

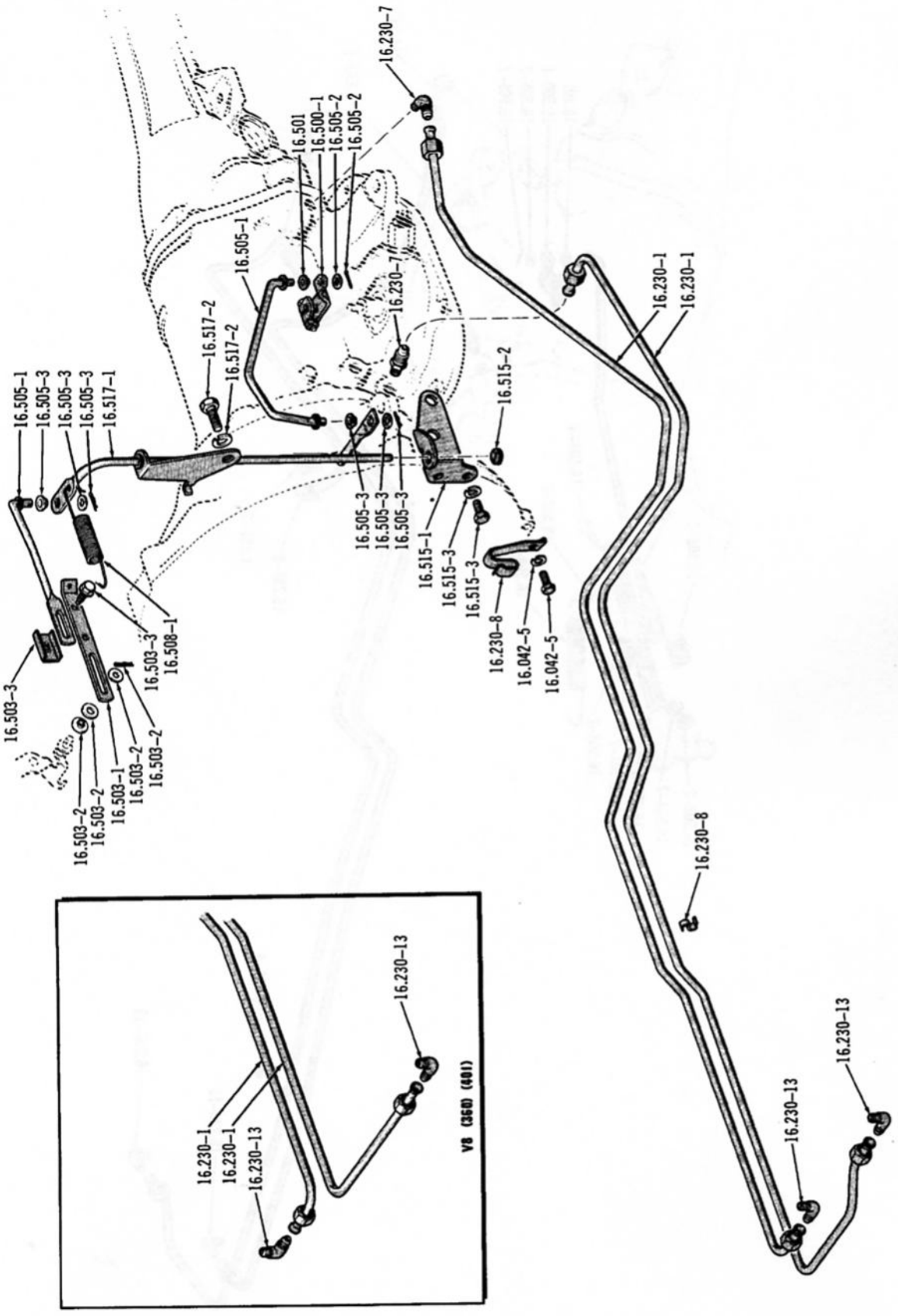

THROTTLE VALVE LINKAGE AND OIL COOLING LINES . . . 1972 (V8)

GROUP NO. — DESCRIPTION — YEAR and MODEL	PAKS CODE	PRIMARY GROUP NO.	PER CAR	PART NO.	CODE
16.001 TRANSMISSION, Automatic					
1967 Thru 1971 (For Components Refer To Groups 16.005 Thru 16.299)					
67 01 (LHD-199-LOCT)(AS2-36A)(AS4-36A)	.....	.....	1	318 5651	
67 01 (LHD-199-LOCT)(AS14-36A)	.....	.....	1	318 9254	
67 01 (LHD-199-LOCT)(AS16-36A)	.....	.....	1	318 9255	
67 01 (LHD-199-WOCT)(AS10-36A)(AS12-36A)	.....	.....	1	318 5671	
67 01 (LHD-199-WOCT)(AS22-36A)	.....	.....	1	318 9258	
67 01 (LHD-199-WOCT)(AS24-36A)	.....	.....	1	318 9259	
67 01 (RHD-199)(AS6-36A)(AS8-36A)	.....	.....	1	318 5653	
67 01 (RHD-199)(AS18-36A)	.....	.....	1	318 9256	
67 01 (RHD-199)(AS20-36A)	.....	.....	1	318 9257	
67 01 (LHD-232-LOCT)(AS4-37A)	.....	.....	1	318 5655	
67 01 (LHD-232-LOCT)(AS22-37A)	.....	.....	1	318 7513	
67 01 (LHD-232-WOCT)(AS6-37A) ***(Use 318 7515)***	.....	.....	1	318 5657	
67 01 (LHD-232-WOCT)(AS26-37A)	.....	.....	1	318 7515	
67 10-50-80 (LHD-232-LOCT)(AS2-37A)(AS14-37A)	.....	.....	1	318 5275	
67 10-50-80 (LHD-232-WOCT)(AS10-37A)(AS18-37A)	.....	.....	1	318 5661	
67 01-10 (RHD-232-WOCT)(AS28-37A)	.....	.....	1	319 0374	
67 01-10-50 (RHD-232-LOCT)(AS8-37A)(AS16-37A)(AS24-37A)	.....	.....	1	318 5660	
67 01 (LHD-290-WCGS)(AS2-40)	.....	.....	1	318 5074	
67 01 (LHD-290-WFGS)(AS4-40)	.....	.....	1	318 5075	
67 10-50-80 (LHD-290-WCGS)(AS6-40) ***(Use 318 5669)***	.....	.....	1	318 5276	
67 10-50-80 (LHD-290-WCGS)(AS12-40)	.....	.....	1	318 5669	
67 10-50-80 (LHD-290-WFGS)(AS10-40) ***(Use 318 5075)***	.....	.....	1	318 5668	
67 10 (RHD-232-WOCT)(AS12-37A)(AS20-37A) ***(Use 319 0374)***	.....	.....	1	318 5662	
67 10-80 (RHD-290)(AS8-40) ***(Ord. Component Parts)***	.....	.....	1	318 5667	
67 10-80 (RHD-290)(AS14-40) ***(Ord. Component Parts)***	.....	.....	1	318 5670	
67 80 (RHD-Post Office)(AS14-40) ***(Ord. Component Parts)***	.....	.....	1	318 5670	
67 10-50-80 (LHD-343-WCGS)(AS2-11) ***(Use 318 5673)***	.....	.....	1	318 5277	
67 10-50-80 (LHD-343-WCGS)(AS4-11)	.....	.....	1	318 5673	
67 10-50-80 (LHD-343-WFGS)(AS6-11)	.....	.....	1	318 5674	
67 10-50-80 (LHD-343-WFGS)(AS8-11) ***(Use 318 5674)***	.....	.....	1	318 5672	
67 10-80 (RHD-343)(AS10-11)	.....	.....	1	318 7887	
67 10-80 (RHD-343)(AS12-11)	.....	.....	1	318 7888	
68 01 (LHD-199-LOCT-* 16-3)(AS26-36A)	.....	.....	1	319 0405	
68 01 (LHD-199-LOCT-* 16-4)(AS32-36A)	.....	.....	1	319 2334	
68 01 (LHD-199-WOCT-* 16-3)(AS30-36A)	.....	.....	1	319 0407	
68 01 (LHD-199-WOCT-* 16-4)(AS34-36A)	.....	.....	1	319 2335	
68 01 (RHD-199)(AS28-36A)	.....	.....	1	319 0406	
68 01 (Except Rogue)(LHD-232-LOCT-* 16-3)(AS30-37A)	.....	.....	1	319 0408	
68 01 (Except Rogue)(LHD-232-LOCT-* 16-4)(AS48-37A)	.....	.....	1	319 2298	
68 01 (Except Rogue)(LHD-232-WOCT-* 16-3)(AS34-37A) ***(Ref. Pr. List)***	.....	.....	1	319 0410	
68 01 (Except Rogue)(LHD-232-WOCT-* 16-4)(AS50-37A)	.....	.....	1	319 2337	
68 01 (Rogue)(LHD-232-* 16-3)(AS42-37A)	.....	.....	1	319 1355	
68 01 (Rogue)(LHD-232-* 16-4)(AS52-37A)	.....	.....	1	319 2336	
68 10-70-80 (LHD-232-LOCT-* 16-1)(AS38-37A)	.....	.....	1	319 0412	
68 10-70-80 (LHD-232-LOCT-* 16-2)(AS48-37A)	.....	.....	1	319 2298	
68 10-70-80 (LHD-232-WOCT-* 16-1)(AS40-37A)	.....	.....	1	319 0414	
68 10-70-80 (LHD-232-WOCT-* 16-2)(AS50-37A)	.....	.....	1	319 2337	
68 10 (Government)(LHD-232-LOCT)(AS38-37A)	.....	.....	1	319 0412	
68 01-10 (RHD-232-LOCT)(AS32-37A)	.....	.....	1	319 0409	
68 01-10 (RHD-232-WOCT)(AS36-37A)	.....	.....	1	319 0411	
68 01 (LHD-290-WCGS-* 16-3)(AS16-40) ***(Ref. Pr. List)***	.....	.....	1	319 0401	
68 01 (LHD-290-WCGS-* 16-4)(AS24-40)	.....	.....	1	319 2299	
68 01-10-70-80 (LHD-290-WFGS)(AS18-40)	.....	.....	1	319 0402	
68 10-70-80 (LHD-290-WCGS-* 16-1)(AS20-40)	.....	.....	1	319 0403	
68 10-70-80 (LHD-290-WCGS-* 16-3)(AS16-40) ***(Ref. Pr. List)***	.....	.....	1	319 0401	
68 10-70-80 (LHD-290-WCGS-* 16-4)(AS24-40)	.....	.....	1	319 2299	
68 30 (LHD-290-WFGS)(AS16-11)	.....	.....	1	319 1666	

Printed in U.S.A.

AUTOMATIC TRANSMISSION

68	***10-80 (RHD-290-WCGS)(AS22-40)***	.....	1	319	0404
68	10-70-80 (LHD-343-WCGS)(AS14-11)	.....	1	319	1077
68	10-30-70-80 (LHD-343-WFGS)(AS16-11)	.....	1	319	1666
68	***10-80 (RHD-343-WCGS)(AS18-11)***	.....	1	319	1406
68	10-80 (LHD-390-WCGS)(AS2-12)	.....	1	319	1078
68	10-30-70-80 (LHD-390-WFGS)(AS4-12)	.....	1	319	1079
69	01 (LHD-199-LOCT)(AS32-36A)	.....	1	319	2334
69	01 (LHD-199-LOCT)(AS2-42)	.....	1	319	5600
69	01 (LHD-199-WOCT)(AS34-36A)	.....	1	319	2335
69	01 (LHD-199-WOCT)(AS6-42)	.....	1	319	5602
69	***01 (RHD-199)(AS28-36A)***	.....	1	319	0406
69	***01 (RHD-199)(AS4-42)*** 200	.....	1	319	5601
69	01 (Except Rogue)(LHD-232-LOCT)(AS48-37A)	.....	1	319	2298
69	01 (Except Rogue)(LHD-232-LOCT)(AS2-43)	.....	1	319	5604
69	01 (Except Rogue)(LHD-232-WOCT)(AS50-37A)	.....	1	319	2337
69	01 (Except Rogue)(LHD-232-WOCT)(AS10-43)	.....	1	319	5605
69	01 (Rogue)(LHD-232)(AS52-37A)	.....	1	319	2336
69	01 (Rogue)(LHD-232)(AS4-43)	.....	1	319	5603
69	10-70-80 (LHD-232-LOCT)(AS48-37A)	.....	1	319	2298
69	10-70-80 (LHD-232-LOCT)(AS2-43)	.....	1	319	5604
69	10-70-80 (LHD-232-WOCT)(AS50-37A)	.....	1	319	2337
69	10-70-80 (LHD-232-WOCT)(AS10-43)	.....	1	319	5605
69	***01-10 (RHD-232-LOCT)(AS32-37A)***	.....	1	319	0409
69	***01-10 (RHD-232-LOCT)(AS6-43)***	.....	1	319	5606
69	***01-10 (RHD-232-WOCT)(AS36-37A)***	.....	1	319	0411
69	***01-10 (RHD-232-WOCT)(AS12-43)***	.....	1	319	5607
69	01-10-70-80 (LHD-290-WCGS)(AS24-40)	.....	1	319	2299
69	01 (LHD-290-WCGS)(AS8-44)	.....	1	319	7284
69	10-70-80 (LHD-290-WCGS)(AS2-44)	.....	1	319	5609
69	10-70-80 (LHD-290-WFGS)(AS18-40)	.....	1	319	0402
69	10-70-80 (LHD-290-WFGS)(AS6-44)	.....	1	319	5611
69	30 (LHD-290-WFGS)(AS16-11)	.....	1	319	1666
69	***10 (RHD-290)(AS22-40)***	.....	1	319	0404
69	***10 (RHD-290)(AS4-44)***	.....	1	319	5610
69	10-70-80 (LHD-343-WCGS)(AS14-11)	.....	1	319	1077
69	10-70-80 (LHD-343-WCGS)(AS2-11B)	.....	1	319	6947
69	10-30-70-80 (LHD-343-WFGS)(AS16-11)	.....	1	319	1666
69	10-30-70-80 (LHD-343-WFGS)(AS4-11B)	.....	1	319	6543
69	**80 (RHD-343)(AS24-11)**	.....	1	319	3536
69	***80 (RHD-343)(AS6-11B)***	.....	1	319	6948
69	10-80 (LHD-390-WCGS)(AS2-12)	.....	1	319	1078
69	10-30-70-80 (LHD-390-WFGS)(AS4-12)	.....	1	319	1079
69	10-30-70-80 (LHD-390-WFGS)(AS6-12)	.....	1	319	6544
70	01 (LHD-199-LOCT)(AS2-42)	.....	1	319	5600
70	01 (LHD-199-WOCT)(AS6-42)	.....	1	319	5602
70	01 (LHD-232-LOCT-Except 19:45 Ratio)(AS2-43)	.....	1	319	5604
70	01 (LHD-232-WOCT-Except 19:45 Ratio)(AS10-43)	.....	1	319	5605
70	01 (LHD-232-19:45 Ratio)(AS4-43)	.....	1	319	5603
70	10-70-80 (LHD-232-LOCT)(AS2-43)	.....	1	319	5604
70	10-70-80 (LHD-232-WOCT)(AS10-43)	.....	1	319	5605
70	***01-10 (RHD-232-WOCT)(AS12-43)***	.....	1	319	5607
70	01 (LHD-304)(AS8-44)	.....	1	319	7284
70	10-70-80 (LHD-304-WCGS)(AS2-44)	.....	1	319	5609
70	10-70-80 (LHD-304-WFGS)(AS6-44)	.....	1	319	5611
70	***10 (RHD-304-WCGS)(AS4-44)***	.....	1	319	5610
70	10-70-80 (LHD-360-WCGS)(AS2-11B)	.....	1	319	6947
70	10-30-70-80 (LHD-360-WFGS)(AS4-11B)	.....	1	319	6543
70	30-70 (LHD-360-WFGS)(AS12-12)	.....	1	321	0501
70	***80 (RHD-360-WCGS)(AS6-11B)***	.....	1	319	6948
70	10-80 (LHD-390-WCGS)(AS2-12)	.....	1	319	1078
70	19 (MACHINE)	.....	1	319	9950
70	10-30-70-80 (LHD-390-WFGS)(AS6-12)	.....	1	319	6544

71	01-40 (LHD-232-LOCT-15: 41 Or 19: 45 Ratio)(AS4-43)	.....	1	319 5603
71	01 (LHD-232-LOCT-Except 19: 45 Ratio)(AS2-43)	.....	1	319 5604
71	01-40 (LHD-232-LOCT-15:41 Or 19:45 Ratio)(10-02-000-011)	.....	1	321 2182
71	01-10-40-70 (LHD-232-LOCT-13:40 Or 13:41 Ratio)(10-02-000-002)	.....	1	321 0855
71	01-40-70 (LHD-258-LOCT-13:40 Or 13:41 Or 13:43 Ratio)(10-02-000-006)	.....	1	321 0859
71	01-40 (LHD-258)(10-02-000-006)	.....	1	321 0859
71	01-40 (LHD-258)(10-02-000-007)	.....	1	321 0860
71	***01-40 (Heavy Duty-232-WOCT-15:41 Or 19:45 Ratio)(10-02-000-001)***	.....	1	321 0854
71	***01 (Heavy Duty-258)(10-02-000-006)***	.....	1	321 0859
71	SIX (LHD-LTCS-13:40 Or 13:41 Or 13:43 Ratio) ***(Use 321 0860)***	.....	1	321 0856
71	***(Heavy Duty-Six-WOCT-WTCS-13:40 Or 13:41 Or 13:43 Ratio)(10-02-000-007)***	.....	1	321 0860
71	01-40 (232-WTTP-WOCT-15:41 Or 19:45 Ratio)(10-02-000-001)	.....	1	321 0854
71	SIX (WTTP-WOTC-WTCS-13:40, 13:41 Or 13:43 Ratio)(16-02-000-007)	.....	1	321 0860
71	01 (258-WTTP)(10-02-000-007)	.....	1	321 0860
71	01 (LHD-304)(10-02-000-008)	.....	1	321 0861
71	10-70-80 (LHD-304-WCGS)(10-02-000-009)	.....	1	321 0862
71	10-70-80 (LHD-304-WFGS)(10-02-000-010)	.....	1	321 0863
71	LHD (360-WCGS)(10-03-000-001)	.....	1	321 0864
71	10-70-80 (LHD-360-WFGS)(10-03-000-002)	.....	1	321 0865
71	10-80 (LHD-401-WCGS)(10-03-000-003)	.....	1	321 0868
71	10 (LHD-401-WFGS-11: 39 Ratio)(10-03-000-005)	.....	1	321 0870
71	10-70-80 (LHD-401-WFGS-13: 41 Or 15: 43 Ratio)(10-03-000-004)	.....	1	321 0869

1972 (For Components Refer To Groups 16.305 Thru 16.999)

72	232	.....	1	321 3956
72	258	.....	1	321 5484
72	***258-360 (Taxi)***	.....	1	321 8138
72	304	.....	1	321 3957
72	360	.....	1	321 3958
72	***360 (Police)***	.....	1	321 1752
72	401	.....	1	321 5485
72	***401 (Taxi)***	.....	1	321 7752
72	***401 (Police)***	.....	1	321 7753

16.005 GASKET AND SEAL SET, Automatic Transmission Overhaul

67/69	SIX (* 16-29) 200	.....	1	320 8216
69	SIX (* 16-31) 200	.....	1	448 7859
70/71	SIX 200	.....	1	448 7859
67/69	290 (Except 30-* 16-29) 200	.....	1	320 8216
69	290 (Except 30-* 16-30) 200	.....	1	448 7859
68/69	290 (30) ***(Use 448 5616)***	.....	1	~~320 8214~~
70/71	304 200	.....	1	448 7859
67/69	343 (* 16-27) ***(Use 448 5616)***	.....	1	~~320 8214~~
69	343 (* 16-28) 201	.....	1	448 5616
68/71	360-390-401 201	.....	1	448 5616

16.007 SNAP RING SET, Automatic Transmission Overhaul

67/69	SIX (* 16-29)	.....	1	320 7302
69	SIX (* 16-31)	.....	1	448 7858
70/71	SIX	.....	1	448 7858
67/69	290 (Except 30-* 16-29)	.....	1	320 7302
69	290 (Except 30-* 16-30)	.....	1	448 7858
68/69	290 (30)	.....	1	320 8336
70/71	304	.....	1	448 7858
67/71	343-360-390-401	.....	1	320 8336

16.010-1 CASE, Automatic Transmission

67	SIX (LHD-LOCT-* 16-5) 192	.....	1	318 8599
67	SIX (LHD-LOCT-* 16-6) ***(Use 448 8247)***	.....	1	~~320 9714~~
67	SIX (LHD-WOCT-* 16-5) 192	.....	1	320 7815
67	SIX (LHD-WOCT-* 16-6) 192	.....	1	320 9712

AUTOMATIC TRANSMISSION

67	***SIX (RHD-LOCT-* 16-5)***	192	.....	1	318 8601
67	***SIX (RHD-LOCT-* 16-6)***	192	.....	1	320 9715
67	***SIX (RHD-WOCT-* 16-5)***	192	.....	1	318 8602
67	***SIX (RHD-WOCT-* 16-6)***	192	.....	1	320 9713
68/69	SIX (LOCT-* 16-29)	192	.....	1	320 9714
69	SIX (LOCT-* 16-31)	***(Use 448 8247)***	.....	1	448 7757
68/69	SIX (WOCT-* 16-29)	192	.....	1	320 9712
69	SIX (WOCT-* 16-31)	192	.....	1	448 7758
70	SIX (LOCT)	***(Use 448 8247)***	.....	1	448 7757
71	SIX (LOCT)	192	.....	1	448 8247
70	SIX (WOCT)	192	.....	1	448 7758
71	SIX (WOCT)	192	.....	1	812 0048
67	290 (LHD-* 16-5)	192	.....	1	320 7815
67	290 (LHD-* 16-6)	192	.....	1	320 9712
68/69	290 (Except 30-* 16-29)	192	.....	1	320 9712
69	290 (10-* 16-30)(70-* 16-30)(80-* 16-30)	192	.....	1	448 7758
69	290 (LHD-01-WCGS-* 16-30)	***(Use 448 8247)***	.....	1	448 7759
68/69	290 (30)	187	.....	1	320 9829
67	***290 (RHD-WOCT-* 16-5)***	192	.....	1	318 8602
67	***290 (RHD-WOCT-* 16-6)***	192	.....	1	320 9713
70	304 (10)(70)(80)	192	.....	1	448 7758
71	304 (10)(70)(80)	192	.....	1	812 0049
70	304 (LHD-01)	***(Use 448 8247)***	.....	1	448 7759
71	304 (01)	192	.....	1	812 0050
67	343	187	.....	1	320 8031
68/69	343 (* 16-27)	187	.....	1	320 9829
69	343 (* 16-28)	187	.....	1	448 5545
68/71	360-390-401	187	.....	1	448 5545

16.010–2 ATTACHING PARTS, Transmission To Converter Housing

BOLT, Hexagon	68/69	290 (30)	17.038	4	G179861	NA
BOLT, Hexagon	67/71	343-360-390-401	17.038	4	G179861	NA
BOLT, Hexagon	67/68	199-232-290 (7/8" Long-Except 30)	.....	1	400 1747	
BOLT, Hexagon	67/68	199-232-290 (1-1/8" Long-Except 30)***(Use 400 1884)***	.....	5	400 1746	
BOLT, Hexagon	69	199-232-290 (7/8" Long-Except 30)...(Incl. Washer)	16.010	1	400 1882	
BOLT, Hexagon	69	199-232-290 (1-1/16" Long-Except 30) ...(Incl. Washer)	16.010	1	400 1883	
BOLT, Hexagon	70/71	199-232-258-304 (3/8-16 x 7/8)	.....	1	400 4012	
BOLT, Hexagon	70/71	199-232-258-304 (3/8-16 x 1-1/16)	.....	5	400 4013	
WASHER, Plain	67/69	199-232-290 (Except 30)	17.814	6	400 1102	
WASHER, Plain	70/71	199-232-258-304	17.814	1	400 1102	
WASHER, Lock	67/69	199-232-290 (Except 30)	17.820	5	G120382	
WASHER, Lock	70	199-232-304	10.260	1	400 3803	
WASHER, Lock	68/69	290 (30)	17.822	4	G114607	NA
WASHER, Lock	67/71	343-360-390-401	17.822	4	G114607	NA

16.010–3 SEAL, Automatic Transmission Case Oil

68/69	290 (30)	.....	1	315 0858	
67/71	343-360-390-401	.....	1	315 0858	

16.010–4 BUSHING, Automatic Transmission Case

67/71	SIX	.....	1	320 3639	
67/69	290 (Except 30)	.....	1	320 3639	
68/69	290 (30)	.....	1	320 2299	
70/71	304	.....	1	320 3639	
67/71	343-360-390-401	.....	1	320 2299	

AUTOMATIC TRANSMISSION

16.010–5 PLUG, Automatic Transmission Case

68/69	290 (30)	.....	2	315 0857
67/71	343–360–390–401	.....	2	315 0857

16.010–6 PLUG, Automatic Transmission Case Pipe

67/71	SIX (1/4")	17.518	2	G444691
67/71	SIX (1/8")	.....	1	315 0854
67/69	290 (1/4"–Except 30)	17.518	2	G444691
67/69	290 (1/8"–Except 30)	.....	1	315 0854
68/69	290 (30)	.....	3	315 0854
70/71	304	.....	1	315 0854
67/71	343–360–390–401	.....	3	315 0854

16.010–7 BREATHER, Automatic Transmission Case

67/71		.....	1	316 7560

16.010–8 PIN, Automatic Transmission Case Front Brake Band Anchor

67/70		.....	1	315 0859
71	SIX	.....	1	315 0859
71	304	.....	1	315 0859

16.010–9 STRUT ASSEMBLY, Transmission Front Brake Anchor

71	360–401	.....	1	321 1746

16.015–1 PAN, Automatic Transmission Oil

67/69	SIX (* 16–29)	.....	1	318 8605
69	SIX (* 16–31)	.....	1	319 8593
70/71	SIX	.....	1	319 8593
67/69	290 (Except 30)	.....	1	318 8605
68/69	290 (30)	.....	1	318 8604
70	304	.....	1	318 8605
71	304 (Except 01)	.....	1	319 8593
71	304 (01)	.....	1	318 8605
67/69	343 (* 16–27)	.....	1	318 8604
69	343 (* 16–28)	.....	1	448 5552
68/71	360–390–401	.....	1	448 5552

16.015–2 ATTACHING PARTS, Pan To Transmission Case

BOLT, Hexagon	67/71	SIX	9.007	15	400 0722
BOLT, Hexagon	67/69	290 (Except 30)	9.007	15	400 0722
BOLT, Hexagon	68/69	290 (30)	9.007	14	400 0722
BOLT, Hexagon	70/71	304	9.007	15	400 0722
BOLT, Hexagon	67/71	343–360–390–401	9.007	14	400 0722
STUD	67/71	SIX	10.470	2	317 6335
WASHER, Plain	67/71	SIX	17.814	2	G120392 NA

16.015–3 GASKET, Automatic Transmission Oil Pan

67/71	SIX	.....	1	316 4825
67/69	290 (Except 30)	.....	1	316 4825
68/69	290 (30)	.....	1	315 1074
70/71	304	.....	1	316 4825
67/71	343–360–390–401	.....	1	315 1074

Printed in U.S.A.

AUTOMATIC TRANSMISSION

16.020–1 TUBE, Automatic Transmission Oil Filler

67/69	SIX (* 16-29) ..... *(Use 317 4640)*	.....	1	317 2861	
69	SIX (* 16-31)	.....	1	319 7283	
70/71	SIX	.....	1	319 7283	
72	SIX (Except Heavy Duty-* 16-81)	.....	1	321 4029	
72	***258 (Heavy Duty-* 16-82)***	.....	1	321 8375	
67/69	290 (01)	.....	1	318 5688	
67/69	290 (LHD-Except 01-* 16-29)(Except 30-* 16-29)	.....	1	318 7161	
69	290 (Except 01-* 16-30)(Except 30-* 16-30)	.....	1	319 7259	
68/69	290 (30)	.....	1	318 7162	
67/69	***290 (RHD-10-80-* 16-29)***	.....	1	318 8506	
70/71	304 (Except 01)	.....	1	319 7259	
70/71	304 (01)	.....	1	318 5688	
72	304	.....	1	321 5490	
67/69	343-390 (LHD)	.....	1	318 7162	
70	360-390 (LHD)	.....	1	318 7162	
71	360-401 (Except 01)	.....	1	321 1483	
71	360 (01)	.....	1	319 8608	
72	360 (Except 01)	.....	1	321 5489	
72	360-401 (01-* 16-73)	.....	1	321 5488	
72	360-401 (* 16-74)	.....	1	321 7287	
72	***360 (Taxi)***	.....	1	321 7797	
67/71	***343-360 (RHD)***	.....	1	318 8507	

16.020–2 GAUGE, Automatic Transmission Oil Level (Incl. Dip Stick)(* 16-32)

67/69	SIX (* 16-29)	.....	1	319 1861
70/71	SIX	.....	1	319 7672
70/71	V8 (01)	.....	1	319 1862
67/69	290 (LHD-10-70-80-* 16-29)	.....	1	319 1862
69	290 (LHD-01)	.....	1	319 1862
68/69	290 (30)	.....	1	319 1863
67/69	***290 (RHD-* 16-29)***	.....	1	319 1864
70/71	304 (Except 01)	.....	1	319 7672
67/71	343-360-390-401 (LHD-Except 01)	.....	1	319 1863
72	WAT (* 16-73)	.....	1	321 5483
72	WAT (* 16-74)	.....	1	321 7326
67/69	***343 (RHD)***	.....	1	319 1865
70	***390 (RHD)***	.....	1	319 1865

16.020–3 BRACKET, Automatic Transmission Oil Filler Tube

67/69	SIX (LHD-* 16-29)	.....	1	318 4588
67/69	290 (01)	.....	1	318 5687
70/71	V8 (01)	.....	1	318 5687
67/69	V8 (LHD-Except 01-* 16-29)	.....	1	318 7164
70	360-390 (LHD-Except 01-* 16-47)	.....	1	318 7164
70	360-390 (* 16-48)	.....	1	321 1492
71	360-401 (Except 01)	.....	1	321 1492
72	V8 (WAT)	.....	1	321 5487
67/69	***SIX (RHD-* 16-29)***	.....	1	318 8514
67/69	***290-343 (RHD-10-80-* 16-29)***	.....	1	318 8508
70	***360 (RHD-80)***	.....	1	318 8508

16.020–3a ATTACHING PARTS, Bracket To Block

BOLT, Hexagon	69	SIX (* 16-29)	17.038	1	G180076	NA
BOLT, Hexagon	70/71	304 (10)(70)(80)	17.038	1	G180118	NA
***BOLT, Hexagon	***69/71***	***V8 (80-RHD)***	17.038	1	G180118	NA
SCREW, Tapping	71	SIX	17.671	1	400 1042	
SCREW, Tapping	72	WAT	15.320	1	400 1701	
WASHER, Lock	69	SIX (* 16-29)	17.820	1	G120382	
WASHER, Lock	70/	V8 (10)(70)(80)	17.820	1	G120382	
WASHER, Lock	71/	V8 (10)(70)(80)	17.820	1	G103321	NA
***WASHER, Lock	***69/71***	***V8 (80-RHD)***	17.820	1	G120382	

AUTOMATIC TRANSMISSION

16.020–4 GASKET, Automatic Transmission Oil Filler Tube

67/69			1	318 4697
70/71	304 (01)		1	318 4697
70/71	360–390–401		1	318 4697

16.020–5 "O" RING, Automatic Transmission Oil Filler Tube

69	10–30–70–80 (* 16–30 And * 16–31)		1	319 7260
70			1	319 7260
71	SIX		1	319 7260
71	304		1	319 7260
72	WAT		1	321 2885

16.020–6 PLUG, Automatic Transmission Oil Filler Tube Hole

70	199–232–304		1	448 8496

16.030–1 CONVERTER, Automatic Transmission

67/69	199		1	318 5454
70	199 (* 16–43)		1	318 5456
70	199 (* 16–44)		1	318 5454
67	232 (01)		1	318 5454
68/69	232 (01–LOCT–Except Rogue–* 16–29)		1	318 5454
68/69	232 (Rogue)		1	318 5456
67	232 (10–50–80)		1	318 5454
68/69	232 (10–80–LOCT–* 16–29)		1	318 5456
68	232 (70–* 16–29)		1	318 5454
69	232 (70–LOCT–* 16–29)		1	318 5454
69	232 (WOCT–Except Rogue–* 16–31)		1	319 8160
70	232 (LOCT)		1	318 5456
70	232 (WOCT)		1	319 8160
71	232 (LOCT)	***(Use 318 5453)***	1	~~321~~ 3712
71	258 (LOCT)		1	318 5453
71	232 (WOCT)	***(Use 321 3946)***	1	~~321 1466~~
71	258 (WOCT)		1	321 3946
72	232–258		1	321 3745
67/69	290 (Except 30–* 16–29)		1	318 1892
69	290 (Except 30–* 16–30)		1	319 5697
68/69	290 (30)		1	319 2340
70	304		1	319 5697
71	304		1	321 1089
72	304		1	321 3745
67/71	343–360		1	318 4783
72	360		1	321 3746
68/69	390		1	319 1085
70	390 (E/MACHINE)		1	319 1085
70	390 (MACHINE–* 16–37)		1	319 1085
70	390 (MACHINE–* 16–38)	***(Ord. 319 1085, 319 6874)***	1	321 0064
71	401		1	319 1085
72	401		1	321 3746
72	***258-360 (Heavy Duty-10)***		1	321 3746

16.035–1 PLATE, Automatic Transmission Converter Drive

67/71	SIX		1	319 1958
72	SIX		1	321 4087
67/69	290 (Except 30)		1	318 4502
68/69	290 (30)		1	319 2342
70/71	304		1	319 6876
72	304		1	321 4088

Printed In U.S.A.

67/69	343	.....	1	318 1750	
70/71	360	.....	1	319 6874	
72	360	.....	1	321 4089	
68/69	390	.....	1	319 1125	
70	390 (E/MACHINE)	.....	1	319 6874	
70	390 (MACHINE-* 16-37)	.....	1	319 6874	
70	390 (MACHINE-* 16-38)	.....	1	321 0063	
71	401	.....	1	321 2351	
72	401	.....	1	321 4090	

16.035-2 ATTACHING PARTS, Plate To Converter

BOLT, Hexagon	67/71	SIX	.....	6	315 1482	
BOLT, Hexagon	67/69	290 (Except 30)	.....	6	315 1482	
BOLT, Hexagon	70/71	304	.....	6	315 1482	
BOLT, Hexagon	72		.....	4	321 4097	
NUT, Lock	68/69	290 (30)	17.416	4	G451010	NA
NUT, Lock	67/71	343-360-390-401	17.416	4	G451010	NA
WASHER, Plain	67/71	SIX	17.814	6	400 1303	
WASHER, Plain	67/69	290 (Except 30)	17.814	6	400 1303	
WASHER, Plain	70/71	304	17.814	6	400 1303	

16.035-3 ATTACHING PARTS, Plate To Crankshaft

BOLT, Hexagon	67/	.....	.....	6	315 1407

16.035-4 PLATE, Automatic Transmission Converter Drive Reinforcement

67/71	.....	.....	1	315 2968
72	.....	.....	1	321 4094

16.040-1 HOUSING, Automatic Transmission Converter

67/70	SIX	.....	1	318 5760
71	SIX (LOCT)	.....	1	318 5760
71	SIX (WOCT)	.....	1	321 1118
67/69	290 (Except 30)	.....	1	318 6349
68/69	290 (30)	.....	1	318 0008
70/71	304	.....	1	318 6349
67/71	343-360-390-401	.....	1	318 0008

16.040-2 ATTACHING PARTS, Converter Housing To Engine

BOLT, Hexagon	67/69	(1-1/4" Long) SIX	17.038	3	G179841	NA
BOLT, Hexagon	67/71	(2-1/2" Long) SIX	17.038	2	G179868	NA
BOLT, Hexagon	69/71	(1-3/16" Long) SIX	16.010	3	400 1884	
BOLT, Hexagon	67/69	(2-1/4" Long) V8	17.038	4	G179848	NA
BOLT, Hexagon	67/71	(2-3/4" Long) V8	17.038	2	G179869	NA
BOLT, Hexagon	69/71	(2-3/16" Long) V8	16.010	4	400 1885	
WASHER, Plain	67/71	(13/32" I.D.) SIX	17.814	3	400 1101	
WASHER, Plain	67/71	(15/32" I.D.) SIX	17.814	1	400 1156	
WASHER, Plain	67/71	(15/32" I.D.) V8	17.814	2	400 1156	
WASHER, Lock	67/71	(3/8" I.D.) SIX	17.820	3	G103321	NA
WASHER, Lock	67/71	(3/8" I.D.) V8	17.820	4	G103321	NA
WASHER, Lock	67/71	(7/16" I.D.)	17.820	2	G103328	NA

16.040-3 ATTACHING PARTS, Converter Housing To Exhaust Pipe Bracket

BOLT, Hexagon	67/71	SIX	17.038	1	G181377	NA
WASHER, Lock	67/71	SIX	17.820	1	G103321	NA
NUT, Hexagon	67/71	SIX	17.406	1	G103026	NA

16.040–4 COVER, Automatic Transmission Converter Housing

67/71	SIX...(Incl. Pads)	203	.....	1	317 8898

16.040–5 ATTACHING PARTS, Cover To Converter Housing

SCREW, Tapping.....	67/	SIX	17.670	3	G448423

16.040–6 PAD, Automatic Transmission Converter Housing Front Cover

67/71	(7/8" x 7/8") SIX	7.014	1	317 5385
67/71	(2-1/2" x 6-1/2") SIX	.....	1	317 8897

16.042–1 SPACER, Automatic Transmission Converter Housing To Engine

72		.....	1	321 3743
67/69	SIX	.....	1	317 2627
70/71	SIX	.....	1	319 5265
67/71	V8 (LHD)	.....	1	318 4268
67/69	***290-343 (RHD)***	.....	1	318 7972
70	***304-360 (RHD)***	.....	1	318 7972

16.042–2 ATTACHING PARTS, Spacer To Engine

SCREW, Machine.....	67/69	SIX	5.065	2	316 0330
WASHER, Lock	67/69	SIX	17.824	2	G138538 NA

16.042–3 ATTACHING PARTS, Spacer To Converter Housing

SCREW, Machine.....	67/69	(5/16"-18 x 5/8") V8	17.626	3	400 0987
SCREW, Machine.....	69	(5/16"-18 x 3/4") V8 (10)(80)...(Incl. Washer).....	1.151	3	316 2258
SCREW, Machine.....	70/71	V8 ...(Incl. Washer)	1.151	2	316 2258
SCREW, Machine.....	72	(5/16"-18 x 3/4") SIX...(Incl. Washer)	1.151	3	316 2258
SCREW, Machine.....	72	(5/16"-18 x 3/4") V8...(Incl. Washer)	1.151	4	316 2258
WASHER, Lock	67/69	V8	17.820	3	G120214

16.042–3a ATTACHING PARTS, Case To Engine

BOLT, Hexagon	72		5.054	2	400 4370

16.042–4 COVER, Automatic Transmission Converter Housing Spacer

67/71	V8	.....	1	318 4267
72		.....	1	321 3744

16.042–5 ATTACHING PARTS, Cover To Spacer

SCREW, Tapping.....	67/71	V8	17.670	2	G455404 NA
BOLT, Hexagon	72	SIX	5.054	3	400 1885
BOLT, Hexagon	72	V8	5.054	4	400 1885

16.045–1 SCREEN, Automatic Transmission Oil (On Valve Body)

67	SIX	.....	1	318 8896
68/70	199	.....	1	317 9973
68/71	232-258	.....	1	318 8896
67/69	290 (Except 30)	.....	1	318 8896
68/69	290 (30)	.....	1	318 6706
70/71	304	.....	1	318 8896
67/71	343-360-390-401	.....	1	318 6706

16.045–2 ATTACHING PARTS, Screen To Valve Body

SCREW, Machine.....	67/71	SIX	17.602	4	G453907 NA
SCREW, Machine.....	67/69	290 (Except 30)	17.602	4	G453907 NA
SCREW, Machine.....	68/69	290 (30)	17.596	3	G435141 NA
SCREW, Machine.....	70/71	304	17.602	4	G453907 NA
SCREW, Machine.....	67/71	343-360-390-401	17.596	3	G435141 NA

Printed in U.S.A.

AUTOMATIC TRANSMISSION

16.045–3 GASKET, Automatic Transmission Oil Screen

68/71	232-258	.....	1	448 5950
68/69	290 (Except 30)	.....	1	448 5950
70/71	304	.....	1	448 5950

16.045–4 MAGNET, Automatic Transmission Oil Screen

67/71		.....	1	315 8610

16.060–1 BODY, Automatic Transmission Front Servo

67/70	SIX (Less Self Adjusting Servo)	.....	1	317 5950
67/71	SIX (Self Adjusting Servo)	.....	1	319 0594
67/69	290 (Less Self Adjusting Servo-Except 30)	.....	1	317 5950
67/69	290 (Self Adjusting Servo-Except 30)	.....	1	319 0594
68/69	290 (30)	.....	1	319 1705
70/71	304	.....	1	319 0594
67/69	343 (Less Self Adjusting Servo)	.....	1	318 7751
67/68	343 (Self Adjusting Servo)	.....	1	319 1705
69	343 (Self Adjusting Servo-* 16-27)	.....	1	319 1705
69	343 (Self Adjusting Servo-* 16-28)	.....	1	319 1998
68/71	360-390-401	.....	1	319 1998

16.060–2 ATTACHING PARTS, Body To Transmission Case

BOLT, Hexagon	67/71	SIX	17.038	1	G179818 NA
BOLT, Hexagon	67/69	290 (Except 30)	17.038	1	G179818 NA
BOLT, Hexagon	68/69	290 (30)	17.038	1	G179841 NA
BOLT, Hexagon	70/71	304	17.038	1	G179818 NA
BOLT, Hexagon	67/71	343-360-390-401	17.038	1	G179841 NA
WASHER, Lock	67/71	SIX	17.820	1	G103320 NA
WASHER, Lock	67/69	290 (Except 30)	17.820	1	G103320 NA
WASHER, Lock	68/69	290 (30)	17.820	1	G103321 NA
WASHER, Lock	70/71	304	17.820	1	G103320 NA
WASHER, Lock	70/71	SIX	17.820	1	G103321 NA
WASHER, Lock	70/71	304	17.820	1	G103321 NA
WASHER, Lock	67/71	343-360-390-401	17.820	1	G103321 NA

16.060–3 PISTON, Automatic Transmission Front Servo

67/71	SIX	.....	1	316 4842
67/69	290 (Except 30)	.....	1	316 4842
68/69	290 (30) 196	.....	1	315 3484
70/71	304	.....	1	316 4842
67/68	343...(Incl. Pin) 196	.....	1	315 3484
69	343 (* 16-27)...(Incl. Pin) 196	.....	1	315 3484
69	343 (* 16-28) 196	.....	1	448 5551
68/71	360-390 196	.....	1	448 5551
71	401 (* 16-50)	.....	1	812 0098
71	401 (* 16-51) 196	.....	1	448 5551

16.060–4 SPRING, Automatic Transmission Front Servo

70/71	SIX	.....	1	315 4115
67/69	199	.....	1	315 4115
67/69	232 (01)	.....	1	315 4115
67/69	232 (LHD-Except 01)	.....	1	315 2176
67/69	***232 10-80 (RHD)***	.....	1	315 4115
67/69	290 (Except 30)	.....	1	316 1206
68/69	290 (30)	.....	1	315 4115

Printed in U.S.A.

70/71	304	.....	1	316 1206
67/68	343-390	.....	1	315 2176
69	343 (* 16-27)	.....	1	315 2176
69	343 (* 16-28)	.....	1	319 6579
69/71	360-390-401	.....	1	319 6579

16.060-5 SLEEVE, Automatic Transmission Front Servo

67/71	SIX	.....	1	316 4822
67/69	290 (Except 30)	.....	1	316 4822
68/69	290 (30)	.....	1	315 3488
70/71	304	.....	1	316 4822
67/68	343	.....	1	315 3488
69	343 (* 16-27)	.....	1	315 3488
69	343 (* 16-28)	.....	1	319 1942
68/71	360-390-401	.....	1	319 1942

16.060-6 LEVER, Automatic Transmission Front Servo

67/71	SIX	.....	1	316 5754
67/69	290 (Except 30)	.....	1	316 5754
68/69	290 (30)	.....	1	319 1754
70/71	304	.....	1	316 5754
67/69	343 (Less Self Adjusting Servo)	.....	1	315 1051
67/68	343 (Self Adjusting Servo)	.....	1	319 1754
69	343 (Self Adjusting Servo-* 16-27)	.....	1	319 1754
69	343 (Self Adjusting Servo-* 16-28)	.....	1	319 1941
68/71	360-390-401	.....	1	319 1941

16.060-7 PIN, Automatic Transmission Front Servo Pivot

67/71		.....	1	317 5951

16.060-8 SCREW, Automatic Transmission Front Servo Adjusting

67	SIX (Less Self Adjusting Servo)	.....	1	316 5020
67/71	SIX (Self Adjusting Servo)	.....	1	319 0591
67/69	290 (Less Self Adjusting Servo-Except 30)	.....	1	316 5020
67/69	290 (Self Adjusting Servo-Except 30)	.....	1	319 0591
68/69	290 (30)	.....	1	319 1752
70/71	304	.....	1	319 0591
67/69	343 (Less Self Adjusting Servo)	.....	1	315 1044
67/69	343 (Self Adjusting Servo)	.....	1	319 1752
68/71	360-390-401	.....	1	319 1752

16.060-9 NUT, Automatic Transmission Front Servo Adjusting Screw

67/69	(Less Self Adjusting Servo)	17.412	1	G114503 NA

16.060-10 PLATE, Automatic Transmission Front Servo Self Adjusting Cam

67/69	SIX	.....	1	319 0763
70/71	SIX	.....	1	319 8566
67/69	290 (Except 30)	.....	1	319 0763
68/69	290 (30)	.....	1	319 1755
70/71	304	.....	1	319 8566
67/71	343-360-390-401	.....	1	319 1755

16.060-11 ATTACHING PARTS, Plate To Servo Body

SCREW, Machine 67/71		17.626	2	G9415663 NA

AUTOMATIC TRANSMISSION

16.060–12 SPRING, Automatic Transmission Front Servo Self Adjusting Screw

67/71	SIX	.....	1	319 0593	
67/69	290 (Except 30)	.....	1	319 0593	
68/69	290 (30)	.....	1	319 1759	
70/71	304	.....	1	319 0593	
67/71	343-360-390-401	.....	1	319 1759	

16.060–13 PIN, Automatic Transmission Front Servo Piston

67/71	199-232-290-304-343-401 (2-7/16" Long)	.....	1	315 1039	
68/71	343-360-390-401 (2-11/32" Long)	.....	1	319 1978	

16.060–14 "O" RING, Automatic Transmission Front Servo Piston (Rear)

67/71	SIX (2-11/64" I. D.)	.....	1	316 5002	
67/69	290 (2-11/64" I. D. -Except 30)	.....	1	316 5002	
68/69	290 (2-3/32" I. D. -30)	.....	1	315 1047	
70/71	304	.....	1	316 5002	
67/71	343-360-390-401 (2-3/32" I. D.)	.....	1	315 1047	

16.060–15 "O" RING, Automatic Transmission Front Servo Piston (Front)

67/71	SIX (1-27/64" I. D.)	.....	1	316 5003	
67/69	290 (1-27/64" I. D. -Except 30)	.....	1	316 5003	
68/69	290 (1-11/64" I. D. -30)	.....	1	315 3486	
70/71	304	.....	1	316 5003	
67/71	343-360-390 (1-11/64" I. D.)	.....	1	315 3486	
71	401 (* 16-50)	.....	1	315 2175	
71	401 (* 16-51)	.....	1	315 3486	

16.060–16 "O" RING, Automatic Transmission Front Servo Sleeve

67/71	SIX (1-27/32" I. D.)	.....	1	316 5001	
67/69	290 (1-27/32" I. D. -Except 30)	.....	1	316 5001	
68/69	290 (1-57/64" I. D. -30)	.....	1	315 1049	
70/71	304	.....	1	316 5001	
67/71	343-360-390-401 (1-57/64" I. D.)	.....	1	315 1049	

16.060–17 "O" RING, Automatic Transmission Front Servo Release Piston

68/71	360-390-401 (1-1/2" I. D.)	.....	1	318 8853	
69	343 (* 16-28)	.....	1	318 8853	

16.060–18 RING, Automatic Transmission Front Servo Piston Snap

67/71		.....	1	315 1048	

16.060–19 PISTON, Automatic Transmission Front Servo Release

68/71	360-390-401	.....	1	319 3314	
69	343 (* 16-28)	.....	1	319 3314	

16.060–20 ATTACHING PARTS, Piston To Piston

SCREW, Machine	69	343 (* 16-28)	.....	1	448 5495	
SCREW, Machine	68/71	360-390-401	.....	1	448 5495	
WASHER, Plain	69	343 (* 16-28)	17.814	1	G103338	NA
WASHER, Plain	68/71	360-390-401	17.814	1	G103338	NA

AUTOMATIC TRANSMISSION

16.060–21 TUBE, Automatic Transmission Front Servo Release

67/71	SIX	.....	1	316 4852
67/69	290 (Except 30)	.....	1	316 4852
68/69	290 (30)	.....	1	318 6736
70/71	304	.....	1	316 4852
67/71	343-360-390-401	.....	1	318 6736

16.060–22 TUBE, Automatic Transmission Front Servo Apply

67/71	SIX	.....	1	316 4977
67/69	290 (Except 30)	.....	1	316 4977
68/69	290 (30)	.....	1	318 6736
70/71	304	.....	1	316 4977
67/71	343-360-390-401	.....	1	318 6736

16.070–1 BODY, Transmission Rear Servo

67/71	SIX	.....	1	318 5554
67/69	290 (Except 30)	.....	1	318 5554
68/69	290 (30)	.....	1	318 6592
70/71	304	.....	1	318 5554
67/69	343 (* 16-27)	.....	1	318 6592
69	343 (* 16-28)	.....	1	448 7925
70/71	360	.....	1	448 7925
68/71	390-401	.....	1	319 3313

16.070–2 ATTACHING PARTS, Body To Transmission Case

SCREW, Machine	67/71	SIX (1-1/2" Long-Nylok)	.....	1	318 9152
SCREW, Machine	67/71	SIX (2" Long)	.....	1	316 4336
SCREW, Machine	67/69	290 (1-1/2" Long-Nylok-Except 30)	.....	1	318 9152
SCREW, Machine	67/69	290 (2" Long-Except 30)	.....	1	316 4336
SCREW, Machine	68/69	290 (1-7/8" Long-30)	.....	1	315 1029
SCREW, Machine	68/69	290 (2-1/2" Long-30)	.....	1	315 1028
SCREW, Machine	70	304 (1-1/2" Long-Nylok)	.....	1	318 9152
SCREW, Machine	70	304 (2" Long)	.....	1	316 4336
SCREW, Machine	67/71	343-360-390-401 (1-7/8" Long)	.....	1	315 1029
SCREW, Machine	67/71	343-360-390-401 (2" Long)	.....	1	315 1028
WASHER, Lock	67/71	SIX	17.820	2	G103321 NA
WASHER, Lock	67/69	290 (Except 30)	17.820	2	G103321 NA
WASHER, Lock	68/69	290 (30)	17.820	2	G103322 NA
WASHER, Lock	70/71	304	17.820	2	G103321 NA
WASHER, Lock	67/71	343-360-390-401	17.820	2	G103322 NA

16.070–3 LEVER, Automatic Transmission Rear Servo

67/71	SIX	.....	1	316 4828
67/69	290 (Except 30)	.....	1	316 4828
68/69	290 (30)	.....	1	315 1017
70/71	304	.....	1	316 4828
67/69	343	.....	1	315 1017
68/70	360-390	.....	1	319 3316
71	360	.....	1	315 1017
71	401	.....	1	319 3316

16.070–4 PIN, Automatic Transmission Rear Servo Pivot

67/71	SIX	.....	1	317 3550
67/69	290 (Except 30)	.....	1	317 3550
68/69	290 (30)	.....	1	315 3855
70/71	304	.....	1	317 3550
67/71	343-360-390-401	.....	1	315 3855

AUTOMATIC TRANSMISSION

16.070–5 PIN, Automatic Transmission Rear Servo Lever Roll

68/69	290 (30)	.....	1	315 1018
67/71	343-360-390-401	.....	1	315 1018

16.070–6 PISTON, Automatic Transmission Rear Servo

67/71	SIX	.....	1	317 3555
67/69	290 (Except 30)	.....	1	317 3555
68/69	290 (30)	.....	1	315 8717
70/71	304	.....	1	317 3555
67/71	343-360	.....	1	315 8717
68/71	390-401	.....	1	319 3323

16.070–7 SPRING, Automatic Transmission Rear Servo Piston

67/71	SIX	.....	1	317 3554
67/69	290 (Except 30)	.....	1	317 3554
68/69	290 (30)	.....	1	315 8718
70/71	304	.....	1	317 3554
67/71	343-360	.....	1	315 8718
68/71	390-401	.....	1	319 3327

16.070–8 RETAINER, Automatic Transmission Rear Servo Piston

68/69	290 (30)	.....	1	318 6590
67/71	343-360	.....	1	318 6590
68/71	390-401	.....	1	319 3326

16.070–9 RING, Automatic Transmission Rear Servo Piston Retainer Snap

68/69	290 (30)	.....	1	315 1024
67/71	343-360	.....	1	315 1024
68/71	390-401	.....	1	448 5696

16.070–10 "O" RING, Automatic Transmission Rear Servo Piston

67/71	SIX	.....	1	316 5014
68/71	290 (Except 30)	.....	1	316 5014
68/69	290 (30)	.....	1	315 1015
70/71	304	.....	1	316 5014
67/71	343-360	.....	1	315 1015
68/71	390-401	.....	1	448 5617

16.070–11 BEARING, Automatic Transmission Rear Servo Lever Needle

68/71	390-401	.....	29	315 1026

16.070–12 WASHER, Automatic Transmission Rear Servo Lever

68/71	390-401	.....	2	315 1027

16.070–13 SCREW, Automatic Transmission Rear Servo Adjusting

67/71	SIX	.....	1	317 5708
67/69	290 (Except 30)	.....	1	317 5708
68/69	290 (30)	.....	1	315 0853
70/71	304	.....	1	317 5708
67/71	343-360-390-401	.....	1	315 0853

Printed in U.S.A.

AUTOMATIC TRANSMISSION

16.070–14 NUT, Automatic Transmission Rear Servo Adjusting Screw

67/71	SIX	.....	1	317 5709
67/69	290 (Except 30)	.....	1	317 5709
68/69	290 (30)	.....	1	315 0852
70/71	304	.....	1	317 5709
67/71	343-360-390-401	.....	1	315 0852

16.070–15 WASHER, Automatic Transmission Rear Servo Adjusting Screw Lock

67/71	SIX	17.820	1	G112724 NA
67/69	290 (Except 30)	17.820	1	G112724 NA
70/71	304	17.820	1	G112724 NA

16.070–16 TUBE, Automatic Transmission Rear Servo

67/71	SIX	.....	1	316 4865
67/69	290 (Except 30)	.....	1	316 4865
70/71	304	.....	1	316 4865

16.080–1 PUMP, Automatic Transmission Front Oil (Complete)

67/69	SIX (* 16-29)	198	.....	1	318 5564
69	199 (* 16-31)	198	.....	1	318 5564
69	232 (LOCT-* 16-31)	198	.....	1	318 5564
69	232 (WOTC-* 16-31)	198	.....	1	319 8588
70	199	198	.....	1	318 5564
70/71	232 (LOCT)	198	.....	1	318 5564
70/71	232 (WOCT)	198	.....	1	319 8588
67/69	290 (Except 30-* 16-29)	198	.....	1	318 5564
69	290 (Except 30-* 16-30)	198	.....	1	319 8588
68/69	290 (30)	206	.....	1	318 7305
71	258	198	.....	1	319 8588
70/71	304	198	.....	1	319 8588
67/71	343-360	206	.....	1	318 7305
68/71	390-401	206	.....	1	319 3807

16.080–2 ATTACHING PARTS, Pump To Transmission Case

BOLT, Hexagon	67/71	SIX	17.038	6	G179817 NA
BOLT, Hexagon	67/69	290 (Except 30)	17.038	6	G179817 NA
BOLT, Hexagon	68/69	290 (30)	17.038	4	G179826 NA
BOLT, Hexagon	70/71	304	17.038	6	G179817 NA
BOLT, Hexagon	67/71	343-360-390-401	17.038	4	G179826 NA
WASHER, Lock	67/71	SIX	17.820	6	G103320 NA
WASHER, Lock	67/69	290 (Except 30)	17.820	6	G103320 NA
WASHER, Lock	70/71	304	17.820	6	G103320 NA

16.080–3 ATTACHING PARTS, Pump Converter To Pump Body

BOLT, Hexagon	67/71	SIX	17.038	5	G179817 NA
BOLT, Hexagon	67/69	290 (Except 30)	17.038	5	G179817 NA
BOLT, Hexagon	70/71	304	17.038	3	G179817 NA
SCREW, Machine	67/71	SIX	17.602	1	G190601 NA
SCREW, Machine	67/69	290 (Except 30)	17.602	1	G190601 NA
SCREW, Machine	68/69	290 (30)	17.584	1	G110533 NA
SCREW, Machine	70/71	304	17.602	1	G190601 NA
SCREW, Machine	67/71	343-360-390	17.584	1	G110533 NA
WASHER, Lock	67/71	SIX	17.820	5	G103320 NA
WASHER, Lock	67/69	290 (Except 30)	17.820	5	G103320 NA
WASHER, Lock	70/71	304	17.820	3	G103320 NA

Printed in U.S.A.

AUTOMATIC TRANSMISSION

16.080–4 BUSHING, Automatic Transmission Front Oil Pump

67/71	SIX	.....	1	320 5306
67/69	290 (Except 30)	.....	1	320 5306
68/69	290 (30)	.....	1	320 6256
70/71	304	.....	1	320 5306
67/71	343-360-390-401	.....	1	320 6256

16.080–5 SEAL, Automatic Transmission Front Oil Pump

67/71	SIX	.....	1	318 3886
67/69	290 (Except 30)	.....	1	318 3886
68/69	290 (30)	.....	1	318 3887
70/71	304	.....	1	318 3886
67/71	343-360-390-401	.....	1	318 3887

16.080–6 "O" RING, Automatic Transmission Front Oil Pump

67/71	SIX	.....	1	316 5004
67/69	290 (Except 30)	.....	1	316 5004
70/71	304	.....	1	316 5004

16.080–7 GASKET, Automatic Transmission Front Oil Pump

67/71	SIX	.....	1	316 4869
67/69	290 (Except 30)	.....	1	316 4869
68/69	290 (30)	.....	1	315 1009
70/71	304	.....	1	316 4869
67/71	343-360-390-401	.....	1	315 1009

16.080–8 TUBE, Automatic Transmission Front Oil Pump Converter Outlet

67/71	SIX	.....	1	316 5058
67/69	290 (Except 30)	.....	1	316 5058
70/71	304	.....	1	316 5058

16.080–9 TUBE, Automatic Transmission Front Oil Pump Converter Inlet

67/71	SIX (LOCT)	.....	1	316 5058
67/71	SIX (WOCT)	.....	1	317 9169
67/69	290 (Except 30)	.....	1	317 9169
70/71	304	.....	1	317 9169

16.080–10 TUBE, Automatic Transmission Front Oil Pump Pressure

67/71	SIX	.....	1	316 5059
67/69	290 (Except 30)	.....	1	316 5059
70/71	304	.....	1	316 5059

16.080–11 TUBE, Automatic Transmission Front Oil Pump Suction

67/71	SIX	.....	1	316 7570
67/69	290 (Except 30)	.....	1	316 7570
70/71	304	.....	1	316 7570

16.080–12 "O" RING, Automatic Transmission Front Oil Pump Suction Tube

67/71	SIX	.....	1	316 5005
67/69	290 (Except 30)	.....	1	316 5005
70/71	304	.....	1	316 5005

Printed in U.S.A.

AUTOMATIC TRANSMISSION

16.070–14 NUT, Automatic Transmission Rear Servo Adjusting Screw

67/71	SIX	.....	1	317 5709	
67/69	290 (Except 30)	.....	1	317 5709	
68/69	290 (30)	.....	1	315 0852	
70/71	304	.....	1	317 5709	
67/71	343–360–390–401	.....	1	315 0852	

16.070–15 WASHER, Automatic Transmission Rear Servo Adjusting Screw Lock

67/71	SIX	17.820	1	G112724	NA
67/69	290 (Except 30)	17.820	1	G112724	NA
70/71	304	17.820	1	G112724	NA

16.070–16 TUBE, Automatic Transmission Rear Servo

67/71	SIX	.....	1	316 4865	
67/69	290 (Except 30)	.....	1	316 4865	
70/71	304	.....	1	316 4865	

16.080–1 PUMP, Automatic Transmission Front Oil (Complete)

67/69	SIX (* 16-29)	198	.....	1	318 5564	
69	199 (* 16-31)	198	.....	1	318 5564	
69	232 (LOCT-* 16-31)	198	.....	1	318 5564	
69	232 (WOTC-* 16-31)	198	.....	1	319 8588	
70	199	198	.....	1	318 5564	
70/71	232 (LOCT)	198	.....	1	318 5564	
70/71	232 (WOCT)	198	.....	1	319 8588	
67/69	290 (Except 30-* 16-29)	198	.....	1	318 5564	
69	290 (Except 30-* 16-30)	198	.....	1	319 8588	
68/69	290 (30)	206	.....	1	318 7305	
71	258	198	.....	1	319 8588	
70/71	304	198	.....	1	319 8588	
67/71	343–360	206	.....	1	318 7305	
68/71	390–401	206	.....	1	319 3807	

16.080–2 ATTACHING PARTS, Pump To Transmission Case

BOLT, Hexagon	67/71	SIX	17.038	6	G179817	NA
BOLT, Hexagon	67/69	290 (Except 30)	17.038	6	G179817	NA
BOLT, Hexagon	68/69	290 (30)	17.038	4	G179826	NA
BOLT, Hexagon	70/71	304	17.038	6	G179817	NA
BOLT, Hexagon	67/71	343–360–390–401	17.038	4	G179826	NA
WASHER, Lock	67/71	SIX	17.820	6	G103320	NA
WASHER, Lock	67/69	290 (Except 30)	17.820	6	G103320	NA
WASHER, Lock	70/71	304	17.820	6	G103320	NA

16.080–3 ATTACHING PARTS, Pump Converter To Pump Body

BOLT, Hexagon	67/71	SIX	17.038	5	G179817	NA
BOLT, Hexagon	67/69	290 (Except 30)	17.038	5	G179817	NA
BOLT, Hexagon	70/71	304	17.038	3	G179817	NA
SCREW, Machine	67/71	SIX	17.602	1	G190601	NA
SCREW, Machine	67/69	290 (Except 30)	17.602	1	G190601	NA
SCREW, Machine	68/69	290 (30)	17.584	1	G110533	NA
SCREW, Machine	70/71	304	17.602	1	G190601	NA
SCREW, Machine	67/71	343–360–390	17.584	1	G110533	NA
WASHER, Lock	67/71	SIX	17.820	5	G103320	NA
WASHER, Lock	67/69	290 (Except 30)	17.820	5	G103320	NA
WASHER, Lock	70/71	304	17.820	3	G103320	NA

Printed in U.S.A.

AUTOMATIC TRANSMISSION

16.080–4 BUSHING, Automatic Transmission Front Oil Pump

67/71	SIX	.....	1	320 5306
67/69	290 (Except 30)	.....	1	320 5306
68/69	290 (30)	.....	1	320 6256
70/71	304	.....	1	320 5306
67/71	343-360-390-401	.....	1	320 6256

16.080–5 SEAL, Automatic Transmission Front Oil Pump

67/71	SIX	.....	1	318 3886
67/69	290 (Except 30)	.....	1	318 3886
68/69	290 (30)	.....	1	318 3887
70/71	304	.....	1	318 3886
67/71	343-360-390-401	.....	1	318 3887

16.080–6 "O" RING, Automatic Transmission Front Oil Pump

67/71	SIX	.....	1	316 5004
67/69	290 (Except 30)	.....	1	316 5004
70/71	304	.....	1	316 5004

16.080–7 GASKET, Automatic Transmission Front Oil Pump

67/71	SIX	.....	1	316 4869
67/69	290 (Except 30)	.....	1	316 4869
68/69	290 (30)	.....	1	315 1009
70/71	304	.....	1	316 4869
67/71	343-360-390-401	.....	1	315 1009

16.080–8 TUBE, Automatic Transmission Front Oil Pump Converter Outlet

67/71	SIX	.....	1	316 5058
67/69	290 (Except 30)	.....	1	316 5058
70/71	304	.....	1	316 5058

16.080–9 TUBE, Automatic Transmission Front Oil Pump Converter Inlet

67/71	SIX (LOCT)	.....	1	316 5058
67/71	SIX (WOCT)	.....	1	317 9169
67/69	290 (Except 30)	.....	1	317 9169
70/71	304	.....	1	317 9169

16.080–10 TUBE, Automatic Transmission Front Oil Pump Pressure

67/71	SIX	.....	1	316 5059
67/69	290 (Except 30)	.....	1	316 5059
70/71	304	.....	1	316 5059

16.080–11 TUBE, Automatic Transmission Front Oil Pump Suction

67/71	SIX	.....	1	316 7570
67/69	290 (Except 30)	.....	1	316 7570
70/71	304	.....	1	316 7570

16.080–12 "O" RING, Automatic Transmission Front Oil Pump Suction Tube

67/71	SIX	.....	1	316 5005
67/69	290 (Except 30)	.....	1	316 5005
70/71	304	.....	1	316 5005

Printed in U.S.A.

AUTOMATIC TRANSMISSION

16.080–13 BUSHING, Automatic Transmission Front Oil Pump (Rear)

67/71	SIX	.....	1	320 5307
67/69	290 (Except 30)	.....	1	320 5307
70/71	304	.....	1	320 5307

16.085–1 GOVERNOR, Automatic Transmission (Less Sleeve)

67/70	199	204	.....	1	320 8331
67/69	232 (Except Roque)	204	.....	1	320 8330
68/69	232 (Roque–* 16–29)	204	.....	1	320 8264
69	232 (Roque–* 16–31)	204	.....	1	320 8330
70/71	232 (* 16–58)	204	.....	1	320 8330
70	232 (* 16–59)	204	.....	1	448 7792
71	232 (LOCT)	204	.....	1	320 8264
71	232 (WOCT–* 16–60)	204	.....	1	448 7792
71	258	204	.....	1	320 8264
67/69	290 (Except 30–* 16–29)	204	.....	1	320 8264
68/69	290 (30–* 16–29)	204	.....	1	320 4636
69	290 (* 16–30)	204	.....	1	448 7792
70/71	304	204	.....	1	448 7792
67/68	343–390	204	.....	1	320 4636
69/71	343–360	204	.....	1	448 6766
69/70	390		.....	1	448 6884
71	401 (* 16–51)		.....	1	812 0092
71	401 (10–* 16–50)		.....	1	448 9288

16.085–2 ATTACHING PARTS, Governor To Sleeve

BOLT, Hexagon	67/71	SIX	17.038	2	G179800
BOLT, Hexagon	67/69	290 (Except 30)	17.038	2	G179800
BOLT, Hexagon	68/69	290 (30)	17.038	2	G179801
BOLT, Hexagon	70/71	304	17.038	2	G179800
BOLT, Hexagon	67/71	343–360–390	17.038	2	G179801
WASHER, Lock	67/71	SIX ..... *(Use G120380)*	17.820	1	G113114 NA
WASHER, Lock	70/71	304 ..... *(Use G120380)*	17.820	1	G113114 NA

16.085–3 RETAINER, Automatic Transmission Governor Spring

67/71	.....	.....	1	315 0971

16.085–4 SLEEVE, Automatic Transmission Governor

67/71	SIX	.....	1	316 4898
67/69	290 (Except 30)	.....	1	316 4898
68/69	290 (30)	.....	1	320 2912
70/71	304	.....	1	316 4898
67/71	343–360–390–401	.....	1	320 2912

16.085–5 RING, Automatic Transmission Governor Snap

67/71	SIX	.....	1	316 5018
67/69	290 (Except 30)	.....	1	316 5018
68/69	290 (30)	.....	1	315 0979
70/71	304	.....	1	316 5018
67/71	343–360–390–401	.....	1	315 0979

16.085–6 KEY, Automatic Transmission Governor

67/69	..... *(Use 321 3666)*	.....	1	319 7130

AUTOMATIC TRANSMISSION

16.085–7 BALL, Automatic Transmission Governor

70/71		17.018	1	G147485

16.090–1 PAWL, Automatic Transmission Parking Brake

67/70	SIX (* 16-45)	.....	1	316 4844
70	SIX (* 16-46)	.....	1	321 1425
71	SIX	.....	1	321 1425
67/69	290 (Except 30)	.....	1	316 4844
68/69	290 (30)	.....	1	315 1171
70	304 (* 16-45)	.....	1	316 4844
70	304 (* 16-46)	.....	1	321 1425
71	304	.....	1	321 1425
67/71	343-360-390-401	.....	1	315 1171

16.090–2 LINK, Automatic Transmission Parking Brake Toggle

67/71		.....	1	315 1176

16.090–3 PIN, Automatic Transmission Parking Brake Toggle Link

67/71		.....	1	315 1178

16.090–4 SPRING, Automatic Transmission Parking Brake Release

67/71		.....	1	318 0043

16.090–5 LEVER, Automatic Transmission Parking Brake Toggle

67/71		.....	1	315 1175

16.090–6 PIN, Automatic Transmission Parking Brake Toggle Lever To Link

67/71		.....	1	318 0039

16.090–7 PIN, Automatic Transmission Parking Brake Lever Anchor

67/71	SIX	.....	1	316 5029
67/69	290 (Except 30)	.....	1	316 5029
68/69	290 (30)	.....	1	315 1179
70/71	304	.....	1	316 5029
67/71	343-360-390-401	.....	1	315 1179

16.090–8 "O" RING, Automatic Transmission Parking Brake Lever Anchor Pin

67/71	SIX	.....	1	316 5006
67/69	290 (Except 30)	.....	1	316 5006
70/71	304	.....	1	316 5006

16.090–9 PIN, Automatic Transmission Parking Brake Lever Anchor Pin Retaining

67/71	SIX	17.472	1	G9413283 NA
67/69	290 (Except 30)	17.472	1	G9413283 NA
70/71	304	17.472	1	G9413283 NA

16.090–10 RETAINER, Automatic Transmission Parking Brake Anchor Pin

68/69	290 (30)	.....	1	315 1182
67/71	343-360-390-401	.....	1	315 1182

Printed in U.S.A.

AUTOMATIC TRANSMISSION

16.090–11 PIN, Automatic Transmission Parking Brake Pawl Anchor Dowel

67/71	SIX	.....	1	316 5030
67/69	290 (Except 30)	.....	1	316 5030
68/69	290 (30)	.....	1	315 1172
70/71	304	.....	1	316 5030
67/71	343-360-390-401	.....	1	315 1172

16.090–12 LEVER, Automatic Transmission Parking Brake Toggle Lift

67/71		.....	1	315 1165

16.090–13 SPRING, Automatic Transmission Parking Brake Toggle Lift Lever

67/71		.....	1	315 1166

16.090–14 LEVER, Automatic Transmission Parking Brake Torsion

67/71	SIX	.....	1	316 4802
67/69	290 (Except 30)	.....	1	316 4802
68/69	290 (30)	.....	1	315 1162
70/71	304	.....	1	316 4802
67/71	343-360-390-401	.....	1	315 1162

16.090–15 WASHER, Automatic Transmission Parking Brake Torsion Lever Pin

67/71		.....	1	315 1180

16.090–16 RETAINER, Automatic Transmission Parking Brake Torsion Lever Pin Spring

67/71		.....	1	315 1181

16.090–17 PIN, Automatic Transmission Parking Brake Torsion Lever

67/71	SIX	.....	1	316 4868
67/69	290 (Except 30)	.....	1	316 4868
68/69	290 (30)	.....	1	315 0855
70/71	304	.....	1	316 4868
67/71	343-360-390-401	.....	1	315 0855

16.090–18 "O" RING, Automatic Transmission Parking Brake Torsion Lever Pin

67/71	SIX	.....	1	316 5006
67/69	290 (Except 30)	.....	1	316 5006
70/71	304	.....	1	316 5006

16.090–19 PIN, Automatic Transmission Parking Brake Torsion Lever Taper

67/71	SIX	17.470	2	G103565
67/69	290 (Except 30)	17.470	2	G103565
70/71	304	17.470	2	G103565

16.090–20 ROD, Automatic Transmission Parking Brake Linkage

68/69	290 (30)	.....	1	315 1167
67/71	343-360-390-401	.....	1	315 1167

16.090–21 RETAINER, Automatic Transmission Parking Brake Linkage Rod

68/69	290 (30)	.....	1	315 1169
67/71	343-360-390-401	.....	1	315 1169

Printed in U.S.A.

AUTOMATIC TRANSMISSION

16.100–1 ADAPTER, Automatic Transmission Case Rear

67/71	SIX	1	318	5553
67/69	290 (Except 30)	1	318	5553
70/71	304	1	318	5553

16.100–2 ATTACHING PARTS, Adapter To Transmission Case

SCREW, Machine	67/71	SIX	5	319	1753
SCREW, Machine	67/69	290 (Except 30)	5	319	1753
SCREW, Machine	70/71	304	5	319	1753

16.100–3 BAFFLE, Automatic Transmission Case Rear Adapter Breather

67/71	SIX	1	317	0944
67/69	290 (Except 30)	1	317	0944
70/71	304	1	317	0944

16.105–1 SHAFT, Automatic Transmission Input

67/69	SIX (* 16-29)	1	318	7395
69	199 (* 16-31)	1	318	7395
69	232 (LOCT-* 16-31)	1	318	7395
69	232 (WOCT-* 16-31)	1	448	7776
70	199	1	318	7395
70/71	232-258 (LOCT)	1	318	7395
70/	232-258 (WOCT)	1	448	7776
67/69	290 (Except 30-* 16-29)	1	318	7395
70/71	304	1	448	7776
69	290 (Except 30-* 16-30)	1	448	7776
68/69	290 (30)	1	318	8732
67/71	343-360-390-401	1	318	8732

16.105–2 WASHER, Automatic Transmission Input Shaft Thrust

67/71	SIX (.062)	1	316	5036
67/71	SIX (.080)	1	316	5056
67/69	290 (.062-Except 30)	1	316	5036
67/69	290 (.080-Except 30)	1	316	5056
68/69	290 (30)	1	315	0917
70/71	304 (.062)	1	316	5036
70/71	304 (.080)	1	316	5056
67/71	343-360-390-401 (* 16-69)	1	315	0917
71	360-401 (* 16-70)	1	321	2858

16.115–1 CYLINDER, Automatic Front Clutch

67/69	SIX (* 16-29)	1	318	5566
69	SIX (* 16-31)	1	319	8587
70/71	SIX	1	319	8587
67/69	290 (Except 30)	1	318	5566
68/69	290 (30)	1	316	5600
70/71	304	1	319	8587
67/71	343-360-390-401	1	316	5600

16.115–2 "O" RING, Automatic Transmission Front Clutch Cylinder

67/69	SIX (* 16-29)	1	316	5013
69	SIX (* 16-31)	1	319	8560
70/71	SIX	1	319	8560
67/69	290 (Except 30)	1	316	5013
68/69	290 (30)	1	315	0900
70/71	304	1	319	8560
67/71	343-360-390-401	1	315	0900

AUTOMATIC TRANSMISSION

16.100–1 ADAPTER, Automatic Transmission Case Rear

67/71	SIX	1	318	5553
67/69	290 (Except 30)	1	318	5553
70/71	304	1	318	5553

16.100–2 ATTACHING PARTS, Adapter To Transmission Case

SCREW, Machine	67/71	SIX	5	319	1753
SCREW, Machine	67/69	290 (Except 30)	5	319	1753
SCREW, Machine	70/71	304	5	319	1753

16.100–3 BAFFLE, Automatic Transmission Case Rear Adapter Breather

67/71	SIX	1	317	0944
67/69	290 (Except 30)	1	317	0944
70/71	304	1	317	0944

16.105–1 SHAFT, Automatic Transmission Input

67/69	SIX (* 16-29)	1	318	7395
69	199 (* 16-31)	1	318	7395
69	232 (LOCT-* 16-31)	1	318	7395
69	232 (WOCT-* 16-31)	1	448	7776
70	199	1	318	7395
70/71	232-258 (LOCT)	1	318	7395
70/	232-258 (WOCT)	1	448	7776
67/69	290 (Except 30-* 16-29)	1	318	7395
70/71	304	1	448	7776
69	290 (Except 30-* 16-30)	1	448	7776
68/69	290 (30)	1	318	8732
67/71	343-360-390-401	1	318	8732

16.105–2 WASHER, Automatic Transmission Input Shaft Thrust

67/71	SIX (.062)	1	316	5036
67/71	SIX (.080)	1	316	5056
67/69	290 (.062-Except 30)	1	316	5036
67/69	290 (.080-Except 30)	1	316	5056
68/69	290 (30)	1	315	0917
70/71	304 (.062)	1	316	5036
70/71	304 (.080)	1	316	5056
67/71	343-360-390-401 (* 16-69)	1	315	0917
71	360-401 (* 16-70)	1	321	2858

16.115–1 CYLINDER, Automatic Front Clutch

67/69	SIX (* 16-29)	1	318	5566
69	SIX (* 16-31)	1	319	8587
70/71	SIX	1	319	8587
67/69	290 (Except 30)	1	318	5566
68/69	290 (30)	1	316	5600
70/71	304	1	319	8587
67/71	343-360-390-401	1	316	5600

16.115–2 "O" RING, Automatic Transmission Front Clutch Cylinder

67/69	SIX (* 16-29)	1	316	5013
69	SIX (* 16-31)	1	319	8560
70/71	SIX	1	319	8560
67/69	290 (Except 30)	1	316	5013
68/69	290 (30)	1	315	0900
70/71	304	1	319	8560
67/71	343-360-390-401	1	315	0900

16.115–3 PISTON, Automatic Transmission Front Clutch Cylinder

67/69	SIX (* 16-29)	.....	1	318 8549
69	SIX (* 16-31)	.....	1	319 8570
70/71	SIX	.....	1	319 8570
67/69	290 (Except 30)	.....	1	318 8549
68/69	290 (30)	.....	1	318 8836
70/71	304	.....	1	319 8570
67/71	343-360-390-401	.....	1	318 8836

16.115–4 "O" RING, Automatic Transmission Front Clutch Cylinder Piston

67/71	SIX	.....	1	316 5012
67/69	290 (Except 30)	.....	1	316 5012
68/69	290 (30)	.....	1	315 0898
70/71	304	.....	1	316 5012
67/71	343-360-390-401	.....	1	315 0898

16.115–5 "O" RING, Automatic Transmission Front Clutch Cylinder Spring Bearing

67/71	SIX	.....	1	316 4988
67/69	290 (Except 30)	.....	1	316 4988
68/69	290 (30)	.....	1	315 0901
70/71	304	.....	1	316 4988
67/71	343-360-390-401	.....	1	315 0901

16.115–6 SPRING, Automatic Transmission Front Clutch Cylinder

67/68	SIX (.065" Thick-* 16-24) ***(Use 448 6217)***	.....	1	~~316 4875~~
67/68	SIX (.075" Thick) ***(Use 448 6217)***	.....	1	~~319 4897~~
69/70	SIX ***(Use 448 6217)***	.....	1	~~319 4897~~
71	SIX	.....	1	448 8458
67/68	290 (.065" Thick-Except 30-* 16-24) ***(Use 448 6217)***	.....	1	~~316 4875~~
67/68	290 (.075" Thick-Except 30) ***(Use 448 6217)***	.....	1	~~319 4897~~
69	290 (Except 30) ***(Use 448 6217)***	.....	1	~~319 4897~~
68/69	290 (30)	.....	1	315 0899
70/71	304	.....	1	448 8458
67/71	343-360-390-401	.....	1	315 0899

16.115–7 RING, Automatic Transmission Front Clutch Cylinder Spring Snap

67/68	SIX (.037" Thick)	.....	1	319 4872
67/68	SIX (.046" Thick)	.....	1	316 5016
69/71	SIX	.....	1	319 4872
67/68	290 (.037" Thick-Except 30)	.....	1	319 4872
67/68	290 (.046" Thick-Except 30)	.....	1	316 5016
69	290 (Except 30)	.....	1	319 4872
68/69	290 (30)	.....	1	315 0897
70/71	304	.....	1	319 4872
67/71	343-360-390-401	.....	1	315 0897

16.115–8 PLATE, Automatic Transmission Front Clutch Cylinder Pressure

67	199 (Use With Four Plate Assembly-Three Drive And Four Driven)	.....	1	316 4631
67	199 (Use With Five Plate Assembly-Four Drive And Five Driven)	.....	1	316 4877
68/69	199	.....	1	316 4877
70	199 (Use With Four Plate Assembly-Three Drive And Four Driven)	.....	1	316 4631
70	199 (Use With Five Plate Assembly-Four Drive And Five Driven)	.....	1	316 4877
67/71	232-258	.....	1	316 4877
67/69	290 (Except 30)	.....	1	316 4877
68/69	290 (30)	.....	1	314 9977
70/71	304	.....	1	316 4877
67/71	343-360-390-401	.....	1	314 9977

Printed in U.S.A.

AUTOMATIC TRANSMISSION

16.115–9 PLATE, Automatic Transmission Front Clutch Cylinder Drive (External Teeth)

67/69	SIX	.....	4	316 4873
70	199 (* 16-39)	.....	4	316 4873
70	199 (* 16-40)	.....	3	316 4873
70	232	.....	4	316 4873
71	232-258	.....	4	321 2388
67/69	290 (Except 30)	.....	4	316 4873
68/69	290 (30)	.....	3	315 0912
70	304	.....	4	316 4873
71	304	.....	4	321 2388
67/71	343-360-390-401	.....	3	315 0912

16.115–10 PLATE, Automatic Transmission Front Clutch Cylinder Driven (Internal Teeth)

67/69	SIX (* 16-29) ..... *(Use 319 8571)*	.....	~~5~~	~~318 5581~~
69	SIX (* 16-31)	.....	5	319 8571
70	199 (* 16-39)	.....	5	319 8571
70	199 (* 16-40)	.....	4	319 8571
70/71	232-258	.....	5	319 8571
67/69	290 (Except 30) ..... *(Use 319 8571)*	.....	~~5~~	~~318 5581~~
68/69	290 (30)	.....	4	318 7959
70/71	304	.....	5	319 8571
67/69	343 (* 16-27)	.....	4	318 7959
69	343 (* 16-28)	.....	4	319 3139
68/71	360-390-401	.....	4	319 3139

16.115–11 HUB, Automatic Transmission Front Clutch Cylinder

67/69	SIX (* 16-29)	.....	1	316 4887
69	SIX (* 16-31)	.....	1	319 8584
70/71	SIX	.....	1	319 8584
67/69	290 (Except 30)	.....	1	316 4887
68/69	290 (30)	.....	1	315 0909
70/71	304	.....	1	319 8584
67/71	343-360-390-401	.....	1	315 0909

16.115–12 WASHER, Automatic Transmission Front Clutch Cylinder Hub Thrust

67/71	SIX	.....	1	316 5043
67/69	290 (Except 30)	.....	1	316 5043
68/69	290 (30)	.....	1	315 0910
70/71	304	.....	1	316 5043
67/71	343-360-390-401	.....	1	315 0910

16.115–13 WASHER, Automatic Transmission Front Clutch Cylinder Thrust (Bronze)

67/69	SIX (* 16-29)	.....	1	316 4987
69	SIX (* 16-31)	.....	1	319 8547
70/71	SIX	.....	1	319 8547
67/69	290 (Except 30)	.....	1	316 4987
68/69	290 (30)	.....	1	315 0915
70/71	304	.....	1	319 8547
67/71	343-360-390-401	.....	1	315 0915

16.115–14 WASHER, Automatic Transmission Front Clutch Cylinder (Plain)

67/69	SIX (* 16-29)	.....	1	316 4986
69	SIX (* 16-31)	.....	1	319 8550
70/71	SIX	.....	1	319 8550
67/69	290 (Except 30)	.....	1	316 4986
68/69	290 (30)	.....	1	315 0916
70/71	304	.....	1	319 8550
67/71	343-360-390-401	.....	1	315 0916

AUTOMATIC TRANSMISSION

16.115–15 RING, Automatic Transmission Front Clutch Plates Retaining Snap

67/71	SIX	.....	1	316 5016
67/69	290 (Except 30)	.....	1	316 5016
68/69	290 (30)	.....	1	315 0895
70/71	304	.....	1	316 5016
67/71	343-360-390-401	.....	1	315 0895

16.125–1 DRUM, Automatic Transmission Rear Clutch (Incl. Bearings)

67	199 (* 16-7) 195	.....	1	320 7675
67	199 (* 16-8) 195	.....	1	320 7772
68/69	199 (* 16-29) 195	.....	1	320 7772
69	SIX (* 16-31) ***(Use 812 0033)***	.....	1	448 7770
67/69	232 (* 16-29) 195	.....	1	320 7772
70	199-232-304 ***(Use 812 0033)***	.....	1	448 7770
71	SIX 195	.....	1	812 0033
67/69	290 (Except 30) 195	.....	1	320 7772
68/69	290 (30-Use With Trans. AS16-11) 195	.....	1	318 9879
68/69	290 (30-Use With Trans. AS20-11) 195	.....	1	318 7300
71	304 195	.....	1	812 0033
67/71	343-360-390-401 195	.....	1	318 9879

16.125–2 BEARING, Automatic Transmission Rear Clutch Drum Needle

67/69	SIX (* 16-29)	.....	1	316 4999
69	SIX (* 16-31)	.....	1	319 8558
70/71	SIX	.....	1	319 8558
67/69	290 (Except 30)	.....	1	316 4999
68/69	290 (30)	.....	1	318 7739
70/71	304	.....	1	319 8558
67/71	343-360-390-401	.....	1	318 7739

16.125–3 "O" RING, Automatic Transmission Rear Clutch Drum

67/69	SIX (* 16-29)	.....	1	316 5010
69	SIX (* 16-31)	.....	1	319 8561
70/71	SIX	.....	1	319 8561
67/69	290 (Except 30)	.....	1	316 5010
68/69	290 (30)	.....	1	315 0887
70/71	304	.....	1	319 8561
67/71	343-360-390-401	.....	1	315 0887

16.125–4 PISTON, Automatic Transmission Rear Clutch Drum

67/69	SIX (* 16-29)	.....	1	316 4985
69	SIX (* 16-31)	.....	1	319 8552
70/71	SIX	.....	1	319 8552
67/69	290 (Except 30)	.....	1	316 4985
68/69	290 (30-Use With AS16-11)	.....	1	319 0095
68/69	290 (30-Use With AS20-11)	.....	1	315 3644
70/71	304	.....	1	319 8552
67/71	343-360-390-401	.....	1	319 0095

16.125–5 "O" RING, Automatic Transmission Rear Clutch Drum Piston

67/71	SIX	.....	1	316 5009
67/69	290 (Except 30)	.....	1	316 5009
68/69	290 (30)	.....	1	315 0889
70/71	304	.....	1	316 5009
67/71	343-360-390-401	.....	1	315 0889

Printed in U.S.A.

AUTOMATIC TRANSMISSION

16.125–6 SPRING, Automatic Transmission Rear Clutch Drum

67/71	SIX	.....	1	316 5047
67/69	290 (Except 30)	.....	1	316 5047
68/69	290 (30)	.....	1	315 0890
70/71	304	.....	1	316 5047
67/71	343-360-390-401	.....	1	315 0890

16.125–7 RETAINER, Automatic Transmission Rear Clutch Drum Spring

67/69	SIX (* 16-29)	.....	1	316 4884
69	SIX (* 16-31)	.....	1	319 8549
70/71	SIX	.....	1	319 8549
67/69	290 (Except 30)	.....	1	316 4884
68/69	290 (30)	.....	1	315 0891
70/71	304	.....	1	319 8549
67/71	343-360-390-401	.....	1	315 0891

16.125–8 RING, Automatic Transmission Rear Clutch Drum Spring Retaining Snap

67/69	SIX (* 16-29)	.....	1	316 5018
69	SIX (* 16-31)	.....	1	319 8559
70/71	SIX	.....	1	319 8559
67/69	290 (Except 30)	.....	1	316 5018
68/69	290 (30)	.....	1	315 0896
70/71	304	.....	1	319 8559
67/71	343-360-390-401	.....	1	315 0896

16.125–9 PLATE, Automatic Transmission Rear Clutch Drum Driven (External Tooth)

67/69	SIX	.....	5	316 4863
70	199 (* 16-39)	.....	5	316 4863
70	199 (* 16-40)	.....	4	316 4863
70/71	232-258	.....	5	316 4863
67/69	290 (Except 30)	.....	5	316 4863
68/69	290 (30-Use With AS16-11)	.....	5	315 0892
68/69	290 (30-Use With AS20-11)	.....	4	315 0892
70/71	304	.....	5	316 4863
67/71	343-360-390-401	.....	5	315 0892

16.125–10 PLATE, Automatic Transmission Rear Clutch Drum Drive (Internal Tooth)

67/69	SIX (* 16-29) ***(Use 319 8571)***	.....	5	318 5581
69	SIX (* 16-31)	.....	5	319 8571
70	199 (* 16-40)	.....	5	319 8571
70	199 (* 16-40)	.....	4	319 8571
70/71	232-258	.....	5	319 8571
67/69	290 (Except 30) ***(Use 319 8571)***	.....	5	318 5581
68/69	290 (30-Use With AS16-11)	.....	5	318 6574
68/69	290 (30-Use With AS20-11)	.....	4	318 6574
70/71	304	.....	5	319 8571
67/69	343	.....	5	318 6574
68/69	390	.....	5	319 3139
70/71	V8	.....	5	319 3139

16.125–11 PLATE, Automatic Transmission Rear Clutch Drum Pressure

67/69	SIX	.....	1	316 4803
70	199 (* 16-39)	.....	1	316 4803
70	199 (* 16-40)	.....	1	318 8612
67/69	290 (Except 30)	.....	1	316 4803
68/69	290 (30)	.....	1	315 0894
70/71	304	.....	1	316 4803
70/71	232-258	.....	1	316 4803
67/71	343-360-390-401	.....	1	315 0894

AUTOMATIC TRANSMISSION

16.125–12 RING, Automatic Transmission Rear Clutch Drum Plates Retaining Snap

67/71	SIX	.....	1	316 5016
67/69	290 (Except 30)	.....	1	316 5016
68/69	290 (30)	.....	1	315 0895
70/71	304	.....	1	316 5016
67/71	343-360-390-401	.....	1	315 0895

16.125–13 "O" RING, Automatic Transmission Rear Clutch Drum Oil Sealing (On Drum)

67/71	SIX	.....	3	318 6344
67/69	290 (Except 30)	.....	3	318 6344
70/71	304	.....	3	318 6344

16.125–14 TUBE, Automatic Transmission Rear Clutch Drum

67/71	SIX	.....	1	318 7987
67/69	290 (Except 30)	.....	1	318 7987
70/71	304	.....	1	318 7987

16.130–1 BAND, Automatic Transmission Front Brake

67	199 (* 16-9)	.....	1	316 4838
67	199 (* 16-10) ***(Use 319 3718)***	.....	1	318 8603
68/70	199 ***(Use 319 3718)***	.....	1	318 8603
67/70	232 ***(Use 319 3718)***	.....	1	318 8603
71	232-258	.....	1	321 0388
67/69	290 (Except 30) ***(Use 319 3718)***	.....	1	318 8603
68/69	290 (30)	.....	1	318 6562
70	304 ***(Use 319 3718)***	.....	1	318 8603
71	304	.....	1	321 0388
67/69	343 (* 16-27)	.....	1	318 6562
69	343 (* 16-28)	.....	1	319 3028
68/70	360-390	.....	1	319 3028
71	360-304 (* 16-61)	.....	1	319 3028
71	360-401 (* 16-62)	.....	1	321 1752

16.130–2 STRUT, Automatic Transmission Front Brake Band

67/71	SIX	.....	1	320 3566
67/69	290 (Except 30)	.....	1	320 3566
68/69	290 (30)	.....	1	315 1053
70/71	304	.....	1	320 3566
67/70	343-360-390	.....	1	315 1053
71	360-304 (* 16-63)	.....	1	315 1053
71	360-401 (* 16-64)	.....	1	321 1748

16.135–1 SUPPORT, Automatic Transmission Center

67/71	SIX	.....	1	318 8766
67/69	290 (Except 30)	.....	1	318 8766
68/69	290 (30)	.....	1	315 3462
70/71	304	.....	1	318 8766
67/71	343-360-390-401	.....	1	315 3462

16.135–2 ATTACHING PARTS, Support To Case

SCREW, Machine	67/71	SIX	.....	2	316 5021
SCREW, Machine	67/69	290 (Except 30)	.....	2	316 5021
SCREW, Machine	68/69	290 (30)	.....	2	315 0920
SCREW, Machine	67/71	343-360-390-401	.....	2	315 0920
SCREW, Machine	70/71	304	.....	2	316 5021
WASHER, Lock	67/71	.....	.....	2	315 0919

Printed in U.S.A.

AUTOMATIC TRANSMISSION

16.140–1 GEAR, Automatic Transmission Sun

67/69	SIX (* 16-29) 202	.....	1	318 5593
69	SIX (* 16-31)	.....	1	319 8551
70/71	SIX	.....	1	319 8551
67/69	290 (Except 30) 202	.....	1	318 5593
68/69	290 (30)	.....	1	318 8531
70/71	304	.....	1	319 8551
67/71	343-360-390-401	.....	1	318 8531

16.140–2 "O" RING, Automatic Transmission Sun Gear Oil Sealing (Front)

67/69	SIX (* 16-29)	.....	2	318 6345
69	SIX (* 16-31)	.....	2	318 6586
70/71	SIX	.....	2	318 6586
67/69	290 (Except 30)	.....	2	318 6345
68/69	290 (30)	.....	2	318 6588
70/71	304	.....	2	318 6586
67/71	343-360-390-401	.....	2	318 6588

16.140–3 "O" RING, Automatic Transmission Sun Gear Oil Sealing (Center)

68/69	290 (30)	.....	2	318 6589
67/71	343-360-390-401	.....	2	318 6589

16.140–4 "O" RING, Automatic Transmission Sun Gear Oil Sealing (Rear)

67/71	SIX	.....	1	317 6130
67/69	290 (Except 30)	.....	1	317 6130
68/69	290 (30)	.....	2	318 6586
70/71	304	.....	1	317 6130
67/71	343-360-390-401	.....	2	318 6586

16.145–1 BEARING, Automatic Transmission Sun Gear Needle

67/69	SIX (Front-Drum End)	.....	1	316 4857
67/71	SIX (Rear-Planetary End)	.....	1	318 8918
67/69	290 (Front-Drum End-Except 30)	.....	1	316 4857
67/69	290 (Rear-Planetary End-Except 30)	.....	1	318 8918
68/69	290 (30)	.....	1	318 7958
70/71	304 (Rear-Planetary End)	.....	1	318 8918
67/71	343-360-390-401	.....	1	318 7958

16.145–2 WASHER, Automatic Transmission Sun Gear Thrust

69	SIX (* 16-31)	.....	1	319 8546
70/71	SIX	.....	1	319 8546
68/69	290 (30)	16.140	1	315 0876
70/71	304	.....	1	319 8546
67/71	343-360-390-401	16.140	1	315 0876

16.145–3 RACE, Automatic Transmission Sun Gear Needle Bearing Thrust Bearing

67/71	SIX	.....	1	317 4775
67/69	290 (Except 30)	.....	1	317 4775
68/69	290 (30)	.....	1	318 7961
70/71	304	.....	1	317 4775
67/71	343-360-390-401	.....	1	318 7961

16.150–1 CARRIER, Automatic Transmission Planetary (Incl. Race And Snap Ring)

67	SIX	***(Use 319 3920)***	.....	1	318 8999
68/69	SIX (* 16-29)	***(Use 319 3920)***	.....	1	318 8999
69	199 (* 16-31)	***(Use 319 8589)***	.....	1	319 3920
70	199	***(Use 319 8589)***	.....	1	319 3920
69	232 (* 16-31)		.....	1	319 8589
70/71	232-258		.....	1	319 8589
67/69	290 (Except 30-* 16-29)	***(Use 319 8589)***	.....	1	319 3920
69	290 (Except 30-* 16-30)		.....	1	319 8589
68/69	290 (30)	193	.....	1	318 7952
70/71	304		.....	1	319 8589
67/69	343 (* 16-27)	193	.....	1	318 7952
69	343 (* 16-28)	193	.....	1	319 8792
70/71	360	193	.....	1	319 8792
68/69	390 (* 16-27)	193	.....	1	319 3331
69	390 (* 16-28)	193	.....	1	319 8791
70/71	390-401	193	.....	1	319 8791

16.150–2 CLUTCH, Automatic Transmission Planetary Carrier One Way (Sprag)

67/69	SIX (* 16-29)	.....	1	316 4843
69	199 (* 16-31)	.....	1	316 4843
70	199 (* 16-41)	.....	1	316 4843
70	199 (* 16-42)	.....	1	321 0836
69	232 (LOCT-* 16-31)	.....	1	316 4843
70/71	232-258 (LOCT)	.....	1	316 4843
69	232 (WOCT-* 16-31)	.....	1	319 8585
70/71	232-258 (WOCT)	.....	1	319 8585
67/69	290 (Except 30-* 16-29)	.....	1	316 4843
69	290 (Except 30-* 16-30)	.....	1	319 8585
68/69	290 (30)	.....	1	316 0346
70/71	304	.....	1	319 8585
67/70	343-360	.....	1	319 3230
71	360	.....	1	316 0346
68/71	390-401	.....	1	319 3230

16.150–3 RACE, Automatic Transmission Planetary Carrier One Way Clutch

67/71	SIX	***(Use 318 8768)***	1	320 3552
67/69	290 (Except 30)	***(Use 318 8768)***	1	320 3552
68/69	290 (30)		1	315 3470
70/71	304	***(Use 318 8768)***	1	320 3552
67/71	343-360		1	315 3470
68/71	390-401		1	319 3315

16.150–4 RING, Automatic Transmission Planetary Carrier One Way Clutch Snap

67/71	SIX	.....	1	316 5016
67/69	290 (Except 30)	.....	1	316 5016
68/69	290 (30)	.....	1	315 3471
70/71	304	.....	1	316 5016
67/71	343-360-390-401	.....	1	315 3471

16.150–5 WASHER, Automatic Transmission Planetary Carrier Thrust

68/69	(.062) 290 (30)	.....	1	315 0925
68/69	(.068) 290 (30)	.....	1	315 0926
68/69	(.075) 290 (30)	.....	1	315 0927
68/69	(.082) 290 (30)	.....	1	315 0928
67/71	(.062) 343-360-390-401 (* 16-71)	.....	1	315 0925
67/71	(.068) 343-360-390-401 (* 16-71)	.....	1	315 0926
71	(.069) 360-401 (* 16-72)	.....	1	321 2863
67/71	(.075) 343-360-390-401 (* 16-71)	.....	1	315 0927
71	(.075) 360-401 (* 16-72)	.....	1	321 2862
67/71	(.082) 343-360-390-401 (* 16-71)	.....	1	315 0928
71	(.082) 360-401 (* 16-72)	.....	1	321 2861
71	(.089) 360-401 (* 16-72)	.....	1	321 2860

AUTOMATIC TRANSMISSION

16.152–1 BEARING, Automatic Transmission Planetary To Output Shaft Needle Thrust

67/71	SIX	.....	1	318 2779
67/69	290 (Except 30)	.....	1	318 2779
70/71	304	.....	1	318 2779

16.152–2 PLATE, Automatic Transmission Planetary To Output Shaft Needle Bearing Thrust

67/71	SIX	.....	1	316 5044
67/69	290 (Except 30)	.....	1	316 5044
70/71	304	.....	1	316 5044

16.155–1 BAND, Automatic Transmission Rear Brake

67/71	SIX	.....	1	318 7096
67/69	290 (Except 30)	.....	1	318 7096
68/69	290 (30)	.....	1	319 0880
70/71	304	.....	1	318 7096
67	343 ***(Use 319 0880)***	.....	1	~~318 8973~~
68/71	343-360-390-401	.....	1	319 0880

16.155–2 STRUT, Automatic Transmission Rear Brake Band

67/71	SIX	16.130	1	320 3566
67/69	290 (Except 30)	16.130	1	320 3566
68/69	290 (Apply-30)	.....	1	315 1037
68/69	290 (Anchor-30)	.....	1	315 1038
70/71	304	16.130	1	320 3566
67/71	343-360-390-401 (Apply)	.....	1	315 1037
67/71	343-360-390-401 (Anchor)	.....	1	315 1038

16.160–1 SHAFT, Automatic Transmission Output

67/69	SIX (* 16-29)...(Incl. Bushing) 199	.....	1	318 4070
69	SIX (* 16-31)...(Incl. Bushing)	.....	1	448 7781
70/71	SIX...(Incl. Bushing)	.....	1	448 7781
67/69	290 (Except 30-* 16-29)...(Incl. Bushing) 199	.....	1	318 4070
69	290 (Except 30-* 16-30) ...(Incl. Bushing)	.....	1	448 7781
68/69	290 (30)	.....	1	320 8011
70/71	304...(Incl. Bushing)	.....	1	448 7781
67/71	343-360	.....	1	320 8011
68/71	390-401	.....	1	448 5546

16.160–2 BUSHING, Automatic Transmission Output Shaft

67/71	SIX	.....	1	320 5305
67/69	290 (Except 30)	.....	1	320 5305
70/71	304	.....	1	320 5305

16.160–3 GEAR, Automatic Transmission Output Shaft Ring

67/70	SIX (* 16-45)	.....	1	318 8998
70	SIX (* 16-46)	.....	1	321 1399
70/71	SIX	.....	1	321 1399
67/69	290 (Except 30)	.....	1	318 8998
68/69	290 (30)	.....	1	319 1940
70	304 (* 16-45)	.....	1	318 8998
70	304 (* 16-46)	.....	1	321 1399
71	304	.....	1	321 1399
67/71	343-360-390-401	.....	1	319 1940

16.160–4 WASHER, Automatic Transmission Output Shaft Thrust

67/71	SIX	.....	1	316 4976	
67/69	290 (Except 30)	.....	1	316 4976	
68/69	290 (30)	.....	1	315 3476	
70/71	304	.....	1	316 4976	
67/71	343-360-390-401	.....	1	315 3476	

16.160–5 RING, Automatic Transmission Output Shaft Ring Gear Snap

67/71	(.055) SIX	.....	1	316 5017	
67/71	(.057) SIX	.....	1	320 3584	
67/71	(.059) SIX	.....	1	320 3585	
67/69	(.055) 290 (Except 30)	.....	1	316 5017	
67/69	(.057) 290 (Except 30)	.....	1	320 3584	
67/69	(.059) 290 (Except 30)	.....	1	320 3585	
68/69	(.055) 290 (30)	.....	1	315 0951	
68/69	(.057) 290 (30)	.....	1	315 0952	
68/69	(.059) 290 (30)	.....	1	315 0953	
70/71	(.055) 304	.....	1	316 5017	
70/71	(.057) 304	.....	1	320 3584	
70/71	(.059) 304	.....	1	320 3585	
67/71	(.055) 343-360-390-401	.....	1	315 0951	
67/71	(.057) 343-360-390-401	.....	1	315 0952	
67/71	(.059) 343-360-390-401	.....	1	315 0953	

16.160–6 "O" RING, Automatic Transmission Output Shaft Oil Sealing

67/71	SIX	.....	3	318 6346	
67/69	290 (Except 30)	.....	3	318 6346	
68/69	290 (30)	.....	4	318 6587	
70/71	304	.....	3	318 6346	
67/71	343-360-390-401	.....	4	318 6587	

16.175–1 RETAINER, Automatic Transmission Rear Bearing (Incl. Bushing)

67	SIX ..... ***(Use 448 5704)***	.....	1	317 3523	
68/71	SIX 191	.....	1	448 5704	
67/69	290 (Except 30) 191	.....	1	448 5704	
68/69	290 (30) 210	.....	1	318 4582	
70/71	304 191	.....	1	448 5704	
67/71	343-360 210	.....	1	318 4582	
68/71	390-401 210	.....	1	448 5549	

16.175–2 ATTACHING PARTS, Retainer To Case

BOLT, Hexagon	67/71	343-360-390-401	17.038	5	G179846	NA
BOLT, Hexagon	67/69	SIX	.....	4	317 0363	
BOLT, Hexagon	67/69	290 (Except 30)	.....	4	317 0363	
BOLT, Hexagon	68/69	290 (30)	17.038	5	G179846	NA
BOLT	70/71	SIX (Full-Threaded Shank)	.....	4	317 0363	
BOLT	70	304 (Half-Threaded Shank) ***(Ord. 317 0363, 317 0364)***	.....	4	448 7798	
BOLT	70/71	304 (Full-Threaded Shank)	.....	4	317 0363	
BOLT	70	SIX (Half-Threaded Shank) ***(Ord. 317 0363, 317 0364)***	.....	4	448 7798	
WASHER, Lock	67/71	SIX	.....	4	317 0364	
WASHER, Lock	67/69	290 (Except 30)	.....	4	317 0364	
WASHER, Lock	68/69	290 (30)	.....	5	315 0919	
WASHER, Lock	70/71	304	.....	4	317 0364	
WASHER, Lock	67/71	343-360-390-401	.....	5	315 0919	

Printed in U.S.A.

AUTOMATIC TRANSMISSION

16.175–3 RETAINER, Automatic Transmission Rear Bearing Retainer Oil (Slinger)

67/71	SIX	.....	.....	1	316 5042
67/69	290 (Except 30)	.....	.....	1	316 5042
70/71	304	.....	.....	1	316 5042

16.175–4 BUSHING, Automatic Transmission Rear Bearing Retainer

67/70	SIX	.....	.....	1	320 4721
71	SIX	*(Use 320 4721)*	.....	1	321 0937
67/69	290 (Except 30)	.....	.....	1	320 4721
68/69	290 (30)	.....	.....	1	320 7936
70	304	.....	.....	1	320 4721
71	304	*(Use 320 4721)*	.....	1	321 0937
67/71	343-360	.....	.....	1	320 7936
68/71	390-401	.....	.....	1	448 5550

16.175–5 SEAL, Automatic Transmission Rear Bearing Retainer Oil

67/71	SIX	.....	.....	1	315 8703
67/69	290 (Except 30)	.....	.....	1	315 8703
68/69	290 (30)	.....	.....	1	318 0041
67/71	343-360	.....	.....	1	318 0041
70/71	304	.....	.....	1	315 8703
68/71	390-401	.....	.....	1	315 3482

16.175–6 GASKET, Automatic Transmission Rear Bearing Retainer

67/71	SIX	.....	.....	1	317 0362
67/69	290 (Except 30)	.....	.....	1	317 0362
68/69	290 (30)	.....	.....	1	318 6571
70/71	304	.....	.....	1	317 0362
67/71	343-360-390-401	.....	.....	1	318 6571

16.175–7 COVER, Automatic Transmission Rear Bearing Retainer Inspection

67	199-232-290	.....	.....	1	315 0989

16.175–8 ATTACHING PARTS, Cover To Retainer

SCREW, Machine	67	199-232-290	17.602	2	G114353 NA
WASHER, Plain	67	199-232-290	.....	2	315 0987

16.175–9 GASKET, Automatic Transmission Rear Bearing Retainer Inspection Cover

67	199-232-290	.....	.....	1	315 0988

16.176–1 ADAPTER, Automatic Transmission Rear (Incl. Bushing)

68/69	290 (30)	208	.....	1	318 8737
67/70	343-360-390	208	.....	1	318 8737
71	360-401	208	.....	1	812 0322

16.176–2 BUSHING, Automatic Transmission Rear Adapter

68/69	290 (30)	*(Ord. 318 8737)*	.....	1	320 8239
67/71	343-360-390-401	*(Ord. 318 8737)*	.....	1	320 8239

16.176–3 GASKET, Automatic Transmission Rear Adapter To Case

68/69	290 (30)	.....	.....	1	318 6570
67/71	343-360-390-401	.....	.....	1	318 6570

AUTOMATIC TRANSMISSION

16.195–1 VALVE ASSEMBLY, Automatic Transmission Control

67	199 (LHD–LOCT)(Identification Letter "F")	186	.....	1	318 8847
67	199 (LHD–WOCT)(Identification Letter "H")	186	.....	1	318 8849
67	199 (LHD–LOCT)(Identification Letter "U")	***(Use 318 8847)***	.....	1	319 1508
67	***199 (RHD)***(Identification Letter "G")	***(Use 319 1509)***	.....	1	318 8848
67	***199 (RHD)***(Identification Letter "V")	186	.....	1	319 1509
68	199 (LHD)(Identification Letter "Z")	186	.....	1	319 1513
68/70	199 (Identification Letter "CC")	186	.....	1	319 3179
67	232 (01–LHD–LOCT)(Identification Letter "K")	186	.....	1	318 8910
67	232 (01–LHD–WOCT)(Identification Letter "L")	186	.....	1	318 8911
67	232 (Except 01–LHD–LOCT)(Identification Letter "J")	***(Use 319 1510)***	.....	1	318 8850
67	232 (Except 01–LHD–WOCT)(Identification Letter "N")	186	.....	1	318 8913
67	***232 (RHD-LOCT)***(Identification Letter "M")	***(Use 319 6218)***	.....	1	318 8912
67	***232 (RHD-WOCT)***(Identification Letter "P")	***(Use 319 1512)***	.....	1	318 8914
67	232 (LHD)(Identification Letter "W")	***(Use 319 6217)***	.....	1	319 1510
67	***232 (RHD)***(Identification Letter "X")	***(Use 319 6217)***	.....	1	319 1511
68	232 (LHD)(Identification Letter "AA")	***(Use 319 3180)***	.....	1	319 1514
68/71	232 (Identification Letter "DD")	***(Use 319 6222)***	.....	1	319 3180
71	232 (Identification Letter "ZZ")		.....	1	321 2560
71	258 (Identification Letter "ZZ")		.....	1	321 2560
67	290 (WCGS)	***(Use 319 1506)***	.....	1	318 6995
67	290 (WFGS)	***(Use 319 1507)***	.....	1	318 7232
68	290 (Except 30–LHD)	***(Ref. Pr. List)***	.....	1	319 1507
68	290 (30)	***(Use 319 3922)***	.....	1	319 2044
68	***290 (RHD)***	***(Use 319 6212)***	.....	1	319 3178
69	290 (WCGS–* 16–29)	***(Use 319 6212)***	.....	1	319 4664
69	290 (WCGS–* 16–30)(Identification Letter "VV")	186	.....	1	319 8597
69	290 (Except 30–WFGS–* 16–29)	***(Use 319 6211)***	.....	1	319 4666
69	290 (Except 30–WFGS–* 16–30)(Identification Letter "WW")	197	.....	1	319 8598
68/69	290 (Identification Letter "Y")		.....	1	321 4778
69	290 (30–WFGS)(Identification Number "5")	197	.....	1	319 3922
68/69	290 (Identification Number "8")		.....	1	319 6685
68/69	290 (Identification Number "17")		.....	1	321 1758
70	304 (WCGS)(Identification Letter "VV")	186	.....	1	319 8597
71	304 (WCGS)	***(Use 321 2558)***	.....	1	448 9476
70	304 (WFGS)(Identification Letter "WW")	197	.....	1	319 8598
71	304 (WFGS)		.....	1	448 9477
67	343 (WCGS–* 16–11)	***(Use 319 6684)***	.....	1	318 7081
67	343 (WCGS–* 16–12)(Identification Number "3")	***(Use 319 6684)***	.....	1	319 0092
67	343 (WFGS–* 16–11)	197	.....	1	318 7683
67	343 (WFGS–* 16–12)(Identification Number "4")	197	.....	1	319 0093
68	343 (Identification Number "5")	197	.....	1	319 3922
67/69	343 (Identification Number "8")		.....	1	319 6685
67/69	343 (Identification Number "17")		.....	1	321 1758
67/69	343 (Identification Letter "Y")		.....	1	321 4778
69	343 (* 16–27)(Identification Number "5")	197	.....	1	319 3922
69	343 (* 16–28)(Identification Number "12")		.....	1	448 7928
70	360 (Identification Number "14")		.....	1	321 1445
70	360 (Identification Number "34")		.....	1	321 4779
71	360 (Identification Number "12")		.....	1	448 7928
71	360 (Identification Number "26")		.....	1	321 2561
71	360 (Identification Number "40")		.....	1	321 4776
68/69	390 (* 16–25)	197	.....	1	319 2045
68/69	390 (* 16–26)(Identification Number "10")	197	.....	1	319 6683
70	390 (Identification Number "10")	197	.....	1	319 6683
71	401 (* 16–50)(Identification Number "23")		.....	1	321 1760
71	401 (Identification Number "33")		.....	1	321 4775
71	401 (Identification Number "41")		.....	1	321 4777
71	401 (* 16–51)(Identification Number "27")		.....	1	321 2562

16.195–2 ATTACHING PARTS, Valve Body To Transmission Case

BOLT, Hexagon	67/71	SIX (1–1/4" Long)	17.038	1	G179799 NA
BOLT, Hexagon	67/71	SIX (1–1/2" Long)	17.038	2	G179801
BOLT, Hexagon	67/69	290 (1–1/4" Long–Except AMX)	17.038	1	G179799 NA
BOLT, Hexagon	67/69	290 (1–1/2" Long–Except AMX)	17.038	2	G179801
BOLT, Hexagon	68/69	290 (1/4–20 x 2–1/4–AMX)	17.038	4	G179806 NA
BOLT, Hexagon	68/69	290 (5/16–18 x2–1/4–AMX)	17.038	2	G179827 NA

Printed in U.S.A.

BOLT, Hexagon	70/71	304 (1-1/4" Long)		17.038	1	G179799 NA
BOLT, Hexagon	70/71	304 (1-1/2" Long)		17.038	2	G179801
BOLT, Hexagon	67/71	343-360-390-401 (1/4-20 x 2-1/4)		17.038	4	G179806 NA
BOLT, Hexagon	67/71	343-360-390-401 (5/16-18 x 2-1/4)		17.038	2	G179827 NA
WASHER, Lock	67/71	SIX	***(Use G120380)***	17.820	3	G113114 NA
WASHER, Lock	67/69	290 (Except AMX)	***(Use G120380)***	17.820	3	G113114 NA
WASHER, Lock	70/71	304	***(Use G120380)***	17.820	3	G113114 NA

16.195–3 PERFORMANCE KIT, Automatic Transmission Valve Body

67/69	343-390	.....	1	448 8283

16.205–1 SPRING, Automatic Transmission Upper Valve Range Control Valve

67/71	SIX	.....	1	317 8726
67/69	290 (Except 30)	.....	1	317 8726
70/71	304	.....	1	317 8726

16.205–2 PLATE, Automatic Transmission Upper Valve Body End Plate (Rear)

67/71	SIX	.....	1	316 4881
67/69	290 (Except 30)	.....	1	316 4881
68/69	290 (30)	.....	1	318 6723
70/71	304	.....	1	316 4881
67/71	343-360-390-401	.....	1	318 6723

16.205–3 ATTACHING PARTS, Plate To Valve Body

SCREW, Machine	67/71	SIX		17.602	3	G189384 NA
SCREW, Machine	67/69	290 (Except 30)		17.602	3	G189384 NA
SCREW, Machine	68/69	290 (30)		17.602	3	G110486 NA
SCREW, Machine	71	304		17.602	3	G189384 NA
SCREW, Machine	67/71	343-360-390-401		17.602	3	G110486 NA

16.205–4 SPRING, Automatic Transmission Upper Valve Body 2–3 Valve (Inner)

67	SIX		.....	1	318 6997
68/71	SIX	***(Use 318 6997)***	.....	1	318 5596
67/69	290 (Except 30)	***(Use 318 6997)***	.....	1	318 5596
68/69	290 (30-* 16-18)		.....	1	319 0453
69	290 (30-* 16-19)		.....	1	316 5032
70/71	304	***(Use 318 6997)***	.....	1	318 5596
67	343 (* 16-11)		.....	1	318 6728
67	343 (* 16-12)		.....	1	319 0453
68/69	343-390 (* 16-18)		.....	1	319 0453
69	343 (* 16-19 And * 16-27)		.....	1	316 5032
69	343 (* 16-28)		.....	1	448 7926
70	360		.....	1	448 7926
69/70	390 (* 16-19)		.....	1	316 5032
71	360		.....	1	321 2358
71	401 (* 16-50)		.....	1	318 6996
71	401 (* 16-51)		.....	1	321 2358

16.205–5 SPRING, Automatic Transmission Upper Valve Body 2–3 Valve (Outer)

67/70	SIX	.....	1	318 6996
71	SIX	.....	1	812 0047
67/69	290 (Except 30)	.....	1	318 6996
68/69	290 (30)	.....	1	319 0454
70	304	.....	1	318 6996
71	304	.....	1	812 0047
67/71	343-360-390-401	.....	1	319 0454

16.205–6 PLUNGER, Automatic Transmission Upper Valve Body 2–3 Shift

67	SIX	.....	1	316 5832
68/71	SIX	.....	1	319 1930
67/69	290 (Except 30)	.....	1	319 1930
70/71	304	.....	1	319 1930

16.205–7 SPRING, Automatic Transmission Upper Valve Body 1–2 Shift Valve

67/70	SIX	.....	1	316 5032
71	SIX	.....	1	448 9496
67/69	290 (Except 30)	.....	1	316 5032
70	304	.....	1	316 5032
71	304	.....	1	448 9496
68/69	290 (30)	.....	1	318 6731
67/70	343-360-390	.....	1	318 6731
71	360	.....	1	315 1095
71	401	.....	1	321 2357

16.205–8 PLATE, Automatic Transmission Upper Valve Body End (Front)

67/71	SIX	.....	1	316 4872
67/69	290 (Except 30)	.....	1	316 4872
70/71	304	.....	1	316 4872

16.205–9 ATTACHING PARTS, Plate To Valve Body

SCREW, Machine	67/70	SIX	17.602	3	G189384 NA
SCREW, Machine	67/69	290 (Except 30)	17.602	3	G189384 NA
BOLT, Hexagon	71	SIX	.....	3	321 2364
BOLT, Hexagon	71	304	.....	3	321 2364

16.205–10 LEVER, Automatic Transmission Upper Valve Body Manual Valve

67/71	SIX	.....	1	318 5586
67/69	290 (Except 30)	.....	1	318 5586
70/71	304	.....	1	318 5586

16.205–11 SPRING, Automatic Transmission Upper Valve Body Orifice Control And Throttle Valve

68/69	290 (30)	.....	1	318 6733
67	343 (Inner–* 16–11)	.....	1	318 6732
67	343 (Outer–* 16–12)	.....	1	318 6733
68/71	343-360-390	.....	1	318 6733
71	360-401	.....	1	318 6733

16.205–12 PLATE, Automatic Transmission Upper Valve Body End

68/69	290 (30)	.....	1	318 6723
67/71	343-360-401	.....	1	318 6723

16.205–13 ATTACHING PARTS, Plate To Valve Body

SCREW, Machine	68/69	290 (30)	17.602	3	G110486 NA
SCREW, Machine	67/71	343-360-390-401	17.602	3	G110486 NA

16.205–14 SPRING, Automatic Transmission Upper Valve Body Throttle Return Valve

67/70	199	.....	1	318 8607
67/71	232-258	.....	1	316 4956
67/69	290 (Except 30)	.....	1	316 4956
68/69	290 (30)	.....	1	318 6733
70/71	304	.....	1	316 4956
67/71	343-360-390-401	.....	1	318 6733

Printed in U.S.A.

16.205–15 SPRING, Automatic Transmission Upper Valve Body Front Clutch Orifice Control Valve

67/71	SIX	.....	1	318 5601
67/69	290 (Except 30)	.....	1	318 5601
70/71	304	.....	1	318 5601

16.205–16 PLATE, Automatic Transmission Upper Valve Body Oil Tube

67/71	SIX	16.025	1	316 4818
67/69	290 (Except 30)	16.025	1	316 4818
70/71	304	16.025	1	316 4818

16.205–17 ATTACHING PARTS, Plate To Lower Valve Body

SCREW, Machine	67/70	(5/8" Long) SIX	17.602	6	G190601 NA
SCREW, Machine	67/70	(7/8" Long) SIX	17.602	2	G443914 NA
SCREW, Machine	67/69	(5/8" Long) 290 (Except 30)	17.602	6	G190601 NA
SCREW, Machine	67/69	(7/8" Long) 290 (Except 30)	17.602	2	G443914 NA
SCREW, Machine	70	(5/8" Long) 304	17.602	6	G190601 NA
SCREW, Machine	70	(7/8" Long) 304	17.602	2	G443914 NA
BOLT, Hexagon	71	(9/16" Long) SIX	.....	6	321 2360
BOLT, Hexagon	71	(7/8" Long) SIX	.....	2	321 2362
BOLT, Hexagon	71	(9/16" Long) 304	.....	6	321 2360
BOLT, Hexagon	71	(7/8" Long) 304	.....	2	321 2362

16.215–1 SPRING, Automatic Transmission Lower Valve Body Down Shift Valve

67/71	SIX	.....	1	318 7426
67/69	290 (Except 30)	.....	1	318 7426
68/69	290 (30)	.....	1	318 6729
70/71	304	.....	1	318 7426
67/71	343-360-390-401	.....	1	318 6729

16.215–2 SPRING, Automatic Transmission Lower Valve Body Servo Orifice Control

67/71	SIX	.....	1	316 4965
67/69	290 (Except 30)	.....	1	316 4965
70/71	304	.....	1	316 4965

16.215–3 SPRING, Automatic Transmission Lower Valve Body Secondary Regulator Valve

67/71	SIX	.....	1	318 5597
67/69	290 (Except 30)	.....	1	318 5597
68/69	290 (30)	.....	1	318 6737
70/71	304	.....	1	318 5597
67/71	343-360-390-401	.....	1	318 6737

16.215–4 SPRING, Automatic Transmission Lower Valve Body Primary Regulator Valve (Outer)

67/71	SIX	.....	1	316 4953
67/69	290 (Except 30)	.....	1	316 4953
68/69	290 (30-* 16-22)	.....	1	319 0455
69 69	290 (30-* 16-23)	.....	1	319 6580
70/71	304	.....	1	316 4953
67	343 (* 16-11)	.....	1	318 6727
67	343 (* 16-12)	.....	1	319 0455
68/69	343-390 (* 16-22)	.....	1	319 0455
69	343-390 (* 16-23)	.....	1	319 6580
70/71	360-390-401	.....	1	319 6580

16.215–5 SPRING, Automatic Transmission Lower Valve Body Converter Out Check

67/71	SIX	.....	1	315 0870

AUTOMATIC TRANSMISSION

16.215–6 SPRING, Automatic Transmission Lower Valve Body 2–3 Circuit Check Ball

67/71	SIX	.....	1	317 7397
67/69	290 (Except 30)	.....	1	317 7397
68/69	290 (30)	.....	1	315 3066
70/71	304	.....	1	317 7397
67/71	343–360–390–401	.....	1	315 3066

16.215–7 BALL, Automatic Transmission Lower Valve Body Converter Check

67/71	SIX	17.018	1	G147485

16.215–8 BALL, Automatic Transmission Lower Valve Body Check Valve Spring

67/71	SIX	17.018	1	G147483
67/69	290 (Except 30)	17.018	1	G147483
68/69	290 (30)	17.018	1	G169110
70/71	304	17.018	1	G147483
67/71	343–360–390–401	17.018	1	G169110

16.215–9 PLATE, Automatic Transmission Valve Body Separating

67	SIX	.....	1	318 6990
68/71	SIX ***(Use 319 4582)***	.....	1	318 6991
67/69	290 (Except 30)	.....	1	319 4582
70/71	304	.....	1	319 4582
67	(Upper) 343 (WCGS)	.....	1	318 6701
67	(Upper) 343 (WFGS)	.....	1	318 7684
68	(Lower) 290 (30)	.....	1	319 1996
68/69	(Lower) 343–390 (* 16–27)	.....	1	319 1996
69	(Lower) 343–390 (* 16–28)	.....	1	448 7927
70/71	(Lower) 360–390–401	.....	1	448 7927

16.215–10 SPRING, Automatic Transmission Lower Valve Body Modulator Valve

67/70	SIX	.....	1	317 4766
71	SIX	.....	1	448 7903
67/69	290 (Except 30)	.....	1	317 4766
68/69	290 (30)	.....	1	318 0612
70/71	304	.....	1	448 7903
67/71	343–360–390–401	.....	1	318 0612

16.215–11 VALVE, Automatic Transmission Lower Valve Body Manual

67/71	SIX	.....	1	316 4967
67/69	290 (Except 30)	.....	1	316 4967
70/71	304	.....	1	316 4967

16.215–12 SPRING, Automatic Transmission Lower Valve Body Primary Regulator Valve (Inner)

68/69	290 (30–* 16–20)	.....	1	319 0456
69	290 (30–* 16–21)	.....	1	319 6578
67	343 (* 16–12)	.....	1	319 0456
68/69	343–390 (* 16–20)	.....	1	319 0456
69	343–390 (* 16–21)	.....	1	319 6578
70/71	360–390–401	.....	1	319 6578

16.215–13 SPRING, Automatic Transmission Lower Valve Body Throttle Modulator Valve

68/69	290 (30)	.....	1	318 6730
67/69	343 (* 16–27)	.....	1	318 6730
69	343 (* 16–28)	.....	1	448 7930
68	390	.....	1	318 6730
69/71	390–401	.....	1	319 4356
70/71	360	.....	1	448 7930

AUTOMATIC TRANSMISSION

16.215–14 SPRING, Automatic Transmission Valve Body Servo Regulator Valve (Outer)

68/69	290 (30)	.....	1	318 6725
67/71	343-360-390-401	.....	1	318 6725

16.215–14a SPRING, Automatic Transmission Valve Body Servo Regulator Valve (Inner)

68/69	290 (30)	.....	1	315 1094
67/71	343-360-390-401	.....	1	315 1094

16.215–15 SPRING, Automatic Transmission Valve Body 2–3 Circuit Check Ball

68/69	290 (30)	.....	1	315 3066
67/71	343-360-390-401	.....	1	315 3066

16.215–16 BALL, Automatic Transmission Valve Body 2–3 Circuit Check

68/69	290 (30)	17.018	1	G169110
67/71	343-360-390-401	17.018	1	G169110

16.215–17 BALL, Automatic Transmission Valve Body 1–2 Directional Check

68/69	290 (30)	.....	1	318 7749
67/71	343-360-390-401	.....	1	318 7749

16.215–18 BALL, Automatic Transmission Valve Body Rear Servo Release Check

68/69	290 (30)	.....	1	318 7749
67/71	343-360-390-401	.....	1	318 7749

16.225–1 LEVER, Automatic Transmission Manual Control (Outer)

67	199 (LHD-* 16-13)	.....	1	317 2101
67	199 (LHD-* 16-14) 194	.....	1	319 0108
67	199 (LHD-* 16-15) 194	.....	1	319 1361
68	199 (LHD-* 16-3) 194	.....	1	319 1361
68	199 (LHD-* 16-4)	.....	1	319 4225
69	199 (LHD-* 16-29)	.....	1	319 4225
69	199 (LHD-* 16-31)	.....	1	319 8575
70	199 (LHD)	.....	1	319 8575
67	***199 (RHD-* 16-13)***	.....	1	318 8917
67	***199 (RHD-* 16-14)***	.....	1	319 0118
67	***199 (RHD-* 16-15)***	.....	1	319 1362
68/69	***199 (RHD-* 16-29)***	.....	1	319 1362
69	***199 (RHD-* 16-30)***	.....	1	319 8576
70	***199 (RHD)***	.....	1	319 8576
69	***232 (RHD-* 16-30)***	.....	1	319 8576
70	***232 (RHD)***	.....	1	319 8576
67	232 (LHD-01-* 16-13) 194	.....	1	317 2101
67	232 (LHD-01-* 16-14) 194	.....	1	319 0108
67	232 (LHD-01-* 16-15) 194	.....	1	319 1361
67	232 (LHD-Except 01-* 16-13) ***(Use 320 8675)***	.....	1	318 7511
67	232 (LHD-Except 01-* 16-14)	.....	1	319 0114
67	232 (LHD-Except 01-* 16-15)	.....	1	319 1364
68	232 (LHD-01-* 16-3) 194	.....	1	319 1361
68	232 (LHD-01-* 16-4)	.....	1	319 4225
68	232 (LHD-Except 01-* 16-1)	.....	1	319 1364
68	232 (LHD-Except 01-* 16-2) 194	.....	1	319 1361
68	232 (LHD-Except 01-* 16-3) 194	.....	1	319 1361
68	232 (LHD-Except 01-* 16-4)	.....	1	319 4225
69	232 (LHD-Except 01-* 16-29)	.....	1	319 4225
69	232 (LHD-* 16-31)	.....	1	319 8575
70/71	232 (LHD)	.....	1	319 8575

Printed in U.S.A.

67	***232 (RHD-* 16-13)***	.....	1	318 8917
67	***232 (RHD-* 16-14)***	.....	1	319 0118
67	***232 (RHD-* 16-15)***	.....	1	319 1362
68/71	***232 (RHD-* 16-29)***	.....	1	319 1362
67	290 (LHD-01-WCGS-* 16-13) 194	.....	1	317 2101
67	290 (LHD-01-WCGS-* 16-14) 194	.....	1	319 0108
67	290 (LHD-01-WCGS-* 16-15) 194	.....	1	319 1361
67	290 (LHD-WFGS-* 16-13)	.....	1	317 7392
67	290 (LHD-WFGS-* 16-14)	.....	1	319 0115
67	290 (LHD-WFGS-* 16-15)	.....	1	319 1363
67	290 (LHD-Except 01-WCGS-* 16-13) ..... ***(Use 320 8675)***	.....	1	318 7511
67	290 (LHD-Except 01-WCGS-* 16-14)	.....	1	319 0114
67	290 (LHD-Except 01-WCGS-* 16-15)	.....	1	319 1364
68	290 (LHD-01-WCGS-* 16-3) 194	.....	1	319 1361
68	290 (LHD-01-WCGS-* 16-4)	.....	1	319 4225
68	290 (LHD-10-70-80-Except 01-* 16-1)	.....	1	319 1364
68	290 (LHD-10-70-80-Except 01-* 16-2) 194	.....	1	319 1361
68	290 (LHD-10-70-80-Except 01-* 16-3) 194	.....	1	319 1361
68	290 (LHD-10-70-80-Except 01-* 16-4)	.....	1	319 4225
68/69	290 (LHD-Except 30-WFGS-* 16-29)	.....	1	319 1363
69	290 (LHD-Except 30- WFGS-* 16-30)	.....	1	319 8565
71	258 (LHD)	.....	1	319 8575
70	304 (Except 30-WFGS)	.....	1	319 8565
71	304 (WFGS)	.....	1	319 8565
68/69	290 (LHD-30-WFGS)	.....	1	317 3261
67	***290 (RHD-* 16-13)***	.....	1	318 9144
67	***290 (RHD-* 16-14)***	.....	1	319 0116
67	***290 (RHD-* 16-15)***	.....	1	319 1365
68/69	***290 (RHD-* 16-29)***	.....	1	319 1362
69	***290 (RHD-* 16-30)***	.....	1	319 8576
70	***304 (RHD-LFGS)***	.....	1	319 8576
70/71	304 (LHD-WCGS)	.....	1	319 8575
67/69	343 (LHD-WCGS)	.....	1	318 7442
67/69	343 (LHD-WFGS)	.....	1	317 3261
67/68	***343 (RHD)***	.....	1	318 8996
68/69	390 (WCGS)	.....	1	318 7442
68/69	390 (WFGS-* 16-27)	.....	1	317 3261
69	390 (WFGS-* 16-28)	.....	1	319 8769
69/71	***343-360 (RHD)***	.....	1	319 5015
70/71	360 (WCGS)	.....	1	319 8768
70	360-390 (WFGS)	.....	1	319 8769
71	401 (WCGS)	.....	1	319 8768
71	401 (WFGS)	.....	1	319 8769
72	SIX	.....	1	321 3544
72	304	.....	1	321 3544
72	360-401	.....	1	321 3545

16.225-2 LEVER, Automatic Transmission Manual And Park (Inside Detent)

67	199-232-290 (Type 1-Refer Special Information Section Page 16-2)***(Use 319 1775)***	.....	1	318 2778
67	199-232-290 (Type 2-Refer Special Information Section Page 16-2)***(Use 319 1775)***	.....	1	319 0112
67	199-232-290 (Type 3-Refer Special Information Section Page 16-2)	.....	1	319 1775
68/71	SIX	.....	1	319 1775
68/69	290 (Except 30)	.....	1	319 1775
68/69	290 (30)	.....	1	318 2544
70/71	304	.....	1	319 1775
67/71	343-360-390-401	.....	1	318 2544

AUTOMATIC TRANSMISSION

16.225–3 ATTACHING PARTS, Lever To Shift Lever

BUSHING	72		16.500	1	321 7256
NUT, Hexagon	67	(5/16"-24) 199-232-290	17.416	1	320 9583
NUT, Hexagon	67	(3/8"-24) 199-232-290	17.416	1	320 9710
NUT, Hexagon	68/71	SIX	17.416	1	320 9710
NUT, Hexagon	68/69	290 (Except 30)	17.416	1	320 9710
NUT, Hexagon	70/71	304	17.416	1	320 9710
NUT, Lock	68/69	290 (30)	16.205	1	315 1150
NUT, Lock	67/71	343-360-390-401	16.205	1	315 1150
NUT, Lock	72	WAT	.....	1	G114381 NA
BOLT, Hexagon	72	WAT	.....	1	G180033 NA
WASHER, Lock	72	WAT	17.820	1	G120214

16.225–4 INSULATOR, Automatic Transmission Manual Control Lever

67/68	199-232-290 (LHD-01)	.....	1	315 1145

16.225–5 ROD, Automatic Transmission Manual Control

67	199-232-290 (Used With Type 1 And Type 2 Lever-Refer Special Information Section Page 16-2)	.....	1	318 2772
67	199-232-290 (Used With Type 3 Lever-Refer Special Information Section Page 16-2)	.....	1	319 1776
68/71	SIX	.....	1	319 1776
68/69	290 (Except 30)	.....	1	319 1776
70/71	304	.....	1	319 1776

16.225–6 "O" RING, Automatic Transmission Manual Control Lever

67/69	SIX	.....	1	316 5006
70/71	SIX	16.235	1	318 7389
67/69	290 (Except 30)	.....	1	316 5006
70/71	304	16.235	1	318 7389

16.225–7 SPRING, Automatic Transmission Manual Valve Detent

68/69	290 (30)	.....	1	317 8655
67/71	343-360-390-401	.....	1	317 8655

16.225–8 BALL, Automatic Transmission Manual Valve Detent Spring

68/69	290 (30)	17.018	1	G147500
67/71	343-360-390-401	17.018	1	G147500

16.225–9 LEVER, Automatic Transmission Manual Valve Detent

67/71	SIX	.....	1	318 2761
67/69	290 (Except 30)	.....	1	318 2761
70/71	304	.....	1	318 2761

16.225–10 ATTACHING PARTS, Lever To Lever

NUT, Hexagon	67/71	SIX	17.410	1	G272121 NA
NUT, Hexagon	67/69	290 (Except 30)	17.410	1	G272121 NA
NUT, Hexagon	70/71	304	17.410	1	G272121 NA

16.225–11 SPRING, Automatic Transmission Manual Valve Detent Lever

67/71	SIX	.....	1	317 7396
67/69	290 (WCGS-Except 30)	.....	1	317 7396
67/69	290 (WFGS-Except 30)	.....	1	319 0400
70/71	304 (WCGS)	.....	1	317 7396
70/71	304 (WFGS)	.....	1	319 0400

16.225–12 BALL, Automatic Transmission Manual Valve Detent Lever Steel (5/16")

67/71	SIX	17.018	1	G169110
67/69	290 (Except 30)	17.018	1	G169110
70/71	304	17.018	1	G169110

Printed in U.S.A.

AUTOMATIC TRANSMISSION

16.225–13 BRACKET, Automatic Transmission Gear Selector Lever Stop

70/71	360–401	.....	1	812 1358
72	360–401 (Except Heavy Duty)	.....	1	812 1411
72	***360-401 (Heavy Duty)***	.....	1	321 8664

16.225–14 ATTACHING PARTS, Bracket To Transmission

BOLT, Hexagon	72	360–401 (Except Heavy Duty)	.....	1	812 1747
NUT	72	360–401 (Except Heavy Duty)	.....	1	400 1457
STUD	***72***	***360-401 (Heavy Duty)***	.....	2	312 2698
WASHER, Lock	***72***	***360-401 (Heavy Duty)***	.....	2	311 1365
NUT	***72***	***360-401 (Heavy Duty)***	17.417	2	812 2425

16.226–1 SWITCH, Solenoid Control (WTCS)

71	232 (01)(40)	.....	1	321 1486
71	232 (10)(70)	.....	1	321 1487
71	258–304	.....	1	321 1487
71	360–401	.....	1	321 1485
72		.....	1	321 5721

16.226–2 ELBOW, Solenoid Control Switch (WTCS)

71	360–401	.....	17.226	1	812 0237

16.230–1 TUBE, Automatic Transmission Oil Cooler

67/68	(Short) SIX	.....	1	318 4733
67/68	(Long) SIX	.....	1	318 4734
69/70	(Short) SIX	.....	1	319 3975
69/70	(Long) SIX	.....	1	319 3976
67	(Short) 01 (290)	.....	1	318 2541
67	(Long) 01 (290)	.....	1	319 0518
68	(Short) 01 (290–* 16–16)	.....	1	318 2541
68	(Short) 01 (290–* 16–17)	.....	1	319 3582
68	(Long) 01 (290–* 16–16)	.....	1	319 0518
68	(Long) 01 (290–* 16–17)	.....	1	319 3583
69	(Short) 01 (290)	.....	1	319 3582
69	(Long) 01 (290)	.....	1	319 3583
67	(Short) 10 (290–* 16–16)	.....	1	318 7624
67	(Short) 10 (290–* 16–17) ***(Ord. 319 3870, 319 3582)***	.....	1	318 8785
67	(Long) 10 (290–* 16–16)	.....	1	318 7625
67	(Long) 10 (290–* 16–17)	.....	1	318 8786
68	(Short) 10–70–80 (290–* 16–16)	.....	1	318 2541
68	(Short) 10–70–80 (290–* 16–17)	.....	1	319 3582
68	(Long) 10–70–80 (290–* 16–16)	.....	1	319 0518
68	(Long) 10–70–80 (290–* 16–17)	.....	1	319 3583
69	(Short) 10–70–80 (290)	.....	1	319 3582
69	(Long) 10–70–80 (290)	.....	1	319 3583
67	(Short) 50–80 (290–* 16–16)	.....	1	318 7624
67	(Short) 50–80 (290–* 16–17) ***(Ord. 319 3582, 316 7685)***	.....	1	318 8919
67	(Long) 50–80 (290–* 16–16)	.....	1	318 7625
67	(Long) 50–80 (290–* 16–17)	.....	1	318 8920
67	(Short) 10–50–80 (343–* 16–16) ***(Ord. 319 0521, 318 7728)***	.....	1	318 7741
67	(Short) 10 (343–* 16–17)	.....	1	318 8787
67	(Short) 50–80 (343–* 16–16)	.....	1	318 8921
67	(Long) 10–50–80 (343–* 16–17)	.....	1	318 7742
67	(Long) 10 (343–* 16–16)	.....	1	318 8788
67	(Long) 50–80 (343–* 16–17) ***(Ord. 319 3585, 316 7685)***	.....	1	318 8922
68/69	(Short) 30 (290)	.....	1	319 3924
68/69	(Long) 30 (290)	.....	1	319 3585
70	(Short) 304 (* 16–33)	.....	1	319 3582
70	(Short) 304 (* 16–34)	.....	1	319 8627
70	(Long) 304 (* 16–33)	.....	1	319 3583
70	(Long) 304 (* 16–34)	.....	1	319 8628

Printed in U.S.A.

68	(Short) 343-390 (* 16-16)	.....	1	319 0521
68	(Short) 343-390 (* 16-17)	.....	1	319 3924
68	(Long) 343-390 (* 16-16)	.....	1	319 0520
68	(Long) 343-390 (* 16-17)	.....	1	319 3585
69/71	(Short) 343-360-390 (* 16-33)	.....	1	319 3924
70	(Short) 360-390 (* 16-34)	.....	1	319 8626
69/71	(Long) 343-360-390 (* 16-33)	.....	1	319 3585
70	(Long) 360-390 (* 16-34)	.....	1	319 8625
71	(Short) 01-10-40-70 (Six-LAC-* 16-52)	.....	1	321 0377
71	(Long) 01-10-40-70 (Six-LAC-* 16-52)	.....	1	321 0376
71	(Short) 01-10-40-70 (Six-LAC-* 16-53)	.....	1	321 1906
71	(Long) 01-10-40-70 (Six-LAC-* 16-53)	.....	1	321 1905
71	(Short) 01-10-40-70 (Six-WAC)	.....	1	321 0377
71	(Long) 01-10-40-70 (Six-WAC)	.....	1	321 0376
71	(Short) 304	.....	1	319 8627
71	(Long) 304	.....	1	319 8628
71	(Short) 360-401	.....	1	319 8626
71	(Long) 360-401	.....	1	319 8625
71	(Short) 80 (Six-LAC-* 16-52)	.....	1	321 0964
71	(Long) 80 (Six-LAC-* 16-52)	.....	1	321 0963
71	(Short) 80 (Six-LAC-* 16-53)	.....	1	321 1904
71	(Long) 80 (Six-LAC-* 16-53)	.....	1	321 1903
71	(Short) 80 (Six-WAC)	.....	1	321 0964
71	(Long) 80 (Six-WAC)	.....	1	321 0963
72	(Short) 01-10-40-70 (Six-LAC)	.....	1	321 5950
72	(Long) 01-10-40-70 (Six-LAC)	.....	1	321 5955
72	(Short) 01-10-40-70 (Six-WAC)	.....	1	321 5949
72	(Long) 01-10-40-70 (Six-WAC)	.....	1	321 5956
72	(Short) 01-40 (304)	.....	1	321 5843
72	(Long) 01-40 (304-LAC)	.....	1	321 5847
72	(Long) 01-40 (304-WAC)	.....	1	321 5849
72	(Short) 01-80 (360)(401)	.....	1	321 5845
72	(Long) 01-80 (360)(401)	.....	1	321 5849
72	(Short) 10 (304)	.....	1	321 5844
72	(Long) 10 (304)	.....	1	321 5850
72	(Short) 70 (304)	.....	1	321 5844
72	(Short) 10-70 (360)(401)	.....	1	321 5846
72	(Long) 10-70 (360)(401)	.....	1	321 5850
72	(Long) 70 (304-LAC)	.....	1	321 5848
72	(Long) 70 (304-WAC)	.....	1	321 5850
72	(Short) 80 (Six)	.....	1	321 5948
72	(Long) 80 (Six)	.....	1	321 5957
72	(Short) 80 (304)	.....	1	321 5843
72	(Long) 80 (304)	.....	1	321 5849
72	***(Short) 10 (Heavy Duty-360)(Taxi)***	.....	1	321 8101
72	***(Long) 10 (Heavy Duty-360)(Taxi)***	.....	1	321 8100

16.230–2 TUBE, Automatic Transmission Oil Cooler Discharge To Sump

68/69	290 (30)	.....	1	315 3454
67/69	343 (* 16-27)	.....	1	315 3454
69	343 (* 16-28)	.....	1	319 3136
68/71	360-390-401	.....	1	319 3136

16.230–3 HOSE, Automatic Transmission Oil Cooler Tube (Flex)

67	290-343	.....	2	318 8672
68	290 (01)	.....	2	319 3871
68	V8 (10)(30)(70)	***(Use 319 3871)***	2	319 3870
68/70	V8 (80)	.....	2	316 7685
69/70	SIX (01)(10)(70)	.....	2	319 3871
69/70	232 (80)	.....	2	316 7685
69/70	V8 (01)(10)(30)(70)	.....	2	319 3871

16.230–4 HOSE, Automatic Transmission Oil Cooler Tube (Rubber–Clamp Type)

67/68	199	.....	2	318 5033
67/68	232 (01)(10)(30)(70)	.....	2	318 5033
67/68	232 (50)(80)	.....	2	318 4735

Printed in U.S.A.

67/68	290	.....	2	318 7728
67	343 (10) *(Use 318 7728)*	.....	2	318 7727
67	343 (50)(80)	.....	2	318 7728
68	343-390	.....	2	318 7728

16.230-5 CLAMP, Automatic Transmission Oil Cooler Tubes Hose

67/70		.....	4	318 4347

16.230-6 ELBOW, Automatic Transmission Oil Cooler Tubes Hose (At Radiator)

67/68		.....	2	318 5084

16.230-7 ELBOW, Automatic Transmission Oil Cooler Tubes (At Transmission)

67/70	199-232-290-304	17.218	2	G143343
71		17.218	2	G143343
67/70	(Front) 343-390 (Used With Short Tube)	17.160	1	G137406
71	(Front) 360-401 (Used With Short Tube)	17.160	1	G137406
67/70	(Rear) 343-390 (Used With Long Tube)	.....	1	318 9859
71	(Rear) 360-401 (Used With Long Tube)	17.218	1	G137422
72	(Front) WAT (Used With Short Tube)	17.158	1	G118749
72	(Rear) WAT (Used With Long Tube)	17.214	1	G118754

16.230-8 CLIP, Automatic Transmission Oil Cooler Tubes Retaining

67	01-10-40-70-80 ("S" Type)	23.028	2	400 0021
72	SIX (WAT)	.....	1	321 5925
72	V8 (WAT)	.....	1	321 5885

16.230-9 BRACKET, Automatic Transmission Oil Cooler Tubes Retaining

67/70	SIX	.....	2	317 5813
70	304	.....	2	317 5813
67	290-343 (Has Hole For Clip Attachment)	.....	1	318 3560
67	290-343 (Snap-In Type)	.....	1	318 9900
68/70	V8 (* 16-33)	.....	1	318 9900
70	V8 (* 16-34)	.....	1	319 8776
71/		.....	1	319 8776

16.230-10 ATTACHING PARTS, Bracket To Oil Pan

STUD	67/70	SIX	.....	2	317 6335	
STUD	67/70	V8	.....	1	317 6335	
WASHER, Lock	67/70	SIX	17.820	2	G120380	NA
WASHER, Lock	67/70	V8	17.820	1	G120380	NA
NUT, Hexagon	67/70	SIX	17.406	2	G120367	
NUT, Hexagon	67/70	V8	17.406	1	G120367	

16.230-11 CLIP, Automatic Transmission Oil Cooler Tubes To Bracket

67/70	SIX	8.220	4	400 1802
67	290-343 (Used With "L" Type Bracket)	.....	1	318 3616
70	304	8.220	4	400 1802

16.230-12 ATTACHING PARTS, Clip To Bracket

BOLT, Hexagon	67/70	SIX	17.038	2	G180022	NA
BOLT, Hexagon	67	290-343	17.038	1	G180016	NA
WASHER, Lock	67/70	SIX	17.820	2	G120380	NA
WASHER, Lock	67/70	290-343	17.820	1	G120380	NA
NUT, Hexagon	67/70	SIX	17.406	2	G120375	
NUT, Hexagon	67	290-343	17.406	1	G120375	

AUTOMATIC TRANSMISSION

16.230–13 ELBOW, Automatic Transmission Oil Cooler Tube (At Radiator)

70	V8 (* 16-34)	.....	2	G118754
71/		.....	2	G118754

16.231–1 COOLER, Automatic Transmission Auxiliary Oil (Trailer Towing Package)

70/	10-80 (V8)	.....	1	319 9980

16.231–2 TUBE, Automatic Transmission Auxiliary Oil Cooler (Trailer Towing Package)

70	(Left) 10 (V8)	.....	1	321 0201
71/	(Left) 10 (V8)	.....	1	321 3634
70/71	(Left) 80 (V8)	.....	1	321 0286
72	(Left) 80 (V8)	.....	1	321 6543
70	(Right) 10 (V8)	.....	1	321 0202
71	(Right) 10 (V8)	.....	1	321 3635
72	(Right) 10 (V8)	.....	1	321 6597
70/71	(Right) 80 (V8)	.....	1	321 0287
72	(Right) 80 (V8)	.....	1	321 6544

16.231–3 ATTACHING PARTS, Automatic Transmission To Auxiliary Oil Cooler

NUT, Tube	70/71	10-80 (V8)	.....	2	448 8516
NUT, Tube	72	10-80 (V8)	.....	2	400 4457
NUT, Tube	70/	10-80 (V8)	17.446	2	G137398
ELBOW	70/	10	17.218	2	G137422
CONNECTOR	70/	80	17.160	2	G137406
PLUG	70/	10-80 (V8)	17.486	2	G103877
UNION	70/	10-80 (V8)	17.792	1	448 8910
CLIP	71/	10-80 (V8)	.....	1	400 0021
CLIP	72	10-80 (V8)(Right Side)	3.312	1	79394
GROMMET	71/	10-80 (V8)	3.166	2	400 0346

16.231–4 BRACKET, Automatic Transmission Auxiliary Oil Cooler Mounting Bracket

70	10-80 (V8)	.....	2	321 0200
71/	10 (V8)	.....	2	321 3633
71/	80 (V8)	.....	2	321 0200

16.231–5 ATTACHING PARTS, Automatic Transmission Auxiliary Oil Cooler Mounting Bracket

BOLT	70/	10-80 (V8)	17.038	4	G180044
NUT	70/	10-80 (V8)	17.417	4	400 3953
SCREW, Machine	70	10-80 (V8)	2.050	4	400 0738
SCREW, Machine	71/	10 (V8)	.....	4	G180022
SCREW, Machine	71/	80 (V8)	2.050	4	400 0738
WASHER, Lock	71/	10 (V8)	17.820	4	G120380
WASHER, Plain	70	10-80 (V8)	17.814	4	400 1176
WASHER, Plain	71/	80 (V8)	17.814	4	400 1176
WASHER, "D" Shape	70/	10-80 (V8)	.....	8	321 0199

16.235–1 SOLENOID, Automatic Transmission Kickdown (To Valve Body)

67/68	SIX ***(Use 319 6496)***	.....	1	318 5580
69/71	SIX	.....	1	319 6496
67/68	290 (Except 30) ***(Use 319 6496)***	.....	1	318 5580
69	290 (Except 30)	.....	1	319 6496
68	290 (30)	.....	1	318 6715
69	290 (30)	.....	1	319 6495
70/71	304	.....	1	319 6496
67/68	343-390	.....	1	318 6715
69/71	343-360-390-401	.....	1	319 6495

16.235–2 "O" RING, Automatic Transmission Kickdown Solenoid

67/71		.....	1	318 5600

Printed in U.S.A.

16.235–3 TERMINAL, Automatic Transmission Kickdown Solenoid Wire

67/71		.....	1	318 5590	

16.235–4 "O" RING, Automatic Transmission Kickdown Solenoid Terminal

67/71		.....	1	318 7389	

16.240–1 TUBE, Automatic Transmission Vacuum

67/71	SIX	.....	1	318 7137	
67/69	290 (Except 30)	.....	1	318 7527	
68/69	290 (30)	.....	1	318 7138	
70/71	304	.....	1	318 7527	
67/71	343-360-390-401	.....	1	318 7138	

16.240–2 HOSE, Automatic Transmission Vacuum Tube To Modulator

67/71	..... ***(Use 319 3524)***	.....	1	318 8565	

16.240–3 CLIP, Automatic Transmission Vacuum Tube Retaining

67/71	SIX (To Transmission)	.....	1	318 6497	
67/71	SIX (To Converter Housing) ..... ***(Use 319 6650)***	.....	1	318 6496	
67/69	290 (To Transmission)(Except 30)	.....	1	318 6497	
67/69	290 (To Converter Housing)(Except 30) ..... ***(Use 319 6650)***	.....	1	318 6496	
68/69	290 (To Transmission And Converter Housing)(30) ..... ***(Use 319 6650)***	.....	2	318 6496	
67/71	304-343-360-390-401 (To Transmission And Converter Housing) ***(Use 319 6650)***	.....	2	318 6496	

16.240–4 ATTACHING PARTS, Clip To Converter Housing

BOLT, Hexagon	67/71	.....	17.038	1	G179848	NA
WASHER, Plain	67/71	.....	17.814	1	400 1101	
WASHER, Lock	67/71	.....	17.820	1	G103321	NA

16.240–5 ELBOW, Automatic Transmission Vacuum Tube To Manifold

67/71	SIX	17.218	1	G137421	
71	304	17.218	1	G137421	

16.240–6 CONNECTOR, Automatic Transmission Vacuum Tube To Manifold

67/71	V8	17.160	1	G137405	

16.245–1 SWITCH, Automatic Transmission Solenoid Kickdown

67/68	.....	.....	1	318 6483	
69/71	LHD (On Accelerator Bracket)	.....	1	319 3748	
70	LHD (01-Six-WAT)(On Carburetor)	.....	1	319 9624	
69/70	***RHD***	.....	1	318 6483	

16.245–2 ATTACHING PARTS, Switch To Control Shaft Bracket

WASHER, Lock	67/68	LHD	17.824	2	G115550	NA
NUT, Hexagon	67/68	LHD	6.367	2	316 6650	

AUTOMATIC TRANSMISSION

16.245–3 ATTACHING PARTS, Switch To Accelerator Pedal Bellcrank Bracket

BOLT, Hexagon	69/71	LHD	17.038	1	G180016	NA
WASHER, Lock	69/71	LHD	17.820	1	G120380	NA
WASHER, Lock	***67/70***	***RHD***	17.824	1	G115550	NA
NUT, Hexagon	69/71	LHD	17.406	1	G120375	
NUT, Hexagon	***67/70***	***RHD***	6.367	1	316 6650	

16.245–3a ATTACHING PARTS, Switch To Bracket (On Carburetor)

NUT, Hexagon	70	01 (LHD-Six-WAT)	6.367	1	316 6650	
WASHER, Lock	70	01 (LHD-Six-WAT)	17.824	1	G115550	NA

16.245–4 WIRE, Automatic Transmission Solenoid Terminal To Kickdown Switch

67/71		.....	1	318 6858	

16.245–5 CLIP, Automatic Transmission Kickdown Switch To Solenoid Wire

67/71		3.610	1	400 0785	
70	01 (LHD-Six-WAT)	.....	1	400 4045	

16.245–6 BRACKET, Automatic Transmission Kickdown Switch To Carburetor

70	01 (199-LDT-WAT)(232-LDT-WAT)	.....	1	319 9555	
70	01 (232-WDT-WAT)	.....	1	319 9556	

16.248–1 GEAR, Speedometer Drive

67	199 (AS2-36A)(AS6-36A)(AS10-36A)(AS14-36A)(AS18-36A)(AS22-36A)	.....	1	317 1548	
67	199 (AS4-36A)(AS8-36A)(AS12-36A)(AS16-36A)(AS20-36A)(AS24-36A)	.....	1	316 7456	
67	232 (AS2-37A)(AS4-37A)(AS6-37A)(AS8-37A)(AS10-37A)(AS12-37A)	.....	1	316 7456	
67	232 (AS14-37A)(AS16-37A)(AS18-37A)(AS20-37A)	.....	1	317 1549	
67	232 (AS22-37A)(AS24-37A)(AS26-37A)(AS28-37A)	.....	1	317 1548	
67	290 (AS2-40)(AS4-40)(AS12-40)(AS14-40)	.....	1	318 4665	
67	290 (AS6-40)(AS8-40)(AS10-40)	.....	1	317 1548	
67	343 (AS2-11)(AS8-11)(AS10-11)	.....	1	316 7462	
67	343 (AS4-11)(AS6-11)(AS12-11)	.....	1	318 2046	
68	199 (AS26-36A)(AS28-36A)(AS30-36A)(AS32-36A)(AS34-36A)	.....	1	317 1548	
68	232 (AS30-37A)(AS32-37A)(AS34-37A)(AS36-37A)(AS38-37A)(AS40-37A)(AS48-37A)(AS50-37A)	.....	1	317 1548	
68	232 (AS42-37A)(AS46-37A)(AS52-37A)	.....	1	319 1347	
68	290 (Except 30)(AS16-40)(AS18-40)(AS20-40)(AS22-40)(AS24-40)(AS26-40)	.....	1	318 4665	
68	290 (30)(AS16-11)(AS20-11)	.....	1	318 2046	
68	343 (AS14-11)(AS16-11)(AS18-11)	.....	1	318 2046	
68	390 (AS2-12)(AS4-12)	.....	1	318 2046	
69	199 (AS28-36A)(AS32-36A)(AS34-36A)(AS2-42)(AS4-42)(AS6-42)	.....	1	317 1548	
69	232 (AS32-37A)(AS36-37A)(AS48-37A)(AS50-37A)(AS2-43)(AS6-43)(AS10-43)(AS12-43)	.....	1	317 1548	
69	232 (AS52-37A)(AS4-43)	.....	1	319 1347	
69	290 (Except 30)(AS18-40)(AS22-40)(AS24-40)(AS2-44)(AS4-44)(AS6-44)(AS8-44)	.....	1	318 4665	
69	290 (30)(AS16-11)(AS20-11)	.....	1	318 2046	
69	343 (AS14-11)(AS16-11)	.....	1	318 2046	
69	390 (AS2-12)(AS4-12)	.....	1	318 2046	
70	199 (AS2-42)(AS4-42)(AS6-42)	.....	1	317 1548	
70	232 (AS4-43)	.....	1	319 1347	
70	232 (AS2-43)(AS6-43)(AS8-43)(AS10-43)(AS12-43)	.....	1	317 1548	
70	304 (AS2-44)(AS4-44)(AS6-44)(AS8-44)	.....	1	318 4665	
70	360 (AS2-11B)(AS4-11B)(AS6-11B)	.....	1	318 2046	
70	360 (AS2-11B)(AS4-11B)(AS10-12)(AS12-12)	.....	1	319 9944	
70	390 (AS2-12)(AS4-12)	.....	1	318 2046	
70	390 (AS8-12)	.....	1	319 9944	

AUTOMATIC TRANSMISSION

71	232 (10-02-000-001)(10-02-000-011)	.....	1	319	1347
71	232 (10-02-000-002)	.....	1	316	7456
71	232-258 (10-02-000-003)	.....	1	316	7456
71	258 (10-02-000-006)	.....	1	316	7456
71	258 (10-02-000-007)	.....	1	316	7456
71	304 (10-02-000-008)	.....	1	318	4665
71	304 (10-02-000-009)	.....	1	318	4665
71	304 (10-02-000-010)	.....	1	318	4665
71	360 (10-03-000-001)	.....	1	318	2046
71	360 (10-03-000-002)	.....	1	318	2046
71	360 (10-03-000-006)	.....	1	318	2046
71	360 (10-03-000-007)	.....	1	318	2046
71	401 (10-03-000-003)	.....	1	318	2046
71	401 (10-03-000-004)	.....	1	318	2046
71	401 (10-03-000-005)	.....	1	319	9944
71	401 (10-03-000-008)	.....	1	318	2046
71	401 (10-03-000-009)	.....	1	318	2046

SPEEDOMETER DRIVE GEAR IDENTIFICATION CHART

I. D.	Teeth	Material	Color	Vendor No.	Part No.
1.186	8	Nylon	Green	35-169D	316 7456
1.380	8	Nylon	Green	8-169A	316 7462
1.186	8	Nylon	Rose	35-169E	317 1548
1.186	7	Nylon	Tan	35-169F	317 1549
1.380	9	Nylon	Purple	8H-169	318 2046
1.186	9	Nylon	Purple	40-169	318 4665
1.186	9	Nylon	Gold	37A-169	319 1347
1.185	8	Nylon	Orange	12-169	319 9944

16.248-2 RING, Automatic Transmission Speedometer Drive Gear Snap

67/71	SIX	6.069	2	310	8405
67/69	290 (Except 30)	6.069	2	310	8405
68/69	290 (30)	6.044	1	315	0622
70/71	304	6.069	2	310	8405
67/71	343-360-390-401	6.044	1	315	0622

16.248-3 BALL, Automatic Transmission Speedometer Drive Gear Steel (1/4")

67/71	.....	17.018	1	G147485

16.250-1 ADAPTER, Automatic Transmission Speedometer Drive Pinion (Single Position)

72	01-70 (232)	3.591	1	321	2707

16.250-2 ADAPTER, Automatic Transmission Speedometer Drive Pinion (Three Position)

72	.....	3.591	1	321	2893

16.250-3 RING, Automatic Transmission Speedometer Seal Retainer

72	.....	3.591	1	321	2846

16.250-4 SEAL, Automatic Transmission Speedometer

72	.....	3.591	1	321	2847

16.250-5 CLAMP, Automatic Transmission Speedometer Drive Pinion Adapter

72	.....	3.591	1	321	2844

Printed in U.S.A.

AUTOMATIC TRANSMISSION

16.250–6 "O" RING, Automatic Transmission Speedometer

72		3.591	1	321 2845

16.250–7 SCREW, Automatic Transmission Speedometer

72		3.591	1	812 1298

16.260–1 MODULATOR, Automatic Transmission Vacuum Control

67/71	SIX	.....	1	~~448 5870~~
67/69	290 (Except 30)	.....	1	448 5870
68/69	290 (30)	.....	1	318 7439
70/71	304	.....	1	448 5870
70	360	.....	1	448 5870
67/70	343-390 (* 16-54)	.....	1	318 7439
70	343-360-390 (* 16-55)	.....	1	448 5870
71	360-401	.....	1	448 5870

16.260–2 "O" RING, Automatic Transmission Vacuum Control Modulator Sealing

67/71		16.235	1	315 4109

16.260–3 ROD, Automatic Transmission Vacuum Control Modulator Control Push

67/71	SIX	16.235	1	318 5595
67/69	290 (Except 30)	16.235	1	318 5595
68/69	290 (30)	16.235	1	318 6591
70/71	304	16.235	1	318 5595
67/71	343-360-390 (* 16-56)	16.235	1	318 6591
70	343-360-390 (* 16-57)	.....	1	321 0383
71	360-401	.....	1	321 0383

16.305 GASKET AND SEAL SET, Automatic Transmission Overhaul

72	232-304	.....	1	812 0985
72	258 (Except Heavy Duty-* 16-81)	.....	1	812 0985
72	360-401	.....	1	812 0986
72	***258 (Heavy Duty-* 16-82)***	.....	1	812 0986

16.307 SNAP RING SET, Automatic Transmission Overhaul

72	232-304 382	.....	1	812 1066
72	258 (Except Heavy Duty-* 16-81) 382	.....	1	812 1066
72	360-401	.....	1	812 1067
72	***258 (Heavy Duty-* 16-82)***	.....	1	812 1067

16.310–1 CASE, Automatic Transmission

72	232	.....	1	812 0836
72	258 (Except Heavy Duty-* 16-81)	.....	1	812 0836
72	304	.....	1	812 0837
72	360-401 (Except Heavy Duty-* 16-83) 392	.....	1	812 0838
72	***(Heavy Duty-* 16-82 And * 16-84)***	.....	1	812 1966

16.310–2 PLUG, Automatic Transmission Case (Pressure Check)

72		.....	3	812 0840

16.310–3 SEAL, Automatic Transmission Case Oil

72		.....	1	812 0839

16.312–1 KIT, Automatic Transmission Over Running Clutch

72	232-304 383	.....	1	812 0844
72	258 (Except Heavy Duty-* 16-81) 383	.....	1	812 0844

AUTOMATIC TRANSMISSION

16.312–1a ATTACHING PARTS, Over Running Clutch Cam To Case

SCREW, Set	72	360–401		17.640	1	G139324
SCREW, Set	***72***	***258 (Heavy Duty-* 16-28)***		17.640	1	G139324

16.312–2 SPRING, Automatic Transmission Over Running Clutch

72	232–304	.....	10	812 0845
72	258 (Except Heavy Duty-* 16–81)	.....	10	812 0845
72	360–401	.....	12	812 0846
72	***258 (Heavy Duty-* 16-82)***	.....	12	812 0846

16.312–3 ROLLER, Automatic Transmission Over Running Clutch

72	232–304	.....	10	812 0847
72	258 (Except Heavy Duty-* 16–81)	.....	10	812 0847
72	360–401	.....	12	812 0848
72	***258 (Heavy Duty-* 16-82)***	.....	12	812 0848

16.314–1 KIT, Automatic Transmission Over Running Clutch Race

72	232–304	376	.....	1	812 0849
72	258 (Except Heavy Duty-* 16–81)	376	.....	1	812 0849
72	360–401	376	.....	1	812 0850
72	***258 (Heavy Duty-* 16-82)***	376	.....	1	812 0850

16.315–1 PAN, Automatic Transmission Oil

72	232–304	.....	1	812 1143
72	258 (Except Heavy Duty-* 16–81)	.....	1	812 1143
72	360–401	.....	1	812 1144
72	***258 (Heavy Duty-* 16-82)***	.....	1	812 1144

16.315–2 ATTACHING PARTS, Pan To Transmission Case

BOLT, Hexagon	72		.....	14	812 1145

16.315–3 GASKET, Automatic Transmission Oil Pan

72	232–304	.....	1	812 0983
72	258 (Except Heavy Duty-* 16–81)	.....	1	812 0983
72	360–401	.....	1	812 0984
72	***258 (Heavy Duty-* 16-82)***	.....	1	812 0984

16.345–1 FILTER, Automatic Transmission Oil

72		.....	1	812 1065

16.345–2 ATTACHING PARTS, Oil Filter To Valve Body

SCREW,	72	(#10-24 × 1-1/4")	.....	3	812 1053

16.348–1 BAND, Automatic Transmission Kickdown

72	232–304	.....	1	812 1169
72	258 (Except Heavy Duty-* 16–81)	.....	1	812 1169
72	360–401	.....	1	812 1084
72	***258 (Heavy Duty-* 16-82)***	.....	1	812 1084

16.348–2 STRUT, Automatic Transmission Kickdown Band

72	232–304	.....	1	812 1087
72	258 (Except Heavy Duty-* 16–81)	.....	1	812 1087
72	360–401	.....	1	812 1103
72	***258 (Heavy Duty-* 16-82)***	.....	1	812 1103

AUTOMATIC TRANSMISSION

16.348–3 LEVER, Automatic Transmission Kickdown Band

72	232-304	.....	.....	1	812 1088
72	258 (Except Heavy Duty-* 16-81)	.....	.....	1	812 1089
72	360 (Except Heavy Duty-* 16-83)	.....	.....	1	812 1090
72	401	.....	.....	1	812 1091
72	***258 (Heavy Duty-* 16-82)***	.....	.....	1	812 1090
72	**360 (Heavy Duty-* 16-84)**	.....	.....	1	812 1091

16.348–4 SHAFT, Automatic Transmission Kickdown Lever

72		.....	.....	1	812 1109

16.348–5 PLUG, Automatic Transmission Kickdown Shaft

72		.....	.....	1	812 1104

16.348–6 ANCHOR, Automatic Transmission Kickdown Band

72	360-401	.....	.....	1	812 1102
72	***258 (Heavy Duty-* 16-82)***	.....	.....	1	812 1102

16.348–7 SCREW, Automatic Transmission Kickdown Band Adjusting

72	232-304	.....	.....	1	812 1085
72	258 (Except Heavy Duty-* 16-81)	.....	.....	1	812 1085
72	360-401	.....	.....	1	812 1086
72	***258 (Heavy Duty-* 16-82)***	.....	.....	1	812 1086

16.348–8 NUT, Automatic Transmission Kickdown Band Screw Adjusting Lock

72		.....	.....	1	G124934 NA

16.350–1 PISTON, Automatic Transmission Kickdown Servo

72	232	.....	.....	1	812 1092
72	258 (Except Heavy Duty-* 16-81)	.....	.....	1	812 1092
72	304	.....	.....	1	812 1093
72	360-401 (Except Heavy Duty-* 16-83)	.....	.....	1	812 1094
72	***258 (Heavy Duty-* 16-82)***	.....	.....	1	812 1094
72	**360-401 (Heavy Duty-* 16-84)**	.....	.....	1	812 2089

16.350–2 SEAL, Automatic Transmission Kickdown Servo Piston Ring (Small)

72	232	.....	.....	1	812 0968
72	258 (Except Heavy Duty-* 16-81)	.....	.....	1	812 0968
72	304	.....	.....	1	812 0971
72	360-401	.....	.....	1	812 0987
72	***258 (Heavy Duty-* 16-82)***	.....	.....	1	812 0987

16.350–3 SEAL, Automatic Transmission Kickdown Servo Piston Ring (Large)

72	232	.....	.....	1	812 0969
72	258 (Except Heavy Duty-* 16-81)	.....	.....	1	812 0969
72	304	.....	.....	1	812 0972
72	360-401	.....	.....	1	812 0988
72	***258 (Heavy Duty-* 16-82)***	.....	.....	1	812 0988

16.350–4 PISTON, Automatic Transmission Kickdown Servo (Inner)

72	360-401 391	.....	.....	1	812 1095
72	***258 (Heavy Duty-* 16-82)*** 391	.....	.....	1	812 1095

16.350–5 SPRING, Automatic Transmission Kickdown Servo Inner Piston

72	360-401	.....	.....	1	812 1096
72	***258 (Heavy Duty-* 16-82)***	.....	.....	1	812 1096

AUTOMATIC TRANSMISSION

16.350–6 RETAINER, Automatic Transmission Kickdown Servo Inner Piston

72	360–401	.....	1	812 1097
72	***258 (Heavy Duty-* 16-82)***	.....	1	812 1097

16.350–7 RING, Automatic Transmission Kickdown Servo Inner Piston Snap

72	360–401	.....	1	812 1050
72	***258 (Heavy Duty-* 16-82)***	.....	1	812 1050

16.350–8 ROD, Automatic Transmission Kickdown Servo Piston

72	SIX	.....	1	812 1098
72	304	.....	1	812 1098
72	401	.....	1	812 1287

16.350–9 SPRING, Automatic Transmission Kickdown Servo Piston (Inner)

72	SIX	.....	1	812 1099
72	304	.....	1	812 1099
72	***360-401 (Heavy Duty-* 16-84)***	.....	1	812 2047

16.350–10 SPRING, Automatic Transmission Kickdown Servo Piston (Outer)

72	304	.....	1	812 1100
72	360–401 (Except Heavy Duty-* 16–83)	.....	1	812 1101
72	***258 (Heavy Duty-* 16-82)***	.....	1	812 1101
72	***360-401 (Heavy Duty-* 16-84)***	.....	1	812 2046

16.350–11 GUIDE, Automatic Transmission Kickdown Servo

72	232	.....	1	812 1105
72	258 (Except Heavy Duty-* 16–81)	.....	1	812 1105
72	304	.....	1	812 1106
72	360–401 (Except Heavy Duty-* 16–83)	.....	1	812 1107
72	***258 (Heavy Duty-* 16-82)***	.....	1	812 1107
72	***360-401 (Heavy Duty-* 16-84)***	.....	1	812 1288

16.350–12 SEAL, Automatic Transmission Kickdown Servo Guide Ring

72	232	.....	1	812 0969
72	258 (Except Heavy Duty-* 16–81)	.....	1	812 0969
72	304	.....	1	812 0972
72	360–401	.....	1	812 0988
72	***258 (Heavy Duty-* 16-82)***	.....	1	812 0988

16.350–13 RING, Automatic Transmission Kickdown Servo Snap

72	232	.....	1	812 1051
72	258 (Except Heavy Duty-* 16–81)	.....	1	812 1051
72	304	.....	1	812 1052
72	360–401	.....	1	812 1055
72	***258 (Heavy Duty-* 16-82)***	.....	1	812 1055

16.370–1 PISTON, Automatic Transmission Reverse Servo

72	232-304	.....	1	812 1180
72	258 (Except Heavy Duty-* 16–81)	.....	1	812 1180
72	360–401	.....	1	812 1181
72	***258 (Heavy Duty-* 16-82)***	.....	1	812 1181

16.370–2 SEAL, Automatic Transmission Reverse Servo Piston

72	232-304	.....	1	812 0992
72	258 (Except Heavy Duty-* 16–81)	.....	1	812 0992
72	360–401	.....	1	812 0993
72	***258 (Heavy Duty-* 16-82)***	.....	1	812 0993

AUTOMATIC TRANSMISSION

16.370–3 SPRING, Automatic Transmission Reverse Servo Cushion

72	SIX	.....	1	812 1176
72	304	.....	1	812 1177
72	360–401	.....	1	812 1176

16.370–4 PLUG, Automatic Transmission Reverse Servo Piston

72	.....	.....	1	812 1175

16.370–5 RING, Automatic Transmission Reverse Servo Plug

72	.....	.....	1	812 1174

16.370–6 SPRING, Automatic Transmission Reverse Servo Piston

72	232–304	.....	1	812 1172
72	258 (Except Heavy Duty–* 16–81)	.....	1	812 1172
72	360–401	.....	1	812 1173
72	***258 (Heavy Duty–* 16–82)***	.....	1	812 1173

16.370–7 RETAINER, Automatic Transmission Reverse Servo Piston Spring

72	232–304	.....	1	812 1170
72	258 (Except Heavy Duty–* 16–81)	.....	1	812 1170
72	360–401	.....	1	812 1171
72	***258 (Heavy Duty–* 16–82)***	.....	1	812 1171

16.370–8 RING, Automatic Transmission Reverse Servo Piston Spring Retainer Snap

72	232–304	.....	1	812 0845
72	258 (Except Heavy Duty–* 16–81)	.....	1	812 0845
72	360–401	.....	1	812 1055
72	***258 (Heavy Duty–* 16–82)***	.....	1	812 1055

16.375–1 PISTON, Automatic Transmission Accumulator

72	.....	.....	1	812 1054

16.375–2 SEAL, Automatic Transmission Accumulator Piston Ring (Large)

72	.....	.....	1	812 0982

16.375–3 SEAL, Automatic Transmission Accumulator Piston Ring (Small)

72	.....	.....	1	812 0981

16.375–4 SPRING, Automatic Transmission Accumulator

72	232	.....	1	812 1140
72	258 (Except Heavy Duty–* 16–81)	.....	1	812 1148
72	V8	.....	1	812 1141
72	***258 (Heavy Duty–* 16–82)***	.....	1	812 1141

16.380–1 HOUSING, Automatic Transmission Oil Pump (With Bushing)

72	232–304	377	.....	1	812 0851
72	258 (Except Heavy Duty–* 16–81)	377	.....	1	812 0851
72	360–401	393	.....	1	812 0856
72	***258 (Heavy Duty–* 16–82)***	393	.....	1	812 0856

16.380–2 BUSHING, Automatic Transmission Oil Pump Housing

72	232–304	.....	1	812 0854
72	258 (Except Heavy Duty–* 16–81)	.....	1	812 0854
72	360–401	.....	1	812 0855
72	***258 (Heavy Duty–* 16–82)***	.....	1	812 0855

Printed in U.S.A.

AUTOMATIC TRANSMISSION

16.380–3 SEAL, Automatic Transmission Oil Pump Impeller Hub

72	232-304		.....	1	812 0852
72	258 (Except Heavy Duty-* 16-81)		.....	1	812 0852
72	360-401		.....	1	812 0853
72	***258 (Heavy Duty-* 16-82)***		.....	1	812 0853

16.380–4 SEAL, Automatic Transmission Oil Pump Housing

72	232-304		.....	1	812 0858
72	258 (Except Heavy Duty-* 16-81)		.....	1	812 0858
72	360-401		.....	1	812 0859
72	***258 (Heavy Duty-* 16-82)***		.....	1	812 0859

16.380–5 ROTOR, Automatic Transmission Oil Pump (Inner And Outer)

72	232-304	380	.....	1	812 0860
72	258 (Except Heavy Duty-* 16-81)	380	.....	1	812 0860
72	360-401	380	.....	1	812 0861
72	***258 (Heavy Duty-* 16-82)***	380	.....	1	812 0861

16.380–6 BAFFLE, Automatic Transmission Oil Pump Housing (With Drive Screw)

72	360-401	385	.....	1	812 0857
72	258 (* 16-82)	385	.....	1	812 0857

16.380–7 SHAFT, Automatic Transmission Reaction (With Bushing)

72	232-304	384	.....	1	812 0862
72	258 (Except Heavy Duty-* 16-81)	384	.....	1	812 0862
72	360-401	390	.....	1	812 0863
72	***258 (Heavy Duty-* 16-82)***	390	.....	1	812 0863

16.380–8 BUSHING, Automatic Transmission Reaction Shaft

72	232-304		.....	1	812 0864
72	258 (Except Heavy Duty-* 16-81)		.....	1	812 0864
72	360-401		.....	1	812 0865
72	***258 (Heavy Duty-* 16-82)***		.....	1	812 0865

16.380–9 SEAL, Automatic Transmission Reaction Shaft Ring

72	232-304		.....	2	812 0866
72	258 (Except Heavy Duty-* 16-81)		.....	2	812 0866
72	360-401		.....	2	812 0867
72	***258 (Heavy Duty-* 16-82)***		.....	2	812 0867

16.380–10 GASKET, Automatic Transmission Oil Pump Housing

72	232-304		.....	1	812 0868
72	258 (Except Heavy Duty-* 16-81)		.....	1	812 0868
72	360-401		.....	1	812 0869
72	***258 (Heavy Duty-* 16-82)***		.....	1	812 0869

16.380–11 SHIELD, Automatic Transmission Vent (With Plug)

72	360-401	387	.....	1	812 0874
72	***258 (Heavy Duty-* 16-82)***	387	.....	1	812 0874

16.380–12 SCREW, Automatic Transmission Oil Pump Housing

72	232-304		.....	6	812 0871
72	258 (Except Heavy Duty-* 16-81)		.....	6	812 0871
72	360-401		.....	7	812 0871
72	***258 (Heavy Duty-* 16-82)***		.....	7	812 0871

AUTOMATIC TRANSMISSION

16.380–13 BOLT, Automatic Transmission Reaction Shaft Support

72	(5/16"–18 x 11/16")	17.586	6	G179815

16.385–1 SUPPORT, Automatic Transmission Governor

72	232–304	.....	1	812 1123
72	258 (Except Heavy Duty–* 16–81)	.....	1	812 1123
72	360–401	.....	1	812 1124
72	***258 (Heavy Duty–* 16–82)***	.....	1	812 1124

16.385–2 SEAL, Automatic Transmission Governor Support Ring (Front)

72		.....	1	812 0976

16.385–3 SEAL, Automatic Transmission Governor Support Ring (Rear)

72		.....	1	812 0976

16.385–4 BODY, Automatic Transmission Governor

72	232–304	.....	1	812 1125
72	258 (Except Heavy Duty–* 16–81)	.....	1	812 1125
72	360–401	.....	1	812 1126
72	***258 (Heavy Duty–* 16–82)***	.....	1	812 1126

16.385–5 LOCK, Automatic Transmission Governor Body Bolt

72		.....	2	812 1127

16.385–6 BOLT, Automatic Transmission Governor Body

72	(1/4"–20 x 11/16")	.....	4	G179794

16.385–7 RING, Automatic Transmission Governor Body Snap

72	232–304	.....	1	812 1056
72	258 (Except Heavy Duty–* 16–81)	.....	1	812 1056
72	360–401	.....	1	812 1057
72	***258 (Heavy Duty–* 16–82)***	.....	1	812 1057

16.385–8 WEIGHT, Automatic Transmission Governor (Outer)

72	232	.....	1	812 1128
72	258 (Except Heavy Duty–* 16–81)	.....	1	812 1128
72	V8	.....	1	812 1129
72	***258 (Heavy Duty–* 16–82)***	.....	1	812 1929

16.385–9 WEIGHT, Automatic Transmission Governor (Inner)

72	232	.....	1	812 1130
72	258 (Except Heavy Duty–* 16–81)	.....	1	812 1130
72	V8	.....	1	812 1131
72	***258 (Heavy Duty–* 16–82)***	.....	1	812 1131

16.385–10 SPRING, Automatic Transmission Governor Weight

72	232	.....	1	812 1133
72	258 (Except Heavy Duty–* 16–81)	.....	1	812 1133
72	V8 (Except Police)	.....	1	812 1132
72	***Police***	.....	1	812 2930
72	***258 (Heavy Duty–* 16–82)***	.....	1	812 1132

16.385–11 RING, Automatic Transmission Governor Weight Snap (Inner)

72		.....	1	812 1058

16.385–12 RING, Automatic Transmission Governor Weight Snap (Outer)

72		.....	1	812 1060

16.385–13 VALVE, Automatic Transmission Governor

72			1	812 1149

16.385–14 SHAFT, Automatic Transmission Governor Valve

72			1	812 1150

16.385–15 RING, Automatic Transmission Governor Valve Shaft Snap

72			2	812 1059

16.385–16 PLUG, Automatic Transmission Governor Press Check

72	(1/8"–27)		1	812 0840

16.390–1 PLUG, Automatic Transmission Parking Sprag Reaction

72		395	1	812 1185

16.390–2 RING, Automatic Transmission Parking Snap

72			1	812 1063

16.390–3 SPRAG, Automatic Transmission Parking

72			1	812 1157

16.390–4 SPRING, Automatic Transmission Parking Sprag

72			1	812 1158

16.390–5 SHAFT, Automatic Transmission Parking Sprag

72			1	812 1159

16.390–6 ROD, Automatic Transmission Parking Sprag

72	232-304		1	812 1163
72	258 (Except Heavy Duty-* 16-81)		1	812 1163
72	360-401		1	812 1164
72	***258 (Heavy Duty-* 16-82)***		1	812 1164

16.390–7 "E" RING, Automatic Transmission Parking Sprag Rod

72			1	812 1239

16.390–8 CLIP, Automatic Transmission Wiring

72			1	812 1160

16.405–1 SHAFT, Automatic Transmission Input

72	232-304		1	812 0906
72	258 (Except Heavy Duty-* 16-81)		1	812 0906
72	***258 (Heavy Duty-* 16-82)***	394	1	812 1284
72	360-401	394	1	812 1284

16.405–2 RING, Automatic Transmission Input Shaft Seal

72	232-304		1	812 0910
72	258 (Except Heavy Duty-* 16-81)		1	812 0910
72	360-401		2	812 0911
72	***258 (Heavy Duty-* 16-82)***		2	812 0911

AUTOMATIC TRANSMISSION

16.405–3 RING, Automatic Transmission Input Shaft Snap

72	232-304		.....	1	812 0907
72	258 (Except Heavy Duty-* 16-81)		.....	1	812 0907
72	360-401		.....	1	812 0908
72	***258 (Heavy Duty-* 16-82)***		.....	1	812 0908

16.405–4 BUSHING, Automatic Transmission Input

72	360-401		.....	1	812 0905
72	***258 (Heavy Duty-* 16-82)***		.....	1	812 0905

16.415–1 RETAINER ASSEMBLY, Automatic Transmission Front Clutch

72	232	379	.....	1	812 0943
72	258 (Except Heavy Duty-* 16-81)	379	.....	1	812 0843
72	304	379	.....	1	812 0843
72	360 (Except Heavy Duty-* 16-83)	389	.....	1	812 0870
72	401	389	.....	1	812 0872
72	***258 (Heavy Duty-* 16-82)***	389	.....	1	812 0870
72	***360 (Heavy Duty-* 16-84)***	389	.....	1	812 0872

16.415–3 PISTON, Automatic Transmission Front Clutch

72	232-304		.....	1	812 0873
72	258 (Except Heavy Duty-* 16-81)		.....	1	812 0873
72	360-401		.....	1	812 0880
72	***258 (Heavy Duty-* 16-82)***		.....	1	812 0880

16.415–4 SEAL, Automatic Transmission Front Clutch Piston (Inner)

72	232-304		.....	1	812 0881
72	258 (Except Heavy Duty-* 16-81)		.....	1	812 0881
72	360-401		.....	1	812 0882
72	***258 (Heavy Duty-* 16-82)***		.....	1	812 0882

16.415–5 SEAL, Automatic Transmission Front Clutch Piston (Outer)

72	232-304		.....	1	812 0883
72	258 (Except Heavy Duty-* 16-81)		.....	1	812 0883
72	360-401		.....	1	812 0884
72	***258 (Heavy Duty-* 16-82)***		.....	1	812 0884

16.415–6 SPRING, Automatic Transmission Front Clutch Piston

72	232		.....	1	812 0965
72	258 (Except Heavy Duty-* 16-81)		.....	1	812 0967
72	304		.....	1	812 0967
72	360-401		.....	9	812 0966
72	***258 (Heavy Duty-* 16-82)***		.....	9	812 0966

16.415–7 RETAINER, Automatic Transmission Front Clutch Cylinder Spring

72	232-304		.....	1	812 0085
72	258 (Except Heavy Duty-* 16-81)		.....	1	812 0885
72	360-401		.....	1	812 0886
72	***258 (Heavy Duty-* 16-82)***		.....	1	812 0886

16.415–7a RING, Automatic Transmission Front Clutch Cylinder Spring Snap (Inner)

72	232-304		.....	1	812 0887
72	258 (Except Heavy Duty-* 16-81)		.....	1	812 0887
72	360-401		.....	1	812 0888
72	***258 (Heavy Duty-* 16-82)***		.....	1	812 0888

AUTOMATIC TRANSMISSION

16.415–8 PLATE, Automatic Transmission Front Clutch Pressure

72	232–304	.....	1	812 0932
72	258 (Except Heavy Duty–* 16–81)	.....	1	812 0932
72	360–401	.....	1	812 0933
72	***258 (Heavy Duty–* 16–82)***	.....	1	812 0933

16.415–9 PLATE, Automatic Transmission Front Clutch Drive

72	232	.....	3	812 0890
72	258 (Except Heavy Duty–* 16–81)	.....	4	812 0890
72	304	.....	4	812 0890
72	360 (Except Heavy Duty–* 16–83)	.....	3	812 0891
72	401	.....	4	812 0891
72	***258 (Heavy Duty–* 16–82)***	.....	3	812 0891
72	***360 (Heavy Duty–* 16–84)***	.....	4	812 0891

16.415–10 DISC ASSEMBLY, Automatic Transmission Front Clutch

72	232	.....	3	812 0879
72	258 (Except Heavy Duty–* 16–81)	.....	4	812 0879
72	304	.....	4	812 0879
72	360 (Except Heavy Duty–* 16–83)	.....	3	812 0889
72	401	.....	4	812 0889
72	***258 (Heavy Duty–* 16–82)***	.....	3	812 0889
72	***360 (Heavy Duty–* 16–84)***	.....	4	812 0889

16.415–11 RING, Automatic Transmission Front Clutch Pressure Snap

72	232–304	.....	1	812 0894
72	258 (Except Heavy Duty–* 16–81)	.....	1	812 0894
72	360–401	.....	1	812 0895
72	***258 (Heavy Duty–* 16–82)***	.....	1	812 0895

16.415–12 BUSHING, Automatic Transmission Front Clutch Retainer

72	232–304	.....	1	812 0896
72	258 (Except Heavy Duty–* 16–81)	.....	1	812 0896
72	360–401	.....	1	812 0897
72	***258 (Heavy Duty–* 16–82)***	.....	1	812 0897

16.415–13 WASHER, Automatic Transmission Front Clutch Thrust

72	232–304	.....	2	812 0835
72	258 (Except Heavy Duty–* 16–81)	.....	2	812 0835

16.415–14 WASHER, Automatic Transmission Front Clutch Thrust (Front)

72	(.061" Thick–Green) 360–401	.....	AR	812 0898
72	(.084" Thick–Red) 360–401	.....	AR	812 0899
72	(.106" Thick–Yellow) 360–401	.....	AR	812 0900
72	***(.061" Thick-Green) 258 (Heavy Duty–* 16–82)***	.....	AR	812 0898
72	***(.084" Thick-Red) 258 (Heavy Duty–* 16–82)***	.....	AR	812 0899
72	***(.106" Thick-Yellow) 258 (Heavy Duty–* 16–82)***	.....	AR	812 0900

16.415–15 WASHER, Automatic Transmission Front Clutch Thrust (Rear)

72	258	.....	1	812 0898
72	360–401	.....	1	812 0898

16.425–1 PISTON ASSEMBLY, Automatic Transmission Rear Clutch

72	232–304	.....	1	812 0912
72	258 (Except Heavy Duty–* 16–81)	.....	1	812 0912
72	360–401	.....	1	812 0913
72	***258 (Heavy Duty–* 16–82)***	.....	1	812 0913

AUTOMATIC TRANSMISSION

16.425–2 SEAL, Automatic Transmission Rear Clutch Piston (Inner)

72	232-304	.....	1	812 0915
72	258 (Except Heavy Duty-* 16-81)	.....	1	812 0915
72	360-401	.....	1	812 0916
72	***258 (Heavy Duty-* 16-82)***	.....	1	812 0916

16.425–3 SEAL, Automatic Transmission Rear Clutch Piston (Outer)

72	232-304	.....	1	812 0917
72	258 (Except Heavy Duty-* 16-81)	.....	1	812 0917
72	360-401	.....	1	812 0918
72	***258 (Heavy Duty-* 16-82)***	.....	1	812 0918

16.425–4 RETAINER, Automatic Transmission Rear Clutch

72	360-401	.....	1	812 0920
72	***258 (Heavy Duty-* 16-82)***	.....	1	812 0920

16.425–4a RETAINER, Automatic Transmission Rear Clutch And Piston

72	232	.....	1	812 0902
72	258 (Except Heavy Duty-* 16-81)	.....	1	812 0902
72	304	.....	1	812 0903

16.425–4b RETAINER, Automatic Transmission Rear Clutch Piston

72	360-401	.....	1	812 0904
72	***258 (Heavy Duty-* 16-82)***	.....	1	812 0904

16.425–5 SPRING, Automatic Transmission Rear Clutch Piston

72	232-304	.....	1	812 0919
72	258 (Except Heavy Duty-* 16-81)	.....	1	812 0919
72	360-401	.....	1	812 0921
72	***258 (Heavy Duty-* 16-82)***	.....	1	812 0921

16.425–6 SPACER, Automatic Transmission Rear Clutch Spring

72	360-401	.....	1	812 1155
72	***258 (Heavy Duty-* 16-82)***	.....	1	812 1155

16.425–7 SPRING, Automatic Transmission Rear Clutch Wave

72	232	.....	1	812 0922
72	258 (Except Heavy Duty-* 16-81)	.....	1	812 0922
72	304	.....	1	812 0923
72	360-401	.....	1	812 0924
72	***258 (Heavy Duty-* 16-82)***	.....	1	812 0924

16.425–8 SEAL RING, Automatic Transmission Rear Clutch Retainer

72	232-304	.....	1	812 0925
72	258 (Except Heavy Duty-* 16-81)	.....	1	812 0925

16.425–9 PLATE, Automatic Transmission Rear Clutch Pressure (Front)

72	232-304	.....	1	812 0926
72	258 (Except Heavy Duty-* 16-81)	.....	1	812 0926
72	360-401	.....	1	812 0927
72	***258 (Heavy Duty-* 16-82)***	.....	1	812 0927

16.425–10 DISC ASSEMBLY, Automatic Transmission Rear Clutch

72	232	.....	3	812 0928
72	258 (Except Heavy Duty-* 16-81)	.....	3	812 0928
72	304	.....	4	812 0928
72	360-401	.....	4	812 0929
72	***258 (Heavy Duty-* 16-82)***	.....	4	812 0929

Printed in U.S.A.

AUTOMATIC TRANSMISSION

16.425–11 PLATE, Automatic Transmission Rear Clutch

72	232	.....	2	812 0890
72	258 (Except Heavy Duty–* 16–81)	.....	2	812 0890
72	304	.....	3	812 0890
72	360–401	.....	3	812 0891
72	***258 (Heavy Duty–* 16–82)***	.....	3	812 0891

16.425–12 PLATE, Automatic Transmission Rear Clutch Pressure (Rear)

72	232–304	.....	1	812 0932
72	258 (Except Heavy Duty–* 16–81)	.....	1	812 0932
72	360–401	.....	1	812 0933
72	***258 (Heavy Duty–* 16–82)***	.....	1	812 0933

16.425–13 RING, Automatic Transmission Rear Clutch Retainer Snap

72	(.060" Thick) 232–304	.....	AR	812 0934
72	(.060" Thick) 258 (Except Heavy Duty–* 16–81)	.....	AR	812 0934
72	(.060" Thick) 360–401	.....	AR	812 0935
72	(.074" Thick) 232–304	.....	AR	812 0936
72	(.074" Thick) 258 (Except Heavy Duty–* 16–81)	.....	AR	812 0936
72	(.074" Thick) 360–401	.....	AR	812 0937
72	(.088" Thick) 360–401	.....	AR	812 0939
72	(.098" Thick) 232–304	.....	AR	812 0938
72	(.098" Thick) 258 (Except Heavy Duty–* 16–81)	.....	AR	812 0938
72	(.106" Thick) 360–401	.....	AR	812 0940
72	***(.060" Thick) 258 (Heavy Duty–* 16–82)***	.....	AR	812 0935
72	***(.074" Thick) 258 (Heavy Duty–* 16–82)***	.....	AR	812 0937
72	***(.088" Thick) 258 (Heavy Duty–* 16–82)***	.....	AR	812 0939
72	***(.106" Thick) 258 (Heavy Duty–* 16–82)***	.....	AR	812 0940

16.430–1 BAND, Automatic Transmission Reverse

72	232	.....	1	812 1108
72	258 (Except Heavy Duty–* 16–81)	.....	1	812 1108
72	304	.....	1	812 1118
72	360–401	.....	1	812 1119
72	***258 (Heavy Duty–* 16–82)***	.....	1	812 1119

16.430–2 LEVER, Automatic Transmission Reverse Band

72	232	.....	1	812 1192
72	258 (Except Heavy Duty–* 16–81)	.....	1	812 1192
72	304	.....	1	812 1193
72	360–401	.....	1	812 1194
72	***258 (Heavy Duty–* 16–82)***	.....	1	812 1194

16.430–3 LEVER, Automatic Transmission Reverse Band Short

72	232	.....	1	812 1190
72	258 (Except Heavy Duty–* 16–81)	.....	1	812 1190
72	360–401	.....	1	812 1191
72	***258 (Heavy Duty–* 16–82)***	.....	1	812 1191

16.430–4 SCREW, Automatic Transmission Reverse Band Adjusting

72	232	.....	1	812 1187
72	258 (Except Heavy Duty–* 16–81)	.....	1	812 1187
72	304	.....	1	812 1188
72	360–401	.....	1	812 1189
72	***258 (Heavy Duty–* 16–82)***	.....	1	812 1189

16.430–5 NUT, Automatic Transmission Reverse Band Adjusting Screw Lock

72	232–304	17.406	1	400 1239
72	258 (Except Heavy Duty–* 16–81)	17.406	1	400 1239
72	360–401	17.410	1	G272121
72	***258 (Heavy Duty–* 16–82)***	17.410	1	G272121

AUTOMATIC TRANSMISSION

16.430–6 SHAFT, Automatic Transmission Reverse Band Lever

72	232-304		.....	1	812 1183
72	258 (Except Heavy Duty-* 16-81)		.....	1	812 1183
72	360-401		.....	1	812 1184
72	***258 (Heavy Duty-* 16-82)***		.....	1	812 1184

16.430–7 SEAL, Automatic Transmission Reverse Band Lever

72	232-304		.....	1	812 0989
72	258 (Except Heavy Duty-* 16-81)		.....	1	812 0989
72	360-401		.....	1	812 0990
72	***258 (Heavy Duty-* 16-82)***		.....	1	812 0990

16.430–8 SHAFT, Automatic Transmission Reverse Band Reaction

72	304		.....	1	812 1183

16.430–9 SEAL, automatic Transmission Reverse Band Reaction

72	304		.....	1	812 0989

16.440–1 GEAR, Automatic Transmission Sun

72	232-304	388	.....	1	812 1025
72	258 (Except Heavy Duty-* 16-81)	388	.....	1	812 1025
72	360-401	388	.....	1	812 1285
72	***258 (Heavy Duty-* 16-32)***	388	.....	1	812 1285

16.440–2 SHELL, Automatic Transmission Sun Gear Driving

72	232-304		.....	1	812 1019
72	258 (Except Heavy Duty-* 16-81)		.....	1	812 1019
72	360-401		.....	1	812 1026
72	***258 (Heavy Duty-* 16-82)***		.....	1	812 1026

16.440–3 PLATE, Automatic Transmission Sun Gear Driving Shell Thrust

72	232-304		.....	2	812 1020
72	258 (Except Heavy Duty-* 16-81)		.....	2	812 1020
72	360-401		.....	1	812 1027
72	***258 (Heavy Duty-* 16-82)***		.....	1	812 1027

16.440–4 WASHER, Automatic Transmission Sun Gear Driving Shell Thrust

72	232		.....	2	812 1021
72	258 (Except Heavy Duty-* 16-81)		.....	2	812 1021
72	304		.....	2	812 1022
72	360-401		.....	1	812 1072
72	***258 (Heavy Duty-* 16-82)***		.....	1	812 1072

16.440–5 RING, Automatic Transmission Sun Gear Driving Shell Lock

72	232-304		.....	2	812 1024
72	258 (Except Heavy Duty-* 16-81)		.....	2	812 1024
72	360-401		.....	2	812 1028
72	***258 (Heavy Duty-* 16-82)***		.....	2	812 1028

16.450–1 CARRIER, Automatic Transmission Planetary (Front)

72	232		.....	1	812 1008
72	258 (Except Heavy Duty-* 16-81)		.....	1	812 1008
72	304		.....	1	812 1009
72	360 (Except Heavy Duty-* 16-83)		.....	1	812 1010
72	401 (Except Heavy Duty-* 16-83)		.....	1	812 1011
72	***258 (Heavy Duty-* 16-82)***		.....	1	812 1010
72	***360-401 (Heavy Duty-* 16-84)***		.....	1	812 1011

AUTOMATIC TRANSMISSION

16.450–2 WASHER, Automatic Transmission Pinion Carrier Thrust (Front)

72	360 (Except Heavy Duty–* 16–83)	.....	1	812 1072
72	401	.....	1	812 1013
72	***258 (Heavy Duty–* 16–82)***	.....	1	812 1072
72	***360 (Heavy Duty–* 16–84)***	.....	1	812 1013

16.450–3 CARRIER, Automatic Transmission Planetary (Rear)

72	232	.....	1	812 1110
72	258 (Except Heavy Duty–* 16–81)	.....	1	812 1110
72	304	.....	1	812 1071
72	360	.....	1	812 1070
72	401 (Except Heavy Duty–* 16–83)	.....	1	812 1070
72	***258 (Heavy Duty–* 16–82)***	.....	1	812 1070
72	***401 (Heavy Duty–* 16–84)***	.....	1	812 2091

16.450–4 WASHER, Automatic Transmission Pinion Carrier Thrust (Rear)

72	360	.....	1	812 1072
72	401 (Except Heavy Duty–* 16–83)	.....	1	812 1072
72	***258 (Heavy Duty–* 16–82)***	.....	1	812 1072
72	***401 (Heavy Duty–* 16–84)***	.....	1	812 1013

16.455–1 LINK, Automatic Transmission Reverse Band

72	232	.....	1	812 1048
72	258 (Except Heavy Duty–* 16–81)	.....	1	812 1048
72	360–401	.....	1	812 1120
72	***258 (Heavy Duty–* 16–82)***	.....	1	812 1120

16.455–2 STRUT, Automatic Transmission Reverse Band

72	232	.....	1	812 1121
72	258 (Except Heavy Duty–* 16–81)	.....	1	812 1121
72	360–401	.....	1	812 1122
72	***258 (Heavy Duty–* 16–82)***	.....	1	812 1122

16.458–1 GEAR, Automatic Transmission Annulus Front

72	232–304	.....	1	812 1073
72	258 (Except Heavy Duty–* 16–81)	.....	1	812 1073
72	360–401	.....	1	812 1015
72	***258 (Heavy Duty–* 16–82)***	.....	1	812 1015

16.458–2 RING, Automatic Transmission Annulus Front Gear Snap

72	232–304	.....	1	812 1014
72	258 (Except Heavy Duty–* 16–81)	.....	1	812 1014

16.458–3 SUPPORT, Automatic Transmission Annulus Front Gear

72	232–304	.....	1	812 1016
72	258 (Except Heavy Duty–* 16–81)	.....	1	812 1016

16.458–4 WASHER, Automatic Transmission Annulus Gear Support Thrust

72	232–304	.....	1	812 1017
72	258 (Except Heavy Duty–* 16–81)	.....	1	812 1017

16.458–5 RING, Automatic Transmission Annulus Front Gear Support Snap

72	232–304	.....	1	812 1018
72	258 (Except Heavy Duty–* 16–81)	.....	1	812 1018

16.458–6 GEAR, Automatic Transmission Annulus Rear

72	232–304	.....	1	812 1073
72	258 (Except Heavy Duty–* 16–81)	.....	1	812 1073
72	360–401	.....	1	812 1075
72	***258 (Heavy Duty–* 16–82)***	.....	1	812 1075

Printed in U.S.A.

AUTOMATIC TRANSMISSION

16.458–7 SUPPORT, Automatic Transmission Annulus Rear Gear

72	232-304	.....	1	812 1074
72	258 (Except Heavy Duty-* 16-81)	.....	1	812 1074

16.458–8 RING, Automatic Transmission Annulus Rear Gear Snap

72	232-304	.....	1	812 1014
72	258 (Except Heavy Duty-* 16-81)	.....	1	812 1014

16.458–9 PLATE, Automatic Transmission Annulus Rear Gear Thrust

72	360-401	.....	1	812 1076
72	***258 (Heavy Duty-* 16-82)***	.....	1	812 1076

16.459 DRUM, Automatic Transmission Reverse

72	232-304	.....	1	812 1079
72	258 (Except Heavy Duty-* 16-81)	.....	1	812 1079
72	360-401	.....	1	812 1080
72	***258 (Heavy Duty-* 16-82)***	.....	1	812 1080

16.460–1 SHAFT, Automatic Transmission Output

72	232-304	.....	1	812 0941
72	258 (Except Heavy Duty-* 16-81)	.....	1	812 0941
72	360	.....	1	812 0942
72	401 (Except Heavy Duty-* 16-83)	.....	1	812 0942
72	***258 (Heavy Duty-* 16-82)***	.....	1	812 0942
72	***401 (Heavy Duty-* 16-84)***	.....	1	812 2130

16.460–2 RING, Automatic Transmission Output Shaft Snap

72	(.040" Thick) 232-304	.....	AR	812 1003
72	(.040" Thick) 258 (Except Heavy Duty-* 16-81)	.....	AR	812 1003
72	(.048" Thick) 232-304	.....	AR	812 1004
72	(.048" Thick) 258 (Except Heavy Duty-* 16-81)	.....	AR	812 1004
72	(.059" Thick) 232-304	.....	AR	812 1006
72	(.059" Thick) 258 (Except Heavy Duty-* 16-81)	.....	AR	812 1006
72	(.048" Thick) 360-401	.....	AR	812 0914
72	(.055" Thick) 360-401	.....	AR	812 1005
72	(.062" Thick) 360-401	.....	AR	812 1007
72	***(.048" Thick) 258 (Heavy Duty-* 16-82)***	.....	AR	812 0914
72	***(.055" Thick) 258 (Heavy Duty-* 16-82)***	.....	AR	812 1005
72	***(.062" Thick) 258 (Heavy Duty-* 16-82)***	.....	AR	812 1007

16.460–3 BEARING, Automatic Transmission Output Shaft

72	232-304	.....	1	812 1077
72	258 (Except Heavy Duty-* 16-81)	.....	1	812 1077
72	360-401	.....	1	812 1078
72	***258 (Heavy Duty-* 16-82)***	.....	1	812 1078

16.460–4 RING, Automatic Transmission Output Shaft Bearing Snap

72	232-304	.....	1	812 1049
72	258 (Except Heavy Duty-* 16-81)	.....	1	812 1049
72	360-401	.....	2	812 1064
72	***258 (Heavy Duty-* 16-82)***	.....	2	812 1064

16.460–5 WASHER, Automatic Transmission Output Shaft Thrust

72	(.052" Thick-Red) 232-304	.....	AR	812 1081
72	(.052" Thick-Red) 258 (Except Heavy Duty-* 16-81)	.....	AR	812 1081
72	(.068" Thick) 232-304	.....	AR	812 1168
72	(.068" Thick) 258 (Except Heavy Duty-* 16-81)	.....	AR	812 1168
72	(.083" Thick) 232-304	.....	AR	812 1083
72	(.083" Thick) 258 (Except Heavy Duty-* 16-81)	.....	AR	812 1083
72	(.062" Thick) 360-401	.....	AR	812 1082
72	***(.062" Thick) 258 (Heavy Duty-* 16-82)***	.....	AR	812 1082

16.460–6 SUPPORT, Automatic Transmission Output Shaft

72	232-304	.....	1	812 0841
72	258 (Except Heavy Duty-* 16-81)	.....	1	812 0841
72	360-401	.....	1	812 0842
72	***258 (Heavy Duty-* 16-82)***	.....	1	812 0842

16.460–7 ATTACHING PARTS, Output Shaft Support To Transmission Case

BOLT, Hexagon	72	(5/16"-18 x 1")	17.038	4	G179818 NA

16.460–8 RING, Automatic Transmission Output Shaft Bearing Snap (Outer)

72	232-304	.....	1	812 1061
72	258 (Except Heavy Duty-* 16-81)	.....	1	812 1061
72	360-401	.....	1	812 1062
72	***258 (Heavy Duty-* 16-82)***	.....	1	812 1062

16.460–9 GASKET, Automatic Transmission Output Shaft Bearing Cover

72	.....	.....	1	812 0980

16.460–10 COVER, Automatic Transmission Output Shaft Bearing

72	.....	.....	1	812 1161

16.460–11 ATTACHING PARTS, Output Shaft Bearing Cover

SCREW	72	(1/4"-20 x 5/8")	.....	2	812 1162

16.475–1 RETAINER, Automatic Transmission Rear Bearing (Incl. Bushing)

72	232-304 (* 16-85)	381	.....	1	812 1151
72	232-304 (* 16-86)	381	.....	1	812 2738
72	258 (Except Heavy Duty-* 16-81)	381	.....	1	812 1151
72	360-401	381	.....	1	812 1195
72	***258 (Heavy Duty-* 16-82)***	381	.....	1	812 1967

16.475–2 ATTACHING PARTS, Rear Bearing Retainer To Case

SCREW	72	(3/8"-16)	.....	6	812 1165

16.475–3 BUSHING, Automatic Transmission Rear Bearing Retainer

72	232-304 (* 16-85 And * 16-86)	.....	1	812 1152
72	258 (Except Heavy Duty-* 16-81)	.....	1	812 1152
72	360-401	.....	1	812 1153
72	***258 (Heavy Duty-* 16-82)***	.....	1	812 1153

16.475–4 SEAL, Automatic Transmission Rear Bearing Retainer Oil

72	232-304 (* 16-85)	.....	1	812 0977
72	232-304 (* 16-86)	.....	1	812 2739
72	258 (Except Heavy Duty-* 16-81)	.....	1	812 0977
72	360-401	.....	1	812 0978
72	***258 (Heavy Duty-* 16-82)***	.....	1	812 0978

16.476–1 GASKET, Automatic Transmission Rear Bearing Retainer To Case

72	.....	.....	1	812 0979

16.495 VALVE ASSEMBLY, Automatic Transmission Control

72	232	.....	1	812 1147
72	258 (Except Heavy Duty-* 16-81)	.....	1	812 1147
72	304	.....	1	812 1178
72	360 (Except Heavy Duty-* 16-83)	.....	1	812 1182
72	401	.....	1	812 1186
72	***258 (Heavy Duty-* 16-82)***	.....	1	812 1182
72	***360 (Heavy Duty-* 16-84)***	.....	1	812 1186

AUTOMATIC TRANSMISSION

16.500–1 LEVER, Automatic Transmission Throttle Valve Control (At Transmission)

72	SIX (* 16-79)	.....	1	321 2953	
72	SIX (* 16-80)	.....	1	321 7540	
72	304 (* 16-79)	.....	1	321 2775	
72	304 (* 16-80)	.....	1	321 7542	
72	360-401 (* 16-79)	.....	1	321 2759	
72	360-401 (* 16-80)	.....	1	321 7544	
72	***258 (Heavy Duty-* 16-82)***	.....	1	321 8393	

16.500–2 ATTACHING PARTS, Lever To Transmission

BOLT, Hexagon	72	(* 16-79)	17.038	1	G180022	
SCREW, Machine	72	(* 16-80)	17.630	1	G273772	NA
NUT, Square	72		17.414	1	G114381	NA
WASHER, Lock	72	(* 16-79)	17.820	1	G120380	NA

16.501 BUSHING, Automatic Transmission Throttle Valve Control Rod (At Transmission Lever)

72	(* 16-80)	.....	1	321 7256	

16.503–1 LINK, Automatic Transmission Throttle Valve Control Rod Adjusting

72	SIX (* 16-67)	.....	1	321 2763	
72	SIX (* 16-68)	.....	1	321 6198	
72	V8 (* 16-67)	.....	1	321 2763	
72	304 (WDT-* 16-68) 360 (WDT-* 16-68)	.....	1	321 6197	
72	360 (W4B-* 16-68) 401 (W4B-* 16-68)	.....	1	321 6198	

16.503–2 ATTACHING PARTS, Adjusting Link To Bellcrank Clevis Pin

SPACER	72	.....	1	321 6552	
PIN, Locking	72	.....	1	400 4173	
WASHER, Plain	72	.....	2	400 1085	

16.503–3 ATTACHING PARTS, Adjusting Link To Control Rod

CLAMP	72	(* 16-75) ..... ***(Use 321 7200)***	.....	1	321 6191
CLAMP	72	(* 16-76)	.....	1	321 7200
BOLT, Hexagon	72	(* 16-75)	17.038	1	G180018
BOLT, Hexagon	72	(* 16-76)	.....	1	400 4507
NUT, Lock	72	(* 16-75)	.....	1	G271172

16.505–1 ROD, Automatic Transmission Throttle Valve Control

72	SIX (* 16-65)	.....	1	321 2952
72	SIX (* 16-66)	.....	1	321 5942
72	V8 (Upper-* 16-65)	.....	1	321 2762
72	V8 (Upper-* 16-66)	.....	1	321 6199
72	V8 (Lower)	.....	1	321 5168

16.505–2 ATTACHING PARTS, Rod To Transmission Control Lever

PIN, Lock	72	(.95" Long)	.....	1	400 0407
PIN, Lock	72	(.75" Long)	.....	1	400 4173
WASHER, Plain	72	.....	.....	1	400 1085

AUTOMATIC TRANSMISSION

16.505–3 ATTACHING PARTS, Rod To Bellcrank

BUSHING	72	V8	.....	2	316 7590	
PIN, Spring	72	V8	.....	2	316 8869	
WASHER, Plain	72	V8	.....	2	400 1091	

16.508–1 SPRING, Automatic Transmission Throttle Control Rod (Rod To Clevis)

72	(* 16–67)	.....	1	321 3929	
72	(* 16–68)	.....	1	319 6286	

16.508–2 PIN, Automatic Transmission Throttle Control Rod Spring Lock

72		.....	2	400 4173	

16.510–1 SHIELD, Automatic Transmission Throttle Valve Control Splash

72		.....	1	321 5951	

16.510–2 ATTACHING PARTS, Shield To Strut Bracket

BOLT, Hexagon	72	.....	.....	1	400 3872	
NUT, Lock	72	.....	.....	1	400 3954	

16.510–3 SCREW, Automatic Transmission Throttle Valve Control (Splash Shield To Sill)

72		.....	1	318 9013	

16.515–1 BRACKET, Automatic Transmission Throttle Valve Control Rod Pivot (Lower)

72	01–40 (V8)	.....	1	321 3894	
72	10–70–80 (V8)	.....	1	321 3895	
72	70 (Six)	.....	1	321 7580	

16.515–2 GROMMET, Automatic Transmission Throttle Valve Control Shift Linkage Bellcrank

72	(Nylon)	.....	1	321 8679	
72	(Rubber) V8	.....	1	319 4672	

16.515–2a BUSHING, Automatic Transmission Throttle Valve Control Rod Pivot

72		4.070	1	317 0829	

16.515–3 ATTACHING PARTS, Pivot Lower To Bracket

BOLT, Hexagon	72	V8	17.038	2	G180077	
WASHER, Lock	72	V8	17.038	2	G120214	

16.517–1 BELLCRANK, Automatic Transmission Throttle Valve Control

72	V8	.....	1	321 5169	

16.517–2 ATTACHING PARTS, Bellcrank To Cylinder Head

BOLT, Hexagon	72	V8	17.038	1	G179854	NA
WASHER, Lock	72	V8	17.820	1	G120382	

SPECIAL INFORMATION

This Standard Parts Group contains all Standard Parts listed in American Motors Automotive Parts Division Parts Catalogs.

Every major type of Standard Part has been assigned a group number. These groups are listed in numerical sequence.

To aid in locating the group listing, we have included an Alphabetical Index.

Each individual group has its parts listed in part number sequence.

Since many common standard parts are readily available locally, American Motors does not supply them for service. In the column immediately following each part number, a service status code is listed. An SS indicates the part is Supplied for Service. Parts listed with a code of NA are Not Available from American Motors and must be obtained locally.

All dimensions used in this catalog are in inches.

For convenience, various codes have been used in the group listings. A list of these codes and their meanings are found below as well as in the Abbreviations Index located at the front of the catalog.

ABBREVIATIONS AND CODES INDEX

#..... Nominal Number Size
A ..... When Used With Bolts Designates Maximum Brinell Hardness Of 241, S. A. E. Grade 2
A ..... When Used With Lubrication Fittings Designates Angle
AL ..... Aluminum
AS ..... Alloy Steel
B ..... When Used With Bolts Designates Maximum Brinell Hardness Of 285, S. A. E. Grade 5
BLE ..... Black Enamel
BLU ..... Blued
BR ..... Brass
BRA ..... Brass
BRI ..... Bright
C ..... When Used With Bolts Designates Maximum Brinell Hardness Of 352, S. A. E. Grade 8
C ..... When Used With Relief Valves Designates Capacity
CA ..... Cast Iron
CAD ..... Cadmium
CC ..... Carbon Commercial
CHR ..... Chrome
CO ..... Copper
COA ..... Coated
COP ..... Copper
DUL ..... Dull
#E ..... Indicates Screw Or Nut Is Equipped With External Tooth Lockwasher
F ..... Finish
G ..... Gauge
#G ..... Grade
#I ..... Indicates Screw Or Nut Is Equipped With Internal Tooth Lockwasher
IR ..... Iron
M ..... Material
MI ..... Malleable Iron
N ..... When Used With Stamped Nuts Designates Number Of Notches
NIC ..... Nickel
#P ..... Indicates Screw Or Nut Is Equipped With Plain Washer
PAR ..... Parkerize
PHO ..... Phosphate
PLA ..... Plain
PLN ..... Plain Annealed
RUP ..... Rustproof
S ..... Service Status
#S ..... Indicates Screw Or Nut Is Equipped With Spring Lockwasher
SL ..... Stainless Steel
SS ..... Supplied For Service
ST ..... Steel
STA ..... Stainless
T ..... When Used With Fittings Designates Nominal Tube Size
TIN ..... Tinned
W ..... When Used With Terminals Designates Gauge Of Wire
#W ..... Indicates Screw Or Nut Is Equipped With Internal-External Tooth Lockwasher
WI ..... Wrought Iron
ZCH ..... Zinc Chrome
ZID ..... Zinc Dichromate
ZIN ..... Zinc

Printed in U.S.A.

ALPHABETICAL INDEX

DESCRIPTION	GROUP NO.
– A –	
ADAPTER, Automotive Pipe	17.006
– B –	
BALL JOINT	17.028
BALL, Steel	17.018
BOLT, Hexagon Head	17.038
BOLT, Hexagon Head Self-Locking	17.042
BOLT, Hexagon Head Slotted	17.040
BOLT, Round Head Square Neck	17.046
BOLT, Square Head	17.044
BRAD, Wire	17.064
BUSHING, Automotive Reducing Pipe	17.088
BUSHING, Reducing Pipe	17.086
– C –	
CAP, Pipe	17.098
CLAMP, Hose	17.108
CLEVIS, Adjustable Rod End	17.120
CLIP, Closed	17.134
CLIP, Fastener	17.130
CLIP, Open	17.132
CONNECTOR, Flared Tube	17.158
CONNECTOR, Inverted Flared Tube	17.160
COUPLING, Pipe	17.174
– D –	
DRAIN COCK	17.146
– E –	
ELBOW, Automotive Pipe Street 45 Degree Type "Extruded"	17.238
ELBOW, Automotive Pipe Street 45 Degree Type "Forged"	17.239
ELBOW, Automotive Pipe Street 90 Degree Type "Extruded"	17.240
ELBOW, Ball Sleeve Tube 90 Degree	17.220
ELBOW, Flared Tube 90 Degree	17.214
ELBOW, Inverted Flared Tube 45 Degree	17.216
ELBOW, Inverted Flared Tube 90 Degree	17.218
ELBOW, Pipe 45 Degree	17.224
ELBOW, Pipe 90 Degree	17.226
ELBOW, Pipe Street 90 Degree	17.232
EYELET	17.260
– F –	
FASTENER, Curtain	17.270
FITTING, Lubrication	17.290
FUSE	17.300
– G –	
GASKET, Annular	17.310
GROMMET, Rubber	17.322
– H –	
HELI-COIL	17.790
– K –	
KEY, Woodruff	17.344
– N –	
NAIL, Barrel	17.372
NAIL, Countersunk	17.374
NAIL, Screw	17.380
NAIL, Sinker	17.358
NIPPLE, Automotive Pipe	17.394
NIPPLE, Pipe	17.392
NUT, Ball Sleeve Tube	17.448
NUT, Barrel	17.434
NUT, Clinch	17.440
NUT, Crown	17.430
NUT, Flared Tube	17.444
NUT, Flat	17.423
NUT, Hexagon	17.406
NUT, Hexagon Jam	17.410
NUT, Hexagon Lock	17.416
NUT, Hexagon Machine Screw	17.412
NUT, Hexagon Slotted	17.408
NUT, Inverted Flared Tube	17.446
NUT, Piloted Projection Weld	17.443
NUT, Projection Weld "Regular"	17.442
NUT, Serrated Hexagon Lock	17.417
NUT, Sleeve	17.436
NUT, Spring Flat	17.422
NUT, Spring "J" Shape	17.424
NUT, Spring Push-On	17.421
NUT, Spring "U" Shape	17.426
NUT, Square	17.413
NUT, Square Machine Screw	17.414
NUT, Stamped	17.428
NUT, Tee	17.438
NUT, Wing	17.432
– P –	
PIN, Clevis	17.474
PIN, Cotter	17.460
PIN, Dowel	17.462
PIN, Escutcheon	17.476
PIN, Groove	17.468
PIN, Spring	17.472
PIN, Straight Chamfered	17.464
PIN, Straight Square End	17.466
PIN, Taper	17.470
PLUG, Automotive Hexagon Head Pipe	17.514
PLUG, Automotive Hexagon Socket Drain	17.526
PLUG, Automotive Hexagon Socket Pipe	17.518
PLUG, Automotive Square Head Pipe	17.512
PLUG, Automotive Square Socket Pipe	17.516
PLUG, Button	17.494
PLUG, Cork	17.496
PLUG, Expansion	17.500
PLUG, Hexagon Head Pipe	17.488
PLUG, Hexagon Outside Head Drain	17.506
PLUG, Slotted Headless Pipe	17.492
PLUG, Square Head Pipe	17.486
PLUG, Square Socket Pipe	17.490
PLUG, Wood	17.498

ALPHABETICAL INDEX

DESCRIPTION	GROUP NO.
– R –	
RIVET, Button Head Solid	17.536
RIVET, Countersunk Head Solid	17.542
RIVET, Flat Head Aluminum	17.572
RIVET, Flat Head Semi-Tubular	17.555
RIVET, Flat Head Solid	17.540
RIVET, Oval Head Split	17.554
RIVET, Oval Head Tubular	17.558
RIVET, Round Head Aluminum	17.566
RIVET, Truss Head Solid	17.544
RIVET, Truss Head Tubular	17.557
– S –	
SCREW, Binding Head Cross Recess Machine	17.622
SCREW, Binding Head Slotted Machine	17.620
SCREW, Fillister Head Cross Recess Machine	17.604
SCREW, Fillister Head Cross Recess Tapping	17.680
SCREW, Fillister Head Slotted Machine	17.602
SCREW, Fillister Head Slotted Tapping	17.678
SCREW, Flat Head Cross Recess Machine	17.586
SCREW, Flat Head Cross Recess Tapping	17.648
SCREW, Flat Head Cross Recess Wood	17.686
SCREW, Flat Head Slotted Machine	17.584
SCREW, Flat Head Slotted Tapping	17.646
SCREW, Flat Head Slotted Wood	17.684
SCREW, Flat Trim Head Cross Recess Tapping	17.649
SCREW, Headless Slotted	17.638
SCREW, Hexagon Head Machine	17.626
SCREW, Hexagon Head Slotted Machine	17.628
SCREW, Hexagon Head Slotted Tapping	17.672
SCREW, Hexagon Head Tapping	17.670
SCREW, Hexagon Serrated Washer Head Machine	17.629
SCREW, Hexagon Socket Head Cap	17.634
SCREW, Hexagon Socket Set.	17.640
SCREW, Hexagon Washer Head Machine	17.630
SCREW, Hexagon Washer Head Slotted Tapping	17.673
SCREW, Hexagon Washer Head Tapping	17.671
SCREW, Oval Head Cross Recess Machine	17.592
SCREW, Oval Head Cross Recess Tapping	17.654
SCREW, Oval Head Cross Recess Wood	17.690
SCREW, Oval Head Slotted Machine	17.590
SCREW, Oval Head Slotted Tapping	17.652
SCREW, Oval Trim Head Cross Recess Machine	17.593
SCREW, Oval Trim Head Cross Recess Tapping	17.655
SCREW, Pan Head Cross Recess Machine	17.598
SCREW, Pan Head Cross Recess Tapping	17.660
SCREW, Pan Head Slotted Machine	17.596
SCREW, Pan Head Slotted Tapping	17.658
SCREW, Projection Weld	17.702
SCREW, Round Head Blunt Point Metal Drive	17.696
SCREW, Round Head Cross Recess Machine	17.616
SCREW, Round Head Cross Recess Tapping	17.666
SCREW, Round Head Slotted Machine	17.614
SCREW, Round Head Slotted Tapping	17.664
SCREW, Round Head Slotted Wood	17.692
S - Cont.	
SCREW, Square Head Set	17.644
SCREW, Truss Head Cross Recess Machine	17.610
SCREW, Truss Head Cross Recess Tapping	17.669
SCREW, Truss Head Slotted Machine	17.608
SLEEVE, Ball	17.030
SPRING, Retainer	17.710
STUD	17.718
STUD, Groove Drive	17.720
– T –	
TACK, Lace	17.732
TACK, Trimmers	17.734
TEE, Inverted Flared Tube Internal Pipe Thread Two Way	17.758
TEE, Inverted Flared Tube Right Angle Two Way	17.760
TEE, Inverted Flared Tube Three Way	17.756
TEE, Inverted Flared Tube Two Way	17.754
TERMINAL, Electric Wire	17.782
THREAD INSERTS (Heli-Coil)	17.790
– U –	
UNION, Flared Tube	17.792
UNION, Inverted Flared Tube	17.796
– V –	
VALVE, Relief	17.810
– W –	
WASHER, Countersunk External Tooth Lock	17.828
WASHER, External Tooth Lock	17.822
WASHER, Finish	17.816
WASHER, Heavy Series Bearing Lock	17.823
WASHER, Internal	17.826
WASHER, Internal Tooth Lock	17.824
WASHER, Plain	17.814
WASHER, Spring Lock	17.820

Printed in U.S.A.

ALPHABETICAL INDEX

DESCRIPTION	GROUP NO.	DESCRIPTION	GROUP NO.

Printed in U.S.A.

17.006 ADAPTER, Automotive Pipe

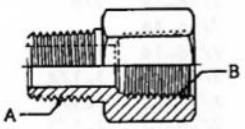

Part No.	S	A	B	M	F
G443999	NA	1/8-27	1/8-27	ST	CAD
G443998	NA	1/8-27	1/8-27	BR	PLA

17.018 BALL, Steel

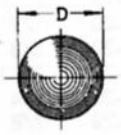

Part No.	S	D	M
G145635	SS	1/8	CHR No. 3
G145637	NA	3/16	CHR No. 3
G145639	SS	1/4	CHR No. 3
G145640	NA	9/32	CHR No. 3
G145641	NA	5/16	CHR No. 3
G145655	NA	7/16	CHR No. 3
G145657	NA	1/2	CHR No. 3

Part No.	S	D	M	#G
G147482	NA	5/32	CC	A
G147483	SS	3/16	CC	A
G147485	SS	1/4	CC	A
G147488	SS	11/32	CC	A
G147491	SS	7/16	CC	A
G147500	SS	3/8	CC	A
G169066	NA	3/16	CC	B
G169067	NA	7/32	CC	B
G160108	NA	1/4	CC	B
G169110	SS	5/16	CC	B
G169158	NA	1/2	CC	B
G169162	NA	5/8	CC	B
G274147	NA	5/32	CC	B

17.028 BALL JOINT

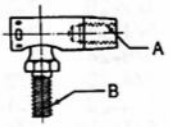

Part No.	S	A	B	M	F
G442716	NA	3/8-24	3/8-24	ST	CAD

17.030 SLEEVE, Ball



Part No.	S	T	M	F
G114628	SS	1/4	BR	PLA

17.038 BOLT, Hex. Hd.

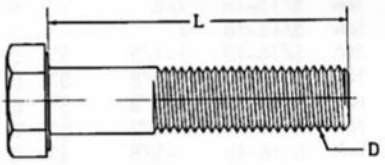

Part No.	S	D	L	M	#G	F
G100109	NA	1/4-20	3/4	ST	A	PLA
G100114	NA	1/4-20	2	ST	A	PLA
G100133	NA	3/8-16	3/4	ST	A	PLA
G100134	NA	3/8-16	1	ST	A	PLA
G100138	NA	3/8-16	2	ST	A	PLA
G106279	NA	5/16-24	5/8	ST	A	PLA
G106319	NA	1/4-20	5/8	ST	A	PLA
G106320	NA	1/4-20	7/8	ST	A	PLA
G106321	NA	1/4-20	1-1/8	ST	A	PLA
G106323	NA	1/4-20	2-1/4	ST	A	PLA
G106324	NA	5/16-18	5/8	ST	A	PLA
G106326	NA	5/16-18	1-1/8	ST	A	PLA
G106331	NA	3/8-16	1-1/8	ST	A	PLA
G106962	NA	1/4-20	3/8	ST	A	PLA
G106973	NA	5/16-18	1/2	ST	A	PLA

STANDARD PARTS

Part No.	S	D	L	M	#G	F
G109443	SS	3/8-16	4	ST	A	CAD
G112752	NA	5/16-24	3-3/8	ST	A	PLA
G112755	NA	1/2-20	3-3/8	ST	A	PLA
G120229	NA	5/16-18	7/8	ST	B	ZIN
G120647	NA	3/8-24	1	ST	A	CAD
G120706	NA	1/4-20	1/2	ST	A	CAD
G121926	NA	1/4-20	1-1/2	ST	A	CAD
G122007	NA	5/16-18	3/4	ST	B	CAD
G122017	NA	5/16-18	1	ST	B	CAD
G122279	NA	7/16-14	1-1/2	ST	A	CAD
G122300	NA	7/16-14	1-7/8	ST	B	ZIN
G122333	NA	7/16-14	3	ST	A	CAD
G122340	SS	7/16-14	3-1/4	ST	B	CAD
G123316	NA	1/4-28	1/2	ST	A	CAD
G123398	NA	7/16-20	1/2	ST	A	PLA
G123400	NA	7/16-20	1/2	ST	A	CAD
G123435	NA	1/4-28	5/8	ST	A	CAD
G124088	NA	5/16-24	2-1/4	ST	A	CAD
G124384	NA	1/2-20	3-3/4	ST	A	CAD
G179789	NA	1/4-20	3/8	ST	B	PLA
G179791	NA	1/4-20	1/2	ST	B	PLA
G179794	SS	1/4-20	11/16	ST	B	PLA
G179793	NA	1/4-20	5/8	ST	B	PLA
G179795	NA	1/4-20	3/4	ST	B	PLA
G179796	NA	1/4-20	7/8	ST	B	PLA
G179798	NA	1/4-20	1-1/8	ST	B	PLA
G179799	NA	1/4-20	1-1/4	ST	B	PLA
G179801	SS	1/4-20	1-1/2	ST	B	PLA
G179802	NA	1/4-20	1-5/8	ST	B	PLA
G179803	NA	1/4-20	1-3/4	ST	B	PLA
G179805	SS	1/4-20	2	ST	B	PLA
G179806	NA	1/4-20	2-1/4	ST	B	PLA
G179807	NA	1/4-20	2-1/2	ST	B	PLA
G179809	NA	1/4-20	3	ST	B	PLA
G179812	NA	5/16-18	1/2	ST	B	PLA
G179814	NA	5/16-18	5/8	ST	B	PLA
G179815	NA	5/16-18	11/16	ST	B	PLA
G179816	NA	5/16-18	3/4	ST	B	PLA
G179817	NA	5/16-18	7/8	ST	B	PLA
G179818	NA	5/16-18	1	ST	B	PLA
G179819	NA	5/16-18	1-1/8	ST	B	PLA
G179820	NA	5/16-18	1-3/8	ST	B	PLA
G179821	NA	5/16-18	1-3/8	ST	B	PLA
G179822	NA	5/16-18	1-1/2	ST	B	PLA
G179823	NA	5/16-18	1-5/8	ST	B	PLA
G179824	NA	5/16-18	1-3/4	ST	B	PLA
G179825	NA	5/16-18	1-7/8	ST	B	PLA
G179826	NA	5/16-18	2	ST	B	PLA
G179827	NA	5/16-18	2-1/4	ST	B	PLA
G179828	NA	5/16-18	2-1/2	ST	B	PLA
G179834	NA	3/8-16	9/16	ST	B	PLA
G179835	NA	3/8-16	5/8	ST	B	PLA
G179837	NA	3/8-16	3/4	ST	B	PLA
G179839	SS	3/8-16	1	ST	B	PLA
G179840	NA	3/8-16	1-1/8	ST	B	PLA
G179841	NA	3/8-16	1-1/4	ST	B	PLA
G179842	NA	3/8-16	1-3/8	ST	B	PLA
G179843	NA	3/8-16	1-1/2	ST	B	PLA
G179844	NA	3/8-16	1-5/8	ST	B	PLA
G179845	NA	3/8-16	1-3/4	ST	B	PLA
G179846	NA	3/8-16	1-7/8	ST	B	PLA
G179847	NA	3/8-16	2	ST	B	PLA
G179848	NA	3/8-16	2-1/4	ST	B	PLA
G179849	NA	3/8-16	2-1/2	ST	B	PLA
G179850	NA	3/8-16	2-3/4	ST	B	PLA

Part No.	S	D	L	M	#G	F
G179851	SS	3/8-16	3	ST	B	PLA
G179856	NA	7/16-14	5/8	ST	B	CAD
G179857	NA	7/16-14	7/8	ST	B	PLA
G179858	NA	7/16-14	1	ST	B	PLA
G179859	NA	7/16-14	1-1/8	ST	B	PLA
G179860	NA	7/16-14	1-1/4	ST	B	PLA
G179861	NA	7/16-14	1-3/8	ST	B	PLA
G179862	NA	7/16-14	1-1/2	ST	B	PLA
G179863	NA	7/16-14	1-5/8	ST	B	PLA
G179864	NA	7/16-14	1-3/4	ST	B	PLA
G179866	NA	7/16-14	2	ST	B	PLA
G179867	NA	7/16-14	2-1/4	ST	B	PLA
G179868	NA	7/16-14	2-1/2	ST	B	PLA
G179869	NA	7/16-14	2-3/4	ST	B	PLA
G179870	NA	7/16-14	3	ST	B	PLA
G179871	NA	7/16-14	3-1/4	ST	B	PLA
G179872	NA	7/16-14	3-1/2	ST	B	PLA
G179874	NA	7/16-14	4	ST	B	PLA
G179883	NA	1/2-13	1-1/4	ST	B	PLA
G179884	NA	1/2-13	1-3/8	ST	B	PLA
G179885	NA	1/2-13	1-1/2	ST	B	PLA
G179890	NA	1/2-13	2-1/4	ST	B	PLA
G179892	NA	1/2-13	2-3/4	ST	B	PLA
G180016	NA	1/4-20	1/2	ST	B	CAD
G180018	NA	1/4-20	5/8	ST	B	CAD
G180019	NA	1/4-20	11/16	ST	B	CAD
G180020	NA	1/4-20	3/4	ST	B	CAD
G180021	NA	1/4-20	7/8	ST	B	CAD
G180022	SS	1/4-20	1	ST	B	CAD
G180023	NA	1/4-20	1-1/8	ST	B	CAD
G180024	SS	1/4-20	1-1/4	ST	B	CAD
G180034	NA	1/4-20	1-1/2	ST	B	CAD
G180037	NA	1/4-20	1-5/8	ST	B	CAD
G180042	SS	1/4-20	1-3/4	ST	B	CAD
G180044	SS	1/4-20	2	ST	B	CAD
G180046	SS	1/4-20	2-1/4	ST	B	CAD
G180048	NA	1/4-20	2-1/2	ST	B	CAD
G180073	SS	5/16-18	1/2	ST	B	CAD
G180075	NA	5/16-18	5/8	ST	B	CAD
G180076	NA	5/16-18	11/16	ST	C	ZIN
G180077	NA	5/16-18	3/4	ST	B	CAD
G180078	NA	5/16-18	7/8	ST	B	ZIN
G180079	NA	5/16-18	1	ST	B	CAD
G180080	NA	5/16-18	1-1/8	ST	B	CAD
G180081	SS	5/16-18	1-1/4	ST	B	CAD
G180082	NA	5/16-18	1-3/8	ST	B	CAD
G180083	NA	5/16-18	1-1/2	ST	B	CAD
G180084	NA	5/16-18	1-5/8	ST	B	CAD
G180085	NA	5/16-18	1-3/4	ST	B	CAD
G180091	NA	5/16-18	2-1/2	ST	B	CAD
G180116	NA	3/8-16	1/2	ST	B	CAD
G180118	NA	3/8-16	5/8	ST	B	PHO
G180120	NA	3/8-16	3/4	ST	B	CAD
G180121	SS	3/8-16	7/8	ST	B	CAD
G180122	NA	3/8-16	1	ST	B	CAD
G180123	NA	3/8-16	1-1/8	ST	B	CAD
G180124	SS	3/8-16	1-1/4	ST	B	CAD
G180125	NA	3/8-16	1-3/8	ST	B	CAD
G180126	NA	3/8-16	1-1/2	ST	B	CAD
G180127	NA	3/8-16	1-5/8	ST	B	CAD
G180128	NA	3/8-16	1-3/4	ST	B	CAD
G180129	SS	3/8-16	1-7/8	ST	B	CAD
G180130	NA	3/8-16	2	ST	B	CAD
G180132	NA	3/8-16	2-1/4	ST	B	CAD
G180134	NA	3/8-16	2-1/2	ST	B	CAD

STANDARD PARTS

Part No.	S	D	L	M	#G	F
G180137	NA	3/8-16	2-3/4	ST	B	CAD
G180141	NA	7/16-14	5/8	ST	B	CAD
G180143	NA	7/16-14	3/4	ST	B	CAD
G180144	NA	7/16-14	7/8	ST	B	CAD
G180145	NA	7/16-14	1	ST	B	CAD
G180146	NA	7/16-14	1-1/8	ST	B	CAD
G180147	NA	7/16-14	1-1/4	ST	B	CAD
G180148	SS	7/16-14	1-3/8	ST	B	CAD
G180149	SS	7/16-14	1-1/2	ST	B	CAD
G180151	NA	7/16-14	1-3/4	ST	B	CAD
G180155	NA	7/16-14	2-1/4	ST	B	CAD
G180157	NA	7/16-14	2-1/2	ST	B	CAD
G180160	NA	7/16-14	3	ST	B	CAD
G180161	NA	7/16-14	3-1/4	ST	B	CAD
G180162	NA	7/16-14	3-1/2	ST	B	CAD
G180173	NA	1/2-13	1	ST	B	CAD
G180175	NA	1/2-13	1-1/4	ST	B	CAD
G180176	NA	1/2-13	1-3/8	ST	B	CAD
G180177	NA	1/2-13	1-1/2	ST	B	CAD
G180178	NA	1/2-13	1-5/8	ST	B	CAD
G180179	NA	1/2-13	1-3/4	ST	B	CAD
G180697	NA	5/16-24	2-1/8	ST	B	CAD
G180768	NA	3/8-24	4-3/4	ST	B	CAD
G180796	NA	7/16-20	5	ST	B	CAD
G180841	NA	1/2-20	3-5/8	ST	B	CAD
G180843	NA	1/2-20	4-1/8	ST	B	CAD
G181003	NA	1/4-28	5/8	ST	B	CAD
G181004	NA	5/16-24	1-1/8	ST	B	CAD
G181066	NA	1/4-20	1-1/8	ST	B	PHO
G181069	NA	1/4-20	1-1/2	ST	B	PHO
G181073	NA	1/4-20	2	ST	B	PHO
G181111	NA	3/8-16	7/8	ST	B	PHO
G181141	NA	7/16-14	1-1/2	ST	B	PHO
G181307	NA	1/4-28	3/8	ST	B	PLA
G181313	NA	1/4-28	3/4	ST	B	PLA
G181314	NA	1/4-28	7/8	ST	B	PLA
G181315	NA	1/4-28	1	ST	B	PLA
G181316	NA	1/4-28	1-1/8	ST	B	PLA
G181333	NA	5/16-24	5/8	ST	B	PLA
G181335	NA	5/16-24	11/16	ST	B	PLA
G181338	NA	5/16-24	7/8	ST	B	PLA
G181339	NA	5/16-24	1	ST	B	PLA
G181340	NA	5/16-24	1-1/8	ST	B	PLA
G181348	SS	5/16-24	2-1/4	ST	B	PLA
G181360	NA	3/8-24	3/4	ST	B	PLA
G181361	NA	3/8-24	7/8	ST	B	PLA
G181364	NA	3/8-24	1	ST	B	PLA
G181365	NA	3/8-24	1-1/8	ST	B	PLA
G181370	NA	3/8-24	1-1/4	ST	B	PLA
G181371	NA	3/8-24	1-3/8	ST	B	PLA
G181377	NA	3/8-24	1-3/4	ST	B	PLA
G181380	NA	3/8-24	2-1/4	ST	B	PLA
G181384	NA	3/8-24	2-3/4	ST	B	PLA
G181385	NA	3/8-24	3	ST	B	PLA
G181394	NA	7/16-20	7/8	ST	B	PLA
G181395	NA	7/16-20	1	ST	B	PLA
G181396	NA	7/16-20	1-1/8	ST	B	PLA
G181397	NA	7/16-20	1-1/4	ST	B	PLA
G181399	NA	7/16-20	1-3/8	ST	B	PLA
G181409	NA	7/16-20	2-3/4	ST	B	PLA
G181413	NA	7/16-20	3-1/2	ST	B	PLA
G181429	NA	1/2-20	1-1/4	ST	B	PLA

Part No.	S	D	L	M	#G	F
G181457	NA	9/16-18	1-3/4	ST	B	PLA
G181461	NA	3/8-24	1-3/8	ST	B	CAD
G181465	NA	9/16-18	3-1/2	ST	B	PLA
G181558	NA	1/4-28	3/8	ST	B	CAD
G181560	NA	1/4-28	7/16	ST	B	CAD
G181561	NA	1/4-28	1/2	ST	B	CAD
G181566	NA	1/4-28	3/4	ST	B	CAD
G181567	NA	1/4-28	7/8	ST	B	CAD
G181568	NA	1/4-28	1	ST	B	CAD
G181574	NA	1/4-28	1-3/8	ST	B	CAD
G181575	NA	1/4-28	1-1/2	ST	B	CAD
G181579	NA	1/4-28	2	ST	B	CAD
G181581	NA	1/4-28	2-1/2	ST	B	CAD
G181587	NA	5/16-24	3/8	ST	B	CAD
G181590	NA	5/16-24	7/16	ST	B	CAD
G181591	NA	5/16-24	1/2	ST	B	CAD
G181592	NA	5/16-24	9/16	ST	B	CAD
G181593	NA	5/16-24	5/8	ST	B	CAD
G181595	NA	5/16-24	3/4	ST	B	CAD
G181596	NA	5/16-24	7/8	ST	B	CAD
G181608	NA	5/16-24	1	ST	B	CAD
G181610	SS	5/16-24	1-1/4	ST	B	CAD
G181613	NA	5/16-24	1-3/8	ST	B	CAD
G181614	NA	5/16-24	1-1/2	ST	B	CAD
G181617	NA	5/16-24	1-5/8	ST	B	CAD
G181618	SS	5/16-24	1-3/4	ST	B	CAD
G181619	NA	5/16-24	1-7/8	ST	B	CAD
G181620	SS	5/16-24	2	ST	B	CAD
G181621	NA	5/16-24	2-1/4	ST	B	CAD
G181622	NA	5/16-24	2-1/2	ST	B	CAD
G181623	NA	5/16-24	2-3/4	ST	B	CAD
G181624	SS	5/16-24	3	ST	B	CAD
G181627	NA	3/8-24	1/2	ST	B	CAD
G181629	NA	3/8-24	5/8	ST	B	CAD
G181635	NA	3/8-24	3/4	ST	B	CAD
G181636	NA	3/8-24	7/8	ST	B	CAD
G181637	NA	3/8-24	1	ST	B	CAD
G181638	NA	3/8-24	1-1/8	ST	B	CAD
G181639	NA	3/8-24	1-1/4	ST	B	CAD
G181641	NA	3/8-24	1-3/8	ST	B	CAD
G181643	NA	3/8-24	1-1/2	ST	B	CAD
G181645	NA	3/8-24	1-5/8	ST	B	CAD
G181646	NA	3/8-24	1-3/4	ST	B	CAD
G181647	NA	3/8-24	1-7/8	ST	B	CAD
G181648	NA	3/8-24	2	ST	B	CAD
G181649	NA	3/8-24	2-1/4	ST	B	CAD
G181650	NA	3/8-24	2-1/2	ST	B	CAD
G181651	NA	3/8-24	2-3/4	ST	B	CAD
G181652	NA	3/8-24	3	ST	B	CAD
G181659	NA	7/16-20	3/4	ST	B	CAD
G181666	NA	7/16-20	1	ST	B	CAD
G181667	NA	7/16-20	1-1/8	ST	B	CAD
G181668	NA	7/16-20	1-1/4	ST	B	CAD
G181669	NA	7/16-20	1-3/8	ST	B	CAD
G181670	NA	7/16-20	1-1/2	ST	B	CAD
G181671	NA	7/16-20	1-5/8	ST	B	CAD
G181672	NA	7/16-20	1-3/4	ST	B	CAD
G181673	NA	7/16-20	1-7/8	ST	B	CAD
G181674	NA	7/16-20	2	ST	B	CAD
G181675	NA	7/16-20	2-1/4	ST	B	CAD
G181676	NA	7/16-20	2-1/2	ST	B	CAD
G181677	NA	7/16-20	2-3/4	ST	B	CAD

STANDARD PARTS

Part No.	S	D	L	M	#G	F
G181678	SS	7/16-20	3	ST	B	CAD
G181679	NA	7/16-20	3-1/4	ST	B	CAD
G181680	NA	7/16-20	3-1/2	ST	B	CAD
G181681	NA	7/16-20	3-3/4	ST	B	CAD
G181682	NA	7/16-20	4	ST	B	CAD
G181694	NA	1/2-20	7/8	ST	B	CAD
G181696	SS	1/2-20	1	ST	B	CAD
G181697	NA	1/2-20	1-1/8	ST	B	CAD
G181698	SS	1/2-20	1-1/4	ST	B	CAD
G181699	NA	1/2-20	1-3/8	ST	B	CAD
G181700	NA	1/2-20	1-1/2	ST	B	CAD
G181702	NA	1/2-20	1-3/4	ST	B	CAD
G181707	NA	1/2-20	2-1/4	ST	B	CAD
G181709	NA	1/2-20	2-1/2	ST	B	CAD
G181712	NA	1/2-20	3-1/4	ST	B	CAD
G181713	NA	1/2-20	3-1/2	ST	B	CAD
G181728	NA	9/16-18	1-5/8	ST	B	CAD
G181729	NA	9/16-18	1-3/4	ST	B	CAD
G181737	NA	9/16-18	3-1/4	ST	B	CAD
G182268	NA	1/4-28	3/8	ST	B	NIC
G182278	NA	1/4-28	1	ST	B	NIC
G182654	NA	1/4-28	3/4	ST	B	PHO
G182689	NA	5/16-24	1	ST	B	PHO
G182690	NA	5/16-24	1-1/8	ST	B	PHO
G182697	NA	5/16-24	1-3/4	ST	B	PHO
G182725	NA	3/8-24	1-3/8	ST	B	PHO
G186268	NA	5/16-18	3-1/8	ST	B	PLA
G186270	SS	5/16-18	3-1/2	ST	B	PLA
G186271	NA	5/16-18	3-3/4	ST	B	PLA
G186272	NA	5/16-18	4	ST	B	PLA
G186276	NA	3/8-16	2-1/8	ST	B	PLA
G186277	NA	3/8-16	2-3/8	ST	B	PLA
G186278	NA	3/8-16	2-5/8	ST	B	PLA
G186279	NA	3/8-16	3-1/8	ST	B	PLA
G186282	NA	3/8-16	3-1/4	ST	B	PLA
G186307	NA	3/8-24	2-1/8	ST	B	PLA
G186308	NA	3/8-24	2-3/8	ST	B	PLA
G186339	NA	1/2-20	5-1/4	ST	B	PLA
G186340	NA	1/2-20	5-1/2	ST	B	PLA
G186485	NA	3/8-24	1-3/4	ST	C	PLA
G186607	NA	5/16-24	1	ST	C	PLA
G186629	NA	5/16-18	1	ST	C	PLA
G186643	NA	5/16-18	2-1/16	ST	C	PLA
G186679	NA	3/8-16	1-1/4	ST	C	CAD
G187044	NA	3/8-24	3-1/2	ST	B	CAD
G187069	NA	3/8-16	2-1/8	ST	B	CAD
G187070	NA	3/8-16	2-5/8	ST	B	CAD
G187227	NA	3/8-24	3-1/8	ST	B	PLA
G187317	NA	7/16-20	4-3/4	ST	B	CAD
G187612	NA	7/16-20	4-1/2	ST	B	CAD
G189291	NA	1/4-20	2-1/8	ST	B	CAD
G189295	SS	3/8-16	4-1/2	ST	B	CAD
G189301	NA	3/8-16	2-3/8	ST	B	CAD
G189303	NA	3/8-16	3-1/8	ST	B	CAD
G189308	SS	3/8-16	6	ST	B	CAD
G189316	NA	1/2-13	4-1/4	ST	B	CAD
G189322	SS	5/16-24	3-1/4	ST	B	CAD
G189324	NA	5/16-24	4	ST	B	CAD
G189329	NA	3/8-24	3-1/4	ST	B	CAD
G189330	NA	3/8-24	3-3/4	ST	B	CAD
G189331	NA	3/8-24	4	ST	B	CAD
G189333	NA	3/8-24	4-1/4	ST	B	CAD
G189335	SS	3/8-24	5	ST	B	CAD
G189336	NA	3/8-24	5-1/4	ST	B	CAD
G189344	NA	7/16-20	2-1/8	ST	B	CAD

Part No.	S	D	L	M	#G	F
G189346	NA	1/2-20	4-1/4	ST	B	CAD
G189349	NA	1/2-20	5-1/4	ST	B	CAD
G190770	NA	1/2-13	3-1/4	ST	C	PLA
G190823	NA	1/2-20	1-5/8	ST	B	PLA
G190911	NA	3/8-16	2-7/8	ST	B	PLA
G191249	NA	3/8-16	3-3/4	ST	B	CAD
G191309	NA	7/16-14	2-1/8	ST	B	PLA
G191695	NA	1/2-20	4-3/4	ST	B	CAD
G191812	NA	1/2-20	1-5/8	ST	B	CAD
G192406	SS	3/8-16	5-1/4	ST	B	CAD
G193484	NA	5/16-24	2-5/8	ST	B	CAD
G193490	NA	7/16-20	4-1/4	ST	B	CAD
G215511	SS	3/8-16	5-3/4	ST	B	CAD
G216339	NA	5/16-24	5/8	ST	C	PLA
G217220	NA	5/16-24	3-3/4	ST	B	PLA
G223533	NA	3/4-10	3-3/4	ST	C	CAD
G271488	NA	7/16-20	2-5/8	ST	B	PLA
G271584	NA	5/8-18	1-5/8	ST	B	PLA
G271585	NA	5/8-18	1-3/4	ST	B	PLA
G271588	NA	5/8-18	2-1/4	ST	B	PLA
G271591	NA	5/8-18	3	ST	B	PLA
G271592	NA	5/8-18	3-1/4	ST	B	PLA
G271751	NA	5/8-18	2-3/4	ST	B	CAD
G271754	NA	5/8-18	3-1/2	ST	B	CAD
G271778	SS	3/4-10	3-3/4	ST	B	PHO
G271940	SS	3/4-10	5	ST	B	PHO
G272498	NA	5/8-18	5-1/4	ST	B	CAD
G274101	SS	3/8-16	4-7/8	ST	B	PLA
G274842	NA	7/16-20	1-13/16	ST	B	CAD
G427589	NA	3/8-16	2-1/2	ST	C	CAD
G427934	NA	3/8-16	1-1/4	ST	A	PLA
G427940	NA	3/8-16	1-1/2	ST	A	PLA
G433095	NA	5/16-24	3-3/4	ST	B	CAD
G435611	NA	3/8-16	1-1/8	ST	C	CAD
G446641	NA	3/8-16	3-5/8	ST	B	PLA
G448695	NA	3/8-24	1	ST	B	CAD
G450517	SS	3/8-16	4-3/4	ST	B	PLA
G451971	NA	3/8-24	2-5/8	ST	B	PLA
G454465	SS	1/2-20	3-1/4	ST	C	CAD
G454497	SS	3/8-16	4-3/4	ST	B	CAD
G454832	SS	1/4-28	1-3/4	ST	C	PLA
G454884	NA	5/16-24	7/8	ST	C	CAD
G454904	NA	3/8-16	3/4	ST	C	CAD
G454933	NA	7/16-14	1-1/8	ST	C	PLA
G454936	SS	7/16-14	3-1/4	ST	C	PLA
G454951	NA	7/16-14	3-1/4	ST	C	CAD
G454962	NA	7/16-20	2-3/4	ST	C	PLA
G454963	NA	7/16-20	3	ST	C	PLA
G454966	SS	7/16-20	3-3/4	ST	C	PLA
G454974	SS	7/16-20	1-1/2	ST	B	ZIN
G454975	NA	7/16-20	1-5/8	ST	C	CAD
G454977	NA	7/16-20	2	ST	C	CAD
G454985	NA	7/16-20	4	ST	C	CAD
G455012	NA	1/2-20	1-1/4	ST	C	PLA
G455017	SS	1/2-20	2-1/2	ST	C	PLA
G455031	NA	1/2-20	3	ST	C	CAD
G455032	SS	1/2-20	3-1/2	ST	C	CAD
G455751	SS	3/8-16	6-3/4	ST	B	CAD
G504256	NA	5/16-18	1/2	ST	B	PAR
G9408984	NA	1/2-20	3/4	ST	B	CAD
G9412126	NA	1/2-20	1-3/8	ST	B	CAD
G9428638	NA	3/8-16	5/8	ST	B	ZIN
320 9556	SS	1/2-20	1-3/8	ST	B	CAD
400 1412	NA	3/8-24	1-3/8	ST	B	CAD

Printed in U.S.A.

Part No.	S	D	L	M	#G	F
400 1931	NA	3/8-16	2	ST	B	ZIN
800 0029	NA	1/4-28	1/4	ST	B	CAD
800 0031	SS	5/16-18	3/4	ST	B	CAD
800 0033	NA	5/16-24	1-1/2	ST	B	CAD
800 0039	SS	3/8-24	1-3/4	ST	B	CAD
800 0041	SS	7/16-20	3-1/4	ST	B	CAD
800 0043	NA	7/16-20	3-5/8	ST	B	CAD
800 0258	NA	3/8-24	3-3/4	ST	B	CAD
800 0311	SS	5/16-18	1	ST	B	CAD
800 0323	SS	5/16-18	1-1/4	ST	B	CAD
800 0339	SS	7/16-20	4-3/8	ST	B	CAD
800 0469	SS	3/8-16	3-3/4	ST	B	PLA
812 1785	SS	7/16-14	2-3/4	ST	B	PHO

17.039 BOLT, Hex. Hd. Flanged

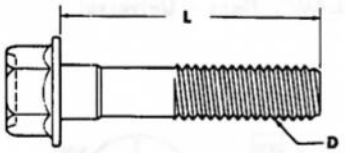

Part No.	S	D	L	M	#G	F
812 0512	SS	5/16-18	1-1/4	ST	B	PLA

17.040 BOLT, Hex. Hd. Slotted

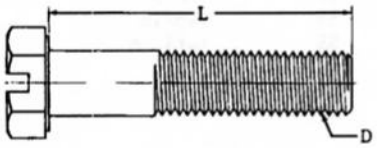

Part No.	S	D	L	M	F
G175181	NA	5/16-18	1	ST	PLA
G175183	NA	5/16-18	1-1/4	ST	PLA
G175188	NA	5/16-18	1-7/8	ST	PLA
G272465	NA	1/4-20	5/8	ST	CAD

17.042 BOLT, Hex. Hd. Self-Locking - Type "AA"

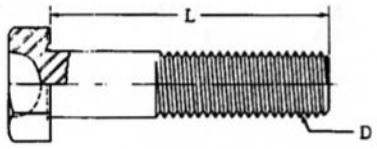

Part No.	S	D	L	M	F
G192353	SS	3/8-24	1-1/4	ST	PLA
G192407	NA	3/8-24	1-1/2	ST	PLA
G192988	NA	1/4-20	5/8	ST	PLA
G429003	NA	3/8-24	1-1/8	ST	PLA
G9409060	NA	1/2-20	1/2	ST	PLA

17.044 BOLT, Square Head

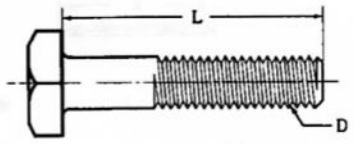

Part No.	S	D	L	M	F
G120225	NA	1/4-20	3/4	ST	CAD
G149535	NA	5/16-18	3/4	ST	CAD
G426920	NA	1/4-20	1-1/2	ST	CAD

17.046 BOLT, Rd. Hd. Square Neck

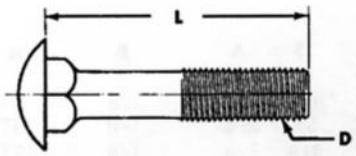

Part No.	S	D	L	M	F
G106703	NA	5/16-18	1-5/8	ST	PHO
G109100	SS	1/4-20	5	ST	CAD
G117495	NA	7/16-14	1-3/8	ST	CAD
G117501	NA	7/16-14	1-5/8	ST	CAD
G120518	NA	1/4-20	3/4	ST	CAD
G126198	NA	10-24	3/4	ST	CAD
G126203	NA	1/4-20	5/8	ST	CAD
G126211	NA	5/16-18	5/8	ST	CAD
G126301	NA	10-24	2	ST	CAD
G126353	NA	5/16-18	7/8	ST	CAD
G126355	NA	1/4-20	1-1/2	ST	CAD
G126406	NA	3/8-16	1-3/8	ST	CAD
G126408	NA	3/8-16	1-3/8	ST	PHO
G126442	NA	7/16-14	1-1/4	ST	CAD
G126452	NA	7/16-14	1-1/2	ST	CAD
G126485	NA	1/2-13	1-1/4	ST	CAD
G126691	NA	5/16-18	5	ST	CAD
G126957	NA	5/16-18	6	ST	CAD
G126967	NA	5/16-18	7	ST	CAD
G131722	NA	5/16-18	2	ST	PHO
800 0267	NA	3/8-24	3/4	ST	CAD
800 0269	NA	3/8-24	1	ST	CAD
800 0309	NA	7/16-20	1-1/4	ST	CAD

17.064 BRAD, Wire

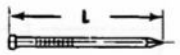

Part No.	S	#	L	M	F
G104789	NA	18	1	ST	BRI

17.086 BUSHING, Reducing Pipe

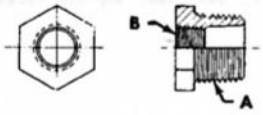

Part No.	S	A	B	M	F
G119922	NA	1/4	1/8	ST	ZIN
G119923	SS	3/8	1/8	ST	ZIN
G141539	NA	1/4	1/8	ST	PLA
G144043	NA	3/8	1/4	ST	PLA
G144050	NA	1/2	1/8	BR	PLA

17.088 BUSHING, Automotive Reducing Pipe

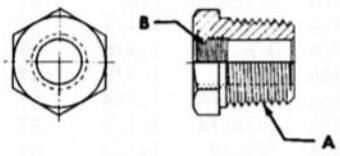

Part No.	S	A	B	M	F
G444024	SS	1/4-18	1/8-27	BR	PLA
G444026	NA	3/8-18	1/8-27	BR	PLA

17.098 CAP, Pipe

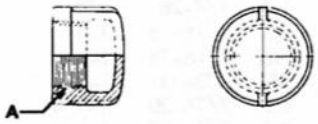

Part No.	S	A	M	F
G110675	NA	3/8	MI	PLA

17.108 CLAMP, Hose - Universal

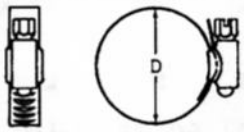

Part No.	S	Min. D	Max. D
320 3076	SS	9/16	1-1/16
320 3077	SS	13/16	1-3/4
320 3078	SS	1-5/16	2-1/4
320 3079	SS	1-13/16	2-3/4

CLAMP, Hose - Type "C"

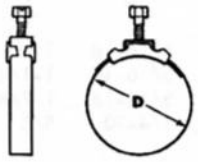

Part No.	S	Min. D	Max. D
G9412239	NA	11/16	1
G9414925	NA	1	1-5/16

Printed in U.S.A.

CLAMP, Hose - Type "D"

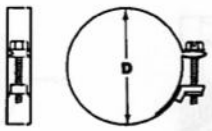

Part No.	S	Min. D	Max. D
G451200	NA	15/16	1

CLAMP, Hose - Type "E"

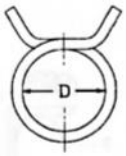

Part No.	S	D
G272841	SS	3/8
G272842	SS	7/16
G272843	SS	1/2
G272844	SS	9/16
G272850	SS	15/16
G272851	SS	1
315 5795	SS	7/8

17.120 CLEVIS, Adjustable Rod End

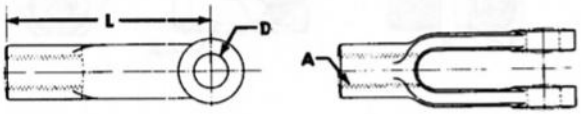

Part No.	S	A	D	L	M	F
G104037	NA	5/16-24	5/16	2-1/4	ST	PLA
G110322	NA	10-32	3/16	1-9/16	ST	CAD
G116383	NA	1/4-28	1/4	2	ST	CAD
G117824	NA	10-32	3/16	1-9/16	ST	PLA
G144242	NA	5/16-24	3/16	2-1/4	ST	CAD
G144243	NA	3/8-24	3/8	2-1/2	ST	CAD
G148382	NA	3/8-24	3/8	2-3/16	ST	CAD
G186956	SS	10-32	3/16	1-3/8	ST	CAD

17.130 CLIP, Fastener - Type "E"

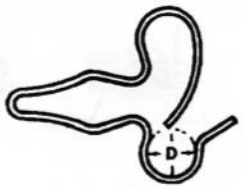

Part No.	S	D	M	F
G173172	NA	5/16	ST	PLA

17.132 CLIP, Open

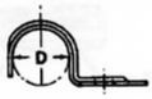

Part No.	S	D	M	F
G274281	SS	5/16	ST	CAD

17.134 CLIP, Closed

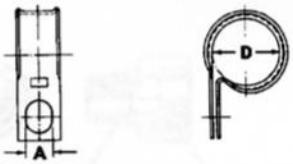

Part No.	S	D	A	M	F
G105245	SS	1/4	1/4	ST	PLA
G105251	SS	5/8	1/4	ST	PLA
G120520	SS	3/16	1/4	ST	CAD
G120521	SS	1/4	1/4	ST	CAD
G120522	NA	5/16	1/4	ST	CAD
G120524	NA	7/16	1/4	ST	PLA
G120525	SS	1/2	1/4	ST	CAD
G120526	NA	9/16	1/4	ST	CAD
G120527	NA	10-5/8	1/4	ST	CAD
G125929	NA	1-3/16	5/16	ST	PLA
G126166	NA	1/4	3/8	ST	CAD
G127879	SS	3/8	5/16	ST	CAD
G140578	NA	1/4	3/8	ST	PLA
G140579	SS	5/16	3/8	ST	PLA

17.146 DRAIN COCK - Type "B"

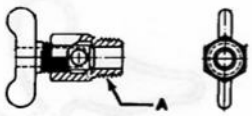

Part No.	S	A	M	F
G141615	NA	1/4-18	BR	PLA

17.158 CONNECTOR, Flared Tube

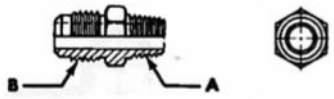

Part No.	S	T	A	B	M	F
G118748	NA	1/4	1/8-27	7/16-20	BR	PLA
G118749	NA	5/16	1/8-27	1/2-20	BR	PLA
G118750	NA	3/8	1/4-18	5/8-18	BR	PLA

17.160 CONNECTOR, Inverted Flared Tube

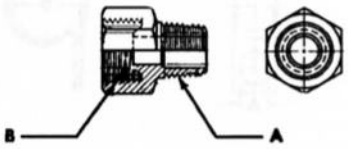

Part No.	S	T	A	B	M	F
G137404	SS	3/16	1/8-27	3/8-24	BR	PLA
G137405	SS	1/4	1/8-27	7/16-24	BR	PLA
G137406	SS	5/16	1/8-27	1/2-20	BR	PLA
G137407	NA	3/8	1/4-18	5/8-18	BR	PLA
G187343	SS	5/16	1/4-18	1/2-20	BR	PLA
G431538	SS	1/2	3/8-18	3/4-18	BR	PLA
G442321	SS	1/4	1/8-27	7/16-24	BR	PLA

17.174 COUPLING, Pipe

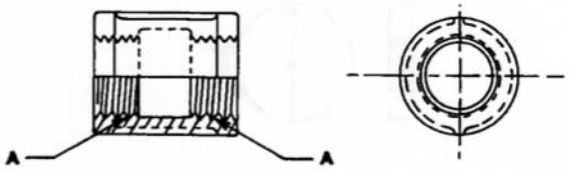

Part No.	S	A	M	F
G187397	NA	1/2	ST	PLA
G192088	SS	3/8	ST	ZIN

17.214 ELBOW, Flared Tube 90 Degree

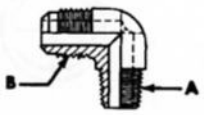

Part No.	S	T	A	B	M	F
G118754	NA	5/16	1/8-27	1/2-20	BR	PLA
G118755	NA	3/8	1/4-18	5/8-18	BR	PLA

17.216 ELBOW, Inverted Flared Tube 45 Degree

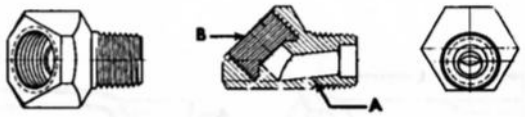

Part No.	S	T	A	B	M	F
G116341	SS	5/16	1/8-27	1/2-20	BR	PLA
G125859	SS	1/4	1/8-27	7/16-24	BR	PLA
G127829	SS	3/16	1/8-27	3/8-24	BR	PLA
G143338	NA	3/8	1/4-18	5/8-18	BR	PLA
G143340	NA	1/2	3/8-18	3/4-18	BR	PLA

Printed in U.S.A.

17.218 ELBOW, Inverted Flared Tube 90 Degree

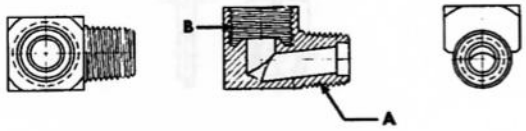

Part No.	S	T	A	B	M	F
G137420	SS	3/16	1/8-27	3/8-24	BR	PLA
G137421	SS	1/4	1/8-27	7/16-24	BR	PLA
G137422	SS	5/16	1/8-27	1/2-20	BR	PLA
G137423	SS	3/8	1/4-18	5/8-18	BR	PLA
G137425	SS	1/2	3/8-18	3/4-18	BR	PLA
G143343	SS	5/16	1/4-18	1/2-20	BR	PLA

17.220 ELBOW, Ball Sleeve Tube 90 Degree

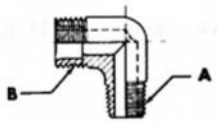

Part No.	S	T	A	B	M	F
G114632	NA	1/4	1/8-27	7/16-24	BR	PLA

17.224 ELBOW, Pipe 45 Degree

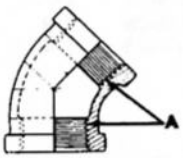

Part No.	S	A	M	F
G144136	SS	3/8-18	IR	ZIN

17.226 ELBOW, Pipe 90 Degree

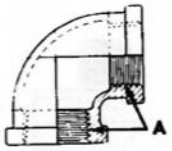

Part No.	S	A	M	F
G144128	NA	3/8-18	IR	ZIN
812 0237	SS	1/8-27	ST	ZIN

17.232 ELBOW, Pipe Street 90 Degree

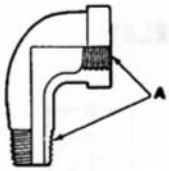

Part No.	S	A	M	F
G105423	NA	1/4-18	IR	PLA
G120499	NA	1/4-18	BR	PLA
G144112	NA	1/4-18	IR	ZIN

17.238 ELBOW, Automotive Pipe Street 45 Degree Type "Extruded"

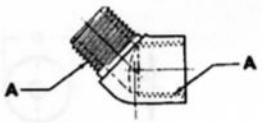

Part No.	S	A	M	F
G444052	NA	1/8-27	BR	PLA
G9409927	SS	1/8-27	BR	PLA

17.239 ELBOW, Automotive Pipe Street 45 Degree Type "Forged"

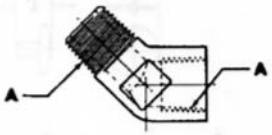

Part No.	S	A	M	F
G454097	NA	1/4-18	ST	CAD

17.240 ELBOW, Automotive Pipe Street 90 Degree Type "Extruded"

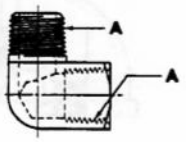

Part No.	S	A	M	F
G444038	SS	1/8-27	BR	PLA
G444042	NA	3/8-18	BR	PLA
G9409934	NA	1/8-27	ST	PLA
320 9531	SS	1/8-27	BR	PLA

17.260 EYELET

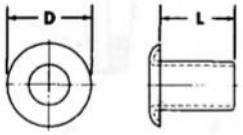

Part No.	S	D	L	M	F
G188540	NA	1/8	5/16	BR	PLA
G188549	NA	5/32	3/16	BR	PLA
G188644	NA	1/4	1/8	BR	PLA

17.270 FASTENER, Curtain - Type "Eyelet 1"

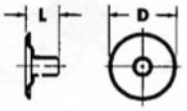

Part No.	S	D	L	M	F
G141990	NA	9/16	9/32	ST	CHR

FASTENER, Curtain - Type "Cap"

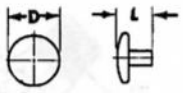

Part No.	S	D	L	M	F
G141994	SS	39/64	3/16	ST	CHR

FASTENER, Curtain - Type "Socket"

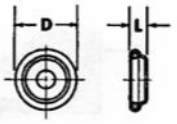

Part No.	S	D	L	M	F
G141998	SS	9/16	5/32	ST	CHR

FASTENER, Curtain - Type "Ring"

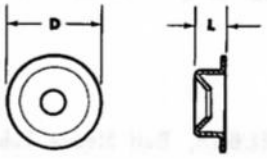

Part No.	S	D	L	M	F
G141989	NA	9/16	11/64	ST	CHR

17.290 FITTING, Lubrication - Type "C" Elbow

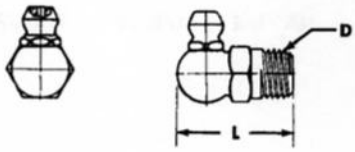

Part No.	S	D	L	A Deg.	M	F
G109350	SS	1/8-27	7/8	67-1/2	ST	CAD
G109354	NA	1/8-27	27/32	85	ST	CAD
G110309	NA	1/4-28	7/8	45	ST	CAD
G191350	NA	1/4-28	3/4	85	ST	CAD

FITTING, Lubrication - Type "C" Straight

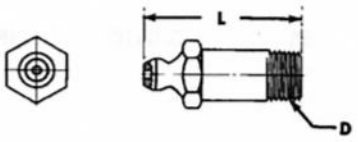

Part No.	S	D	L	M	F
G119512	NA	1/8-27	3/4	ST	CAD
G271431	NA	3/16	17/32	ST	CAD
G273354	SS	3/16	1/2	ST	CAD

FITTING, Lubrication - Type "CC" Elbow

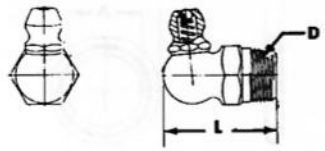

Part No.	S	D	L	A Deg.	M	F
G271284	SS	1/8-27	27/32	67-1/2	ST	CAD
G271285	SS	1/8-27	27/32	85	ST	CAD
G271290	SS	1/4-28	25/32	85	ST	CAD
G273323	SS	1/8-27	25/32	67-1/2	ST	CAD

FITTING, Lubrication - Type "CC" Straight

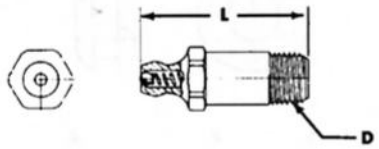

Part No.	S	D	L	M	F
G271287	SS	1/4-28	17/32	ST	CAD
G271291	SS	1/4-28	1/2	ST	CAD

FITTING, Lubrication - Type "D" Elbow

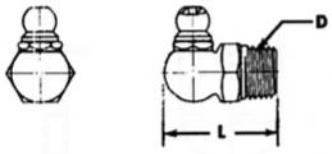

Part No.	S	D	L	A Deg.	M	F
G127743	NA	1/8-27	1-3/16	67-1/2	ST	CAD

FITTING, Lubrication - Type "D" Tip

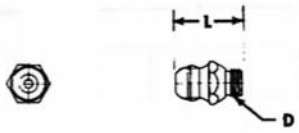

Part No.	S	D	L	M	F
G125696	SS	12-36	1/2	ST	CAD

FITTING, Lubrication - Type "DD" Elbow

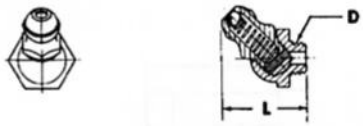

Part No.	S	D	L	A Deg.	M	F
G271435	SS	1/4-28	5/8	45	ST	CAD

FITTING, Lubrication - Type "E" Elbow

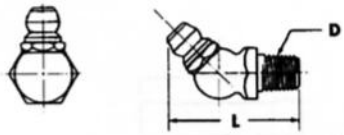

Part No.	S	D	L	A Deg.	M	F
G271309	NA	1/4-28	7/8	90	ST	CAD
G274509	SS	1/4-28	15/16	45	ST	CAD

17.300 FUSE - Type "SAE"

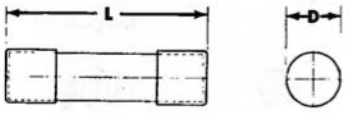

Part. No.	S	Amp.	D	L
G106653	SS	20	1/4	1-1/4
G147682	SS	4	1/4	5/8
G147683	SS	6	1/4	3/4
G147684	SS	9	1/4	7/8
G147685	SS	14	1/4	1-1/16
G455640	SS	7-1/2	1/4	7/8

FUSE - Type "1AG"

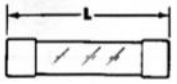

Part No.	S	Amp.	D	L
G126049	SS	5	1/4	5/8
G148086	NA	2	1/4	5/8
G445635	NA	3	1/4	5/8

FUSE - Type "3AG"

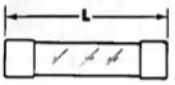

Part No.	S	Amp.	D	L
G117142	NA	10	1/4	1-1/4
G120114	SS	30	1/4	1-1/4
G120151	SS	15	1/4	1-1/4

17.310 GASKET, Annular

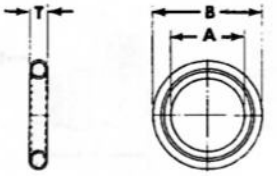

Part No.	S	A	B	T	M
G105450	NA	3/16	3/8	5/64	CO
G113897	NA	3/4	15/16	3/32	CO
G119937	NA	1/2	11/16	5/64	CO

17.322 GROMMET, Rubber

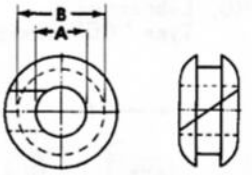

Part No.	S	#	A	B
G117962	NA	6	25/64	21/32
G117963	SS	7	33/64	21/32
G120879	NA	7	33/64	21/32
G144229	NA	8	3/4	1-3/8

17.344 KEY, Woodruff

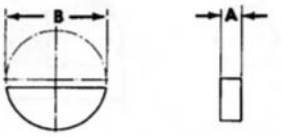

Part No.	S	#	A	B	No.	M
G103905	SS	5	1/8	5/8	1035	ST
G103906	NA	8	5/32	3/4	1035	ST
G103907	NA	11	3/16	7/8	1035	ST
G106749	SS	3	1/8	1/2	1035	ST
G106750	NA	6	5/32	5/8	1035	ST
G106751	NA	9	3/16	3/4	1035	ST

Printed in U.S.A.

Part No.	S	#	A	B	No.	M
G106958	NA	1	1/16	1/2	1035	ST
G112139	NA	A	1/4	7/8	1035	ST
G124543	NA	3	1/8	1/2		AS
G124546	SS	6	5/32	5/8		AS
G124551	NA	A	1/4	7/8		AS
G124552	NA	13	3/16	1		AS
G124553	NA	15	1/4	1		AS
G144542	SS	126	3/16	2-1/8	1035	ST

17.358 NAIL, Sinker

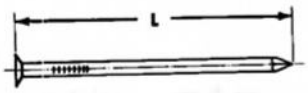

Part No.	S	#	L	M	F
G106503	NA	4d	1-3/8	ST	COA
G106505	NA	6d	1-7/8	ST	COA
G106506	NA	7d	2-1/8	ST	COA
G106507	NA	8d	2-3/8	ST	COA
G106511	NA	16d	3-1/4	ST	COA
G106512	NA	20d	3-3/4	ST	COA
G106513	NA	30d	4-1/4	ST	COA

17.372 NAIL, Barrel



Part No.	S	#	L	M	F
G116974	NA	13	7/8	ST	COA

17.374 NAIL, Countersunk - Barbed

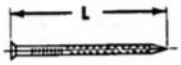

Part No.	S	#	L	M	F
G116627	NA	14	5/8	ST	COA
G116630	NA	14	3/4	ST	COA
G116631	NA	14	7/8	ST	COA
G116642	NA	13	5/8	ST	COA
G116645	NA	13	3/4	ST	COA
G116648	NA	13	7/8	ST	COA
G137231	NA	16	5/8	ST	COA

17.380 NAIL, Screw - Flat Head

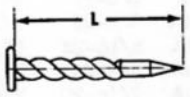

Part No.	S	#	L	M
G143019	NA	15	3/4	ST
G455384	NA	4	1/2	ST

17.392 NIPPLE, Pipe

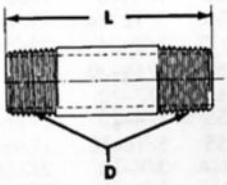

Part No.	S	D	L	M	F
G120285	SS	3/8-18	1	ST	CAD
G192032	NA	1/8-27	3/4	ST	CAD
G192044	NA	1/8-27	2-1/2	ST	CAD
G192067	NA	3/8-18	1	ST	CAD
G192071	SS	3/8-18	3	ST	CAD
G192073	SS	3/8-18	4	ST	CAD

17.394 NIPPLE, Automotive Pipe

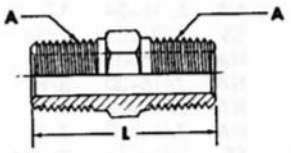

Part No.	S	A	L	M	F
G443976	NA	1/8-27	31/32	BR	PLA

17.406 NUT, Hex.

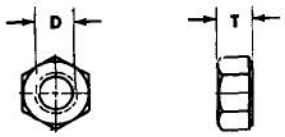

Part No.	S	D	T	M	F
G102634	NA	5/16-18	17/64	ST	PLA
G102635	NA	3/8-16	21/64	ST	PLA
G102639	SS	5/8-11	35/64	ST	PLA
G103024	NA	1/4-28	7/32	ST	PLA
G103025	NA	5/16-24	17/64	ST	PLA
G103026	NA	3/8-24	21/64	ST	PLA
G103027	NA	7/16-20	3/8	ST	PLA
G103028	SS	1/2-20	7/16	ST	PLA
G103029	NA	9/16-18	31/64	ST	PLA
G103030	NA	5/8-18	35/64	ST	PLA
G106637	NA	7/16-20	29/64	ST	PLA
G106638	NA	1/2-20	9/16	ST	PLA
G106639	NA	9/16-18	39/64	ST	PLA
G109864	NA	1-14	7/8	ST	PLA
G115729	NA	5/16-24	17/64	ST	PHO
G115730	NA	7/16-20	3/8	ST	PHO
G115733	NA	5/8-18	35/64	ST	PHO
G118614	NA	5/16-18	17/64	ST	PHO
G120367	SS	1/4-28	7/32	ST	CAD
G120368	SS	5/16-24	17/64	ST	CAD
G120369	NA	3/8-24	21/64	ST	CAD
G120370	SS	7/16-20	3/8	ST	CAD
G120371	SS	1/2-20	7/16	ST	CAD
G120375	SS	1/4-20	7/32	ST	CAD
G120376	SS	5/16-18	17/64	ST	CAD
G120377	NA	3/8-16	21/64	ST	CAD
G120378	NA	1/2-13	7/16	ST	CAD
G121358	NA	5/8-18	35/64	ST	CAD
G124573	NA	7/16-14	3/8	ST	CAD
G124634	NA	9/16-18	31/64	ST	CAD
G125913	NA	3/8-24	13/32	ST	CAD
G127855	NA	7/16-20	29/64	ST	CAD
G137509	NA	5/16-24	21/64	ST	PLA
G143416	SS	5/16-24	21/64	ST	CAD
G179137	NA	3/8-24	21/64	BR	CAD
G214442	NA	1/2-20	7/16	ST	PLA
G218197	NA	3/4-16	5/8	ST	PLA
G218585	NA	7/16-20	23/64	ST	CAD
G219421	NA	5/16-18	21/64	ST	PLA
G219422	NA	3/8-16	13/32	ST	PLA
G219432	NA	3/8-16	13/32	ST	CAD
G219463	NA	5/16-18	21/64	ST	PHO
G220067	NA	7/16-14	23/64	ST	PLA
G221157	NA	5/16-24	1/4	ST	CAD
G225857	SS	1/2-20	7/16	ST	CAD
G271501	NA	7/16-14	3/8	ST	CAD
G271505	NA	7/16-20	3/8	ST	PLA
G271506	NA	7/16-20	3/8	ST	CAD
G271514	NA	7/16-20	3/8	BR	PLA
G272230	SS	7/16-14	29/64	ST	PLA
G426767	NA	7/8-14	3/4	ST	CAD
G429607	NA	3/8-16	23/64	ST	PLA
G451399	NA	5/16-24	19/64	ST	CAD
G451402	NA	7/16-14	27/64	ST	PLA
G451405	NA	7/16-20	27/64	ST	CAD
G451412	NA	5/8-11	39/64	ST	CAD
800 0245	SS	3/8-24	21/64	ST	PLA
800 0247	SS	7/16-20	3/8	ST	PLA
800 0250	NA	3/8-24	1/2	ST	CAD
800 0251	SS	1/2-20	9/16	ST	PLA
800 0292	SS	7/16-20	29/64	ST	PLA
800 0293	SS	7/16-20	29/64	ST	CAD

17.408 NUT, Hex. Slotted

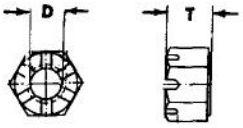

Part No.	S	D	T	M	F
G102647	SS	1/2-20	7/16	ST	PLA
G119252	NA	3/8-24	13/32	ST	PLA
G119255	NA	9/16-18	39/64	ST	PLA
G125215	NA	1/4-28	7/32	ST	CAD
G125250	NA	1/2-20	7/16	ST	CAD
G125267	NA	5/8-18	35/64	ST	CAD
G125348	NA	3/8-24	13/32	ST	CAD
G218483	NA	3/8-16	23/64	ST	PLA
G218512	NA	5/8-18	39/64	ST	PLA
G272073	NA	7/16-20	3/8	ST	CAD
G427604	NA	5/16-24	1/4	ST	CAD

17.410 NUT, Hex. Jam



Part No.	S	D	T	M	F
G114494	NA	3/8-24	7/32	ST	PLA
G114496	NA	1/2-20	5/16	ST	PLA
G114498	NA	5/8-18	3/8	ST	PLA
G114499	NA	3/4-16	3/8	ST	PLA
G120613	NA	1/4-28	5/32	ST	CAD
G120625	NA	1/2-20	5/16	ST	CHR

Part No.	S	D	T	M	F
G124818	NA	1/4-20	5/32	ST	CAD
G124824	NA	5/16-18	3/16	ST	CAD
G124829	NA	3/8-16	7/32	ST	CAD
G124847	NA	5/8-11	3/8	ST	CAD
G124920	SS	5/16-24	3/16	ST	CAD
G124921	NA	5/16-24	3/16	ST	CAD
G124925	SS	3/8-24	7/32	ST	CAD
G124929	NA	7/16-20	1/4	ST	CAD
G124934	NA	1/2-20	5/16	ST	CAD
G124944	NA	5/8-18	3/8	ST	CAD
G193233	NA	1/4-28	11/64	ST	CAD
G220086	NA	1/4-10	5/8	ST	ZIN
G272121	SS	7/16-20	1/4	ST	PLA
G272122	SS	7/16-14	1/4	ST	CAD
G272123	NA	7/16-20	1/4	ST	CAD
G9419666	NA	1/2-20	5/16	ST	PHO

17.412 NUT, Hex. Machine Screw

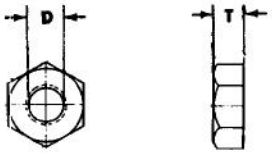

Part No.	S	D	T	M	F
G103088	NA	10-32	1/8	ST	PLA
G103092	NA	8-32	1/8	ST	PLA
G113102	NA	6-32	7/64	BR	PLA
G114503	NA	3/8-16	7/32	ST	PLA
G116000	NA	10-24	1/8	ST	PHO
G118553	NA	6-32	7/64	BR	NIC
G120361	NA	10-24	1/8	ST	CAD
G120614	NA	10-32	1/8	ST	CAD
G120622	NA	8-32	1/8	ST	CAD
G121743	NA	12-24	5/32	ST	CAD
G134524	NA	4-40	3/32	ST	CAD
G134530	NA	6-32	7/64	ST	CAD
G134551	NA	1/4-20	3/16	ST	CAD
G142212	NA	10-32	1/8	ST	CAD
G271162#E	NA	8-32	5/32	ST	PLA
G271163#E	NA	8-32	5/32	ST	CAD
G271166#E	NA	10-24	5/32	ST	CAD
G271169#E	SS	10-32	5/32	ST	CAD
G271171#E	NA	1/4-20	15/64	ST	PLA
G271172#E	SS	1/4-20	15/64	ST	CAD
G271173#E	NA	1/4-20	15/64	ST	PHO
G271175#E	NA	1/4-28	15/64	ST	CAD
G271184#E	NA	5/16-18	13/32	ST	CAD
G271187#E	NA	5/16-24	17/64	ST	CAD
G271190#E	NA	3/8-16	11/32	ST	CAD
G271193#E	NA	3/8-24	25/64	ST	CAD
G271482#E	NA	6-32	9/64	ST	CAD
G272474#E	NA	12-24	7/32	ST	CAD
G426324	NA	5-40	7/64	ST	CAD
G426913	NA	5/16-24	7/32	ST	CAD
G453996	NA	8-32	1/8	ST	CAD
G9415570	NA	7/16-20	3/8	ST	CAD
448 6944	NA	7/16-32	1/8	ST	NIC

17.413 NUT, Square

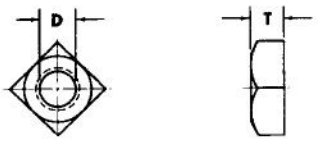

Part No.	S	D	T	M	F
G120374	NA	3/8-16	21/64	ST	CAD
G148083	NA	5/16-24	17/64	ST	PLA
G213537	NA	3/8-24	11/32	ST	CAD

17.414 NUT, Square Machine Screw

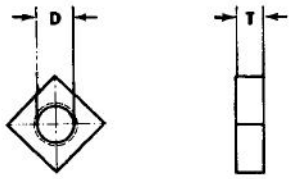

Part No.	S	D	T	M	F
G105617	NA	3/8-16	1/4	ST	PLA
G110634	NA	10-24	1/8	ST	PLA
G114381	NA	1/4-20	3/16	ST	ZIN
G120399	NA	5/16-18	7/32	ST	CAD
G120611	NA	10-32	1/8	ST	CAD
G120619	NA	10-24	1/8	ST	CAD
G134536	NA	8-32	1/8	ST	CAD
G450510	NA	3/8-24	1/4	ST	PLA
G456307	NA	5/16-24	7/32	ST	PLA

17.416 NUT, Hex. Lock - Type "CL"

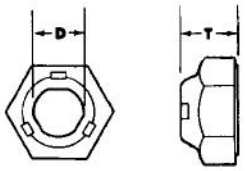

Part No.	S	D	T	M	#G	F
G9415106	SS	3/8-24	11/32	ST	B	CAD
G9415990	SS	5/16-24	9/32	ST	B	CAD

Printed in U.S.A.

NUT, Hex. Lock - Type "EA"

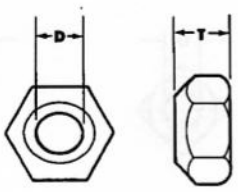

Part No.	S	D	T	M	#G	F
G274636	SS	7/16-20	7/16	ST	A	PLA
G274841	NA	7/16-20	7/16	ST	B	CAD
G9411783	NA	3/8-24	9/16	ST	C	CAD
G9411819	SS	9/16-18	35/64	ST	B	CAD
G9411971	SS	1/2-20	7/16	ST	C	CAD
G9413215	NA	7/16-20	11/16	ST	C	CAD
G9413561	NA	1/2-13	1/2	ST	C	CAD
G9413955	NA	7/16-20	7/16	ST	B	PLA
400 4025	SS	1/2-13	1/2	ST		PHO

NUT, Hex. Lock - Type "HL"

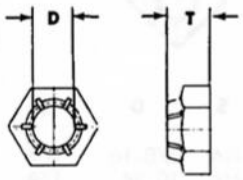

Part No.	S	D	T	M	F
G272672	NA	3/4-16	41/64	ST	PLA
G272684	NA	7/16-20	3/8	ST	CAD
G443320	NA	5/16-24	9/32	ST	PLA
G443335	NA	3/8-16	21/64	ST	CAD
G443336	NA	3/8-24	21/64	ST	CAD
G443340	SS	1/2-20	7/16	ST	CAD
G443348	NA	7/8-14	49/64	ST	PLA

NUT, Hex. Lock - Type "HLT"

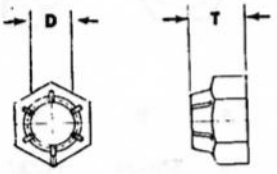

Part No.	S	D	T	M	F
G272712	NA	7/16-20	29/64	ST	CAD
G272713	SS	3/4-10	13/16	ST	CAD
G272714	NA	3/4-16	13/16	ST	CAD
G442823	NA	1/4-20	9/32	ST	CAD
G442824	NA	1/4-28	9/32	ST	CAD
G442826	NA	5/16-24	21/64	ST	CAD
G442827	SS	3/8-16	25/64	ST	CAD
G442828	SS	3/8-24	13/32	ST	CAD
G442832	SS	1/2-20	9/16	ST	CAD
G442834	SS	9/16-18	39/64	ST	CAD
G442836	NA	5/8-18	23/32	ST	CAD

NUT, Hex. Lock - Type "L"

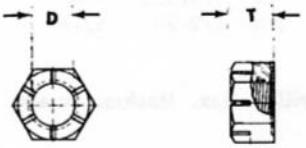

Part No.	S	D	T	M	F
G117212	NA	3/8-24	21/64	ST	PLA
G126000	NA	5/16-24	17/64	ST	PLA

NUT, Hex. Lock - Type "LL"

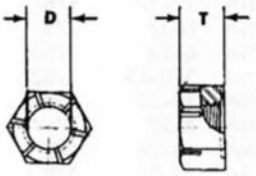

Part No.	S	D	T	M	F
G451006	NA	5/16-24	17/64	ST	PLA
G451007	NA	5/16-24	17/64	ST	CAD
G451010	NA	3/8-24	21/64	ST	PLA
G451012	NA	7/16-14	3/8	ST	PLA
G451014	NA	7/16-20	3/8	ST	PLA
G451018	NA	1/2-20	7/16	ST	PLA
G451026	NA	5/8-18	35/64	ST	PLA
G451030	NA	3/4-16	21/32	ST	PLA

NUT, Hex. Lock - Type "N"

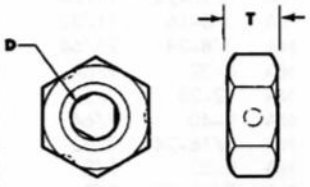

Part No.	S	D	T	M	F
448 7549	SS	9/16-16	21/64	ST	CAD
812 0975	SS	1/2-20	7/16	ST	PLA

17.417 NUT, Serrated Hexagon Lock

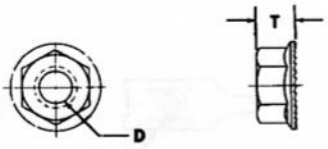

Part No.	S	D	T	M	F
G273801	SS	1/4-20	1/4	ST	CAD
G273802	NA	5/16-18	9/32	ST	CAD
G273807	NA	12-24	7/32	ST	CAD
G9414031	NA	6-32	9/64	ST	CAD
G9415152	NA	5/16-24	9/32	ST	CAD
400 3953	NA	1/4-20	9/32	ST	PHO
448 7145	SS	1/4-14	1/4	ST	CAD

17.421 NUT, Spring Push-On - Type "A" - Style 1

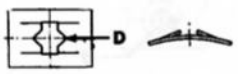

Part No.	S	D	G	M	F
G173137	SS	1/8	Light	ST	PHO
G445159	NA	1/8	Medium	ST	PHO
G445166	NA	5/32	Heavy	ST	PHO
G445172	NA	3/16	Heavy	ST	PHO
G445176	NA	1/4	Light	ST	PHO
G445177	SS	1/4	Medium	ST	PHO
G445178	SS	1/4	Heavy	ST	PHO
G445196	NA	1/8	Heavy	ST	RUP
G445202	NA	5/32	Heavy	ST	RUP
G445208	NA	3/16	Heavy	ST	RUP
G9409615	NA	3/8	Light	ST	PHO

NUT, Spring Push-On - Type "A" - Style 2

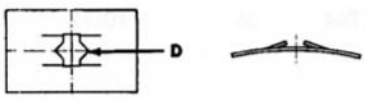

Part No.	S	D	G	M	F
G445168	NA	5/32	Medium	ST	PHO
G445173	SS	3/16	Light	ST	PHO
G445181	NA	1/4	Heavy	ST	PHO

17.422 NUT, Spring Flat - Type "A" - Style 1

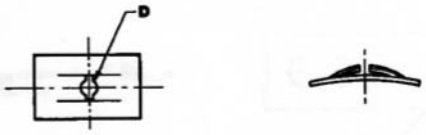

Part No.	S	D	M	F
G445103	NA	6-18	ST	PHO
G445110	NA	8-15	ST	PHO

NUT, Spring Flat - Type "A" - Style 2



Part No.	S	D	M	F
G445109	NA	8-15	ST	PHO
G445132	NA	8-15	ST	RUP
G445138	SS	10-12	ST	RUP
G445142	NA	1/4-20	ST	RUP

NUT, Spring Flat - Type "A" - Twin Boss



Part No.	S	D	M	F
G445283	NA	10-12	ST	RUP

Printed in U.S.A.

17.423 NUT, Flat - Latch Spring

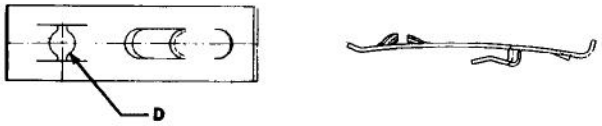

Part No.	S	D	M	F
G445300	SS	10-12	ST	PHO
G445312	SS	8-15	ST	RUP
G445316	NA	10-12	ST	RUP

17.424 NUT, Spring "J" Shape - Type "A" - Style 1



Part No.	S	D	M	F
G445359	SS	10-12	ST	PHO
G445379	NA	6-18	ST	RUP
G445407	SS	14-10	ST	RUP

NUT, Spring "J" Shape - Type "A" - Style 2

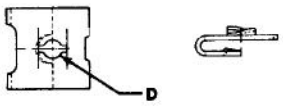

Part No.	S	D	M	F
G445357	SS	10-12	ST	PHO
G445376	NA	6-18	ST	RUP
G445388	SS	8-15	ST	RUP
G445389	NA	8-15	ST	RUP
G445400	SS	10-12	ST	RUP

NUT, Spring "J" Shape - Type "A" - Style 3



Part No.	S	D	M	F
G445349	SS	8-15	ST	PHO
G445368	NA	3/8-12	ST	PHO
G445380	NA	6-18	ST	RUP
G445392	SS	8-15	ST	RUP

NUT, Spring "J" Shape - Type "B" - Style 1



Part No.	S	D	M	F
G446726	SS	14-10	ST	PHO

NUT, Spring "J" Shape - Type "B" - Style 2



Part No.	S	D	M	F
G446764	SS	10-12	ST	RUP

Printed in U.S.A.

17.426 NUT, Spring "U" Shape - Type "A" - Style 1

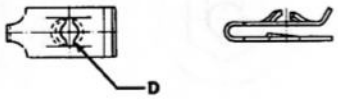

Part No.	S	D	M	F
G445435	SS	8-15	ST	PHO
G445441	NA	10-24	ST	PHO
G445445	SS	10-12	ST	PHO
G445446	SS	10-12	ST	PHO
G445449	NA	14-10	ST	PHO
G445490	NA	10-12	ST	RUP
G447027	NA	14-10	ST	RUP

NUT, Spring "U" Shape - Type "A" - Style 2

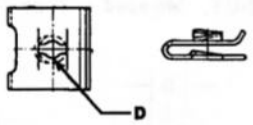

Part No.	S	D	M	F
G187999	NA	10-12	ST	PHO
G445457	SS	6-32	ST	RUP
G445477	NA	8-15	ST	RUP

NUT, Spring "U" Shape - Type "A" - Style 3

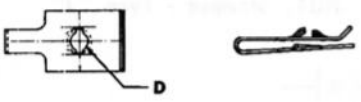

Part No.	S	D	M	F
G445448	SS	10-12	ST	PHO
G445493	SS	10-12	ST	RUP

NUT, Spring "U" Shape - Type "B" - Style 1



Part No.	S	D	M	F
G446955	NA	6-18	ST	PHO
G447022	SS	10-12	ST	RUP
G447026	SS	14-10	ST	RUP

NUT, Spring "U" Shape - Type "B" - Style 2

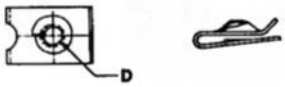

Part No.	S	D	M	F
G446965	SS	8-15	ST	PHO
G446977	NA	10-12	ST	PHO
G447008	SS	8-15	ST	RUP

NUT, Spring "U" Shape - Type "B" - Style 3

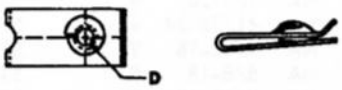

Part No.	S	D	M	F
G447029	SS	14-10	ST	RUP

NUT, Spring "U" Shape - Type "8A"



Part No.	S	D	M	F
400 1556	SS	8-15	ST	PHO
812 2119	SS	8-18	ST	PHO

17.428 NUT, Stamped - Type "B"

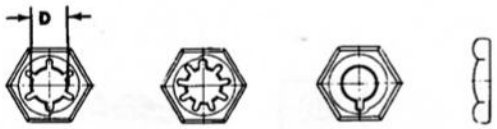

Part No.	S	D	N	M	F
G107354	NA	9/16-18	9	ST	CAD
G107381	NA	7/16-20	9	ST	PLA
G107806	SS	1/4-20	6	ST	PHO
G107815	NA	5/16-18	6	ST	CAD
G107816	NA	3/8-16	6	ST	CAD
G107821	NA	1/4-28	6	ST	CAD
G107822	NA	5/16-24	9	ST	CAD
G107823	NA	3/8-24	9	ST	CAD
G107826	NA	5/8-18	9	ST	CAD
G107828	NA	3/8-24	9	ST	PLA
G107829	NA	3/4-16	9	ST	PLA
G144485	SS	8-32	1	ST	CAD
G144567	SS	10-24	1	ST	CAD
G145507	NA	7/8-14	9	ST	CAD
G145509	NA	1-14	9	ST	CAD
G147514	NA	1/2-20	9	ST	PLA
G441272	NA	11/32-24	9	ST	PLA
G9420172	NA	9/16-18	9	ST	ZIN
G9420174	NA	5/8-18	9	ST	ZIN
G9420185	NA	3/16-18	9	ST	PHO
320 9550	SS	3/16	8	ST	ZIN
320 9575	SS	9/16-18	9	ST	ZIN

NUT, Stamped - Type "G"

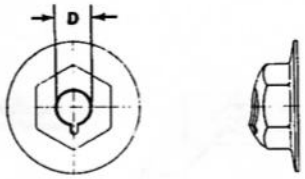

Part No.	S	D	N	M	F
G273295	NA	1/4-20	1	ST	CAD
G273329	NA	10-24	1	ST	CAD
G274809	NA	1/4-20	1	ST	CAD
G440491	NA	1/4-20	1	ST	CAD
G441239	NA	10-24	1	ST	CAD
G446026	NA	1/4-20	1	ST	CAD
G446059	NA	10-24	1	ST	CAD
G446060	NA	10-32	1	ST	CAD
G9420315	NA	10-24	1	ST	ZIN
320 9548	SS	10-24	1	ST	ZIN
320 9555	SS	10-24	1	ST	ZCH
448 7128	SS	10-24	1	ST	PHO

NUT, Stamped - Type "GG"



Part No.	S	D	N	M	F
G446061	NA	10-32	1	ST	CAD
G454385	NA	3/8-32	1	ST	CAD
G9416919	NA	1/4-20	1	ST	ZIN
G9419782	NA	8-32	1	ST	ZIN
320 9549	SS	1/4-20	1	ST	ZIN

NUT, Stamped - Type "J"



Part No.	S	D	N	M	F
G441253	SS	8-32	1	ST	CAD
G441256	NA	10-24	1	ST	CAD
G441259	NA	10-32	1	ST	CAD
G441261	NA	1/4-20	6	ST	PLA
G441262	NA	1/4-20	6	ST	CAD
G446620	NA	1/4-20	6	ST	CHR

NUT, Stamped - Type "M"

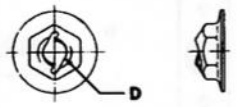

Part No.	S	D	M	F
G274750	SS	1/8	ST	CAD
G274751	NA	3/16	ST	CAD
G274796	SS	1/4	ST	CAD
G9414971	NA	1/4	ST	ZIN
G9415250	NA	1/8	ST	PHO
320 9539	SS	1/4	ST	CAD
320 9552	SS	1/8	ST	PHO
320 9553	SS	1/8	ST	CAD
812 1965	SS	1/4	ST	ZIN

NUT, Stamped - Type "SC"

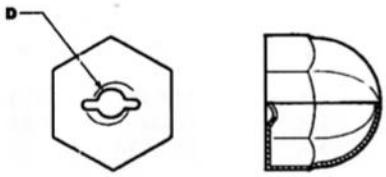

Part No.	S	D	N	M	F
320 9648	SS	6-32	2	ST	CAD

NUT, Stamped - Type "SD"



Part No.	S	D	N	M	F
G9420299	NA	3/16	2	ST	ZIN
320 9540	SS	1/8	2	ST	PHO
812 0141	SS	1/4	2	ST	ZCH

NUT, Stamped - Type "SG"



Part No.	S	D	N	M	F
448 8312	SS	1/4	2	ST	ZIN
812 0994	SS	1/4	3	ST	ZIN

17.430 NUT, Crown

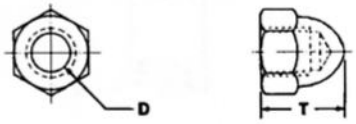

Part No.	S	D	T	M	F
G131516	NA	1/4-28	15/32	ST	CHR
320 9551	NA	5/32	3/8	ST	CAD

17.432 NUT, Wing - Type "A"

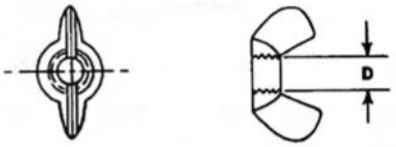

Part No.	S	D	M	F
G110330	NA	10-32	ST	CAD
G126177	SS	1/4-20	ST	CAD
G144235	SS	7/16-14	ST	CAD
G219217	SS	5/16-24	ST	CAD
G219218	SS	3/8-24	ST	CAD
G219219	SS	7/16-20	ST	CAD

NUT, Wing - Type "B"

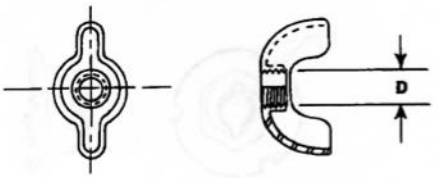

Part No.	S	D	M	F
G148309	SS	10-24	ST	CAD
G148310	SS	10-32	ST	CAD
G148312	SS	1/4-20	ST	CAD
G148313	SS	5/16-18	ST	CAD

17.434 NUT, Barrel

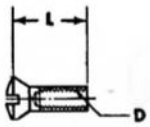

Part No.	S	D	L	M	F
G141421	NA	8-32	13/32	BR	CHR

17.436 NUT, Sleeve

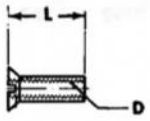

Part No.	S	D	L	M	F
G192018	SS	8-32	5/32	ST	CAD

17.438 NUT, Tee (4 Boss Base External) - Type "A"

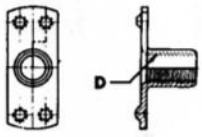

Part No.	S	D	M	F
G119480	SS	1/4-20	ST	PLA
G127517	NA	1/4-20	ST	PLA

NUT, Tee (2 Hole Base) - Type "A"

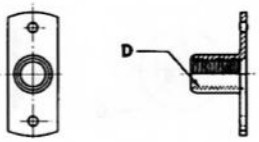

Part No.	S	D	M	F
G143577	NA	12-24	ST	CAD

NUT, Tee (2 Boss Base, External) - Type "B"

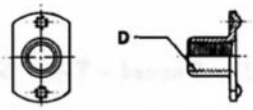

Part No.	S	D	M	F
G143649	NA	1/4-20	ST	CAD
G442507	NA	10-24	ST	CAD
G442517	NA	5/16-24	ST	PLA

NUT, Tee (2 Hole Base) - Type "B"

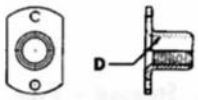

Part No.	S	D	M	F
G149526	NA	12-24	ST	CAD
G442494	NA	8-32	ST	PLA
G442495	SS	8-32	ST	CAD

NUT, Tee (Plain Base) - Type "B"

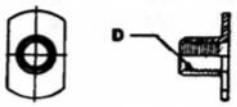

Part No.	S	D	M	F
G453745	NA	1/4-20	ST	PLA

NUT, Tee (3 Boss Base, External) - Type "C"

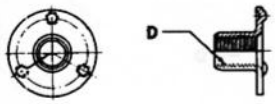

Part No.	S	D	M	F
G143755	NA	5/16-24	ST	PLA
G453727	NA	5/16-18	ST	PLA

NUT, Tee (3 Hole, 3 Prong Base) - Type "C"

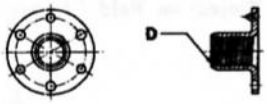

Part No.	S	D	M	F
G143711	SS	12-24	ST	CAD

NUT, Tee (Curved 3 Prong) - Type "G"

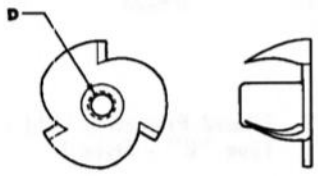

Part No.	S	D	M	F
G9409727	NA	1/4-20	ST	CAD
G453824	SS	10-24	ST	CAD

17.440 NUT, Clinch - Type "A"

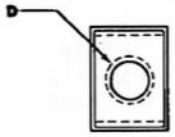

Part No.	S	D	F	M	F
G273949	NA	1/4-20	.127	ST	CAD

NUT, Clinch - Type "AH"

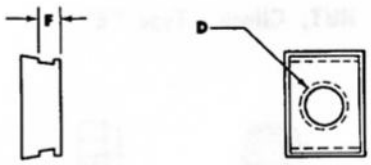

Part No.	S	D	F	M	F
G9418173	NA	1/4-20	.127	ST	PLA
G9419816	NA	1/4-20	.127	ST	ZIN
G9419938	NA	1/4-20	.078	ST	ZIN
G9419939	NA	5/16-20	.109	ST	ZIN
G9419964	NA	5/16-18	.087	ST	ZIN

NUT, Clinch - Type "C"



Part No.	S	D	M	F
G126128	NA	1/4-20	ST	PLA
G127527	NA	1/4-20	ST	CAD
G127605	NA	8-32	ST	PLA
G127606	NA	8-36	ST	PLA
G127608	NA	10-32	ST	PLA
G127607	NA	10-24	ST	PLA

Part No.	S	D	M	F
G127609	NA	12-24	ST	PLA
G127611	NA	1/4-28	ST	PLA
G127612	NA	5/16-18	ST	PLA
G127613	NA	5/16-24	ST	PLA
G127615	NA	8-32	ST	CAD
G127618	NA	10-32	ST	CAD
G127619	NA	12-24	ST	CAD
G127636	NA	1/4-28	ST	CAD
G127637	NA	5/16-18	ST	CAD
G127638	NA	5/16-24	ST	CAD
G143560	NA	3/8-24	ST	PLA
G143562	NA	3/8-24	ST	CAD
G442614	NA	7/16-20	ST	PLA

NUT, Clinch - Type "E"

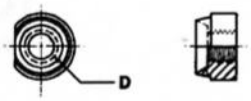

Part No.	S	D	M	F
G127481	NA	3/8-16	ST	PLA
G148220	NA	5/16-24	ST	PLA
G148238	NA	3/8-24	ST	CAD
G148254	NA	7/16-20	ST	CAD
G442673	NA	7/16-20	ST	CAD
G442678	NA	1/2-20	ST	CAD

NUT, Clinch - Type "H"

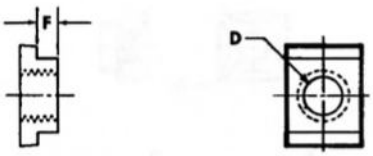

Part No.	S	D	F	M	F
G440516	NA	1/4-20	.109	ST	PLA
G441296	NA	1/4-20	.127	ST	PLA
G441989	NA	12-24	.109	ST	CAD
G441995	NA	1/4-20	.078	ST	PLA
G441996	NA	1/4-20	.078	ST	CAD
G441997	NA	1/4-28	.078	ST	PLA
G442010	NA	5/16-24	.125	ST	PLA
G9419945	NA	5/16-24	.094	ST	ZIN

17.442 NUT, Projection Weld "Regular"

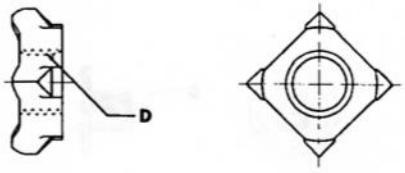

Part No.	S	D	M	F
G451739	NA	8-32	ST	PLA
G451741	NA	10-24	ST	PLA
G451744	NA	1/4-20	ST	PLA
G451748	NA	5/16-18	ST	PLA
G451750	NA	5/16-24	ST	PLA
G451752	NA	3/8-16	ST	PLA
G451754	NA	3/8-24	ST	PLA
G451758	NA	7/16-20	ST	PLA
G451762	NA	1/2-20	ST	PLA

NUT, Projection Weld "Heavy"

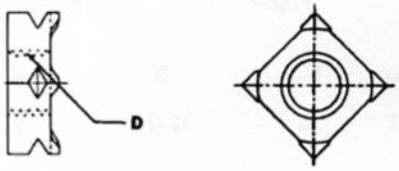

Part No.	S	D	M	F
G451751	NA	5/16-24	ST	PLA
G451753	NA	11/16-3/8	ST	PLA
G451755	NA	3/8-24	ST	PLA

17.443 NUT, Piloted Projection Weld - Type "E" - Style 1



Part No.	S	D	M	F
G9415607	NA	5/16-18	ST	PLA
G9417134	NA	5/16-18	ST	PLA

Printed in U.S.A.

Part No.	S	D	M	F
G9417160	NA	1/4-20	ST	PLA
G9417164	NA	5/16-18	ST	PLA
G9417170	NA	3/8-16	ST	PLA
G9417171	NA	3/8-24	ST	PLA
G9417172	NA	3/8-24	ST	PLA
G9417176	NA	7/16-20	ST	PLA

NUT, Piloted Projection Weld - Type "E" - Style 2

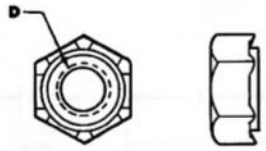

Part No.	S	D	M	F
G9417139	NA	5/16-24	ST	PLA

NUT, Piloted Projection Weld - Type "F"

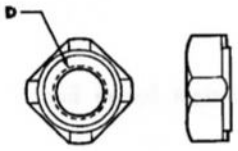

Part No.	S	D	M	F
G9415605	NA	5/16-18	ST	PLA
G9417112	NA	3/8-24	ST	PLA
G9417113	NA	7/16-14	ST	PLA

NUT, Piloted Projection Weld - Type "G"

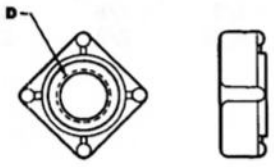

Part No.	S	D	M	F
G9417197	NA	7/16-20	ST	PLA
G9417198	NA	1/4-20	ST	PLA
G9417205	NA	3/8-16	ST	PLA
G9417206	NA	3/8-16	ST	PLA
G9417207	NA	3/8-24	ST	PLA
G9417212	NA	7/16-20	ST	PLA

17.444 NUT, Flared Tube

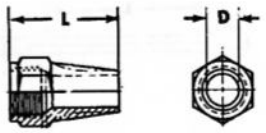

Part No.	S	T	D	L	M	F
G118538	SS	5/16	1/2-20	1-1/8	BR	PLA
448 8516	SS	5/16	1/2-20	5/8	ST	CAD

17.446 NUT, Inverted Flared Tube

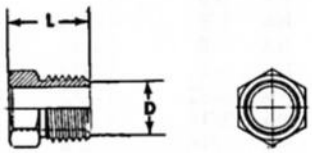

Part No.	S	T	D	L	M	F
G137396	SS	3/16	3/8-24	9/16	ST	CAD
G137397	SS	1/4	7/16-24	9/16	ST	CAD
G137398	SS	5/16	1/2-20	5/8	ST	CAD
G137401	NA	1/2	3/4-18	3/4	ST	CAD
G143522	NA	5/16	1/2-20	5/8	ST	PLA
G143523	NA	3/8	5/8-18	21/32	ST	PLA

17.448 NUT, Ball Sleeve Tube

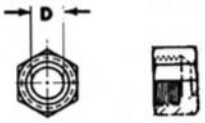

Part No.	S	T	D	M	F
G114627	SS	1/4	7/16-24	BR	PLA

17.460 PIN, Cotter

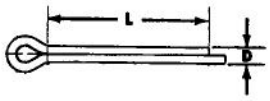

Part No.	S	D	L	M	F
G103361	NA	1/16	1/2	ST	PLA
G103362	NA	1/16	3/4	ST	PLA
G103364	NA	1/16	1-1/4	ST	PLA
G103372	NA	3/32	1/2	ST	PLA
G103373	NA	3/32	3/4	ST	PLA
G103374	SS	3/32	1	ST	PLA
G103375	NA	3/32	1-1/4	ST	PLA
G103376	NA	3/32	1-1/2	ST	PLA
G103384	NA	1/8	3/4	ST	PLA
G103385	NA	1/8	1	ST	PLA
G103386	NA	1/8	1-1/4	ST	PLA
G103387	NA	1/8	1-1/2	ST	PLA
G103388	NA	1/8	1-3/4	ST	PLA
G103398	NA	5/32	1-1/2	ST	PLA
G103407	NA	3/16	1	ST	PLA
G103412	NA	3/16	2-1/4	ST	PLA
G107761	NA	1/16	5/8	ST	PLA
G107762	NA	3/32	5/8	ST	PLA
G108630	NA	1/8	7/8	ST	PLA
G108635	NA	1/8	1-1/8	ST	PLA
G112526	NA	1/16	3/8	ST	PLA
G119209	NA	1/8	1-5/8	ST	PLA
G120169	NA	5/32	1	ST	CAD
G121224	NA	3/32	1	ST	CAD
G137127	NA	1/16	5/16	ST	CAD
G137133	NA	1/16	7/16	ST	CAD
G137150	NA	1/16	7/8	ST	CAD
G137159	NA	3/32	5/8	ST	CAD
G137273	NA	3/16	2-1/2	ST	CAD
G143174	NA	1/32	3/8	ST	PLA
G187357	NA	1/16	1-1/2	ST	CAD
G453311	NA	1/8	2-1/2	ST	CAD
G456171	NA	1/16	3/8	ST	CAD

17.462 PIN, Dowell

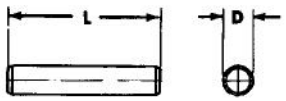

Part No.	S	D	L	M	F
G141071	NA	3/32	3/4	ST	PLA
G141075	NA	3/32	1	ST	PLA
G141106	NA	1/8	5/16	ST	PLA
G141108	NA	1/8	7/16	ST	PLA
G141109	NA	1/8	1/2	ST	PLA
G141111	NA	1/8	5/8	ST	PLA
G141113	NA	1/8	3/4	ST	PLA
G141151	NA	3/16	1/2	ST	PLA
G141155	NA	3/16	3/4	ST	PLA
G141196	NA	1/4	11/16	ST	PLA
G141218	SS	5/16	11/16	ST	PLA
G141240	NA	3/8	3/4	ST	PLA
G141246	NA	3/8	1-1/4	ST	PLA
G443767	NA	1/4	1/2	ST	PLA

17.464 PIN, Straight Chamfered

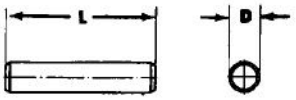

Part No.	S	D	L	M	F
G103677	NA	3/32	3/4	ST	PLA
G103679	NA	3/32	1	ST	PLA
G103722	NA	3/16	3/4	ST	PLA
G110732	NA	3/32	13/16	ST	PLA
G110736	NA	1/4	13/16	ST	PLA
G110741	NA	1/8	11/16	ST	PLA

17.466 PIN, Straight Square End



Part No.	S	D	L	M	F
G110995	NA	3/16	1	ST	PLA
G112010	NA	1/8	13/16	ST	PLA
G112011	NA	1/8	7/8	ST	PLA
G112031	NA	5/32	7/8	ST	PLA

Printed in U.S.A.

17.468 PIN, Groove - Type "A"

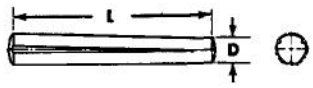

Part No.	S	D	L	M	F
G142486	NA	1/8	3/4	ST	ZIN

PIN, Groove - Type "B"



Part No.	S	D	L	M	F
G442904	NA	3/32	3/8	ST	ZIN
G442918	NA	1/8	3/4	ST	ZIN

PIN, Groove - Type "C"



Part No.	S	D	L	M	F
G443003	NA	3/32	3/4	ST	ZIN
G443023	SS	3/16	1	ST	ZIN

PIN, Groove - Type "E"



Part No.	S	D	L	M	F
G187381	NA	1/16	1/2	ST	ZIN

PIN, Groove - Type "F"

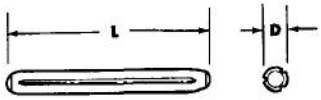

Part No.	S	D	L	M	F
448 8468	NA	3/16	1	ST	ZIN

17.470 PIN, Taper

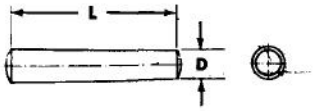

Part No.	S	D	L	M	F
G103564	NA	0	1	ST	PLA
G103565	SS	0	1-1/4	ST	PLA
G103594	NA	3	1	ST	PLA
G103619	NA	5	2-1/4	ST	PLA
G110769	SS	0	1-1/8	ST	PLA
G110773	NA	4	1-1/8	ST	PLA
G110782	NA	5	1-3/8	ST	PLA
G111843	NA	00	1-1/4	ST	PLA
G111845	NA	00	1-1/2	ST	PLA
G113499	NA	0	7/8	ST	PLA

17.472 PIN, Spring

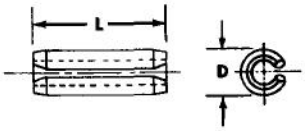

Part No.	S	D	L	M	F
G271448	NA	5/32	1	ST	PLA
G273337	NA	1/8	5/8	ST	PLA
G273751	NA	3/32	5/8	ST	CAD
G273753	NA	3/32	3/4	ST	CAD
G273937	NA	1/8	1-1/4	ST	CAD
G274306	NA	1/16	7/16	ST	PLA
G454666	NA	1/8	1/2	ST	CAD
G455313	SS	1/4	1-3/4	ST	PLA
G455532	SS	1/8	1/2	ST	PLA
G455735	NA	3/32	5/8	ST	CAD
G455798	NA	1/16	5/8	ST	PLA
G455862	NA	1/8	7/8	ST	PLA
G455918	NA	3/8	1-1/2	ST	CAD
G456098	NA	3/16	7/8	ST	PLA
G456876	SS	1/4	1/2	ST	CAD
G456885	NA	1/4	1-5/8	ST	PLA
G9411615	NA	7/32	1-1/2	ST	PLA
G9413283	NA	5/32	1/2	ST	PLA
G9414525	NA	3/16	1-3/8	ST	CAD
448 7148	SS	5/64	7/8	ST	CAD
812 0648	SS	3/16	3/4	ST	ZIN

17.474 PIN, Clevis

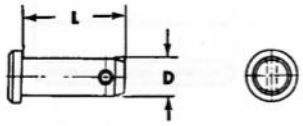

Part No.	S	D	L	M	F
G114785	NA	3/8	1-3/32	ST	PLA
G120690	NA	5/16	31/32	ST	CAD
G121547	NA	3/16	19/32	ST	CAD
G138078	NA	3/8	1-3/32	ST	CAD
G138082	NA	3/16	19/32	ST	CAD
800 0216	SS	1/4	3/4	ST	CAD
800 0218	SS	3/8	1-1/4	ST	CAD
800 0220	NA	1/4	1-31/32	ST	CAD
800 0221	SS	1/4	2-3/16	ST	PLA
800 0222	NA	1/4	2-3/16	ST	CAD
800 0224	SS	3/8	1-9/16	ST	CAD
800 0225	SS	5/16	1-3/8	ST	PLA
800 0226	NA	5/16	1-3/8	ST	CAD
800 0228	SS	3/8	1-1/8	ST	CAD
800 0229	SS	1/4	21/32	ST	PLA
800 0230	SS	1/4	21/32	ST	CAD
800 0232	SS	3/8	1-3/32	ST	CAD
800 0234	SS	1/4	15/32	ST	CAD
800 0236	SS	3/8	1-1/4	ST	CAD
800 0315	SS	3/8	7/8	ST	CAD
800 0337	SS	3/8	1	ST	CAD
800 0445	SS	3/8	1-5/16	ST	CAD

17.476 PIN, Escutcheon

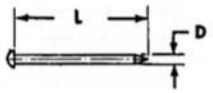

Part No.	S	D	L	M	F
G106229	NA	20	3/8	BR	NIC

17.486 PLUG, Square Hd. Pipe

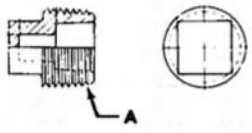

Part No.	S	A	M	F
G103865	SS	1/8-27	CA	PLA
G103866	NA	1/4-18	CA	PLA
G103867	SS	3/8-18	CA	PLA
G103868	NA	1/2-14	CA	PLA
G103869	NA	3/4-14	CA	PLA
G103877	NA	1/8-27	ST	PLA
G103879	NA	3/8-18	ST	PLA
G103880	NA	1/2-14	ST	PLA
G143932	NA	1/8-27	CA	CAD
G219189	NA	1/4-18	MI	PLA
G219191	NA	3/8-18	MI	PLA
G219301	NA	3/4-14	MI	PLA
G444576	NA	1/4-18	CA	PLA

17.488 PLUG, Hex. Hd. Pipe

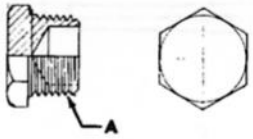

Part No.	S	A	M	F
G127950	NA	1/8-27	BR	PLA
G127951	NA	1/4-18	BR	PLA
G127952	NA	3/8-18	BR	PLA
G444630	SS	1/2-14	BR	PLA

17.490 PLUG, Square Socket Pipe

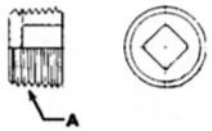

Part No.	S	A	M	F
G103874	NA	1/2-14	CA	PLA
G103876	NA	1-12	CA	PLA
G112715	NA	1/2-14	MI	PLA
G126045	NA	3/8-18 (Short)	ST	PLA
G143162	NA	3/8-18	ST	PLA
G444782	NA	3/8-18	ST	PLA

17.492 PLUG, Slotted Headless Pipe

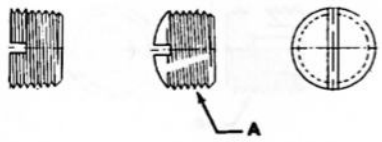

Part No.	S	A	M	F
G103883	NA	1/8-27	ST	PLA

17.494 PLUG, Button

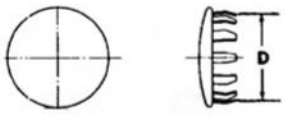

Part No.	S	D	M	F
G125619	SS	1-1/2	ST	BLE
G142019	SS	1/2	ST	CHR
G142077	SS	9/16	ST	BLE
G142079	SS	5/8	ST	PLA
G142081	SS	5/8	ST	BLE
G192769	NA	3/4	ST	CAD
G432372	NA	7/16	BR	NIC
G432453	SS	1/2	ST	PHO
G432541	SS	7/16	ST	CHR
G454176	SS	15/16	ST	CHR

17.496 PLUG, Cork

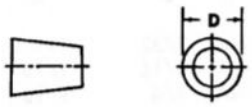

Part No.	S	#	D	L
G104939	NA	3	9/16	3/4
G104940	NA	4	5/8	13/16

17.498 PLUG, Wood

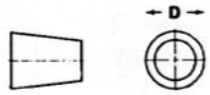

Part No.	S	#	D	L
G104969	NA	2	1/2	11/16

17.500 PLUG, Expansion

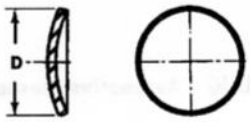

Part No.	S	D	M	F
G103892	NA	3/4	ST	PLA
G103893	NA	7/8	ST	PLA
G103894	NA	1	ST	PLA
G103896	NA	1-1/2	ST	PLA
G103897	NA	1-3/4	ST	PLA
G105602	SS	13/16	ST	PLA
G105603	NA	1-7/16	ST	PLA
G106517	NA	1-1/8	ST	PLA
G117612	NA	11/16	ST	PLA
G117918	NA	9/16	ST	PLA
G117919	NA	15/16	ST	PLA
G142656	NA	3/4	AL	PLA
G172615	NA	1-13/16	ST	PLA

17.506 PLUG, Hex. Outside Hd. Drain

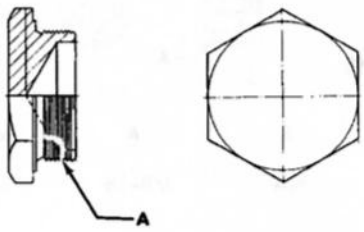

Part No.	S	A	M	F
G445078	NA	1/2-20	ST	PLA
G445084	NA	5/8-18	ST	PLA
G445090	NA	3/4-16	ST	PLA
G445091	NA	3/4-16	ST	CAD

17.512 PLUG, Automotive Square Hd. Pipe

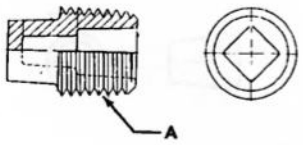

Part No.	S	A	M	F
G438159	NA	1/2-14	CA	PLA
G444574	NA	1/4-18	CA	PLA
G444592	NA	3/4-14	CA	PLA
G445671	NA	1/8-27	CA	PLA
G445673	NA	3/8-18	CA	PLA
G445684	NA	1/8-27	ST	PLA
G445686	NA	3/8-18	ST	PLA

17.514 PLUG, Automotive Hexagon Head Pipe

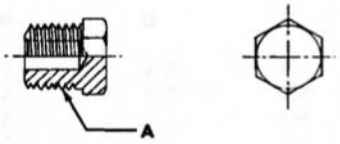

Part No.	S	A	M	F
G444612	NA	1/8-27	ST	PLA
G444618	NA	1/4-18	ST	PLA

17.516 PLUG, Automotive Square Socket Pipe

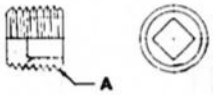

Part No.	S	A	M	F
G444660	NA	3/8-18	ST	PLA

17.518 PLUG, Automotive Hex. Socket Pipe

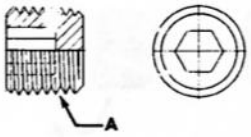

Part No.	S	A	M	F
G444687	NA	1/8-27	ST	PLA
G444688	NA	1/8-27	ST	CAD
G444691	NA	1/4-18	ST	PLA

17.526 PLUG, Automotive Hexagon Socket Drain

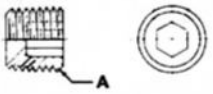

Part No.	S	A	M	F
G444872	SS	1/2-14	ST	PLA

17.536 RIVET, Button Hd. Solid

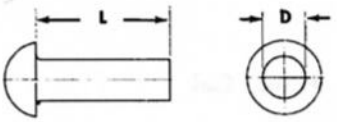

Part No.	S	D	L	M	F
G102659	NA	7/32	1-1/8	ST	PLN
G102672	NA	5/16	7/16	ST	PLN
G102677	NA	1/4	9/16	ST	PLN
G102683	NA	1/4	11/16	ST	PLN
G102684	NA	5/16	11/16	ST	PLN
G103486	NA	1/4	13/16	ST	PLN
G104052	NA	1/8	3/8	ST	PLN
G104067	NA	3/16	1/2	ST	PLN
G104072	NA	3/16	1-1/8	ST	PLN
G104081	NA	1/4	1/2	ST	PLN

Printed in U.S.A.

Part No.	S	D	L	M	F
G104082	NA	1/4	5/8	ST	PLN
G104083	NA	1/4	3/4	ST	PLN
G104084	NA	1/4	7/8	ST	PLN
G104096	NA	5/16	5/8	ST	PLN
G104097	NA	5/16	3/4	ST	PLN
G104098	NA	5/16	7/8	ST	PLN
G104099	NA	5/16	1	ST	PLN
G104112	NA	3/8	7/8	ST	PLN
G104113	NA	3/8	1	ST	PLN
G104114	NA	3/8	1-1/8	ST	PLN
G106952	NA	1/8	3/16	ST	PLN
G110638	NA	3/16	5/16	ST	PLN
G110787	NA	5/32	5/16	ST	PLN
G110945	NA	1/8	15/16	ST	PLN
G121613	NA	3/32	7/16	ST	PLN
G451953	NA	1/2	13/16	ST	PLN

17.540 RIVET, Flat Hd. Solid

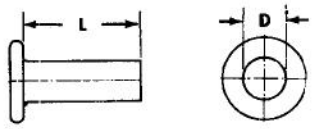

Part No.	S	D	L	M	F
G104218	NA	1/4	1/8	ST	PLN
G104219	NA	1/4	1/8	ST	PLN
G104220	NA	1/8	3/8	ST	PLN
G104234	NA	3/16	3/8	ST	PLN
G104236	NA	3/16	5/8	ST	PLN
G104239	NA	3/16	1	ST	PLN
G104251	NA	1/4	3/4	ST	PLN
G104265	NA	5/16	3/4	ST	PLN
G104266	NA	5/16	7/8	ST	PLN
G104267	NA	5/16	1	ST	PLN
G104268	NA	5/16	1-1/8	ST	PLN
G104280	NA	3/8	7/8	ST	PLN
G104282	NA	3/8	1-1/8	ST	PLN
G105535	NA	1/8	5/16	ST	PLN
G110976	NA	5/16	1/4	ST	PLN
G118059	NA	3/8	9/16	ST	PLN
G118062	NA	5/16	11/16	ST	PLN
G118067	NA	5/16	13/16	ST	PLN
G134777	NA	3/32	1/2	ST	PLN
G134831	NA	7/32	1	ST	PLN
G134944	NA	11/32	2-1/4	ST	PLN
G271130	NA	1/8	11/16	ST	CAD
G426185	NA	9/64	1/4	ST	PLN
G447148	NA	3/16	7/8	ST	CAD

17.542 RIVET, Countersunk Hd. Solid



Part No.	S	D	L	M	F
G104151	NA	3/16	1/2	ST	PLN
G113225	NA	3/16	9/16	ST	PLN
G135018	NA	1/8	3/16	ST	PLN
G136181	NA	1/8	11/32	ST	NIC
G9418891	NA	9/64	15/32	ST	CAD

17.544 RIVET, Truss Hd. Solid

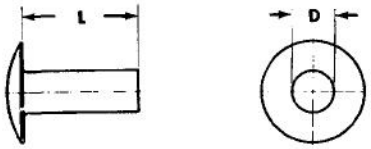

Part No.	S	D	L	M	F
G106898	NA	1/4	1/2	ST	PLN
G106899	NA	1/4	5/8	ST	PLN
G135259	NA	1/8	13/16	ST	PLN
G9421996	NA	9/64	15/32	ST	CAD

17.554 RIVET, Oval Hd. Split

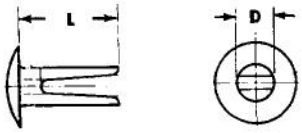

Part No.	S	D	L	M	F
G136326	NA	3/16	1/2	ST	PLA

17.555 RIVET, Flat Hd. Semi-Tubular

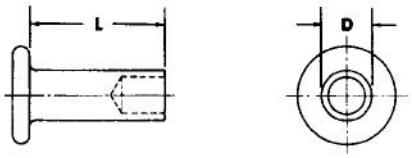

Part No.	S	D	L	M	F
G134774	NA	3/32	5/16	ST	PLN
G136170	NA	1/8	1/4	ST	PLA
G221192	NA	1/8	1/4	ST	PLA
G426180	NA	1/8	7/32	ST	PLA
G427227	NA	3/16	1/4	ST	CAD
G9411491	NA	3/16	3/8	ST	CAD

17.557 RIVET, Truss Head Tubular

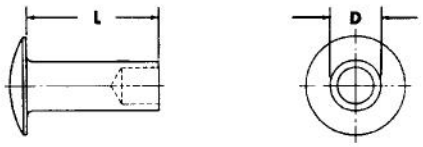

Part No.	S	D	L	M	F
G111889	NA	9/64	3/16	ST	PLA
G118136	NA	9/64	15/32	ST	BLE
G119364	NA	3/16	9/16	ST	CAD
G135724	NA	9/64	9/32	ST	PLA
G135729	NA	9/64	11/32	ST	BLE
G135745	NA	3/16	11/32	ST	PLA
G135846	NA	9/64	9/32	ST	BLE
G9421887	NA	1/8	3/16	ST	CAD

17.558 RIVET, Oval Hd. Tubular

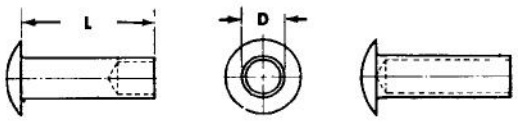

Part No.	S	D	L	M	F
G107285	NA	1/8	3/16	ST	CAD
G109729	NA	9/64	9/32	ST	CAD
G111854	NA	9/64	3/16	WI	BLE

Part No.	S	D	L	M	F
G111856	NA	9/64	5/16	WI	BLE
G111872	NA	1/8	3/16	ST	PLA
G111873	NA	1/8	1/4	ST	PLA
G111880	NA	9/64	5/32	ST	PLA
G113349	NA	1/8	7/32	ST	PLA
G113354	NA	3/16	1/4	ST	PLA
G113355	NA	3/16	5/16	ST	PLA
G113356	NA	3/16	3/8	ST	PLA
G113746	NA	1/8	5/16	ST	BLE
G113747	NA	9/64	5/16	ST	BLE
G113748	NA	9/64	5/16	ST	BLE
G113765	NA	3/16	3/16	ST	PLA
G114300	NA	9/64	3/16	ST	BLE
G114860	NA	3/16	7/16	ST	BLE
G116392	NA	9/64	1/4	ST	CAD
G118129	NA	1/8	3/16	ST	BLE
G118515	NA	9/64	1/4	ST	BLE
G118516	NA	9/64	1/4	ST	BLE
G121646	NA	3/16	1/4	ST	CAD
G122863	NA	3/16	5/16	ST	CAD
G129025	NA	9/64	5/16	ST	PLA
G131396	NA	9/64	5/16	ST	CAD
G135499	NA	1/8	3/16	ST	TIN
G135685	NA	1/8	1/8	ST	NIC
G135689	NA	1/8	7/32	ST	NIC
G135711	NA	9/64	11/32	ST	BLE
G135725	NA	9/64	9/32	ST	BLE
G135726	NA	9/64	7/16	ST	NIC
G135731	NA	9/64	3/8	ST	BLE
G135738	NA	9/64	9/32	ST	NIC
G135740	NA	3/16	7/32	ST	BLE
G135744	NA	3/16	9/32	ST	NIC
G135750	NA	3/16	3/8	ST	NIC
G135870	NA	9/64	13/32	ST	PLA
G136067	NA	9/64	9/32	BR	NIC
G136868	NA	3/16	3/16	ST	CAD
G137312	NA	3/16	3/8	ST	CAD
G137871	NA	3/16	1/2	ST	CAD
G138025	NA	9/64	5/32	ST	CAD
G139865	NA	9/64	3/8	ST	NIC
G140727	NA	9/64	3/16	ST	CAD
G142938	NA	9/64	7/32	ST	CAD
G143291	NA	1/8	5/16	ST	CAD
G144543	NA	9/64	7/32	ST	CAD
G148592	SS	1/8	1/4	ST	CAD
G173264	NA	9/64	1/4	ST	CHR
G187992	NA	1/8	3/8	ST	CAD
G188330	NA	9/64	9/32	ST	CAD
G191297	NA	1/8	3/16	BR	CAD
G191522	NA	1/8	7/32	ST	CAD
G191725	NA	1/8	1/8	BR	CAD
G192872	NA	3/32	5/16	ST	CAD
G213516	NA	1/8	1/8	ST	CAD
G213536	NA	3/32	5/32	ST	CAD
G426458	NA	3/32	1/4	ST	CAD
G427024	NA	3/16	13/32	ST	CAD
G446569	NA	5/64	1/8	ST	PLA
G453042	NA	9/64	1/4	ST	CAD
G9414976	NA	3/32	3/32	ST	PLA

17.566 RIVET, Round Head Aluminum

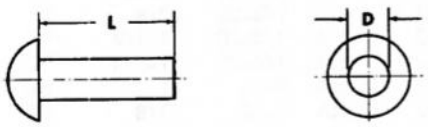

Part No.	S	D	L
G9402565	NA	5/32	5/8

17.572 RIVET, Flat Head Aluminum

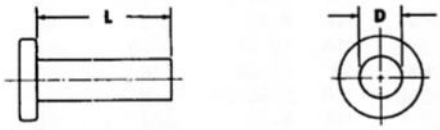

Part No.	S	D	L
G178762	NA	1/8	1/4
G192827	NA	1/8	7/16
G193305	NA	1/4	7/16

17.584 SCREW, Flat Hd. Slotted Machine

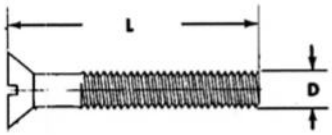

Part No.	S	D	L	M	F
G103863	NA	8-32	3/8	ST	NIC
G110533	NA	10-24	3/4	ST	PLA
G120612	NA	10-32	5/8	ST	CAD
G133414	NA	6-32	1/4	ST	CAD
G133432	NA	6-32	1/2	ST	CAD
G133495	NA	8-32	5/8	ST	CAD
G133567	NA	10-24	5/8	ST	ZIN
G133827	NA	5/16-18	3/4	ST	CAD
G143329	NA	1/2-20	7/8	ST	CAD
G189618	NA	10-32	9/16	ST	PHO
G421374	NA	4-48	5/16	BR	PLA
G451735#E	NA	10-24	3/8	ST	PLA
G454492#E	NA	10-24	7/16	ST	PLA
G454541#E	NA	10-24	7/16	ST	PLA
G455471#E	NA	10-24	3/8	ST	PLA

17.586 SCREW, Flat Hd. Cross Recess Machine

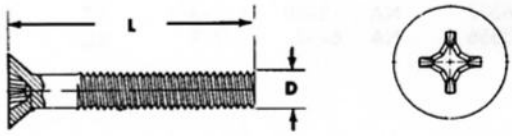

Part No.	S	D	L	M	F
G155836	NA	6-32	5/16	ST	CHR
G155845	NA	6-32	7/16	ST	CHR
G155872	NA	8-32	5/16	ST	CAD
G155873	NA	8-32	5/16	ST	CHR
G155877	NA	8-32	3/8	ST	CAD
G155904	NA	8-32	1	ST	CAD
G155941	NA	10-24	5/8	ST	CAD
G156009	NA	10-32	1/2	ST	CAD
G156012	NA	10-32	1/2	ST	PHO
G156014	NA	10-32	5/8	ST	CAD
G156019	NA	10-32	3/4	ST	CAD
G156248	NA	1/4-20	5/8	ST	PLA
G156249	NA	1/4-20	5/8	ST	CAD
G156253	NA	1/4-20	3/4	ST	CAD
G156265	NA	1/4-20	1	ST	CAD
G156270	NA	1/4-20	1	ST	PHO
G156466	SS	5/16-18	1	ST	CAD
G156471	SS	5/16-18	1-1/4	ST	CAD
G177935	NA	10-24	1/2	ST	CAD
G187440#E	NA	1/4-20	5/8	ST	CAD
G191903	NA	5/16-24	3/4	ST	ZIN
G191981#E	NA	10-24	1/2	ST	CAD
G191983	NA	1/4-20	5/8	ST	CAD
G271157#E	NA	1/4-20	1/2	ST	CAD
G271452#E	NA	10-32	1/2	ST	CAD
G272994	NA	12-24	3/4	ST	CAD
G273521	SS	5/16-24	7/8	ST	CAD
G426764#E	NA	5/16-24	1	ST	CAD
G439983	NA	1/4-28	5/8	ST	CAD
G441786#E	NA	1/4-20	1/2	ST	CAD
G443511	NA	10-32	1/2	ST	CHR
G443637#E	NA	10-24	3/4	ST	CAD
G443878	NA	1/4-20	7/8	ST	PHO
G445592	NA	1/4-20	7/8	ST	CAD
G445607#E	NA	8-32	1/2	ST	CAD
G445638#E	NA	12-24	1/2	ST	CHR
G447137#E	NA	5/16-18	3/4	ST	CHR
G456833#E	NA	8-32	5/16	ST	CAD
G9411436	NA	8-32	7/16	ST	CAD
G9417535	NA	1/4-20	7/8	ST	CAD
800 0281#E	SS	5/16-24	1-3/8	ST	CAD
800 0287#E	NA	10-32	1/4	ST	CAD
800 0289#E	SS	10-32	3/8	ST	CAD
800 0325#E	SS	8-32	1-1/2	ST	CAD

17.590 SCREW, Oval Hd. Slotted Machine

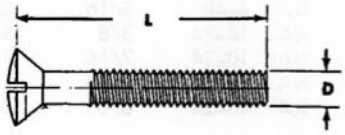

Part No.	S	D	L	M	F
G101053	NA	6-32	7/8	BR	PLA
G134168	NA	6-32	7/16	ST	CHR
G134187	NA	6-32	1	ST	CHR
G134219	NA	8/32	7/16	ST	CAD
G436307	NA	12-28	1-3/4	ST	CHR
G443856	NA	6-32	7/8	SL	PLA

17.592 SCREW, Oval Hd. Cross Recess Machine

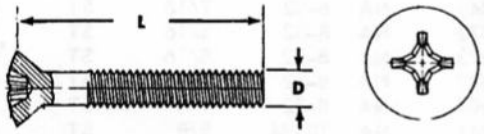

Part No.	S	D	L	M	F
G147762	NA	8-32	5/8	ST	CHR
G147840	NA	10-24	3/4	ST	CHR
G148034	NA	10-24	1/2	ST	CHR
G148101	NA	8-32	3/8	ST	CHR
G148102	NA	1/4-20	5/8	ST	CHR
G148109	NA	10-24	5/8	ST	CHR
G156642	SS	6-32	5/16	ST	CHR
G156655	NA	6-32	1/2	ST	CHR
G156690	NA	6-32	3/4	ST	CHR
G156723	NA	6-32	7/8	ST	CHR
G156730	NA	6-32	1	ST	CHR
G156750	NA	8-32	5/16	ST	CAD
G156751	NA	8-32	5/16	ST	CHR
G156762	NA	8-32	3/8	ST	CAD
G156771	NA	8-32	1/2	ST	CHR
G156780	NA	8-32	3/4	ST	CHR
G156792	NA	8-32	7/8	ST	CAD
G156793	NA	8-32	7/8	ST	CHR
G156798	NA	8-32	1	ST	CHR
G156818	NA	8-32	1	ST	PHO
G156963	NA	10-24	1/2	ST	CAD
G156977	NA	10-24	1	ST	CHR
G157004	SS	10-24	1-3/4	ST	CHR
G157062	NA	10-32	7/16	ST	CHR
G157070	NA	10-32	1/2	ST	CAD
G157105	NA	10-32	1/2	ST	CHR
G157183	NA	10-32	1-1/4	ST	CHR
G157322	NA	12-24	1	ST	CHR
G157388	NA	1/4-20	7/16	ST	CHR
G157441	NA	1/4-20	7/8	ST	CAD
G157452	NA	1/4-20	1-1/4	ST	CHR
G157463	NA	1/4-20	1-3/4	ST	CHR
G158552	NA	8-32	1	BR	CHR
G159582	NA	8-32	3/8	ST	CAD
G162484	NA	10-12	1-1/4	ST	CAD
G169234	NA	8-32	1-1/4	ST	CHR
G179265	NA	10-32	7/8	SL	PLA
G179396	NA	10-32	5/8	ST	NIC
G186575	NA	8-32	3/4	SL	PLA
G186932#E	NA	12-24	1/2	ST	PHO
G187012	NA	1/4-20	5/8	SL	PLA
G187704#E	NA	12-24	1/2	ST	CAD
G187705	NA	12-24	1/2	ST	PLA
G187871	NA	8-32	1/2	ST	CHR
G187951	SS	12-24	5/8	ST	CAD
G187991	NA	10-32	7/16	SL	PLA
G189430	NA	8-32	3/8	SL	PLA
G191929	NA	3/8-16	3-1/2	ST	CAD
G271079#E	NA	8-32	3/8	ST	CHR
G271138#E	NA	10-24	7/16	ST	CHR
G271208#E	SS	10-24	3/4	ST	CHR
G431613#E	NA	5/16-24	5/8	ST	ZID
G441302	NA	8-32	5/8	SL	PLA
G446632#E	NA	10-32	1/2	ST	CHR
G446635	NA	12-24	3/4	ST	CHR
G451259	NA	10-24	5/8	ST	CHR
G451270	NA	10-24	3/4	ST	CHR
G451911	NA	10-32	7/16	ST	CHR
G452995	NA	10-24	7/8	ST	CHR
G455166#E	NA	1/4-20	1/2	ST	CAD
G9415982#E	SS	10-24	5/8	ST	CHR
800 0333	SS	3/8-16	3-3/4	ST	CAD

17.593 SCREW, Oval Trim Hd. Cross Recess Machine

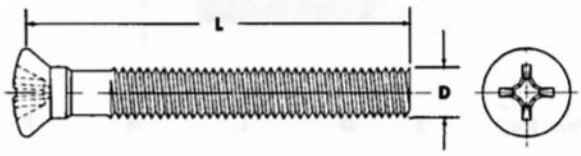

Part No.	S	D	L	M	F
G168638	SS	8-32	1/2	ST	CHR
G168641	SS	8-32	5/8	ST	CHR
G168999	NA	6-32	1	ST	CHR
G445546	NA	10-32	1	SL	PLA
G446025	NA	10-32	3/4	SL	PLA
G455475	NA	10-24	3/8	ST	CHR

17.596 SCREW, Pan Hd. Slotted Machine

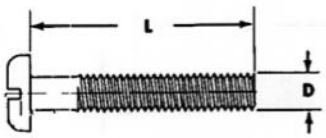

Part No.	S	D	L	M	F
G193257	NA	6-32	1/4	ST	CAD
G435141	NA	10-24	3/8	ST	PLA
G436575	NA	10-24	1-1/4	ST	PLA
G436638	NA	4-40	1/4	ST	CAD
G436698	NA	8-32	7/8	ST	CAD
G436748	NA	10-32	3/8	ST	CAD
G437059	NA	10-24	7/16	ST	CHR
G453049	NA	14-20	3/4	ST	CAD
G453050#E	NA	1/4-20	3/4	ST	CAD
G454342#E	NA	8-32	3/8	ST	CAD

17.598 SCREW, Pan Hd. Cross Recess Machine

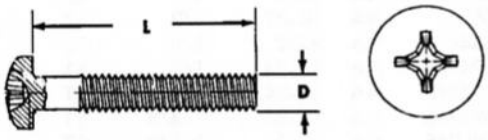

Part No.	S	D	L	M	F
G154903	NA	4-40	1/8	ST	CAD
G159028	SS	4-40	1/4	ST	CAD
G159240	NA	6-32	5/16	ST	CAD
G159255	NA	6-32	3/8	ST	CHR
G159353#E	SS	6-32	7/8	ST	CAD
G159358	NA	6-32	1	ST	CAD
G159549	NA	8-32	3/16	ST	CAD
G159572	NA	8-32	1/4	ST	CAD
G159577	SS	8-32	5/16	ST	CAD
G159582	SS	8-32	3/8	ST	CAD
G159583	NA	8-32	3/8	ST	CHR
G159588	NA	8-32	7/16	ST	CHR
G159592	NA	8-32	1/2	ST	CAD
G159658	NA	8-32	3/4	ST	CAD
G159719	NA	8-32	2-1/4	ST	CAD
G159858	NA	10-24	5/16	ST	CAD
G159914	NA	10-24	7/16	ST	CHR
G159920	NA	10-24	1/2	ST	CAD

Part No.	S	D	L	M	F
G159921	NA	10-24	1/2	ST	CHR
G159929	NA	10-24	5/8	ST	CAD
G160035	NA	10-32	3/8	ST	CAD
G160064	NA	10-32	7/8	ST	CAD
G160075	NA	10-32	1-1/4	ST	CAD
G160364	NA	12-24	1	ST	PLA
G160510	NA	1/4-20	7/16	ST	CAD
G160515	NA	1/4-20	1/2	ST	CAD
G160536	NA	1/4-20	5/8	ST	CAD
G160548	NA	1/4-20	7/8	ST	CAD
G160679	NA	5/16-18	1/2	ST	CAD
G160722	NA	5/16-18	1-1/4	ST	CAD
G160921	NA	6-32	1/4	BR	NIC
G163024	NA	4-24	1/4	ST	CAD
G188749#E	NA	10-24	3/8	ST	CAD
G190332	NA	5/16-24	3/4	ST	PLA
G191680#E	NA	10-32	1/2	ST	CAD
G191691#E	NA	10-24	5/8	ST	CAD
G191984#E	NA	1/4-20	3/8	ST	CAD
G191988#I	NA	1/4-20	1/2	ST	CAD
G271113#E	NA	12-24	3/8	ST	CAD
G273228#E	NA	8-32	3/8	ST	CAD
G273511#E	NA	10-32	5/8	ST	CAD
G273792#E	SS	1/4-28	1/4	ST	CAD
G273876#E	NA	6-32	5/16	ST	CAD
G274557#E	NA	10-24	1	ST	CAD
G274857#E	NA	5/16-24	5/8	ST	CAD
G436732	NA	10-24	1/2	ST	CAD
G439448	NA	1/4-28	7/8	ST	CAD
G439458	NA	5/16-24	7/16	ST	CAD
G444272#E	NA	8-32	1/4	ST	CAD
G444912	NA	10-32	3/4	ST	CAD
G445613	NA	8-32	7/16	ST	CAD
G447115	NA	10-32	7/16	ST	CAD
G447129#E	NA	10-24	7/16	ST	CAD
G450560#E	NA	8-32	1/2	ST	CAD
G451600#E	NA	8-32	1/2	ST	CAD
G453027#E	NA	5/16-24	7/8	ST	CAD
G453048#I	NA	10-32	7/8	ST	CAD
G454542#E	NA	1/4-20	1/2	ST	CAD
G455711#E	NA	5/16-18	5/8	ST	CAD
G456845#E	NA	10-24	5/8	ST	CAD
G456963#E	NA	10-32	3/8	ST	CAD
G9411530	NA	8-18	5/16	ST	CAD
G9413543	NA	10-24	7/8	ST	CAD
G9416388#I	NA	1/4-20	5/8	ST	CAD
400 0971#E	SS	5/16-24	3/4	ST	PLA
800 0037#E	NA	10-32	1-1/2	ST	CAD
800 0045#E	NA	10-24	3/8	ST	CAD
800 0056#E	SS	10-32	7/16	ST	CAD
800 0058#E	SS	8-32	3/8	ST	CAD
800 0077#E	NA	1/4-28	7/16	ST	CAD
800 0110#W	SS	1/4-20	5/8	ST	PLA
800 0113#E	SS	5/16-24	3/4	ST	CAD
800 0283#E	SS	8-32	5/16	ST	CAD
800 0285#E	SS	1/4-20	7/16	ST	CAD
800 0327#E	SS	10-24	7/16	ST	PHO

Printed in U.S.A.

17.602 SCREW, Fillister Hd. Slotted Machine

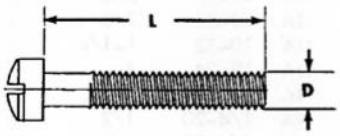

Part No.	S	D	L	M	F
G110486	NA	10-24	3/8	ST	PLA
G110488	NA	10-24	5/8	ST	PLA
G110491	NA	10-24	1	ST	PLA
G110492	NA	10-24	1-1/8	ST	PLA
G110881	NA	10-24	7/16	ST	PLA
G114353	NA	1/4-20	1/2	ST	PLA
G114354	NA	1/4-20	5/8	ST	PLA
G114358	NA	1/4-20	1-1/8	ST	PLA
G117278	NA	10-24	2-1/2	ST	PLA
G120216	NA	10-32	1/2	ST	CAD
G131958	NA	8-32	5/16	ST	CAD
G131963	NA	8-32	3/8	ST	CAD
G132124	NA	10-32	3/4	ST	CAD
G132148	NA	10-32	1-3/4	ST	CAD
G132255	NA	1/4-20	1/2	ST	CAD
G189384#S	NA	10-24	7/16	ST	PLA
G189385#S	NA	10-24	3/4	ST	PLA
G189386#S	NA	10-24	1	ST	PLA
G190163#S	NA	10-24	1-1/4	ST	PLA
G190601#S	NA	10-24	5/8	ST	PLA
G193445#S	NA	10-24	9/16	ST	PLA
G216357#S	NA	10-24	1/2	ST	PLA
G224976	NA	5-40	1/4	ST	CAD
G271212#S	NA	1/4-20	7/8	ST	CAD
G273181#S	NA	10-24	1-3/8	ST	PLA
G274197#S	NA	10-24	1-1/2	ST	PLA
G431626	NA	1/4-20	5/8	ST	PLA
G443914#S	NA	10-24	7/8	ST	PLA
G453907#S	NA	10-24	3/8	ST	PLA
G454027#S	NA	10-24	5/8	ST	PLA
G454028#S	NA	10-24	1	ST	PLA
G454029#S	NA	10-24	3/4	ST	PLA
G454030#S	NA	10-24	7/16	ST	PLA
G454031#S	NA	10-24	1-1/8	ST	PLA
G454776#S	NA	10-24	1-1/4	ST	PLA
G455634#S	NA	10-24	1-3/8	ST	PLA

17.604 SCREW, Fillister Hd. Cross Recess Machine

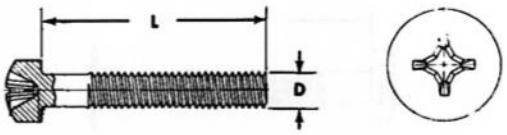

Part No.	S	D	L	M	F
G153144	NA	8-32	5/8	ST	CHR
G153154	NA	8-32	7/8	ST	CHR
G153181	NA	8-32	1-1/4	ST	CHR
G153250	NA	10-24	1/2	ST	CHR
G153415	NA	10-32	7/16	ST	PLA
G153550	NA	12-24	1/2	ST	CAD
G153554	NA	12-24	5/8	ST	PLA
G153555	NA	12-24	5/8	ST	CAD
G153783	NA	1/4-20	3/4	ST	CHR
G153802	NA	1/4-20	1-1/4	ST	CAD
G153931	NA	5/16-18	1/2	ST	PHO
G153994	NA	5/16-18	1	ST	CAD
G154000	NA	5/16-18	1-1/4	ST	CAD
G187060	SS	5/16-24	1	ST	CAD
G187952	NA	5/16-24	1	ST	PLA
G273425	NA	10-24	2	ST	PLA
G273599#S	NA	10-24	5/8	ST	PLA
G446674	NA	8-32	1/2	SL	PLA
G450503	NA	10-32	1/2	ST	CHR
G456544	NA	8-32	7/8	SL	PLA
G456947#S	NA	10-24	1/2	ST	PLA
G456948#S	NA	10-24	3/4	ST	PLA
G456949#S	NA	10-24	1-3/8	ST	PLA
G456950#S	NA	10-24	1-5/8	ST	PLA

17.608 SCREW, Truss Hd. Slotted Machine

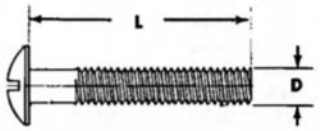

Part No.	S	D	L	M	F
G125680	NA	1/4-20	5/8	ST	CAD
G144531	NA	1/4-20	1/2	ST	CAD
G178760	NA	5/16-18	2-1/4	ST	CAD
G272519	NA	1/4-20	1	ST	CAD
G433856	NA	5/16-24	3/4	ST	CAD
G443639	NA	1/4-28	3/8	ST	CAD
G445938	NA	10-32	3/8	ST	CAD

17.610 SCREW, Truss Hd. Cross Recess Machine

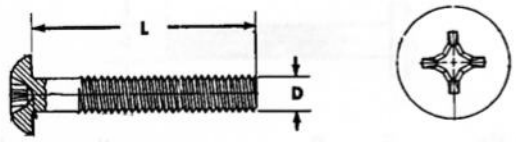

Part No.	S	D	L	M	F
G157728	NA	1/4-20	5/8	ST	CAD
G157733	NA	1/4-20	3/4	ST	CAD
G157734	NA	1/4-20	3/4	ST	CHR
G179051	NA	10-32	7/16	ST	CAD
G179072	NA	5/16-24	2	ST	CAD
G189129	NA	1/4-20	5/8	ST	CAD
G191940	NA	6-32	3/8	ST	CAD
G191941	NA	5/16-18	2	ST	CAD
G272995	NA	10-24	11/16	ST	CAD
G273434#E	NA	8-32	1/2	ST	CAD
G273808	SS	6-32	1/4	ST	CAD
G274503	NA	12-24	5/8	ST	CAD
G445615	NA	5/16-24	3/4	ST	CAD
G446607	NA	10-32	1/2	ST	CAD
G446938#E	NA	1/4-20	5/8	ST	CAD
G451271#E	NA	10-32	1/2	ST	CAD
G451297#E	NA	10-24	7/16	ST	CAD
G451603#E	NA	8-32	5/16	ST	CAD
G451704#E	NA	10-32	5/16	ST	CAD
G451812	NA	1/4-20	1/2	ST	CHR
G454805	NA	5/16-24	1	ST	CAD
G455178#I	NA	12-24	3/4	ST	CAD
G455683#E	NA	1/4-20	1/2	ST	CAD
G9413200	NA	5/16-24	2-1/4	ST	CAD
G9414972#I	NA	5/16-18	3/4	ST	CAD
G9415336	NA	6-32	7/16	ST	CAD
G9415360	NA	10-24	7/16	ST	CAD
G9417333#E	NA	10-24	1/2	ST	CAD
G9418746	NA	10-24	1	ST	PHO
800 0112#E	SS	5/16-24	3/4	ST	PLA
800 0239#E	SS	5/16-18	7/16	ST	CAD
800 0241#I	SS	5/16-24	1-1/4	ST	CAD
800 0243#I	SS	5/16-24	3/4	ST	CAD
800 0255	SS	8-32	1/2	ST	CAD
800 0256	SS	8-32	1/2	ST	CHR
800 0303#E	NA	5/16-18	1-1/2	ST	CAD
800 0466#E	SS	5/16-18	1	ST	CAD

17.614 SCREW, Round Hd. Slotted Machine

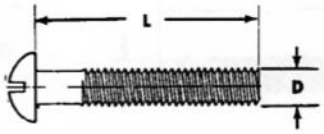

Part No.	S	D	L	M	F
G100754	NA	8-32	7/8	ST	PLA
G111302	NA	8-32	1-1/8	ST	CAD
G113962	NA	1/4-20	1-3/8	ST	PLA
G113963	NA	1/4-20	1-1/2	ST	PLA
G113975	NA	1/4-20	1/2	BR	PLA
G120222	NA	10-24	5/8	ST	CAD
G121540	NA	10-32	5/16	ST	CAD
G121749	NA	8-32	5/16	ST	CAD
G121832	NA	8-32	3/8	ST	CAD
G122159	NA	8-32	1/4	ST	CAD
G124060	NA	1/4-20	1/2	ST	PHO
G129028	NA	6-32	5/8	ST	CAD
G131375	NA	1/4-20	3/8	ST	CAD
G132628	NA	4-40	1/4	ST	CHR
G132660	NA	4-40	7/8	ST	CAD
G132684	NA	6-32	3/16	ST	CAD
G132696	NA	6-32	3/8	ST	CAD
G132731	NA	6-32	1-3/4	ST	CAD
G132750	NA	8-32	1/4	ST	PHO
G132760	NA	8-32	1/2	ST	CAD
G132764	NA	8-32	5/8	ST	CAD
G132768	NA	8-32	3/4	ST	CAD
G132830	NA	10-24	3/8	ST	CAD
G132833	NA	10-24	7/16	ST	CAD
G132892	NA	10-32	1/4	ST	CAD
G132908	NA	10-32	1/2	ST	CAD
G132915	NA	10-32	3/4	ST	CAD
G132923	NA	10-32	1	ST	CAD
G132926	NA	10-32	1-1/4	ST	CAD
G132934	NA	10-32	1-3/4	ST	CAD
G132942	NA	10-32	2-1/4	ST	CAD
G132988	NA	12-24	1	ST	CAD
G133053	NA	1/4-20	1-1/4	ST	CAD
G145530	NA	8-32	5/16	ST	CAD
G147630	NA	10-24	5/16	ST	CAD
G148124	NA	8-32	3/8	BR	CAD
G173028	NA	8-32	3/8	ST	CAD
G174964	NA	10-24	3/8	ST	CAD
G178792	NA	12-24	1/2	ST	CAD
G187869	NA	8-32	5/8	ST	PHO
G228288#E	NA	6-32	1/4	ST	CAD
G228329#E	NA	8-32	1/2	ST	CAD
G228720#I	NA	10-24	7/16	ST	PLA
G421799	NA	6-40	3/8	ST	PLA
G427709	NA	10-32	7/16	ST	CAD
G431586	NA	10-32	9/16	ST	CAD
G447119	NA	8-32	1/4	ST	CAD
G453283	NA	10-32	3/8	ST	CAD
G453461	NA	8-32	3/8	ST	CAD
800 0081	SS	10-32	5/8	ST	PLA
800 0084	SS	8-32	1/2	ST	CAD
800 0086	SS	10-32	3/8	ST	CAD
800 0329	NA	8-32	3/8	ST	CAD

17.616 SCREW, Round Hd. Cross Recess Machine

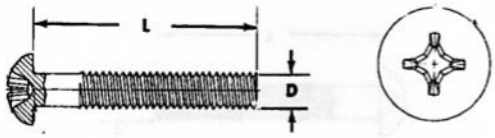

Part No.	S	D	L	M	F
G147899	NA	10-24	1/2	ST	CHR
G154976	NA	6-32	3/8	ST	CAD
G154998	NA	6-32	3/4	ST	CAD
G155044	NA	8-32	1/2	ST	CHR
G155103	NA	10-24	3/8	ST	CAD
G155118	NA	10-24	5/8	ST	CAD
G155124	NA	10-24	3/4	ST	CHR
G155193	NA	10-32	1/2	ST	CAD
G155203	NA	10-32	3/4	ST	CAD
G155338	NA	1/4-20	1/2	ST	CAD
G155343	NA	1/4-20	5/8	ST	CAD
G155348	NA	1/4-20	3/4	ST	CAD
G155358	NA	1/4-20	1	ST	CAD
G155363	NA	1/4-20	1-1/4	ST	CAD
G155366	NA	1/4-20	1-1/4	ST	PHO
G155458	NA	3/8-16	1/2	ST	CAD
G179372#E	NA	10-24	1/2	ST	CAD
G186500#E	NA	12-24	5/8	ST	CAD
G186522#I	NA	6-32	3/8	ST	CAD
G186857	NA	1/4-20	7/8	ST	CAD
G187483#E	NA	8-32	3/8	ST	CAD
G187523#E	NA	10-32	1/4	ST	CAD
G187804#E	NA	12-24	1	ST	CAD
G187987#E	NA	12-24	1/2	ST	CAD
G271085#E	NA	6-32	3/8	ST	CAD
G271102#E	NA	8-32	1/4	ST	CAD
G271126#E	NA	1/4-20	3/4	ST	CAD
G271128	NA	1/4-28	2-5/8	ST	PHO
G273785	SS	6-32	1/2	SL	PLA
G421519	SS	6-32	3/8	SL	PLA
G435827	NA	10-24	5/16	ST	CAD
G436468#E	NA	12-24	1/2	ST	PHO
G442435#E	NA	1/4-20	1	ST	CAD
G443370#E	NA	8-32	7/16	ST	CAD
G443610#E	NA	10-32	5/16	ST	CAD
G443642#E	NA	8-32	5/16	ST	CAD
G444271#E	NA	10-32	3/8	ST	CAD
G445573#E	NA	10-24	1/2	ST	CAD
G446680#E	NA	1/4-20	5/8	ST	CAD
G446119#E	NA	8-32	9/16	ST	CAD
G447121#E	NA	10-32	1/2	ST	CAD
G450649#E	NA	6-32	3/8	ST	CAD
G451263	NA	1/4-20	5/8	ST	CAD
G451813#E	NA	8-32	1/4	ST	CAD
G454496#E	NA	1/4-20	5/8	ST	PLA
G455173#E	NA	12-24	1/2	ST	CAD
G455409#E	NA	5/16-24	5/8	ST	CAD

17.620 SCREW, Binding Hd. Slotted Machine

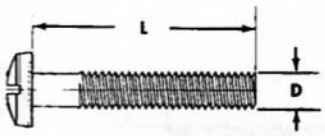

Part No.	S	D	L	M	F
G9407638	NA	1/4-20	5/8	ST	CAD
G9407855	NA	10-32	1-3/4	ST	PHO

17.622 SCREW, Binding Hd. Cross Recess Machine

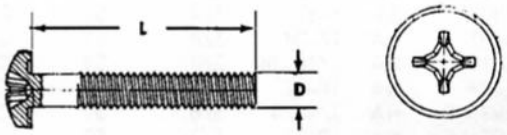

Part No.	S	D	L	M	F
800 0049	SS	1/4-20	4	ST	CAD
800 0131	SS	1/4-20	1/2	ST	PLA

17.626 SCREW, Hex. Hd. Machine

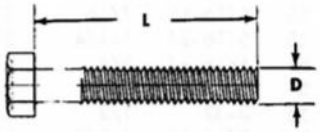

Part No.	S	D	L	M	F
G178451	NA	10-32	3/8	ST	CAD
G178785#I	NA	1/4-20	1/2	ST	CAD
G179056#E	NA	10-24	7/16	ST	CAD
G186491#E	NA	1/4-20	1/2	ST	CAD
G186493#E	SS	1/4-20	5/8	ST	CAD
G187383#E	NA	5/16-18	5/8	ST	PLA
G187527#E	NA	5/16-18	5/8	ST	CAD
G187572	NA	10-24	7/8	ST	CAD

Part No.	S	D	L	M	F
G187745#E	NA	1/4-20	3/4	ST	CAD
G187838	NA	10-32	5/8	ST	CAD
G187993#E	NA	5/16-18	3/4	ST	CAD
G190634#E	NA	5/16-24	1/2	ST	PLA
G191509#S	NA	1/4-20	5/8	ST	PLA
G191833#E	NA	5/16-24	1/2	ST	CAD
G217232#S	NA	5/16-18	9/16	ST	PLA
G217233#S	NA	5/16-18	3/4	ST	PLA
G423333#E	NA	1/4-20	3/8	ST	PLA
G423336#E	NA	1/4-20	5/8	ST	PLA
G423345#E	NA	5/16-18	1/2	ST	PLA
G423392#E	NA	1/4-20	1-1/2	ST	PLA
G423525#E	NA	6-32	7/8	ST	CAD
G423545#E	NA	10-24	1/2	ST	CAD
G423546#E	NA	10-24	3/4	ST	CAD
G423554#E	SS	1/4-20	7/16	ST	CAD
G423560#E	NA	5/16-18	1/2	ST	CAD
G423563#E	NA	5/16-18	1-1/8	ST	CAD
G423565#E	NA	5/16-18	1-1/2	ST	CAD
G423594#E	NA	10-24	7/16	ST	CAD
G423595#E	NA	10-24	1/2	ST	CAD
G423596#E	NA	10-24	5/8	ST	CAD
G425107#I	NA	5/16-18	1/2	ST	PLA
G425458#E	NA	1/4-28	1-1/4	ST	PLA
G425462#E	NA	5/16-24	5/8	ST	PLA
G425463#E	NA	5/16-24	3/4	ST	PLA
G425498#E	NA	10-32	1/2	ST	PLA
G425565#E	NA	10-32	1/4	ST	CAD
G425575#E	NA	10-32	1-1/2	ST	CAD
G425588#E	NA	5/16-24	7/16	ST	CAD
G425589#E	NA	5/16-24	5/8	ST	CAD
G425591#E	NA	5/16-24	7/8	ST	CAD
G425594#E	NA	5/16-24	1-1/4	ST	CAD
G425599#E	NA	3/8-24	3/4	ST	CAD
G425623#E	NA	10-32	3/8	ST	CAD
G425625#E	NA	10-32	1/2	ST	CAD
G425633#E	NA	1/4-28	3/4	ST	CAD
G425639#E	NA	5/16-24	5/8	ST	CAD
G425640#E	NA	5/16-24	3/4	ST	CAD
G425642#E	NA	5/16-24	1-1/8	ST	CAD
G425643#E	NA	5/16-24	1/4	ST	CAD
G425859#I	SS	3/8-24	1	ST	CAD
G425900#I	NA	5/16-24	5/8	ST	CAD
G431938#S	NA	5/16-18	1	ST	ZIN
G431942	NA	10-32	1/2	ST	CAD
G431953#I	NA	1/4-20	1/2	ST	CAD
G440402#E	NA	12-24	5/16	ST	CAD
G440403#E	NA	12-24	3/8	ST	CAD
G440405#E	NA	12-24	1/2	ST	CAD
G440407#E	NA	12-24	3/4	ST	CAD
G440408#E	NA	12-24	7/8	ST	CAD
G440502	NA	10-24	5/8	ST	CAD
G442279	NA	10-32	3/4	ST	CAD
G442695#S	NA	5/16-18	5/8	ST	PLA
G443609#S	NA	5/16-18	7/8	ST	PLA
G443874	NA	10-24	1/2	ST	CAD
G445627	NA	10-24	1/2	ST	CAD
G450526	NA	10-32	7/8	ST	CAD
G451280	NA	8-32	1/2	ST	CAD
G451695	NA	8-32	1/4	ST	CAD
G9409101#S	NA	5/16-18	5/8	ST	CAD
G9414012	NA	14-14	1/2	ST	CAD
G9414204	NA	1/4-20	3/8	ST	CAD
G9415663	NA	10-24	5/16	ST	PLA
G9415770	NA	10-24	7/16	ST	CAD
G9415796	NA	1/4-20	5/8	ST	CAD
G9415800	NA	1/4-20	1-1/4	ST	CAD
G9416388#S	NA	1/4-20	5/8	ST	CAD
320 9576	NA	10-24	7/16	ST	CAD
400 0741	SS	1/4-20	3/8	ST	CAD
800 0005#E	SS	1/4-20	1/2	ST	CAD
800 0007#E	SS	5/16-24	1/2	ST	CAD
800 0009#E	SS	5/16-24	3/4	ST	CAD
800 0013#E	SS	1/4-20	3/4	ST	CAD
800 0015#I	SS	10-24	3/8	ST	CAD
800 0017#E	NA	3/8-24	3/4	ST	CAD
800 0019#E	SS	5/16-24	3/4	ST	CAD
800 0023#E	NA	10-24	1/2	ST	CAD
800 0061#S	SS	1/4-20	1/2	ST	PLA
800 0063#P	SS	5/16-18	3/4	ST	PLA
800 0065#P	SS	5/16-18	5/8	ST	PLA
800 0067#S	SS	5/16-18	5/8	ST	PLA
800 0068#S	SS	5/16-18	5/8	ST	CAD
800 0306#S	SS	1/4-20	3/8	ST	PLA
800 0317#P	SS	1/4-20	3/4	ST	CAD
800 0319#P	NA	5/16-24	3/4	ST	CAD
800 0459#S	SS	1/4-20	3/4	ST	PLA
812 1747	SS	1/4-28	1-1/2	ST	PLA

17.628 SCREW, Hex. Hd. Slotted Machine

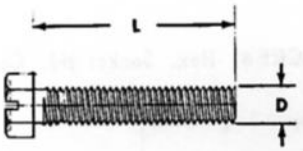

Part No.	S	D	L	M	F
G446678	NA	8-32	1/2	ST	PLA
G446891	NA	8-32	5/8	ST	PLA
G455962	NA	8-32	1/4	ST	CAD
G9418657#E	NA	10-32	5/16	ST	ZIN

17.629 SCREW, Hex. Serrated Washer Hd. Machine

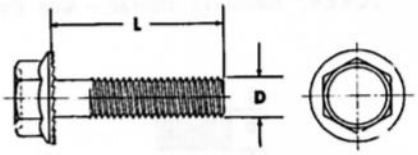

Part No.	S	D	L	M	F
G273573	SS	5/16-18	5/8	ST	PHO
G273745	NA	3/8-24	7/8	ST	CAD
G273772	NA	1/4-20	7/8	ST	CAD
G273773	NA	3/8-16	3/4	ST	CAD
G273867	SS	5/16-18	1/2	ST	ZIN
G273890	NA	5/16-18	5/8	ST	CAD

Part No.	S	D	L	M	F
G274195	SS	3/8-16	1	ST	ZIN
G274473	NA	1/4-20	5/8	ST	CAD
G274644	NA	5/16-18	3/4	ST	CAD
G274683	NA	5/16-24	1/2	ST	CAD
G274825	NA	1/4-20	3/4	ST	CAD
G274882	NA	3/8-16	5/8	ST	CAD
G274893	NA	5/16-24	5/8	ST	CAD
G9412076	NA	5/16-24	3/4	ST	PLA
G9413571	NA	5/16-24	3/4	ST	CAD
G9414038	NA	1/4-20	1/2	ST	CAD
400 1798	SS	5/16-24	3/4	ST	PHO
812 1298	SS	5/16-18	3/4	ST	ZIN

17.630 SCREW, Hex. Washer Hd. Machine

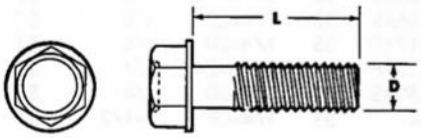

Part No.	S	D	L	M	F
812 0128	SS	5/16-18	1-1/4	ST	PHO

17.634 SCREW, Hex. Socket Hd. Cap

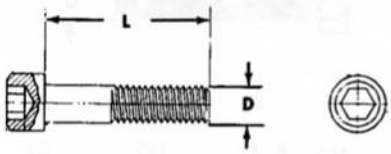

Part No.	S	D	L	M	F
G138232	NA	5/16-24	1	ST	PLA
G138308	SS	1/2-20	1-1/4	ST	PLA
G217904	NA	1/4-20	7/8	ST	PLA
G454474	NA	3/8-16	2-1/4	ST	CAD
G9421654	NA	7/16-14	3	ST	PLA

17.638 SCREW, Headless Slotted - Cup Point

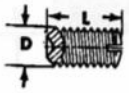

Part No.	S	D	L	M	F
G102695	NA	10-24	3/8	ST	PLA
G128284	NA	10-32	5/16	ST	PLA
G173156	NA	10-32	3/16	ST	CAD
G186473	NA	10-24	7/16	SL	PLA
G9400811	SS	6-32	1/4	ST	CAD
G9400866	NA	1/4-20	1-1/4	ST	CAD
320 9649	SS	1/4-20	1-1/4	ST	CAD

SCREW, Headless Slotted - Oval Point

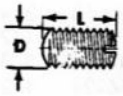

Part No.	S	D	L	M	F
G446055	NA	1/4-20	1-1/2	ST	CAD

17.640 SCREW, Hex. Socket Set - Cone Point

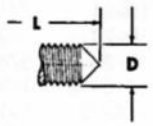

Part No.	S	D	L	M	F
G140892	NA	8-32	1/4	ST	PLA
G140896	NA	8-32	1/2	ST	PLA
G147450	NA	6-32	1/4	ST	PLA
G453069	NA	8-32	5/16	ST	CAD

SCREW, Hex. Socket Set - Cup Point

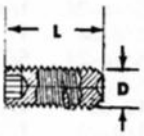

Part No.	S	D	L	M	F
G102569	NA	1/4-20	1/4	ST	PLA
G135615	NA	1/4-20	1/4	ST	NIC
G139107	SS	7/16-20	1/2	ST	PLA
G140854	NA	8-32	1/4	ST	PLA
G140868	NA	10-24	1/4	ST	PLA
G140879	NA	10-32	3/16	ST	PLA

Printed in U.S.A.

SCREW, Hex. Socket Set - Flat Point

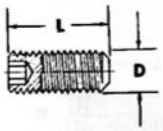

Part No.	S	D	L	M	F
G222421	NA	1/4-28	5/16	ST	PLA
G435146	SS	6-32	1/4	ST	PLA
400 1531	SS	10-24	1-1/2	ST	CHR

17.644 SCREW, Square Hd. Set - Cone Point

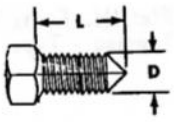

Part No.	S	D	L	M	F
G102938	NA	5/16-18	3/4	ST	PLA
G137750	NA	3/4-10	4	ST	PLA

SCREW, Square Hd. Set - Cup Point

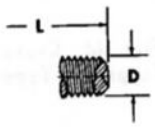

Part No	S	D	L	M	F
G127796	NA	1/4-20	3/4	ST	CAD

17.646 SCREW, Flat Hd. Slotted Tapping - Type "A"

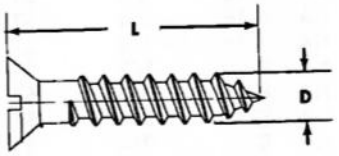

Part No.	S	D	L	M	F
G125702	NA	6-18	1/2	ST	CAD
G140708	NA	10-16	3/8	ST	PLA
G144657	NA	12-11	7/8	ST	CAD
G144678	NA	12-11	1-1/4	ST	CAD
G144693	NA	12-11	2	ST	CAD

SCREW, Flat Hd. Slotted Tapping - Type "B"

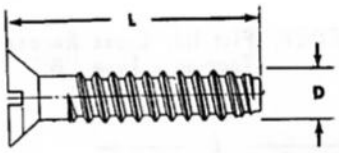

Part No.	S	D	L	M	F
G145094	NA	12-14	1-1/4	ST	CAD
G440961	NA	8-18	3/8	ST	CAD

17.648 SCREW, Flat Hd. Cross Recess Tapping - Type "A"

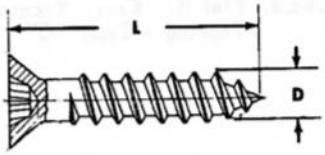

Part No.	S	D	L	M	F
G161370	NA	6-18	3/8	ST	CAD
G161371	NA	6-18	3/8	ST	CHR
G161372	NA	6-18	1/2	ST	PLA

Part No.	S	D	L	M	F
G161373	NA	6-18	1/2	ST	CAD
G161375	NA	6-18	5/8	ST	CAD
G161376	NA	6-18	5/8	ST	CHR
G161377	NA	6-18	3/4	ST	CAD
G161400	NA	7-16	1/2	ST	CAD
G161415	NA	8-15	1/2	ST	CAD
G161418	NA	8-15	5/8	ST	CAD
G161422	NA	8-15	3/4	ST	CAD
G161425	NA	8-15	3/4	ST	CHR
G161427	NA	8-15	7/8	ST	CAD
G161428	NA	8/15	7/8	ST	CHR
G161431	NA	8-15	1	ST	CHR
G161436	NA	10-12	1/2	ST	CAD
G161439	NA	10-12	5/8	ST	CAD
G161441	NA	10-12	3/4	ST	CAD
G161443	NA	10-12	7/8	ST	PLA
G161444	NA	10-12	7/8	ST	CAD
G161447	NA	10-12	1	ST	CAD
G161455	NA	10-12	1-1/2	ST	CAD
G161472	NA	12-11	3/4	ST	CAD
G161503	NA	14-10	3/4	ST	CAD
G161511	NA	14-10	1	ST	CAD
G274472	NA	8-15	1/2	ST	CHR
G451247	NA	10-12	1/2	ST	CAD

SCREW, Flat Hd. Cross Recess Tapping - Type "B"

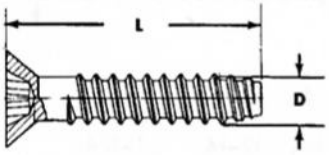

Part No.	S	D	L	M	F
G162653	NA	8-18	3/8	ST	CAD
G162688	NA	10-16	5/8	ST	CAD
G163548	NA	7-19	1/2	ST	CAD

SCREW, Flat Hd. Cross Recess Tapping - Type "C"

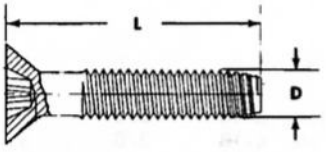

Part No.	S	D	L	M	F
G163693	SS	6-32	1/2	ST	CAD
G163718	NA	8-32	3/8	ST	CAD
G187831	NA	8-32	1/4	ST	CHR

SCREW, Flat Hd. Cross Recess Tapping - Type "D"

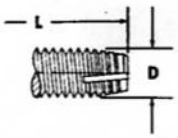

Part No.	S	D	L	M	F
G166297	NA	8-32	3/8	ST	CAD
G166330	NA	10-24	3/8	ST	CAD
G166336	NA	10-24	1/2	ST	CAD
G166359	NA	10-32	1/2	ST	CHR
G449203	NA	6-32	3/8	ST	CAD
G9417862	NA	8-32	1/2	ST	CAD

SCREW, Flat Hd. Cross Recess Tapping - Type "F"

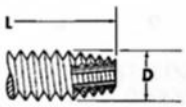

Part No.	S	D	L	M	F
G449015	SS	8-32	5/8	ST	CAD

SCREW, Flat Hd. Cross Recess Tapping - Type "T"

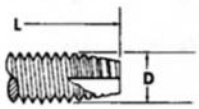

Part No.	S	D	L	M	F
G449249	NA	1/4-20	3/4	ST	CAD

Printed in U.S.A.

17.649 SCREW, Flat Trim Hd. Cross Recess Tapping - Type "A"

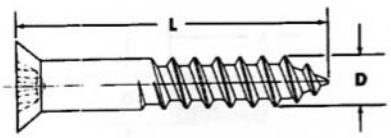

Part No.	S	D	L	M	F
G451664	SS	8-32	1/2	ST	CHR
G455632	NA	8-15	1/2	ST	CAD
G9418797	NA	8-18	1	ST	ZIN

SCREW, Flat Trim Hd. Cross Recess Tapping - Type "AB"

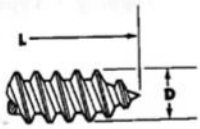

Part No.	S	D	L	M	F
448 8697	NA	8-18	1/2	ST	CAD

SCREW, Flat Trim Hd. Cross Recess Tapping - Type "F"

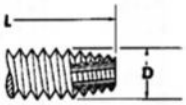

Part No.	S	D	L	L	F
G9416060	NA	8-32	3/8	ST	CAD

17.652 SCREW, Oval Hd. Slotted Tapping - Type "A"

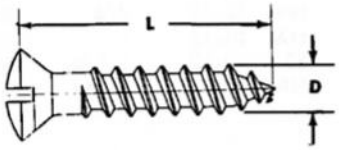

Part No.	S	D	L	M	F
G273528	NA	10-12	3/4	SL	PLA
G440885	NA	6-18	7/8	ST	CHR
G440895	NA	12-11	1	ST	CHR
G440934	NA	4-24	3/8	ST	CAD
G440935	NA	4-24	1/2	ST	CAD

17.654 SCREW, Oval Hd. Cross Recess Tapping - Type "A"

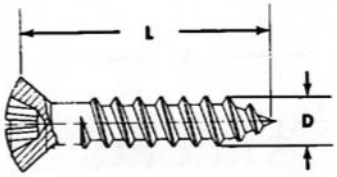

Part No.	S	D	L	M	F
G148543	NA	6-18	3/4	ST	CHR
G148545	NA	8-15	1/2	ST	CHR
G148547	NA	8-15	3/4	ST	PLA
G162126	NA	4-24	3/8	ST	PHO
G162129	NA	4-24	1/2	ST	CAD
G162130	NA	4-24	1/2	ST	CHR
G162141	NA	4-24	3/4	ST	CHR
G162146	NA	4-24	1	ST	CAD
G162246	NA	6-18	1/2	ST	PLA
G162289	NA	6-18	1/2	ST	CHR
G162298	SS	6-18	7/8	ST	CHR
G162312	NA	6-18	1	ST	CHR
G162396	NA	8-15	1/2	ST	CAD
G162400	NA	8-15	5/8	ST	CHR
G162401	NA	8-15	3/4	ST	CAD
G162402	NA	8-15	3/4	ST	CHR
G162406	NA	8-15	7/8	ST	CHR
G162413	NA	8-15	1	ST	CHR
G162415	NA	8-15	1-1/4	ST	CAD
G162416	NA	8-15	1-1/4	ST	CHR
G162418	NA	8-15	1-1/2	ST	CHR
G162420	NA	8-15	1-3/4	ST	CAD
G162421	NA	8-15	1-3/4	ST	CHR
G162453	NA	10	1/2	ST	CAD
G162454	NA	10-12	1/2	ST	CHR
G162457	NA	10	5/8	ST	CAD
G162459	NA	10-12	5/8	ST	CHR
G162462	NA	10-12	3/4	ST	CAD
G162474	NA	10-12	3/4	ST	CHR
G162479	NA	10-12	7/8	ST	CHR
G162482	NA	10-12	1	ST	CHR
G162485	NA	10-12	1-1/4	ST	CHR
G162491	NA	10-12	1-3/4	ST	CHR
G162500	NA	12-11	5/8	ST	CHR
G162502	NA	12-11	3/4	ST	PLA
G162507	NA	12-11	7/8	ST	CHR
G162513	NA	12-11	1-1/4	ST	CHR
G162517	NA	12-11	1-1/2	ST	CHR
G168608	NA	10-12	7/8	ST	CHR
G168619	NA	10-12	1-1/8	ST	CHR
G186775	NA	8-15	1	SL	PLA
G187482	NA	10-12	3/4	ST	PHO
G187618	NA	8-15	1-1/8	SL	PLA
G188197	NA	4-24	1/2	SL	PLA
G443512	NA	8-18	3/8	ST	PHO
G443824	SS	6-18	1/2	ST	PHO
G446595	NA	10-12	1	SL	PLA
G455369	NA	10-12	5/8	SL	PLA
G9411550	NA	10-16	1/2	ST	CHR
G9411797	NA	8-15	7/8	ST	CHR
G9415537	NA	10-16	3/4	ST	CHR
G9425786	NA	8-18	1-3/8	ST	CHR
400 2839	SS	8-18	1-1/2	ST	PHO
448 9492	NA	8-18	3/4	ST	CHR
812 0057	SS	10-16	1	ST	CHR
812 0819	NA	8-18	1/2	ST	CHR
812 1257	NA	6-20	3/4	ST	PHO
812 2079	NA	10-16	5/8	ST	PHO

Printed in U.S.A.

SCREW, Oval Hd. Cross Recess Tapping - Type "B"

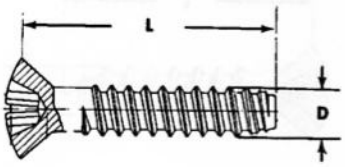

Part No.	S	D	L	M	F
G163402	NA	6-20	3/8	ST	CHR
G163405	NA	6-20	1/2	ST	CHR
G163462	NA	8-18	1	ST	CHR
G163467	NA	10-16	1/2	ST	CAD
G163473	NA	10-16	3/4	ST	CAD
G163484	NA	10-16	1	ST	CHR
G9416680	NA	8-18	3/4	ST	CHR

SCREW, Oval Hd. Cross Recess Tapping - Type "D"

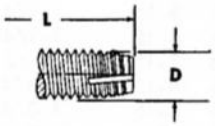

Part No.	S	D	L	M	F
G162488	NA	10-32	1-1/2	ST	CHR
G167548	NA	8-32	3/4	ST	CHR
G167562	NA	10-24	1/2	ST	CAD
G167602	NA	10-32	5/8	ST	CHR
G167620	NA	10-32	1-1/2	ST	CHR
G168980	SS	8-32	3/4	ST	CHR
320 9572	SS	8-32	7/8	ST	CHR

SCREW, Oval Hd. Cross Recess Tapping - Type "F"

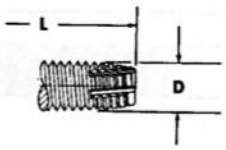

Part No.	S	D	L	M	F
G449346	NA	1/4-20	5/8	ST	PLA
320 9577	SS	8-32	7/8	ST	CHR

17.655 SCREW, Oval Trim Hd. Cross Recess Tapping - Type "A"

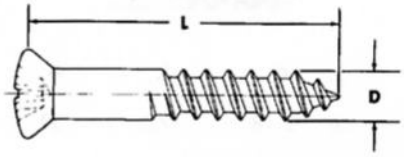

Part No.	S	D	L	M	F
G145417	NA	8-15	5/8	ST	CHR
G145418	NA	8-15	1-1/8	ST	CHR
G145419	NA	8-15	1-1/4	ST	CHR
G145420	NA	8-15	1-1/2	ST	CHR
G148095	NA	8-15	1	ST	CHR
G166303	NA	8-32	1/2	ST	CAD
G168474	NA	8-15	3/8	ST	CAD
G168479	SS	8-15	1/2	ST	CHR
G168488	NA	8-15	1/2	ST	CAD
G168489	NA	8-15	5/8	ST	PLA
G168495	SS	8-15	3/4	ST	CAD
G168496	SS	8-15	3/4	ST	CHR
G168499	NA	8-15	7/8	ST	CHR
G168528	NA	8-15	1-3/4	ST	CHR
G168531	NA	8-15	2	ST	CHR
G168581	SS	10-12	3/8	ST	CHR
G168584	NA	10-12	1/2	ST	CHR
G168590	NA	10-12	5/8	ST	CHR
G168592	NA	10-12	3/4	ST	CHR
G168593	NA	10-12	3/4	ST	CHR
G168611	NA	10-12	1	ST	CAD
G168623	SS	10-12	1-1/4	ST	CHR
G168626	NA	10-12	1-1/2	ST	CHR

Printed in U.S.A.

Part No.	S	D	L	M	F
G178849	NA	8-15	1-1/4	ST	CHR
G188145	NA	8-15	1-3/8	ST	CHR
G188954	NA	10-12	3/4	SL	PLA
G188973	NA	8-15	1/2	SL	PLA
G189354	NA	8-15	1	ST	PHO
G273904	NA	6-18	5/8	ST	CHR
G274500	NA	10-12	5/8	SL	PLA
G274790	NA	6-18	1-1/4	ST	CHR
G446875	NA	8-15	1/2	ST	CHR
G9414755	NA	8-18	7/8	ST	CHR
G9414757	NA	8-18	1-1/4	ST	CHR
G9414756	NA	8-18	1	ST	CHR
G9414758	NA	8-18	1/2	ST	CHR
G9420747	NA	8-18	1-3/8	ST	CHR
320 9561	NA	8-15	7/8	ST	CHR

SCREW, Oval Trim Hd. Cross Recess Tapping - Type "AB"

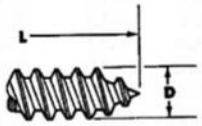

Part No.	S	D	L	M	F
G9414757	NA	8-18	1-1/4	ST	CHR
G9422102	NA	8-18	1	ST	CHR
320 9830	SS	8-18	1	ST	CHR
448 9491	SS	8-18	3/4	ST	CHR
448 9495	NA	8-18	1	ST	CHR
812 0160	SS	10-16	1-1/4	ST	CHR
812 1623	SS	10-16	1-1/8	ST	CHR

SCREW, Oval Trim Hd. Cross Recess Tapping - Type "C"

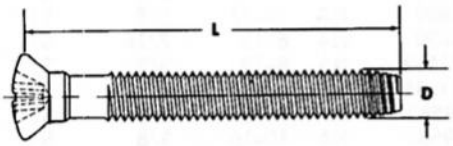

Part No	S	D	L	M	F
G168850	NA	8-32	1/2	ST	CHR
G168901	NA	10-32	5/8	ST	CHR
G274547	SS	8-32	1-1/8	ST	CHR

SCREW, Oval Trim Hd. Cross Recess Tapping - Type "D"

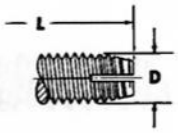

Part No.	S	D	L	M	F
G168971	NA	8-32	3/8	ST	CHR
G168974	NA	8-32	1/2	ST	CHR
G9417455	NA	8-18	1/2	ST	PHO

SCREW, Oval Trim Hd. Cross Recess Tapping - Type "F"

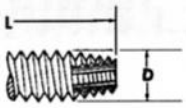

Part No.	S	D	L	M	F
G9425228	NA	10-24	3/4	ST	CHR
G9425232	NA	10-24	1	ST	CHR

17.658 SCREW, Pan Hd. Slotted Tapping - Type "A"

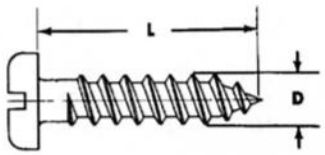

Part No.	S	D	L	M	F
G111633	NA	8-15	1/2	ST	CAD
G127837	NA	7-16	3/8	ST	PLA
G127933	NA	10-16	3/8	ST	CAD
G128270	NA	8-18	3/8	ST	CAD
G142611	NA	10-12	5/8	ST	CAD
G144791	NA	6-20	1/4	ST	CAD
G144803	NA	4-24	3/8	ST	CAD
G144805	NA	7-16	3/8	ST	CAD
G144810	NA	7-16	1/2	ST	CAD
G144811	NA	10-12	1/2	ST	CAD
G144813	NA	6-18	5/8	ST	CAD
G144816	NA	12-11	5/8	ST	CAD
G144822	NA	7-16	3/4	ST	CAD
G440719	NA	4-24	3/8	ST	CHR

SCREW, Pan Hd. Slotted Tapping - Type "AB"

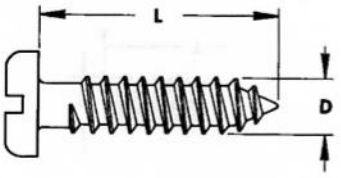

Part No.	S	D	L	M	F
G9426092	NA	8-18	5/8	ST	CAD

SCREW, Pan Hd. Slotted Tapping - Type "B"

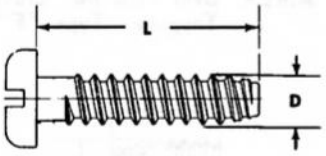

Part No.	S	D	L	M	F
G178812	NA	6-20	1/4	ST	CAD

SCREW, Pan Hd. Slotted Tapping - Type "D"

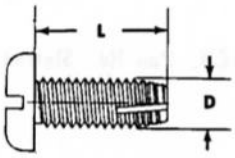

Part No.	S	D	L	M	F
G171704	NA	8-32	1/2	ST	CAD
G171712	NA	8-32	5/8	ST	CAD
G177231	NA	8-32	3/4	ST	CAD

17.660 SCREW, Pan Hd. Cross Recess Tapping - Type "A"

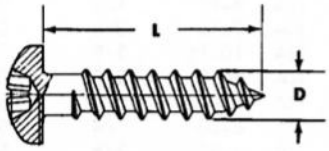

Part No.	S	D	L	M	F
G161753	NA	4-24	1/4	ST	CHR
G161756	NA	4-24	3/8	ST	CHR
G161790	NA	6-18	3/8	ST	CAD
G161791	NA	6-18	3/8	ST	CHR

Part No.	S	D	L	M	F
G161798	NA	6-18	1/2	ST	CAD
G161801	NA	6-18	5/8	ST	CAD
G161815	NA	6-18	1	ST	CAD
G161817	NA	7-16	3/8	ST	PLA
G161818	NA	7-16	3/8	ST	CAD
G161857	NA	8-15	3/8	ST	CAD
G161859	NA	8-15	3/8	ST	CHR
G161860	SS	8-15	1/2	ST	CAD
G161869	SS	8-15	5/8	ST	CAD
G161871	SS	8-15	3/4	ST	CAD
G161872	NA	8-15	3/4	ST	CHR
G161874	NA	8-15	7/8	ST	CAD
G161875	SS	8-15	7/8	ST	CHR
G161878	SS	8-15	1	ST	CAD
G161881	NA	8-15	1-1/4	ST	CAD
G161890	NA	10-12	3/8	ST	PLA
G161892	NA	10-12	3/8	ST	CAD
G161894	NA	10-12	1/2	ST	PLA
G161895	SS	10-12	1/2	ST	CAD
G161897	NA	10-12	1/2	ST	CHR
G161900	NA	10-12	5/8	ST	PLA
G161901	SS	10-12	5/8	ST	CAD
G161902	SS	10-12	5/8	ST	CHR
G161903	SS	10-12	3/4	ST	CAD
G161904	SS	10-12	3/4	ST	CHR
G161906	NA	10-12	7/8	ST	CAD
G161907	NA	10-12	7/8	ST	CAD
G161909	NA	10-12	1	ST	CAD
G161930	SS	10-12	1-1/4	ST	CAD
G161933	NA	10-12	1-1/2	ST	CAD
G161942	NA	10-12	1-3/4	ST	CAD
G162003	NA	12-11	1/2	ST	CAD
G162006	NA	12-11	5/8	ST	CAD
G162009	NA	12-11	3/4	ST	CAD
G162013	NA	12-11	7/8	ST	CAD
G162017	SS	12-11	1	ST	CAD
G162022	NA	12-11	1-1/4	ST	CAD
G162033	NA	12-11	1-1/2	ST	CAD
G162074	NA	14-10	5/8	ST	CAD
G162090	NA	14-10	1-1/4	ST	CAD
G162093	NA	14-10	1-1/2	ST	CAD
G162110	NA	14-10	1-3/4	ST	CAD
G162113	NA	14-10	2	ST	CAD
G179061	NA	8-15	1/2	ST	PHO
G186469	NA	10-12	1/2	ST	PHO
G186758	NA	8-18	1/4	ST	CAD
G187047	NA	8-15	2-1/2	ST	CAD
G217181	NA	6-18	1-1/4	ST	CAD
G274921	NA	10-12	5/8	SL	PLA
G443946	NA	10-12	3/4	ST	PHO
G451809	NA	10-12	5/8	ST	PHO
G457030	NA	8-15	7/16	ST	CHR
G9411532	NA	8-18	3/8	ST	CAD
G9411535	NA	10-16	3/8	ST	CAD
320 9582	SS	8-18	3/8	ST	CAD
320 9584	NA	10-16	3/8	ST	CAD
400 3105	SS	12-11	1-1/2	ST	PHO
812 0060	NA	12-14	1	ST	ZIN

SCREW, Pan Hd. Cross Recess Tapping - Type "AB"

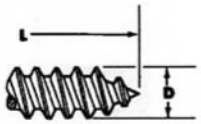

Part No.	S	D	L	M	F
G9414711	NA	8-18	3/8	ST	CAD
G9414713	NA	8-18	5/8	ST	ZIN
G9414721	NA	10-16	3/8	ST	ZIN
G9414722	NA	10-16	1/2	ST	ZIN
G9414723	NA	10-16	5/8	ST	CAD
G9414726	NA	10-16	1	ST	ZIN
G9414727	NA	10-16	1-1/4	ST	ZIN
G9414728	NA	10-16	1-1/2	ST	ZIN
G9417276	NA	6-20	1/2	ST	CAD
G9421151	NA	10-16	3/4	ST	PHO
G9420721	NA	8-18	3/4	ST	PHO
G9425940	NA	10-16	2-1/4	ST	CAD
448 8612	SS	8-18	7/8	ST	CHR
448 9487	SS	8-18	1/2	ST	ZIN
448 9490	SS	8-18	3/4	ST	CAD
448 9493	SS	8-18	7/8	ST	CHR
812 0052	SS	10-16	1/2	ST	ZIN
812 0055	SS	10-16	5/8	ST	ZIN
812 0056	SS	10-16	3/4	ST	ZIN
812 0059	NA	10-16	1-1/4	ST	ZIN
812 0615	SS	10-16	1	ST	ZIN
812 0616	NA	10-16	1-1/2	ST	ZIN
812 0617	NA	10-16	3/4	ST	PHO
812 2118	SS	8-18	3/4	ST	PHO
812 2121	SS	8-18	1	ST	PLA

SCREW, Pan Hd. Cross Recess Tapping - Type "B"

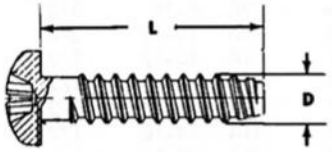

Part No.	S	D	L	M	F
G163095	NA	6-20	1/4	ST	CAD
G163098	NA	6-20	3/8	ST	CAD
G163102	NA	6-20	1/2	ST	CAD
G163107	NA	6-20	3/4	ST	PLA
G163158	NA	8-18	3/8	ST	CAD
G163161	NA	8-18	1/2	ST	PLA
G163162	NA	8-18	1/2	ST	CAD
G163177	NA	8-18	5/8	ST	CAD
G163214	NA	10-16	1/2	ST	PLA
G163216	NA	10-16	1/2	ST	CAD
G163219	NA	10-16	5/8	ST	CAD
G163227	NA	10-16	3/4	ST	PLA
G163228	NA	10-16	3/4	ST	CAD
G163239	NA	10-16	1-1/4	ST	CAD
G163303	NA	1/4-14	1/2	ST	CAD
G163309	NA	1/4-14	5/8	ST	CAD
G186509	NA	8-18	1/4	ST	CAD
G190066	NA	6-20	7/16	ST	CAD
G190075	NA	6-20	5/16	ST	CAD
G190095	NA	6-20	5/16	ST	CAD
G9415627	NA	8-18	1/2	ST	PHO
G9422919	NA	12-14	3/8	ST	ZIN
320 9578	SS	6-20	1/2	ST	CAD
448 6657	NA	8-18	5/16	ST	CAD

SCREW, Pan Hd. Cross Recess Tapping - Type "BF"

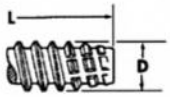

Part No.	S	D	L	M	F
G9422716	NA	6-20	1/2	ST	CAD
320 9579	NA	8-18	1/2	ST	CAD

SCREW, Pan Hd. Cross Recess Tapping - Type "C"

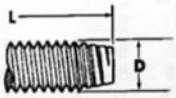

Part No.	S	D	L	M	F
G164321	NA	6-32	3/8	ST	CAD
G164354	NA	8-32	3/8	ST	CAD
G164487	SS	12-24	3/8	ST	CAD

SCREW, Pan Hd. Cross Recess Tapping - Type "D"

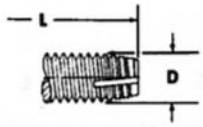

Part No.	S	D	L	M	F
G166985	NA	6-32	1/4	ST	CAD
G166991	NA	6-32	3/8	ST	CAD
G167024	NA	8-32	1/4	ST	CAD
G167038	NA	8-32	3/8	ST	CAD

Part No.	S	D	L	M	F
G167050	NA	8-32	5/8	ST	CAD
G167071	NA	10-24	1/4	ST	CHR
G167077	NA	10-24	3/8	ST	CAD
G167084	NA	10-24	1/2	ST	CAD
G167106	NA	10-24	3/4	ST	CAD
G167156	NA	10-32	3/8	ST	CAD
G167159	SS	10-32	7/16	ST	CAD
G167170	NA	10-32	5/8	ST	CAD
G177271	NA	6-32	1-1/4	ST	CAD
G274677	NA	12-11	1-5/8	ST	CAD
G9405886	NA	4-40	1/4	ST	CAD
G9417816	NA	6-32	7/8	ST	CHR
320 9574	SS	6-32	7/8	ST	CHR

SCREW, Pan Hd. Cross Recess Tapping - Type "F"

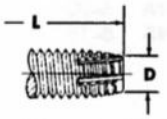

Part No.	S	D	L	M	F
G449601	NA	6-32	1/4	ST	CAD
G449611	NA	8-32	3/8	ST	CAD
G449613	SS	8-32	1/2	ST	CAD
G449615	SS	8-32	5/8	ST	CAD
G449623	NA	10-24	1/2	ST	CAD
G449627	NA	10-24	3/4	ST	CAD
G9405916	NA	6-32	7/16	ST	CAD

SCREW, Pan Hd. Cross Recess Tapping - Type "G"

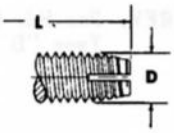

Part No.	S	D	L	M	F
G449721	NA	10-24	3/8	ST	CAD
G449779	NA	5/16-24	1	ST	CAD
G9406122	NA	10-24	7/16	ST	CAD

SCREW, Pan Hd. Cross Recess Tapping - Type "T"

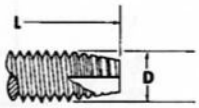

Part No.	S	D	L	M	F
G9414224	NA	8-32	5/8	ST	CAD
G9415952	NA	8-32	3/8	ST	CAD
G9416323	NA	8-32	7/16	ST	CAD
G9417323	NA	6-32	1/2	ST	CAD
G9428487	NA	4-24	1/4	ST	ZIN
448 5706	SS	8-32	5/8	ST	CAD
448 8318	SS	8-32	3/4	ST	CAD

17.664 **SCREW, Round Hd. Slotted Tapping - Type "A"**

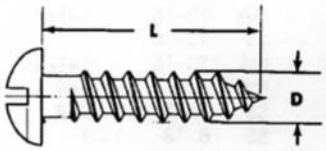

Part No.	S	D	L	M	F
G111684	NA	8-15	3/8	ST	CAD
G119368	NA	10-12	3/4	ST	CAD
G125591	NA	10-12	1/2	ST	CAD
G127853	NA	6-12	1/2	ST	CAD
G144727	NA	12-11	1/2	ST	CAD
G144728	NA	14-10	1/2	ST	CAD
G144757	NA	10-12	1	ST	CAD
G144759	NA	14-10	1	ST	CAD
G441077	NA	10-12	1-3/4	ST	PHO

SCREW, Round Hd. Slotted Tapping - Type "B"

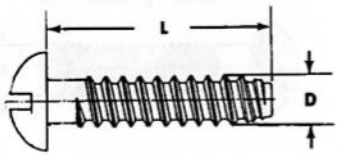

Part No.	S	D	L	M	F
G107394	NA	1/4-14	3/8	ST	PLA
G109425	NA	6-20	3/16	ST	CAD
G115137	NA	6-20	3/8	ST	CAD
G142645	NA	6-20	1/2	ST	CAD
G143152	NA	10-16	1/2	ST	CAD
G145131	NA	1/4-14	1/2	ST	CAD
G145161	NA	1/4-14	1-1/4	ST	PLA
G145167	NA	8-18	1-1/2	ST	CAD

SCREW, Round Hd. Slotted Tapping - Type "C"

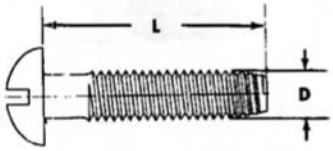

Part No.	S	D	L	M	F
G169513	NA	10-32	1/2	ST	CAD

SCREW, Round Hd. Slotted Tapping - Type "D"

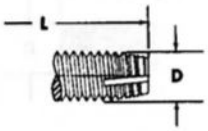

Part No.	S	D	L	M	F
G171354	NA	8-32	1/2	ST	CAD
G171587	NA	12-24	3/8	ST	CAD
G177036	NA	6-32	1-1/2	ST	CAD
G179259	NA	6-32	5/16	ST	CAD

SCREW, Round Hd. Slotted Tapping - Type "F"

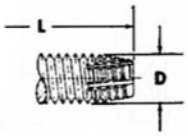

Part No.	S	D	L	M	F
G448112	NA	8-32	1/2	ST	CAD

SCREW, Round Hd. Slotted Tapping - Type "G"

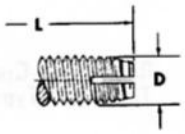

Part No.	S	D	L	M	F
G448226	NA	10-24	3/4	ST	PLA

17.666

SCREW, Round Hd. Cross Recess Tapping - Type "A"

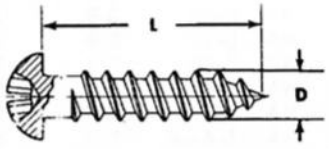

Part No.	S	D	L	M	F
G161554	NA	4-24	1/4	ST	PLA
G161592	NA	6-18	1/2	ST	CHR
G161599	NA	6-18	3/4	ST	CAD
G161606	NA	6-18	1	ST	CAD
G161608	NA	7-16	3/8	ST	PLA
G161627	NA	8-18	3/8	ST	CAD

Part No.	S	D	L	M	F
G161629	SS	8-15	1/2	ST	CAD
G161631	NA	8-15	5/8	ST	CAD
G161633	NA	8-15	3/4	ST	CAD
G161643	NA	10-12	3/8	ST	CAD
G161645	NA	10-12	1/2	ST	CAD
G161646	NA	10-12	1/2	ST	CHR
G161648	NA	10-12	5/8	ST	CAD
G161651	NA	10-12	3/4	ST	CAD
G161657	NA	10-12	1	ST	CAD
G161667	NA	10-12	1-3/4	ST	CAD
G161670	NA	10-12	2	ST	CAD
G161673	NA	12-11	1/2	ST	CAD
G161684	NA	12-11	1	ST	CAD
G161711	NA	14-10	5/8	ST	CAD
G161739	NA	14-10	1-1/2	ST	CAD
G166620	SS	8-32	3/4	ST	CAD
G445626	NA	10-12	3/4	ST	PHO
G447124	SS	14-10	2-7/16	ST	CAD
G449913	NA	8-32	1/2	ST	CAD
G450614	NA	14-10	2-1/4	ST	CAD
G455699	NA	14-10	2-1/8	ST	CAD
G455974	NA	10-12	1-3/4	ST	PHO
G9425888	NA	14-10	2-7/16	ST	CAD
448 9488	NA	8-18	1/2	ST	ZIN

SCREW, Round Hd. Cross Recess Tapping - Type "B"

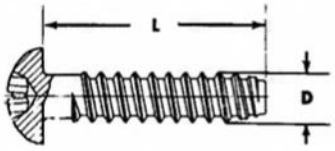

Part No.	S	D	L	M	F
G162785	NA	4-24	1/4	ST	CAD
G162819	NA	6-20	3/8	ST	CAD
G162872	NA	8-18	3/8	ST	CAD
G162877	NA	8-18	5/8	ST	CAD
G162883	NA	8-18	3/4	ST	CAD
G162892	NA	8-18	1	ST	CHR
G162900	NA	10-16	3/8	ST	CAD
G162996	NA	1/4-14	3/4	ST	CAD
G443709	NA	8-18	5/16	ST	CAD
800 0116	NA	8-18	3/16	ST	CAD

SCREW, Round Hd. Cross Recess Tapping - Type "C"

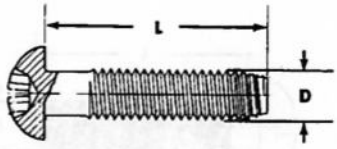

Part No.	S	D	L	M	F
G163985	NA	6-32	5/16	ST	CAD
G163988	NA	6-32	3/8	ST	CAD
G164039	NA	10-24	1/4	ST	CAD
G164045	NA	10-24	3/8	ST	CAD
G164048	NA	10-24	7/16	ST	CAD
G164051	NA	10-24	1/2	ST	CAD

SCREW, Round Hd. Cross Recess Tapping - Type "D"

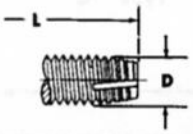

Part No.	S	D	L	M	F
G166649	NA	10-24	1/2	ST	CHR
G166652	NA	10-24	5/8	ST	CHR
G166723	NA	10-32	3/4	ST	CAD

SCREW, Round Hd. Cross Recess Tapping - Type "F"

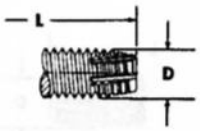

Part No.	S	D	L	M	F
G449913	NA	8-32	1/2	ST	CAD
G9406220	NA	8-32	5/16	ST	CAD
G9406242	NA	10-32	5/16	ST	CAD

SCREW, Round Hd. Cross Recess Tapping - Type "G"

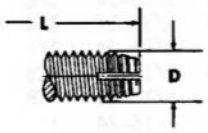

Part No.	S	D	L	M	F
G450013	NA	8-32	1/2	ST	CAD
G9406422	NA	10-32	5/16	ST	CAD

17.669 SCREW, Truss Hd. Cross Recess Tapping - Type "A"

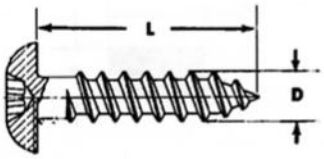

Part No.	S	D	L	M	F
G445947	NA	10-12	7/16	ST	CAD
G455508	NA	6-18	3/8	ST	CHR
G455524	NA	10-12	1/2	ST	CAD
G455525	NA	6-20	1/4	ST	CHR
G457002	NA	8-18	3/8	ST	CAD
G9415551	NA	8-18	3/8	ST	CAD
G9426970	NA	6-20	3/8	ST	CAD
400 1264	NA	8-15	3/8	ST	CAD
400 1267	NA	8-15	5/8	ST	CAD
400 1270	NA	10-12	3/8	ST	CAD
448 9283	SS	10-16	1/2	ST	CHR
800 0272	NA	8-15	3/8	ST	CAD
800 0274	NA	8-15	5/8	ST	CAD
800 0276	SS	8-15	1/4	ST	CAD
800 0305	NA	10-12	3/8	ST	CAD
800 0458	NA	8-15	3/8	ST	PAR

SCREW, Truss Hd. Cross Recess Tapping - Type "B"

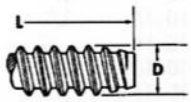

Part No.	S	D	L	M	F
G9417487	NA	8-18	7/16	ST	CAD

17.670 SCREW, Hex. Hd. Tapping - Type "A"

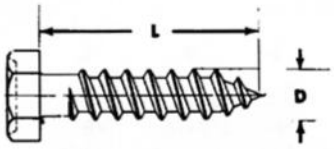

Part No.	S	D	L	M	F
G149501	NA	14-10	5/8	ST	CAD
G178781	NA	10-16	3/8	ST	CAD
G189119	NA	12-11	1/2	ST	CAD
G189694	NA	14-14	1/2	ST	CAD
G216322	NA	14-10	1-1/8	ST	CAD
G273420	SS	20-9	1-1/2	ST	CAD
G274725	NA	8-15	7/8	ST	CAD
G443882	NA	8-18	3/8	ST	CAD
G443923	NA	14-10	7/8	ST	CAD
G444267	NA	10-12	1/2	ST	CAD
G451625	NA	10-12	5/8	ST	CAD
G451808	NA	12-11	3/4	ST	CAD
G455404	NA	10-16	1/4	ST	CAD
G9426747	NA	6-20	3/8	ST	CAD
800 0120	SS	12-11	1-1/4	ST	PHO
800 0122	SS	12-11	5/8	ST	CAD
800 0124	SS	10-12	1	ST	CAD
800 0297	SS	14-10	3/8	ST	CAD

SCREW, Hex. Hd. Tapping - Type "B"

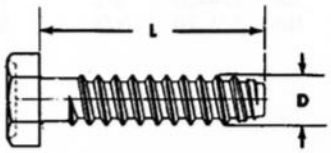

Part No.	S	D	L	M	F
G111640	NA	1/4-14	3/4	ST	PLA
G111655	NA	1/4-14	3/4	ST	CAD
G145350	NA	1/4-14	1	ST	CAD

Part No.	S	D	L	M	F
G145415	NA	12-14	1/2	ST	CAD
G148077	NA	5/16-12	5/8	ST	PLA
G178434	NA	1/4-14	1/2	ST	CAD
G179370	NA	12-14	3/4	ST	CAD
G271137	NA	10-16	3/8	ST	CAD
G445656	NA	10-16	1/2	ST	CAD
G455451	NA	10-16	7/8	ST	CAD
800 0108	NA	10-16	5/8	ST	PLA

SCREW, Hex. Hd. Tapping - Type "C"

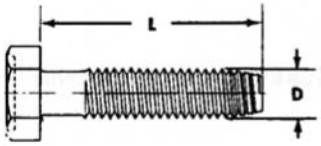

Part No.	S	D	L	M	F
G170986	NA	8-32	1/4	ST	CAD
G171121	NA	3/8-16	5/8	ST	CAD
G176011	NA	5/16-24	1-1/2	ST	CAD

SCREW, Hex. Hd. Tapping - Type "D"

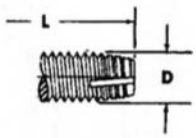

Part No.	S	D	L	M	F
G172300	NA	8-32	1/2	ST	CAD
G172327	NA	10-24	5/8	ST	CAD
G172336	NA	10-32	3/8	ST	PLA
G172378	NA	10-32	1/2	ST	CAD
G172383	NA	10-32	3/4	ST	CAD
G172401	NA	12-24	3/8	ST	CAD
G172425	NA	1/4-20	3/8	ST	CAD
G172427	NA	1/4-20	1/2	ST	CAD
G172429	NA	1/4-20	5/8	ST	CAD
G172431	NA	1/4-20	3/4	ST	CAD

Part No.	S	D	L	M	F
G172433	NA	1/4-20	7/8	ST	CAD
G172435	NA	1/4-20	1	ST	CAD
G172441	NA	1/4-28	5/8	ST	CAD
G172468	NA	5/16-24	5/8	ST	CAD
G172469	NA	5/16-24	3/4	ST	PLA
G172470	NA	5/16-24	3/4	ST	CAD
G172472	NA	5/16-24	7/8	ST	PLA
G172473	NA	5/16-24	7/8	ST	CAD
G172475	NA	5/16-24	1	ST	CAD
G175977	NA	1/4-20	1-1/2	ST	CAD
G175997	NA	5/16-18	1-1/4	ST	CAD
G176008	NA	5/16-24	1-1/4	ST	CAD
G271088	NA	5/16-18	3/8	ST	CAD
G448631	NA	10-24	1	ST	CAD
G451824	NA	10-24	7/16	ST	CAD
G9404738	NA	10-24	7/16	ST	CAD
400 1445	SS	10-24	9/16	ST	ZIN
448 7144	SS	5/16-12	7/8	ST	CAD

SCREW, Hex. Hd. Tapping - Type "F"

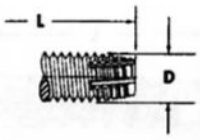

Part No.	S	D	L	M	F
G448423	SS	10-24	1/2	ST	CAD
G448433	NA	10-32	3/8	ST	CAD
G448625	NA	10-24	5/8	ST	CAD
G448627	NA	10-24	3/4	ST	CAD

SCREW, Hex. Hd. Tapping - Type "G"

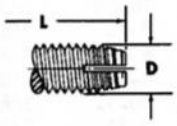

Part No.	S	D	L	M	F
G448549	NA	1/4-20	3/4	ST	CAD

17.671 SCREW, Hex. Washer Hd. Tapping - Type "A"

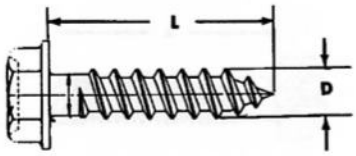

Part No.	S	D	L	M	F
G274773	SS	10-12	1/2	ST	CAD
G455702	NA	14-10	3/4	ST	CAD
G456766	SS	10-12	5/8	ST	CAD
G456794	SS	8-15	1/2	ST	CAD
G9411429	NA	8-15	5/8	ST	CAD
G9411541	NA	14-10	1	ST	CAD
G9411563	SS	14-10	5/8	ST	CAD
G9414012	NA	14-14	1/2	ST	CAD
G9414051	NA	12-11	1/2	ST	CAD
G9414261	NA	8-15	3/8	ST	CAD
320 9537	SS	12-11	5/8	ST	CAD
G9419321	NA	10-16	5/8	ST	PHO
320 9585	NA	8-15	3/8	ST	CAD
400 0479	SS	10-12	1-1/4	ST	CAD
400 0774	SS	10-16	3/4	ST	CAD
400 1031	SS	10-12	3/8	ST	CAD
448 5889	SS	8-15	5/8	ST	CAD
448 7144	SS	5/16-12	7/8	ST	CAD
448 8032	SS	14-10	1-1/4	ST	CAD
800 0091	SS	10-12	3/8	ST	CAD
800 0093	NA	10-12	1/2	ST	CAD
800 0095	SS	10-12	5/8	ST	CAD
800 0097	SS	10-12	3/4	ST	CAD
800 0098	NA	10-12	1-1/4	ST	PLA
800 0099	SS	10-12	1-1/4	ST	CAD
800 0103	SS	14-10	5/8	ST	CAD
800 0105	SS	12-11	1/2	ST	CAD
800 0107	SS	8-15	3/8	ST	CAD
800 0301	SS	8-15	5/8	ST	CAD
800 0472	NA	10-12	1/2	ST	PHO

SCREW, Hex. Washer Hd. Tapping - Type "AB"

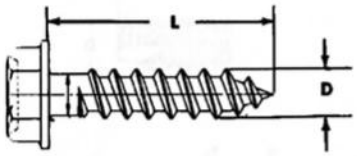

Part No.	S	D	L	M	F
G9419699	NA	8-18	3/8	ST	PHO
G9423829	NA	1/4-14	3/4	ST	ZIN
G9426241	NA	1/4-14	1/2	ST	ZIN
448 9486	SS	8-18	1/2	ST	ZIN
812 0054	SS	10-16	1/2	ST	ZIN
812 0127	SS	10-16	7/16	ST	PHO

SCREW, Hex. Washer Hd. Tapping - Type "B"

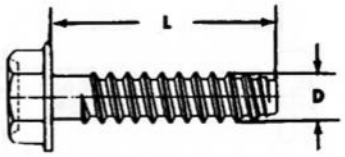

Part No.	S	D	L	M	F
G177999	NA	1/4-14	1/2	ST	CAD
G187303	NA	10-16	1/2	ST	CAD
G187822	NA	10-16	1	ST	CAD
G189117	NA	1/4-14	1	ST	CAD
G189361	NA	10-16	5/8	ST	CAD
G274626	NA	8-18	5/8	ST	PLA
G443794	NA	10-16	3/4	ST	CAD
G451790	NA	10-16	3/8	ST	CAD
G451831	NA	8-18	3/8	ST	ZIN
G9414263	NA	8-18	3/4	ST	CAD
G9415538	NA	4-24	3/16	ST	CAD
G9426711	NA	1/4-14	1-3/4	ST	PHO
400 1064	SS	14-14	1/2	ST	CAD
800 0127	SS	14-14	1/2	ST	CAD
800 0129	SS	14-14	5/8	ST	CAD
800 0473	NA	12-14	5/8	ST	PHO
812 2126	SS	10-16	1/4	ST	PLA

SCREW, Hex. Washer Hd. Tapping - Type "C"

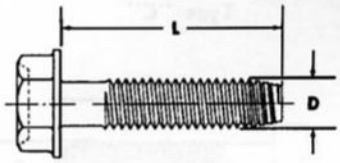

Part No.	S	D	L	M	F
G453113	NA	10-24	3/8	ST	CAD

SCREW, Hex. Washer Hd. Tapping - Type "D"

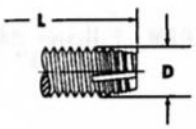

Part No.	S	D	L	M	F
G271444	NA	5/16-18	5/8	ST	CAD
G273243	NA	1/4-20	3/4	ST	CAD
G274105	NA	10-24	3/8	ST	CAD
G442751	SS	5/16-18	3/4	ST	CAD
G451658	NA	10-24	7/16	ST	CAD
G455380	SS	10-24	1/2	ST	CAD
G456322	SS	1/4-20	5/8	ST	CAD
G456865	NA	10-24	5/16	ST	CAD
G9424757	NA	5/16-18	1-1/4	ST	CAD
G9425173	NA	5/16-18	1	ST	ZIN

17.672 SCREW, Hex. Hd. Slotted Tapping - Type "A"

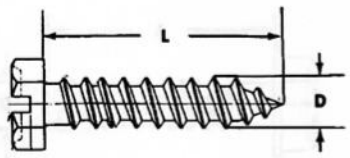

Part No.	S	D	L	M	F
G443836	NA	8-15	5/8	ST	CAD
G9411526	NA	12-14	3/8	ST	CAD

17.673 SCREW, Hex. Washer Hd. Slotted Tapping

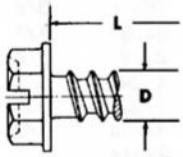

Part No.	S	D	L	M	F
G273624	SS	10-16	3/8	ST	CAD

17.678 SCREW, Fillister Hd. Slotted Tapping - Type "C"

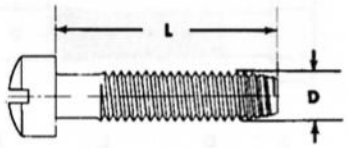

Part No.	S	D	L	M	F
G170466	NA	8-32	3/8	ST	CAD
G170564	NA	10-32	3/4	ST	CAD

SCREW, Fillister Hd. Slotted Tapping - Type "D"

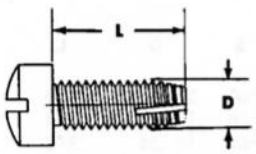

Part No.	S	D	L	M	F
G172111	NA	6-32	3/8	ST	CAD
G172125	NA	6-32	3/4	ST	CAD
G9405022	NA	8-32	7/16	ST	CAD

17.680 SCREW, Fillister Hd. Cross Recess Tapping - Type "C"

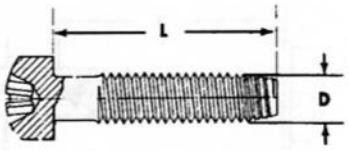

Part No.	S	D	L	M	F
G165308	NA	6-32	5/16	ST	CAD
G165523	NA	1/4-20	3/4	ST	CHR
G9415540	NA	8-15	3/4	ST	CHR

SCREW, Fillister Hd. Cross Recess Tapping - Type "D"

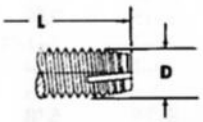

Part No.	S	D	L	M	F
G167865	NA	8-32	3/8	ST	CAD
G167866	NA	8-32	3/8	ST	CHR
G168005	NA	1/4-20	3/4	ST	CAD
G168006	NA	1/4-20	3/4	ST	CHR
G168009	NA	1/4-20	7/8	ST	CHR
G450403	NA	6-32	3/8	ST	CAD
G9406672	NA	6-32	7/16	ST	CAD
320 7023	SS	6-32	7/16	ST	CAD

SCREW, Fillister Hd. Cross Recess Tapping - Type "T"

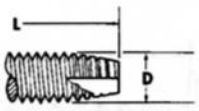

Part No.	S	D	L	M	F
448 8307	SS	6-32	5/16	ST	CAD

17.684 SCREW, Flat Hd. Slotted Wood

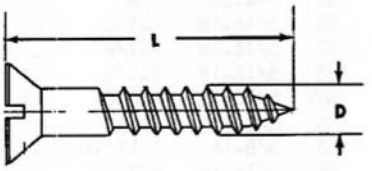

Part No.	S	D	L	M	F
G101932	NA	10-13	1	ST	PLA
G129347	NA	8-15	5/8	ST	CAD

17.686 SCREW, Flat Hd. Cross Recess Wood

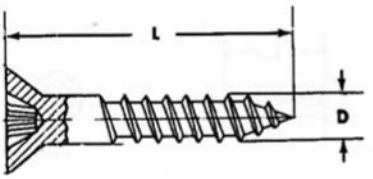

Part No.	S	D	L	M	F
G149002	NA	10-13	1-1/2	ST	CHR
G149012	NA	10-13	2	ST	CHR
G156258	NA	1/4-20	7/8	ST	CHR

17.690 SCREW, Oval Hd. Cross Recess Wood

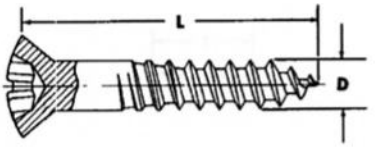

Part No.	S	D	L	M	F
G151966	NA	8-15	7/8	ST	CAD

17.692 SCREW, Round Hd. Slotted Wood

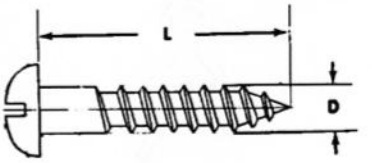

Part No.	S	D	L	M	F
G101984	NA	8-15	5/8	ST	PLA
G130434	NA	14-10	1-1/4	ST	CAD

17.696 SCREW, Round Hd. Blunt Point Metal Drive

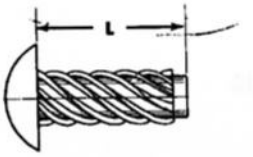

Part No.	S	#	L	M	F
G111030	NA	8	3/8	ST	PLA
G119832	NA	6	3/8	ST	BRA
G135504	NA	10	1/2	ST	PLA
G145366	NA	2	3/16	ST	PLA
G145368	NA	2	3/16	ST	CAD
G145372	NA	4	1/4	ST	CAD
G145373	NA	6	1/4	ST	CAD
G145376	NA	7	5/16	ST	PLA
G145377	NA	4	5/16	ST	CAD
G220295	NA	0	1/4	ST	NIC

17.702 SCREW, Projection Weld - Type "AA"

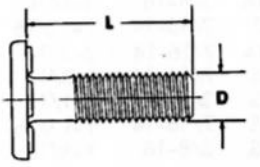

Part No.	S	D	L	M	F
G9414605	NA	8-32	1/4	ST	PLA
G9414623	NA	10-32	1/2	ST	PLA
G9414637	NA	1/4-20	1	ST	PLA
G9414660	NA	3/8-16	1	ST	PLA
G9414669	NA	3/8-24	7/8	ST	PLA

17.710 SPRING, Retainer

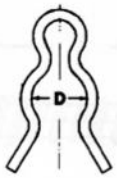

Part No.	S	D	M	F
G148145	SS	1/16	ST	PLA
G148147	SS	5/32	ST	PLA
G148148	SS	7/32	ST	PLA
G148149	SS	9/32	ST	PLA
G149505	SS	5/32	ST	CAD
G455560	SS	3/64	ST	CAD
G455562	SS	3/32	ST	CAD
G455563	SS	9/32	ST	CAD
G455565	SS	13/32	ST	CAD

17.718 STUD

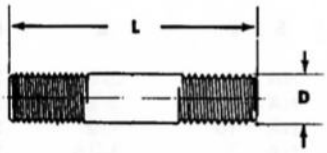

Part No.	S	D	L	M	F
G103155	NA	1/4-20	1-5/8	ST	PLA
G103175	SS	5/16-18	1-1/2	ST	PLA
G103176	NA	5/16-18	1-3/4	ST	PLA
G103180	SS	5/16-18	2-3/4	ST	PLA
G103193	NA	3/8-16	1-3/16	ST	PLA
G103194	NA	3/8-16	1-5/16	ST	PLA
G103195	SS	3/8-16	1-7/16	ST	PLA
G103196	SS	3/8-16	1-9/16	ST	PLA
G103197	NA	3/8-16	1-13/16	ST	PLA
G103199	NA	3/8-16	2-5/16	ST	PLA
G103202	NA	3/8-16	3-1/16	ST	PLA
G103217	SS	7/16-14	1-11/16	ST	PLA
G103219	NA	7/16-14	2-3/16	ST	PLA
G103223	SS	7/16-14	3-3/16	ST	PLA
G107290	SS	3/8-16	2-1/16	ST	CAD
G109426	SS	7/16-14	1-13/16	ST	CAD
G113237	SS	3/8-16	1-5/16	ST	CAD
G113240	NA	5/16-18	1-1/8	ST	CAD
G113247	NA	3/8-16	1-7/16	ST	CAD
G144532	SS	1/4-20	7/8	ST	CAD
G148062	SS	5/16-18	1-1/2	ST	CAD
G148090	SS	5/16-18	1-7/8	ST	CAD
G186895	SS	5/16-18	2-1/8	ST	CAD
G191991	NA	5/16-18	1-5/8	ST	CAD
G191992	SS	3/8-16	1-15/16	ST	CAD
G192426	SS	3/8-16	1-13/16	ST	CAD
G272962	SS	5/16-18	1-3/8	ST	CAD
G273369	NA	3/8-18	5-1/2	ST	PLA
G441975	SS	7/16-14	2-1/2	ST	PLA
G447176	SS	3/8-16	3	ST	CAD
G456025	SS	5/16-18	1-5/16	ST	CAD
320 9581	SS	7/16-14	1-3/4	ST	PLA

17.720 STUD, Groove Drive

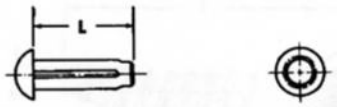

Part No.	S	#	L	M	F
G443080	NA	0	3/16	ST	DUL
G443094	SS	8	3/8	ST	DUL

17.732 TACK, Lace

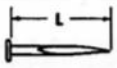

Part No.	S	#	L	M	F
G104897	NA	6	9/16	ST	BLE

Printed in U.S.A.

17.734 TACK, Trimmers

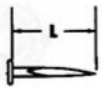

Part No.	S	#	L	M	F
G118422	NA	2	1/4	ST	BLU

17.754 TEE, Inverted Flared Tube Two Way

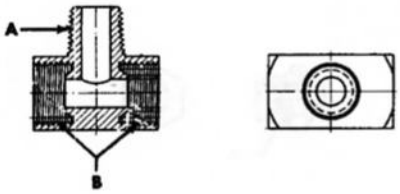

Part No.	S	T	A	B	M	F
G143481	SS	3/16	1/8-27	3/8-24	BR	PLA
G143482	SS	1/4	1/8-27	7/16-24	BR	PLA
G143483	SS	5/16	1/8-27	1/2-20	BR	PLA

17.756 TEE, Inverted Flared Tube Three Way

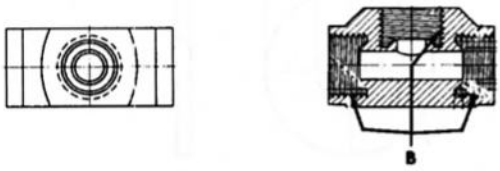

Part No.	S	T	B	M	F
G173182	NA	5/16	1/2-20	BR	PLA
G178654	SS	3/16	3/8-24	BR	PLA

17.758 TEE, Inverted Flared Tube Internal Pipe Thread Two Way

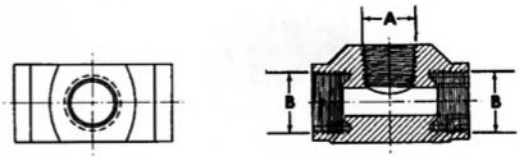

Part No.	S	T	A	B	M	F
G178910	NA	1/4	1/8-27	7/16-24	BR	PLA

17.760 TEE, Inverted Flared Tube Right Angle Two Way

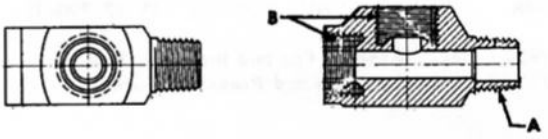

Part No.	S	T	A	B	M	F
G173203	NA	5/16	1/8-27	1/2-20	BR	PLA
G178685	NA	1/4	1/8-27	7/16-24	BR	PLA

17.782 TERMINAL, Electric Wire - Type "B"

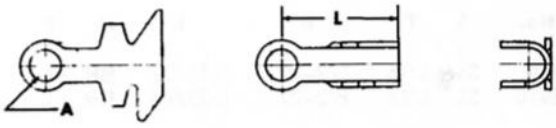

Part No.	S	W	A	L	M	F
G200316	NA	10-12	11/32	1	BR	TIN

17.790 THREAD INSERT (Heli-Coil)

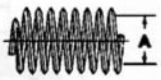

Part No.	S	A	M	F
320 3789	SS	5/16-18	SL	PLA
320 3790	SS	3/8-16	SL	PLA
320 3791	SS	7/16-14	SL	PLA
320 3792	SS	1/2-13	SL	PLA

ASSORTMENTS

320 2964	EZY-KIT (Incl. 320 2965 thru 320 2969)	
320 2969	TOOL PACK	(* 17.790-2)
320 2965	EZY-PACK "E" (5/16-18)	(* 17.790-1)
320 2966	EZY-PACK "F" (3/8-16)	(* 17.790-1)
320 2967	EZY-PACK "G" (7/16-14)	(* 17.790-1)
320 2968	EZY-PACK "H" (1/2-13)	(* 17.790-1)

*** 17.790-1 (Incl. Inserts, Tap and Inserting Tool.)**
*** 17.790-2 (Incl. T-Handle and Pressure Plate.)**

17.792 UNION, Flared Tube



Part No.	S	T	B	L	M	F
G118801	SS	5/16	1/2-20	1-11/32	BR	PLA
448 8910	SS	5/16	1/2-20	1-27/64	BR	PLA

17.796 UNION, Inverted Flared Tube

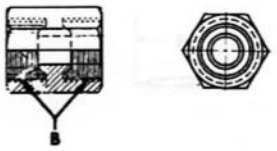

Part No.	S	T	B	M	F
G137414	SS	5/16	1/2-20	BR	PLA

17.810 VALVE, Relief

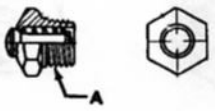

Part No.	S	C	A	M	F
G443590	NA	400-650 lbs.	1/8-27	ST	PLA

17.814 WASHER, Plain

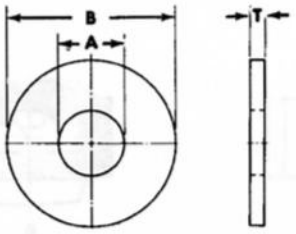

Part No.	S	A	B	T	M	F
G103338	NA	7/32	1/2	1/16	ST	PLA
G103339	NA	9/32	5/8	1/16	ST	PLA
G103340	NA	11/32	11/16	1/16	ST	PLA
G103341	NA	13/32	13/16	1/16	ST	PLA
G103342	NA	15/32	59/64	1/16	ST	PLA
G103343	NA	17/32	1-1/16	3/32	ST	PLA

STANDARD PARTS

Part No.	S	A	B	T	M	F
G116104	SS	15/32	59/64	1/16	CO	PLA
G118664	NA	5/16	3/4	1/16	ST	PHO
G118674	NA	5/32	3/8	3/64	ST	PHO
G118773	NA	9/32	5/8	1/16	ST	PHO
G118775	NA	13/32	13/16	1/16	ST	PHO
G120386	NA	5/16	3/4	1/16	ST	CAD
G120388	NA	7/16	1	5/64	ST	CAD
G120391	NA	7/32	1/2	3/64	ST	CAD
G120392	NA	9/32	5/8	1/16	ST	CAD
G120393	NA	11/32	11/16	1/16	ST	CAD
G120394	NA	13/32	13/16	1/16	ST	CAD
G120395	NA	15/32	59/64	1/16	ST	CAD
G120396	NA	17/32	1-1/16	3/32	ST	CAD
G131014	NA	5/32	3/8	3/64	ST	CAD
G131015	NA	3/16	7/16	3/64	ST	CAD
G131016	NA	21/32	1-5/16	3/32	ST	CAD
G147579	NA	1/4	9/16	5/64	ST	CAD
G274517	NA	13/32	1-1/8	1/16	ST	CAD
G446129	NA	11/64	13/32	3/64	ST	PLA
G446130	NA	11/64	13/32	3/64	ST	CAD
G446142	NA	3/16	3/8	3/64	ST	PLA
G446143	NA	3/16	3/8	1/16	ST	CAD
G446152	NA	13/64	15/32	3/64	ST	CAD
G446161	NA	7/32	7/16	3/64	ST	CAD
G446165	NA	7/32	7/16	3/64	BR	PLA
G446170	NA	15/64	17/32	3/64	ST	CAD
G446178	NA	1/4	1/2	3/64	ST	PLA
G446179	NA	1/4	1/2	3/64	ST	CAD
G446180	NA	1/4	1/2	3/64	ST	PHO
G446188	NA	17/64	5/8	3/64	ST	CAD
G446189	NA	17/64	5/8	3/64	ST	PHO
G446195	NA	17/64	5/8	3/64	CO	PLA
G446212	NA	7/16	7/8	5/64	ST	CAD
G446354	NA	5/16	7/8	1/16	ST	CAD
G446363	NA	3/8	7/8	5/64	ST	CAD
G446548	NA	3/8	3/4	1/16	ST	CAD
G9414106	NA	13/64	15/32	3/64	ST	CAD
G9414321	NA	11/32	5/8	1/16	ST	PLA
G9414401	NA	13/64	27/64	3/64	ST	PLA
G9414920	NA	9/32	1/2	1/16	ST	CAD
G9415543	NA	1/2	1-1/4	7/64	ST	ZIN
G9416128	NA	13/64	13/32	3/64	ST	CAD
G9416160	NA	5/16	5/8	1/16	ST	CAD
G9416712	NA	13/64	3/8	5/64	ST	PLA
400 1102	SS	13/32	11/16	1/16	ST	CAD
400 1104	SS	13/32	7/8	1/8	ST	CAD
400 1111	SS	13/32	1-9/16	1/4	ST	CAD
400 1116	SS	15/32	7/8	1/16	ST	CAD
400 1128	SS	17/32	7/8	1/16	ST	CAD
400 1186	SS	3/4	1-3/8	1/8	ST	CAD
400 1289	NA	15/32	7/8	3/16	ST	CAD
400 1760	SS	11/32	7/8	7/64	ST	CAD
400 1762	SS	13/32	7/8	7/64	ST	CAD
400 1766	SS	13/32	1	5/64	ST	CAD
448 6667	SS	13/64	13/32	3/64	ST	CAD
448 8495	SS	17/32	1-1/4	7/64	ST	ZIN
800 0135	SS	1/8	3/8	3/64	ST	CAD
800 0137	NA	13/64	7/16	1/32	ST	CAD
800 0139	SS	7/32	5/8	1/32	ST	CAD
800 0141	SS	7/32	3/4	1/16	ST	CAD
800 0143	SS	1/4	3/4	1/16	ST	CAD
800 0144	NA	17/64	1/2	3/64	ST	PLA
800 0145	SS	17/64	1/2	3/64	ST	CAD
800 0147	SS	9/32	9/16	3/64	ST	CAD

Part No.	S	A	B	T	M	F
800 0149	SS	9/32	7/8	1/16	ST	CAD
800 0151	SS	21/64	9/16	3/64	ST	CAD
800 0153	SS	11/32	7/8	5/64	ST	CAD
800 0155	SS	11/32	7/8	1/8	ST	CAD
800 0157	SS	11/32	1-1/8	1/16	ST	CAD
800 0159	SS	11/32	1-1/4	3/32	ST	CAD
800 0161	SS	25/64	7/8	1/32	ST	CAD
800 0162	SS	13/32	11/16	1/16	ST	PLA
800 0167	SS	13/32	1	5/64	ST	CAD
800 0169	SS	13/32	1-1/8	1/8	ST	CAD
800 0173	SS	13/32	1-9/16	1/8	ST	CAD
800 0175	NA	7/16	13/16	3/64	ST	CAD
800 0177	SS	15/32	15/16	1/32	ST	CAD
800 0178	SS	15/32	7/8	1/16	ST	PLA
800 0179	SS	15/32	7/8	1/16	ST	CAD
800 0180	SS	15/32	7/8	1/8	ST	PLA
800 0181	SS	15/32	7/8	1/8	ST	CAD
800 0183	SS	15/32	1	1/8	ST	CAD
800 0185	SS	15/32	1-1/8	1/8	ST	CAD
800 0187	SS	15/32	1-1/2	3/16	ST	CAD
800 0189	NA	17/32	7/8	1/16	ST	CAD
800 0190	SS	17/32	1	1/32	ST	PLA
800 0193	SS	17/32	1	5/64	ST	CAD
800 0194	SS	17/32	1	1/8	ST	PLA
800 0195	SS	17/32	1	1/8	ST	CAD
800 0197	SS	17/32	1-1/8	3/16	ST	CAD
800 0198	SS	17/32	1-1/4	1/8	ST	PLA
800 0205	SS	5/8	1-1/4	3/32	ST	CAD
800 0207	SS	21/32	1-1/4	1/8	ST	CAD
800 0209	SS	23/32	1-5/8	1/8	ST	CAD
800 0211	SS	37/64	3/4	1/32	ST	CAD
800 0264	SS	21/32	1	1/16	ST	CAD
800 0290	SS	1/4	3/4	3/32	ST	PLA
800 0295	NA	15/32	1-1/4	1/16	ST	CAD
800 0298	NA	15/32	3/4	1/16	ST	PLA
800 0299	NA	15/32	3/4	1/16	ST	CAD
800 0313	NA	13/32	1	3/16	ST	CAD
800 0331	SS	13/32	7/8	3/16	ST	CAD
800 0441	SS	15/32	1-1/8	3/32	ST	CAD
800 0443	SS	19/32	1-1/16	1/8	ST	CAD
800 0446	SS	13/32	13/16	1/16	ST	PLA
800 0449	SS	15/64	1/2	17/64	ST	CAD
800 0451	SS	9/32	3/4	1/16	ST	CAD
800 0453	SS	19/32	1-1/16	1/16	ST	CAD
800 0455	NA	25/32	1-1/2	1/16	ST	CAD
800 0462	NA	17/32	7/8	1/8	ST	CAD
800 0468	SS	13/32	1-1/8	3/16	ST	CAD
800 0475	NA	13/32	11/16	1/16	ST	PLA
800 0480	NA	3/4	1-3/8	1/8	ST	CAD
800 0482	SS	15/32	1-1/4	3/16	ST	CAD
800 0484	SS	9/32	7/8	5/32	ST	CAD
800 0486	SS	17/32	1	1/16	ST	CAD
800 0488	SS	13/32	1-1/4	3/16	ST	CAD

Printed in U.S.A.

17.816 WASHER, Finish

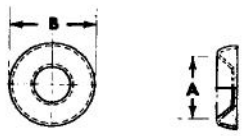

Part No.	S	A	B	M	F
G103352	NA	10	19/32	BR	NIC
G121770	NA	1/4	25/32	BR	CHR
G140192	NA	1/4	25/32	ST	STA
G140244	NA	8	17/32	ST	NIC
G140259	NA	8	17/32	ST	STA
G140270	NA	8	17/32	BR	CHR
G140272	SS	12	11/16	BR	CHR
G173207	NA	10	19/32	ST	CHR

17.820 WASHER, Spring Lock - "Light"

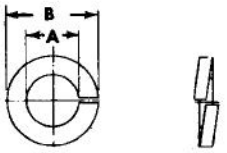

Part No.	S	A	B	M	F
G103320	NA	5/16	19/32	ST	PLA
G103335	NA	3/4	1-9/32	ST	PLA
G103336	NA	7/8	1-15/32	ST	PLA
G112723	NA	5/16	37/64	ST	PLA
G112724	NA	9/16	31/32	ST	PLA
G113114	NA	1/4	1/2	ST	PLA
G118873	NA	10	21/64	ST	PLA
G120381	NA	3/8	11/16	ST	CAD
G120382	SS	3/8	11/16	ST	ZIN
G121621	NA	7/16	3/4	ST	CAD
G121637	NA	1/4	1/2	ST	CAD
G131181	NA	6	1/4	ST	CAD
G131182	NA	8	9/32	ST	CAD
G131183	NA	10	21/64	ST	CAD
G426243	NA	5	7/32	ST	CAD

WASHER, Spring Lock - "Medium"

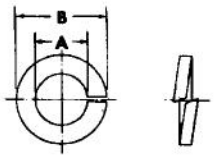

Part No.	S	A	B	M	F
G103319	NA	1/4	1/2	ST	PLA
G103320	NA	5/16	19/32	ST	PLA
G103321	NA	3/8	11/16	ST	PLA
G103322	NA	7/16	25/32	ST	PLA
G103323	SS	1/2	7/8	ST	PLA
G103324	NA	9/16	63/64	ST	PLA
G103325	NA	5/8	1-3/32	ST	PLA
G106497	NA	10	11/32	ST	PLA
G116120	NA	5/16	19/32	ST	PHO
G116121	NA	1/2	7/8	ST	PHO
G120214	SS	5/16	19/32	ST	CAD
G120217	NA	10	11/32	ST	CAD
G120380	NA	1/4	1/2	ST	CAD
G120382	SS	3/8	11/16	ST	CAD
G120383	NA	7/16	25/32	ST	CAD
G120384	SS	1/2	7/8	ST	CAD
G120898	NA	9/16	31/32	ST	CAD
G121574	NA	5/8	1-3/32	ST	CAD
G121744	NA	12	3/8	ST	CAD
G121841	NA	11/64	19/64	ST	ZIN
G131044	NA	6	1/4	ST	CAD
G131046	NA	3/8	43/64	ST	CAD
G131100	SS	7/16	25/32	ST	ZIN
G450585	NA	1/4	1/2	ST	CAD

WASHER, Spring Lock - "Heavy"

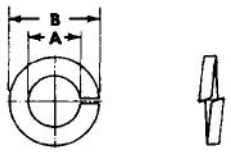

Part No.	S	A	B	M	F
G103328	NA	7/16	51/64	ST	PLA
G103331	NA	5/8	1-3/32	ST	PLA
G103333	NA	7/8	1-1/2	ST	PLA
G108579	NA	5/16	19/32	ST	PLA
G108580	NA	3/8	11/16	ST	PLA
G120638	NA	5/16	19/32	ST	CAD
G122158	NA	10	23/64	ST	PLA
G131095	NA	8	5/16	ST	CAD
G131096	NA	10	23/64	ST	CAD
G131099	NA	3/8	11/16	ST	CAD
G131100	SS	7/16	51/64	ST	CAD
G131101	NA	1/2	57/64	ST	CAD
G131121	NA	1/4	1/2	ST	PHO

Printed in U.S.A.

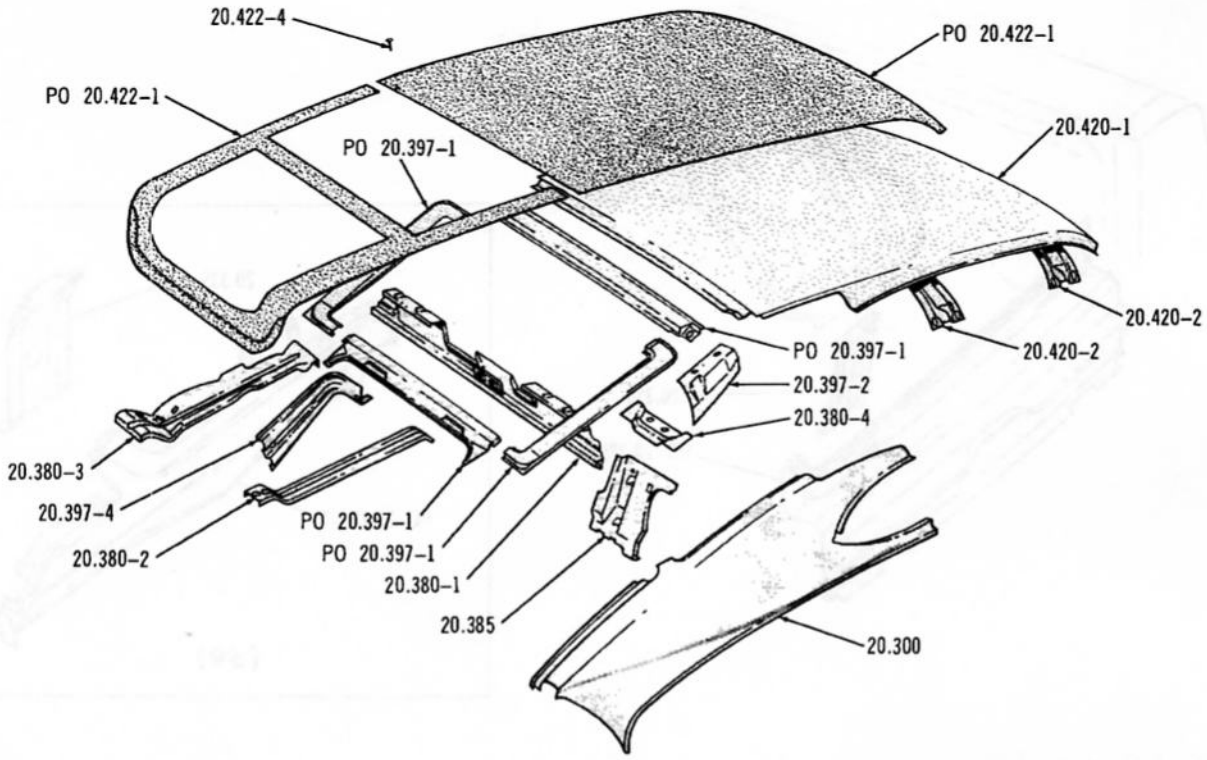

ROOF PANEL, SUPPORTS AND REAR SHELF PANEL ... 1967 (59)

3380

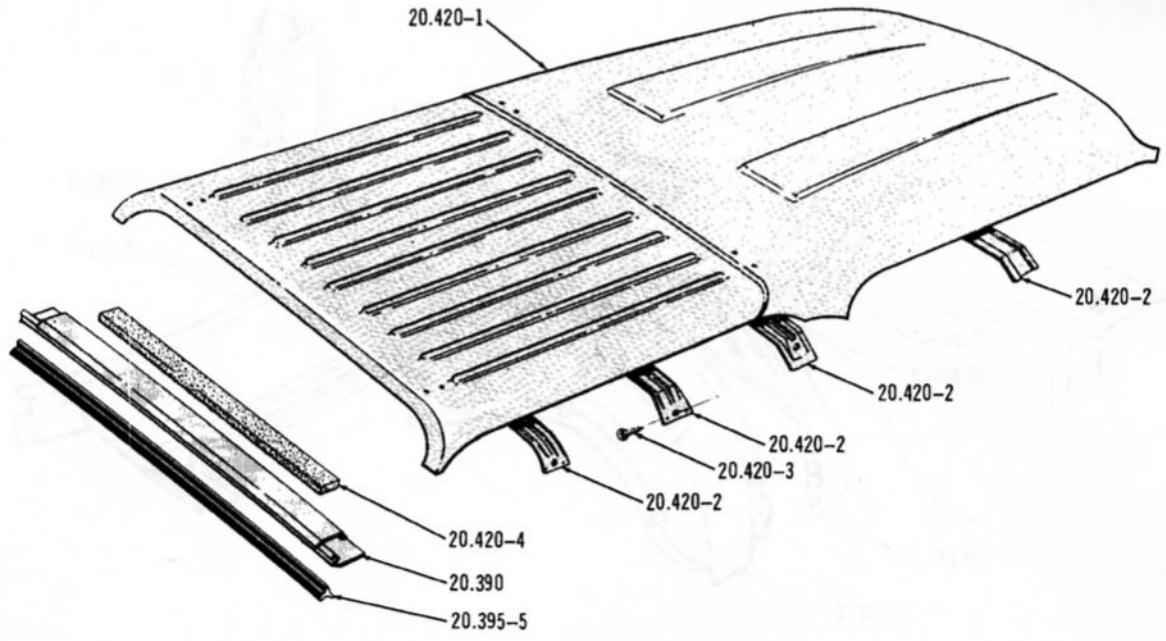

3390

ROOF PANEL AND SUPPORTS ... 18, 88

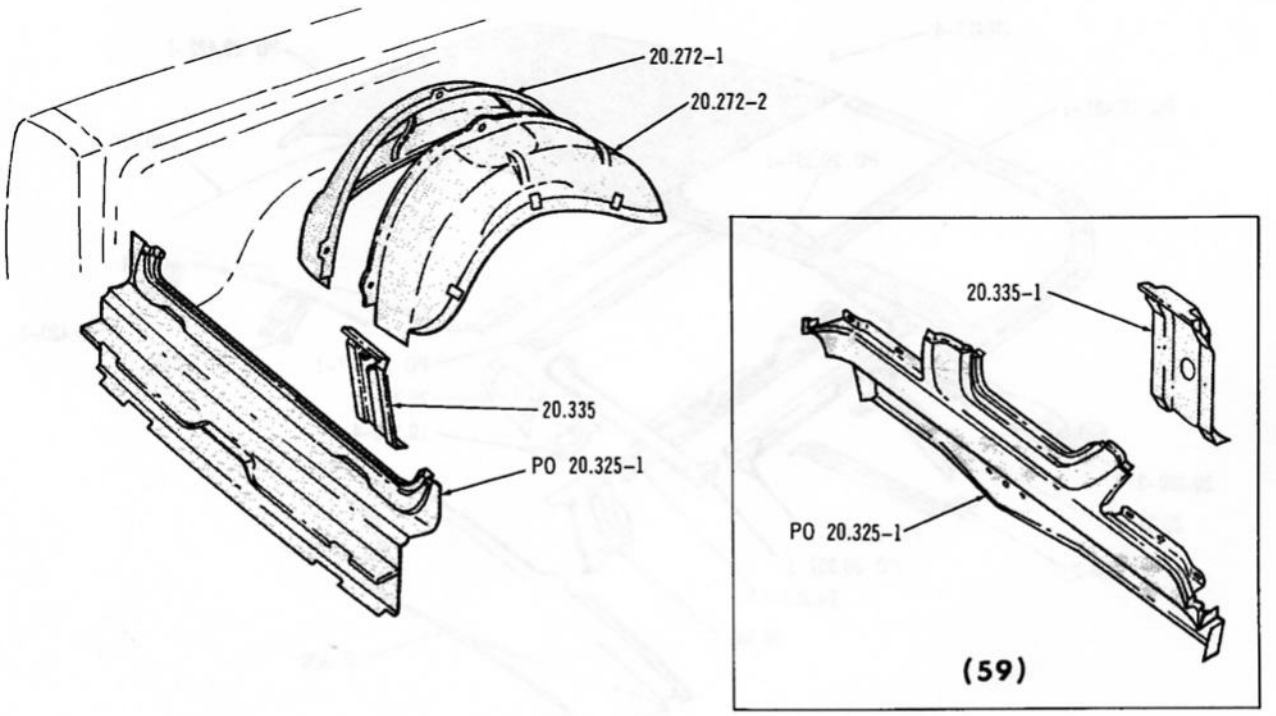

3422

REAR WHEELHOUSE AND REAR DECK LOWER PANEL ... 1967/69 (10)(50)(80)

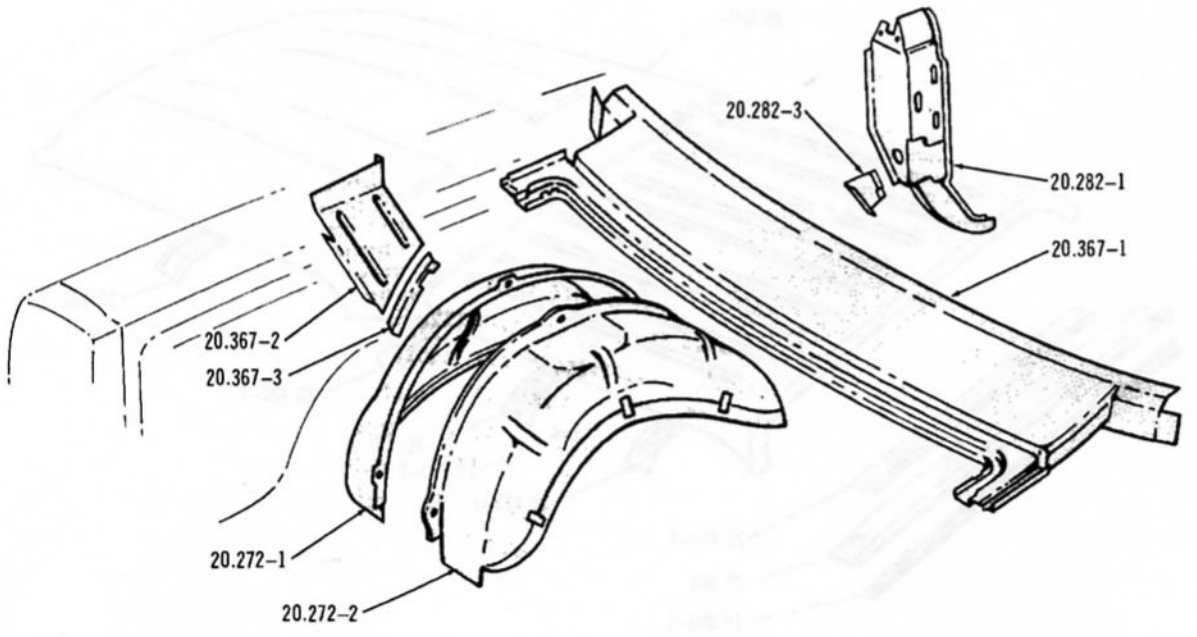

3419

REAR WHEELHOUSE AND REAR DECK UPPER PANEL ... 17, 87

17.822 WASHER, External Tooth Lock

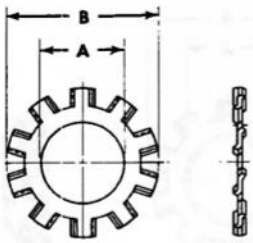

Part No.	S	A	B	M	F
G114602	NA	8	3/8	ST	PLA
G114603	NA	10	13/32	ST	PLA
G114604	NA	1/4	1/2	ST	PLA
G114605	NA	5/16	19/32	ST	PLA
G114606	NA	3/8	11/16	ST	PLA
G114607	NA	7/16	3/4	ST	PLA
G114608	NA	1/2	7/8	ST	PLA
G114756	NA	9/16	31/32	ST	PLA
G120930	SS	3/8	11/16	ST	PHO
G121752	SS	8	3/8	ST	CAD
G121753	NA	1/4	1/2	ST	CAD
G125751	NA	12	7/16	ST	CAD
G135629	NA	1/2	7/8	ST	CAD
G138473	NA	6	5/16	ST	CAD
G138479	NA	10	13/32	ST	CAD
G138481	NA	13/32	25/64	ST	PHO
G138485	NA	5/16	19/32	ST	CAD
G138489	NA	3/8	11/16	ST	CAD
G138493	NA	7/16	3/4	ST	PHO
G138498	NA	9/16	63/64	ST	PLA
G138502	NA	5/8	1-1/16	ST	CAD
G138508	NA	3/4	1-1/4	ST	PHO
G445715	NA	1/4	1/2	ST	CAD

17.823 WASHER, Heavy Series Bearing Lock

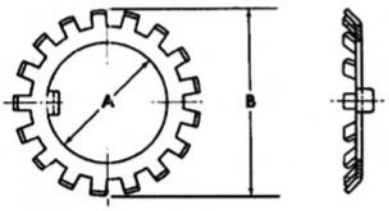

Part No.	S	A	B	M	F
G271233	NA	3-19/32	4-15/16	ST	PLA

17.824 WASHER, Internal Tooth Lock

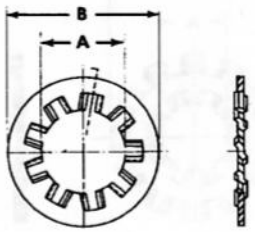

Part No.	S	A	B	M	F
G111328	NA	3/8	23/32	ST	PLA
G115545	NA	13/64	3/8	ST	PLA
G115547	NA	1/4	15/32	ST	PLA
G115548	NA	5/16	19/32	ST	PLA
G115549	NA	3/8	11/16	ST	PLA
G115550	NA	7/16	3/4	ST	PLA
G115551	NA	1/2	7/8	ST	PLA
G115553	NA	5/8	1-1/16	ST	PLA
G115554	NA	3/4	15/64	ST	PLA
G120423	NA	1/4	15/32	ST	CAD
G121801	NA	10	3/8	ST	CAD
G125700	NA	27/32	15/16	ST	PLA
G125793	NA	13/16	19/64	ST	CAD
G131718	NA	7/16	3/4	ST	CAD
G138167	NA	1/4	15/32	ST	PHO
G138181	NA	12	13/32	ST	PHO
G138526	NA	6	9/32	ST	CAD
G138530	NA	8	21/64	ST	CAD
G138538	NA	5/16	19/32	ST	CAD
G138542	SS	3/8	11/16	ST	CAD
G138549	NA	1/2	7/8	ST	CAD
G138553	NA	9/16	31/32	ST	CAD
G141706	NA	11/16	1-5/32	ST	PLA
G141707	NA	11/16	1-5/32	ST	CAD
G147755	NA	5	17/64	ST	CAD
G178397	NA	12	11/16	ST	CAD
G180288	NA	5/16	19/32	ST	PLA
400 1527	NA	1/4	1/2	ST	ZIN

17.826 WASHER, Internal - External Tooth Lock

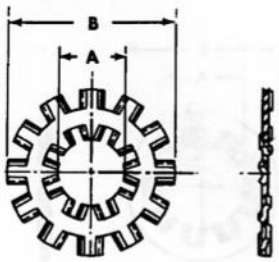

Part No.	S	A	B	M	F
G173124	SS	1/4	3/4	ST	PLA
G173128	NA	3/8	31/32	ST	PLA
G174916	NA	1/4	3/4	ST	CAD
G178364	NA	8	19/32	ST	CAD
G178378	SS	10	19/32	ST	CAD
G178388	NA	10	3/4	ST	CAD
G178393	NA	10	57/64	ST	CAD
G178518	NA	1/4	57/64	ST	CAD
G178532	NA	5/16	29/32	ST	CAD
G178551	NA	3/8	31/32	ST	CAD
G178556	NA	3/8	1-1/16	ST	CAD
G178571	NA	7/16	1-1/16	ST	CAD
G454763	NA	1/4	11/16	ST	CAD

17.828 WASHER, Countersunk External Tooth Lock

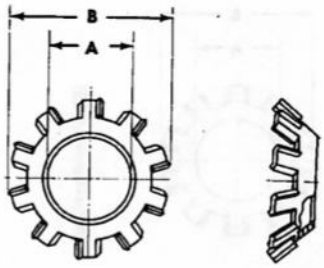

Part No.	S	A	B	M	F
G114614	NA	10	23/64	ST	PLA
G125829	NA	1/2	31/32	ST	CAD
G138597	NA	10	23/64	ST	CAD
G138598	NA	10	23/64	ST	PHO
G138600	NA	12	27/64	ST	CAD
G138615	NA	5/16	19/32	ST	PHO
G138617	NA	3/8	49/64	ST	CAD

Printed in U.S.A.

SPECIAL INFORMATION

The Engine Build Code Number, Vehicle Identification Number and the information provided on the Unit Body Plate are often necessary when determining the proper replacement parts for your automobile. For their location refer to the General Information Section found at the front of this catalog.

ILLUSTRATIONS INDEX

CAMSHAFT KIT V8 ..... Gr 19 - L 1
CAPACITOR DISCHARGE IGNITION SYSTEM V8 ..... Gr 19 - L 5
CROSS RAM DUAL CARBURETOR ALUMINUM MANIFOLD V8 ..... Gr 19 - L 4
FOUR BOLT MAIN BEARING PROVISION CYLINDER BLOCK 360 ..... Gr 26 - L 2
FRONT UNDERBODY SPOILER 30, 70 ..... Gr 19 - L 6
HIGH PERFORMANCE IGNITION SYSTEM V8 ..... Gr 19 - L 3
HEAT BLOCKER MANIFOLD GASKET V8 ..... Gr 19 - L 1
HIGH RISER ALUMINUM MANIFOLD AND SINGLE CARBURETOR V8 ..... Gr 19 - L 2
POSITIVE LOCKING DIFFERENTIAL V8 ..... Gr 19 - L 6
REAR AXLE GEAR SETS V8..... Gr 19 - L 3
TORQUE LINK KIT 01 (V8) ..... Gr 19 - L 4
TORQUE LINK KIT 70..... Gr 19 - L 5

NOTES

Printed in U.S.A.

ILLUSTRATION SUPPLEMENT - SPECIAL INFORMATION

HIGH PERFORMANCE .... Refer to F-14072 Parts Catalog.

Printed in U.S.A.

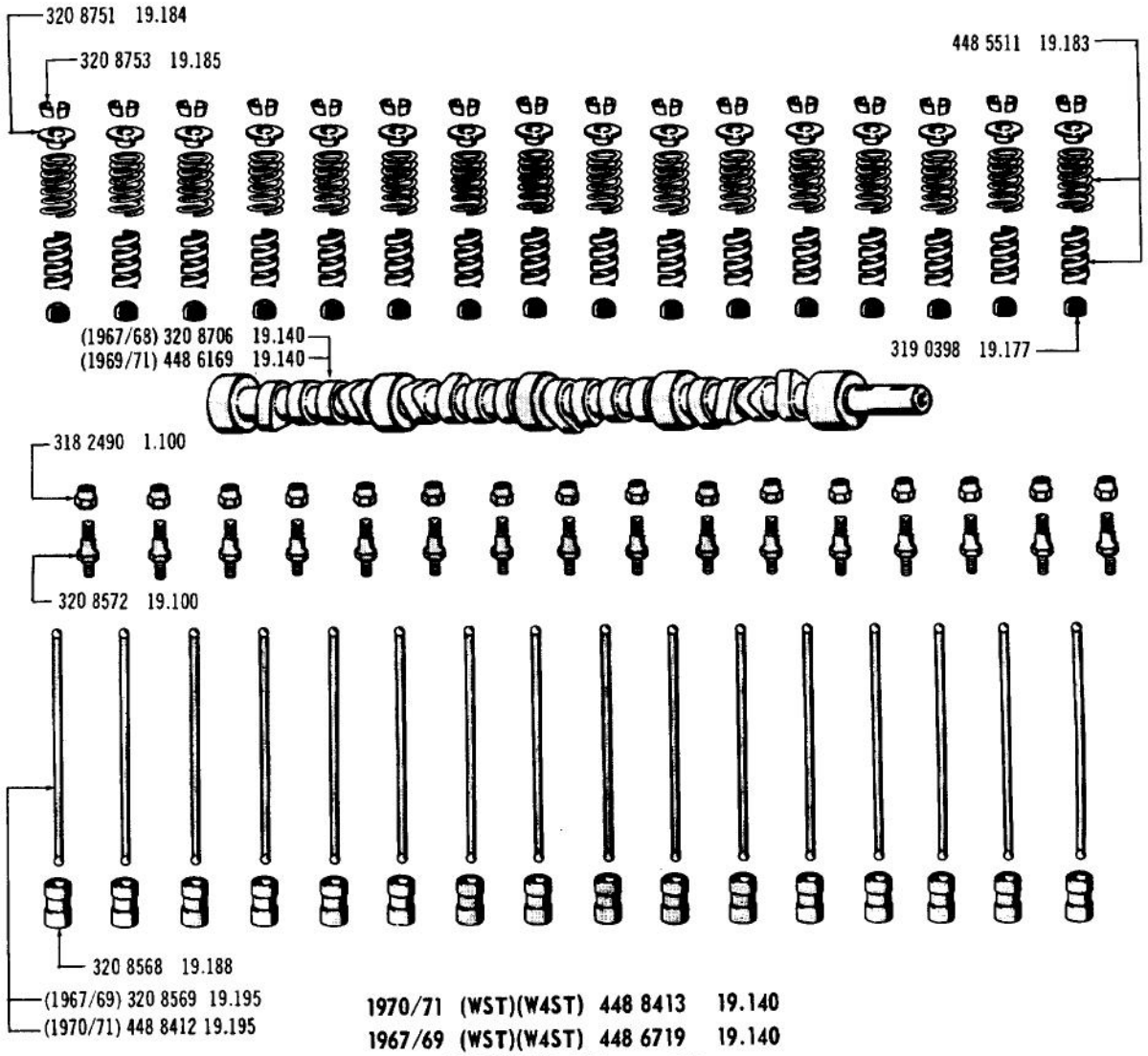

1970/71 (WST)(W4ST) 448 8413 19.140
1967/69 (WST)(W4ST) 448 6719 19.140
CAMSHAFT KIT . . . V8

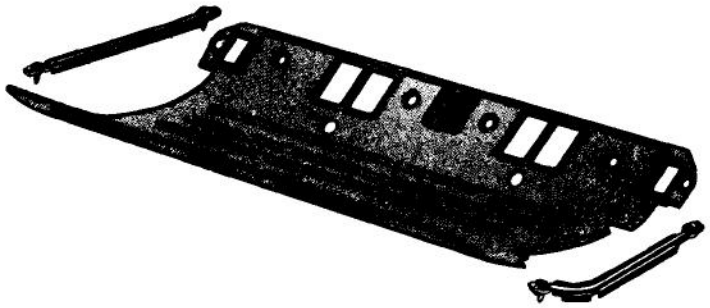

(1967/69) 448 8475 19.167
(1970/) 448 8476 19.167

3439

HEAT BLOCKER MANIFOLD GASKET . . . V8

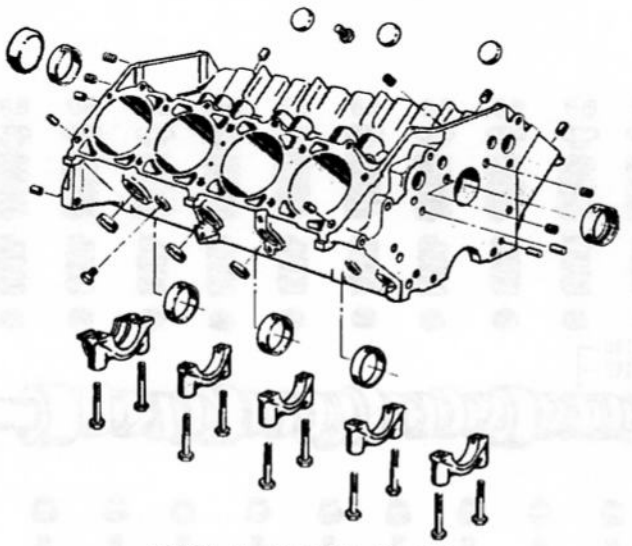

(1970/) 448 8937 19.120

FOUR BOLT MAIN BEARING PROVISION CYLINDER BLOCK ... 360

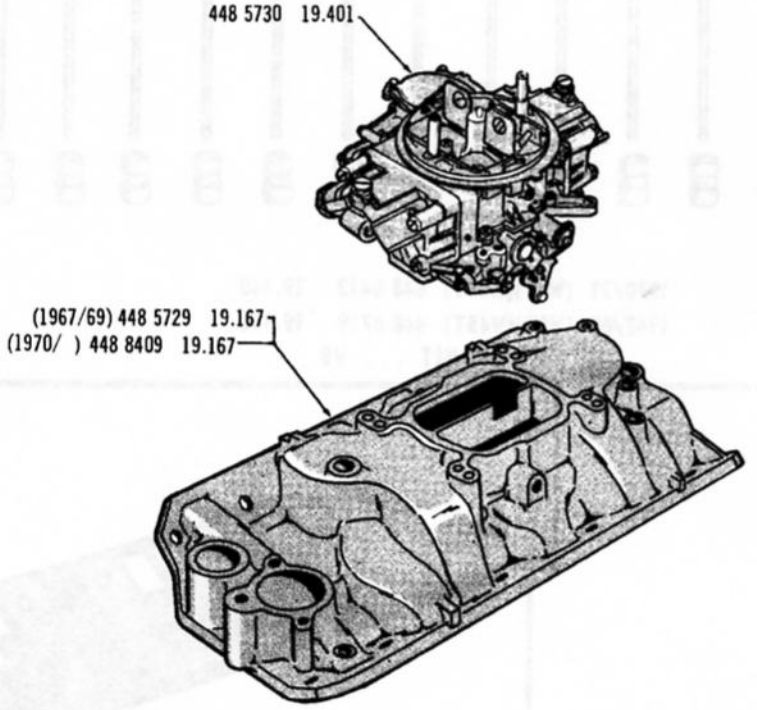

(1967/69) 448 5731 19.167
(1970/) 448 8410 19.167

3440

HIGH RISER ALUMINUM MANIFOLD AND SINGLE CARBURETOR ... V8

Printed in U.S.A.

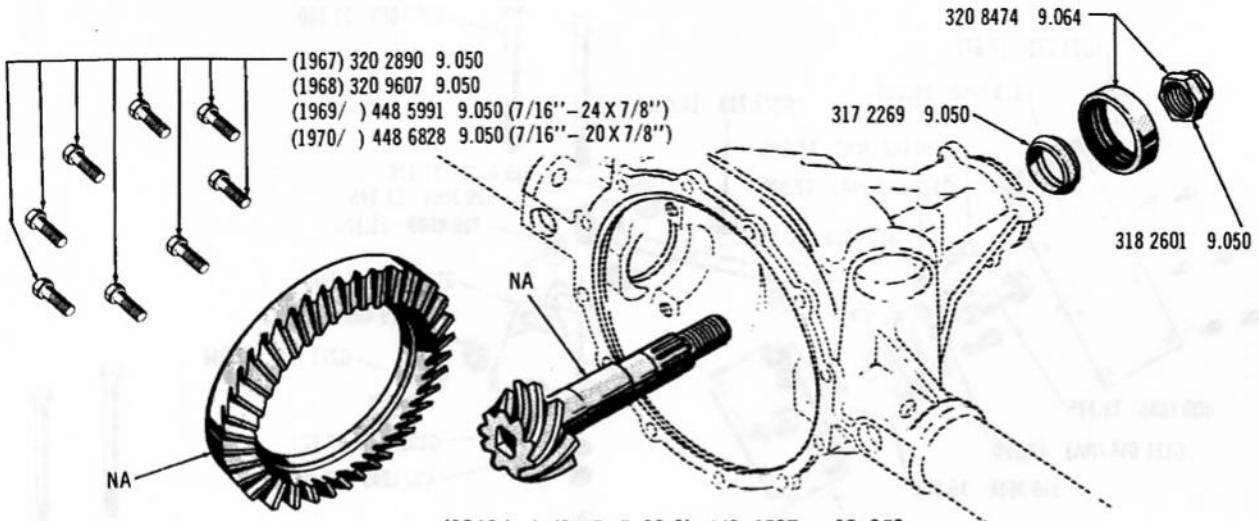

(1968/) (9:45–5.00:1) 448 6587 19.950
(1967) (9:40–4.44:1) 320 8551 19.950
(1968/) (9:40–4.44:1) 320 9854 19.950
(1968/) (10:41–4.10:1) 320 8546 19.950
(1968/) (11:43–3.91:1) 448 5750 19.950
(1968/) (11:41–3.73:1) 448 5749 19.950

REAR AXLE GEAR SETS ... V8

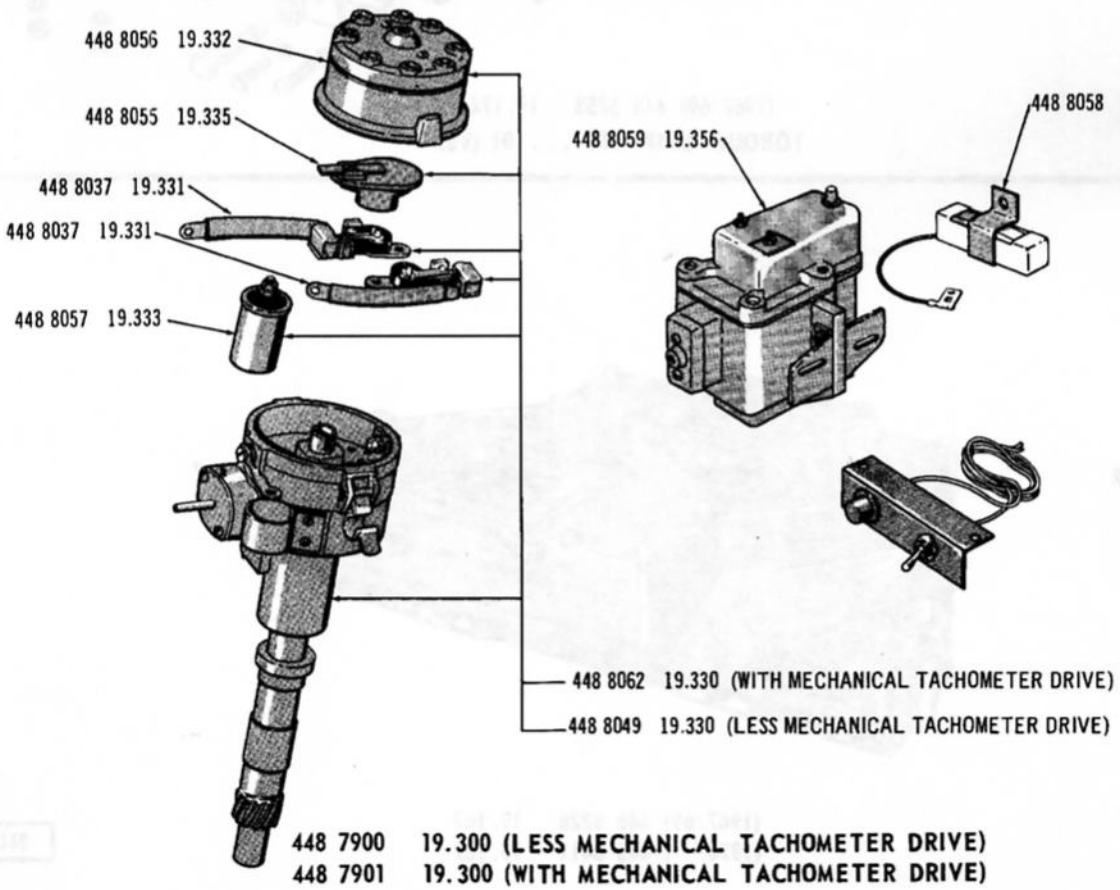

448 7900 19.300 (LESS MECHANICAL TACHOMETER DRIVE)
448 7901 19.300 (WITH MECHANICAL TACHOMETER DRIVE)

3441

HIGH PERFORMANCE IGNITION SYSTEM ... V8

Printed in U.S.A.

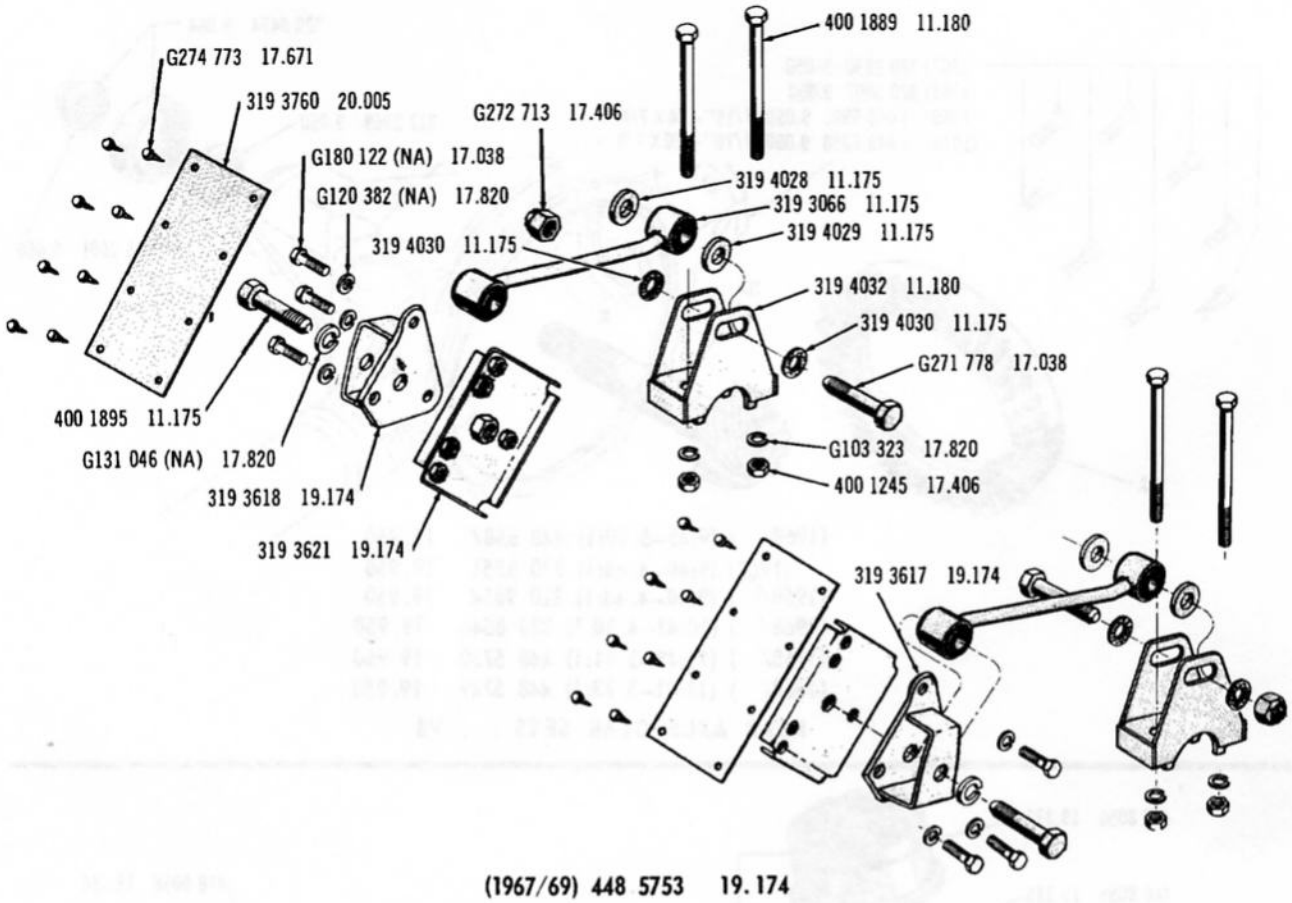

(1967/69) 448 5753 19.174
TORQUE LINK KIT ... 01 (V8)

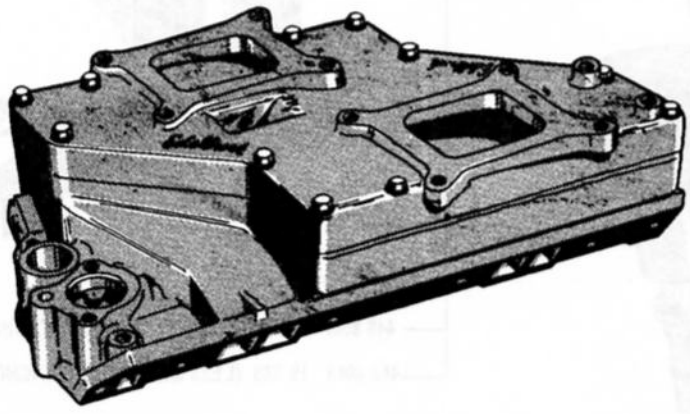

(1967/69) 448 6228 19.167
(1970/) 448 8411 19.167

3443

CROSS RAM DUAL CARBURETOR ALUMINUM MANIFOLD ... V8

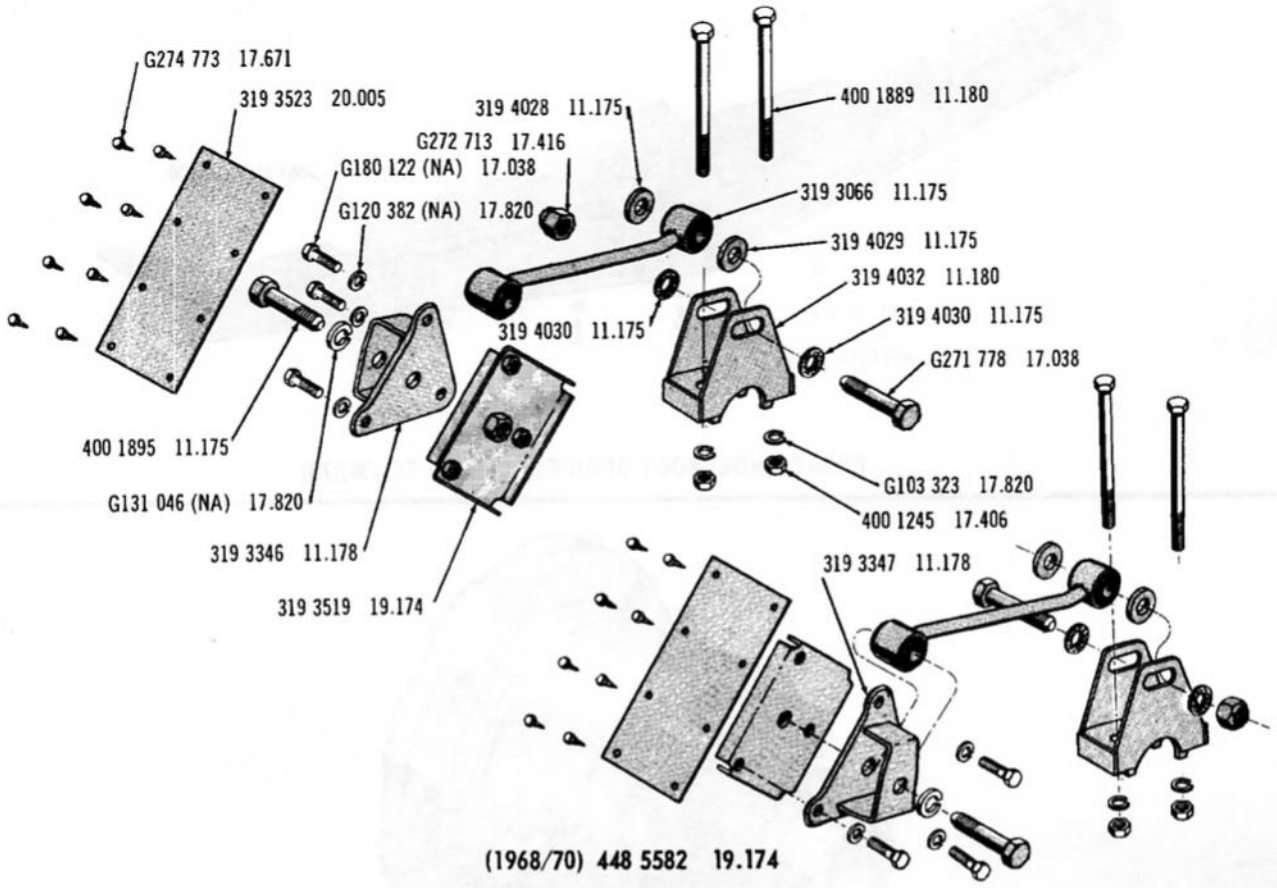

(1968/70) 448 5582 19.174

TORQUE LINK KIT ... 70

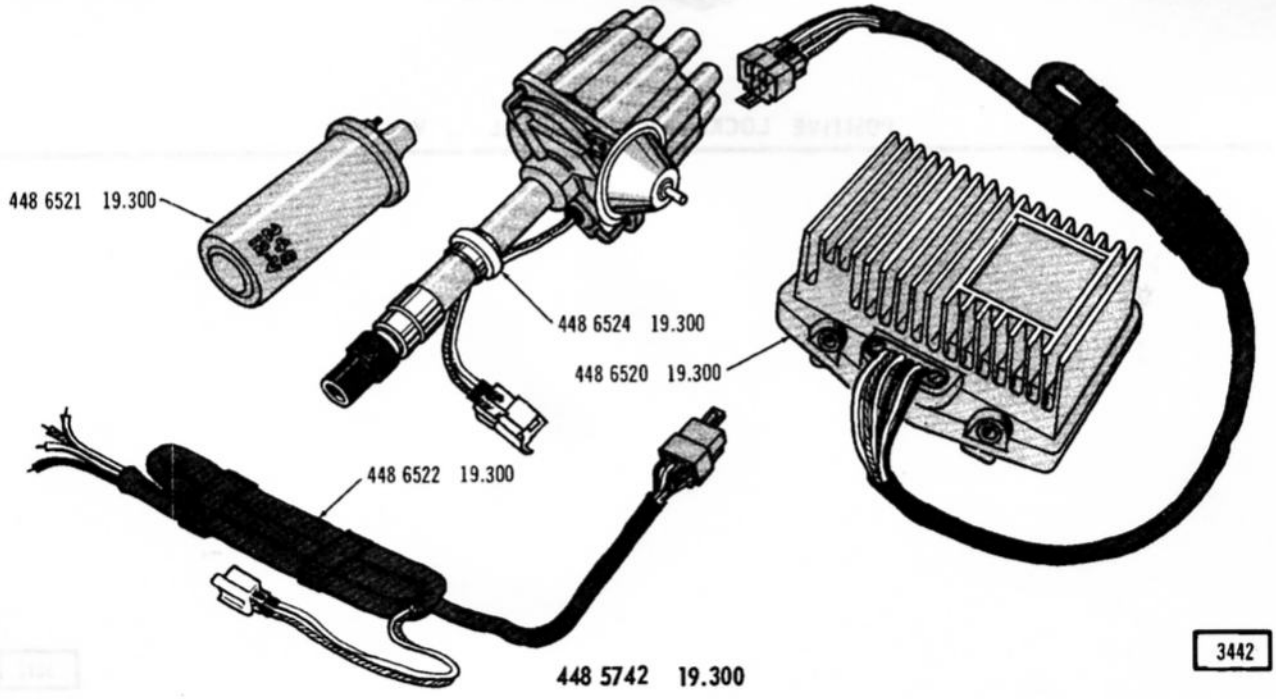

448 5742 19.300

CAPACITOR DISCHARGE IGNITION SYSTEM ... V8

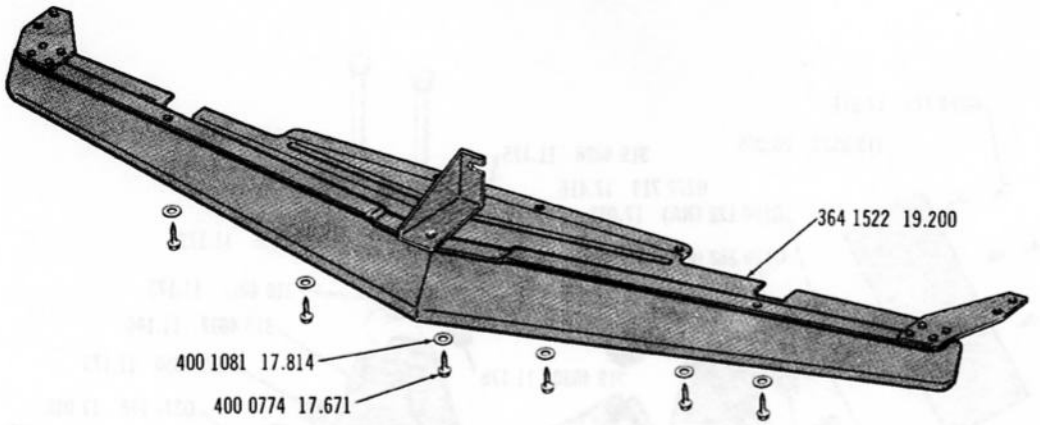

FRONT UNDERBODY SPOILER ... 1968/70 (30)(70)

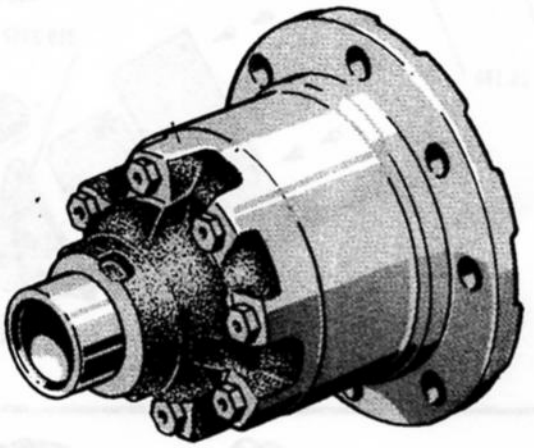

448 6997 19.900
POSITIVE LOCKING DIFFERENTIAL ... V8

3512

SPECIAL INFORMATION

The Engine Build Code Number, Vehicle Identification Number and the information provided on the Unit Body Plate are often necessary when determining the proper replacement parts for your automobile. For their location refer to the General Information Section found at the front of this catalog.

NOTES

20–1 .... Used prior to Car Sequence No. E-48062 or W-59129.

20–2 .... Used beginning with Car Sequence No. E-48062 or W-59129.

20–3 .... The Front Suspension Upper Control Arm Mounting Reinforcement has a slotted hole.

20–4 .... The Front Suspension Upper Control Arm Mounting Reinforcement has a round hole.

20–5 .... Roof Supports are Numbered from the front to the rear of the car.

20–6 .... The Rear Quarter Window Up-Stop is attached to the Glass Slide Channel.

20–7 .... The Rear Quarter Window Up-Stop is attached to the Regulator Panel. The Glass Slide Channel is eliminated.

20–8 .... On the 69 70, the Body Lock Pillar Reinforcement and the Rear Side Roof Rail have Clinch Nuts welded to them.

20–9 .... On the 69 70, the Body Lock Pillar Reinforcement and the Rear Side Roof Rail have the Clinch Nuts eliminated and replaced by Countersunk Holes.

20–10 ... Includes Tapping Plates for attachment of Seat Slide.

20–11 ... Does not include Tapping Plates for attachment of Seat Slide.

20–12 ... Vinyl covers only the rear half of the Roof Panel.

20–13 ... Vinyl covers the entire Roof Panel.

20–14 ... Used with Stud and Nut Type Luggage Rack fastening.

20–15 ... Used with Screw Type Luggage Rack fastening.

20–16 ... Rear Quarter Window Support is welded to the Body.

20–17 ... Rear Quarter Window Support is screwed to the Body.

20–18 ... The upper end of the Shock Absorber has a "Cross Pin" Type mounting and the lower end of the Shock has an "Eye" Type mounting.

20–19 ... The upper and lower end of the Shock Absorber has a "Bayonet" Type mounting.

20–20 ... Used on cars where the Parking Lamps or Brake Scoops are mounted beneath the Bumper Rail.

20–21 ... Used on Cars where the Parking Lamps are mounted in the Grille and there are no Brake Scoops, Spoiler Type.

20–22 ... Used on Cars prior to Body No. 19656.

20–23 ... Used on Cars beginning with Body No. 19656.

20–24 ... Includes Fuel Opening Housing welded to Panel.

20–25 ... Does not include Fuel Opening Housing.

20–26 ... Shoulder Harness Mounting Plate has Weld Nuts which are threaded.

20–27 ... Shoulder Harness Mounting Plate has Weld Nuts which are not threaded.

20–28 ... Used with Liftgate Anti-Rattle Guide Pin arrangement.

20–29 ... When ordering or Cars with Liftgate Handle, order part in Group 23.413–4.

2560

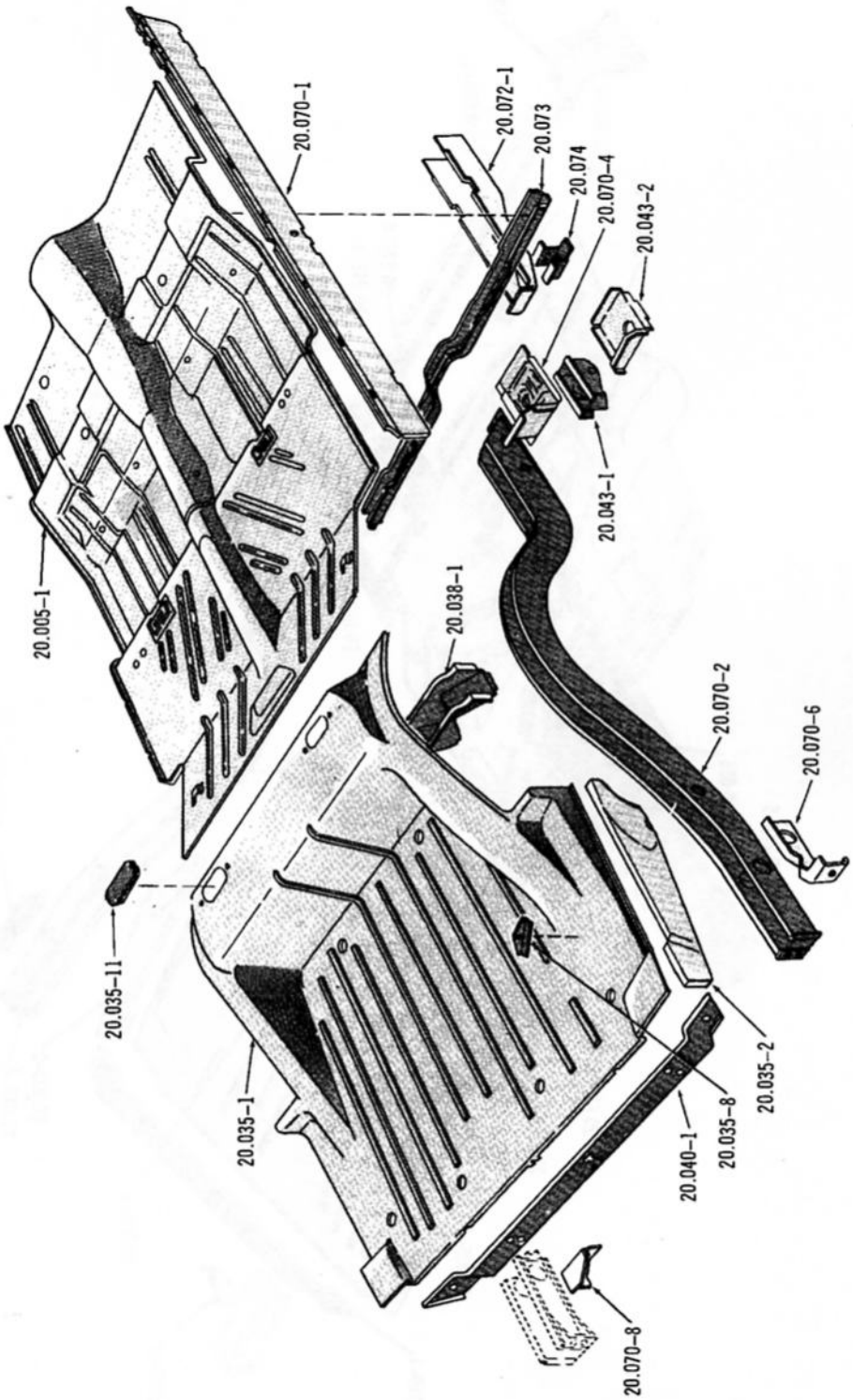

UNDERBODY PANELS ... 1967/69 (05)(06)(08)(09)

Printed in U.S.A.

2563

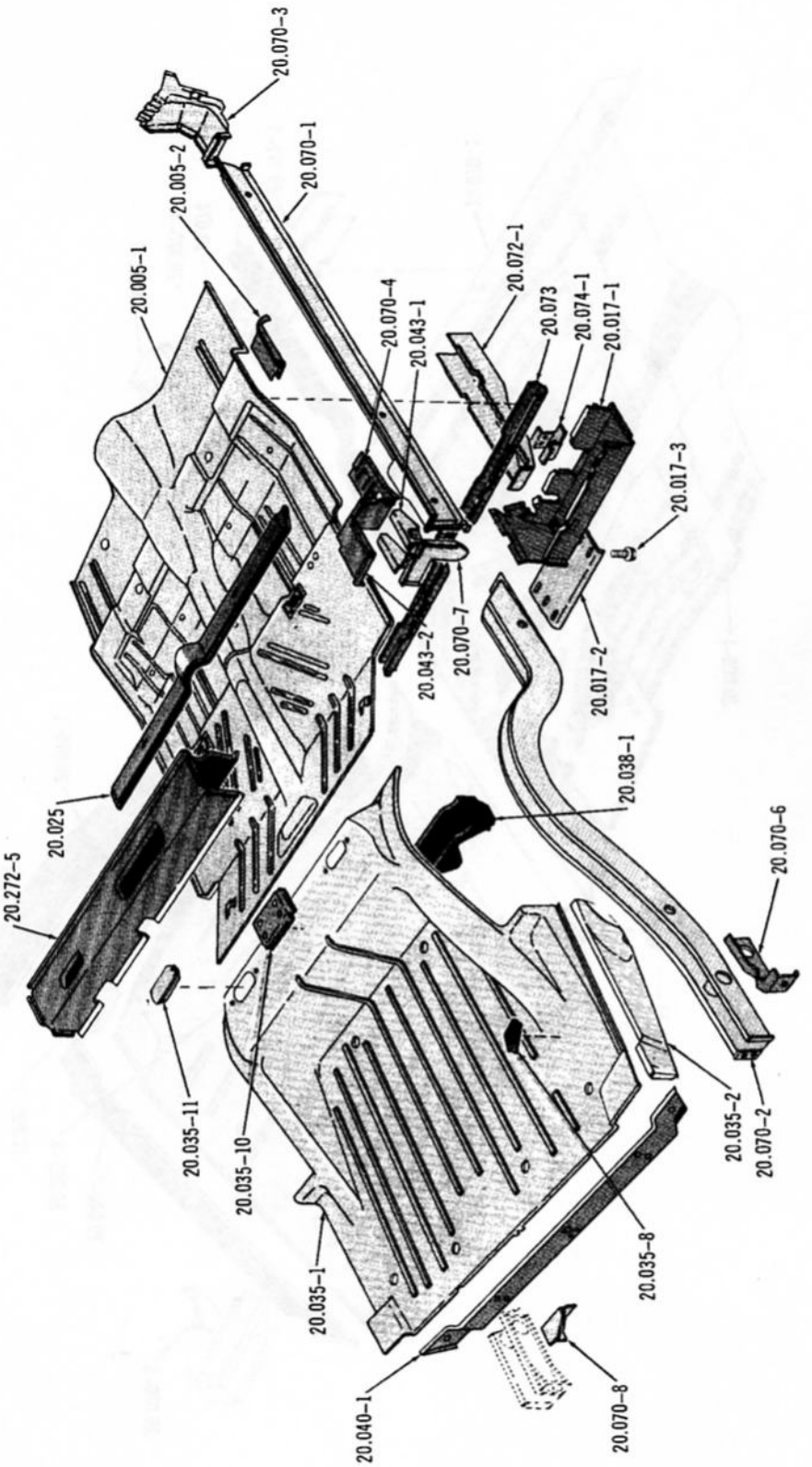

UNDERBODY PANELS ... 07

3825

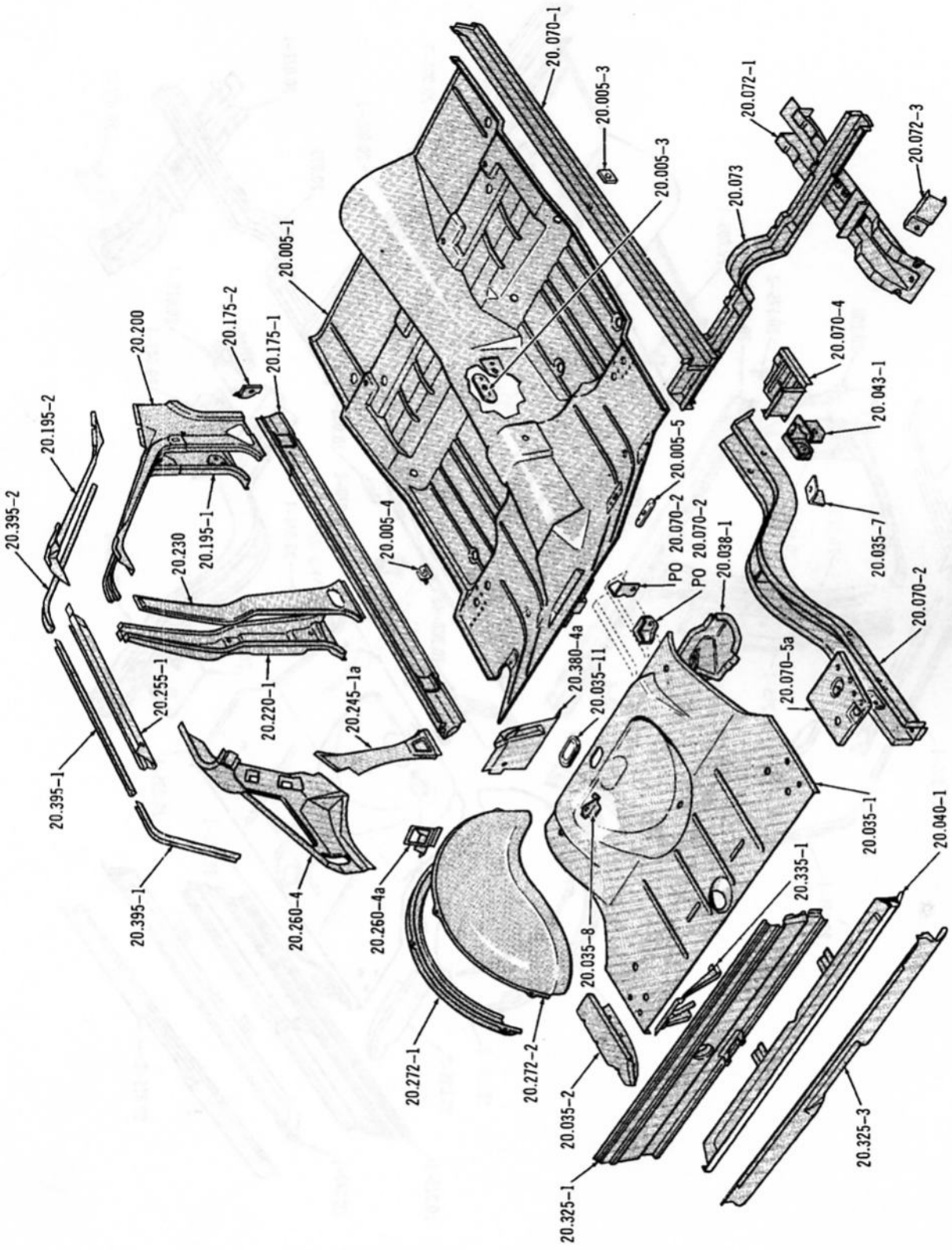

FLOOR PANS AND SIDE PANELS ... 1970/ (05)

3826

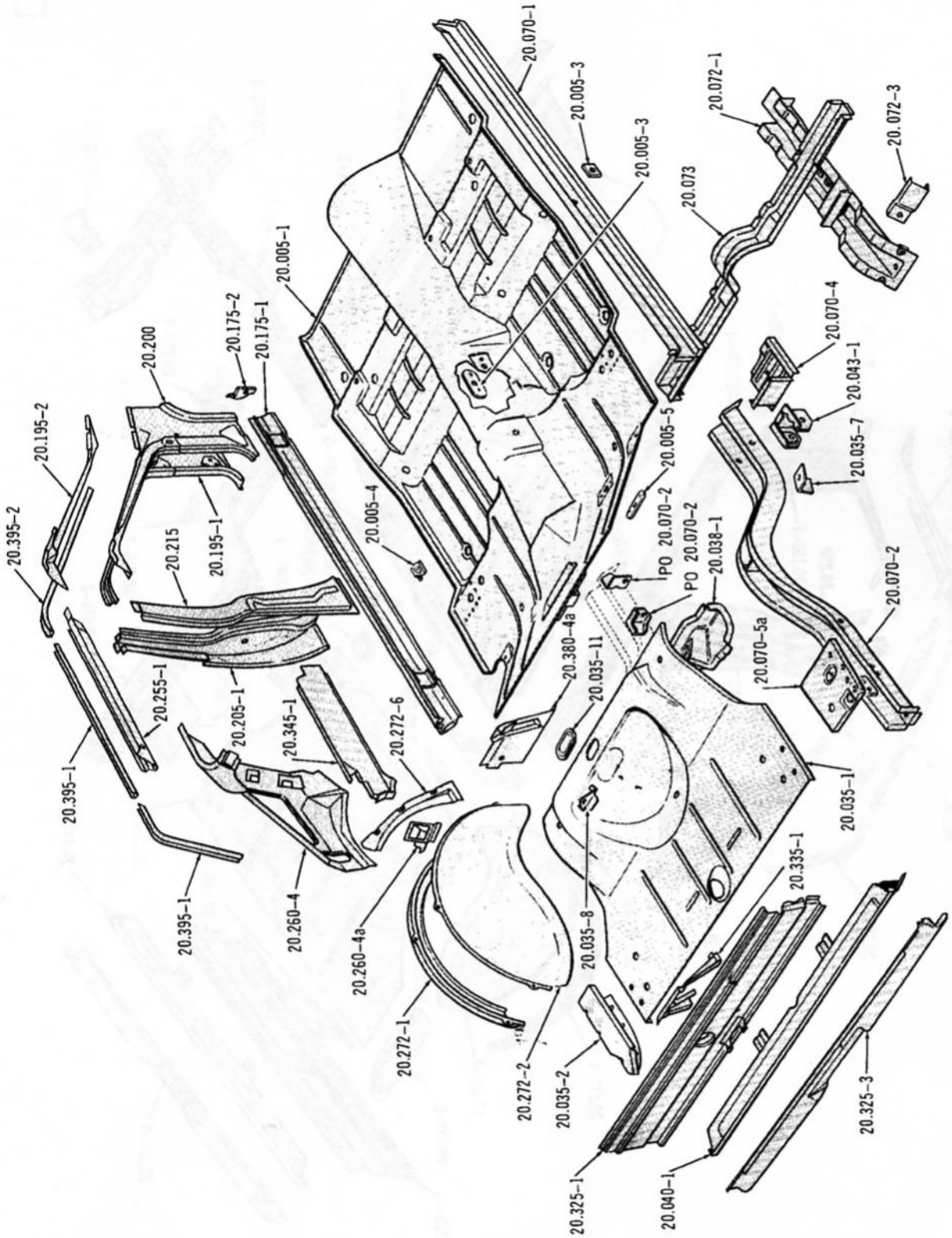

FLOOR PANS AND SIDE PANELS ... 1970/ (06)

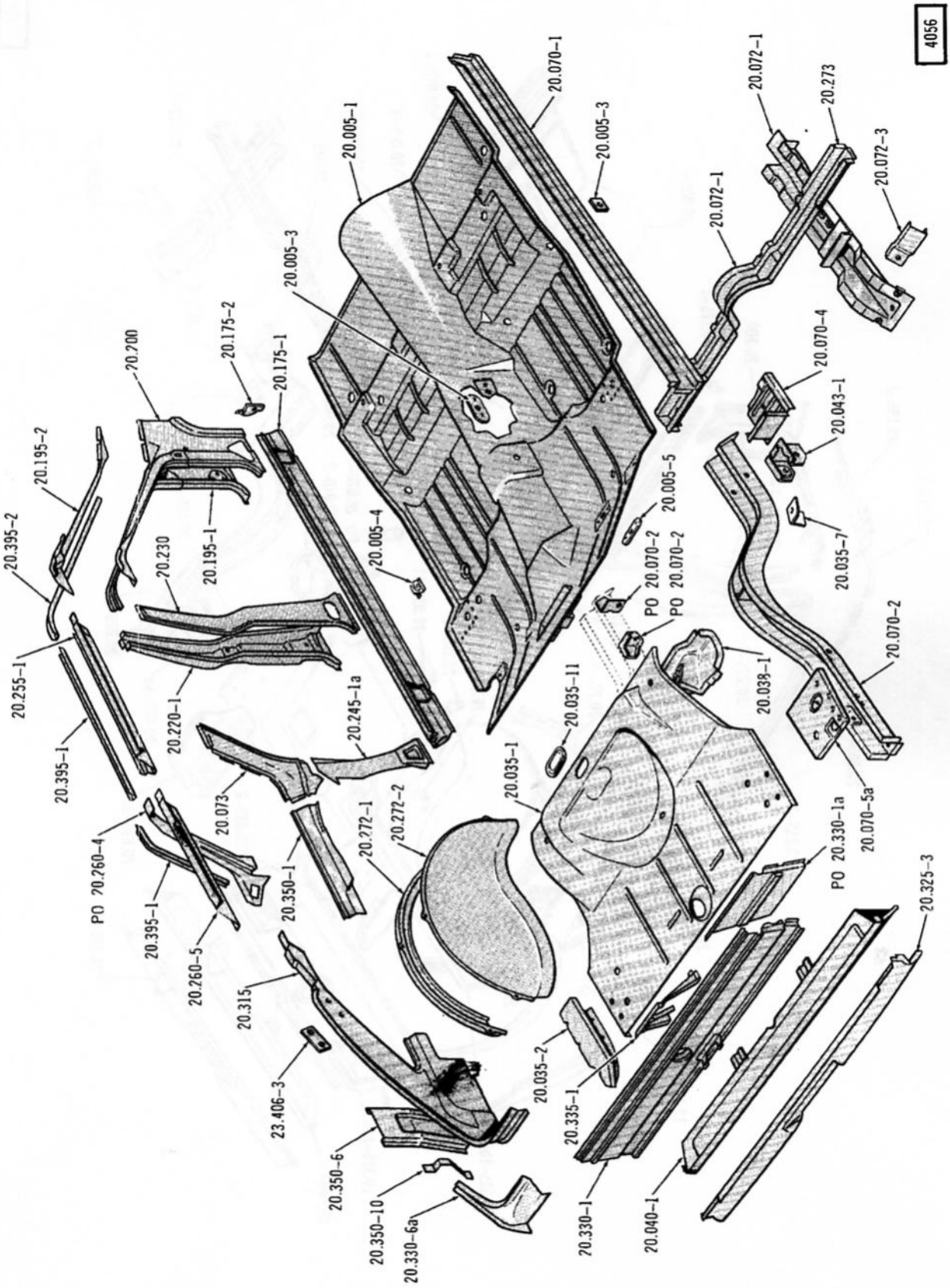

FLOOR PANS AND SIDE PANELS ... 1971/ (08)

3931

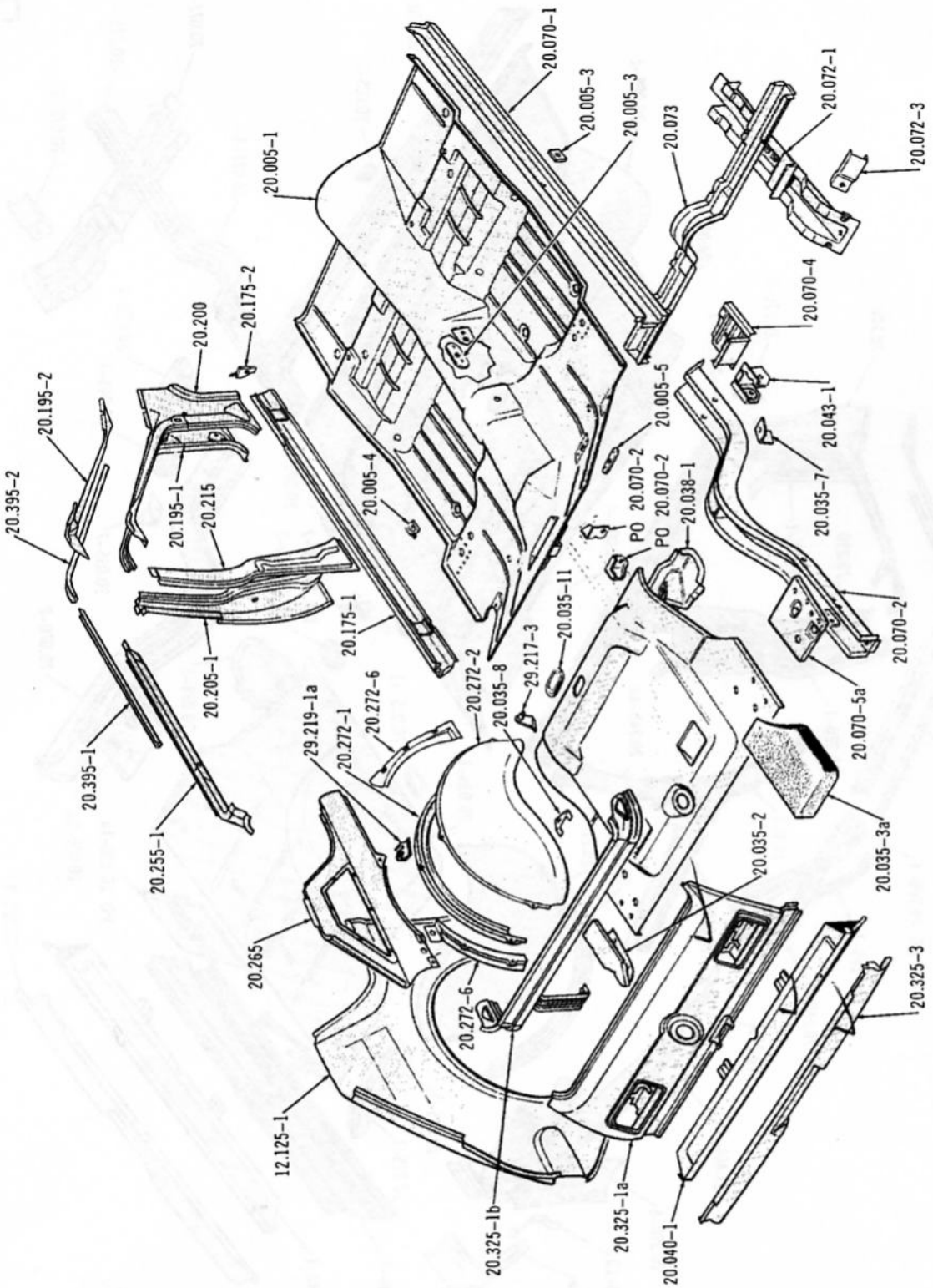

FLOOR PANS AND SIDE PANELS ... 1970/ (40)

Printed in U.S.A.

3160

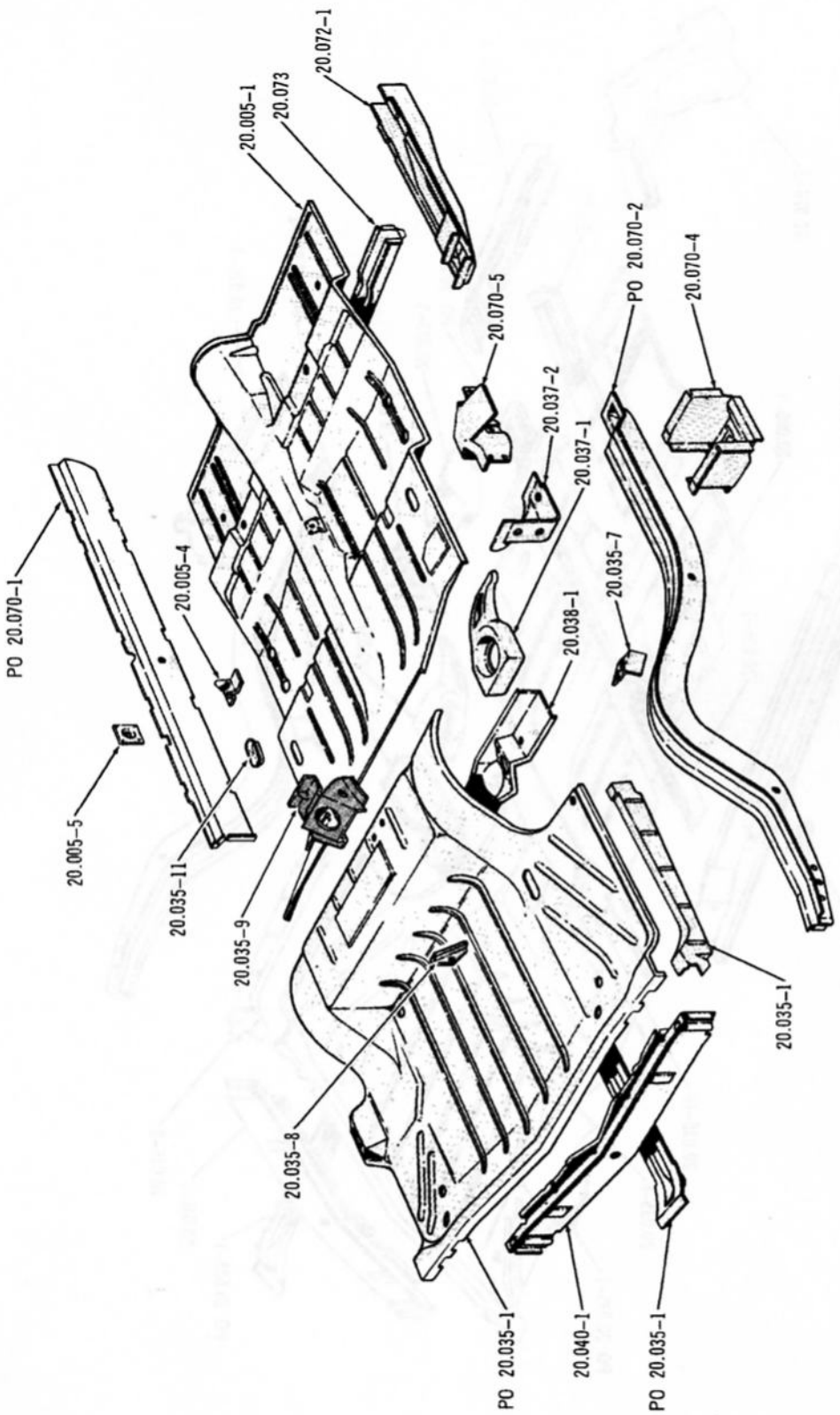

UNDERBODY PANELS ... 15, 16, 18 (L3S), 19, 59, 85, 86, 88-L3S (1967/68), 89

3197

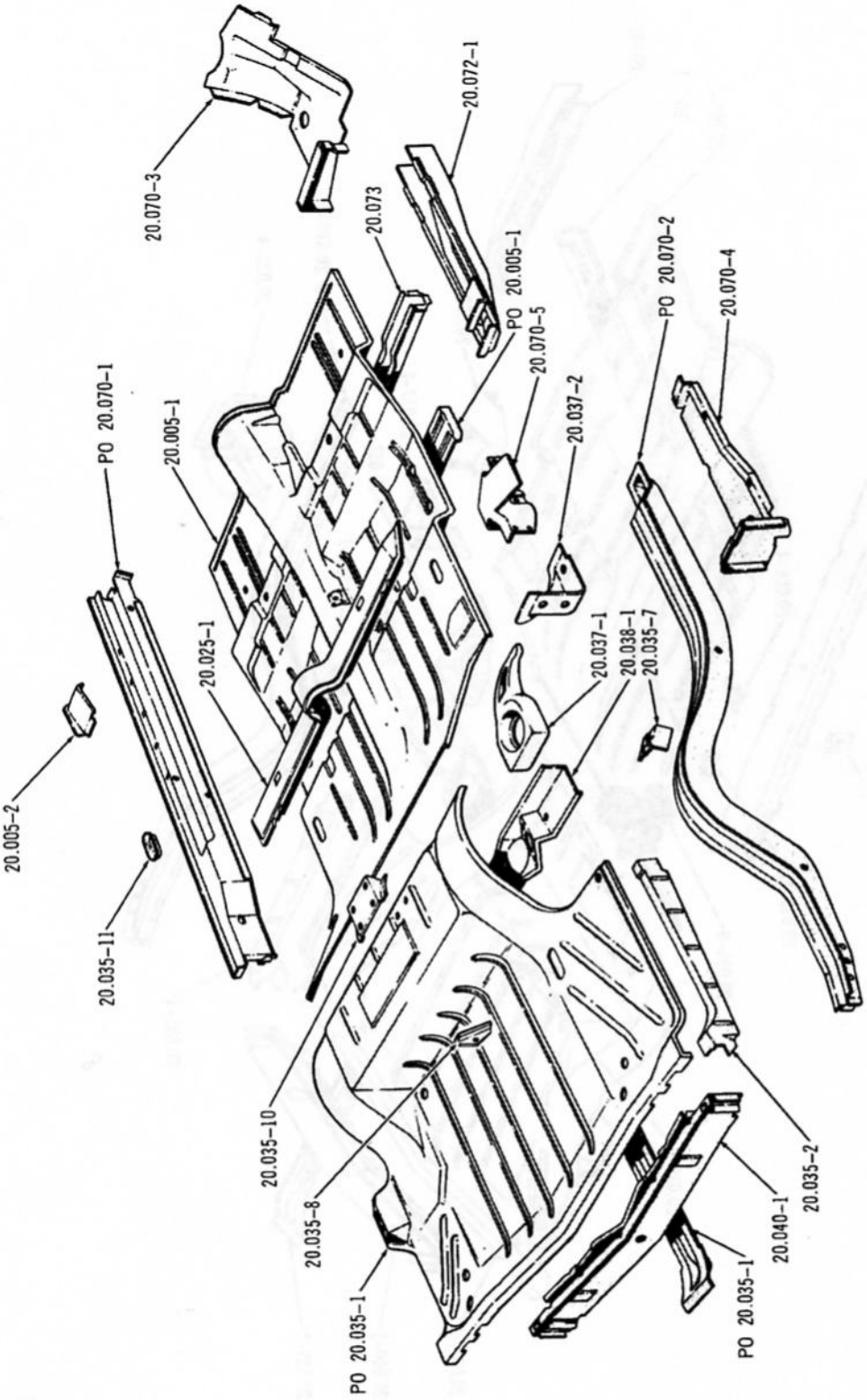

UNDERBODY PANELS ... 17, 87

3193

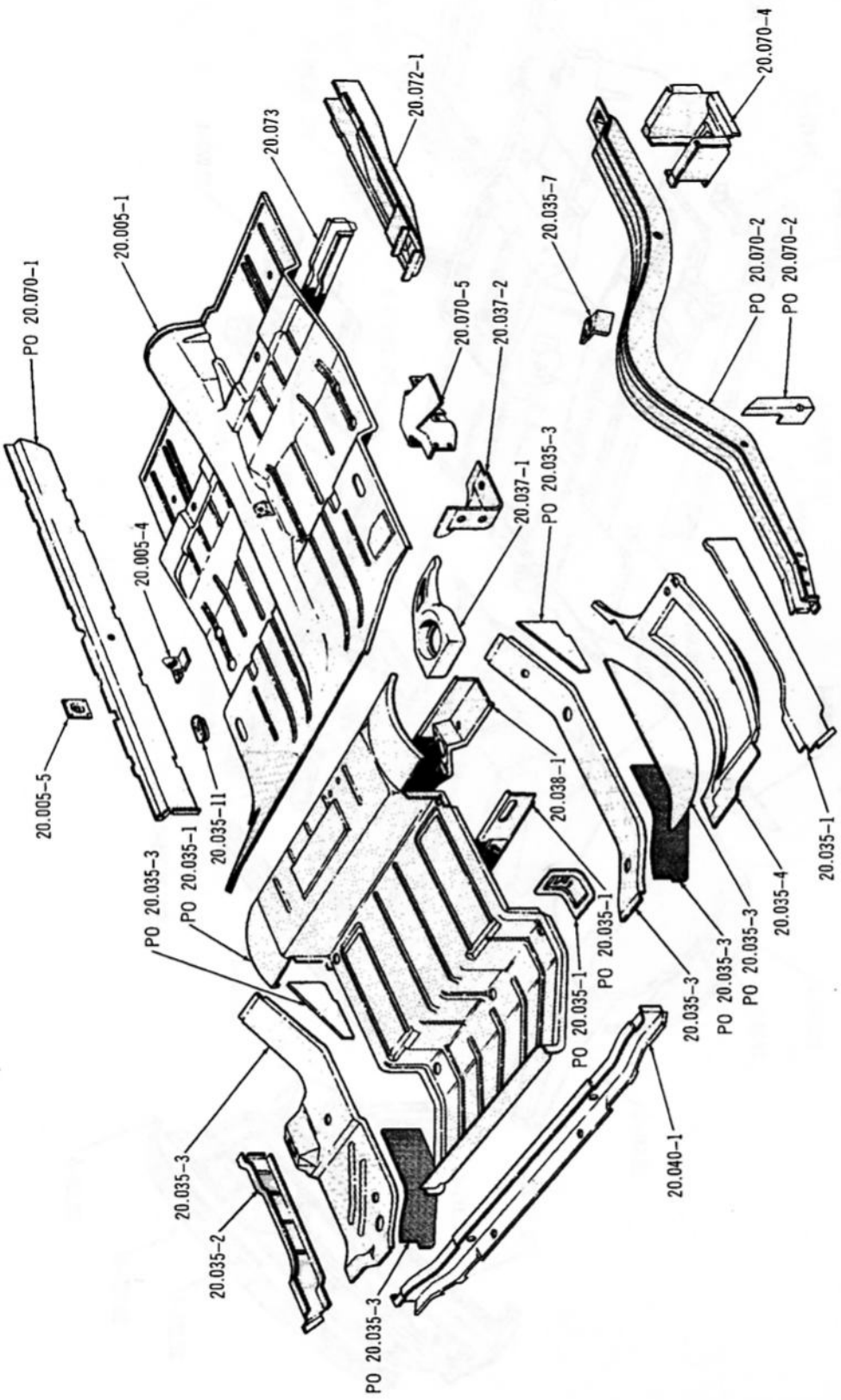

UNDERBODY PANELS ... 18 (W3S), 88 (W3S-1967/68)(1969/)

5026

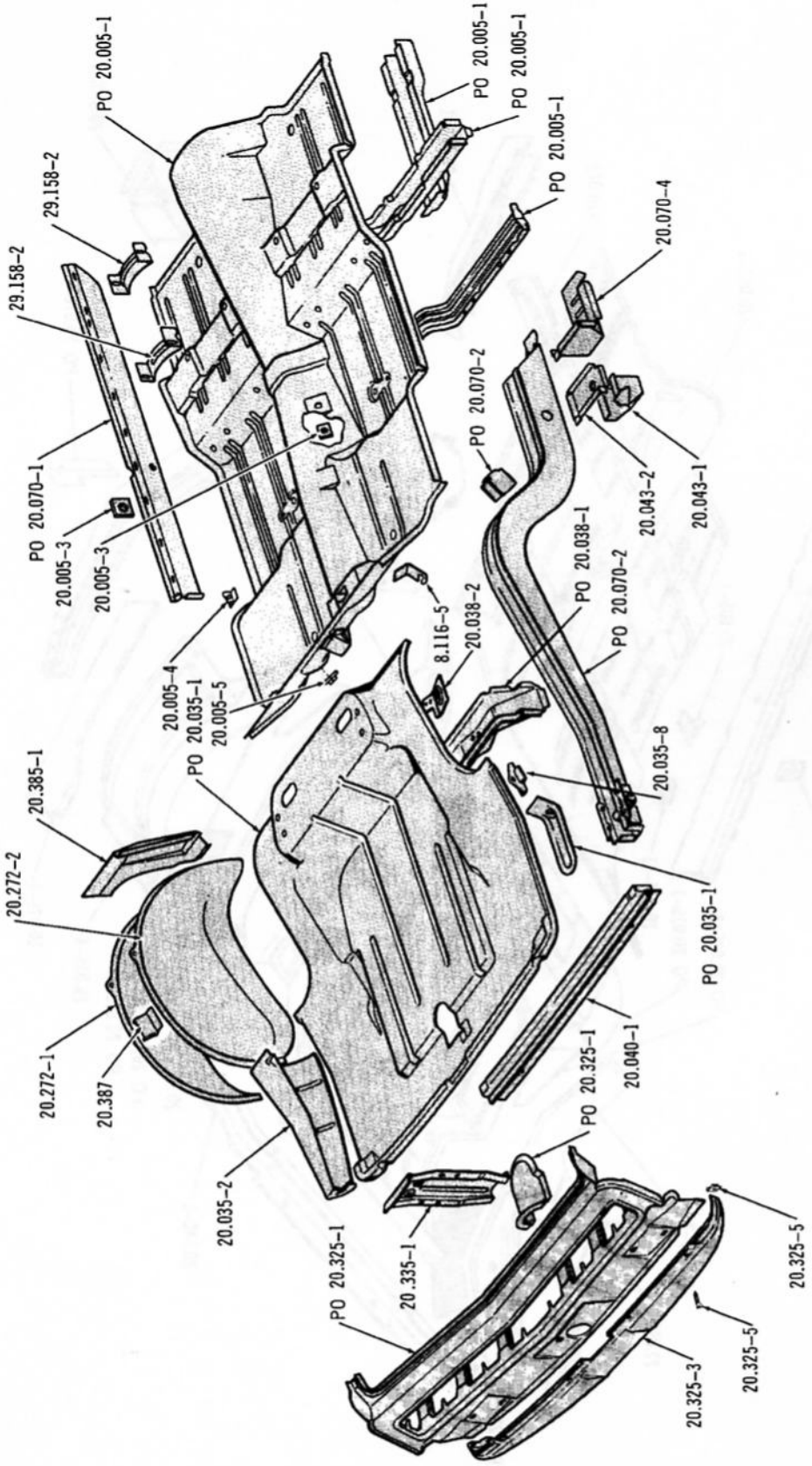

UNDERBODY PANELS . . . 1971/ (70)

Printed in U.S.A.

1574

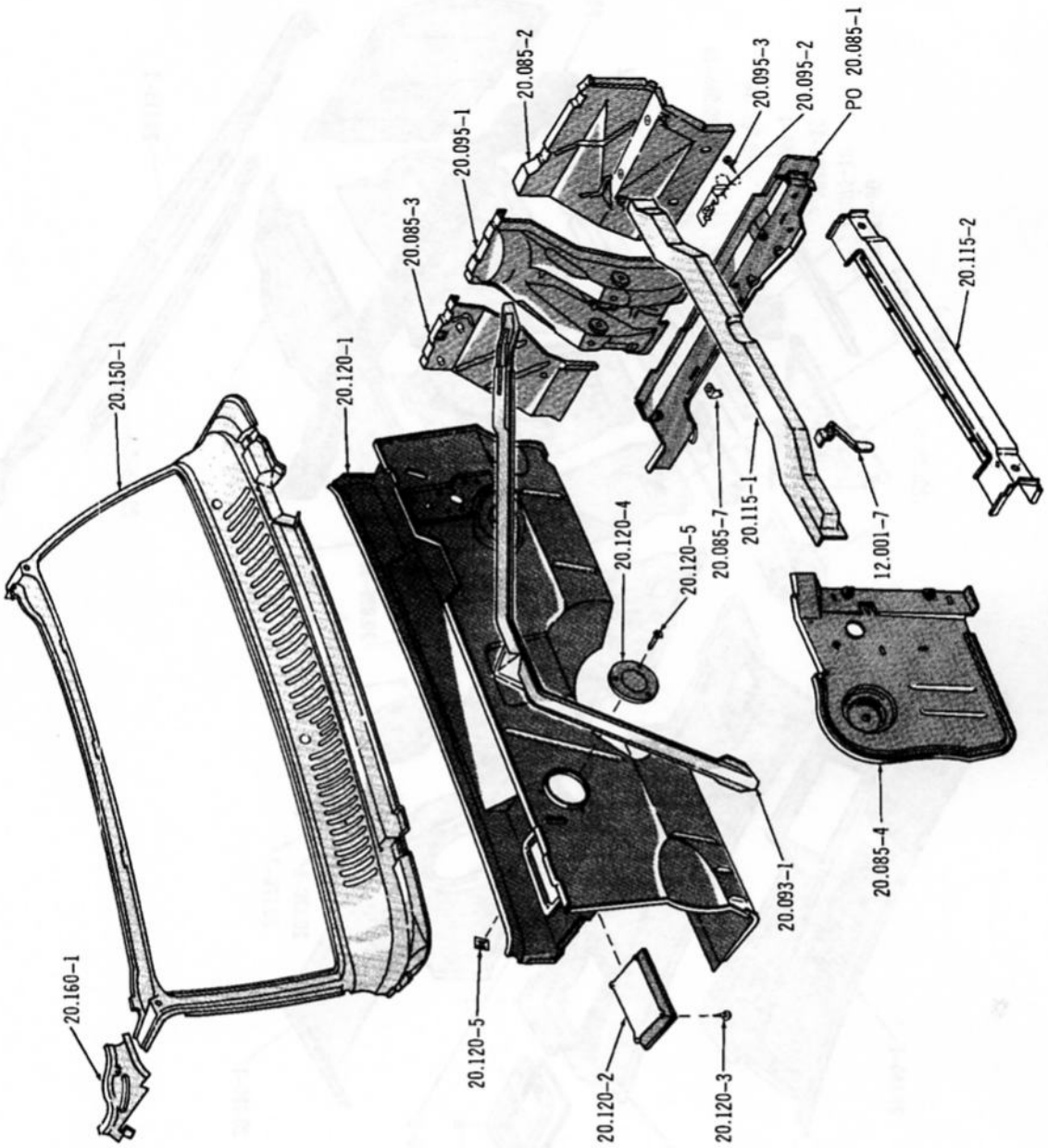

DASH AND FRONT WHEELHOUSE PANEL ... 1967/69 (01)

3828

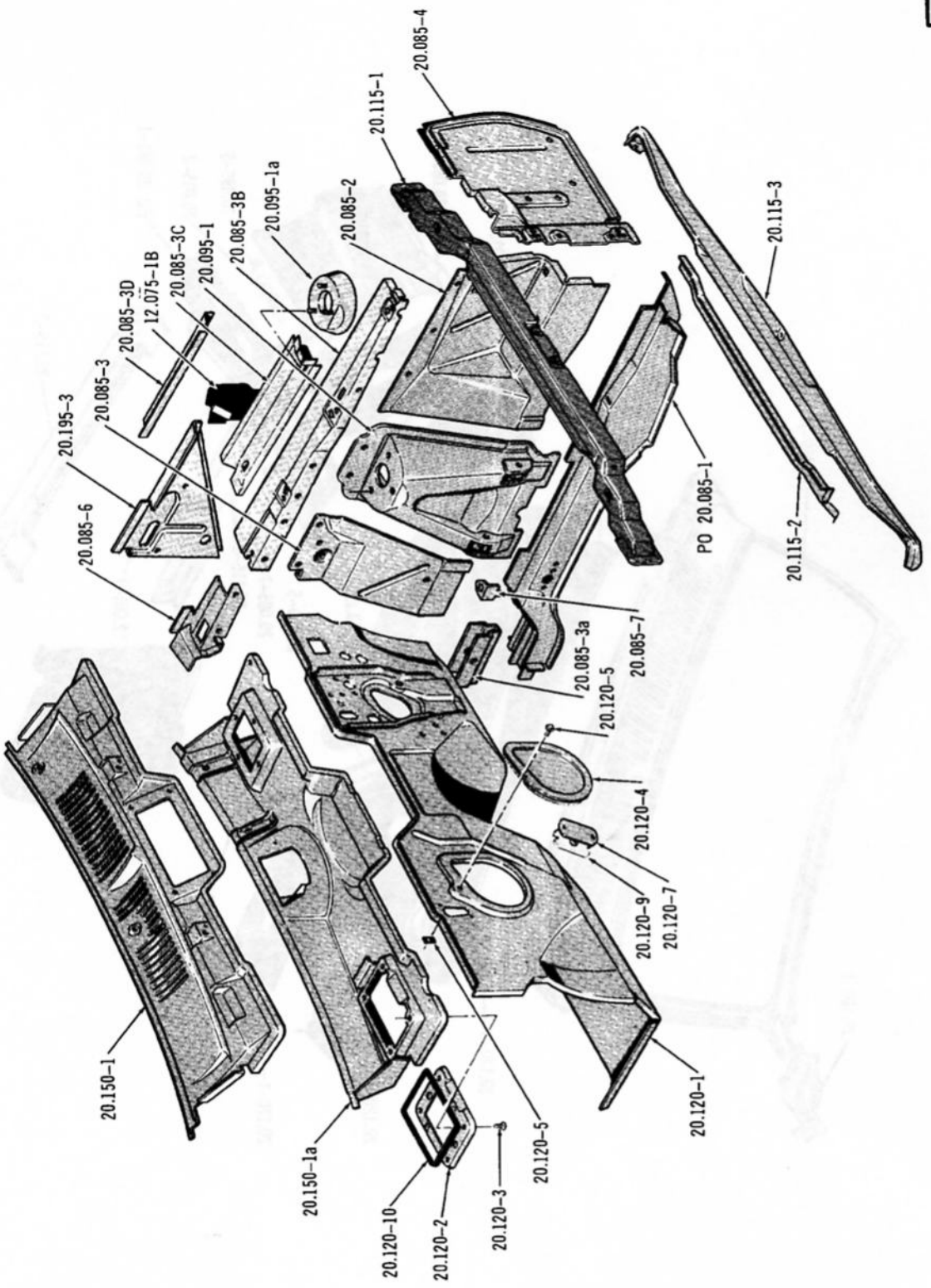

DASH AND FRONT WHEELHOUSE PANEL ... 1970/ (01)(40)

Printed in U.S.A.

3428

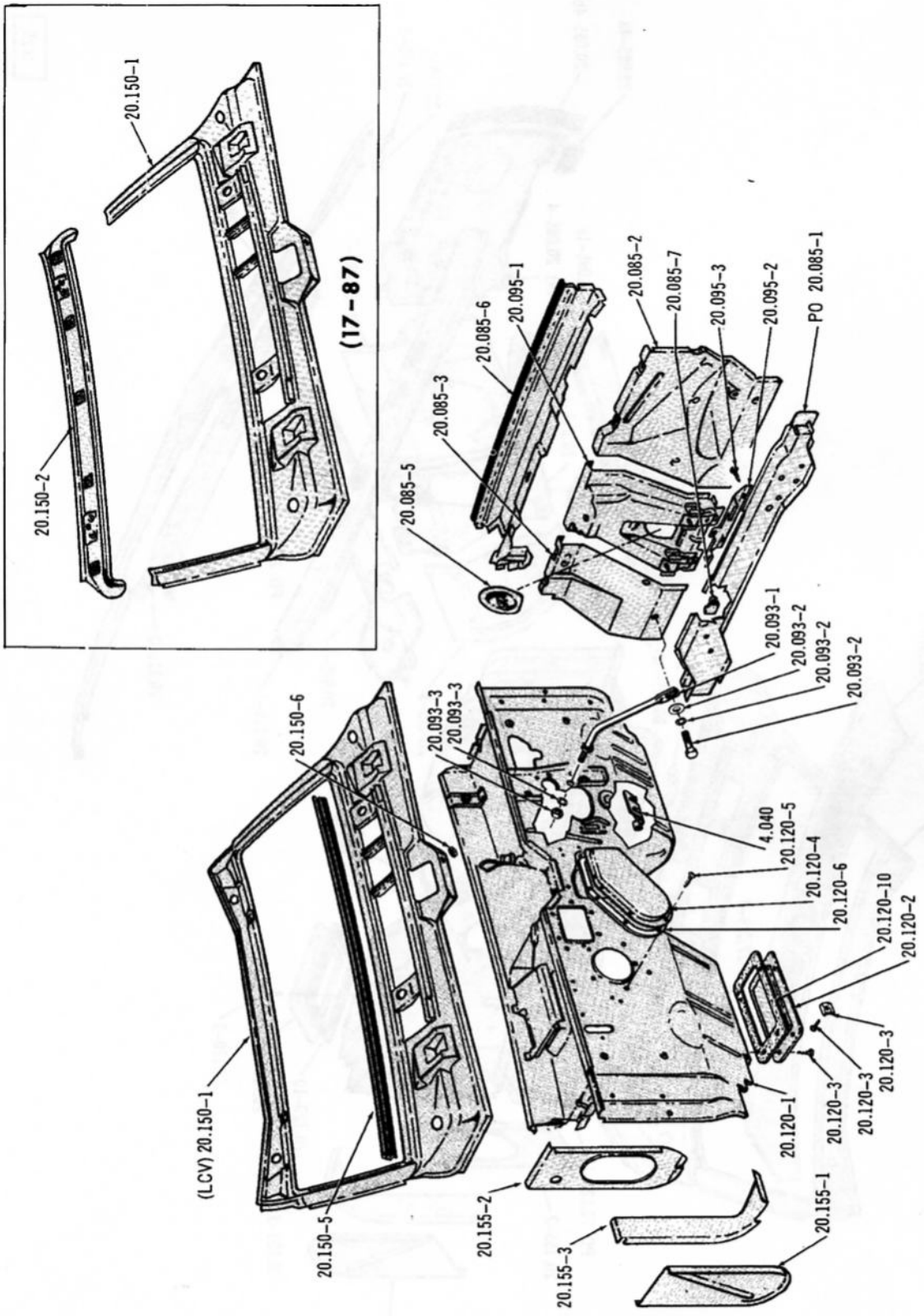

DASH AND FRONT WHEELHOUSE PANEL . . . 1967/69 (10)(50)(80)

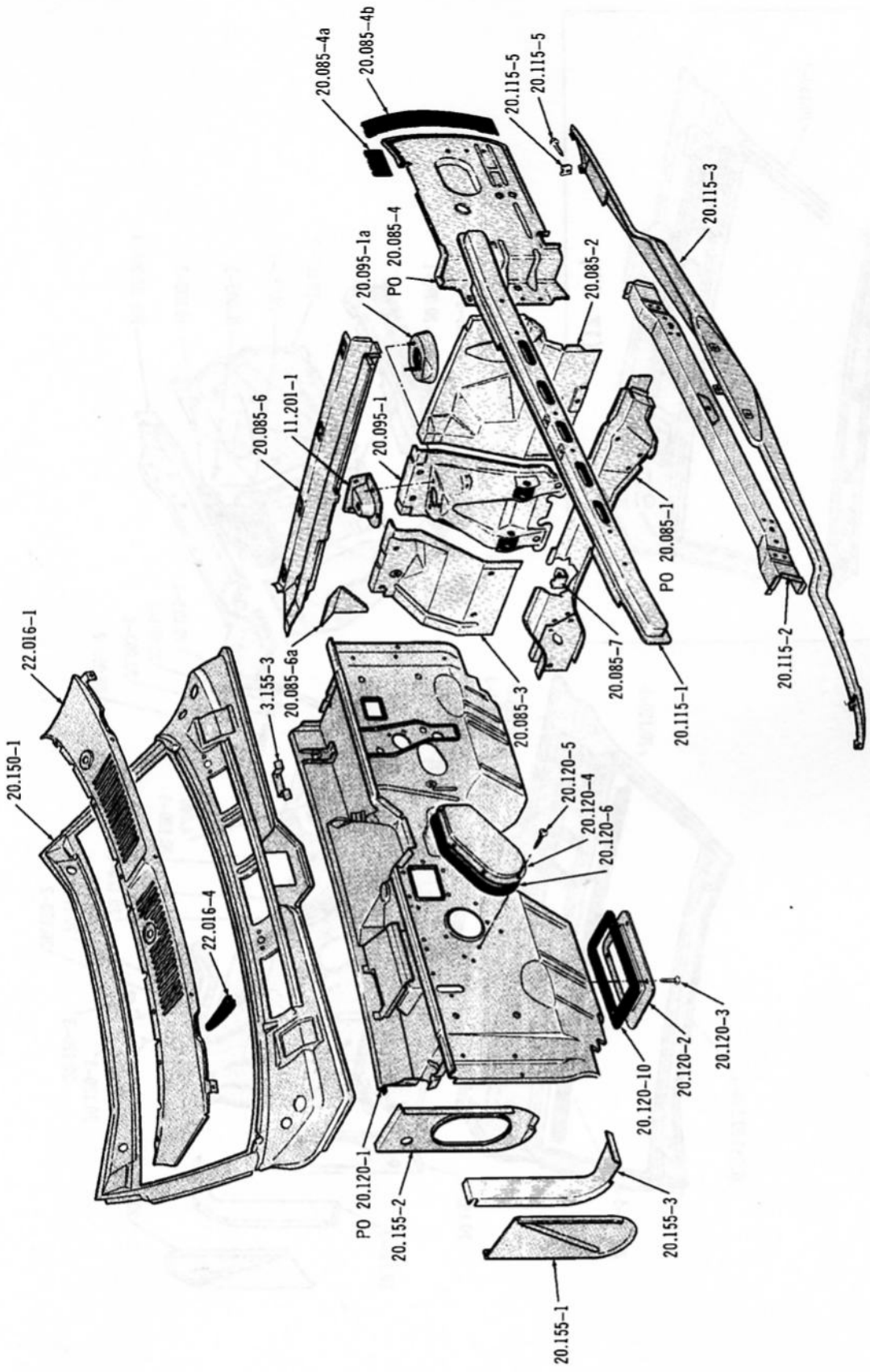

DASH AND FRONT WHEELHOUSE PANEL . . . 1970/ (10)(80)

2567

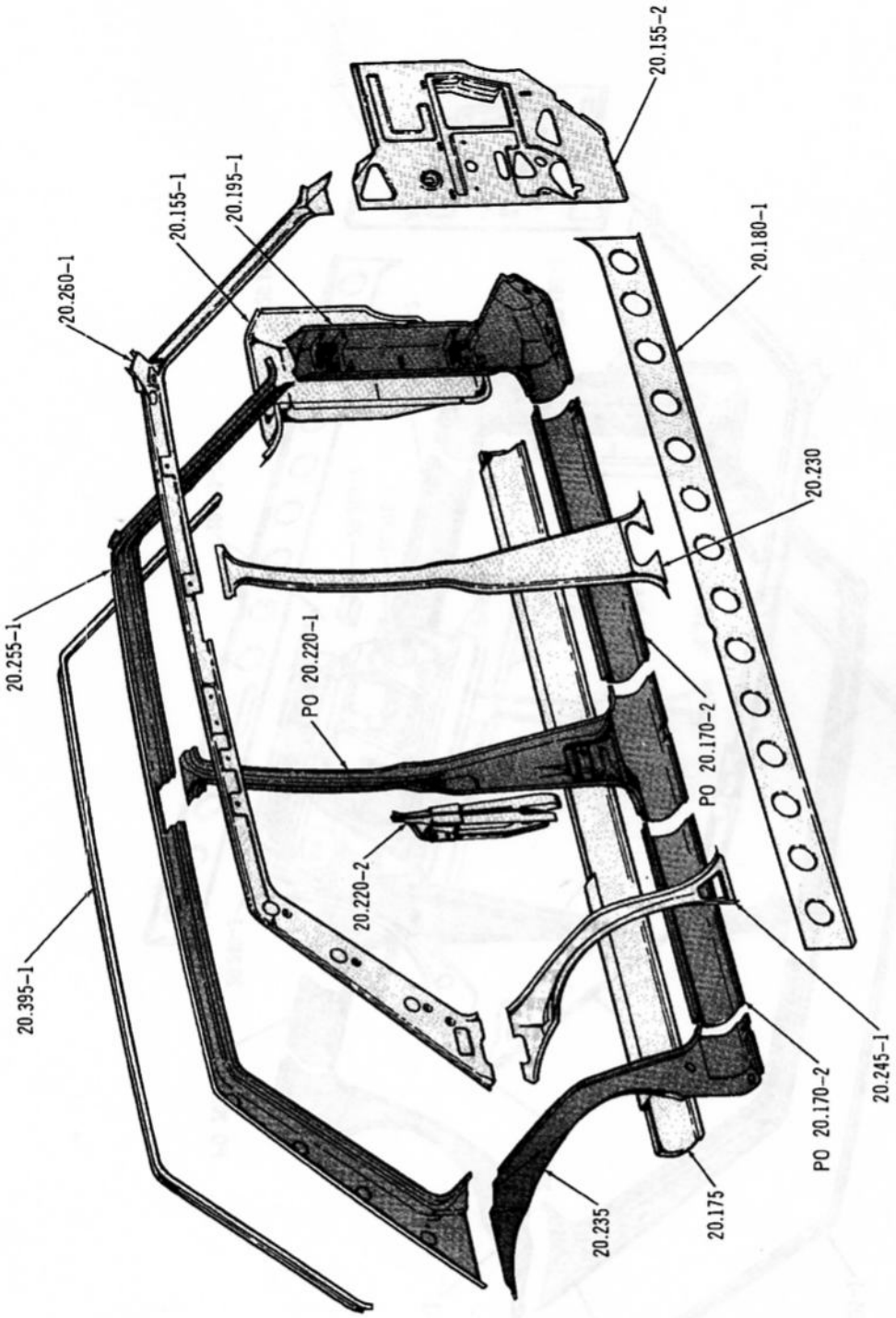

UNISIDE ... 1967/69 (05)

2968

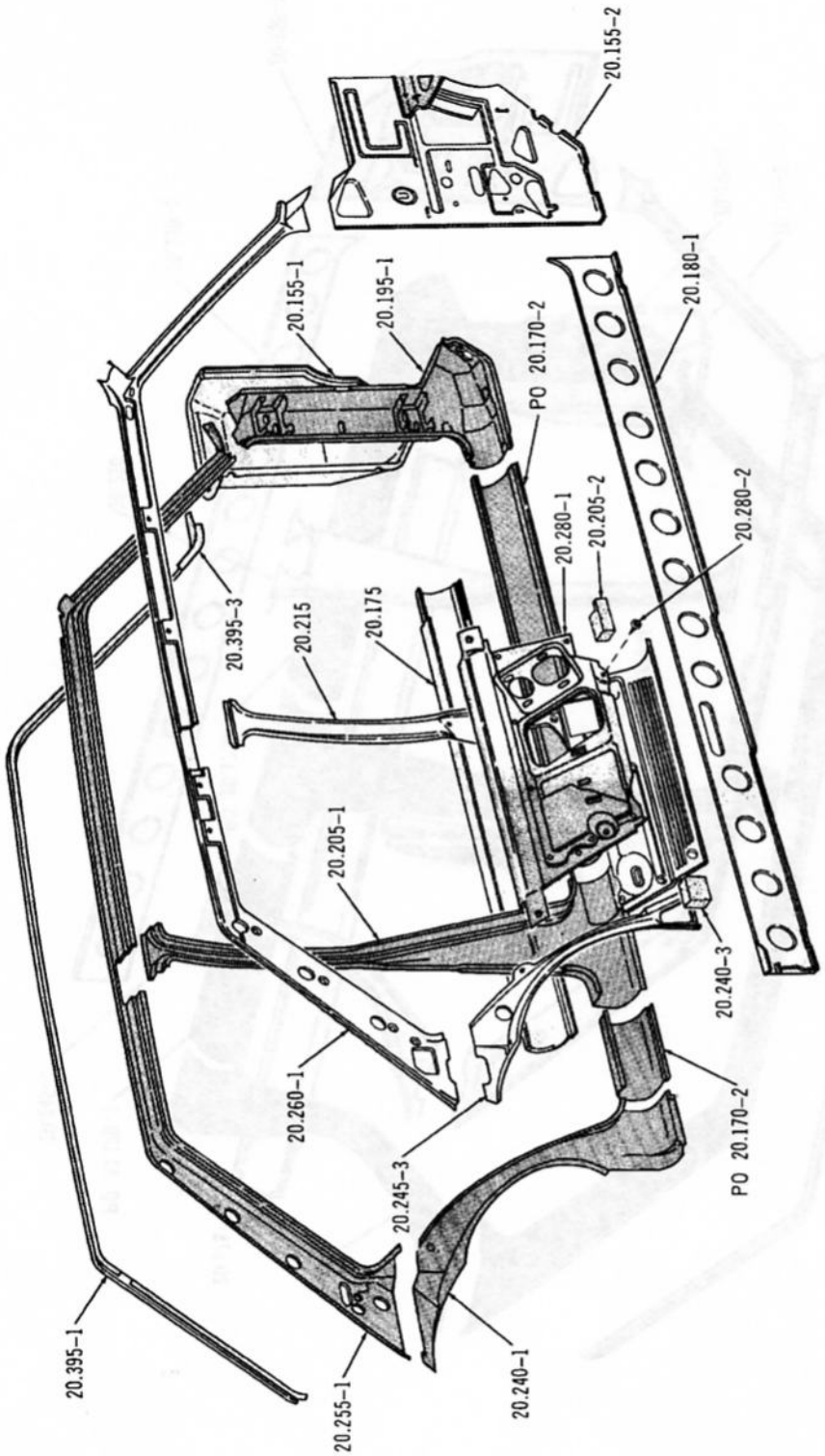

UNISIDE ... 1967/69 (06)

1576

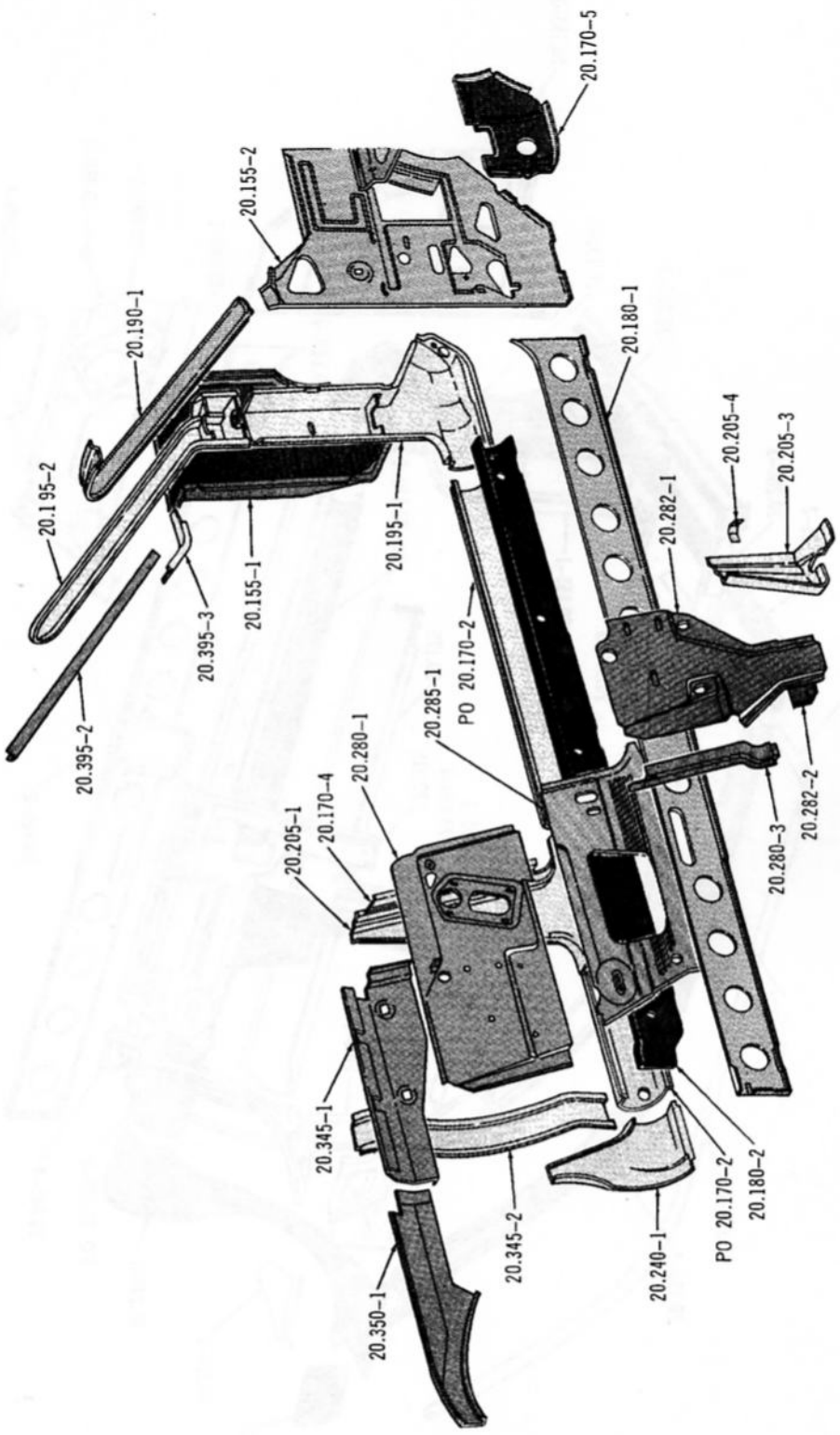

UNISIDE ... 07

2969

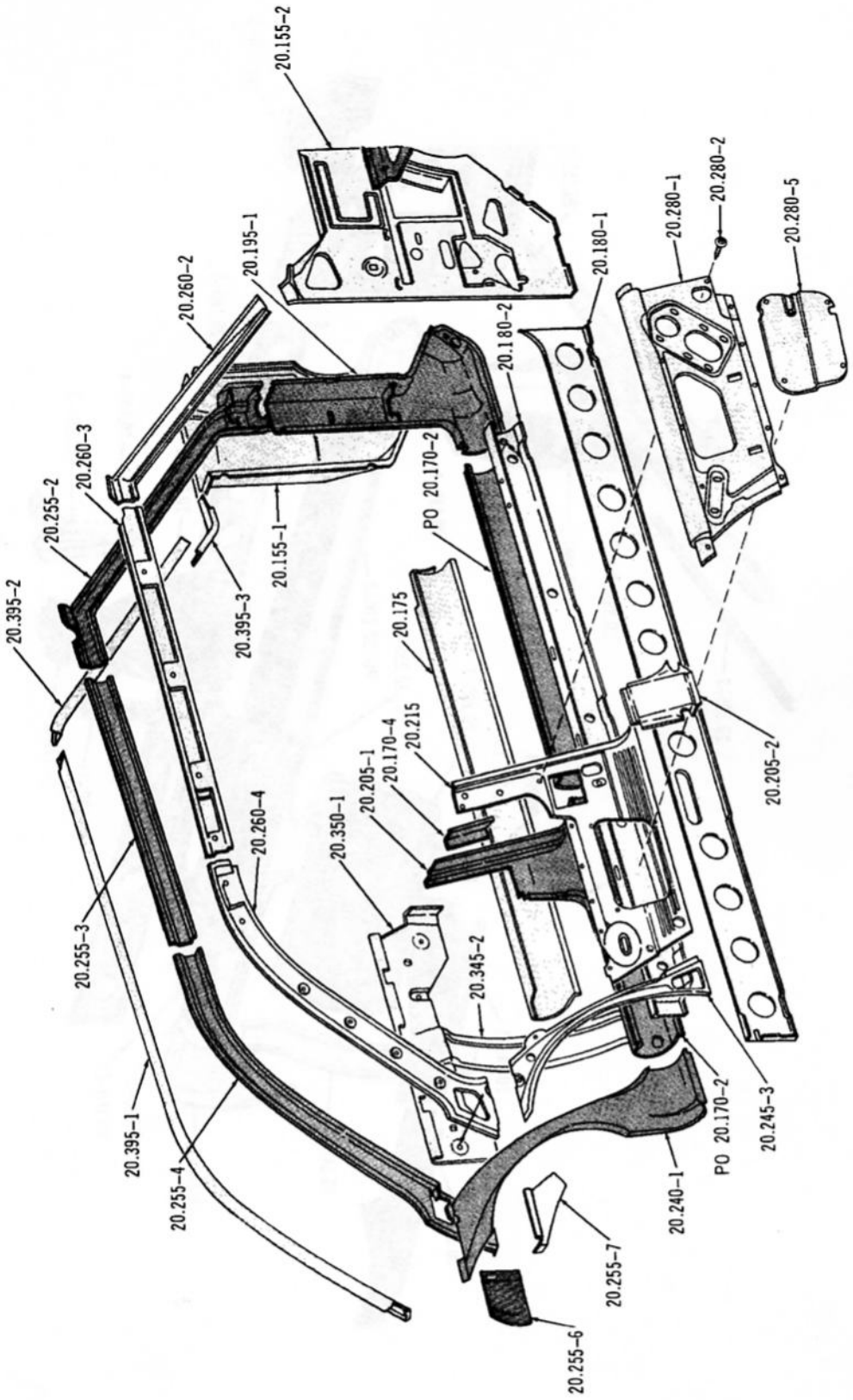

UNISIDE ... 1967/69 (09)

3157

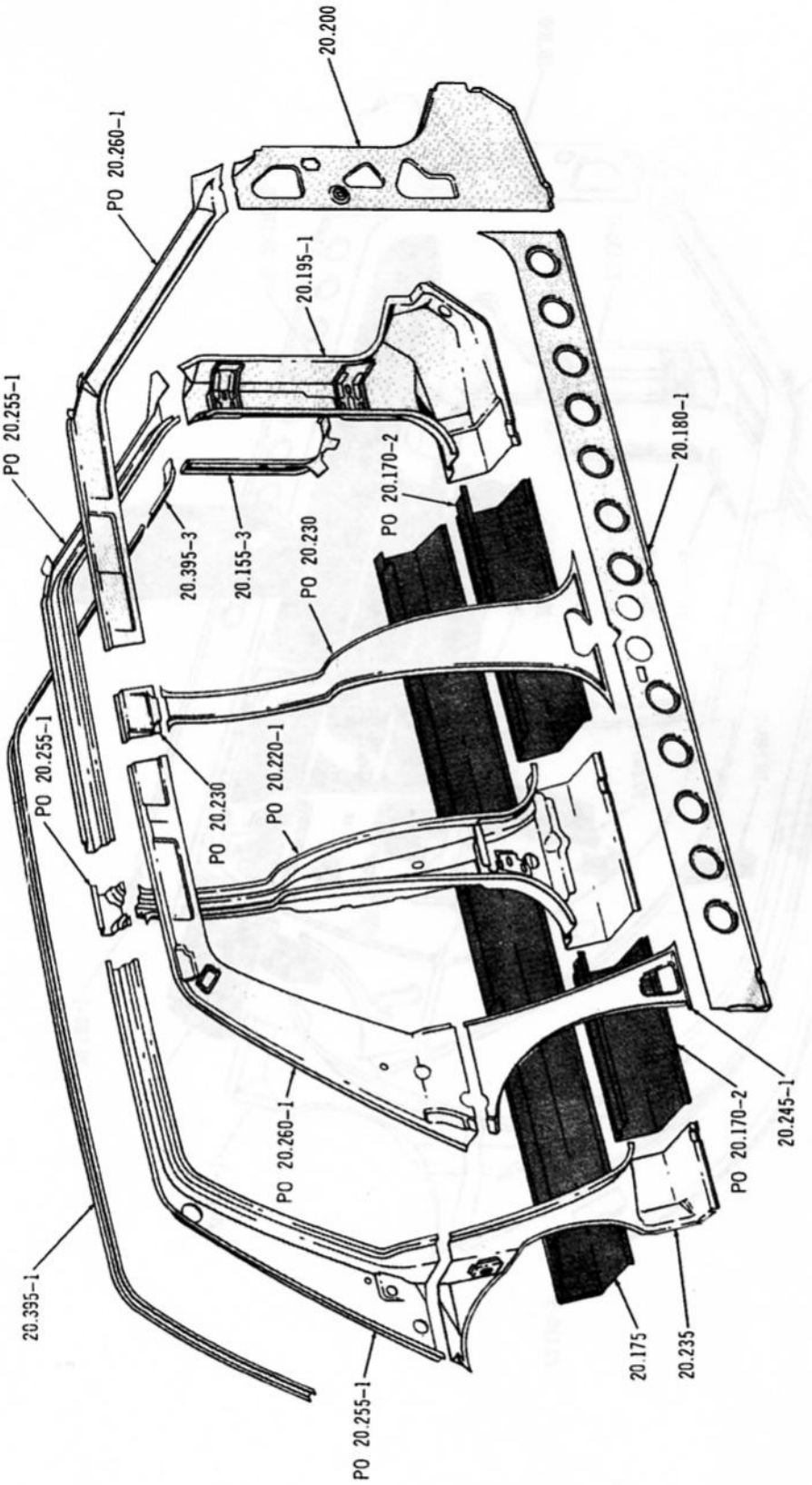

UNISIDE ... 1967/69 (15)(85), 18, 88

Printed in U.S.A.

3158

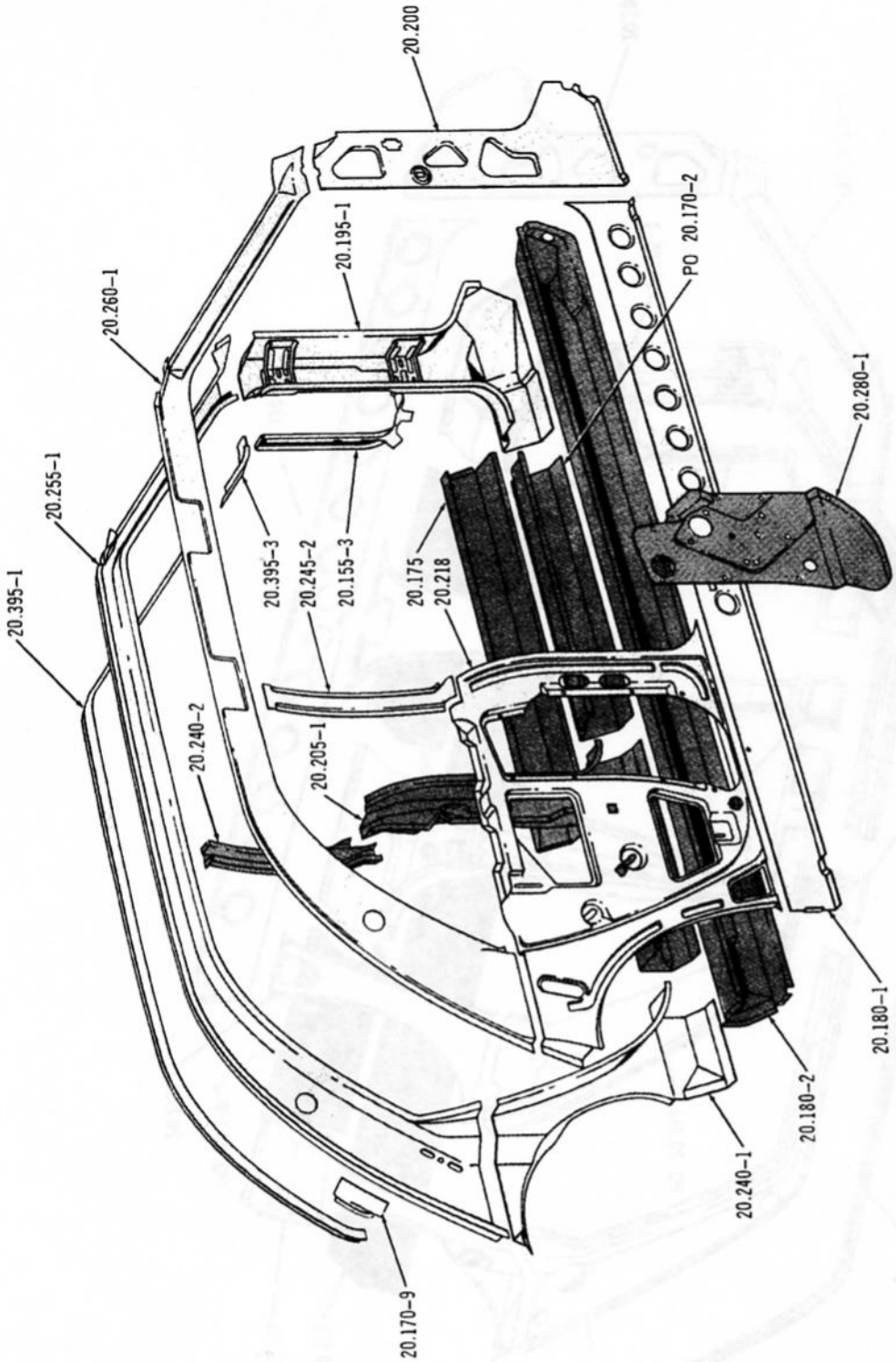

UNISIDE ... 16, 86, 1967/69 (19)(89)

3195

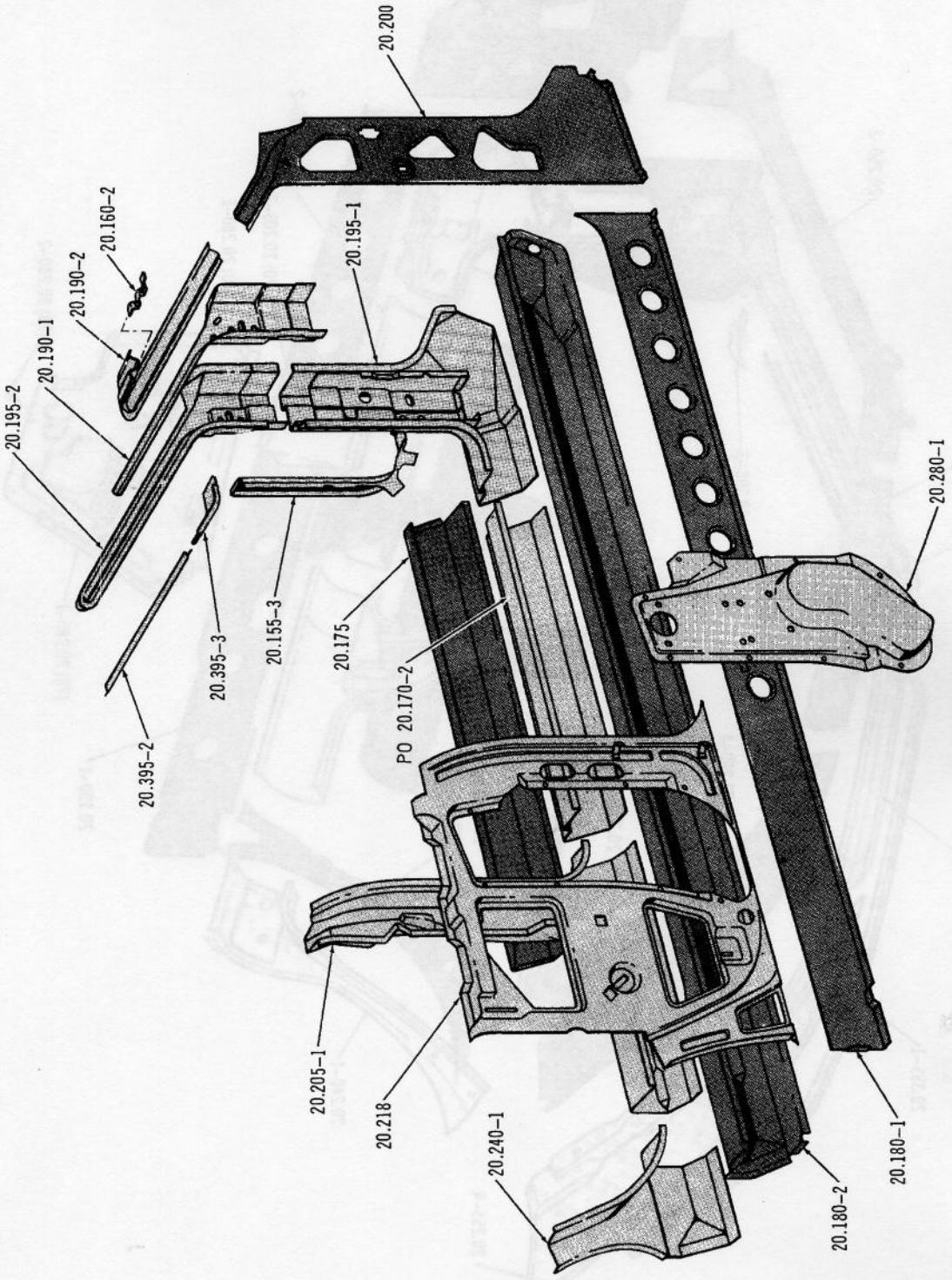

UNISIDE ... 17, 87

3915

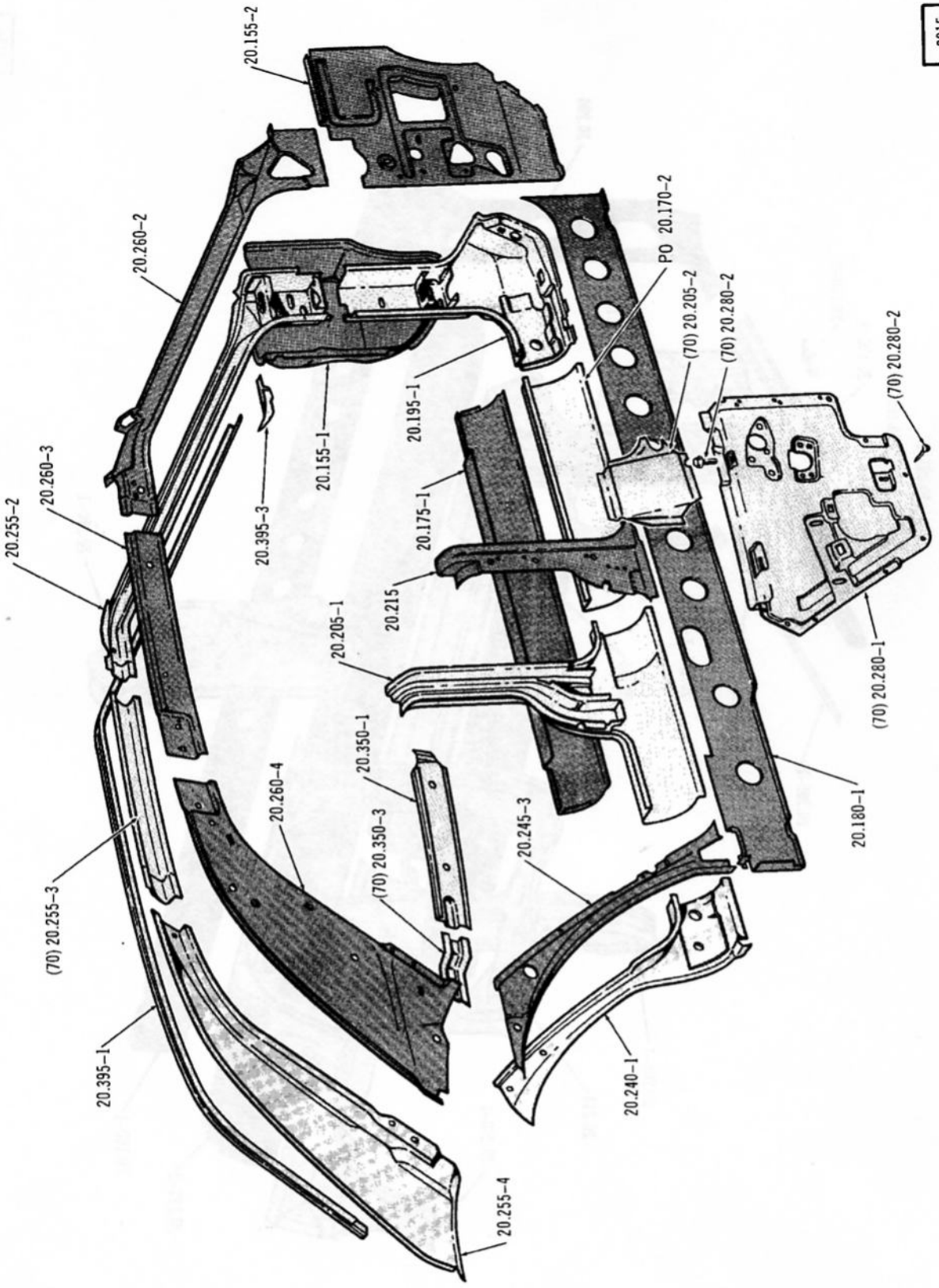

UNISIDE ... 1968/70 (30)(70)

5031

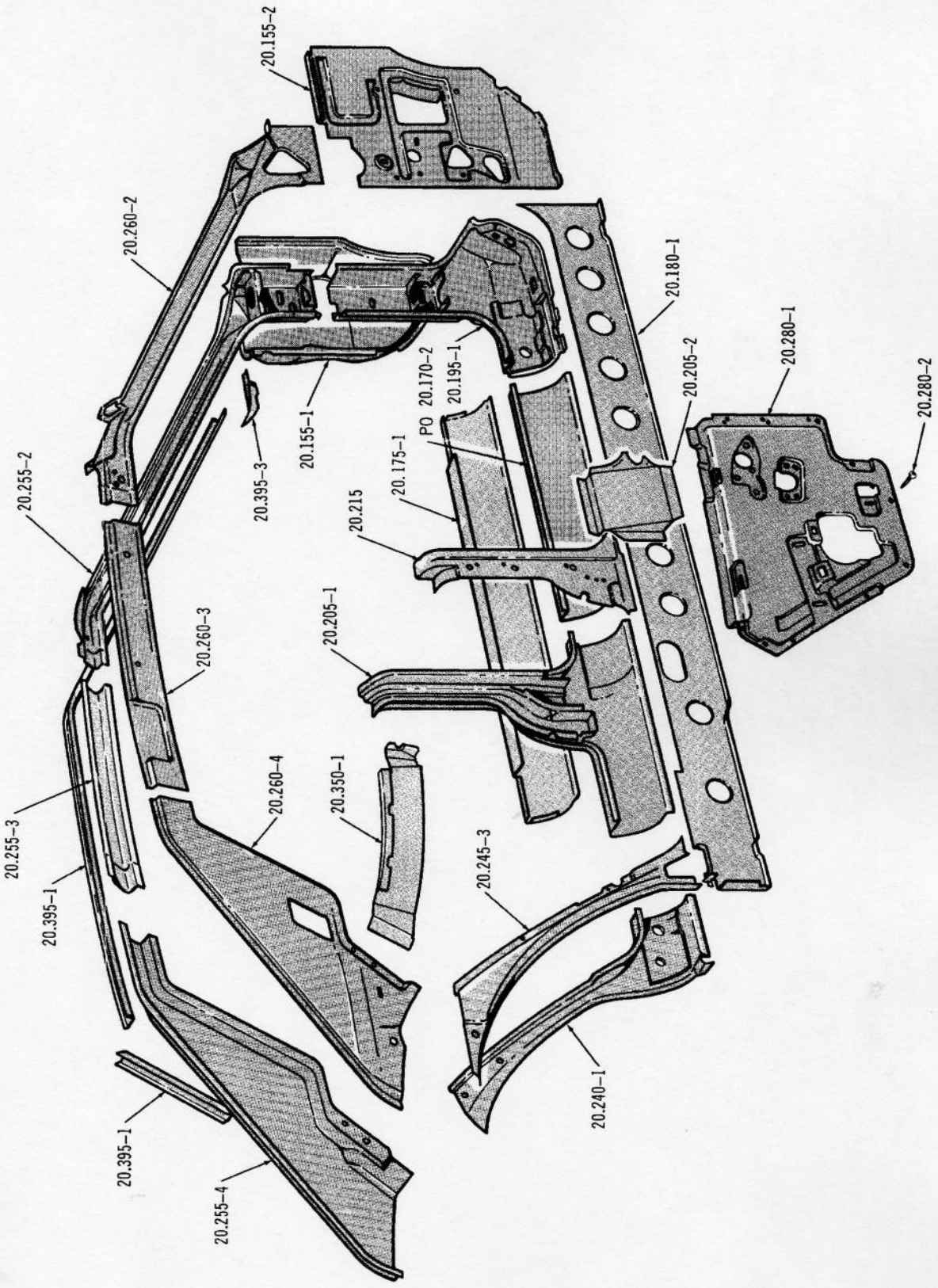

UNISIDE . . . 1971/ (70)

Printed in U.S.A.

3198

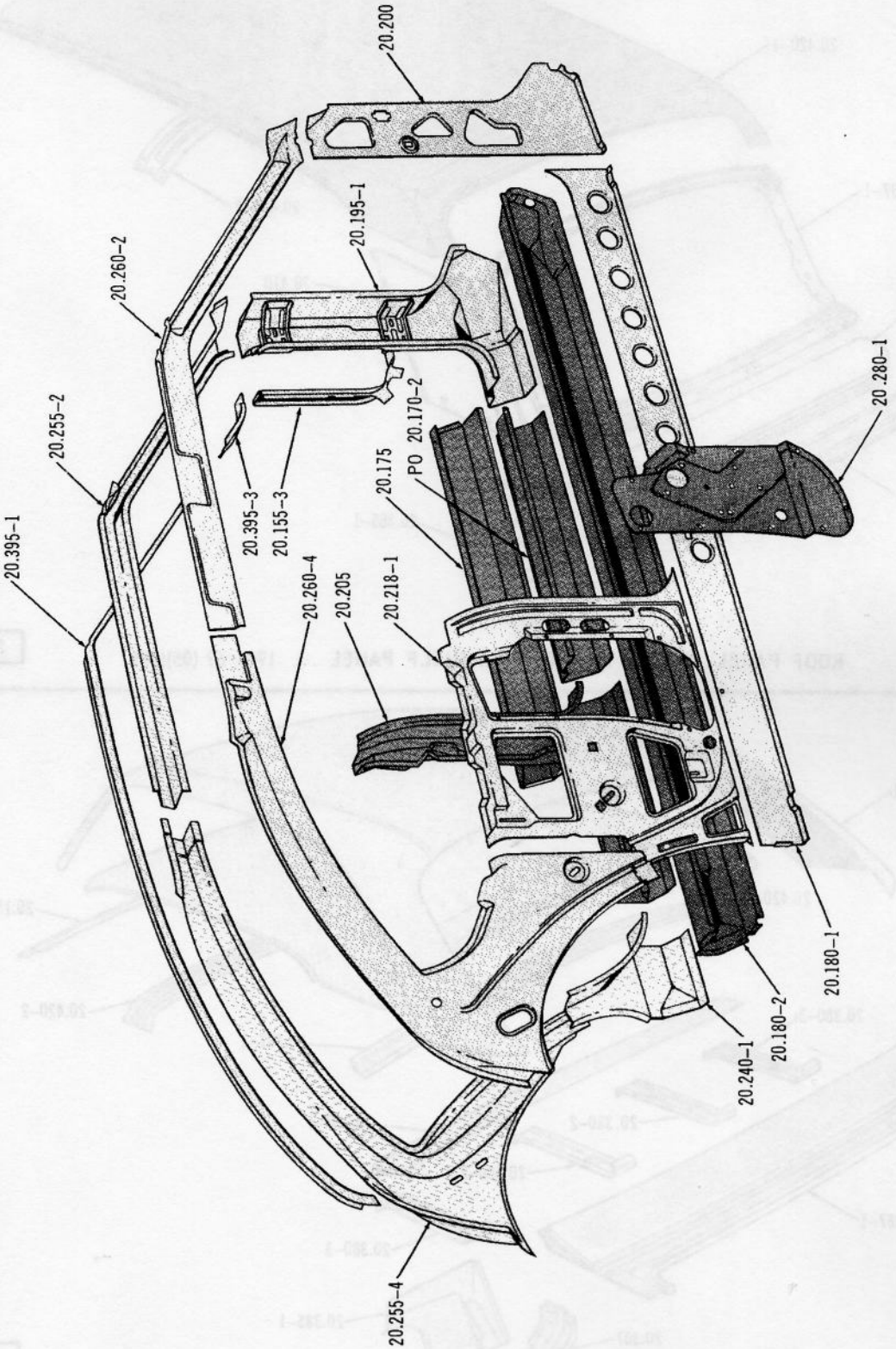

UNISIDE ... 50

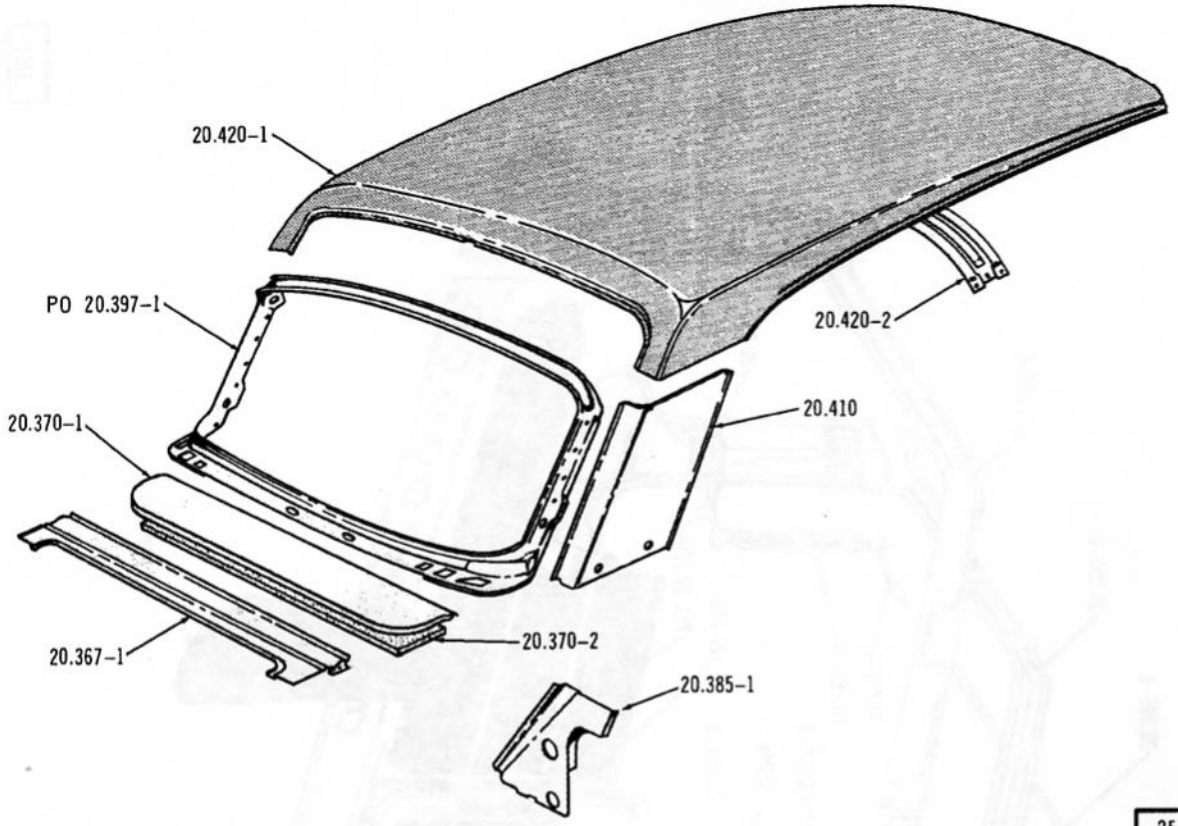

ROOF PANEL, SUPPORTS AND REAR SHELF PANEL ... 1967/69 (05)(06)

2544

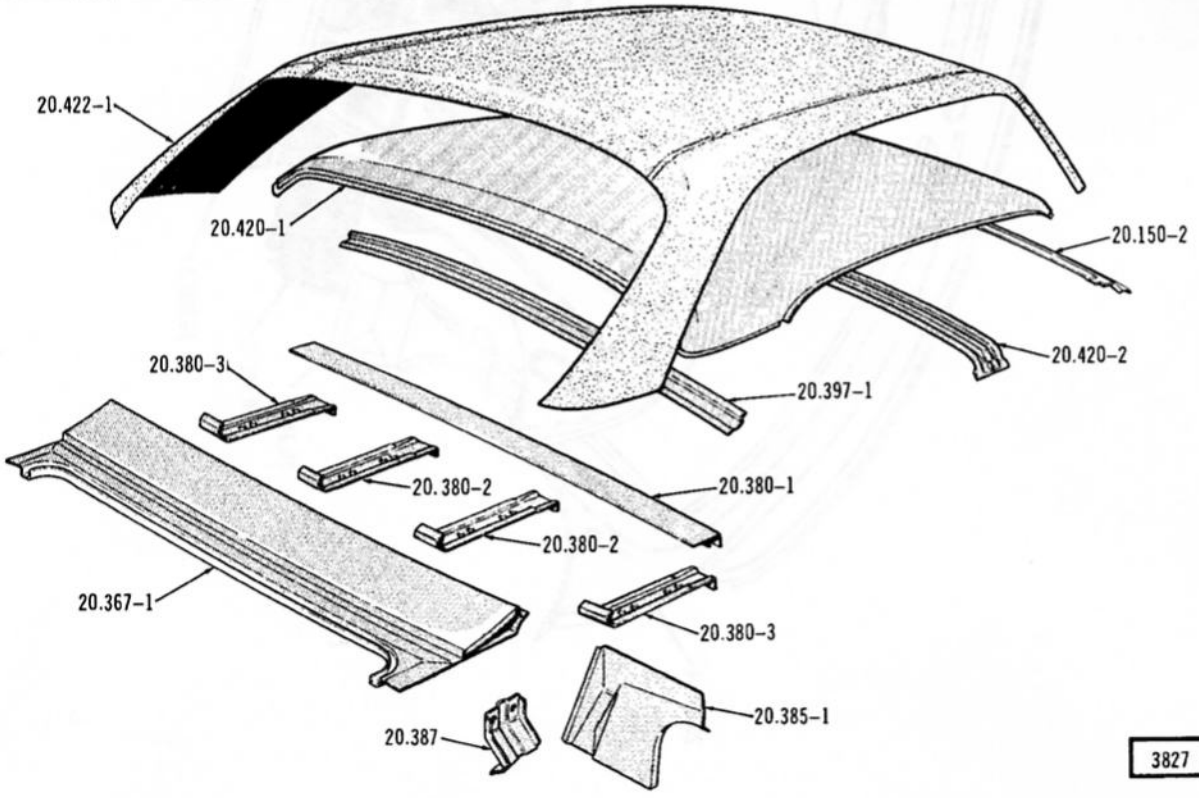

ROOF PANEL, SUPPORTS AND REAR SHELF PANEL ... 1970/ (05)(06)

3827

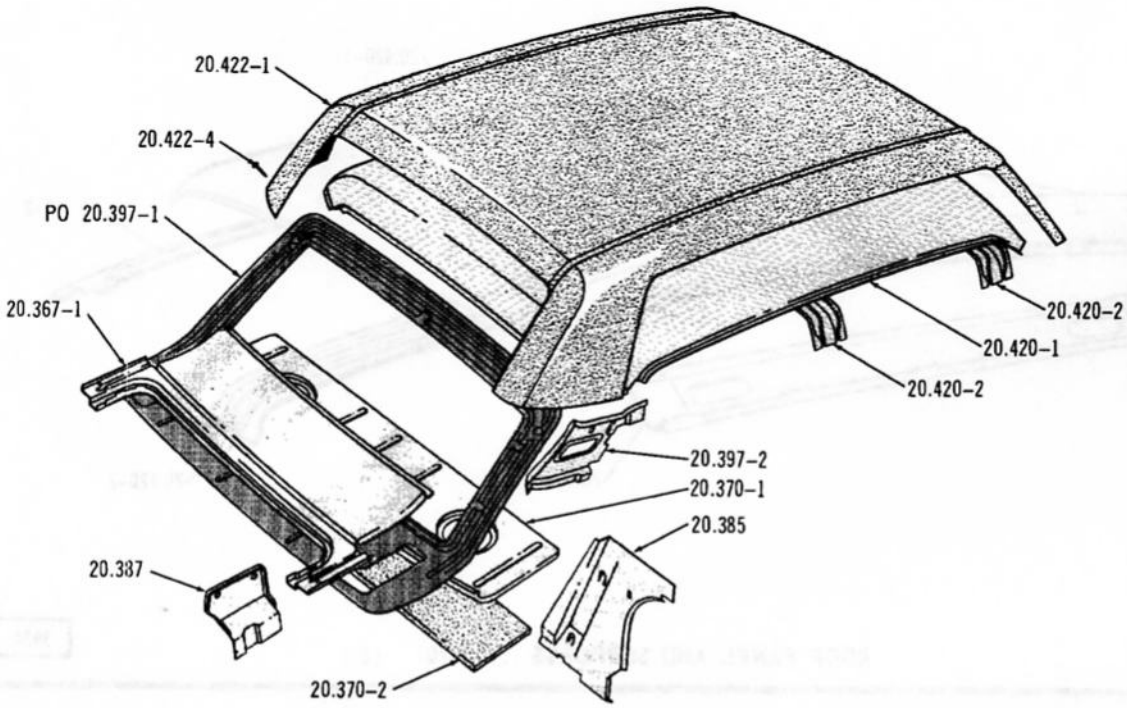

ROOF PANEL, SUPPORTS AND REAR SHELF PANEL ... 1967/69 (15)(85) 3420

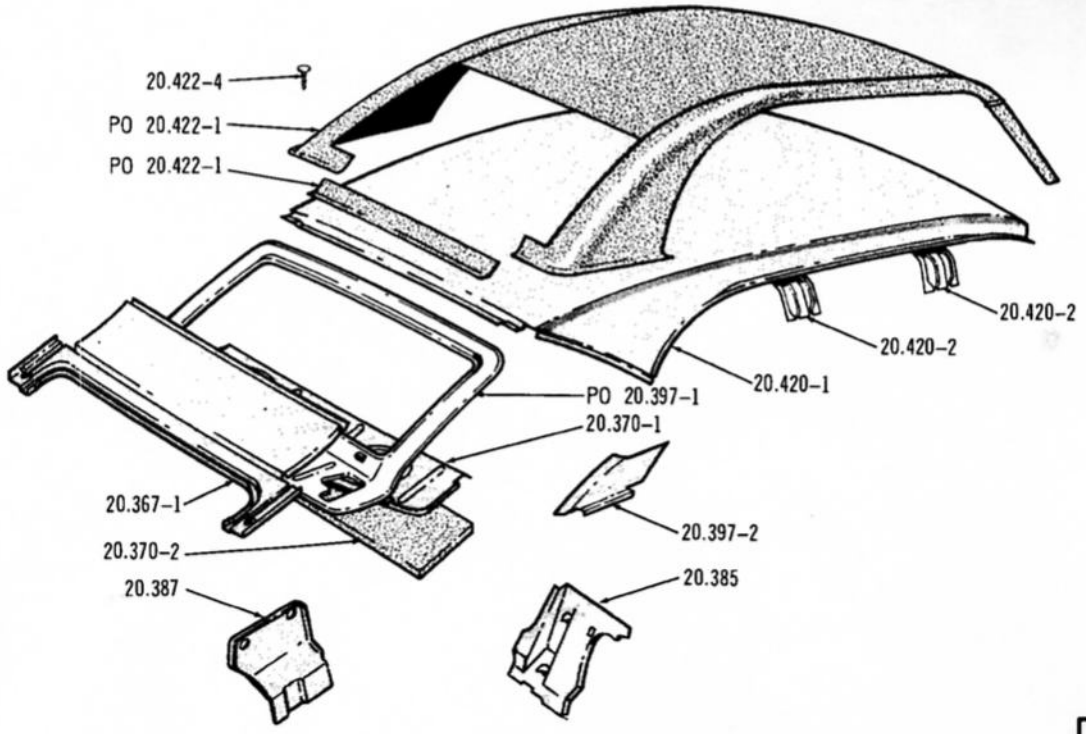

3393

ROOF PANEL, SUPPORTS AND REAR SHELF PANEL ... 16, 86, 1967/69 (19)(89)

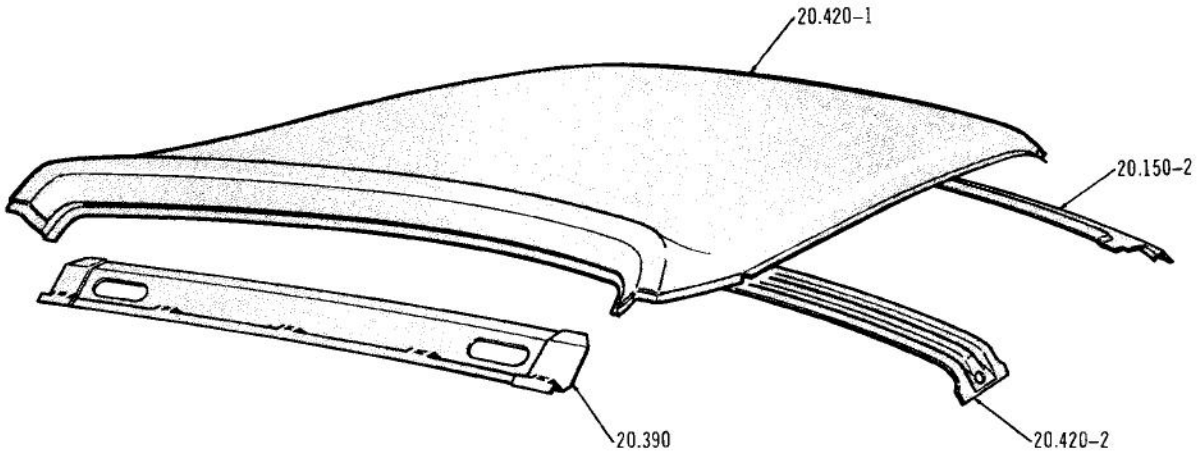

ROOF PANEL AND SUPPORTS ... 1970/ (40)

3934

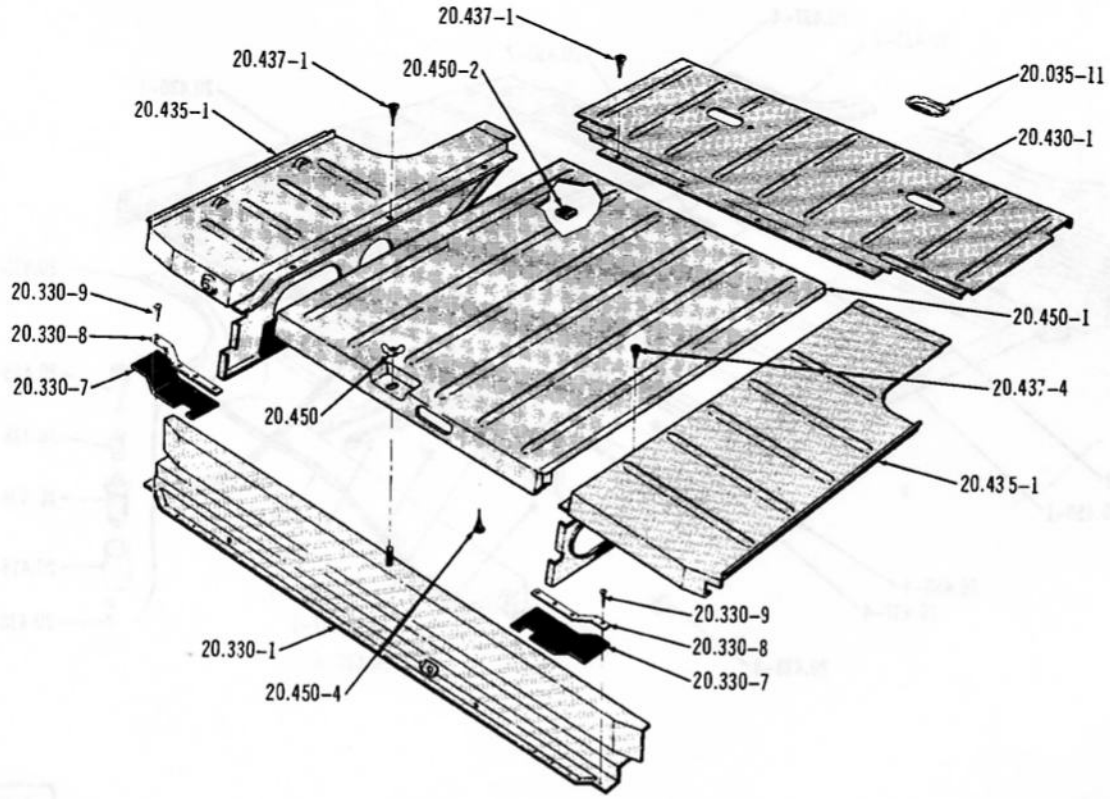

AUXILIARY FLOOR PANELS ... 1967/69 (08)

3156

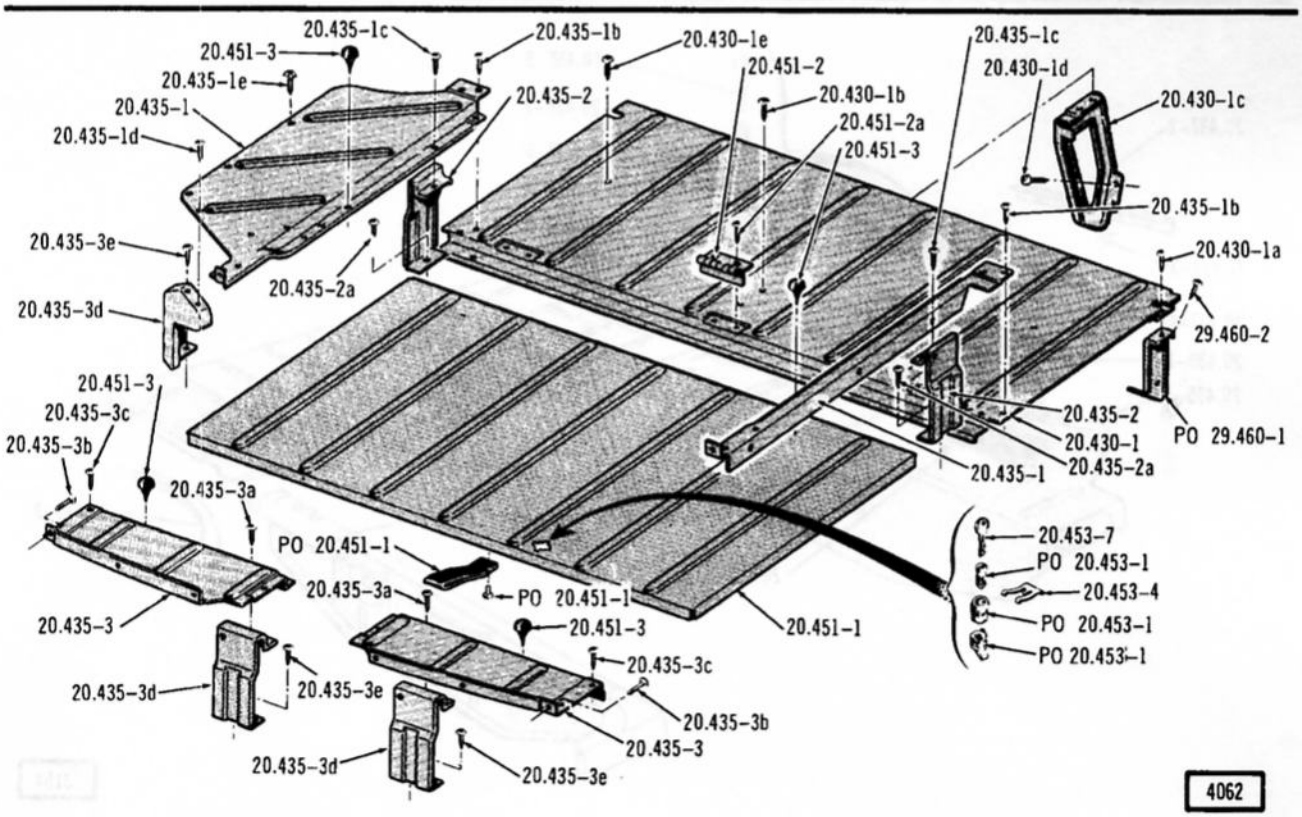

4062

AUXILIARY FLOOR PANELS ... 1971/ (08)

Printed in U.S.A.

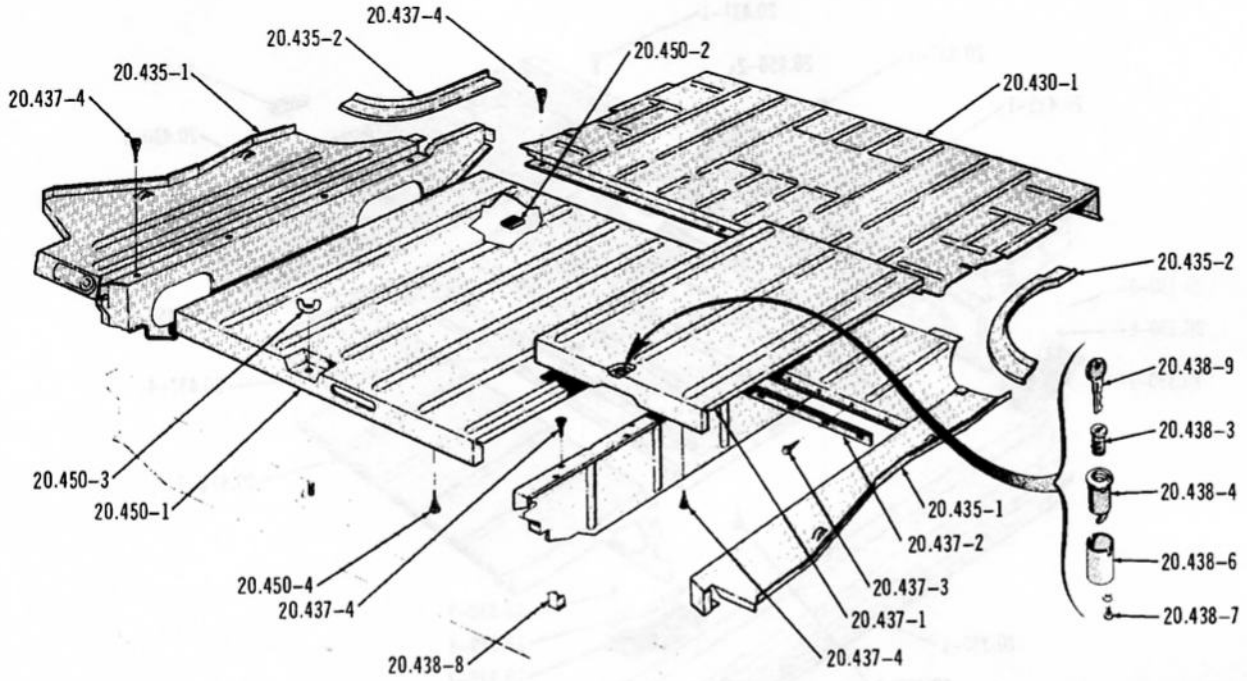

3153

AUXILIARY FLOOR PANELS ... 18 (L3S), 1967/68 (88-L3S)

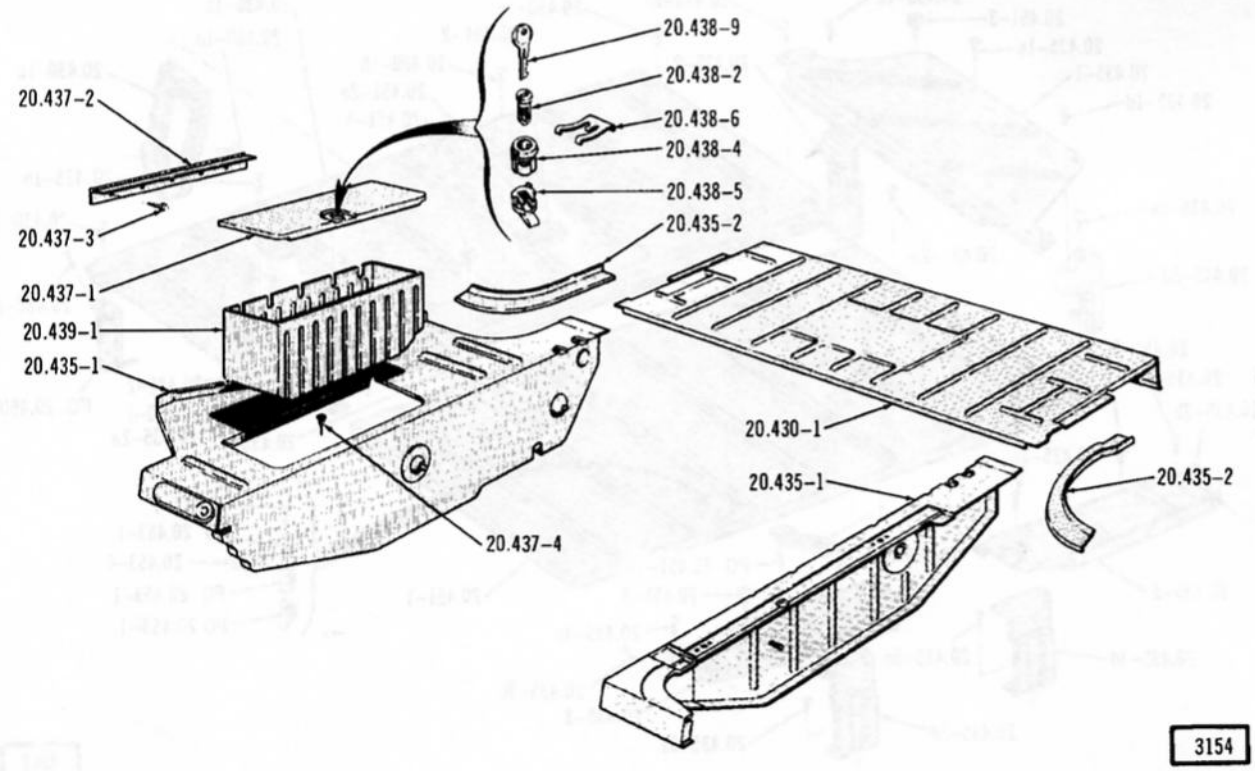

3154

AUXILIARY FLOOR PANELS ... 18 (W3S), 1967/ (88-W3S)

4095

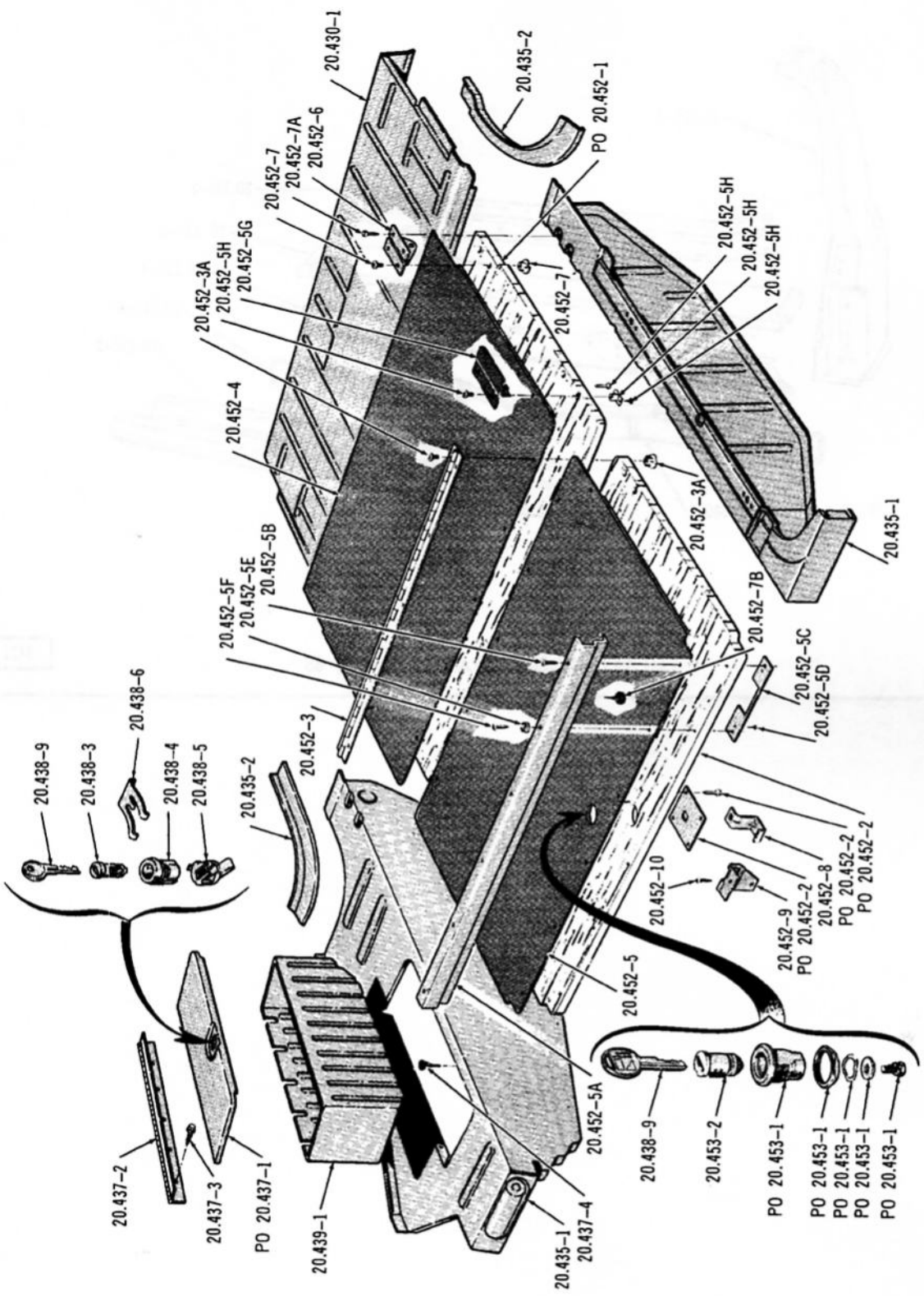

AUXILIARY FLOOR PANELS (L3S) . . . 1969/ (88)

Printed in U.S.A.

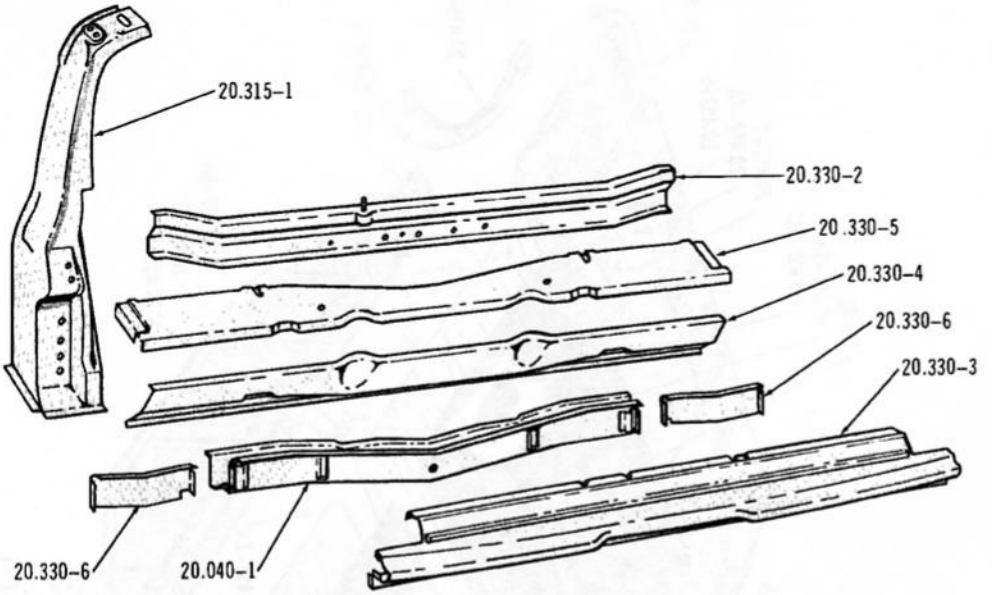

TAILGATE OPENING PANELS ... 18, 88

3421

GROUP NO. — DESCRIPTION — YEAR and MODEL	"L" CODE	PAKS CODE	PRIMARY GROUP NO.	PER CAR	PART NO.	CODE
20.005–1 PAN ASSEMBLY, Front Floor						
72 01 (LSBW)			.....	1	812 0167	MR
72 01 (WSBW)			.....	1	812 1504	MR
67 05–06–08–09			.....	1	448 1282	MR
68 05–06–08–09 (* 20–1)			.....	1	448 5316	MR
68 05–06–08–09 (* 20–2)			.....	1	448 5431	MR
69 05–06–08–09			.....	1	448 5431	MR
70 05–06			.....	1	448 7309	MR
71 05–06–08			.....	1	812 0167	MR
67 07			.....	1	448 1283	MR
69/71 10–80			.....	1	360 8690	MR
72 10–80 (LSBW)			.....	1	653 1630	MR
72 10–80 (WSBW)			.....	1	653 1663	MR
67 15–16–18–19–59–85–86–88–89			.....	1	448 4250	MR
68 15–18–19–85–88–89 (* 20–1)			.....	1	448 5334	MR
68 15–18–19–85–88–89 (* 20–2)			.....	1	448 5418	MR
67 17–87			.....	1	448 4374	MR
68 17 (* 20–1)			.....	1	448 5335	MR
68 17 (* 20–2) *(Ref. Pr. List)*			.....	1	448 5419	MR
68/70 30			.....	1	448 5492	MR
70 40			.....	1	448 8390	MR
71 40			.....	1	812 0190	MR
72 40 (LSBW)			.....	1	812 0190	MR
72 40 (WSBW)			.....	1	812 1505	MR
68 70 (* 20–1)			.....	1	448 5267	MR
68 70 (* 20–2)			.....	1	448 5434	MR
69/70 70			.....	1	448 5434	MR
71 70			.....	1	448 8613	MR
72 70 (LSBW)			.....	1	812 0284	MR
72 70 (WSBW–* 20–11)			.....	1	812 1507	MR
72 70 (WSBW–* 20–10)			.....	1	812 2373	MR
20.005–2 SPACER, Pan To Side Sill						
67/68 (Left) 07–17–87			.....	1	350 0923	
67/68 (Right) 07–17–87			.....	1	350 0922	
20.005–3 REINFORCEMENT, Front Seat Belt Mounting						
67/69 01			.....	2	349 8880	
68/70 30–70			.....	2	349 8880	
70 10–80			.....	2	349 8880	
71 10–80			.....	4	364 1979	
72 10–80 (LSBW)			.....	4	364 1979	
72 10–80 (WSBW)			.....	4	365 7772	
70 (Inner) 01–40 *(Use 364 1971)*			.....	2	361 5215	
71 (Inner) 01–40			.....	2	364 1971	
72 (Inner) 01–40 (LSBW)			.....	2	364 1971	
72 (Inner) 01–40 (WSBW)			.....	2	365 7770	
71 (Inner) 70			.....	2	364 1976	
72 (Inner) 70 (LSBW)			.....	2	364 1976	
72 (Inner) 70 (WSBW)			.....	2	365 7771	
70 (Outer) 01–40			.....	2	349 8880	
71 (Outer) 01–40			.....	2	364 1976	
72 (Outer) 01–40 (LSBW)			.....	2	364 1976	
72 (Outer–Left) 01–40 (WSBW)			.....	1	365 7603	
72 (Outer–Right) 01–40 (WSBW)			.....	1	365 7602	
71 (Outer) 70			.....	2	364 1976	
72 (Outer) 70 (LSBW)			.....	2	364 1976	
72 (Outer) 70 (WSBW)			.....	2	365 7771	
20.005–4 RETAINER, Rear Seat Cushion						
67/69 01 (LCV)			.....	2	347 2243	
70/ 01–40			.....	2	361 5244	
67/ 10–50–70–80			.....	2	357 4242	

BODY SHEET METAL

20.005–5 REINFORCEMENT, Rear Seat Belt Mounting

68/70	(Left) 70	.....	1	630 0005	
68/70	(Right) 70	.....	1	630 0004	
70	(Inner) 01–40 ***(Use 364 1971)***	.....	2	361 5215	
71	(Inner) 01–40	.....	2	364 1971	
72	(Inner) 01–40 (LSBW)	.....	2	364 1971	
72	(Inner) 01–40 (WSBW)	.....	2	365 7770	
71/	(Inner) 70	.....	2	364 1976	
72	(Outer) 01–40 (WSBW)	.....	2	365 7606	
72	(Outer) 70 (WSBW)	.....	2	365 7606	
70	(Outer-Right) 01–40	.....	1	361 5300	
72	(Outer-Right) 01–40 (LSBW)	.....	1	361 5300	
71	(Outer-Right) 70	.....	1	364 1974	
72	(Outer-Right) 70 (LSBW)	.....	1	364 1974	MR
70	(Outer-Left) 01–40	.....	1	361 5301	
72	(Outer-Left) 01–40 (LSBW)	.....	1	361 5301	
71	(Outer-Left) 70	.....	1	364 1975	
72	(Outer-Left) 70 (LSBW)	.....	1	364 1975	
67/69	05–06–08–09	.....	2	349 8880	
67/	10–50–80 (LCV)	.....	4	349 8880	
67	***01 (Heavy Duty)***	.....	2	358 2518	

20.005–6 COVER, Underbody Access Hole

67	***85 (RHD-Post Office)***	.....	8	360 8576	

20.005–7 COVER, Floor Pan Torque Link Access Hole

68/70	70 (Used With Torque Links)	.....	2	319 3523	
68/69	01 (Used With Torque Links) ***(Use 319 3523)***	.....	2	319 3760	

20.017–1 REINFORCEMENT, Floor To Front Side Sill

67	(Left) 07 (Six)	.....	1	350 5763	
67	(Right) 07 (Six)	.....	1	350 5762	

20.017–2 PLATE, Floor To Front Side Sill Reinforcement Cross Tie

67	07	.....	1	350 5690	

20.017–3 ATTACHING PARTS, Plate To Reinforcement

BOLT, Hexagon 67	07	.....	6	400 0708	

20.025 CROSSMEMBER, Rear Seat

67	07	.....	1	350 0028	
67/68	17–87	.....	1	357 4330	

20.035–1 PAN ASSEMBLY, Rear Floor

67/69	01	.....	1	350 0020	MR
70/71	01	.....	1	448 7314	MR
72	01	.....	1	812 1700	MR
67/69	10–50–80 (L3S)	.....	1	448 4245	MR
70/	10–80 (L3S)	.....	1	448 7581	MR
67/	10–80 (W3S)	.....	1	448 4242	MR
70	40 ***(Use 448 9160)***	.....	1	448 8394	MR
71	40	.....	1	448 9160	MR
72	40	.....	1	812 1701	
68/69	30–70	.....	1	448 5268	MR
70	30–70	.....	1	448 7935	MR
71/	70	.....	1	448 8614	MR

20.035–2 EXTENSION, Rear Floor Pan (Lower)

67/69	(Left) 01	.....	1	355 2419
70/	(Left) 01	.....	1	361 5243
67/69	(Left) 15-16-17-19-59-85-86-87-89	.....	1	650 1583
70/	(Left) 15-19-85-89	.....	1	361 5613
67/71	(Left) 18-88	.....	1	357 4351
72	(Left) 18-88	.....	1	361 0089
68/70	(Left) 30-70	.....	1	360 0167
70/	(Left) 40	.....	1	363 6021
71/	(Left) 70	.....	1	363 2159
67/69	(Right) 01	.....	1	355 2418
70/	(Right) 01	.....	1	361 5242
67/69	(Right) 15-16-17-19-59-85-86-87-89	.....	1	357 4348
70/	(Right) 15-19-85-89	.....	1	361 5612
67/68	(Right) 18-88 (L3S)	.....	1	357 4350
69/71	(Right) 18 (L3S)	.....	1	357 4350
72	(Right) 18 (L3S)	.....	1	361 0088
67/68	(Right) 18-88 (W3S)	.....	1	357 4352
69/71	(Right) 18 (W3S)	.....	1	357 4352
72	(Right) 18 (W3S)	.....	1	361 0090
68/70	(Right) 30-70	.....	1	360 0166
70/	(Right) 40	.....	1	363 6020
71/	(Right) 70	.....	1	363 2158
69/71	(Right) 88	.....	1	357 4352
72	(Right) 88	.....	1	361 0090

20.035–3 PANEL, Rear Floor Pan Side Extension

67/68	(Left) 18-88 (W3S)	.....	1	357 4443
69/	(Left) 18 (W3S)	.....	1	357 4443
69/	(Left) 88	.....	1	357 4443
67/68	(Right) 18-88 (W3S)	.....	1	357 4442
69/	(Right) 18 (W3S)	.....	1	357 4442
69/	(Right) 88	.....	1	357 4442

20.035–3a FILLER, Rear Floor Pan

70	40	.....	1	361 5467
71/	40	.....	1	365 0785

20.035–4 PANEL, Spare Wheel Well

67/68	18-88 (W3S)	.....	1	357 4390
69	18 (W3S)	.....	1	357 4390
70/	18 (W3S)	.....	1	360 9395
69	88	.....	1	357 4390
70/	88	.....	1	360 9395

20.035–5 SUPPORT, Rear Floor Pan Gas Tank Strap

67/69	01	.....	1	350 0045

20.035–6 BAFFLE, Muffler

67/69	01	.....	1	352 3056

20.035–7 BRACKET, Rear Seat Belt Anchor Mounting

67/71	10-50-80	.....	2	355 4065
72	10-80 (LSBW)	.....	2	355 4065
72	10-80 (WSBW)	.....	2	365 7620
68/70	(Left) 70	.....	1	630 0005
68/70	(Right) 70	.....	1	630 0004

BODY SHEET METAL

20.035–8 BRACKET, Spare Tire

67/69		.....	1	346 3526
70	01-30-40-70	.....	1	363 0221
71/	05-06-70	.....	1	363 0221
72	08	.....	1	363 0221
70/	10-80	.....	1	363 0221
71	40 (Round Hole)	.....	1	363 0221
71	40 (Slotted Hole)	.....	1	321 5343
72	40	.....	1	321 5343

20.035–9 BRACKET, Spare Tire Support And Jack Mounting

67/69	15-16-19-59-85-86-89	.....	1	650 1600

20.035–10 BRACKET, Top Operating Motor Mounting

67	07	.....	1	351 7416
67/68	17-87	.....	1	357 4014

20.035–11 COVER, Shock Absorber Access Hole

67/		.....	2	317 7315

20.035–12 GASKET, Rear Shock Opening Cover

72	01-10-80	.....	1	314 9882

20.037–1 BRACKET, Rear Spring Retainer

67/	(Left) 10-50-80	.....	1	357 4287
67/	(Right) 10-50-80	.....	1	357 4286

20.037–2 BRACKET, Upper Control Arm Mounting

67/68	(Left) 10-50-80	.....	1	357 4295
69/	(Left) 10-80	.....	1	360 8885
67/68	(Right) 10-50-80 ***(Use 360 8884)***	.....	1	357 4294
69/	(Right) 10-80	.....	1	360 8884

20.038–1 CROSSMEMBER ASSEMBLY, Rear Shock Absorber Mounting Bracket

67/69	01	.....	1	350 0063
70	01-40	.....	1	361 5227
71	01-40 (* 20-18)	.....	1	361 5227
71	01-40 (* 20-19)	.....	1	812 0000
72	01-40	.....	1	812 0000
68/	30-70	.....	1	630 1434
67/	10-50-80	.....	1	357 4291

20.038–2 REINFORCEMENT, Rear Shock Absorber Mounting

67	01	.....	2	350 0064
68/69	(Left) 01-30-70	.....	1	359 8593
70/	(Left) 30-70	.....	1	359 8593
68/69	(Right) 01-30-70	.....	1	359 8592
70/	(Right) 30-70	.....	1	359 8592

20.038–3 PLATE, Seat Belt Mounting

72	10-80 (LSBW)	.....	4	359 1148
72	10-80 (WSBW)	.....	4	365 7773
67/71	18-88 (With Third Seat Belts)	.....	4	359 1148

20.040–1 SILL, Rear Cross

67/69	01	.....	1	350 5554
70/	01	.....	1	630 4548
67/68	10-50-80 (L3S)	.....	1	370 0110
69/71	10-85-89 (L3S)	.....	1	370 0110

72	10-85-89 (L3S)	.....	1	360 8949
67/68	18-88 (W3S)	.....	1	357 4276
69/	18 (W3S)	.....	1	357 4276
68/70	30-70	.....	1	630 0060
70/	40	.....	1	630 4625
71/	70	.....	1	630 5046
69/	88	.....	1	357 4276

20.040–2 BRACKET, Tailgate Hinge Torque Rod Mounting

67/69	08	.....	1	350 1125

20.043–1 BRACKET, Rear Leaf Spring Front Mounting

70/	(Left) 01-40	.....	1	361 5223
67/69	(Left) 05-06-08-09	.....	1	350 0087
67	(Left) 07	.....	1	350 0057
68/	(Left) 30-70	.....	1	360 0137
70/	(Right) 01-40	.....	1	361 5222
67/69	(Right) 05-06-08-09	.....	1	350 0086
67	(Right) 07	.....	1	350 0056
68/	(Right) 30-70	.....	1	360 0136

20.043–2 REINFORCEMENT, Rear Leaf Spring Front Mounting Bracket

67/69	(Left) 05-06-08-09	.....	1	350 0059
67	(Left) 07	.....	1	350 0617
68/	(Left) 30-70	.....	1	360 0147
67/69	(Right) 05-06-08-09	.....	1	350 0058
67	(Right) 07	.....	1	350 0616
68/	(Right) 30-70	.....	1	360 0146

20.070–1 SILL, Front Side

70	(Left) 01	.....	1	361 5203 MR
71/	(Left) 01	.....	1	448 8689 MR
67/69	(Left) 05-06-08-09	.....	1	351 2869 MR
67	(Left) 07	.....	1	448 1285 MR
67/71	(Left) 10-50-80 (LCV)	.....	1	357 4255 MR
72	(Left) 10-80 (LSBW)	.....	1	365 7117 MR
72	(Left) 10-80 (WSBW)	.....	1	366 1979 MR
67/68	(Left) 17-87	.....	1	357 4259 MR
68	(Left) 30	.....	1	448 5491 MR
69/70	(Left) 30	.....	1	448 6889 MR
70/	(Left) 40	.....	1	448 8393 MR
68	(Left) 70	.....	1	448 5271 MR
69/	(Left) 70	.....	1	448 6887 MR
70	(Right) 01	.....	1	361 5202 MR
71/	(Right) 01	.....	1	448 8688 MR
67/69	(Right) 05-06-08-09	.....	1	351 2868 MR
67	(Right) 07	.....	1	448 1284 MR
67/71	(Right) 10-50-80 (LCV)	.....	1	357 4254 MR
72	(Right) 10-80 (LSBW)	.....	1	365 7116 MR
72	(Right) 10-80 (WSBW)	.....	1	366 1978 MR
67/68	(Right) 17-87	.....	1	357 4258 MR
68	(Right) 30	.....	1	448 5490 MR
69/70	(Right) 30	.....	1	448 6888 MR
70/	(Right) 40	.....	1	448 8392 MR
68	(Right) 70	.....	1	448 5270 MR
69/	(Right) 70	.....	1	448 6886 MR

20.070–2 SILL, Rear Side

72	01 (WSBW)	.....	2	812 1506 MR
67/69	(Left) 01	.....	1	448 1289 MR
70/71	(Left) 01	.....	1	448 7313 MR
72	(Left) 01 (LSBW)	.....	1	448 7313 MR

Printed in U.S.A.

BODY SHEET METAL

67/68	(Left) 10-50-80 (L3S)	.....	1	448 4247 MR
69	(Left) 10-85-89 (L3S)	.....	1	448 6459 MR
70/	(Left) 10-85-89 (L3S)	.....	1	448 7583 MR
67/68	(Left) 10-80 (W3S)	.....	1	448 4249 MR
69/	(Left) 18 (W3S)	.....	1	448 6461 MR
68/69	(Left) 30	.....	1	448 5677 MR
70	(Left) 30	.....	1	448 7939 MR
70/71	(Left) 40	.....	1	448 8397 MR
72	(Left) 40 (LSBW)	.....	1	812 0645 MR
72	(Left) 40 (WSBW)	.....	1	812 1509 MR
68/69	(Left) 70	.....	1	448 5273 MR
70	(Left) 70	.....	1	448 7937 MR
71/	(Left) 70 (LSBW)	.....	1	448 8617 MR
72	(Left) 70 (WSBW)	.....	1	812 1511
69/	(Left) 88	.....	1	448 6461 MR
67/69	(Right) 01	.....	1	448 1288 MR
70/71	(Right) 01	.....	1	448 7312 MR
72	(Right) 01 (LSBW)	.....	1	448 7312 MR
67/68	(Right) 10-50-80 (L3S)	.....	1	448 4246 MR
69	(Right) 10-85-89 (L3S)	.....	1	448 6458 MR
70/	(Right) 10-85-89 (L3S)	.....	1	448 7582 MR
67/68	(Right) 10-80 (W3S)	.....	1	448 4248 MR
69/	(Right) 18 (W3S)	.....	1	448 6460 MR
68/69	(Right) 30	.....	1	448 5676 MR
70	(Right) 30	.....	1	448 7938 MR
70/71	(Right) 40	.....	1	448 8396 MR
72	(Right) 40 (LSBW)	.....	1	812 0644 MR
72	(Right) 40 (WSBW)	.....	1	812 1508 MR
68/69	(Right) 70	.....	1	448 5272 MR
70	(Right) 70	.....	1	448 7936 MR
71/	(Right) 70 (LSBW)	.....	1	448 8616 MR
72	(Right) 70 (WSBW)	.....	1	812 1510
69/	(Right) 88	.....	1	448 6460 MR

20.070-3 BRACE, Front Side Sill To Dash Panel

67	(Left) 07	.....	1	350 0025
67	(Left) 17-87	.....	1	357 4273
68	(Left) 17 (* 20-1)	.....	1	357 4273
68	(Left) 17 (* 20-2)	.....	1	360 8919
67	(Right) 07	.....	1	350 0024
67	(Right) 17-87	.....	1	357 4272
68	(Right) 17 (* 20-1)	.....	1	357 4272
68	(Right) 17 (* 20-2)	.....	1	360 8918

20.070-4 BRACE, Front Side Sill To Rear Side Sill (Lift Pad)

67/71	15-16-18-19-59-85-86-88-89	.....	2	357 4016
72	10-80 (LSBW)	.....	2	357 4016
72	10-80 (WSBW)	.....	2	365 7628
67/69	(Left) 05-06-08-09	.....	1	350 0035
70/	(Left) 01	.....	1	361 5219
67	(Left) 07	.....	1	350 0037
67/68	(Left) 17-87	.....	1	357 4265
70/	(Left) 40	.....	1	363 6027
68/	(Left) 30-70	.....	1	360 0135
67/69	(Right) 05-06-08-09	.....	1	350 0034
70/	(Right) 01	.....	1	361 5218
67	(Right) 07	.....	1	350 0036
67/68	(Right) 17-87	.....	1	357 4264
70/	(Right) 40	.....	1	363 6026
68/	(Right) 30-70	.....	1	360 0134

20.070-5 BRACKET, Lower Control Arm Mounting

67/68	(Left) 10-50-80	.....	1	357 4323
69/	(Left) 10-80	.....	1	360 8973
67/68	(Right) 10-50-80	.....	1	357 4322
69/	(Right) 10-80	.....	1	360 8972

Printed in U.S.A.

BODY SHEET METAL

20.070–5a REINFORCEMENT, Rear Spring Rear Mounting Bracket

70/	(Left) 01–40	.....	1	630 4431
70/	(Right) 01–40	.....	1	630 4430

20.070–6 REINFORCEMENT, Rear Sill To Cross Sill Bumper Mount

67/69	(Left) 01	.....	1	350 0053
67/69	(Right) 01	.....	1	350 0052

20.070–7 FILLER, Front Side Sill To Rear Side Sill

67	(Left) 07	.....	1	350 1115
67	(Right) 07	.....	1	350 1114

20.070–8 BRACKET, Rear Muffler Support Hanger

67/69	01	.....	1	350 5369

20.072–1 CHANNEL, Floor Reinforcement

70/71	01–40	.....	2	630 4488
72	01–40	.....	1	630 6787
68	10–30–70–80 (* 20–2)	.....	2	360 2854
69/71	10–80	.....	2	360 3902
72	10–80	.....	2	364 5945
69	30–70	.....	2	360 2854
70/71	30–70	.....	2	630 4549
72	70	.....	2	364 5823
67	(Left) 01	.....	1	350 5569
68	(Left) 01 (* 20–1)	.....	1	350 5569
68	(Left) 01 (* 20–2)	.....	1	630 1973
69	(Left) 01	.....	1	630 1973
67	(Left) 10–30–50–70–80	.....	1	357 4031
68	(Left) 10–30–50–70–80 (* 20–1)	.....	1	357 4031
67	(Right) 01	.....	1	350 5568
68	(Right) 01 (* 20–1)	.....	1	350 5568
68	(Right) 01 (* 20–2)	.....	1	630 1972
69	(Right) 01	.....	1	630 1972
67	(Right) 10–30–50–70–80	.....	1	357 4030
68	(Right) 10–30–50–70–80 (* 20–1)	.....	1	357 4030

20.072–2 EXTENSION, Floor Reinforcement Channel

67	(Left) 01 (V8)	.....	1	351 6359
68/69	(Left) 01	.....	1	359 9403
67	(Right) 01 (V8)	.....	1	351 6358
68/69	(Right) 01	.....	1	359 9402

20.072–3 REINFORCEMENT, Front Seat Support (Outer)

70/	01–40	.....	2	363 0980

20.073 CROSSMEMBER, Side Sill To Side Sill

67/69	05–06–08–09	.....	1	350 0022
67	07	.....	1	350 0910
70	01 (* 20–10)	.....	1	630 4314
70	01–40 (* 20–11)	.....	1	361 5204
71/	01–40	.....	1	361 5204
67/	15–16–18–19–59–85–86–88–89	.....	1	357 4268
67/68	17–87	.....	1	357 4270
68/69	30–70	.....	1	360 0106
70	30–70 (* 20–10)	.....	1	630 2219
70	30–70 (* 20–11)	.....	1	360 0106
71/	70 (* 20–11)	.....	1	360 0106
72	70 (* 20–10)	.....	1	630 2219

Printed in U.S.A.

BODY SHEET METAL

20.074 BRACKET, Rear Motor Support Crossmember Mounting

67	01	.....	1	350 0289
68	01 (* 20-1)	.....	1	350 0289
68	01 (* 20-2)	.....	1	630 1970
69	01	.....	1	630 1970

20.085-1 PANEL ASSEMBLY, Front Wheelhouse

67	(Left) 01	.....	1	354 9232 MR
68	(Left) 01 (* 20-1)	.....	1	354 9232 MR
68	(Left) 01 (* 20-2) ..... *(Ref. Pr. List)*	.....	1	630 2096 MR
69	(Left) 01	.....	1	630 3406 MR
70/71	(Left) 01-40	.....	1	448 7307 MR
72	(Left) 01-40	.....	1	630 7335 MR
67	(Left) 10	.....	1	650 0017 MR
68	(Left) 10 (* 20-1)	.....	1	651 0009 MR
68	(Left) 10 (* 20-2)	.....	1	651 5831 MR
69	(Left) 10	.....	1	651 8063 MR
70	(Left) 10	.....	1	653 1077 MR
71	(Left) 10	.....	1	653 1377 MR
72	(Left) 10	.....	1	653 1543 MR
68	(Left) 30-70 (* 20-2)	.....	1	448 5689 MR
69	(Left) 30-70	.....	1	448 6561 MR
70/	(Left) 30-70	.....	1	448 7934 MR
67	(Left) 50-80	.....	1	650 0021 MR
68	(Left) 70 (* 20-1) ..... *(Use 448 6561)*	.....	1	630 0093 MR
68	(Left) 80 (* 20-1)	.....	1	651 0013 MR
68	(Left) 80 (* 20-2)	.....	1	651 5835 MR
69	(Left) 80	.....	1	651 8067 MR
70/71	(Left) 80	.....	1	653 1079 MR
72	(Left) 80	.....	1	653 1547 MR
67	(Right) 01	.....	1	354 9234 MR
68	(Right) 01 (* 20-1)	.....	1	354 9234 MR
68	(Right) 01 (* 20-2) ..... *(Ref. Pr. List)*	.....	1	630 2095 MR
69	(Right) 01 (LHD)	.....	1	630 3404 MR
70/71	(Right) 01-40	.....	1	448 7310 MR
72	(Right) 01-40	.....	1	630 7334 MR
67	(Right) 10 (LHD)	.....	1	650 0018 MR
68	(Right) 10 (LHD-* 20-1)	.....	1	651 0010 MR
68	(Right) 10 (LHD-* 20-2)	.....	1	651 5832 MR
69	(Right) 10 (LHD)	.....	1	651 8062 MR
70	(Right) 10 (LHD)	.....	1	653 1076 MR
71	(Right) 10	.....	1	653 1376 MR
72	(Right) 10	.....	1	653 1542 MR
68	(Right) 30-70 (* 20-2) ..... *(Use 630 3450)*	.....	1	630 3042 MR
69	(Right) 30-70 ..... *(Use 630 3450)*	.....	1	630 3042 MR
70/	(Right) 30-70	.....	1	630 4274 MR
67	(Right) 50-80 (LHD)	.....	1	650 0022 MR
68	(Right) 70 (* 20-1) ..... *(Use 630 3450)*	.....	1	630 0094 MR
68	(Right) 80 (LHD-* 20-1)	.....	1	651 0014 MR
68	(Right) 80 (LHD-* 20-2)	.....	1	651 5836 MR
69	(Right) 80 (LHD)	.....	1	651 8066 MR
70/71	(Right) 80 (LHD)	.....	1	653 1078 MR
72	(Right) 80	.....	1	653 1546 MR
67	***(Right) 01 (RHD)***	.....	1	354 9235 MR
68	***(Right) 01 (RHD-* 20-1)***	.....	1	354 9235 MR
68	***(Right) 01 (RHD-* 20-2)***	.....	1	630 2259 MR
69	***(Right) 01 (RHD)***	.....	1	630 3405 MR
67	***(Right) 10 (RHD)***	.....	1	650 1582 MR
68	***(Right) 10 (RHD-* 20-1)***	.....	1	651 0018 MR
68	***(Right) 10 (RHD-* 20-2)*** ..... *(Use 651 5888)*	.....	1	651 5890 MR

69	***(Right) 10 (RHD)***	.....	1	651 8064	MR
70	***(Right) 10 (RHD)***	.....	1	653 1080	MR
67	***(Right) 80 (RHD)***	.....	1	650 1562	MR
68	***(Right) 80 (RHD-* 20-1)***	.....	1	651 0022	MR
68	***(Right) 80 (RHD-* 20-2)*** ..... ***(Use 651 5892)***	.....	1	651 5894	MR
69	***(Right) 80 (RHD)***	.....	1	651 8068	MR
70	***(Right) 80 (RHD)***	.....	1	653 1082	MR

20.085–2 PANEL (Only), Front Wheelhouse Front

67/69	(Left) 01 ..... ***(Ref. Pr. List)***	.....	1	355 2479	MR
70/	(Left) 01-40	.....	1	361 5271	MR
69	(Left) 10	.....	1	360 8693	MR
70	(Left) 10	.....	1	361 5751	MR
71	(Left) 10	.....	1	360 9629	MR
72	(Left) 10	.....	1	361 0083	MR
67/68	(Left) 10-50-80 ..... ***(Ref. Pr. List)***	.....	1	358 6265	MR
68/69	(Left) 30-70 ..... ***(Ref. Pr. List)***	.....	1	360 0193	MR
70/	(Left) 30-70	.....	1	361 5951	MR
69	(Left) 80	.....	1	360 3953	MR
70/71	(Left) 80	.....	1	361 5755	MR
72	(Left) 80	.....	1	361 0081	MR
67/69	(Right) 01 ..... ***(Ref. Pr. List)***	.....	1	355 2478	MR
70/	(Right) 01-40	.....	1	361 5270	MR
67/68	(Right) 10-50-80 ..... ***(Ref. Pr. List)***	.....	1	358 6268	MR
69	(Right) 10	.....	1	360 8692	MR
70	(Right) 10	.....	1	361 5750	MR
71	(Right) 10	.....	1	360 9628	MR
72	(Right) 10	.....	1	361 0082	MR
68/69	(Right) 30-70 ..... ***(Ref. Pr. List)***	.....	1	360 0188	MR
70/	(Right) 30-70	.....	1	361 5950	MR
69	(Right) 80	.....	1	360 3952	MR
70/71	(Right) 80	.....	1	361 5754	MR
72	(Right) 80	.....	1	361 0080	MR

20.085–3 PANEL (Only), Front Wheelhouse Rear

67/69	(Left) 01	.....	1	355 2255	MR
70/	(Left) 01-40	.....	1	361 5533	MR
67	(Left) 10	.....	1	357 4453	MR
68/69	(Left) 10	.....	1	360 2303	MR
70	(Left) 10	.....	1	361 5797	MR
71/	(Left) 10	.....	1	653 1369	MR
68/69	(Left) 30-70	.....	1	630 0059	MR
70	(Left) 30-70	.....	1	630 4103	MR
71/	(Left) 70	.....	1	630 6067	MR
67	(Left) 50-80	.....	1	357 4455	MR
68	(Left) 80	.....	1	360 2307	MR
69	(Left) 80	.....	1	360 3909	MR
70/	(Left) 80	.....	1	653 1057	MR
67/69	(Right) 01	.....	1	355 2254	MR
70/	(Right) 01-40	.....	1	361 5532	MR
67	(Right) 10	.....	1	357 4452	MR
68/69	(Right) 10	.....	1	360 2302	MR
70	(Right) 10	.....	1	361 5796	MR
71/	(Right) 10	.....	1	653 1368	MR
68/69	(Right) 30-70	.....	1	630 0058	MR
70	(Right) 30-70 ..... ***(Use 630 6066)***	.....	1	630 4102	MR
67	(Right) 50-80	.....	1	357 4454	MR
71/	(Right) 70	.....	1	630 6066	MR
68	(Right) 80	.....	1	360 2306	MR
69	(Right) 80	.....	1	360 3908	MR
70/	(Right) 80	.....	1	653 1056	MR

Printed in U.S.A.

BODY SHEET METAL

20.085–3a REINFORCEMENT, Front Wheelhouse To Floor Reinforcement Channel

70/	01–40	.....		2	363 5742

20.085–3b BRACE, Front Wheelhouse Upper

70/	(Left) 01–40	.....		1	630 4283
70/	(Right) 01–40	.....		1	630 4282

20.085–3c REINFORCEMENT, Front Wheelhouse Upper Brace

70/	(Left) 01–40	.....		1	361 5249
70/	(Right) 01–40	.....		1	361 5248

20.085–3d REINFORCEMENT, Front Wheelhouse Upper Brace (Side)

70/	(Left) 01–40	.....		1	363 5919
70/	(Right) 01–40	.....		1	363 5918

20.085–4 EXTENSION, Front Wheelhouse Panel Front (Baffle, Radiator Air)

67/68	(Left) 01	55	2.023	1	620 0103	MR
69	(Left) 01	55	2.023	1	630 3071	MR
70/	(Left) 01–40		.....	1	630 4173	MR
67/68	(Left) 10	59	2.023	1	357 4473	MR
69	(Left) 10	59	2.023	1	361 4987	MR
70	(Left) 10	59	2.023	1	361 4987	MR
71	(Left) 10		.....	1	653 1301	MR
72	(Left) 10–80		.....	1	812 0602	MR
68	(Left) 30–70	71	2.023	1	630 0113	MR
69/70	(Left) 30–70	71	2.023	1	630 3345	MR
71/	(Left) 70		.....	1	630 5089	MR
67/68	(Left) 50–80	59	2.023	1	357 4475	MR
69/71	(Left) 80	59	2.023	1	651 8013	MR
67/68	(Right) 01	55	2.023	1	620 0102	MR
69	(Right) 01	55	2.023	1	630 3070	MR
70/	(Right) 01–40		.....	1	630 4172	MR
67/68	(Right) 10	59	2.023	1	357 4472	MR
69	(Right) 10	59	2.023	1	361 4986	MR
70	(Right) 10		.....	1	360 9170	MR
71	(Right) 10		.....	1	653 1300	MR
72	(Right) 10–80		.....	1	653 1484	MR
68	(Right) 30–70	71	2.023	1	630 0112	MR
69/70	(Right) 30–70	71	2.023	1	630 3344	MR
67/68	(Right) 50–80	59	2.023	1	357 4474	MR
71/	(Right) 70		.....	1	630 5088	MR
69/71	(Right) 80	59	2.023	1	651 8012	MR

20.085–4a SEAL, Front Wheelhouse Panel Front Extension (Upper)

67/69	01	2.062	2	355 2449
67/70	10	2.023	2	357 5138
68/70	30–70	2.023	2	360 0224
67/68	50–80	2.023	2	357 5139
69/71	80	2.023	2	360 3968

20.085–4b SEAL, Front Wheelhouse Panel Front Extension (Lower)

67/69	01	2.062	2	355 2448
67/70	10	2.023	2	357 5144
68/70	30–70	2.023	2	360 0226
67/68	50–80	2.023	2	357 5144
69/71	80	2.023	2	360 3970

BODY SHEET METAL

20.085–4c BRACKET, Front Wheelhouse Panel Front Extension

68/70	(Left) 30–70	2.023	2	360 0291
68/70	(Right) 30–70	2.023	2	360 0290

20.085–5 BRACKET, Shock Absorber Mounting

67/69	10–50–80	.....	2	355 2673
70/	(Left)	11.201	1	319 6992
70/	(Right)	11.201	1	319 6993

20.085–6 GUSSET, Front Wheelhouse To Cowl Top Panel

70/	(Left) 01–40	.....	1	361 5267
67/70	(Left) 10	.....	1	357 5557
71/	(Left) 10	.....	1	363 3367
68/69	(Left) 30–70	.....	1	360 0313
70/	(Left) 30–70	.....	1	630 4561
67/68	(Left) 50–80	.....	1	357 5559
69	(Left) 80	.....	1	361 4061
70	(Left) 80	.....	1	363 1559
71/	(Left) 80	.....	1	363 2917
70/	(Right) 01–40	.....	1	361 5266
67/70	(Right) 10	.....	1	357 5556
71/	(Right) 10	.....	1	363 3366
68/69	(Right) 30–70	.....	1	360 0312
70/	(Right) 30–70	.....	1	630 4560
67/68	(Right) 50–80	.....	1	357 5558
69	(Right) 80	.....	1	361 4060
70	(Right) 80	.....	1	363 1558
71/	(Right) 80	.....	1	363 2916

20.085–6a GUSSET, Front Wheelhouse To Dash Panel

70	(Left) 10	.....	1	360 9811
72	(Left) 15–18–19	.....	1	360 9811
70	(Right) 10	.....	1	360 9810
72	(Right) 15–18–19	.....	1	360 9810

20.085–7 BRACKET, Brake Hose Support

67/69	.....	8.116	2	318 5136
70/	01–40	.....	2	319 7100
70/	30–70	8.116	2	318 5136
70/	10–80	8.116	2	318 5136

20.093–1 BRACE, Cowl Top To Wheelhouse Panel

67/69	01	.....	1	350 5344
67/68	10–50–70–80	.....	1	318 8822

20.093–2 ATTACHING PARTS, Cowl Top Brace To Wheelhouse

SCREW, Tapping.....	67/68	10–50–70–80	17.671	1	G442751
WASHER, Plain.....	67/68	10–50–70–80	17.814	1	G120393 NA
WASHER, Lock	67/68	10–50–70–80	17.820	1	G120214

20.093–3 ATTACHING PARTS, Brace To Dash

WASHER, Lock.....	67/68	10–50–70–80	17.820	1	G120380 NA
NUT, Hexagon.....	67/68	10–50–70–80	17.406	1	G120375

BODY SHEET METAL

20.093–4 BRACE, Wheelhouse To Radiator Upper Baffle

68	30-70 (V8)	.....	2	359 8787
69/	30-70	.....	2	359 8787
68	70 (Six-With 70 Amp. Battery-LAC)	.....	1	359 8787
68	70 (Six-Less 70 Amp. Battery)(Six-With 70 Amp. Battery-WAC)	.....	2	359 8787

20.093–5 ATTACHING PARTS, Upper Baffle Brace To Wheelhouse

SCREW, Machine	68	30-70 (Six-With 70 Amp Battery-LAC)	17.629	1	G274882 NA
SCREW, Machine	68	30-70 (Six-Less 70 Amp Battery)(Six-With 70 Amp. Battery-WAC)	17.629	2	G274882 NA
SCREW, Machine	68	30-70 (V8)	17.629	2	G274882 NA
SCREW, Machine	69/	30-70	17.629	4	G274882 NA
NUT, Hexagon	68	30-70	17.406	1	G120377 NA
WASHER, Lock	68	30-70	17.820	1	G120382

20.093–6 ATTACHING PARTS, Brace To Radiator Upper Baffle

SCREW, Machine	68	30-70 (Six-With 70 Amp Battery-LAC)	17.629	1	G274882 NA
SCREW, Machine	68	30-70 (Six-Less 70 Amp Battery)(Six-With 70 Amp. Battery-WAC)	17.629	2	G274882 NA
SCREW, Machine	68	30-70 (V8)	17.629	2	G274882 NA

20.095–1 BRACKET, Front Suspension Mounting

67	10-50-80	.....	2	355 2669 MR
68	10-80 (* 20-3)	.....	2	355 2669 MR
68	10-80 (* 20-4)	.....	2	360 8249 MR
69	10-80	.....	2	360 8948 MR
67/69	(Left) 01-30-70 ***(Use 630 3351)***	.....	1	350 5577 MR
70/	(Left) 01-40	.....	1	630 4101 MR
70/	(Left) 10-80	.....	1	363 0549 MR
70	(Left) 30-70 ***(Use 630 5999)***	.....	1	630 4673 MR
71/	(Left) 70	.....	1	630 5999 MR
67/69	(Right) 01-30-70	.....	1	350 5576 MR
70/	(Right) 01-40	.....	1	630 4100 MR
70/	(Right) 10-80	.....	1	363 0548 MR
70	(Right) 30-70 ***(Use 630 5998)***	.....	1	630 4672 MR
71/	(Right) 70	.....	1	630 5998 MR

20.095–1a CUP, Front Suspension Spring Retainer

70/	01-30-40-70	20.085	2	630 4093
70/	10-80	20.085	2	653 1173

20.095–2 COVER, Front Suspension Mounting Bracket To Side Sill Reinforcement

67/69	01-70 (Six)	.....	2	350 0088
67/69	10-50-80	.....	2	355 2688
67/69	(Left) 01-30-70 (V8)	.....	1	358 3946
67/69	(Right) 01-30-70 (V8)	.....	1	350 0088

20.095–3 ATTACHING PARTS, Cover To Side Sill Reinforcement

SCREW, Tapping	67/69	17.671	6	G9414261 NA

BODY SHEET METAL

20.115–1 CROSSMEMBER, Wheelhouse Panel To Wheelhouse Panel (Upper)(Baffle, Radiator Air)

67/68	01	61	2.062	1	620 0113
69	01		2.062	1	630 3069
70/71	01–40		.....	1	630 4170
72	01–40		.....	1	361 5337
67/68	10		2.062	1	650 0025
69/70	10		2.062	1	651 8120
71/	10		.....	1	653 1357
68	30–70	*(Ref. Pr. List)*	2.062	1	630 0203
69/70	30–70		2.062	1	448 6455
67	50–80		2.062	1	650 0032
71/	70		.....	1	448 8618
68	80		2.062	1	651 0164
69/71	80		2.062	1	651 8010
72	80		2.062	1	653 1473

20.115–2 CROSSMEMBER, Wheelhouse Panel To Wheelhouse Panel (Lower)(Baffle, Radiator Air)

67/69	01		2.062	1	354 8937
70/	01–40		.....	1	361 5340
67/68	10–30–70		2.062	1	650 0033
69/	10		2.062	1	651 8121
69/	30–70		2.062	1	630 3348
67/68	50–80		2.062	1	650 0034
69/	80		2.062	1	651 8122

20.115–3 PANEL, Front Wheelhouse Crossmember Lower Splash

70/	01–40		.....	1	630 3493
71	10 (* 20–22)	*(Ord. 653 1415, 360 9981)*	.....	1	653 1410
71	10 (* 20–23)		.....	1	653 1415
72	10		.....	1	653 1415
71/	70 (* 20–20)		.....	1	363 2222

20.115–3a SPOILER, Front Underbody

71/	70		.....	1	364 6490

20.115–4 ATTACHING PARTS, Panel To Center Grille Support

SCREW, Tapping.....	71/	70	17.669	2	448 9283

20.115–5 ATTACHING PARTS, Panel To Fender

BOLT, Hexagon	71/	70 (* 20–21)	.....	6	G273771 NA
SCREW, Tapping.....	71/	10	12.075	2	400 0424
SCREW, Tapping.....	71/	70	2.050	6	400 2359
NUT, Spring.....	71/	10	12.075	4	G447026
NUT, Spring.....	71/	70 (* 20–20)	2.050	6	400 2002
NUT, Spring.....	71/	70 (* 20–21)	17.417	6	G273801 NA

20.115–5a ATTACHING PARTS, Spoiler To Fender Bracket

SCREW, Tapping.....	71/	70 (* 20–21)	17.660	2	812 0052
NUT, Speed	71/	70 (* 20–21)	2.050	2	400 1999

20.115–5b ATTACHING PARTS, Spoiler To Center Support

SCREW, Tapping.....	71/	70 (* 20–21)	17.660	1	812 0052

20.115–5c ATTACHING PARTS, Front Splash Guard To Hood Latch Support

SCREW, Tapping.....	71/	70	.....	1	400 2359

BODY SHEET METAL

20.115–7 SUPPORT, Front Wheelhouse Crossmember Lower Splash Center

71/	70 (* 20-21)	.....	1	364 6491	

20.120–1 DASH ASSEMBLY (Incl. Toeboard)

68	01 (LHD-* 20-2)	.....	1	448 5432	MR
69	01 (LHD)	.....	1	448 5964	MR
70	01-40	.....	1	630 3392	MR
71/	01-40	.....	1	630 7361	MR
67	05-06-08-09 (LHD)	.....	1	448 4804	MR
68	05-06-08-09 (LHD-* 20-1)	.....	1	448 4804	MR
67	07 (LHD)	.....	1	448 4803	MR
69	10-80 (LHD)	.....	1	651 8142	MR
70	10-80 (LHD)	.....	1	653 1130	MR
71	10-80	.....	1	653 1408	MR
72	10-80	.....	1	653 1585	MR
67	15-16-18-19-59-85-86-88-89 (LHD)	.....	1	448 4251	MR
67	17-87 (LHD)	.....	1	448 4793	MR
68	15-16-18-19-59-85-86-88-89 (LHD-* 20-1)	.....	1	448 4251	MR
68	15-18-19-85-88-89 (LHD-* 20-2)	.....	1	448 5390	MR
68	17-87 (LHD-* 20-1)	.....	1	448 4793	MR
68	17 (LHD-* 20-2)	.....	1	600 0880	MR
68	30-70 (* 20-1)	.....	1	448 5269	MR
68	30-70 (* 20-2)	.....	1	448 5433	MR
69	30-70	.....	1	448 6216	MR
70	30-70	.....	1	448 7933	MR
71	70	.....	1	448 8615	MR
72	70	.....	1	812 0285	MR
67	***05-06-08-09 (RHD)***	.....	1	448 3360	MR
67	***07 (RHD)***	.....	1	448 3361	MR
68/69	***05-06-08-09 (RHD)***	.....	1	448 5529	MR
67/68	***15-16-18-19-85-86-88-89 (RHD)***	.....	1	448 4805	MR
67/68	***17-87 (RHD)***	.....	1	448 4792	MR
69/70	***10-80 (RHD)***	.....	1	448 6646	MR

20.120–2 PLATE, Cowl Vent Air Chamber Cover

67/69	01-30-70 (Less Heater)...(Incl. Gasket)	.....	1	350 5749	
70/	01-40 (Less Heater)	.....	1	361 5280	
67/	10-50-80 (Less Heater)	.....	1	347 2723	
70/	30-70 (Less Heater)	.....	1	350 5749	

20.120–3 ATTACHING PARTS, Plate To Dash Assembly

SCREW, Tapping.....	67/69	01-30-70 (Less Heater)	17.671	4	400 0774	
SCREW, Tapping.....	70/	01-40 (Less Heater)	20.280	4	400 1724	
SCREW, Tapping.....	70/	30-70 (Less Heater) ***(Use 400 2192)***	29.010	4	400 2099	
SCREW, Tapping.....	67/	10-50-80 (LHD-Less Heater)	.....	4	812 0052	
***SCREW, Tapping.....	***67/70***	***10-50-80 (RHD-Less Heater)***	17.660	2	G161895	NA
RETAINER.....	67/	10-50-80 (LHD-Less Heater)	.....	2	347 2725	

20.120–4 PLATE, Heater Motor Opening Cover

67/69	01 (LHD-Less Heater)	.....	1	358 3197	
70/	01-40 (Less Heater)...(Incl. Gasket)	.....	1	360 1332	
68/	30-70 (Less Heater)	.....	1	360 1332	
67/	10-50-80 (Less Heater)	.....	1	347 2734	
67/69	***01 (RHD-Less Heater)***	.....	1	350 0545	

BODY SHEET METAL

20.120–5 ATTACHING PARTS, Plate To Dash Assembly

SCREW, Tapping.....	67/	01-30-40-70 (LHD-Less Heater)	20.280	4	400 1724
SCREW, Tapping.....	67/	10-50-80 (Less Heater)	.....	6	812 0052
SCREW, Tapping**.....**	***67/69***	***01 (RHD-Less Heater)***	17.660	3	G161895
NUT, Speed**.....**	***67/69***	***01 (RHD-Less Heater)***	13.035	3	400 0278

20.120–6 GASKET, Heater Motor Opening Cover Plate

67/69	01 (LHD-Less Heater)	13.012	1	317 7324
67/68	10-50-80 (Less Heater)	.....	1	347 2736
69/	10 (Less Heater)	.....	1	347 2736
67/69	***01 (RHD-Less Heater)***	13.012	1	316 9203

20.120–7 PLATE, Heater Valve Opening

67/	(Less Heater).....	.....	1	344 7989

20.120–8 ATTACHING PARTS, Plate To Dash

SCREW, Tapping.....	67/	Less Heater	.....	2	812 0052
SCREW, Tapping.....	71/	70 (Less Heater)	17.670	2	G9414722

20.120–9 GASKET, Heater Valve Plate

67/	(Less Heater).....	13.035	1	346 5920

20.120–10 GASKET, Cowl Vent Air Chamber Cover Plate

70/	01-40 (Less Heater)	.....	1	361 5296
67/68	10-50-80 (Less Heater)	.....	1	347 2724
69/	10 (Less Heater)	.....	1	347 2724
68/	30-70 (Less Heater)	.....	1	360 0347

20.150–1 PANEL, Cowl Top

70	01-40.....	.....	1	630 3274 MR
71	01-40.....	.....	1	630 6409 MR
72	01-40.....	.....	1	630 8408 MR
67	05-06-08 (LHD).....	.....	1	620 0195 MR
68	05-06-08..... ***(Use 630 3074)***	.....	1	359 9890 MR
69	05-06-08..... ***(Use 630 3074)***	.....	1	630 4193 MR
67	07 (LHD).....	.....	1	620 0127 MR
67	09 (LHD)...(Incl. Gussets)	.....	1	620 0189 MR
68/69	09...(Incl. Gussets) ..... ***(Use 630 3075)***	.....	1	630 2172 MR
69/70	10.....	.....	1	448 6483 MR
71	10.....	.....	1	448 8717 MR
72	10.....	.....	1	653 1479 MR
67	15-16-18-19-59-85-86-88-89.....	.....	1	650 0668 MR
67	17-87.....	.....	1	448 4824 MR
68	15-18-19-85-88-89.....	.....	1	448 5057 MR
68	17.....	.....	1	448 5056 MR
68/69	30-70..... ***(Use 630 4225)***	.....	1	630 0108 MR
70/	30-70.....	.....	1	630 4225 MR
69/70	80.....	.....	1	448 6482 MR
71	80..... ***(Use 653 1371)***	.....	1	448 8716 MR
72	80.....	.....	1	653 1480 MR
67	***05-06-08 (RHD)*** ..... ***(Use 630 3074)***	.....	1	620 0194 MR
67	***07 (RHD)***.....	.....	1	620 0126 MR
67	***09 (RHD)***...(Incl. Gussets)	.....	1	620 0188 MR

Printed in U.S.A.

BODY SHEET METAL

20.150–1a PANEL, Cowl Vent Air Chamber

70/71	01–40 (LHD)	.....	1	630 4315
72	01–40	.....	1	630 8387

20.150–2 PANEL, Windshield Header

70/	01–40	.....	1	361 5410
67/68	17–87	.....	1	620 0020

20.150–3 BRACE, Cowl Top To Uniside

68	(Left) 01	.....	1	359 9405
68	(Right) 01	.....	1	359 9404

20.150–4 FILLER, Cowl Top Panel

67/70	*10-80 (RHD)*	.....	1	357 4588

20.150–5 ANTI-SQUEAK, Cowl Top Panel

67/69	10–50–80	.....	1	357 5788

20.150–6 PLUG, Cowl Top Panel Drain

67/68	10–50–80	.....	1	357 4372

20.155–1 PANEL, Cowl Side Outer

67/69	(Left) 01	.....	1	350 9109
67/	(Left) 10–50–80	.....	1	357 4835
68/	(Left) 30–70	.....	1	359 2587
67/69	(Right) 01	.....	1	350 9108
67/	(Right) 10–50–80	.....	1	357 4834
68/	(Right) 30–70	.....	1	359 2586

20.155–2 PANEL, Cowl Side Inner

67/69	(Left) 05–06–08	.....	1	448 1357
67/69	(Left) 07–09	.....	1	448 1359
67/	(Left) 15–16–18–19–59–85–86–88–89	.....	1	357 4703
67/68	(Left) 17–87	.....	1	357 4705
68/	(Left) 30–70	.....	1	448 5303
67/69	(Right) 05–06–08	.....	1	448 1356
67/69	(Right) 07–09	.....	1	448 1358
67/	(Right) 15–16–18–19–59–85–86–88–89	.....	1	357 4702
67/68	(Right) 17–87	.....	1	357 4704
68/	(Right) 30–70	.....	1	448 5302

20.155–3 FILLER, Uniside To Cowl Side Panel

67/	(Left) 10–50–80	.....	1	357 4839
67/	(Right) 10–50–80	.....	1	357 4838

20.160–1 GUSSET, Windshield Header Bar To Side Roof Rail

67/69	(Left) 09	.....	1	350 0769
67/69	(Right) 09	.....	1	350 0768

20.160–2 SUPPORT, Sun Visor Bracket

67/68	17–87	.....	2	357 5175

BODY SHEET METAL

20.170–1 UNISIDE ASSEMBLY

67/69	(Left) 05–08	.....	1	448	4359 MR
67/69	(Left) 06	.....	1	448	4361 MR
67	(Left) 07	.....	1	352	3301 MR
67/69	(Left) 09	.....	1	448	4363 MR
67/69	(Left) 15–18–85–88	.....	1	358	5871 MR
70/71	(Left) 15–85	.....	1	361	6197 MR
72	(Left) 15–85 (LSBW)	.....	1	361	6197 MR
72	(Left) 15–85 (WSBW)	.....	1	365	7789 MR
67	(Left) 16–86	.....	1	358	5873 MR
67/68	(Left) 17–87	.....	1	358	5877 MR
70/71	(Left) 18–88	.....	1	360	9277 MR
72	(Left) 18–88 (LSBW)	.....	1	360	9277 MR
72	(Left) 18–88 (WSBW)	.....	1	365	7791 MR
67/69	(Left) 19–89	.....	1	358	5875 MR
70/71	(Left) 19–89	.....	1	361	6185 MR
72	(Left) 19–89 (LSBW)	.....	1	365	1449 MR
72	(Left) 19–89 (WSBW)	.....	1	365	7793 MR
68/70	(Left) 30	.....	1	630	1671 MR
67	(Left) 59	.....	1	358	5879 MR
68/69	(Left) 70	.....	1	359	2583 MR
70	(Left) 70	.....	1	363	5653 MR
71	(Left) 70	.....	1	364	1795 MR
72	(Left) 70 (LSBW)	.....	1	364	1795 MR
72	(Left) 70 (WSBW)	.....	1	366	2093 MR
67/69	(Right) 05–08	.....	1	448	4358 MR
67/69	(Right) 06	.....	1	448	4360 MR
67	(Right) 07	.....	1	352	3300 MR
67/69	(Right) 09	.....	1	448	4362 MR
67/69	(Right) 15–18–85–88	.....	1	358	5870 MR
70/71	(Right) 15–85 ***(Ord. 365 7788, 400 4544)***	.....	1	361	6196 MR
72	(Right) 15–85 (LSBW) ***(Ord. 365 7788, 400 4544)***	.....	1	361	6196 MR
72	(Right) 15–85 (WSBW)	.....	1	365	7788 MR
67	(Right) 16–86	.....	1	358	5872 MR
67/68	(Right) 17–87	.....	1	358	5876 MR
70/71	(Right) 18–88	.....	1	358	5870 MR
72	(Right) 18–88 (LSBW)	.....	1	358	5870 MR
72	(Right) 18–88 (WSBW)	.....	1	365	7790 MR
67/69	(Right) 19–89	.....	1	358	5874 MR
70/71	(Right) 19–89	.....	1	361	6184 MR
72	(Right) 19–89 (LSBW)	.....	1	365	1448 MR
72	(Right) 19–89 (WSBW)	.....	1	365	7792 MR
68/70	(Right) 30	.....	1	630	1670 MR
67	(Right) 59	.....	1	358	5878 MR
68/70	(Right) 70	.....	1	359	2582 MR
71	(Right) 70	.....	1	364	1794 MR
72	(Right) 70 (LSBW)	.....	1	364	1794 MR
72	(Right) 70 (WSBW)	.....	1	366	2092 MR

20.170–2 PANEL, Uniside Outer

67/69	(Left) 05–08	.....	1	448	1291 MR
67/69	(Left) 06	.....	1	448	1293 MR
67	(Left) 07	.....	1	448	2753 MR
67/69	(Left) 09	.....	1	448	2755 MR
67/69	(Left) 15–18–85–88	.....	1	448	4283 MR
70/	(Left) 15–85	.....	1	448	7639 MR
67/68	(Left) 17–87	.....	1	448	4827 MR
67/69	(Left) 16–19–86–89	.....	1	448	4287 MR
70/	(Left) 18–88	.....	1	448	4283 MR
70/	(Left) 19–89	.....	1	448	7643 MR
68/69	(Left) 30	.....	1	448	5499 MR
70	(Left) 30	.....	1	448	7942 MR
67	(Left) 59	.....	1	448	4373 MR
68/69	(Left) 70	.....	1	448	5293 MR
70	(Left) 70	.....	1	448	7943 MR
71/	(Left) 70	.....	1	448	8629 MR

67/69	(Right) 05-08	.....	1	448 1290	MR
67/69	(Right) 06	.....	1	448 1292	MR
67	(Right) 07	.....	1	448 2752	MR
67/69	(Right) 09	.....	1	448 2754	MR
67/69	(Right) 15-18-85-88	.....	1	448 4282	MR
70/	(Right) 15-85	.....	1	448 7638	MR
67/69	(Right) 16-19-86-89	.....	1	448 4286	MR
67/68	(Right) 17-87	.....	1	448 4826	MR
70/	(Right) 18-88	.....	1	448 4282	MR
70/	(Right) 19-89	.....	1	448 7642	MR
68/70	(Right) 30	.....	1	448 5498	MR
67	(Right) 59	.....	1	448 4372	MR
68/70	(Right) 70	.....	1	448 5292	MR
71/	(Right) 70	.....	1	448 8628	MR

20.170–3 PANEL, Uniside Inner

67/69	(Left) 05-08	.....	1	359 2389	MR
67/69	(Left) 06	.....	1	359 2391	MR
67	(Left) 07	.....	1	354 2785	MR
67/69	(Left) 09	.....	1	359 2393	MR
67/69	(Left) 15-18-85-88	.....	1	359 1701	MR
67/69	(Left) 16-19-86-89	.....	1	448 4289	MR
67/68	(Left) 17-87	.....	1	448 4831	MR
67	(Left) 59	.....	1	448 4783	MR
67/69	(Right) 05-08	.....	1	359 2388	MR
67/69	(Right) 06	.....	1	359 2390	MR
67	(Right) 07	.....	1	354 2784	MR
67/69	(Right) 09	.....	1	359 2392	MR
67/69	(Right) 15-18-85-88	.....	1	359 1700	MR
67/69	(Right) 16-19-86-89	.....	1	448 4288	MR
67/68	(Right) 17-87	.....	1	448 4830	MR
67	(Right) 59	.....	1	448 4782	MR

20.170–4 REINFORCEMENT, Inner To Outer Uniside Panels

67	(Left) 07	.....	1	350 1079	
67/69	(Left) 09	.....	1	350 9243	
67	(Right) 07	.....	1	350 1078	
67/69	(Right) 09	.....	1	350 9242	

20.170–5 BRACE, Inner Uniside Panel To Dash And Side Sill

67	(Left) 07	.....	1	350 0039	
67	(Right) 07	.....	1	350 0038	

20.170–6 BRACE, Inner Uniside Panel To Side Sill At Front Pillar

67	(Left) 07	.....	1	354 2847	
67/68	(Left) 17-87	.....	1	357 4333	
67	(Right) 07	.....	1	354 2846	
67/68	(Right) 17-87	.....	1	357 4332	

20.170–7 COVER, Inner Uniside Panel Hinge Access Hole

67/69	01-30-70	.....	2	347 2309	
70	30-70	.....	2	347 2309	
71/	70	.....	1	347 2309	
67	10-50-80	.....	2	347 2309	

20.170–8 ATTACHING PARTS, Cover To Uniside

SCREW, Tapping	67/69	01-30-70	.....	17.669	4	G457002 NA
SCREW, Tapping	70/	30-70	.....	17.669	4	G457002 NA
SCREW, Tapping	67	10-50-80	.....	17.669	4	G457002 NA

BODY SHEET METAL

20.170–9 FILLER, Uniside To Drip Moulding Rear

67/69	(Left) 16-19-86-89	.....	1	359 1051
67/69	(Right) 16-19-86-89	.....	1	359 1050

20.175–1 COVER, Rocker Panel Snap On

67/69	(Left) 05-08	.....	1	448 0755
67/69	(Left) 06-07-09-30-70	.....	1	448 0757
70/	(Left) 01	.....	1	448 7391
67/	(Left) 15-18-85-88	.....	1	448 4835
67/	(Left) 16-17-19-59-86-87-89	.....	1	448 4837
70/	(Left) 30-70	.....	1	448 0757
70/	(Left) 40	.....	1	448 8511
67/69	(Right) 05-08	.....	1	448 0754
67/69	(Right) 06-07-09-30-70	.....	1	448 0756
70/	(Right) 01	.....	1	448 7390
67/	(Right) 15-18-85-88	.....	1	448 4834
67/	(Right) 16-17-19-59-86-87-89	.....	1	448 4836
70/	(Right) 30-70	.....	1	448 0756
70/	(Right) 40	.....	1	448 8510

20.175–2 FILLER, Rocker Panel (Front)

70/	(Left) 01-40	.....	1	361 5359
70/	(Right) 01-40	.....	1	361 5358

20.180–1 REINFORCEMENT, Rocker Panel

67/69	(Left) 05-08	.....	1	448 0759
67/69	(Left) 06-07-09	.....	1	448 0761
67/	(Left) 15-18-85-88	.....	1	448 4321
67/	(Left) 16-17-19-59-86-87-89	.....	1	448 4331
68/	(Left) 30-70	.....	1	448 5307
67/69	(Right) 05-08	.....	1	448 0758
67/69	(Right) 06-07-09	.....	1	448 0760
67/	(Right) 15-18-85-88	.....	1	448 4320
67/	(Right) 16-17-19-59-86-87-89	.....	1	448 4330
68/	(Right) 30-70	.....	1	448 5306

20.180–2 STIFFENER, Rocker Panel

67/69	(Left) 07-09	.....	1	350 0939
67/	(Left) 16-17-19-59-86-87-89	.....	1	357 4649
67/69	(Right) 07-09	.....	1	350 0938
67/	(Right) 16-17-19-59-86-87-89	.....	1	357 4648

20.190–1 REINFORCEMENT, Front Door Pillar Upper

67	(Left) 07	.....	1	350 0235
67/68	(Left) 17-87	.....	1	357 5305
67	(Right) 07	.....	1	350 0234
67/68	(Right) 17-87	.....	1	357 5304

20.190–2 EXTENSION, Uniside Inner Panel Front Pillar

67/68	(Left) 17-87	.....	1	357 5309
67/68	(Right) 17-87	.....	1	357 5308

Printed in U.S.A.

BODY SHEET METAL

20.195–1 PILLAR, Body Front

67/69	(Left) 05-06-08	1	448 0799	MR
67	(Left) 07	1	448 2841	MR
67/69	(Left) 09	1	448 1347	MR
70/71	(Left) 01-40	1	630 4297	MR
72	(Left) 01-40	1	630 8415	MR
67/	(Left) 15-18-85-88	1	448 4301	MR
67/	(Left) 16-19-59-86-89	1	448 4309	MR
67/68	(Left) 17-87...(Incl. Upper Pillar)	1	448 5555	MR
68/	(Left) 30-70	1	448 5297	MR
70/71	(Right) 01-40	1	630 4296	MR
72	(Right) 01-40	1	630 8414	MR
67/69	(Right) 05-06-08	1	448 0798	MR
67	(Right) 07	1	448 2840	MR
67/69	(Right) 09	1	448 1346	MR
67/	(Right) 15-18-85-88	1	448 4300	MR
67/	(Right) 16-19-59-86-89	1	448 4308	MR
67/68	(Right) 17-87...(Incl. Upper Pillar)	1	448 5554	MR
68/	(Right) 30-70	1	448 5296	MR

20.195–2 PILLAR, Body Front Upper

70/71	(Left) 01-40	1	361 5425	MR
72	(Left) 01-40	1	365 7521	MR
67	(Left) 07	1	448 2837	MR
67/68	(Left) 17-87 ***(Use 358 6889)***	1	448 4829	MR
70/71	(Right) 01-40	1	361 5424	MR
72	(Right) 01-40	1	365 7520	MR
67	(Right) 07	1	448 2836	MR
67/68	(Right) 17-87 ***(Use 358 6888)***	1	448 4828	MR

20.195–3 GUSSET, Front Pillar To Wheelhouse

70/	(Left) 01-40	1	363 5741	
70/	(Right) 01-40	1	363 5740	

20.200 REINFORCEMENT, Front Body Pillar

70/71	(Left) 01-40	1	630 4299	MR
72	(Left) 01-40	1	630 8411	MR
67/	(Left) 15-18-85-88	1	448 4319	MR
67/	(Left) 16-19-59-86-89	1	448 4329	MR
67/68	(Left) 17-87	1	448 4341	MR
70/71	(Right) 01-40	1	630 4298	MR
72	(Right) 01-40	1	630 8410	MR
67/	(Right) 15-18-85-88	1	448 4318	MR
67/	(Right) 16-19-59-86-89	1	448 4328	MR
67/68	(Right) 17-87	1	448 4340	MR

20.205–1 PILLAR, Body Lock

67/69	(Left) 06	1	448 0773	MR
70/	(Left) 06-40	1	630 4313	MR
67	(Left) 07	1	448 1353	MR
67/69	(Left) 09	1	448 1349	MR
67/	(Left) 16-17-19-59-86-87-89	1	448 4313	MR
68/	(Left) 30-70	1	448 5299	MR
67/69	(Right) 06	1	448 0772	MR
70/	(Right) 06-40	1	630 4312	MR
67	(Right) 07	1	448 1352	MR
67/69	(Right) 09	1	448 1348	MR
67/	(Right) 16-17-19-59-86-87-89	1	448 4312	MR
68/	(Right) 30-70	1	448 5298	MR

Printed in U.S.A.

BODY SHEET METAL

20.205–2 BRACE, Pillar To Side Sill

67/69	(Left) 09	.....	1	350 0997
68/	(Left) 70	.....	1	360 0169
67/69	(Right) 09	.....	1	350 0996
68/	(Right) 70	.....	1	360 0168

20.205–3 BRACE, Pillar To Floor Pan

67	(Left) 07	.....	1	354 2947
67	(Right) 07	.....	1	354 2946

20.205–4 BRACKET, Pillar Brace To Trim Panel Support

67	07	.....	2	350 0067

20.205–5 SEAL, Pillar Cap Upper

67/68	(Left) 09	.....	1	352 8465
67/68	(Right) 09	.....	1	352 8464

20.205–6 SEAL, Pillar Cap Lower

67/68	(Left) 09	.....	1	352 8467
67/68	(Right) 09	.....	1	352 8466

20.205–7 SEAL, Pillar Lower

67	06-07-09	20.240	2	349 2699

20.215 REINFORCEMENT, Body Lock Pillar

67/69	(Left) 06	.....	1	448 2781 MR
67/69	(Left) 09	.....	1	448 2783 MR
70/	(Left) 06-40	.....	1	363 1033 MR
68/69	(Left) 30-70 (* 20-8) ***(Use 360 2003)***	.....	1	359 2579 MR
69	(Left) 30-70 (* 20-9)	.....	1	360 2003 MR
70/	(Left) 30-70	.....	1	360 2003 MR
67/69	(Right) 06	.....	1	448 2780 MR
67/69	(Right) 09	.....	1	448 2782 MR
70/	(Right) 06-40	.....	1	363 1032 MR
68/69	(Right) 30-70 (* 20-8) ***(Use 360 2002)***	.....	1	359 2578 MR
69	(Right) 30-70 (* 20-9)	.....	1	360 2002 MR
70/	(Right) 30-70	.....	1	360 2002 MR

20.218 REINFORCEMENT, Body Lock And Rear Body Pillar

67/69	(Left) 16-19-86-89	.....	1	448 4335 MR
67/68	(Left) 17-59-87	.....	1	448 4339 MR
70/	(Left) 19-89	.....	1	448 7981
67/69	(Right) 16-19-86-89	.....	1	448 4334 MR
67/68	(Right) 17-59-87	.....	1	448 4338 MR
70/	(Right) 19-89	.....	1	448 7980 MR

20.220–1 PILLAR, Body Center

67/69	(Left) 05-08	.....	1	448 0771 MR
70/	(Left) 05-08	.....	1	630 4301 MR
67/	(Left) 15-18-85-88	.....	1	448 4303 MR
67/69	(Right) 05-08	.....	1	448 0770 MR
70/	(Right) 05-08	.....	1	630 4300 MR
67/	(Right) 15-18-85-88	.....	1	448 4302 MR

BODY SHEET METAL

20.220–2 EXTENSION, Upper Hinge Mounting

67/69	(Left) 05–08	.....	1	347 2453
67/69	(Right) 05–08	.....	1	347 2452

20.220–3 PLATE, Shoulder Harness Anchor

72	*(Left) 15-85 (Fleet)*	.....	1	365 7897

20.230 REINFORCEMENT, Body Center Pillar

67/69	(Left) 05–08	.....	1	448 0775 MR
70/	(Left) 05–08	.....	1	361 5449 MR
67/	(Left) 15–18–85–88	.....	1	448 4325 MR
67/69	(Right) 05–08	.....	1	448 0774 MR
70/	(Right) 05–08	.....	1	361 5448 MR
67/	(Right) 15–18–85–88	.....	1	448 4324 MR

20.235 PILLAR, Rear Quarter Body Lock

67/69	(Left) 05–08	.....	1	448 1343 MR
67/	(Left) 15–18–85–88	.....	1	448 4305 MR
67/69	(Right) 05–08	.....	1	448 1342 MR
67/	(Right) 15–18–85–88	.....	1	448 4304 MR

20.240–1 PILLAR, Rear Body

67/69	(Left) 06	.....	1	448 1345 MR
67	(Left) 07	.....	1	448 1355 MR
67/69	(Left) 09	.....	1	448 1351 MR
67/69	(Left) 16–17–19–59–86–87–89	.....	1	448 4315 MR
70/	(Left) 19–89	.....	1	448 7983 MR
68/	(Left) 30–70	.....	1	448 5301 MR
67/69	(Right) 06	.....	1	448 1344 MR
67	(Right) 07	.....	1	448 1354 MR
67/69	(Right) 09	.....	1	448 1350 MR
67/69	(Right) 16–17–19–59–86–87–89	.....	1	448 4314 MR
70/	(Right) 19–89	.....	1	448 7982 MR
68/	(Right) 30–70	.....	1	448 5300 MR

20.240–2 EXTENSION, Rear Body Pillar

67	(Left) 16–86	.....	1	357 5277
67	(Right) 16–86	.....	1	357 5276

20.240–3 SEAL, Rear Body Pillar Lower

67	06–07–09	.....	2	349 2698

20.245–1 REINFORCEMENT, Rear Quarter Body Lock Pillar

67/69	(Left) 05–08	.....	1	448 0767 MR
67/	(Left) 15–18–85–88	.....	1	448 4327 MR
67/69	(Right) 05–08	.....	1	448 0766 MR
67/	(Right) 15–18–85–88	.....	1	448 4326 MR

20.245–1a FILLER, Rear Quarter Panel Front Extension To Wheelhouse

70/	(Left) 05	.....	1	363 1035 MR
71/	(Left) 08	.....	1	363 2049 MR
70/	(Right) 05	.....	1	363 1034 MR
71/	(Right) 08	.....	1	363 2048 MR

20.245–2 EXTENSION, Rear Body Pillar Reinforcement

67	(Left) 16–86	.....	1	357 5279
67	(Right) 16–86	.....	1	357 5278

20.245–3 REINFORCEMENT, Rear Body Pillar

67/69	(Left) 06	.....	1	448 0769 MR
67/69	(Left) 09	.....	1	448 1363 MR
68/70	(Left) 30	.....	1	360 2539 MR
68/	(Left) 70	.....	1	448 5309 MR
67/69	(Right) 06	.....	1	448 0768 MR
67/69	(Right) 09	.....	1	448 1362 MR
68/70	(Right) 30	.....	1	360 2538 MR
68/	(Right) 70	.....	1	448 5308 MR

20.247 PANEL, Rear Quarter Body Lock Pillar Finish

67/69	(Left) 08	.....	1	350 0265
67/	(Left) 18-88	.....	1	357 5403
67/69	(Right) 08	.....	1	350 0264
67/	(Right) 18-88	.....	1	357 5402

20.255–1 RAIL, Side Roof

71	(Left) 01	.....	1	630 4309 MR
72	(Left) 01 (LSBW)	.....	1	630 4309 MR
72	(Left) 01 (WSBW)	.....	1	630 9123 MR
67/69	(Left) 05-08	.....	1	448 0779 MR
70	(Left) 05	.....	1	630 4309 MR
67/69	(Left) 06	.....	1	448 0781 MR
70	(Left) 06	.....	1	630 4311 MR
67/69	(Left) 15-18-85-88	.....	1	448 4307 MR
70/	(Left) 15-85	.....	1	448 7641 MR
67/69	(Left) 16-19-86-89	.....	1	448 4311 MR
70/	(Left) 18-88	.....	1	448 4307 MR
70/	(Left) 19-89	.....	1	448 7645 MR
70/71	(Left) 40	.....	1	630 4809 MR
72	(Left) 40 (LSBW)	.....	1	630 4809 MR
72	(Left) 40 (WSBW)	.....	1	630 9099 MR
71	(Right) 01	.....	1	630 4308 MR
72	(Right) 01 (LSBW)	.....	1	630 4308 MR
72	(Right) 01 (WSBW)	.....	1	630 9122 MR
67/69	(Right) 05-08	.....	1	448 0778 MR
70	(Right) 05	.....	1	630 4308 MR
67/69	(Right) 06	.....	1	448 0780 MR
70	(Right) 06 ***(Use 630 4308)***	.....	1	630 4310 MR
67/69	(Right) 15-18-85-88	.....	1	448 4306 MR
70/	(Right) 15-85	.....	1	448 7640 MR
67/69	(Right) 16-19-86-89	.....	1	448 4310 MR
70/	(Right) 18-88	.....	1	448 4306 MR
70/	(Right) 19-89	.....	1	448 7644 MR
70/71	(Right) 40	.....	1	630 4808 MR
72	(Right) 40 (LSBW)	.....	1	630 4808 MR
72	(Right) 40 (WSBW)	.....	1	630 9098 MR

20.255–2 RAIL, Side Roof (Front)

67/69	(Left) 09	.....	1	448 1299 MR
68/	(Left) 30-70	.....	1	448 5261 MR
67	(Left) 59	.....	1	448 4317 MR
67/69	(Right) 09	.....	1	448 1298 MR
68/	(Right) 30-70	.....	1	448 5260 MR
67	(Right) 59	.....	1	448 4316 MR

20.255–3 RAIL, Side Roof (Center)

67/69	(Left) 09	.....	1	350 9161 MR
68/70	(Left) 70	.....	1	360 0367 MR
71/	(Left) 70	.....	1	363 2401 MR
67/69	(Right) 09	.....	1	350 9160 MR
68/70	(Right) 70	.....	1	360 0366 MR
71/	(Right) 70	.....	1	363 2400 MR

BODY SHEET METAL

20.255–4 RAIL, Side Roof (Rear)

67/69	(Left) 09	.....	1	350 9165 MR
68/70	(Left) 30	.....	1	360 2547 MR
67	(Left) 59	.....	1	357 4173 MR
68/69	(Left) 70 (* 20–8)	.....	1	359 2595 MR
69	(Left) 70 (* 20–9)	.....	1	360 0369 MR
70	(Left) 70	.....	1	360 0369 MR
71/	(Left) 70	.....	1	363 2291 MR
67/69	(Right) 09	.....	1	350 9164 MR
68/70	(Right) 30	.....	1	360 2546 MR
67	(Right) 59	.....	1	357 4172 MR
68/69	(Right) 70 (* 20–8)	.....	1	359 2594 MR
69	(Right) 70 (* 20–9)	.....	1	360 0368 MR
70	(Right) 70	.....	1	360 0368 MR
71/	(Right) 70	.....	1	363 2290 MR

20.255–5 RAIL, Rear Quarter Side Roof

67/69	(Left) 08	.....	1	350 0249
67/69	(Right) 08	.....	1	350 0248

20.255–6 EXTENSION, Side Roof Rail Rear

67/69	(Left) 09	.....	1	350 9157
67/69	(Right) 09	.....	1	350 9156

20.255–7 GUSSET, Roof Rail To Uniside

67/69	(Left) 09	.....	1	350 9037
67/69	(Right) 09	.....	1	350 9036

20.260–1 REINFORCEMENT, Side Roof Rail

67/69	(Left) 05–08	.....	1	448 4367 MR
67/69	(Left) 06	.....	1	448 4369 MR
67/69	(Left) 15–18–85–88	.....	1	448 4323 MR
70/71	(Left) 15–85	.....	1	448 7651 MR
72	(Left) 15–85 (LSBW)	.....	1	448 7651 MR
72	(Left) 15–85 (WSBW)	.....	1	812 1693 MR
67/69	(Left) 16–19–86–89	.....	1	448 4333 MR
70/71	(Left) 18–88	.....	1	448 4323 MR
72	(Left) 18–88 (LSBW)	.....	1	448 4323 MR
72	(Left) 18–88 (WSBW)	.....	1	812 1695 MR
67/69	(Right) 05–08	.....	1	448 4366 MR
67/69	(Right) 06	.....	1	448 4368 MR
67/69	(Right) 15–18–85–88	.....	1	448 4322 MR
70/71	(Right) 15–85	.....	1	448 7650 MR
72	(Right) 15–85 (LSBW)	.....	1	448 7650 MR
72	(Right) 15–85 (WSBW)	.....	1	812 1692 MR
67/69	(Right) 16–19–86–89	.....	1	448 4332 MR
70/71	(Right) 18–88	.....	1	448 4322 MR
72	(Right) 18–88 (LSBW)	.....	1	448 4322 MR
72	(Right) 18–88 (WSBW)	.....	1	812 1694 MR

20.260–2 REINFORCEMENT, Side Roof Rail (Front)

67/69	(Left) 09	.....	1	350 9167 MR
70/	(Left) 19–89	.....	1	448 7977 MR
68/	(Left) 30–70	.....	1	360 0377 MR
67	(Left) 59	.....	1	448 4337 MR
67/69	(Right) 09	.....	1	350 9166 MR
70/	(Right) 19–89	.....	1	448 7976 MR
68/	(Right) 30–70	.....	1	360 0376 MR
67	(Right) 59	.....	1	448 4336 MR

BODY SHEET METAL

20.260–3 REINFORCEMENT, Side Roof Rail (Center)

67/69	(Left) 09	.....	1	350 9169	MR
68/70	(Left) 30–70	.....	1	360 0379	MR
71/	(Left) 70	.....	1	363 2403	MR
67/69	(Right) 09	.....	1	350 9168	MR
68/70	(Right) 30–70	.....	1	360 0378	MR
71/	(Right) 70	.....	1	363 2402	MR

20.260–4 REINFORCEMENT, Side Roof Rail (Rear)

70	(Left) 05	.....	1	630 4305	MR
71	(Left) 05–06	.....	1	630 4305	MR
72	(Left) 05–06 (LSBW)	.....	1	630 4305	MR
72	(Left) 05–06 (WSBW)	.....	1	630 9125	MR
70	(Left) 06	.....	1	630 4627	MR
71/	(Left) 08	.....	1	630 5121	MR
67/69	(Left) 09	.....	1	448 4365	MR
70/71	(Left) 19–89	.....	1	448 7979	MR
72	(Left) 19–89 (LSBW)	.....	1	448 7979	MR
72	(Left) 19–89 (WSBW)	.....	1	812 1697	MR
68/70	(Left) 30	.....	1	448 5497	MR
67	(Left) 59	.....	1	448 4785	MR
68/70	(Left) 70	.....	1	448 5291	MR
71	(Left) 70	.....	1	448 8637	MR
72	(Left) 70 (LSBW)	.....	1	448 8637	MR
72	(Left) 70 (WSBW)	.....	1	812 1711	MR
70	(Right) 05	.....	1	630 4304	MR
71	(Right) 05–06	.....	1	630 4304	MR
72	(Right) 05–06 (LSBW)	.....	1	630 4304	MR
72	(Right) 05–06 (WSBW)	.....	1	630 9124	MR
70	(Right) 06	.....	1	630 4626	MR
71/	(Right) 08	.....	1	630 5120	MR
67/69	(Right) 09	.....	1	448 4364	MR
70/71	(Right) 19–89	.....	1	448 7978	MR
72	(Right) 19–89 (LSBW)	.....	1	448 7978	MR
72	(Right) 19–89 (WSBW)	.....	1	812 1696	MR
68/70	(Right) 30	.....	1	448 5496	MR
67	(Right) 59	.....	1	448 4784	MR
68/70	(Right) 70	.....	1	448 5290	MR
71	(Right) 70	.....	1	448 8636	MR
72	(Right) 70 (LSBW)	.....	1	448 8636	MR
72	(Right) 70 (WSBW)	.....	1	812 1710	MR

20.260–4a SUPPORT, Rear Quarter Window Upper (Rear)

70	(Left) 06 (* 20–16)	.....	1	363 1029
70	(Right) 06 (* 20–16)	.....	1	363 1028

20.260–4b SUPPORT, Rear Quarter Window Upper (Front)

70	06 (* 20–16)	.....	2	363 1026

20.260–4c SUPPORT, Rear Quarter Window (Upper)

70	(Left) 06 (* 20–17)	.....	1	364 1843
71/	(Left) 06	.....	1	364 1843
70	(Right) 06 (* 20–17)	.....	1	364 1842
71/	(Right) 06	.....	1	364 1842

20.260–4d ATTACHING PARTS, Support To Roof Rail Rear Reinforcement

SCREW, Tapping.....	70	06 (* 20–16)	20.280	12	400 1724
SCREW, Tapping.....	70	06 (* 20–17)	12.128	10	400 1479
SCREW, Tapping.....	71/	06	12.128	10	400 1479

Printed in U.S.A.

BODY SHEET METAL

20.260–4e SUPPORT, Rear Quarter Window (Lower)

70	(Left) 06 (* 20-17)	.....	1	363 6797
71/	(Left) 06	.....	1	363 6797
70	(Right) 06 (* 20-17)	.....	1	363 6796
71/	(Right) 06	.....	1	363 6796

20.260–4f ATTACHING PARTS, Support To Rear Quarter Panel

SCREW, Tapping	71/	06 ***(Use 400 1479)***	.....	6	400 1418
SCREW, Tapping	71/	06	23.198	6	400 1923

20.260–4g SUPPORT, Side Roof Rail Rear Reinforcement To Wheelhouse

70/	(Left) 05-06	.....	1	361 5549
70/	(Right) 05-06	.....	1	361 5548

20.260–5 REINFORCEMENT, Side Roof Rail To Rear Quarter Side Roof Rail

67	(Left) 08	.....	1	350 0251
68/69	(Left) 08	.....	1	448 5059
71/	(Left) 08	.....	1	448 9171
67	(Left) 18-88 ***(Use 650 6477)***	.....	1	357 4655
68/71	(Left) 18-88	.....	1	650 6477
72	(Left) 18-88 (* 20-26)	.....	1	650 6477
72	(Left) 18-88 (* 20-27)	.....	1	653 1623
67	(Right) 08	.....	1	350 0250
68/69	(Right) 08	.....	1	448 5058
71/	(Right) 08	.....	1	448 9170
67	(Right) 18-88 ***(Use 650 6476)***	.....	1	357 4654
68/71	(Right) 18-88	.....	1	650 6476
72	(Right) 18-88 (* 20-26)	.....	1	650 6476
72	(Right) 18-88 (* 20-27)	.....	1	653 1622

20.265 PANEL, Rear Quarter Inner

70/71	(Left) 40	.....	1	448 8513
72	(Left) 40	.....	1	812 1273
70/71	(Right) 40	.....	1	448 8512
72	(Right) 40	.....	1	812 1272

20.272–1 PANEL, Rear Wheelhouse (Outer)

67/69	(Left) 01	.....	1	355 2217 MR
70/	(Left) 01-40	.....	1	361 5577 MR
68/70	(Left) 30-70	.....	1	360 0477 MR
71/	(Left) 70	.....	1	363 2343 MR
67/68	(Left) 10-50-80	.....	1	357 4801 MR
69/	(Left) 10-80	.....	1	361 4141 MR
67/69	(Right) 01	.....	1	355 2216 MR
70/	(Right) 01-40	.....	1	361 5576 MR
68/70	(Right) 30-70	.....	1	360 0476 MR
71/	(Right) 70	.....	1	363 2342 MR
67/68	(Right) 10-50-80 ***(Use 361 4140)***	.....	1	357 4800 MR
69/	(Right) 10-80	.....	1	361 4140 MR

20.272–2 PANEL, Rear Wheelhouse (Inner)

70/	(Left) 01-40	.....	1	361 5579 MR
67/69	(Left) 05-06-09	.....	1	448 1301 MR
67	(Left) 07	.....	1	352 0819 MR
67/69	(Left) 08	.....	1	350 5531 MR
67/	(Left) 15-16-18-19-59-85-86-88-89	.....	1	448 4233 MR
67/68	(Left) 17-87	.....	1	448 4833 MR
68/70	(Left) 30-70	.....	1	350 0041 MR
71/	(Left) 70	.....	1	363 2341 MR

70/	(Right) 01-40	1	361 5578	MR
67/69	(Right) 05-06-09	1	448 1300	MR
67	(Right) 07	1	352 0818	MR
67/69	(Right) 08	1	350 5530	MR
67/	(Right) 15-16-18-19-59-85-86-88-89	1	448 4232	MR
67/68	(Right) 17-87	1	448 4832	MR
68/70	(Right) 30-70	1	350 0040	MR
71/	(Right) 70	1	363 2340	MR

20.272-3 BRACKET, Spare Tire Support

67/68	18-88 (W3S)	1	358 6564
69/	18 (W3S)	1	358 6564
69/	88	1	358 6564

20.272-4 FILLER, Rear Wheelhouse To Floor Plan

68/70	(Left) 30-70	1	360 0463
68/70	(Right) 30-70	1	360 0462

20.272-5 REINFORCEMENT, Rear Wheelhouse To Floor Pan

67	07	1	350 6001

20.272-6 SUPPORT, Rear Quarter Trim Panel

70/	(Left) 06	1	361 5445
70/	(Left-Front) 40	1	363 6069
70/71	(Left-Rear) 40	1	363 6071
72	(Left-Rear) 40 (LSBW)	1	363 6071
72	(Left-Rear) 40 (WSBW)	1	630 9133
70/	(Right) 06	1	361 5444
70/	(Right-Front) 40	1	363 6068
70/71	(Right-Rear) 40	1	363 6070
72	(Right-Rear) 40 (LSBW)	1	363 6070
72	(Right-Rear) 40 (WSBW)	1	630 9132

20.273 REINFORCEMENT, Rear Quarter Window Front

71/	(Left) 08	1	363 2257
67/	(Left) 18-88	1	357 4663
71/	(Right) 08	1	363 2256
67/	(Right) 18-88	1	357 4662

20.275 BRACKET, Rear Seat Back Hinge

67/69	(Left) 08	1	350 0327
67/69	(Right) 08	1	350 0326

20.280-1 PANEL, Rear Quarter Window Regulator

67/68	(Left) 06	1	350 9311
69	(Left) 06	1	363 0811
67	(Left) 07	1	352 3935
67/68	(Left) 09	1	350 0945
69	(Left) 09	1	362 4599
67/69	(Left) 16-19-59-86-89	1	357 5345
67/68	(Left) 17-87	1	357 5353
70/	(Left) 19-89	1	361 5657
68/69	(Left) 70 (* 20-6)	1	630 0017
69	(Left) 70 (* 20-7)	1	448 6919
70	(Left) 70	1	448 6919
71/	(Left) 70	1	630 6103
67/68	(Right) 06	1	350 9310
69	(Right) 06	1	363 0810
67	(Right) 07	1	352 3934
67/68	(Right) 09	1	350 0944
69	(Right) 09	1	362 4598

67/69	(Right) 16-19-59-86-89	.....	1	357 5344
67/68	(Right) 17-87	.....	1	357 5352
70/	(Right) 19-89	.....	1	361 5656
68/69	(Right) 70 (* 20-6)	.....	1	630 0016
69	(Right) 70 (* 20-7)	.....	1	448 6918
70	(Right) 70	.....	1	448 6918
71/	(Right) 70	.....	1	630 6102

20.280–2 ATTACHING PARTS, Panel To Uniside

SCREW, Tapping.....	67/68	06-09 (8-18 × 3/8)	17.669	4	G457002 NA
SCREW, Tapping.....	67/69	06-09 (8-5 × 5/8)	.....	6	400 0013
SCREW, Tapping.....	69	06-09 (10-12 × 5/8) ***(Use 318 9013)***	17.671	2	400 0478
SCREW, Tapping.....	67/70	16-17-19-59-86-87-89	.....	AR	320 9584
SCREW, Tapping.....	70/	19-89	17.660	4	G161901
SCREW, Tapping.....	71/	19-89	.....	12	G9414721 NA
SCREW, Tapping.....	68/	70 ***(Use 318 9013)***	17.671	16	400 0478
SCREW, Hexagon	68/69	70	22.056	6	400 0457
SCREW, Hexagon	70/	70	17.671	4	400 1040

20.280–3 WATERDAM, Regulator Panel To Rear Quarter Panel

67	(Left) 07	.....	1	350 0949
67	(Right) 07	.....	1	350 0948

20.280–4 BRACKET, Regulator Panel To Lock Pillar Support

67/69	(Left) 09	.....	1	350 9411
67/69	(Right) 09	.....	1	350 9410

20.280–5 COVER, Regulator Panel Access Hole

67/69	(Left) 07-09	.....	1	350 1085
67/69	(Right) 07-09	.....	1	350 1084

20.280–6 ATTACHING PARTS, Cover To Regulator Panel

SCREW, Tapping.....	67/69	07-09	17.660	8	G161895

20.282–1 SUPPORT, Folding Top Pivot Bracket

67	(Left) 07	.....	1	350 0967
67	(Left) 17-87	.....	1	620 0037
67	(Right) 07	.....	1	350 0966
67	(Right) 17-87	.....	1	620 0036

20.282–2 BRACKET, Support To Side Sill

67	07	.....	2	350 0972

20.282–3 DEFLECTOR, Rear Quarter Belt Water

68	17	.....	2	359 9200
67	(Left) 17-87	25.029	1	357 5319
67	(Right) 17-87	25.029	1	357 5318

20.285–1 PANEL, Rear Quarter Inside Lower

67	(Left) 07	.....	1	448 2785
67	(Right) 07	.....	1	448 2784

20.300 PANEL, Rear Quarter Upper

67	(Left) 59	.....	1	448 4789 MR
67	(Right) 59	.....	1	448 4788 MR

20.315 PILLAR, Tailgate Opening

67/69	(Left) 08	.....	1	448 1305	MR
71/	(Left) 08	.....	1	630 6619	MR
67/68	(Left) 18-88 (LVT)	.....	1	448 4271	MR
67/68	(Left) 18-88 (WVT)	.....	1	448 4275	MR
69/	(Left) 18-88	.....	1	448 6671	MR
67/69	(Right) 08	.....	1	448 1304	MR
71/	(Right) 08	.....	1	630 6618	MR
67/68	(Right) 18-88 (LVT)	.....	1	448 4270	MR
67/68	(Right) 18-88 (WVT)	.....	1	448 4274	MR
69/	(Right) 18-88	.....	1	448 6670	MR

20.325–1 PANEL ASSEMBLY, Lower Deck Center

67/69	05-06-07-09 ***(Use 448 5938)***	.....	1	~~358 3940~~	MR
70	01	.....	1	630 4284	MR
71	05-06	.....	1	630 6357	MR
72	05-06 (* 20-24)	.....	1	812 0810	MR
72	05-06 (* 20-25)	.....	1	812 1454	MR
67	15-16-17-19-85-86-87-89 ***(Use 448 5401)***	.....	1	357 4921	MR
68	15-17-19-85-89	.....	1	448 5401	MR
69	15-19 345	.....	1	651 8139	MR
70/	15-19-85-89	.....	1	653 1083	MR
68/69	30-70	.....	1	448 5288	MR
70	30-70	.....	1	448 7752	MR
71/	70	.....	1	448 8645	MR
67	59	.....	1	620 0001	MR
69	85-89 346	.....	1	448 6484	MR

20.325–1a PANEL, Rear Center

70/	40 (* 20-29)	.....	1	448 8487	

20.325–1b REINFORCEMENT, Rear Center Panel

70/	40	.....	1	630 5086	

20.325–2 PLATE, Tail Lamp Mounting

67/69	05-06-07-09	.....	2	358 3830	

20.325–3 EXTENSION, Lower Deck Center Panel

70/	01-40 630 9441	USE.	1	361 ~~5603~~	
70/71	15-19-85-89	.....	1	653 1081	
72	15-19-85-89	.....	1	653 1595	
68/69	30-70 ***(Use 630 4510)***	.....	1	630 0097	
70/	30-70	.....	1	630 4510	

20.325–4 ATTACHING PARTS, Extension To Lower Deck Center Panel

SCREW, Tapping.....	70/	15-19-85-89	.....	4	400 1701	
SCREW, Tapping.....	70/	15-19-85-89	17.660	4	G162003	NA
SCREW, Tapping.....	68/69	30-70 ***(Use 400 1479)***	.....	3	400 1418	
SCREW, Tapping.....	70/	30-70	.....	3	400 1701	

20.325–5 ATTACHING PARTS, Extension To Rear Floor Pan Extension

SCREW, Tapping.....	68/69	30-70	2.050	4	400 2334	
SCREW, Tapping.....	70	30-70	17.671	4	400 1040	
SCREW, Tapping.....	71/	70	2.050	4	400 2334	
NUT, Spring.....	68/	30-70	2.050	4	400 1999	

BODY SHEET METAL

20.330–1 PANEL ASSEMBLY, Lower Rear

67/69	08	.....	1	350 0141
71	08	.....	1	630 6357
72	08 (* 20-24)	.....	1	812 0810
72	08 (* 20-25)	.....	1	812 1454
72	08 (* 20-28)	.....	1	812 2081

20.330–1a REINFORCEMENT, Lower Rear Panel

71/	08	.....	1	630 6368

20.330–2 PANEL ASSEMBLY, Lower Rear (Inner)

67/68	18-88	.....	1	357 4931
69/	18-88	.....	1	360 9009

20.330–3 PANEL ASSEMBLY, Lower Rear (Outer)

67/68	18–88 (L3S)	.....	1	650 0671
67/68	18–88 (W3S)	.....	1	357 4935
69/	18 (L3S)	.....	1	360 0667
69/	18 (W3S)	.....	1	360 0669
69/	88	.....	1	360 0669

20.330–4 REINFORCEMENT, Lower Rear Inner Panel

67/68	18–88 (L3S)	.....	1	357 4936
67/68	18–88 (W3S)	.....	1	357 4937
69/	18 (L3S)	.....	1	357 4936
69/	18 (W3S)	.....	1	357 4937
69/	88	.....	1	357 4937

20.330–5 EXTENSION, Lower Rear Inner Panel

67/68	18–88 (L3S)	.....	1	650 0567
67/68	18–88 (W3S)	.....	1	357 4929
69/71	18 (L3S)	.....	1	650 0567
72	18 (L3S)	.....	1	653 1683
69/71	18 (W3S)	.....	1	357 4929
72	18 (W3S)	.....	1	361 0092
69/71	88	.....	1	357 4929
72	88	.....	1	361 0092

20.330–6 EXTENSION, Rear Cross Sill

67/68	(Left) 18–88 (L3S)	.....	1	357 4399
69/	(Left) 18 (L3S)	.....	1	357 4399
67/68	(Right) 18–88 (L3S)	.....	1	357 4398
69/	(Right) 18 (L3S)	.....	1	357 4398

20.330–6a EXTENSION, Lower Rear Panel (Upper)

71/	(Left) 08	.....	1	361 6105
71/	(Right) 08	.....	1	361 6104

20.330–7 SEAL, Lower Rear Panel

67/69	08	.....	2	355 2222

20.330–8 RETAINER, Lower Rear Panel Seal

67/69	08	.....	2	355 4285

Printed in U.S.A.

BODY SHEET METAL

20.335–1 BRACE, Lower Center Panel To Floor

67/69	01	.....	1	355 2525
70	01	.....	1	361 5605
71/	01	.....	1	363 2125
69	10-80	.....	1	361 4179
70/	10-80	.....	1	360 9177
67/68	15-16-17-19-85-86-87-89	.....	1	357 5507
68/69	30-70	.....	1	360 0525
70	30-70	.....	1	362 4792
67	59	.....	1	357 4233
71/	70	.....	1	363 2355

20.335–2 COVER, Lower Center Panel Brace

71/	08	.....	1	364 6724

20.335–3 ATTACHING PARTS, Cover To Brace

SCREW, Tapping 71/	08	..... 3.349	4	400 2526

20.345–1 RAIL, Inner Belt Front

70/	(Left) 06	.....	1	361 5567
67	(Left) 07	.....	1	350 0517
67/68	(Left) 17-87	.....	1	357 5489
67	(Left) 59	.....	1	357 4477
70/	(Right) 06	.....	1	361 5566
67	(Right) 07	.....	1	350 0516
67/68	(Right) 17-87	.....	1	357 5488
67	(Right) 59	.....	1	357 4476

20.345–2 BRACE, Belt Rail To Rear Quarter Outer Panel

67/69	07-09	.....	2	350 0324
67/69	16-17-19-59-86-87-89	.....	2	357 5460
70/	19-89	.....	2	361 5688

20.350–1 RAIL, Inner Belt Rear

67	(Left) 07	.....	1	355 3149
67/69	(Left) 08	.....	1	350 5673
71/	(Left) 08	.....	1	361 5565
67/69	(Left) 09	.....	1	448 4115
67/69	(Left) 16-19-86-89	.....	1	357 5485
67/68	(Left) 17-87	.....	1	357 5359
67/	(Left) 18-88	.....	1	650 0591
70/	(Left) 19-89	.....	1	361 5691
68/70	(Left) 30	.....	1	360 2543
68/70	(Left) 70	.....	1	360 0483
71/	(Left) 70	.....	1	363 2329
67	(Right) 07	.....	1	355 3148
67/69	(Right) 08	.....	1	350 5672
71/	(Right) 08	.....	1	361 5564
67/69	(Right) 09	.....	1	448 4114
67/69	(Right) 16-19-86-89	.....	1	357 5484
67/68	(Right) 17-87	.....	1	357 5358
67/	(Right) 18-88 (L3S)	.....	1	650 0590
67/	(Right) 18-88 (W3S)	.....	1	650 0592
70/	(Right) 19-89	.....	1	361 5690
68/70	(Right) 30	.....	1	360 2542
68/70	(Right) 70	.....	1	360 0482
71/	(Right) 70	.....	1	363 2328

Printed in U.S.A.

BODY SHEET METAL

20.350–2 ATTACHING PARTS, Rail To Uniside

SCREW, Hexagon	67/69	19-89	23.001	2	400 2203

20.350–3 EXTENSION, Inner Belt Rail Rear

68/70	(Left) 70	.....	1	360 0373
68/70	(Right) 70	.....	1	360 0372

20.350–6 BRACE, Belt Rail To Floor

67/	18-88 (L3S)	.....	2	357 5406
67/	18-88 (W3S)	.....	1	357 5406
71/	(Left) 08	.....	1	361 6071
71/	(Right) 08	.....	1	361 6070

20.350–7 SUPPORT, Belt Rail To Inner Wheelhouse

67	(Left) 07	.....	1	350 0457
67/68	(Left) 17-87	.....	1	357 5297
67	(Right) 07	.....	1	350 0456
67/68	(Right) 17-87	.....	1	357 5296

20.350–8 SUPPORT, Spare Wheel

67/68	18-88 (W3S)	.....	1	357 5544
69/	18 (W3S)	.....	1	357 5544
69/	88	.....	1	357 5544

20.350–9 RETAINER, Rear Compartment Trim Panel

67/	(Left) 18-88	.....	1	357 5373
67/68	(Right) 18-88 (W3S)	.....	1	357 5374
69/	(Right) 18 (W3S)	.....	1	357 5374
67/68	(Right) 18-88 (L3S)	.....	1	357 5372
69/	(Right) 18 (L3S)	.....	1	357 5372
69/	(Right) 88	.....	1	357 5374

20.350–10 SUPPORT, Rear Compartment Trim Panel

71/	(Left) 08	.....	2	364 1994
67/68	18-88 (W3S)	.....	1	357 4562
69/	18 (W3S)	.....	1	357 4562
69/	88	.....	1	357 4562

20.367–1 PANEL, Rear Deck Upper

67	05-06	.....	1	350 0390
68/69	05-06	.....	1	360 0710
67/68	09	.....	1	350 0390
70/	05-06	.....	1	448 7384
67	07	.....	1	448 1310
67/69	15-85 ***(Use 357 4600)***	.....	1	448 4264
70/	15-85	.....	1	361 5762
67/69	16-19-86-89	.....	1	448 4265
67/68	17-87	.....	1	448 4825
70/	19-89	.....	1	361 5764
68/70	30-70	.....	1	360 0322
71/	70	.....	1	363 2234

20.367–2 SUPPORT, Rear Deck Upper Panel To Wheelhouse

67	(Left) 07	.....	1	350 9059
67/68	(Left) 17-87	.....	1	357 5343
67	(Right) 07	.....	1	350 9058
67/68	(Right) 17-87	.....	1	357 5342

20.367–3 BRACKET, Rear Deck Upper Panel To Wheelhouse Support

67/68	(Left) 17-87	.....	1	357 4497
67/68	(Right) 17-87	.....	1	357 4496

20.367–4 TAPE, Rear Deck Upper Panel (Reflective)

67	*85 (RHD-Post Office)*	.....	1	360 8644

20.370–1 PANEL, Shelf

67/69	05-06-09	.....	1	350 0410
67	15-85	.....	1	650 0669
68/	15-85	.....	1	651 0268
67	16-19-86-89	.....	1	650 0670
68/	19-89	.....	1	651 0267
68/70	30	.....	1	360 2506
68/70	70	.....	1	448 5275
71	70	.....	1	363 2237
72	70 (* 20-26)	.....	1	363 2237
72	70 (* 20-27)	.....	1	365 7794

20.370–2 INSULATION, Shelf Panel

67/69	05-06-09	.....	1	349 2087
67	15-16-19-85-86-89	.....	1	351 6380
67	59	.....	1	351 6380

20.370–3 PLATE, Rear Window Defogger Mounting

72	05-06	.....	1	365 7814

20.370–4 ATTACHING PARTS, Rear Window Defogger Mounting Plate To Panel

SCREW, Tapping.....	72	05-06	.....	6	400 2328

20.378 SUPPORT, Rear Seat Back

67	59	.....	1	351 7288

20.380–1 SUPPORT, Rear Shelf Panel (Front)

70/	05-06	.....	1	630 4634
67	59	.....	1	448 3239

20.380–2 SUPPORT, Rear Shelf Panel (Center)

70/	(Left) 05-06	.....	1	361 6319
70/	(Right) 05-06	.....	1	361 6318
67	59	.....	1	351 7206

20.380–3 SUPPORT, Rear Shelf Panel (Outer)

70/	(Left) 05-06	.....	1	361 6317
67	(Left) 59	.....	1	351 7209
70/	(Right) 05-06	.....	1	361 6316
67	(Right) 59	.....	1	351 7208

20.380–4 GUSSET, Shelf Panel To Uniside

67	59	.....	2	357 4206

BODY SHEET METAL

20.380–4a EXTENSION, Rear Shelf Panel Support Gusset

70/	(Left) 05–06	.....	1	361 6573
70/	(Right) 05–06	.....	1	361 6572

20.385–1 GUSSET, Shelf Panel To Wheelhouse

67/69	(Left) 05–06–09	.....	1	350 0409
70/	(Left) 05–06	.....	1	361 5581
67/	(Left) 15–85	.....	1	357 4817
67/	(Left) 16–19–86–89	.....	1	357 4819
68/70	(Left) 30	.....	1	360 2587
67	(Left) 59	.....	1	357 4213
68/	(Left) 70	.....	1	360 0839
67/69	(Right) 05–06–09	.....	1	350 0408
70/	(Right) 05–06	.....	1	361 5580
67/	(Right) 15–85	.....	1	357 4816
67/	(Right) 16–19–86–89	.....	1	357 4818
68/70	(Right) 30	.....	1	360 2586
67	(Right) 59	.....	1	357 4212
68/	(Right) 70	.....	1	360 0838

20.387 BRACKET, Rear Deck Hinge Support To Wheelhouse

70/	(Left) 05–06	.....	1	361 5569
67/	(Left) 15–85	.....	1	359 1077
67/	(Left) 16–17–19–86–87–89	.....	1	359 1079
68/70	(Left) 30–70	.....	1	360 2391
71/	(Left) 70	.....	1	363 2335
70/	(Right) 05–06	.....	1	361 5568
67/	(Right) 15–85	.....	1	359 1076
67/	(Right) 16–17–19–86–87–89	.....	1	359 1078
68/70	(Right) 30–70	.....	1	360 2390
71/	(Right) 70	.....	1	363 2334

20.390 HEADER, Rear Opening

67/69	08	.....	1	448 1287
71/	08	.....	1	630 6250
67/	18–88	.....	1	650 0674
70/	40	.....	1	363 6034

20.395–1 MOULDING, Side Roof Rail Drip (Rain Gutter)(Painted)

67/69	(Left) 05–08	.....	1	347 2473
67/69	(Left) 06	.....	1	350 0509
67/69	(Left) 09	.....	1	350 0243
67/69	(Left) 15–18–85–88	.....	1	357 5247
67/69	(Left) 16–19–86–89	.....	1	357 5249
70/	(Left) 18–88	.....	1	357 5247
70/	(Left) 19–89	.....	1	361 5655
68/70	(Left) 30	.....	1	360 2545
70/	(Left) 40	.....	1	363 6065
67	(Left) 59	.....	1	357 4135
68/70	(Left) 70	.....	1	360 0357
67/69	(Right) 05–08	.....	1	347 2472
67/69	(Right) 06	.....	1	350 0508
67/69	(Right) 09	.....	1	350 0242
67/69	(Right) 15–18–85–88	.....	1	357 5246
67/69	(Right) 16–19–86–89	.....	1	357 5248
70/	(Right) 18–88	.....	1	357 5246
70/	(Right) 19–89	.....	1	361 5654
68/70	(Right) 30	.....	1	360 2544
70/	(Right) 40	.....	1	363 6064
67	(Right) 59	.....	1	357 4134
68/70	(Right) 70	.....	1	360 0356

Printed in U.S.A.

70/	(Left-Front) 01	.....	1	361 5433
70/	(Left-Front) 15-85	.....	1	361 5651
71/	(Left-Front) 70	.....	1	363 2299
70/	(Left-Rear) 05-06-08	.....	1	361 5435
70/	(Left-Rear) 15-85	.....	1	361 5653
71/	(Left-Rear) 70	.....	1	363 2271
70/	(Right-Front) 01	.....	1	361 5432
70/	(Right-Front) 15-85	.....	1	361 5650
71/	(Right-Front) 70	.....	1	363 2298
70/	(Right-Rear) 05-06-08	.....	1	361 5434
70/	(Right-Rear) 15-85	.....	1	361 5652
71/	(Right-Rear) 70	.....	1	363 2270

20.395–2 MOULDING, Front Body Roof Rail Drip (Rain Gutter)(Painted)

67/69	(Left) 09	.....	1	350 0369
70/	(Left) 01-40	.....	1	361 6759
67/68	(Left) 17-87	.....	1	357 5307
67/69	(Right) 09	.....	1	350 0368
70/	(Right) 01-40	.....	1	361 6758
67/68	(Right) 17-87	.....	1	357 5306

20.395–3 EXTENSION, Side Drip Moulding To Cowl Side

67/69	(Left) 05-06-08	.....	1	350 0239
67/69	(Left) 07-09	.....	1	350 0161
67/	(Left) 15-18-85-88	.....	1	357 5253
67/	(Left) 16-17-19-59-86-87-89	.....	1	357 5281
68/	(Left) 30-70	.....	1	360 0359
67/69	(Right) 05-06-08	.....	1	350 0238
67/69	(Right) 07-09	.....	1	350 0160
67/	(Right) 15-18-85-88	.....	1	357 5252
67/	(Right) 16-17-19-59-86-87-89	.....	1	357 5280
68/	(Right) 30-70	.....	1	360 0358

20.395–4 COVER, Drip Moulding Joint

70/	01-40	.....	4	363 5727
67/70	15-16-18-85-86	26.075	2	344 0395
71/	15-18-85	.....	2	363 5727
71/	70	.....	2	363 2206

20.395–5 SEAL, Tailgate Opening To Drip Moulding

67/	18-88	.....	1	358 5298

20.397–1 FRAME, Rear Window

67	05-06	.....	1	448 1306 MR
68/69	05-06	.....	1	448 5060 MR
70/	05-06	.....	1	361 5404 MR
67	09	.....	1	448 1307 MR
68/69	09	.....	1	448 5321 MR
67/69	15-85	.....	1	448 4262 MR
70/	15-85	.....	1	448 7595 MR
67/69	16-19-86-89	.....	1	448 4263 MR
70/	19-89	.....	1	448 7606 MR
67	59	.....	1	448 4371 MR
68/70	30-70...(Incl. Deck Upper Panel And Weatherstrip Retainer)	.....	1	448 5274 MR
71/	70...(Incl. Deck Upper Panel And Weatherstrip Retainer)	.....	1	448 8623 MR

BODY SHEET METAL

20.397–2 GUSSET, Frame To Uniside

68/69	(Left) 05-06	.....	1	360 0757
67/69	(Left) 15-85	.....	1	357 5193
70/	(Left) 15-85	.....	1	361 5627
67/69	(Left) 16-19-86-89	.....	1	357 5195
70/	(Left) 19-89	.....	1	361 5629
68/69	(Left) 30	.....	1	360 2509
70	(Left) 30	.....	1	630 4099
67	(Left) 59	.....	1	357 4095
68/70	(Left) 70	.....	1	360 0375
71/	(Left) 70	.....	1	363 2245
68/69	(Right) 05-06	.....	1	360 0756
67/69	(Right) 15-85	.....	1	357 5192
70/	(Right) 15-85	.....	1	361 5626
67/69	(Right) 16-19-86-89	.....	1	357 5194
70/	(Right) 19-89	.....	1	361 5628
68/69	(Right) 30	.....	1	360 2508
70	(Right) 30	.....	1	630 4098
67	(Right) 59	.....	1	357 4094
68/70	(Right) 70	.....	1	360 0374
71/	(Right) 70	.....	1	363 2244

20.397–3 GUSSET, Frame To Wheelhouse

68/70	(Left) 30	.....	1	360 2487
68/70	(Left) 70	.....	1	360 2123
71/	(Left) 70	.....	1	363 2281
68/70	(Right) 30	.....	1	360 2486
68/70	(Right) 70	.....	1	360 2122
71/	(Right) 70	.....	1	363 2280

20.397–4 BRACE, Rear Window Opening Reinforcement

67	(Left) 59	.....	1	357 4091
67	(Right) 59	.....	1	357 4090

20.410 PANEL, Side Roof Extension

67	(Left) 05-06	.....	1	350 0343
68/69	(Left) 05-06	.....	1	360 0681
67/69	(Left) 08	.....	1	350 0365
67/69	(Left) 09	.....	1	350 0353
67	(Right) 05-06	.....	1	350 0342
68/69	(Right) 05-06	.....	1	360 0680
67/69	(Right) 08	.....	1	350 0364
67/69	(Right) 09	.....	1	350 0352

20.412 EXTENSION, Rear Corner Roof

67/69	(Left) 08	.....	1	350 0377
67/69	(Right) 08	.....	1	350 0376

20.420–1 PANEL ASSEMBLY, Roof

67	05-06	.....	1	350 0350 MR
68/69	05-06	.....	1	360 0330 MR
70/	05-06	.....	1	361 5390
67/69	08	.....	1	350 0370 MR
71/	08	.....	1	361 5392 MR
67/69	09	.....	1	350 0360 MR

67/69	15-85	.....	1	357 4560	MR
70/	15-85	.....	1	361 5630	MR
67/69	16-19-86-89	.....	1	357 4580	MR
67/68	18-88	.....	1	357 4570	MR
69	18-88 ***(Use 357 4570)***	.....	1	360 8970	MR
70/	18-88	.....	1	361 6201	MR
70/	19-89	.....	1	361 5640	MR
68/70	30	.....	1	360 2520	MR
70/	40	.....	1	363 6040	MR
67	59	.....	1	357 4581	MR
68/70	70	.....	1	360 0320	MR
71/	70	.....	1	363 2230	MR

20.420–2 SUPPORT, Roof Panel (* 20–5)

70/	(No. 1) 01	.....	1	361 5394	
67	(No. 1) 05-06-08	.....	1	350 0594	
68/69	(No. 1) 05-06	.....	1	360 0318	
68/69	(No. 1) 08	.....	1	350 0594	
67/69	(No. 1) 09	.....	1	352 3350	
67/69	(No. 1) 15-18-85-88	.....	1	357 5152	
70/	(No. 1) 15-85	.....	1	361 5622	
67/	(No. 1) 16-19-59-86-89	.....	1	357 5156	
70	(No. 1) 18-88 (* 20-14)	.....	1	360 3766	
70	(No. 1) 18-88 (* 20-15)	.....	1	360 9859	
71/	(No. 1) 18-88	.....	1	360 9859	
68/70	(No. 1) 30-70	.....	1	360 0316	
71/	(No. 1) 70	.....	1	363 2232	
67/69	(No. 2) 08	.....	1	350 0603	
71/	(No. 2) 08	.....	1	363 2255	
67/69	(No. 2) 09	.....	1	350 1044	
67/69	(No. 2) 15-85	.....	1	357 5154	
70	(No. 2) 15-85	.....	1	361 5624	
67	(No. 2) 16-86	.....	1	357 5157	
67	(No. 2) 18-88	.....	1	357 5154	
71/	(No. 2) 18-88	.....	1	357 5162	
68/69	(No. 2) 19 (550)	.....	1	357 5157	
67/70	(No. 2) 19-59-89	.....	1	357 5156	
68	(No. 2) 89 (880)	.....	1	357 5157	
68/69	(No. 3) 08	.....	1	350 0599	
67/69	(No. 3) 18-88	.....	1	357 5162	
70	(No. 3) 18-88 (* 20-14)	.....	1	360 3785	
70	(No. 3) 18-88 (* 20-15)	.....	1	360 9858	
71/	(No. 3) 18-88	.....	1	360 9858	
67/69	(No. 4) 18-88	.....	1	357 5164	
67/	(No. 5) 18-88	.....	1	357 5165	

20.420–3 ATTACHING PARTS, Support To Roof Rail

SCREW, Tapping	67	15-16-19-59-85-86-89	.....	8	400 0642
SCREW, Tapping	67	18-88	.....	20	400 0642
SCREW, Tapping	71/	18-88 (To #2 Roof Support)	.....	4	812 0054

20.420–4 FILLER, Roof Panel Support

67/	18-88	.....	1	358 5310	

20.420–5 SPOILER, Roof Panel

69/70	70	.....	1	363 1490	

BODY SHEET METAL

20.420–8 ATTACHING PARTS, Roof Panel To Roof Spoiler

BOLT	69/70	70	.....	4	400 4017
SHIM	69/70	70 (Tapered)	.....	2	400 4018
WASHER	69/70	70 (Rubber)	.....	4	350 8963
NUT, Hexagon	69/70	70...(Incl. Dished Lock Washer)	.....	4	400 2256

20.422–1 COVER, Roof Top Vinyl

70/71	(Black) 05-06	.....	1	362 6555
72	(Black) 05-06	.....	1	365 5120
67	(Black) 09 ***(Use 359 8502)***	.....	1	359 8066
68/69	(Black) 09	.....	1	359 8502
67	(Black) 15-85	.....	1	358 6600
68/69	(Black) 15-85	.....	1	360 8349
70/71	(Black) 15-85	.....	1	362 6344
72	(Black) 15-85	.....	1	365 5258
67	(Black) 19-89	.....	1	358 6614
68/69	(Black) 19-89	.....	1	360 8335
70/71	(Black) 19-89	.....	1	362 6649
72	(Black) 19	.....	1	365 6259
67	(Black) 59	.....	1	358 6632
68/69	(Black) 79	.....	1	359 9319
70	(Black) 79 (* 20-12)	.....	1	362 7989
70	(Black) 79 (* 20-13)	.....	1	363 8313
71	(Black-Left) 79	.....	1	364 9133
72	(Black-Left) 79	.....	1	365 5189
71	(Black-Right) 79	.....	1	364 9132
72	(Black-Right) 79	.....	1	365 5188
72	(Black) 89	.....	1	365 5152
70	(Parchment) 01	.....	1	362 6556
71	(Parchment) 05-06	.....	1	364 2372
70	(Parchment) 79 (* 20-12)	.....	1	362 7990
72	(White) 05-06	.....	1	365 5123
67	(White) 09	.....	1	359 8067
68	(White) 09 ***(Use 359 8067)***	.....	1	359 8503
69	(White) 09	.....	1	359 8067
67	(White) 15-85	.....	1	358 6601
68	(White) 15-85	.....	1	360 8350
69	(White) 15-85	.....	1	358 6601
70	(White) 15-85	.....	1	362 6345
71	(White) 15-85	.....	1	364 3234
72	(White) 15-85	.....	1	365 5261
67	(White) 19-89	.....	1	358 6615
68	(White) 19-89	.....	1	360 8328
69	(White) 19-89	.....	1	360 9013
70	(White) 19-89	.....	1	362 6650
71	(White) 19-89	.....	1	364 3118
72	(White) 19	.....	1	365 6262
67	(White) 59	.....	1	358 6633
68	(White) 79	.....	1	359 9325
69	(White) 79	.....	1	362 4921
70	(White) 79 (* 20-13)	.....	1	363 8321
71	(White-Left) 79	.....	1	364 9135
72	(White-Left) 79	.....	1	365 5195
71	(White-Right) 79	.....	1	364 9134
72	(White-Right) 79	.....	1	365 5194
72	(White) 89	.....	1	365 5155
70	(Blue) 01	.....	1	362 6557
71	(Blue) 05-06	.....	1	364 2204
72	(Blue) 05-06	.....	1	366 1601

68	(Blue) 15-85	.....	1	360 8351
69	(Blue) 15-85	.....	1	360 8928
70	(Blue) 15-85	.....	1	362 6346
71	(Blue) 15-85	.....	1	364 3124
72	(Blue) 15-85	.....	1	366 1650
68	(Blue) 19-89	.....	1	360 8342
69	(Blue) 19-89	.....	1	360 8929
70	(Blue) 19-89	.....	1	362 6651
71	(Blue) 19-89	.....	1	364 3098
72	(Blue) 19	.....	1	366 1677
69	(Blue) 70	.....	1	362 4911
70	(Blue) 79	.....	1	362 7991
71	(Blue-Left) 79	.....	1	364 9137
72	(Blue-Left) 79	.....	1	366 1621
71	(Blue-Right) 79	.....	1	364 9136
72	(Blue-Right) 79	.....	1	366 1620
72	(Blue) 89	.....	1	366 1656
72	(Brown) 05-06	.....	1	366 1603
72	(Brown) 15-85	.....	1	366 1652
72	(Brown) 19	.....	1	366 1679
72	(Brown-Left) 79	.....	1	366 1625
72	(Brown-Right) 79	.....	1	366 1624
72	(Brown) 89	.....	1	366 1658
71	(Green) 05-06	.....	1	364 2314
72	(Green) 05-06	.....	1	366 1602
71	(Green) 15-85	.....	1	364 3130
72	(Green) 15-85	.....	1	366 1651
71	(Green) 19-89	.....	1	364 3105
72	(Green) 19	.....	1	366 1678
71	(Green-Left) 79	.....	1	364 9139
72	(Green-Left) 79	.....	1	366 1623
71	(Green-Right) 79	.....	1	364 9138
72	(Green-Right) 79	.....	1	366 1622
72	(Green) 89	.....	1	366 1657

20.422-2 COVER, Deck Opening Lower Panel Vinyl

67	(Black) 59	.....	1	358 6770
67	(White) 59	.....	1	358 6772

20.422-2a COVER, Rear Door Upper Vinyl

71	(Black-Left) 15-85 (WRC)	.....	1	360 9585
72	(Black-Left) 15-85 (WRC)	.....	1	365 1935
70	(Black-Left) 85 (WRC)	.....	1	360 9585
71	(Black-Right) 15-85 (WRC)	.....	1	360 9584
72	(Black-Right) 15-85 (WRC)	.....	1	365 1934
70	(Black-Right) 85 (WRC)	.....	1	360 9584
71	(White-Left) 15-85 (WRC)	.....	1	360 9853
72	(White-Left) 15-85 (WRC)	.....	1	365 1941
70	(White-Left) 85 (WRC)	.....	1	360 9587
71	(White-Right) 15-85 (WRC)	.....	1	360 9852
72	(White-Right) 15-85 (WRC)	.....	1	365 1940
70	(White-Right) 85 (WRC)	.....	1	360 9586
71	(Blue-Left) 15-85 (WRC)	.....	1	360 9849
72	(Blue-Left) 15-85 (WRC)	.....	1	365 1937
70	(Blue-Left) 85 (WRC)	.....	1	360 9589
71	(Blue-Right) 15-85 (WRC)	.....	1	360 9848
72	(Blue-Right) 15-85 (WRC)	.....	1	365 1936
70	(Blue-Right) 85 (WRC)	.....	1	360 9588
71	(Green-Left) 15-85 (WRC)	.....	1	360 9851
72	(Green-Left) 15-85 (WRC)	.....	1	365 1939

Printed in U.S.A.

71	(Green-Right) 15-85 (WRC)	.....	1	360 9850
72	(Green-Right) 15-85 (WRC)	.....	1	365 1938
72	(Brown-Left) 15-85 (WRC)	.....	1	365 1943
72	(Brown-Left) 15-85 (WRC)	.....	1	365 1942

20.422–2b RETAINER, Rear Door Upper Vinyl Cover

70/	(Left) 15-85 (WRC)	.....	1	360 9671
70/	(Right) 15-85 (WRC)	.....	1	360 9670

20.422–3 ATTACHING PARTS, Vinyl Roof Covering To Windshield Opening Reinforcement

NAIL, Drive	67/	WRC	.....	AR	400 1734

20.422–4 ATTACHING PARTS, Vinyl Roof Covering To Rear Window Opening Reinforcement

NAIL, Drive	67/	WRC	.....	AR	400 1734

20.422–5 ATTACHING PARTS, Vinyl Roof Covering To Roof Side Extension (Rear Door Opening)

SCREW, Tapping	67/	15-85 (WRC)	.....	4	400 0316

20.422–6 CEMENT, Vinyl Roof Cover To Roof (1 Quart)

67/	WRC		30.020	AR	448 3394

20.422–7 SEALER, Vinyl Roof Cover To Drip Rail (12 Oz. Cartridge)

67/	(Black) WRC		30.026	AR	448 3395
67	(White) WRC	***(Use 448 5533)***	30.026	AR	448 4048
68	(White) WRC		.....	AR	448 5533
69	(White) WRC	***(Use 448 5533)***	30.026	AR	448 4048
70/	(White) WRC		.....	AR	448 8303
68/69	(Blue) WRC	***(Use 448 3395)***	.....	AR	448 5530
70	(Blue) WRC		.....	AR	448 8302
71/	(Blue) WRC	***(Use 448 3395)***	.....	AR	448 5530
72	(Brown)(WRC)		.....	1	812 0620
71/	(Green) WRC		.....	AR	812 0142

20.425–1 DEFLECTOR, Rear Window Air

70	18-88	***(Use 360 9867)***	.....	1	363 2473
71/	18-88		.....	1	360 9867
71/	40		.....	1	364 6560

20.425–1a ATTACHING PARTS, Deflector To Roof Panel

SCREW, Tapping	70/	18-88	27.208	4	400 3754
SCREW, Tapping	71/	40	27.208	4	400 3754

20.425–3 SEAL, Rear Window Air Deflector Upper

70/	18-88		.....	2	363 2476

20.430–1 PANEL, Rear Auxiliary Floor

67/69	08		.....	1	350 0149
71/	08		.....	1	448 9044
67/68	18–88 (L3S)		.....	1	357 4356
67/68	18–88 (W3S)		.....	1	357 4388
69/	18 (L3S)		.....	1	357 4356
69/	18 (W3S)		.....	1	357 4388
69/	88		.....	1	357 4388

BODY SHEET METAL

20.430–1a ATTACHING PARTS, Panel To Rear Compartment Side Trim Panel Support

SCREW, Tapping.....	71/	08.....	20.280	2	400	1724

20.430–1b ATTACHING PARTS, Panel To Center Support

SCREW, Tapping.....	71/	08.....	3.773	2	400	4093

20.430–1c SUPPORT, Rear Auxiliary Floor Center

71/	08.....	.....	1	364	1995

20.430–1d ATTACHING PARTS, Support To Floor Pan

SCREW, Tapping.....	71/	08.....	20.280	2	400	1724

20.430–1e ATTACHING PARTS, Panel To Floor Pan

SCREW, Tapping.....	71/	08.....	20.280	2	400	1724

20.435–1 PANEL, Rear Auxiliary Floor Side

67/69	(Left) 08.....	.....	1	350	5681
71/	(Left) 08.....	.....	1	361	6053
67/68	(Left) 18–88 (L3S).....	.....	1	357	4373
67/68	(Left) 18–88 (W3S).....	.....	1	650	0569
69/	(Left) 18 (L3S).....	.....	1	357	4373
69/	(Left) 18 (W3S).....	.....	1	650	0569
69/	(Left) 88.....	.....	1	650	0569
67/69	(Right) 08.....	.....	1	350	5680
71/	(Right) 08.....	.....	1	361	6052
67/68	(Right) 18–88 (L3S).....	.....	1	650	0566
67/68	(Right) 18–88 (W3S).....	.....	1	650	0570
69/	(Right) 18 (L3S).....	.....	1	650	0566
69	(Right) 18 (W3S).....	.....	1	650	0570
70/	(Right) 18 (W3S).....	.....	1	653	1165
69	(Right) 88.....	.....	1	650	0570
70/	(Right) 88.....	.....	1	653	1165

20.435–1a ATTACHING PARTS, Spare Tire Cover Support To Panel

SCREW, Tapping.....	71/	08.....	29.019	3	439	5412

20.435–1b ATTACHING PARTS, Floor Side Panel To Rear Auxiliary Floor

SCREW, Tapping.....	71/	08.....	3.773	6	400	4093

20.435–1c ATTACHING PARTS, Floor Side Panel To Support

SCREW, Tapping.....	71/	08.....	3.773	2	400	4093

20.435–1d ATTACHING PARTS, Left Floor Side Panel To Rear Support

SCREW, Tapping.....	71/	08.....	3.773	2	400	4093

20.435–1e ATTACHING PARTS, Left Floor Side Panel To Side Trim Panel

SCREW, Tapping.....	71/	08.....	3.773	2	400	4093

BODY SHEET METAL

20.435–2 SUPPORT, Rear Auxiliary Floor Side Panel To Floor

71/	(Left) 08	.....	1	361 6056
67/	(Left) 18–88	.....	1	357 5555
71/	(Right) 08	.....	1	361 6056
67/68	(Right) 18–88 (L3S)	.....	1	357 5554
69/	(Right) 18 (L3S)	.....	1	357 5554
67/68	(Right) 18–88 (W3S)	.....	1	357 5442
69/	(Right) 18 (W3S)	.....	1	357 5442
69/	(Right) 88	.....	1	357 5442

20.435–2a ATTACHING PARTS, Support To Floor Pan

SCREW, Tapping.....	71/	08.....	3.773	2	400 4093

20.435–3 PANEL, Rear Auxiliary Floor Rear

71/	(Left) 08	.....	1	364 1991
71/	(Right) 08	.....	1	364 1990

20.435–3a ATTACHING PARTS, Panel To Rear Support

SCREW, Tapping.....	71/	08.....	3.773	2	400 4093

20.435–3b ATTACHING PARTS, Panel To Rear Center Panel

SCREW, Tapping.....	71/	08.....	3.773	6	400 4093

20.435–3c ATTACHING PARTS, Panel To Rear Auxiliary Floor Side Panel

SCREW, Tapping.....	71/	08.....	3.773	6	400 4093

20.435–3d SUPPORT, Rear Auxiliary Floor Rear Panel

71/	08	.....	2	361 6056
71/	(Left-Rear) 08	.....	1	364 1993

20.435–3e ATTACHING PARTS, Support To Floor Pan

SCREW, Tapping.....	71/	08.....	3.773	4	400 4093

20.437–1 DOOR, Rear Auxiliary Floor Side Compartment (Incl. Hinge)

67/68	18–88 (L3S)	.....	1	357 4367
69/	18 (L3S)	.....	1	357 4367
67/68	18–88 (W3S)	.....	1	347 2843
69/	18 (W3S)	.....	1	347 2843
69/	88	.....	1	347 2843

20.437–2 HINGE, Rear Auxiliary Floor Side Compartment Door

67/	18–88	.....	1	347 2844

20.437–3 ATTACHING PARTS, Hinge To Auxiliary Floor Side Panel

SCREW, Tapping.....	67/	18–88.....	17.660	5	G162003 NA

20.437–4 BUMPER, Rear Auxiliary Floor Side Compartment Door

67/68	18–88 (W3S)	20.450	2	400 0313
69/	18 (W3S)	20.450	2	400 0313
69/	88	20.450	2	400 0313

BODY SHEET METAL

20.438–1 LOCK ASSEMBLY, Rear Auxiliary Floor Side Compartment Door

67/69	18 (L3S-Keyless)...(Incl. Cylinder, Case And Retainer)	22.073	1	346 1434
67/68	18-88 (L3S-Regular)...(Incl. Cylinder, Case, Retainer And Keys)	22.073	1	447 7234
67/68	18-88 (L3S-Special-Specify Key Number)...(Incl. Cylinder, Case, Retainer And Keys) ***(Use 448 4734)***	22.073	1	447 6046
69	18 (L3S-Regular)...(Incl. Cylinder, Case, Retainer And Keys)	22.073	1	447 7234
69	18 (L3S-Special-Specify Key Number)...(Incl. Cylinder, Case, Retainer And Keys) ***(Use 448 4734)***	22.073	1	447 6046
70/	18 (Keyless)...(Incl. Cylinder, Case And Retainer) ***(Use 346 1434)***	22.073	1	360 9491
70/	18-88 (W3S-Regular)...(Incl. Cylinder, Case, Retainer And Keys)	.....	1	448 7664
70	***18 (RHD-L3S-Regular)***...(Incl. Cylinder, Case, Retainer And Keys)	22.073	1	447 7234
70	***18 (RHD-L3S-Special-Specify Key Number)***...(Incl. Cylinder, Case, Retainer And Keys) ***(Use 448 4734)***	22.073	1	447 6046

20.438–2 CYLINDER ASSEMBLY, Rear Auxiliary Floor Side Compartment Door Lock (Incl. Case, Cam & Keys)

67/68	18-88 (W3S-Regular)	.....	1	448 0967
67/68	18-88 (W3S-Special-Specify Key Number) ***(Use 448 5262)***	.....	1	448 0968
69	18 (W3S-Regular)	.....	1	448 0967
69	18 (W3S-Special-Specify Key Number) ***(Use 448 5262)***	.....	1	448 0968
69	88 (Regular)	.....	1	448 0967
69	88 (Special-Specify Key Number) ***(Use 448 5262)***	.....	1	448 0968
70	***18 (RHD-W3S-Regular)***	.....	1	448 0967
70	***18 (RHD-W3S-Special-Specify Key Number)*** ***(Use 448 5262)***	.....	1	448 0968
70	***88 (RHD-Regular)***	.....	1	448 0967
70	***88 (RHD-W3S-Special-Specify Key Number)*** ***(Use 448 5262)***	.....	1	448 0968

20.438–3 CYLINDER, Rear Auxiliary Floor Side Compartment Door Lock

67/68	18-88 (L3S-Regular)...(Incl. Keys)	22.073	1	447 8586
67/68	18-88 (L3S-Special-Specify Key Number)...(Incl. Keys)	22.073	1	447 8587
69	18 (L3S-Regular)...(Incl. Keys)	22.073	1	447 8586
69	18 (L3S-Special-Specify Key Number)...(Incl. Keys)	22.073	1	447 8587
70/	18 (L3S-Uncoded)...(Less Keys)	.....	1	448 7663
70	***18 (RHD-L3S-Regular)...(Incl. Keys)***	22.073	1	447 8586
70	***18 (RHD-L3S-Special-Specify Key Number)...(Incl. Keys)***	22.073	1	447 8587

20.438–4 CASE, Rear Auxiliary Floor Side Compartment Door Lock

67/68	18-88 (L3S)	22.073	1	447 5616
69/	18 (L3S)	22.073	1	447 5616
67/68	18-88 (W3S)	22.073	1	447 8415
69/	18 (W3S)	22.073	1	447 8415
69/	88	22.073	1	447 8415

20.438–5 CAM, Rear Auxiliary Floor Side Compartment Door Lock

67/68	18-88 (W3S)	23.081	1	447 9829
69/	18 (W3S)	23.081	1	447 9829
69/	88	23.081	1	447 9829

20.438–6 RETAINER, Rear Auxiliary Floor Side Compartment Door Lock

67/68	18-88 (L3S)	22.073	1	341 1053
69/	18 (L3S)	22.073	1	341 1053
67/68	18-88 (W3S)	23.086	1	348 2879
69/	18 (W3S)	23.086	1	348 2879
69/	88	23.086	1	348 2879

BODY SHEET METAL

20.438–7 ATTACHING PARTS, Retainer To Lock Case

SCREW, Machine	67/68	18-88 (L3S)	17.616	1	G186522 NA
SCREW, Machine	69/	18 (L3S)	17.616	1	G186522 NA

20.438–8 STRIKER, Rear Auxiliary Floor Side Compartment Door Lock (Welds To Rear Lower Panel)

67/68	18-88 (L3S)	.....	1	348 2666
69/	18 (L3S)	.....	1	348 2666

20.438–9 KEY, Rear Auxiliary Floor Side Compartment Door Lock

67/69	18-88 (Blank)	23.085	2	344 5762
67/69	18-88 (Coded-Specify Key Number)	23.085	2	447 8593
70/	18-88 (LHD-Blank)	23.085	1	363 6393
70/	18-88 (LHD-Coded-Specify Key Number)	23.085	1	448 7668
70	***18-88 (RHD-Blank)***	23.085	1	344 5762
70	***18-88 (RHD-Coded-Specify Key Number)***	23.085	1	447 8593

20. 439–1 BOX, Rear Auxiliary Floor Side Compartment

67/68	18-88 (W3S)	.....	1	357 5574
69/	18 (W3S)	.....	1	357 5574
69/	88	.....	1	357 5574

20.439–2 ATTACHING PARTS, Box To Auxiliary Floor Side Panel

SCREW, Tapping	67/68	18-88 (W3S)	29.470	2	400 0471
SCREW, Tapping	69/	18 (W3S)	29.470	2	400 0471
SCREW, Tapping	69/	88	29.470	2	400 0471

20.450–1 PANEL, Spare Tire Cover

67	08 (Six)	.....	1	350 0151
67	08 (V8)	.....	1	356 1898
68/69	08	.....	1	356 1898
67/68	18-88 (L3S)	.....	1	347 2819
69	18 (L3S)	.....	1	347 2819
70/	18 (L3S)	.....	1	360 9572

20.450–2 SILENCER, Spare Tire Cover Panel Front Bracket

67/69	08	.....	2	342 1290
67/68	18-88 (L3S)	.....	2	342 1290
69/	18 (L3S)	.....	2	342 1290

20.450–3 WING NUT, Spare Tire Cover Panel Hold Down

67/69	08	17.432	1	G219218
67/68	18-88 (L3S)	17.432	1	G219218
69/	18 (L3S)	17.432	1	G219218

20.450–4 BUMPER, Spare Tire Cover Panel

67/68	18-88 (L3S)	23.019	2	437 8370
69/	18 (L3S)	23.019	2	437 8370

20.451–1 PANEL, Rear Compartment Door (Incl. Hinge)

71/	08	.....	1	630 6101

BODY SHEET METAL

20.451–2 HINGE, Rear Compartment Door Panel

71/ 08	.....	3	361 6061

20.451–2a ATTACHING PARTS, Hinge To Panel

SCREW, Tapping..... 71/ 08	17.660	6	812 0052

20.451–3 BUMPER, Rear Compartment Door Panel

71/ 08	.....	6	400 4607

20.452–1 COVER ASSEMBLY, Rear Auxiliary Floor Storage Compartment (Front)

69/ 88 (L3S)...(Incl. Board And Metal Cover)	.....	1	652 6017

20.452–2 COVER ASSEMBLY, Rear Auxiliary Floor Storage Compartment (Rear)

69/ 88 (L3S)...(Incl. Board And Metal Cover)	.....	1	652 6018

20.452–3 HINGE, Rear Auxiliary Floor Storage Compartment Cover (Front Cover To Rear Cover)

69/ 88 (L3S)	.....	1	361 9336

20.452–3a ATTACHING PARTS, Hinge To Cover

SCREW, Machine..... 69/ 88 (L3S)	.....	10	400 3106
NUT, Tee..... 69/ 88 (L3S)	17.438	10	G453824

20.452–4 COVER, Rear Auxiliary Floor Storage Compartment Cover Metal (Front)

69/ 88 (L3S)(Metal)	.....	1	362 1600

20.452–5 COVER, Rear Auxiliary Floor Storage Compartment Cover Metal (Rear)

69/ 88 (L3S)	.....	1	362 1601

20.452–5a MOULDING, Rear Auxiliary Storage Compartment Cover (Rear)

69/ 88 (L3S)(36-9/16")	29.279	1	358 0551

20.452–5b ATTACHING PARTS, Moulding To Rear Cover

SCREW, Tapping..... 69/ 88 (L3S)	29.279	4	400 2839

20.452–5c PLATE, Rear Auxiliary Cover Moulding Fastening

69/ 88 (L3S)	29.258	3	349 0766

20.452–5d ATTACHING PARTS, Plate To Cover

NAIL..... 69/ 88 (L3S)	17.374	6	G116630 NA

20.452–5e RING, Rear Auxiliary Floor Storage Compartment Cover Moulding Snap

69/ 88 (L3S)	17.271	3	G105507 NA

20.452–5f ATTACHING PARTS, Snap Ring To Moulding

SCREW, Tapping..... 69/ 88 (L3S)	26.001	3	400 0661

Printed in U.S.A.

20.452–5g SUPPORT BRACKET, Rear Auxiliary Storage Compartment Cover (Front And Rear)(Side)

69/	88		.....	4	360 9282

20.452–5h ATTACHING PARTS, Support Bracket To Storage Cover

SCREW, Tapping	69/	88 (3/4")	17.660	4	G179373 NA
SCREW, Tapping	69/	88 (7/8")	17.592	8	G156795 NA
NUT, Tee	69/	88	17.438	12	G442494 NA
NAIL	69/	88	17.374	12	G116630 NA

20.452–6 HINGE, Rear Auxiliary Floor Storage Compartment Cover Side

69/	88 (L3S)		29.260	2	358 0613

20.452–7 ATTACHING PARTS, Side Hinge To Cover

SCREW, Machine	69/	88 (L3S)	20.452	4	400 3106
NUT, Tee	69/	88 (L3S)	17.438	4	G453824

20.452–7a ATTACHING PARTS, Side Hinge To Auxiliary Panel

SCREW, Tapping	69/	88 (L3S)	23.006	4	400 0318

20.452–7b BUMPER, Rear Auxiliary Floor Storage Compartment Cover Moulding

69/	88 (L3S)		20.450	4	400 0313

20.452–8 LATCH, Rear Auxiliary Floor Storage Compartment

69/	88 (L3S)		.....	1	361 4624

20.452–9 STRIKER, Rear Auxiliary Floor Storage Compartment Latch

69/	88 (L3S)		.....	1	361 4626

20.452–10 ATTACHING PARTS, Striker To Lower Panel

SCREW, Tapping	69/	88 (L3S)	17.669	2	400 1267 NA

20.452–11 EXTENSION ASSEMBLY, Rear Auxiliary Floor (Plywood)

69	*18 (Post Office)*		.....	1	360 9062

20.452–12 BRACKET, Rear Auxiliary Floor

69	*18 (Post Office)("L" Shape-2-3/4" x 2-3/4")*		.....	3	360 9416

20.452–13 SUPPORT, Extension Auxiliary Floor (Rear)

69	*18 (Post Office)(44" Long)*		.....	1	360 9415

20.452–14 SUPPORT ASSEMBLY, Extension Auxiliary Floor To Floor Pan

69	*18 (Post Office)*		.....	1	360 9419

BODY SHEET METAL

20.453–1 LOCK ASSEMBLY, Rear Auxiliary Floor Storage Compartment (Incl. Keys)

71/	08	20.438	1	448 7664
69	88 (L3S)	.....	1	448 6842
70/	88 (L3S-Regular)...(Incl. Keys)	.....	1	360 9492
70	***88 (RHD-L3S)***	.....	1	448 6842

20.453–2 CYLINDER ASSEMBLY, Rear Auxiliary Floor Storage Compartment Lock

69	88 (L3S)	.....	1	448 6843
70/	88 (L3S-Uncoded)...(Less Keys)	.....	1	448 7669
70	***88 (RHD-L3S)***	.....	1	448 6843

20.453–3 CYLINDER, Rear Auxiliary Floor Storage Compartment Lock

71/	08 (Uncoded)...(Less Keys)	27.270	1	448 7663

20.453–4 RETAINER, Lock To Panel

71/	08	23.086	1	348 2879

Printed in U.S.A.

SPECIAL INFORMATION

The Engine Build Code Number, Vehicle Identification Number and the information provided on the Unit Body Plate are often necessary when determining the proper replacement parts for your automobile. For their location refer to the General Information Section found at the front of this catalog.

NOTES

22–1 .... The Components of the Electric Windshield Wiper Motor are located in Groups 22.028 thru 22.037.

22–2 .... The Components of the Electrically Operated Windshield Washer are located in Groups 22.051 thru 22.054.

22–3 .... Regular indicates Cylinder is not set to any specified Key Number.
Special indicates Cylinder is set to a specified Key Number.

22–4 .... Used on Cars less Lock Escutcheon.

22–5 .... Used on Cars with Lock Escutcheon.

22–6 .... The Finish is a bright Silver.

22–7 .... The Finish is a dull Silver-Gray.

22–8 .... The Nameplate "JAVELIN" or "AMX" is located on the Glove Box.

22–9 .... The Nameplate "JAVELIN" or "AMX" is located on the Instrument Panel Center Crash Pad.

22–10 ... The "AMX" Nameplate must be engraved locally.

22–11 ... Nozzle has a Double Head with 2 spray holes in each.

22–12 ... Nozzle is a Single Head with 4 spray holes.

22–13 ... Finish Panel does not have a Moulding between the Center and Right Air Ducts.

22–14 ... Finish Panel has a Moulding 11" long between the Center and Right Air Ducts.

22–15 ... The Space between the Mounting Holes in the Assist Handle is 9-1/4 inches.

22–16 ... The Space between the Mounting Holes in the Assist Handle is 8-1/4 inches.

22–17 ... Striker is mounted on the "front" surface of the Glove Box Inner Panel.

22–18 ... Striker is mounted on the "side" surface of the Glove Box Inner Panel.

22–19 ... The Instrument Panel Top consists of two pieces; an Upper Finish Panel, housing the Radio Speaker, and a Crash Pad.

22–20 ... The Instrument Panel Top is a one piece Crash Pad, housing the Radio Speaker. This type has no Upper Finish Panel.

22–21 ... The Special Cylinder is not serviced. Order the applicable Glove Box Lock Cylinder (Regular) from Group 22.073–4. Refer to 1970 Technical Service Manual, Section 17 Page 3, for Filing Lock Tumbler procedure.

22–22 ... Center Portion of Knob Painted Black.

22–23 ... Center Portion of Knob Bright Chrome.

22–24 ... Ash Receiver opening is covered with a Door.

22–25 ... Ash Receiver Tray is a flip Open Type.

22–26 ... Glove Box Hinge is attached to Door with Tapping Screws.

22–27 ... Glove Box Hinge has Weld Screws and is attached to Door with Washer Nuts.

22–28 ... Identification Panel does not have "Fasten" and "Belts" Lenses.

22–29 ... Identification Panel has "Fasten" and "Belts" Lenses.

Printed in U.S.A.

NOTES

22–30 ... Instrument Panel does not have an opening for "Fasten Belts" Lamp.

22–31 ... Instrument Panel has an opening for "Fasten Belts" Lamp.

22–32 ... Use with 18" Blade.

22–33 ... Use with 16" Blade.

22–34 ... Identification Panel has separate Escutcheons around Lens.

22–35 ... Identification Panel has information "Hot" stamped on Panel.

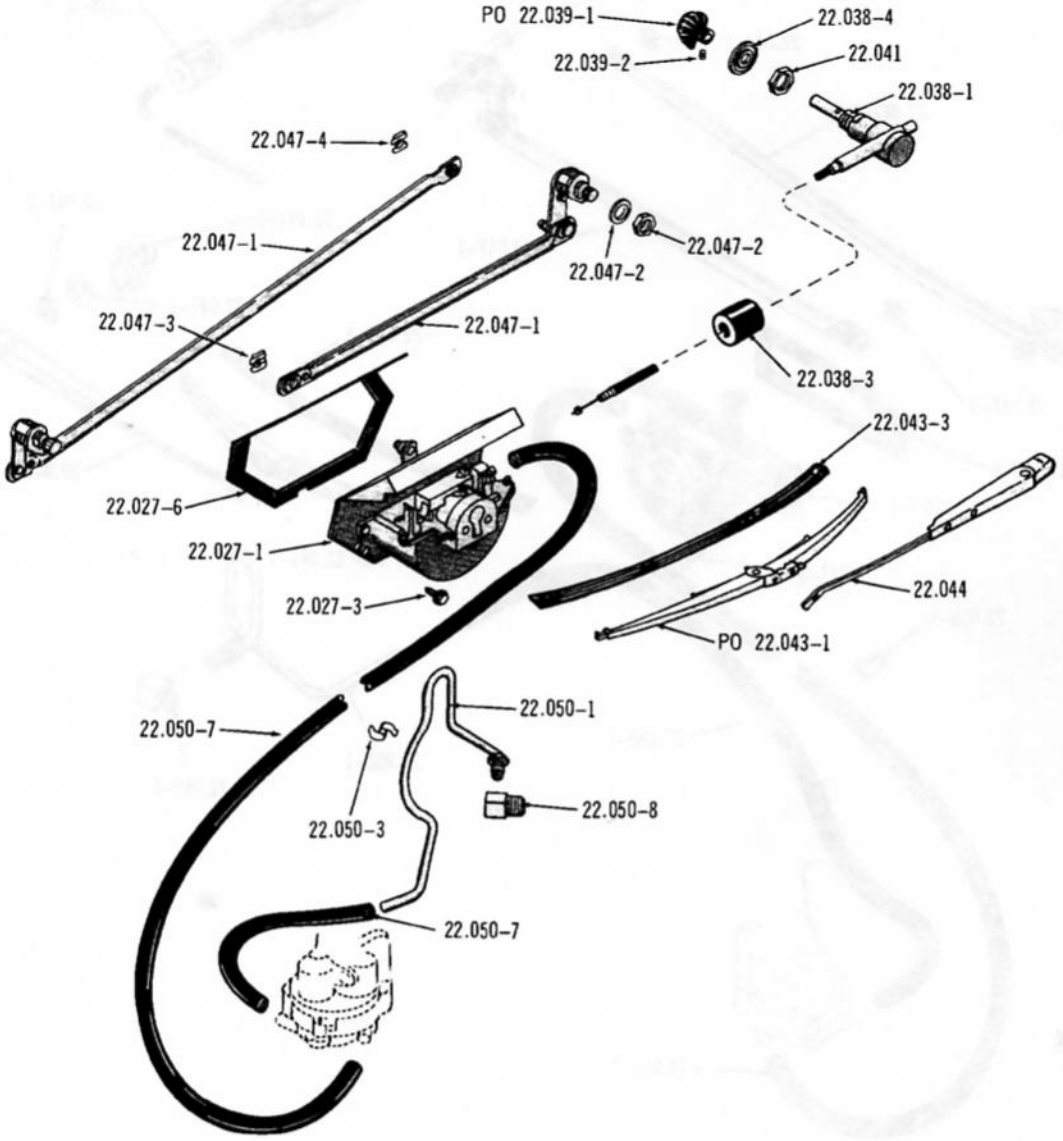

1562

VACUUM WINDSHIELD WIPER ... 1967/69 (01)

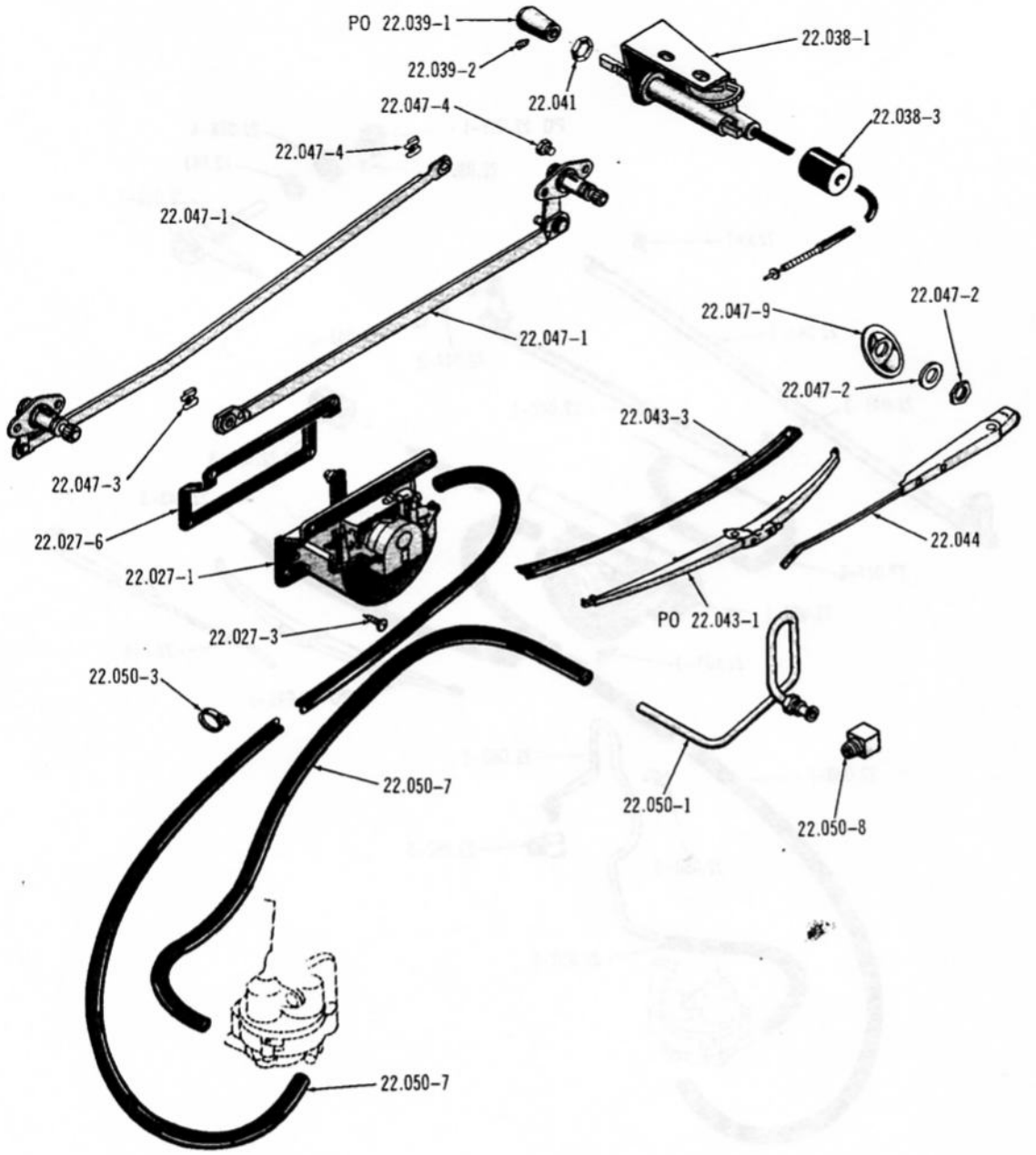

2326

VACUUM WINDSHIELD WIPER ... 1967/68 (10)(80), 1967 (50)

3660

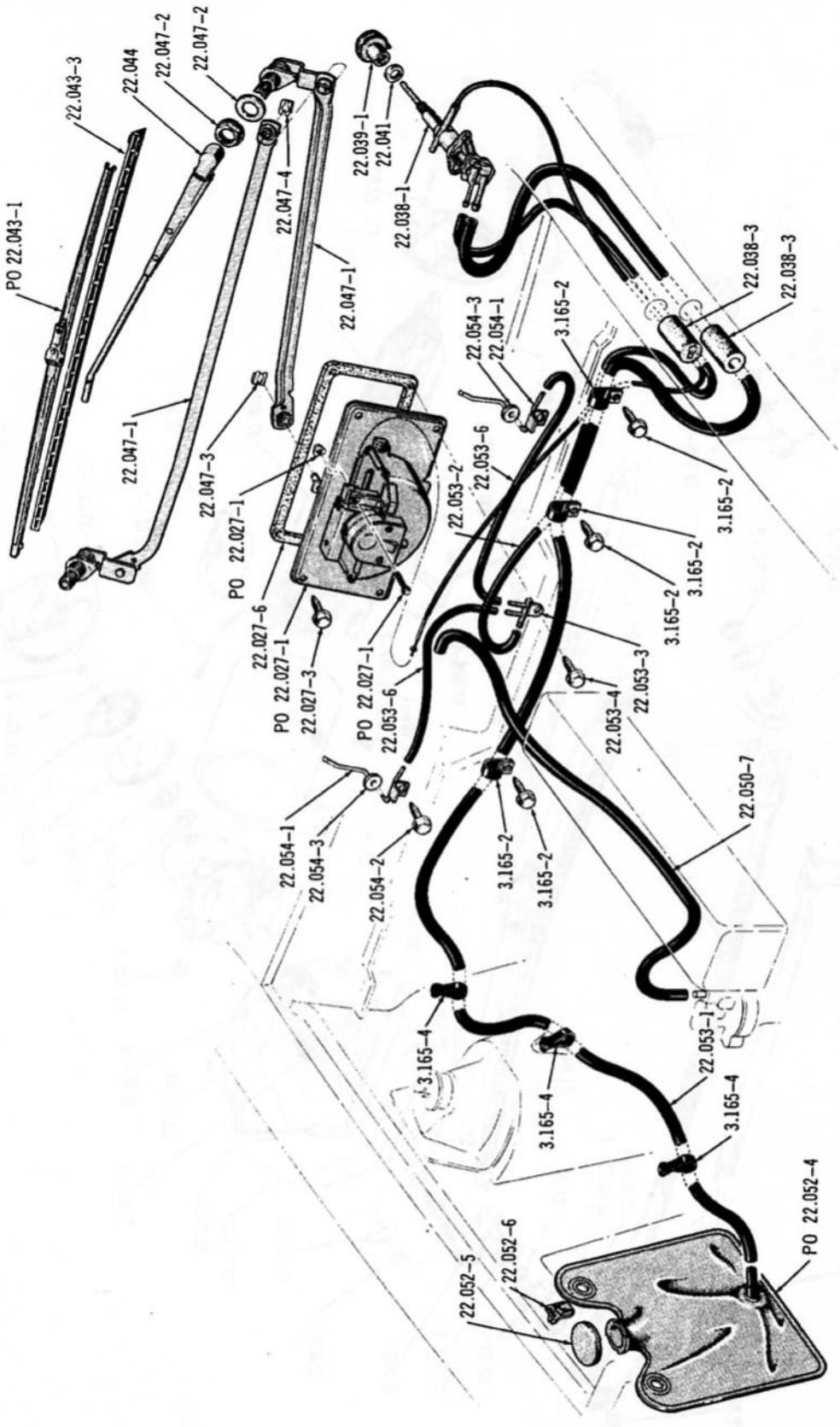

VACUUM WINDSHIELD WIPERS AND WASHER . . . 1970/71 (01)(40)

3528-A

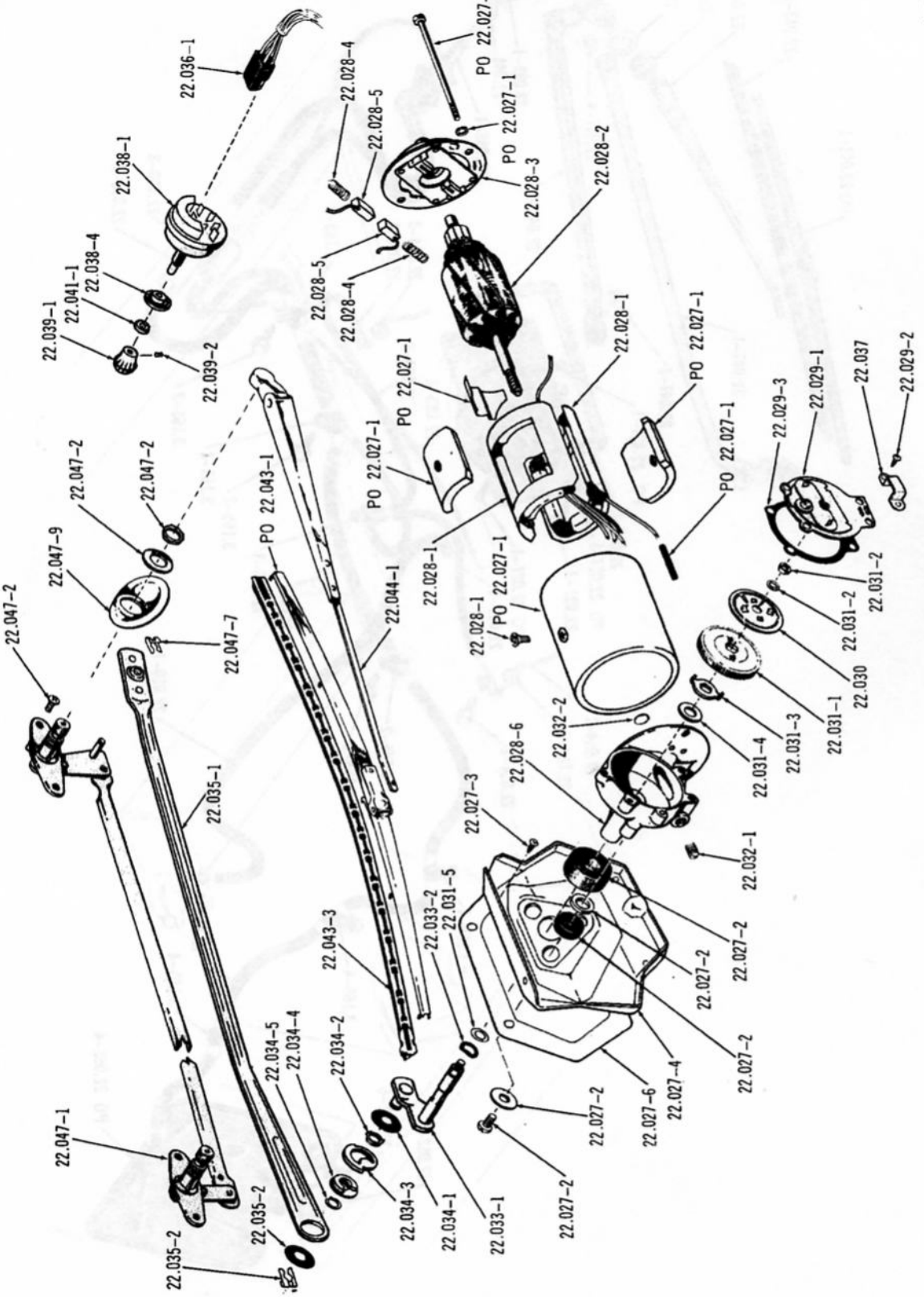

ELECTRIC WINDSHIELD WIPER

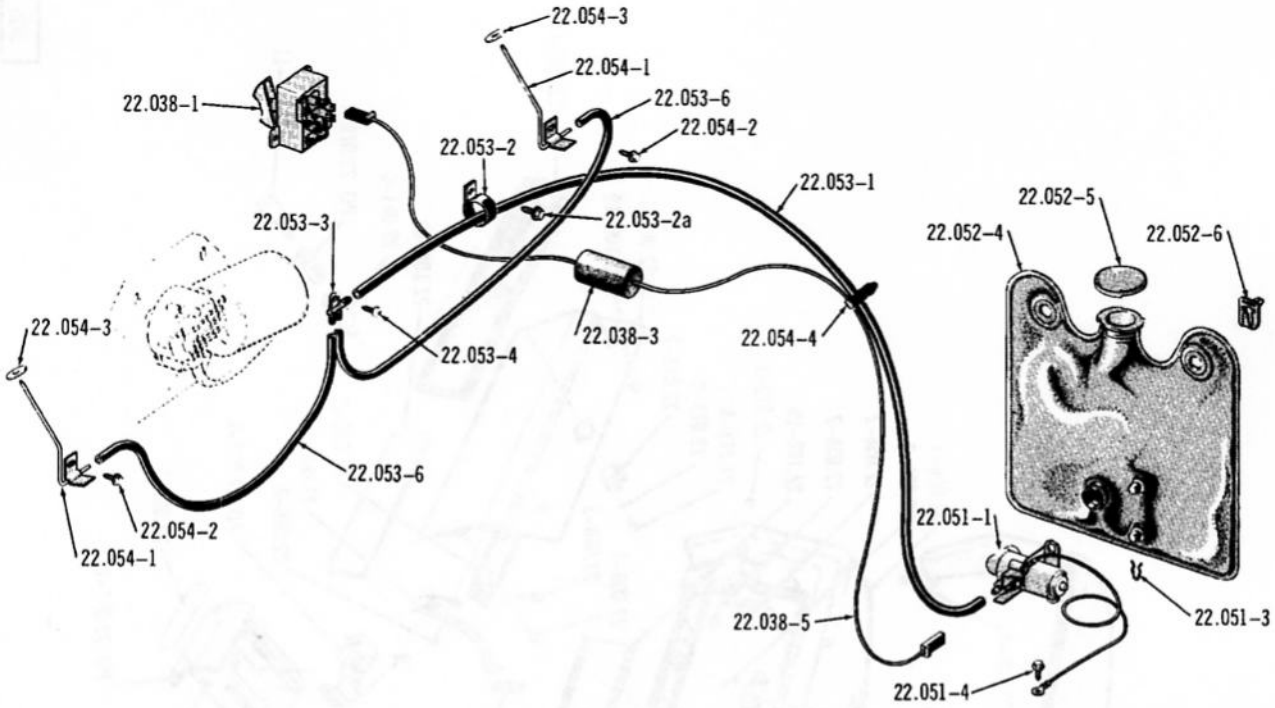

ELECTRIC OPERATED WINDSHIELD WASHER . . . 1969/70

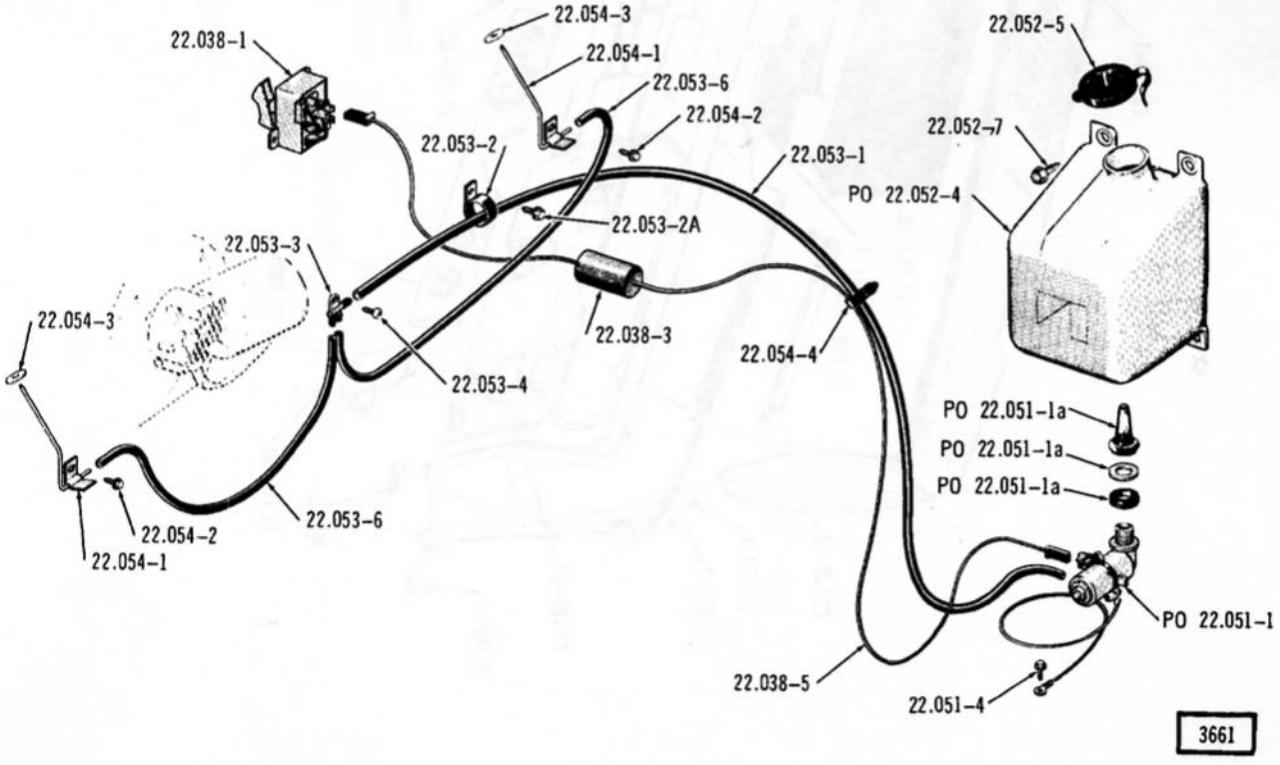

ELECTRIC OPERATED WINDSHIELD WASHERS . . . 1971/

3479

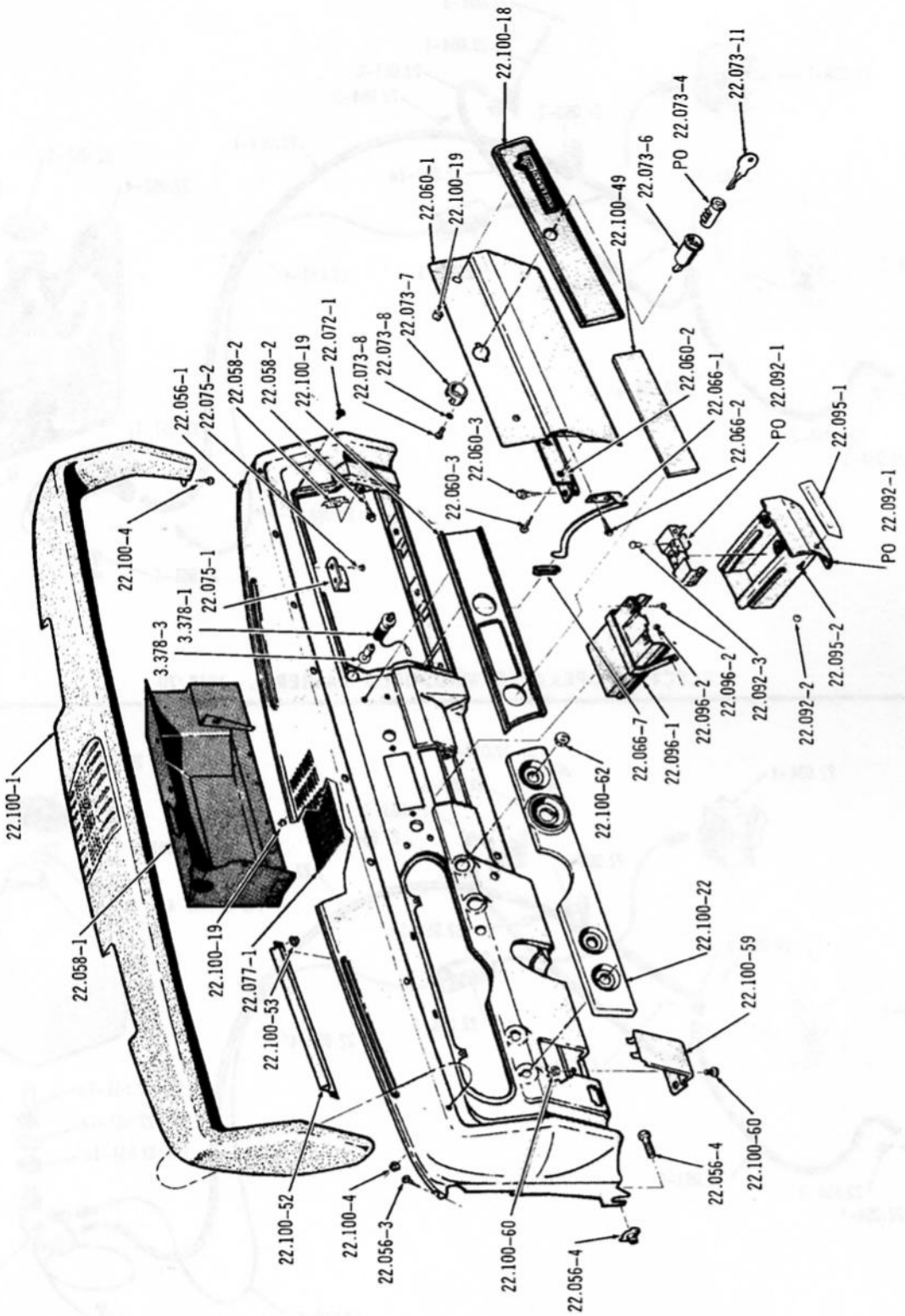

INSTRUMENT PANEL, GLOVE BOX AND OVERLAYS ... 1967/69 (01)

3904

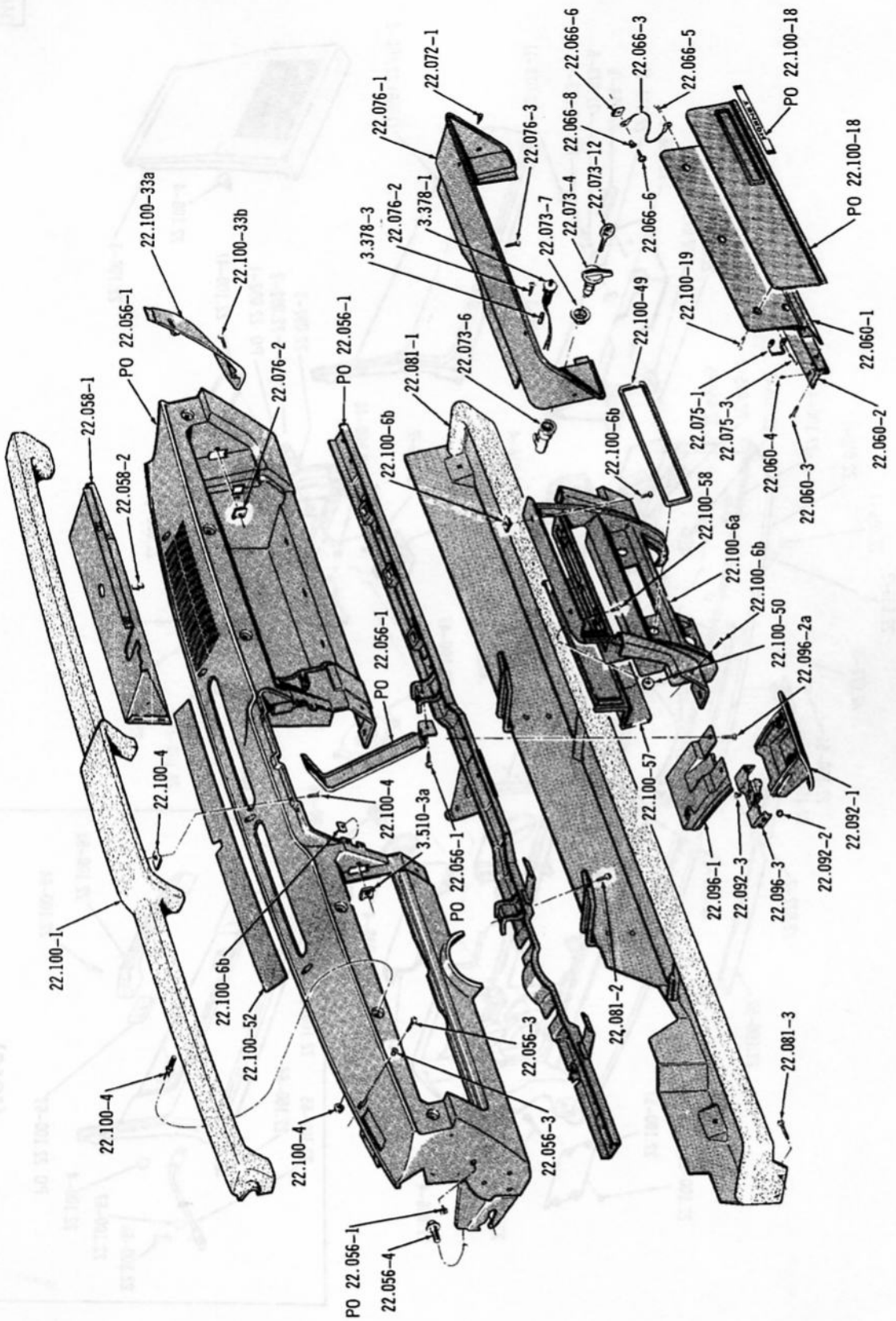

INSTRUMENT PANEL, GLOVE BOX AND OVERLAYS ... 1970/ (01)(40)

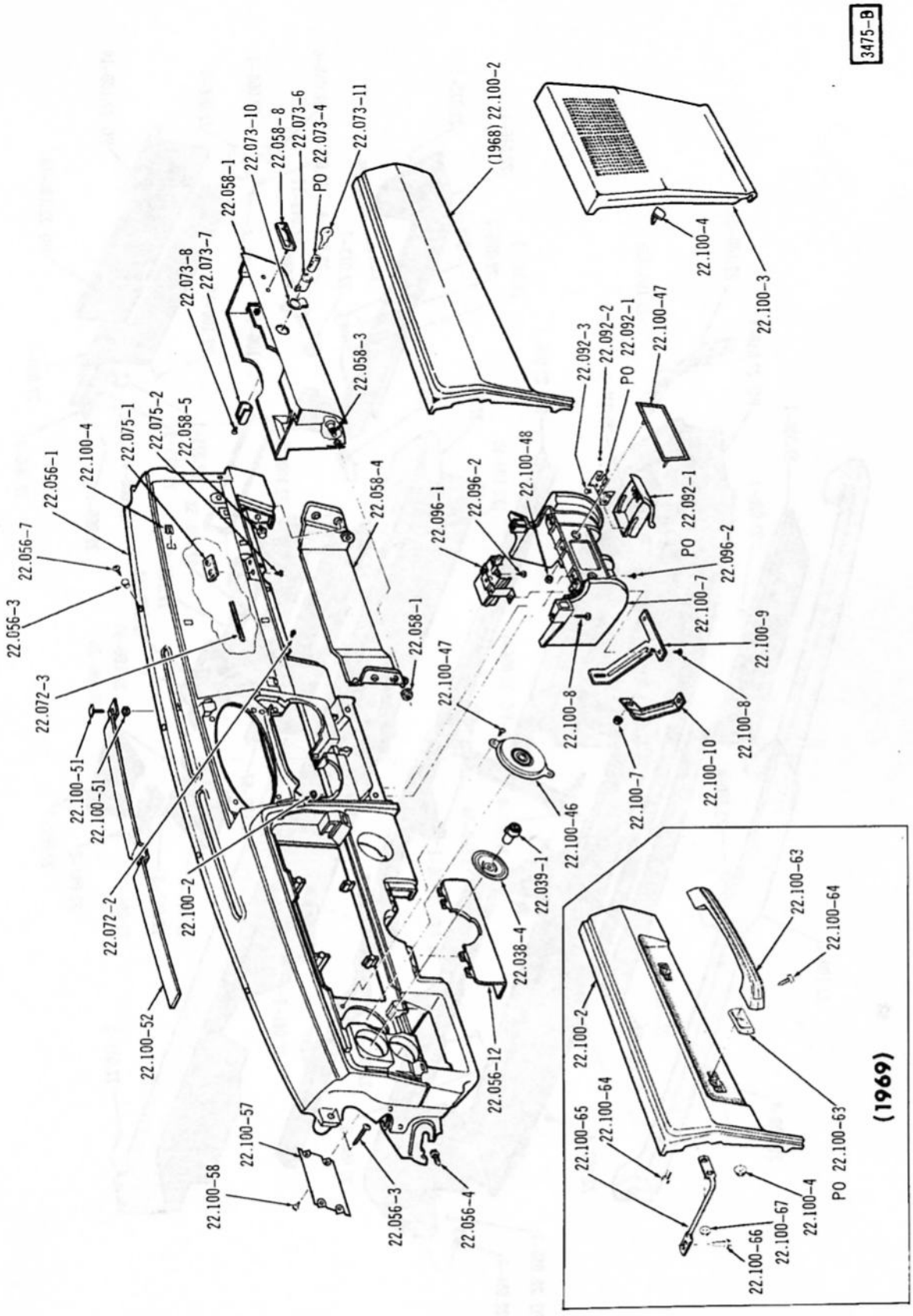

INSTRUMENT PANEL, GLOVE BOX AND OVERLAYS ... 1968/69 (30)(70)

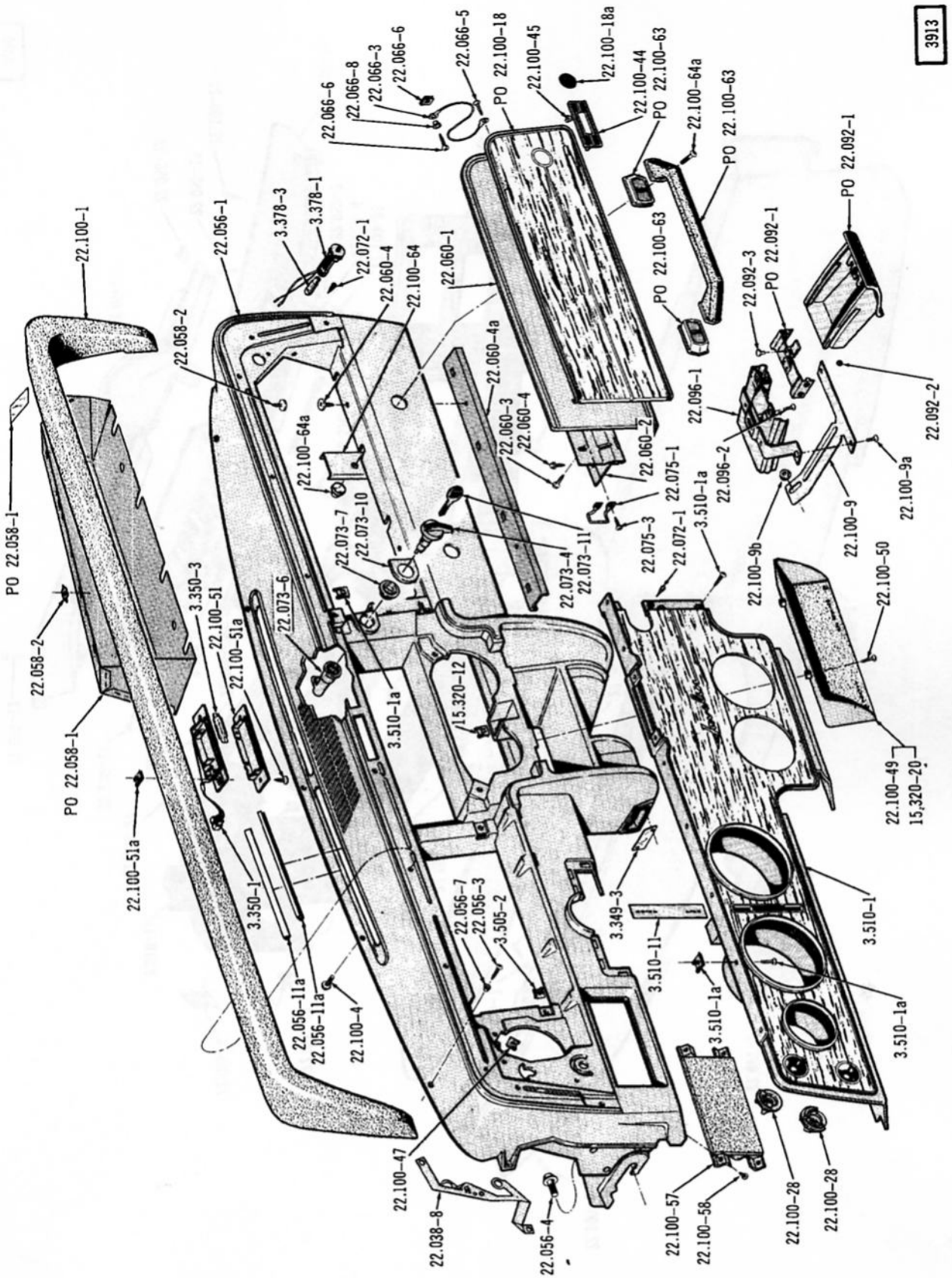

INSTRUMENT PANEL, GLOVE BOX AND OVERLAYS ... 1970 (30)(70)

4070

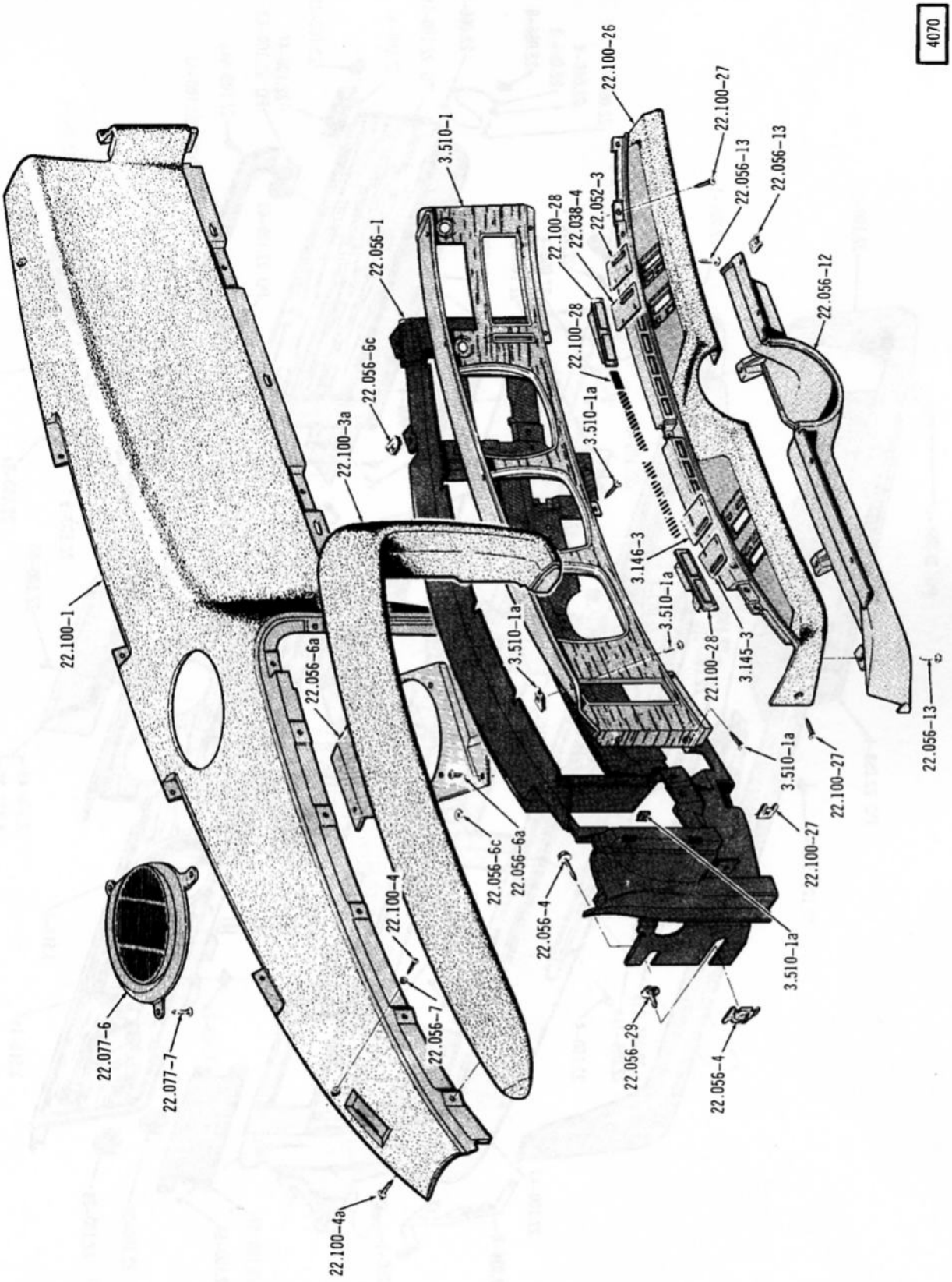

INSTRUMENT PANEL (UPPER) . . . 1971/ (70)

4074

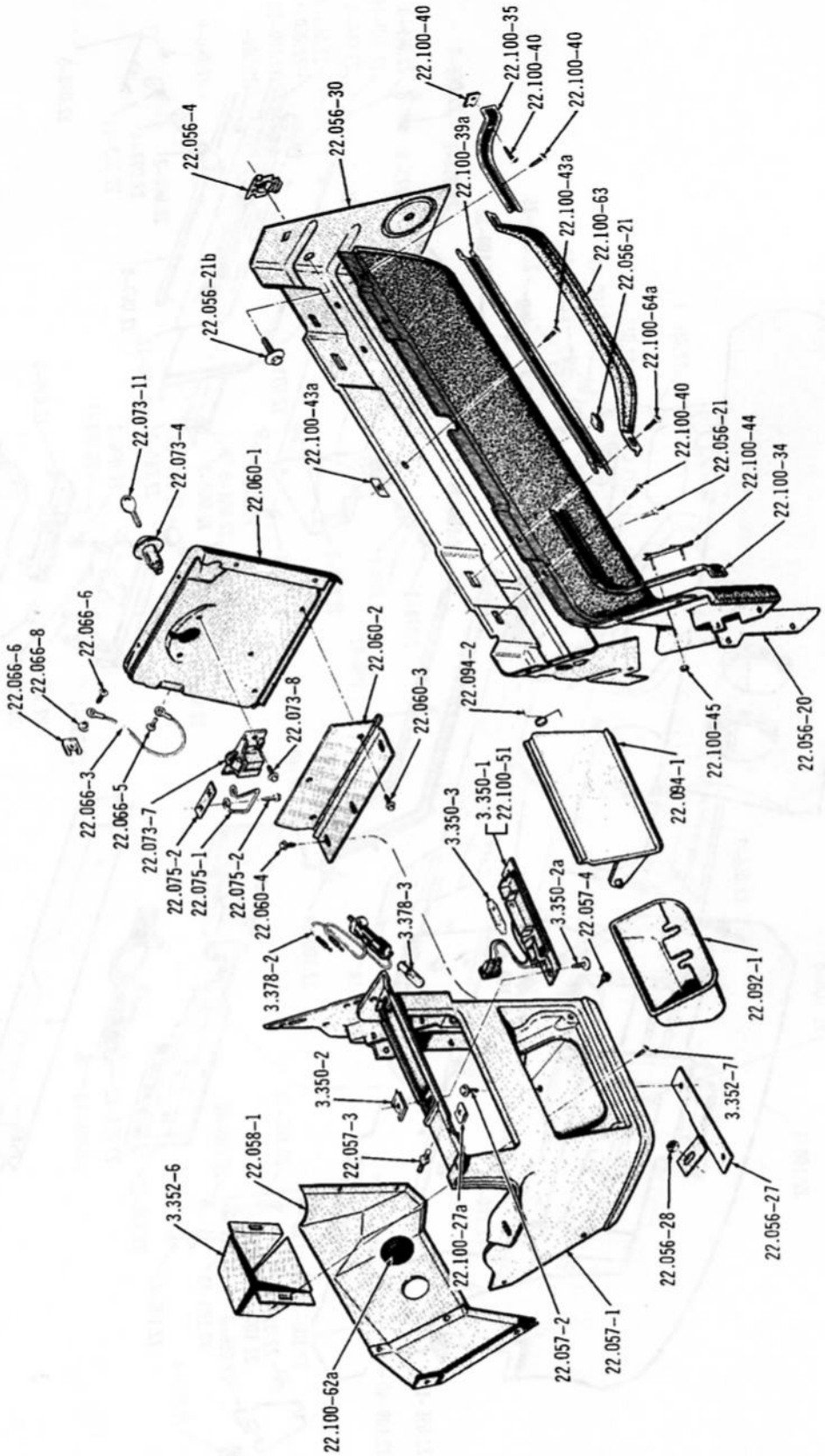

INSTRUMENT PANEL (LOWER) ... 1971 (70)

3945

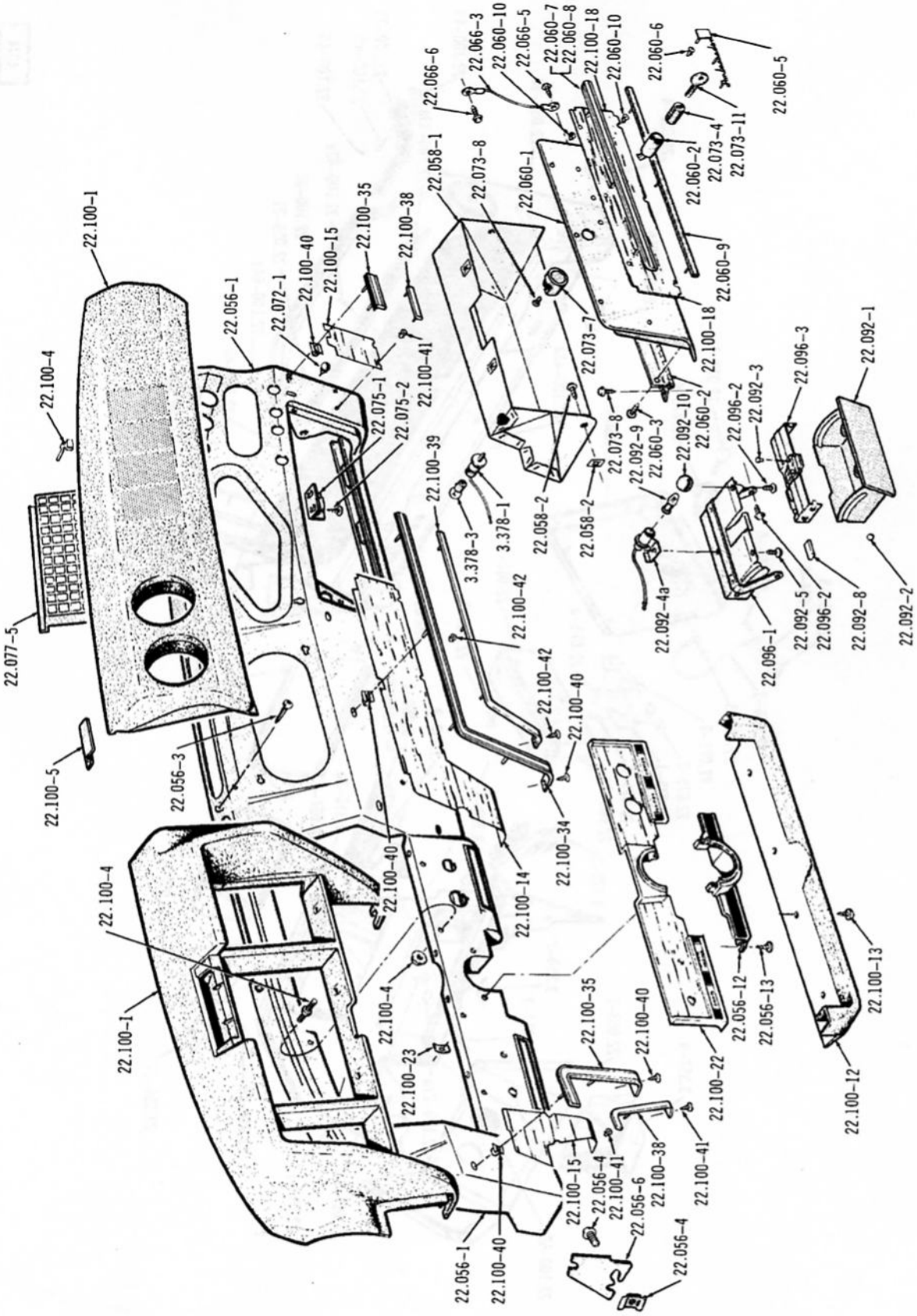

INSTRUMENT PANEL, GLOVE BOX AND OVERLAYS ... 1967/68 (10)(50)(80)

Printed in U.S.A.

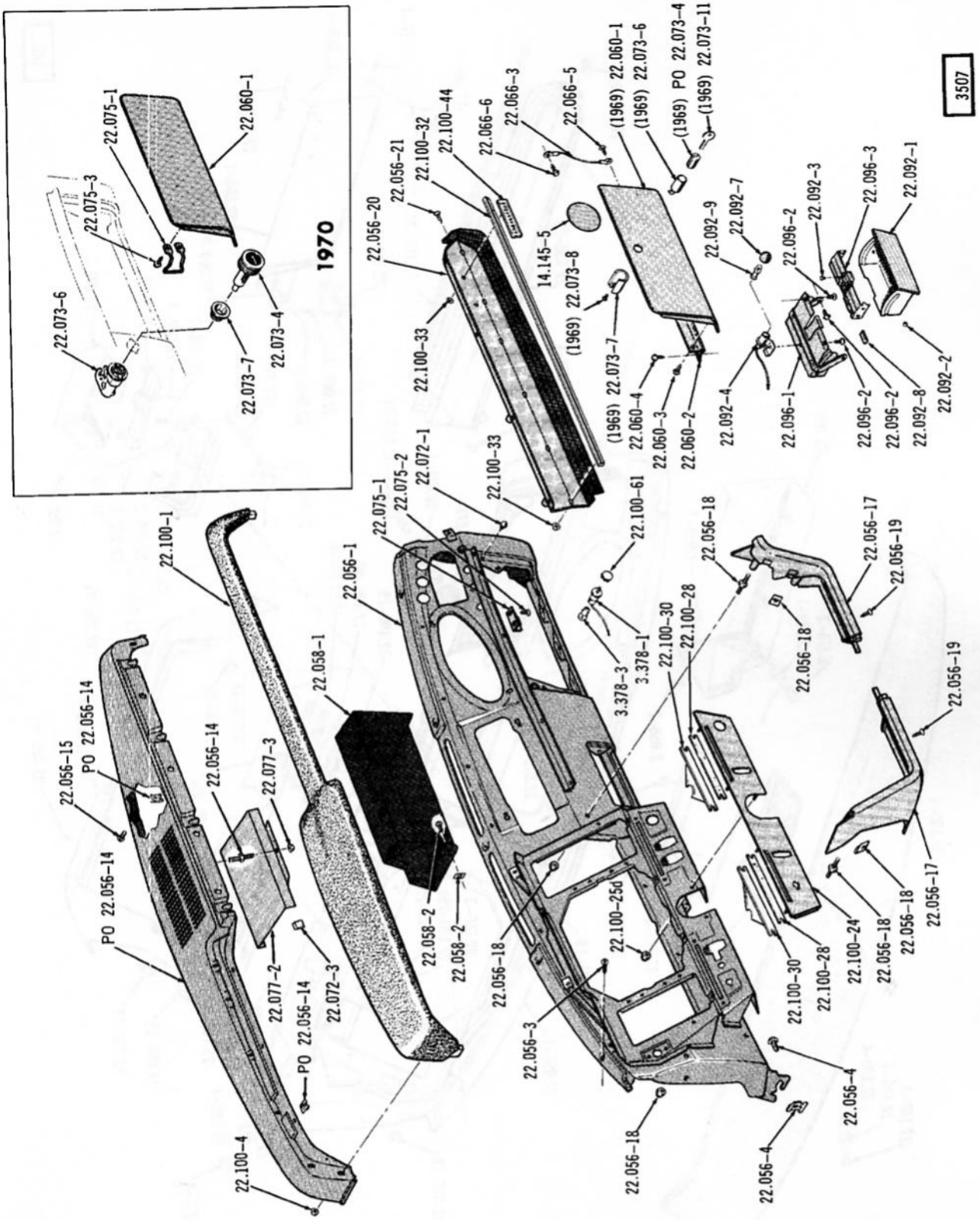

INSTRUMENT PANEL, GLOVE BOX AND OVERLAYS ... 1969/70 (10)(80)

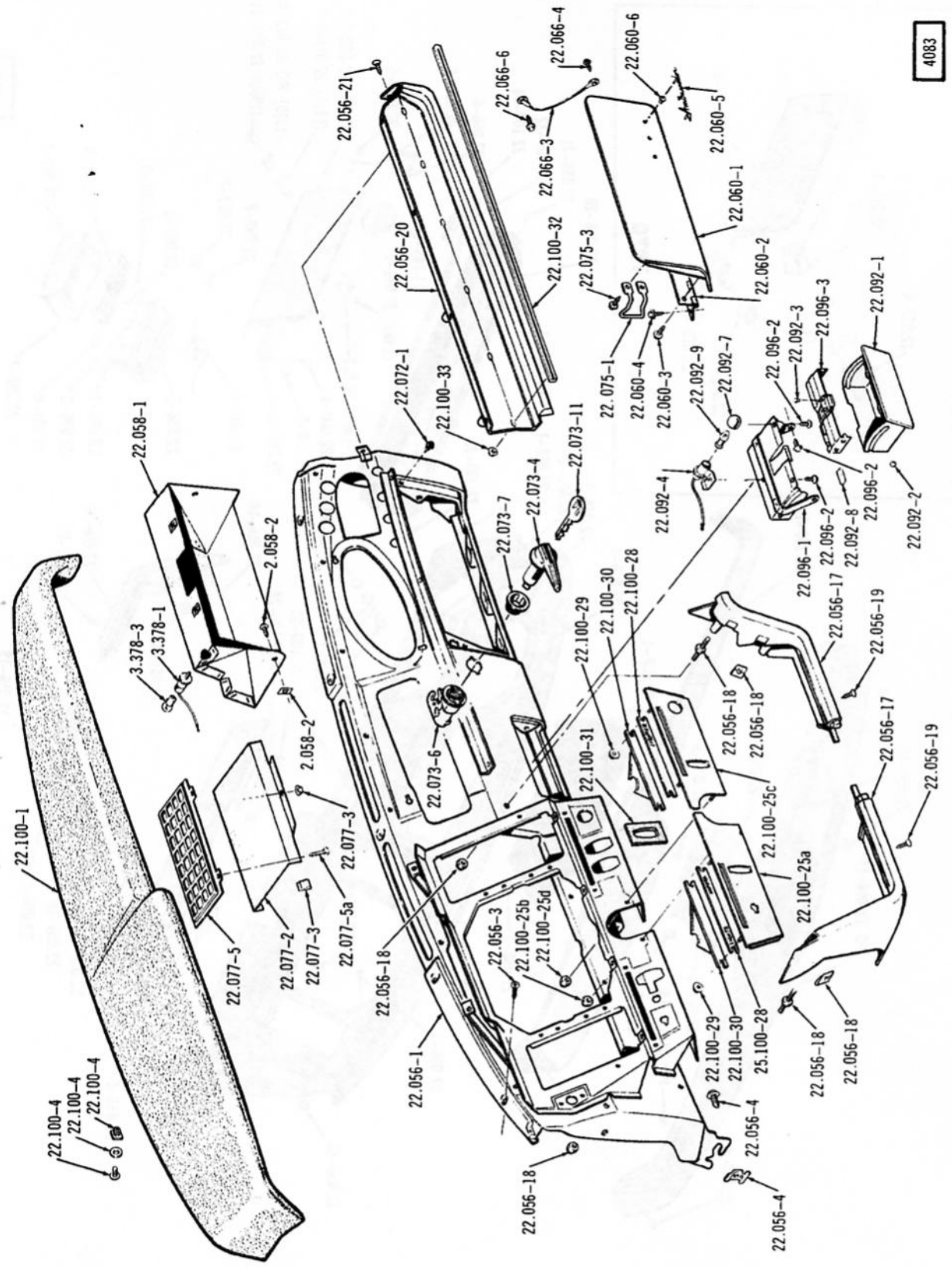

INSTRUMENT PANEL, GLOVE BOX AND OVERLAYS ... 1971 (10)(80)

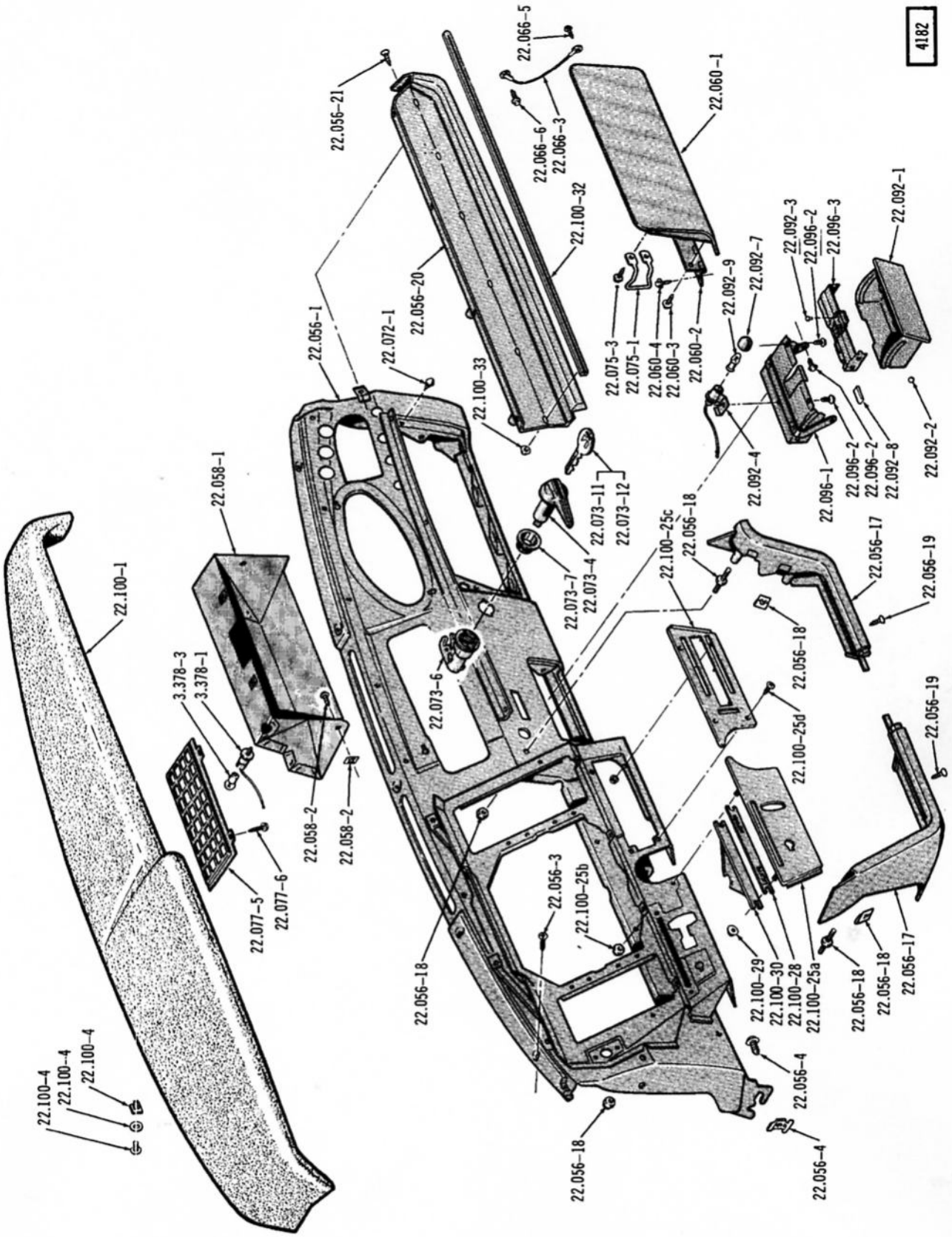

INSTRUMENT PANEL, GLOVE BOX AND OVERLAYS . . . 1972 (10)(80)

WINDSHIELD WIPER - COWL VENT - INST. PANEL

GROUP NO. — DESCRIPTION — YEAR and MODEL	PAKS CODE	PRIMARY GROUP NO.	PER CAR	PART NO.	CODE
22.007–1 SCREEN, Cowl Ventilator					
67 10-50-80	.....	.....	1	357 5588	
68 80	.....	.....	1	360 0739	
22.016–1 PANEL, Cowl Ventilator Intake Cover					
67 10	.....	.....	1	357 5244	
68/70 10	.....	.....	1	360 0704	
71/ 10	.....	.....	1	363 3380	
67 5C-80	.....	.....	1	357 5240	
68 80	.....	.....	1	360 0708	
69/ 80	.....	.....	1	360 3998	
22.016–2 ATTACHING PARTS, Panel To Cowl Ventilator					
SCREW, Tapping..... 67/ 10-50-80	.....	17.671	7	812 0054	
22.016–3 ATTACHING PARTS, Panel To Cowl Top					
SCREW, Tapping..... 67/ 10-50-80 (10-12 x 1/2")	.....	17.671	7	812 0054	
22.016–4 SEAL, Cowl Ventilator Air Intake Panel					
67 10-50-80	.....	.....	2	357 5697	
68/70 10	.....	.....	2	360 0745	
71/ 10	.....	.....	2	363 2284	
68 80	.....	.....	2	360 0746	
69/ 80	.....	.....	2	361 4352	
22.020–1 DUCT ASSEMBLY, Fresh Air Intake					
70/ (Left) 01-40 (LHD)	.....	.....	1	319 6969	
70/ (Right) 01-40 (LHD-LWH) (LHD-LHLV) (LHD-LAC)	.....	.....	1	319 7218	
22.020–2 ATTACHING PARTS, Duct Assembly To Dash Panel					
70/ 01-40	.....	17.660	AR	G9414722	NA
22.020–3 SEAL, Duct Assembly To Dash Panel					
70/ 01-40 (WWH) (WHLV) (WAC)	.....	.....	1	361 5775	
70/ 01-40 (LWH) (LHLV) (LAC)	.....	.....	2	361 5775	
22.020–4 CABLE, Fresh Air Intake					
70/ (Left) 01-40 (LHD)	.....	.....	1	319 8645	
70/ (Right) 01-40 (LHD-LWH) (LHD-LHLV) (LHD-LAC)	.....	.....	1	319 8646	
71/ 70...(Incl. Handle And Bracket)	.....	.....	1	363 2676	
22.020–5 BRACKET, Fresh Air Intake Cable To Instrument Panel					
70/ (Left) 01-40 (LHD)	.....	.....	1	319 8185	
70/ (Right) 01-40 (LHD-LWH) (LHD-LHLV) (LHD-LAC)	.....	.....	1	319 8386	
22.020–6 ATTACHING PARTS, Bracket To Instrument Panel (Left)					
NUT, Hexagon..... 70/ 01-40 (LHD)	.....	17.412	1	G271166	NA

Printed in U.S.A.

WINDSHIELD WIPER - COWL VENT - INST. PANEL

22.020–7 ATTACHING PARTS, Bracket To Instrument Panel (Right)

SCREW, Tapping.....	70/	01-40 (LHD-LWH) (LHD-LHLV)	17.671	2	400 1042

22.020–8 ATTACHING PARTS, Left Cable To Fuse Panel Bracket

CLIP.....	70/	01-40 (LHD)	.....	1	400 0417

22.020–9 ATTACHING PARTS, Cable To Cable Bracket

CLIP, Closed	70/	01-40 (LWH) (LHLV) (LAC).....	17.134	AR	G120520
SCREW, Tapping.....	70/	01-40 (LWH) (LHLV) (LAC).....	17.671	AR	400 1042
NUT, Jam.....	70/	01-40 (WWH) (WHLV)	17.410	1	G272122
NUT, Jam.....	70/	01-40 (LWH) (LHLV)	17.410	2	G272122

22.020–10 ATTACHING PARTS, Cable To Damper Door

NUT, Push.....	70/	01-40 (WWH)	13.017	1	400 1714
NUT, Push.....	70/	01-40 (LWH)	13.017	2	400 1714

22.027–1 MOTOR, Windshield Wiper (* 22-1)

67/69	01 (LHD-WVW).....	.....	1	350 0548
67/69	01 (WEW)..... ***(Use 320 8447)***	.....	1	~~339 8073~~
70/71	01-40 (WVW).....	.....	1	361 5830
70/	01-40 (WEW)	.....	1	448 7333
67/71	10-30-50-70-80 (WVW).....	.....	1	357 5575
67/68	10-50-80 (WEW).....	.....	1	320 8246
69/	10-80 (LHD-WEW).....	.....	1	448 6666
68/70	30-70 (WEW).....	.....	1	320 8246
71/	70 (WEW)	.....	1	448 6666
69/70	***10-80 (RHD-WEW)***	.....	1	320 8246

22.027–2 ATTACHING PARTS, Motor To Bracket

SCREW, Machine	67/	WEW.....	17.614	3	G131375 NA
GROMMET (Rubber)	67/	WEW.....	.....	3	448 1006
SEAL (Rubber).....	67/	WEW.....	.....	1	448 1005
WASHER, Inner	67/	WEW.....	17.814	3	800 0175 NA
WASHER, Outer.....	67/	WEW.....	17.814	3	400 1083

22.027–3 ATTACHING PARTS, Motor To Dash Panel

SCREW, Spinlock.....	67/68	10-50-80.....	.....	4	400 0071
SCREW, Tapping.....	67/	01-40.....	17.671	3	812 0054
SCREW, Tapping.....	69/70	10-80.....	17.671	4	812 0054
SCREW, Tapping.....	71/	10-80 (#10-12 × 1/2").....	17.671	3	812 0054
SCREW, Tapping.....	71	10-80 (#10-12 × 3/4").....	17.660	2	G443946 NA
SCREW, Tapping.....	68/	30-70.....	17.660	3	G161901
SCREW, Tapping.....	72	70.....	17.671	3	812 0054

22.027–4 BRACKET, Windshield Wiper Motor Mounting

67/69	01 (WEW).....	.....	1	350 0615
70/	01-40 (WEW)	.....	1	448 7332
67/	10-30-50-70-80 (WEW).....	.....	1	448 4296

22.027–5 ATTACHING PARTS, Bracket To Dash Panel

SCREW, Tapping.....	67/69	01 (WEW).....	17.671	4	400 1042

WINDSHIELD WIPER - COWL VENT - INST. PANEL

22.027–6 SEAL, Windshield Wiper Motor Mounting Bracket

67/69	01 (LHD-WVW)(WEW)	.....	1	350 0556
70/	01-40	.....	1	361 5832
67/	10-30-50-70-80	.....	1	357 5578

22.028–1 COIL, Electric Windshield Wiper Motor Field

67/		22.200	1	448 0998

22.028–2 ARMATURE, Electric Windshield Wiper Motor

67/		22.205	1	448 0999

22.028–3 HEAD, Electric Windshield Wiper Motor Commutator End

67/69	01	22.210	1	448 0993
70/	01-40	22.210	1	448 4418
67/	10-30-50-70-80	22.210	1	448 4418

22.028–4 SPRING SET, Electric Windshield Wiper Motor Brush

67/		22.210	1	448 1000

22.028–5 BRUSH SET, Electric Windshield Wiper Motor

67/		22.210	1	448 3774

22.028–6 HEAD, Electric Windshield Wiper Motor Drive End

67/69	01	22.215	1	448 1377
70/	01-40	22.215	1	448 4420
67/	10-30-50-70-80	22.215	1	448 4420

22.029–1 PLATE AND SWITCH, Electric Windshield Wiper Motor

67/68	01-10-50-80	***(Use 448 6665)***	22.218	1	448 3775
69	01	***(Use 448 6665)***	22.218	1	448 3775
70/	01-40		22.218	1	448 6665
69/	10-80 (LHD)		22.218	1	448 6665
68/70	30-70	***(Use 448 6665)***	22.218	1	448 3775
71/	70		22.218	1	448 6665
69/70	***10-80 (RHD)***	***(Use 448 6665)***	22.218	1	448 3775

22.029–2 ATTACHING PARTS, Plate To Head

SCREW, Tapping	67/68	01-10-50-80	22.218	5	448 4684
SCREW, Tapping	68/	30-70	22.218	5	448 4684

22.029–3 GASKET, Electric Windshield Wiper Motor Switch Plate

67/		22.218	1	448 1004

22.030 PLATE, Electric Windshield Wiper Motor Switch Contact

67/		22.222	1	448 0995

22.031–1 GEAR, Electric Windshield Wiper Motor

67/		22.226	1	~~448 0991~~

S/22278

Printed in U.S.A.

WINDSHIELD WIPER - COWL VENT - INST. PANEL

22.031–2 ATTACHING PARTS, Gear To Crank

NUT, Gear 67/	17.412	1	G120361	NA
WASHER, Lock 67/	17.824	1	G120423	NA

22.031–3 KEY, Electric Windshield Wiper Motor Gear

67/	22.226	1	448 0990

22.031–4 WASHER, Electric Windshield Wiper Drive Crank Thrust (Inner)

67/	22.226	1	448 0988

22.031–5 WASHER, Electric Windshield Wiper Drive Crank Thrust (Outer)

67/	22.226	1	448 0989

22.032–1 SCREW, Electric Windshield Wiper Motor Adjusting

67/	22.232	1	448 1001

22.032–2 DISC, Electric Windshield Wiper Motor Adjusting

67/ 01–40	22.232	1	448 1002
67/ 10–30–50–70–80	22.232	1	448 4683

22.033–1 CRANK, Electric Windshield Wiper Drive

67/69 01 ..... *(Use 448 1378)*	22.238	1	448 4417
70/ 01–40	22.238	1	448 4298
67/ 10–30–50–70–80	22.238	1	448 4298

22.033–2 ATTACHING PARTS, Crank To Motor

WASHER, Spring 67/	23.121	1	400 0043

22.034–1 WASHER, Electric Windshield Wiper Drive Crank Eccentric Spring

67/	22.242	1	349 0397

22.034–2 SPRING, Electric Windshield Wiper Drive Crank Eccentric

67/	22.242	1	349 0395

22.034–3 ACTUATOR, Electric Windshield Wiper Drive Link

67/	22.242	1	349 0396

22.034–4 BUSHING, Electric Windshield Wiper Drive Crank Eccentric

67/	22.242	1	349 0394

22.034–5 RETAINER, Electric Windshield Wiper Drive Crank Eccentric

67/	22.242	1	448 0986

WINDSHIELD WIPER - COWL VENT - INST. PANEL

22.035–1 LINK, Electric Windshield Wiper Drive

67/68	01 (LHD)	***(Use 362 3126)***	22.246	1	350 0600
69	01		22.246	1	362 3126
70/	01-40		22.246	1	361 5837
67/68	10-50-80	***(Use 360 8672)***	22.246	1	357 5580
69/	10-80		22.246	1	360 8672
68	30-70	***(Use 362 3155)***	22.246	1	360 1116
69/	30-70		22.246	1	362 3155
67/69	***01 (RHD)***		22.246	1	320 9946

22.035–2 ATTACHING PARTS, Link To Motor

CLIP	67/		22.246	1	349 0399
RETAINER	67/		22.246	1	349 0398

22.035–3 ATTACHING PARTS, Link To Body

CLIP	67/		22.047	1	349 2542

22.036–1 HARNESS, Electric Windshield Wiper Motor Wire

67/69	01		22.250	1	448 4840
70/	01-40		22.250	1	448 7334
67/68	10-50-80		22.250	1	448 2838
69/	10-80 (LHD)		22.250	1	448 6662
68/70	30-70		22.250	1	448 2838
71/	70		.....	1	812 0191
69/70	***10-80 (RHD)***		22.250	1	448 2838

22.036–2 GROMMET, Electric Windshield Wiper Motor Wire Lead

70/	01-40		22.250	1	448 3777
67/	10-50-70-80		22.250	1	448 3777

22.037 BRACKET, Electric Windshield Wiper Motor Lead Wire

67/			22.254	1	448 1003

22.038–1 CONTROL, Windshield Wiper (* 22-2) (For 7170 WVW, Refer Group 22.038–9 BRACKET)

67	01 (LHD-WVW)		.....	1	358 3377
68/69	01 (LHD-WVW)		.....	1	359 8674
70	01-40 (LHD-WVW)...(Incl. Pump)	***(Use 363 6644)***	.....	1	~~363 1188~~
71	01-40 (LHD-WVW)...(Incl. Pump)		.....	1	363 6644
72	01-40 (2 Speed)		.....	1	365 7636
67	01 (LHD-WEW)		.....	1	358 3199
68/69	01 (LHD-WEW)		.....	1	359 8673
70/	01-40 (LHD-WEW-Variable Speed)		.....	1	361 5829
67/68	10-50-80 (LHD-WVW)		.....	1	357 6970
67/68	10-50-80 (LHD-WEW)		.....	1	357 6971
69/70	10-80 (LHD-WVW)		.....	1	361 4476
71	10-80 (WVW)		.....	1	365 1248
69/71	10-80 (LHD-WEW)		.....	1	361 4478
72	10-80 (2 Speed)		.....	1	365 7635
72	10-80 (3 Speed)		.....	1	361 4478
68/69	30-70 (WVW)		.....	1	359 8905
70	30-70 (WVW)...(Incl. Pump)	***(Use 363 6644)***	.....	1	363 1188
68/69	30-70 (WEW)		.....	1	360 1621
70	30-70 (WEW)		.....	1	355 3761
71/	70 (WEW-3 Speed)		.....	1	363 2644
72	70 (2 Speed)		.....	1	365 7634
67/69	***01 (RHD-WEW)***		.....	1	355 3761
67/70	***10-80 (RHD-WEW)***		.....	1	357 6971

Printed in U.S.A.

WINDSHIELD WIPER - COWL VENT - INST. PANEL

22.038–2 ATTACHING PARTS, Control To Instrument Panel

SCREW, Tapping	69/70	10-80 (#8-18 x 1/2")	13.510	2	400 2457
SCREW, Tapping	70/71	10-80 (#10-12 x 1/2")	17.671	2	812 0054
SCREW, Tapping	72	10-80	17.660	2	448 9487
WASHER, Lock	67/69	WEW	17.824	1	G138542 NA
WASHER, Plain	***67/69***	***01 (RHD)***	***(Use 400 3808)***	17.814	1	G120394 NA

22.038–3 GROMMET, Windshield Wiper Control Cable

67/69	01 (LHD-WVW)	.....	1	318 1121
68/69	10-30-70-80 (WVW)	.....	1	318 1121
70/71	WVW (Two Holes)	.....	1	319 8399
70	01-40 (WVW-One Hole)	.....	1	318 1118

22.038–4 ESCUTCHEON, Windshield Wiper Control

67/69	01 (LHD-WVW)(WEW-LEOW)	.....	1	350 9536
68/69	01 (WEW-WEOW)	.....	1	360 3046
68/69	30-70 (LEOW)	.....	1	360 1629
68/69	30-70 (WEOW)	.....	1	360 3045
70	30-70 (WVW)	.....	1	361 6272
71	(Black) 70	.....	1	363 3870
71	(Blue) 70	.....	1	363 3871
71	(Green) 70	.....	1	363 3872
71	(Red) 70	.....	1	363 3873
72	(Black) 70 (* 22-34)	.....	1	365 1210
72	(Blue) 70 (* 22-34)	.....	1	365 1211
72	(Green) 70 (* 22-34)	.....	1	365 1212
72	(Tan) 70 (* 22-34)	.....	1	365 1214

22.038–5 WIRE, Windshield Wiper Control To Windshield Washer Pump

67/69	01 (LHD-WEOW)	.....	1	318 6873
70	01-70 (Six-WEOW)	.....	1	319 8393
70	01-30-70 (V8-WEOW)	.....	1	319 8394
71	01-40 (Six-WEOW)	.....	1	319 8395
71	01 (V8-WEOW)	.....	1	319 8394
67/69	10-50-80 (LHD-WEOW)	.....	1	318 6874
70/71	10 (LHD-Six)	.....	1	319 8395
70/71	10 (LHD-V8)	.....	1	319 8396
68	30-70 (WEOW)	.....	1	319 0613
69	30-70 (WEOW)	.....	1	319 6439
71	70 (V8-WEOW)	.....	1	321 2188
71	70 (Six-WEOW)	.....	1	321 2189
69	80 (Six-WEOW)	.....	1	319 4619
70/71	80 (LHD-Six)	.....	1	319 8397
70/71	80 (LHD-V8)	.....	1	319 8398

22.038–6 CLIP, Windshield Washer Pump Wire To Plate

68/71	30-70 (WEOW)	.....	13.440	1	400 0443

22.038–6a CLIP, Wire To Instrument Panel Lower Reinforcement

69	30-70 (WEOW)	.....	15.320	1	400 0461

22.038–7 ATTACHING PARTS, Clip To Mounting Plate

SCREW, Tapping	68/69	30-70 (WEW)	.....	17.071	1	400 1042

WINDSHIELD WIPER - COWL VENT - INST. PANEL

22.038–8 STRAP, Windshield Wiper Control Ground

70/	01-40 (WEW)	.....	1	363 5419
68/69	30-70 (WEW)	.....	1	362 3156
70	30-70	3.145	1	364 1172

22.038–9 BRACKET, Windshield Wiper And Washer Control (Incl. Lever)

71	70 (WVW)	.....	1	363 2561

22.038–10 ATTACHING PARTS, Bracket To Instrument Panel

SCREW, Tapping	71	70 (WVW)	17.671	3	448 9486

22.038–11 CABLE, Windshield Wiper Control

71	70 (WVW)	.....	1	363 2678

22.038–11a CLAMP, Windshield Wiper Control Cable

71	70 (WVW)	.....	1	400 4384

22.038–12 ATTACHING PARTS, Clamp To Control Bracket

SCREW, Tapping	71	70 (WVW)	17.671	1	448 9486

22.039–1 KNOB, Windshield Wiper Control

67	01	.....	1	350 9461
68	01-10-80 (LHD-WVW-Chrome)	.....	1	360 8550
68	01-10-80 (WEW-Chrome)	.....	1	360 8549
68	01 (LHD-Plastic)	.....	1	359 9969
69	01	.....	1	359 9969
70	01-40	.....	1	361 6352
71	01-40 (* 22-22)	.....	1	361 6352
71	01-40 (* 22-23)	.....	1	364 6761
72	01-40	.....	1	364 6761
67	10-50-80 (LHD-WVW)	.....	1	357 6976
67	10-50-80 (WEW)	.....	1	357 6960
71	10-80 (WVW)	.....	1	364 6761
68	30-70 (Black Plastic)	.....	1	360 1628
68/69	30-70 (Chrome)	.....	1	360 2976
70	30-70	.....	1	350 9540
71	70	3.150	1	363 2660
72	70	.....	1	364 6916
68	***01 (RHD-WEW)***	.....	1	360 9461
69/70	***10-80 (RHD-WEW)***	.....	1	360 8549

22.039–2 ATTACHING PARTS, Knob To Control

SCREW, Set	67	01	17.638	1	G435146

22.041 NUT, Windshield Wiper Control Holding

67	01-10-50-80 (LHD)	3.145	1	400 0056
68/	01-30-40-70	3.145	1	400 0056
71	10-80 (WVW)	3.145	1	400 0056.
67/70	***10-80 (RHD)***	3.145	1	400 0056

22.043–1 BLADE, Windshield Wiper (Incl. Element)

67	01 ***(Use 359 2444)***	.....	2	358 5974
68	01-30-70 (16" Long) ***(Use 360 8677)***	.....	2	357 5605
69	01	.....	2	360 8677
70/71	01-40	.....	2	362 4450
72	01-40 (16" Long)	.....	2	360 8677
72	01-40 (18" Long)	.....	2	362 4450
67	10-50-80 ***(Use 360 8677)***	.....	2	357 5605

WINDSHIELD WIPER - COWL VENT - INST. PANEL

68	10-80 ***(Use 360 8677)***	.....	2	359 1180
69/	10-80	.....	2	360 8677
68	30-70 (18" Long)	.....	2	360 8582
69/	30-70	.....	2	362 4450

22.043-2 BLADE, Windshield Wiper (Incl. Element)(Right)

67	***80 (RHD-Post Office)***	.....	1	360 8582

22.043-3 ELEMENT, Windshield Wiper Blade

67	01 ***(Use 359 2483)***	.....	2	349 0368
68	01-30-70 (16" Long) ***(Use 359 1181)***	.....	2	359 0989
69	01	.....	2	359 1181
70/71	01-40	.....	2	360 8581
72	01-40 (16" Long)	.....	2	359 1181
72	01-40 (18" Long)	.....	2	360 8581
67	10-50-80 ***(Use 359 1181)***	.....	2	359 0989
68/	10-80	.....	2	359 1181
68/	30-70 (18" Long)	.....	2	360 8581

22.043-4 ELEMENT, Windshield Wiper Blade (Right)

67	***80 (RHD-Post Office)***	.....	1	360 8581

22.044 ARM, Windshield Wiper

67/68	(Left) 01 ***(Use 362 4411)***	.....	1	358 3389
69	(Left) 01	.....	1	362 4411
70/	(Left) 01-40	.....	1	363 5721
67/68	(Left) 10-30-50-70-80 ***(Use 360 8995)***	.....	1	357 5601
69/	(Left) 10-80	.....	1	360 8995
69/	(Left) 30-70	.....	1	362 4797
67/68	(Right) 01 ***(Use 362 4410)***	.....	1	358 3388
69	(Right) 01	.....	1	362 4410
70/71	(Right) 01-40	.....	1	363 5720
72	(Right) 01-40 (* 22-33)	.....	1	366 1746
72	(Right) 01-40 (* 22-32)	.....	1	363 5720
67/68	(Right) 10-30-50-70-80 ***(Use 360 8994)***	.....	1	357 5600
69/	(Right) 10-80	.....	1	360 8994
69/	(Right) 30-70	.....	1	362 4796

22.047-1 BODY, Windshield Wiper Pivot Shaft

70/	01-40 (LHD-WEW)	.....	1	361 5836
67/68	10-50-80 (LHD-WVW) ***(Use 360 8671)***	.....	1	357 5584
67/68	10-50-80 (WEW) ***(Use 360 8670)***	.....	1	357 5579
69/71	10-80 (WVW)	.....	1	360 8671
69/	10-80 (WEW)	.....	1	360 8670
68	30-70 (WEW)	.....	1	362 3154
69/	30-70 (WEW)	.....	1	362 4793
67/68	(Left) 01 (LHD-WVW) ***(Use 362 3129)***	.....	1	350 0551
67/68	(Left) 01 (WEW)	.....	1	448 1281
69	(Left) 01 (WVW)	.....	1	362 3129
70/71	(Left) 01-40 (WVW)	.....	1	361 5834
69	(Left) 01 (WEW)	.....	1	448 5581
68	(Left) 30-70 (WVW) ***(Use 362 3153)***	.....	1	360 1123
69/71	(Left) 30-70 (WVW)	.....	1	362 4795
67/68	(Right) 01 (LHD-WVW) ***(Use 362 3128)***	.....	1	350 0550
67/68	(Right) 01 (WEW) ***(Use 448 5580)*** [1]	.....	1	448 1280
69	(Right) 01 (WVW)	.....	1	362 3128
69	(Right) 01 (WEW)	.....	1	448 5580
70/71	(Right) 01-40 (WVW)	.....	1	361 5835
68	(Right) 30-70 (WVW) ***(Use 362 3152)***	.....	1	360 1122
69/71	(Right) 30-70 (WVW)	.....	1	362 4794
67	***80 (RHD-Post Office)*** ***(Use 360 8670)***	.....	1	357 5579

WINDSHIELD WIPER - COWL VENT - INST. PANEL

22.047–2 ATTACHING PARTS, Body To Cowl Ventilator Panel

SCREW, Hexagon	67/	10–50–80	23.098	4	400 0572
WASHER, Chrome	67/69	01	.....	2	344 6603
WASHER, Chrome	67/	10–50–80	.....	2	344 6603
WASHER, Chrome	68	30–70	.....	2	344 6603
WASHER, Steel	69/	30–70	.....	2	400 3879
WASHER, Steel	70/	01–40	.....	2	400 3879
NUT, Chrome	67/69	01	.....	2	400 0069
NUT, Chrome	70/	01–40	.....	2	400 3878
NUT, Chrome	67/	10–50–80	.....	2	400 0069
NUT, Chrome	68	30–70	.....	2	400 0069
NUT, Chrome	69/	30–70	.....	2	400 3878

22.047–3 ATTACHING PARTS, Body To Motor

CLIP	67/71	01–30–40–70 (LHD–WVW)	.....	1/1	349 2542

22.047–4 ATTACHING PARTS, Body To Body

CLIP	67/	01–30–40–70 (LHD)	.....	1	349 2542

22.047–5 ATTACHING PARTS, Body To Link

CLIP	67/	01–30–40–70 (WEW)	.....	1	349 2542

22.047–6 LINK, Vacuum Windshield Wiper Drive

67/68	10–50–80 (WVW)	*(Use 360 8673)*	.....	1	357 5585
71	10–80 (WVW)		.....	1	360 8673

22.047–7 ATTACHING PARTS, Link To Motor

CLIP	67/71	10–50–80 (WVW)	.....	1	349 2542

22.047–8 ATTACHING PARTS, Link To Body

CLIP	67/71	10–50–80 (WVW)	.....	1	349 2542

22.047–9 SPACER, Windshield Wiper Pivot Shaft

67/	10–50–80		.....	2	357 5604

22.050–1 TUBE, Manifold To Pump (Vacuum Windshield Wiper)

67	SIX		.....	1	317 7222
68	SIX		.....	1	319 1525
69/70	SIX	*(Use 319 5402)*	.....	1	319 3948
71	SIX		.....	1	321 1624

22.050–2 TUBE, Pump To Windshield Wiper

67/68	10–30–50–70–80 (V8–WVW)		.....	1	318 7410

22.050–3 CLIP, Pump To Windshield Wiper Tube

67/71	10–30–50–70–80 (WVW)		29.294	1	316 9685

22.050–4 TUBE, Pump To Tee

67/68	10–30–50–70–80 (V8–WVW)		.....	1	318 7411
69/71	10–30–70–80 (V8–WVW)		.....	1	319 5132

WINDSHIELD WIPER - COWL VENT - INST. PANEL

22.050–5 TEE, Vacuum Connector

67/70	10-30-50-70-80 (V8-WVW)	.....	1	318 8526
71	V8 (WVW)	1.117	1	321 1497

22.050–6 RETAINER, Vacuum Hose (Clip)

68	10-30-70-80 (V8-WVW)	10.331	1	317 8454

22.050–7 HOSE, Tube To Pump (Vacuum Windshield Wiper)(BULK-Order In Feet)

67/71	.....	.....	AR	320 2250

22.050–7a ATTACHING PARTS, Wiper Hose To Wire Harness

CLIP	67/71	3.312	1	79 394

22.050–8 ELBOW, Manifold To Pump

67/71	SIX (WVW-LPB)	.....	1	317 5858
67	10-50-80 (WEW-LPB-WASC)	.....	1	317 5858

22.050–9 ELBOW, Vacuum Tube (In Fuel Pump)

69	V8 (WVW)	17.218	1	G137422

22.050–10 CONNECTOR, Vacuum Tube (In Fuel Pump)

69	SIX (WVW)	17.160	1	G137406

22.051–1 PUMP, Windshield Washer

67	01-50 (LHD-LEOW)	15.440	1	316 7632
68/69	01-30-70 (LHD-LEOW)	22.150	1	319 1110
70	01-30-40-70 (LEOW)...(Incl. Wiper Control) ***(Use 363 6644)***	22.038	1	363 1188
71	01-40 (LEOW)...(Incl. Wiper Control)	22.038	1	363 6644
67/69	10-80 (LHD-LEOW)	15.440	1	316 7632
70	10-80 (LEOW)	22.150	1	363 1204
71	10-80 (WVW)	.....	1	363 6646
71	70 (WVW)	.....	1	365 0478
67/70	WEOW	22.150	1	448 5487
71/	WEOW 360	.....	1	812 1404

22.051–1a FILTER SERVICE KIT, Windshield Washer

71/	WEOW 363	.....	1	812 1405

22.051–2 ATTACHING PARTS, Pump To Dash Panel

SCREW, Tapping	67	01 (LHD-LEOW)	17.671	3	400 0774
SCREW, Tapping	68/69	01 (LHD-LEOW)	17.671	2	400 0774
SCREW, Tapping	67/69	10-30-50-70-80 (LEOW)	17.671	3	400 0774
***SCREW, Tapping	67/69	01 (RHD-LEOW)***	17.671	3	400 0479

22.051–3 ATTACHING PARTS, Pump To Reservoir

CLIP	67/70	WEOW	22.150	2	448 5489

22.051–4 ATTACHING PARTS, Ground Wire To Radiator Side Baffle

SCREW, Tapping	69	10-80 (WEW)	15.320	1	400 1701
SCREW, Tapping	70	01-40 (WEOW)	15.320	1	400 1701
SCREW, Tapping	71	01-40 (WEOW)	2.013	1	318 9013

Printed in U.S.A.

WINDSHIELD WIPER - COWL VENT - INST. PANEL

22.051–5 ATTACHING PARTS, Ground Wire To Dash Panel

SCREW, Tapping.....	69	10–80 (WEW).....	17.671	1	400 1031

22.052–1 CONTROL, Windshield Washer (Also Refer Group 22.051–1 PUMP)

70	10–80 (LHD–WVW).....	22.150	1	363 1204
71	10–80 (WVW).....	.....	1	363 6646
71/	70 (WEOW).....	.....	1	363 3990

22.052–1a ATTACHING PARTS, Control To Panel

SCREW, Tapping.....	71/	70 (WEOW).....	17.671	1	448 9486

22.052–2 KNOB, Windshield Washer Control

70/71	10–80 (LHD–WVW).....	22.150	1	363 1205
71	70.....	3.150	1	363 2660
72	70.....	.....	1	364 6918

22.052–2a BRACKET, Windshield Washer And Wiper Control (Refer Group 22.038–9)

22.052–3 ESCUTCHEON, Windshield Washer Control Knob

70/71	10–80 (LHD–WVW).....	22.150	1	363 1217
71	(Black) 70 (Plastic–Snap In).....	.....	1	363 3821
71	(Blue) 70 (Plastic–Snap In).....	.....	1	363 3822
71	(Green) 70 (Plastic–Snap In).....	.....	1	363 3823
71	(Red) 70 (Plastic–Snap In).....	.....	1	363 3824
72	(Black) 70 (Plastic–Snap In–* 22–34).....	.....	1	365 1215
72	(Blue) 70 (Plastic–Snap In–* 22–34).....	.....	1	365 1216
72	(Green) 70 (Plastic–Snap In–* 22–34).....	.....	1	365 1217
72	(Tan) 70 (Plastic–Snap In–* 22–34).....	.....	1	365 1219
71	70 (WVW)(Metal–Threaded).....	.....	1	365 0544

22.052–4 RESERVOIR, Windshield Washer

67/69	LHD (LEOW).....	22.155	1	318 4276
70	LHD (LEOW).....	22.155	1	319 8383
71/	LEOW...(Incl. Cap).....	22.155	1	321 1339
67/69	WEOW.....	22.155	1	448 5488
70	WEOW.....	22.155	1	448 8017
71/	WEOW...(Incl. Pump And Cap).....	22.155	1	321 1338
71/	WEOW.....	.....	1	812 1741

22.052–5 CAP, Windshield Washer Reservoir

67/69	LHD (WEOW).....	22.155	1	320 7114
70	LHD.....	22.155	1	320 7114
71/	.....	22.155	1	448 9483

22.052–6 CLIP, Windshield Washer Reservoir Mounting

67/68	LHD.....	22.155	2	400 1813
69	.....	22.155	2	400 3945
70	.....	22.155	2	400 4031

22.052–7 ATTACHING PARTS, Reservoir To Wheel House

SCREW, Tapping.....	71/	.....	12.075	3	400 0424

Printed in U.S.A.

WINDSHIELD WIPER - COWL VENT - INST. PANEL

22.053–1 HOSE, Windshield Washer (Bulk)(Order In Feet)

67/	(1/4" I.D.)	15.440	AR	320 2251	
67/	(9/32" I.D.)	15.440	AR	320 2252	
67/	(7/64" I.D.)	.....	AR	812 0637	

22.053–2 CLIP, Windshield Washer Hose

67/		17.134	1	G120521	

22.053–2a ATTACHING PARTS, Clip To Dash Panel

SCREW, Tapping.....	67/		17.671	1	812 0054

22.053–3 CONNECTOR, Windshield Washer Hose

67/		22.160	1	318 7871	

22.053–4 ATTACHING PARTS, Connector To Panel

SCREW, Tapping.....	70	10-50	17.671	2	812 0054	
SCREW, Tapping.....	70/	01-30-40-70	2.050	1	400 3831	
WASHER, Plain.....	70	10-80	17.814	1	G120391	NA

22.053–5 SPACER, Windshield Washer Connector

68/	30-70 (WEOW)	17.814	1	400 1085	

22.053–6 HOSE, Connector To Nozzle

67/69	(Left Side) 10-50-80 ***(Use 318 7872)***	22.160	1	318 7872	
68/69	(Left Side) 30-70 ***(Use 318 7873)***	22.160	1	319 1455	
67/69	(Right Side) 10-50-80	22.160	1	318 7873	
68/69	(Right Side) 30-70 ***(Use 318 7873)***	22.160	1	319 1454	
70/		22.160	1	318 7873	

22.053–7 HOSE, Connector To Foot Pump

69	30-70	22.160	1	316 8085	

22.054–1 NOZZLE, Windshield Washer

67/69	01 (* 22-11)	15.440	1	347 2211	
68	01 (* 22-12) ***(Ord. 347 2211, 400 0444)***	22.165	1	363 0337	
70/	01-40	22.165	2	319 1498	
67	10-50-80	22.165	2	357 5603	
68	10-80	22.165	2	319 1499	
69/70	10	22.165	2	319 4936	
68/	30-70	22.165	2	319 1498	
69/70	80	22.165	2	319 4937	
71/	10-80	22.165	2	319 4937	

22.054–2 ATTACHING PARTS, Nozzle To Body

SCREW, Tapping.....	67/68	(1/2" Long)	17.660	2	G161895	
SCREW, Tapping.....	70/	01-40	17.671	2	812 0054	
SCREW, Tapping.....	69/	10-80	17.671	2	812 0054	
SCREW, Tapping.....	68/69	30-70 (5/8" Long)	17.660	2	G161901	NA
SCREW, Tapping.....	70/	30-70	17.671	2	812 0054	
WASHER, Plain.....	68/69	10-80	17.814	2	400 1089	

WINDSHIELD WIPER - COWL VENT - INST. PANEL

22.054–3 SEAL, Windshield Washer Nozzle

70/	01–40	22.165	2	319 1502
68/	30–70	22.165	2	319 1502

22.054–4 CLIP, Electric Windshield Washer Nozzle Hose To Wire Harness

67/	01 (WEW)	3.210	1	63 045

22.054–5 NUT, Windshield Washer Nozzle

67/	01 (5/16–18)	15.440	1	400 0444
68	01 (5/16–24)	17.412	1	G271187 NA

22.055–1 VALVE ASSEMBLY, Windshield Washer Check

67/69	LHD (LEOW)	15.440	1	316 0571

22.055–2 ATTACHING PARTS, Valve To Dash Panel

CLIP	67/69	LHD (LEOW)	15.440	1	316 0573
SCREW, Tapping	67/69	LHD (LEOW)	17.671	1	400 1042

22.055–3 GROMMET, Valve To Hose

67/	LHD (LEOW)	15.440	1	318 1118

22.055–4 CAP ASSEMBLY, Windshield Washer Check Valve (Incl. Hose And Filter)

67/68	LHD (LEOW)	15.440	1	439 2678
69	01–10–30–70 (LHD–LEOW)	22.170	1	439 2678
69	80 (Six–LHD–LEOW)	22.170	1	319 4920
69	80 (V8–LHD–LEOW)	22.170	1	439 2678

22.055–5 ATTACHING PARTS, Cap Hose To Left Wheelhouse

CLIP	67/69	01 (LHD–V8–LEOW)	3.165	1	400 0553
CLIP	67/69	10–50–80 (LHD–V8–LEOW)	4.141	1	400 1712
SCREW, Tapping	67/69	01 (LHD–V8–LEOW)	17.671	1	400 1042

22.055–6 ATTACHING PARTS, Cap Hose To Wire Harness

CLIP	68/69	10–70–80	3.312	3	79 394

22.056–1 PANEL, Instrument

(T–831)	***(Use 448 6087)***	.....	1 360 1362
(T–832)	***(Use 359 8786)***	.....	1 360 1368
(T–835)	***(Use 448 6088)***	.....	1 360 1365
(T–838)	***(Use 448 6087)***	.....	1 360 1362
(T–931)	***(Use 448 6087)***	.....	1 362 3488
(T–932)	***(Use 448 6087)***	.....	1 362 3488
(T–935)	***(Ref. Pr. List)***	.....	1 362 3490
(T–936)		.....	1 362 3491
(T–961)	***(Use 448 6087)***	.....	1 362 3488
(T–962)	***(Use 448 6087)***	.....	1 362 3488
(T–963)	***(Ref. Pr. List)***	.....	1 362 3489
(T–965)	***(Ref. Pr. List)***	.....	1 362 3490
(T–966)		.....	1 362 3491
(T–968)	***(Use 448 6087)***	.....	1 362 3488
(T–001)		.....	1 363 0852
(T–008)		.....	1 363 0852

Printed in U.S.A.

WINDSHIELD WIPER - COWL VENT - INST. PANEL

(T-011)				1	363 0852
(T-013)		***(Use 812 0264)***		1	363 0853
(T-014)		***(Use 812 0265)***		1	363 0854
(T-015)		***(Use 812 0266)***		1	363 0855
(T-021)				1	363 0852
(T-023)		***(Use 812 0264)***		1	363 0853
(T-024)				1	363 0854
(T-025)		***(Use 812 0266)***		1	363 0855
(T-031)				1	361 6222
(T-033)				1	361 6223
(T-035)				1	361 6225
(T-036)				1	361 6226
(T-041)				1	363 0852
(T-043)		***(Use 812 0264)***		1	363 0853
(T-044)				1	363 0854
(T-045)		***(Use 812 0266)***		1	363 0855
(T-061)				1	361 6222
(T-063)				1	361 6223
(T-064)				1	361 6224
(T-065)				1	361 6225
(T-066)				1	361 6226
(T-101)				1	363 0852
(T-103)				1	812 0268
(T-104)				1	812 0269
(T-108)				1	363 0852
(T-111)				1	363 0852
(T-113)				1	812 0268
(T-114)				1	812 0269
(T-115)				1	812 0270
(T-121)				1	363 0852
(T-123)				1	812 0268
(T-124)				1	812 0269
(T-141)				1	363 0852
(T-143)				1	812 0268
(T-144)				1	812 0269
(T-145)				1	812 0270
(T-161)				1	363 2549
(T-163)				1	363 2550
(T-164)				1	363 2551
(T-165)				1	363 2552
(T-168)				1	363 2549
(T-201)				1	812 1290
(T-203)				1	812 1291
(T-206)				1	812 1293
(T-211)				1	812 1290
(T-213)				1	812 1291
(T-215)				1	812 1290
(T-216)				1	812 1293
(T-221)				1	812 1290
(T-223)				1	812 1291
(T-224)				1	812 1292
(T-226)				1	812 1293
(T-241)				1	812 1290
(T-243)				1	812 1291
(T-244)				1	812 1292
(T-246)				1	812 1293
(T-261)				1	365 1189
(T-263)				1	365 1190
(T-264)				1	365 1191
(T-265)				1	365 1189
(T-266)				1	365 1193
(T-268)				1	365 1189
67	01 (LHD)			1	620 0094
68/69	01 (LHD)			1	630 3080
67	10-50-80 (LHD)	***(Use 650 0679)***		1	448 4692
68	10-80 (LHD)			1	651 6811
69	10-80 (LHD)			1	651 8151

WINDSHIELD WIPER - COWL VENT - INST. PANEL

70	10-80 (LHD-* 22-19)	.....	1	653 1004	
70	10-80 (LHD-* 22-20)	.....	1	653 1228	
71	10-80	.....	1	653 1228	
72	10-80 (* 22-30)	.....	1	653 1510	
72	10-80 (* 22-31)	.....	1	653 1686	
67/68	***01 (RHD-Used Less Heater)***	.....	1	620 0119	
67/68	***01 (RHD-Used With Heater)***	.....	1	620 0145	
69	***01 (RHD-Used Less Heater)***	.....	1	630 3222	
69	***01 (RHD-Used With Heater)***	.....	1	630 3223	
67/68	***10-80 (RHD)*** ***(Use 448 6599)***	.....	1	448 4693	
69/70	***10-80 (RHD)***	.....	1	448 6599	

22.056–2 ATTACHING PARTS, Panel To Cowl Top

SCREW, Tapping	67/69	01 (5/8")	17.660	8	G161901	
SCREW, Tapping	70	30-70 (1")	.....	5	400 4102	

22.056–3 ATTACHING PARTS, Panel To Cowl Vent Air Chamber

SCREW, Tapping.....	70	01-30-40-70 (8-15 x 1-1/4)	17.655	5	G145419	NA
SCREW, Tapping.....	70	01-40 (8-15 x 1/2)	17.671	1	G456794	NA
SCREW, Tapping.....	70	01-40 (10-12 x 1/2)	17.660	1	G161895	
SCREW, Tapping.....	71/	01-40	17.655	5	G9414757	NA
SCREW, Tapping.....	67/	10-50-80 (LHD)	.....	5	400 2180	
SCREW, Tapping.....	68/69	30-70	17.655	4	400 3045	
SCREW, Tapping.....	69	10-80	.....	5	400 3030	
***SCREW, Tapping.....	***67/70***	***10-80 (RHD)***	.....	4	400 2180	
EYELET.....	70/	01-40	.....	5	400 3569	

22.056–4 ATTACHING PARTS, Panel To Uniside (Inner)

SCREW, Machine.....	67/68	01-10-50-80 ***(Use 400 1896)***	23.020	2	400 0608
SCREW, Machine.....	68/71	01-30-40-70 (1-1/8" Long)	.....	2	400 2070
SCREW, Machine	68/70	30-70	20.280	4	400 0013
SCREW, Tapping.....	71/	70	.....	1	400 1489
BOLT, Hexagon	68/70	01-30-70 (1" Long)	12.075	2	400 0066
BOLT, Hexagon	69/	10-80	12.075	2	400 0066
NUT, Speed	67/70	01-10-50-80 (5/16-24)	23.006	2	400 0567
NUT, Speed	68/70	01 (5/16-10)	12.075	2	400 0568
NUT, Speed	69	01-30-70	12.075	2	400 0568
NUT, Speed	69/	10-80	12.075	2	400 0568
NUT, Spring	69/70	01-30-70	.....	2	400 2261
NUT, Spring	71/	70	.....	2	400 2261
NUT, Cage.....	70/71	01-40	.....	2	400 3700

22.056–5 ATTACHING PARTS, Panel To Roof Rail Reinforcement

SCREW, Tapping	70	30-70 (1/2")	20.280	2	400 1724
SCREW, Tapping	68/70	30-70 (1-3/4")	.....	2	400 1865

22.056–6 BRACKET, Instrument Panel To Uniside

67/68	10-50-80	.....	2	357 6454	

22.056–6a PLATE, Instrument Panel To Cowl Vent Air Chamber (Speaker Mounting)

71/	70	15.320	1	363 2706	

22.056–6b ATTACHING PARTS, Plate To Instrument Panel

SCREW, Tapping.....	71/	70	17.660	2	G163158	NA

22.056–6c ATTACHING PARTS, Plate To Cowl Vent Air Chamber

NUT, Hexagon.....	71/	70	23.074	1	400 3018	

WINDSHIELD WIPER - COWL VENT - INST. PANEL

22.056–7 EYELET, Instrument Panel To Cowl Vent Air Chamber

68/70	30–70	.....	4	400 3569	

22.056–8 FILLER, Instrument Panel To Uniside (Left)

67/68	10–50–80	.....	1	359 1091	
69/70	***19-89 (RHD)***	.....	1	362 1253	

22.056–9 FILLER, Instrument Panel To Uniside (Right)

67/68	10–50–80	.....	1	359 1090	
69/70	***19-89 (RHD)***	.....	1	362 1252	

22.056–10 ATTACHING PARTS, Filler To Uniside

SCREW, Tapping.....	67/68	10–50–80	17.660	2	G161895	
***SCREW, Tapping.....	***69/70***	***10-80 (RHD)***	20.280	2	400 1724	

22.056–11 ATTACHING PARTS, Bracket To Uniside

SCREW, Machine.....	67/68	10–50–80 ***(Use 400 1896)***	23.020	2	400 0608	
NUT, Speed	67/68	10–50–80	23.006	2	400 0567	

22.056–11a MOULDING, Instrument Panel Defroster Duct Opening

70/	01–40	.....	1	364 6852	
70	(Front) 30–70	.....	1	364 1826	
70	(Rear) 30–70	.....	1	364 1827	

22.056–12 BEZEL, Instrument Panel Steering Column Opening (Also Refer Group 10.338–3 COVER)

67	10–50–80 (* 22–6)	.....	1	357 6504	
67	10–50–80 (* 22–7)	.....	1	319 0516	
68	10–80	.....	1	319 2329	
69	30–70	10.338	1	319 3700	NC
71	70 (Cover)	10.338	1	363 2615	NC
72	70 (Cover)	10.338	1	365 1768	
69/70	***10-80 (RHD)***	.....	1	319 2329	

22.056–13 ATTACHING PARTS, Bezel To Instrument Panel Or Control Housing

SCREW, Hexagon	71/	70	15.320	3	400 2309	
SCREW, Tapping.....	67/68	10–50–80	15.320	2	400 1701	
SCREW, Tapping.....	68/69	30–70	29.023	2	400 1309	
SCREW, Tapping.....	71/	70	7.014	4	400 2809	
NUT (Nylon).....	68/69	30–70	14.108	2	400 0141	
NUT, Speed	71/	70	22.100	4	400 3841	

22.056–14 PANEL, Instrument Panel Finish (Upper)

69	(Charcoal) 10–80 (LHD) ...(Incl. Studs)	.....	1	361 5031	
69	(Blue) 10–80 (LHD)...(Incl. Studs)	.....	1	361 5032	
69	(Red) 10–80 (LHD)...(Incl. Studs) ***(Use 361 5036)***	.....	1	361 5033	
69	(Brown) 10–80 (LHD) ...(Incl. Studs)	.....	1	361 5034	
69	(Avocado) 10–80 (LHD) ...(Incl. Studs)	.....	1	361 5035	
70	10–80 (LHD–* 22–19)	.....	1	362 1361	

22.056–15 ATTACHING PARTS, Finish Panel To Instrument Panel

SCREW, Tapping.....	69/70	10–80 (LHD)	.....	10	400 3091	
NUT, Speed	69/70	10–80 (LHD)	.....	1	400 3077	
NUT, Spring.....	69/70	10–80 (LHD)	.....	5	400 3710	
WASHER, Plastic	69/70	10–80 (LHD)	.....	10	400 3089	
WASHER, Plain.....	69	10–80 (LHD)	17.814	10	400 1081	

WINDSHIELD WIPER - COWL VENT - INST. PANEL

22.056–16 ATTACHING PARTS, Finish Panel To Radio Speaker Mounting Bracket

STUD	69	10–80 (LHD)	3.505	1	400 1378	

22.056–17 PANEL, Instrument Panel Finish (Lower)(For 68 10-80 Refer To Group 22.100–12 PAD)

69	(Left) 10–80 (LHD)	.....	1	361 5043	
70/71	(Left) 10–80 (LHD)	.....	1	360 9185	NC
72	(Left) 10–80	.....	1	361 0013	NC
69	(Right) 10–80 (LHD)	.....	1	361 5042	
70/71	(Right) 10–80 (LHD) ***(Use 361 0012)***	.....	1	360 9180	NC
72	(Right) 10–80	.....	1	361 0012	NC

22.056–18 ATTACHING PARTS, Finish Panel To Bezel

STUD	69/	10–80 (LHD)	3.505	4	400 1378
NUT, Acorn	69/	10–80 (LHD)	12.004	4	400 0812
NUT, Spring	69/	10–80 (LHD)	3.505	4	400 1948

22.056–19 ATTACHING PARTS, Finish Panel To Instrument Panel

SCREW, Tapping	69/	10–80 (LHD)	.....	13	400 2652

22.056–20 PANEL, Instrument Panel Finish (Right)

69	(Charcoal)(Rebel) 10 (LHD–LAC–Except SST)(LHD–LHLV–Except SST)	.....	1	361 5105	
69	(Charcoal)(Rebel–SST) 10 (LHD–LAC)(LHD–LHLV)	.....	1	361 5115	
69	(Charcoal)(Rebel) 10 (LHD–WAC–* 22–14)(LHD–WHLV–* 22–14)	.....	1	448 7164	
69	(Charcoal)(Rebel) 10 (LHD–WAC–* 22–13)(LHD–WHLV–* 22–13)	.....	1	361 5110	
69	(Blue)(Rebel) 10 (LHD–LAC–Except SST)(LHD–LHLV–Except SST)	.....	1	361 5106	
69	(Blue)(Rebel–SST) 10 (LHD–LAC)(LHD–LHLV)	.....	1	361 5116	
69	(Blue)(Rebel) 10 (LHD–WAC–* 22–13)(LHD–WHLV–* 22–13) ***(Use 448 7165)***	.....	1	361 5111	
69	(Blue)(Rebel) 10 (LHD–WAC–* 22–14)(LHD–WHLV–* 22–14)	.....	1	448 7165	
69	(Avocado)(Rebel) 10 (LHD–LAC–Except SST)(LHD–LHLV–Except SST)	.....	1	361 5109	
69	(Avocado)(Rebel–SST) 10 (LHD–LAC)(LHD–LHLV)	.....	1	361 5119	
69	(Avocado)(Rebel) 10 (LHD–WAC–* 22–13)(LHD–WHLV–* 22–13)	.....	1	361 5114	
69	(Avocado)(Rebel) 10 (LHD–WAC–* 22–14)(LHD–WHLV–* 22–14)	.....	1	448 7168	
69	(Brown)(Rebel) 10 (LHD–LAC–Except SST)(LHD–LHLV–Except SST)	.....	1	361 5107	
69	(Brown)(Rebel–SST) 10 (LHD–LAC)(LHD–LHLV)	.....	1	361 5117	
69	(Brown)(Rebel) 10 (LHD–WAC–* 22–13)(LHD–WHLV–* 22–13)	.....	1	361 5112	
69	(Brown)(Rebel) 10 (LHD–WAC–* 22–14)(LHD–WHLV–* 22–14)	.....	1	448 7166	
69	(Red)(Rebel) 10 (LHD–LAC–Except SST)(LHD–LHLV–Except SST)	.....	1	361 5108	
69	(Red)(Rebel–SST) 10 (LHD–LAC)(LHD–LHLV)	.....	1	361 5118	
69	(Red)(Rebel) 10 (LHD–WAC–* 22–13)(LHD–WHLV–* 22–13)	.....	1	361 5113	
69	(Red)(Rebel) 10 (LHD–WAC–* 22–14)(LHD–WHLV–* 22–14)	.....	1	448 7167	
69	(Charcoal)(Ambassador) 80 (LHD–Except DPL And SST)	.....	1	361 5100	
69	(Charcoal)(Ambassador–DPL) 80 (LHD)	.....	1	361 5100	
69	(Charcoal)(Ambassador–SST) 80 (LHD) ***(Use 448 7169)***	.....	1	361 5120	
69	(Blue)(Ambassador) 80 (LHD–Except DPL And SST) ***(Use 448 7175)***	.....	1	361 5101	
69	(Blue)(Ambassador–DPL) 80 (LHD) ***(Use 448 7175)***	.....	1	361 5101	
69	(Blue)(Ambassador–SST) 80 (LHD) ***(Use 448 7170)***	.....	1	361 5121	
69	(Brown)(Ambassador) 80 (LHD–Except DPL And SST) ***(Use 448 7176)***	.....	1	361 5102	
69	(Brown)(Ambassador–DPL) 80 (LHD) ***(Use 448 7176)***	.....	1	361 5102	
69	(Brown)(Ambassador–SST) 80 (LHD) ***(Use 448 7171)***	.....	1	361 5122	
69	(Red)(Ambassador) 80 (LHD)	.....	1	361 5103	
69	(Red)(Ambassador–DPL) 80 (LHD)	.....	1	361 5103	
69	(Red)(Ambassador–SST) 80 (LHD)	.....	1	361 5123	
69	(Avocado)(Ambassador) 80 (LHD–Except DPL And SST) ***(Use 448 7178)***	.....	1	361 5104	
69	(Avocado)(Ambassador–DPL) 80 (LHD) ***(Use 448 7178)***	.....	1	361 5104	
69	(Avocado)(Ambassador–SST) 80 (LHD) ***(Use 448 7173)***	.....	1	361 5124	
70	10 (LHD–LAC–Except SST)(LHD–LHLV–Except SST)	.....	1	361 6566	
70	10 (LHD–LAC–SST)(LHD–LHLV–SST)	.....	1	361 6546	
70	(Black)(Rebel) 10 (LHD–WAC)(LHD–WHLV)	.....	1	448 8150	
70	(Blue)(Rebel) 10 (LHD–WAC)(LHD–WHLV)	.....	1	448 8151	

WINDSHIELD WIPER - COWL VENT - INST. PANEL

70	(Brown)(Rebel) 10 (LHD-WAC)(LHD-WHLV)	.....	1	448 8154	
70	(Green)(Rebel) 10 (LHD-WAC)(LHD-WHLV)	.....	1	448 8152	
70	(Red)(Rebel) 10 (LHD-WAC)(LHD-WHLV)	.....	1	448 8153	
70	(Black)(Ambassador) 80 (LHD-Except DPL And SST)	.....	1	448 8146	
70	(Black)(Ambassador-DPL) 80 (LHD)	.....	1	448 8155	
70	(Black)(Ambassador-SST) 80 (LHD)	.....	1	448 8160	
70	(Blue)(Ambassador) 80 (LHD-Except DPL And SST)	.....	1	448 8147	
70	(Blue)(Ambassador-DPL) 80 (LHD)	.....	1	448 8156	
70	(Blue)(Ambassador-SST) 80 (LHD)	.....	1	448 8161	
70	(Brown)(Ambassador) 80 (LHD-Except DPL And SST)	.....	1	448 8149	
70	(Brown)(Ambassador-DPL) 80 (LHD)	.....	1	448 8159	
70	(Brown)(Ambassador-SST) 80 (LHD)	.....	1	448 8164	
70	(Green)(Ambassador) 80 (LHD-Except DPL And SST)	.....	1	448 8148	
70	(Green)(Ambassador-DPL) 80 (LHD)	.....	1	448 8157	
70	(Green)(Ambassador-SST) 80 (LHD)	.....	1	448 8162	
70	(Red)(Ambassador-DPL) 80 (LHD)	.....	1	448 8158	
70	(Red)(Ambassador-SST) 80 (LHD)	.....	1	448 8163	
71	(Brushed Aluminum)(Matador) 10 (LAC)	.....	1	364 6710	NC
71	(Black)(Matador) 10 (WAC)	.....	1	812 0168	
71	(Black) (Ambassador-DPL) 80	.....	1	448 9312	
71	(Black) (Ambassador-SST) 80	.....	1	448 9315	
71	(Black) (Ambassador-Brougham) 80	.....	1	448 9319	
71	(Blue)(Matador) 10 (WAC)	.....	1	812 0169	
71	(Blue) (Ambassador-DPL) 80	.....	1	448 9313	
71	(Blue) (Ambassador-SST) 80	.....	1	448 9316	
71	(Blue) (Ambassador-Brougham) 80	.....	1	448 9320	
71	(Green)(Matador) 10 (WAC)	.....	1	812 0170	
71	(Green) (Ambassador-DPL) 80	.....	1	448 9314	
71	(Green) (Ambassador-SST) 80	.....	1	448 9317	
71	(Green) (Ambassador-Brougham) 80	.....	1	448 9321	
71	(Red)(Matador) 10 (WAC)	.....	1	812 0171	
71	(Red) (Ambassador-SST) 80	.....	1	448 9318	
71	(Red) (Ambassador-Brougham) 80	.....	1	448 9322	
71	(Black) 70 ***(Use 363 0790)***	.....	1	363 2575	
71	(Blue) 70	.....	1	363 2576	
71	(Green) 70	.....	1	363 2577	
71	(Red) 70 ***(Use 363 0790)***	.....	1	363 2578	
72	(Black) 10 (LAC)	.....	1	812 0712	
72	(Black) 10 (WAC)	.....	1	812 0716	
72	(Blue) 10 (LAC)	.....	1	812 0713	
72	(Blue) 10 (WAC)	.....	1	812 0717	
72	(Green) 10 (LAC)	.....	1	812 0714	
72	(Green) 10 (WAC)	.....	1	812 0718	
72	(Tan) 10 (LAC)	.....	1	812 0715	
72	(Tan) 10 (WAC)	.....	1	812 0719	
72	70	.....	1	365 1274	NC
72	(Black)(Ambassador-Brougham) 80	.....	1	812 0720	
72	(Black)(Ambassador-SST) 80	.....	1	364 6145	
72	(Blue)(Ambassador-Brougham) 80	.....	1	812 0721	
72	(Blue)(Ambassador-SST) 80	.....	1	364 6146	
72	(Green)(Ambassador-Brougham) 80	.....	1	812 0722	
72	(Green)(Ambassador-SST) 80	.....	1	364 6147	
72	(Tan)(Ambassador-Brougham) 80	.....	1	812 0723	
72	(Tan)(Ambassador-SST) 80	.....	1	364 6148	

22.056–21 ATTACHING PARTS, Right Finish Panel To Instrument Panel

SCREW, Trim	69/	10-80 (LHD)	.....	9	400 3590
SCREW, Tapping	71/	10-80	7.014	1	400 2809
SCREW, Trim	69/	10-80 (LHD)	.....	10	400 3590
SCREW, Oval Head.....	71/	70.....	.....	3	400 2876
SCREW, Hexagon	71/	70.....	15.320	4	400 2309
CLIP, "S"	71/	70	.....	1	400 4131

22.056–21a ATTACHING PARTS, Right Finish Panel To Support

SCREW, Tapping.....	71	70.....	3.510	1	400 2652

WINDSHIELD WIPER - COWL VENT - INST. PANEL

22.058–6 PIN, Glove Box Retainer

68	30-70	.....	1	360 1394	

22.058–7 ATTACHING PARTS, Pin To Support

WASHER, Plain	68	30-70	17.814	2	G9414920	NA
SPRING, Retainer	68	30-70	17.710	2	G149505	

22.060–1 DOOR, Glove Box

67	01 (LHD-220)	.....	1	620 0265	
67	01 (LHD-440)	.....	1	350 1370	
68/69	01 (LHD)	.....	1	620 0265	
70/	01-40 (LHD-* 22-26)...(Incl. Hinge)	.....	1	630 4761	
72	01-40 (* 22-27)	.....	1	630 8576	
67/69	***01 (RHD)*** ..... ***(Use 360 8041)***	.....	1	356 1665	
67	10-50-80 (LHD)	.....	1	448 4839	NC
68/69	10-80 (LHD)	.....	1	360 8041	NC
70	10-80 (LHD)	.....	1	361 6780	NC
71/	10-80	.....	1	361 6780	NC
67/70	***10-80 (RHD)***	.....	1	357 6842	
70	30-70	.....	1	361 6244	
71	70	.....	1	363 3220	NC
72	70	.....	1	630 7850	NC

22.060–2 HINGE, Glove Box

67/69	01	.....	1	350 0672	
70/	01-40 (LHD-* 22-26)	.....	1	363 5801	
72	01-40 (* 22-27) ..... ***(Use 369 9516)***	.....	1	366 1506	
67/69	10-50-80	.....	1	357 6470	
70/	10-80	.....	1	360 9516	
70	30-70	.....	1	361 6235	
71/	70	.....	1	363 2490	

22.060–3 ATTACHING PARTS, Hinge To Door

SCREW, Machine	67/69	01	13.017	3	400 0616	
SCREW, Pancake Head .	70	01-30-40-70	17.671	4	400 4032	
SCREW, Pan Head	70	01-30-70	17.660	4	G161895	NA
SCREW, Tapping	71/	01-40	17.660	3	G9414722	NA
SCREW, Posi-Drive	72	01-40	.....	3	400 4568	
SCREW, Tapping	72	01-40 (* 22-27)	2.050	3	345 8265	
SCREW, Tapping	71/	70	17.671	3	812 0054	
SCREW, Tapping	67/71	10-50-80 (LHD) ..... ***(Use 812 0054)***	17.671	3	G274773	
SCREW, Tapping	72	10-80	17.671	3	G9421073	NA
SCREW, Tapping	***67/70***	***10-80 (RHD)***	13.017	3	400 1781	

22.060–4 ATTACHING PARTS, Hinge To Instrument Panel

NUT, Speed	72	70	.....	3	400 3841	
SCREW, Tapping	67/69	01 ..... ***(Use 400 0616)***	17.673	3	G273624	
SCREW, Tapping	70	01 (1/2") ..... ***(Use 812 0054)***	17.671	3	G274773	
SCREW, Tapping	67/71	10-50-80 ..... ***(Use 812 0054)***	17.671	3	G274773	
SCREW, Tapping	72	10-80	17.671	3	G9421073	
SCREW, Tapping	71/	70	17.671	3	812 0054	
SCREW, Pancake Head .	70	30-70 (3/4")	17.671	4	400 4033	
SCREW, Hexagon	70/	01-40 (5/8")	2.013	3	318 9013	
SCREW, Hexagon	70	30-70 (5/8")	2.013	4	318 9013	

22.060–4a REINFORCEMENT, Glove Box Door Hinge

70	30-70	.....	1	361 6234	

WINDSHIELD WIPER - COWL VENT - INST. PANEL

22.060–5 NAMEPLATE, Glove Box Door (For 70-71 01-40 Refer To Group 22.100–18)

67	(SST) 10	.....	1	359 1086
67	(Briarcliff) 18	.....	1	357 5807
67	(Mariner) 18	.....	1	357 5805
67	(Westerner) 18	.....	1	357 5803
67	(Marlin) 50	.....	1	353 0302
67/68	(Rebel) 10	.....	1	357 7177
68	(Blank-* 22-10) 30	22.058	1	448 6745
68	(Javelin) 70	22.058	1	360 1482
67	(Ambassador 880) 80	.....	1	357 7179
67	(Ambassador 990) 80	.....	1	357 7180
67	(Ambassador DPL) 80	.....	1	357 7175
68	(Ambassador) 80	.....	1	360 2920
71	(Ambassador) 80	.....	1	363 3572
67/69	***(American 440) 01 (RHD)***	.....	1	448 1232
67/69	***(Rogue) 01 (RHD)***	.....	1	355 3816
69/70	***(Rebel) 10 (RHD)***	.....	1	357 7177
69/70	***(Ambassador) 80 (RHD)***	.....	1	360 2920

22.060–5a DECAL, Glove Box Door

70	("THE MACHINE") 10	12.078	1	363 6622

22.060–6 ATTACHING PARTS, Nameplate To Glove Box

CLIP	67/68	10 (LHD-550)(LHD-770)	12.078	2	400 2093
CLIP	67	10 (Rebel)(SST)	.....	2	400 2155
CLIP	71	80	.....	3	400 0091
CLIP	***67/69***	***01 (RHD)***	12.125	2	400 0266
CLIP	***67/68***	***80 (RHD)***	22.103	3	400 0091
CLIP	***68***	***10 (RHD)***	22.103	3	400 0091
CLIP	***69/70***	***10-80 (RHD)***	22.100	3	400 1498
CLIP	***68***	***80 (RHD)***	12.078	2	400 2093
NUT, Speed	67/68	10 (Rebel)(SST)	26.095	2	400 1560
NUT, Stamped	68	30-70	17.430	2	320 9648

22.060–7 MOULDING, Glove Box Door

(T-753)		.....	1	357 7194
(T-758)		.....	1	357 7193
(T-759)		.....	1	357 7195
67/68	10 (770)(SST)	.....	1	357 7191
67/68	80 (880)	.....	1	357 7191
68	10 (LHD-550)	.....	1	360 8369

22.060–8 MOULDING, Glove Box Door (Upper)

67	50 (LHD)	.....	1	357 7192
67	80 (LHD-990)(LHD-DPL)	.....	1	357 7192
68	80 (LHD-990)(LHD-DPL)	.....	1	357 7191

22.060–9 MOULDING, Glove Box Door (Lower)

67	50 (LHD)	.....	1	357 5659
67/68	80 (LHD-990)(LHD-DPL)	.....	1	357 5659
67/70	***10-80 (RHD)***	.....	1	357 6575

22.060–10 ATTACHING PARTS, Moulding To Glove Box Door

CLIP	67/68	50-80	12.078	3	400 2093
CLIP	***67/70***	***10-80 (RHD)***	22.100	3	400 1498

WINDSHIELD WIPER - COWL VENT - INST. PANEL

22.066–1 LINK, Glove Box Door Check

67/69	01		.....	1	350 9432

22.066–2 ATTACHING PARTS, Link To Door

SCREW, Tapping.....	67/69	01	17.660	2	G161860

22.066–3 CABLE, Glove Box Door Check

70/	01–40	.....	1	357 6459
67/	10–50–80 (LHD)	.....	1	357 6459
70	30–70	.....	1	361 6253
71/	70	.....	1	363 2498
67/70	***10-80 (RHD)***	.....	1	357 6471

22.066–4 ATTACHING PARTS, Cable To Glove Box

SCREW, Tapping	***67/70***	***10-80 (RHD)***	26.032	1	400 1638

22.066–5 ATTACHING PARTS, Cable To Glove Box Door

SCREW, Hexagon	70	01 ..... ***(Use G161860)***	17.671	1	448 5889
SCREW, Pancake Head .	70	30–70	22.075	1	400 4032
SCREW, Pan Head	70	01–30–40–70	29.120	1	400 2456
SCREW, Pan Head	70	30–70	29.120	1	400 2456
SCREW, Tapping	71/	01–40	17.660	1	448 9487
SCREW, Tapping.....	67/71	10–50–80 ..... ***(Use 812 0054)***	17.671	1	G274773
SCREW, Tapping.....	72	10–80	17.671	1	G9421073 NA
SCREW, Tapping.....	71/	70	.....	1	400 2311

22.066–6 ATTACHING PARTS, Cable To Instrument Panel

SCREW, Tapping.....	67/71	10–50–80 (LHD) ..... ***(Use 812 0054)***	17.671	1	G274773
SCREW, Tapping.....	72	10–80	17.671	1	G9421073 NA
SCREW, Tapping	***67/70***	***10-50-80 (RHD)***	17.671	1	G9411429 NA
SCREW, Tapping	71/	01–40	17.660	1	448 9487
SCREW, Tapping.....	71/	70	.....	1	400 2311
SCREW, Pan Head	70	01–30–40–70	29.120	1	400 2456
SCREW, Hexagon	70	01–30–70	17.671	1	400 5889
NUT, Speed	70/	01–30–70	13.072	1	400 0383
NUT, Speed	71/	70	.....	1	400 3841

22.066–7 SILENCER, Glove Box Door Check

67/69	01		.....	1	348 2231

22.066–8 EYELET, Glove Box Door Check Cable

70/	01–30–40–70		.....	1	400 3677

22.072–1 BUMPER, Glove Box Door

67/	01–10–40–50–80		.....	2	400 0093
70/	30–70		.....	2	400 0093

22.072–2 BUMPER, Glove Box Door (Upper)

68/69	30–70		.....	4	400 0093

WINDSHIELD WIPER - COWL VENT - INST. PANEL

22.072–3 BUMPER, Glove Box Door (Lower)

68/69	30–70	.....	2	360 1396	

22.073–1 LOCK ASSEMBLY, Glove Box (Keyless)

67/69	01	.....	1	346 1434	
70	01–10 ***(Use 363 1571)***	.....	1	361 6421	
71/	01	.....	1	363 1571	
67/69	10–50–80	.....	1	357 6462	
70	***RHD***	.....	1	357 6462	

22.073–2 LOCK ASSEMBLY, Glove Box (Regular)(Incl. Keys)(* 22-3)

67/69	01	.....	1	448 4733	
67/69	10–30–50–70–80	.....	1	448 4697	
70	***RHD***	.....	1	448 4697	

22.073–3 LOCK ASSEMBLY, Glove Box (Special)(Incl. Keys)(* 22-4)

67/69	01	.....	1	448 4734	
67/69	10–30–50–70–80	.....	1	448 4699	
70	***RHD***	.....	1	448 4699	

22.073–4 CYLINDER, Glove Box Lock (Regular)

67/69	...(Incl. Keys)	.....	1	447 8586	
70	LHD (Uncoded Cylinder Less Keys–Must Be Coded Locally) .... ***(Use 448 8469)***	.....	1	448 7662	
71/	01–10–40–80...(Less Keys)	.....	1	448 8469	
71/	70...(Less Keys)	.....	1	448 9174	
70	***RHD***...(Incl. Keys)	.....	1	447 8586	

22.073–5 CYLINDER, Glove Box Lock (Special)(Incl. Keys)

67/69		.....	1	447 8587	
70/	(* 22-21)	.....	1	****	MR
70	***RHD***	.....	1	447 8587	

22.073–6 CASE, Glove Box Lock

67/69	01	.....	1	447 5616	
67/69	10–30–50–70–80	.....	1	448 4698	
70/	LHD	.....	1	361 6667	
70	***RHD***	.....	1	448 4698	

22.073–7 RETAINER, Glove Box Lock

70	LHD	.....	1	361 6238	
67/69	01 (LHD–220)	.....	1	358 3396	
67/69	01 (LHD–440)(LHD–Rogue)	.....	1	358 3395	
71/	01–10–40–80 (LHD)	.....	1	361 6238	
67/69	10–50–80	.....	1	351 6382	
68	30–70 (* 22–4)	.....	1	350 0694	
68	30–70 (* 22–5)	.....	1	358 3395	
69	30–70	.....	1	358 3395	
71/	70	.....	1	363 2495	
70	***RHD***	.....	1	351 6382	
67/69	***01 (RHD-220)***	.....	1	350 0694	
67/69	***01 (RHD-440)***	.....	1	351 7249	

WINDSHIELD WIPER - COWL VENT - INST. PANEL

22.073–8 ATTACHING PARTS, Retainer To Lock

SCREW, Machine	67	(3/8" Long)	17.616	1	G271085 NA
SCREW, Machine	67/70	(5/16" Long)	.....	1	400 1411
SCREW, Machine	71/	01-10-40-80 (LHD)	.....	1	400 1411
SCREW, Tapping	71/	70	17.671	2	448 9486
WASHER, Lock	67		17.820	1	G131181 NA

22.073–9 SPACER, Glove Box Door Lock

67/69	***01 (RHD-440)(RHD-Rogue)***	.....	1	353 0856

22.073–10 ESCUTCHEON, Glove Box Door Lock

68	(Black) 30-70	.....	1	360 3083
68	(Red) 30-70	.....	1	360 3084
68	(Tan) 30-70	.....	1	360 3085
69	(Charcoal) 30-70	.....	1	361 5155
69	(Blue) 30-70	.....	1	361 5156
69	(Red) 30-70	.....	1	361 5158
69	(Brown) 30-70	.....	1	361 5157
70	(Gray) 70	.....	1	361 6408
70	(Woodgrain) 30-70	.....	1	361 6409
67/69	***01 (RHD)***	.....	1	350 9433

22.073–11 KEY, Glove Box Door Lock (Blank)

67/69		23.085	2	344 5762
70	LHD	.....	1	363 6393
71/	LHD	.....	1	364 1913
70	***RHD***	23.085	2	344 5762

22.073–12 KEY, Glove Box Door Lock (Coded–Specify Key No.)

67/69		23.085	2	447 8593
70/	LHD	.....	2	448 7668
70	***RHD***	23.085	2	447 8593

22.075–1 STRIKER, Glove Box Lock

70	(Front Mounted-* 22-17)	.....	1	361 6666
67/69	01 (LHD)	.....	1	350 0676
70	01-30-40-70 (Side Mounted-* 22-18)	.....	1	363 5800
71/	01-40	.....	1	363 5800
68/69	10-50-80 (LHD)	.....	1	357 6460
70	10-80 (Side Mounted-* 22-18)	.....	1	360 9555
71/	10-80	.....	1	360 9555
68/69	30-70	.....	1	360 1440
71/	70	.....	1	363 2496
67/69	***05-06-08 (RHD-220)***	.....	1	350 0676
67/69	***01 (RHD-440)***	.....	1	351 7248
67/70	***10-80 (RHD)***	.....	1	357 4371

22.075–2 ATTACHING PARTS, Striker To Instrument Panel

SCREW, Tapping	67/69	01	17.669	2	G457002 NA
SCREW, Tapping	67/69	01	17.669	2	G457001 NA
SCREW, Tapping	70	01-30-70 (5/8" Long) ***(Use G161860)***	17.671	2	448 5889
SCREW, Tapping	68	30-70 (Pan Head)	17.660	2	G161895
SCREW, Tapping	68/69	30-70 (Hexagon Head) ***(Use 812 0054)***	17.671	2	G274773
SCREW, Tapping	***70***	***10-80 (RHD)*** ***(Use 812 0054)***	17.671	2	G274773
NUT, Spring	71/	70 (Single)	.....	1	400 3763
NUT, Spring	72	70 (Twin)	.....	1	400 4464

Printed in U.S.A.

WINDSHIELD WIPER - COWL VENT - INST. PANEL

22.075–3 ATTACHING PARTS. Striker To Glove Box Door

SCREW, Pancake Head .	70	01-30-70 (1/2" Long)	.....	2	400	4032
SCREW, Tapping	70/	10-80	.....	1	400	3113
SCREW, Tapping.....	71/	70	.....	2	400	2311
SCREW, Round Head ...	70	01-30-40-70 (1/2" Long)	.....	2	400	3113
SCREW, Round Head ...	71/	01-40	.....	2	400	3113

22.076–1 BEZEL. Glove Box (For "Less Glove Box" Refer To Group 22.100–69)

70	(Black) 01	.....	1	363	1672
70	(Blue) 01	.....	1	363	1673
70	(Red) 01	.....	1	363	1675
70	(Green) 01	.....	1	363	1674
70	(Satin Chrome) 01	.....	1	363	1676
70	(Black) 40 (Used With Glove Box)	.....	1	363	6533
70	(Blue) 40 (Used With Glove Box)	.....	1	363	6534
70	(Green) 40 (Used With Glove Box)	.....	1	363	5927
70	(Red) 40	.....	1	363	6535
71	(Black) 01 (E/SC-360 And SST)	.....	1	363	6533
71	(Blue) 01 (E/SC-360 And SST)	.....	1	364	1946
71	(Green) 01 (E/SC-360 And SST)	.....	1	364	1947
71	(Black) 01 (SC-360) (SST)	.....	1	363	1672
71	(Blue) 01 (SC-360) (SST)	.....	1	364	1765
71	(Green) 01 (SC-360) (SST)	.....	1	364	1766
71	(Red) 01 (SC-360) (SST)	.....	1	364	1767
72	(Black) 01	.....	1	365	1356
72	(Blue) 01	.....	1	365	1357
72	(Green) 01	.....	1	365	1358
72	(Tan) 01	.....	1	365	1399
71	(Black) 40	.....	1	363	6533
71	(Blue) 40	.....	1	364	1946
71	(Green) 40	.....	1	364	1947
71	(Red) 40	.....	1	364	1948
72	(Black) 40	.....	1	365	1450
72	(Blue) 40	.....	1	365	1451
72	(Tan) 40	.....	1	365	1454

22.076–2 ATTACHING PARTS. Bezel To Instrument Panel

SCREW, Pancake Head .	70	01-40 (Lower)	.....	2	400	4032
SCREW, Hi-Lo Thread ..	70/	01-40 (Used Less Nut)	.....	4	400	4112
SCREW, Oval Head.....	70/	01-40 (Sides And Top-Used With Nut)	3.510	AR	400	2652
SCREW, Pan Head	70/	01-40	17.660	2	G161895	
SCREW, Tapping.....	71/	01-40	17.660	2	G9414722	NA
NUT	70	01-40	3.505	2	400	1948
NUT	71/	01-40	22.100	2	400	3841

22.076–3 ATTACHING PARTS. Bezel To Pad

SCREW, Tapping.....	70/	01-40	.....	8	400 2657
SCREW, Tapping	70	30-70	.....	2	400 4032

22.076–4 ATTACHING PARTS. Bezel To Cover

70/	01-40	13.510	2	400	2457

22.077–1 SCREEN, Instrument Panel Radio Speaker

67	01	.....	1	350	1389

WINDSHIELD WIPER - COWL VENT - INST. PANEL

22.077–2 MASK, Instrument Panel Radio Speaker Grille (Less Radio)

67/68	10–50–80	1		355 2227
69/70	10–80 (LHD)	1		361 5061
69/70	***10–80 (RHD)***	1		355 2227

22.077–3 ATTACHING PARTS, Mask To Finish Panel (Less Radio)

NUT, Lock	69/70	10–80 (LHD)	23.074	2	400 3018
CLIP	69/70	10–80 (LHD)	22.100	2	400 1551

22.077–4 SUPPORT, Instrument Panel Radio Speaker

67/69	01		1	358 3887

22.077–5 REINFORCEMENT, Instrument Panel Radio Speaker Opening

67/68	10–50–80 (LHD–LAC)		1	357 6646
67/68	10–50–80 (LHD–WAC)		1	357 6648
70	10–80 (LHD–* 22–20)		1	363 6329
71/	10–80		1	363 6329
67/70	***10–80 (RHD)***		1	357 6646

22.077–5a ATTACHING PARTS, Radio Support To Crash Pad

SCREW, Tapping	70/	10–80	17.660	3	G190075 NA

22.077–6 GRILLE, Instrument Panel Radio Speaker Opening

71/	70		1	363 2568

22.077–7 ATTACHING PARTS, Grille To Crash Pad

SCREW, Tapping	71/	70	17.660	3	G163158 NA

22.081–1 TRAY ASSEMBLY, Package (Bezel Air Outlet (WAC) Is In Group 13.515–33)

70/	(Black) 01–40 (LHD–LAC)		1	361 6332
70/71	(Black) 01–40 (LHD–WAC)		1	361 6340
72	(Black) 01–40 (LHD–WAC)...(Incl. Bezel)		1	366 1381
70	(Blue) 01–40 (LHD–LAC)		1	361 6333
71	(Blue) 01–40 (LHD–LAC)		1	364 1554
72	(Blue) 01–40 (LHD–LAC)		1	365 1365
70	(Blue) 01–40 (LHD–WAC)		1	361 6341
71	(Blue) 01–40 (LHD–WAC) ***(Use 366 1381)***		1	364 1563
72	(Blue) 01–40 (LHD–WAC)...(Incl. Bezel)		1	366 1382
70	(Green) 01–40 (LHD–LAC)		1	361 6334
71	(Green) 01–40 (LHD–LAC)		1	364 1555
72	(Green) 01–40 (LHD–LAC)		1	365 1366
70	(Green) 01–40 (LHD–WAC)		1	361 6342
71	(Green) 01–40 (LHD–WAC) ***(Use 366 1381)***		1	364 1564
72	(Green) 01–40 (LHD–WAC)...(Incl. Bezel)		1	366 1383
70	(Red) 01–40 (LHD–LAC)		1	361 6335
71	(Red) 01–40 (LHD–LAC)		1	364 1556
70	(Red) 01–40 (LHD–WAC)		1	361 6343
71	(Red) 01–40 (LHD–WAC)		1	364 1565
72	(Tan) 01–40 (LHD–LAC)		1	365 1368
72	(Tan) 01–40 (LHD–WAC)...(Incl. Bezel)		1	366 1384

22.081–2 ATTACHING PARTS, Tray To Instrument Panel

SCREW, Tapping	70/	01–40 (LHD)	17.671	2	400 3831

WINDSHIELD WIPER - COWL VENT - INST. PANEL

22.081–3 ATTACHING PARTS, Tray To Uniside

SCREW, Tapping.....	70/	01-40 (LHD)	17.671	4	400 0774

22.092–1 TRAY ASSEMBLY, Instrument Panel Ash Receiver

67	01...(Incl. Guide And Bearings)	***(Use 353 5965)***	.....	1	350 9008 NC
68	01...(Incl. Guide And Bearings)	***(Use 353 5965)***	.....	1	359 9219 NC
69	01...(Incl. Guide And Bearings)		.....	1	362 3586 NC
70/	01-40...(Incl. Guide And Bearings)		.....	1	448 7249 NC
67/	10-50-80...(Less Guide)		.....	1	448 4685 NC
68	30-70...(Incl. Guide And Bearings)	***(Use 360 1596)***	.....	1	360 1461 NC
69	30-70...(Incl. Guide And Bearings)		.....	1	362 3476 NC
70	30-70...(Incl. Guide And Bearings)		.....	1	363 0552 NC
71	70 (* 22-24)		.....	1	363 2530 NC
71	70 (* 22-25)		.....	1	365 7311 NC
72	70.....		.....	1	365 7311 NC

22.092–2 BALL, Instrument Panel Ash Receiver

67/		17.018	4	G147488

22.092–3 BUTTON, Instrument Panel Ash Receiver Tray

67/		.....	2	400 0081

22.092–4 LAMP ASSEMBLY, Instrument Panel Ash Receiver (Incl. Socket)

67/	10-50-80		.....	1	359 0887

22.092–4a SOCKET, Instrument Panel Ash Receiver Lamp

67	10-50-80.....	***(Ref. Pr. List)***	.....	1	320 7881

22.092–5 ATTACHING PARTS, Socket To Instrument Panel

SCREW, Tapping.....	67/	10-50-80	17.660	1	G161895 NA

22.092–6 ATTACHING PARTS, Socket To Guide

SCREW, Tapping.....	67/68	10-50-80.....	17.660	1	G161869
SCREW, Tapping.....	69/	10-80 ..... ***(Use 812 0054)***	17.671	1	G274773
SCREW, Tapping.....	72	10-80.....	17.671	1	G9421073 NA

22.092–7 HOOD, Instrument Panel Ash Receiver Lamp (Incl. Bracket and Filter)

67/	10-50-80		.....	1	320 7884

22.092–8 SEAL, Instrument Panel Ash Receiver Lamp Light

67/	10-50-80		.....	1	359 0888

22.092–9 BULB, Instrument Panel Ash Receiver Lamp

67/	10-50-80 (GE 1445)		3.215	1	320 4552

22.092–10 FILTER, Instrument Panel Ash Receiver Lamp

67/	10-50-80		3.510	1	352 0871

Printed in U.S.A.

WINDSHIELD WIPER - COWL VENT - INST. PANEL

22.092–11 BAFFLE, Instrument Panel Ash Receiver

72	01–40	.....	1	364 6846	

22.094–1 DOOR, Instrument Panel Ash Receiver

71	(Black) 70 (* 22–24)	.....	1	363 2541	
71	(Blue) 70 (* 22–24)	.....	1	363 2542	
71	(Green) 70 (* 22–24)	.....	1	363 2543	
71	(Red) 70 (* 22–24)	.....	1	363 2544	

22.094–2 SPRING, Instrument Panel Ash Receiver Door

71	70 (* 22–24)	.....	1	363 2559	

22.095–1 KNOB, Instrument Panel Ash Receiver Tray

67	01 (LHD–WAC)	.....	1	352 0749	
68/69	01 (LHD–WAC)	.....	1	359 9521	
67	***01 (RHD–WWH)***	.....	1	352 0749	
68/69	***01 (RHD–WWH)***	.....	1	359 9521	

22.095–2 ATTACHING PARTS, Knob To Tray

SCREW, Tapping	67/69	01	17.660	2	G163095	NA

22.096–1 RETAINER, Instrument Panel Ash Receiver

67/69	01	.....	1	350 1499
70/	01–40	.....	1	363 1437
67/	10–50–80	.....	1	357 6568
68/70	30–70	.....	1	360 2251
71/	70 (* 22–25)	.....	1	365 7316

22.096–2 ATTACHING PARTS, Retainer To Instrument Panel

SCREW, Machine	67/69	01	17.598	1	G160510	NA
SCREW, Tapping	68/69	01	17.669	4	G457002	NA
SCREW, Tapping	67/68	10–50–80 (LHD)	13.017	4	400 0616	
SCREW, Tapping	69/71	10–80 (LHD) ..... ***(Use 812 0054)***	17.671	4	G274773	
SCREW, Tapping	72	10–80	17.671	4	G9421073	NA
SCREW, Tappinc	68	30–70 (Round Head–1/2")	17.666	2	G161645	NA
SCREW, Tappinc	68	30–70 (Truss Head–7/16")	17.669	2	G445947	NA
SCREW, Tapping	69/70	30–70	17.660	4	G161860	
SCREW, Tapping	71/	70 (* 22–25)	.....	2	812 0819	NA
***SCREW, Tapping ..... ***	***67/70***	***10-80 (RHD)***	17.660	2	G161901	
***WASHER, Plain ..... ***	***67/70***	***10-80 (RHD)***	.....	2	400 0847	

22.096–2a ATTACHING PARTS, Retainer To Housing

SCREW, Tapping	70	01–40 ..... ***(Use 812 0054)***	17.671	2	G274773	
SCREW, Machine	70/	01–40	17.598	1	G454542	NA
SCREW, Tapping	71/	01–40	17.671	2	G9421073	NA
NUT, Lock	70	01–40	25.029	1	400 2290	
NUT, Lock	71/	01–40 (Used Less Radio)	17.417	1	G273801	NA
NUT, Lock	71/	01–40 (Used With Radio)	23.074	1	400 3018	

22.096–3 GUIDE, Instrument Panel Ash Receiver

67/	10–50–80	.....	1	357 6567	

22.096–4 ATTACHING PARTS, Guide To Instrument Panel

***SCREW, Machine ..... ***	***67***	***10-80 (RHD)***	17.586	2	G155877	NA
***SCREW, Machine ..... ***	***68/70***	***10-80 (RHD)***	28.018	2	400 2010	

WINDSHIELD WIPER - COWL VENT - INST. PANEL

22.096–5 PLATE, Ash Receiver Tray Mounting

71/	70 (* 22–25)	.....	1	365 7302

22.100–1 PAD, Instrument Panel Crash

(T–723)	.....	1	358 4969
(T–728)	.....	1	358 4968
(T–729)	.....	1	358 4973
(T–741)	.....	1	358 4968
(T–743)	.....	1	358 4969
(T–744)	.....	1	358 4970
(T–745)	***(Use 362 4451)***	1	358 4971
(T–747)	.....	1	358 4972
(T–748)	.....	1	358 4968
(T–749)	.....	1	358 4973
(T–753)(LHD–LAC)	.....	1	357 6482
(T–753)(LHD–WAC–Left)	.....	1	357 6515
(T–753)(LHD–WAC–Right)	.....	1	357 6514
(T–753)***(RHD-LAC-Left)***	.....	1	359 0762
(T–753)***(RHD-Right)***	.....	1	359 0772
(T–758)(LHD–LAC)	.....	1	357 6481
(T–758)(LHD–WAC–Left)	.....	1	357 6513
(T–758)(LHD–WAC–Right)	.....	1	357 6512
(T–758)***(RHD-LAC-Left)***	.....	1	359 0761
(T–758)***(RHD-Right)***	.....	1	359 0771
(T–759)(LHD–LAC)	.....	1	357 6487
(T–759)(LHD–WAC–Left)	.....	1	357 6525
(T–759)(LHD–WAC–Right)	.....	1	357 6524
(T–759)***(RHD-LAC-Left)***	.....	1	359 0767
(T–759)***(RHD-Right)***	***(Use 359 0771)***	1	359 0777
(T–771)(LHD–LAC)	.....	1	357 6481
(T–771)(LHD–WAC–Left)	.....	1	357 6513
(T–771)(LHD–WAC–Right)	.....	1	357 6512
(T–771)***(RHD-LAC-Left)***	.....	1	359 0761
(T–771)***(RHD-Right)***	.....	1	359 0771
(T–773)(LHD–LAC)	.....	1	357 6482
(T–773)(LHD–WAC–Left)	.....	1	357 6515
(T–773)(LHD–WAC–Right)	.....	1	357 6514
(T–773)***(RHD-LAC-Left)***	.....	1	359 0762
(T–773)***(RHD-Right)***	.....	1	359 0772
(T–774)(LHD–LAC)	.....	1	357 6483
(T–774)(LHD–WAC–Left)	.....	1	357 6517
(T–774)(LHD–WAC–Right)	.....	1	357 6516
(T–774)***(RHD-LAC-Left)***	.....	1	359 0763
(T–774)***(RHD-Right)***	.....	1	359 0773
(T–775)(LHD–LAC)	.....	1	357 6484
(T–775)(LHD–WAC–Left)	.....	1	357 6519
(T–775)(LHD–WAC–Right)	***(Use 357 6512)***	1	357 6518
(T–775)***(RHD-LAC-Left)***	.....	1	359 0764
(T–775)***(RHD-Right)***	.....	1	359 0774
(T–776)(LHD–LAC)	.....	1	357 6485
(T–776)(LHD–WAC–Left)	.....	1	357 6521
(T–776)(LHD–WAC–Right)	.....	1	357 6520
(T–776)***(RHD-LAC-Left)***	.....	1	359 0765
(T–776)***(RHD-Right)***	.....	1	359 0775
(T–777)(LHD–LAC)	.....	1	357 6486
(T–777)(LHD–WAC–Left)	.....	1	357 6523
(T–777)(LHD–WAC–Right)	.....	1	357 6522
(T–777)***(RHD-LAC-Left)***	.....	1	359 0766
(T–777)***(RHD-Right)***	.....	1	359 0776
(T–778)(LHD–LAC)	.....	1	357 6481
(T–778)(LHD–WAC–Left)	.....	1	357 6513
(T–778)(LHD–WAC–Right)	.....	1	357 6512
(T–778)***(RHD-LAC-Left)***	.....	1	359 0761
(T–778)***(RHD-Right)***	.....	1	359 0771

WINDSHIELD WIPER - COWL VENT - INST. PANEL

(T-779)(LHD-LAC)	.....	1	357 6487
(T-779)(LHD-WAC-Left)	.....	1	357 6525
(T-779)(LHD-WAC-Right)	.....	1	357 6524
(T-779)***(RHD-LAC-Left)***	.....	1	359 0767
(T-779)***(RHD-Right)***	***(Use 359 0771)***	1	359 0777
(T-781)(LHD-LAC)	.....	1	357 6481
(T-781)***(RHD-LAC-Left)***	.....	1	359 0761
(T-781)***(RHD-Right)***	.....	1	359 0771
(T-783)(LHD-LAC)	.....	1	357 6482
(T-783)(LHD-WAC-Left)	.....	1	357 6515
(T-783)(LHD-WAC-Right)	.....	1	357 6514
(T-783)***(RHD-LAC-Left)***	.....	1	359 0762
(T-783)***(RHD-Right)***	.....	1	359 0772
(T-784)(LHD-LAC)	.....	1	357 6483
(T-784)(LHD-WAC-Left)	.....	1	357 6517
(T-784)(LHD-WAC-Right)	.....	1	357 6516
(T-784)***(RHD-LAC-Left)***	.....	1	359 0763
(T-784)***(RHD-Right)***	.....	1	359 0773
(T-785)***(RHD-LAC-Left)***	.....	1	359 0764
(T-785)***(RHD-Right)***	.....	1	359 0774
(T-787)(LHD-LAC)	.....	1	357 6486
(T-787)(LHD-WAC-Left)	.....	1	357 6523
(T-787)(LHD-WAC-Right)	.....	1	357 6522
(T-787)***(RHD-LAC-Left)***	.....	1	359 0766
(T-787)***(RHD-Right)***	.....	1	359 0776
(T-789)(LHD-LAC)	.....	1	357 6487
(T-789)(LHD-WAC-Left)	.....	1	357 6525
(T-789)(LHD-WAC-Right)	.....	1	357 6524
(T-789)***(RHD-LAC-Left)***	.....	1	359 0767
(T-789)***(RHD-Right)***	***(Use 359 0771)***	1	359 0777
(T-791)(LHD-LAC)	.....	1	357 6481
(T-791)(LHD-WAC-Left)	.....	1	357 6513
(T-791)(LHD-WAC-Right)	.....	1	357 6512
(T-791)***(RHD-LAC-Left)***	.....	1	359 0761
(T-791)***(RHD-Right)***	.....	1	359 0771
(T-793)(LHD-LAC)	.....	1	357 6482
(T-793)(LHD-WAC-Left)	.....	1	357 6515
(T-793)(LHD-WAC-Right)	.....	1	357 6514
(T-794)(LHD-LAC)	.....	1	357 6483
(T-794)(LHD-WAC-Left)	.....	1	357 6517
(T-794)(LHD-WAC-Right)	.....	1	357 6516
(T-794)***(RHD-LAC-Left)***	.....	1	359 0763
(T-794)***(RHD-Right)***	.....	1	359 0773
(T-795)(LHD-LAC)	.....	1	357 6484
(T-795)(LHD-WAC-Left)	.....	1	357 6519
(T-795)(LHD-WAC-Right)	.....	1	357 6518
(T-795)***(RHD-LAC-Left)***	***(Use 357 6512)***	1	359 0764
(T-795)***(RHD-Right)***	.....	1	359 0774
(T-796)(LHD-LAC)	.....	1	357 6485
(T-796)(LHD-WAC-Left)	.....	1	357 6521
(T-796)(LHD-WAC-Right)	.....	1	357 6520
(T-796)***(RHD-LAC-Left)***	.....	1	359 0765
(T-796)***(RHD-Right)***	.....	1	359 0775
(T-797)(LHD-LAC)	.....	1	357 6486
(T-797)(LHD-WAC-Left)	.....	1	357 6523
(T-797)(LHD-WAC-Right)	.....	1	357 6522
(T-797)***(RHD-LAC-Left)***	.....	1	359 0766
(T-797)***(RHD-Right)***	.....	1	359 0776
(T-798)(LHD-LAC)	.....	1	357 6481
(T-798)(LHD-WAC-Left)	.....	1	357 6513
(T-798)(LHD-WAC-Right)	.....	1	357 6512
(T-798)***(RHD-LAC-Left)***	.....	1	359 0761
(T-798)***(RHD-Right)***	.....	1	359 0771

Printed in U.S.A.

WINDSHIELD WIPER - COWL VENT - INST. PANEL

(T-799)(LHD-LAC)	.....	1	357 6487
(T-799)(LHD-WAC-Left)	.....	1	357 6525
(T-799)(LHD-WAC-Right)	.....	1	357 6524
(T-799)***(RHD-LAC-Left)***	.....	1	359 0767
(T-799)***(RHD-Right)***	***(Use 359 0771)***	1	359 0777
(T-828)	.....	1	362 4451
(T-832)	.....	1	360 2237
(T-835)	.....	1	360 2234
(T-838)	.....	1	360 2231
(T-843)	.....	1	362 4452
(T-844)	.....	1	362 4453
(T-845)	.....	1	362 4454
(T-848)	.....	1	362 4451
(T-851)(LHD-LAC)	.....	1	357 6481
(T-851)(LHD-WAC-Left)	.....	1	357 6513
(T-851)(LHD-WAC-Right)	.....	1	357 6512
(T-851)***(RHD-Left)***	.....	1	359 0761
(T-851)***(RHD-Right)***	.....	1	359 0771
(T-853)(LHD-LAC)	.....	1	360 8178
(T-853)(LHD-WAC-Left)	***(Use 357 6513)***	1	360 8171
(T-853)(LHD-WAC-Right)	.....	1	360 8170
(T-853)***(RHD-Left)***	.....	1	360 8182
(T-853)***(RHD-Right)***	.....	1	360 8186
(T-855)(LHD-LAC)	.....	1	357 6484
(T-855)(LHD-WAC-Left)	.....	1	357 6519
(T-855)(LHD-WAC-Right)	.....	1	357 6518
(T-855)***(RHD-Left)***	.....	1	359 0764
(T-871)(LHD-LAC)	.....	1	357 6481
(T-871)(LHD-WAC-Left)	.....	1	357 6513
(T-871)(LHD-WAC-Right)	.....	1	357 6512
(T-871)***(RHD-Left)***	.....	1	359 0761
(T-871)***(RHD-Right)***	.....	1	359 0771
(T-873)(LHD-LAC)	.....	1	360 8178
(T-873)(LHD-WAC-Left)	***(Use 357 6513)***	1	360 8171
(T-873)(LHD-WAC-Right)	.....	1	360 8170
(T-873)***(RHD-Left)***	.....	1	360 8182
(T-873)***(RHD-Right)***	.....	1	360 8186
(T-874)(LHD-LAC)	.....	1	360 8179
(T-874)(LHD-WAC-Left)	.....	1	360 8173
(T-874)(LHD-WAC-Right)	***(Use 357 6512)***	1	360 8172
(T-874)***(RHD-Left)***	.....	1	360 8183
(T-874)***(RHD-Right)***	.....	1	360 8187
(T-875)(LHD-LAC)	.....	1	357 6484
(T-875)(LHD-WAC-Left)	.....	1	357 6519
(T-875)(LHD-WAC-Right)	.....	1	357 6518
(T-875)***(RHD-Left)***	.....	1	359 0764
(T-875)***(RHD-Right)***	.....	1	359 0774
(T-876)(LHD-LAC)	.....	1	360 8180
(T-876)(LHD-WAC-Left)	.....	1	360 8175
(T-876)(LHD-WAC-Right)	.....	1	360 8174
(T-876)***(RHD-Left)***	.....	1	360 8184
(T-876)***(RHD-Right)***	.....	1	360 8188
(T-879)(LHD-LAC)	.....	1	360 8181
(T-879)(LHD-WAC-Left)	***(Use 357 6513)***	1	360 8177
(T-879)(LHD-WAC-Right)	***(Use 357 6512)***	1	360 8176
(T-879)***(RHD-Left)***	.....	1	360 8185
(T-879)***(RHD-Right)***	.....	1	360 8189
(T-881)(LHD-LAC)	.....	1	357 6481
(T-881)(LHD-WAC-Left)	.....	1	357 6513
(T-881)(LHD-WAC-Right)	.....	1	357 6512
(T-881)***(RHD-Left)***	.....	1	359 0761
(T-881)***(RHD-Right)***	.....	1	359 0771
(T-883)(LHD-LAC)	.....	1	360 8178
(T-883)(LHD-WAC-Left)	***(Use 357 6513)***	1	360 8171
(T-883)(LHD-WAC-Right)	.....	1	360 8170
(T-883)***(RHD-Left)***	.....	1	360 8182
(T-883)***(RHD-Right)***	.....	1	360 8186

Printed in U.S.A.

WINDSHIELD WIPER - COWL VENT - INST. PANEL

(T-885)(LHD-LAC)		.....	1	357 6484	
(T-885)(LHD-WAC-Left)		.....	1	357 6519	
(T-885)(LHD-WAC-Right)		.....	1	357 6518	
(T-885)***(RHD-Left)***		.....	1	359 0764	
(T-891)(LHD-LAC)		.....	1	357 6481	
(T-891)(LHD-WAC-Left)		.....	1	357 6513	
(T-891)(LHD-WAC-Right)		.....	1	357 6512	
(T-891)***(RHD-Left)***		.....	1	359 0761	
(T-891)***(RHD-Right)***		.....	1	359 0771	
(T-893)(LHD-LAC)		.....	1	360 8178	
(T-893)(LHD-WAC-Left)	***(Use 357 6513)***	.....	1	360 8171	
(T-893)(LHD-WAC-Right)		.....	1	360 8170	
(T-893)***(RHD-Left)***		.....	1	360 8182	
(T-893)***(RHD-Right)***		.....	1	360 8186	
(T-894)(LHD-LAC)		.....	1	360 8179	
(T-894)(LHD-WAC-Left)		.....	1	360 8173	
(T-894)(LHD-WAC-Right)	***(Use 357 6512)***	.....	1	360 8172	
(T-894)***(RHD-Left)***		.....	1	360 8183	
(T-894)***(RHD-Right)***		.....	1	360 8187	
(T-895)(LHD-LAC)		.....	1	357 6484	
(T-895)(LHD-WAC-Left)		.....	1	357 6519	
(T-895)(LHD-WAC-Right)		.....	1	357 6518	
(T-895)***(RHD-Left)***		.....	1	359 0764	
(T-895)***(RHD-Right)***		.....	1	359 0774	
(T-896)(LHD-LAC)		.....	1	360 8180	
(T-896)(LHD-WAC-Left)		.....	1	360 8175	
(T-896)(LHD-WAC-Right)		.....	1	360 8174	
(T-896)***(RHD-Left)***		.....	1	360 8184	
(T-896)***(RHD-Right)***		.....	1	360 8188	
(T-899)(LHD-LAC)		.....	1	360 8181	
(T-899)(LHD-WAC-Left)	***(Use 357 6513)***	.....	1	360 8177	
(T-899)(LHD-WAC-Right)	***(Use 357 6512)***	.....	1	360 8176	
(T-899)***(RHD-Left)***		.....	1	360 8185	
(T-899)***(RHD-Right)***		.....	1	360 8189	
(T-031)		.....	1	361 6261	
(T-033)		.....	1	361 6262	
(T-035)		.....	1	361 6264	
(T-036)		.....	1	361 6265	
(T-061)		.....	1	361 6261	
(T-063)		.....	1	361 6262	
(T-064)		.....	1	361 6263	
(T-065)		.....	1	361 6264	
(T-066)		.....	1	361 6265	
69	01	.....	1	362 4404	NC
70/71	01-40	.....	1	361 6387	NC
72	01-40	.....	1	365 1243	NC
69	10-80 (LHD)	.....	1	361 5011	NC
70	10-80 (LHD-* 22-19)	.....	1	362 1366	NC
70	10-80 (LHD-* 22-20)	.....	1	363 6320	NC
71/	10-80	.....	1	363 6320	NC
71	70 (LAC)	.....	1	365 0179	NC
71	70 (WAC)	.....	1	630 6494	NC
72	70 (LAC)	.....	1	365 1600	NC
72	70 (WAC)	.....	1	630 8174	NC
69	***(Left) 10-80 (RHD)***	.....	1	360 9040	
70	***(Left) 10-80 (RHD)***	.....	1	360 9135	
69	***(Right) 10-80 (RHD)***	.....	1	360 9045	
70	***(Right) 10-80 (RHD)***	.....	1	360 9140	

WINDSHIELD WIPER - COWL VENT - INST. PANEL

22.100–2 PAD, Instrument Panel Crash (Right-Outer)

68	30-70	.....	1	360 2231	
69	30-70 (* 22-15)	.....	1	361 5181	
69	30-70 (* 22-16)	.....	1	363 5571	

22.100–3 PAD, Instrument Panel Crash (Center)

(T-831)(LAC-* 22-8)	.....	1	360 2490	
(T-831)(LAC-* 22-9)	***(Use 360 2490)***	1	360 1717	
(T-831)(WAC-* 22-8)	.....	1	360 1401	
(T-831)(WAC-* 22-9)	.....	1	360 1714	
(T-832)(LAC-* 22-8)	***(Use 360 2490)***	1	360 2496	
(T-832)(LAC-* 22-9)	***(Use 360 2490)***	1	360 1719	
(T-832)(WAC-* 22-8)	.....	1	360 1407	
(T-832)(WAC-* 22-9)	.....	1	360 1716	
(T-835)(LAC-* 22-8)	.....	1	360 2493	
(T-835)(LAC-* 22-9)	***(Use 360 1718)***	1	360 1718	
(T-835)(WAC-* 22-8)	***(Use 360 1401)***	1	360 1404	
(T-835)(WAC-* 22-9)	.....	1	360 1715	
(T-838)(LAC-* 22-8)	.....	1	360 2490	
(T-838)(LAC-* 22-9)	***(Use 360 2490)***	1	360 1717	
(T-838)(WAC-* 22-8)	.....	1	360 1401	
(T-838)(WAC-* 22-9)	.....	1	360 1714	
68	30-70 (WRP)	1	448 5865	
69	30-70 (WWH-Platinum)(LHLV-Platinum)	1	362 3512	
69	30-70 (WAC-Platinum)(WHLV-Platinum)	1	362 3596	
69	30-70 (WWH-Wood Grain)(LHLV-Wood Grain)	1	361 6821	
69	30-70 (WAC-Wood Grain)(WHLV-Wood Grain)	1	361 6822	
69	30-70 (WRP)	1	448 6643	

22.100–3a PAD, Instrument Cluster Bezel Crash

71	70	1	363 3211	NC
72	70	1	365 1160	NC

22.100–4 ATTACHING PARTS, Pad To Instrument Panel

CLIP	70	01 (LHD)	13.072	2	400 0383	
STUD	67/68	10-50-80 (LHD)	3.505	8	400 1378	
STUD	70/	30-70 (1-1/4")	17.671	AR	400 1378	
STUD	70	01 (LHD)	3.505	6	400 1378	
SCREW, Tapping	67/69	01	17.660	2	G161895	NA
SCREW, Tapping	67/69	01 ...(Incl. Washer)	.....	5	400 1776	
SCREW, Tapping	70	01-40 (8-18 x 5/8)	.....	2	400 3671	
SCREW, Tapping	70/71	01-30-40-70 (10-16 x 5/8)	17.671	12	G9419321	NA
SCREW, Tapping	72	01-40	.....	6	400 4547	
SCREW, Tapping	70/	10-80 (LHD)	15.320	12	400 2309	
SCREW, Tapping	71/	70	15.320	1	400 2309	
***SCREW, Tapping	67/70***	***10-80 (RHD)***	17.660	7	G162009	NA
WASHER (Plastic)	70/	10-80 (LHD)	22.056	12	400 3089	
NUT, Acorn	71/	70	3.740	1	400 3098	
NUT (Nylon-White)	70/	10-80 (LHD)	14.108	12	400 0141	
NUT (Nylon-Red)	71/	10-80 (LHD)	3.510	2	400 4160	
NUT, Speed	67/69	01	22.092	2	400 0512	
NUT, Speed	70	01-30-70 (LHD)	3.505	8	400 1948	
NUT, Speed	67/69	10-50-80 (LHD)	3.505	8	400 1948	
NUT, Speed	72	70	.....	6	400 3841	
NUT, Stamped	67/69	01	17.428	13	320 9550	
NUT, Stamped	68/69	30-70	17.428	9	G274999	
NUT, Stamped	67/69	10-50-80 (LHD)	25.052	8	439 0742	
NUT, Whiz	70	01 (LHD)	23.074	6	400 3018	
NUT, Whiz	69/70	10-80 (LHD	23.074	11	400 3920	
NUT, Whiz	70	30-70	23.074	12	400 3018	
FASTENER	67/69	10-30-50-70-80 (LHD)	.....	7	400 2030	
***FASTENER	67/70***	***10-80 (RHD)***	.....	9	400 2030	

WINDSHIELD WIPER - COWL VENT - INST. PANEL

22.100–4a ATTACHING PARTS, Cluster Pad To Instrument Panel Crash Pad

SCREW, Tapping.....	71/	70.....	17.671	7	G443794	NA

22.100–5 COVER, Instrument Panel Crash Pad Joint

67/68	10-50-80 (OAC-Plastic).....	.....	1	320 7798
68	10-80 (WAC-Metal).....	.....	1	360 8892

22.100–6 ATTACHING PARTS, Cover To Instrument Panel

SCREW, Tapping.....	67/68	10-50-80 (OAC).....	17.660	2	G941535	NA

22.100–6a HOUSING, Instrument Panel Center

70/71	01-40.....	.....	1	363 1512 NC
72	01-40.....	.....	1	365 7352 NC

22.100–6b ATTACHING PARTS, Housing To Instrument Panel

SCREW, Tapping.....	70/	01-40 (Trim Head-Outer).....	3.510	2	400 2652
SCREW, Tapping.....	70	01-40 (Hi-Lo Thread-Outer).....	.....	2	400 4112
SCREW, Tapping.....	70	01-40 (Round Head-Lower and Upper).....	.....	4	400 3671
SCREW, Tapping.....	71	01-40 (Upper).....	.....	2	400 2659
SCREW, Tapping.....	71/	01-40 (Upper).....	.....	2	400 4112
SCREW, Tapping.....	72	01-40 (Lower).....	.....	1	400 3671

22.100–7 HOUSING, Radio And Ash Receiver

(T-831)(Used Less Tape Player-* 22-8).....	.....	1	359 8774
(T-831)(Used Less Tape Player-* 22-9)..... ***(Use 359 8774)***	.....	1	362 4355
(T-831)(Used With Tape Player)..... ***(Ref. Pr. List)***	.....	1	359 9496
(T-832)(Used Less Tape Player-* 22-8)..... ***(Use 359 8774)***	.....	1	359 8857
(T-832)(Used Less Tape Player-* 22-9).....	.....	1	362 4357
(T-832)(Used With Tape Player)..... ***(Use 630 1611)***	.....	1	359 9498
(T-835)(Used Less Tape Player-* 22-8).....	.....	1	359 8777
(T-835)(Used Less Tape Player-* 22-9)..... ***(Use 359 8774)***	.....	1	362 4356
(T-835)(Used With Tape Player)..... ***(Ref. Pr. List)***	.....	1	359 9497
(T-838)(Used Less Tape Player-* 22-8).....	.....	1	359 8774
(T-838)(Used Less Tape Player-* 22-9)..... ***(Use 359 8774)***	.....	1	362 4355
(T-838)(Used With Tape Player)..... ***(Ref. Pr. List)***	.....	1	359 9496
69 30-70 (Used Less Tape Player).....	.....	1	361 4952
69 30-70 (Used With Tape Player)..... ***(Ref. Pr. List)***	.....	1	630 3236

22.100–8 ATTACHING PARTS, Housing To Panel

SCREW, Tapping.....	68/69	30-70.....	17.660	2	G161930
SCREW, Tapping.....	68	30-70.....	17.655	3	G145417 NA
SCREW, Tapping.....	69	30-70.....	22.056	3	400 3045
NUT, Spring.....	68	30-70..... ***(Use 400 3841)***	3.505	3	400 1996
NUT, Speed	69	30-70.....	.....	3	400 3841

22.100–9 BRACKET, Radio And Ash Receiver Housing To Dash Panel

68/69	30-70 (Used Less Tape Player).....	.....	1	359 8986
70	30-70.....	.....	1	361 6243

22.100–9a ATTACHING PARTS, Bracket To Dash Panel

SCREW, Tapping.....	70	30-70.....	17.660	2	G161930

WINDSHIELD WIPER - COWL VENT - INST. PANEL

22.100–9b ATTACHING PARTS, Bracket To Floor

NUT, Lock	70	30-70	17.417	1	G273801	NA

22.100–10 BRACKET, Stereo Player To Dash Panel

68	30-70 (Used With Tape Player)	.....	1	360 1569	

22.100–11 BRACKET, Ash Receiver Housing To Stereo Player

68/69	30-70 (Used With Tape Player)	.....	1	362 3160	

22.100–12 PAD, Instrument Panel Controls Safety

68	(Black) 10-80 (LHD)	.....	1	360 1411	
68	(Blue) 10-80 (LHD) ***(Use 360 1411)***	.....	1	360 1412	
68	(Dark Green) 10-80 (LHD)	.....	1	360 1413	
68	(Red) 10-80 (LHD)	.....	1	360 1414	
68	(Dark Russet) 10-80 (LHD) ***(Use 360 1411)***	.....	1	360 1415	
68	(Gold) 10-80 (LHD) ***(Use 360 1411)***	.....	1	360 1416	

22.100–13 ATTACHING PARTS, Pad To Instrument Panel

SCREW, Tapping	68	10-80	15.320	4	400 1701	

22.100–14 OVERLAY, Instrument Panel (Inner)

67	50 (Aluminum Finish)	.....	1	357 7235	
67	50 (Wood Grain Finish)	.....	1	357 7234	
67	85 (LHD-990)	.....	1	357 7234	
67	87 (LHD-DPL) ***(Use 357 7234)***	.....	1	357 7256	
67	88 (LHD-990-LER)	.....	1	357 7234	
67	88 (LHD-990-WER) ***(Use 357 7234)***	.....	1	357 7256	
68	80 (LHD-990)	.....	1	360 2172	
68	80 (LHD-DPL)	.....	1	360 2172	
67/70	***10-80 (RHD)***	.....	1	357 7228	

22.100–15 OVERLAY, Instrument Panel (Outer)

67	(Left) 50 (LAC-LASC-Aluminum Finish)	.....	1	357 7233	
67	(Left) 50 (LAC-LASC-Wood Grain Finish)	.....	1	357 7231	
67	(Left) 50 (LHD-LAC-WASC-Aluminum Finish)	.....	1	359 1029	
67	(Left) 50 (LHD-LAC-WASC-Wood Grain Finish)	.....	1	359 1028	
67	(Left) 50 (WAC-LASC-Aluminum Finish)	.....	1	357 7253	
67	(Left) 50 (WAC-LAS C-Wood Grain Finish)	.....	1	357 7239	
67	(Left) 50 (LHD-WAC-WASC-Aluminum Finish)	.....	1	359 1031	
67	(Left) 50 (LHD-WAC-WASC-Wood Grain Finish)	.....	1	359 1030	
67	(Left) 80 (LHD-990-LAC-LASC)(LHD-DPL-LAC-LASC)	.....	1	357 7231	
67	(Left) 80 (LHD-990-LAC-WASC)(LHD-DPL-LAC-WASC)	.....	1	359 1028	
67	(Left) 80 (LHD-990-WAC-LASC)(LHD-DPL-WAC-LASC)	.....	1	357 7239	
67	(Left) 80 (LHD-990-WAC-WASC)(LHD-DPL-WAC-WASC)	.....	1	359 1030	
68	(Left) 80 (LHD-990-LAC-LASC)(LHD-DPL-LAC-LASC)	.....	1	360 2180	
68	(Left) 80 (LHD-990-WAC-LASC)(LHD-DPL-WAC-LASC)	.....	1	360 2181	
68	(Left) 80 (LHD-990-LAC-WASC)(LHD-DPL-LAC-WASC)	.....	1	360 2182	
68	(Left) 80 (LHD-990-WAC-WASC)(LHD-DPL-WAC-WASC)	.....	1	360 2183	
67/70	***(Left) 10-80 (RHD)***	.....	1	357 7227	
67	(Right) 50 (Aluminum Finish)	.....	1	357 7232	
67	(Right) 50 (Wood Grain Finish)	.....	1	357 7230	
67	(Right) 80 (LHD-990)(LHD-DPL)	.....	1	357 7230	
68	(Right) 80 (LHD-990)(LHD-DPL)	.....	1	360 2178	
67/70	***(Right) 10-80 (RHD)***	.....	1	357 7226	

WINDSHIELD WIPER - COWL VENT - INST. PANEL

22.100–16 OVERLAY, Instrument Panel

67/69	***01 (RHD)***	.....	1	355	3072

22.100–17 ATTACHING PARTS, Overlay To Instrument Panel

NUT, Speed	67	10-50-80 ..... ***(Use 400 1714)***	13.155	2	400	1470
SCREW, Tapping	***67/69***	***01 (RHD)***	.....	2	400	1572
RETAINER	***67/69***	***01 (RHD)***	.....	2	359	2141

22.100–18 OVERLAY, Instrument Panel Glove Box Door

67/68	01 (LHD-440-Black And Chrome)(LHD-Rogue-Black And Chrome)	.....	1	358	3380
68	01 (LHD-440-Black And Gray)(LHD-Rogue-Black And Gray)	.....	1	359	9962
68	01 (LHD-440-Gray And Chrome)(LHD-Rogue-Gray And Chrome)	.....	1	360	2969
69	01 (LHD-440)(LHD-Rogue)	.....	1	361	5137
70	01 (Black)...(Incl. Nameplate)	22.060	1	363	1800
70	01 (Blue)...(Incl. Nameplate)	22.060	1	363	1801
70	01 (Green)...(Incl. Nameplate)	22.060	1	363	5921
70	01 (Red)...(Incl. Nameplate)	22.060	1	363	5945
70	01 (Satin Chrome)...(Incl. Nameplate)	22.060	1	363	1804
71	(Black) 01 (E/SC-360 And SST)	.....	1	365	0580
71	(Blue) 01 (E/SC-360 And SST)	.....	1	365	0581
71	(Green) 01 (E/SC-360 And SST)	.....	1	365	0582
71	(Black) 01 (SC-360)	.....	1	365	0571
71	(Blue) 01 (SC-360)	.....	1	365	0572
71	(Green) 01 (SC-360)	.....	1	365	0573
71	(Red) 01 (SC-360)	.....	1	365	0574
71	(Black) 01 (SST)	.....	1	363	1800
71	(Blue) 01 (SST)	.....	1	364	1828
71	(Green) 01 (SST)	.....	1	364	1829
71	(Red) 01 (SST)	.....	1	364	1830
72	(Black) 01	.....	1	365	1410
72	(Blue) 01	.....	1	365	1411
72	(Green) 01	.....	1	365	1412
72	(Tan) 01	.....	1	365	1550
70	30 (Woodgrain)...(Incl. Nameplate)	22.060	1	361	6303
70	(Black) 40	.....	1	363	6529
70	(Blue) 40	.....	1	363	6530
70	(Green) 40	.....	1	363	5792
70	(Red) 40	.....	1	363	6531
71	(Black) 40	.....	1	363	6529
71	(Blue) 40	.....	1	364	1937
71	(Green) 40	.....	1	364	1938
71	(Red) 40	.....	1	364	1939
72	(Black) 40	.....	1	365	1389
72	(Blue) 40	.....	1	365	1390
72	(Tan) 40	.....	1	365	1392
67	50 (Aluminum Finish)	.....	1	357	7237
67	50 (Woodgrain)	.....	1	360	8032
70	70 (Gray)...(Incl. Medallion)	22.060	1	361	6314
70	70 (Woodgrain)...(Incl. Medallion)	22.060	1	361	6315
67	80 (LHD-990)(LHD-DPL)	.....	1	357	7236
68	80 (LHD-990)(LHD-DPL)	.....	1	360	2176
67/69	***01 (RHD-440)(RHD-Rogue)***	.....	1	358	4976
67/70	***10-80 (RHD)***	.....	1	357	7238

22.100–18a INSERT, Instrument Panel Glove Box Door (Sticker)

70	79	.....	1	361	6305

WINDSHIELD WIPER - COWL VENT - INST. PANEL

22.100–18b NAMEPLATE, Letter X, Glove Box Door

71/	40 "X"	.....	1	364 6809

22.100–19 ATTACHING PARTS, Overlay To Glove Box Door

CLIP, Speed	67/69	01 (LHD–440)(LHD–Roque)	.....	2	400 1745
NUT, Stamped	70/	01–40	24.050	6	400 3625
SCREW, Tapping	70/	01–40 (#8–18 × 3/8")	17.669	6	G457002
SCREW, Tapping	70/	01–40 (#10–16 × 7/16")	.....	6	400 4566
SCREW, Tapping	***67/69***	***01 (RHD-440)(RHD-Rogue)***	.....	4	400 1561

22.100–20 OVERLAY, Instrument Panel (At Radio Holes)

67/68	01 (LHD–440–Black And Chrome)(LHD–Roque–Black And Chrome)	.....	1	358 3379
68/69	01 (LHD–440–Gray And Chrome)(LHD–Roque–Gray And Chrome)	.....	1	360 2968
68	01 (LHD–440–Black And Gray)(LHD–Roque–Black And Gray)	.....	1	359 9961
67/68	***01 (RHD-440-Used With Push Button Radio) (RHD-Roque-Used With Push Button Radio)***	.....	1	358 4967
67	***01 (RHD-440-Used With Manual Radio)(RHD-Roque-Used With Manual Radio)***	.....	1	358 4966
67/69	***01 (RHD-440-Used Less Radio)(RHD-Rogue-Used Less Radio)***	.....	1	358 4965

22.100–21 ATTACHING PARTS, Overlay To Instrument Panel

CLIP	67/69	01 (LHD–440)(LHD–Roque)	.....	4	400 1745
SCREW, Tapping	***67/69***	***01 (RHD-Used Less Radio)***	.....	2	400 1561

22.100–22 OVERLAY, Instrument Panel Identification (At Ignition, Lighter, Lights And Wiper Holes)

68	01 (LHD)	.....	1	359 8495
67	10–50–80 (LHD–* 22–6)...(Incl. Lens)	.....	1	357 6503
67	10–50–80 (LHD–* 22–7)...(Incl. Lens)	.....	1	360 8169
68	10 (LHD–LEOW)	.....	1	360 2187
68	10 (LHD–WEOW)	.....	1	360 0992
68	80 (LHD–880–LEOW)	.....	1	360 2187
68	80 (LHD–880–WEOW)	.....	1	360 0992
68	80 (LHD–990–LEOW)(LHD–DPL–LEOW)	.....	1	360 2186
68	80 (LHD–990–WEOW)(LHD–DPL–WEOW)	.....	1	360 0993
67	***10-80 (RHD-* 22-6)***...(Incl. Lens)	.....	1	357 6506
68/70	***10-80 (RHD)***...(Incl. Lens)	.....	1	360 8663
67	***80 (RHD-* 22-7)***...(Incl. Lens)	.....	1	360 8167

22.100–23 ATTACHING PARTS, Overlay To Instrument Panel

NUT, Speed	67/68	10–50–80	13.155	2	400 0369
CLIP	68	10–80 ***(Use 400 1714)***	13.017	2	400 1470
CLIP	***68/70***	***10-80 (RHD)*** ***(Use 400 1714)***	13.017	2	400 1470

22.100–24 OVERLAY, Instrument Panel Identification (At Lights, Wiper And Lighter)

69	15–19–85–89 (LHD–Painted Finish)	.....	1	361 4875
69	18–88 (LHD–LER–Painted Finish)	.....	1	361 4875
69	18–88 (LHD–WER–Painted Finish)	.....	1	361 4877
69	85–89 (LHD–Woodgrain)	.....	1	361 4876
69	88 (LHD–LER–Woodgrain)	.....	1	361 4876
69	88 (LHD–WER–Woodgrain)	.....	1	361 4878

22.100–25 ATTACHING PARTS, Overlay To Instrument Panel

NUT Stamped	69/	10–80 (LHD)	17.428	4	G9419782 NA

Printed in U.S.A.

WINDSHIELD WIPER - COWL VENT - INST. PANEL

22.100–25a OVERLAY. Instrument Panel Identification (at Lights–Wiper)

70	10-80 (LHD-WEW-Silver Gray)	.....	1	363 1005	
70/71	10-80 (LHD-WEW-Black)	.....	1	363 1013	NC
70	10-80 (LHD-WEW-Woodgrain)	.....	1	363 1021	
70	10-80 (LHD-WVW-Silver Gray)	.....	1	363 1913	
70/71	10-80 (LHD-WVW-Black)	.....	1	363 1917	NC
72	10-80	.....	1	361 0073	NC
70	80 (LHD-WVW-Woodgrain)	.....	1	363 1921	

22.100–25b ATTACHING PARTS. Overlay To Instrument Panel

NUT, Stamped	70/	10-80 (LHD)	17.428	3	G9419782	NA

22.100–25c OVERLAY. Instrument Panel Identification (At Cigar Lighter)

70	15-19-85-89 (LHD-Used Less Heated Rear Window-Silver Gray)	.....	1	363 1004	
70	15-19-85-89 (LHD-Used With Heated Rear Window-Silver Gray)	.....	1	363 1008	
70/71	15-19-85-89 (LHD-Used Less Heated Rear Window-Black)	.....	1	363 1012	NC
70/71	15-19-85-89 (LHD-Used With Heated Rear Window-Black)	.....	1	363 1016	NC
70	18-88 (LHD-LER-Silver Gray)	.....	1	363 1004	
70/71	18-88 (LHD-LER-Black)	.....	1	363 1012	NC
70	18-88 (LHD-WER-Silver Gray)	.....	1	363 1008	
70/71	18-88 (LHD-WER-Black)	.....	1	363 1016	NC
70	85-89 (LHD-Used Less Heated Rear Window-Woodgrain)	.....	1	363 1020	
70	85-89 (LHD-Used With Heated Rear Window-Woodgrain)	.....	1	363 1024	
70	88 (LHD-LER-Woodgrain)	.....	1	363 1020	
70	88 (LHD-WER-Woodgrain)	.....	1	363 1024	
72	10-80 (Except Export)	.....	1	364 6302	NC
72	***10-80 (Export)***	.....	1	366 1415	NC

22.100–25d ATTACHING PARTS. Overlay To Instrument Panel

NUT, Stamped	70/	10-80 (LHD)	17.428	AR	G9419782	NA
SCREW, Tapping	72	10-80	.....	3	400 4373	

22.100–26 PANEL. Instrument Panel Controls Identification

71	(Black) 70 (WVW)	.....	1	363 2902
71	(Black) 70 (WEW)	.....	1	363 2623
71	(Blue) 70 (WVW)	.....	1	363 2903
71	(Blue) 70 (WEW)	.....	1	363 2624
71	(Green) 70 (WVW)	.....	1	363 2904
71	(Green) 70 (WEW)	.....	1	363 2625
71	(Rec) 70 (WVW)	.....	1	363 2905
71	(Red) 70 (WEW)	.....	1	363 2626
72	(Black) 70 (* 22-28)	.....	1	365 1179
72	(Black) 70 (* 22-29 And * 22-34)	.....	1	365 7715
72	(Black) 70 (* 22-29 And * 22-35)	.....	1	366 2239
72	(Blue) 70 (* 22-28)	.....	1	365 1180
72	(Blue) 70 (* 22-29 And * 22-34)	.....	1	365 7716
72	(Blue) 70 (* 22-29 And * 22-35)	.....	1	366 2240
72	(Green) 70 (* 22-28)	.....	1	365 1181
72	(Green) 70 (* 22-29 And * 22-34)	.....	1	365 7717
72	(Green) 70 (* 22-29 And * 22-35)	.....	1	366 2241
72	(Tan) 70 (* 22-28)	.....	1	365 1183
72	(Tan) 70 (* 22-29 And * 22-34)	.....	1	365 7719
72	(Tan) 70 (* 22-29 And * 22-35)	.....	1	366 2243

22.100–27 ATTACHING PARTS. Identification Panel To Instrument Panel

SCREW, Tapping	71/	70	.....	3	400 2824
SCREW, Tapping	71/	70 (Left Side)	.....	1	400 2655
NUT, Speed	71/	70 (Left Side)	.....	1	400 3841

22.100–27a ATTACHING PARTS. Identification Panel To Center Panel

NUT, Spring	71	70	22.058	2	400 0267

WINDSHIELD WIPER - COWL VENT - INST. PANEL

22.100–28 LENS, Instrument Panel Controls Identification

69/	("Rear Window-Lighter") 18-88 (LHD-WER)	.....	1	361 4892
70/71	("Rear Window-Lighter") 15-19-85-89 (LHD-Used With Heated Rear Window)	.....	1	361 4892
70/71	("Lighter") 15-19-85-89 (LHD-Used Less Heated Rear Window)	.....	1	361 4890
70/71	("Lighter") 15-19-85-89 (LHD-Less Heated Rear Window)	.....	1	361 4890
69/71	("Lighter") 18-88 (LHD-LER)	.....	1	361 4890
70	("Lights") 30-70	.....	1	363 1190
71/	("Lights") 70	.....	1	363 2650
69	("Lights-Wipers") 10-80 (LHD-WVW-LEOW)	.....	1	361 4888
70/71	("Lights-Washer-Wipers") 10-80 (LHD-WVW-LEOW)	.....	1	363 1912
69/	("Lights-Wipers-Washer") 10-80 (LHD-WEW-WEOW)	.....	1	361 4889
70	("Wipers-Washers") 30-70	.....	1	363 1189
71	("Wipers-Washers") 70 (WVW) ***(Ord. 365 0084, 365 0164)***	.....	1	363 2742
71/	("Wipers-Washers") 70 (WEW)	.....	1	363 2651
71/	("Bright") 70	.....	1	363 2659
71/	("Brake") 70 (* 22-28)	.....	1	363 2657
72	("Fasten") 70 (* 22-29)	.....	1	365 7692
71/	("Alt") 70	.....	1	363 2658
71/	("Fuel") 70	.....	1	363 2654
71/	("Oil") 70	.....	1	363 2655
71/	(Left Turn) 70	.....	1	363 2653
71/	(Right Turn) 70	.....	1	363 2652
72	("Belts") 70 (* 22-29)	.....	1	365 7693
72	("Brake") 70 (* 22-29)	.....	1	365 7691
71/	(Blank) 70	.....	1	365 0450

22.100–29 ATTACHING PARTS, Lens To Overlay

NUT, Speed 69/	10-80 (LHD)	7.215	4	400 0459

22.100–30 CONDUCTOR, Instrument Panel Identification Lens

69/	10-80	.....	2	361 4868

22.100–31 SEAL, Instrument Panel Identification Lens

69/	10-80	.....	1	361 4869

22.100–32 MOULDING, Instrument Panel

69/	(Right) 10-80 (LHD-WAC-11" Long)(LHD-WHLV-11" Long)	.....	1	361 4903
69	(Right) 10 (LHD-LAC-28-1/8" Long)(LHD-LHLV-28-1/8" Long)	.....	1	361 4902

22.100–33 ATTACHING PARTS, Moulding To Instrument Panel

NUT, Speed 69/	10-80 (LHD)	.....	AR	320 9552

22.100–33a COVER, Instrument Panel End

70	(Black) 01-40 (Left)	.....	1	363 1475
70	(Black) 01-40 (Right) ***(Use 365 0554)***	.....	1	363 1474
70	(Blue) 01-40 (Left)	.....	1	363 1477
70	(Blue) 01-40 (Right)	.....	1	363 1476
70	(Green) 01-40 (Left)	.....	1	363 1479
70	(Green) 01-40 (Right)	.....	1	363 1478
70	(Red) 01-40 (Left)	.....	1	363 1481
70	(Red) 01-40 (Right)	.....	1	363 1480
71	(Black) 01-40 (Left-7" Long)	.....	1	363 1475
71	(Black) 01-40 (Left-9" Long)	.....	1	365 0555
71	(Black) 01-40 (Right-7" Long) ***(Use 365 0554)***	.....	1	363 1474
71	(Black) 01-40 (Right-9" Long)	.....	1	365 0554

WINDSHIELD WIPER - COWL VENT - INST. PANEL

71	(Blue) 01-40 (Left-7" Long)	.....	1	364 1751
71	(Blue) 01-40 (Left-9" Long)	.....	1	365 0557
71	(Blue) 01-40 (Right-7" Long)	.....	1	364 1750
71	(Blue) 01-40 (Right-9" Long)	.....	1	365 0556
71	(Green) 01-40 (Left-7" Long)	.....	1	364 1753
71	(Green) 01-40 (Left-9" Long)	.....	1	365 0559
71	(Green) 01-40 (Right-7" Long)	.....	1	364 1752
71	(Green) 01-40 (Right-9" Long)	.....	1	365 0558
71	(Red) 01-40 (Left-7" Long)	.....	1	364 1755
71	(Red) 01-40 (Left-9" Long)	.....	1	365 0561
71	(Red) 01-40 (Right-7" Long)	.....	1	364 1754
71	(Red) 01-40 (Right-9" Long)	.....	1	365 0560
72	(Black) 01-40 (Left)	.....	1	365 1339
72	(Black) 01-40 (Right)	.....	1	365 1338
72	(Blue) 01-40 (Left)	.....	1	365 1341
72	(Blue) 01-40 (Right)	.....	1	365 1340
72	(Green) 01-40 (Left)	.....	1	365 1343
72	(Green) 01-40 (Right)	.....	1	365 1342
72	(Tan) 01-40 (Left)	.....	1	365 1347
72	(Tan) 01-40 (Right)	.....	1	365 1346

22.100-33b ATTACHING PARTS, Cover To Instrument Panel

SCREW, Tapping..... 70/ 01-40		.....	4	400 4074

22.100-34 MOULDING, Instrument Panel (Inner)

(T-753)(LHD)		.....	1	357 7204
(T-758)(LHD)		.....	1	357 7203
(T-759)(LHD)		.....	1	357 7205
68	10 (LHD-550)	.....	1	360 8375
67/68	10 (LHD-770)(LHD-SST)	.....	1	357 7201
67	50	.....	1	357 7202
67	80 (LHD-880)	.....	1	357 7201
67	80 (LHD-990)(LHD-DPL)	.....	1	357 7202
68	80 (LHD)	.....	1	357 7201
71/	70	.....	1	363 3318

22.100-35 MOULDING, Instrument Panel (Outer)

(T-753)(Left-LHD)		.....	1	357 7219
(T-753)(Right-LHD)		.....	1	357 7218
(T-758)(Left-LHD)		.....	1	357 7217
(T-758)(Right-LHD)		.....	1	357 7216
(T-759)(Left-LHD)		.....	1	357 7221
(T-759)(Right-LHD)		.....	1	357 7220
68	(Left) 10 (LHD-550)	.....	1	360 8371
67/68	(Left) 10 (LHD-770)(LHD-SST)	.....	1	357 7213
67	(Left) 50	.....	1	357 7215
67	(Left) 80 (LHD-880)	.....	1	357 7213
68	(Left) 80 (LHD)	.....	1	357 7213
67	(Left) 80 (LHD-990)(LHD-DPL)	.....	1	357 7215
68	(Right) 10 (LHD-550)	.....	1	360 8673
67/68	(Right) 10 (LHD-770)(LHD-SST)	.....	1	357 7212
67	(Right) 50	.....	1	357 7214
67	(Right) 80 (LHD-880)	.....	1	357 7212
68	(Right) 80 (LHD)	.....	1	357 7212
67	(Right) 80 (LHD-990)(LHD-DPL)	.....	1	357 7214
71/	70	.....	1	363 3316

WINDSHIELD WIPER - COWL VENT - INST. PANEL

22.100–36 MOULDING, Instrument Panel (Upper-Outer)

67	50 (LHD-WAC)	.....	1	357 5648
67/68	80 (LHD-990-WAC)(LHD-DPL-WAC)	.....	1	357 5648

22.100–37 MOULDING, Instrument Panel (Upper)

67/70	***(Left) 10-80 (RHD)***	.....	1	357 7183
67/70	***(Right) 10-80 (RHD)***	.....	1	357 7182

22.100–38 MOULDING, Instrument Panel (Lower-Outer)

67	50 (LHD-WAC)	.....	1	357 5649
67/68	80 (LHD-990-WAC)(LHD-DPL-WAC)	.....	1	357 5649
67	(Left) 50 (LHD-LAC)	.....	1	357 5657
67/68	(Left) 80 (LHD-990-LAC)(LHD-DPL-LAC)	.....	1	357 5657
67/70	***(Left) 10-80 (RHD)***	.....	1	357 6577
67	(Right) 50	.....	1	357 5656
67/68	(Right) 80 (LHD-990)(LHD-DPL)	.....	1	357 5656
67/70	***(Right) 10-80 (RHD)***	.....	1	357 6576

22.100–39 MOULDING, Instrument Panel (Lower-Inner)

67	50 (LHD)	.....	1	357 5658
67/68	80 (LHD-990)(LHD-DPL)	.....	1	357 5658
67/70	***10-80 (RHD)***	.....	1	357 6578

22.100–39a MOULDING, Instrument Panel (Center)

71/	70	.....	1	363 3317
71	70 (Except SST And AMX)	.....	1	363 3319

22.100–40 ATTACHING PARTS, Inner And Outer Moulding To Instrument Panel

CLIP	67/68	10-50-80	.....	4	400 1460
SCREW, Tapping	67/68	10-50-80	17.660	1	G161904
SCREW, Tapping	71/	70	.....	2	400 2672 NA
SCREW, Tapping	71/	70 (Outer End)	3.510	1	400 2657
NUT, Speed	71/	70 (Outer End)	22.100	1	400 3841

22.100–41 ATTACHING PARTS, Lower-Outer Moulding To Instrument Panel

CLIP	67/68	50-80 (LHD)	12.078	2	400 2093
SCREW, Tapping	67	50	17.660	1	G161860
SCREW, Tapping	67	80 (LHD-990)(LHD-DPL)	17.660	1	G161860
NUT, Push-On	67	50	.....	4	400 1331
NUT, Push-On	67	80 (LHD-990)(LHD-DPL)	.....	4	400 1331
NUT, Push-On	***67/70***	***10-80 (RHD)***	.....	2	400 1498

22.100–42 ATTACHING PARTS, Lower-Inner Moulding To Instrument Panel

CLIP	67/68	50-80 (LHD)	12.078	3	400 2093
SCREW, Tapping	67	50	17.660	1	G161860
SCREW, Tapping	67	80 (LHD-990)(LHD-DPL)	17.660	1	G161860
NUT, Push-On	67	50	.....	3	400 1331
NUT, Push-On	67	80 (LHD-990)(LHD-DPL)	.....	3	400 1331
NUT, Push-On	***67/70***	***10-80 (RHD)***	.....	4	400 1498

22.100–43 ATTACHING PARTS, Upper Moulding To Instrument Panel

SCREW, Tapping	67	50 (LHD-WAC)	17.660	1	G161860
SCREW, Tapping	67/68	LHD (990-WAC)(DPL-WAC)	17.660	1	G161860
NUT, Push-On	***67/70***	***10-80 (RHD)***	.....	8	400 1498

WINDSHIELD WIPER - COWL VENT - INST. PANEL

22.100–43a ATTACHING PARTS, Center Moulding To Instrument Panel

NUT, Spring	71/	70	17.422	1	G445109	NA
SCREW, Tapping	71/	70	3.510	1	400 2657	

22.100–44 NAMEPLATE, Instrument Panel

69	10 (LHD)	.....	1	361 4427
70	10 (LHD)	.....	1	361 6417
72	10	.....	1	364 6124
68/69	30 (Blank-* 22-10)	.....	1	448 6746
70	30 (Blank-* 22-10)	.....	1	448 8167
68/69	70	.....	1	360 2978
71/	70	.....	1	363 3770
69/70	80 (LHD)	.....	1	361 4615
71/	80	.....	1	363 3572

22.100–45 ATTACHING PARTS, Nameplate To Panel

CLIP	70	30	23.006	2	400 1335	
NUT, Stamped	68/69	30-70	13.017	2	400 1323	
NUT, Stamped	69/71	10-80 (LHD)	17.428	2	320 9552	
NUT, Stamped	72	10-80	.....	AR	400 4496	
NUT, Stamped	71/	70	12.128	2	400 0295	

22.100–46 COVER, Instrument Panel Clock Or Tachometer Opening (Less Clock And Tachometer)

70	01	.....	1	363 1492
71/	01	.....	1	363 6658
67/	10-50-80 (WWH)(WAC)	.....	1	357 6580
68/70	30-70	.....	1	360 1488
71/	70	.....	1	363 2607

22.100–47 ATTACHING PARTS, Cover To Instrument Panel

SCREW, Tapping	70	01 (5/8")	17.660	2	G161901	
SCREW, Tapping	70/	01 (1/4")	17.660	2	G9428487	NA
SCREW, Tapping	67/71	10-50-80 (WWH)(WAC)	3.303	2	400 1629	
SCREW, Tapping	69	10-80	17.660	4	G163158	NA
SCREW, Tapping	68/70	30-70	17.660	2	G161901	
SCREW, Tapping	71/	70	17.671	4	448 9486	
NUT, Push-On	68	30-70 ***(Use 400 3841)***	3.505	2	400 1996	
NUT, Speed	69/70	30-70	.....	2	400 3841	

22.100–48 MASK, Instrument Panel Clock Opening (Less Clock)

67/	10-50-80	.....	1	357 6583

22.100–49 COVER, Instrument Panel Radio Opening (Less Radio)

67/69	(Dial Opening) 01 (LHD-220-Black And Gray)	.....	1	358 3382
68/69	(Dial Opening) 01 (LHD-220-Black)	.....	1	362 3017
67/69	(Dial Opening) 01 (LHD-440-Silver Gray)(LHD-Rogue-Silver Gray)	.....	1	358 3383
68/69	(Dial Opening) 01 (LHD-440-Black)(LHD-Rogue-Black)	.....	1	359 9971
68/69	(Dial Opening) 30-70	.....	1	360 1532
70	(Dial Opening) 30-70	.....	1	361 6280
67/69	***(Dial Opening) 10-80 (RHD-Black And Gray)***	.....	1	358 3382
68	***(Dial Opening) 10-80 (RHD-Black)***	.....	1	361 4832
69/	***(Dial Opening) 10-80 (RHD-Black)***	.....	1	362 3017
70/71	01-40	.....	1	361 6440
72	01-40	.....	1	365 7363 NC
67/68	10-50-80 (LHD)	.....	1	357 7250
69/	10 (LHD)	.....	1	361 4832

WINDSHIELD WIPER - COWL VENT - INST. PANEL

71	70 (Except SST And AMX)	1	363 6937	
71/	70 (SST)	1	363 2715	
71/	70 (AMX)	1	363 2713	
69/	80 (LHD)	1	361 4831	
67/69	***01 (RHD-220)***	1	350 0752	
67	***10-80 (Police)***	1	317 6930	

22.100–50 ATTACHING PARTS, Cover To Instrument Panel (Less Radio)

SCREW, Trim	70	30-70	3.510	4	400 2658
NUT, Speed	67/	01-40 (LHD)	2.050	2	400 0721
NUT, Speed	67/69	30-70	2.050	2	400 0721
NUT, Speed	***67/70***	***10-80 (RHD-For 3/16" Dia. Hole) ... (Use 400 2160)***		2	400 2147
NUT, Speed	***67/70***	***10-80 (RHD-For 1/4" Dia. Hole)***		2	400 2160
NUT, Lock	***67/70***	***10-80 (RHD)***	12.128	2	400 0392
NUT, Stamped	***67***	***10-80 (RHD)***	17.428	2	320 9550
NUT, Hexagon	***67/69***	***01 (RHD)***	26.039	2	400 0517
BOLT, Tee	***67/69***	***01 (RHD-220)***		2	400 0635
WASHER	***67***	***10-80 (RHD)***		2	400 2053

22.100–50a ATTACHING PARTS, Cover To Instrument Cluster Bezel

SCREW, Tapping	67/	10-50-80 (LAC)	17.660	4	G163158 NA

22.100–51 COVER, Map Light Opening (Less Map Light)

70/	30-70		1	363 1221

22.100–51a ATTACHING PARTS, Cover To Crash Pad

SCREW, Pan Head	70	30-70	22.060	2	400 4033

22.100–52 COVER, Instrument Panel Defroster Duct Opening (Less Heater)

67/69	01 (LWH-LAC)		2	352 2270
70/	01-40 (LWH-LAC)(LWH-LHLV)		1	361 6380
68/70	30-70 (LWH-LAC)		1	360 2222
71/	(Left) 70 (LWH-LAC)		1	363 2739
71/	(Right) 70 (LWH-LAC)		1	363 2738

22.100–53 ATTACHING PARTS, Cover To Instrument Panel

BOLT, Tee	68/70	30-70 (LWH-LAC)		2	400 3819
NUT, Lock	68/70	30-70 (LWH-LAC)		2	400 3018
NUT, Stamped	67/69	01 (LWH-LAC)	17.428	4	320 9549
SCREW, Tapping	71/	70 (LWH-LAC)	25.029	4	400 3814

22.100–54 MASK, Instrument Panel Defroster Opening Bezel

67/	10-50-80 (LWH-LAC)		2	357 7099

22.100–55 ATTACHING PARTS, Mask To Duct Mounting Bracket

SCREW, Tapping	67/	10-50-80	17.660	4	448 9494

22.100–56 BRACKET, Instrument Panel Defroster Opening Bezel

67/	10-50-80 (LWH-LAC)		4	357 7093

WINDSHIELD WIPER - COWL VENT - INST. PANEL

22.100–56a COVER, Instrument Panel Air Outlet Opening

71	01-40 (LAC)(LHLV) ..... ***(Use 363 3972)***	.....	1	363 3976	NC
72	01-40 (LAC)(LHLV)	.....	1	365 1300	NC
70	40 (LAC)(LHLV)	.....	1	363 1507	NC

22.100–56b ATTACHING PARTS, Cover To Center Housing

SCREW, Tapping	70	40 (LAC)(LHLV)	22.056	2	400 3590	
SCREW, Tapping	71/	01-40 (LAC)(LHLV)	22.056	2	400 3590	

22.100–57 COVER, Instrument Panel Heater And Air Conditioning Controls Opening (Less Heater-LAC)(NC)

70	01-40	.....	1	363 1500	
71	01-40	.....	1	363 3980	
72	01-40 (LAC)(LHLV)	.....	1	365 1289	NC
67	10-50-80 (Used With Clock)	.....	1	357 7251	
67/69	10-50-80 (Used Less Clock)	.....	1	357 7250	
68/70	30-70	.....	1	360 1588	
71	70 (LWH-LAC)	.....	1	363 2815	
72	70 (LAC)(LWH)	.....	1	365 1138	NC
68	***10-80 (Export-Used With Clock)***	.....	1	357 7251	
69/	***10 (Export-Used With Clock)***	.....	1	361 4830	
69/	***10 (Export-Used Less Clock)***	.....	1	361 4833	
69	***80 (Export-Used With Clock)***	.....	1	361 4817	

22.100–58 ATTACHING PARTS, Cover To Instrument Panel

SCREW, Trim	70/	01-40	22.056	2	400 3590	
SCREW, Tapping	67/	10-50-80 (With Clock-2 Req.)(Less Clock-4 Req.) ..	17.660	AR	G163158	NA
SCREW, Tapping	68/70	30-70	17.660	4	G161895	

22.100–59 COVER, Instrument Panel Heater And Defroster Controls

67	01 (LHD-LAC)(LHD-LWH) ..... ***(Use 362 4570)***	.....	1	355 3091	
68	01 (LHD-LAC)(LHD-LWH) ..... ***(Use 362 4570)***	.....	1	359 9209	
69	01 (LHD-LAC)(LHD-LWH)	.....	1	362 4570	

22.100–60 ATTACHING PARTS, Cover To Instrument Panel

SCREW, Machine	67/69	01 (LHD-LAC)(LHD-LWH)	17.598	2	400 1009	NA
WASHER, Plain	67/69	01 (LHD-LAC)(LHD-LWH)	17.814	2	G120392	
NUT, Hexagon	67/69	01 (LHD-LAC)(LHD-LWH)	17.412	2	G271172	

22.100–61 PLUG, Instrument Panel Glove Box Lamp Switch Hole (Used Less Glove Box Lamp)

67/	10-50-80	.....	1	400 0368	
70/	01-30-40-70	17.494	1	G142081	

22.100–62 PLUG, Instrument Panel Cigar Lighter Hole (Used Less Cigar Lighter)

67	01 (LHD) ..... ***(Use 400 1818)***	.....	1	400 1755	
68	01 (LHD-Chrome)	.....	1	400 1864	
68/69	01 (LHD-Plastic)	.....	1	400 1818	
70/	01-40	.....	1	400 0193	
67/69	***01 (RHD)***	.....	1	400 0193	

22.100–62a PLUG, Instrument Panel Glove Box Hole

71/	70	27.038	1	400 0334	

WINDSHIELD WIPER - COWL VENT - INST. PANEL

22.100–63 HANDLE, Instrument Panel Assist

69	(Blue) 70 (* 22-15)	.....	1	361 6801
69	(Blue) 70 (* 22-16)	.....	1	360 3109
69	(Brown) 30-70 (* 22-15)	.....	1	361 6803
69	(Brown) 30-70 (* 22-16)	.....	1	360 3111
69	(Charcoal) 30-70 (* 22-15)	.....	1	361 6800
69	(Charcoal) 30-70 (* 22-16)	.....	1	360 3108
69	(Red) 30-70 (* 22-15)	.....	1	361 6802
69	(Red) 30-70 (* 22-16)	.....	1	360 3110
70	(Black) 30-70	.....	1	360 3117
70	(Blue) 30-70	.....	1	360 3118
70	(Brown) 30-70	.....	1	360 3121
70	(Green) 70	.....	1	360 3119
70	(Red) 30-70	.....	1	360 3110
71/	(Black) 70	.....	1	363 3451
71	(Blue) 70	.....	1	363 3452
71	(Green) 70	.....	1	363 3453
71	(Red) 70	.....	1	363 3454
72	(Blue) 70	.....	1	365 1220
72	(Green) 70	.....	1	365 1221
72	(Tan) 70	.....	1	365 1223

22.100–64 REINFORCEMENT, Instrument Panel Assist Handle

70	30-70	.....	2	364 1859

22.100–64a ATTACHING PARTS, Handle To Instrument Panel

SCREW, Tapping	69	30-70 (#8-32 × 5/16")	26.032	4	400 1638
SCREW, Tapping	69	30-70 (#8-32 × 1/2")	3.303	4	400 1629
SCREW, Tapping	69	30-70 (#10-16)	.....	2	400 2541
SCREW, Tapping	69	30-70 (#10-12)	17.654	2	G162485 NA
SCREW, Machine	70	30-70	17.592	2	G157183 NA
SCREW, Machine	71/	70	.....	2	400 2530
NUT, Cup	70	30-70	.....	2	400 4099
NUT, Lock	69	30-70	17.416	1	G273801 NA

22.100–65 BRACE, Instrument Panel Assist Handle To Cowl Panel

69	30-70	.....	1	361 5188

22.100–66 ATTACHING PARTS, Brace To Cowl Panel

SCREW, Machine	69	30-70	12.125	1	400 2015

22.100–67 ATTACHING PARTS, Brace To Crash Pad

NUT, Lock	69	30-70	17.416	2	G273801 NA

22.100–68 COVER, Glove Box Opening (Board)

70	40 (Used Less Glove Box)	.....	1	363 6098
71/	40 (Used Less Glove Box)	.....	1	364 6617

WINDSHIELD WIPER - COWL VENT - INST. PANEL

22. 100–69 BEZEL, Glove Box Opening (Used Less Glove Box)(Incl. Nameplate)

70	(Black) 40	.....	1	363 6566
70	(Blue) 40	.....	1	363 6567
70	(Green) 40	.....	1	363 5843
70	(Red) 40	.....	1	363 6568
71	(Black) 40	.....	1	363 6568
71	(Blue) 40	.....	1	364 1928
71	(Green) 40	.....	1	364 1929
71	(Red) 40	.....	1	364 1930

22. 100–70 ATTACHING PARTS, Bezel To Instrument Panel (Used Less Glove Box)

SCREW, Tapping	70	40 (Lower)	22. 076	2	400 4032
SCREW, Oval Head	70	40 (Sides)	3. 510	2	400 2652
SCREW, Oval Head	70	40 (Top–Used With Nut)	3. 510	3	400 2652
SCREW, Hi–Lo Thread ..	70	40 (Top–Used Less Nut)	22. 076	3	400 4112
NUT, Speed	70	40	3. 505	3	400 1948
SCREW, Tapping	71/	40 (8–18 × 3/4)	22. 100	5	400 2657
SCREW, Tapping	71/	40 (8–18 × 5/8)	22. 100	3	400 3671
NUT, Speed	71/	40	13. 488	5	400 1949

22. 150 WASHER, Windshield (For Windshield Washer System Parts, Refer To Groups 22. 051 Thru 22. 055)

22. 200 WIPER, Electric Windshield (For Components And Linkage, Refer To Groups 22. 028 Thru 22. 037)

SPECIAL INFORMATION

The Engine Build Code Number, Vehicle Identification Number and the information provided on the Unit Body Plate are often necessary when determining the proper replacement parts for your automobile. For their location refer to the General Information Section found at the front of this catalog.

NOTES

23–1 .... On 6800 Models used prior to Car Sequence No. E-48062 or W-59129.

23–2 .... On 68 01 Models used beginning with Car Sequence No. E-48062. On 68 10-30-70-80 Models used beginning with Car Sequence No. W-59129 or E-48062 using a Hinge Screw with a length of 1-1/4".

23–3 .... On 68 10-30-70-80 Models used beginning with Car Sequence No. W-59129 or E-48062 using a Hinge Screw with a length of 1-1/8".

23–4 .... Used on 68 Models prior to Car Sequence No. E-48062 or W-59129.

23–5 .... Used beginning with Car Sequence No. E-48062 or W-59129.

23–6 .... Used prior to Car Sequence No. 44730.

23–7 .... Used beginning with Car Sequence No. 44730.

23–8 .... Used prior to Car Sequence No. 44730.

23–9 .... Used beginning with Car Sequence No. 44730.

23–10 ... Ventilator does not have a Push Button Locking Handle.

23–11 ... Ventilator has a Push Button Locking Handle.

23–12 ... Division Bar is pointed at Top and Bumper has Outside Lip and used with Window Frame that is 28-3/8" Long Top Side.

23–13 ... Division Bar is not pointed at Top and Bumper does not have Outside Lip and used with Window Frame that is 28-17/32" Long Top Side.

23–14 ... Moulding is made of Metal.

23–15 ... Moulding is made of Plastic.

23–16 ... The Pinion is made of Moulded Rubber and has no Springs.

23–17 ... The Pinion is made of Metal and has 4 Springs.

23–18 ... Latch is activated by a Locking Control Cable.

23–19 ... Latch is activated by a Locking Control Rod.

23–20 ... Uses Solid Type Weatherseal.

23–21 ... Uses Hollow Type Weatherseal.

23–22 ... Plastic Mouldings are serviced in the longest length and may require cutting to the desired length.

23–23 ... The depressions in the Finish Panel for the Tailgate Remote Control Handles have vertical sides which are symmetrical and measure 2-3/4".

23–24 ... The depressions in the Finish Panel for the Tailgate Remote Control Handles have vertical sides which are not symmetrical and measure 2-3/4" on one side and 3-3/4" on the other side.

23–25 ... Mounts from the back. The space between mounting holes is 9-1/8". The End Brackets are rigid type.

23–26 ... Mounts from the front. The space between mounting holes is 10-1/2". The End Brackets are link type.

23–27 ... Liftgate is supported with Two Supports.

23–28 ... Liftgate is supported with One Support.

Printed in U.S.A.

NOTES

23–29 ... Upper Hinge Pin is Flag Type and does not use a Pin Roller. (See Type 1 Illustration).

23–30 ... Upper Hinge Pin is Straight Type and does use a Pin Roller. (See Type 2 Illustration).

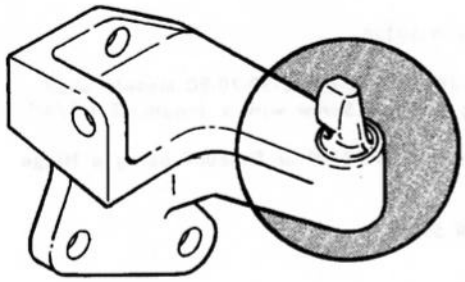

TYPE 1

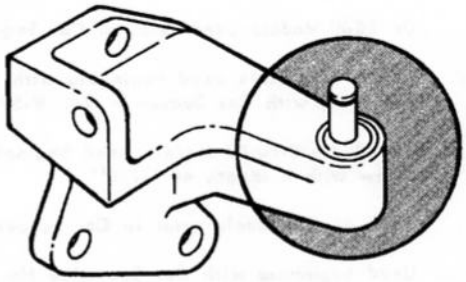

TYPE 2

23–31 ... Latch Panel is fastened to Body with 9 Machine Screws.

23–32 ... Latch Panel is fastened to Body with 5 Machine Screws and 4 Tapping Screws.

23–33 ... Liftgate Support Bracket is fastened to Body with 6 Screws.

23–34 ... Liftgate Support Bracket is welded to Body.

23–35 ... Used with Window Regulator that has a 6 Tooth Pinion with 3-1/2 turns to Lower Window.

23–36 ... Used with Window Regulator that has a 8 Tooth Pinion with 5-1/2 turns to Lower Window.

23–37 ... This Receiver has a slanted bottom.

23–38 ... This Receiver has a rounded bottom.

23–39 ... Used with Receiver that has a slanted bottom.

23–40 ... Used with Received that has a rounded bottom.

23–41 ... Used on cars without Anti-Rattle Pin and Guide arrangement.

23–42 ... Used on cars with Anti-Rattle Pin and Guide arrangement.

23–43 ... Used on 72 18 Models equipped with (258) Engine only and without a Horizontal Brace on inner Door Panel.

23–44 ... Used on 72 18 Models equipped with (258) Engine only and with a Horizontal Brace on inner Door Panel.

2327

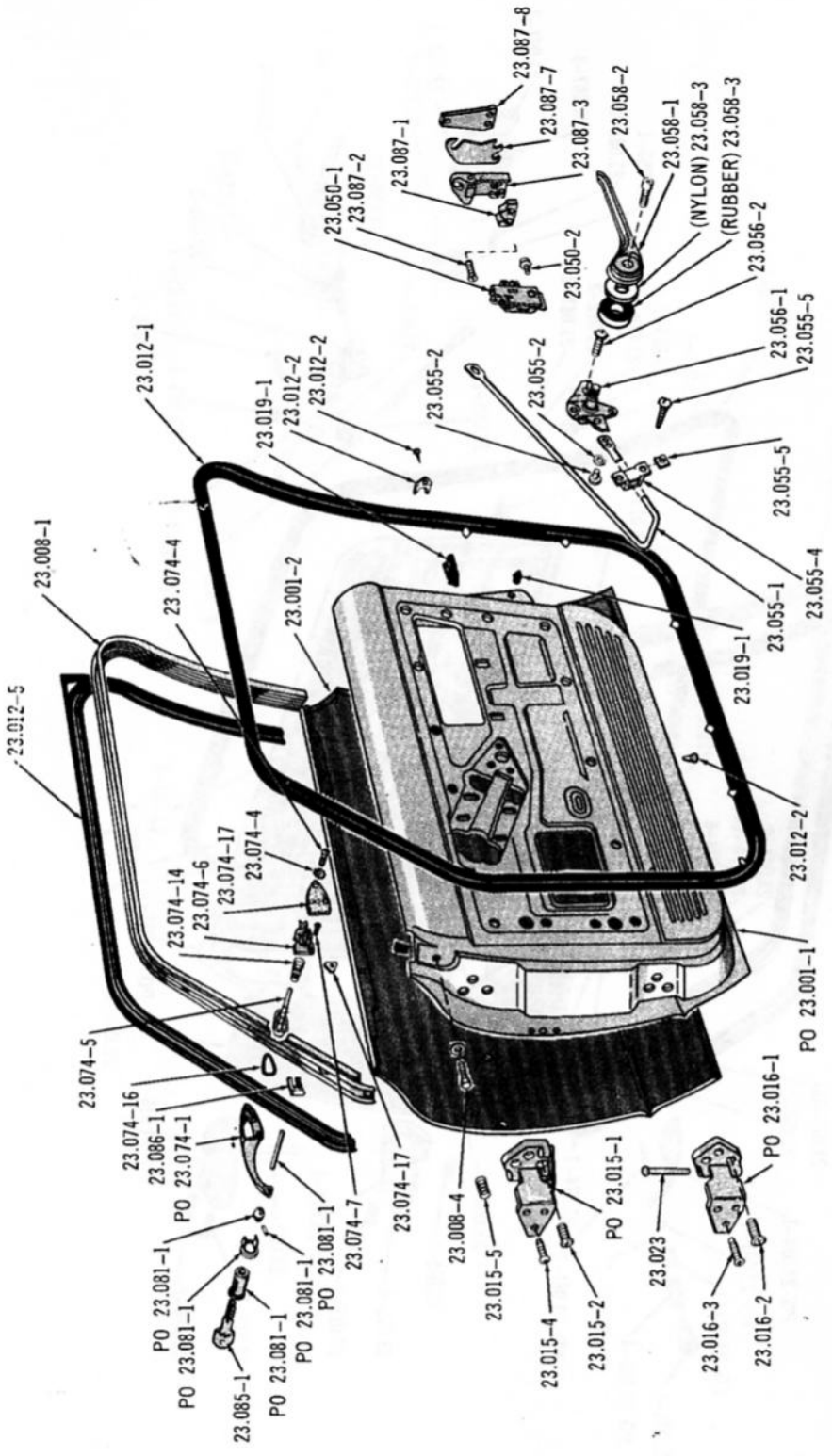

FRONT DOOR, HARDWARE AND SEALERS ... 1967/69 (05)(08)

Printed in U.S.A.

2328

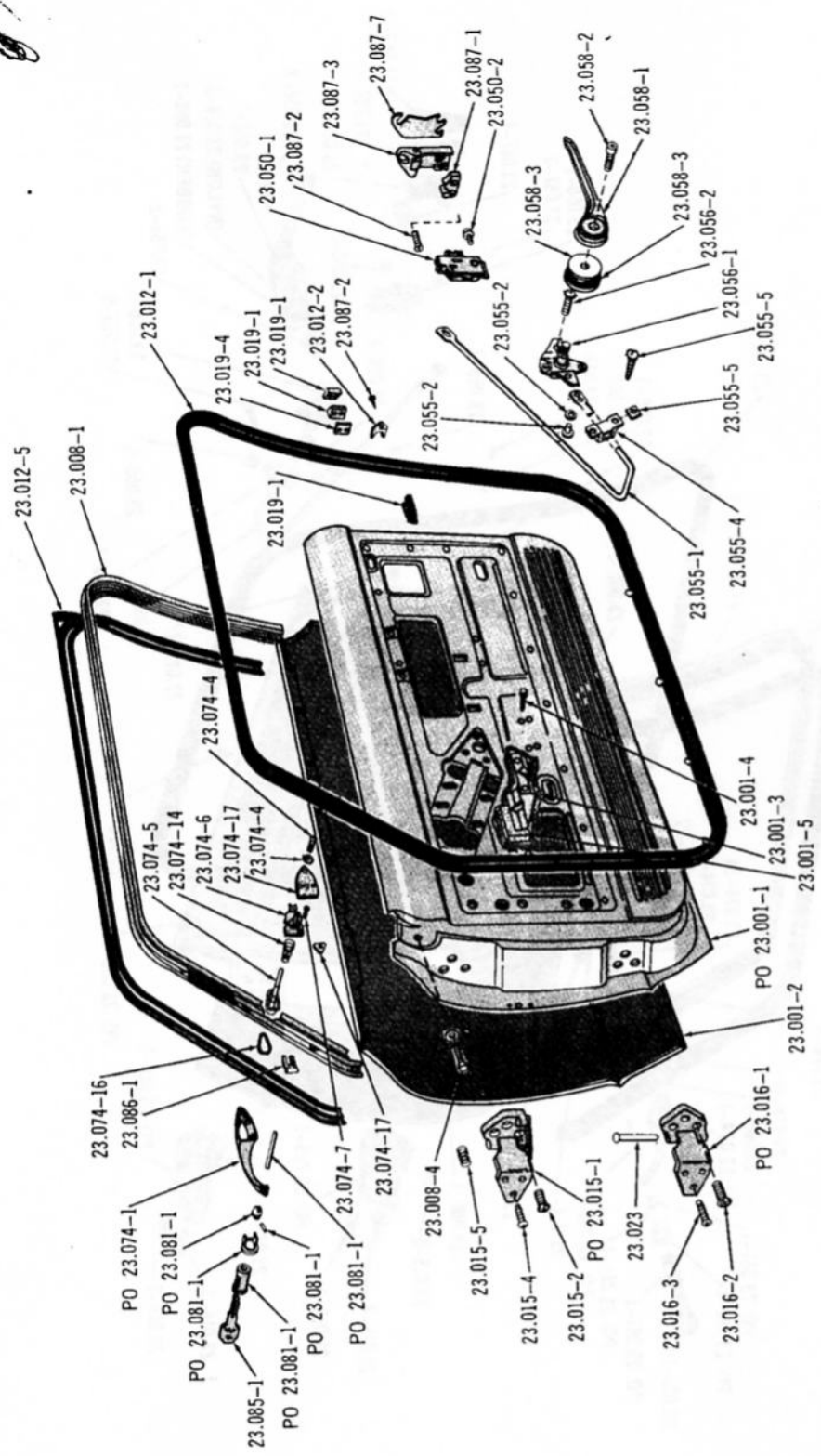

FRONT DOOR, HARDWARE AND SEALERS ... 1967/69 (06)

1984-A

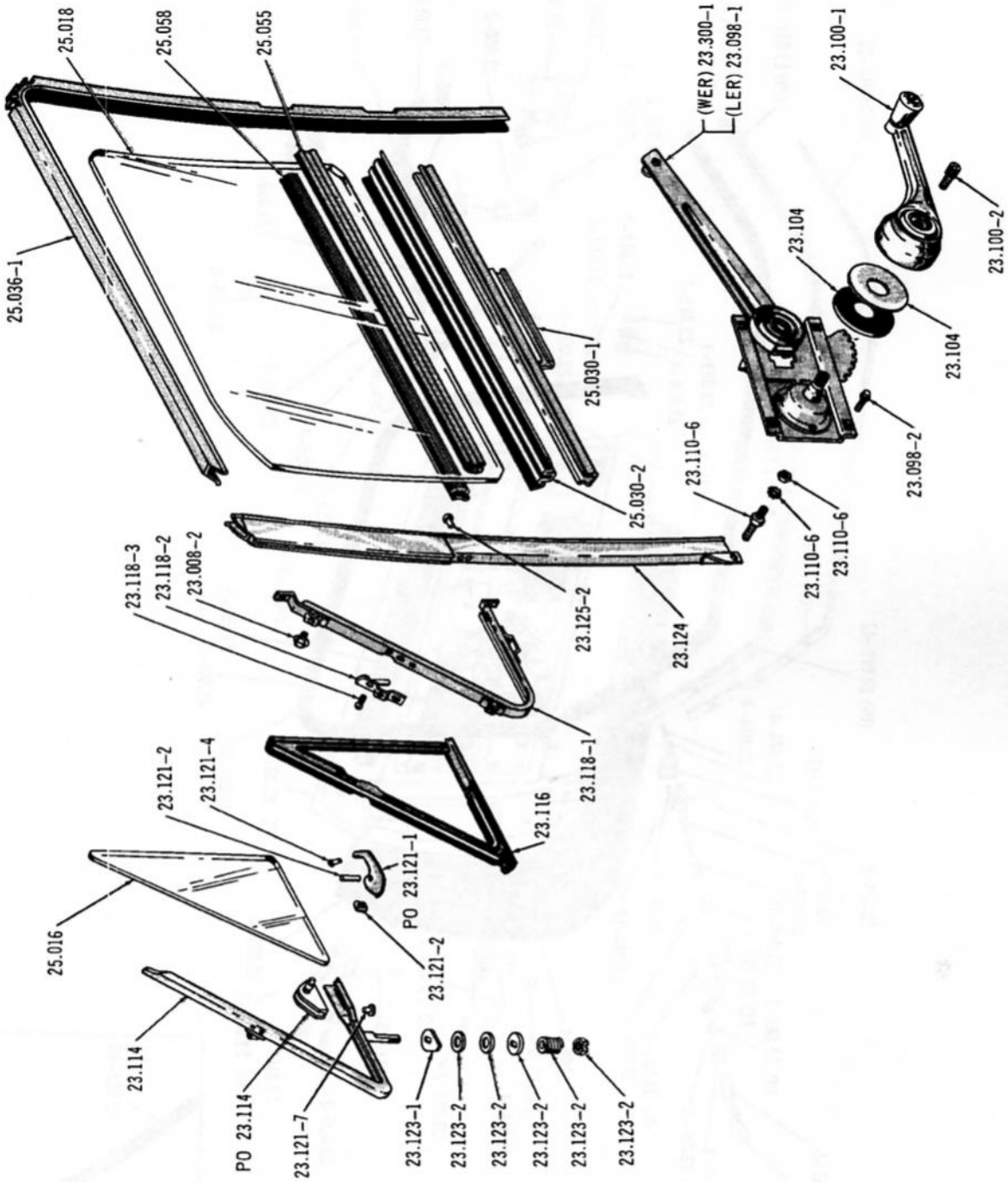

FRONT DOOR GLASS AND CHANNELS ... 1967/69 (05)(06)(08)

Printed in U.S.A.

2329

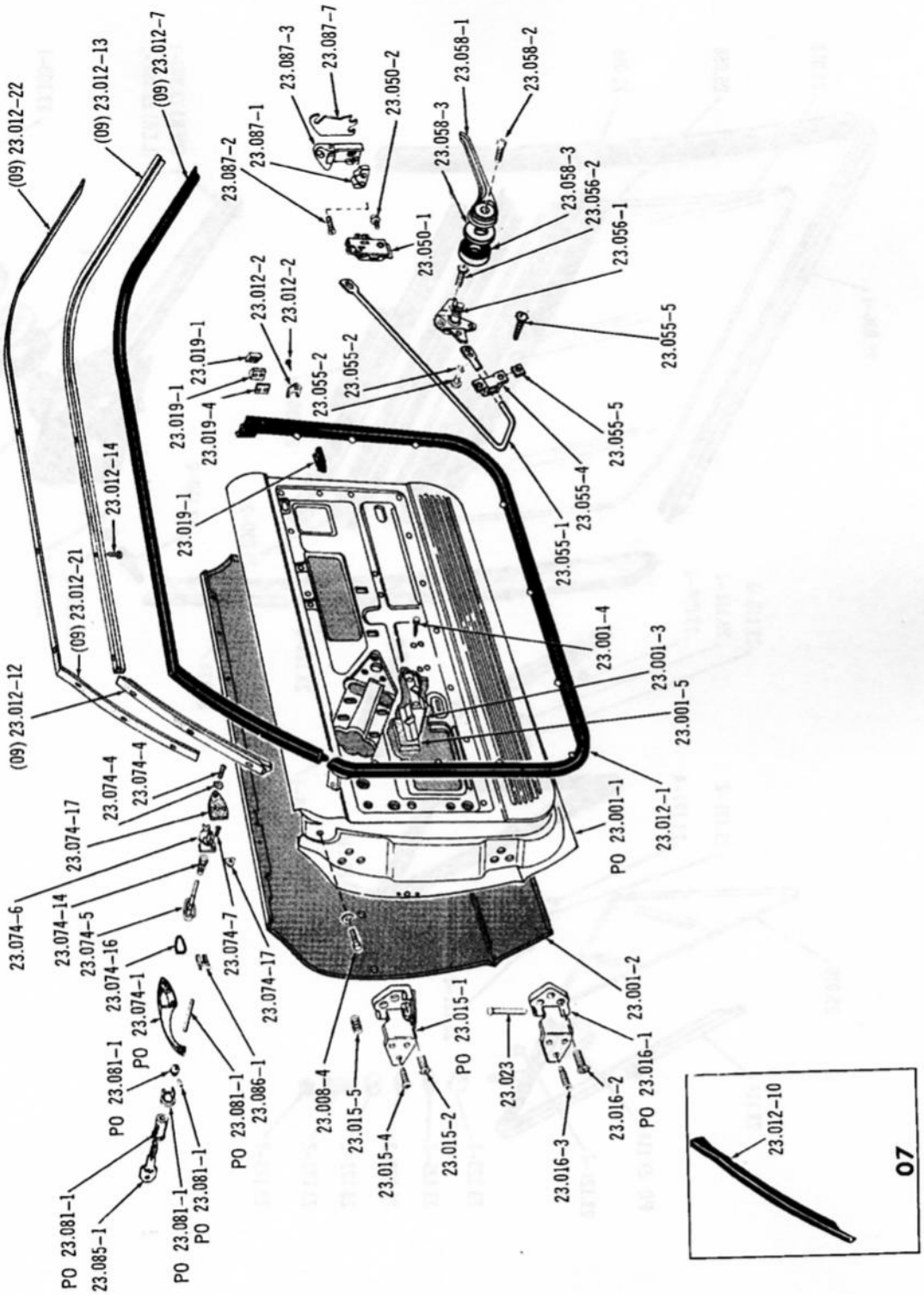

FRONT DOOR, HARDWARE AND SEALERS ... 1967 (07), 1967/69 (09)

Printed in U.S.A.

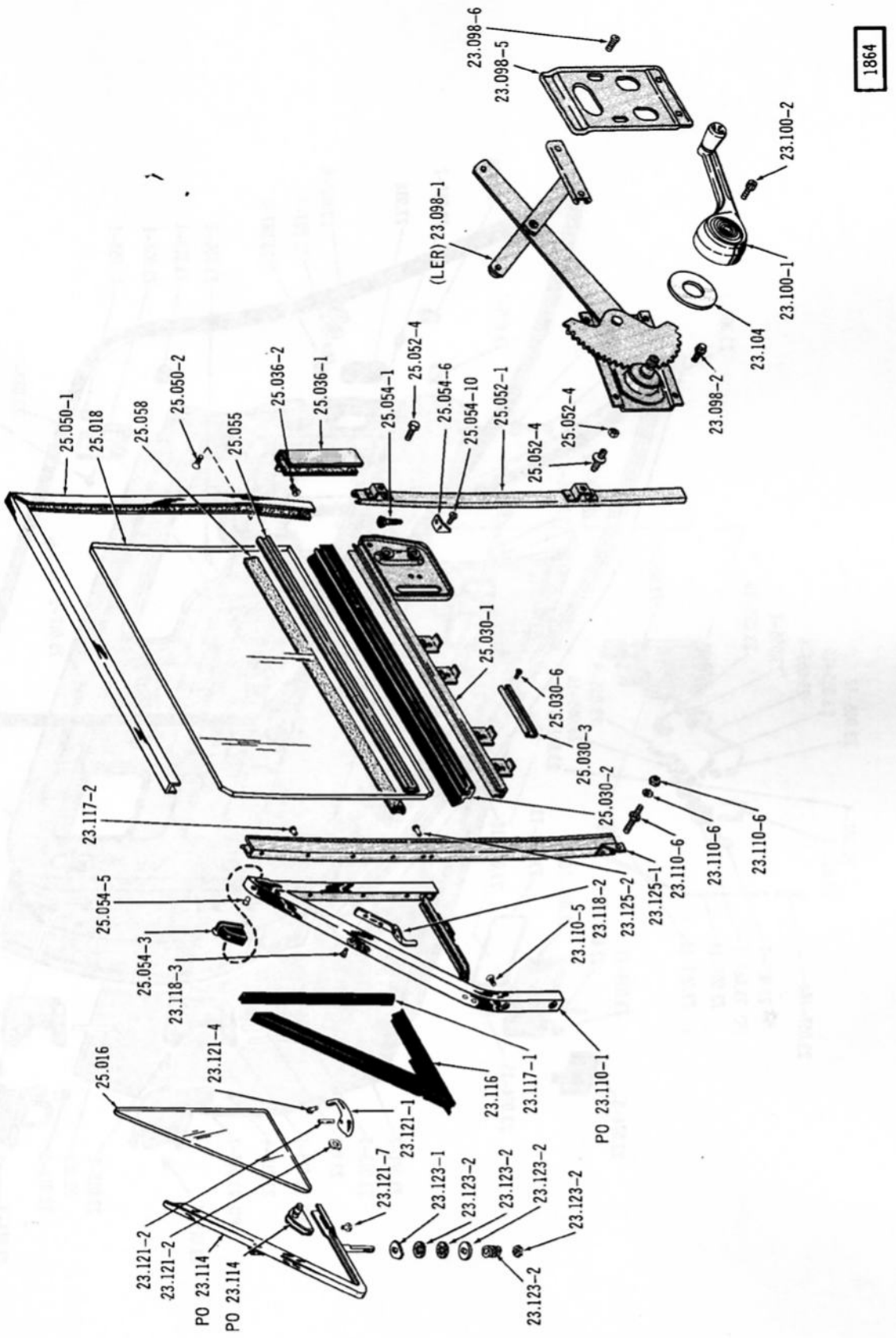

FRONT DOOR GLASS AND CHANNELS ... 1967 (07), 1967/69 (09)

3819

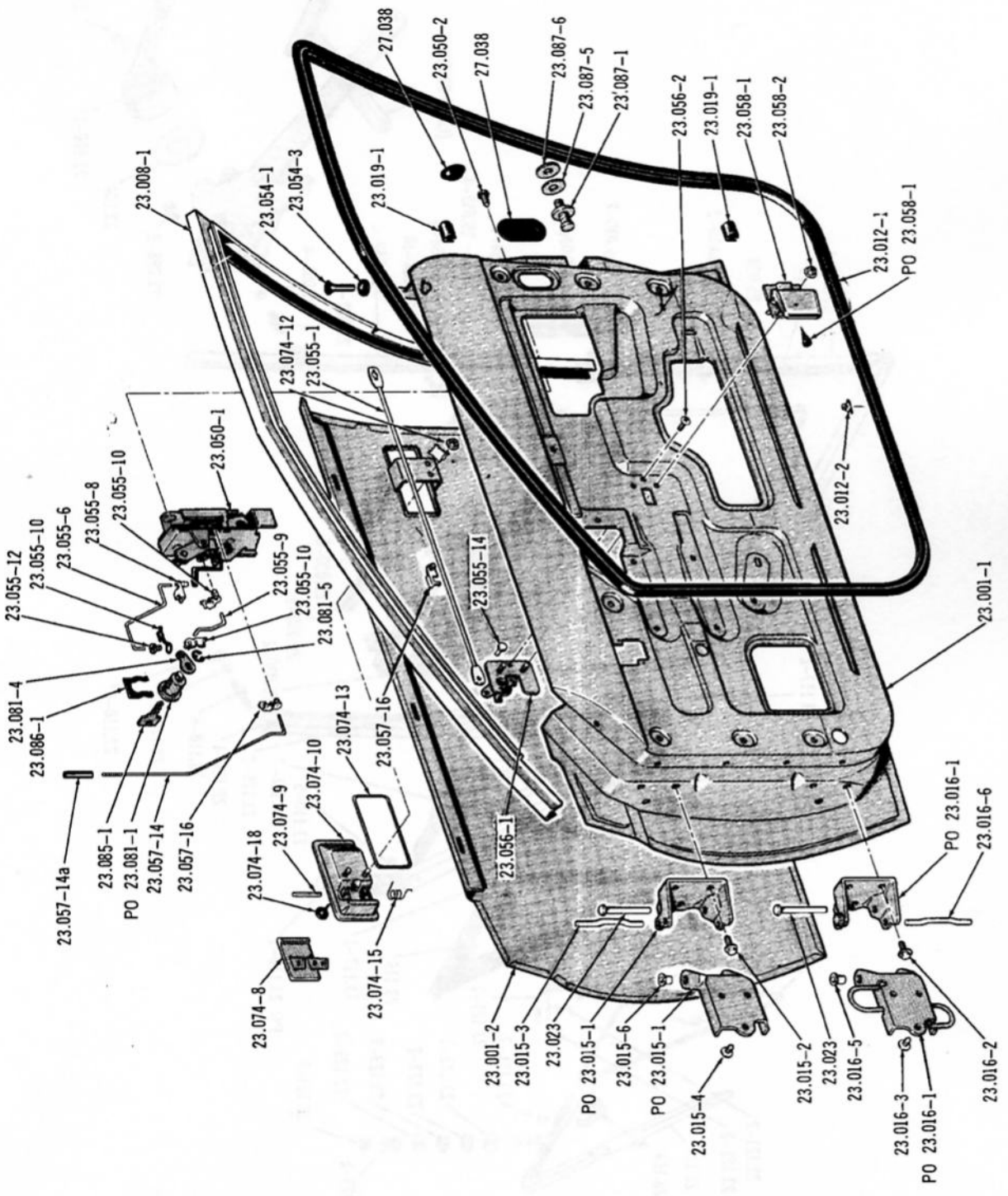

FRONT DOOR HARDWARE AND SEALERS ... 1970 (01)(40)

4179

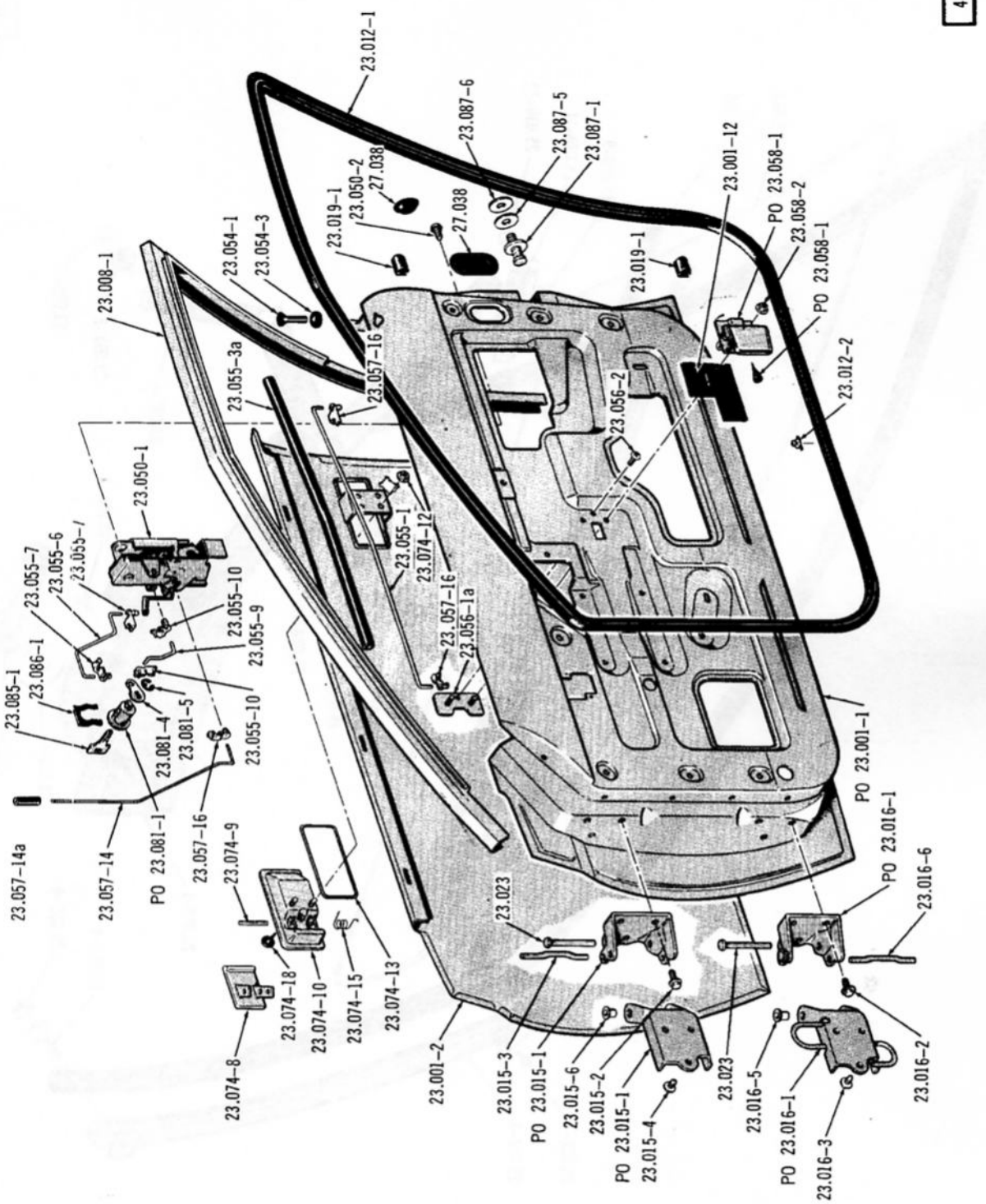

FRONT DOOR HARDWARE AND SEALERS . . . 1971/ (01)(40)

Printed in U.S.A.

3820

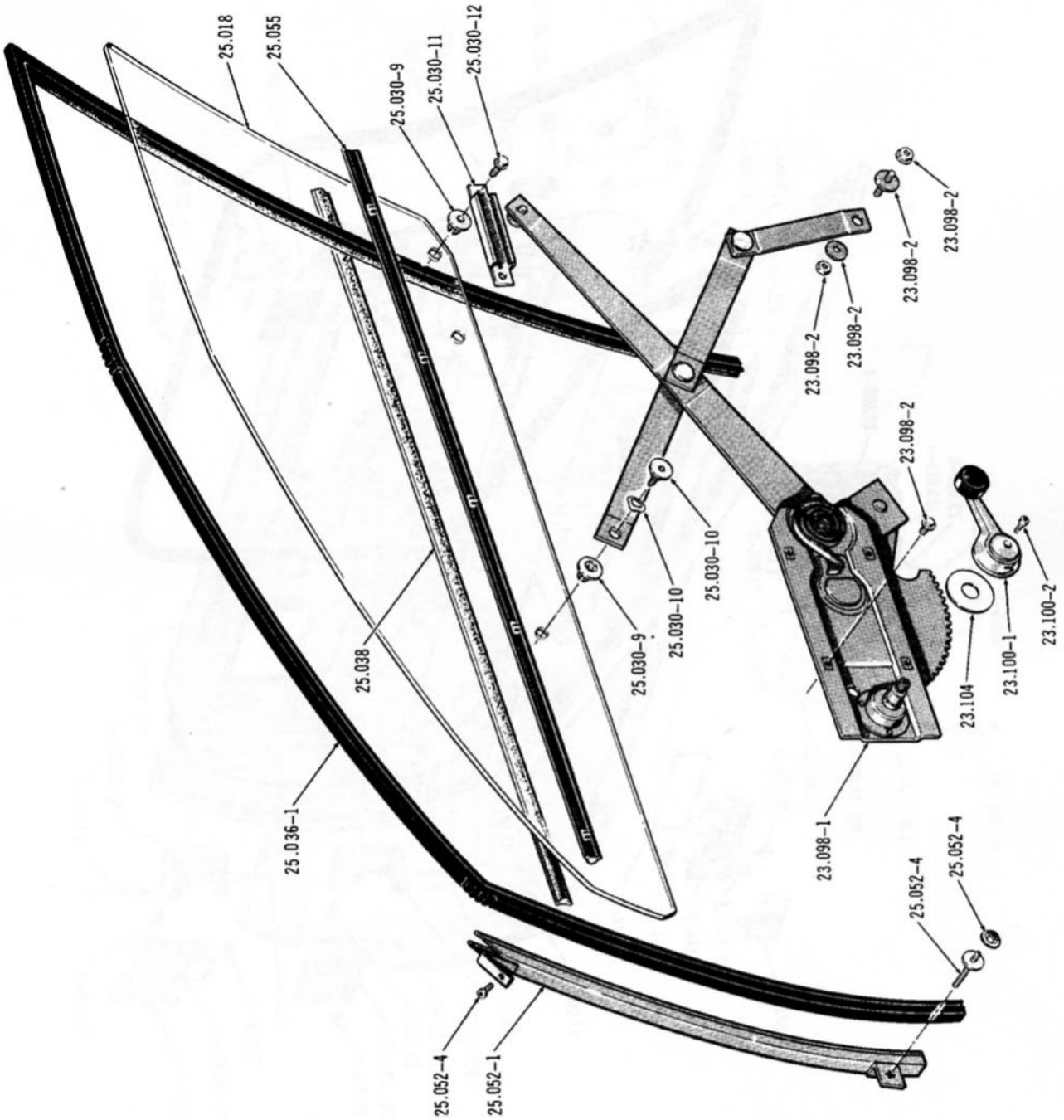

FRONT DOOR GLASS AND CHANNELS ... 1970/ (01)(40)

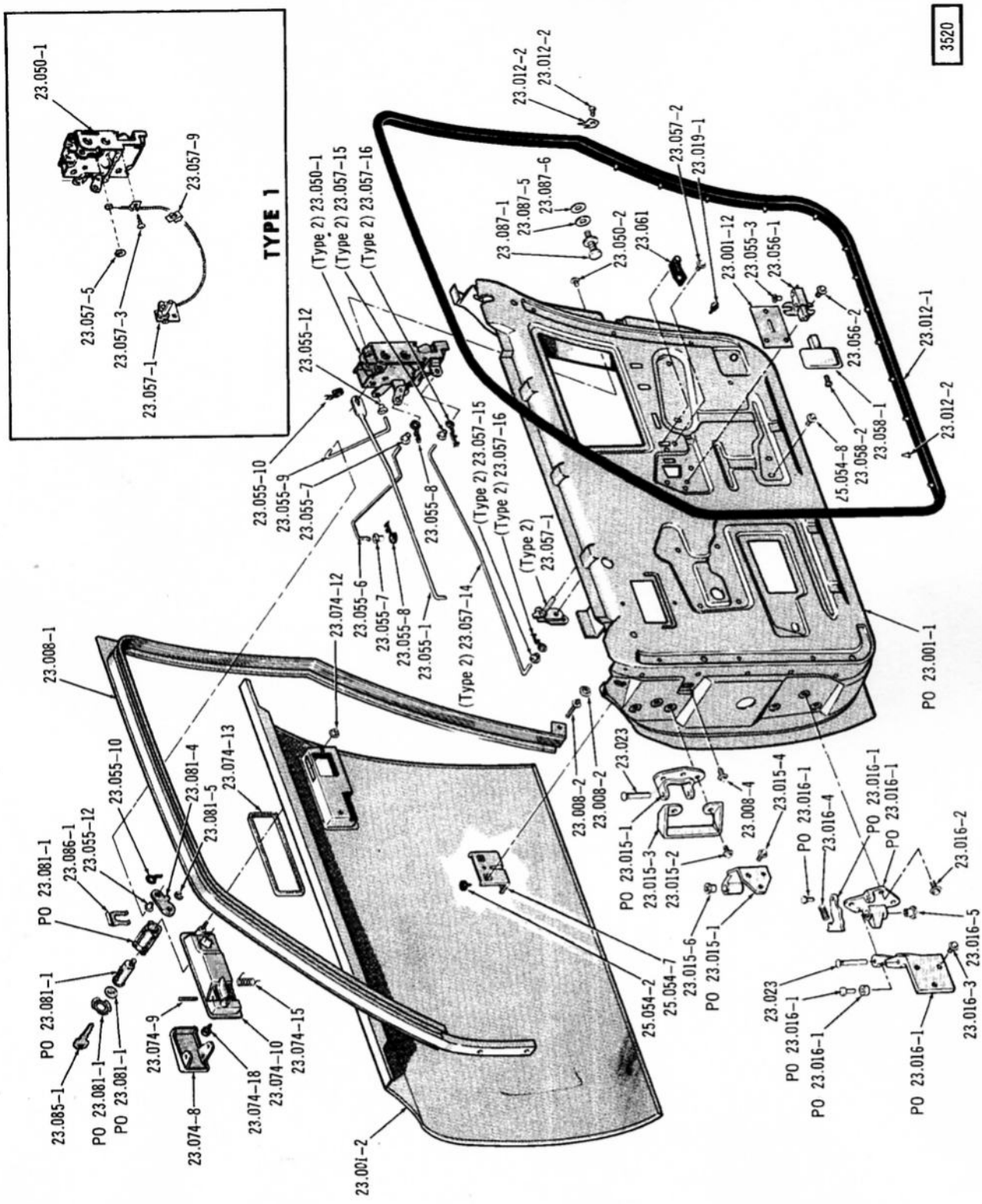

FRONT DOOR HARDWARE AND SEALERS ... 1968/71 (15)(18)(85)(88)

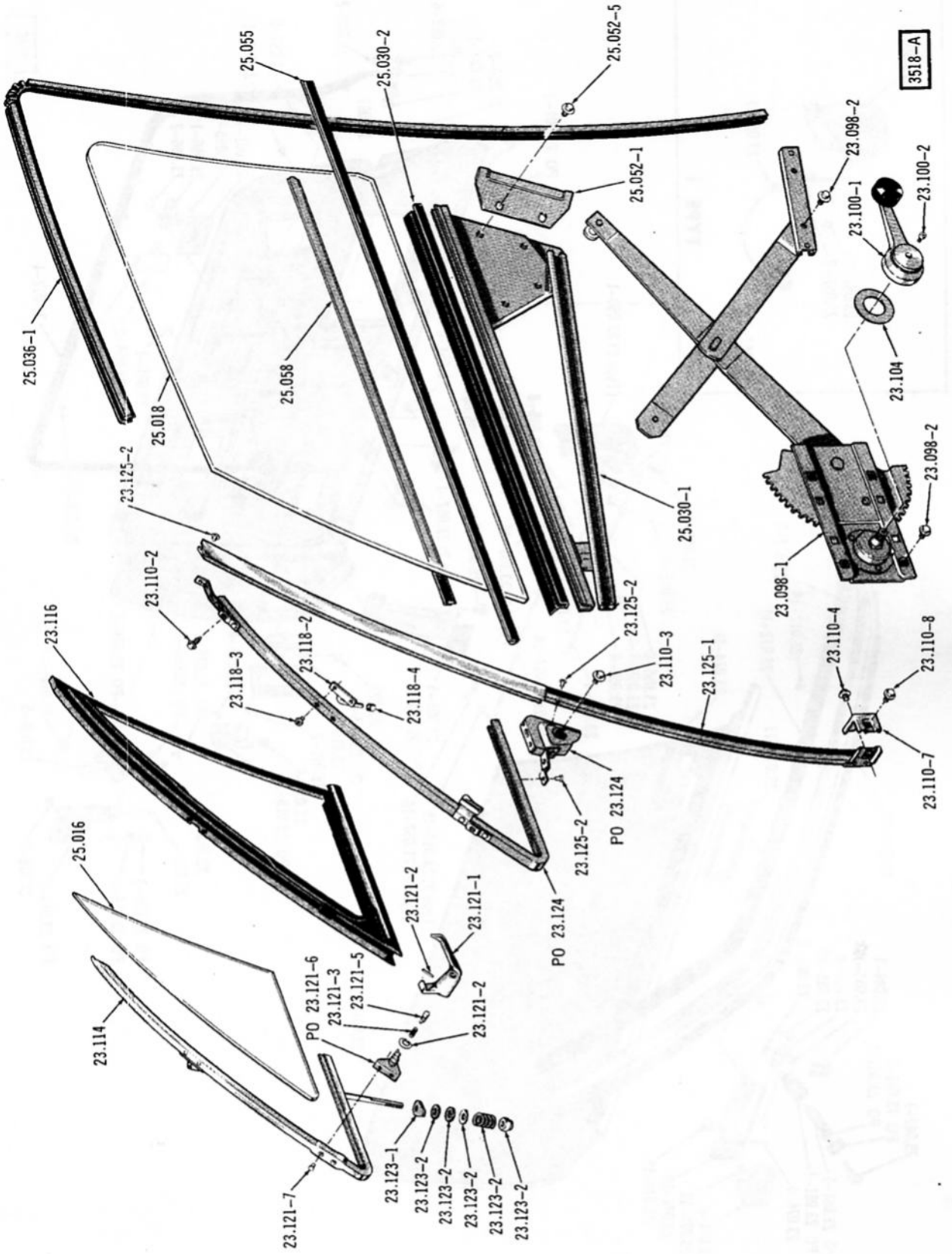

FRONT DOOR GLASS AND CHANNELS ... 15, 18, 85, 88

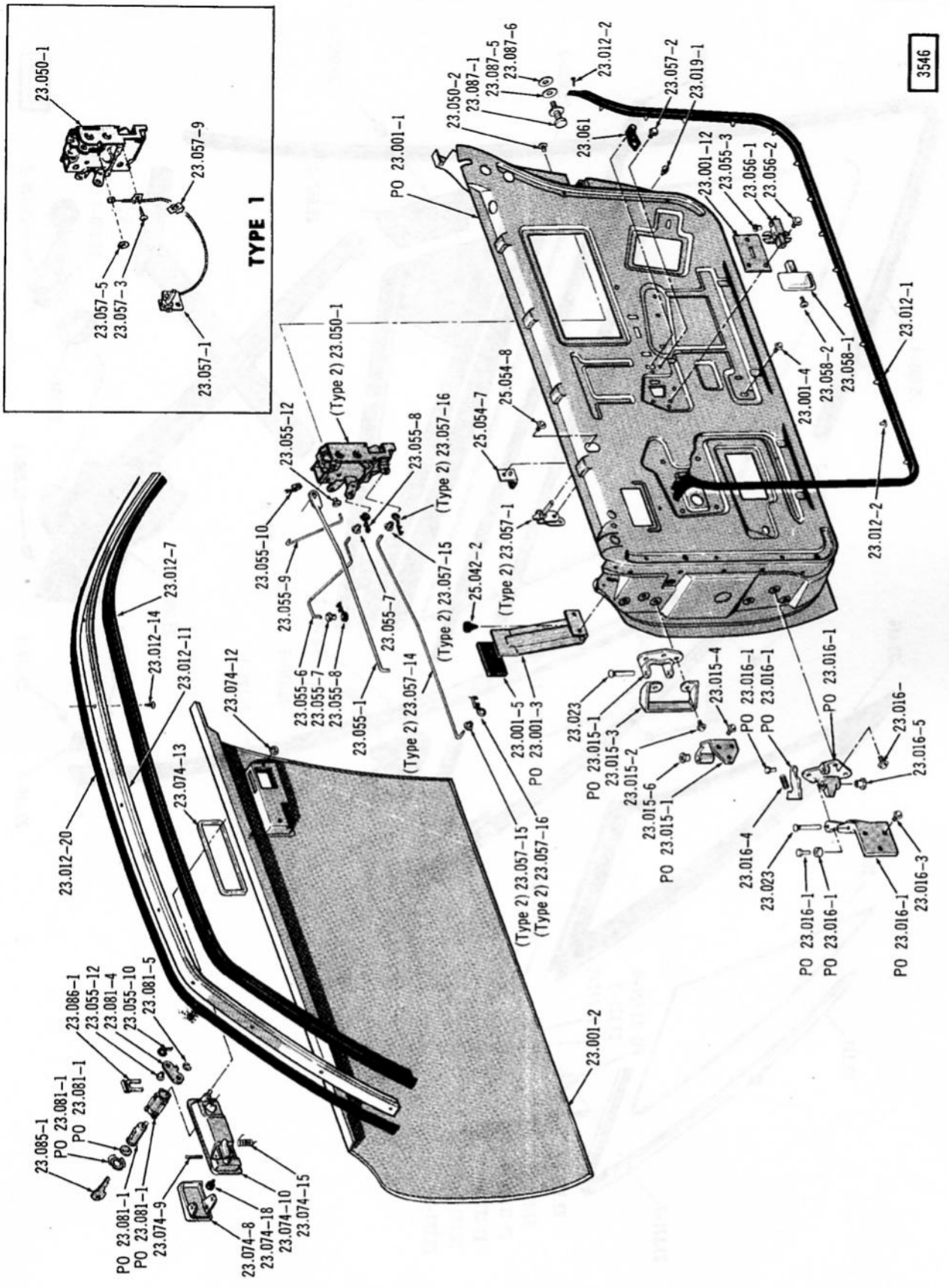

FRONT DOOR HARDWARE AND SEALERS ... 1968 (17), 1968/71 (19)(89)

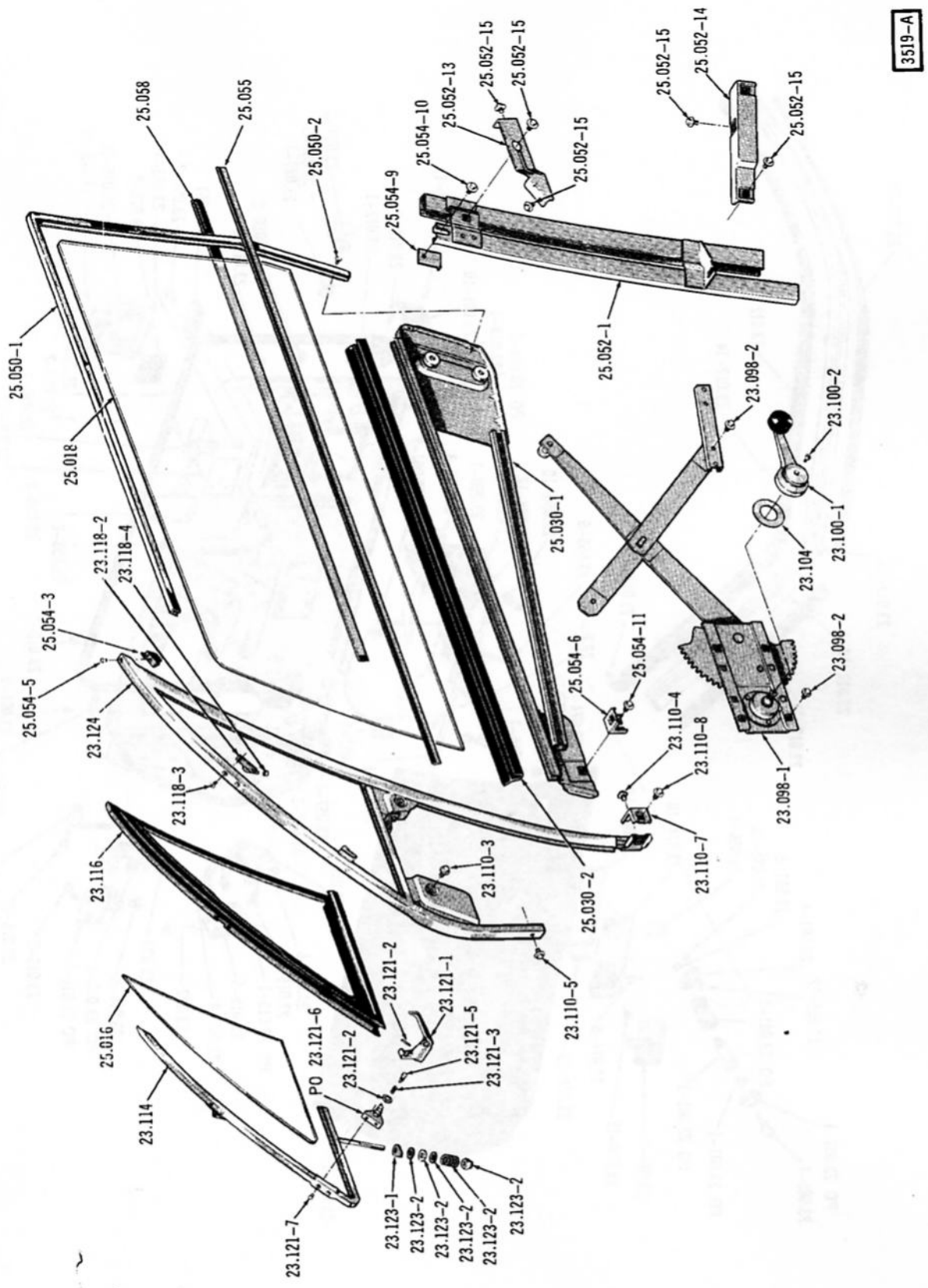

FRONT DOOR GLASS AND CHANNELS ... 17, 19, 59, 87, 89

3431

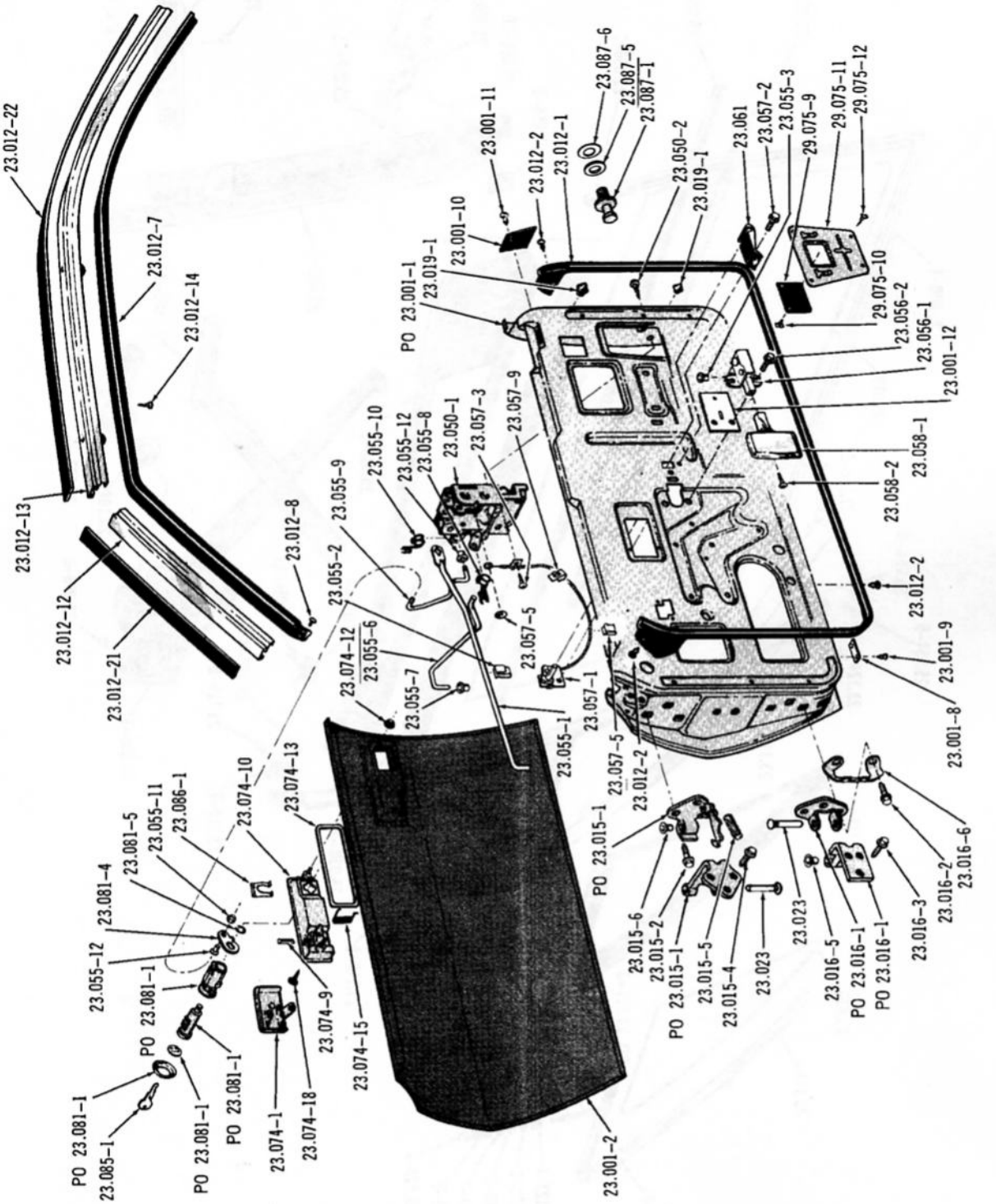

FRONT DOOR, HARDWARE AND SEALERS . . . 1968/70 (30)(70)

Printed in U.S.A.

4180

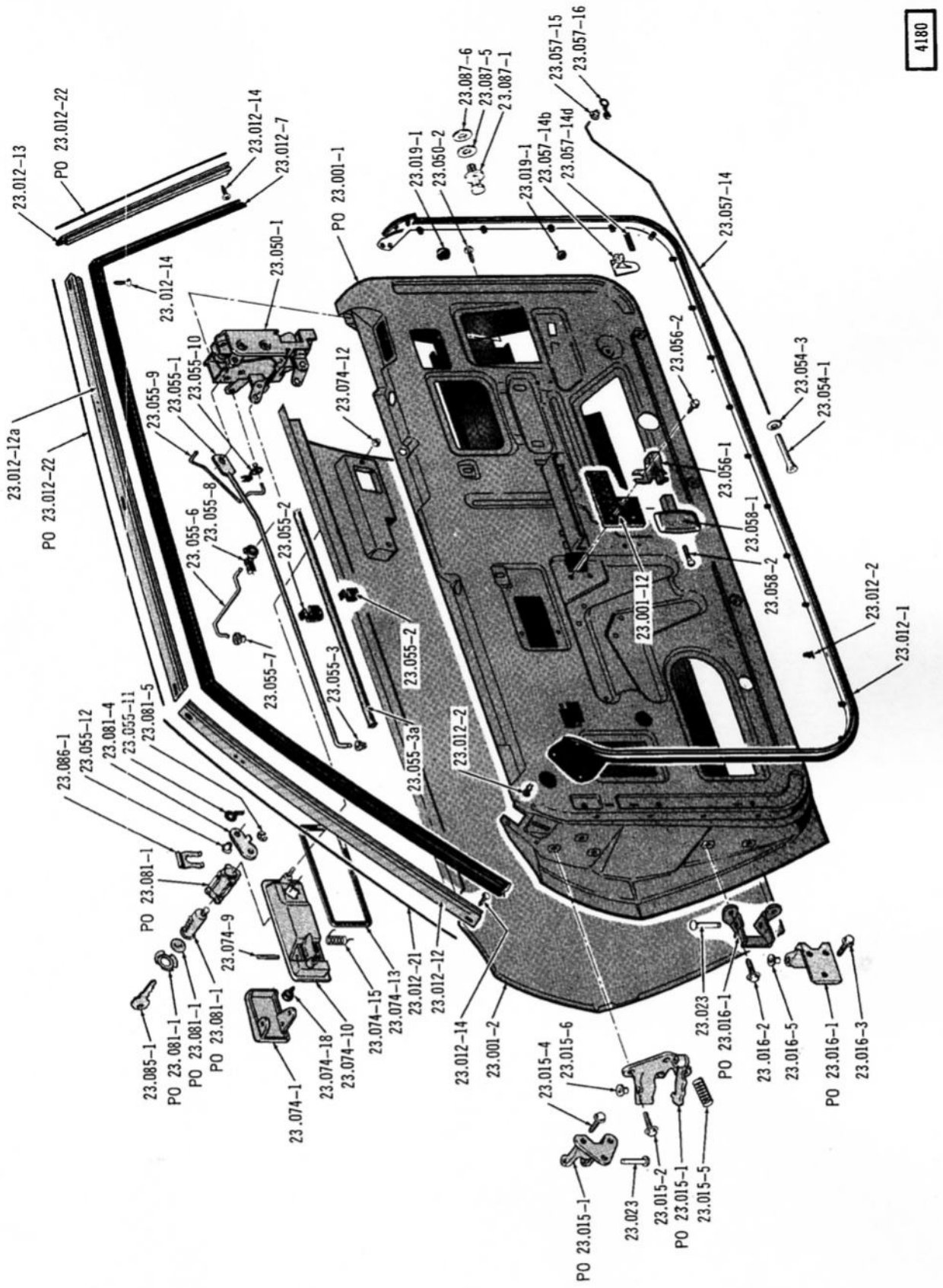

FRONT DOOR HARDWARE AND SEALERS . . . 1971/ (70)

Printed in U.S.A.

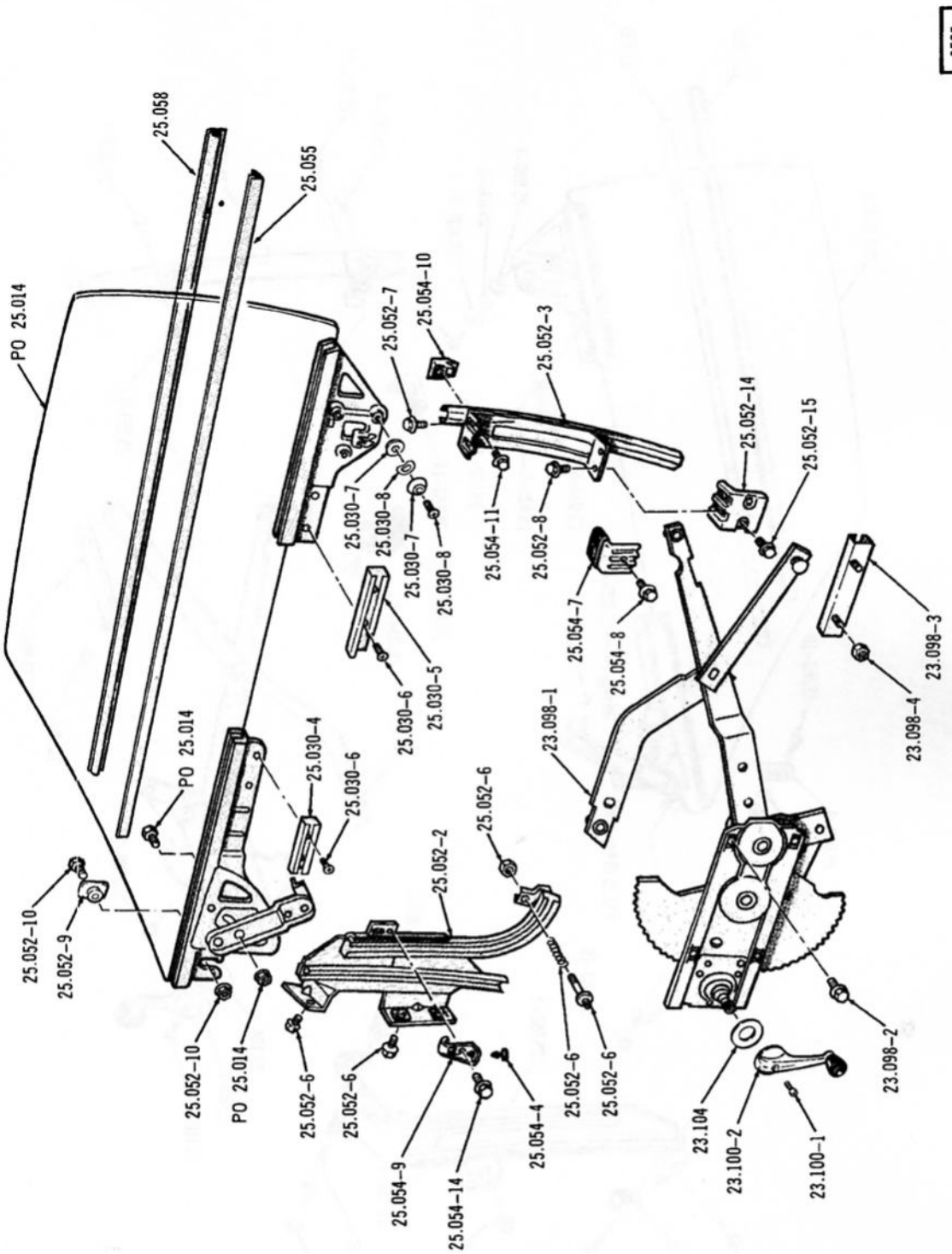

FRONT DOOR GLASS AND CHANNELS ... 1968-TYPE 1 (30)(70)

3509

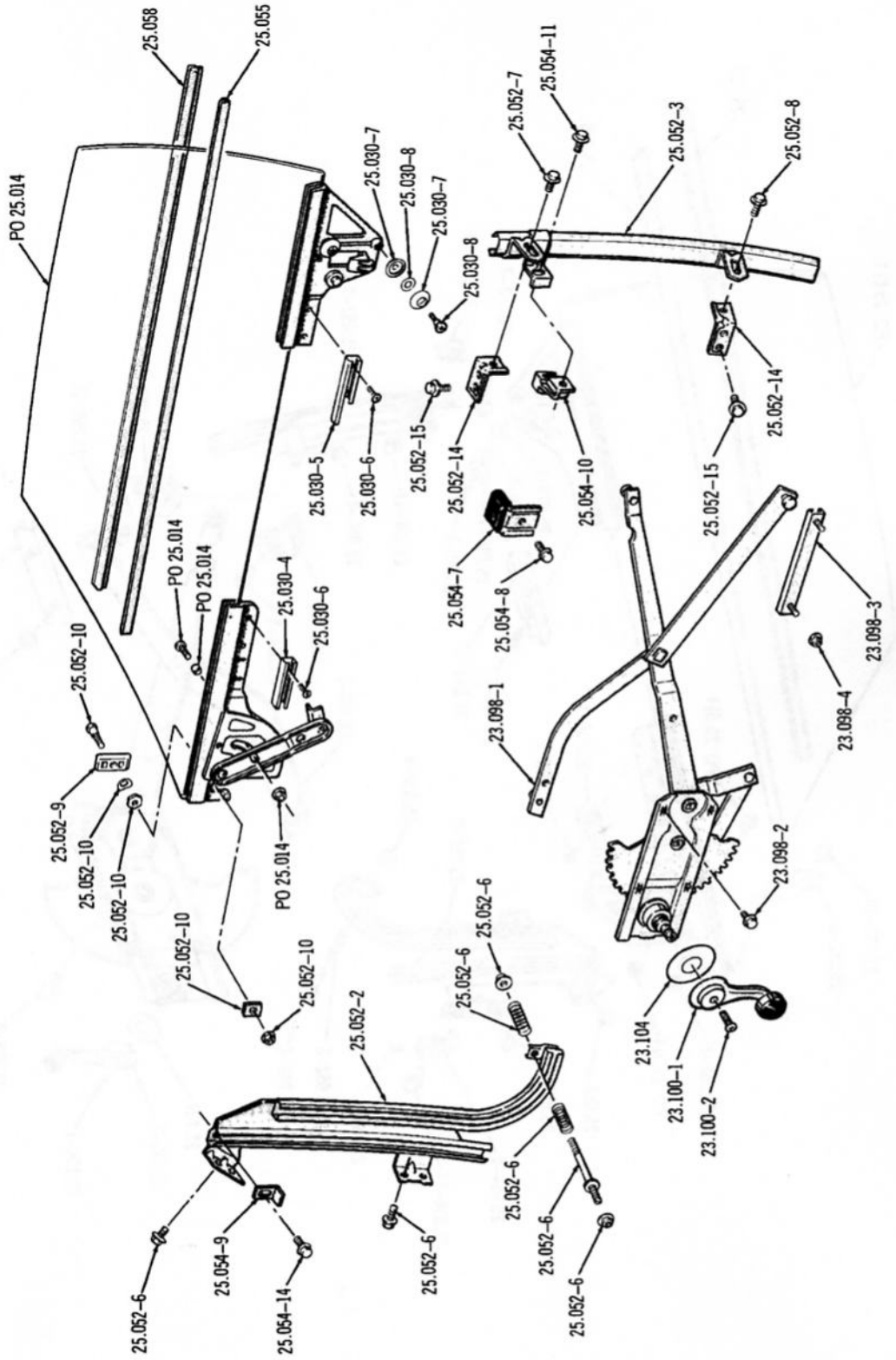

FRONT DOOR GLASS AND CHANNELS ... 1968-TYPE 2 (30)(70), 1969/70 (30)(70)

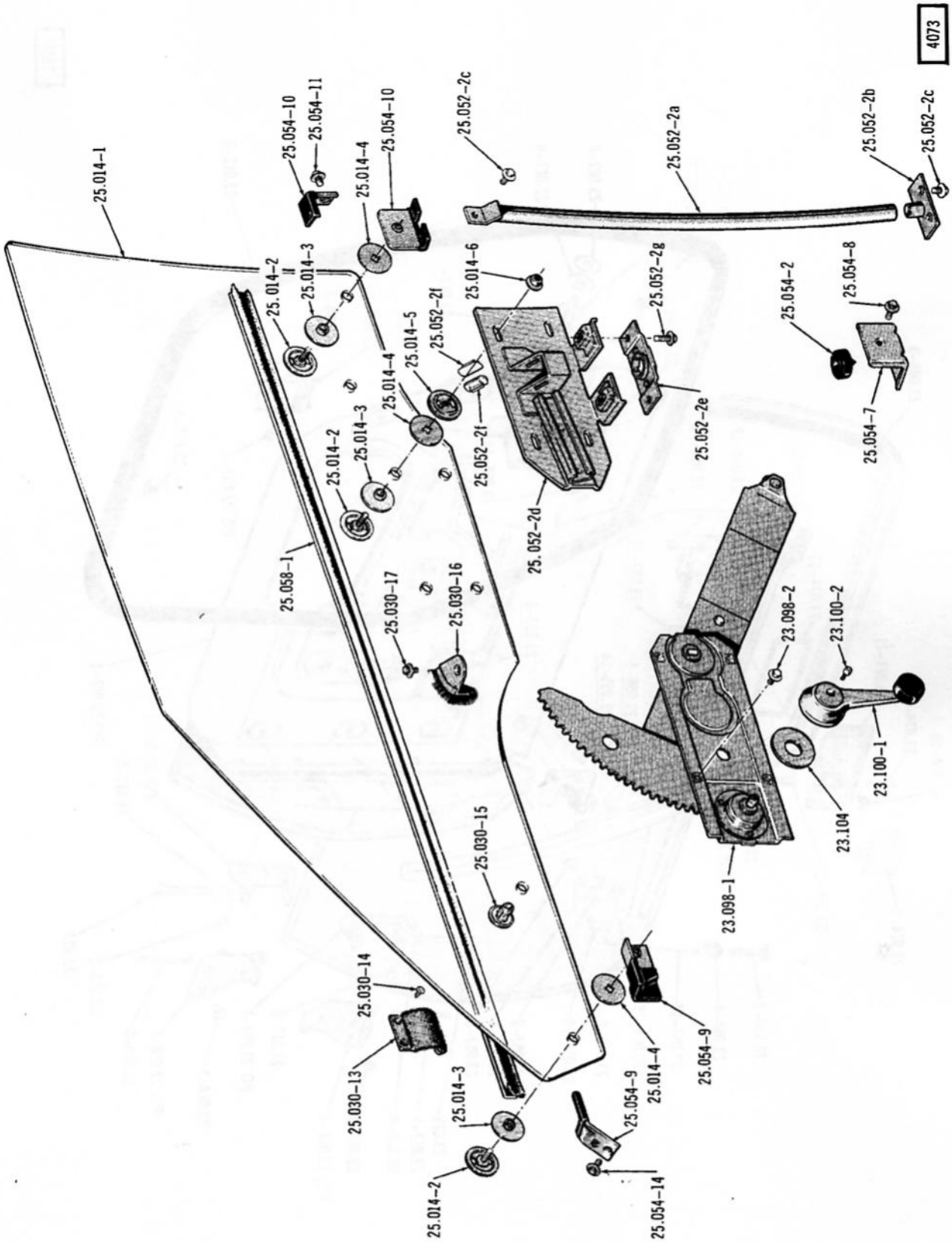

FRONT DOOR GLASS AND CHANNELS ... 1971/ (70)

3836

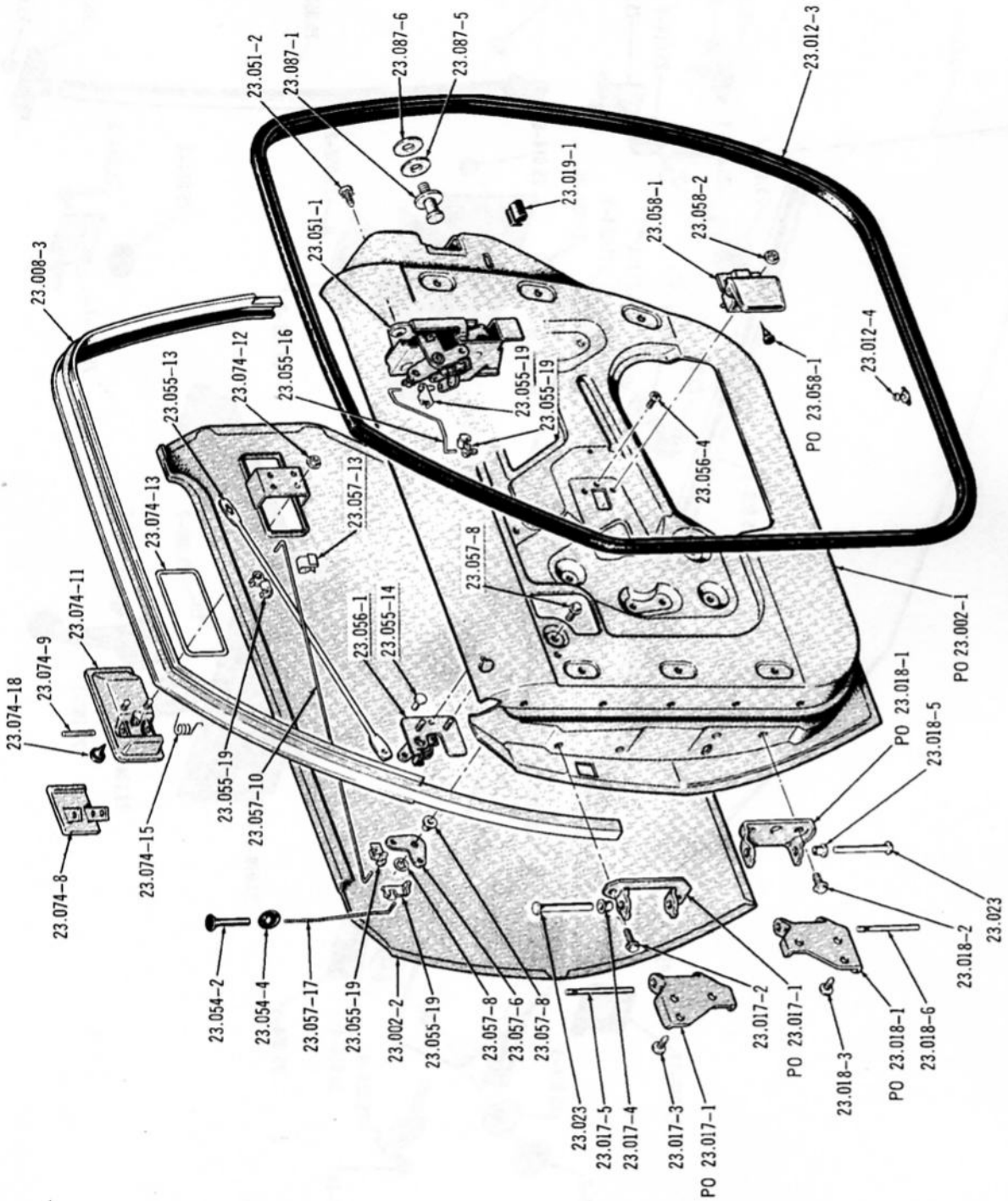

REAR DOOR HARDWARE AND SEALERS ... 1970/ (05)(08)

3837

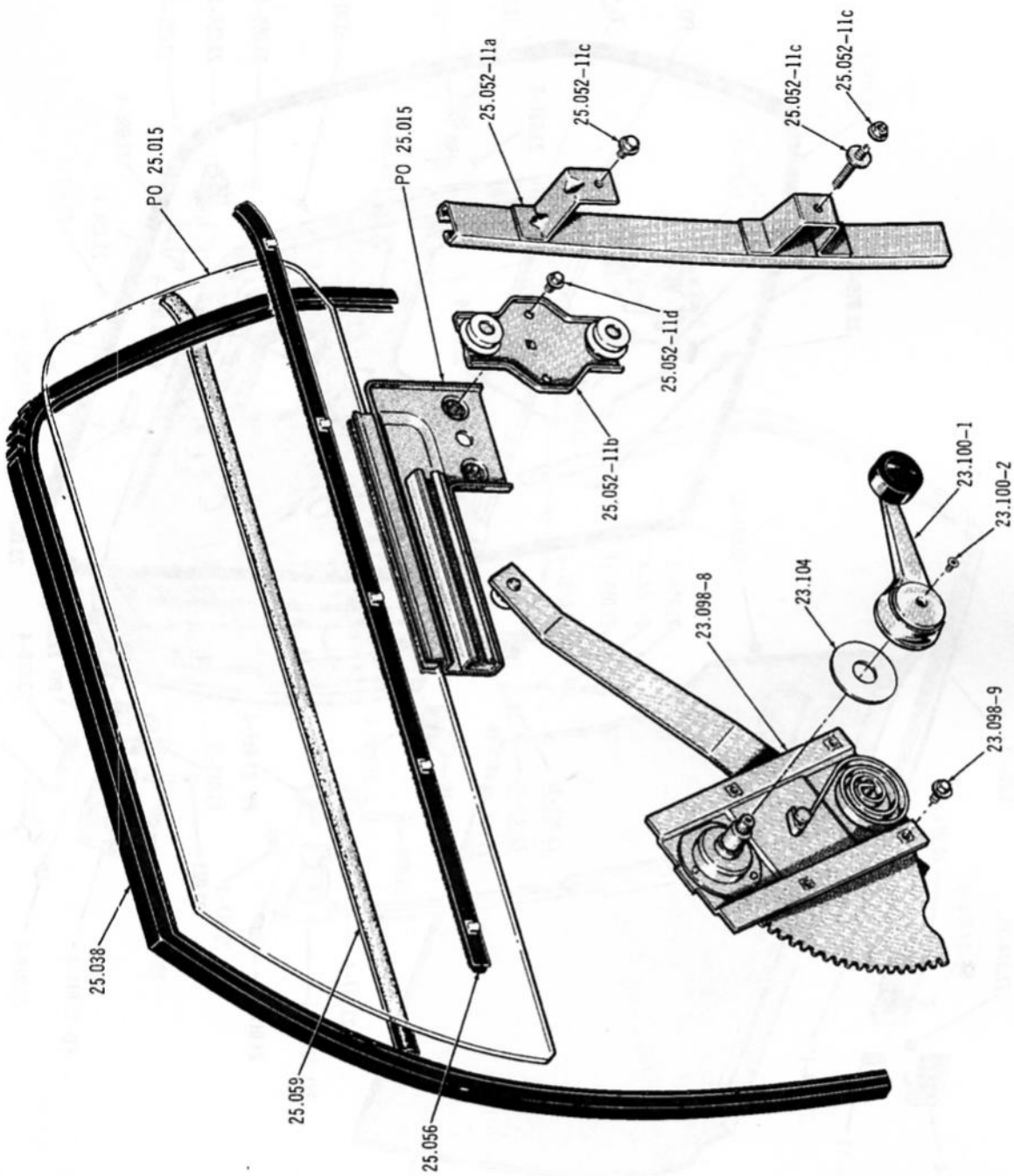

REAR DOOR GLASS AND CHANNELS .... 1970/ (05)(08)

Printed in U.S.A.

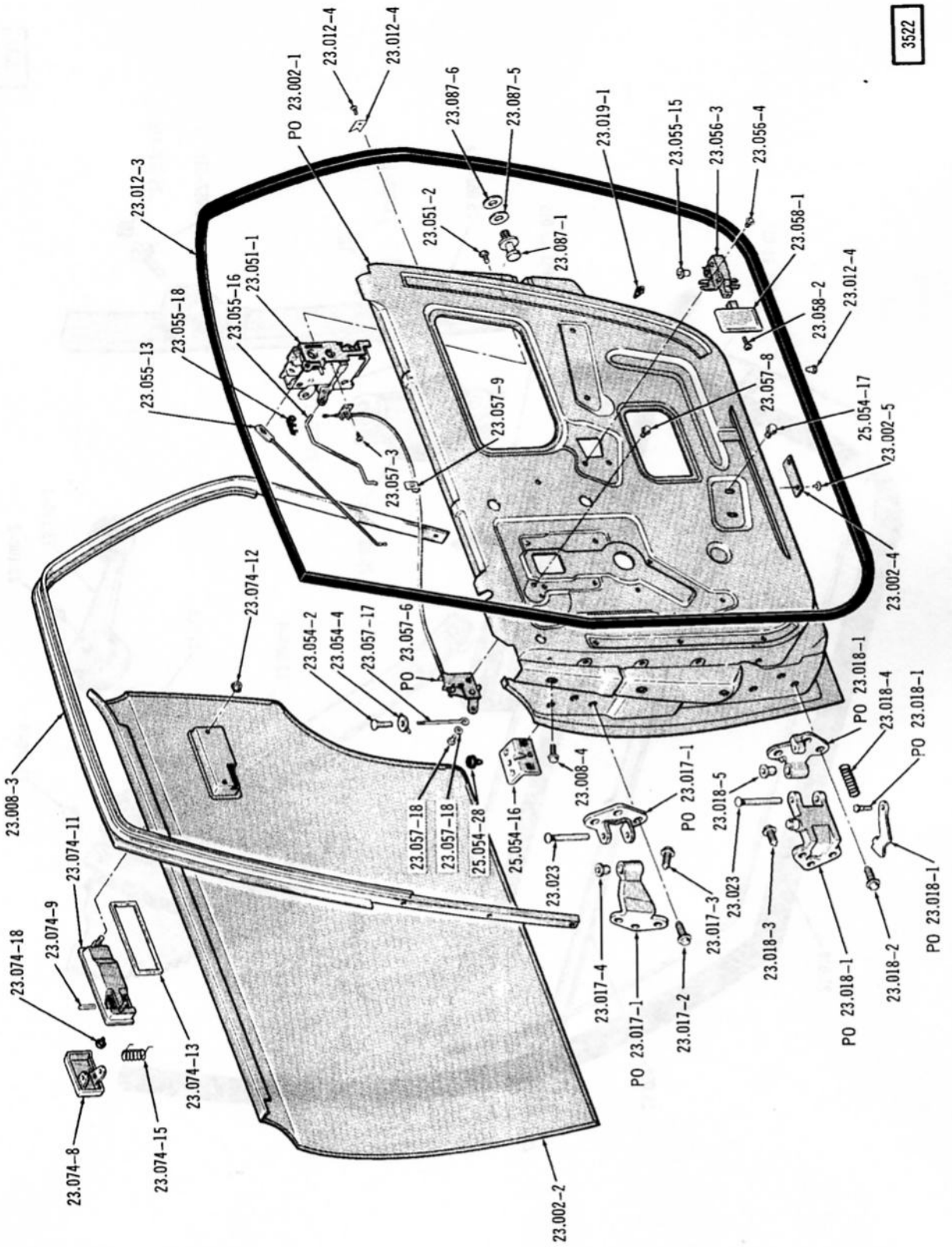

REAR DOOR HARDWARE AND SEALERS ... 1968/ (10)(80)

3521

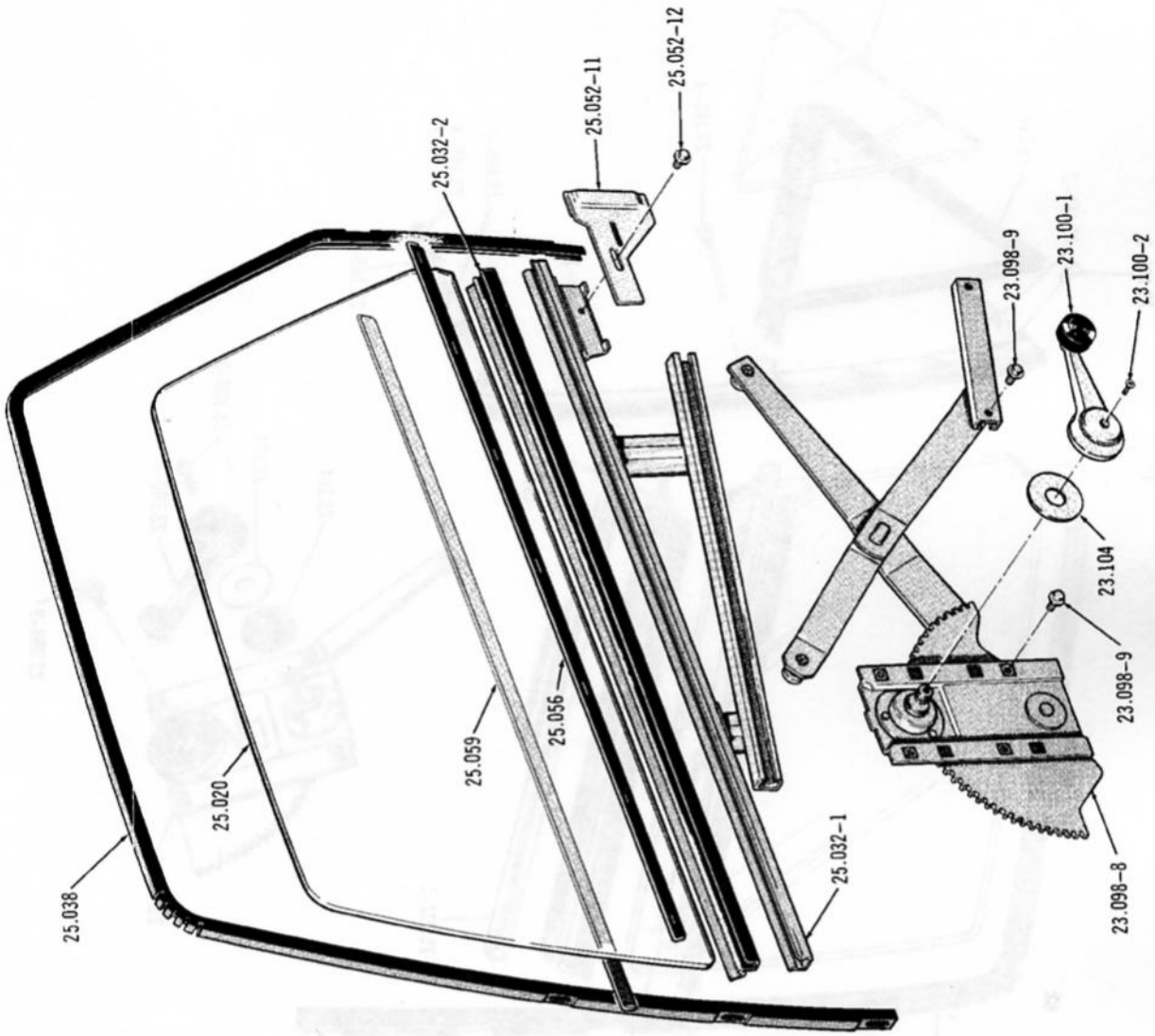

REAR DOOR GLASS AND CHANNELS ... 1968/ (10)(80)

2379

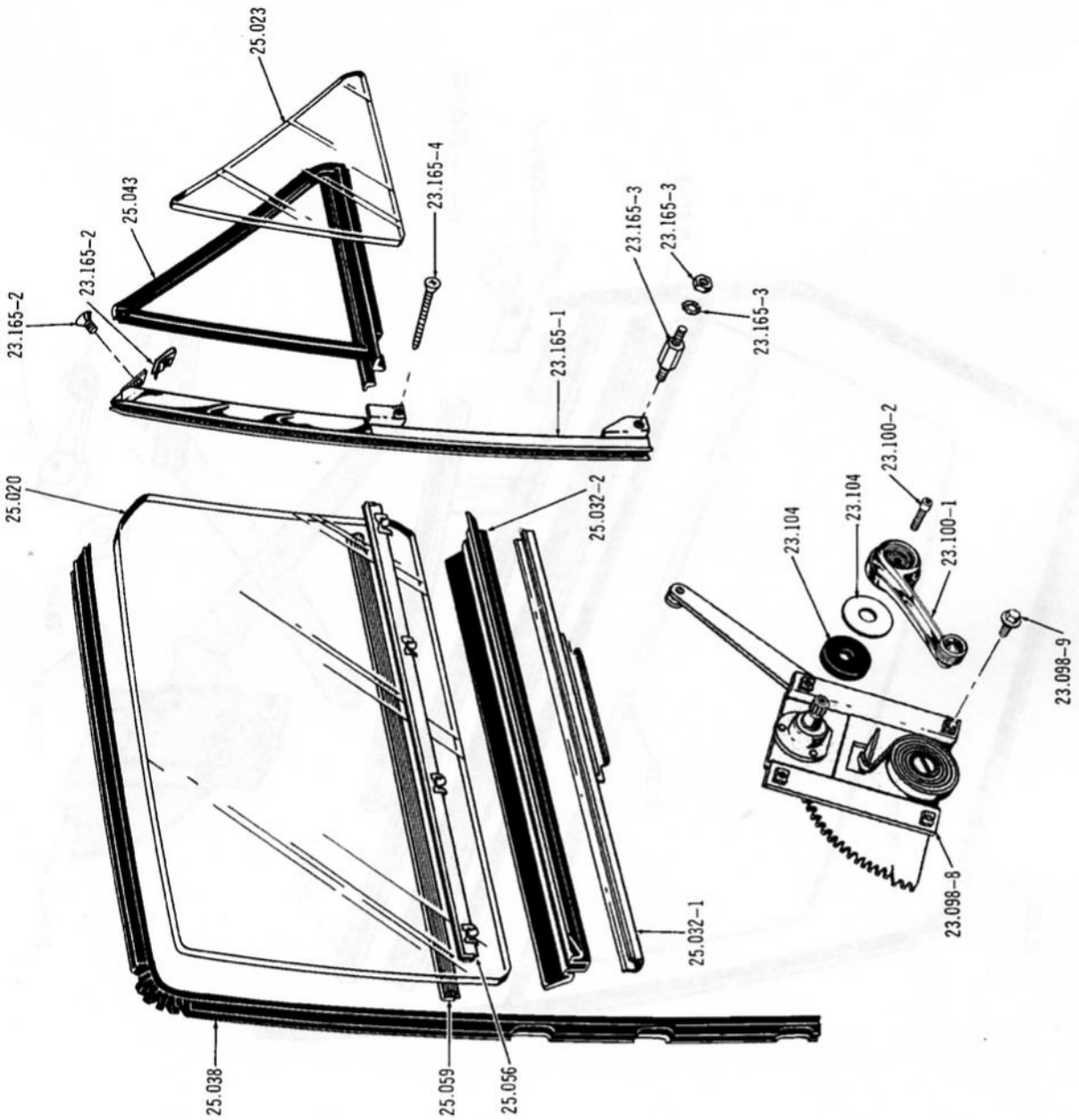

REAR DOOR GLASS AND CHANNELS ... 1967/69 (05)(08)

Printed in U.S.A.

1860

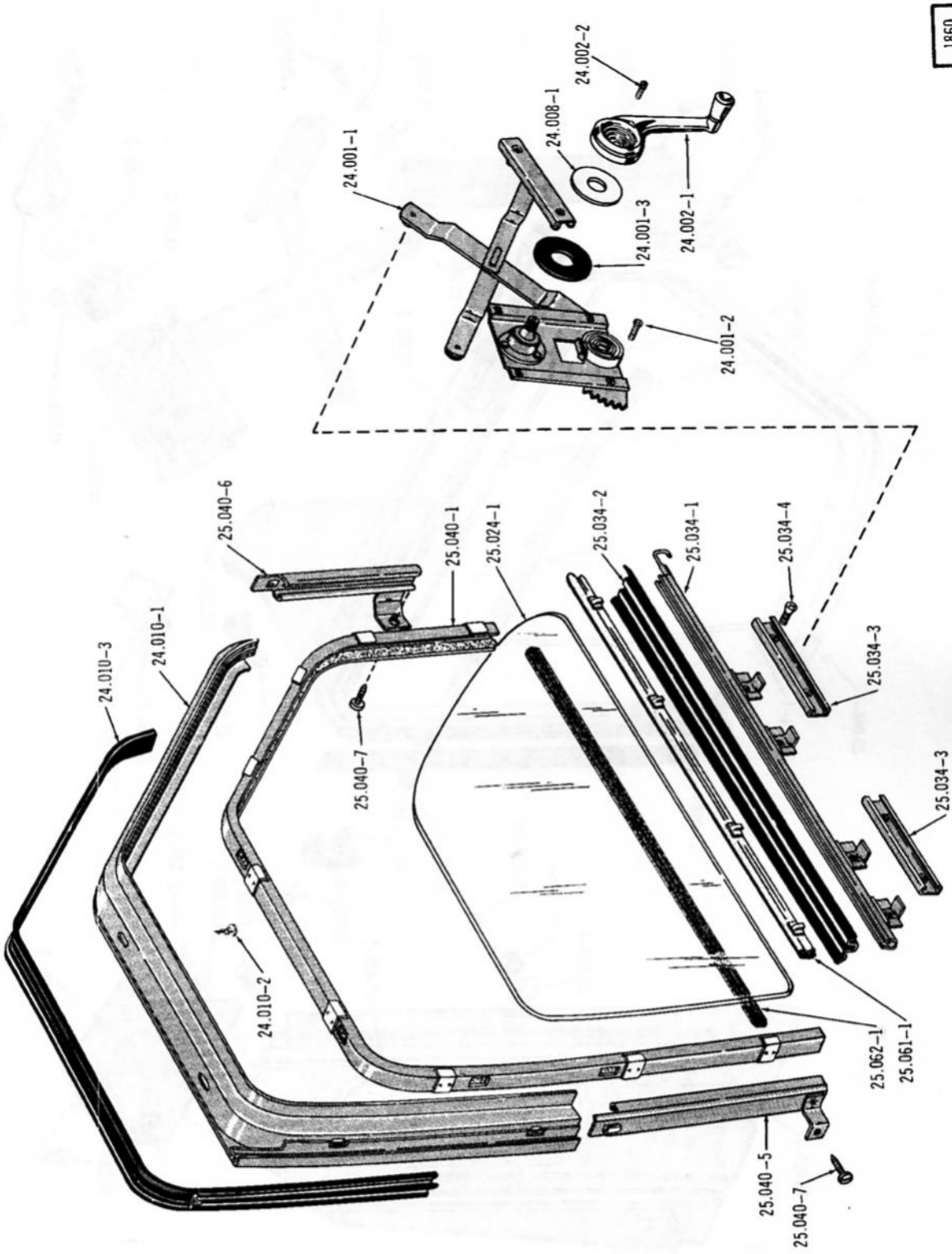

REAR QUARTER LOWERING GLASS AND CHANNELS ... 1967/69 (06)

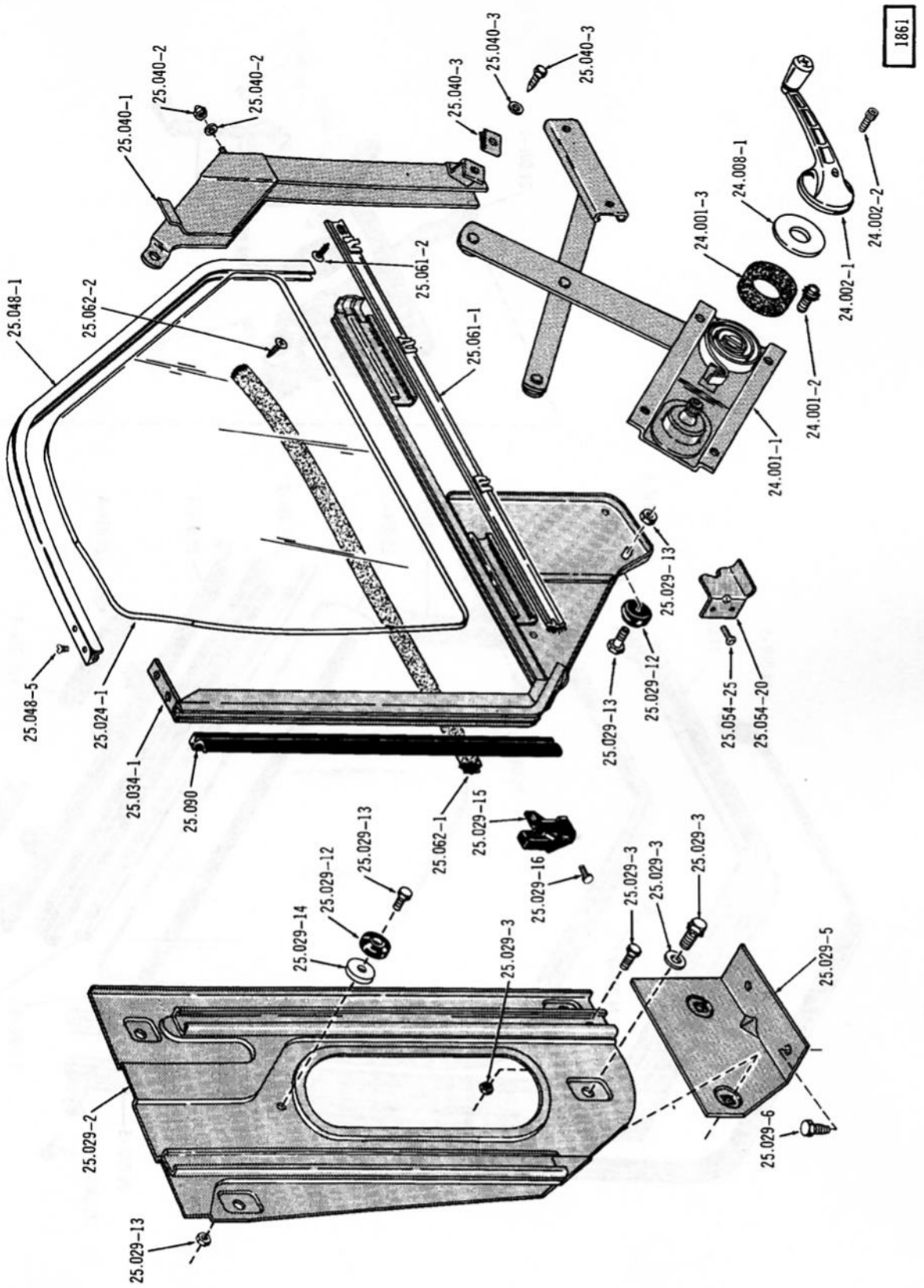

REAR QUARTER LOWERING GLASS AND CHANNELS ... 07

Printed in U.S.A.

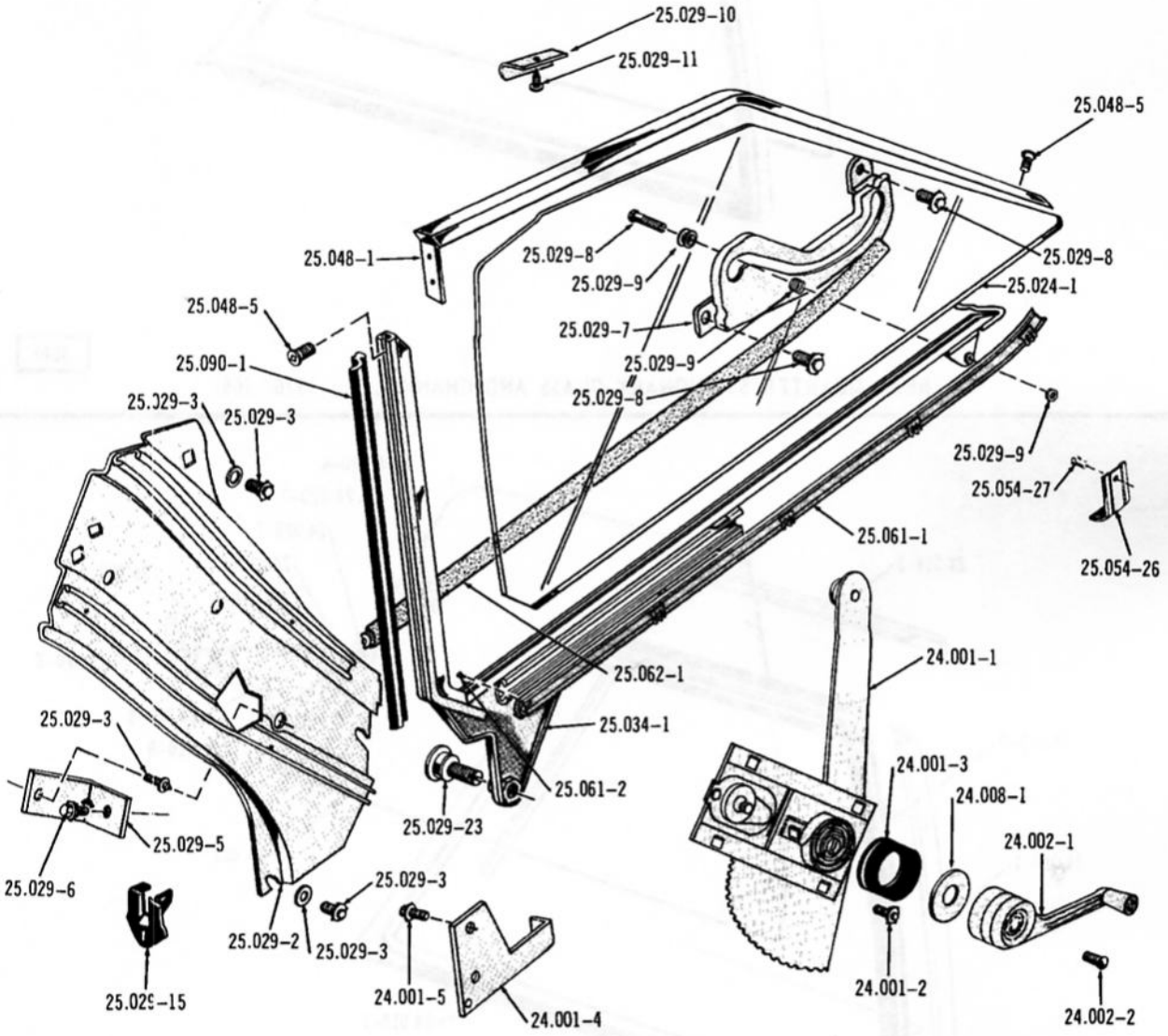

2385-A

REAR QUARTER LOWERING GLASS AND CHANNELS ... 1967/69 (09)

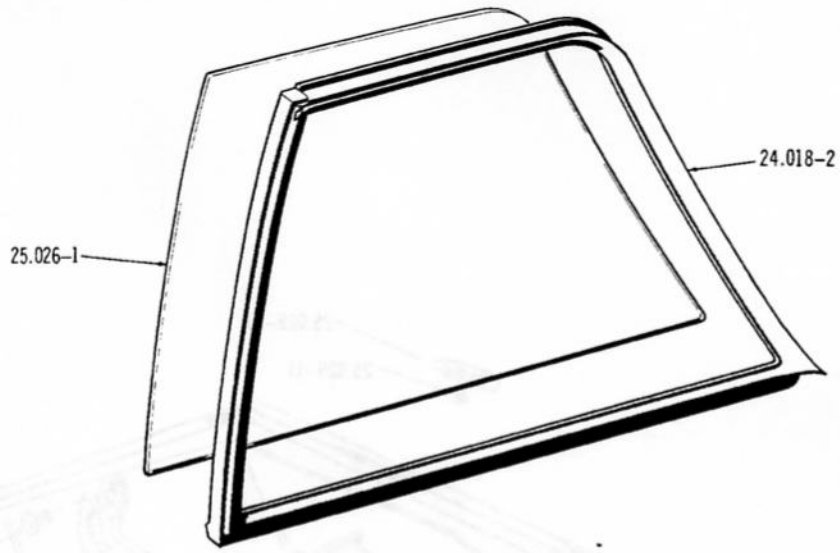

3840

REAR QUARTER STATIONARY GLASS AND CHANNEL ... 1970/ (06)

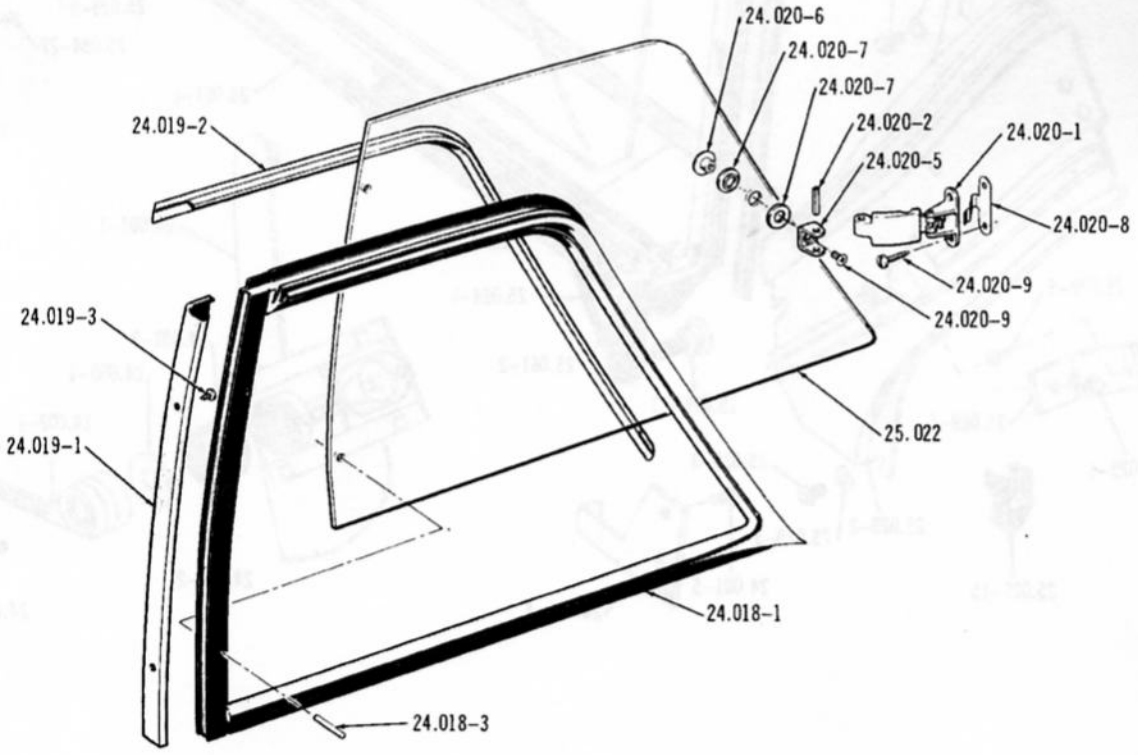

3849

REAR QUARTER PIVOTING GLASS AND CHANNELS ... 1970-TYPE 1 (06)

Printed in U.S.A.

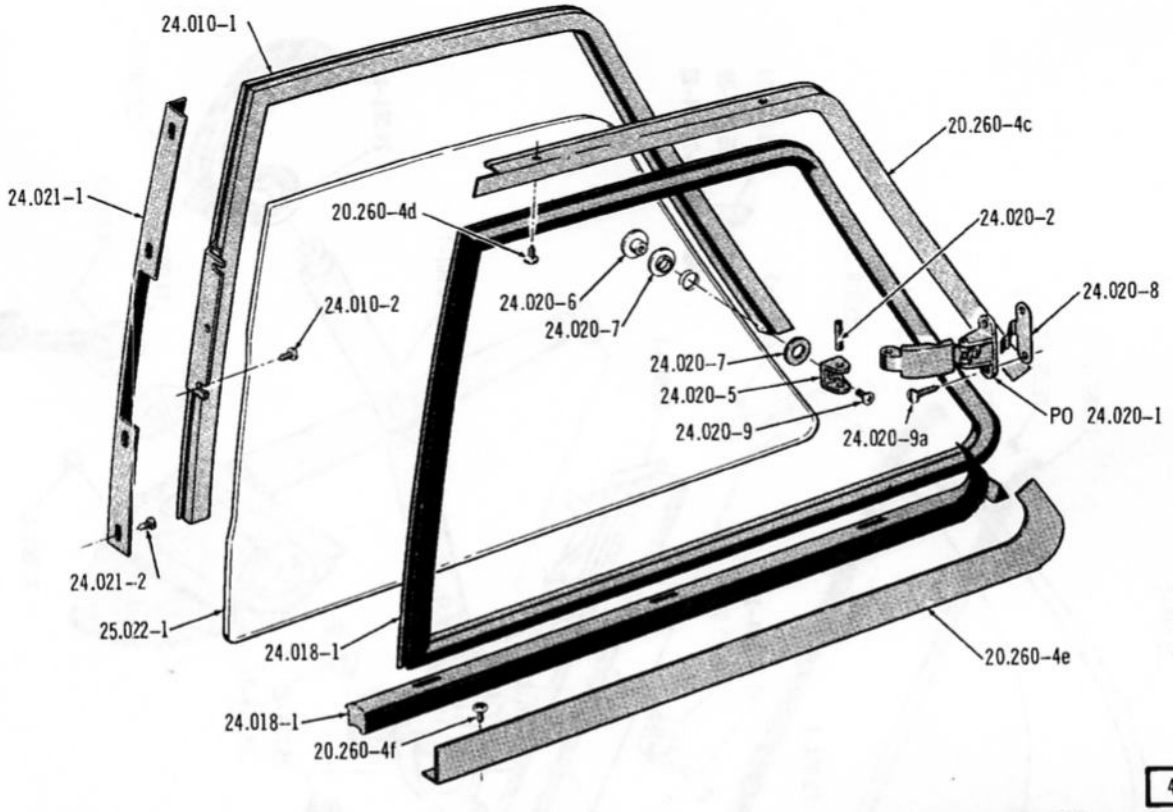

REAR QUARTER PIVOTING GLASS AND CHANNELS ... 1970-TYPE 2 (06), 1971 (06)

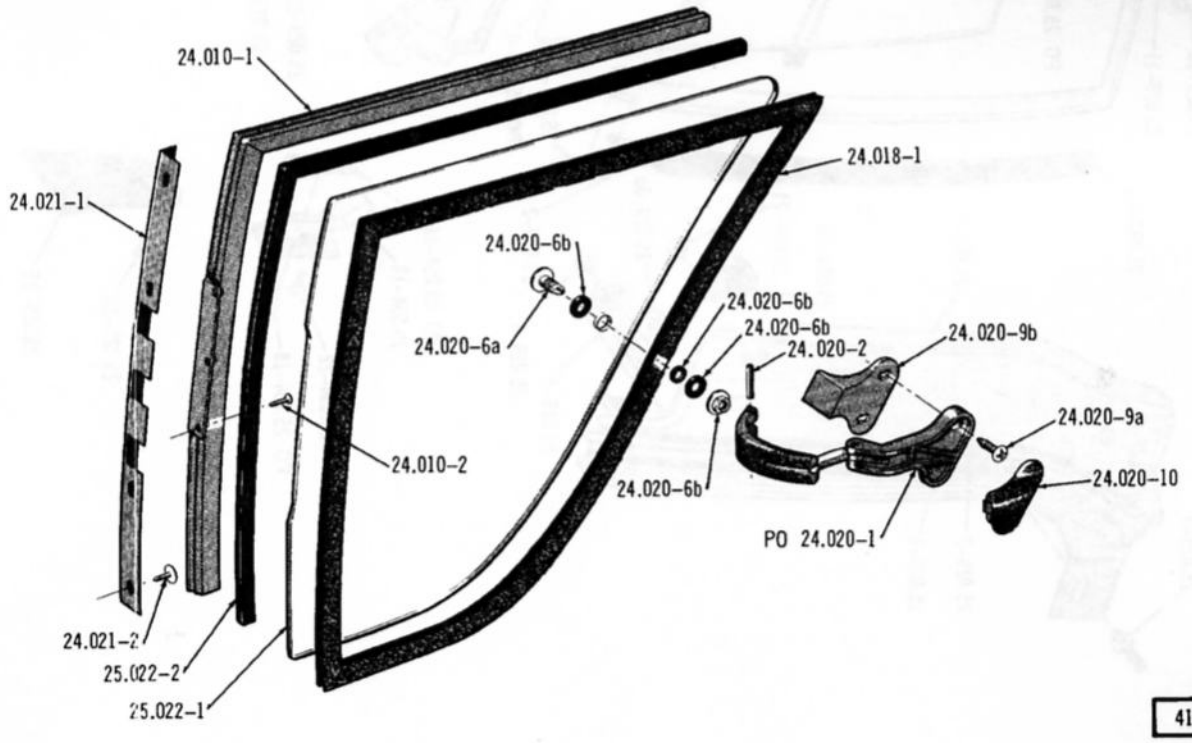

REAR QUARTER PIVOTING GLASS AND CHANNELS . . . 1972 (40)

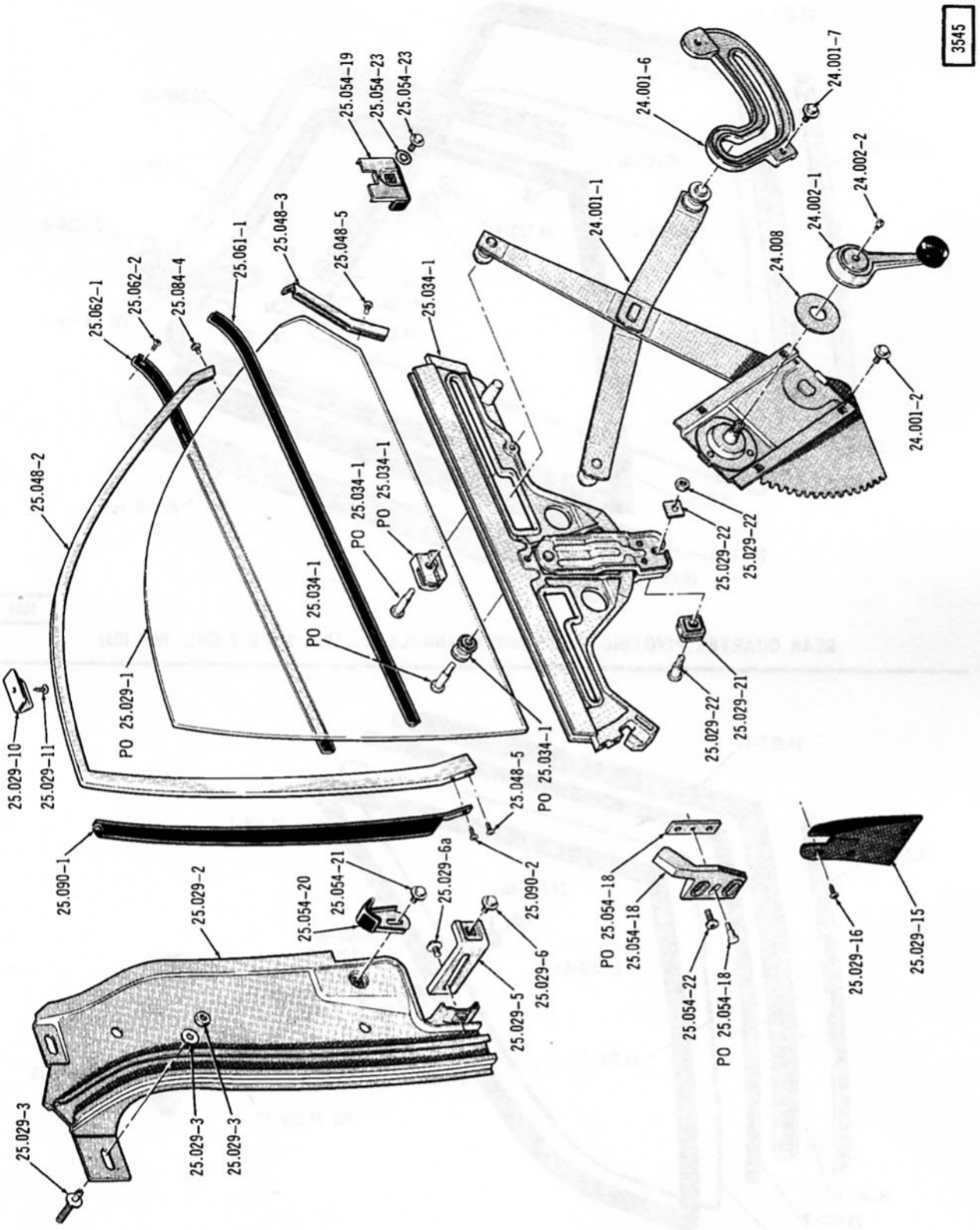

REAR QUARTER LOWERING GLASS AND CHANNELS ... 1967/69 (16)(17)(19)(86)(87)(89)

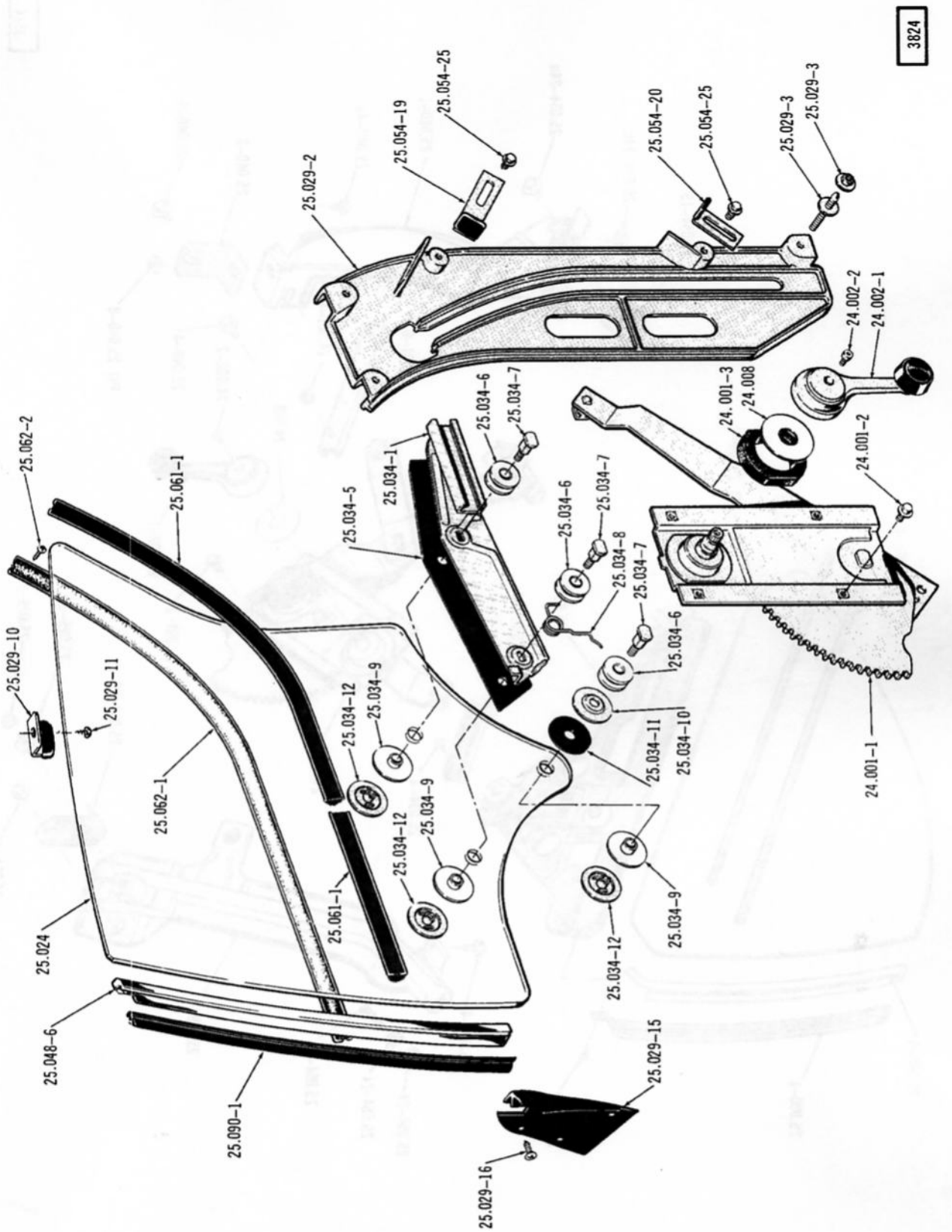

REAR QUARTER LOWERING GLASS AND CHANNELS ... 1970/ (19)(89)

3514

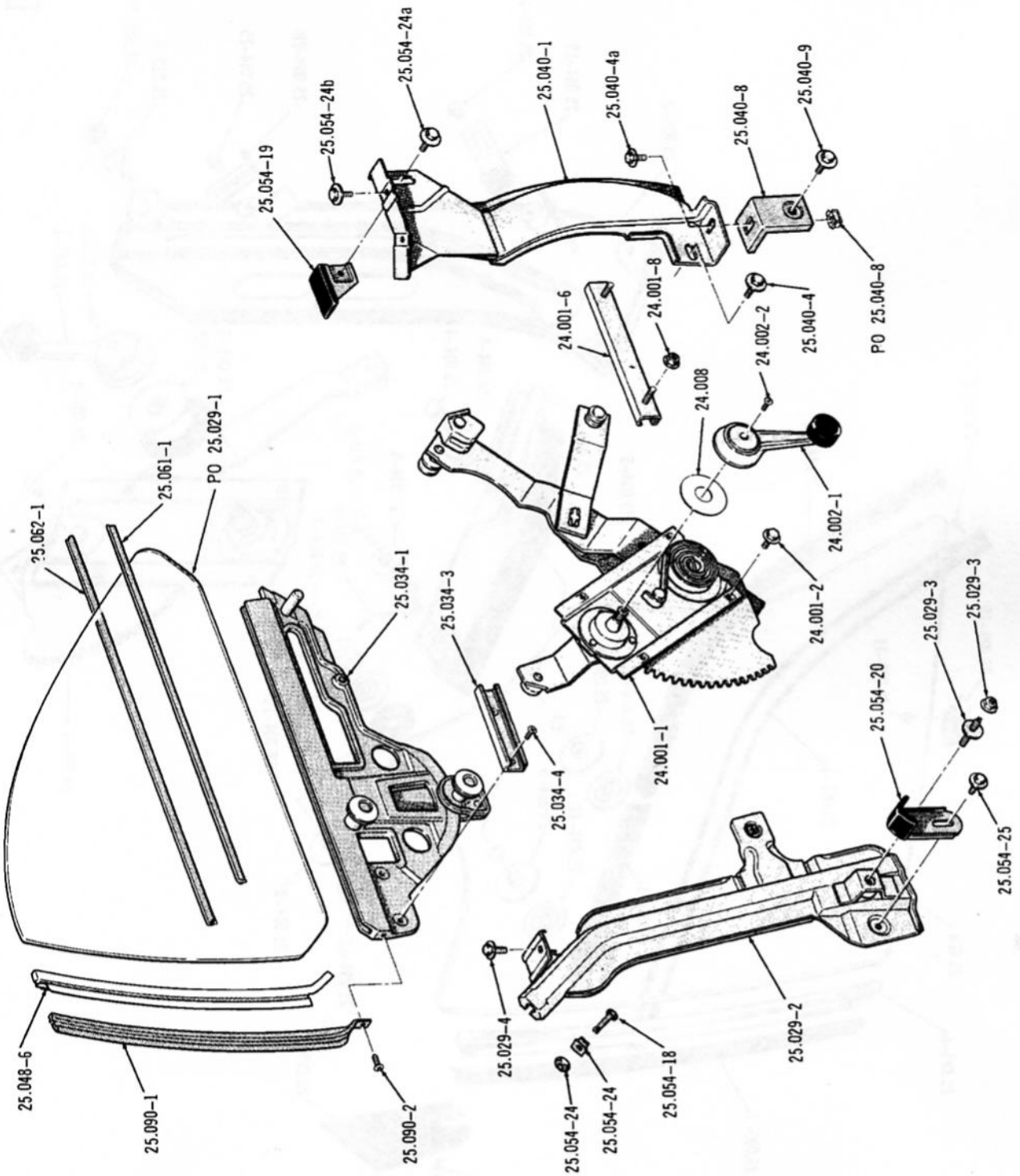

REAR QUARTER LOWERING GLASS AND CHANNELS ... 70 (Type 1)

3515

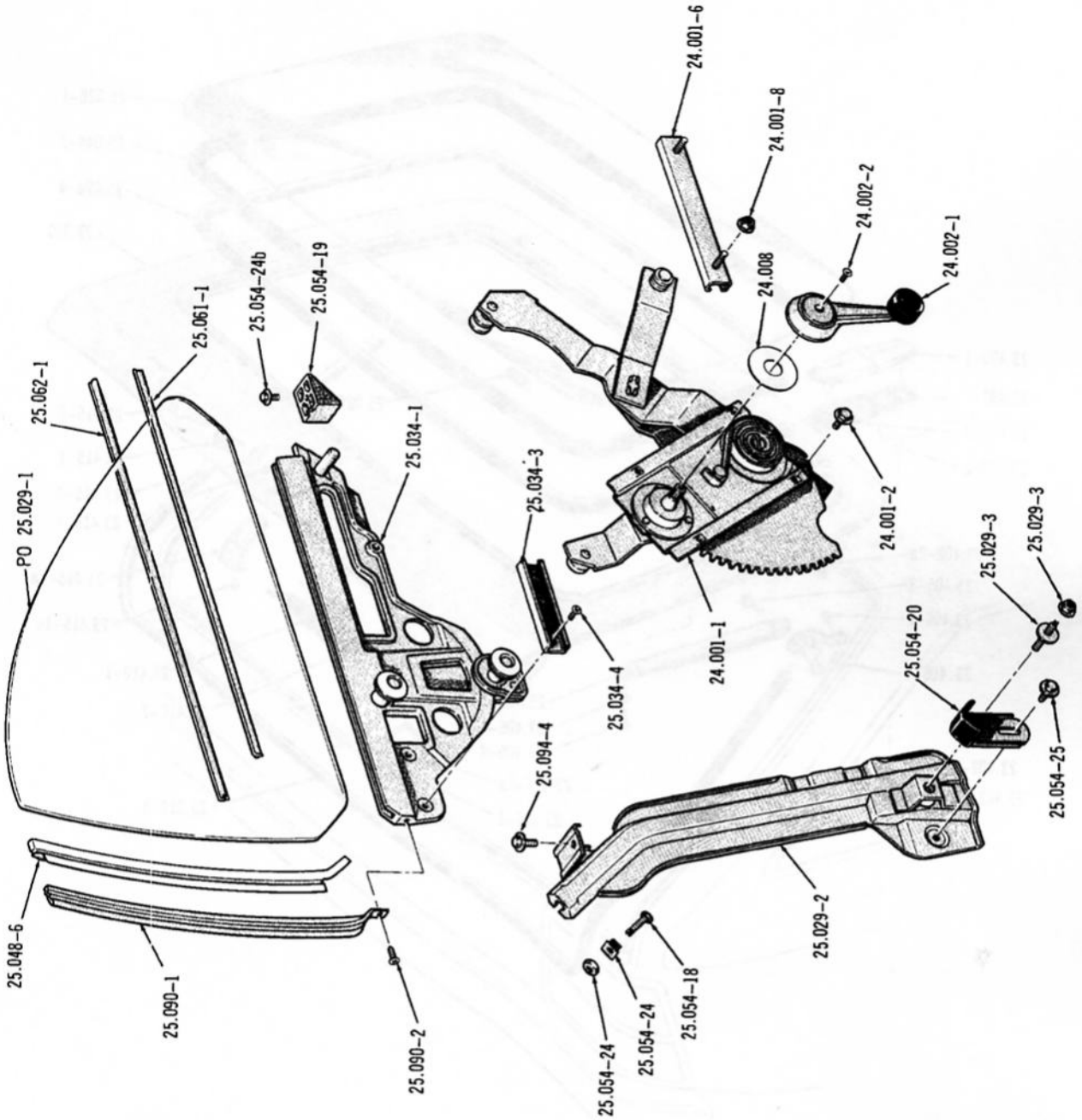

REAR QUARTER LOWERING GLASS AND CHANNELS ... 70 (Type 2)

Printed in U.S.A.

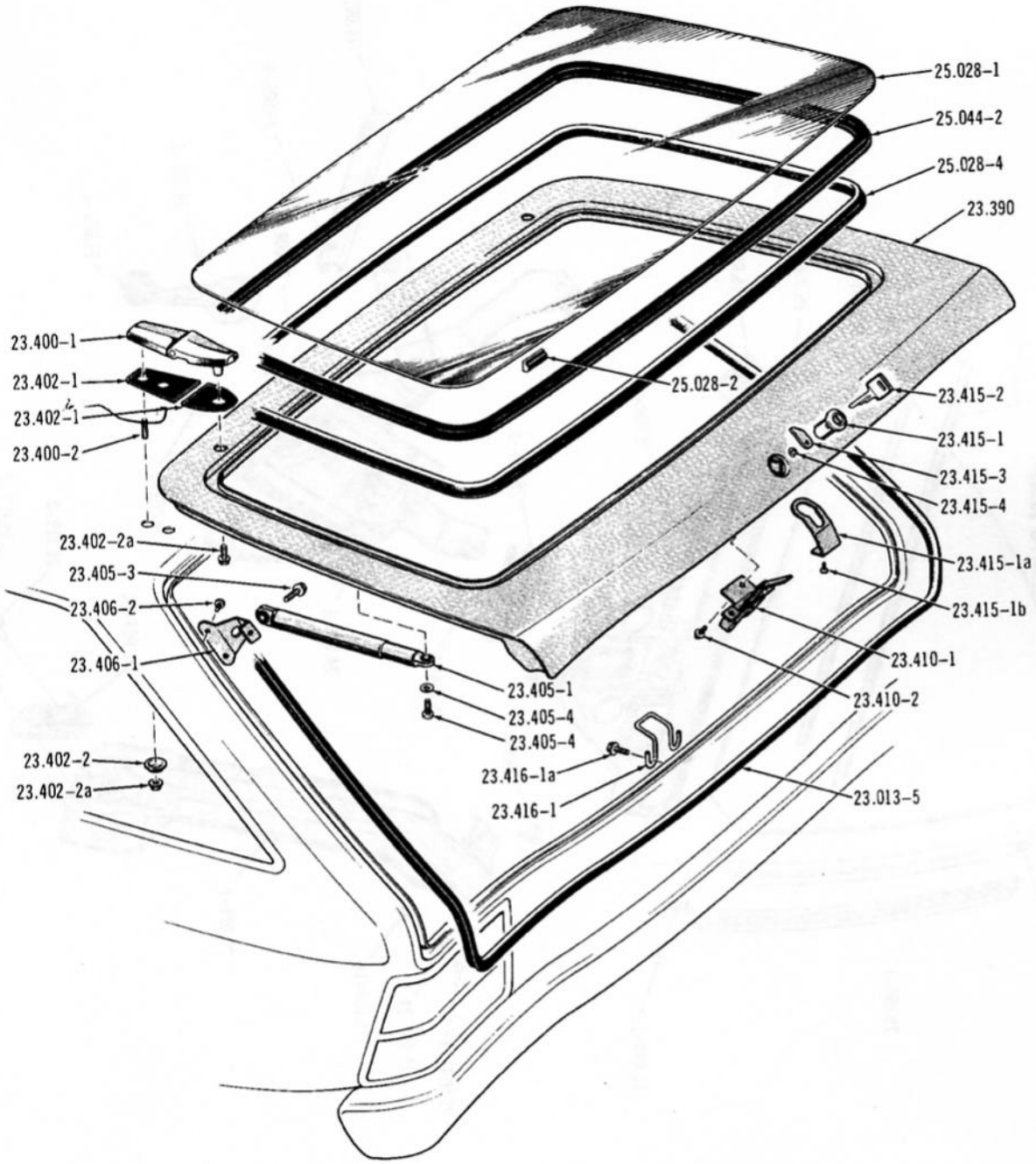

4061

LIFTGATE ... 1971/ (08)

Printed in U.S.A.

3917

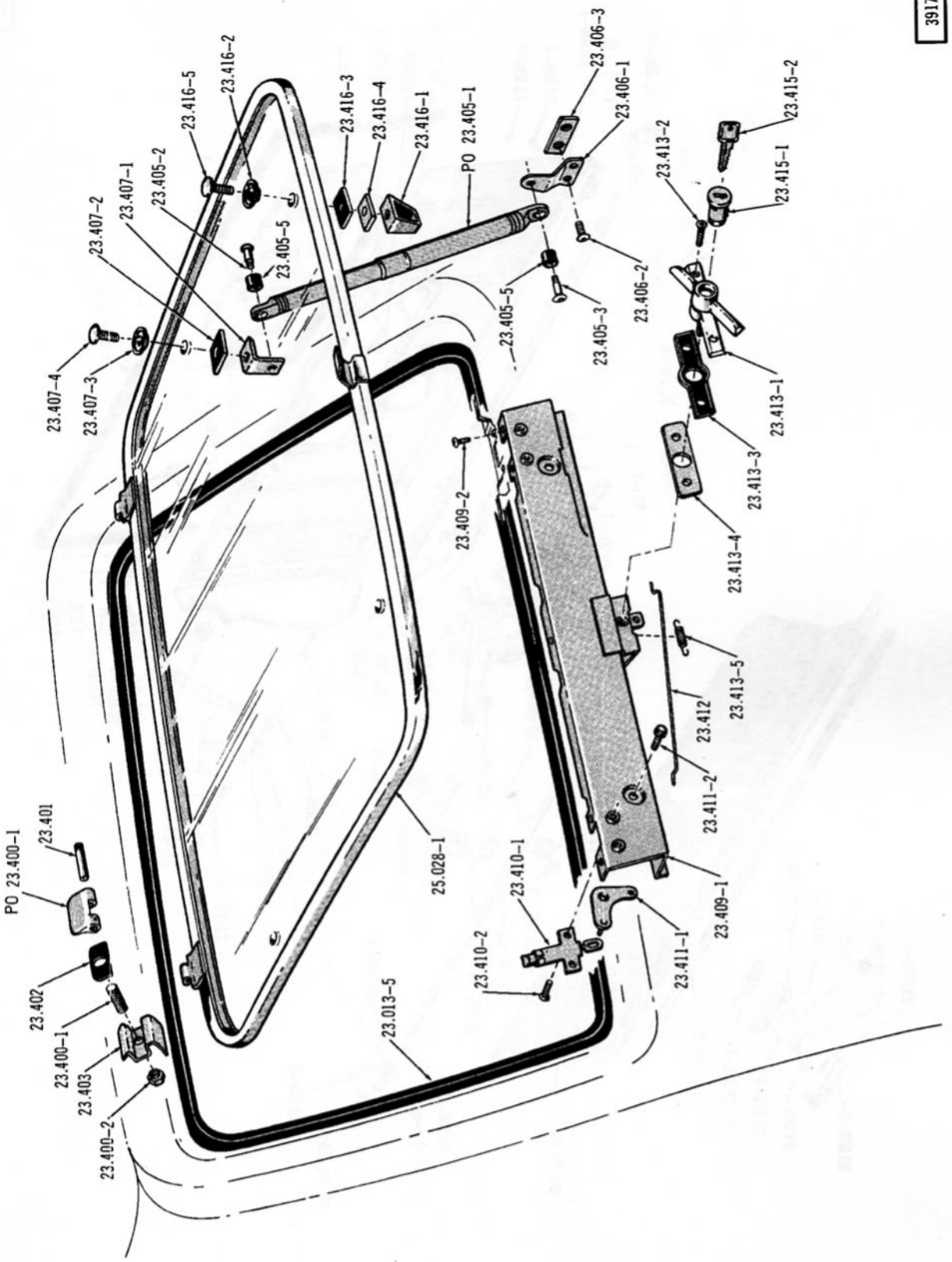

LIFTGATE ... 1970/ (40)

Printed in U.S.A.

1597

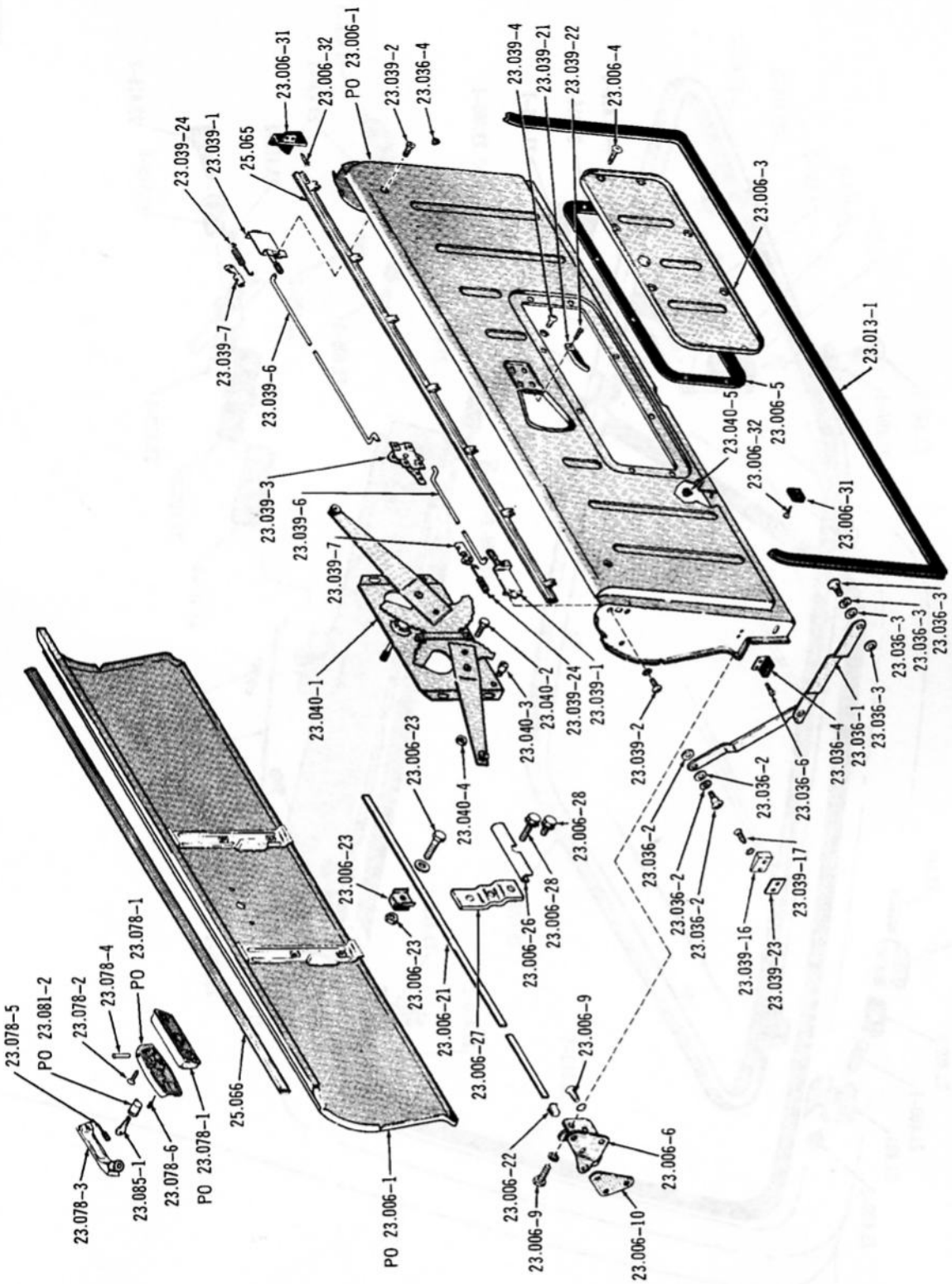

TAILGATE, HARDWARE AND SEALERS ...1967/69 (08-LER)

1655

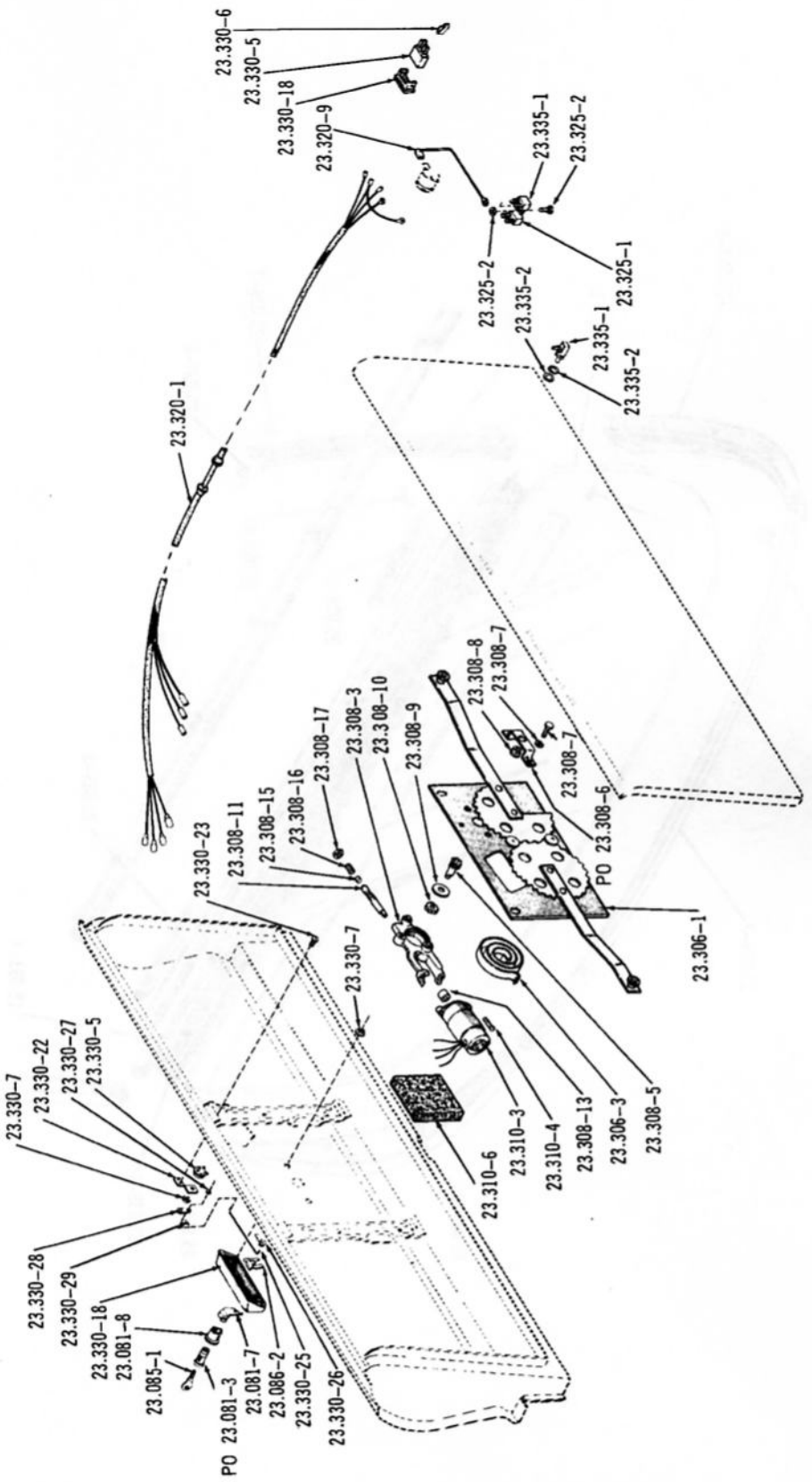

TAILGATE ELECTRIC WINDOW REGULATOR ... 1967-08 (WER)

2331

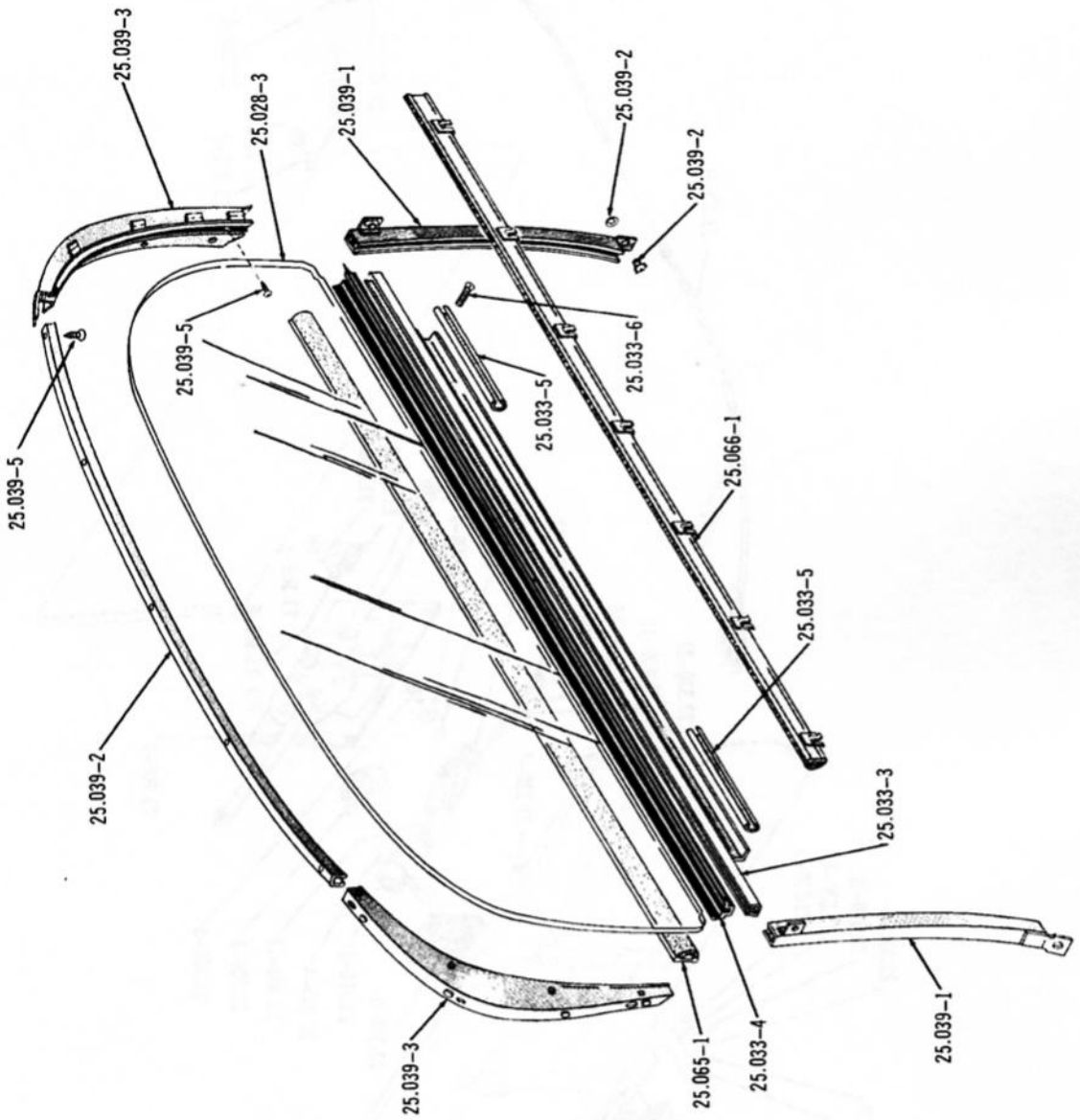

TAILGATE, GLASS AND CHANNELS ... 1967/69 (08)

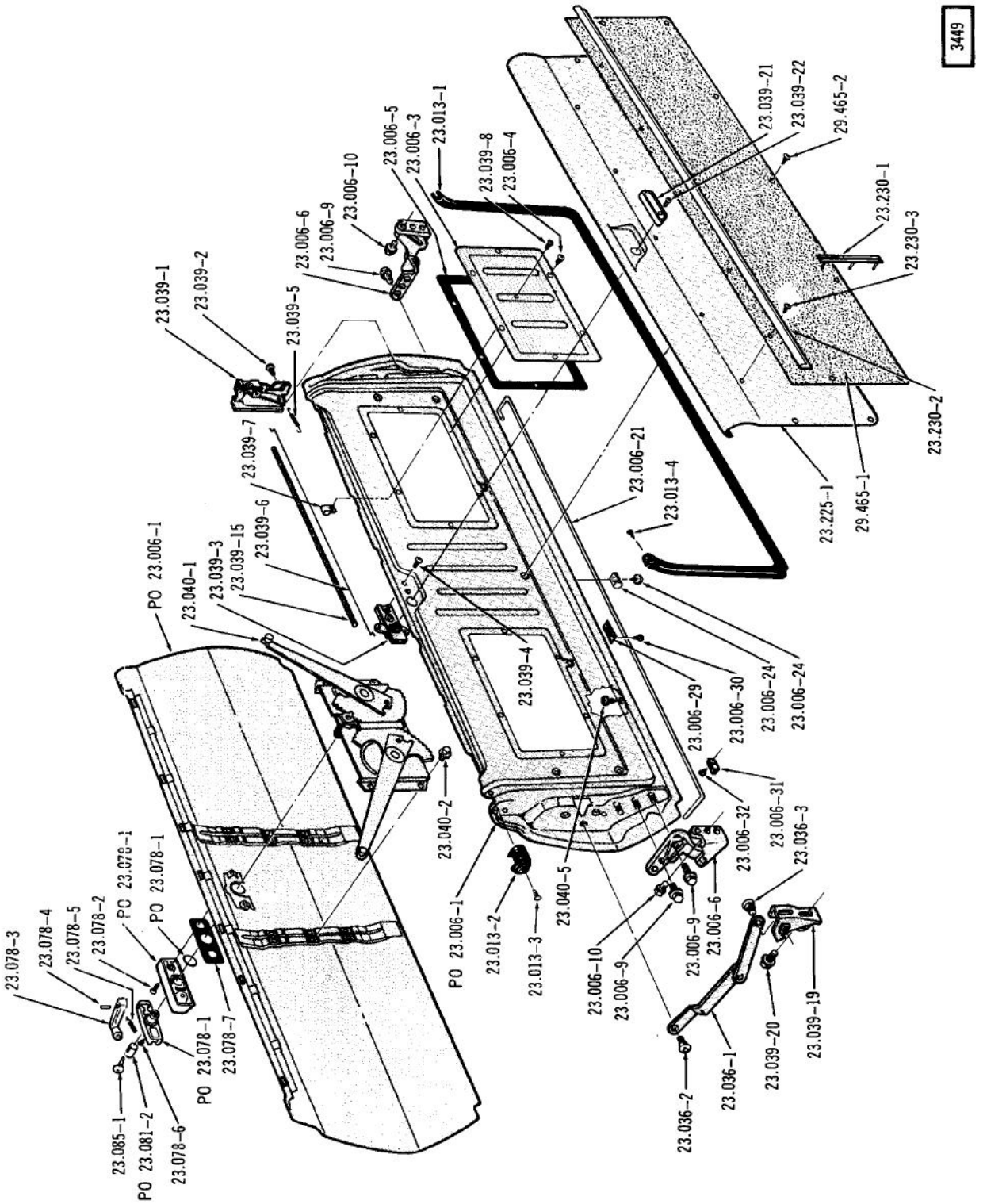

TAILGATE, HARDWARE AND SEALERS ... 1967/68-LVT (18)(88)

Printed in U.S.A.

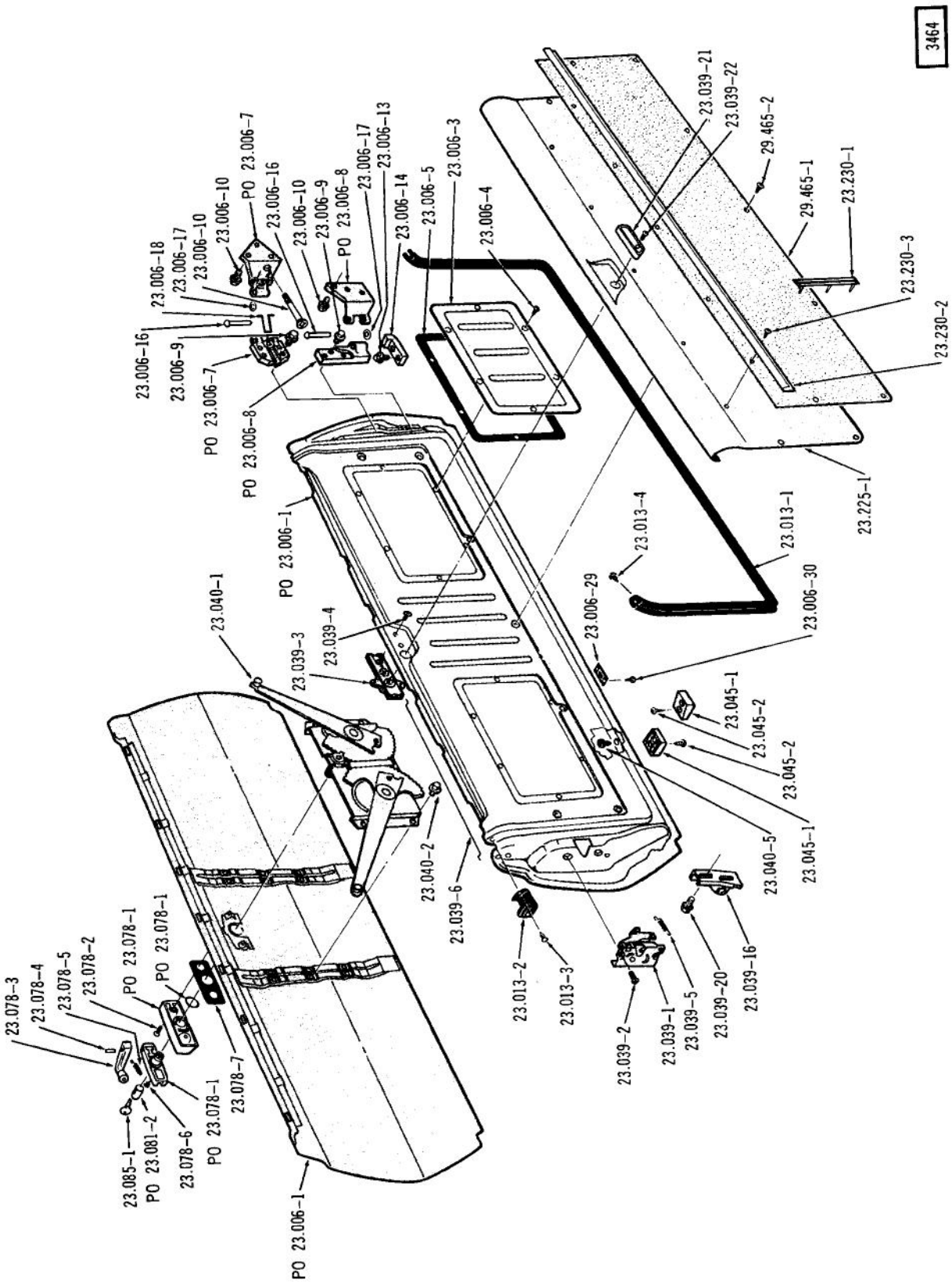

TAILGATE, HARDWARE AND SEALERS ... 1967/68-WVT (18)(88)

3538

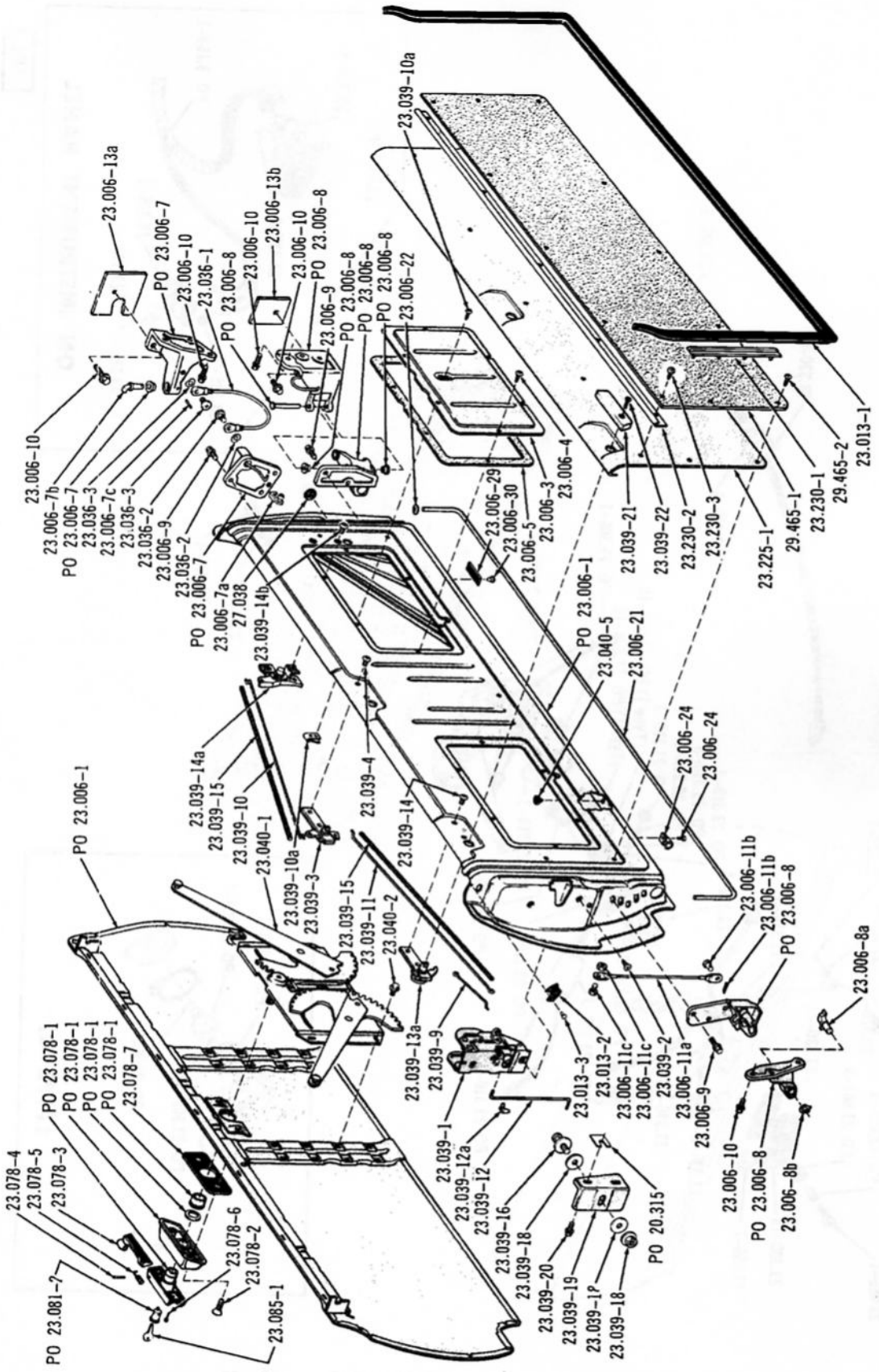

TAILGATE, HARDWARE AND SEALER ... 1969/ -LER (18)(88)

Printed in U.S.A.

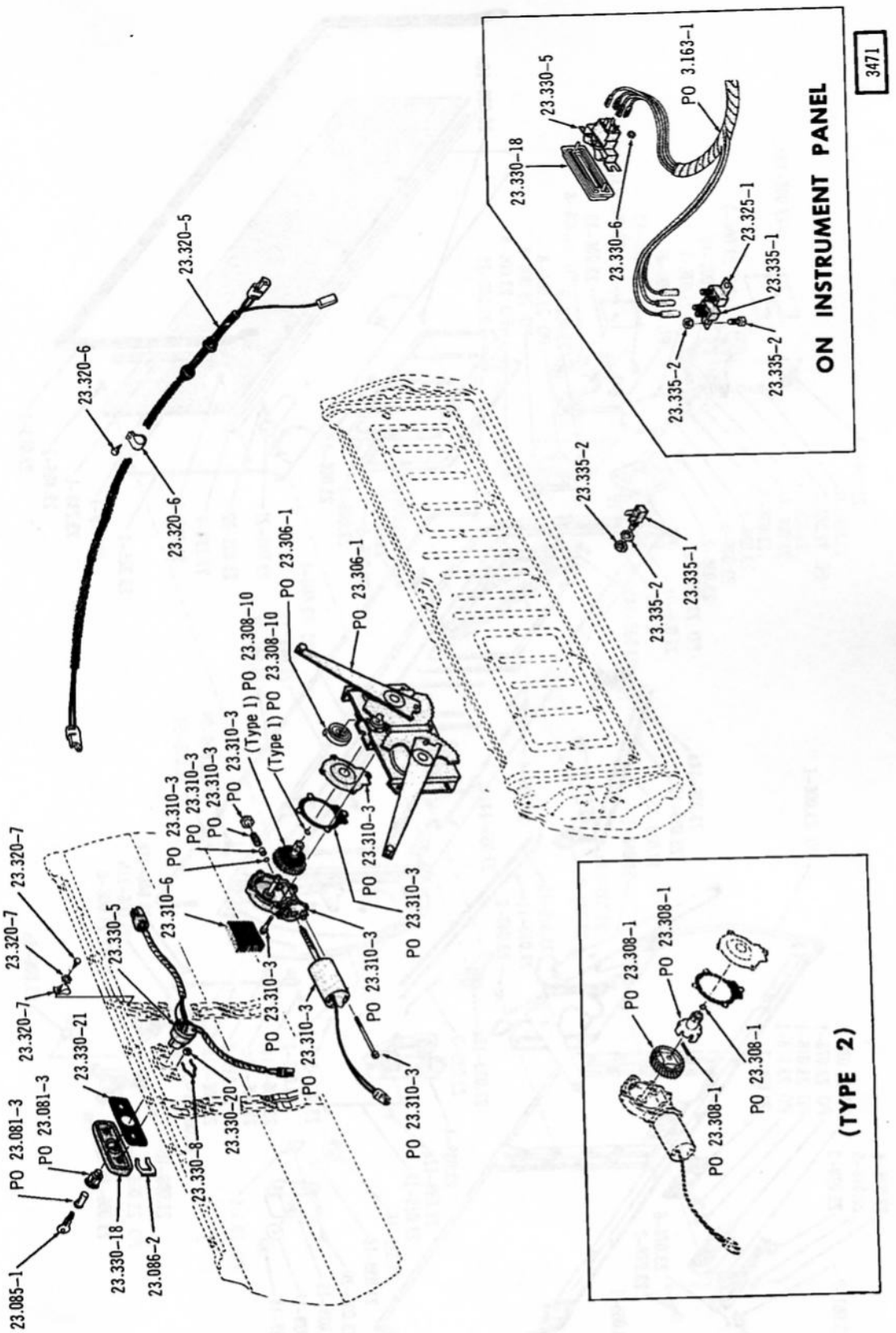

TAILGATE ELECTRIC WINDOW REGULATOR ... 18, 88

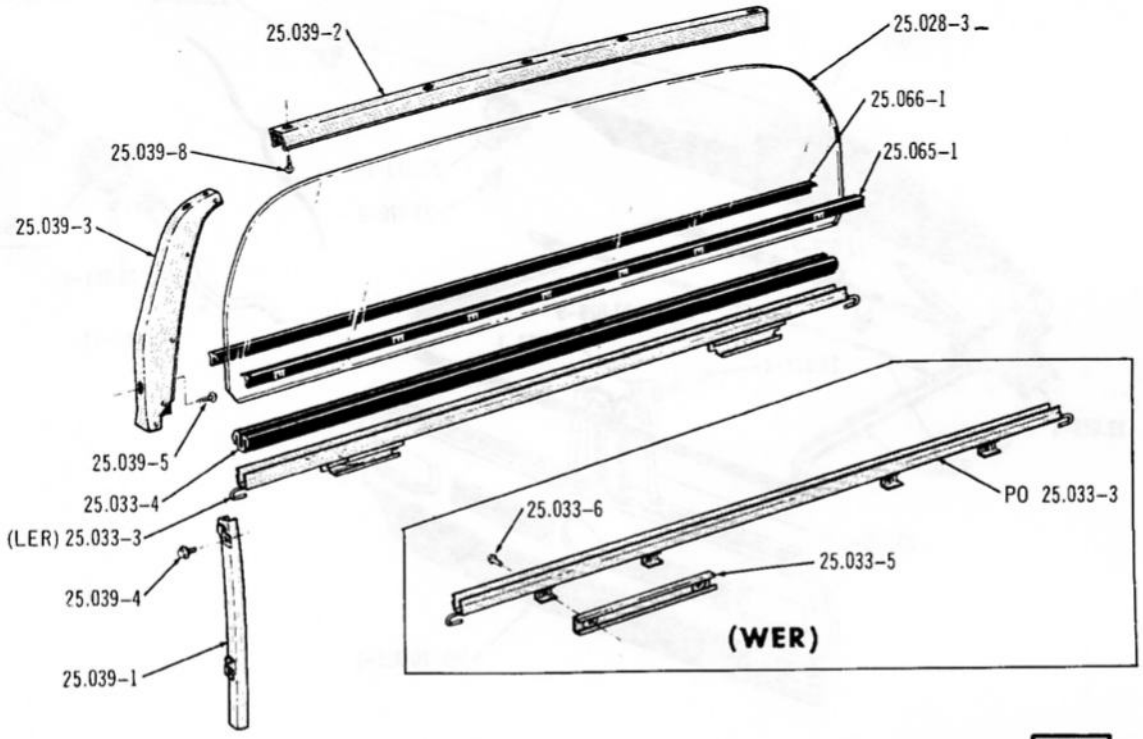

TAILGATE, GLASS AND CHANNELS ... 1967-Type 1 (18)(88)

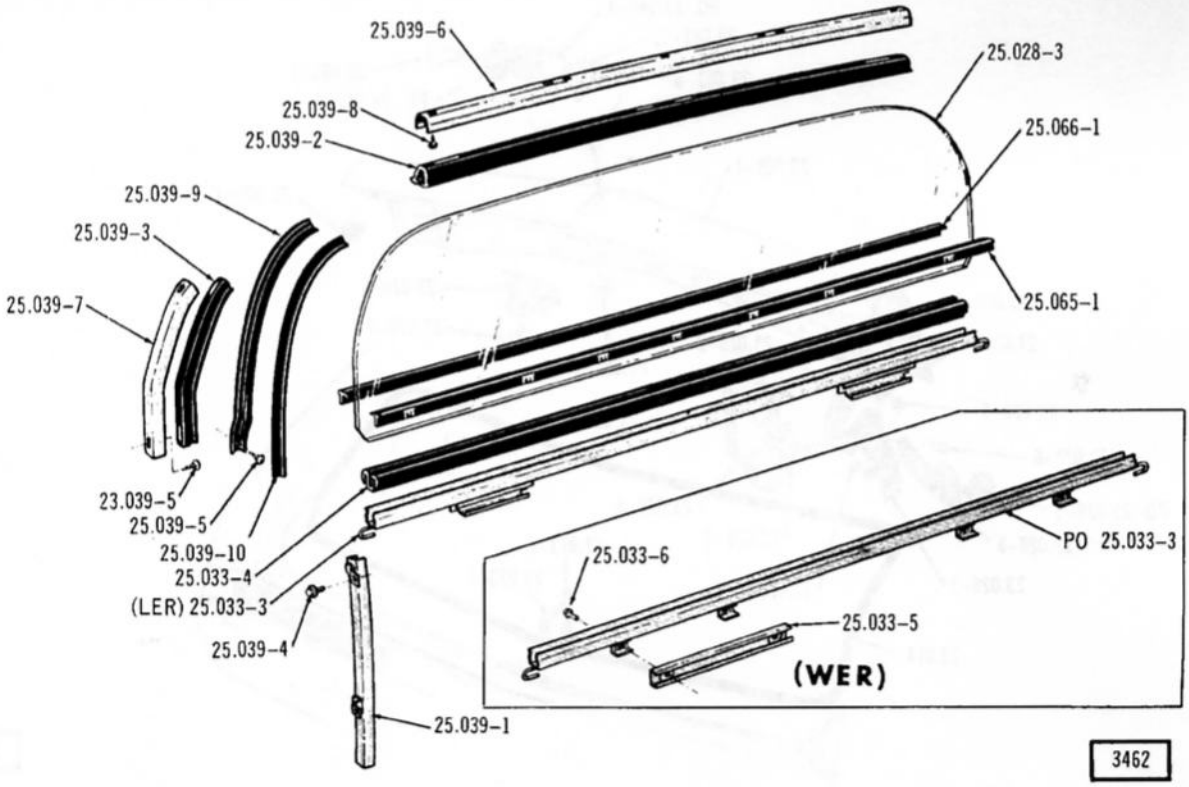

TAILGATE, GLASS AND CHANNELS ... 1967-Type 2 (18)(88), 1968/ (18)(88)

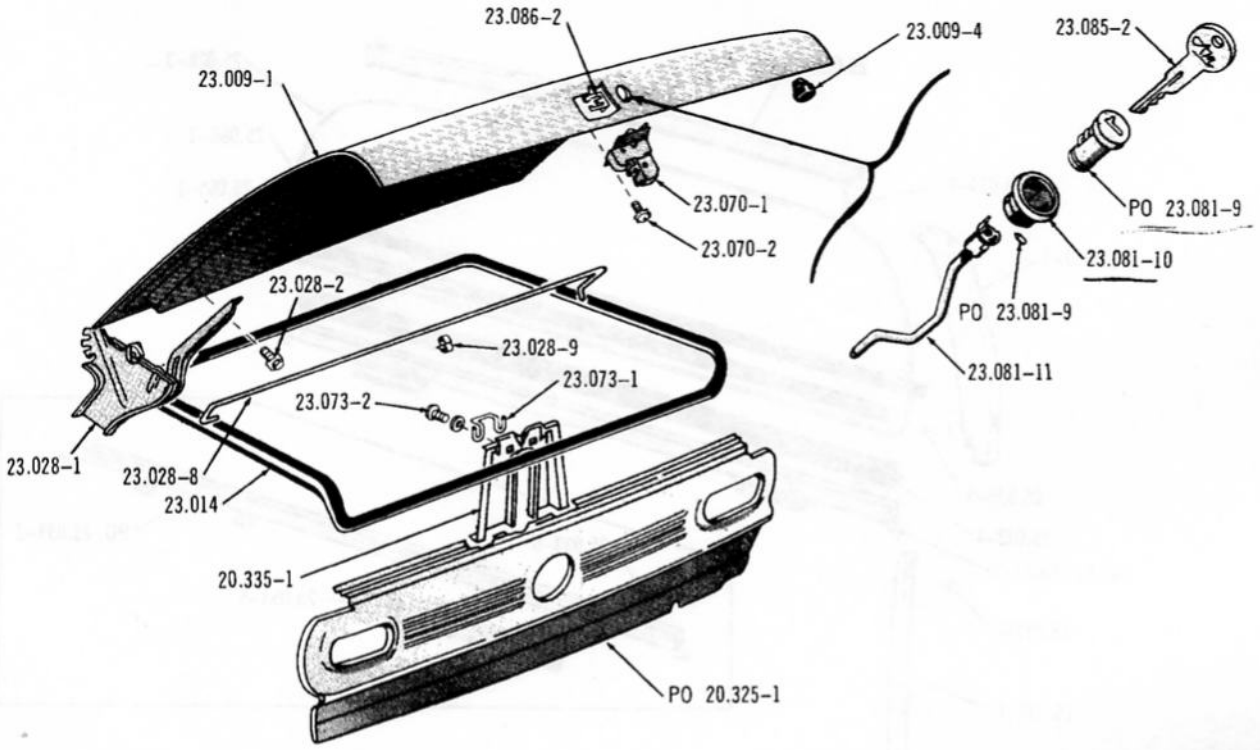

1663

REAR DECK DOOR, HINGE AND LOWER CENTER PANEL ... 1967/69 (05)(06)(07)(09)

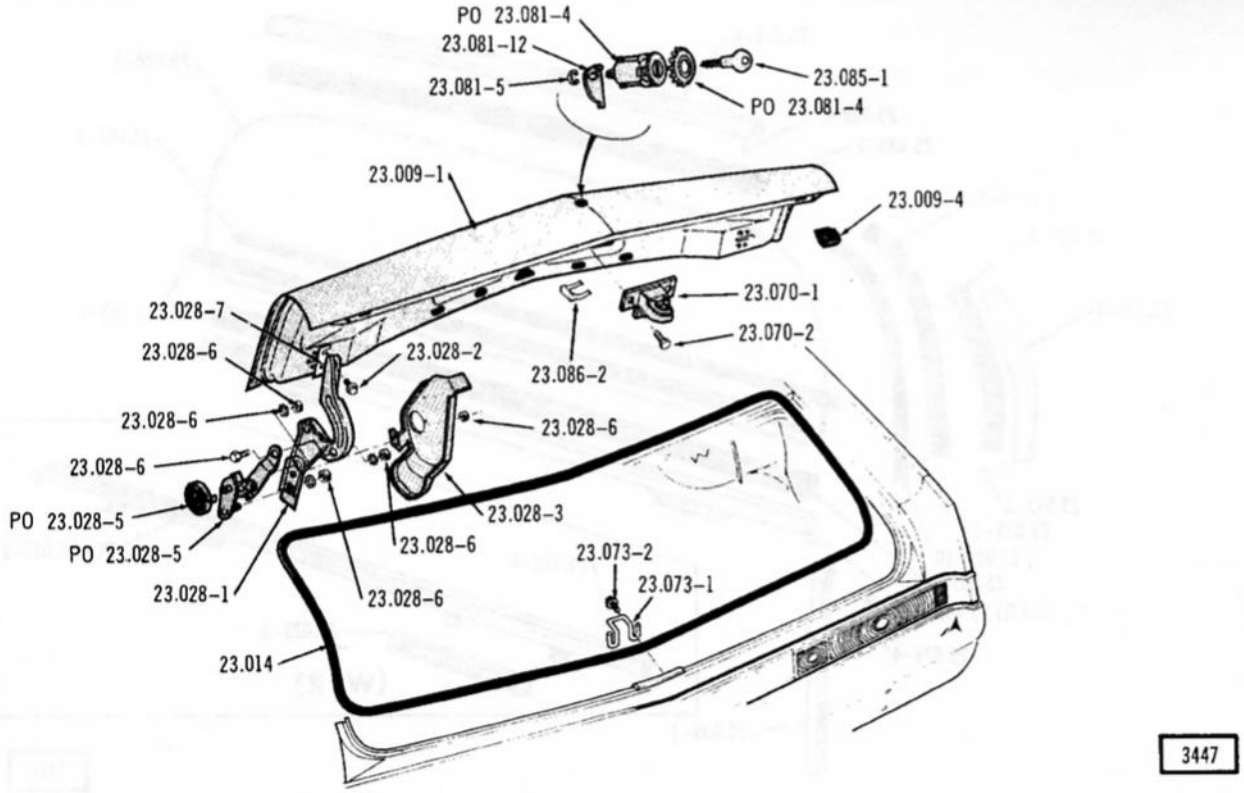

3447

REAR DECK DOOR AND HINGE ... 30, 70

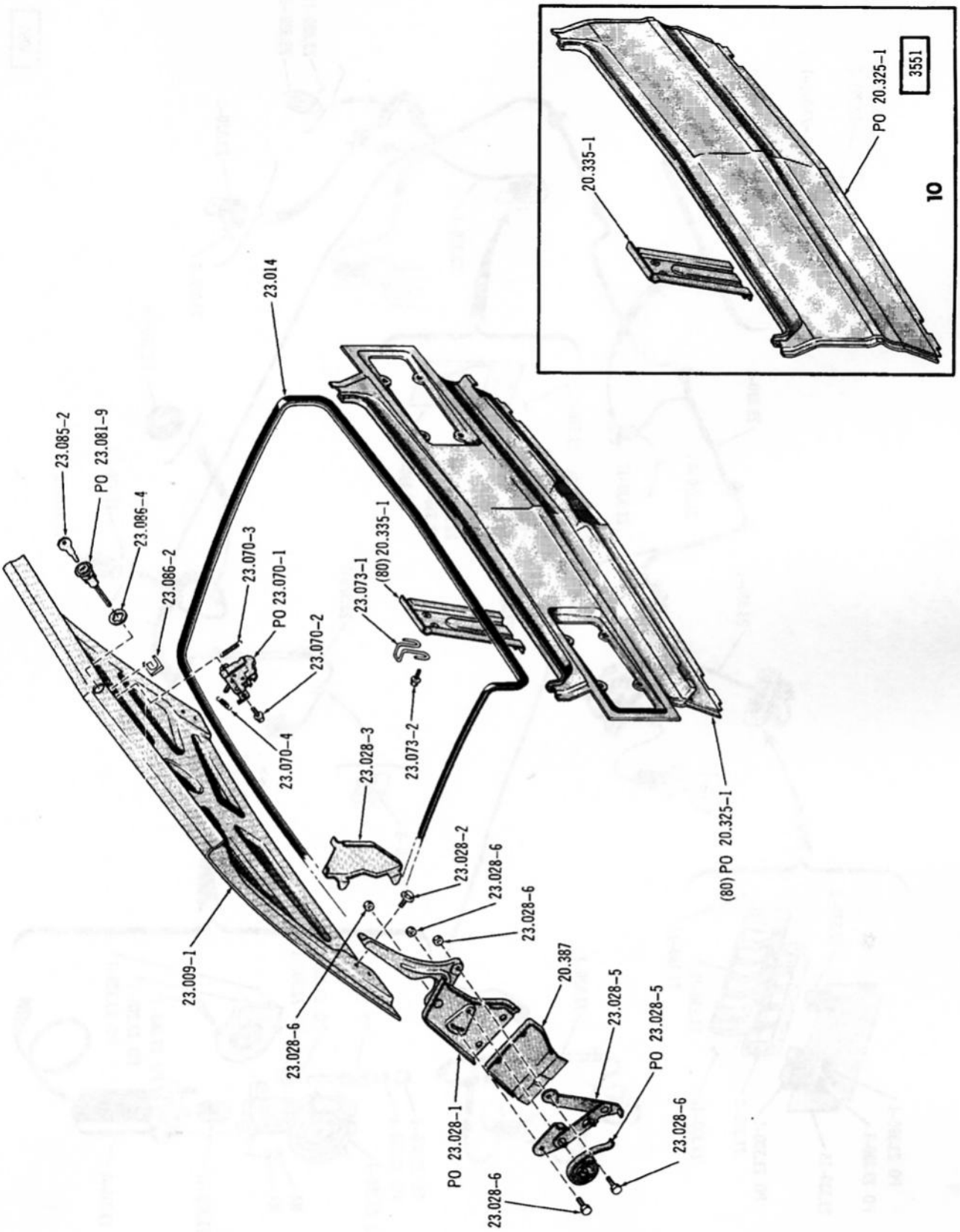

REAR DECK DOOR AND HINGE ... 1969 (10)(80)

Printed in U.S.A.

4096

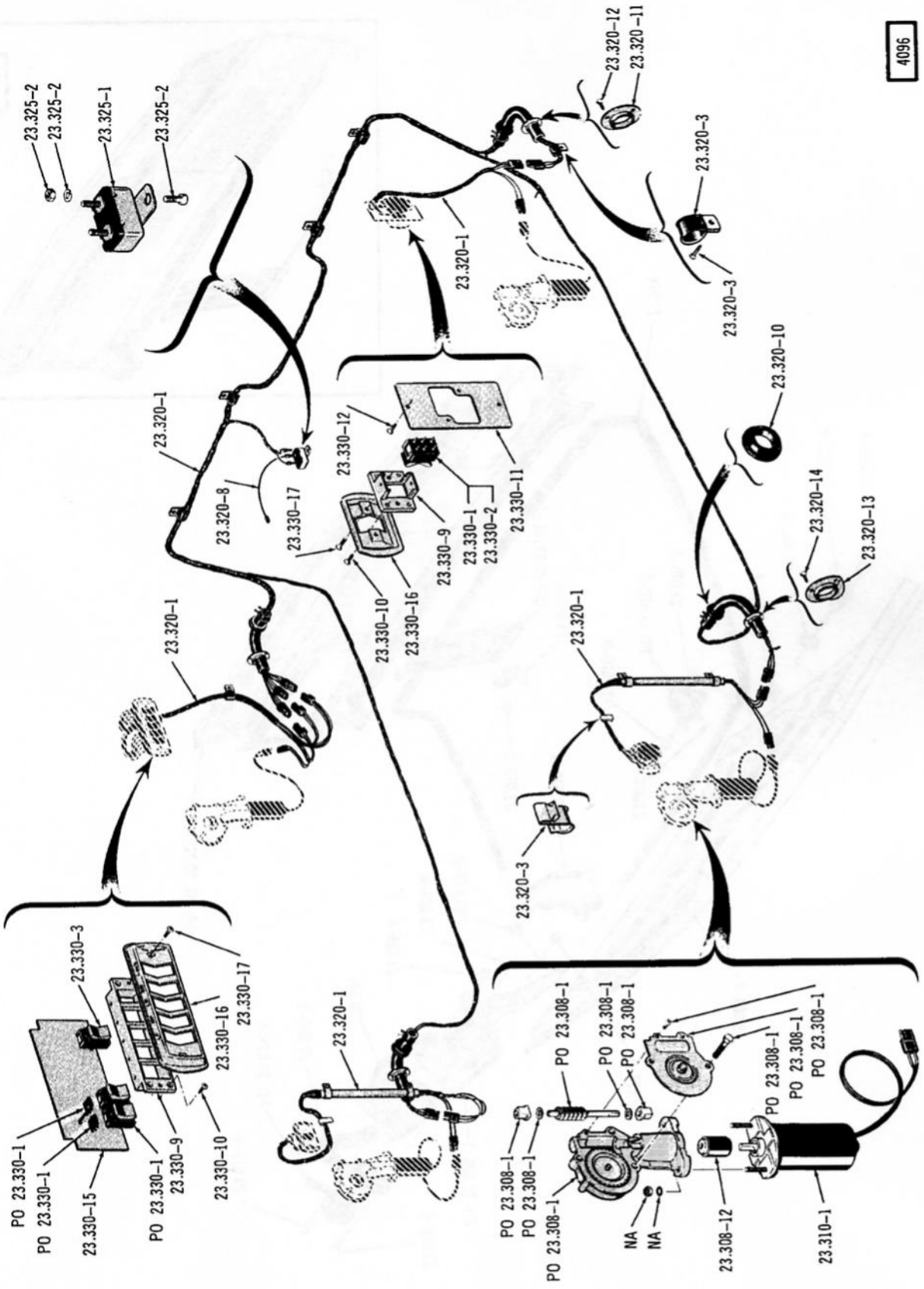

ELECTRIC DOOR WINDOW HARNESS AND RELATED PARTS . . . 1968/ (10)(80)

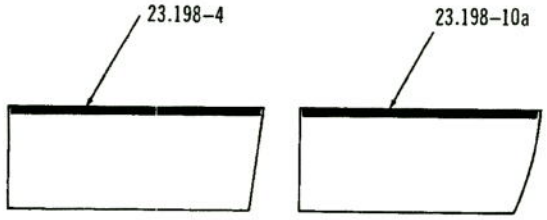

1967 (05)(08), 1968 (05)(08)

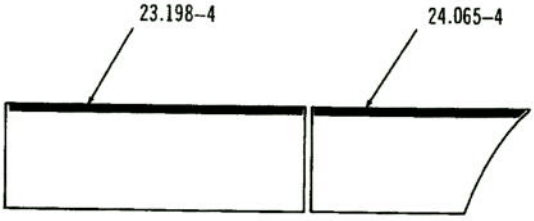

1967 (06)(09), 1968 (06)(09)

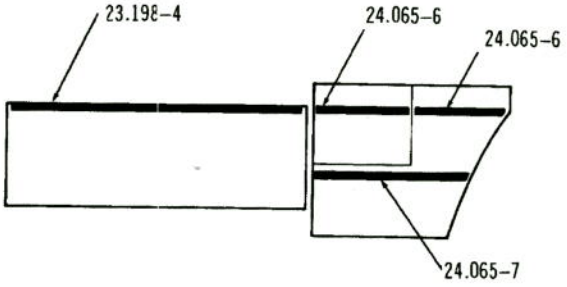

1967 (07)

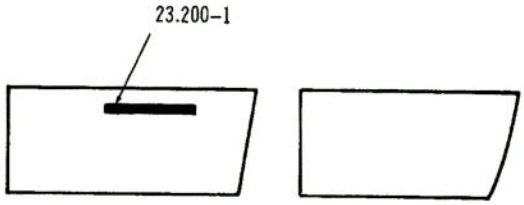

1969 (01)

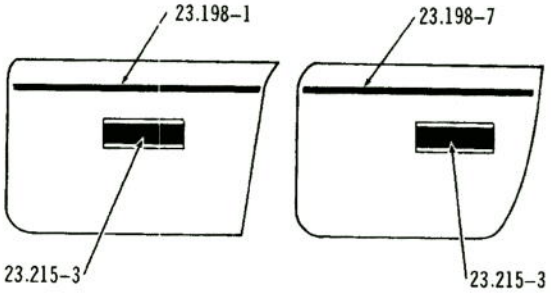

1970 (05-7)

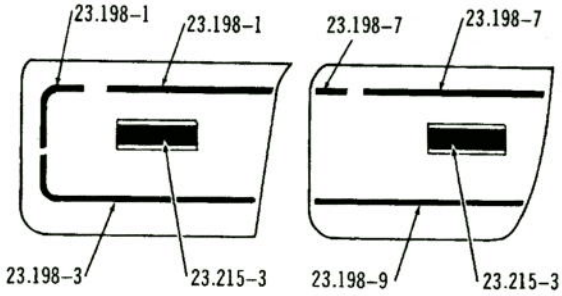

1970 (05-7 CUSTOM)

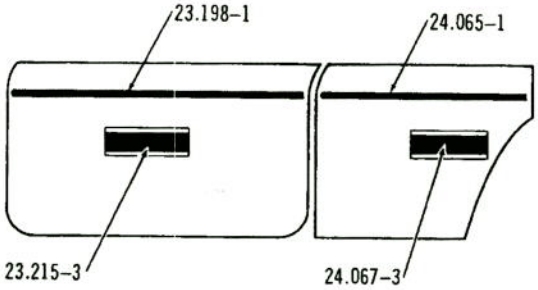

1970 (06-7)

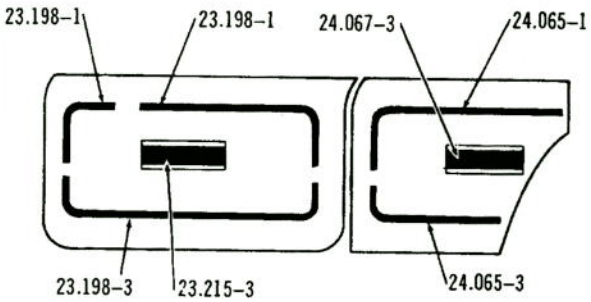

1970 (06-7 CUSTOM)

3640

INTERIOR TRIM PANEL MOULDINGS

Printed in U.S.A

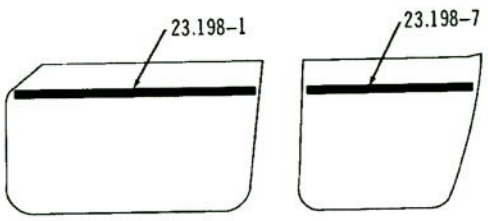

1971 (05-7)(08-7)

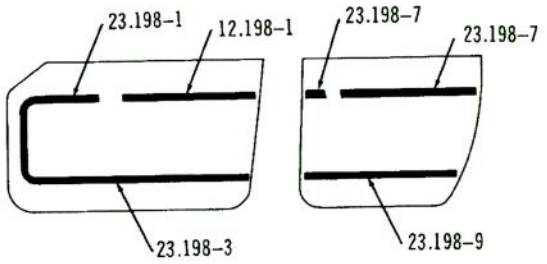

1971 (05-7 CUSTOM)(08-7 CUSTOM)

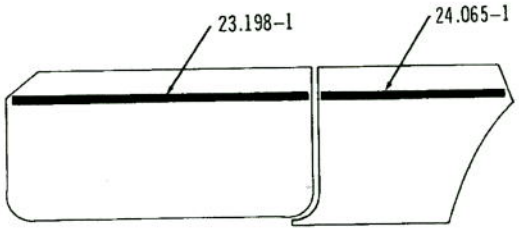

1971 (06-7)

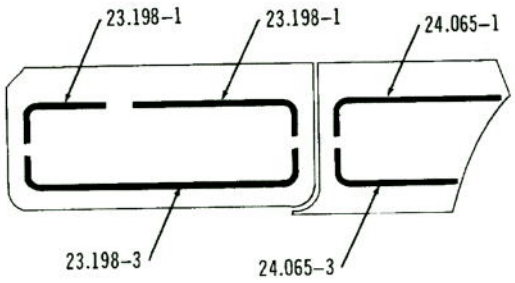

1971 (06-7 CUSTOM)

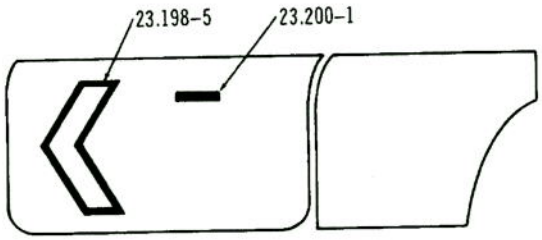

1968 (30)(70)

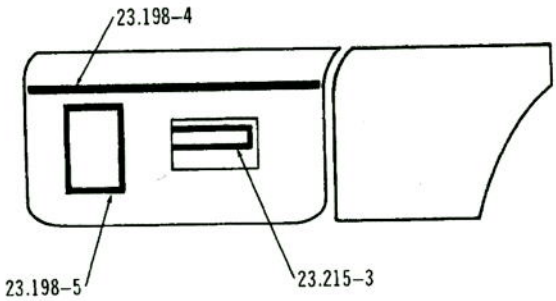

1969 (30)

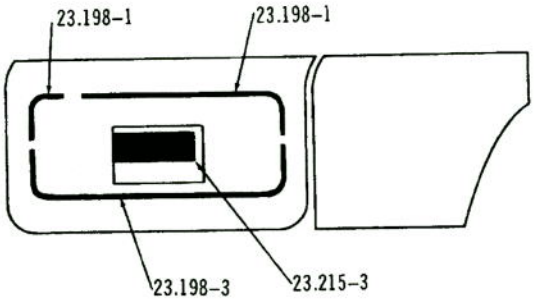

1970 (30)

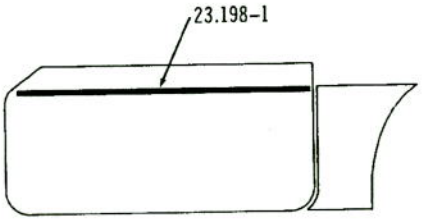

1970/ (40)

3650

INTERIOR TRIM PANEL MOULDINGS

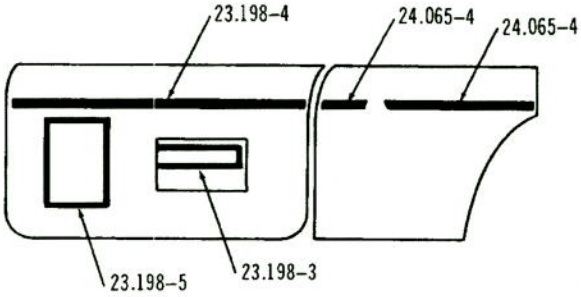

1969 (70)

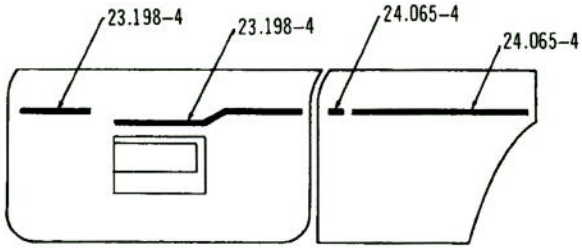

1970 (70-5)

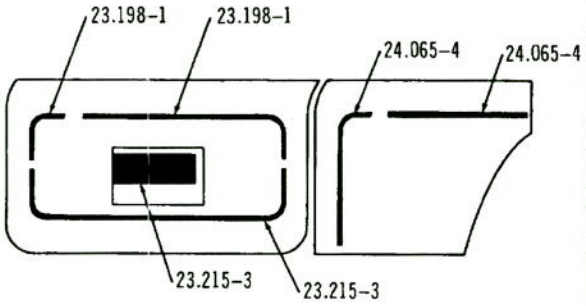

1970 (70-7)

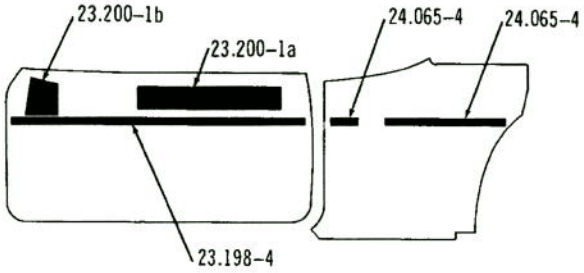

1971 (70)

3651

INTERIOR TRIM PANEL MOULDINGS

Printed in U.S.A.

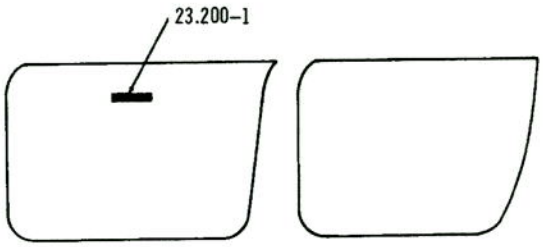

1968 (15-5)(18-5)(19-5)

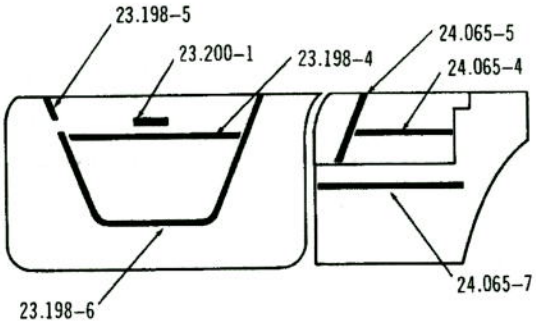

1968 (17)

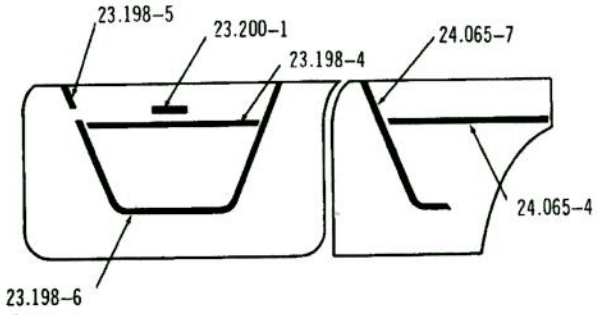

1968 (19-7)

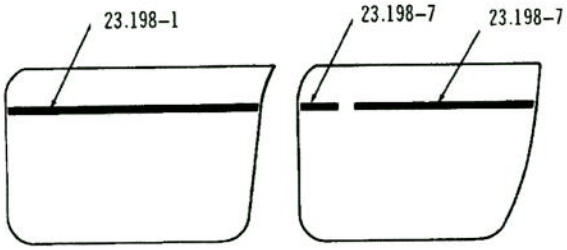

1968 (85-2)

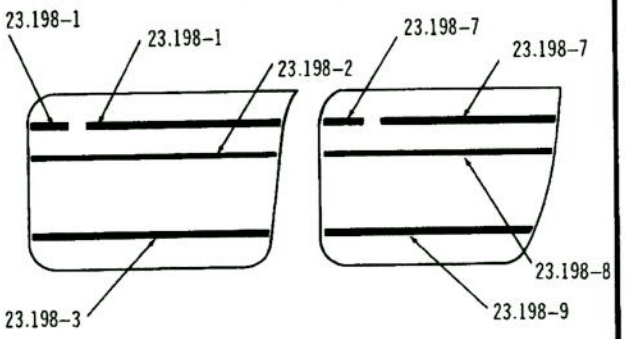

1968 (85-5)(88-5)

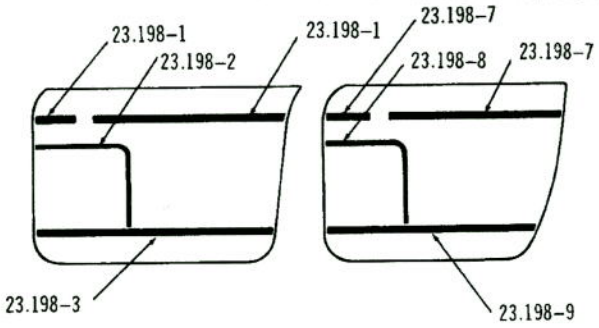

1968 (85-7)

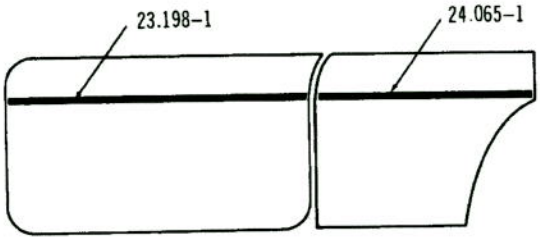

1968 (89-2)

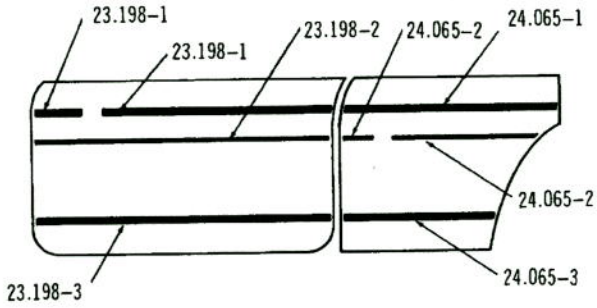

1968 (89-5)

3641

INTERIOR TRIM PANEL MOULDINGS

Printed in U.S.A.

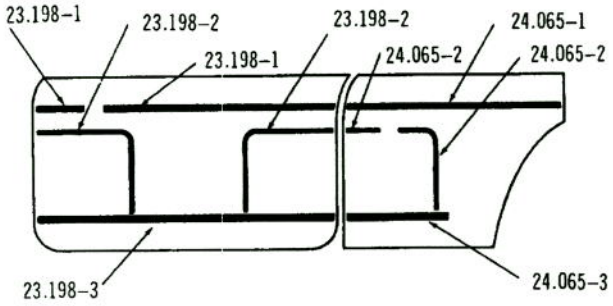

1968 (89-7)

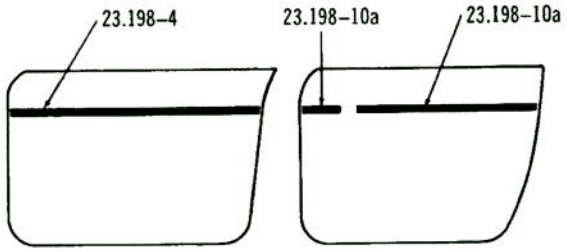

1969 (15-BASIC)(18-BASIC)

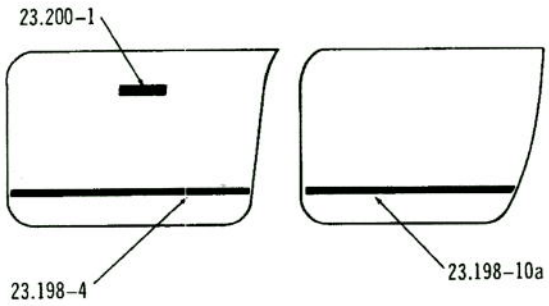

1969 (15-7)(18-7)

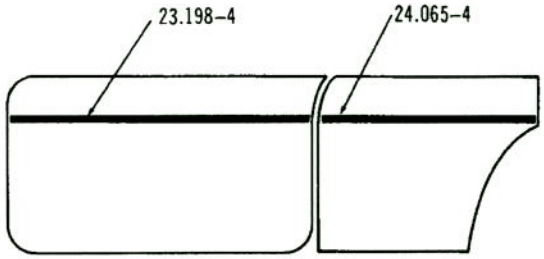

1969 (19-BASIC)

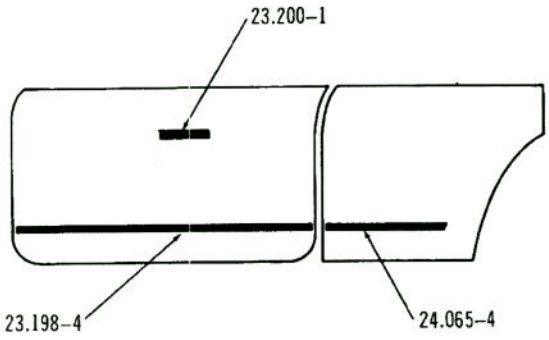

1969 (19-7)

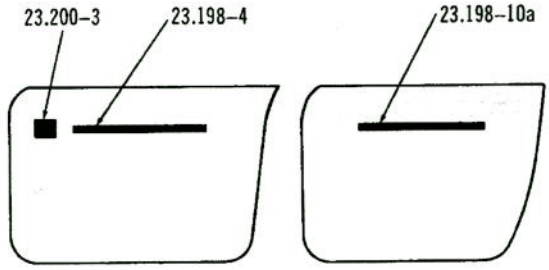

1969 (85-2)

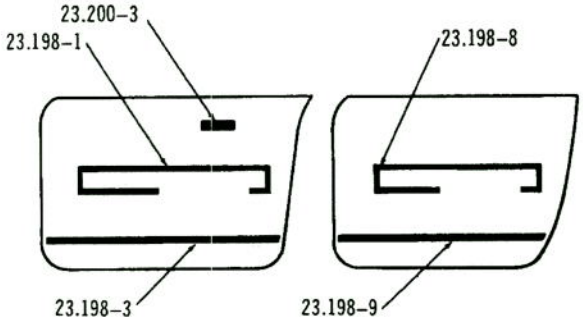

1969 (85-5)(88-5)

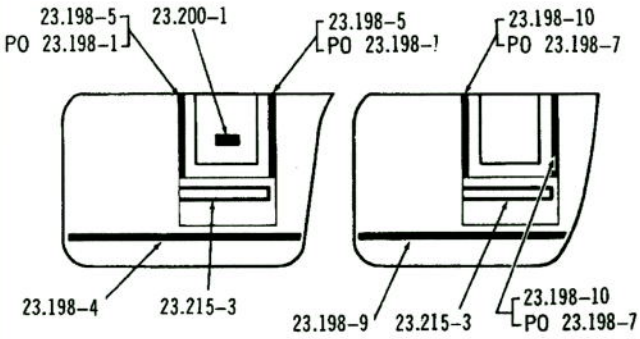

1969 (85-7)(88-7)

3642

INTERIOR TRIM PANEL MOULDINGS

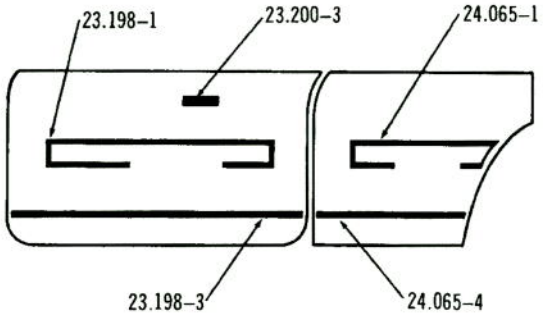

1969 (89-5)

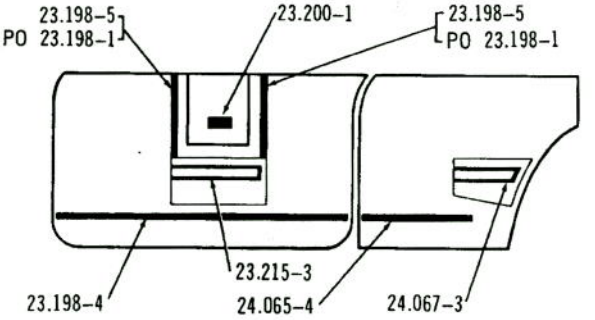

1969 (89-7)

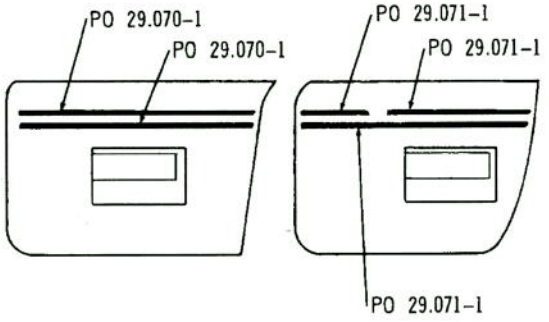

1970 (15-BASIC)(18 BASIC)

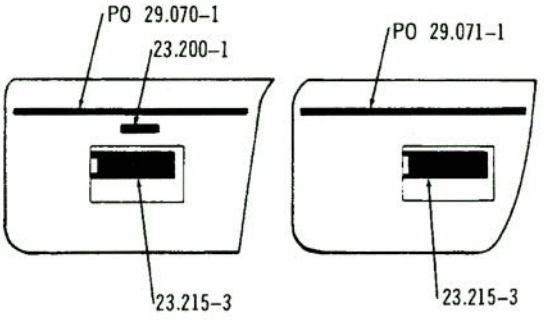

1970 (15-7)(18-7)

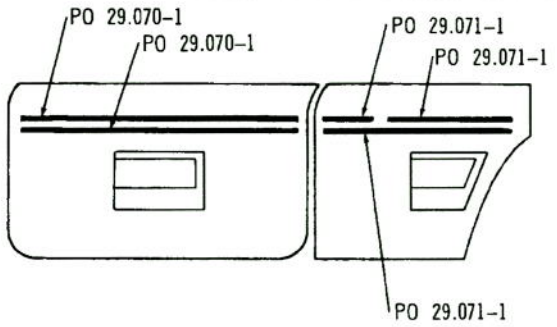

1970 (19-BASIC)

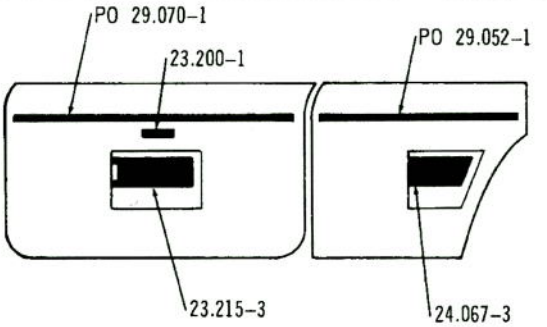

1970 (19-7)

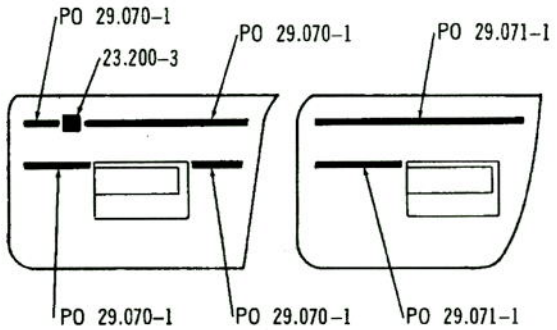

1970 (85-2)

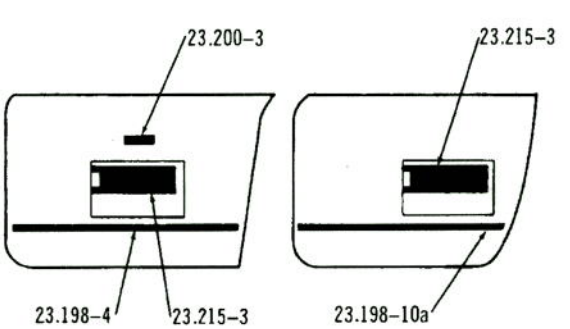

3643

1970 (85-5)(88-5)

INTERIOR TRIM PANEL MOULDINGS

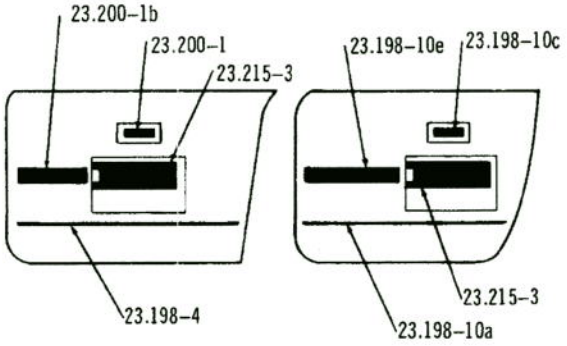

1970 (85-7)(88-7)

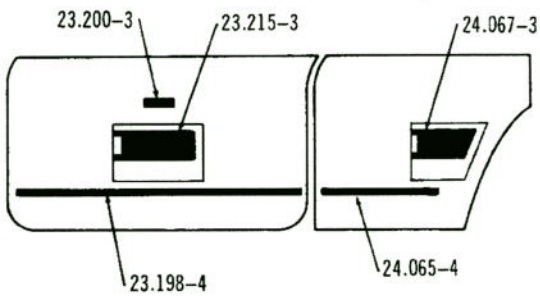

1970 (89-5)

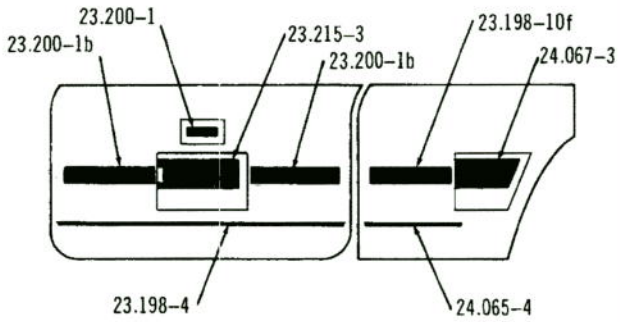

1970 (89-7)

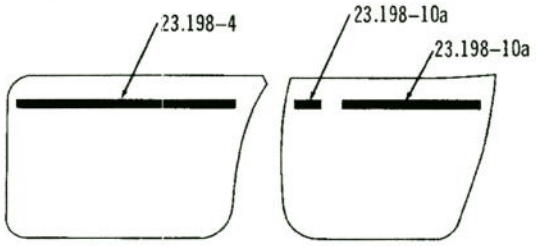

1971 (15-BASIC)(18-BASIC)

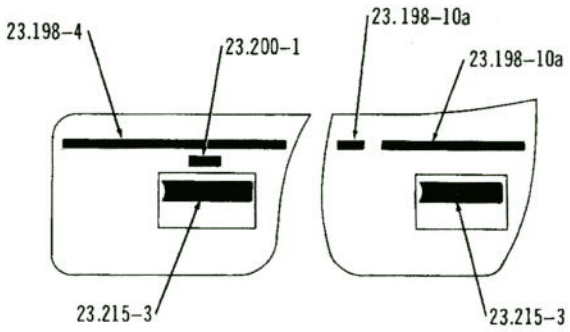

1971 (15-7)(18-7)

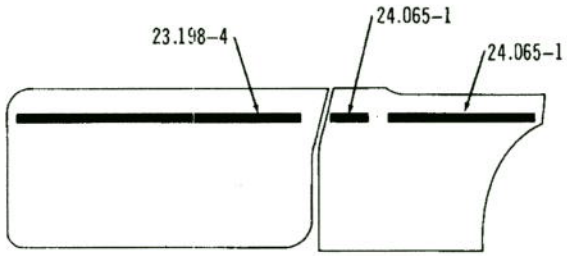

1971 (19-BASIC)

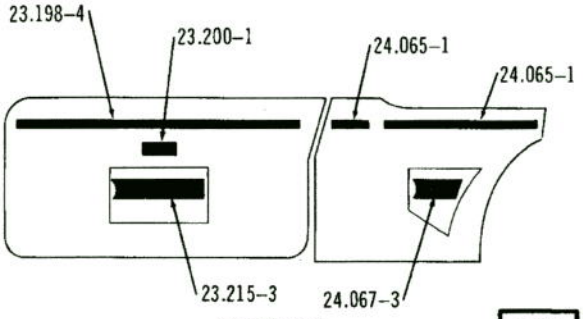

1971 (19-7)

3652

INTERIOR TRIM PANEL MOULDINGS

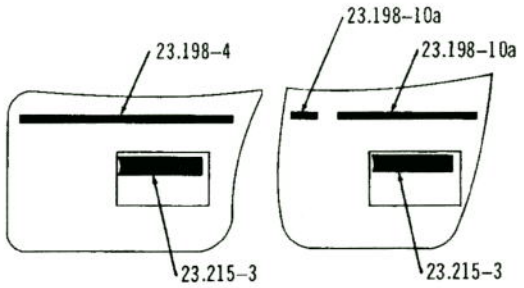

1971 (85-2)

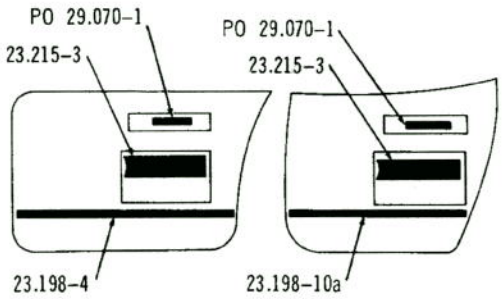

1971 (85-5)(88-5)

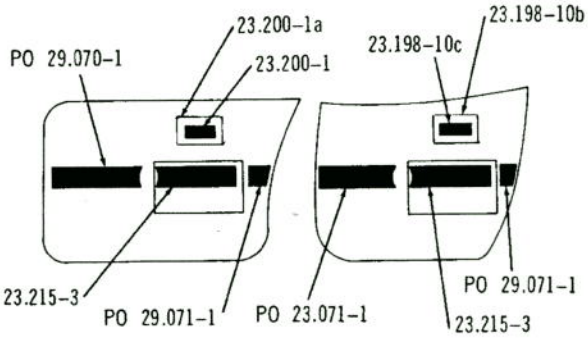

1971 (85-7)(88-7)

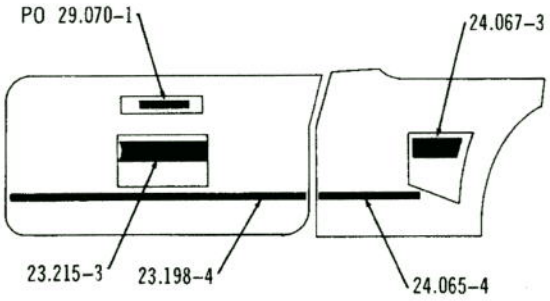

1971 (89-5)

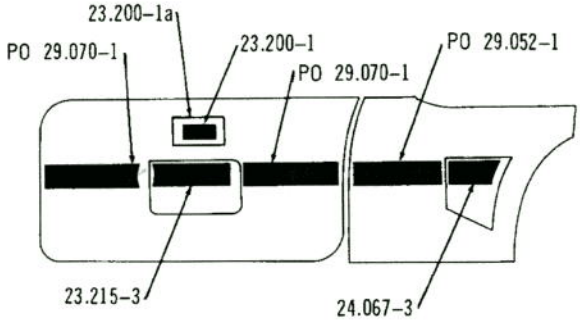

1971 (89-7)

3653

INTERIOR TRIM PANEL MOULDINGS

GROUP NO. — DESCRIPTION — YEAR and MODEL	"L" CODE	PAKS CODE	PRIMARY GROUP NO.	PER CAR	PART NO.	CODE
23.001–1 DOOR, Front (Incl. Outer Panel)						
67 (Left) 05-08			*(Use 448 5895)*	1	448 3415	
68 (Left) 05-08 (* 23-1)			*(Use 448 5895)*	1	448 3415	
68 (Left) 05-08 (* 23-2)			.....	1	448 5895	
69 (Left) 05-08			.....	1	448 5971	
70/ (Left) 05-08			.....	1	448 7393	
67 (Left) 06			.....	1	448 3419	
68 (Left) 06 (* 23-1)			.....	1	448 3419	
68 (Left) 06 (* 23-2)			.....	1	448 5897	
69 (Left) 06			.....	1	448 5973	
70/ (Left) 06-46			.....	1	448 7403	
67 (Left) 07-09			.....	1	448 3421	
68 (Left) 09 (* 23-1)			.....	1	448 3421	
68 (Left) 09 (* 23-2)			.....	1	448 5899	
69 (Left) 09			.....	1	448 5977	
67 (Left) 15-18-85-88			.....	1	448 4223	
68 (Left) 15-18-85-88 (* 23-1)			*(Ref. Pr. List)*	1	320 8875	
68 (Left) 15-18-85-88 (* 23-2)			.....	1	448 5907	
68 (Left) 15-18-85-88 (* 23-3)			*(Ref. Pr. List)*	1	448 5901	
69/71 (Left) 15-18-85-88			*(Ref. Pr. List)*	1	448 5901	
72 (Left) 15-85-88			*(Ref. Pr. List)*	1	448 5901	
72 (Left) 18 (232)			*(Ref. Pr. List)*	1	448 5901	
72 (Left) 18 (258: * 23-43)			*(Ref. Pr. List)*	1	448 5901	
72 (Left) 18 (258: * 23-44)			.....	1	812 2243	
72 (Left) 18 (V8)			*(Ref. Pr. List)*	1	448 5901	
67 (Left) 16-17-19-59-86-87-89			.....	1	448 4225	
68 (Left) 17-19-89 (* 23-1)			*(Ref. Pr. List)*	1	320 8879	
68 (Left) 17-19-89 (* 23-2)			.....	1	448 5909	
68 (Left) 17-19-89 (* 23-3)			*(Ref. Pr. List)*	1	448 5903	
69/70 (Left) 19-89			*(Ref. Pr. List)*	1	448 5903	
71/ (Left) 19-89 (* 23-35)			.....	1	448 5909	
72 (Left) 19-89 (* 23-36)			.....	1	812 2249	
68 (Left) 39-79 (* 23-1)			*(Ref. Pr. List)*	1	320 8887	
68 (Left) 39-79 (* 23-2)			.....	1	448 5911	
68 (Left) 39-79 (* 23-3)			*(Ref. Pr. List)*	1	448 5905	
69/70 (Left) 39-79			.....	1	448 5911	
71/ (Left) 79			.....	1	448 9401	
67 (Right) 05-08			*(Use 448 5894)*	1	448 3414	
68 (Right) 05-08 (* 23-1)			*(Use 448 5894)*	1	448 3414	
68 (Right) 05-08 (* 23-2)			.....	1	448 5894	
69 (Right) 05-08			.....	1	448 5970	
70/ (Right) 05-08			.....	1	448 7392	
67 (Right) 06			*(Use 448 5896)*	1	448 3418	
68 (Right) 06 (* 23-1)			*(Use 448 5896)*	1	448 3418	
68 (Right) 06 (* 23-2)			.....	1	448 5896	
69 (Right) 06			.....	1	448 5972	
70/ (Right) 06-46			.....	1	448 7402	
67 (Right) 07-09			*(Use 448 9262)*	1	448 3420	
68 (Right) 09 (* 23-1			*(Use 448 9262)*	1	448 3420	
68 (Right) 09 (* 23-2)			*(Use 448 9262)*	1	448 5898	
69 (Right) 09			.....	1	448 5976	
67 (Right) 15-18-85-88			.....	1	448 4222	
68 (Right) 15-18-85-88 (* 23-1)			.....	1	320 8874	
68 (Right) 15-18-85-88 (* 23-2)			.....	1	448 5906	
68 (Right) 15-18-85-88 (* 23-3)			*(Ref. Pr. List)*	1	448 5900	
69/71 (Right) 15-18-85-88			*(Ref. Pr. List)*	1	448 5900	
72 (Right) 15-85-88			*(Ref. Pr. List)*	1	448 5900	
72 (Right) 18 (232)			*(Ref. Pr. List)*	1	448 5900	
72 (Right) 18 (258: * 23-43)			*(Ref. Pr. List)*	1	448 5900	
72 (Right) 18 (258: * 23-44)			.....	1	812 2242	
72 (Right) 18 (V8)			*(Ref. Pr. List)*	1	448 5900	
67 (Right) 16-17-19-59-86-87-89			.....	1	448 4224	
68 (Right) 17-19-89 (* 23-1)			.....	1	320 8878	
68 (Right) 17-19-89 (* 23-2)			.....	1	448 5908	
68 (Right) 17-19-89 (* 23-3)			*(Ref. Pr. List)*	1	448 5902	
69/70 (Right) 19-89			*(Ref. Pr. List)*	1	448 5902	

71/	(Right) 19-89 (* 23-35)	.....	1	448 5908
72	(Right) 19-89 (* 23-36)	.....	1	812 2248
68	(Right) 39-79 (* 23-1) ***(Ref. Pr. List)***	.....	1	320 8886
68	(Right) 39-79 (* 23-2)	.....	1	448 5910
68	(Right) 39-79 (* 23-3) ***(Ref. Pr. List)***	.....	1	448 5904
69/70	(Right) 39-79	.....	1	448 5910
71/	(Right) 79	.....	1	448 9400

23.001-2 PANEL, Front Door Outer

67/69	(Left) 05-08	.....	1	448 3413
70/	(Left) 05-08	.....	1	448 7395
67/69	(Left) 06-07-09	.....	1	448 3417
70/	(Left) 06-46	.....	1	448 7401
67	(Left) 15-18-85-88	.....	1	448 4039
68/	(Left) 15-18-85-88	.....	1	320 8873
67	(Left) 16-17-19-59-86-87-89	.....	1	448 4041
68/	(Left) 17-19-89	.....	1	320 8877
68/70	(Left) 39-79	.....	1	320 8885
71/	(Left) 79	.....	1	448 9397
67/69	(Right) 05-08	.....	1	448 3412
70/	(Right) 05-08	.....	1	448 7394
67/69	(Right) 06-07-09	.....	1	448 3416
70/	(Right) 06-46	.....	1	448 7400
67	(Right) 15-18-85-88	.....	1	448 4038
68/	(Right) 15-18-85-88	.....	1	320 8872
67	(Right) 16-17-19-59-86-87-89	.....	1	448 4040
68/	(Right) 17-19-89	.....	1	320 8876
68/70	(Right) 39-79	.....	1	320 8884
71/	(Right) 79	.....	1	448 9396

23.001-3 SUPPORT AND CUSHION SET, Front Door Inner To Outer Panel

67/69	06-07-09	.....	2	320 6250
67/	16-17-19-59-86-87-89	.....	2	448 4252

23.001-4 ATTACHING PARTS, Support To Door

SCREW, Tapping	67/68	06-07-09	17.671	4	320 9537
SCREW, Tapping	69	06-09	17.669	4	G457002 NA
SCREW, Tapping	67/68	16-17-19-59-86-87-89 ***(Use 400 2203)***	.....	4	400 1952
SCREW, Tapping	69/	19-89	23.110	4	400 2203
NUT, Clinch	67/	16-17-19-59-86-87-89	17.440	4	G9419939 NA

23.001-5 CUSHION, Front Door Inner To Outer Panel Support

67/	06-07-09-16-17-19-59-86-87-89	.....	2	349 7043

23.001-6 REINFORCEMENT, Front Door Outer Panel Handle

67	10-50-80	.....	2	358 6671

23.001-7 TAPE, Front Door Reflective (Red)

69	***(Left) 18 (Post Office)***	.....	1	360 8639
67	***(Left) 85 (Post Office)***	.....	1	360 8639
69	***(Right) 18 (Post Office)***	.....	1	360 8638
67	***(Right) 85 (Post Office)***	.....	1	360 8638

23.001-8 SEAL, Front Door Inner Panel Lower Drain Hole

67/69	.....	23.006	AR	355 2958

23.001-9 ATTACHING PARTS, Seal To Lower Inner Panel

FASTENER	67/68	.....	23.013	AR	400 0249

Printed in U.S.A.

23.001–10 SEAL, Front Door Flo-Thru Air Outlet (On Door Lock Side Extension)

68	30–70	.....	2	360	2320

23.001–11 ATTACHING PARTS, Seal To Extension

FASTENER	68	30–70	23.012	4	400	2284

23.001–12 SEAL, Door Inner Panel Air (Behind Armrest)

71/	01–40	.....	AR	360	1066
68/	15–18–85–88	.....	4	360	1066
68/	17–19–89	.....	2	360	1066
68/70	39–79	.....	2	360	1066
71/	79	.....	2	365	1069

23.001–13 BUMPER, Door Edge Guard (Plastic)

68	05–06 (Except 440 And Rogue)(5" Long)	.....	4	363	0320
68	01 (440)(Rogue)(3-1/2" Long)	.....	4	363	0321
69	01 (3-1/2" Long)	.....	AR	363	0321
68	10–30–70–80 (3-1/2" Long)	.....	4	363	0321
69/	01–10–30–40–70–80 (5" Long)	.....	AR	363	0320

23.002–1 DOOR, Rear (Incl. Outer Panel)

67/68	(Left) 05–08	.....	1	448	0387
69	(Left) 05–08	.....	1	448	5979
70	(Left) 05	.....	1	448	7405
71/	(Left) 05–08	.....	1	448	8991
67	(Left) 15–18–85–88	.....	1	448	4227
68/69	(Left) 15–18–85–88 ***(Ref. Pr. List)***	.....	1	320	8883
70/	(Left) 15–85	.....	1	448	7693
70/	(Left) 18–88 ***(Ref. Pr. List)***	.....	1	320	8883
67/68	(Right) 05–08	.....	1	448	0386
69	(Right) 05–08	.....	1	448	5978
70	(Right) 05	.....	1	448	7404
71/	(Right) 05–08	.....	1	448	8990
67	(Right) 15–18–85–88	.....	1	448	4226
68/69	(Right) 15–18–85–88 ***(Ref. Pr. List)***	.....	1	320	8882
70/	(Right) 15–85	.....	1	448	7692
70/	(Right) 18–88 ***(Ref. Pr. List)***	.....	1	320	8882

23.002–2 PANEL, Rear Door Outer

67/69	(Left) 05–08	.....	1	448	0393
70/	(Left) 05–08	.....	1	448	7409
67	(Left) 15–18–85–88	.....	1	448	4065
68/69	(Left) 15–18–85–88	.....	1	320	8881
70/	(Left) 15–85	.....	1	448	7691
70/	(Left) 18–88	.....	1	320	8881
67/69	(Right) 05–08	.....	1	448	0392
70/	(Right) 05–08	.....	1	448	7408
67	(Right) 15–18–85–88	.....	1	448	4064
68/69	(Right) 15–18–85–88	.....	1	320	8880
70/	(Right) 15–85	.....	1	448	7690
70/	(Right) 18–88	.....	1	320	8880

23.002–3 REINFORCEMENT, Rear Door Outer Panel Handle

67	15–18–85–88	23.001	1	358	6671

23.002–4 SEAL, Rear Door Inner Panel Lower Drain Hole

67/69	15–18–85–88	23.006	4	355	2958

DOORS - HARDWARE

23.002–5 ATTACHING PARTS, Seal To Lower Inner Panel

FASTENER	67/68	15-18-85-88		23.013	8	400 0249

23.002–6 TAPE, Rear Door Reflecting (Red)

69	***(Left) 18 (Post Office)***	.....	1	360 8641
67	***(Left) 85 (Post Office)***	.....	1	360 8641
69	***(Right) 18 (Post Office)***	.....	1	360 8640
67	***(Right) 85 (Post Office)***	.....	1	360 8640

23.006–1 TAILGATE

67/69	08	.....	1	448 4276
67/68	18-88 (LVT) ***(Use 448 5598)***	.....	1	448 4228
67/68	18-88 (WVT) ***(Use 448 5599)***	.....	1	448 4229
69	18-88 (* 23-23)	.....	1	448 6310
69	18-88 (* 23-24)	.....	1	448 7207
70/	18-88	.....	1	448 7207

23.006–2 TAPE, Tailgate Reflective (Red)

69	***18 (Post Office)***	.....	1	360 9438

23.006–3 COVER, Tailgate Inner Panel Access Hole

67/69	08	.....	1	348 2300
67/	18-88	.....	2	355 2956

23.006–4 ATTACHING PARTS, Cover To Tailgate

SCREW, Tapping	67/69	08	.....	8	400 0531	
SCREW, Tapping	67/	18-88	17.660	12	812 0052	NA

23.006–5 GASKET, Tailgate Inner Panel Access Hole Cover

67/69	08	.....	1	348 2303
67/	18-88	.....	2	355 2957

23.006–6 HINGE ASSEMBLY, Tailgate

67/69	(Left) 08	.....	1	355 2411
67/68	(Left) 18-88 (LVT)	.....	1	357 4991
67/69	(Right) 08	.....	1	355 2410
67/68	(Right) 18-88 (LVT)	.....	1	357 4990

23.006–7 HINGE ASSEMBLY, Tailgate Upper

67/68	18-88 (WVT)	.....	1	357 5070	
69/70	18-88 (Body Half)	329	1	361 4293	
71	18-88 (Body Half)(* 23-29)	329	1	361 4293	
71	18-88 (Body Half)(* 23-30)	.....	1	360 9892	
72	18-88 (Body Half)	.....	1	360 9892	
69/70	18-88 (Tailgate Half)	.....	1	360 0620	
71	18-88 (Tailgate Half)(* 23-29)	.....	1	360 0620	
71	18-88 (Tailgate Half)(* 23-30)	.....	1	360 9893	
72	18-88 (Tailgate Half)	.....	1	360 9893	

23.006–7a ATTACHING PARTS, Tailgate Upper Hinge Release Rod

RETAINER, Clip	69/	18-88	.....	1	400 3672	

DOORS - HARDWARE

23.006–7b PIN, Tailgate Door Upper Hinge (On Body Half Of Hinge)

69/70	18-88		.....	1	360 0628
71	18-88 (* 23-29)		.....	1	360 0628
71	18-88 (* 23-30)...(Incl. Pin, Roller And Ring)		.....	1	812 0458
72	18-88...(Incl. Pin, Roller And Ring)		.....	1	812 0458

23.006–7c ATTACHING PARTS, Tailgate Door Upper Hinge Retaining

PIN	69/71	18-88 (* 23-29)	.....	1	448 7148
SCREW, Set	71	18-88 (* 23-30)	.....	1	400 4391
SCREW, Set	72	18-88	.....	1	400 4391

23.006–7d ROLLER, Tailgate Door Upper Hinge Pin

71	18-88 (* 23-30)...(Incl. Pin, Roller And Ring)	.....	1	812 0458
72	18-88...(Incl. Pin, Roller And Ring)	.....	1	812 0458

23.006–7e RING, Tailgate Upper Hinge Pin Retaining

71	18-88 (* 23-30)	.....	1	400 4186
72	18-88	.....	1	400 4186

23.006–8 HINGE ASSEMBLY, Tailgate Lower

67/68	18-88 (WVT)		.....	1	357 5074
69/	(Left) 18-88	331	.....	1	360 0631
69/	(Right-Body Half) 18-88...(Incl. Pin, Snap Ring And Bushing)	330	.....	1	361 4292
69/	(Right-Tailgate Half) 18-88...(Incl. Latch Cable)	332	.....	1	360 0630

23.006–8a PIN, Tailgate Door Lower Hinge

69/	(Right-Body Half) 18-88	.....	1	360 9233

23.006–8b RING, Tailgate Door Lower Hinge Pin Snap

69	18-88	.....	1	400 3542
70/	18-88	.....	1	360 9458

23.006–9 ATTACHING PARTS, Hinge To Tailgate

SCREW, Machine	67/69	08	.....	6	400 1577
SCREW, Machine	67/68	18-88 (LVT-1-1/8" Long)	23.015	5	400 2070
SCREW, Machine	67/68	18-88 (LVT-1-3/8" Long)	.....	1	400 2157
SCREW, Machine	68	18-88 (LVT-1-1/4" Long)	29.105	5	400 1962
SCREW, Machine	68	18-88 (LVT-1-1/2" Long)	.....	1	400 3017
SCREW, Machine	67/68	18-88 (WVT-Upper-7/8" Long)	.....	4	400 2154
SCREW, Machine	68	18-88 (WVT-Upper-1-1/8" Long)	.....	4	400 1963
SCREW, Machine	67/68	18-88 (WVT-Lower)	23.015	3	400 2178
SCREW, Tapping	69/	18-88 (5/16-18 x 1)	.....	8	400 3528
SCREW, Tapping	69	18-88 (10-24 x 3/8")	.....	1	G9415329 NA

23.006–10 ATTACHING PARTS, Hinge To Body

SCREW, Machine	67/69	08	.....	6	400 1577
SCREW, Machine	67/68	18-88 (1-1/8" Long)	23.015	6	400 2070
SCREW, Machine	67/68	18-88 (1-1/4" Long)	29.105	10	400 1962
SCREW, Machine	69/	18-88 (1-7/8" Long)	.....	2	400 3072
SCREW, Tapping	69/	18-88 (1-1/4" Long)	23.015	9	400 3060
PLATE, Tapping	67/69	08	.....	2	347 2860

DOORS - HARDWARE

23.006–11 ATTACHING PARTS, Upper Hinge Release Rod To Bellcrank

CLIP	69	18–88	.....	1	400 0439

23.006–11a CABLE, Tailgate Right Lower Hinge To Latch

69/	18–88 (12-1/4" Long)	.....	1	361 4294

23.006–11b ATTACHING PARTS, Cable To Lower Right Hinge

PIN, Clevis	69/	18–88	16.300	1	316 4193	
PIN, Cotter	69/	18–88	17.460	1	G137127	NA

23.006–11c ATTACHING PARTS, Cable To Latch

SCREW, Shoulder	69/	18–88	.....	1	400 3644
NUT, Lock	69/	18–88	23.074	1	400 1972

23.006–12 REINFORCEMENT KIT, Tailgate Upper Hinge To Rear Quarter Panel Extension

67/68	18–88 (WVT)	.....	1	448 6453

23.006–12a REINFORCEMENT, Tailgate Upper Hinge To Rear Quarter Panel Extension

67/68	18–88 (WVT)	.....	1	360 8933

23.006–13 ATTACHING PARTS, Reinforcement To Hinge

SCREW, Machine	67/68	18–88 (WVT)	.....	1	400 3026	

23.006–13a PLATE, Tailgate Upper Left Hinge To Body Mounting

69/	18–88	.....	1	360 9254

23.006–13b PLATE, Tailgate Lower Left Hinge To Body Mounting

69/	(1/8") 18–88	.....	AR	360 9257
69/	(3/16") 18–88	.....	AR	360 9255

23.006–13c SHIM, Tailgate To Body (2 Inches Long)

69/	(1/32") 18–88	.....	AR	360 9198
69/	(1/16") 18–88	.....	AR	360 9199
69/	(1/8") 18–88	.....	AR	360 9234

23.006–14 SUPPORT, Tailgate Lower Hinge

68	18–88 (WVT)	.....	1	360 8501

23.006–15 ATTACHING PARTS, Support To Lower Center Panel

SCREW, Tapping	68	18–88 (WVT)	17.671	2	400 1037	

23.006–16 PIN, Tailgate Hinge

67/68	18–88 (WVT)	.....	2	351 5464

23.006–17 BUSHING, Tailgate Hinge Pin

67/68	18–88 (WVT)	.....	4	358 6688

Printed in U.S.A.

DOORS - HARDWARE

23.006–18 LINK, Tailgate Upper Hinge Stop

67/68	18-88 (WVT)	***(Use 351 5454)***	.....	1	351 7197

23.006–19 PLATE, Tailgate Locking Instruction

67	18-88 (WVT-L3S)		.....	1	357 7260

23.006–20 ATTACHING PARTS, Plate To Panel

FASTENER	67	18-88 (WVT-L3S)	.....	4	400 0283

23.006–21 BAR, Tailgate Hinge Torque

67/69	08		.....	1	354 8873
67/68	18-88 (_VT)		.....	1	357 5060
69/	18-88		.....	1	360 0616

23.006–22 ATTACHING PARTS, Bar To Hinge

CLIP	67/69	08	.....	2	400 1706
SCREW, Machine	67/68	18-88 (LVT)	.....	1	400 2157
NUT, Speed	69/	18-88	.....	1	400 3058

23.006–23 ATTACHING PARTS, Bar To Bracket

CLAMP	67/69	08	.....	1	348 5679
BOLT, Hexagon	67/69	08	17.038	1	G181004 NA
NUT, Hexagon	67/69	08	17.412	1	G271187 NA

23.006–24 ATTACHING PARTS, Bar To Inner Panel

CLIP	67/68	18-88 (LVT) ***(Use 400 3015)***	17.134	1	G120525
CLIP	69/	18-88	.....	1	400 3632
SCREW, Tapping	67/68	18-88 (LVT)	15.320	1	400 1701
SCREW, Tapping	69	18-88 (3/8" Long)	.....	1	400 2303
SCREW, Tapping	69/	18-88 (1/2" Long)	17.671	1	812 0054

23.006–25 ANTI-SQUEAK, Tailgate Hinge Torque Bar

67	18-88 (_VT-18" Long-On Rod)		.....	1	358 6232
67	18-88 (LVT-3-1/2" Long-On Hinge)		.....	1	355 3925

23.006–26 SPACER, Tailgate Hinge Torque Bar Bracket

67/69	08		.....	1	350 0173

23.006–27 BRACKET, Tailgate Hinge Torque Bar Center

67/69	08		.....	1	355 2400

23.006–28 ATTACHING PARTS, Bracket To Rear Cross Sill

SCREW, Machine	67/69	08 (1-1/4" Long)	.....	1	400 0187
SCREW, Machine	67/69	08 (1-1/8" Long)	17.626	1	G425642 NA

23.006–29 SEAL, Tailgate Inner Panel Drain Hole

67/	18-88		.....	4	355 2958

DOORS - HARDWARE

23.006–30 ATTACHING PARTS, Seal To Tailgate

FASTENER	67/	18-88	23.013	8	400 0249

23.006–31 BUMPER, Tailgate

67/69	(Left) 08 (On Tailgate Opening Pillar)	.....	1	348 8231
67/69	(Right) 08 (On Tailgate Opening Pillar)	.....	1	348 8230
67/68	(Lower) 18-88 (LVT-On Outer Panel-For Torque Rod Cushion)	20.450	1	400 0313
67/	(Lower) 18-88 (Bottom Of Panel)(Inner)	23.019	2	434 8105

23.006–32 ATTACHING PARTS, Bumper To Opening Pillar

SCREW, Tapping	67/69	08	17.660	4	G161790 NA

23.008–1 FRAME, Front Door Window

67/69	(Left) 05-08	.....	1	448 1999
70/	(Left) 05-08	.....	1	361 5507
67/69	(Left) 06	.....	1	448 1997
70/	(Left) 06-46	.....	1	361 5473
67/71	(Left) 15-18-85-88	.....	1	357 6203
72	(Left) 15-18-85-88	.....	1	364 6047
67/69	(Right) 05-08	.....	1	448 1998
70/	(Right) 05-08	.....	1	361 5506
67/69	(Right) 06	.....	1	448 1996
70/	(Right) 06-46	.....	1	361 5472
67/71	(Right) 15-18-85-88	.....	1	357 6202
72	15-18-85-88	.....	1	364 6046

23.008–2 ATTACHING PARTS, Frame To Front Door

SCREW, Machine	67/69	05-06-08 (5/8" Long)	23.017	4	400 0659
SCREW, Machine	67/69	05-06-08 (3/8" Long)	.....	6	400 0776
SCREW, Machine	67/	15-18-85-88 (3/4" Long)	.....	4	400 1953
SCREW, Machine	67/	15-18-85-88 (3/8" Long)	.....	2	400 0570
STUD, Adjusting	67/	15-18-85-88	25.029	2	400 1487
NUT, Hexagon	67/	15-18-85-88	12.001	2	400 0566

23.008–3 FRAME, Rear Door Window

67/69	(Left) 05-08	.....	1	448 2001
70/	(Left) 05-08	.....	1	630 5171
67/69	(Left) 15-18-85-88	.....	1	357 6213
70/71	(Left) 15-85	.....	1	361 5843
72	(Left) 15-85	.....	1	364 6051
70/71	(Left) 18-88	.....	1	357 6213
72	(Left) 18-88	.....	1	364 6055
67/69	(Right) 05-08	.....	1	448 2000
70/	(Right) 05-08	.....	1	630 5170
67/69	(Right) 15-18-85-88	.....	1	357 6212
70/71	(Right) 15-85	.....	1	361 5842
72	(Right) 15-85	.....	1	364 6050
70/71	(Right) 18-88	.....	1	357 6212
72	(Right) 18-88	.....	1	364 6054

DOORS - HARDWARE

23.008–4 ATTACHING PARTS, Frame To Rear Door

SCREW, Machine	67/69	05-08	.....	10	400 0776
SCREW, Machine	67/	15-18-85-88 (Upper)	.....	AR	400 0570
SCREW, Tapping	71/	15-18-85-88 (Lower)	.....	4	400 4400

23.009–1 DOOR, Rear Deck

67/68	05-06-07-09	.....	1	448 3423
69	05-06-09	.....	1	448 6473
70/	05-06	.....	1	363 0726
67/68	15-85	.....	1	448 4799
69/	15-85	.....	1	651 8004
67/68	16-17-19-86-87-89	.....	1	448 4800
69/	19-89	.....	1	651 8005
68/	30-70	.....	1	359 2550
67	59	.....	1	358 6556

23.009–2 COVER, Rear Deck Door Vinyl

67	(White) 59 (WRC)	.....	1	358 6821
67	(Black) 59 (WRC)	.....	1	358 6558

23.009–3 CEMENT, Rear Deck Door Vinyl Cover

67	59 (Quart)	30.020	AR	448 3394

23.009–4 BUMPER, Rear Deck Door

67/68	05-06-07-09	.....	2	400 0282
71/	79	.....	2	365 0943

23.009–5 SPOILER, Rear Deck Door

70	79	.....	1	363 5978
70	79 (Mark Donohue Special)	.....	1	363 6847
71/	79	.....	1	364 6488

23.009–6 ATTACHING PARTS, Spoiler To Bracket

WASHER, Bite	70	79	10.003	2	310 8995
NUT, Acorn	70	79	17.430	2	G131422 NA

23.009–6a ATTACHING PARTS, Spoiler To Deck Door

NUT, Hexagon	70	79 (Mark Donohue Special)	.....	8	G271172
NUT, Hexagon	71/	79 (1/4-20)(Outer-Upper)	17.428	2	G107806
NUT, Tee	71/	79 ...(Incl. Sealer)	.....	7	400 3114
SEAL	70	79 (Mark Donohue Special)	.....	8	319 1502

23.009–7 BRACKET, Rear Deck Spoiler

70	79	.....	2	363 5979

23.009–8 ATTACHING PARTS, Bracket To Deck Door

BOLT, Hexagon	70	79 ..... ***(Use G180073)***	17.038	4	G179812 NA
WASHER, Lock	70	79	17.824	4	G138538 NA

Printed in U.S.A.

DOORS - HARDWARE

23.009–9 DECAL, Rear Deck Spoiler (Mark Donohue)

70	70 (Mark Donohue Special)	.....	1	363 6850

23.009–10 GASKET, Rear Deck Spoiler Lock Cylinder (Sponge Rubber)

70	70 (Mark Donohue Special)	.....	1	365 0430

23.009–11 POST, Rear Deck Luggage Rack (Rear)

68/	(Left) 30–70...(Incl. Studs)	27.208	1	350 0609
68/	(Right) 30–70...(Incl. Studs)	27.208	1	350 0608

23.009–12 SEAL, Rear Deck Luggage Rack Post (Rear)

68/	30–70	27.208	2	350 0620

23.009–13 ATTACHING PARTS, Rear Deck Luggage Rack Post (Rear)

NUT, Sealing	68/	30–70	27.208	2	400 2117

23.009–14 STANCHION, Rear Deck Luggage Rack

71/	05–06	.....	6	363 6741
68/	30–70	.....	4	363 6742

23.009–15 WASHER, Rear Deck Luggage Rack Stanchion

71/	05–06	.....	4	363 6743
68/	30–70	.....	4	363 6743

23.009–16 ATTACHING PARTS, Rear Deck Luggage Rack Stanchion To Deck Door

NUT, Lock (Acorn).....	71/	05–06 (Center)	.....	2	400 4198
SCREW, Machine.....	71/	(#10–24 x 1-7/8") 05–06 (Center)	.....	2	400 4199
SCREW, Tapping.....	71/	(#10–16 x 2") 05–06 (Chrome) (Thru Stanchion To Deck Panel)	.....	4	400 2948
SCREW, Tapping.....	68/	30–70	17.660	4	G9425940 NA

23.009–17 CAP, Rear Deck Luggage Rack Rail (Black - Plastic)

71/	05–06	.....	8	363 6739
68/	30–70	.....	8	448 9175

23.012–1 SEALER, Front Door

67/69	(Left) 05–08	.....	1	354 1513
70	(Left) 05	.....	1	363 1835
71/	(Left) 05–08 ***(Use 365 0949)***	.....	1	363 6783
67/69	(Left) 06	.....	1	354 1517
70	(Left) 06–46 ***(Use 363 6781)***	.....	1	~~363 1855~~
71/	(Left) 06–46	.....	1	363 6781
67/69	(Left) 07–09	.....	1	355 3229
67/	(Left) 15–18–85–88	.....	1	357 4597
67/	(Left) 16–17–19–59–86–87–89	.....	1	357 4567
68/	(Left) 30–70	.....	1	360 2019

Printed in U.S.A.

67/69	(Right) 05-08	.....	1	354 1512	
70	(Right) 05 ***(Use 365 0948)***	.....	1	363 6782	
71/	(Right) 05-08 ***(Use 365 0948)***	.....	1	363 6782	
67/69	(Right) 06	.....	1	354 1516	
70	(Right) 06-46	.....	1	363 1832	
71/	(Right) 06-46	.....	1	363 6780	
67/69	(Right) 07-09	.....	1	355 3228	
67/	(Right) 15-18-85-88	.....	1	357 4596	
67/	(Right) 16-17-19-59-86-87-89	.....	1	357 4566	
68/	(Right) 30-70	.....	1	360 2018	

23.012-2 ATTACHING PARTS, Sealer To Front Door

FASTENER, Screw.....	67/70	01-10-50-80	.....	42	400 1325	
FASTENER, Spring	67/	(Upper Front And Upper Rear)	.....	AR	400 0316	
FASTENER, Lock	72	10-80	.....	AR	400 1916	
FASTENER, Tubular ...	69		.....	AR	400 1839	
CLIP (Metal)	67/	(Front And Rear End)	.....	4	400 0650	
CLIP (Plastic).....	67/		.....	AR	400 1016	
SEALER, Hole	67/69	06-07-09	.....	42	400 0138	
SCREW, Tapping.....	67/	01-10-50-80 (Front)	17.670	2	G9426747	NA
SCREW, Tapping.....	67/	01-10-50-80 (Rear)	17.660	2	G161790	NA

23.012-3 SEALER, Rear Door

67/69	(Left) 05-08	.....	1	354 1515
70	(Left) 05	.....	1	363 1837
71/	(Left) 05-08	.....	1	363 6785
67/69	(Left) 15-18-85-88	.....	1	357 4583
70	(Left) 15-85	.....	1	361 6177
71/	(Left) 15-85	.....	1	361 6173
70	(Left) 18-88	.....	1	357 4583
71/	(Left) 18-88	.....	1	357 4579
67/69	(Right) 05-08	.....	1	354 1514
70	(Right) 05	.....	1	363 1836
71/	(Right) 05-08	.....	1	363 6784
67/69	(Right) 15-18-85-88	.....	1	357 4582
70	(Right) 15-85	.....	1	361 6176
71/	(Right) 15-85	.....	1	361 6172
70	(Right) 18-88	.....	1	357 4582
71/	(Right) 18-88	.....	1	357 4578

23.012-4 ATTACHING PARTS, Sealer To Rear Door

FASTENER, Screw.....	67	05-08-15-18-85-88	.....	32	400 1325	
FASTENER, Screw.....	70	15-18-85-88	.....	32	400 1325	
FASTENER, Lock	67/	05-08-15-18-85-88	.....	34	400 1916	
CLIP (Metal)	67/69	05-08-15-18-85-88	.....	4	400 0650	
CLIP (Metal)	70/	15-18-85-88 (Front End)	.....	2	400 0650	
CLIP (Metal)	72	05-08 (Rear End)	.....	2	400 0050	
CLIP (Plastic).....	70/	05-08	.....	32	400 1916	
SCREW, Tapping.....	67/	05-08-15-18-85-88 (Front)	17.660	2	G161790	NA
SCREW, Tapping.....	72	05-08 (Rear End)	17.660	2	G161790	NA

23.012-5 WEATHERSEAL, Front Door Window Frame

67	(Left) 05-08	.....	1	350 1103
67	(Left) 06	.....	1	350 1101
67/69	(Left) 15-18-85-88	.....	1	357 6161
67	(Right) 05-08	.....	1	350 1102
67	(Right) 06	.....	1	350 1100
67/69	(Right) 15-18-85-88	.....	1	357 6160

Printed in U.S.A.

23.012–6 WEATHERSEAL, Rear Door Window Frame

67	(Left) 05–08	.....	1	350 1105
67/69	(Left) 15–18–85–88	.....	1	357 6165
67	(Right) 05–08	.....	1	350 1104
67/69	(Right) 15–18–85–88	.....	1	357 6164

23.012–7 WEATHERSEAL, Roof Rail

67/69	(Left) 09	.....	1	352 0895
67	(Left) 16–86	.....	1	357 6115
67/69	(Left) 19–89 (79-5/8" Long)	.....	1	357 6089
70/	(Left) 19–89 (72-3/8" Long)	.....	1	363 1933
68	(Left) 39	.....	1	360 2575
69	(Left) 39 (* 23–20)	.....	1	360 2575
69	(Left) 39 (* 23–21)	.....	1	363 0847
70	(Left) 39	.....	1	363 0847
67	(Left) 59	.....	1	357 7587
68	(Left) 79	.....	1	360 1231
69	(Left) 79 (* 23–20)	.....	1	360 1231
69	(Left) 79 (* 23–21)	.....	1	363 0819
70	(Left) 79	.....	1	363 0819
71/	(Left) 79	.....	1	363 2445
67/69	(Right) 09	.....	1	352 0894
67	(Right) 16–86	.....	1	357 6114
67/69	(Right) 19–89 (79-5/8" Long)	.....	1	357 6088
70/	(Right) 19–89 (72-3/8" Long) ***(Use 360 9693)***	.....	1	363 1932
68	(Right) 39	.....	1	360 2574
69	(Right) 39 (* 23–20)	.....	1	360 2574
69	(Right) 39 (* 23–21)	.....	1	363 0846
70	(Right) 39	.....	1	363 0846
67	(Right) 59	.....	1	357 7586
68	(Right) 79	.....	1	360 1230
69	(Right) 79 (* 23–20)	.....	1	360 1230
69	(Right) 79 (* 23–21)	.....	1	363 0818
70	(Right) 79	.....	1	363 0818
71/	(Right) 79	.....	1	363 2444

23.012–8 ATTACHING PARTS, Weatherseal To Bottom Of Front Pillar

FASTENER, Drive 68	30–70	.....	2	400 2284

23.012–9 WEATHERSEAL, Rear Quarter Window

67	(Left) 16–86	.....	1	357 6125
67	(Right) 16–86	.....	1	357 6124

23.012–10 WEATHERSEAL, Front Body Pillar

67	(Left) 07	.....	1	350 1021
67/68	(Left) 17–87	.....	1	357 6091
67	(Right) 07	.....	1	350 1020
67/68	(Right) 17–87	.....	1	357 6090

DOORS - HARDWARE

23.012–11 RETAINER, Roof Side Rail Weatherseal

67/69	(Left) 19-89	1		357 6095
70/	(Left) 19-89	1		361 5373
67	(Left) 59	1		357 7589
67/69	(Right) 19-89	1		357 6094
70/	(Right) 19-89	1		361 5372
67	(Right) 59	1		357 7588

23.012–12 RETAINER, Roof Rail Weatherseal Front

67/69	(Left) 09	1		352 0891
67	(Left) 16-86	1		357 6117
68	(Left) 39-79	1		359 9271
69	(Left) 39-79 (* 23-20)	1		359 9271
69	(Left) 39-79 (* 23-21)	1		363 0827
70/	(Left) 39-79	1		363 0827
67/69	(Right) 09	1		352 0890
67	(Right) 16-86	1		357 6116
68	(Right) 39-79	1		359 9270
69	(Right) 39-79 (* 23-20)	1		359 9270
69	(Right) 39-79 (* 23-21)	1		363 0826
70/	(Right) 39-79	1		363 0826

23.012–12a RETAINER, Roof Rail Weatherseal Center

71/	(Left) 79	1		363 2449
71/	(Right) 79	1		363 2448

23.012–13 RETAINER, Roof Rail Weatherseal Rear

67/69	(Left) 09	1		353 0565
67	(Left) 16-86	1		357 6129
68	(Left) 39	1		359 9275
69	(Left) 39 (* 23-20)	1		359 9275
69	(Left) 39 (* 23-21)	1		363 0851
70	(Left) 39	1		363 0851
68	(Left) 79	1		359 9273
69	(Left) 79 (* 23-20)	1		359 9273
69	(Left) 79 (* 23-21)	1		363 0829
70	(Left) 79	1		363 0829
71/	(Left) 79	1		363 2455
67/69	(Right) 09	1		353 0564
67	(Right) 16-86	1		357 6128
68	(Right) 39	1		359 9274
69	(Right) 39 (* 23-20)	1		359 9274
69	(Right) 39 (* 23-21)	1		363 0850
70	(Right) 39	1		363 0850
68	(Right) 79	1		359 9272
69	(Right) 79 (* 23-20)	1		359 9272
69	(Right) 79 (* 23-21)	1		363 0828
70	(Right) 79	1		363 0828
71/	(Right) 79	1		363 2454

23.012–14 ATTACHING PARTS, Retainer To Roof Rail

SCREW, Tapping	67/	09-16-19-39-59-79-86-89 (8~~-18 x 1/2)~~	20.280	AR	400 1724
SCREW, Tapping	69	09 (8-15 x 1/2)	17.660	18	G161860 NA

Printed in U.S.A.

DOORS - HARDWARE

23.012–15 RETAINER, Front Body Pillar Weatherseal

67/68	(Left) 17–87	.....	1	357 6101
67/68	(Right) 17–87	.....	1	357 6100

23.012–16 ATTACHING PARTS, Retainer To Front Pillar

SCREW, Tapping	67/68 17–87	20.280	8	400 1724

23.012–17 BRACKET, Front Body Pillar Weatherseal Retainer Mounting (On Header)

67/68	(Left) 17–87	.....	1	359 8103
67/68	(Right) 17–87	.....	1	359 8102

23.012–18 RETAINER, Center Pillar Weatherstrip

67	16–86	.....	4	357 7580

23.012–19 ATTACHING PARTS, Retainer To Center Pillar

SCREW, Tapping	67 16–86	20.280	12	400 1724

23.012–20 SEALER, Roof Rail Weatherseal Retainer To Roof Rail

67	59	.....	2	357 7590
67/68	19–89	.....	2	357 6097
69/	19–39–79–89	.....	2	360 9111

23.012–21 SEALER, Roof Rail Weatherseal Retainer To Roof Rail (Front)

67/68	09	.....	2	352 8462
69	09	.....	2	363 0510
67	16–86	.....	2	357 6118
68	39–79	.....	2	357 6132
69/	39–79	.....	2	360 9111

23.012–22 SEALER, Roof Rail Weatherseal Retainer To Roof Rail (Rear)

67/68	09	.....	2	350 9422
69/	09–39–79	.....	2	360 9111
67	16–86	.....	2	357 6132
68	39–79	.....	2	357 7590

23.012–23 SEALER, Center Pillar Retainer

67	16–86	.....	4	357 7582

23.012–24 SEALER, Front Body Pillar Weatherseal Retainer

67/68	17–87	.....	2	360 8025

23.013–1 SEALER, Tailgate (On Body)

67/	18–88	.....	1	358 6570
67/69	08 (Left)	.....	1	353 0635
67/69	08 (Right)	.....	1	353 0634

23.013–2 SEALER, Tailgate (On Tailgate)

67/	(Left) 18–88	.....	1	357 7387
67/	(Right) 18–88	.....	1	357 7386

DOORS - HARDWARE

23.013–3 ATTACHING PARTS, Sealer To Tailgate

FASTENER	67/69	18-88	.....	4	400 1667
SCREW, Tapping	69/	18-88	17.669	4	G457002

23.013–4 ATTACHING PARTS, Sealer To Body

SCREW, Tapping	67/	18-88	29.294	2	400 3095

23.013–5 SEALER, Liftgate

70/	40	.....	1	365 0892
71/	08	.....	1	365 1583

23.014 SEALER, Rear Deck Door

67/69	05-06-07-09	.....	1	350 0814
70/	05-06	.....	1	361 5353
67	59	.....	1	351 7390
67/68	15-85 ***(Use 351 6818)***	.....	1	357 6324
67/68	16-17-19-86-87-89 ***(Use 351 6818)***	.....	1	357 6325
68/	39-79	.....	1	351 6818
69	10-80	.....	1	351 6818
70	10-80	.....	1	363 1391
71/	10-80	.....	1	351 6818

23.015–1 HINGE, Front Door Upper

70/	01-40	.....	2	361 5480
67/69	(Left) 01	.....	1	352 8971
67/68	(Left) 15-18-85-88 ***(Use 357 4751)***	.....	1	360 8197
69	(Left) 15-18-85-88	.....	1	357 4751
70/	(Left) 15-18-85-88	.....	1	360 2959
67/	(Left) 16-17-19-59-86-89	.....	1	360 2959
68/	(Left) 39-79	.....	1	360 0421
67/69	(Right) 01	.....	1	352 8970
67/68	(Right) 15-18-85-88 ***(Use 357 4750)***	.....	1	360 8196
69	(Right) 15-18-85-88	.....	1	357 4750
70/	(Right) 15-18-85-88	.....	1	360 2958
67/	(Right) 16-17-19-59-86-89	.....	1	360 2958
68/	(Right) 39-79	.....	1	360 0420

23.015–2 ATTACHING PARTS, Upper Hinge To Front Door

SCREW, Machine	67/69	01	.....	6	400 1577
SCREW, Machine	67/69	10-30-50-70-80 (1-1/8" Long)	.....	6	400 2070
SCREW, Threading	68	10-30-70-80 (1-1/4" Long) ***(Use 400 3060)***	29.105	6	400 1962
SCREW, Tapping	70/	01-40 (3/4" Long)	.....	6	400 1933
SCREW, Tapping	70/	10-80	.....	10	400 3060
SCREW, Tapping	69/70	30-70	.....	10	400 3060
SCREW, Tapping	71	70 (5/16-18 x 1-1/4")	.....	6	400 3060
SCREW, Tapping	71/	70 (5/16-18 x 1")	.....	6	400 3528

23.015–3 STOP, Front Door Upper Hinge

70/	01-40	.....	2	361 5487
67/68	10-50-80	.....	2	360 8593

DOORS - HARDWARE

23.015–4 ATTACHING PARTS, Upper Hinge To Body

SCREW, Machine	67/69	01	***(Use 400 1896)***	23.020	6	400 0608
SCREW, Machine	70/	01-40		29.131	6	400 1933
SCREW, Machine	67/71	10-30-50-70-80		.....	6	400 2199
SCREW, Machine	72	10-70-80		.....	6	400 4520

23.015–5 SPRING, Front Door Upper Hinge Check

67/69	01	.....	2	448 0805
68/	30-70	23.018	2	357 4789

23.015–6 BUSHING, Front Door Upper Hinge Pin

70/	01-40	23.006	4	358 6688
67/	10-30-50-70-80	23.006	4	358 6688

23.016–1 HINGE, Front Door Lower

70/	01-40	.....	2	361 5490
67/69	(Left) 01	.....	1	347 2391
67	(Left) 10-50-80	***(Use 359 1187)***	.....	1	357 4761
68/	(Left) 10-80	.....	1	359 1187
68	(Left) 30-70	***(Use 360 2961)***	.....	1	360 0431
69/	(Left) 30-70	.....	1	360 2961
67/69	(Right) 01	.....	1	347 2390
67	(Right) 10-50-80	***(Use 359 1186)***	.....	1	357 4760
68/	(Right) 10-80	.....	1	359 1186
68	(Right) 30-70	***(Use 360 2960)***	.....	1	360 0430
69/	(Right) 30-70	.....	1	360 2960

23.016–2 ATTACHING PARTS, Lower Hinge To Front Door

SCREW, Machine	67/69	01		23.015	6	400 1577
SCREW, Machine	70/	01-40		29.131	6	400 1933
SCREW, Machine	67/68	10-30-50-70-80 (1-1/8" Long)		23.015	6	400 2070
SCREW, Tapping	68	10-30-70-80 (1/1/4" Long)	***(Use 400 3060)***	29.105	6	400 1962
SCREW, Tapping	69/	10-80		23.015	6	400 3060
SCREW, Tapping	69/70	30-70		23.015	6	400 3060
SCREW, Tapping	71/	70		.....	4	400 3528
SHIM	70/	10-80 (.03 Thick)		.....	AR	360 9285

23.016–3 ATTACHING PARTS, Lower Hinge To Body

SCREW, Machine	67/69	01	***(Use 400 1896)***	23.020	6	400 0608
SCREW, Machine	70/	01-40		29.131	6	400 1933
SCREW, Machine	67/71	10-50-80		23.015	6	400 2199
SCREW, Machine	68	30-70		23.015	6	400 2070
SCREW, Machine	70/71	30-70		23.015	6	400 2199
SCREW, Machine	72	10-70-80		23.015	6	400 4520

23.016–4 SPRING, Front Door Lower Hinge Check

67/	10-50-80	23.018	2	357 4789

23.016–5 BUSHING, Front Door Lower Hinge Pin

70/	01-40 (Bronze)	23.006	4	360 9194
67/	10-30-50-70-80 (Nylon)	23.006	4	358 6688

23.016–6 STOP, Front Door Lower Hinge

70/	01-40	.....	2	361 5487
68	30-70	.....	2	360 1432

DOORS - HARDWARE

23.017–1 HINGE, Rear Door Upper

67/69	(Left) 05-08	.....	1	347	2401
70/	(Left) 05-08	.....	1	361	5531
67/	(Left) 15-18-85-88	.....	1	357	4771
67/69	(Right) 05-08	.....	1	347	2400
70/	(Right) 05-08	.....	1	361	5530
67/	(Right) 15-18-85-88 348	.....	1	357	4770

23.017–2 ATTACHING PARTS, Rear Door Upper Hinge To Door

SCREW, Machine	67/69	05-08	23.015	4	400	1577
SCREW, Machine	70/	05-08	29.131	4	400	1933
SCREW, Machine	67/68	15-18-85-88 (1-1/8" Long)	23.015	6	400	2070
SCREW, Threading	68	15-18-85-88 (1-1/4" Long) ***(Use 400 3060)***	29.105	6	400	1962
SCREW, Tapping	69/	15-18-85-88	23.015	6	400	3060

23.017–3 ATTACHING PARTS, Rear Door Upper Hinge To Body

SCREW, Machine	67/69	05-08	.....	4	400	0659
SCREW, Machine	70/	05-08	29.131	4	400	1933
SCREW, Machine	67/	15-18-85-88	23.015	6	400	2070

23.017–4 BUSHING, Rear Door Upper Hinge Pin

70/	05-08	23.006	2	358	6688
67/	15-18-85-88	23.006	4	358	6688

23.017–5 STOP, Rear Door Upper Hinge (Pin)

70/	05-08 (3" Long)	.....	2	361	5536

23.018–1 HINGE, Rear Door Lower

67/69	(Left) 05-08	.....	1	347	2411
70/	(Left) 05-08	.....	1	361	5541
67	(Left) 15-18-85-88 ***(Use 359 1191)***	.....	1	357	4781
68/	(Left) 15-18-85-88 347	.....	1	359	1191
67/69	(Right) 05-08	.....	1	347	2410
70/	(Right) 05-08	.....	1	361	5540
67	(Right) 15-18-85-88 ***(Use 359 1190)***	.....	1	357	4780
68/	(Right) 15-18-85-88 347	.....	1	359	1190

23.018–2 ATTACHING PARTS, Rear Door Lower Hinge To Door

SCREW, Machine	67/69	05-08	23.015	4	400	1577
SCREW, Machine	70/	05-08	29.131	4	400	1933
SCREW, Machine	67/68	15-18-85-88 (1-1/8" Long)	23.015	6	400	2070
SCREW, Threading	68	15-18-85-88 (1-1/4" Long) ***(Use 400 3060)***	29.105	6	400	1962
SCREW, Tapping	69/	15-18-85-88	23.015	6	400	3060

23.018–3 ATTACHING PARTS, Rear Door Lower Hinge To Body

SCREW, Machine	67/69	05-08	23.015	6	400	1577
SCREW, Machine	70/	05-08	29.131	6	400	1933
SCREW, Machine	67/	15-18-85-88	23.015	6	400	2070

23.018–4 SPRING, Rear Door Lower Hinge Check

67/69	05-08	.....	2	448	0806
67/	15-18-85-88	.....	2	357	4789

Printed in U.S.A.

DOORS - HARDWARE

23.018–5 BUSHING, Rear Door Lower Hinge Pin

70/	05–08	23.006	2	358 6688
67/	15–18–85–88	23.006	4	358 6688

23.018–6 STOP, Rear Door Lower Hinge

70/	05–08	.....	2	361 5536

23.019–1 BUMPER, Door

67/	(Button Type–Rubber–Fits 5/16" Dia. Hole)	.....	AR	400 0668
68/	(Button Type–Rubber–Fits 19/32" Dia. Hole) 30–70	.....	AR	400 2299
67/69	(Wedge Type–Rubber) 01	.....	2	400 0669
70/	(Center Of Door) 05–06–08–46	.....	AR	363 1398
70/	(Front Door Lower) 05–08	.....	2	363 1375
70/	(Rear Door) 05–08	.....	2	363 1398
67/69	(Left–Metal–On Door) 07–09	.....	1	351 1761
67/69	(Left–Nylon–On Body) 07–09	.....	1	351 1759
67/69	(Right–Metal–On Door) 07–09	.....	1	351 1760
67/69	(Right–Nylon–On Body) 07–09	.....	1	351 1758

23.019–2 ATTACHING PARTS, Bumper To Door

SCREW, Tapping.....	67/69	07–09	17.648	8	G161418 NA

23.019–3 SHIM, Door Bumper

67/69	07–09	.....	2	350 1017

23.023 PIN, Door Hinge (4 on 2 Dr.- 8 on 4 Dr.) (Upper And Lower)

70/	01–40	.....	AR	361 5486
67/69	01	.....	AR	359 1139
67/	10–30–50–70–80	23.006	AR	351 5464

23.028–1 SUPPORT, Rear Deck Door Hinge (Incl. Hinge Arm)

67/69	(Left) 05–06–09	.....	1	350 0429
70/	(Left) 05–06	.....	1	361 5849
67	(Left) 07	.....	1	350 0427
67/71	(Left) 15–16–17–19–85–86–87–89	.....	1	359 1081
72	(Left) 15–19–85–89	.....	1	359 1081
68/70	(Left) 30–70	.....	1	360 2371
71/	(Left) 70	.....	1	363 2265
67	(Left) 59	.....	1	357 4149
67/69	(Right) 05–06–09	.....	1	350 0428
70/	(Right) 05–06	.....	1	361 5848
67	(Right) 07	.....	1	350 0426
67/71	(Right) 15–16–17–19–85–86–87–89	.....	1	359 1080
72	(Right) 15–19–85–89	.....	1	359 1080
68/70	(Right) 30–70	.....	1	360 2370
71/	(Right) 70	.....	1	363 2264
67	(Right) 59	.....	1	357 4148

DOORS - HARDWARE

23.028–2 ATTACHING PARTS, Hinge Arm To Deck Door

SCREW, Machine	67/68	(5/16"-24 x 1-1/16") 01-10-50-80	***(Use 400 1896)***	23.020	4 400 0608
SCREW, Machine	69/70	(5/16-18 x 1") 10-80		12.060	4 400 3069
SCREW, Machine	71	(5/16"-18 x 1-1/8") 10-80		23.015	4 400 2199
SCREW, Machine	72	10-80		.....	4 400 4520
SCREW, Machine	68	30-70		23.015	4 400 2070
SCREW, Machine	69	(5/16"-18 x 7/8") 05-06-09		12.060	4 400 3872
SCREW, Machine	70/	05-06		23.015	4 400 2070
SCREW, Machine	69/	30-70		12.060	4 400 3872

23.028–3 COVER, Rear Deck Door Hinge

67/	(Left) 15-16-17-19-85-86-87-89	.....	1	357 4533
68/	(Left) 30-70	.....	1	360 2469
67/	(Right) 15-16-17-19-85-86-87-89	.....	1	357 4532
68/	(Right) 30-70	.....	1	360 2468

23.028–4 ATTACHING PARTS, Hinge Cover To Hinge

SCREW, Tapping	68/	30-70	***(Use 812 0054)***	17.671	2 G274773

23.028–5 BRACKET AND LINKS, Rear Deck Door Hinge

67/	(Left) 15-16-17-19-85-86-87-89	.....	1	357 5339
68/	(Left) 30-70	.....	1	360 2379
67/	(Right) 15-16-17-19-85-86-87-89	.....	1	357 5338
68/	(Right) 30-70	.....	1	360 2378

23.028–6 ATTACHING PARTS, Link To Hinge Arm

SCREW, Machine	67/	15-16-17-19-85-86-87-89	.....	2	400 2143
SCREW, Machine	68/	30-70	.....	2	400 2283
NUT, Hexagon	67/	15-16-17-19-39-79-85-86-87-89	17.412	6	G271184 NA

23.028–7 SHIM, Rear Deck Door Bracket And Link Assembly

70/	05-06	.....	AR	360 0342
68/	30-70	.....	AR	360 0342
67	59	.....	2	351 7304

23.028–8 ROD, Rear Deck Door Hinge Torque

67/69	(Left) 05-06-09	.....	1	350 0443
70/	(Left) 05-06	***(Use 361 5402)***	1	361 5403
67	(Left) 07	.....	1	350 0441
67	(Left) 59	.....	1	351 7369
67/69	(Right) 05-06-09	.....	1	350 0442
70/	(Right) 05-06	.....	1	361 5402
67	(Right) 07	.....	1	350 0440
67	(Right) 59	.....	1	351 7368

23.028–9 CLIP, Rear Deck Door Hinge Torque Rod

67/69	05-06-07-09-59		22.050	1	314 7959
70/	05-06		.....	1	400 4105

23.028–10 SLIDE, Rear Deck Door Torque Rod

67	59	.....	2	351 7070

Printed in U.S.A.

DOORS - HARDWARE

23.036–1 SUPPORT, Tailgate

67/68	18–88 (LVT)	.....	2	357 6830
69/	18–88 (Cable With Plastic Sleeve–15–5/8 x 9/64)	.....	1	361 4306
67/69	(Left) 08	.....	1	355 2403
67/69	(Right) 08	.....	1	355 2402

23.036–2 ATTACHING PARTS, Support To Tailgate

BOLT, Shoulder	67/69	08	.....	2	400 0780
BOLT, Machine	67/68	18–88 (LVT)	.....	2	400 0357
SCREW, Shoulder	69/	18–88	.....	1	400 3577
WASHER, Wave	67/68	08–18–88 (LVT)	25.030	2	400 0324
WASHER, Wave	69	08	25.030	4	400 0324
WASHER, Wave	69/	18–88	.....	1	400 3578
WASHER, Plain	67/68	08–18–88 (LVT)	17.814	2	400 0480

23.036–3 ATTACHING PARTS, Support To Pillar

BOLT, Shoulder	67/69	08	.....	2	400 0780
BOLT, Machine	67/68	18–88 (LVT)	.....	2	400 0357
SCREW, Shoulder	69	18–88	.....	1	400 3577
WASHER, Wave	67/68	08–18–88 (LVT)	25.030	2	400 0324
WASHER, Wave	69	18–88	.....	1	400 3578
WASHER, Plain	67/68	08–18–88 (LVT)	17.814	2	400 0480

23.036–4 BUMPER, Tailgate Support

67/69	08 (On Auxiliary Side Floor Pan)	.....	2	344 7240
67/69	08 (On Tailgate Inner Panel)	.....	2	352 2267
67/69	18–88 (LVT–On Right Side Pillar)	.....	1	344 7240
67/69	18–88 (LVT–On Auxiliary Side Floor Pan)	.....	2	351 5105

23.036–5 ATTACHING PARTS, Bumper To Auxiliary Floor Pan

SCREW, Tapping	67/68	08–18–88 (LVT)	17.660	4	G161801 NA

23.036–6 ATTACHING PARTS, Bumper To Tailgate

SCREW, Tapping	67/69	08	17.660	4	G161790 NA

23.036–7 ATTACHING PARTS, Bumper To Pillar

SCREW, Tapping	67/68	18–88 (LVT)	17.660	4	G161801 NA

23.039–1 LATCH, Tailgate

67/68	18–88 (WVT)	.....	1	357 5840
69/	18–88	.....	1	360 0640
67/69	(Left) 08	.....	1	348 5859
67/68	(Left) 18–88 (LVT)	.....	1	357 5841
67/69	(Right) 08	.....	1	348 5858
67/68	(Right) 18–88 (LVT)	.....	1	357 5840

23.039–2 ATTACHING PARTS, Latch To Tailgate Side Extension

SCREW, Machine	67/69	08 (7/16" Long)	.....	4	400 0501
SCREW, Machine	67/69	08 (5/8" Long)	.....	2	400 0502
SCREW, Machine	67/68	18–88 (WVT)	17.592	2	G187704 NA
SCREW, Machine	67/68	18–88 (LVT)	17.592	4	G187704 NA
SCREW, Machine	69/	18–88 (3/4" Long)	17.586	2	G272994 NA

23.039–3 LOCK, Tailgate Remote Control (Center Of Inner Panel)

67/69	08			.....	1	344 6243
67/68	18–88			.....	1	355 2950
69	18–88 (* 23–23)			.....	1	361 4162
69	18–88 (* 23–24)			.....	1	360 9293
70/	18–88			.....	1	360 9293

23.039–4 ATTACHING PARTS, Lock To Tailgate Inner Panel

SCREW, Machine	67/69	08		.....	4	400 0644
SCREW, Machine	67/68	18–88		17.586	2	G445638 NA
SCREW, Machine	69/	18–88		17.586	2	G272994 NA

23.039–5 SPRING, Tailgate Latch Release Lever

67/68	18–88 (WVT)			.....	1	357 5851
67/68	18–88 (LVT)			.....	2	357 5851
69/	18–88			.....	1	360 3799

23.039–6 ROD, Tailgate Lock To Latch

67/69	08			.....	2	348 2295
67/68	18–88 (WVT)			.....	1	357 5066
67/68	(Left) 18–88 (LVT)			.....	1	357 5067
67/68	(Right) 18–88 (LVT)			.....	1	357 5066

23.039–7 ATTACHING PARTS, Rod To Lock

CLIP	67/69	08		.....	2	400 0439

23.039–8 ATTACHING PARTS, Rod To Access Hole Cover

CLIP	67/68	18–88 (LVT)		.....	2	400 1936
CLIP	67/68	18–88 (WVT)		.....	1	400 1936
SCREW, Tapping	67/68	18–88 (LVT)		17.660	2	G161901
SCREW, Tapping	67/68	18–88 (WVT)		17.660	1	G161901

23.039–9 ROD, Tailgate Vertical Latch To Right Side Bellcrank

69/	18–88 (5" Long)			.....	1	361 4827

23.039–10 ROD, Tailgate Lock Control To Left Side Bellcrank

69/	18–88 (25-5/8" Long)			.....	1	360 0619

23.039–10a ATTACHING PARTS, Rod To Access Hole Cover

CLIP, Wire	69/	18–88		.....	2	400 1936
SCREW, Tapping	69/71	18–88		17.660	2	G161901
SCREW, Tapping	72	18–88		17.660	2	G9414723 NA

23.039–11 ROD, Tailgate Lock Control To Latch Control

69/	18–88 (On Right Side–25–1/8" Long)			.....	1	361 4296

23.039–12 ROD, Tailgate Safety Release To Latch

69/	18–88 (7-5/8" Long)			.....	1	360 1679

23.039–12a ATTACHING PARTS, Latch Rod To Latch

RETAINER	69/	18–88		.....	1	400 3673

23.039–13a BELLCRANK, Tailgate (Right Side)

69	18-88 (* 23-23)	.....	1	361 4822	
69	18-88 (* 23-24)	.....	1	360 9294	
70/	18-88	.....	1	360 9294	

23.039–14 ATTACHING PARTS, Bellcrank To Inner Panel (Right Side)

SCREW, Machine	69/	18-88	17.592	2	G187704	NA

23.039–14a BELLCRANK, Tailgate (Left Side)

69/	18-88	.....	1	360 0650	

23.039–14b ATTACHING PARTS, Bellcrank To Inner Panel (Left Side)

SCREW, Machine	69/	18-88	17.592	2	G187704	NA

23.039–15 SLEEVE, Tailgate Latch Rod (Cloth)

67/68	18-88 (LVT)	.....	2	357 5061	
67/68	18-88 (WVT)	.....	1	357 5061	
69/	18-88	.....	2	360 0664	

23.039–16 STRIKER, Tailgate Latch

67/69	08	.....	2	341 7476	
67/68	18-88 (LVT)	.....	2	355 2951	
67/68	18-88 (WVT)	.....	1	355 2951	
69/	18-88	23.087	1	360 9276	

23.039–17 ATTACHING PARTS, Striker To Tailgate Opening Pillar

SCREW, Machine	67/69	08	.....	4	400 0456

23.039–18 ATTACHING PARTS, Striker To Bracket

WASHER, Plain	67/68	18-88 (LVT)	17.814	2	400 0480
WASHER, Plain	67/68	18-88 (WVT)	17.814	1	400 0480
WASHER, Plain	69	18-88 (Steel)	.....	1	400 2057
WASHER, Spacer	69	18-88 (Nylon)	.....	1	400 2073
NUT, Retaining	67/68	18-88 (LVT)	.....	2	400 2109
NUT, Retaining	67/68	18-88 (WVT)	.....	1	400 2109
NUT, Retaining	69/	18-88	.....	1	400 3078

23.039–19 BRACKET, Tailgate Latch Striker Mounting Bracket

69/	18-88	.....	1	361 4206	
67/68	18-88 (WVT)	.....	1	357 5464	
67/68	(Left) 18-88 (LVT)	.....	1	357 5397	
67/68	(Right) 18-88 (LVT)	.....	1	357 5396	

23.039–20 ATTACHING PARTS, Bracket To Pillar

SCREW, Machine	67/68	18-88 (LVT)	.....	4	400 2124	
SCREW, Machine	67/68	18-88 (WVT)	.....	2	400 2124	
SCREW, Machine	69/	18-88	23.006	2	400 3528	

23.039–21 HANDLE, Tailgate Latch Release

67/69	08	.....	1	343 5853
67/68	18-88	.....	1	357 7097
69/	18-88	.....	2	357 7097

23.039–22 ATTACHING PARTS, Handle To Lock

SCREW, Machine	67/69	08	17.592	1	G271079 NA
SCREW, Machine	67/68	18-88	17.586	1	G443511 NA
SCREW, Machine	69/	18-88	17.586	2	G443511 NA

23.039–23 SHIM, Tailgate Latch Striker

67/69	08 (.0359" Thick)	.....	AR	348 8024
67/69	08 (.0598" Thick)	.....	AR	348 8023

23.039–24 SPRING, Tailgate Latch Link Retainer

67/69	08	29.131	2	447 8806

23.040–1 REGULATOR, Tailgate Window (Manual - Refer Group 23.306 For Electric)

67/69	08	.....	1	352 0882
67/	18-88 (L3S)	.....	1	357 5068

23.040–2 ATTACHING PARTS, Regulator To Tailgate Outer Panel

SCREW, Machine	67/69	08	23.098	4	400 0137
SCREW, Machine	67/68	18-88 (L3S)	25.054	4	400 1951
SCREW, Machine	69/	18-88	23.110	4	400 2203
NUT, Cage	69/	18-88	25.054	2	400 1946
NUT, Hexagon	70/	18-88 (Washer Base)	12.001	2	400 0566

23.040–3 STOP, Tailgate Window Regulator Arm

67/69	08-18-88 (L3S)	.....	1	400 0198

23.040–4 ATTACHING PARTS, Stop To Regulator

NUT, Hexagon	67/69	08-18-88 (L3S)	17.412	1	G271172

23.040–5 BUMPER, Tailgate Window Regulator (In Lower Inner Panel)

67/	08-18-88	23.019	2	434 8105

23.045–1 GUIDE, Tailgate Positioning

67/68	18-88 (WVT)	.....	2	357 4117

23.045–2 ATTACHING PARTS, Guide To Tailgate And Lower Panel

SCREW, Tapping	67/68	18-88 (WVT)	17.660	4	G161901

23.050–1 LATCH, Front Door

67	(Left) 01 ***(Use 362 3113)***	.....	1	357 6407
68/69	(Left) 01	.....	1	362 3113
70	(Left) 05-06-46	.....	1	361 6681
71/	(Left) 01-40	.....	1	363 6825
67	(Left) 10-50-80	.....	1	357 6221

Printed in U.S.A.

68	(Left) 10-30-70-80 (* 23-4)	448570 1 ← use	.....	~~1~~	~~360 2053~~
68	(Left) 10-30-70-80 (* 23-5)		.....	1	448 5701
69	(Left) 10-30-70-80 (* 23-18)		.....	1	448 5701
69	(Left) 10-30-70-80 (* 23-19)		.....	1	361 6947
70/	(Left) 10-30-70-80		.....	1	361 4157
67	(Right) 01	***(Use 362 3112)***	.....	1	357 6406
68/69	(Right) 01		.....	1	362 3112
70	(Right) 05-06-46		.....	1	361 6680
71/	(Right) 01-40		.....	1	363 6824
67	(Right) 10-50-80		.....	1	357 6220
68	(Right) 10-30-70-80 (* 23-4)		.....	1	360 2052
68	(Right) 10-30-70-80 (* 23-5)		.....	1	448 5700
69	(Right) 10-30-70-80 (* 23-18)		.....	1	448 5700
69	(Right) 10-30-70-80 (* 23-19)		.....	1	361 6946
70/	(Right) 10-30-70-80		.....	1	361 4156

23.050-2 ATTACHING PARTS, Latch To Front Door

SCREW, Machine.....	67/		17.592	6	G187951

23.051-1 LATCH, Rear Door

67	(Left) 05-08		.....	1	357 6409
68/69	(Left) 05-08		.....	1	362 3115
70	(Left) 05		.....	1	361 6683
71/	(Left) 05-08		.....	1	363 6829
67	(Left) 15-18-85-88		.....	1	357 6223
68	(Left) 15-18-85-88 (* 23-4)		.....	1	360 2055
68	(Left) 15-18-85-88 (* 23-5)		.....	1	448 5703
69	(Left) 15-18-85-88		.....	1	448 5703
70/	(Left) 15-18-85-88		.....	1	361 4159
67	(Right) 05-08		.....	1	357 6408
68/69	(Right) 05-08		.....	1	362 3114
70	(Right) 05		.....	1	361 6682
71/	(Right) 05-08		.....	1	363 6828
67	(Right) 15-18-85-88		.....	1	357 6222
68	(Right) 15-18-85-88 (* 23-4)	***(Use 361 4158)***	.....	1	360 2054
68	(Right) 15-18-85-88 (* 23-5)		.....	1	448 5702
69	(Right) 15-18-85-88		.....	1	448 5702
70/	(Right) 15-18-85-88		.....	1	361 4158

23.051-2 ATTACHING PARTS, Latch To Rear Door

SCREW, Machine.....	67/	05-08	17.592	6	G187951	
SCREW, Machine.....	67/70	15-18-85-88	17.592	6	G187951	
SCREW, Machine.....	71/	15-85	17.592	4	G187951	
SCREW, Machine.....	71/	18-88	17.592	6	G187951	
SCREW, Machine.....	71/	15-85 (Used On Top Hole Of Door Latch)	17.586	2	G272994	NA

23.054-1 BUTTON, Front Door Lock Push

70/	05-06-08-46		.....	2	363 1946
67	10-50-80		.....	2	357 4924
68/71	(Black-Plastic) 10-80 (Lever)		.....	2	360 1320
68/	(Chrome-Metal) 10-80 (Lever)		.....	2	366 1540
68/70	(Black-Plastic) 30-70 (Lever)		.....	2	360 1320
71/	70		23.061	2	363 2703

23.054-2 BUTTON, Rear Door Lock Push

67/69	05-08		.....	2	346 2541
70/	05-08		.....	2	363 1946
67/70	15-18-85-88		.....	2	357 4924
71/	15-18-85-88		.....	2	363 2703

DOORS - HARDWARE

23.054–3 GROMMET, Front Door Lock Push Button

70/	05–06–08–46	2	362 6549
67	10–50–80	2	357 9645
71/	79	2	357 9645

23.054–4 GROMMET, Rear Door Lock Push Button

67/69	05–08	2	400 0682
70/	05–08	2	362 6549
67/	15–18–85–88	2	357 9645

23.055–1 LINK, Remote Control To Front Door Latch

67	05–08	2	351 6188
68/69	05–08	2	360 2822
70	05	2	363 1378
70	06–46	2	363 1382
71/	06–46	2	363 6840
67	15–18–85–88	2	357 6229
69/	15–18–85–88	2	360 2058
67	16–17–19–59–86–87–89	2	357 6227
69/	19–89	2	360 2062
67	(Left) 06–07–09	1	351 6207
68/69	(Left) 06–09 ***(Use 360 6207)***	1	360 2827
71/	(Left) 05–08	1	363 6839
68	(Left) 15–18–85–88 ***(Use 360 2058)***	1	360 2059
68	(Left) 17–19–89 ***(Use 360 2062)***	1	360 2063
68/	(Left) 30–70	1	360 2297
67	(Right) 06–07–09	1	351 6206
68/69	(Right) 06–09	1	360 2826
71/	(Right) 05–08	1	363 6838
68	(Right) 15–18–85–88	1	360 2058
68	(Right) 17–19–89	1	360 2062
68/	(Right) 30–70	1	360 2296

23.055–2 ATTACHING PARTS, Link To Remote Control

WASHER, Spring	67/69	01	2	400 0308
WASHER, Spring	67	10–50–80	2	400 0308
RIVET, Tubular	67/69	01	2	400 0307
RIVET, Tubular	67	10–50–80	2	400 0307
CLIP, Speed	69/71	30–70 (Anti-Rattle)	2	400 0461
CLIP, Speed	72	70 (Anti-Rattle)	2	400 4546

23.055–3 RETAINER, Front Remote Control Link (To Control Lever)(Nylon)

68/	10–30–70–80	2	400 3509

23.055–3a SLEEVE, Remote Control Rod (Front And Rear - Cut To Required Length)

70/	05–06–08–46 (23–1/2" Long)	2	363 5983
72	70 (23–1/2" Long)	2	363 5983

23.055–4 RETAINER, Front Door Remote Control Link (To Door Inner Panel)

67	01	2	351 5080
68/69	01	2	360 2794
67/68	10–50–80 (Uses Tapping Screw For Fastening)	2	359 8017

DOORS - HARDWARE

23.055–5 ATTACHING PARTS, Retainer To Inner Panel

CLIP	67/69	01	.....	4	400 1932
SCREW, Tapping	67/69	01	***(Use 812 0054)***	17.671	4	G274773
SCREW, Tapping	67/68	16-17-19-59-86-87-89	.....	20.420	2	400 0642

23.055–6 LINK, Front Door Outside Handle To Door Latch Release

70/	(Left) 05-08	.....	1	363 1561
70/	(Left) 06-46	.....	1	363 6555
68/	(Left) 10-80	.....	1	360 2285
68/	(Left) 30-70	.....	1	360 2293
70/	(Right) 05-08	.....	1	363 1560
70/	(Right) 06-46	.....	1	363 6554
68/	(Right) 10-80	.....	1	360 2284
68/	(Right) 30-70	.....	1	360 2292

23.055–7 ATTACHING PARTS, Front Door Link To Handle

RETAINER (Nylon)	68/	10-80	.....	2	400 3509
BUSHING	68/	10-30-70-80	.....	2	400 3557
CLIP	70/	(Left) 01-40...(Incl. Bushing)	.....	2	400 4533
CLIP	70/	(Right) 01-40...(Incl. Bushing)	.....	2	400 4532

23.055–8 CLIP, Front Door Outside Handle To Door Latch Release Link Retaining

68	(Left-Handle End) 10-30-70-80	.....	1	400 2249
68/	(Left-Latch End) 10-30-70-80	.....	1	400 2253
68	(Right-Handle End) 10-30-70-80	.....	1	400 2248
68/	(Right-Latch End) 10-30-70-80	.....	1	400 2252

23.055–9 LINK, Front Door Lock Cylinder To Door Latch

70/	(Left) 05-08	.....	1	363 1651
70/	(Left) 06-46	.....	1	363 1649
68/	(Left) 15-18-85-88	.....	1	360 2291
68/	(Left) 17-19-89	.....	1	360 2287
68/	(Left) 30-70	.....	1	360 2295
70/	(Right) 05-08	.....	1	363 1650
70/	(Right) 06-46	.....	1	363 1648
68/	(Right) 15-18-85-88	.....	1	360 2290
68/	(Right) 17-19-89	.....	1	360 2286
68/	(Right) 30-70	.....	1	360 2294

23.055–10 ATTACHING PARTS, To Lock Cylinder And To Latch

CLIP	70/	(Left) 01-40...(Incl. Bushing)	.....	1	400 4533
CLIP	70/	(Right) 01-40...(Incl. Bushing)	.....	1	400 4532
CLIP, Speed	70	05-06	.....	2	400 3862
CLIP, Speed	68	10-80	.....	2	400 1969
CLIP, Speed	69/	10-30-70-80	.....	2	400 3862
CLIP, Speed	68	30-70	.....	2	400 3559
CLIP	71	70...(Incl. Bushing)	23.057	2	400 4431
CLIP	72	(Left) 70...(Incl. Bushing)	.....	1	400 4528
CLIP	72	(Right) 70...(Incl. Bushing)	.....	1	400 4529

23.055–11 ATTACHING PARTS, Link To Cam

NUT, Hexagon	68	30-70	.....	2	400 0812

23.055–12 BUSHING, Door Lock Cylinder Link To Latch

70	05-06 (Nylon)	23.057	2	400 2078
68/	10-80 (Nylon)	23.057	4	400 2078
68/71	30-70 (Nylon)	23.057	2	400 2078
72	(Left) 70...(Incl. Clip)	.....	2	400 4533
72	(Right) 70...(Incl. Clip)	.....	2	400 4532

DOORS - HARDWARE

23.055–13 LINK, Remote Control To Rear Door Latch

67/69	05-08 (17-11/16" Long)	2	348	2350
70	05 (16" Long)	2	363	1380
71/	05-08 (14-7/8")	2	363	6836
67	15-18-85-88 (16" Long)	2	357	6229
68/	15-18-85-88 (17-3/16" Long)	2	360	2069

23.055–14 ATTACHING PARTS, Link To Remote Control

WASHER, Spring	67/69	05-08	2	400	0308
WASHER, Spring	70	05-06-46	AR	400	0308
WASHER, Spring	67	15-18-85-88	2	400	0308
RIVET, Tubular	67/69	05-08	2	400	0307
RIVET, Tubular	70	05-06-46	AR	400	0307
RIVET, Tubular	67	15-18-85-88	2	400	0307

23.055–15 RETAINER, Rear Door Remote Control Link (At Control Lever)(Nylon)

68/	15-18-85-88	2	400	3509

23.055–16 LINK, Rear Door Outside Handle To Door Latch

70/	(Left) 05-08	1	363	1647
68/	(Left) 15-18-85-88	1	360	2289
70/	(Right) 05-08	1	363	1646
68/	(Right) 15-18-85-88	1	360	2288

23.055–16a SLEEVE, Rear Door Outside Handle To Latch (Cut To Required Length)

72	05-08 (23-1/2" Long)	2	363	5983

23.055–17 ATTACHING PARTS, Rear Door Link To Handle

RETAINER (Nylon)	68/	15-18-85-88	2	400	3509
BUSHING	68/	15-18-85-88	2	400	3557

23.055–18 CLIP, Rear Door Lock Release Link Retaining (At Lock)

68/	(Left) 15-18-85-88	1	400	2253
68/	(Right) 15-18-85-88	1	400	2252

23.055–19 RETAINER, Rear Door Locking Rod End (Incl. Bushing)

70/	(Left) 05-08 (Locking Control)	1	400	4533
70/	(Left) 05-08 (Locking Link)	2	400	4533
70/	(Left) 05-08 (Outside Handle To Latch)	2	400	4533
70/	(Right) 05-08 (Locking Control)	1	400	4532
70/	(Right) 05-08 (Locking Link)	2	400	4532
70/	(Right) 05-08 (Outside Handle To Latch)	2	400	4532

23.055–20 CLIP AND BUSHING, Rear Door Outside Handle To Latch

71/	(Left) 01	4	400	4533
71/	(Right) 01	4	400	4532

23.056–1 CONTROL, Front Door Latch Remote

67/69	01	2	353	0870
67	10-50-80	2	357	6230
68/	10-30-70-80	2	360	2056
70	(Left) 05-06-46	1	363	1173
70	(Right) 05-06-46	1	363	1172

23.056–1a PLATE ASSEMBLY, Front Door Latch Remote Control Mounting

71/	01-46	2	363	6842

Printed in U.S.A.

DOORS - HARDWARE

23.056–2 ATTACHING PARTS, Control To Front Door

SCREW, Machine	67/69	01	23.098	6	400	0572
SCREW, Machine	70	05-06 (Remote Handle To Door Inner Panel)(3/8")	.....	AR	400	0954
SCREW, Machine	71/	01-46 (Mounting Plate To Inner Door Panel)	.....	2	400	0954
SCREW, Machine	67	10-50-80	23.098	6	400	0572
SCREW, Machine	68	10-30-70-80	23.110	4	400	2203
SCREW, Machine	68	30-70 (5/8")	23.110	4	400	2203
SCREW, Machine	69/70	10-80 (5/16")	23.098	4	400	2028
SCREW, Tapping	70/	10-80 (1/2")	.....	4	400	3093
SCREW, Tapping	70/	30-70 (1/2")	.....	4	400	3093
NUT, Lock	70	05-06 (To Weld Screws On Remote Control)	.....	AR	400	3018
RIVET, Truss Head	72	01-40 (Mounting Plate To Inner Door Panel)	.....	2	400	4515

23.056–3 CONTROL, Rear Door Latch Remote

67	15-18-85-88	.....	2	357	6230
68/	15-18-85-88	23.056	2	360	2056
67/69	(Left) 05-08	.....	1	353	0873
70	(Left) 05	23.056	1	363	1173
67/69	(Right) 05-08	.....	1	353	0872
70	(Right) 05	23.056	1	363	1172

23.056–3a PLATE ASSEMBLY, Rear Door Latch Remote Control Mounting

71/	05-08	.....	2	363	6842

23.056–4 ATTACHING PARTS, Control To Rear Door

SCREW, Machine	67/69	05-08	23.098	6	400	0572
SCREW, Machine	70	05	23.056	4	400	0954
SCREW, Machine	71/	05-08 (Mounting Plate To Inner Door Panel)	.....	2	400	0954
SCREW, Machine	67	15-18-85-88	23.098	6	400	0572
SCREW, Machine	68/	15-18-85-88	23.098	4	400	3093
RIVET, Truss Head	72	01-40 (Mounting Plate To Inner Door Panel)	.....	4	400	4515

23.056–5 PAD, Front Door Remote Control Anti-Rattle (Rubber)

68	10-80	.....	2	360	8279

23.056–6 PAD, Rear Door Remote Control Anti-Rattle (Rubber)

68	05-08	23.060	2	400	0393
67	15-18-85-88 ***(Use 400 2167)***	27.290	2	400	2202
68	15-18-85-88	.....	2	360	8279

23.057–1 BELLCRANK, Front Door Locking Control Handle

69	10-30-70-80 (* 23-19)...(Incl. Bracket, Lever And Shaft)	.....	2	361	6948
70/71	10-30-70-80...(Incl. Bracker, Lever And Shaft)	.....	2	361	6948
72	10-80...(Incl. Bracket, Lever And Shaft)	.....	2	364	4238
68	(Left) 15-18-85-88 ...(Incl. Cable)	.....	1	360	1137
69	(Left) 15-18-85-88 (* 23-18)...(Incl. Cable) ***(Use 360 1137)***	.....	1	360	8961
68	(Left) 17-19-89 ...(Incl. Cable)	.....	1	360	1139
69	(Left) 19-89 (* 23-18)...(Incl. Cable) ***(Use 360 1139)***	.....	1	360	8959
68	(Left) 30-70...(Incl. Cable) ***(Use 360 8999)***	.....	1	360	9057
69	(Left) 30-70 (* 23-18)...(Incl. Cable) ***(Use 360 8999)***	.....	1	360	9057
68	(Right) 15-18-85-88 ...(Incl. Cable)	.....	1	360	1136
69	(Right) 15-18-85-88 (* 23-18)...(Incl. Cable) ***(Use 360 1136)***	.....	1	360	8960
68	(Right) 17-19-89 ...(Incl. Cable)	.....	1	360	1138
68	(Right) 39-79...(Incl. Cable) ***(Use 360 8998)***	.....	1	360	9056
69	(Right) 30-70 (* 23-18)...(Incl. Cable) ***(Use 360 8998)***	.....	1	360	9056
69	(Right) 19-89 (* 23-18)...(Incl. Cable) ***(Use 360 1138)***	.....	1	360	8958

23.057–2 ATTACHING PARTS, Bellcrank To Front Door

SCREW, Machine	68	10-80	23.110	2	400 2203
SCREW, Machine	69	10-80 (* 23-18)	23.110	2	400 2203
SCREW, Machine	69	10-80 (* 23-19)	23.098	4	400 2028
SCREW, Machine	70/	10-80	23.098	2	400 2028
SCREW, Machine	68/	30-70	23.098	2	400 2028

23.057–3 ATTACHING PARTS, Bellcrank Cable Clamp To Rear Door Latch

SCREW, Machine	68/	10-30-70-80	3.319	2	400 1805
FASTENER	70/	10-80	13.017	2	400 1714

23.057–4 ATTACHING PARTS, Bellcrank Cable To Door

CLIP	68	10-30-70-80 (7/16" Wide)	3.615	2	310 8634
CLIP	69	10-30-70-80 (1/2" Wide)	13.122	2	400 1554
CLIP	69	15-18-85-88 (3/8" Wide)	.....	4	400 3052

23.057–5 ATTACHING PARTS, Bellcrank Cable To Latch

FASTENER	68	10-30-70-80	13.017	2	400 1714

23.057–6 BELLCRANK, Rear Door Locking Push Button

70/	05-08		.....	2	363 1412
67	15-18-85-88		.....	2	357 6244
67/69	(Left) 05-08		.....	1	348 2359
68/	(Left) 15-18-85-88...(Incl. Cable)	344	.....	1	360 1057
67/69	(Right) 05-08		.....	1	348 2358
68/	(Right) 15-18-85-88...(Incl. Cable)	344	.....	1	360 1056

23.057–8 ATTACHING PARTS, Bellcrank To Door

SCREW, Tapping	70	05...(Incl. Washer)	25.054	2	400 1951
SCREW, Tapping	71/	05-08...(Incl. Washer)	17.626	2	G440405 NA
SCREW, Machine	67/69	05-08	23.098	2	400 0572
SCREW, Machine	67	15-18-85-88	.....	2	400 1956
SCREW, Machine	68/	15-18-85-88	23.110	2	400 2203
WASHER, Wave	67	15-18-85-88	.....	2	400 2226
WASHER, Spring	67	15-18-85-88	29.105	2	400 0898
NUT, Push	70	05	.....	2	400 2207
NUT, Push	67	15-18-85-88	.....	2	400 2207
NUT, Tee	70	05	.....	2	400 2212
NUT, Tee	67	15-18-85-88	.....	2	400 2212

23.057–9 ATTACHING PARTS, Door Locking Control Cable To Door

CLIP, Fastening	68/	10-80	.....	4	400 3052
CLIP, Fastening	69	10-80 (* 23-18)	13.122	4	400 1554
CLIP, Fastening	68	30-70	13.122	4	400 1554
CLIP, Fastening	69	30-70 (1/2" Wide)(* 23-18)	13.122	2	400 1554
CLIP, Fastening	69	30-70 (7/16" Wide)	3.615	2	310 8634

23.057–9a ATTACHING PARTS, Door Locking Control Cable To Latch

FASTENER	69	10-80	13.017	2	400 1714

Printed in U.S.A.

DOORS - HARDWARE

23.057–10 LINK, Rear Door Push Button Locking Bellcrank To Lock

70/	05–08 (23–1/2" Long)	.....	2	363	1414
67/69	(Left) 05–08	.....	1	348	2347
67	(Left) 15–18–85–88 ***(Use 357 6240)***	.....	1	357	6241
67/69	(Right) 05–08	.....	1	348	2346
67	(Right) 15–18–85–88	.....	1	357	6240

23.057–11 ATTACHING PARTS, Link To Bellcrank

RIVET, Tubular	67	15–18–85–88	.....	2	357	6245

23.057–12 ATTACHING PARTS, Link To Lock

CLIP	67	15–18–85–88	.....	2	400	2082

23.057–13 CLIP, Rear Door Push Button Locking Link Anti-Rattle

67/69	05–08–15–18–85–88	.....	2	400	0657
70/	05–08	15.320	2	400	0461

23.057–14 ROD, Front Door Locking Control (Bellcrank To Latch)

67	15–18–85–88 ***(Ref. Pr. List)***	.....	2	357	6247
69	15–18–85–88 (* 23–19)(11–1/2" Long)	.....	2	361	6942
70/	15–18–85–88	.....	2	361	6942
67	16–17–19–59–86–87–89 ***(Ref. Pr. List)***	.....	2	357	6248
69	19–89 (* 23–19)(21–1/2" Long)	.....	2	361	6944
70/	19–89	.....	2	361	6944
70/	(Left) 05–08 (Latch To Push Button)	.....	1	363	1641
70/	(Left) 06–46 (Latch To Push Button)	.....	1	363	1639
69	(Left) 30–70 (* 23–19)	.....	1	361	6937
70	(Left) 30–70	.....	1	361	6937
71/	(Left) 70	.....	1	363	2699
70/	(Right) 05–08 (Latch To Push Button)	.....	1	363	1640
70/	(Right) 06–46 (Latch To Push Button)	.....	1	363	1638
69	(Right) 30–70 (* 23–19)	.....	1	361	6936
70	(Right) 30–70	.....	1	361	6936
71/	(Right) 70	.....	1	363	2698

23.057–14a SLEEVE, Front Door Locking Control Rod

70/	01–46 (Rubber–3" Long)	.....	2	364	1869

23.057–14b RETAINER, Door Locking Control Rod (Plastic)

71/	79 (Screw On Type)	.....	4	363	2697
72	79 (Push On Type)	.....	4	366	1945

23.057–14c ATTACHING PARTS, Door Locking Control Rod Retainer (To Inner Panel)

SCREW, Tapping.....	71	79	17.660	8	G9414722	NA

23.057–14d BAND, Door Locking Control Rod Anti-Rattle

72	70	.....	4	366	1882

23.057–15 BUSHING, Front Door Locking Control Rod Retainer (In Lock) (Latch End)

67/68	10–30–50–70–80	.....	2	400	2078
69/70	10–80	.....	2	400	2078
71/	10–30–70–80	.....	4	400	1968
69	30–70 (* 23–18)	.....	2	400	2078
69	30–70 (* 23–19)	.....	4	400	1968

DOORS - HARDWARE

23.057–16 CLIP, Front Door Locking Control Rod

69/71	10-30-70-80 (Latch And Remote End)	.....	4	400 3559	
70/	(Left) 01-40 (Latch And Remote End)...(Incl. Bushing)	.....	2	400 4533	
72	(Left) 10-80 (Latch And Remote End)	.....	1	400 4533	
72	(Left) 70 (Latch End)	.....	1	400 4533	
70/	(Right) 01-40 (Latch And Remote End)...(Incl. Bushing)	.....	2	400 4532	
72	(Right) 10-80 (Latch And Remote End)	.....	1	400 4532	
72	(Right) 70 (Latch End)	.....	1	400 4532	

23.057–16a CLIP AND BUSHING, Front Door Outside Handle To Latch

71/	10-80	23.055	4	400 4431	
70/	(Left) 01-40	.....	1	400 4533	
70/	(Right) 01-40	.....	1	400 4532	

23.057–17 ROD, Rear Door Push Button Locking Control

67/69	05-08	.....	2	351 5799	
70/	05-08	.....	2	363 1416	
67/	15-18-85-88	.....	2	357 6246	

23.057–18 ATTACHING PARTS, Push Button Rod To Bellcrank

RIVET, Tubular	67/	15-18-85-88	.....	2	357 6245	
WASHER, Wave	67/68	15-18-85-88	.....	2	400 2226	
WASHER, Wave	69/	15-18-85-88	.....	2	400 3514	

23.058–1 HANDLE, Remote Control

67	01	.....	4	357 6412	
68	01 (* 23-6)	.....	4	357 6412	
68	01 (* 23-7)	.....	4	360 2828	
69	01	.....	4	360 2828	
70	05	.....	4	363 1171	
71/	05-08	.....	4	363 6830	
70	06-46	.....	2	363 1171	
71/	06-46	.....	2	363 6830	
67	15-16-18 (550)	.....	4	357 6412	
68/	10-30-70-80	.....	4	360 1340	
67	(Left) 15-18 (770)	.....	2	357 6411	
67	(Left) 17-19-50-80	.....	2	357 6411	
67	(Right) 15-18 (770)	.....	2	357 6410	
67	(Right) 17-19-50-80	.....	2	357 6410	

23.058–2 ATTACHING PARTS, Handle To Control

SCREW, Socket	67/69	01	29.105	4	400 0826	
SCREW, Socket	67	10-50-80	29.105	4	400 0826	
SCREW, Machine	68/70	10-30-70-80	17.598	4	G159592	NA
SCREW, Tapping	71/	10-70-80	.....	4	400 1629	
NUT, Lock	70/	01-40 (To Weld Screw On Remote Control)	.....	AR	400 3018	
WASHER, Lock	72	10-70-80	17.822	2	G121752	NA

23.058–3 WASHER, Remote Control Handle To Control

67	(Rubber) 10-50-80	.....	4	400 0687	
67/68	(Nylon) 01-10-50-80	23.104	4	357 6417	
69	01	.....	4	361 3467	

23.061 HANDLE, Front Door Locking Control

68/71	(Black-Plastic) 10-80 (Lever)	23.054	2	360 1320	
68/	(Chrome-Metal) 10-80 (Lever)	23.054	2	366 1540	
68/70	(Black-Plastic) 30-70 (Lever)	23.054	2	360 1320	
71/	70 (Knob)	23.054	2	363 2703	

DOORS - HARDWARE

23.070–1 LOCK, Rear Deck

67/69	05-06-07-09	.....	1	344 0790	
70/	05-06	.....	1	360 0513	
67/68	15-16-17-19-85-86-87-89 ***(Use 360 2990)***	.....	1	357 4892	
69/	15-16-19-85-89	.....	1	360 2990	
68/	39-79	.....	1	360 0513	
67	59	.....	1	351 5421	

23.070–2 ATTACHING PARTS, Lock To Rear Deck

SCREW, Machine	67/	05-06-07-09-39-79	17.626	3	G423336	NA
SCREW, Machine	67/	15-16-17-19-85-86-87-89	23.008	2	400 0617	
SCREW, Machine	67	59	22.056	3	400 0058	

23.070–3 SPRING, Rear Deck Lock Lever Release

67/	15-16-17-19-85-86-87-89	.....	1	357 4899	

23.070–4 SPRING, Rear Deck Lock Pawl Return

67/68	15-16-17-19-85-86-87-89	.....	1	359 1140	
69/	15-19-85-89	.....	1	360 9262	

23.073–1 STRIKER, Rear Deck Lock

67/70	05-06-07-09-39-59-79	.....	1	349 2086	
71/	05-06	.....	1	361 6109	
67/	15-16-17-19-85-86-87-89	.....	1	357 5508	
71/	70	.....	1	349 2086	

23.073–2 ATTACHING PARTS, Striker To Lower Panel Brace

SCREW, Machine	67/68	05-06-07-09 ***(Use 400 1896)***	23.020	2	400 0608
SCREW, Machine	67/68	15-16-17-19 ***(Use 400 1896)***	23.020	2	400 0608
SCREW, Machine	67/68	59-85-86-87-89 ***(Use 400 1896)***	23.020	2	400 0608
SCREW, Machine	69/	(5/16"-18 x 1-1/4") 05-06-09-15-19-85-89 ...(Incl. 5 Flutes)	12.060	2	400 3556
SCREW, Machine	69	(5/16"-24 x 1") 15-19-85-89	12.060	2	400 0723
SCREW, Machine	69/70	(5/16"-18 x 1-1/4") 39-79	12.060	2	400 3556
SCREW, Machine	69/	(5/16"-18 x 1-1/8") 39-79	23.073	2	400 4520

23.074–1 HANDLE ASSEMBLY, Door Outside (Complete)

67/69	01	.....	4	348 2400	
67	10-50-80	.....	4	357 7570	

23.074–2 HANDLE ASSEMBLY, Front Door Outside (Complete)

70/	(Left) 05-06-08-46	.....	1	363 1163	
68/	(Left) 10-30-70-80	.....	1	360 1331	
70/	(Right) 05-06-08-46	.....	1	363 1162	
68/	(Right) 10-30-70-80	.....	1	360 1330	

23.074–3 HANDLE ASSEMBLY, Rear Door Outside (Complete)

70/	(Left) 05-08	.....	1	363 1163	
68/	(Left) 15-18-85-88	349	1	360 2071	
70/	(Right) 05-08	.....	1	363 1162	
68/	(Right) 15-18-85-88	349	1	360 2070	

DOORS - HARDWARE

23.074–4 ATTACHING PARTS, Handle Assembly To Door

SCREW, Machine	67/69	01	.....	8	400 0051
SCREW, Machine	67	10-50-80	17.626	8	400 0902 NA
WASHER, Plain	67/69	01	17.814	8	400 0481
WASHER (Plastic)	67	10-50-80	12.075	2	400 0082
NUT, Lock	68	10-30-70-80	25.052	8	439 0742

23.074–5 BUTTON, Door Outside Handle

67/69	01	.....	4	448 1429
67	10-50-80	.....	4	320 7619

23.074–6 RETAINER, Door Outside Handle Button

67/69	01	.....	4	448 1428
67	10-50-80	***(Use 448 5953)***	4	357 7573

23.074–7 ATTACHING PARTS, Retainer To Handle

SCREW, Machine	67/69	01	17.598	1	G273228 NA

23.074–8 HANDLE, Door Outside (Less Spring, Pin, Bumper And Base)(Front And Rear)

70/	(Left) 05-06-08-46	.....	AR	363 1165
68/	(Left) 10-30-70-80	.....	AR	360 2075
70/	(Right) 05-06-08-46	.....	AR	363 1164
68/	(Right) 10-30-70-80	.....	AR	360 2074

23.074–9 ATTACHING PARTS, Handle To Base

PIN, Spring	68/	01-30-40-70-80	17.472	4	G455313

23.074–10 BASE, Front Door Outside Handle

70/	(Left) 05-06-08-46	.....	1	363 1937
68/	(Left) 10-30-70-80	.....	1	360 2129
70/	(Right) 05-06-08-46	.....	1	363 1936
68/	(Right) 10-30-70-80	.....	1	360 2128

23.074–11 BASE, Rear Door Outside Handle

70/	(Left) 05-08	.....	1	363 1937
68/	(Left) 15-18-85-88	.....	1	360 2133
70/	(Right) 05-08	.....	1	363 1936
68/	(Right) 15-18-85-88	.....	1	360 2132

23.074–11a BUMPER, Door Glass Upper

71/	06-46 (Front Door)(On Upper Stud Of Outside Door Handle)	.....	2	364 6850
71/	05-08 (Rear Door)(On Upper Stud Of Outside Door Handle)	.....	2	364 6850

23.074–12 ATTACHING PARTS, Base To Door

NUT, Lock	68	10-30-70-80	25.052	AR	439 0742
NUT, Lock	69	10-80	.....	AR	400 3018
NUT, Lock	70/	01-40	.....	AR	400 3018
NUT, Lock	69	30-70 (Serrated Base)	.....	4	400 3018
NUT, Lock	69/	30-70 (Non-Serrated Base)	.....	4	400 3920
NUT, Lock	70/	10-80	.....	4	400 3920
SCREW, Tapping	72	.....	.....	AR	400 4554

DOORS - HARDWARE

23.074–13 SEAL, Door Outside Handle (2 on 2 Dr. - 4 on 4 Dr.)

70/	05-06-08-46	.....	AR	363 1938
68	10-30-70-80 ***(Use 362 4799)***	.....	AR	360 2138
69/	10-30-70-80	.....	AR	362 4799

23.074–14 SPRING, Door Outside Handle Push Button Return

67/69	01	.....	4	448 1427
67	10-50-80	.....	4	351 6821

23.074–15 SPRING, Door Outside Handle Return (2 on 2 Dr. - 4 on 4 Dr.)

70/	(Left) 05-06-08-46	.....	AR	363 1219
68/	(Left) 10-30-70-80	.....	2	360 2135
70/	(Right) 05-06-08-46	.....	AR	363 1218
68/	(Right) 10-30-70-80	.....	2	360 2134

23.074–16 SEALER, Door Outside Handle Button

67/69	01	.....	4	448 1431
67	10-50-80	.....	4	351 6817

23.074–17 PAD, Door Outside Handle Button

67/69	01 (Small)	.....	4	348 2682
67	10-50-80 (Small)	.....	4	357 7574
67/69	01 (Large)	.....	4	348 2683
67	10-50-80 (Large)	.....	4	357 7575

23.074–18 BUMPER, Door Outside Handle (In Base)(Front And Rear)

68/	.....	20.452	4	400 3110

23.077–1 HANDLE ASSEMBLY, Tailgate

67/69	08 (LER)...(Incl. Regular Cylinder And Keys)	.....	1	448 1742
67/69	08 (LER)...(Incl. Special Cylinder And Keys-Specify Key No.)	.....	1	448 1743
67/69	18-88 (L3S-LER)...(Incl. Regular Cylinder And Keys)	.....	1	448 4808
67/69	18-88 (L3S-LER)...(Incl. Special Cylinder And Keys-Specify Key No.)	.....	1	448 4809

23.077–2 ATTACHING PARTS, Handle To Tailgate

SCREW, Machine	67/69	08-18-88 (L3S-LER-1-11/32" Long-Left)	.....	1	400 0818
SCREW, Machine	67/69	08-18-88 (L3S-LER-3/4" Long-Right)	.....	1	400 0817

23.077–3 HANDLE ASSEMBLY, Rear Deck Door

67/69	***15-85 (Fleet)***...(Incl. Regular Cylinder And Keys)	.....	1	448 4810
67/69	***15-85 (Fleet)***...(Incl. Special Cylinder And Keys-Specify Key No.)	.....	1	448 4811

23.077–4 ATTACHING PARTS, Handle To Deck Door

SCREW, Machine	***67/69***	***15-85 (Fleet)***	23.078	2	400 0429
PLATE, Tapping	***67/69***	***15-85 (Fleet)***	.....	1	346 2739

23.077–5 KNOB, Rear Deck Door

72	***15 (Fleet)***...(Incl. Cylinder And Key)	.....	1	365 7802

Printed in U.S.A.

DOORS - HARDWARE

23.078–1 HANDLE ASSEMBLY, Tailgate Window Regulator (Less Cylinder)

67/69	08 (LER)		.....	1	350 0816
67/69	18-88 (L3S-LER)	328	.....	1	357 7094
70	18-88 (LHD-LER)		.....	1	363 6429
70	***18-88 (RHD-LER)***	328	.....	1	357 7094
71/	18-88 (_ER)		.....	1	363 6429

23.078–2 ATTACHING PARTS, Handle To Tailgate

SCREW, Machine	67/	08-18-88 (L3S-LER-1-11/32" Long-Left)	23.077	1	400 0818
SCREW, Machine	67/	08-18-88 (L3S-LER-3/4" Long-Right)	23.077	1	400 0817

23.078–3 HANDLE, Tailgate Window Regulator (Crank)

67/	08-18-88 (L3S-LER)	.....	.....	1	448 0845

23.078–4 ATTACHING PARTS, Crank To Handle

PIN	67/	08-18-88 (L3S-LER)	.....	1	400 0039

23.078–5 SPRING, Tailgate Window Regulator Handle Crank

67/	08-18-88 (L3S-LER)	.....	.....	1	345 1685

23.078–6 BUMPER, Tailgate Window Regulator Handle Crank

67/	08-18-88 (L3S-LER)	.....	.....	1	400 0035

23.078–7 PAD, Tailgate Window Regulator Handle To Tailgate

67/	18-88 (L3S-LER)	.....	.....	1	357 7096

23.078–8 HANDLE, Rear Deck Door

67/69	***15-85 (Fleet)***	.....	.....	1	357 5054

23.078–9 ATTACHING PARTS, Handle To Deck Door

SCREW, Machine 67/69	***15-85 (Fleet)***	.....	.....	2	400 0429
PLATE, Tapping 67/69	***15-85 (Fleet)***	.....	23.077	1	346 2739

23.078–10 PAD, Rear Deck Door Handle

67/69	***15-85 (Fleet)***	.....	.....	1	357 5056

23.078–11 SPACER, Rear Deck Door Handle Shaft

67/69	***15-85 (Fleet)***	.....	.....	1	346 2737

23.078–12 SEAL, Rear Deck Door Handle

67/69	***15-85 (Fleet)***	.....	.....	1	357 5055

23.081–1 CYLINDER ASSEMBLY, Door Lock

67/69	01 (Regular Cylinder With Keys)	.....	.....	2	448 4686
67/69	01 (Uncoded Cylinder Less Keys-Must Be Coded Locally)	.....	.....	2	448 4240
70/	01-40 (Uncoded Cylinder Less Keys-Must Be Coded Locally)	.....	.....	2	448 7661
67	10-50-80 (Regular Cylinder With Keys)	.....	.....	2	448 4686

67	10-50-80 (Uncoded Cylinder Less Keys-Must Be Coded Locally)	.....	2	448 4240
68/69	10-30-70-80 (Uncoded Cylinder Less Keys-Must Be Coded Locally)	.....	2	320 8982
70/	10-30-70-80 (LHD)(Uncoded Cylinder Less Keys-Must Be Coded Locally)	.....	2	448 7661
70	***10-80 (RHD)(Uncoded Cylinder Less Keys-Must Be Coded Locally)***	.....	2	320 8982

23.081-2 CYLINDER ASSEMBLY, Tailgate Lock (Less Electric)

67/69	08-18-88 (Regular Cylinder With Keys)	.....	1	448 0842
67/69	08-18-88 (Special Cylinder With Keys-Specify Key No.)	.....	1	448 0843
71	08 (Uncoded Cylinder Less Keys-Must Be Coded Locally)	.....	1	448 7661
70/	18-88 (LHD)(Uncoded Cylinder Less Keys-Must Be Coded Locally)	.....	1	448 7666
70	***10-80 (RHD)(Regular Cylinder And Keys)***	.....	1	448 0842
70	***10-80 (RHD)(Special Cylinder And Keys-Specify Key No.)***	.....	1	448 0843

23.081-3 CYLINDER ASSEMBLY, Tailgate Lock (With Electric)

67	08 (Regular Cylinder With Keys)	.....	1	448 0787
67	08 (Special Cylinder With Keys-Specify Key No.)	.....	1	448 0792
67	18-88 (Regular Cylinder With Keys)	.....	1	448 4813
68/69	18-88 (Uncoded Cylinder-Must Be Coded Locally)	.....	1	320 8982
70/	18-88 (LHD)(Uncoded Cylinder-Must Be Coded Locally)	.....	1	448 7661
70	***18-88 (RHD)(Uncoded Cylinder-Must Be Coded Locally)***	.....	1	320 8982

23.081-4 LEVER, Door Lock Cylinder

70/	01-40	.....	2	360 1333
68/	10-30-70-80	.....	2	360 1333

23.081-5 ATTACHING PARTS, Lever To Door Lock Cylinder

RETAINER, Spring	70/	05-06-08-46	.....	2	400 2250
RETAINER, Spring	68/	10-30-70-80	.....	2	400 2250

23.081-6 BUSHING, Door Lock Cylinder Lever

68/	10-30-70-80	23.057	2	400 2078

23.081-6a CLIP, Door Lock Cylinder Lever

70/	10-30-70-80	23.055	2	400 3862

23.081-7 CAM, Tailgate Electric Operated Window Regulator Switch Cylinder

67	08 (WER)	.....	1	448 0793

23.081-8 CASE, Tailgate Electric Operated Window Regulator Lock Cylinder

67	08 (WER)	.....	1	447 9470

23.081-9 CYLINDER ASSEMBLY, Rear Deck Lock

67/69	05-06-07-09 (Regular Cylinder With Keys)	.....	1	448 1196
67/69	05-06-07-09 (Special Cylinder With Keys-Specify Key No.)	.....	1	448 1197
70/	05-06 (Uncoded Cylinder Less Keys-Must Be Coded Locally)	.....	1	448 7661
67/69	15-16-17-19-85-86-87-89 (Regular Cylinder With Keys)	.....	1	448 4686
67/69	15-16-17-19-85-86-87-89 (Uncoded Cylinder Less Keys-Must Be Coded Locally)	.....	1	448 4240
70/	10-80 (LHD)(Uncoded Cylinder Less Keys) ...(Incl. Shaft)	.....	1	448 7665
68/69	30-70 (Uncoded Cylinder Less Keys-Must Be Coded Locally)	.....	1	320 8982
70/	30-70 (Uncoded Cylinder Less Keys-Must Be Coded Locally)	.....	1	448 7661
67	59 (Regular Cylinder With Keys)	.....	1	448 0468
67	59 (Special Cylinder With Keys-Specify Key No.)	.....	1	448 0469
70	***10-80 (RHD)(Regular Cylinder With Keys)***	.....	1	448 4686
70	***10-80 (RHD)(Uncoded Cylinder Less Keys-Must Be Coded Locally)***	.....	1	448 4240
72	***15 (Fleet)***...(Incl. Knob And Key)	.....	1	365 7802

Printed in U.S.A.

23.081–10 CASE, Rear Deck Lock Cylinder

67/69	05-06-07-09	.....	1	448 2260
67	59	.....	1	447 8415

23.081–11 SHAFT, Rear Deck Lock Cylinder

67/69	05-06-07-09	.....	1	448 1198

23.081–12 LEVER, Rear Deck Lock Cylinder

70/	05-06	.....	1	359 9811
68	39-79 ***(Use 359 9811)***	.....	1	360 0511
69/	39-79	.....	1	359 9811
67	59	.....	1	448 0470

23.081–13 ATTACHING PARTS, Lever Rear Deck Lock Cylinder

RETAINER, Spring..... 70/	05-06	.....	1	400 2250
RETAINER, Spring..... 68/	30-70	.....	1	400 2250

23.081–14 CYLINDER ASSEMBLY, Rear Deck Handle Lock

67/	***15-85 (Fleet)***	.....	1	447 8606
67/	***15-85 (Fleet)***	.....	1	447 8607

23.085–1 KEY, Lock Cylinder (Door, Ignition And Tailgate)

67/69	(Blank)	.....	2	344 5763
70	(Blank) LHD	.....	2	363 6394
71/	(Blank)	.....	2	364 1914
67/69	(Coded-Specify Key No.)	.....	2	447 8592
70/	(Coded-Specify Key No.) LHD	.....	2	448 7667
70	***(Blank) 10-80 (RHD)***	.....	2	344 5763
70	***(Coded-Specify Key No.) 10-80 (RHD)***	.....	2	447 8592

23.085–2 KEY, Lock Cylinder (Glove Box And Rear Deck)

67/69	(Blank)	.....	2	344 5762
70	(Blank) LHD	.....	2	363 6393
71/	(Blank)	.....	2	364 1913
67/69	(Coded-Specify Key No.)	.....	2	447 8593
70/	(Coded-Specify Key No.) LHD	.....	2	448 7668
70	***(Blank) 10-80 (RHD)***	.....	2	344 5762
70	***(Coded-Specify Key No.) 10-80 (RHD)***	.....	2	447 8593

23.086–1 RETAINER, Lock Cylinder (Door)

67/		.....	2	351 6003

23.086–2 RETAINER, Lock Cylinder (Rear Deck)

67/69	05-06-07-09	.....	1	348 2879
70/	05-06	.....	1	351 6003
67/	15-16-17-19-39-59-79-85-86-87-89	.....	1	351 6003

23.086–3 RETAINER, Lock Cylinder (Tailgate)

67	08 (WER)	.....	1	348 2879
67/	18-88 (WER)	.....	1	351 6003

Printed in U.S.A.

23.086–4 GASKET, Deck Door Lock Cylinder

69/	15-19-85-89	.....	1	360 9299

23.087–1 STRIKER, Door Lock

70/	01-40	.....	AR	357 6224
67/	10-30-50-70-80	.....	4	357 6224
67	(Left) 01 ...(Less Housing) ***(Use 362 3103)***	.....	2	357 7579
68/69	(Left) 01 ...(Less Housing)	.....	2	362 3103
67	(Right) 01 ...(Less Housing) ***(Use 362 3102)***	.....	2	357 7578
68/69	(Right) 01 ...(Less Housing)	.....	2	362 3102

23.087–2 ATTACHING PARTS, Striker To Body

SCREW, Machine 67/69	01	.....	12	400 2008

23.087–3 HOUSING, Door Lock Striker (Less Striker)

67	(Left) 01 ***(Use 362 3111)***	.....	1	320 8991
68/69	(Left) 01	.....	2	362 3111
67	(Right) 01	.....	1	320 8990
68/69	(Right) 01	.....	2	362 3110

23.087–4 ATTACHING PARTS, Housing To Body

SCREW, Machine 67/69	01	.....	12	400 2008

23.087–5 SPACER, Door Lock Striker (Nylon)

70/	01-40	23.039	AR	400 2073
67/	10-30-50-70-80	23.039	4	400 2073

23.087–6 WASHER, Door Lock Striker

70/	01-40	.....	AR	400 2057
67/	10-30-50-70-80	.....	4	400 2057

23.087–7 SHIM, Door Lock Striker

67/69	01 (.0359" Thick)	.....	AR	349 2115
67/69	01 (.0598" Thick)	.....	AR	349 2114

23.087–8 PLATE, Door Lock Striker Tapping (On Center Pillar)

67/69	(Left) 05-08	.....	1	359 8023
67/69	(Right) 05-08	.....	1	359 8022

23.098–1 REGULATOR, Front Door Window (Refer To Gr. 23.300–1 For Electric Type)

67/69	(Left) 05-08	.....	1	354 3127
67/69	(Left) 06	.....	1	354 3131
67/69	(Left) 07-09	.....	1	350 0977
70/	(Left) 01-40	.....	1	361 5477
67/68	(Left) 10-50-80	.....	1	357 4795
69/71	(Left) 10-80	.....	1	360 9085
72	(Left) 15-18-85-88 (* 23-35)	.....	1	360 9085
72	(Left) 15-18-85-88 (* 23-36)	.....	1	366 2905
72	(Left) 19-89 (* 23-35)	.....	1	360 9085
72	(Left) 19-89 (* 23-36)	.....	1	366 2903
68/70	(Left) 30-70	.....	1	360 1285
71/	(Left) 70	.....	1	363 6981

Printed in U.S.A.

67/69	(Right) 05-08	.....	1	354 3126
67/69	(Right) 06	.....	1	354 3130
67/69	(Right) 07-09	.....	1	350 0976
70/	(Right) 01-40	.....	1	361 5476
67/68	(Right) 10-50-80	.....	1	357 4794
69/71	(Right) 10-80	.....	1	360 9084
72	(Right) 15-18-85-88 (* 23-35)	.....	1	360 9084
72	(Right) 15-18-85-88 (* 23-36)	.....	1	366 2904
72	(Right) 19-89 (* 23-35)	.....	1	360 9084
72	(Right) 19-89 (* 23-36)	.....	1	366 2902
68/70	(Right) 30-70	.....	1	360 1284
71/	(Right) 70	.....	1	363 6980

23.098-1a ROLLER KIT, Front Door Window Regulator

71/72	70	.....	1	812 2883

23.098-2 ATTACHING PARTS, Regulator To Panel (Front Door)

SCREW, Machine	67/69	01	.....	8	400 0572
SCREW, Machine	67/	05-06-10-30-50-70-80 (1/4" x 20 x 3/8")	.....	AR	400 2028
SCREW, Machine	69/	10-30-50-70-80 (1/4" x 20 x 5/8") (To Slide Channel)	.....	4	400 2203
NUT, Hexagon	70/	01-40 (Regulator Link To Inner Panel)	.....	2	400 0566
NUT, Hexagon	70/	01-40 (Regulator Arm Pivot)	17.406	2	G120375
STUD	70/	01-40 (Regulator Arm Fixed Pivot To Inner Panel)	.....	2	361 5557
WASHER, Plain	70/	01-40 (Regulator Arm Pivot Stud)	17.814	2	400 1083

23.098-3 GUIDE, Front Door Window Regulator Arm

68/70	30-70	.....	2	360 1291

23.098-4 ATTACHING PARTS, Guide To Panel

NUT, Lock	68/70	30-70	17.416	4	G273801 NA

23.098-5 PLATE, Front Door Window Regulator Crossarm Mounting

67/69	(Left) 07-09	.....	1	354 3051
67/69	(Right) 07-09	.....	1	354 3050

23.098-6 ATTACHING PARTS, Plate To Inner Panel

SCREW, Machine	67/69	07-09	.....	8	400 0572

23.098-7 ATTACHING PARTS, Plate To Regulator Slide Channel

SCREW, Machine	67/69	07-09	.....	4	400 0137

23.098-8 REGULATOR, Rear Door Window (Refer To Gr. 23.305-1 For Electric Type)

67/69	(Left) 05-08	.....	1	354 3129
70/	(Left) 05-08	.....	1	361 5527
67/	(Left) 15-18-85-88 (LER)	.....	1	360 9089
67/69	(Right) 05-08	.....	1	354 3128
70/	(Right) 05-08	.....	1	361 5526
67/	(Right) 15-18-85-88 (LER)	.....	1	360 9088

23.098-9 ATTACHING PARTS, Regulator To Panel (Rear Door)

SCREW, Machine	67/69	05-08	.....	8	400 0572
SCREW, Machine	70/	05-08	.....	8	400 2028
SCREW, Machine	67/	15-18-85-88	.....	8	400 2028
SCREW, Machine	67/	15-18-85-88 (To Slide Channel)	.....	4	400 2028

DOORS - HARDWARE

23.100–1 HANDLE, Door Window Regulator (Front And Rear)

67	01	.....	AR	357 6415	
67	15-16-18 (550)	.....	AR	357 6415	
67	15-18 (770)	.....	AR	357 6414	
67	17-19-50-80	.....	AR	357 6414	
68	(* 23-8)	.....	AR	360 1240	
68	(* 23-9)	.....	AR	360 2986	
69/		.....	AR	360 2986	

23.100–2 ATTACHING PARTS, Handle To Regulator (Front And Rear)

SCREW, Machine.....	67/71	01-10-80	29.105	4	400 0826	
SCREW, Machine.....	68/70	79	.....	AR	400 0826	
SCREW, Tapping.....	71/	79	.....	AR	400 4478	
SCREW, Tapping.....	72	01-10-80	24.002	4	400 4478	

23.104 WASHER, Door Window Regulator Handle (Front And Rear)

67	(Rubber) 10-50-80	23.058	AR	400 0687	
67	(Nylon)	.....	AR	357 6417	
68	(Steel) 17-19-85-89	23.087	AR	400 2057	
69/	(Nylon-2" O.D.)	.....	AR	361 3467	
69	06-09 (23/64" O.D.-In Base Of Handle-Used On Left Side Only)	17.820	2	G131096	NA

23.105 SPACER, Door Window Regulator Handle (Black Nylon)

70	80 (SST-1-3/4" Dia. From Flat Edges)	.....	2	363 6421
72	01 (Gucci Trim)	.....	4	363 6421

23.110–1 VENTILATOR, Front Door (Incl. Glass)

67/69	(Clear-Left) 05-06-08	.....	1	348 5333
67/69	(Tinted-Left) 05-06-08	.....	1	348 5335
67/69	(Clear-Left) 07-09	.....	1	350 1051
67/69	(Tinted-Left) 07-09	.....	1	350 1053
67	(Clear-Left) 15-18-85-88 (* 23-10) ***(Use 358 6829)***	.....	1	357 6169
67	(Tinted-Left) 15-18-85-88 (* 23-10) ***(Use 358 6831)***	.....	1	357 6171
67	(Clear-Left) 15-18-85-88 (* 23-11)	.....	1	358 6829
67	(Tinted-Left) 15-18-85-88 (* 23-11)	.....	1	358 6831
68/	(Clear-Left) 15-18-85-88	.....	1	358 6829
68/	(Tinted-Left) 15-18-85-88	.....	1	358 6831
67	(Clear-Left) 16-17-19-59-86-87-89 (* 23-10)	.....	1	357 6261
67	(Tinted-Left) 16-17-19-59-86-87-89 (* 23-10)	.....	1	357 6263
67	(Clear-Left) 16-17-19-59-86-87-89 (* 23-11 And * 23-12)	.....	1	358 6825
67	(Tinted-Left) 16-17-19-59-86-87-89 (* 23-11 And * 23-12)	.....	1	358 6827
67	(Clear-Left) 16-17-19-59-86-87-89 (* 23-13)	.....	1	360 2739
67	(Tinted-Left) 16-17-19-59-86-87-89 (* 23-13)	.....	1	360 2741
68/69	(Clear-Left) 17-19-89	.....	1	360 2739
68/69	(Tinted-Left) 17-19-89	.....	1	360 2741
70/	(Clear-Left) 19-89	.....	1	363 1927
70/	(Tinted-Left) 19-89	.....	1	363 1929
67/69	(Clear-Right) 05-06-08	.....	1	348 5332
67/69	(Tinted-Right) 05-06-08	.....	1	348 5334
67/69	(Clear-Right) 07-09	.....	1	350 1050
67/69	(Tinted-Right) 07-09	.....	1	350 1052
67	(Clear-Right) 15-18-85-88 (* 23-10) ***(Use 358 6828)***	.....	1	357 6168
67	(Tinted-Right) 15-18-85-88 (* 23-10) ***(Use 358 6830)***	.....	1	357 6170
67	(Clear-Right) 15-18-85-88 (* 23-11)	.....	1	358 6828
67	(Tinted-Right) 15-18-85-88 (* 23-11)	.....	1	358 6830
68/	(Clear-Right) 15-18-85-88	.....	1	358 6828
68/	(Tinted-Right) 15-18-85-88	.....	1	358 6830
67	(Clear-Right) 16-17-19-59-86-87-89 (* 23-10)	.....	1	357 6260
67	(Tinted-Right) 16-17-19-59-86-87-89 (* 23-10) ***(Ord. 358 6826, 359 0949, 400 0951)***	.....	1	357 6262

67	(Clear-Right) 16-17-19-59-86-87-89 (* 23-11 And * 23-12) .... ***(Ref. Pr. List)***	.....	1	358 6824	
67	(Tinted-Right) 16-17-19-59-86-87-89 (* 23-11 And * 23-12)	.....	1	358 6826	
67	(Clear-Right) 16-17-19-59-86-87-89 (* 23-13)	.....	1	360 2738	
67	(Tinted-Right) 16-17-19-59-86-87-89 (* 23-13)	.....	1	360 2740	
68/69	(Clear-Right) 17-19-89	.....	1	360 2738	
68/69	(Tinted-Right) 17-19-89	.....	1	360 2740	
70/	(Clear-Right) 19-89	.....	1	363 1926	
70/	(Tinted-Right) 19-89	.....	1	363 1928	

23.110–2 ATTACHING PARTS, Ventilator To Door Window Frame

SCREW, Machine	67/69	05-06-08	.....	6	400 0717
SCREW, Machine	67/	15-18-85-88	.....	4	400 2164

23.110–3 ATTACHING PARTS, Ventilator To Door Inner Panel (Upper)

SCREW, Tapping	67/69	01	17.660	2	G161901
SCREW, Machine	67/68	15-18-85-88	23.008	2	400 1953
SCREW, Machine	67/68	16-17-19-59-86-87-89 ..... ***(Use 400 2203)***	23.001	4	400 1952
SCREW, Machine	69/	19-89	.....	4	400 2203
NUT, Speed	67/69	01	.....	2	400 0196

23.110–4 ATTACHING PARTS, Ventilator To Bracket (Lower-On Inner Panel)

SCREW, Machine	67/	10-50-80	.....	2	400 2203

23.110–5 ATTACHING PARTS, Ventilator To Door (Hingeside)

SCREW, Machine	67/69	07-09	23.008	4	400 0727
SCREW, Machine	67/	16-17-19-59-86-87-89	23.008	2	400 1953

23.110–6 ATTACHING PARTS, Ventilator To Door Inner Panel (Lower)

STUD	67	01	23.124	2	400 1439
STUD	68	05-06	23.124	2	400 1439
STUD	68/69	09	23.124	2	400 0618
WASHER, Lock	67/69	01	17.826	2	G173124
NUT, Hexagon	67/68	01	17.406	2	G120375
NUT, Lock	69	01	17.416	2	G273801 NA

23.110–7 BRACKET, Front Door Ventilator (Lower-On Inner Panel)

67/	10-50-80	23.125	2	359 0949	

23.110–8 ATTACHING PARTS, Bracket To Ventilator And Inner Panel

SCREW, Machine	67/	10-50-80	.....	4	400 2203

23.112 FRAME ASSEMBLY, Front Door Ventilator (Incl. Glass)

67/69	(Clear-Left) 01	.....	1	448 0243	
67/69	(Tinted-Left) 01	.....	1	448 0245	
67	(Clear-Left) 10-50-80 (* 23-10)	.....	1	448 4123	
67	(Tinted-Left) 10-50-80 (* 23-10)	.....	1	448 4125	
67	(Clear-Left) 10-50-80 (* 23-11)	.....	1	448 4871	
67	(Tinted-Left) 10-50-80 (* 23-11)	.....	1	448 4873	
68/	(Clear-Left) 10-80	.....	1	448 4871	
68/	(Tinted-Left) 10-80	.....	1	448 4873	

Printed in U.S.A.

67/69	(Clear-Right) 01	.....	.....	1	448 0242
67/69	(Tinted-Right) 01	.....	.....	1	448 0244
67	(Clear-Right) 10-50-80 (* 23-10)	.....	.....	1	448 4122
67	(Tinted-Right) 10-50-80 (* 23-10)	.....	.....	1	448 4124
67	(Clear-Right 10-50-80 (* 23-11)	.....	.....	1	448 4870
67	(Tinted-Right) 10-50-80 (* 23-11)	.....	.....	1	448 4872
68/	(Clear-Right) 10-80	.....	.....	1	448 4870
68/	(Tinted-Right) 10-80	.....	.....	1	448 4872

23.114 FRAME, Front Door Ventilator (Less Glass)

67/69	(Left) 01	.....	.....	1	448 0247
67	(Left) 10-50-80 (* 23-10)	.....	.....	1	448 4121
67	(Left) 10-50-80 (* 23-11)	.....	.....	1	448 4869
68/	(Left) 10-80	.....	.....	1	448 4869
67/69	(Right) 01	.....	.....	1	448 0246
67	(Right) 10-50-80 (* 23-10)	.....	.....	1	448 4120
67	(Right) 10-50-80 (* 23-11)	.....	.....	1	448 4868
68/	(Right) 10-80	.....	.....	1	448 4868

23.116 WEATHERSTRIP, Front Door Ventilator

67/69	(Left) 05-06-08	.....	.....	1	348 7995
67/69	(Left) 07-09	.....	.....	1	350 9489
67/	(Left) 15-18-85-88	.....	.....	1	357 6177
67/	(Left) 16-17-19-59-86-87-89	.....	.....	1	357 6257
67/69	(Right) 05-06-08	.....	.....	1	348 7994
67/69	(Right) 07-09	.....	.....	1	350 9488
67/	(Right) 15-18-85-88	.....	.....	1	357 6176
67/	(Right) 16-17-19-59-86-87-89	.....	.....	1	357 6256

23.117-1 WEATHERSTRIP, Front Door Glass And Ventilator Division Channel

67/69	07-09	.....	.....	2	448 1387

23.117-2 ATTACHING PARTS, Weatherstrip To Channel

RIVET, Tubular	67/69	07-09	.....	.....	8	448 1388

23.118-1 CHANNEL, Front Door Ventilator

67/69	(Left) 05-06-08	.....	.....	1	448 0249
67/69	(Right) 05-06-08	.....	.....	1	448 0248

23.118-2 PIVOT, Front Door Ventilator Upper

67/69	(Left) 05-06-08	.....	.....	1	448 0261
67/69	(Left) 07-09	.....	.....	1	350 9501
67/	(Left) 15-18-85-88	.....	.....	1	357 6199
67/	(Left) 16-17-19-59-86-87-89	.....	.....	1	357 6219
67/69	(Right) 05-06-08	.....	.....	1	448 0260
67/69	(Right) 07-09	.....	.....	1	350 9500
67/	(Right) 15-18-85-88	.....	.....	1	357 6198
67/	(Right) 16-17-19-59-86-87-89	.....	.....	1	357 6218

23.118-3 ATTACHING PARTS, Front Door Ventilator Upper Pivot To Channel

SCREW, Machine	67/69	05-06-08	.....	.....	4	448 0262
SCREW, Machine	67/69	07-09	.....	.....	4	448 1386
SCREW, Machine	67/	15-18-85-88	.....	.....	4	448 4132
SCREW, Machine	67/	16-17-19-59-86-87-89	.....	.....	4	448 4116

DOORS - HARDWARE

23.118–4 BUSHING, Front Door Ventilator Upper Pivot

67/	10-50-80	2	357	6209

23.121–1 HANDLE, Front Door Ventilator Lock

67/69	(Left) 01	1	448	0255
67	(Left) 10-50-80 (* 23-10)	1	357	6195
67	(Left) 10-50-80 (* 23-11)...(Less Push Button And Springs)	1	358	6839
68/	(Left) 10-80...(Less Push Button And Springs)	1	358	6839
67/69	(Right) 01	1	448	0254
67	(Right) 10-50-80 (* 23-10)	1	357	6194
67	(Right) 10-50-80 (* 23-11)...(Less Push Button And Springs)	1	358	6838
68/	(Right) 10-80...(Less Push Button And Springs)	1	358	6838

23.121–2 ATTACHING PARTS, Handle To Bracket

PIN, Groove	67	01-10-50-80 (* 23-10)	2	400	0034
PIN, Spring	67	10-50-80 (* 23-11)	2	358	6841
PIN, Spring	68/	10-80	2	358	6841
WASHER, Spring	67/	10-50-80	2	400	0043

23.121–3 SPRING, Front Door Ventilator Lock Handle Button

67/	10-50-80	2	342	4015

23.121–4 BUTTON, Front Door Ventilator Lock Handle (Nylon)

67/69	01	2	320	4462

23.121–5 BUTTON, Front Door Ventilator Lock Handle Release

67/	10-50-80	2	358	6835

23.121–6 BRACKET KIT, Front Door Ventilator Lock Handle Mounting (Incl. Bracket And Rivets)

67	10-50-80 (* 23-10)	2	448	4119
67	10-50-80 (* 23-11)	2	448	4866
68/	10-80	2	448	4866
67/69	(Left) 01	1	448	0265
67/69	(Right) 01	1	448	0264

23.121–7 ATTACHING PARTS, Bracket To Frame

RIVET, Tubular	67/69	01	6	344	6089
RIVET, Tubular	67/	10-50-80	4	448	4812

23.123–1 PLATE, Front Door Ventilator Friction Unit

67/69	01 ***(Use 448 4118)***	2	342	2882
67/	10-50-80	2	448	4118

23.123–2 ATTACHING PARTS, Plate To Frame

SPRING	67/69	01	2	435	9017
SPRING	67/	10-50-80	2	435	9017
WASHER (Steel)	67/69	01	2	435	9021
WASHER (Steel)	67/	10-50-80	2	435	9021
WASHER (Fibre)	67/69	01	4	448	4117
WASHER (Fibre)	67/	10-50-80	4	448	4117
NUT, Hexagon	67/69	01	2	400	0238
NUT, Hexagon	67/	10-50-80	2	400	0238

DOORS - HARDWARE

23.124 CHANNEL, Front Door Glass And Ventilator Division (Incl. Channel, Weatherstrip And Upper Pivot)

67/69	(Left) 05-06-08	.....	1	448 0251	
67/69	(Left) 07-09	.....	1	448 1391	
67/	(Left) 15-18-85-88	.....	1	448 4821	
67	(Left) 16-17-19-59-86-87-89 (* 23-12)	.....	1	448 4129	
67	(Left) 16-17-19-59-86-87-89 (* 23-13)	.....	1	320 9857	
68/69	(Left) 17-19-89	.....	1	320 9857	
70/	(Left) 19-89	.....	1	812 0147	
67/69	(Right) 05-06-08	.....	1	448 0250	
67/69	(Right) 07-09	.....	1	448 1390	
67/	(Right) 15-18-85-88	.....	1	448 4820	
67	(Right) 16-17-19-59-86-87-89 (* 23-12)	.....	1	448 4128	
67	(Right) 16-17-19-59-86-87-89 (* 23-13)	.....	1	320 9856	
68/69	(Right) 17-19-89	.....	1	320 9856	
70/	(Right) 19-89	.....	1	812 0146	

23.125–1 CHANNEL, Front Door Division Channel Glass Slide

67/69	(Left) 07-09	.....	1	448 2325
67/	(Left) 15-18-85-88	.....	1	448 4137
67/	(Left) 16-17-19-59-86-87-89	.....	1	448 4131
67/69	(Right) 07-09	.....	1	448 2324
67/	(Right) 15-18-85-88	.....	1	448 4136
67/	(Right) 16-17-19-59-86-87-89	.....	1	448 4130

23.125–2 ATTACHING PARTS, Channel To Channel

RIVET, Tubular	67/69	(1/8" × 5/32")	23.117	4	448 1388	
RIVET, Tubular	67/69	(9/64 × 7/32) 07-09	.....	2	448 2326	
RIVET, Tubular	67/69	(.145" × 7/32") 07-09	25.054	1	448 1389	
RIVET, Tubular	67/	10-50-80	.....	4	448 4133	

23.165–1 CHANNEL, Rear Door Glass And Ventilator Division

67/69	(Left) 05-08	.....	1	354 8735
67/69	(Right) 05-08	.....	1	354 8734

23.165–2 ATTACHING PARTS, Channel To Window Frame

SCREW, Machine	67/69	05-08	23.110	2	400 0717	
CLIP, Speed	67/69	05-08	.....	2	400 0535	

23.165–3 ATTACHING PARTS, Channel To Door Inner Panel (Bottom)

STUD	67/69	05-08	23.124	2	400 1439	
WASHER, Lock	67/69	05-08	17.826	2	G173124	
NUT, Hexagon	67/68	05-08	17.406	2	G120375	
NUT, Lock	69	05-08	17.416	2	G273801	NA

23.165–4 ATTACHING PARTS, Channel To Door (At Belt Line)

SCREW, Tapping	67/69	05-08	.....	2	400 1441

23.182–1 RECEIVER ASSEMBLY, Rear Door Ash (See Group 24.050–1 For Rear Quarter)

67	05-08-15-18-85-88	.....	2	357 7350	
68	05-08-15-18-85-88	.....	2	360 1220	
69	05-08	24.050	2	448 6549	
70/71	05-08 ...(Less Outside Cover)	24.050	2	362 8324	
72	05-08-15-18-85-88 (* 23-37) ...(Less Outside Cover)	.....	2	362 8324	
72	05-08-15-18-85-88 (* 23-38) ...(Less Outside Cover)	.....	2	364 9527	
69/71	15-18-85-88	.....	2	360 1220	

DOORS - HARDWARE

23.182–2 ATTACHING PARTS, Rear Door Ash Receiver To Panel

SCREW, Tapping.....	69	05-08.....	17.660	4	G161798	NA
SCREW, Tapping.....	72	05-08-15-18-85-88 (1" Long).....	.....	4	400 2099	

23.182–3 ATTACHING PARTS, Ash Receiver Handle To Cover

SCREW, Tapping.....	69	05-08.....	17.660	4	G163158	NA
NUT, Stamped.....	69	05-08.....	17.660	4	400 3625	

23.182–4 SPRING, Rear Door Ash Receiver Cover

67	05-08-15-18-85-88.....	.....	2	357 7348	

23.182–5 COVER, Rear Door Ash Receiver Outside (NC)

69	05-08.....	24.052	2	362 5592	
72	05-08-15-18-85-88 (Holds Chrome Receiver-* 23-40).....	24.052	2	364 7036	
70/	05-08-15-18-85-88 (Holds Chrome Receiver-* 23-39).....	24.052	2	362 8352	

23.182–6 PLATE, Rear Door Ash Receiver Mounting (Behind Trim Panel)

69	05-08.....	.....	2	347 2207	
70/	05-08.....	.....	2	363 5784	

23.182–7 ATTACHING PARTS, Mounting Plate To Rear Door

SCREW, Tapping.....	69	05-08.....	17.669	2	G457002	NA
SCREW, Tapping.....	70/71	05-08.....	.....	4	400 2456	

23.182–9 ATTACHING PARTS, Ash Receiver Retainer To Armrest

SCREW, Tapping.....	72	10-80.....	.....	4	400 4404

23.198–1 MOULDING, Front Door Trim Panel Upper (* 23-22)

70/	05-08 (SST-34-1/2" Long).....	.....	2	362 8663
70/	06-46 (SST-42-7/8" Long).....	.....	2	362 8662
70	05-06 (SST-Left-Front-Used With Remote Mirror-11-3/16" Long-Cane Shape)..	.....	1	362 5842
71	05-06-08 (SST-Left-Front-Used With Remote Mirror-11-3/16" Long-Cane Shape)	.....	1	363 8925
72	08 (SST-Gucci-Left-Front-Used With Remote Mirror-11-3/16" Long-Cone Shape)	.....	1	363 8925
72	05-08 (SST-Left-Front-Used With Remote Mirror-Except Gucci Trim).....	.....	1	366 3225
72	06 (SST-Left-Front-Used With Remote Mirror).....	.....	1	365 3958
70	05 (SST-Left-Rear-Used With Remote Mirror-19" Long).....	.....	1	362 7081
71	05-08 (SST-Left-Rear-Used With Remote Mirror-19" Long).....	.....	1	363 8956
72	05-08 (SST-Left-Rear-Used With Remote Mirror-17" Long-Cone Shape-Except Gucci Trim).....	.....	1	365 3943
72	08 (SST-Gucci-Left-Rear-Used With Remote Mirror-19" Long).....	.....	1	363 8956
70	06 (SST-Left-Rear-Used With Remote Mirror-24-7/16" Long-Cane Shape).....	.....	1	362 5843
71	06 (SST-Left-Rear-Used With Remote Mirror-24-7/16" Long-Cane Shape).....	.....	1	363 8926
72	06 (SST-Left-Rear-Used With Remote Mirror).....	.....	1	365 3959
70	05 (SST-Left-Used Less Remote Mirror-33" Long-Cane Shape).....	.....	1	362 7075
71	05-08 (SST-Left-Used Less Remote Mirror-33" Long-Cane Shape).....	.....	1	363 8929
72	05-08 (SST-Custom-Left-Used Less Remote Mirror-27-5/8" Long-U Shape-Except Gucci Trim).....	.....	1	365 3945
72	08 (SST-Gucci-Left-Less Remote Mirror-33" Long-Cane Shape).....	.....	1	363 8929

70	06 (SST-Left-Used Less Remote Mirror-38-11/16" Long-U Shape)	.....	1	362 5846
71	06 (SST-Left-Used Less Remote Mirror-38-11/16" Long-U Shape)	.....	1	363 8957
72	06 (SST-Left-Used Less Remote Mirror-32-1/4" Long-U Shape)	.....	1	365 3948
70	05 (SST-Right-33" Long-Cane Shape)	.....	1	362 7074
71	05-08 (SST-Right-33" Long-Cane Shape)	.....	1	363 8928
72	05-08 (SST-Custom-Right-27-5/8" Long-U Shape-Except Gucci Trim)	.....	1	365 3944
72	08 (SST-Gucci-Right-33" Long-Cane Shape)	.....	1	363 8928
70	06 (SST-Right-38-11/16" Long-U Shape)	.....	1	362 5846
71	06 (SST-Right-38-11/16" Long-U Shape)	.....	1	363 8957
72	06 (SST-Right-32-1/4" Long-U Shape)	.....	1	365 3948
70	30-70 (SST-Left-Rear-Used With Remote Mirror-24-7/16" Long-Cane Shape)	.....	1	362 5843
70	30-70 (SST-Left-Used Less Remote Mirror-38-11/16" Long)	.....	1	362 5847
70	30-70 (SST-Right-38-11/16" Long-U Shape)	.....	1	362 5846
70	30-70 (SST-Left-Front-Used With Remote Mirror-11-3/16" Long)	.....	1	362 5842
67	59-87-89 (Except Custom-Left)...(Incl. Walnut Overlay)	.....	1	357 9713
67	59-87-89 (Except Custom-Right)...(Incl. Walnut Overlay)	.....	1	357 9712
67	85-88 (990-Left)...(Incl. Walnut Overlay)	.....	1	357 9695
67	85-88 (990-Right)...(Incl. Walnut Overlay)	.....	1	357 9694
68	85-88 (Left)	.....	1	360 7777
68	85-88 (Right)	.....	1	360 7776
69	85-88 (DPL-Left)...(Incl. Overlay)	.....	1	361 8217
69	85-88 (DPL-Right)...(Incl. Overlay)	.....	1	361 8216
68	89 (Left)	.....	1	360 7781
68	89 (Right)	.....	1	360 7780
69	89 (DPL-Left)...(Incl. Overlay)	.....	1	361 8221
69	89 (DPL-Right)...(Incl. Overlay)	.....	1	361 8220
69	85-88-89 (SST)...(Incl. Overlay)	.....	2	361 8222

23.198-2 MOULDING, Front Door Trim Panel Center (* 23-22)

68	85 (DPL-Left)	.....	1	360 7807
68	85 (DPL-Right)	.....	1	360 7806
67	89 (Custom-Left-40-3/16" Long)...(Incl. Cap)	.....	1	357 9723
67	89 (Custom-Right-40-3/16" Long)...(Incl. Cap)	.....	1	357 9722
68	89 (DPL-Left)	.....	1	360 7809
68	89 (DPL-Right)	.....	1	360 7808
68	80 (SST-Left-Front)	.....	1	360 7701
68	80 (SST-Right-Front)	.....	1	360 7700
68	89 (SST-Left-Rear)	.....	1	360 7700
68	89 (SST-Right-Rear)	.....	1	360 7701

23.198-3 MOULDING, Front Door Trim Panel Lower (* 23-22)

72	06 (SST-32-1/4" Long-U Shape)	.....	2	365 3948
70	05 (SST-Left-32" Long-Cane Shape)	.....	1	362 7077
71	05-08 (SST-Left-32" Long-Cane Shape)	.....	1	363 8931
72	05-08 (SST-Left-Except Gucci Trim)	.....	1	365 3947
70	06 (SST-Left-38-11/16" Long-U Shape)	.....	1	362 5844
71	06 (SST-Left-32" Long-U Shape)	.....	1	363 8959
72	08 (SST-Gucci-Left-32" Long-Cane Shape)	.....	1	363 8931
70	05 (SST-Right-32" Long-Cane Shape)	.....	1	362 7076
71	05-08 (SST-Right-32" Long-Cane Shape)	.....	1	363 8930
72	05-08 (SST-Right-Except Gucci Trim)	.....	1	365 3946
70	06 (SST-Right-38-11/16" Long-U Shape)	.....	1	362 5844
71	06 (SST-Right-32" Long-U Shape)	.....	1	363 8959
72	08 (SST-Gucci-Right-32" Long-Cane Shape)	.....	1	363 8930
70	30-70 (SST-Left-38-11/16" Long) ***(Use 362 5844)***	.....	1	362 5845
70	30-70 (SST-Right-38-11/16" Long-U Shape)	.....	1	362 5844
67	59 (42-23/32" Long)	.....	2	357 9718
67	85-88 (31-43/64" Long) ***(Use 361 8762)***	.....	2	357 9698
68	85-88 ***(Use 361 8762)***	.....	2	357 9698
69	85-88	.....	2	361 8762

67	87-89 (Except Custom-42-23/32" Long)	.....	2	357 9718
67	89 (Custom-Left-50-1/2" Long)	.....	1	357 9727
67	89 (Custom-Right-50-1/2" Long)	.....	1	357 9726
69	89 (DPL) ***(Use 357 9718)***	.....	2	361 8763
68	89	.....	2	357 9718
69	85-88 (DPL)	.....	2	361 8762

23.198-4 MOULDING, Front Door Trim Panel Horizontal (* 23-22)

67/68	05-08	.....	2	349 3248
67/68	06-07-09	.....	2	349 3265
67	10 (Except Custom-Left-43-55/64" Long-Plastic)	.....	1	357 9743
67	10 (Except Custom-Right-43-55/64" Long-Plastic)	.....	1	357 9742
67	19 (Custom-Left-LER-44" Long-Metal)	.....	1	357 9689
67	19 (Custom-Left-Front-WER-5-5/16" Long-Metal)	.....	1	357 9683
67	19 (Custom-Right-Front-WER-5-5/16" Long-Metal)	.....	1	357 9682
67	19 (Custom-Left-Rear-WER-36-9/16" Long-Metal)	.....	1	357 9691
67	19 (Custom-Right-Rear-WER-36-9/16" Long-Metal)	.....	1	357 9690
67	19 (Custom-Right-LER-44" Long-Metal)	.....	1	357 9688
68	10 (SST-30-3/32" Long-* 23-14)	.....	2	360 7232
68	10 (SST-30-3/32" Long-* 23-15)	.....	2	361 3263
69	10 (Except SST)	.....	2	361 8200
71	19 (Matador-Two Painted Stripes-40" Long)	.....	2	364 0350
69	10 (SST)	.....	2	361 8272
71	15-18 (Matador-32-1/4" Long)	.....	2	364 0342
69	39-79	.....	2	361 7345
70	70 (Left-Except SST-Used Less Remote Control)	.....	1	362 8807
71/	70 (Left-Used Less Remote Control-39" Long)	.....	1	364 2235
70	70 (Left-Front-Except SST-Used With Remote Control-12" Long)	.....	1	363 5769
71/	70 (Left-Front-Used With Remote Control -9-5/8" Long)	.....	1	364 2232
70	70 (Left-Rear-Except SST-Used With Remote Control-25-3/8" Long)	.....	1	363 5777
71/	70 (Left-Rear-Used With Remote Control -26-1/2" Long)	.....	1	364 2233
70	70 (Right-Rear-Except SST)	.....	1	362 8806
71/	70 (Right-42-1/4" Long)	.....	1	364 2234
69	85 (Except DPL And SST)	.....	2	361 7752
69	85-88 (SST)	.....	2	361 8762
71	85 (DPL-Upper-30-1/2" Long)	.....	2	364 0328
70	85-88 (DPL And SST-Above Carpet-31-1/2" Long)	.....	2	362 8121
71	85-88 (SST-Above Carpet-31-1/2" Long)	.....	2	362 8121
69	89 (SST) ***(Use 357 9718)***	.....	2	361 8763
70	89 (DPL And SST-Above Carpet-42-9/16" Long)	.....	2	362 8123
71	89 (SST-Above Carpet-42-9/16" Long)	.....	2	362 8123

23.198-5 MOULDING, Front Door Trim Panel Vertical (* 23-22)

68	17-19 (SST-Left-WER-* 23-14)	.....	1	360 7229
68	17-19 (SST-Right-WER-* 23-14)	.....	1	360 7228
68	17-19 (SST-Left-WER-* 23-15)	.....	1	361 3395
68	17-19 (SST-Right-WER-* 23-15)	.....	1	361 3394
68	39-79 (SST)...(Incl. Walnut Overlay)	.....	2	360 7076
69	39-79...(Incl. Walnut Overlay)	.....	2	361 7340
69	80 (SST)	.....	4	362 1380

23.198-6 MOULDING, Front Door Trim Panel "U" Shape (* 23-22)

67	10 (770)(SST)	.....	2	358 1535
67	15-16-18 (550)	.....	2	358 1520
68	17-19 (SST-LER-* 23-15)	.....	2	361 3390
68	17-19 (SST-Left-WER-* 23-14)	.....	1	360 7227
68	17-19 (SST-Right-WER-* 23-14)	.....	1	360 7226
68	17-19 (SST-Left-WER-* 23-15)	.....	1	361 3393
68	17-19 (SST-Right-WER-* 23-15)	.....	1	361 3392

67	19 (Custom-Left-LER)	.....	1	357 9692
67	19 (Custom-Left-WER)	.....	1	357 9686
67	19 (Custom-Right)	.....	1	357 9692
68	17-19 (SST-Left-LER-* 23-14)	.....	1	360 7225
68	17-19 (SST-Right-LER-* 23-14)	.....	1	360 7224
67	85-86-87 (Fleet)	.....	2	358 1520

23.198–7 MOULDING, Rear Door Trim Panel Upper (* 23-22)

67/69	05-08	.....	2	349 3262
70/71	05-08 (SST-25-11/32" Long)	.....	2	362 8664
70	05 (SST-Custom-Left-Upper Front-3-7/8" Long)	.....	1	362 7095
71	05 (SST-Custom-Left-Upper Front-3-7/8" Long)	.....	1	363 8939
72	05-08 (SST-Custom-Left-Upper-19" Long-Cone Shape)	.....	1	365 3939
72	08 (SST-Gucci-Left-Upper-Front-3-7/8" Long)	.....	1	363 8939
70	05 (SST-Custom-Right-Upper Front-3-7/8" Long)	.....	1	362 7094
71	05 (SST-Custom-Right-Upper Front-3-7/8" Long)	.....	1	363 8938
72	05-08 (SST-Custom-Right-Upper-19" Long-Cone Shape)	.....	1	365 3938
72	08 (SST-Gucci-Right-Upper-Front-3-7/8" Long)	.....	1	363 8938
70	05 (SST-Custom-Left-Upper Rear-19-1/2" Long)	.....	1	362 7093
71	05 (SST-Custom-Left-Upper Rear-20" Long)	.....	1	363 8941
72	08 (SST-Gucci-Left-Upper-Rear-20" Long)	.....	1	363 8941
70	05 (SST-Custom-Right-Upper Rear-19-1/2" Long)	.....	1	362 7092
71	05 (SST-Custom-Right-Upper Rear-20" Long)	.....	1	363 8940
72	08 (SST-Gucci-Right-Upper-Rear-20" Long)	.....	1	363 8940
67	15-18 (Left-Front)	.....	1	357 9747
67	15-18 (Right-Front)	.....	1	357 9746
67	15-18 (Left-Rear)	.....	1	357 9741
67	15-18 (Right-Rear)	.....	1	357 9740
67	85-88 (Left)...(Incl. Walnut Overlay)	.....	1	357 9703
67	85-88 (Right)...(Incl. Walnut Overlay)	.....	1	357 9702
68	85-88 (Left-Front)	.....	1	360 7797
68	85-88 (Right-Front)	.....	1	360 7796
68	85-88 (Left-Rear)	.....	1	360 7799
68	85-88 (Right-Rear)	.....	1	360 7798
69	85-88 (SST)...(Incl. Overlay)	.....	2	361 8222

23.198–8 MOULDING, Rear Door Trim Panel Center (* 23-22)

68	85-88 (DPL-Left)	.....	1	360 7807
68	85-88 (DPL-Right)	.....	1	360 7806
68	85 (SST-Left)	.....	1	360 7703
68	85 (SST-Right)	.....	1	360 7702
69	85-88 (DPL-Left)	.....	1	361 8219
69	85-88 (DPL-Right)	.....	1	361 8218

23.198–9 MOULDING, Rear Door Trim Panel Lower (* 23-22)

70	05 (SST-Custom-22-5/16" Long)	.....	2	362 7096
71	05 (SST-Custom-22-5/16" Long)	.....	2	363 8942
72	08 (SST-Gucci-22-5/8" Long)	.....	2	363 8942
72	05-08 (SST-Custom-Left-17-5/64" Long-Cone Shape)	.....	1	365 3943
72	05-08 (SST-Custom-Right-17-5/64" Long-Cone Shape)	.....	1	365 3942
67/68	85-88 (Left)	.....	1	357 9721
67/68	85-88 (Right)	.....	1	357 9720
69	85-88 (Left)	.....	1	361 8765
69	85-88 (Right)	.....	1	361 8764

23.198–10 MOULDING, Rear Door Trim Panel Vertical

69	80 (SST)	.....	4	362 1380

DOORS - HARDWARE

23. 198–10a MOULDING, Rear Door Trim Panel Horizontal (* 23-22)

67/69	05–08	.....	2	349	3262
69	15–18 (SST)	.....	2	361	8272
69	15–18 (Except SST)	.....	2	361	8200
71	15–18 (Matador–Left–Upper Front–5" Long)	.....	1	364	0347
71	15–18 (Matador–Right–Upper Front–5" Long)	.....	1	364	0346
71	15–18 (Matador–Left–Upper Rear–21–1/2" Long)	.....	1	364	0353
71	15–18 (Matador–Right–Upper Rear–21–1/2" Long)	.....	1	364	0352
69	85 (Except DPL And SST)	.....	2	361	7752
71	85 (DPL–Left–Upper Front–5" Long)	.....	1	364	0331
71	85 (DPL–Right–Upper Front–5" Long)	.....	1	364	0330
71	85 (DPL–Left–Upper Rear–20–1/2" Long)	.....	1	364	0323
71	85 (DPL–Right–Upper Rear–20–1/2" Long)	.....	1	364	0322
70	85–88 (DPL And SST–Above Carpet–25–7/8" Long)	.....	2	362	8122
71	85–88 (SST–Above Carpet–25–7/8" Long)	.....	2	362	8122

23. 198–10b OVERLAY, Rear Door Trim Panel Nameplate

70	85–88 (SST)...(Incl. Woodgrain)	23. 200	2	362	8308
71	85–88 (Brougham And Custom–Woodgrain–Retains Nameplate)	23. 200	2	363	8383

23. 198–10c NAMEPLATE, Rear Door Trim Panel

70	(SST) 85–88	.....	2	361	8229
70	(Custom) 85	23. 200	2	362	8414
71	(Custom) 85	.....	2	364	3394
71	(Brougham) 85–88	.....	2	364	3437

23. 198–10d ATTACHING PARTS, Nameplate To Rear Door Trim Panel

NUT, Speed	70/71	80 (SST–Brougham And Custom)	23. 200	AR	400	3076

23. 198–10e OVERLAY, Rear Door Trim Panel (Center Of Panel)(Woodgrain Finish)

70	85–88 (DPL And SST–12" x 2–1/2")	.....	2	363	7845

23. 198–10f OVERLAY, Rear Quarter Trim Panel (Woodgrain Finish)

70	89 (SST–12" x 2–1/2")	.....	2	363	7845

23. 198–11 ATTACHING PARTS, Metal Moulding To Trim Panel

CLIP, Wire	68	17–19 (LER)	.....	4	400	3502
CLIP, Wire	68	17–19 (WER)	.....	6	400	3502

23. 198–12 CAP, Front Door Trim Panel Moulding Connecting

67	89 (Custom)	.....	2	357	9725

23. 200–1 NAMEPLATE, Front Door Trim Panel

69	(440) 05–08	.....	2	361	8090
69	(Rogue) 09	.....	2	361	8091
68	(Seven Seventy) 15–18–19	.....	2	360	7390
68/70	(SST) 10	.....	2	360	7391
67	(Custom) 19–89	.....	2	355	6007
69/70	(SST) 10–80	.....	2	361	8229
69	(Custom) 85	.....	2	355	6007
70	(Custom) 85	.....	2	362	8414
71	(Matador) 15–18–19	.....	2	364	3397
71/	(AMX) 79	.....	2	363	9492
71	(Brougham) 85–88–89	.....	2	364	3437
71	(Custom) 85–89	.....	2	364	3394
72	(Pierre Cardin) 79	.....	2	364	8152

DOORS - HARDWARE

23.200–1a OVERLAY, Front Door Trim Panel Name Plate

70	19–85–88–89 (SST–4–5/16" x 2–1/4")...(Incl. Woodgrain)	.....	2	362 8308
71	85–88 (Brougham And Custom–Woodgrain–Retains Nameplate)	.....	4	363 8383
71	89 (Brougham And Custom–Woodgrain–Retains Nameplate)	.....	2	363 8383
71	79 (SST–Left–24" x 2–3/4" Long–Walnut Finish–Retains SST Letters)	.....	1	364 2249
72	79 (SST–Left–24" x 2–3/4" Long–Walnut Finish–Retains SST Letters)	.....	1	365 6329
72	79 (SST–Cardin–Left–Retains Pierre Nameplate)	.....	1	364 8149
71	79 (Left–Upper–Black–Except SST And AMX)	.....	1	364 8548
71	79 (Left–Upper–Blue–Except SST And AMX)	.....	1	364 8549
71	79 (Left–Upper–Green–Except SST And AMX)	.....	1	364 8550
71	79 (Left–Upper–Red–Except SST And AMX)	.....	1	364 8551
71	79 (AMX–Left–Upper–23–5/8" x 2" Long–Engine–Turn Finish–Retains AMX Letters)	.....	1	364 2362
71	79 (SST–Right–24" x 2–3/4" Long–Walnut Finish–Retains SST Letters)	.....	1	364 2248
72	79 (SST–Right–24" x 2–3/4" Long–Walnut Finish–Retains SST Letters)	.....	1	365 6328
72	79 (SST–Cardin–Right–Retains Pierre Nameplate)	.....	1	364 8148
71	79 (Right–Upper–Black–Except SST And AMX)	.....	1	364 8544
71	79 (Right–Upper–Blue–Except SST And AMX)	.....	1	364 8545
71	79 (Right–Upper–Green–Except SST And AMX)	.....	1	364 8546
71	79 (Right–Upper–Red–Except SST And AMX)	.....	1	364 8547
71/	79 (AMX–Right–Upper–Engine–Turn Finish)	.....	1	364 2361

23.200–1b OVERLAY, Front Door Trim Panel

70	85–88–89 (SST–12" x 2–1/2"–Woodgrain)	23.198	2	363 7845
71	79 (Upper Front–Left–4 x 5–Gray Finish–Except SST And AMX)	.....	1	364 9277
71/	79 (SST–Upper Front–Left–4 x 5–Walnut Finish)	.....	1	364 9276
71/	79 (AMX–Upper Front–Left–4 x 5–Engine–Turn Finish) (Outer Edge Has Red Line)	.....	1	364 9275

23.200–2 ATTACHING PARTS, Nameplate To Front Door Trim Panel

NUT, Speed	69/70	80	.....	4	400 3076
NUT, Speed	71	10–80	.....	8	400 3076

23.200–3 MEDALLION, Door Trim Panel (Front And Rear)

69/70	80 (DPL)	.....	2	361 8228
69	85 (Except DPL And SST)	12.128	2	361 4124
70	85 (Except DPL And SST)	.....	2	359 0712
71	79 (Except SST And AMX)	.....	2	361 6908

23.200–4 ATTACHING PARTS, Medallion To Trim Panel

NUT, Self–Threading ...	69/70	85 (Except DPL And SST)	7.230	4	400 0401
NUT, Speed	69/70	80 (DPL)	.....	6	400 3076
FASTENER	71/	79	.....	4	400 1560

23.200–5 PLATE, Front Door Trim Panel Medallion Backing

70	85–88–89 (DPL)	.....	2	362 6520

23.200–6 LETTERS, Door Trim Panel Overlay

71/	79 "S"	.....	4	365 2459
71/	79 "T"	.....	2	365 2460

23.200–7 ATTACHING PARTS, Door Trim Panel Letters To Overlay

FASTENER	71/	79 (SST)	26.095	6	400 1560

23.215–1 MOULDING, Door Armrest (2 on 2 Dr. - 4 on 4 Dr.)

67	01 (220)	.....	AR	358	1520
67	01 (440)(Roque)	.....	AR	358	1523
67	10 (550)	.....	AR	358	1520
67	10 (770)(SST)	.....	AR	358	1535
67	50-80 (990)(DPL)	.....	AR	358	1535
67	80 (880)	.....	AR	358	1531
67	***85-86-88 (Fleet)***	.....	2	358	1520

23.215–2 ATTACHING PARTS, Moulding To Armrest

FASTENER	67	29.056	AR	400	2076

23.215–3 OVERLAY, Door Armrest (2 on 2 Dr. - 4 on 4 Dr.)

70	05-06-46 (Brushed Aluminum Finish)	.....	AR	362	9208
71/	05-06-08-46 (SST-Custom)(Brushed Aluminum Finish)	.....	AR	363	8338
70	15-18-19 (Brushed Aluminum Finish)	.....	AR	362	9376
71	15-18-19-85 (Matador)(DPL)(Brushed Aluminum Finish)	.....	AR	362	9376
72	15-18-19-85-88-89 (Brushed Aluminum Finish)	.....	AR	364	7058
69	30-70-80 (Woodgrain Finish)	.....	AR	361	7336
70	30-70 (Woodgrain Finish)	.....	2	363	7854
70	85-88-89 (DPL And SST)(Woodgrain Finish)	.....	AR	363	7854
71	85-88-89 (SST And Brougham)(Woodgrain Finish)	.....	AR	364	0360

23.215–4 ATTACHING PARTS, Overlay To Door Armrest

SCREW, Tapping	70	01	22.100	AR	400	2657
SCREW, Tapping	71/	01-40 (Overlay To Armrest Base)	.....	AR	400	4663
SCREW, Tapping	71	10-80 (8-18 x 3/4)	17.654	AR	448	9492
SCREW, Tapping	72	10-80 (Overlay To Armrest Base)(3/8" Long)	.....	4	400	1468
SCREW, Tapping	69/70	30-70-80	.....	AR	400	3642
RETAINER, Stud	69/71	10-30-70-80 (To Inner Door Panel)(Plastic)	.....	AR	400	3620

23.217–1 HANDLE, Door Assist

70	30-70 (Black)(* 23-25)	.....	2	363	4475
70	30-70 (Black)(* 23-26)	.....	2	363	7778
70	30-70 (Blue)(* 23-25)	.....	2	363	4476
70	30-70 (Blue)(* 23-26)	.....	2	363	7779
70	30-70 (Red)(* 23-25)	22.100	2	361	6802
70	30-70 (Red)(* 23-26)	.....	2	363	7781
70	30-70 (Brown)(* 23-25)	.....	2	363	4478
70	30-70 (Brown)(* 23-26)	.....	2	363	7782
70	70 (Green)(* 23-25)	.....	2	363	4477
70	70 (Green)(* 23-26)	.....	2	363	7780

23.217–2 ATTACHING PARTS, Assist Handle To Door

SCREW, Tapping	70	30-70 (* 23-25)	17.660	4	G274677	NA
SCREW, Tapping	70	30-70 (8-18 x 1")(* 23-26)	17.649	4	G9418797	NA
NUT	70	30-70	.....	4	400	1614

23.217–2a ESCUTCHEON ASSEMBLY, Door Assist Handle

70	30-70 (* 23-26)	.....	4	362	8222
72	***15 (Taxi)(Used With Link Type Handle)***	.....	4	362	8222

23.217–2b CAP, Escutcheon Door Assist Handle (Chrome)

70	30-70 (* 23-26)	.....	4	362	8224
72	***15 (Taxi)(Used With Link Type Handle)***	.....	4	362	8224

23.217–3 HANDLE, Rear Door Assist

67/70	*15-85 (Taxi)(Chrome)(Painted Mounting Brackets)*	17.014	2	343 0557
67/71	*15-85 (Taxi)(Plastic-Charcoal Grey)(Chrome Mounting Brackets)(Rigid Type)*	27.014	2	361 6800
72	*15 (Taxi)(Black)(Link Type)*	.....	2	363 7778

23.217–4 ATTACHING PARTS, Handle To Inner Panel

SCREW, Tapping	*67/70*	*15-85 (Taxi)(5/8" Long)*	17.654	4	G162500 NA
SCREW, Tapping	*67/*	*15-85 (Taxi)(1-1/2" Long)*	17.666	4	G161739 NA

23.217–5 PAD, Rear Door Assist Handle

67/70	*15-85 (Taxi)(Used With Chrome Type Handle)*	27.014	4	348 8303

23.225–1 PANEL, Tailgate Inner Trim (Metal)

67	18-88 ***(Use 361 2380)***	.....	1	358 0206
68	18-88	.....	1	361 2380
69	18-88 (* 23-23)	.....	1	362 0146
69	18-88 (* 23-24)	.....	1	362 1526
70/71	18-88...(Incl. Weather Strip)	.....	1	652 6197
72	18-88...(Incl. Weatherstrip)	.....	1	652 9368

23.225–2 ATTACHING PARTS, Panel To Tailgate

SCREW, Tapping	67/68	18-88	.....	7	400 2158
SCREW, Tapping	69/	18-88	.....	7	400 3067
NUT, Hexagon	67	08	.....	4	345 8271

23.230–1 STRIP, Tailgate Carpet Skid

67/68	88 (LVT)	23.205	6	351 9696
69	88	23.205	6	351 9696

23.230–2 MOULDING, Tailgate Carpet

67/	88	23.205	1	357 8860

23.230–3 ATTACHING PARTS, Moulding To Tailgate

SCREW, Tapping	67/	88	17.669	5	G457002 NA

23.300–1 REGULATOR, Front Door Electric Operated Window

67/	(Left) 10-50-80	.....	1	448 4259
67/	(Right) 10-50-80	.....	1	448 4258

23.300–2 ATTACHING PARTS, Regulator To Front Door Panel

SCREW, Machine	67/	10-50-80 (21/64" Long)	23.098	8	400 2028
SCREW, Machine	67/	10-50-80 (To Door Inner Panel)	.....	4	400 2028

23.305–1 REGULATOR, Rear Door Electric Operated Window

67/	(Left) 15-18-85-88	.....	1	448 4261
67/	(Right) 15-18-85-88	.....	1	448 4260

23.305–2 ATTACHING PARTS, Regulator To Rear Door Panel

SCREW, Machine	67/	15-18-85-88	23.098	12	400 2028

23.306–1 REGULATOR, Tailgate Electric Operated Window

67	08	.....	1	448 2903
67/	18–88	.....	1	448 4269

23.306–2 ATTACHING PARTS, Regulator To Tailgate Support

SCREW, Machine	67	08 (5/8" Long)	23.040	3	400 0413
SCREW, Machine	67	08 (7/16" Long)	23.039	1	400 0501
SCREW, Machine	67	18–88	23.098	4	400 0137
SCREW, Machine	68	18–88	25.054	4	400 1951
SCREW, Machine	69/	18–88	23.110	4	400 2203
NUT, Cage	68/	18–88	25.054	2	400 1946
NUT, Hexagon	70/	18–88 (Washer Base)	23.009	2	400 0566

23.306–3 SPRING, Tailgate Electric Operated Window Regulator Balance

67	08	.....	2	448 0802

23.308–1 DRIVE UNIT, Door Electric Operated Window Regulator (Less Motor)

67/	(Left) 10–50–80	.....	AR	448 4915
67/	(Right) 10–50–80	.....	AR	448 4914

23.308–3 HOUSING, Tailgate Electric Operated Window Regulator Transmission

67	08	.....	1	448 0795

23.308–4 ATTACHING PARTS, Housing To Regulator

BOLT, Hexagon	67	08	17.038	3	G180023 NA
WASHER, Lock	67	08	17.820	3	G121637 NA

23.308–5 PINION, Tailgate Electric Operated Window Regulator

67	08	.....	1	448 2261

23.308–6 SUPPORT ASSEMBLY, Tailgate Electric Operated Window Regulator Pinion Shaft

67	08...(Incl. Bearing) ***(Use 448 4843)***	.....	1	448 1432

23.308–7 ATTACHING PARTS, Support To Regulator

BOLT, Hexagon	67	08	17.038	2	G180023 NA
WASHER, Lock	67	08	17.820	2	G121637 NA

23.308–8 BEARING, Tailgate Electric Operated Window Regulator Pinion Shaft End

67	08	.....	1	344 1522

23.308–9 RETAINER, Tailgate Electric Operated Window Regulator Pinion Grease

67	08	.....	1	447 9506

23.308–10 GEAR, Tailgate Electric Operated Window Regulator Pinion

67	08	.....	1	447 9508
67/68	18–88 (* 23–16) ***(Use 448 5643)***	.....	1	320 8704
68	18–88 (* 23–17)	.....	1	448 5674
69/	18–88	.....	1	448 5674

23.308–11 WORM, Tailgate Electric Operated Window Regulator

67	08...(Less Coupling)	.....	1	448 0420

23.308–12 COUPLING, Door Electric Operated Window Regulator Drive Unit

67/	10-50-80	.....	4	448 4876

23.308–13 COUPLING, Tailgate Electric Operated Window Regulator Worm

67	08	.....	1	448 0421

23.308–14 RETAINER, Tailgate Electric Operated Window Regulator Worm Grease

67	08	.....	1	344 1542

23.308–15 SPACER, Tailgate Electric Operated Window Regulator Worm End

67	08	.....	1	344 1543

23.308–16 SCREW, Tailgate Electric Operated Window Regulator Worm Set

67	08	.....	1	344 1544

23.308–17 NUT, Tailgate Electric Operated Window Regulator Worm Set Screw

67	08	.....	1	344 1545

23.310–1 MOTOR, Door Electric Operated Window Regulator (Less Drive Unit)

67/71	10-50-80	.....	AR	448 4875
72	10-80	.....	AR	366 1224

23.310–3 MOTOR, Tailgate Electric Operated Window Regulator

67	08	.....	1	448 0797
67/	18-88...(Incl. Drive Unit)	.....	1	448 4904

23.310–4 ATTACHING PARTS, Motor To Transmission Housing

SCREW, Machine	67	08	17.602	2	G132142 NA
WASHER, Lock	67	08	17.820	4	G131183 NA

23.310–5 PAD, Door Electric Operated Window Regulator Motor Anti-Rattle

67/68	10-50-80	.....	AR	351 0140
69/70	80 (SST)(DPL)	.....	AR	351 0140
71/	80 (SST)(Brougham)	.....	AR	351 0140

23.310–6 PAD, Tailgate Electric Operated Window Regulator Motor Anti-Rattle

67/	08-18-88	.....	1	351 0518

23.320–1 HARNESS, Door Electric Operated Window Regulator Wiring

67	15-18-85-88 (LHD)	.....	1	318 6847
67	16-19-59-86-89 (LHD)	.....	1	318 6848
67	17-87 (LHD)	.....	1	318 6849
68/71	17-19-89 (LHD-Main)	.....	1	319 1987
68/71	85-88 (LHD-Main)	.....	1	319 1988
72	85-88 (Main)	.....	1	321 6582
72	89 (Main)	.....	1	321 6581
68/	17-19-85-88-89 (LHD-Left Front Door-Master Switch)	.....	1	319 1989
68/	17-19-85-88-89 (LHD-Right Front Door-Single Switch)	.....	1	319 1990
68/	85-88 (LHD-Rear Door-Single Switch)	.....	2	319 1991

DOORS – HARDWARE

23.320–2 ATTACHING PARTS, Harness To Cowl Vent Chamber

CLIP, Wire	67/	10-50-80	3.165	4	400 1801
SCREW, Tapping	67/	10-50-80	17.671	4	400 1042

23.320–3 ATTACHING PARTS, Harness To Front And Rear Door

SCREW, Tapping	67/	10-80	17.660	4	G161895
CLIP, Wire	67/68	10-80	4.141	4	400 0786
CLIP, Wire	70/	80 (4 On Rear-2 On Front)	4.141	6	400 0786
CLIP, Tube	69/	10-80 (Rear Door)	15.320	2	400 1598

23.320–4 ATTACHING PARTS, Harness To Rear Quarter Regulator Panel

CLIP, Wire	67/	16-17-19-59-86-87-89	3.165	2	400 1801
SCREW, Tapping	67/68	16-17-19-59-86-87-89	17.671	2	400 1042

23.320–5 HARNESS, Tailgate Electric Operated Window Regulator Wiring

67	08 (Instrument Panel To Tailgate)	3.163	1	318 6817
67	08 (In Tailgate)	.....	1	317 2489
67/68	18-88 (LVT)	.....	1	318 6851
67/68	18-88 (WVT)	.....	1	318 6852
69/	18-88	.....	1	319 4618

23.320–5a SPRING KIT, Tailgate Wiring Harness Retractor

69/70	18-88 ..(Incl. Spring And Strap)	.....	1	448 6965

23.320–5b SPRING, Tailgate Wiring Harness Retractor

69/	18-88	.....	1	318 7996

23.320–5c STRAP, Tailgate Wiring Harness Retractor Spring

69/70	18-88	3.196	1	318 1008

23.320–5d ATTACHING PARTS, Tailgate Wiring Harness Retractor Spring

SCREW & WASHER	69/	18-88	.....	1	400 1776

23.320–5e HARNESS, Tailgate Window Switch Extension Wire

70	*18-88 (RHD)*		.....	1	319 4639

23.320–6 ATTACHING PARTS, Harness To Tailgate Hinge

SCREW, Tapping	67/	18-88	17.660	1	G161895
CLIP, Wire	67/68	18-88	3.210	1	400 0788
CLIP, Wire	69/	18-88 (1/2" Dia.)	.....	1	400 0553
CLIP, Speed	69/	18-88 ("S" Shape)	.....	1	400 3083

23.320–7 ATTACHING PARTS, Harness To Tailgate Inner Panel

CLIP, Wire	67	08	4.141	2	400 0306
CLIP, Wire	67/	18-88	4.141	1	400 0786
CLIP (Plastic)	67/	18-88	3.166	5	400 0713
SCREW, Tapping	67/	18-88	17.660	1	G161895
WASHER, Plain	67/	18-88	17.814	1	400 1081

23.320–8 WIRE, Door Electric Operated Window Regulator Jumper

67/	17-18-87-88	.....	1	318 6839	

23.320–9 WIRE, Tailgate Electric Operated Window Regulator Circuit Breaker To Switch

67	08	28.057	1	318 6840	

23.320–10 GROMMET, Door Electric Operated Window Regulator Wiring Harness (On Front And Center Pillar)

67/	10-50-80	.....	4	400 0094	

23.320–11 FERRULE, Front Door Wiring Harness

67/	10-50-80	.....	2	358 6721	

23.320–12 ATTACHING PARTS, Ferrule To Door

SCREW, Tapping	67/	10-50-80	17.660	6	G161860	

23.320–13 FERRULE, Rear Door Wiring Harness

67/	15-18-85-88	.....	2	358 6720	

23.320–14 ATTACHING PARTS, Ferrule To Door

SCREW, Tapping.....	67/	15-18-85-88	17.660	6	448 9487	

23.325–1 BREAKER, Electric Operated Window Regulator Circuit

67	08 (25 Amp.)	.....	2	318 1126	
67/	15-16-17-19-59-85-86-87-89 (20 Amp.)	.....	1	318 6892	
67/	18-88 (20 Amp.)	.....	2	318 6892	

23.325–2 ATTACHING PARTS, Circuit Breaker To Instrument Panel

SCREW, Tapping	67	08	17.648	2	G161895	
SCREW, Machine	67/	10-50-80	17.598	2	G453048	
WASHER, Lock	67/	10-50-80	17.820	2	G131096	NA
NUT, Hexagon	67/	10-50-80	17.412	2	G120614	NA

23.330–1 SWITCH, Front Door Electric Operated Window Regulator Control

67	(Left) 10-50-80	.....	4	359 0897	
68/	(Left) 80	.....	2	360 2420	
67	(Right) 10-50-80	.....	1	357 7148	
68/	(Right) 80	.....	1	360 9564	

23.330–2 SWITCH, Rear Door Electric Operated Window Regulator Control

67	15-18-85-88	.....	2	357 7148	
68/	80	.....	2	360 9564	

23.330–3 SWITCH, Front Door Electric Operated Window Regulator Control Safety

67	10-50-80	.....	1	357 7149	
68/	80	.....	1	360 9565	

23.330–4 CLIP, Door Electric Operated Window Regulator Control Switch Retaining

67	(Switch To Housing-Master) 10-50-80	.....	4	400 2094	
67/68	(Switch And Housing To Plate) 10-50-80	.....	12	400 2095	

DOORS - HARDWARE

23.330–5 SWITCH, Tailgate Electric Operated Window Regulator Control

67	08 (On Instrument Panel) ***(Use 346 6086)***	.....	1	359 8651
67	08 (In Tailgate)	.....	1	448 0808
67/	18–88 (In Tailgate)	.....	1	357 5229
67/68	18–88 (On Instrument Panel)(Black–Less Lettering)	.....	1	357 6571
69/	18–88 (LHD)(On Instrument Panel)(Chrome–With Lettering)	.....	1	361 4484
69/70	***18–88 (RHD)(On Instrument Panel)***	.....	1	357 6571

23.330–6 ATTACHING PARTS, Switch To Instrument Panel Escutcheon

SPRING	67	08	24.220	2	437 7109
NUT, Push	67	18–88	22.100	2	400 1331
NUT, Push	***68/70***	***18–88 (RHD)***	22.100	2	400 1498

23.330–7 ATTACHING PARTS, Switch To Bracket

NUT, Hexagon	67	08	.....	1	448 0809
SCREW, Tapping	67/69	18–88 (8–18 × 1/2)	13.510	2	400 2457
SCREW, Hexagon	70/71	18–88 (19–12 × 1/2) ***(Use 812 0054)***	17.671	1	G274773
SCREW, Tapping	72	18–88	17.671	2	812 0054

23.330–8 ATTACHING PARTS, Switch To Tailgate

RETAINER	67/	18–88	.....	1	357 5241

23.330–8a BRACKET, Tailgate Electric Operated Window Regulator Control

72	18–88	3.700	1	364 5814

23.330–8b ATTACHING PARTS, Bracket To Instrument Panel

SCREW, Tapping	72	18–88	17.660	2	448 9487

23.330–8c SEAL, Tailgate Electric Operated Window Regulator Control Switch

72	18–88	.....	1	364 5815

23.330–9 HOUSING, Electric Operated Window Regulator Control

67	(Master) 10–50–80	.....	1	352 0812
68/	(Master) 10–80	.....	1	360 2415
67	(Individual) 10–50–80	.....	3	352 0816
68/	(Individual) 10–80	.....	3	360 2413

23.330–10 ATTACHING PARTS, Housing To Door Panel

SCREW, Tapping	68/	10–80	17.654	6	G443512 NA

23.330–11 PLATE, Electric Operated Window Regulator Control Switch Mounting

67	(Master) 10–50–80	.....	1	352 0813
67	(Individual) 10–50–80	.....	3	352 0817
68/	(Right–Front Door) 10–80	.....	1	360 1500

23.330–12 ATTACHING PARTS, Right Front Door Plate To Panel

SCREW, Tapping	68/	10–80	.....	2	400 2268

23.330–13 BAR, Electric Operated Window Regulator Control Master Switch Bus

67	10–50–80	.....	1	448 2398

23.330–14 ATTACHING PARTS, Bus Bar To Master Switch

SCREW, Machine	67	10–50–80	24.220	4	437 7578

23.330–15 WATERDAM, Electric Operated Window Regulator Control Switch

67/	10-50-80	.....	.....	4	438 2105	

23.330–16 BEZEL, Electric Operated Window Regulator Control Switch Housing

68	(Master) 10-80	.....	.....	1	360 2419	
69/	(Master) 10-80	.....	.....	1	360 9108	
68	(Individual) 10-80	.....	.....	3	360 2418	
69/	(Individual) 10-80	.....	.....	3	360 9109	

23.330–17 ATTACHING PARTS, Bezel To Door

SCREW, Tapping	68/	10-80	17.655	6	G168971	NA

23.330–18 ESCUTCHEON, Tailgate Electric Operated Window Switch

67	08 (On Instrument Panel)	.....	.....	1	349 0432	
67	08 (On Tailgate)	.....	.....	1	350 9336	
67/	18-88 (On Tailgate)	.....	.....	1	357 5228	
67/68	18-88 (On Instrument Panel)	.....	.....	1	357 7068	
69	***18-88 (RHD-On Instrument Panel)***	.....	.....	1	357 7068	

23.330–19 ATTACHING PARTS, Escutcheon To Instrument Panel

NUT, Push	67/68	18-88	22.100	2	400 1498	

23.330–20 ATTACHING PARTS, Escutcheon To Tailgate

NUT, Hexagon	67/68	08-18-88	25.052	2	439 0742	
NUT, Lock	69/	18-88	23.074	2	400 3018	

23.330–21 PAD, Tailgate Electric Operated Window Switch Escutcheon

67/	18-88	.....	.....	1	359 0975	

23.330–22 BRACKET, Tailgate Electric Operated Window Control Switch Mounting

67	08 (In Tailgate)	.....	.....	1	349 0430	
67	18-88 (On Instrument Panel)	.....	.....	1	358 6796	
68	18-88 (LHD-On Instrument Panel)	.....	.....	1	360 2193	
68/70	***18-88 (RHD-On Instrument Panel)***	.....	.....	1	358 6796	

23.330–23 ATTACHING PARTS, Bracket To Tailgate Support

SCREW, Machine	67	08	17.610	2	G451271	NA

23.330–24 ATTACHING PARTS, Bracket To Instrument Panel

SCREW, Tapping	67	18-88	17.660	2	G161860	NA
SCREW, Tapping	68	18-88 (LHD)	17.671	1	400 1037	
SCREW, Tapping	69	18-88 (LHD)	13.510	2	400 2457	
SCREW, Tapping 68/70		***18-88 (RHD)***	17.660	2	G161860	NA
NUT, Spring 68/70		***18-88 (RHD)***	17.422	2	G445109	NA

23.330–25 LINK, Tailgate Electric Operated Window Control Switch To Lock

67	08	.....	.....	1	350 9528	

23.330–26 ATTACHING PARTS, Link To Switch

CLIP	67	08	.....	1	400 0672	

DOORS - HARDWARE

23.330–27 ATTACHING PARTS, Link To Lock Cylinder

NUT, Speed	67	08	23.070	1	400 0494

23.330–28 LEVER, Tailgate Electric Operated Window Control Switch

67	08		.....	1	448 0810

23.330–29 ATTACHING PARTS, Lever To Switch

PIN, Spring	67	08	17.472	1	G274306 NA

23.335–1 SWITCH, Tailgate Electric Operated Window Regulator Control Safety

67/	08-18-88 (In Rear Auxiliary Floor Panel)		.....	1	349 0422

23.335–2 ATTACHING PARTS, Switch To Floor Panel

WASHER, Lock	67/	08-18-88	17.824	1	G131718 NA
NUT, Hexagon	67/	08-18-88	3.145	1	400 1797

23.390 PANEL, Liftgate

71/	08 (* 23-41)	.....	1	448 9344
72	08 (* 23-42)	.....	1	812 2114

23.400–1 HINGE, Liftgate

70/	(Left) 40 (Body Half)(Door Half Is Part Of Rear Window Glass Assembly)	.....	1	363 6439
71/	(Left) 08 (Body And Door Half)	.....	1	363 3543
70/	(Right) 40 (Body Half)(Door Half Is Part Of Rear Window Glass Assembly)	.....	1	363 6438
71/	(Right) 08 (Body And Door Half)	.....	1	363 3542

23.400–2 ATTACHING PARTS, Hinge To Body

NUT, Hexagon	70/	40	12.035	2	400 1845
STUD	71/	08	.....	4	400 1617

23.401 PIN, Liftgate Hinge

70/	40	.....	2	363 6102

23.402–1 GASKET, Liftgate Hinge

70/	40	.....	2	363 6148
71/	08 (Body Half)	.....	2	363 3548
71/	08 (Door Half)	.....	2	363 3550

23.402–2 SPACER, Liftgate Hinge

71/	08 (Body Half-To Roof Panel)	.....	4	363 3553

23.402–2a ATTACHING PARTS, Liftgate Hinge

NUT, Hexagon	71/	08 (Hinge To Body)	.....	4	G271184 NA
SCREW, Tapping	71/	08 (Hinge To Door)	29.158	2	400 1933
WASHER (Zinc)	71/	08 (Hinge To Door)	.....	2	400 3933
WASHER (Black)	71/	08 (Hinge To Door)	.....	2	400 4387

23.403 REINFORCEMENT, Liftgate Hinge (Body Half)

70/	(Left) 40	.....	1	363 6127
70/	(Right) 40	.....	1	363 6126

DOORS - HARDWARE

23.405–1 SUPPORT, Liftgate

70	40 (* 23-27)	.....	2	363	6760
70	40 (* 23-28)	.....	1	364	6547
71/	08	.....	2	363	3950
71/	40	.....	1	364	6547

23.405–2 ATTACHING PARTS, Support To Glass Bracket

SCREW, Shoulder	70	40 (* 23-27)	.....	2	363	6737
SCREW, Shoulder	70	40 (* 23-28)	.....	1	363	6737
SCREW, Shoulder	71/	40	.....	1	363	6737

23.405–3 ATTACHING PARTS, Support To Body Bracket

SCREW, Shoulder	70	40 (* 23-27)	.....	2	363	6737
SCREW, Shoulder	70	40 (* 23-28)	.....	1	363	6737
SCREW, Shoulder	71/	40	.....	1	363	6737
SCREW, Machine	71/	08	17.630	2	812	0128

23.405–4 ATTACHING PARTS, Liftgate Support To Body (Upper)

SCREW	71/	08	.....	2	400	3556
WASHER	71/	08	29.225	4	400	1388
WASHER	71/	08 (Black)	.....	2	400	4387

23.405–5 INSERT, Liftgate Support Housing Cap

71/	08 (Rubber)	.....	4	363	3959
71/	08 (Steel-Bushing)	.....	4	363	3958
70/	40 (Rubber)	.....	AR	363	6770

23.406–1 BRACKET, Liftgate Support To Body

71/	08	.....	2	363	3567
70	40 (* 23-28)	.....	1	363	6735
71/	40	.....	1	363	6735
70	(Left) 40 (* 23-27)	.....	1	363	6735
70	(Right) 40 (* 23-27)	.....	1	363	6734

23.406–2 ATTACHING PARTS, Bracket To Body Reinforcement

SCREW, Machine.....	70	40 (* 23-27)	23.110	4	400	2203
SCREW, Machine.....	70	40 (* 23-28)	23.110	2	400	2203
SCREW, Machine.....	71/	40	23.110	2	400	2203
SCREW, Machine	71/	08 (Bracket To Body)	.....	6	400	0244

23.406–3 REINFORCEMENT, Liftgate Support Bracket

71/	08	.....	2	363	3759
70	40 (* 23-27)	.....	2	363	6745
70	40 (* 23-28)	.....	1	363	6745
71/	40	.....	1	363	6745

23.407–1 BRACKET, Liftgate Support To Glass

70	40 (* 23-28)	.....	1	363	6733
71/	40	.....	1	363	6733
70	(Left) 40 (* 23-27)	.....	1	363	6733
70	(Right) 40 (* 23-27)	.....	1	363	6732

23.407–2 GASKET, Liftgate Support Bracket To Glass

70	(Left) 40 (* 23-27)	.....	1	363 6119
70	(Right) 40 (* 23-27)	.....	1	363 6118
70	40 (* 23-28)	.....	1	363 6119
71/	40	.....	1	363 6119

23.407–3 BUSHING, Liftgate Support Bracket To Glass

70	40 (* 23-27)	.....	2	363 6073
70	40 (* 23-28)	.....	1	363 6073
71/	40	.....	1	363 6073

23.407–4 STUD, Liftgate Support Bracket To Glass

70	40 (* 23-27)	.....	2	363 6072
70	40 (* 23-28)	.....	1	363 6072
71/	40	.....	1	363 6072

23.409–1 PANEL, Liftgate Latch And Bellcrank Mounting

70	40 ***(Ref. Pr. List)***	.....	1	363 6085
71	40 (* 23-31) ***(Ref. Pr. List)***	.....	1	363 6085
71/	40 (* 23-32)	.....	1	812 0209

23.409–2 ATTACHING PARTS, Panel To Reinforcement

SCREW, Machine	70	40	.....	9	400 0978	NA
SCREW, Tapping	71/	40 (10-16 × 1/2")	17.671	4	812 0054	
SCREW, Machine	71/	40 (10-24 × 5/8")	17.626	5	G546575	NA

23.410–1 LATCH, Liftgate

70/	40	.....	2	363 6120
71/	08	.....	1	361 6091

23.410–2 ATTACHING PARTS, Latch To Panel

SCREW, Machine	70/	40	17.598	4	G188749	NA
SCREW, Tapping	71/	08	.....	3	G423336	NA

23.410–3 SHIM, Liftgate Latch

70/	40	23.416	AR	363 6129	

23.411–1 BELLCRANK, Liftgate Latch

70/	(Left) 40	.....	1	363 1583
70/	(Right) 40	.....	1	363 1582

23.411–2 ATTACHING PARTS, Bellcrank To Panel

SCREW, Machine	70/	40	17.626	2	G440405	NA

23.412 LINK, Liftgate Bellcrank To Locking Lever

70/	40	.....	2	363 6124

23.413–1 HANDLE, Liftgate Latch Release

70/	40	.....	1	363 6132

DOORS - HARDWARE

23.413–2 ATTACHING PARTS, Handle To Panel

SCREW, Machine 70/ 40	.....	2	G166349	NA

23.413–3 PAD, Liftgate Latch Release Handle

70/ 40	.....	1	363 1569	

23.413–4 REINFORCEMENT, Liftgate Handle

70/ 40	.....	1	363 6047	

23.413–5 SPRING, Liftgate Latch Handle Release Lever Return

70/ 40	.....	1	363 1575	

23.413–6 WASHER, Liftgate Handle Wave

70/ 40	.....	1	400 4616	

23.414 HANDLE, Liftgate (On Glass Frame)

70/ 40	.....	1	363 6075	

23.415–1 CYLINDER ASSEMBLY, Liftgate Lock

70/ 40 (Uncoded Cylinder Less Keys–Must Be Coded Locally)	.....	1	448 7666	
71/ 08 (Uncoded Cylinder Less Keys–Must Be Coded Locally)	23.081	1	448 7661	

23.415–1a RETAINER, Liftgate Lock Cylinder And Housing

71/ 08	.....	1	361 6154	

23.415–1b ATTACHING PARTS, Lock Cylinder Retainer To Body

SCREW, Tapping 71/ 08	17.660	1	G9414711	NA

23.415–2 KEY, Liftgate Lock

70/ 40 (Blank)	23.085	1	363 6394	
71/ 08 (Blank)	23.085	1	364 1914	
70/ 40 (Coded–Specify Key No.)	23.085	1	448 7667	
71/ 08 (Coded–Specify Key No.)	23.085	1	448 7667	

23.415–3 LEVER, Liftgate Lock Cylinder

71/ 08	23.081	1	359 9811	

23.415–4 ATTACHING PARTS, Lever To Liftgate Lock Cylinder

RING, Retaining 71/ 08	23.081	1	400 2250	

23.416–1 STRIKER, Liftgate Latch

70/ 40	.....	2	363 6128	
71/ 08	.....	1	361 6108	

23.416–1a ATTACHING PARTS, Striker To Lower Panel Brace

SCREW, Machine	71/	08	12.060	2	400 3556
WASHER, Bite	71/	08	12.178	2	400 1854

23.416–1b SLEEVE, Liftgate Latch Striker (Rubber)

71/	08	.....	1	366 2609

23.416–2 BUSHING, Liftgate Latch Striker Mounting

70/	40	23.407	2	363 6073

23.416–3 GASKET, Liftgate Latch Striker To Glass

70/	40	.....	2	363 6074

23.416–4 SHIM, Liftgate Latch Striker

70/	40	.....	2	363 6129

23.416–5 STUD, Liftgate Latch Striker Mounting

70/	40	23.407	2	363 6072

23.416–6 "O" RING, Liftgate Latch Striker Bracket Sealer

72	40	.....	6	400 4405

23.417–1 PIN, Liftgate Anti-Rattle Dowel

72	08	.....	1	365 7866

23.417–2 GUIDE, Liftgate Anti-Rattle Dowel Pin

72	08	.....	1	365 7862

23.417–3 GASKET, Liftgate Anti-Rattle Dowel Pin Guide

72	08	.....	1	365 7863

23.417–4 ATTACHING PARTS, Liftgate Anti-Rattle Pin And Guide

SCREW	72	08	17.586	4	G155941	NA

23.417–5 GUIDE KIT, Liftgate Anti-Rattle

72	08	.....	1	812 1425

SPECIAL INFORMATION

The Engine Build Code Number, Vehicle Identification Number and the information provided on the Unit Body Plate are often necessary when determining the proper replacement parts for your automobile. For their location refer to the General Information Section found at the front of this catalog.

NOTES

24–1 .... Moulding is made of Metal.

24–2 .... Moulding is made of Plastic.

24–3 .... Regulator has a Guide Bracket Riveted to the Roller Arm.

24–4 .... Regulator Roller Arm is less the Guide Bracket.

24–5 .... Channel does not have Slot for Reveal Moulding.

24–6 .... Channel has a Slot for Reveal Moulding.

24–7 .... Rear Quarter Glass has no Frame around it.

24–8 .... Rear Quarter Glass has a Frame around it.

24–9 .... This Receiver has a slanted bottom.

24–10 ... This Receiver has a rounded bottom.

24–11 ... Used with Receiver that has a slanted bottom.

24–12 ... Used with Receiver that has a curved bottom.

Printed in U.S.A.

ILLUSTRATION SUPPLEMENT - SPECIAL INFORMATION

REAR QUARTER HARDWARE .... Refer To Group 23 Illustrations

ILLUSTRATION SUPPLEMENT - SPECIAL INFORMATION

Printed in U.S.A.

REAR QUARTER HARDWARE

GROUP NO. — DESCRIPTION — YEAR and MODEL	"L" CODE	PAKS CODE	PRIMARY GROUP NO.	PER CAR	PART NO.	CODE
24.001–1 REGULATOR, Rear Quarter Window (Refer To Gr. 24.200–1 For Electric Type)						
67 (Left) 06			.....	1	352 0699	
67 (Left) 07			.....	1	351 6409	
67/69 (Left) 09			.....	1	358 2863	
67/69 (Left) 16-19-86-89 (LER)			.....	1	357 5991	
70/ (Left) 19-89 (LER)			.....	1	361 5293	
67/68 (Left) 17-87 (LER)			.....	1	357 5995	
68/69 (Left) 79 (* 24-3)			.....	1	360 1205	
69 (Left) 79 (* 24-4)			.....	1	448 6915	
70/ (Left) 79			.....	1	448 6915	
67 (Right) 06			.....	1	352 0698	
67 (Right) 07			.....	1	351 6408	
67/69 (Right) 09			.....	1	358 2862	
67/69 (Right) 16-19-86-89 (LER)			.....	1	357 5990	
70/ (Right) 19-89 (LER)			.....	1	361 5292	
67/68 (Right) 17-87 (LER)			.....	1	357 5994	
68/69 (Right) 79 (* 24-3)			.....	1	360 1204	
69 (Right) 79 (* 24-4)			.....	1	448 6914	
70/ (Right) 79			.....	1	448 6914	
24.001–2 ATTACHING PARTS, Regulator To Panel						
SCREW, Machine 67/69		06-09	23.056	12	400 0075	
SCREW, Machine 67		07	23.098	8	400 0572	
SCREW, Machine 67/		16-17-59-79-86-87-89	23.098	8	400 2028	
24.001–2a ATTACHING PARTS, Regulator To Rear Slide Channel Bracket						
SCREW, Tapping 68/		79	23.110	4	400 2203	
24.001–3 WASHER, Rear Quarter Window Regulator (Rubber)						
67 06			.....	2	400 0556	
67/70 07-09-16-17-19-59-86-87-89			.....	2	400 0677	
24.001–4 STOP, Rear Quarter Window Regulator						
67/69 (Left) 09			.....	1	358 2693	
67/69 (Right) 09			.....	1	358 2692	
24.001–5 ATTACHING PARTS, Stop To Uniside Outer Panel						
SCREW, Tapping 67/68		09	22.056	4	400 0058	
SCREW, Tapping 69		09	23.110	4	400 2203	
24.001–6 GUIDE, Rear Quarter Window Regulator Idler Arm						
68/ 79			23.098	2	360 1291	
67/69 (Left) 16-19-59-86-89			.....	1	359 0743	
67/68 (Left) 17-87			.....	1	357 6083	
67/69 (Right) 16-19-59-86-89			.....	1	359 0742	
67/68 (Right) 17-87			.....	1	357 6082	
24.001–7 ATTACHING PARTS, Guide To Uniside Inner Panel						
SCREW, Tapping 67/69		16-17-19-59-86-87-89	23.110	4	400 2203	
24.001–8 ATTACHING PARTS, Guide To Regulator Panel						
NUT, Lock 68/		79	.....	6	400 4587	

Printed in U.S.A.

REAR QUARTER HARDWARE

24.002–1 HANDLE, Rear Quarter Window Regulator

67	06-07-09-16	23.100	2	357 6415	
67	17-19-59-86-87-89	23.100	2	357 6414	
68	09-17-19-79-89 ***(Use 360 2986)***	23.100	2	360 1485	
69/	09-19-79-89	23.100	2	360 2986	

24.002–2 ATTACHING PARTS, Handle To Regulator

SCREW, Machine	67/	29.105	2	400 0826	
SCREW, Tapping	72	23.100	2	400 4478	

24.008 WASHER, Rear Quarter Window Regulator Handle (Nylon)

67/68	06-07-09-16-17-19-59-79-86-87-89	23.104	2	357 6417	
69/	09-19-79-89	23.104	2	361 3467	

24.010–1 FRAME, Rear Quarter Window

67	(Left) 06	.....	1	350 0575	
68/69	(Left) 06	.....	1	362 3163	
70/	(Left) 06...(Incl. Hinge)	.....	1	363 3939	
72	(Left) 40...(Incl. Hinge)	.....	1	364 6221	
67	(Right) 06	.....	1	350 0574	
68/69	(Right) 06	.....	1	362 3162	
70/	(Right) 06...(Incl. Hinge)	.....	1	363 3938	
72	(Right) 40...(Incl. Hinge)	.....	1	364 6220	

24.010–2 ATTACHING PARTS, Frame To Body

SCREW, Tapping	67/69	06 (1" Long-Front)	17.655	6	G161909	
SCREW, Tapping	67/69	06 (1-1/2" Long-Rear)	17.660	6	G161933	NA
SCREW, Tapping	70/	06	13.510	6	400 2457	
SCREW, Tapping	72	40	13.510	6	400 2457	

24.010–3 SEALER, Rear Quarter Window Frame (Lowering And Stationary)

67/69	(Left) 06	.....	1	350 0581
67/69	(Right) 06	.....	1	350 0580

24.018–1 CHANNEL, Quarter Window Glass (Rubber)(Pivoting Type Window)

71	(Black)(Left-Upper) 06	.....	1	363 6985
72	(Black)(Left-Upper) 06	.....	1	365 1655
72	(Black)(Left) 40	.....	1	364 6253
71	(Blue)(Left-Upper) 06	.....	1	363 6987
72	(Blue)(Left-Upper) 06	.....	1	365 1657
72	(Blue)(Left) 40	.....	1	364 6255
71	(Green)(Left-Upper) 06	.....	1	363 6989
72	(Green)(Left-Upper) 06	.....	1	365 1659
71	(Red)(Left-Upper) 06	.....	1	363 6991
72	(Tan)(Left-Upper) 06	.....	1	365 1661
72	(Tan)(Left) 40	.....	1	364 6259
71	(Black)(Right-Upper) 06	.....	1	363 6984
72	(Black)(Right-Upper) 06	.....	1	365 1654
72	(Black)(Right) 40	.....	1	364 6252
71	(Blue)(Right-Upper) 06	.....	1	363 6986
72	(Blue)(Right-Upper) 06	.....	1	365 1656
72	(Blue)(Right) 40	.....	1	364 6254
71	(Green)(Right-Upper) 06	.....	1	363 6988
72	(Green)(Right-Upper) 06	.....	1	365 1658
71	(Red)(Right-Upper) 06	.....	1	363 6990
72	(Tan)(Right-Upper) 06	.....	1	365 1660
72	(Tan)(Right) 40	.....	1	364 6258

REAR QUARTER HARDWARE

70	(Left) 06 (SST)(* 24-7)	.....	1	363	1097
70	(Left-Lower) 06 (SST)(* 24-8)	.....	1	363	3933
71/	(Left-Lower) 06	.....	1	363	3933
70	(Left-Upper) 06 (SST)(* 24-8)	.....	1	363	6985
70	(Right) 06 (SST)(* 24-7)	.....	1	363	1096
70	(Right-Lower) 06 (SST)(* 24-8)	.....	1	363	3932
71/	(Right-Lower) 06	.....	1	363	3932
70	(Right-Upper) 06 (SST)(* 24-8)	.....	1	363	6984

24.018–1a SEAL, Rear Quarter Glass Channel (Pivoting Type Window)

70	(Upper) 06 (SST)	.....	2	364	1981
70	(Lower) 06 (SST)	.....	2	364	1980

24.018–2 CHANNEL, Quarter Window Glass (Rubber)(Stationary Type Window)

70	(Left) 06	.....	1	361	5799
71	(Left) 06 (* 24-5)	.....	1	361	5799
71	(Left) 06 (* 24-6)	.....	1	363	6399
72	(Left) 06	.....	1	363	6399
70/	(Left) 40	.....	1	363	6145
70	(Right) 06	.....	1	361	5798
71	(Right) 06 (* 24-5)	.....	1	361	5798
71	(Right) 06 (* 24-6)	.....	1	363	6398
72	(Right) 06	.....	1	363	6398
70/	(Right) 40	.....	1	363	6144

24.018–3 PIN, Quarter Window Glass Retaining (Nylon)

70	06 (SST)(1-11/32" x 3/16")	.....	4	363	1106

24.019–1 MOULDING, Rear Quarter Window Channel Retainer (Front)

70	(Left) 06 (SST)	.....	1	363	1111
71	(Left) 06 (E/SST)(E/SC-360)	.....	1	363	1111
72	(Left) 06	.....	1	363	1111
70	(Right) 06 (SST)	.....	1	363	1110
71	(Right) 06 (E/SST) (E/SC-360)	.....	1	363	1110
72	(Right) 06	.....	1	363	1110

24.019–2 MOULDING, Rear Quarter Window Channel Retainer (Upper And Rear)

70	(Left) 06 (SST)	.....	1	363	1091
71	(Left) 06 (E/SST) (E/SC-360)	.....	1	363	1091
72	(Left) 06	.....	1	363	1091
70	(Right) 06 (SST)	.....	1	363	1090
71	(Right) 06 (E/SST) (E/SC-360)	.....	1	363	1090
72	(Right) 06	.....	1	363	1090

24.019–3 ATTACHING PARTS, Rear Quarter Window Channel Moulding To Body (Front)

SCREW, Tapping	70/71	06 (SST)	20.280	4	400 1724
SCREW, Tapping	72	06	.....	4	400 1724
CLIP	70	06 (E/SST)(E/SC-360)	.....	6	400 3770
CLIP	72	06	.....	6	400 4393
CLIP	71	06 (E/SST)(E/SC-360)	.....	6	400 4393

24.020–1 HANDLE ASSEMBLY, Rear Quarter Pivoting Glass

72	(Left) 06-46	.....	1	364	6211
72	(Right) 06-46	.....	1	364	6210
70/71	06 (SST)	.....	2	363	1907

Printed in U.S.A.

REAR QUARTER HARDWARE

24.020–2 PIN, Quarter Window Handle Spring

70/71	06 (SST)	17.472	4	G456098	NA
72	06–40	17.472	6	812 0648	

24.020–5 BASE, Quarter Window Handle To Glass

70/71	06 (SST)	.....	2	363 1900	

24.020–6 BUTTON, Quarter Window Handle

70/71	06 (SST)	.....	2	363 1903	

24.020–6a STUD, Rear Quarter Window Handle Retaining

72	06–40	.....	2	364 6215	

24.020–6b ATTACHING PARTS, Stud To Glass

WASHER, Collar	72	06–40	.....	4	364 6217
WASHER, Plain	72	06–40	.....	2	364 6218
NUT, Hexagon	72	06–40	.....	2	364 6216

24.020–7 BUSHING, Quarter Window Glass Retaining (Glass To Handle)

70/71	06 (SST)	.....	4	363 1901	

24.020–8 SPRING, Quarter Window Handle

70/71	06 (SST)	.....	2	363 1906	

24.020–9 ATTACHING PARTS, Actuating Handle To Glass

SCREW, Machine	70/71	06 (5/16" Long)	17.592	2	G156751	NA

24.020–9a ATTACHING PARTS, Handle To Body

SCREW, Machine	70/71	06 (8–15 × 3/4)	23.215	4	400 3642
SCREW, Tapping	70/71	06 (SST)(8–18 × 3/4)	29.056	4	400 3628
SCREW, Tapping	72	06	.....	4	400 3642
SCREW, Tapping	72	46	2.050	4	400 2334

24.020–9b SPACER, Handle To Body

72	(Left) 46	.....	1	364 6467	
72	(Right) 46	.....	1	364 6466	

24.020–10 COVER, Quarter Window Handle Assembly

72	(Left) 06–46	.....	1	364 6463	
72	(Right) 06–46	.....	1	364 6462	

24.021–1 FILLER, Rear Quarter Window Front (Pivoting Type Window)

71	06	.....	2	364 6464	
72	06–46	.....	2	364 6464	

24.021–2 ATTACHING PARTS, Filler To Pillar

SCREW, Tapping	71/	06–46	.....	8	400 2457

REAR QUARTER HARDWARE

24.050–1 RECEIVER ASSEMBLY, Rear Quarter Ash (See Gr. 23.182–1 For Rear Door)

67	07...(Less Retainer)	.....	2	447 9945
67	06-09-79-86-89 (Complete)	.....	2	357 7350
69	06-09...(Less Retainer)	.....	2	448 6549
70/71	06...(Less Outside Cover)	23.182	2	362 8324
72	06-19-89 (* 24-9)...(Less Outside Cover)	.....	2	362 8324
72	06-19-89 (* 24-10)...(Less Outside Cover)	.....	2	364 9527
68	09-19-89	23.182	2	360 1220
67/68	17-87 (Complete)	.....	2	357 7351
69/71	19-89	23.182	2	360 1220
70	79	23.182	2	360 1220
71/	79 (* 24-9)...(Less Outside Cover)	23.182	2	362 8324
72	79 (* 24-10)...(Less Outside Cover)	.....	2	364 9527

24.050–2 ATTACHING PARTS, Ash Receiver To Panel

SCREW, Tapping.....	69	06-09	17.660	4	G161798 NA
SCREW, Tapping.....	70	06	17.660	4	G161871
SCREW, Tapping.....	71	06-79	17.660	4	G9414714 NA
SCREW, Tapping.....	72	06-19-79-89	.....	4	400 2099
RIVET, Tubular	70	79	17.558	2	G9414976 NA

24.050–3 ATTACHING PARTS, Ash Receiver Handle To Cover

SCREW, Tapping.....	69/70	06-09	17.660	4	G163158 NA
NUT, Stamped	69/70	06-09	.....	4	400 3625

24.050–4 SPRING, Rear Quarter Ash Receiver Cover

67	07	.....	2	447 9947
67/68	06-09-17-19-59-86-87-89	.....	2	357 7348

24.050–5 PLATE, Rear Quarter Ash Receiver Mounting

70/	06	.....	2	363 5784

24.050–6 ATTACHING PARTS, Rear Quarter Ash Receiver Mounting Plate

SCREW, Tapping.....	70/71	06	.....	4	400 2456

24.051–1 RECEIVER ASSEMBLY, Rear Compartment Spare Wheel Cover Ash

67/	18-88 (W3S)...(Less Retainer)	24.050	1	447 9945

24.051–2 SPRING, Rear Compartment Spare Wheel Cover Ash Receiver

67/	18-88 (W3S)	24.050	1	447 9947

24.051–3 RETAINER, Rear Compartment Spare Wheel Cover Ash Receiver

67/	18-88 (W3S)	24.052	1	447 9946

Printed in U.S.A.

REAR QUARTER HARDWARE

24.052–1 RETAINER, Rear Quarter Side Ash Receiver

69	06-09	.....	2	362 5592
67	07	.....	2	447 9946

24.052–1a COVER, Rear Quarter Side Ash Receiver Outside

70/	06 (Holds Chrome Receiver-* 24-11)	23. 182	2	362 8352
72	06-19-89 (Holds Chrome Receiver-* 24-12)	.....	2	364 7036
72	19-89 (Holds Chrome Receiver-* 24-11)	23. 182	2	362 8352
71/	79 (Holds Chrome Receiver-* 24-11)	23. 182	2	362 8352
72	79 (Holds Chrome Receiver-* 24-12)	.....	2	364 7036

24.052–2 WATERSHIELD, Rear Quarter Ash Receiver Retainer

69/70	06-09	.....	2	350 7360

24.065–1 MOULDING, Rear Quarter Side Trim Panel Upper

70	06 (SST-Left-Cane Shape)	.....	1	363 7311
71	06 (SST-Custom-Left-Cane Shape-26" Long)	.....	1	363 8951
72	06 (SST-Custom-Left-Cane Shape-17-5/64" Long)	.....	1	365 3943
70	06 (SST-Right-Cane Shape)	.....	1	363 7310
71	06 (SST-Custom-Right-Cane Shape-26" Long)	.....	1	363 8950
72	06 (SST-Custom-Right-Cane Shape-17-5/64" Long)	.....	1	365 3942
70/71	06 (SST-27" Long)	.....	2	362 8661
67	19 (Custom-25-13/64" Long)	.....	2	357 8992
67	59 (Left)...(Incl. Walnut Overlay)	.....	1	358 9897
67	59 (Right)...(Incl. Walnut Overlay)	.....	1	358 9896
69	79 (Left-4-59/64" Long)	.....	1	361 7347
69	79 (Right-4-59/64" Long)	.....	1	361 7346
69	79 (Rear-21-7/32" Long)	.....	1	361 7348
67	89 (Left)...(Incl. Walnut Overlay)	.....	1	357 9543
67	89 (Right)...(Incl. Walnut Overlay)	.....	1	357 9542
68	89 (Left)	.....	1	360 7821
68	89 (Right)	.....	1	360 7820

24.065–2 MOULDING, Rear Quarter Side Trim Panel Center

67	19 (Custom-2-3/16" Long)	.....	2	357 8988
67	89 (Custom-Left-Front-LER-2-1/2" Long)	.....	1	357 9845
67	89 (Custom-Right-Front-LER-2-1/2" Long)	.....	1	357 9844
67	89 (Custom-Left-Front-WER-2-1/8" Long)	.....	1	357 9843
67	89 (Custom-Right-WER-2-1/8" Long)	.....	1	357 9842
67	89 (Custom-Left-Rear-LER-17-1/2" Long)	.....	1	357 9551
67	89 (Custom-Right-Rear-LER-17-1/2" Long)	.....	1	357 9550
67	89 (Custom-Rear-WER-16-7/8" Long)	.....	1	357 9549
68	89 (DPL-Left)	.....	1	360 7843
68	89 (DPL-Right)	.....	1	360 7842
68	89 (SST-Left-Front-LER-5" Long)	.....	1	360 7693
68	89 (SST-Right-Front-LER-5" Long)	.....	1	360 7692
68	89 (SST-Front-WER-4" Long)	.....	2	360 7690
68	89 (SST-Left-Rear-LER-Cane Shape)	.....	1	360 7697
68	89 (SST-Right-Rear-LER-Cane Shape)	.....	1	360 7696
68	89 (SST-Left-Rear-WER-Cane Shape)	.....	1	360 7695
68	89 (SST-Right-Rear-WER-Cane Shape)	.....	1	360 7694

24.065–3 MOULDING, Rear Quarter Trim Panel Lower

70	06 (SST-Left-Cane Shape-19-3/8" Long)	.....	1	363 7313
71	06 (SST-Custom-Left-Cane Shape-19-3/8" Long)	.....	1	363 8953
72	06 (SST-Left-Custom-Cane Shape-12-3/4" Long)	.....	1	365 3941
70	06 (SST-Right-Cane Shape-19-3/8" Long)	.....	1	363 7312
71	06 (SST-Custom-Right-Cane Shape-19-3/8" Long)	.....	1	363 8952
72	06 (SST-Right-Custom-Cane Shape-12-3/4" Long)	.....	1	365 3940

Printed in U.S.A.

REAR QUARTER HARDWARE

67	19 (Custom-Left)	.....	1	357 8991
67	19 (Custom-Right)	.....	1	357 8990
67	59 (20-9/32" Long)	.....	2	357 9540
67	89 (Custom-Left-"L"Shape)	.....	1	359 7593
67	89 (Custom-Right-"L"Shape)	.....	1	359 7592
67	89 (Except Custom-20-9/32" Long)	.....	2	357 9540
68	89 (15-3/16" Long)	.....	2	360 7854

24.065–4 MOULDING, Rear Quarter Trim Panel Horizontal (The Description Of "Horizontal" Is Used When Center And Lower Mouldings Are Not Used)

67/69	06-09	.....	2	349 3264
67	07	.....	2	350 1868
67	17 (Left-Front)	.....	1	357 9159
67	17 (Right-Front)	.....	1	357 9158
67	17 (Left-Rear)	.....	1	357 9755
67	17 (Right-Rear)	.....	1	357 9754
68	17 (SST-Left-12" Long-* 24-1)	.....	1	361 2731
68	17 (SST-Right-12" Long-* 24-1)	.....	1	361 2730
67	19 (Except Custom)	.....	2	357 9148
68	19 (SST-* 24-2)	.....	2	361 3263
68	19 (SST-21-3/8"-* 24-1)	.....	2	360 7220
69	19 (Except SST)	.....	2	361 8200
69	19 (SST)	.....	2	361 8272
71	19 (Matador-Left-Rear-21-1/2" Long)	.....	1	364 0353
71	19 (Matador-Right-Rear-21-1/2" Long)	.....	1	364 0352
71	19 (Matador-Left-Front-6" Long)	.....	1	364 0325
71	19 (Matador-Right-Front-6" Long)	.....	1	364 0324
70	79 (SST-Rear-19-1/4" Long)	.....	2	362 5812
70	79 (SST-Left-Front-Cane Shape)	.....	1	362 5811
70	79 (SST-Right-Front-Cane Shape)	.....	1	362 5810
70	79 (Except SST-Left-Front-2" Long)	.....	1	362 8831
70	79 (Except SST-Right-Front-2" Long)	.....	1	362 8830
70	79 (Except SST-Left-Rear-19-7/8" Long)	.....	1	362 8833
70	79 (Except SST-Right-Rear-19-7/8" Long)	.....	1	362 8832
71/	79 (Left-Rear-16-3/8" Long)	.....	1	364 2238
71/	79 (Left-Front-5-3/16" Long)	.....	1	364 2237
71/	79 (Right-23" Long)	.....	1	364 2236
67	87 (Left)...(Incl. Walnut Overlay)	.....	1	357 9547
67	87 (Right)...(Incl. Walnut Overlay)	.....	1	357 9546
69	89	.....	2	361 8760
70	89 (DPL And SST-Lower-Above Carpet-15-3/16" Long)	.....	2	362 8124
71	89 (SST-Lower-Above Carpet-15-3/16" Long)	.....	1	362 8124

24.065–5 MOULDING, Rear Quarter Trim Panel Vertical

68	17 (SST-12"-* 24-2)	.....	2	361 3398
68	17 (SST-Left-9" Long-* 24-1)	.....	1	360 7803
68	17 (SST-Right-9" Long-* 24-1)	.....	1	360 7802
68	19 (SST-Left-* 24-1)	.....	1	360 7219
68	19 (SST-Right-* 24-1)	.....	1	360 7218
68	19 (SST-* 24-2)	.....	2	361 3398

24.065–6 MOULDING, Rear Quarter Support Trim Panel Upper

67	07 (Left) ***(Use 358 3166)***	.....	1	358 3167
67	07 (Right)	.....	1	358 3166

24.065–7 MOULDING, Rear Quarter Support Trim Panel Lower

67	07	.....	2	351 7678
67/68	17-87	.....	2	358 1536

REAR QUARTER HARDWARE

24.065–8 ATTACHING PARTS, Moulding To Panel

BOLT, Tee	67/68	17–87	12.078	6	400 0638
NUT, Push	67/68	17–87	17.428	6	320 9555
CLIP, Wire	68	17–19	26.032	2	400 3502

24.065–9 CAP, Rear Quarter Trim Panel Moulding Connecting

67	89 (Custom–Front)	23.198	2	357 9725

24.067–1 MOULDING, Rear Quarter Armrest

67	06 (220)	.....	2	358 1525
67	06 (440)	.....	2	358 1529
67	09–19–59–89	.....	2	358 1529
67	16–86	.....	2	358 1525

24.067–2 ATTACHING PARTS, Moulding To Rear Quarter Armrest

FASTENER, Snap	67	06–09–16–19–59–86–89	29.056	4	400 2076

24.067–3 OVERLAY, Rear Quarter Armrest

70	06 (Brushed Aluminum Finish)	.....	2	362 9208
71	06 (SST–Custom)(Brushed Aluminum Finish)	.....	2	363 8338
72	19–89 (Brushed Aluminun Finish)	.....	2	363 8338
70/71	(Left) 19 (Brushed Aluminum Finish)	.....	1	362 9375
70	(Left) 79–89 (Wood Grain Finish)	.....	1	363 7851
71	(Left) 89 (SST And Brougham)(Burled Walnut Finish)	.....	1	364 0359
69	(Left) 89 (Wood Grain Finish)	.....	1	361 8259
70/71	(Right) 19 (Brushed Aluminum Finish)	.....	1	362 9374
70	(Right) 79–89 (Wood Grain Finish)	.....	1	363 7850
71	(Right) 89 (SST And Brougham)(Burled Walnut Finish)	.....	1	364 0358
69	(Right) 89 (Wood Grain Finish)	.....	1	361 8258

24.067–4 ATTACHING PARTS, Overlay To Rear Quarter Armrest

RETAINER, Stud	69/71	19–79–89	23.215	4	400 3620
SCREW, Tapping	71/	06 (Overlay To Armrest Base)	.....	2	400 4663
SCREW, Tapping	69	79–89	23.215	2	400 3642

24.200–1 REGULATOR, Rear Quarter Electric Operated Window

67/68	(Left) 17–87	.....	1	448 4257
67/69	(Left) 16–19–59–86–89	.....	1	448 4255
70/	(Left) 19–89	.....	1	448 7655
67/68	(Right) 17–87	.....	1	448 4256
67/69	(Right) 16–19–59–86–89	.....	1	448 4254
70/	(Right) 19–89	.....	1	448 7654

24.200–2 ATTACHING PARTS, Regulator To Panel

SCREW, Machine	67/	16–17–19–59–86–87–89	23.098	8	400 2028

24.203–1 DRIVE UNIT, Rear Quarter Electric Operated Window Regulator (Less Motor)

67/	(Left) 16–19–59–86–89	.....	1	448 4915
67/68	(Left) 17–87	.....	1	448 4911
67/	(Right) 16–19–59–86–89	.....	1	448 4914
67/68	(Right) 17–87	.....	1	448 4910

Printed in U.S.A.

REAR QUARTER HARDWARE

24.203–2 COUPLING, Rear Quarter Electric Operated Window Regulator Drive Unit

67/	16-17-19-59-86-97-89	23.310	2	448 4876

24.205 MOTOR, Rear Quarter Electric Operated Window Regulator (Less Drive Unit)

67/71	16-17-19-59-86-87-89	23.310	2	448 4875
72	19-89	23.310	2	366 1224

24.215 HARNESS, Rear Quarter Electric Operated Window Regulator Wiring

67	19-59-89 (LHD)	23.320	1	318 6848
67	17-87 (LHD)	23.320	1	318 6849
68/71	17-19-89 (LHD-Main)	23.320	1	319 1987
72	17-19-89 (LHD-Main)	23.320	1	321 6581
68/	17-19-89 (LHD-Quarter Panel-Single)	23.320	2	319 1990

24.220–1 SWITCH, Rear Quarter Electric Operated Window Regulator Control (Less Housing)

67	17-19-59-87-89	23.330	2	357 7148
68/	17-19-89 ***(Use 360 9564)***	23.330	2	360 2416

24.220–2 HOUSING, Rear Quarter Electric Operated Window Regulator Control Switch

67	17-19-59-87-89	23.330	2	352 0816
68/	17-19-89	23.330	2	360 2413

24.220–3 ATTACHING PARTS, Housing To Regulator Panel

SCREW, Tapping	68/	17-19-89	17.654	4	G443512 NA

24.220–4 PLATE, Rear Quarter Electric Operated Window Regulator Control Switch

67	17-19-59-87-89	23.330	2	352 0817
68	17	.....	2	360 1501
68/69	(Left) 19-89	.....	1	360 1509
68/69	(Right) 19-89	.....	1	360 1508

24.220–5 ATTACHING PARTS, Plate To Regulator Panel

SCREW, Machine	68/69	17-19-89	23.098	4	400 2028
NUT, Hexagon	68/69	17-19-89	17.406	4	G120375

24.220–6 BEZEL, Rear Quarter Electric Operated Window Regulator Control Switch Housing

68/69	17-19-89 (Individual)	23.330	2	360 2418
70/	89 (Individual)	23.330	2	360 9109

24.220–7 ATTACHING PARTS, Bezel To Regulator Panel

SCREW, Tapping	68/	17-19-89	17.655	4	G168971 NA

24.220–8 WATERDAM, Rear Quarter Electric Operated Window Regulator Control Switch

67/	17-19-59-87-89	23.320	2	438 2105

24.220–9 SPRING, Rear Quarter Electric Operated Window Regulator Control Switch To Housing

67/	17-19-87-89	23.320	2	400 2095

SPECIAL INFORMATION

The Engine Build Code Number, Vehicle Identification Number and the information provided on the Unit Body Plate are often necessary when determining the proper replacement parts for your automobile. For their location refer to the General Information Section found at the front of this catalog.

NOTES

25–1 .... Channel has no Slit for Reveal Moulding.

25–2 .... Channel has a Slit for Reveal Moulding.

25–3 .... Frame is 28-3/8" Long from Front to Rear Top Side and used with Division Bar Pointed at Top.

25–4 .... Frame is 28-17/32" Long from Front to Rear Top Side and used with Division Bar that is not Pointed at Top.

25–5 .... Channel and Guide is Bolted Together.

25–6 .... Channel and Guide is Welded Together.

25–7 .... Channel has Felt Lining and Stainless Steel Beading.

25–8 .... Channel is Flocked Rubber and has a Separate Retainer.

25–9 .... Channel and Guide is Bolted Together.

25–10 ... Channel and Guide is Welded Together.

25–11 ... Has Two Channels Welded to the Guide.

25–12 ... Has One Channel Welded to the Guide.

25–13 ... Up-Stop on Rear Quarter Window Channel is 27/32" long.

25–14 ... Up-Stop on Rear Quarter Window Channel is 1-3/8" long.

25–16 ... The Guide Channel has a Bracket welded to it for supporting the Glass Slide Channel.

25–17 ... The Guide Channel is less the Glass Slide Channel Support Bracket.

25–18 ... Used on Cars having a Quarter Window Rear Slide Channel (25.040). Refer to Type 1 Illustration.

25–19 ... Used on Cars where the Stop is fastened directly to the Rear Quarter Regulator Panel. Refer to Type 2 Illustration.

25–20 ... Used with Rubber Channel.

25–21 ... Used with Butyl Tape.

25–22 ... Glass has no Frame around it.

25–23 ... Glass has a Frame around it.

25–24 ... Liftgate is supported with Two Supports.

25–25 ... Liftgate is supported with One Support.

25–26 ... Glass contact surface of Weatherstrip is made of a Pile Material Type.

25–27 ... Glass contact surface of Weatherstrip is made of a Tubular Rubber Type.

25–28 ... Glass contact surface of Weatherstrip is made of a Single Edge Rubber Seal Type.

25–29 ... Assembly includes two Channels and includes Rear Slide Channel.

25–30 ... Assembly includes One Channel and does not include Rear Slide Channel.

Printed in U.S.A.

NOTES

25–31 . . . Window Regulator Guide Channel is 4" long.

25–32 . . . Window Regulator Guide Channel is 5-1/2" long.

25–33 . . . Rear Up-Stop does not have a Weld Nut.

25–34 . . . Rear Up-Stop has a Nut welded to it.

25–35 . . . Hole for Handle is 7.94" from top corner of Glass.

25–36 . . . Hole for Handle is 9.44" from top corner of Glass.

Printed in U.S.A.

ILLUSTRATION SUPPLEMENT - SPECIAL INFORMATION

GLASS - CHANNELS .... Refer To Group 23 Illustrations

Printed in U.S.A.

GLASS - CHANNELS

GROUP NO. — DESCRIPTION — YEAR and MODEL	"L" CODE	PAKS CODE	PRIMARY GROUP NO.	PER CAR	PART NO.	CODE
25.001 GLASS, Windshield						
67/69 (Clear)(W646) 01			.....	1	355 3864	
67/69 (Sunshade Tinted)(W646) 01			.....	1	355 3865	
67/69 (Clear)(W684) 10-50-80 (* 25-21)			.....	1	357 5040	
67/69 (Sunshade Tinted)(W684) 10-50-80 (* 25-21)			.....	1	357 5041	
70/ (Clear)(W684) 10-80			.....	1	357 5040	
70/ (Tinted)(W684) 10-80			.....	1	357 5041	
67 (Clear)(W685) 10-50-80 (* 25-20)			.....	1	358 6492	
67 (Tinted)(W685) 10-50-80 (* 25-20)			.....	1	358 6493	
68/69 (Clear)(W708) 30-70			.....	1	360 0900	
70/ (Clear)(W708) 30-70			.....	1	363 5672	
68/69 (Sunshade Tinted)(W708) 30-70			.....	1	360 0901	
70/ (Tinted)(W708) 30-70			.....	1	363 5673	
70/ (Tinted)(W747) 01-40			.....	1	361 5731	
70/ (Clear)(W747) 01-40			.....	1	361 5730	
25.002–1 CHANNEL, Windshield Glass (For Butyl Installation See 25.002–4)						
67 05-06-08-09			.....	1	358 2530	
67 07			.....	1	350 0532	
68 05-06-08-09 (* 25-1)			.....	1	358 2530	
68 05-06-08-09 (* 25-2)			.....	1	350 0532	
69 01			.....	1	358 2530	
67 10-50-80			.....	1	358 6513	
25.002–2 SPACER, Windshield Glass						
67/69 01			.....	2	353 5895	
70/ 01-40			.....	2	359 8623	
67/ 10-50-80			.....	2	358 6543	
68/69 39-79			.....	2	359 8623	
70/ 39-79			.....	2	362 3388	
25.002–3 ATTACHING PARTS, Spacer To Body						
SCREW, Tapping 67 10-50-80			17.660	2	320 9582	NA
SCREW, Tapping 68/69 10-80			17.671	2	G9411429	NA
SCREW, Tapping 72 10-80			.....	2	G457002	NA
25.002–4 KIT, Glass Installation (Incl. Butyl Tape And Primer)						
70/ 01-40			25.044	1	448 4920	
67/ 10-30-50-70-80			25.044	1	448 4920	
25.002–5 SUPPORT KIT, Inside Rear View Mirror						
72 01-40			27.084	1	812 0995	
25.014–1 GLASS ASSEMBLY, Front Door Lowering						
Incl. Frame And Bottom Channel						
67/69 (Left-Clear) 07-09			.....	1	353 0811	
67/69 (Left-Tinted) 07-09			.....	1	353 0813	
67 (Left-Clear) 16-17-19-59-86-87-89 (* 25-3)			.....	1	357 6277	
67 (Left-Clear) 16-17-19-59-86-87-89 (* 25-4)			.....	1	360 2747	
67 (Left-Tinted) 16-17-19-59-86-87-89 (* 25-3)			.....	1	357 6279	
67 (Left-Tinted) 16-17-19-59-86-87-89 (* 25-4) ..... *(Ord. Component Parts)*			.....	1	360 2749	
68/69 (Left-Clear) 17-19-89			.....	1	360 2747	
68/69 (Left-Tinted) 17-89 ..... *(Ord. Component Parts)*			.....	1	360 2749	
67/69 (Right-Clear) 07-09			.....	1	353 0810	
67/69 (Right-Tinted) 07-09			.....	1	353 0812	
67 (Right-Clear) 16-17-19-59-86-87-89 (* 25-3)			.....	1	357 6276	
67 (Right-CLear) 16-17-19-59-86-87-89 (* 25-4)			.....	1	360 2746	

GLASS - CHANNELS

67	(Right-Tinted) 16-17-19-59-86-87-89 (* 25-3)	.....	1	357 6278
67	(Right-Tinted) 16-17-19-59-86-87-89 (* 25-4)	.....	1	360 2748
68/69	(Right-Clear) 17-19-89	.....	1	360 2746
68/69	(Right-Tinted) 17-19-89	.....	1	360 2748

Incl. Bottom Channel

70/	(Left-Clear) 19-89 ***(Ord. Component Parts)***	.....	1	363 1635
70/	(Left-Tinted) 19-89 ***(Ord. Component Parts)***	.....	1	363 1637
68/70	(Left-Clear) 39	.....	1	360 2763
68/70	(Left-Tinted) 39	.....	1	360 2765
68/70	(Left-Clear) 79	.....	1	360 2759
68/70	(Left-Tinted) 79	.....	1	360 2761
70/	(Right-Clear) 19-89 ***(Ord. Component Parts)***	.....	1	363 1634
70/	(Right-Tinted) 19-89 ***(Ord. Component Parts)***	.....	1	363 1636
68/70	(Right-Clear) 39	.....	1	360 2762
68/70	(Right-Tinted) 39	.....	1	360 2764
68/70	(Right-Clear) 79	.....	1	360 2758
68/70	(Right-Tinted) 79	.....	1	360 2760

Less Bottom Channel

71/	(Left-Clear)(D4571) 79	25.018	1	363 6897
71/	(Left-Tinted)(D4571) 79	25.018	1	363 6899
71/	(Right-Clear)(D4570) 79	25.018	1	363 6896
71/	(Right-Tinted)(D4570) 79	25.018	1	363 6898

25.014–2 BOLT, Door Window Spanner

71/	79 (1/4"-20 x 7/8"-Thru Glass To Guide Plate)	25.014	12	363 6889

25.014–3 BUSHING, Door Window Spanner Bolt

71/	79 (Nylon-1-1/2" Dia.-Fits Into Hole In Glass Fron Outside)	25.029	8	361 5821
71/	79 (Black-Nylon-1-1/2" Dia.-To Rear Up Stop-On Glass)	25.014	4	365 1038

25.014–4 WASHER, Door Window Spanner Bolt

71/	79 (Nylon-1-1/2" Dia.-Fits On Glass From Inside)	25.014	12	363 2958

25.014–5 NUT, Door Window Spanner Bolt Washer

71/	79 (Fits On Glass From Inside)	25.029	8	361 5820

25.014–6 ATTACHING PARTS, Guide Plate To Door Window (On End Of Spanner Bolt)

NUT, Hexagon	71/ 79 (Washer Base)	.....	8	400 4469

25.015 GLASS ASSEMBLY, Rear Door Lowering (Incl. Bottom Channel)

70/	(Left-Clear) 05-08	.....	1	363 1681
70/	(Left-Tinted) 05-08	.....	1	363 1683
70/	(Right-Clear) 05-08	.....	1	363 1680
70/	(Right-Tinted) 05-08	.....	1	363 1682

25.016 GLASS, Front Door Ventilator

67/69	(Left-Clear)(V3136) 01	.....	1	348 2129
67/69	(Left-Tinted)(V3136) 01	.....	1	348 2131
67/	(Left-Clear)(V3690) 10-50-80	.....	1	357 6173
67/	(Left-Tinted)(V3690) 10-50-80	.....	1	357 6175
67/69	(Right-Clear)(V3135) 01	.....	1	348 2128
67/69	(Right-Tinted)(V3135) 01	.....	1	348 2130
67/	(Right-Clear)(V3689) 10-50-80	.....	1	357 6172
67/	(Right-Tinted)(V3689) 10-50-80	.....	1	357 6174

GLASS - CHANNELS

25.018 GLASS, Front Door Lowering

67/69	(Left-Clear)(D3390) 05-08	.....	1	353 0713
67/69	(Left-Tinted)(D3390) 05-08	.....	1	353 0715
70/	(Left-Clear)(D4394) 05-08	.....	1	361 5743
70/	(Left-Tinted)(D4394) 05-08	.....	1	361 5745
67/69	(Left-Clear)(D3387) 06	.....	1	353 0721
67/69	(Left-Tinted)(D3387) 06	.....	1	353 0723
70/	(Left-Clear)(D4387) 06-46	.....	1	361 5739
70/	(Left-Tinted)(D4387) 06-46	.....	1	361 5741
67/69	(Left-Clear)(D3382) 07-09	.....	1	353 0817
67/69	(Left-Tinted)(D3382) 07-09	.....	1	353 0819
67/	(Left-Clear)(D3704) 15-18-85-88	.....	1	357 5003
67/	(Left-Tinted)(D3704) 15-18-85-88	.....	1	357 5005
67/69	(Left-Clear)(D3692) 16-17-19-59-86-87-89	.....	1	357 6267
67/69	(Left-Tinted)(D3692) 16-17-19-59-86-87-89	.....	1	357 6269
70/	(Left-Clear)(D4398) 19-89	.....	1	363 1689
70/	(Left-Tinted)(D4398) 19-89	.....	1	363 1691
71/	(Left-Clear)(D4571) 79	25.014	1	363 6897
71/	(Left-Tinted)(D4571) 79	25.014	1	363 6899
67/69	(Right-Clear)(D3389) 05-08	.....	1	353 0712
67/69	(Right-Tinted)(D3389) 05-08	.....	1	353 0714
70/	(Right-Clear)(D4393) 05-08	.....	1	361 5742
70/	(Right-Tinted)(D4393) 05-08	.....	1	361 5744
67/69	(Right-Clear)(D3386) 06	.....	1	353 0720
67/69	(Right-Tinted)(D3386) 06	.....	1	353 0722
70/	(Right-Clear)(D4386) 06-46	.....	1	361 5738
70/	(Right-Tinted)(D4386) 06-46	.....	1	361 5740
67/69	(Right-Clear)(D3381) 07-09	.....	1	353 0816
67/69	(Right-Tinted)(D3381) 07-09	.....	1	353 0818
67/	(Right-Clear)(D3703) 15-18-85-88	.....	1	357 5002
67/	(Right-Tinted)(D3703) 15-18-85-88	.....	1	357 5004
67/69	(Right-Clear)(D3691) 16-19-59-86-87-89	.....	1	357 6266
67/69	(Right-Tinted)(D3691) 16-17-19-59-86-87-89	.....	1	357 6268
70/	(Right-Clear)(D4397) 19-89	.....	1	363 1688
70/	(Right-Tinted)(D4397) 19-89	.....	1	363 1690
71/	(Right-Clear)(D4570) 79	25.014	1	363 6896
71/	(Right-Tinted)(D4570) 79	25.014	1	363 6898

25.020 GLASS, Rear Door Lowering (Refer To Group 25.015 For 70-71 05-08 Assembly)

67/69	(Left-Clear)(D3392) 05-08	.....	1	353 0717
67/69	(Left-Tinted)(D3392) 05-08	.....	1	353 0719
67/69	(Left-Clear)(D3706) 15-18-85-88	.....	1	357 5007
67/69	(Left-Tinted)(D3706) 15-18-85-88	.....	1	357 5009
70/	(Left-Clear)(D4402) 15-85	.....	1	361 5845
70/	(Left-Tinted)(D4402) 15-85	.....	1	361 5847
70/	(Left-Clear)(D3706) 18-88	.....	1	357 5007
70/	(Left-Tinted)(D3706) 18-88	.....	1	357 5009
67/69	(Right-Clear)(D3391) 05-08	.....	1	353 0716
67/69	(Right-Tinted)(D3391) 05-08	.....	1	353 0718
67/69	(Right-Clear)(D3705) 15-18-85-88	.....	1	357 5006
67/69	(Right-Tinted)(D3705) 15-18-85-88	.....	1	357 5008
70/	(Right-Clear)(D4401) 15-85	.....	1	361 5844
70/	(Right-Tinted)(D4401) 15-85	.....	1	361 5846
70/	(Right-Clear)(D3705) 18-88	.....	1	357 5006
70/	(Right-Tinted)(D3705) 18-88	.....	1	357 5008

25.022-1 GLASS, Rear Quarter Window (Non-Lowering)(Push Out Type)

70	(Left-Clear)(Q4389) 06 (SST-* 25-22)	.....	1	363 1085
70/71	(Left-Clear)(Q4577) 06 (SST-* 25-23)	.....	1	363 3921
72	(Left-Clear)(Q4577) 06	.....	1	363 3921
70	(Left-Tinted)(Q4389) 06 (SST-* 25-22)	.....	1	363 1087
70/71	(Left-Tinted)(Q4577) 06 (SST-* 25-23)	.....	1	363 3923
72	(Left-Tinted)(Q4577) 06	.....	1	363 3923
72	(Left-Clear) 40 (* 25-35)	.....	1	366 2549
72	(Left-Clear)(Q4757) 40 (* 25-36)	.....	1	364 6201
72	(Left-Tinted) 40 (* 25-35)	.....	1	366 2599
72	(Left-Tinted)(Q4757) 40 (* 25-36)	.....	1	364 6203

Printed in U.S.A.

GLASS - CHANNELS

70	(Right-Clear)(Q4388) 06 (SST-* 25-22)	.....	1	363 1084
70/71	(Right-Clear)(Q4576) 06 (SST-* 25-23)	.....	1	363 3920
72	(Right-Clear)(Q4576) 06	.....	1	363 3920
70	(Right-Tinted)(Q4388) 06 (SST)(* 25-22)	.....	1	363 1086
70/71	(Right-Tinted)(Q4576) 06 (SST)(* 25-23)	.....	1	363 3922
72	(Right-Tinted)(Q4576) 06	.....	1	363 3922
72	(Right-Clear) 40 (* 25-35)	.....	1	366 2548
72	(Right-Clear)(Q4756) 40 (* 25-36)	.....	1	364 6200
72	(Right-Tinted) 40 (* 25-35)	.....	1	366 2598
72	(Right-Tinted)(Q4756) 40 (* 25-36)	.....	1	364 6202

25.022-2 SEALER. Rear Quarter Window (Non-Lowering)(Push Out Type)

72	01	.....	2	365 1599
72	40	.....	2	366 1401

25.023 GLASS. Rear Door Stationary Window

67/69	(Left-Clear)(Q3142) 05-08	.....	1	348 2145
67/69	(Left-Tinted)(Q3142) 05-08	.....	1	348 2147
67/69	(Right-Clear)(Q3141) 05-08	.....	1	348 2144
67/69	(Right-Tinted)(Q3141) 05-08	.....	1	348 2146

25.024 GLASS. Rear Quarter Lowering

67/69	(Left-Clear)(Q3210) 06	.....	1	350 1091
67/69	(Left-Tinted)(Q3210) 06	.....	1	350 1093
67	(Left-Clear)(Q3208) 07	.....	1	350 1135
67	(Left-Tinted)(Q3208) 07	.....	1	350 1137
67/69	(Left-Clear)(Q3204) 09	.....	1	350 1193
67/69	(Left-Tinted)(Q3204) 09	.....	1	350 1195
67	(Left-Clear)(Q3702) 16-86	.....	1	357 5043
67	(Left-Tinted)(Q3702) 16-86	.....	1	357 5045
67/68	(Left-Clear)(Q3700) 17-87	.....	1	357 6321
67/69	(Left-Tinted)(Q3700) 17-87	.....	1	357 6323
67/69	(Left-Clear)(Q3697) 19-89	.....	1	357 6317
67/69	(Left-Tinted)(Q3697) 19-89	.....	1	357 6319
70/	(Left-Clear)(Q4400) 19-89	.....	1	361 5791
70/	(Left-Tinted)(Q4400) 19-89	.....	1	361 5793
67	(Left-Clear)(Q3694) 59	.....	1	357 6371
67	(Left-Tinted)(Q3694) 59	.....	1	357 6373
67/69	(Right-Clear)(Q3209) 06	.....	1	350 1090
67/69	(Right-Tinted)(Q3209) 06	.....	1	350 1092
67	(Right-Clear)(Q3207) 07	.....	1	350 1134
67	(Right-Tinted)(Q3207) 07	.....	1	350 1136
67/69	(Right-Clear)(Q3203) 09	.....	1	350 1192
67/69	(Right-Tinted)(Q3203) 09	.....	1	350 1194
67	(Right-Clear)(Q3701) 16-86	.....	1	357 5042
67	(Right-Tinted)(Q3701) 16-86	.....	1	357 5044
67/68	(Right-Clear)(Q3699) 17-87	.....	1	357 6320
67/68	(Right-Tinted)(Q3699) 17-87	.....	1	357 6322
67/69	(Right-Clear)(Q3696) 19-89	.....	1	357 6316
67/69	(Right-Tinted)(Q3696) 19-89	.....	1	357 6318
70/	(Right-Clear)(Q4399) 19-89	.....	1	361 5790
70/	(Right-Tinted)(Q4399) 19-89	.....	1	361 5792
67	(Right-Clear)(Q3693) 59	.....	1	357 6370
67	(Right-Tinted)(Q3693) 59	.....	1	357 6372

25.026-1 GLASS. Rear Quarter Stationary

68/69	(Left-Clear)(Q3210) 06	25.024	1	350 1091
68/69	(Left-Tinted)(Q3210) 06	25.024	1	350 1093
70/	(Left-Clear)(Q4392) 06	.....	1	361 5735
70/	(Left-Tinted)(Q4392) 06	.....	1	361 5737
67/69	(Left-Clear)(Q3213) 08	.....	1	350 0535
67/69	(Left-Tinted)(Q3213) 08	.....	1	350 0537

Printed in U.S.A.

GLASS - CHANNELS

71/	(Left-Clear)(Q4579) 08	.....	1	361 6101
71/	(Left-Tinted)(Q4579) 08	.....	1	361 6103
67/	(Left-Clear)(Q3709) 18-88	.....	1	357 5047
67/	(Left-Tinted)(Q3709) 18-88	.....	1	357 5049
68/70	(Left-Clear)(Q3945) 39	.....	1	360 2571
68/70	(Left-Tinted)(Q3945) 39	.....	1	360 2573
70/	(Left-Clear)(Q4448) 40	.....	1	363 6141
70/	(Left-Tinted)(Q4448) 40	.....	1	363 6143
68/69	(Right-Clear)(Q3209) 06	25.024	1	350 1090
68/69	(Right-Tinted)(Q3209) 06	25.024	1	350 1092
70/	(Right-Clear)(Q4391) 06	.....	1	361 5734
70/	(Right-Tinted)(Q4391) 06	.....	1	361 5736
67/69	(Right-C ear)(Q3212) 08	.....	1	350 0534
67/69	(Right-Tinted)(Q3212) 08	.....	1	350 0536
71/	(Right-Clear)(Q4578) 08	.....	1	361 6100
71/	(Right-Tinted)(Q4578) 08	.....	1	361 6102
67/	(Right-C ear)(Q3708) 18-88	.....	1	357 5046
67/	(Right-Tinted)(Q3708) 18-88	.....	1	357 5048
68/70	(Right-Clear)(Q3944) 39	.....	1	360 2570
68/70	(Right-Tinted)(Q3944) 39	.....	1	360 2572
70/	(Right-Clear)(Q4447) 40	.....	1	363 6140
70/	(Right-Tinted)(Q4447) 40	.....	1	363 6142

25.026–2 PROTECTOR. Rear Quarter Stationary Glass (Sealer)

71/	(Upper-Left) 08 (41" Long)	.....	1	365 0433
71/	(Lower-Left) 08 (43-7/8" Long)	.....	1	365 0435
71/	(Upper-Right) 08 (41" Long)	.....	1	365 0432
71/	(Lower-Right) 08 (43-7/8" Long)	.....	1	365 0434

25.026–3 SPACER. Rear Quarter Stationary Glass

71/	08	25.044	4	359 8623

25.028–1 GLASS. Rear Window (See 25.002–4 For Glass Installation Kit)

67	(Clear)(B3211) 05-06	.....	1	350 0590
67	(Sunshade Tinted)(B3211) 05-06	.....	1	350 0591
68/69	(Clear)(B3948) 05-06	.....	1	360 0702
68/69	(Tinted)(B3948) 05-06	.....	1	360 0703
70/	(Clear)(B4390) 05-06	.....	1	361 5732
70/	(Tinted)(B4390) 05-06	.....	1	361 5733
71/	(Clear)(B4580) 08	.....	1	361 6110
71/	(Tinted)(B4580) 08	.....	1	361 6111
67/69	(Clear)(B3206) 09	.....	1	350 1040
68/69	(Tinted)(B3206) 09	.....	1	359 8989
67	(Sunshade Tinted)(B3206) 09	.....	1	350 1041
67	(Clear)(B3707) 15-85	.....	1	358 6504
67	(Sunshade Tinted)(B3707) 15-85	.....	1	358 6505
68/	(Clear)(B3947) 15-85	.....	1	357 5000•
68/	(Tinted)(B3947) 15-85	.....	1	360 8458
70/	(Tinted-Heated)(B4453) 15-85	.....	1	363 6637
71/	(Clear)(B4575) 79	.....	1	363 2384
68/70	(Tinted)(B3941) 39-79	.....	1	360 0911
71/	(Tinted)(B4575) 79	.....	1	363 2385
67	(Clear)(B3698) 16-19-86-89	.....	1	358 6488
67	(Sunshade Tinted)(B3698) 16-19-86-89	.....	1	358 6491
68/	(Clear)(B3946) 19-89	.....	1	357 5560
68/	(Tinted)(B3946) 19-89	.....	1	360 8460
70/	(Tinted-Heated)(B4452) 19-89	.....	1	363 6638
68/70	(Clear)(B3941) 39-79	.....	1	360 0910

Printed in U.S.A.

GLASS - CHANNELS

70	(Tinted-Heated)(B4451) 39-79	.....	1	363 6636
67	(Sunshade Tinted)(B3695) 59	.....	1	358 6525
67	(Tinted)(B3695) 59	.....	1	358 6524
71/	(Tinted-Heated)(B4574) 79	.....	1	363 2383
70/71	(Clear-Used Less Liftgate Window)(B4450) 40	.....	1	363 6090
70	(Clear-Used With Liftgate Window-Used With Two Supports) 40 ...(Incl. Chrome Frame And Hinge Assembly)	.....	1	448 8517
70/71	(Sunshade Tinted-Used Less Liftgate Window)(B4450) 40	.....	1	363 6091
70	(Sunshade Tinted-Used With Liftgate Window-Used With Two Supports) 40 ...(Incl. Chrome Frame And Hinge Assembly)	.....	1	448 8518
70	(Clear-Used With Liftgate Window-Used With One Support) 40 ...(Incl. Chrome Frame And Hinge Assembly)	.....	1	~~812 0001~~
70	(Sunshade Tinted-Used With Liftgate Window-Used With One Support) 40 ...(Incl. Chrome Frame And Hinge Assembly)	.....	1	812 0002
71/	(Clear-Used With Liftgate Window) 40...(Incl. Chrome Frame And Hinge Assembly)	.....	1	~~812 0001~~
71/	(Sunshade Tinted-Used With Liftgate Window) 40...(Incl. Chrome Frame And Hinge Assembly)	.....	1	812 0002

25.028–2 SPACER, Rear Window Glass

70/	05-06	25.002	2	359 8623
71/	08	25.044	2	360 8480
68/	15-19-85-89	25.044	2	360 8480
68/	39-79 (.36" Thick)	25.002	2	359 8623
68	79 (.48" Thick)	25.002	2	362 3388

25.028–3 GLASS, Tailgate

67/69	(Clear)(B3150) 08	.....	1	358 2534
67/69	(Tinted)(B3150) 08	.....	1	358 2535
67/	(Clear)(B3710) 18-88	.....	1	357 5014
67/	(Tinted)(B3710) 18-88	.....	1	357 5015

25.028–4 PROTECTOR, Liftgate (Flange To Glass)

71/	08 (125" Long)	.....	1	365 0431

25.029–1 GLASS ASSEMBLY, Rear Quarter Window Lowering (Incl. Chrome Frame And Bottom Channel)

67	(Left-Clear) 07	.....	1	353 0911
67	(Left-Tinted) 07	.....	1	353 0913
67/69	(Left-Clear) 09	.....	1	358 3169
67/69	(Left-Tinted) 09	.....	1	358 3171
67	(Left-Clear) 16-86	.....	1	357 6301
67	(Left-Tinted) 16-86	.....	1	357 6303
67/68	(Left-Clear) 17-87	.....	1	357 6309
67/68	(Left-Tinted) 17-87	.....	1	357 6311
67/69	(Left-Clear) 19-89	.....	1	357 6305
67/69	(Left-Tinted) 19-89	.....	1	357 6307
70	(Left-Clear) 19-89	.....	1	361 5801
70	(Left-Tinted) 19-89	.....	1	361 5803
67	(Left-Clear) 59	.....	1	357 6367
67	(Left-Tinted) 59	.....	1	357 6369
68	(Left-Clear) 79	.....	1	360 1141
68	(Left-Tinted) 79	.....	1	360 1143
69	(Left-Clear) 79 (* 25-13)	.....	1	360 1141
69	(Left-Clear) 79 (* 25-14)	.....	1	448 6917
69	(Left-Tinted) 79 (* 25-13)	.....	1	360 1143
69	(Left-Tinted) 79 (* 25-14)	.....	1	448 6931
70	(Left-Clear) 79	.....	1	448 6917
71/	(Left-Clear) 79	.....	1	363 2421
70	(Left-Tinted) 79	.....	1	448 6931
71/	(Left-Tinted) 79	.....	1	363 2423

GLASS - CHANNELS

67	(Right-Clear) 07	.....	1	353 0910	
67	(Right-Tinted) 07	.....	1	353 0912	
67/69	(Right-Clear) 09	.....	1	358 3168	
67/69	(Right-Tinted) 09	.....	1	358 3170	
67	(Right-Clear) 16-86	.....	1	357 6300	
67	(Right-Tinted) 16-86	.....	1	357 6302	
67/68	(Right-Clear) 17-87	.....	1	357 6308	
67/69	(Right-Tinted) 17-87	.....	1	357 6310	
67/69	(Right-Clear) 19-89	.....	1	357 6304	
67/69	(Right-Tinted) 19-89	.....	1	357 6306	
70	(Right-Clear) 19-89	.....	1	361 5800	
70	(Right-Tinted) 19-89	.....	1	361 5802	
67	(Right-Clear) 59	.....	1	357 6366	
67	(Right-Tinted) 59	.....	1	357 6368	
68	(Right-Clear) 79	.....	1	360 1140	
68	(Right-Tinted) 79	.....	1	360 1142	
69	(Right-Clear) 79 (* 25-13)	.....	1	360 1140	
69	(Right-Clear) 79 (* 25-14)	.....	1	448 6916	
69	(Right-Tinted) 79 (* 25-13)	.....	1	360 1142	
69	(Right-Tinted) 79 (* 25-14)	.....	1	448 6930	
70	(Right-Clear) 79	.....	1	448 6916	
71/	(Right-Clear) 79	.....	1	363 2420	
70	(Right-Tinted) 79	.....	1	448 6930	
71/	(Right-Tinted) 79	.....	1	363 2422	

25.029–2 GUIDE, Rear Quarter Glass Channel (Front)

67	(Left) 07	.....	1	350 0999	
67/69	(Left) 09	.....	1	350 1183	
67/69	(Left) 16-19-59-86-89	.....	1	357 6071	
67/68	(Left) 17-87	.....	1	357 7271	
70/	(Left) 19-89	.....	1	361 5809	
68	(Left) 79	.....	1	360 1219	
69	(Left) 79 (* 25-16)	.....	1	360 1219	
69	(Left) 79 (* 25-17)	.....	1	448 6921	
70/71	(Left) 79	.....	1	448 6921	
72	(Left) 79	.....	1	366 1905	
67	(Right) 07	.....	1	350 0998	
67/69	(Right) 09	.....	1	350 1182	
67/69	(Right) 16-19-59-86-89	.....	1	357 6070	
67/68	(Right) 17-87	.....	1	357 7270	
70/	(Right) 19-89	.....	1	361 5808	
68	(Right) 79	.....	1	360 1218	
69	(Right) 79 (* 25-16)	.....	1	360 1218	
69	(Right) 79 (* 25-17)	.....	1	448 6920	
70/71	(Right) 79	.....	1	448 6920	
72	(Right) 79	.....	1	366 1904	

25.029–3 ATTACHING PARTS, Guide To Uniside Lower Bracket And Belt Rail

STUD, Adjusting	67/	(1/4"-20) 09-19-79-89	.....	2	400 1487	
STUD, Adjusting	67/69	(5/16"-24) 16-17-19-59-86-87-89	.....	4	400 2034	
STUD, Adjusting	70/	19-89	25.052	6	400 3643	
SCREW, Machine	67	07...(Less Washer)	17.602	4	G132255	NA
SCREW, Machine	67/69	07-09...(Incl. Washer)	23.040	8	400 0413	
SCREW, Machine	67/69	16-17-19-59-86-87-89	23.110	2	400 2203	
WASHER, Plain	67	07	17.814	8	G120392	NA
WASHER, Plain	67/69	16-17-19-59-86-87-89	17.814	4	G9416160	NA
NUT, Lock	67	07	17.412	4	G271172	
WASHER, Bite	67/69	09	.....	8	400 0690	
NUT, Lock	67/69	09	17.416	2	G273801	NA
NUT, Hexagon	67/	(5/16"-24) 19-89 (Washer Base)	12.001	6	400 0566	
NUT, Hexagon	68/	79 (Washer Base)	12.001	2	400 0566	
NUT, Jam	67/69	16-17-19-59-86-87-89	17.410	4	G124920	

Printed in U.S.A.

GLASS - CHANNELS

25.029–4 ATTACHING PARTS, Guide To Regulator Panel Reinforcement (Upper)

SCREW, Machine	68/69	79 (* 25–18)	25.052	2	400 2204	
SCREW, Machine	70/	79	25.052	2	400 2204	

25.029–5 BRACKET, Rear Quarter Glass Channel Guide

67/69	09	.....	2	358 4759	
67/69	17–87	.....	2	359 0979	
67/69	(Left) 07	.....	1	350 1033	
67/69	(Left) 16–19–59–86–89	.....	1	359 1023	
67/69	(Right) 07	.....	1	350 1032	
67/69	(Right) 16–19–59–86–89	.....	1	359 1022	

25.029–6 ATTACHING PARTS, Bracket To Uniside

SCREW, Machine	67	07	23.006	4	400 0318	
SCREW, Machine	67/69	09	23.040	2	400 0413	
SCREW, Machine	67/69	16–17–59–86–87 (5/8" Long) ***(Use 400 2203)***	23.056	2	400 1965	
SCREW, Machine	69	19–89 (5/8" Long)	23.110	2	400 2203	
WASHER, Bite	67	07	.....	4	400 0690	
NUT, Clinch	67/69	16–17–19–59–86–87–89	17.440	2	G9419939	NA

25.029–6a ATTACHING PARTS, Bracket To Guide Channel

SCREW, Machine	67/69	16–17–19–59–86–87–89	23.110	2	400 2203

25.029–7 GUIDE, Rear Quarter Window (Rear)(At Belt Rail)

67/69	(Left) 09	.....	1	350 1179	
67/69	(Right) 09	.....	1	350 1178	

25.029–8 ATTACHING PARTS, Guide To Belt Rail And Side Roof Rail

SCREW, Machine	67/69	09	23.040	4	400 0413	

25.029–9 ATTACHING PARTS, Guide To Bottom Channel Bracket

ROLLER	67/69	09	.....	2	350 1387	
SPRING	67/69	09	.....	2	350 1359	
SCREW, Machine	67/69	09	.....	2	400 0698	
NUT, Jam	67/69	09	17.410	2	G124818	

25.029–10 GUIDE, Rear Quarter Window (At Roof Rail)

67/69	09–16–19–59–86–89	.....	2	352 0899	
70/	19–89	.....	2	360 9656	

25.029–11 ATTACHING PARTS, Guide To Roof Rail

SCREW, Tapping	67/69	09–16–19–59–86–89	17.660	2	G161860	
SCREW, Tapping	70/	19–89	.....	2	400 1724	

25.029–12 BUMPER, Rear Quarter Window Anti-Rattle

67	07	.....	4	350 0989	

25.029–13 ATTACHING PARTS, Bumper To Window Bracket

SCREW, Machine	67	07	17.626	2	G443994	
NUT, Hexagon	67	07	17.412	2	G271169	

GLASS - CHANNELS

25.029–14 ATTACHING PARTS, Bumper To Guide

SHIM	67	07	.....	2	400 0873	
SCREW, Machine	67	07	17.626	2	G443994	
NUT, Hexagon	67	07	17.412	2	G271169	

25.029–15 SEAL, Rear Quarter Window Lowering (At Lock Pillar)

68/	79	.....	2	362 3449	
67/69	(Left) 07–09	.....	1	353 6009	
67/	(Left) 17–19–59–87–89	.....	1	357 6015	
67/69	(Right) 07–09	.....	1	353 6008	
67/	(Right) 17–19–59–87–89	.....	1	357 6014	

25.029–16 ATTACHING PARTS, Seal To Lock Pillar

SCREW, Tapping	67/69	07–09	17.610	2	G451271	NA
SCREW, Tapping	67/	17–19–59–87–89	17.669	8	G457002	NA
SCREW, Tapping	68	79	.....	8	400 3814	
NUT, Hexagon	67/69	07–09	17.412	2	G271171	NA
FASTENER, Button	68	79	23.013	8	400 0249	
FASTENER, Dome Head	69/	79	.....	8	400 3833	

25.029–17 SEAL, Rear Quarter Window Belt (Rear)

67/69	(Left) 09	.....	1	352 8289	
67/69	(Right) 09	.....	1	352 8288	

25.029–18 DEFLECTOR, Rear Quarter Window Water

67	59	.....	2	357 5789	
68/	79	.....	2	362 3178	

25.029–19 ATTACHING PARTS, Deflector To Belt Rail

CLIP	68	79 ***(Use 400 3563)***	26.036	2	400 2221	
FASTENER	70	79	25.054	2	400 0834	

25.029–20 WATERDAM, Rear Quarter Window

67/68	(Left) 17–87	.....	1	357 5315	
67/68	(Right) 17–87	.....	1	357 5314	

25.029–21 SLIDE, Rear Quarter Window Stabilizer Arm (On Bottom Channel)

67/69	16–17–19–59–86–87–89	.....	2	359 1005	

25.029–22 ATTACHING PARTS, Slide To Bottom Channel Stabilizer Arm

STUD	67/69	16–17–19–59–86–87–89	.....	2	359 1007	
WASHER	67/69	16–17–19–59–86–87–89	.....	2	359 1008	
NUT, Hexagon	67/69	16–17–19–59–86–87–89	17.412	2	G271184	NA

25.029–23 ROLLER, Rear Quarter Glass Bottom Channel To Guide

67/69	09	.....	2	448 2357	

25.029–24 ATTACHING PARTS, Roller To Channel Bracket

NUT, Jam	67/69	09	17.410	2	G124818	NA

GLASS - CHANNELS

25.030–1 CHANNEL, Front Door Lowering Glass Bottom

67/69	(Left) 05–08	.....	1	350 0797
67/69	(Left) 06	.....	1	350 0799
67/69	(Left) 07–09	.....	1	350 1157
67/	(Left) 15–18–85–88	.....	1	357 6145
67/69	(Left) 16–17–19–59–86–87–89	.....	1	357 6299
70/	(Left) 19–89	.....	1	448 7695
67/69	(Right) 05–08	.....	1	350 0796
67/69	(Right) 06	.....	1	350 0798
67/69	(Right) 07–09	.....	1	350 1156
67/	(Right) 15–18–85–88	.....	1	357 6144
67/69	(Right) 16–17–19–59–86–87–89	.....	1	357 6298
70/	(Right) 19–89	.....	1	448 7694

25.030–1a SLIDE, Front Door Window Bottom (Fastens To Lower Channel)

70/71	19–89 (Nylon)	.....	2	363 1334

25.030–1b ATTACHING PARTS, Window Bottom Slide To Channel

SCREW, Tapping 70/71	19–89	23.008	4	400 2065

25.030–2 SEALER, Front Door Lowering Glass Bottom Channel

67/69	01	25.030	2	351 9972
67/	10–50–80	25.030	2	357 6152

25.030–3 SLIDE, Front Door Lowering Glass Bottom Channel

67/69	07–09	.....	4	348 5850

25.030–4 GUIDE, Front Door Lowering Glass Bottom Channel (Front)

68/70	39–79	.....	2	360 1288

25.030–5 GUIDE, Front Door Lowering Glass Bottom Channel (Rear)

68/70	(Left) 39–79	.....	1	359 9197
68/70	(Right) 39–79	.....	1	359 9196

25.030–6 ATTACHING PARTS, Slide To Channel

SCREW, Machine 67/69	07–09	17.648	8	G187831 NA
SCREW, Machine 68/70	39–79	17.586	8	G155866 NA

25.030–7 ROLLER, Front Door Lowering Glass Bottom Channel (Rear)

68/70	(Inner) 39–79	.....	4	360 1245
68/70	(Outer) 39–79	.....	4	360 1267

25.030–8 ATTACHING PARTS, Roller To Bottom Channel

PIN 68/70	39–79	.....	4	360 1265
WASHER, Spring 68/70	39–79	.....	4	400 0324

25.030–9 FASTENER, Front Door Regulator

70/	01–46 (Regulator Arm To Window–Front)	.....	2	400 3707
70/	01–46 (Regulator Guide To Window–Rear)	.....	4	400 3706

GLASS - CHANNELS

25.030–10 ATTACHING PARTS, Fastener To Front Door Glass

WASHER, Wave	70/	01-46	.....	2	400 1834
SCREW, Shoulder	70/	01-46	.....	2	400 3705

25.030–11 GUIDE, Front Door Window Regulator Arm

70/	01-46		.....	2	363 1746

25.030–12 ATTACHING PARTS, Window Regulator Arm Guide To Glass (Rear)

SCREW	70/	01-46	.....	4	400 0738

25.030–13 BRACKET, Front Door Glass Retaining Outer (On Outer Door Panel)(Upper)

71/	79		.....	4	363 6862

25.030–14 ATTACHING PARTS, Front Door Glass Retaining Outer Bracket To Door Panel

SCREW, Tapping	71	79	.....	8	400 3590

25.030–15 BUTTON, Front Door Glass To Outer Retaining Bracket

71/	79 (Plastic)(On Outside Of Glass)		.....	4	363 6865

25.030–16 BRACKET, Front Door Glass Retaining (Inner)

71/	79 (Upper-Center And Rear-Attached To Door Inner Panel)		.....	4	363 6894
71/	79 (Lower-Front-Attached To Horizontal Door Brace)		.....	2	365 1056

25.030–17 ATTACHING PARTS, Retaining Bracket To Door Inner Panel

SCREW, Machine	71/	79 (To Upper-Center And Rear Bracket)	.....	4	400 1951
SCREW, Tapping	71/	79 (To Lower-Front Bracket)	2.050	2	400 0738

25.032–1 CHANNEL, Rear Door Lowering Glass Bottom

67/69	(Left) 05-08		.....	1	350 0801
67/	(Left) 15-18-85-88		.....	1	357 6147
67/69	(Right) 05-08		.....	1	350 0800
67/	(Right) 15-18-85-88		.....	1	357 6146

25.032–2 SEALER, Rear Door Lowering Glass Bottom Channel

67/69	05-08		25.030	2	351 9972
67/	15-18-85-88		25.030	2	357 6152

25.033–3 CHANNEL, Tailgate Glass Bottom

67/69	08 (LER)...(Less Slides)		.....	1	348 2288
67/69	08 (WER)...(Incl. Slides)		.....	1	349 0448
67/	18-88 (LER)...(Incl. Slides)		.....	1	357 5232
67/	18-88 (WER)...(Incl. Slides)		.....	1	357 5233

25.033–4 SEALER, Tailgate Glass Bottom Channel

67/69	08		.....	1	355 2868
67/	18-88		.....	1	357 5236

25.033–5 SLIDE, Tailgate Glass Bottom Channel

67/69	08 (LER)		.....	2	348 5847
67	08 (WER)		.....	2	349 0451
67/	18-88 (WER)		.....	2	357 5227

GLASS - CHANNELS

25.033–6 ATTACHING PARTS, Slide To Channel

SCREW, Machine.....	67/69	08 (LER).....	17.586	4	G456833	NA
SCREW, Machine.....	67/69	08 (WER).....	17.626	4	G425567	NA
SCREW, Machine.....	67/	18-88 (WER).....	17.626	4	G425565	NA

25.034–1 CHANNEL, Rear Quarter Lowering Glass Bottom

68/69	06.....	.....	2	362 3116
67	(Left) 06...(Less Slides).....	.....	1	348 2453
67	(Left) 07.....	.....	1	353 0915
67/69	(Left) 09.....	.....	1	358 5777
67	(Left) 16-86.....	.....	1	448 4691
67/69	(Left) 17-19-59-87-89.....	.....	1	448 4689
70/71	(Left) 19-89 (Bracket Assembly)...(Incl. Window Regulator Guide Channel-* 25-31).....	.....	1	361 5813
71/	(Left) 19-89 (Bracket Assembly)...(Incl. Window Regulator Guide Channel-* 25-32).....	.....	1	364 6869
68/70	(Left) 79.....	.....	1	320 8855
67	(Right) 06...(Less Slides).....	.....	1	348 2452
67	(Right) 07.....	.....	1	353 0914
67/69	(Right) 09.....	.....	1	358 5776
67	(Right) 16-86.....	.....	1	448 4690
67/69	(Right) 17-19-59-87-89.....	.....	1	448 4688
70/71	(Right) 19-89 (Bracket Assembly)...(Incl. Window Regulator Guide Channel-* 25-31).....	.....	1	361 5812
71/	(Right) 19-89 (Bracket Assembly)...(Incl. Window Regulator Guide Channel-* 25-32).....	.....	1	364 6868
68/70	(Right) 79.....	.....	1	320 8854

25.034–1a ATTACHING PARTS, Bottom Channel To Frame

SCREW, Tapping.....	69	06.....	17.666	4	G161645	NA

25.034–2 SEALER, Rear Quarter Lowering Glass Bottom Channel

67/69	06.....	25.030	2	351 9972

25.034–3 GUIDE, Rear Quarter Lowering Glass Bottom Channel

67	06.....	.....	4	348 5850
68/	79.....	.....	2	360 2256

25.034–4 ATTACHING PARTS, Guide To Channel

SCREW, Machine.....	67	06.....	17.586	8	G456833	NA
SCREW, Machine.....	68/	79.....	17.586	4	G155877	NA

25.034–5 PAD, Rear Quarter Window Lower Bracket

70/	19-89 (Rubber)(10" Long).....	25.034	2	361 5814

25.034–6 ROLLER, Rear Quarter Window Guide

70/	19-89 (Plastic)(Front Rear And Lower).....	25.029	6	361 5816

25.034–7 BOLT, Rear Quarter Window Guide

70/	(Front) 19-89.....	25.029	2	361 5817
70/	(Rear-Lower) 19-89.....	25.029	4	361 5818

GLASS - CHANNELS

25.034–8 SPRING, Rear Quarter Window Guide Front Roller

70/	19–89	25.029	2	361	5819

25.034–9 BUSHING, Rear Quarter Window Guide Roller

70/	19–89 (Nylon)	25.029	6	361	5821

25.034–10 SPACER, Rear Quarter Window Guide Roller

70/	19–89 (Steel–Between Pad And Roller On Lower Roller)	25.029	2	361	5822

25.034–11 PAD, Rear Quarter Window Lower Guide Roller Spacer

70/	19–89 (Rubber–1–5/8" Dia.)	25.029	2	361	5823

25.034–12 NUT, Rear Quarter Window Guide Roller

70/	19–89	25.029	6	361	5820

25.036–1 CHANNEL, Front Door Lowering Glass Slide (Top And Rear)

67/69	05–08	.....	2	448	2003
70/71	05–08 (104" Long)	.....	2	361	6686
72	05–08 (111" Long)	.....	2	366	1903
67/69	06	.....	2	448	2002
70/	06–46 (119–1/4" Long)	.....	2	361	6685
72	06–46 (127–1/4" Long)	.....	2	365	1578
67/	15–18–85–88	.....	2	357	6154
67/69	(Left) 07–09	.....	1	350	1127
67	(Left) 16–17–19–59–86–87–89 (* 25–5)	.....	1	357	6283
67	(Left) 16–17–19–59–86–87–89 (* 25–6)	25.052	1	359	1137
68/70	(Left) 17–19–89	25.052	1	359	1137
71	(Left) 19–89 (* 25–29)	25.052	1	359	1137
71	(Left) 19–89 (* 25–30)	25.052	1	364	6891
72	(Left) 19–89	25.052	1	364	6891
67/69	(Right) 07–09	.....	1	350	1126
67	(Right) 16–17–19–59–86–87–89 (* 25–5)	.....	1	357	6282
67	(Right) 16–17–19–59–86–87–89 (* 25–6)	25.052	1	359	1136
68/70	(Right) 17–19–89	25.052	1	359	1136
71	(Right) 19–89 (* 25–29)	25.052	1	359	1136
71	(Right) 19–89 (* 25–30)	25.052	1	364	6890
72	(Right) 19–89	25.052	1	364	6890

25.036–2 ATTACHING PARTS, Channel To Door

SCREW, Tapping.....	67/69	07–09	25.054	4	400	0658
SCREW, Tapping.....	67/68	16–17–19–59–86–87–89	25.054	2	400	1951
SCREW, Tapping.....	69/	19–89	23.110	2	400	2203

25.036–3 SHIM STOCK, Front Door Lowering Glass Slide Channel Plastic (50 Ft. Roll)

67/	01–10–50–80	23.124	AR	447	9906

25.038 CHANNEL, Rear Door Lowering Glass Slide (Top And Sides)

67/69	05–08	.....	2	448	2004
70/	05–08	.....	2	361	6688
67/69	15–18–85–88	.....	2	357	6155
70/	15–85	.....	2	361	6170
70/	18–88	.....	2	357	6155

25.038–1 BRACKET, Rear Door Glass Retaining

69	*18 (Post Office-Holds Window In "Up" Position)*	.....	4	360	9412

GLASS - CHANNELS

25.038–2 ATTACHING PARTS, Glass Retaining Bracket

PLATE, Tapping	*69*	*18 (Post Office)*	.....	4	400 3094
SCREW, Tapping	*69*	*18 (Post Office)*	.....	8	400 2203

25.039–1 CHANNEL, Tailgate Glass Slide Lower (In Tailgate)

67/69	(Left) 08	.....	1	358 2533
67/68	(Left) 18–88	.....	1	357 6499
69/	(Left) 18–88	.....	1	361 4363
67/69	(Right) 08	.....	1	358 2532
67/68	(Right) 18–88	.....	1	357 6498
69/	(Right) 18–88	.....	1	361 4362

25.039–2 CHANNEL, Tailgate Glass Slide Upper Center (On Body)

67/69	08	.....	1	354 2408
67	18–88 (* 25–7)	.....	1	357 6040
67	18–88 (* 25–8)	.....	1	358 6727
68/	18–88	.....	1	358 6727

25.039–3 CHANNEL, Tailgate Glass Slide Upper Side (On Body)

67/69	(Left) 08	.....	1	350 9459
67	(Left) 18–88 (* 25–7)	.....	1	357 6029
67/69	(Right) 08	.....	1	350 9458
67	(Right) 18–88 (* 25–7)	.....	1	357 6028
67	18–88 (* 25–8)	.....	2	358 6730
68/70	18–88	.....	2	358 6730

25.039–4 ATTACHING PARTS, Channel To Tailgate

SCREW, Machine	67/69	08	.....	4	400 0648
SCREW, Machine	67/	18–88	23.008	4	400 0033
NUT, Speed	67/69	08	.....	2	400 0543
NUT, Lock	69/	18–88	.....	2	400 3587

25.039–5 ATTACHING PARTS, Channel To Body

SCREW, Tapping	67/69	08 (3/4" Long)	17.655	9	G168496
SCREW, Tapping	67/69	08 (1/2" Long)	17.660	6	G161860
SCREW, Tapping	67	18–88 (* 25–7)	.....	9	400 2100
SCREW, Tapping	68	18–88	.....	9	400 1922
SCREW, Tapping	69/	18–88	20.280	7	400 1724

25.039–6 RETAINER, Tailgate Glass Slide Channel Upper (On Roof Line)

67/	18–88	.....	1	358 6726

25.039–7 RETAINER, Tailgate Glass Slide Channel Side (On Body Pillar)

67/69	(Left) 18–88	.....	1	358 6729
67/69	(Right) 18–88	.....	1	358 6728

25.039–8 ATTACHING PARTS, Retainer To Body (Upper And Side)

SCREW, Tapping	67/69	18–88	.....	9	400 2100

25.039–9 WEATHERSTRIP, Tailgate Window Slide Upper - Inner (On Side Pillar)

67/	(Left) 18–88	.....	1	358 6733
67/	(Right) 18–88	.....	1	358 6732

GLASS - CHANNELS

25.039–10 WEATHERSTRIP, Tailgate Window Slide Upper - Outer (On Side Pillar)

67/	(Left) 18–88	.....	.....	1	358 6735
67/	(Right) 18–88	.....	.....	1	358 6734

25.040–1 CHANNEL, Rear Quarter Lowering Glass Slide (Rear)

67/69	06	.....	.....	2	352 2680
67	(Left) 07	.....	.....	1	353 0617
68	(Left) 79	.....	.....	1	360 2269
69	(Left) 79	.....	.....	1	360 2269
67	(Right) 07	.....	.....	1	353 0616
68	(Right) 79	.....	.....	1	360 2268
69	(Right) 79	.....	.....	1	360 2268

25.040–2 ATTACHING PARTS, Channel To Belt Rail

WASHER, Plain	67	07	.....	17.814	2	400 1081
NUT, Stamped	67	07	.....	17.428	2	G441256 NA

25.040–3 ATTACHING PARTS, Channel To Inner Panel (Lower)

SCREW, Tapping	67	07	.....	3.165	2	400 0478
WASHER, Lock	67	07	.....	17.826	2	G178388 NA
NUT, Spring	67	07	.....	17.426	2	G445446

25.040–4 ATTACHING PARTS, Slide Channel To Front Guide Support

SCREW, Machine	68	79	.....	23.110	2	400 2203
SCREW, Machine	69	79 (* 25–18)	.....	23.110	2	400 2203

25.040–4a ATTACHING PARTS, Slide Channel To Mounting Bracket

SCREW, Machine	68	79	.....	23.110	2	400 2203
SCREW, Machine	69	79 (* 25–18)	.....	23.110	2	400 2203

25.040–5 RETAINER, Rear Quarter Lowering Glass Slide Channel Front

67	(Left) 06	.....	.....	1	350 9069
67	(Right) 06	.....	.....	1	350 9068

25.040–6 RETAINER, Rear Quarter Lowering Glass Slide Channel Rear

67	(Left) 06	.....	.....	1	350 9073
67	(Right) 06	.....	.....	1	350 9072

25.040–7 ATTACHING PARTS, Retainer To Body

SCREW, Tapping	67	06	.....	17.660	4	G161895

25.040–8 BRACKET, Rear Quarter Lowering Glass Slide Channel Mounting

68/69	79 (* 25–18)	.....	.....	2	360 2275

25.040–9 ATTACHING PARTS, Bracket To Regulator Panel

SCREW, Machine	68	79	.....	23.110	2	400 2203
SCREW, Machine	69	79 (* 25–18)	.....	23.110	2	400 2203

25.042 CHANNEL, Rear Quarter Window Stationary Glass

67/68	(Left) 08 (220)	.....	.....	1	350 0869
67/69	(Left) 08 (440)	.....	.....	1	350 0583
67/	(Left) 18–88	.....	.....	1	357 5215

GLASS - CHANNELS

67/68	(Right) 08 (220)	.....	1	350 0868
67/69	(Right) 08 (440)	.....	1	350 0582
67/	(Right) 18-88	.....	1	357 5214

25.043 CHANNEL, Rear Door Window Stationary Glass

67/69	(Left) 05-08	.....	1	348 2377
67/69	(Right) 05-08	.....	1	348 2376

25.044-1 CHANNEL, Rear Window Glass (For Butyl Installation See 25.044-2)

67	05-06	.....	1	350 0592
68/69	05-06 (220)	.....	1	362 3108
68/69	05-06 (440)	.....	1	360 0852
70	05-06	.....	1	361 5699
67/69	09	.....	1	350 1042
67	15-85	.....	1	358 6510
67	16-19-86-89	.....	1	358 6512
70/	40 (Less Liftgate Window)	.....	1	363 6094
67	59	.....	1	358 6521

25.044-2 KIT, Rear Window Glass Installation (Incl. Butyl Tape And Primer)

70/	01	25.002	1	448 4920
68/	10-30-70-80	25.002	1	448 4920

25.044-3 SPACER, Rear Window Glass

67	15-16-19-85-86-89	.....	2	360 8202
68/	15-19-85-89	25.028	2	360 8480
68/	39-79	25.002	2	359 8623

25.048-1 FRAME, Rear Quarter Window Glass Upper

67	(Left) 07	.....	1	350 1131
67/69	(Left) 09	.....	1	350 1199
67	(Right) 07	.....	1	350 1130
67/69	(Right) 09	.....	1	350 1198

25.048-2 FRAME, Rear Quarter Window Glass Upper Front

67	(Left) 16-86	.....	1	357 5989
67/68	(Left) 17-87	.....	1	357 6905
67/69	(Left) 19-89	.....	1	357 7503
67	(Left) 59	.....	1	357 7499
67	(Right) 16-86	.....	1	357 5988
67/68	(Right) 17-87	.....	1	357 6904
67/69	(Right) 19-89	.....	1	357 7502
67	(Right) 59	.....	1	357 7498

25.048-3 FRAME, Rear Quarter Window Glass Lower Rear

67/69	(Left) 16-19-86-89	.....	1	357 7515
67/68	(Left) 17-87	.....	1	357 6909
67	(Left) 59	.....	1	357 7519
67/69	(Right) 16-19-86-89	.....	1	357 7514
67/68	(Right) 17-87	.....	1	357 6908
67	(Right) 59	.....	1	357 7518

25.048-4 ATTACHING PARTS, Frame (Front) To Frame (Rear)

SCREW, Machine	67/69	16-17-19-59-86-87-89	.....	23.114	2	400 0042

GLASS - CHANNELS

25.048–5 ATTACHING PARTS, Frame To Bottom Channel

SCREW, Machine	67/69	07–09	23.114	6	400 0042	
SCREW, Tapping	67/69	(5/16" Long) 16–17–19–59–86–87–89	17.586	6	G9411436	NA
SCREW, Tapping	67/69	(7/16" Long) 16–17–19–86–89	17.660	2	G9416323	NA

25.048–6 RETAINER, Rear Quarter Window Glass Weatherstrip

70/	(Left) 19–89	.....	1	363 1633
68/70	(Left) 39	.....	1	362 3963
68/70	(Left) 79	.....	1	360 1147
71/	(Left) 79	.....	1	363 2415
70/	(Right) 19–89	.....	1	363 1632
68/70	(Right) 39	.....	1	362 3962
68/70	(Right) 79	.....	1	360 1146
71/	(Right) 79	.....	1	363 2414

25.048–7 ATTACHING PARTS, Retainer To Body

SCREW, Tapping	68/70	39	.....	4	400 3837

25.050–1 FRAME, Front Door Lowering Glass

67/69	(Left) 07–09	.....	1	353 0815
67	(Left) 16–17–19–59–86–87–89 (* 25–3)	.....	1	357 6297
67	(Left) 16–17–19–59–86–87–89 (* 25–4)	.....	1	360 2745
68/69	(Left) 17–19–89	.....	1	360 2745
67/69	(Right) 07–09	.....	1	353 0814
67	(Right) 16–17–19–59–86–87–89 (* 25–3)	.....	1	357 6296
67	(Right) 16–17–19–59–86–87–89 (* 25–4)	.....	1	360 2744
68/69	(Right) 17–19–89	.....	1	360 2744

25.050–2 ATTACHING PARTS, Frame To Bottom Channel

SCREW, Tapping	67/69	07–09	17.648	4	G162653	NA
SCREW, Tapping	67/69	16–17–19–59–86–87–89	23.008	4	400 2065	

25.052–1 GUIDE, Front Door Glass Channel

67/69	07–09	.....	2	350 1465
67/	15–18–85–88	.....	2	357 6352
70/71	(Left) 01–46 (Front)	.....	1	363 1363
72	(Left) 01–46 (Front)	.....	1	363 1363
72	(Left) 06–46 (Rear–Lower Extension)	.....	1	365 1547
72	(Left) 05–08 (Rear–Lower Extension)	.....	1	366 1901
67	(Left) 16–17–19–59–86–89 (* 25–9)	.....	1	357 6435
67	(Left) 16–17–19–59–86–87–89 (* 25–10)	25.036	1	359 1137
68/70	(Left) 17–19–89	25.036	1	359 1137
71	(Left) 19–89 (* 25–29)	25.036	1	359 1137
71	(Left) 19–89 (* 25–30)	.....	1	364 6891
72	(Left) 19–89	.....	1	364 6891
70/71	(Right) 01–46 (Front)	.....	1	363 1362
72	(Right) 01–46 (Front)	.....	1	363 1362
72	(Right) 06–46 (Rear–Lower Extension)	.....	1	365 1546
72	(Right) 05–08 (Rear–Lower Extension)	.....	1	366 1900
67	(Right) 16–17–19–59–86–87–89 (* 25–9)	.....	1	357 6434
67	(Right) 16–17–19–59–86–87–89 (* 25–10)	25.036	1	359 1136
68/70	(Right) 17–19–89	25.036	1	359 1136
71	(Right) 19–89 (* 25–29)	25.036	1	359 1136
71	(Right) 19–89 (* 25–30)	.....	1	364 6890
72	(Right) 19–89	.....	1	364 6890

25.052–2 GUIDE, Front Door Glass Channel Front (Support)

68	(Left) 39–79	.....	1	360 2097
69/70	(Left) 39–79	.....	1	363 0781
68	(Right) 39–79	.....	1	360 2096
69/70	(Right) 39–79	.....	1	363 0780

Printed in U.S.A.

GLASS - CHANNELS

25.052–2a TUBE, Front Door Window Guide

71/	79 (19-7/8" Long) ...(Incl. Upper Bracket)	.....	2	363 6859

25.052–2b BRACKET, Front Door Window Guide Tube (Lower)

71/	(Left) 79 (To Door Inner Panel)	.....	1	363 6893
71/	(Right) 79 (To Door Inner Panel)	.....	1	363 6892

25.052–2c ATTACHING PARTS, Front Door Window Guide Tube And Bracket To Door

SCREW, Machine 71/	79...(Incl. Washer)	.....	6	400 1951

25.052–2d PLATE ASSEMBLY, Door Window Guide (Upper)(Attaches To Glass)

71/	(Left) 79	.....	1	363 6903
71/	(Right) 79	.....	1	363 6902

25.052–2e GUIDE ASSEMBLY, Door Window Lower (Bottom Section Of Guide Plate)

71/	79	.....	2	363 6908

25.052–2f SPACER, Door Window Upper Guide

71	79 (Plastic)(Upper-Positioned At Angle)	.....	4	365 1053
71	79 (Plastic)(Lower-Positioned Straight)	.....	4	363 6907
72	79 (Plastic)(Upper)	.....	4	365 1054

25.052–2g ATTACHING PARTS, Guide Assembly (Lower) To Plate Assembly

SCREW, Machine	71/	79 (1/4"-20 x 3/4")	23.110	4	400 2203

25.052–3 GUIDE, Front Door Glass Channel Rear (Support)

68	39-79 (* 25-11) ***(Ref. Pr. List)***	.....	2	360 2098
68	(Left) 39-79 (* 25-12)	.....	1	362 3441
69/70	(Left) 39-79	.....	1	363 0709
68	(Right) 39-79 (* 25-12)	.....	1	362 3440
69/70	(Right) 39-79	.....	1	363 0708

25.052–4 ATTACHING PARTS, Front Door Glass Guide To Channel

SCREW, Tapping	70/	01-46 (To Upper Bracket)	13.510	2	400 2457
SCREW, Tapping	72	01-46 (To Door Inner Panel-Lower Rear)	.....	2	400 2204
STUD, Adjusting	70/	01-46 (To Door Inner Panel-Lower)	.....	2	400 4103
NUT, Hexagon	70/	01-46 (To Door Inner Panel)	.....	2	400 0566
STUD	67/69	07-09	23.124	2	400 1439
SCREW, Machine	67/69	07-09	23.098	2	400 0137
WASHER, Lock	67/69	07-09	17.826	2	G173124
NUT, Hexagon	67/69	07-09	17.406	2	G120375

25.052–5 ATTACHING PARTS, Guide To Bottom Channel

SCREW, Tapping	67/69	10-50-80 (1/2" Long)	25.054	4	400 1951
SCREW, Tapping	69	10-80 (5/8" Long)	23.110	4	400 2203

25.052–6 ATTACHING PARTS, Front Guide To Door

STUD	68	39-79 (1-13/16" Long)	.....	2	400 1487
STUD	68	39-79 (2-13/16" Long)	.....	2	400 3876
STUD	69/70	39-79	.....	2	400 3876
SCREW, Machine	68/70	39-79	25.054	8	400 1951
NUT, Hexagon	68/70	39-79	12.001	2	400 0566
NUT, Hexagon	69/70	39-79	.....	2	400 3853
SPRING	68/70	39-79	.....	4	362 4789

Printed in U.S.A.

GLASS - CHANNELS

25.052–7 ATTACHING PARTS, Rear Guide To Door (Upper)

SCREW, Machine	68/70	39–79	.....	4	400 2204

25.052–8 ATTACHING PARTS, Rear Guide To Door (Lower)

SCREW, Machine	68/70	39–79	.....	4	400 2204

25.052–9 GLIDE, Front Door Lowering Glass (On Front Bottom Channel)

68	39–79 ***(Use 630 3063)***	.....	2	360 2010
69/70	39–79...(Incl. Screw, Washer And Nut)	.....	2	630 4281

25.052–10 ATTACHING PARTS, Glide To Bottom Channel

BOLT, Hexagon	68	39–79	17.626	2	G9415800 NA
WASHER, Rectangular	69/70	39–79	.....	2	400 3923
NUT, Hexagon	69	39–79 (Non-Serrated)	.....	2	400 2290
NUT, Hexagon	69/70	39–79 (Serrated)	17.417	2	G273801 NA
NUT, Hexagon	68	39–79	25.052	2	400 2251
NUT, Hexagon	68	39–79	17.406	2	G120375

25.052–11 GUIDE, Rear Door Glass Channel

67/	15–18–85–88	.....	2	357 6358

25.052–11a CHANNEL ASSEMBLY, Rear Door Window Guide (Rear)

70/	05–08	.....	2	363 1370

25.052–11b PLATE ASSEMBLY, Rear Door Window Guide Roller Mounting (Incl. Rollers)

70/	05–08	.....	2	363 1377

25.052–11c ATTACHING PARTS, Rear Door Window Guide Channel To Door Inner Panel

SCREW, Machine	70/	05–08 (Upper)...(Incl. Washer)	23.098	2	400 2028
STUD	70/	05–08 (Lower)	.....	2	400 3643
NUT, Hexagon	70/	05–08 (Lower)	12.001	2	400 0566

25.052–11d ATTACHING PARTS, Plate Assembly To Rear Door Glass Bottom Channel

SCREW, Machine	70/	05–08 (5/8" Long)	23.098	4	400 2028

25.052–12 ATTACHING PARTS, Guide To Bottom Channel

SCREW, Tapping	67/68	15–18–85–88	25.054	2	400 1951
SCREW, Tapping	69/	15–18–85–88	23.110	2	400 2203

25.052–13 BRACKET, Front Door Window Guide Channel (Upper)

69/70	39–79	.....	2	363 0705
67	(Left) 16–17–19–59–86–87–89 (* 25–9)	.....	1	359 0919
67	(Left) 16–17–19–59–86–87–89 (* 25–10)	.....	1	359 1129
68/69	(Left) 17–19–89	.....	1	359 1129
70/	(Left) 19–89	.....	1	360 8711
67	(Right) 16–17–19–59–86–87–89 (* 25–9)	.....	1	359 0918
67	(Right) 16–17–19–59–86–87–89 (*25–10)	.....	1	359 1128
68/69	(Right) 17–19–89	.....	1	359 1128
70/	(Right) 19–89	.....	1	360 8710

Printed in U.S.A.

GLASS - CHANNELS

25.052–14 BRACKET, Front Door Window Guide Channel (Lower)

67	16-17-19-59-86-87-89 (* 25-9)	.....	2	359	0906
68	39-79	.....	2	360	2015
69/70	39-79	.....	2	363	0705
67	(Left) 16-17-19-59-86-87-89 (* 25-10)	.....	1	359	1135
68/	(Left) 17-19-89	.....	1	359	1135
67	(Right) 16-17-19-59-86-87-89 (* 25-11)	.....	1	359	1134
68/	(Right) 17-19-89	.....	1	359	1134

25.052–15 ATTACHING PARTS, Bracket To Inner Panel

SCREW, Machine	68	39-79 ..... ***(Use 400 2203)***	23.056	4	400	1965
SCREW, Machine	69	39-79	.....	8	400	2204
SCREW, Machine	67/68	16-17-19-59-86-87-89	.....	4	400	2204
SCREW, Machine	69/	19-89 (3/8" Long)	23.098	2	400	2028
SCREW, Machine	69/	19-89 (5/8" Long)	23.110	AR	400	2203

25.052–16 PLUG, Front Door Inner Panel Rear Access Hole

69/70	39-79	.....	4	400	3913

25.054–1 BUMPER, Front Door Glass Stop Bottom (On Bottom Channel)

67/69	07-09	20.450	2	400	0313

25.054–2 BUMPER, Front Door Glass Down Stop Bottom (On Inner Panel Bracket)

67/	.....	23.019	2	434	8105
71/	79 (Rubber)	.....	2	363	6891

25.054–2a BUMPER, Front Door Glass Anti-Rattle (On Door Horizontal–On Outer Panel)

71	79 (Rubber-Black)	23.019	2	400	2299
71/	79 (Rubber-Grey)(.84" Dia.)	.....	2	400	4428
72	79 (Rubber)(1.25" Dia.)	.....	2	363	6891

25.054–3 BUMPER, Front Door Glass Stop Upper (On Division Channel)

67	16-17-19-59-86-87-89 (* 25-4) ..... ***(Ord. 360 8594, 360 8595)***	.....	2	360	2742
68	17-19-89 ..... ***(Ord. 360 8594, 360 8595)***	.....	2	360	2742
70/	19-89	.....	2	360	9524
67/69	(Left) 07-09	.....	1	350	9509
67	(Left) 16-17-19-59-86-87-89 (* 25-3)	.....	1	357	6387
69	(Left) 19-89	.....	1	360	8595
67/69	(Right) 07-09	.....	1	350	9508
67	(Right) 16-17-19-59-86-87-89 (* 25-3)	.....	1	357	6386
69	(Right) 19-89	.....	1	360	8594

25.054–4 BUMPER, Front Door Glass Up-Stop (On Up-Stop)

68/70	39-79	20.450	2	400	0313

25.054–5 ATTACHING PARTS, Bumper To Channel

RIVET	67/68	07-09	.....	2	448	1389
RIVET	67/	16-17-19-59-86-87-89	.....	2	448	4126

25.054–6 BRACKET, Front Door Glass Bottom Channel Stop

67/69	07-09	.....	2	353	0820
67/	16-17-19-59-86-87-89	23.125	2	359	0949

GLASS - CHANNELS

25.054–7 STOP, Front Door Glass Regulator (Down)

70/	01–46 (Attaches To Regulator Assembly) ***(Ref. Pr. List)***	.....	2	365 0441	
67/	15–18–85–88	.....	2	357 5440	
67/68	16–17–19–59–86–87–89	.....	2	359 0944	
69/	19–89	.....	2	360 8712	
68/70	39–79 (To Welded Bracket On Inner Panel)	.....	2	360 1310	
71/	79 (On Inner Panel–Lower Center)	.....	2	363 6890	

25.054–8 ATTACHING PARTS, Down-Stop To Door Inner Panel

NUT, Lock	70/	01–46 (Serrated)	17.417	2	G273801	NA
SCREW, Tapping	67/68	15–18–85–88	.....	4	400 1951	
SCREW, Machine	69/	15–18–85–88	23.110	2	400 2203	
SCREW, Machine	69	19–89	23.098	2	400 2028	
SCREW, Machine	70/	19–89	23.110	2	400 2203	
SCREW, Machine	68/70	39–79 (To Welded Bracket)	23.110	4	400 2203	
SCREW, Machine	71/	79	23.110	2	400 2203	
NUT, Clinch	67/	15–18–85–88	17.440	4	G9419939	NA

25.054–9 STOP, Front Door Glass Front Guide Channel (Up)

69/70	39–79	.....	2	363 0728
68	(Left) 39–79	.....	1	360 1307
71/	(Left) 79 (Front–On Glass)	.....	1	363 6969
71/	(Left) 79 (Front–On Door)	.....	1	363 6967
68	(Right) 39–79	.....	1	360 1306
71/	(Right) 79 (Front–On Glass)	.....	1	363 6968
71/	(Right) 79 (Front–On Door)	.....	1	363 6966

25.054–10 STOP, Front Door Glass Rear Guide Channel (Up)

67/68	16–17–19–59–86–89	.....	2	357 5432
69/	19–89	.....	2	360 8713
68	39–79	.....	2	360 1296
71/	79 (Rear–On Door)	.....	2	365 0876
71/	79 (Rear–On Glass)	.....	2	363 6964
69/70	(Left) 39–79	.....	1	363 0713
69/70	(Right) 39–79	.....	1	363 0712

25.054–11 ATTACHING PARTS, Up-Stop To Rear Guide Channel

SCREW, Tapping	67/68	16–17–19–59–86–87–89	.....	2	400 1951
SCREW, Machine	69/	19–89	23.110	2	400 2028
SCREW, Tapping	69/70	39–79	23.110	2	400 2203
SCREW, Machine	71/	79	.....	2	400 1951

25.054–12 ATTACHING PARTS, Down-Stop To Glass Bottom Channel

SCREW, Machine	67/69	07–09	17.598	4	G271113 NA
SCREW, Machine	69/	19–89	23.110	2	400 2203
SCREW, Tapping	67/68	16–17–19–59–86–87–89	.....	2	400 1951

25.054–14 ATTACHING PARTS, Up-Stop To Front Guide

SCREW, Machine	68/70	39–79 (1/2" Long)	.....	2	400 1951
SCREW, Machine	69	39–79 (5/8" Long)	23.110	2	400 2203
SCREW, Machine	71/	79	23.110	2	400 2203

25.054–16 BRACKET, Rear Door Glass Stop

67/	15–18–85–88 (On Door Inner Panel)	.....	2	357 5440

Printed in U.S.A.

GLASS - CHANNELS

25.054–17 ATTACHING PARTS, Stop To Rear Door Inner Panel

SCREW, Tapping	67/68	15-18-85-88	.....	4	400 1951	
SCREW, Machine	69/	15-18-85-88	23.110	4	400 2203	
NUT, Clinch	67/	15-18-85-88	17.440	4	G9419939	NA

25.054–18 STOP, Rear Quarter Glass Upper Front

68/	79	.....	2	360 1182
67/69	(Left) 17-19-59-87-89	.....	1	357 6045
67/69	(Right) 17-19-59-87-89	.....	1	357 6044

25.054–19 STOP, Rear Quarter Glass Upper Rear (Up)

67/69	16-19-59-86-89	.....	2	359 1010
67/68	17-87	.....	2	359 1011
70/71	19-89 (* 25-33)	.....	2	361 5827
71	19-89 (* 25-34)	.....	2	364 6876
72	19-89	.....	2	364 6876
69	79 (* 25-19)	.....	2	363 0816
70/	79	.....	2	363 0816
68	(Left) 79	.....	1	360 1185
69	(Left) 79 (* 25-18)	.....	1	360 1185
68	(Right) 79	.....	1	360 1184
69	(Right) 79 (* 25-18)	.....	1	360 1184

25.054–20 STOP, Rear Quarter Glass Lower Front (Down)

67/69	16-17-19-59-79-86-87-89	.....	2	357 6096
70/	19-89	.....	2	361 5824
70/	79	.....	2	357 6096
67	(Left) 07	.....	1	352 8613
67	(Right) 07	.....	1	352 8612

25.054–21 ATTACHING PARTS, Stop To Support

SCREW, Machine	67/69	16-17-19-59-86-87-89 ...(Incl. Washer)	23.110	2	400 2203
NUT, Retainer	67/69	16-17-19-59-86-87-89	.....	2	400 1946

25.054–22 ATTACHING PARTS, Front Stop To Uniside

SCREW, Machine	67/69	17-19-59-87-89	17.610	4	G157728 NA

25.054–23 ATTACHING PARTS, Rear Stop To Uniside

SCREW, Machine	67/68	16-17-19-59-86-87-89	.....	4	400 1951
SCREW, Machine	69	19-89 ...(Incl. Washer)	23.110	4	400 2203
NUT, Clinch	67/69	19-89	17.440	2	G9419939 NA
WASHER, Bite	69	19-89 (1")(Between Stop And Inner Panel)	25.029	2	400 0690

25.054-24 ATTACHING PARTS, Front Stop To Guide (Upper)

NUT, Retainer	68/	79	.....	2	400 2233
NUT, Jam	68/	79	17.410	2	G124818 NA

25.054–24a ATTACHING PARTS, Rear Stop To Slide Channel

SCREW, Machine	68/	79 (* 25-18) ...(Incl. Washer)	23.110	2	400 2203

25.054–24b ATTACHING PARTS, Rear Stop To Regulator Panel

SCREW, Machine	69	79 (* 25-18)	23.110	2	400 2203
SCREW, Machine	69	79 (* 25-19) ***(Use 400 2203)***	23.056	2	400 1965
SCREW, Machine	70/	79 ***(Use 400 2203)***	23.056	2	400 1965

GLASS - CHANNELS

25.054-25 ATTACHING PARTS, Front Stop To Guide (Lower)

SCREW, Machine	67	07	.....	4	400 0658
SCREW, Machine	68/	79 ...(Incl. Washer)	23.110	2	400 2203
SCREW, Machine	67/69	16-17-19-59-86-87-89 ***(Use 400 2203)***	.....	2	400 1965
SCREW, Machine	70/	19-89	23.110	4	400 2203

25.054-26 BUMPER, Rear Quarter Window

67/69	09	.....	2	350 0826

25.054-27 ATTACHING PARTS, Bumper To Panel

FASTENER	67/69	09	.....	2	400 0834

25.054-27a BRACKET, Rear Quarter Window Up-Stop Mounting

71/	(Left) 19-89	.....	1	364 6875
71/	(Right) 19-89	.....	1	364 6874

25.054-28 BUMPER, Rear Door Glass Stop

67/	15-18-85-88 (On Bracket-Lower)	23.019	2	434 8105

25.055 WEATHERSTRIP, Front Door Glass (Inner)

67/68	05-08 ***(Use 362 3030)***	.....	2	348 7830
69	05-08	.....	2	362 3030
70/	05-08 ***(Use 362 3029)***	.....	2	363 1387
67/68	06-07-09	.....	2	348 2357
69	06-09	.....	2	362 3029
70/	06-46	.....	2	363 1386
68/70	39-79	.....	1	360 1322
67/70	(Left) 15-18-85-88	.....	1	357 5615
71	(Left) 15-18-85-88 (* 25-26)	.....	1	357 5615
71	(Left) 15-18-85-88 (* 25-28)	.....	1	365 1517
72	(Left) 15-18-85-88	.....	1	365 1517
67/70	(Left) 16-17-19-59-86-87-89	.....	1	357 5627
71	(Left) 19-89 (* 25-26)	.....	1	357 5627
71	(Left) 19-89 (* 25-28)	.....	1	365 1519
72	(Left) 19-89	.....	1	365 1519
71/	(Left) 79	.....	1	363 3175
67/70	(Right) 15-18-85-88	.....	1	357 5614
71	(Right) 15-18-85-88 (* 25-26)	.....	1	357 5614
71	(Right) 15-18-85-88 (* 25-28)	.....	1	365 1516
72	(Right) 15-18-85-88	.....	1	365 1516
67/70	(Right) 16-17-19-59-86-87-89	.....	1	357 5626
71	(Right) 19-89 (* 25-26)	.....	1	357 5626
71	(Right) 19-89 (* 25-28)	.....	1	365 1518
72	(Right) 19-89	.....	1	365 1518
71/	(Right) 79	.....	1	363 3174

25.056 WEATHERSTRIP, Rear Door Glass (Inner)

67/68	05-08 ***(Use 362 3028)***	.....	2	348 2354
69	05-08	.....	2	362 3028
70	18-88	.....	2	357 5618
71	18-88 (* 25-26)	.....	2	357 5618
71	18-88 (* 25-28)	.....	2	365 1526
72	18-88	.....	1	365 1526

GLASS - CHANNELS

71	85 (Brougham-With Custom Trim-Straight)	.....	2	357 5618
70/	(Left) 05-08	.....	1	363 1388
67/69	(Left) 15-18-85-88	.....	1	357 5619
70	(Left) 15-85	.....	1	361 6183
71	(Left) 15 (* 25-26)	.....	1	361 6183
71	(Left) 15 (* 25-28)	.....	1	365 1521
71	(Left) 85 (SST-* 25-26)(DPL-* 25-26)	.....	1	361 6183
71	(Left) 85 (SST-* 25-28)(DPL-* 25-28)	.....	1	365 1521
72	(Left) 15-85	.....	1	365 1521
71	(Left) 85 (Brougham-Without Custom Trim-Curved)	.....	1	361 6183
70/	(Right) 05-08	.....	1	363 1389
67/69	(Right) 15-18-85-88	.....	1	357 5618
70	(Right) 15-85	.....	1	361 6182
71	(Right) 15 (* 25-26)	.....	1	361 6182
71	(Right) 15 (* 25-28)	.....	1	365 1520
72	(Right) 15-85	.....	1	365 1520
71	(Right) 85 (SST-* 25-26)(DPL-* 25-26)	.....	1	361 6182
71	(Right) 85 (SST-* 25-28)(DPL-* 25-28)	.....	1	365 1520
71	(Right) 85 (Brougham-Without Custom Trim-Curved)	.....	1	361 6182

25.058-1 WEATHERSTRIP, Front Door Glass (Outer)

67/68	05-08 ***(Use 362 3030)***	25.055	2	348 7830
69	05-08	25.055	2	362 3030
70/	05-08	.....	2	363 1387
67/68	06 ***(Use 362 3029)***	25.055	2	348 2357
69	06	.....	2	362 3029
70/	06-46	.....	2	363 1386
67/68	(Left) 07-09	.....	1	350 1069
69	(Left) 09	.....	1	362 3027
67/70	(Left) 15-18-85-88	.....	1	357 5617
71	(Left) 15-18-85-88 (* 25-26)	.....	1	357 5617
71	(Left) 15-18-85-88 (* 25-27)	.....	1	365 1507
72	(Left) 15-18-85-88	.....	1	365 1507
67/70	(Left) 16-17-19-59-86-87-89	.....	1	357 5629
71	(Left) 19-89 (* 25-26)	.....	1	357 5629
71	(Left) 19-89 (* 25-27)	.....	1	365 1509
72	(Left) 19-89	.....	1	365 1509
68	(Left) 39-79 ***(Use 362 4187)***	.....	1	~~360 2797~~
69/70	(Left) 39-79	.....	1	362 4187
71/	(Left) 79	.....	1	363 6881
67/68	(Right) 07-09	.....	1	350 1068
69	(Right) 09	.....	1	362 3026
67/70	(Right) 15-18-85-88	.....	1	357 5616
71	(Right) 15-18-85-88 (* 25-26)	.....	1	357 5616
71	(Right) 15-18-85-88 (* 25-27)	.....	1	365 1506
72	(Right) 15-18-85-88	.....	1	365 1506
67/70	(Right) 16-17-19-59-86-87-89	.....	1	357 5628
71	(Right) 19-89 (* 25-26)	.....	1	357 5628
71	(Right) 19-89 (* 25-27)	.....	1	365 1508
72	(Right) 19-89	.....	1	365 1508
68	(Right) 39-79 ***(Use 362 4186)***	.. ...	1	360 2796
69/70	(Right) 39-79	.....	1	362 4186
71/	(Right) 79	.....	1	363 6880

25.058-2 FILLER, Front Door Glass Weatherstrip (Outer)(Fits Into Weatherstrip)

70	39-79 (Front-17-1/2" Long)	.....	2	365 0154
70	39-79 (Rear-1-1/2" Long)	.....	2	365 0155

GLASS - CHANNELS

25.059 WEATHERSTRIP, Rear Door Glass (Outer)

67/68	05-08 ..... *(Use 362 3028)*	25.055	2	348 2354
69	05-08	25.056	2	362 3028
70/	(Left) 05-08	25.056	2	363 1389
67/69	(Left) 15-18-85-88	.....	1	357 5625
70	(Left) 15-85	.....	1	361 6181
71	(Left) 15-85 (* 25-26)	.....	1	361 6181
71	(Left) 15-85 (* 25-27)	.....	1	365 1511
72	(Left) 15-85	.....	1	365 1511
70	(Left) 18-88	.....	1	357 5625
71	(Left) 18-88 (* 25-26)	.....	1	357 5625
71	(Left) 18-88 (* 25-27)	.....	1	365 1513
72	(Left) 18-88	.....	1	365 1513
70/	(Right) 05-08	25.056	2	363 1388
67/69	(Right) 15-18-85-88	.....	1	357 5624
70	(Right) 15-85	.....	1	361 6180
71	(Right) 15-85 (* 25-26)	.....	1	361 6180
71	(Right) 15-85 (* 25-27)	.....	1	365 1510
72	(Right) 15-85	.....	1	365 1510
70	(Right) 18-88	.....	1	357 5624
71	(Right) 18-88 (* 25-26)	.....	1	357 5624
71	(Right) 18-88 (* 25-27)	.....	1	365 1512
72	(Right) 18-88	.....	1	365 1512

25.061-1 WEATHERSTRIP, Rear Quarter Glass (Inner)

67/68	(Left) 06 ..... *(Use 362 3025)*	.....	1	350 9413
69	(Left) 06	25.062	1	362 3025
67	(Left) 07	.....	1	354 7565
67/68	(Left) 09	.....	1	350 1029
69	(Left) 09	.....	1	362 3151
67	(Left) 16-86	.....	1	357 6031
67/68	(Left) 17-87	.....	1	357 6037
67/69	(Left) 19-89	.....	1	357 6033
70	(Left) 19-89 (Front-6-5/16" Long)	.....	1	361 5291
71	(Left) 19-89 (Front-6-5/16" Long-* 25-26)	.....	1	361 5291
71	(Left) 19-89 (* 25-28) ..... *(Use 365 1522)*	.....	1	365 1523
72	(Left) 19-89	.....	1	365 1523
70	(Left) 19-89 (Rear-Curved)	25.090	1	363 1885
71	(Left) 19-89 (Rear-Curved-* 25-26)	25.090	1	363 1885
71	(Left) 19-89 (Rear-Curved-* 25-28)	25.090	1	365 1525
67	(Left) 59	.....	1	357 6233
68/70	(Left) 79	.....	1	360 1179
71/	(Left) 79	.....	1	363 2459
67/68	(Right) 06 ..... *(Use 362 3024)*	.....	1	350 9412
69	(Right) 06	25.062	1	362 3024
67	(Right) 07	.....	1	354 7564
67/68	(Right) 09	.....	1	350 1028
69	(Right) 09	.....	1	362 3150
67	(Right) 16-86	.....	1	357 6030
67/68	(Right) 17-87	.....	1	357 6036
67/69	(Right) 19-89	.....	1	357 6032
70	(Right) 19-89 (Front-6-5/16" Long)	.....	1	361 5290
71	(Right) 19-89 (Front-6-5/16" Long-* 25-26)	.....	1	361 5290
71	(Right) 19-89 (* 25-28)	.....	1	365 1522
72	(Right) 19-89	.....	1	365 1522
70	(Right) 19-89 (Rear-Curved)	25.090	1	363 1884
71	(Right) 19-89 (Rear-Curved-* 25-26)	25.090	1	363 1884
71	(Right) 19-89 (Rear-Curved-* 25-28)	25.090	1	365 1524
67	(Right) 59	.....	1	357 6232
68/70	(Right) 79	.....	1	360 1178
71/	(Right) 79	.....	1	363 2458

GLASS - CHANNELS

25.061–2 ATTACHING PARTS, Weatherstrip To Inner Panel

SCREW, Tapping	67/69	07-09	17.648	2	G161373	NA

25.062–1 WEATHERSTRIP, Rear Quarter Glass (Outer)

67/68	17-87	.....	2	357	6038
67/69	(Left) 06	25.061	1	362	3024
67	(Left) 07	.....	1	350	1023
67/68	(Left) 09	.....	1	350	1097
69	(Left) 09	.....	1	362	3023
67	(Left) 16-86	.....	1	357	6073
67/69	(Left) 19-89	.....	1	357	6035
70	(Left) 19-89	.....	1	361	6023
71	(Left) 19-89 (* 25-26)	.....	1	361	6023
71/	(Left) 19-89 (* 25-27)	.....	1	365	1515
67	(Left) 59	.....	1	357	6235
68/70	(Left) 79	.....	1	360	2799
71	(Left) 79	.....	1	363	2457
72	(Left) 79	.....	1	812	1665
67/69	(Right) 06	25.061	1	362	3025
67	(Right) 07	.....	1	350	1022
67/68	(Right) 09 ***(Use 362 3022)***	.....	1	350	1096
69	(Right) 09	25.062	1	362	3022
67	(Right) 16-86	.....	1	357	6072
67/69	(Right) 19-89	.....	1	357	6034
70	(Right) 19-89	.....	1	361	6022
71	(Right) 19-89 (* 25-26)	.....	1	361	6022
71/	(Right) 19-89 (* 25-27)	.....	1	365	1514
67	(Right) 59	.....	1	357	6234
68/70	(Right) 79	.....	1	360	2798
71	(Right) 79	.....	1	363	2456
72	(Right) 79	.....	1	812	1664

25.062–2 ATTACHING PARTS, Weatherstrip To Outer Panel

SCREW, Tapping	67/69	07-16-19-79-86-89	17.648	2	G161373	NA
SCREW, Tapping	70/	19-89	23.215	2	400	3642

25.065 WEATHERSTRIP, Tailgate Glass (Inner)(Beltline)

67/69	08 ***(Use 362 2031)***	.....	1	348	2909
67/68	18-88	.....	1	357	6890
69/	18-88	.....	1	360	9175

25.066 WEATHERSTRIP, Tailgate Glass (Outer)(Beltline)

67/69	08	.....	1	348	7832
67/	18-88	.....	1	357	6891

25.090–1 WEATHERSTRIP, Rear Quarter Window Frame (Front)(Vertical)

67/69	(Left) 07-09	.....	1	358	5269
67/69	(Left) 17-19-59-87-89	.....	1	357	6915
70/	(Left) 19-89	.....	1	363	1631
68/70	(Left) 39	.....	1	360	2567
68/70	(Left) 79	.....	1	360	1145
71/	(Left) 79	.....	1	363	2417
67/69	(Right) 07-09	.....	1	358	5268
67/69	(Right) 17-19-59-87-89	.....	1	357	6914
70/	(Right) 19-89	.....	1	363	1630
68/70	(Right) 39	.....	1	360	2566
68/70	(Right) 79	.....	1	360	1144
71/	(Right) 79	.....	1	363	2416

GLASS - CHANNELS

25.090–1a WEATHERSTRIP, Rear Quarter Window (Rear)(Curved–Inner)

70	(Left) 19-89	25.061	1	363 1885	
71	(Left) 19-89 (* 25-26)	25.061	1	363 1885	
71	(Left) 19-89 (* 25-28)	25.061	1	365 1525	
72	(Left) 19-89	25.061	1	365 1525	
70	(Right) 19-89	25.061	1	363 1884	
71	(Right) 19-89 (* 25-26)	25.061	1	363 1884	
71	(Right) 19-89 (* 25-28)	25.061	1	365 1524	
72	(Right) 19-89	25.061	1	365 1524	

25.090–2 ATTACHING PARTS, Weatherstrip To Bottom Channel

SCREW, Tapping	68/70	39	20.280	4	400 3981	
SCREW, Tapping	67	59	17.660	2	G166991	NA
SCREW, Tapping	68/	79	17.660	2	G166991	NA
SCREW, Tapping	67/69	16-17-19-86-89 (To Window Frame)(5/16" Long)	17.586	2	G9411436	NA

25.090–3 ATTACHING PARTS, Weatherstrip To Retainer

SCREW, Tapping	68/70	39	17.660	2	G9426353	NA

SPECIAL INFORMATION

The Engine Build Code Number, Vehicle Identification Number and the information provided on the Unit Body Plate are often necessary when determining the proper replacement parts for your automobile. For their location refer to the General Information Section found at the front of this catalog. Production installed Exterior Ornamentation parts as illustrated in section "L" include all necessary attaching parts. Refer to General Information Page Ge - 2 for **GROUP 26** - Body Mouldings (Special Dealer Treatment).

NOTES

26–1 .... The inside edge of the moulding fits against the glass.

26–2 ..... The inside edge of the moulding fits against the rubber channel.

26–3 ..... Moulding does not have a rubber seal stapled to it.

26–4 ..... Moulding has a rubber seal stapled to it.

26–5 ..... Used on cars with Butyl Tape windshield sealer.

26–6 ..... Used on cars with Rubber Channel windshield sealer.

26–7 ..... Used on cars with Stud type retainer.

26–8 ..... Used on cars with Screw on type retainer.

26–9 .... Letter is 5/8" high and has a bright polished chrome finish.

26–10 ... Letter is 15/32" high and has a bright polished chrome finish.

26–11 ... Letter is 5/8" high and has a grained chrome finish.

26–12 ... Moulding is retained with Screws only.

26–13 ... Moulding has Studs and is retained with Clips.

26–14 ... Insert has 1 hole drilled in it.

26–15 ... Insert has 2 holes drilled in it.

26–16 ... Nameplate is 8-19/64" long.

26–17 ... Nameplate is 7-13/64" long.

26–18 ... Rocker Panel Moulding is made from Stainless Steel and is not a Simulated Exhaust Shield.

26–19 ... Rocker Panel Moulding is made from an Aluminum Alloy and is a Simulated Exhaust Shield.

26–20 ... Windshield Upper Finish Moulding is two piece Metal Type.

26–21 ... Windshield Upper Finish Moulding has a Smooth Finish and is a one piece Plastic Type.

26–22 ... Clip is used with a Weld Stud.

26–23 ... Clip is used less a Weld Stud.

26–24 ... Moulding has a Smooth Finish and is serviced in Prime Paint only.

26–25 ... Moulding has a "Molded In" color and a Textured Grain Finish.

26–26 ... The Hood Stripe Tape is available in Bulk only. Order in Yard Lengths as required. Approximately 5 Yards is required per car.

26–27 ... The American Motors Emblem has a Red "AM" in the upper section.

26–28 ... The American Motors Emblem has a Red Triangle and a Blue Rectangle in the upper section.

26–33 ... Used with full Vinyl Roof Covering.

Printed in U.S.A.

NOTES

26–34 ... Moulding is 5-1/8" long.

26–35 ... Moulding is 4" long.

26–36 ... Windshield Upper Finish Moulding has a Textured Grain Finish and is a one piece Plastic Type.

26–37 ... The straight sections of the Silver Body Stripe is sold in Bulk Quantities only. Order in Yard Lengths as required.

26–38 ... This Rally Stripe is less the Pin Stripe.

26–39 ... This Rally Stripe includes the Pin Stripe.

26–40 ... Windshield Upper Finish Moulding is Metal and does not include the Upper End Section.

26–41 ... Windshield Upper Finish Moulding is Plastic and does include the Upper End Section.

26–42 ... This Decal has a Silver Accent Stripe.

26–43 ... This Decal has a Black Accent Stripe.

26–44 ... This Moulding has smooth Surface.

26–45 ... This Moulding has ground Surface.

26–46 ... This Clip is used with two mounting Holes.

26–47 ... This Clip is used with one mounting Hole.

Printed in U.S.A.

ILLUSTRATION SUPPLEMENT - SPECIAL INFORMATION

BODY MOULDINGS .... Refer to F-14072 Parts Catalog.

Printed in U.S.A.

ILLUSTRATION SUPPLEMENT - SPECIAL INFORMATION

MODEL	PAGE NO.	MODEL	PAGE NO.

DI-NOC OVERLAY

18, 88	Gr 26 - L 227

EXTERIOR ORNAMENTATION

FRONT VIEW		REAR VIEW	
05	Gr 26 - L 28	05	Gr 26 - L 29
06	Gr 26 - L 30	06	Gr 26 - L 31
07	Gr 26 - L 32	07	Gr 26 - L 33
08	Gr 26 - L 34	08	Gr 26 - L 35
09 (440)	Gr 26 - L 36	09 (440)	Gr 26 - L 37
09 (ROGUE)	Gr 26 - L 38	09 (ROGUE)	Gr 26 - L 39
15	Gr 26 - L 58	15	Gr 26 - L 59
16	Gr 26 - L 60	16	Gr 26 - L 61
17 (SST)	Gr 26 - L 62	17 (SST)	Gr 26 - L 63
18	Gr 26 - L 64	18	Gr 26 - L 65
19 (770)	Gr 26 - L 66	19 (770)	Gr 26 - L 67
19 (SST)	Gr 26 - L 68	19 (SST)	Gr 26 - L 69
59	Gr 26 - L 120	59	Gr 26 - L 121
85	Gr 26 - L 134	85	Gr 26 - L 135
86	Gr 26 - L 136	86	Gr 26 - L 137
87 (DPL-EXCEPT SATIN CHROME)	Gr 26 - L 138	87 (DPL-EXCEPT SATIN CHROME)	Gr 26 - L 139
87 (DPL-SATIN CHROME)	Gr 26 - L 140	87 (DPL-SATIN CHROME)	Gr 26 - L 141
88 (LWO)(LTT)	Gr 26 - L 142	88 (LWO)(LTT)	Gr 26 - L 143
88 (WWO)(WTT)	Gr 26 - L 144	88 (WWO)(WTT)	Gr 26 - L 145
89 (DPL-EXCEPT SATIN CHROME)	Gr 26 - L 146	89 (DPL-EXCEPT SATIN CHROME)	Gr 26 - L 147
89 (DPL-SATIN CHROME)	Gr 26 - L 148	89 (DPL-SATIN CHROME)	Gr 26 - L 149

REAR QUARTER REVEAL MOULDINGS

08	Gr 26 - L 18	08	Gr 26 - L 19

REAR WINDOW FINISH MOULDINGS

05, 06	Gr 26 - L 7	16, 19, 86, 89	Gr 26 - L 10
08	Gr 26 - L 8	18, 88	Gr 26 - L 11
09	Gr 26 - L 9	59	Gr 26 - L 13
15, 85	Gr 26 - L 9		

REAR WINDOW REVEAL MOULDINGS

05, 06	Gr 26 - L 20	16, 19, 86, 89	Gr 26 - L 24
08	Gr 26 - L 21	18, 88	Gr 26 - L 26
09	Gr 26 - L 22	59	Gr 26 - L 26
15, 85	Gr 26 - L 23		

WINDSHIELD FINISH MOULDINGS

05, 06, 08, 09	Gr 26 - L 1	16, 19, 59, 86, 89	Gr 26 - L 5
07	Gr 26 - L 1	17, 87	Gr 26 - L 6
15, 18, 85, 88	Gr 26 - L 3		

WINDSHIELD REVEAL MOULDINGS

05, 06, 08, 09	Gr 26 - L 14	07	Gr 26 - L 14

WINDSHIELD REVEAL MOULDINGS WITH BUTYL TAPE

15, 16, 18, 19, 59, 85, 86, 88, 89	Gr 26 - L 16	17, 87	Gr 26 - L 17

WINDSHIELD REVEAL MOULDINGS WITH RUBBER CHANNEL

15, 16, 18, 19, 59, 85, 86, 88, 89	Gr 26 - L 16

MODEL	PAGE NO.	MODEL	PAGE NO.

DI-NOC OVERLAY

18, 88	Gr 26 - L 227		

EXTERIOR DECAL RALLY STRIPE

19	Gr 26 - L 226	70	Gr 26 - L 222
30	Gr 26 - L 216	89	Gr 26 - L 226

EXTERIOR ORNAMENTATION

FRONT VIEW		REAR VIEW	
05	Gr 26 - L 40	05	Gr 26 - L 41
06	Gr 26 - L 42	06	Gr 26 - L 43
08	Gr 26 - L 44	08	Gr 26 - L 45
09	Gr 26 - L 46	09	Gr 26 - L 47
15	Gr 26 - L 70	15	Gr 26 - L 71
17	Gr 26 - L 72	17	Gr 26 - L 73
18 (LWO)(LTT)	Gr 26 - L 74	18 (LWO)(LTT)	Gr 26 - L 75
18 (WWO)(WTT)	Gr 26 - L 76	18 (WWO)(WTT)	Gr 26 - L 77
19	Gr 26 - L 78	19	Gr 26 - L 79
30	Gr 26 - L 114	30	Gr 26 - L 115
70	Gr 26 - L 122	70	Gr 26 - L 123
85-2	Gr 26 - L 150	85-2	Gr 26 - L 151
85-5	Gr 26 - L 152	85-5	Gr 26 - L 153
85-7	Gr 26 - L 154	85-7	Gr 26 - L 155
88 (LWO)(LTT)	Gr 26 - L 156	88 (LWO)(LTT)	Gr 26 - L 157
88 (WWO)(WTT)	Gr 26 - L 158	88 (WWO)(WTT)	Gr 26 - L 159
89-2	Gr 26 - L 160	89-2	Gr 26 - L 161
89-5	Gr 26 - L 162	89-5	Gr 26 - L 163
89-7	Gr 26 - L 164	89-7	Gr 26 - L 165

REAR QUARTER REVEAL MOULDINGS

08	Gr 26 - L 18	18, 88	Gr 26 - L 19

REAR WINDOW FINISH MOULDINGS

05, 06	Gr 26 - L 7	16, 19, 86, 89	Gr 26 - L 10
08	Gr 26 - L 8	18, 88	Gr 26 - L 11
09	Gr 26 - L 9	30, 70	Gr 26 - L 12
15, 85	Gr 26 - L 9		

REAR WINDOW REVEAL MOULDINGS

05, 06	Gr 26 - L 20	18, 88	Gr 26 - L 26
08	Gr 26 - L 21	19, 89	Gr 26 - L 25
09	Gr 26 - L 22	30, 70	Gr 26 - L 27
15, 85	Gr 26 - L 23		

WINDSHIELD FINISH MOULDINGS

05, 06, 08, 09	Gr 26 - L 1	17, 87	Gr 26 - L 6
15, 18, 85, 88	Gr 26 - L 3	30, 70	Gr 26 - L 6
16, 19, 86, 89	Gr 26 - L 5		

WINDSHIELD REVEAL MOULDINGS

05, 06, 08, 09	Gr 26 - L 14	30, 70	Gr 26 - L 17

WINDSHIELD REVEAL MOULDINGS WITH BUTYL TAPE

15, 16, 18, 19, 85, 88, 89	Gr 26 - L 16	17, 87	Gr 26 - L 17

Printed in U.S.A.

MODEL	PAGE NO.	MODEL	PAGE NO.

DI-NOC OVERLAY

18, 88 ..... Gr 26 - L 227

EXTERIOR DECAL RALLY STRIPE

09 (SC/RAMBLER) ..... Gr 26 - L 212
30 ..... Gr 26 - L 216
70 ..... Gr 26 - L 222

EXTERIOR ORNAMENTATION

FRONT VIEW

05 ..... Gr 26 - L 40
06 ..... Gr 26 - L 42
08 ..... Gr 26 - L 44
09 (EXCEPT SC/RAMBLER) ..... Gr 26 - L 46
09 (SC/RAMBLER) ..... Gr 26 - L 48
15 ..... Gr 26 - L 80
18 (LWO)(LTT) ..... Gr 26 - L 82
18 (WWO)(WTT) ..... Gr 26 - L 84
19 ..... Gr 26 - L 86
30 ..... Gr 26 - L 114
70 ..... Gr 26 - L 122
85-2, 85-5 ..... Gr 26 - L 166
85-7 ..... Gr 26 - L 168
88 (LWO)(LTT) ..... Gr 26 - L 170
88 (WWO)(WTT) ..... Gr 26 - L 172
89-2, 89-5 ..... Gr 26 - L 174
89-7 ..... Gr 26 - L 176

REAR VIEW

05 ..... Gr 26 - L 41
06 ..... Gr 26 - L 43
08 ..... Gr 26 - L 45
09 (EXCEPT SC/RAMBLER) ..... Gr 26 - L 47
09 (SC/RAMBLER) ..... Gr 26 - L 49
15 ..... Gr 26 - L 81
18 (LWP)(LTT) ..... Gr 26 - L 83
18 (WWO)(WTT) ..... Gr 26 - L 85
19 ..... Gr 26 - L 87
30 ..... Gr 26 - L 115
70 ..... Gr 26 - L 123
85-2, 85-5 ..... Gr 26 - L 167
85-7 ..... Gr 26 - L 169
88 (LWO)(LTT) ..... Gr 26 - L 171
88 (WWO)(WTT) ..... Gr 26 - L 173
89-2, 89-5 ..... Gr 26 - L 175
89-7 ..... Gr 26 - L 177

REAR QUARTER REVEAL MOULDINGS

08 ..... Gr 26 - L 18
18, 88 ..... Gr 26 - L 19

REAR WINDOW FINISH MOULDINGS

05, 06 ..... Gr 26 - L 7
08 ..... Gr 26 - L 8
09 ..... Gr 26 - L 9
15, 85 ..... Gr 26 - L 9
19, 89 ..... Gr 26 - L 10
18, 88 ..... Gr 26 - L 11
30, 70 ..... Gr 26 - L 12

REAR WINDOW REVEAL MOULDINGS

05, 06 ..... Gr 26 - L 20
08 ..... Gr 26 - L 21
09 ..... Gr 26 - L 22
15, 85 ..... Gr 26 - L 23
18, 88 ..... Gr 26 - L 26
19, 89 ..... Gr 26 - L 25
30, 70 ..... Gr 26 - L 27

WINDSHIELD FINISH MOULDINGS

05, 06, 08, 09 ..... Gr 26 - L 1
15, 18, 85, 88 ..... Gr 26 - L 3
19, 89 ..... Gr 26 - L 5
30, 70 ..... Gr 26 - L 6

WINDSHIELD REVEAL MOULDINGS

05, 06, 08, 09 ..... Gr 26 - L 14
30, 70 ..... Gr 26 - L 17

WINDSHIELD REVEAL MOULDINGS WITH BUTYL TAPE

15, 18, 19, 88, 89 ..... Gr 26 - L 16

MODEL	PAGE NO.	MODEL	PAGE NO.

DI-NOC OVERLAY

18, 88 ..... Gr 26 - L 227

EXTERIOR DECAL RALLY STRIPE

19 (MACHINE) ..... Gr 26 - L 215
30 ..... Gr 26 - L 217
40 ..... Gr 26 - L 218
40 ("X" PACKAGE) ..... Gr 26 - L 219
40 (EXCEPT "X" PACKAGE) ..... Gr 26 - L 217
70 ..... Gr 26 - L 223

EXTERIOR ORNAMENTATION

FRONT VIEW		REAR VIEW	
05	Gr 26 - L 50	05	Gr 26 - L 51
06	Gr 26 - L 52	06	Gr 26 - L 53
15	Gr 26 - L 88	15	Gr 26 - L 89
18 (LWO)(LTT)	Gr 26 - L 90	18 (LWO)(LTT)	Gr 26 - L 91
18 (WWO)(WTT)	Gr 26 - L 92	18 (WWO)(WTT)	Gr 26 - L 93
19 (EXCEPT MACHINE)	Gr 26 - L 94	19 (EXCEPT MACHINE)	Gr 26 - L 95
19 (MACHINE)	Gr 26 - L 96	19 (MACHINE)	Gr 26 - L 97
30	Gr 26 - L 116	30	Gr 26 - L 117
40	Gr 26 - L 118	40	Gr 26 - L 119
70	Gr 26 - L 124	70	Gr 26 - L 125
85-2, 85-5	Gr 26 - L 178	85-2, 85-5	Gr 26 - L 179
85-7	Gr 26 - L 180	85-7	Gr 26 - L 181
88 (LWO)(LTT)	Gr 26 - L 182	88 (LWO)(LTT)	Gr 26 - L 183
88 (WWO)(WTT)(SST)	Gr 26 - L 184	88 (WWO)(WTT)(SST)	Gr 26 - L 185
89-5	Gr 26 - L 186	89-5	Gr 26 - L 187
89-7	Gr 26 - L 188	89-7	Gr 26 - L 189

REAR QUARTER REVEAL MOULDINGS

18, 88 ..... Gr 26 - L 19

REAR WINDOW FINISH MOULDINGS

15, 85 ..... Gr 26 - L 9
18, 88 ..... Gr 26 - L 11
19, 89 ..... Gr 26 - L 11
30, 70 ..... Gr 26 - L 12
40 ..... Gr 26 - L 12

REAR WINDOW REVEAL MOULDINGS

05, 06 ..... Gr 26 - L 21
15, 85 ..... Gr 26 - L 23
18, 88 ..... Gr 26 - L 26
19, 89 ..... Gr 26 - L 25
30, 70 ..... Gr 26 - L 27

REAR WINDOW AND SIDE PILLAR FINISH MOULDINGS

01 ..... Gr 26 - L 7

WINDSHIELD FINISH MOULDINGS

01, 40 ..... Gr 26 - L 2
15, 18, 85, 88 ..... Gr 26 - L 3
19, 89 ..... Gr 26 - L 5
30, 70 ..... Gr 26 - L 6

WINDSHIELD REVEAL MOULDINGS

01, 40 ..... Gr 26 - L 15
30, 70 ..... Gr 26 - L 17

WINDSHIELD REVEAL MOULDINGS WITH BUTYL TAPE

15, 18, 19, 85, 88, 89 ..... Gr 26 - L 16

Printed in U.S.A.

MODEL	PAGE NO.	MODEL	PAGE NO.

DI-NOC OVERLAY

08	Gr 26 - L 228	18, 88	Gr 26 - L 229

EXTERIOR DECAL RALLY STRIPE

06 (SC/360)	Gr 26 - L 213	40 ("X" PACKAGE)	Gr 26 - L 219
40	Gr 26 - L 218	79-5, 79-7	Gr 26 - L 223
40 (EXCEPT "X" PACKAGE)	Gr 26 - L 217	79-8	Gr 26 - L 224

EXTERIOR ORNAMENTATION

FRONT VIEW		REAR VIEW	
05	Gr 26 - L 50	05	Gr 26 - L 51
06	Gr 26 - L 52	06	Gr 26 - L 53
08 (LWO)	Gr 26 - L 54	08 (LWO)	Gr 26 - L 55
08 (WWO)	Gr 26 - L 56	08 (WWO)	Gr 26 - L 57
15	Gr 26 - L 98	15	Gr 26 - L 99
18 (LTT)(LWO)	Gr 26 - L 100	18 (LTT)(LWO)	Gr 26 - L 101
18 (WTT)(WWO)	Gr 26 - L 102	18 (WTT)(WWO)	Gr 26 - L 103
19	Gr 26 - L 104	19	Gr 26 - L 105
40	Gr 26 - L 118	40	Gr 26 - L 119
79-5, 79-7	Gr 26 - L 126	79-5, 79-7	Gr 26 - L 127
79-8	Gr 26 - L 128	79-8	Gr 26 - L 129
85-2	Gr 26 - L 190	85-2	Gr 26 - L 191
85-5, 85-7	Gr 26 - L 192	85-5, 85-7	Gr 26 - L 193
88 (LTT)(LWO)	Gr 26 - L 194	88 (LTT)(LWO)	Gr 26 - L 195
88 (WTT)(WWO)	Gr 26 - L 196	88 (WTT)(WWO)	Gr 26 - L 197
89-5	Gr 26 - L 198	89-5	Gr 26 - L 199
89-7	Gr 26 - L 200	89-7	Gr 26 - L 201

REAR QUARTER REVEAL MOULDINGS

08	Gr 26 - L 18	18, 88	Gr 26 - L 19

REAR WINDOW FINISH MOULDINGS

08	Gr 26 - L 8	19, 89	Gr 26 - L 11
15, 85	Gr 26 - L 10	40	Gr 26 - L 12
18, 88	Gr 26 - L 11	70	Gr 26 - L 13

REAR WINDOW REVEAL MOULDINGS

05, 06	Gr 26 - L 21	18, 88	Gr 26 - L 26
08	Gr 26 - L 22	19, 89	Gr 26 - L 25
15, 85	Gr 26 - L 24	70	Gr 26 - L 27

REAR WINDOW AND SIDE PILLAR FINISH MOULDINGS

05, 06	Gr 26 - L 7

WINDSHIELD FINISH MOULDINGS

01, 40	Gr 26 - L 2	19, 89	Gr 26 - L 5
15, 18, 85, 88	Gr 26 - L 4	70	Gr 26 - L 6

WINDSHIELD REVEAL MOULDINGS

01, 40	Gr 26 - L 15	70	Gr 26 - L 17

WINDSHIELD REVEAL MOULDINGS WITH BUTYL TAPE

15, 18, 19, 85, 88, 89	Gr 26 - L 16

MODEL	PAGE NO.	MODEL	PAGE NO.

DI-NOC OVERLAY

08	Gr 26 - L 228	18, 88	Gr 26 - L 229

EXTERIOR DECAL RALLY STRIPE

06 (HORNET "X")	Gr 26 - L 213	40 (EXCEPT "X" PACKAGE)	Gr 26 - L 220
06 (RALLY)	Gr 26 - L 214	40 ("X" PACKAGE)	Gr 26 - L 221
08	Gr 26 - L 214	79-5, 79-7	Gr 26 - L 225
40	Gr 26 - L 218		

EXTERIOR ORNAMENTATION

FRONT VIEW		REAR VIEW	
05	Gr 26 - L 50	05	Gr 26 - L 51
06	Gr 26 - L 52	06	Gr 26 - L 53
08 (LWO)	Gr 26 - L 54	08 (LWO)	Gr 26 - L 55
08 (WWO)	Gr 26 - L 56	08 (WWO)	Gr 26 - L 57
15	Gr 26 - L 106	15	Gr 26 - L 107
18 (LTT)(LWO)	Gr 26 - L 110	18 (LTT)(LWO)	Gr 26 - L 111
18 (WTT)(WWO)	Gr 26 - L 112	18 (WTT)(WWO)	Gr 26 - L 113
19	Gr 26 - L 108	19	Gr 26 - L 109
40	Gr 26 - L 118	40	Gr 26 - L 119
79-5, 79-7	Gr 26 - L 130	79-5, 79-7	Gr 26 - L 131
79-8	Gr 26 - L 132	79-8	Gr 26 - L 133
85	Gr 26 - L 202	85	Gr 26 - L 203
88 (LTT)(LWO)	Gr 26 - L 208	88 (LTT)(LWO)	Gr 26 - L 209
88 (WTT)(WWO)	Gr 26 - L 210	88 (WTT)(WWO)	Gr 26 - L 211
89-5	Gr 26 - L 204	89-5	Gr 26 - L 205
89-7	Gr 26 - L 206	89-7	Gr 26 - L 207

REAR QUARTER REVEAL MOULDINGS

08	Gr 26 - L 18	18, 88	Gr 26 - L 19

REAR WINDOW FINISH MOULDINGS

08	Gr 26 - L 8	19, 89	Gr 26 - L 11
15, 85	Gr 26 - L 10	40	Gr 26 - L 12
18, 88	Gr 26 - L 11	70	Gr 26 - L 13

REAR WINDOW REVEAL MOULDINGS

05, 06	Gr 26 - L 21	18, 88	Gr 26 - L 26
08	Gr 26 - L 22	19, 89	Gr 26 - L 25
15, 85	Gr 26 - L 24	70	Gr 26 - L 27

REAR WINDOW AND SIDE PILLAR FINISH MOULDINGS

05, 06	Gr 26 - L 7

WINDSHIELD FINISH MOULDINGS

01, 40	Gr 26 - L 2	19, 89	Gr 26 - L 5
15, 18, 85, 88	Gr 26 - L 4	70	Gr 26 - L 6

WINDSHIELD REVEAL MOULDINGS

01, 40	Gr 26 - L 15	70	Gr 26 - L 17

WINDSHIELD REVEAL MOULDINGS WITH BUTYL TAPE

15, 18, 19, 85, 88, 89	Gr 26 - L 16

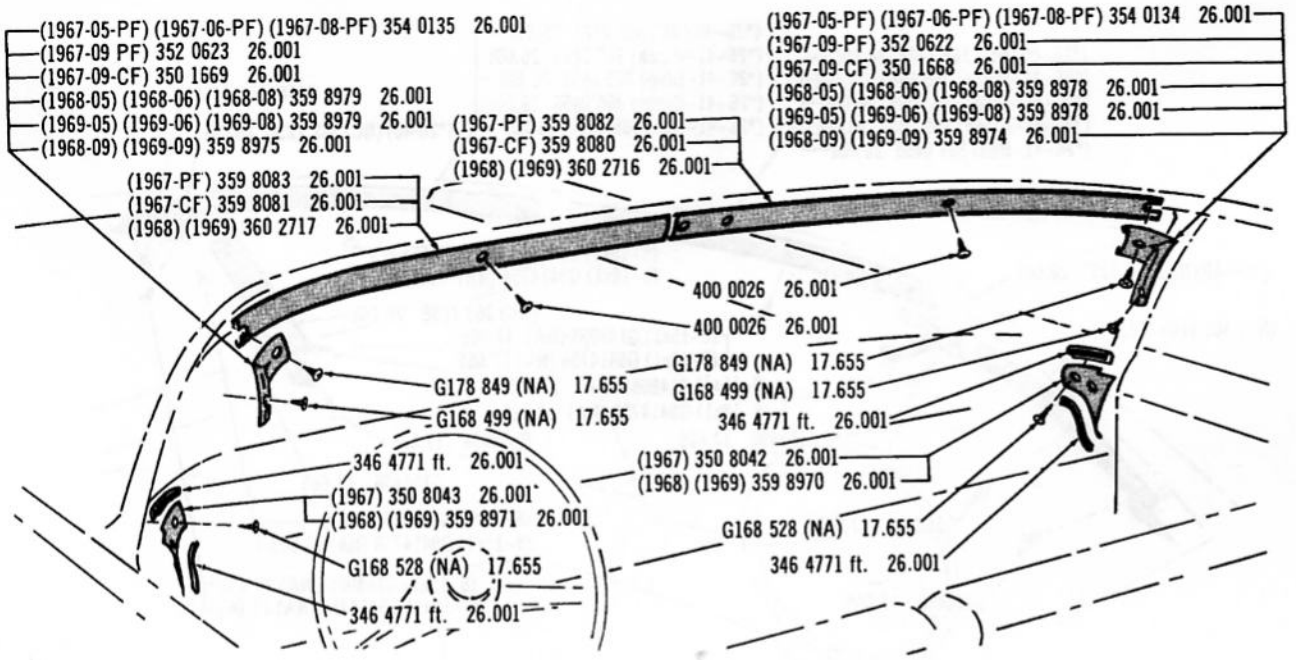

WINDSHIELD FINISH MOULDINGS ... 1967/69 (05)(06)(08)(09)

2844

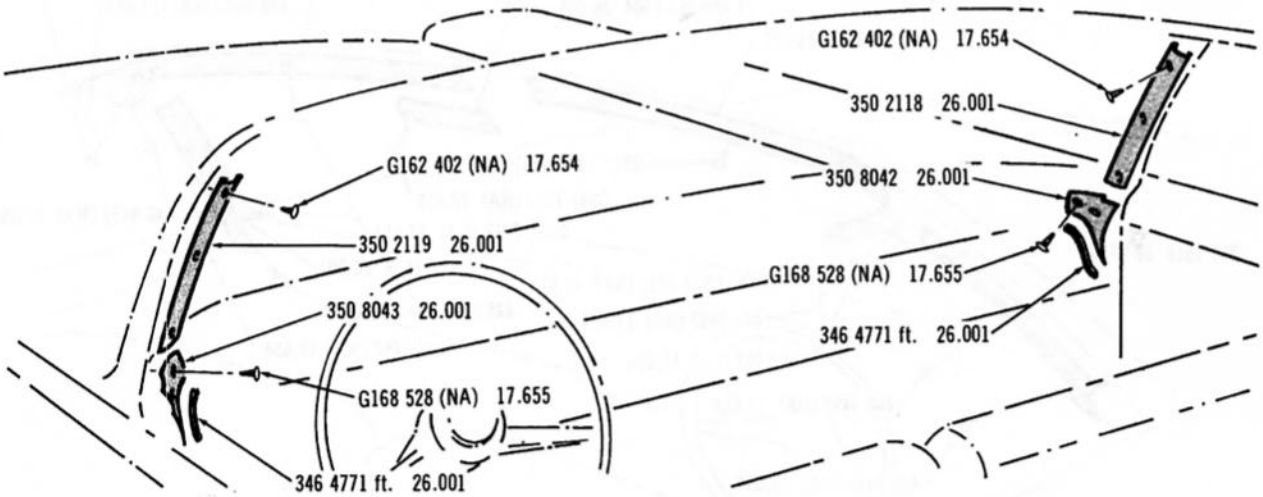

2845

WINDSHIELD FINISH MOULDINGS ... 07

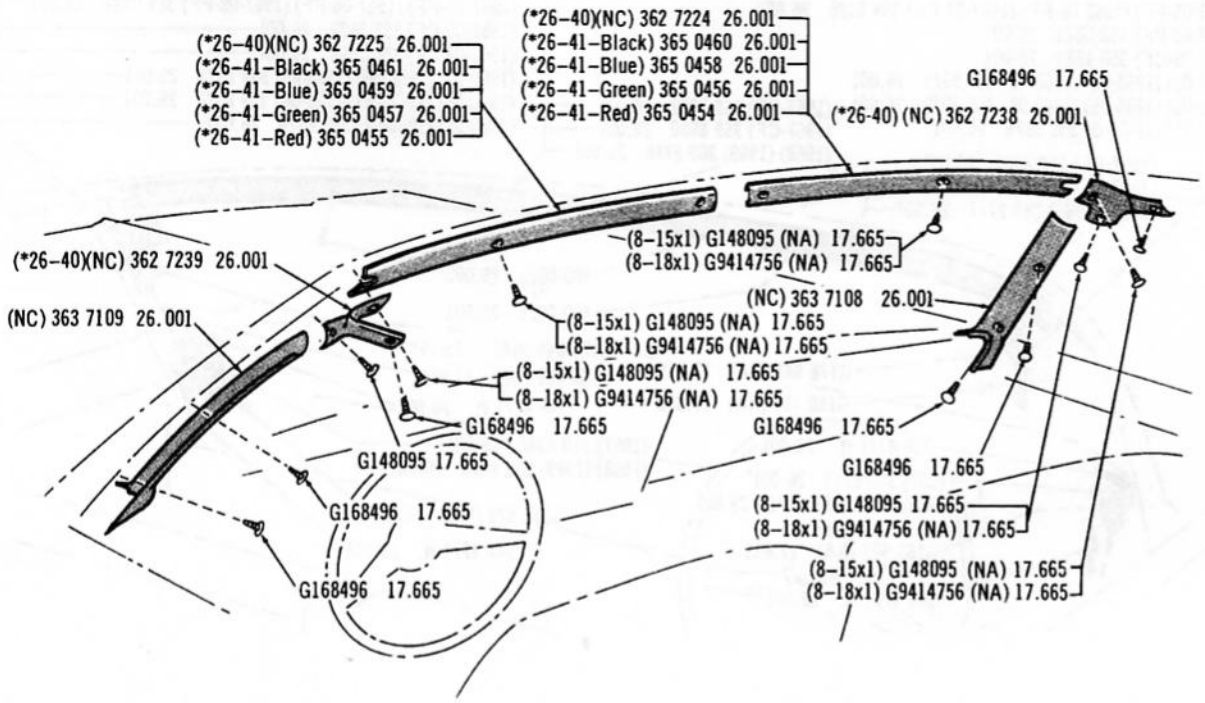

WINDSHIELD FINISH MOULDINGS . . . 1970/71 (01)(40)

3866

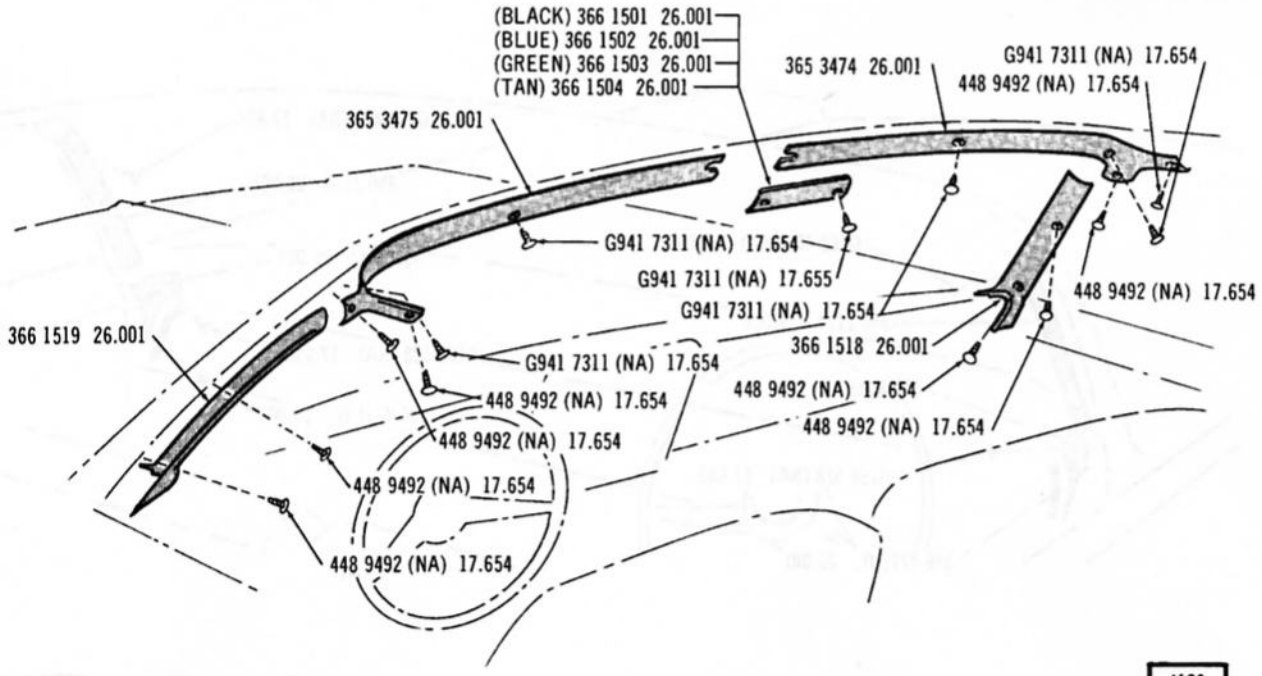

4128

WINDSHIELD FINISH MOULDINGS . . . 1972 (01)(40)

Printed in U.S.A.

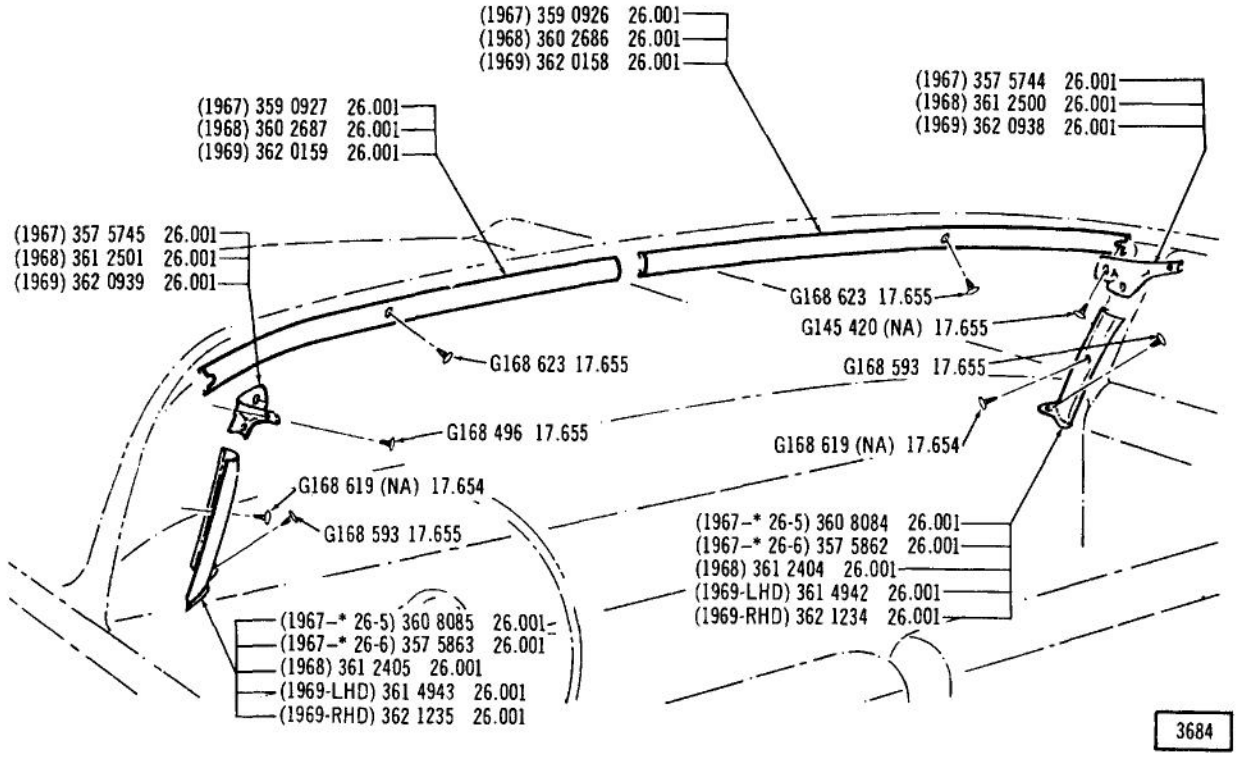

WINDSHIELD FINISH MOULDINGS ... 1967/69 (15)(18)(85)(88)

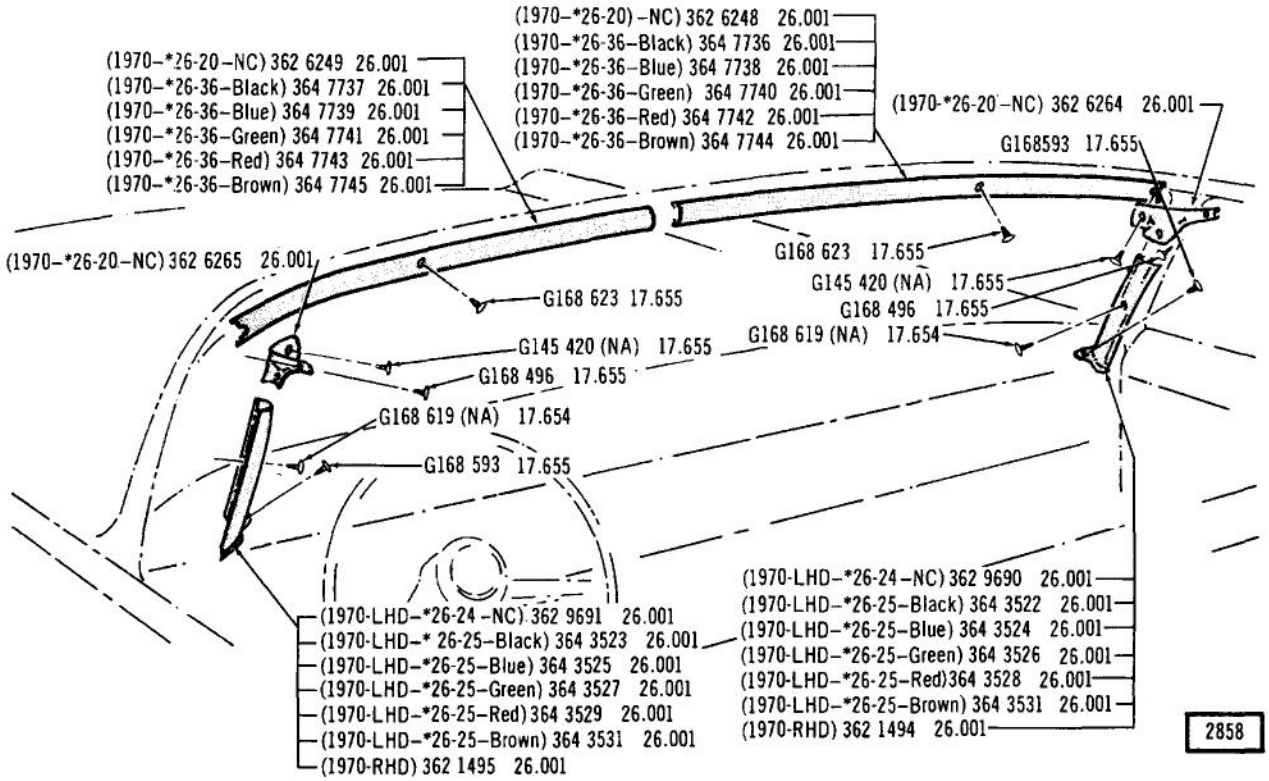

WINDSHIELD FINISH MOULDINGS ... 1970 (15)(18)(85)(88)

Printed in U.S.A.

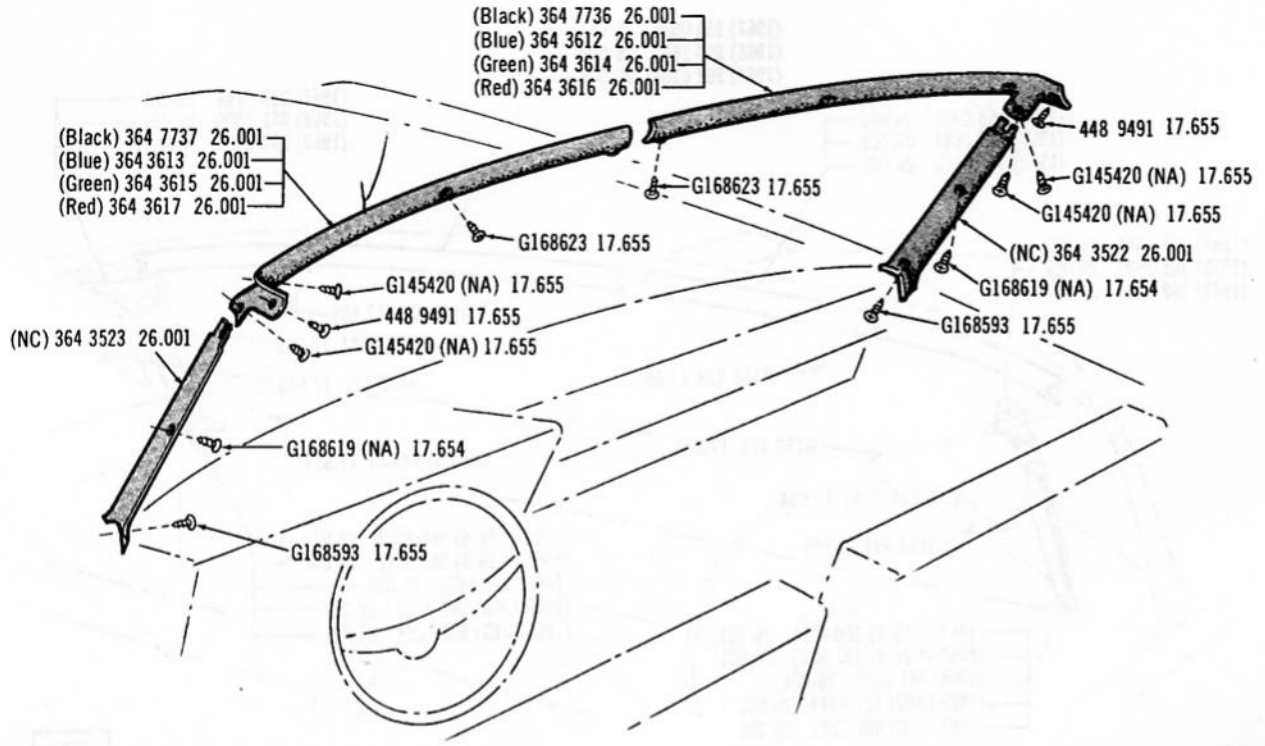

WINDSHIELD FINISH MOULDINGS ... 1971 (15)(18)(85)(88)

4033

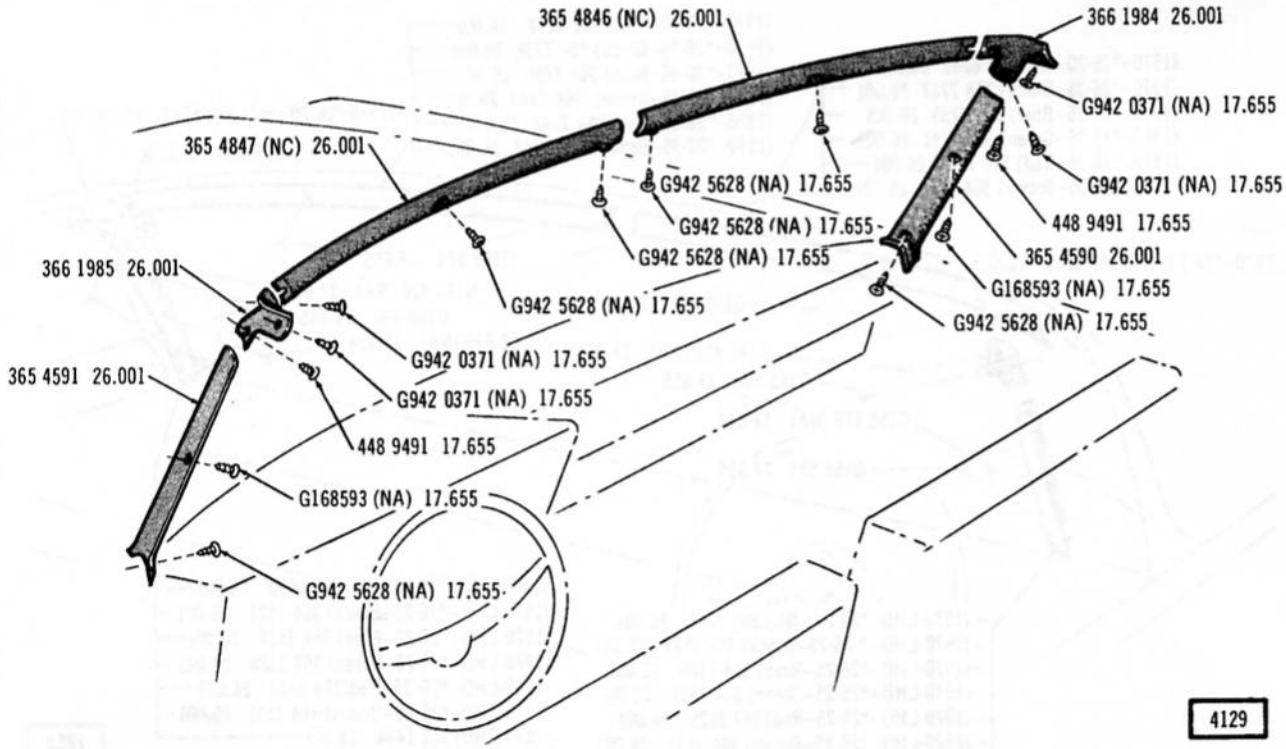

4129

WINDSHIELD FINISH MOULDINGS . . . 1972 (15)(18(85)(88)

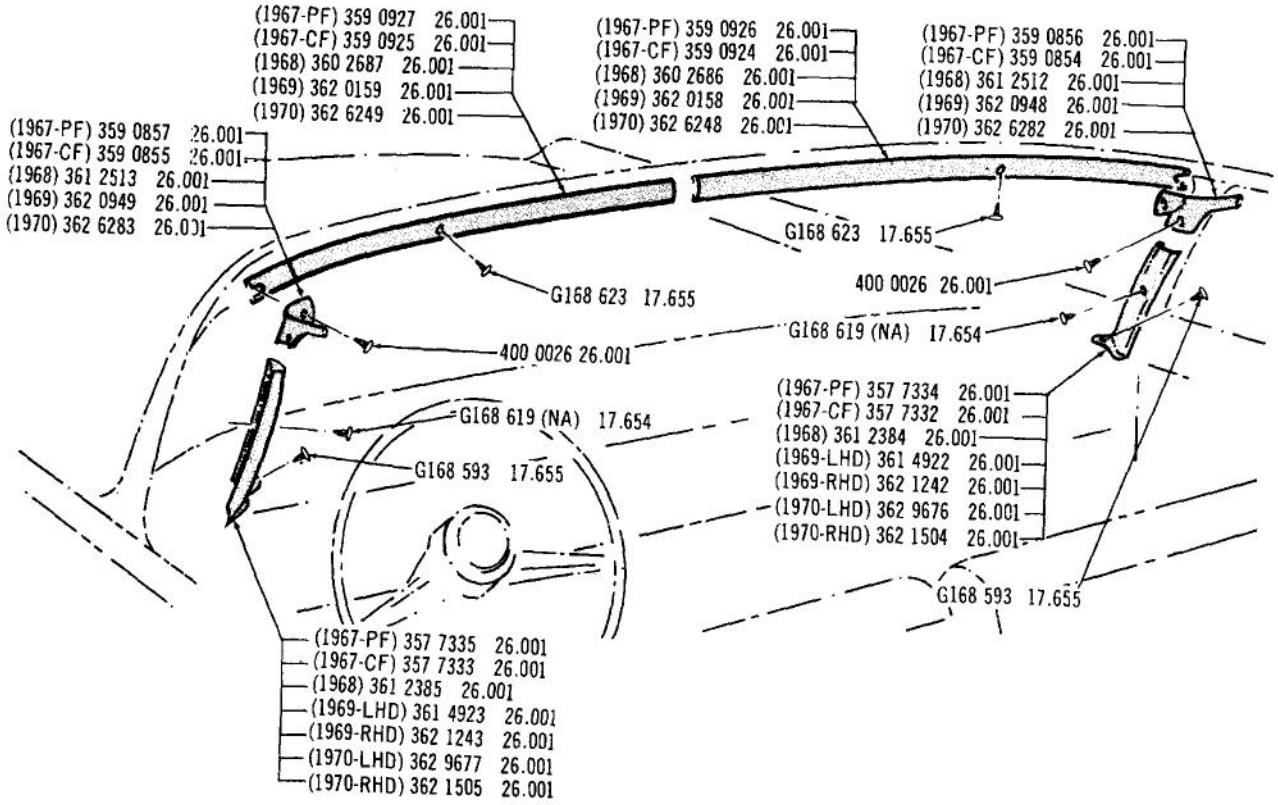

WINDSHIELD FINISH MOULDINGS ... 1967/70 (16)(19)(59)(86)(89) 2849

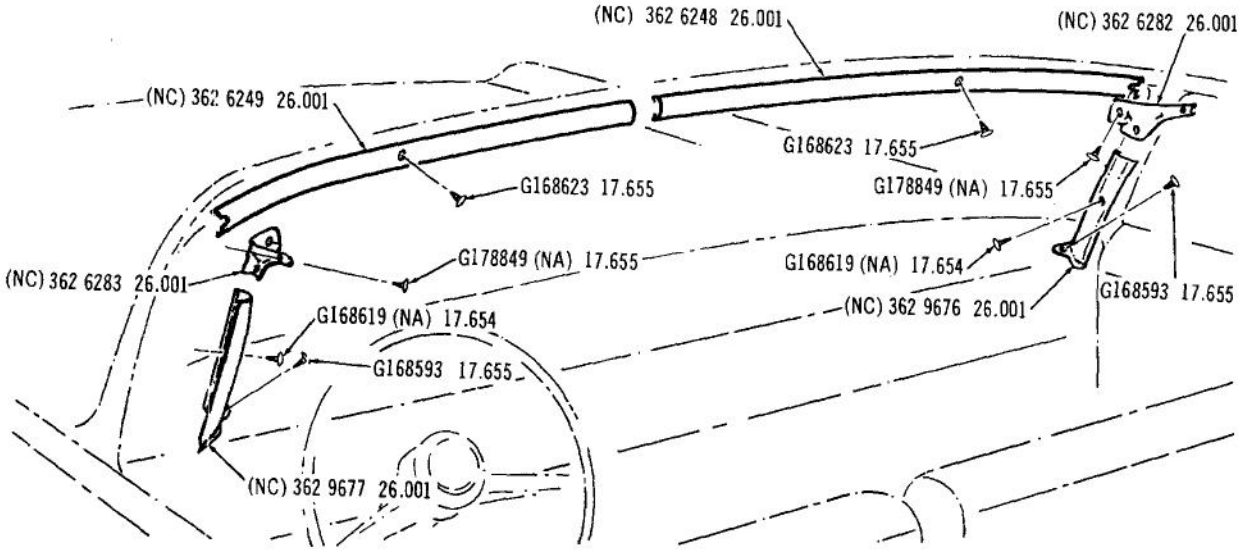

4034

WINDSHIELD FINISH MOULDINGS ... 1971/ (19)(89)

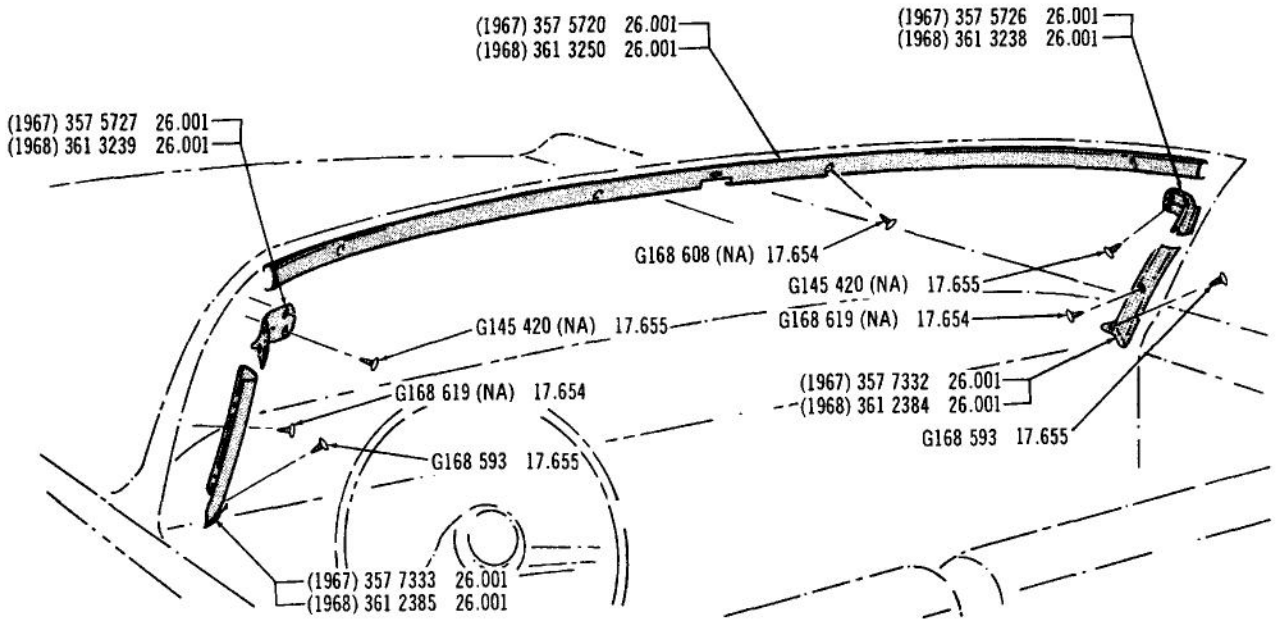

WINDSHIELD FINISH MOULDINGS ... 17, 87 2850

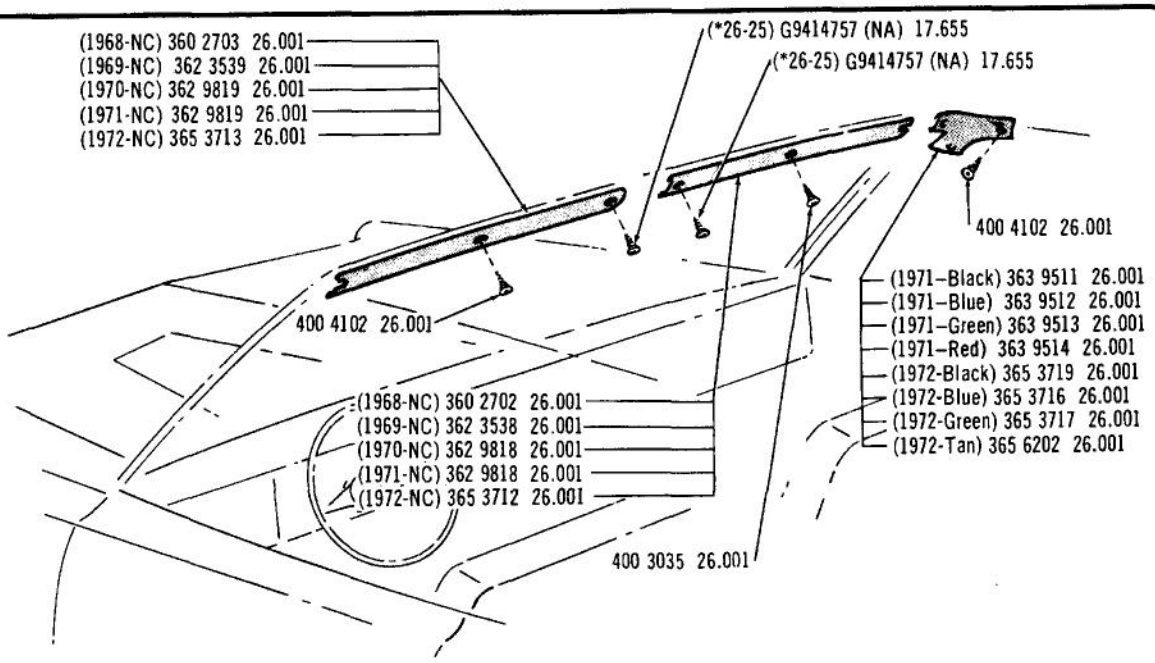

3415–A

WINDSHIELD FINISH MOULDINGS ... 30, 70

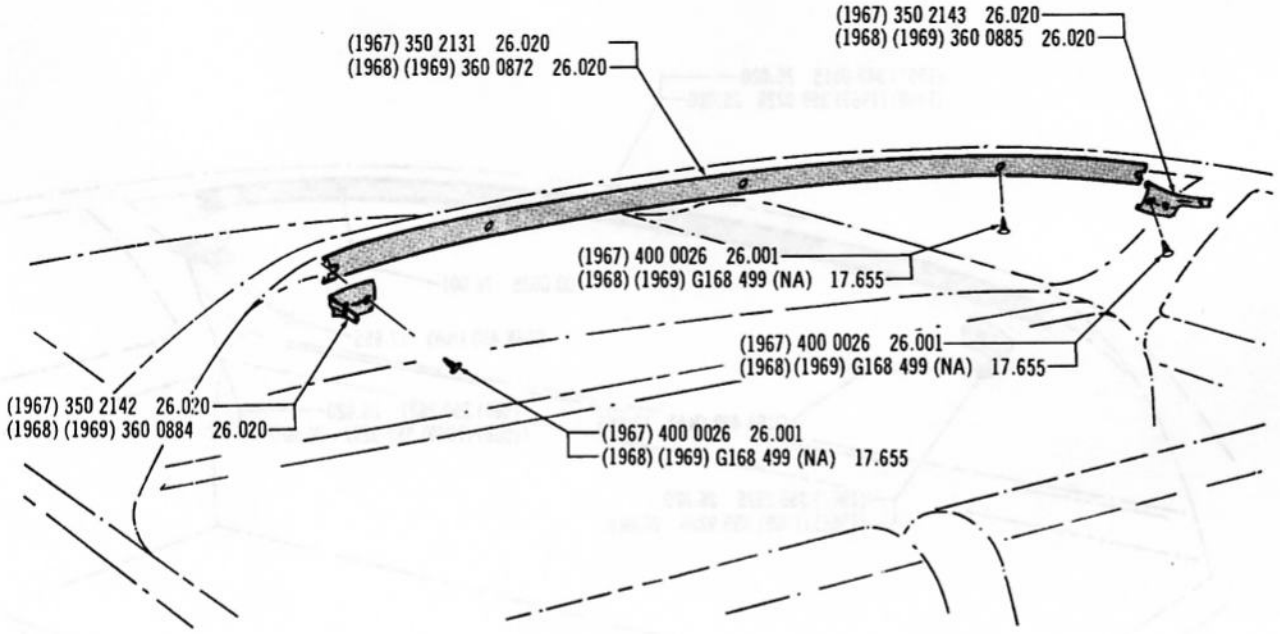

2846

REAR WINDOW FINISH MOULDINGS ... 1967/69 (05)(06)

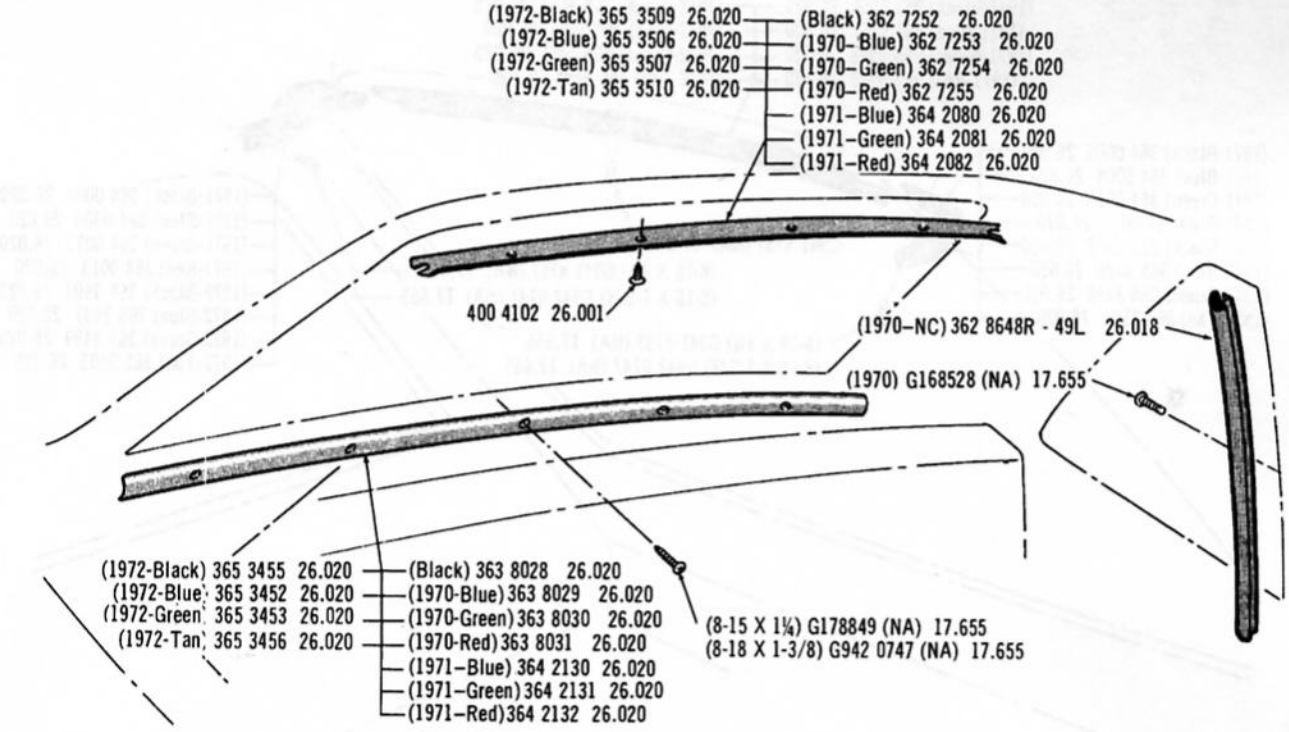

3865

REAR WINDOW AND SIDE PILLAR FINISH MOULDINGS ... 1970 (01), 1971/ (05)(06)

Printed in U.S.A.

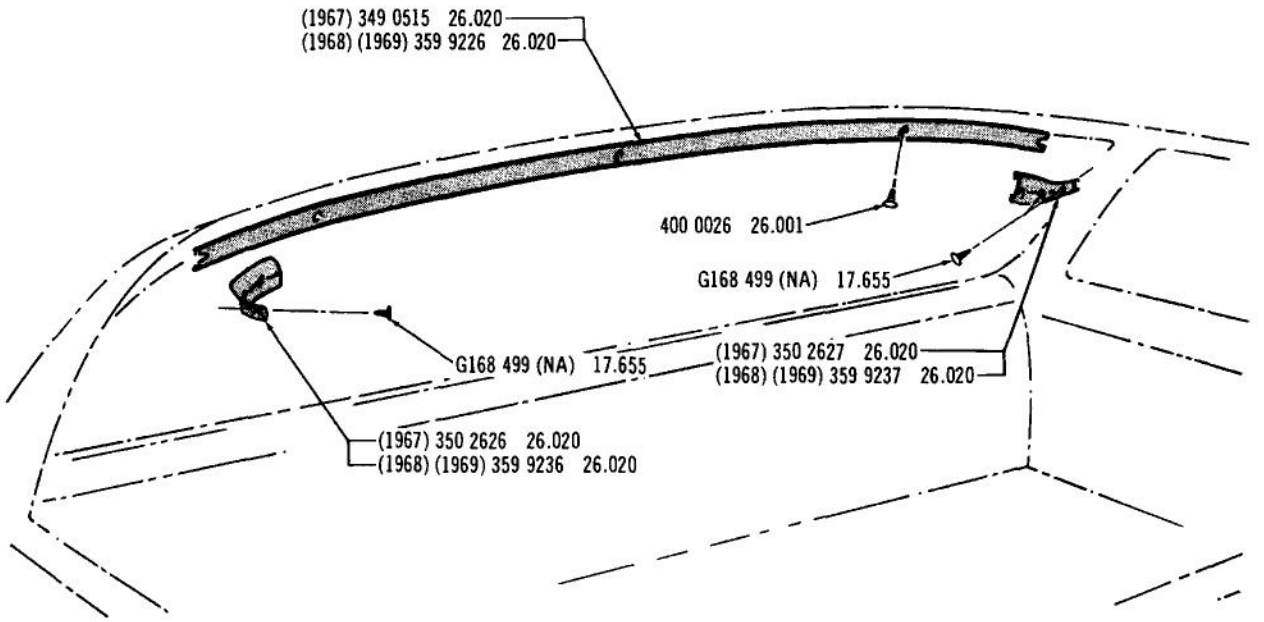

2848

REAR WINDOW FINISH MOULDINGS ... 1967/69 (08)

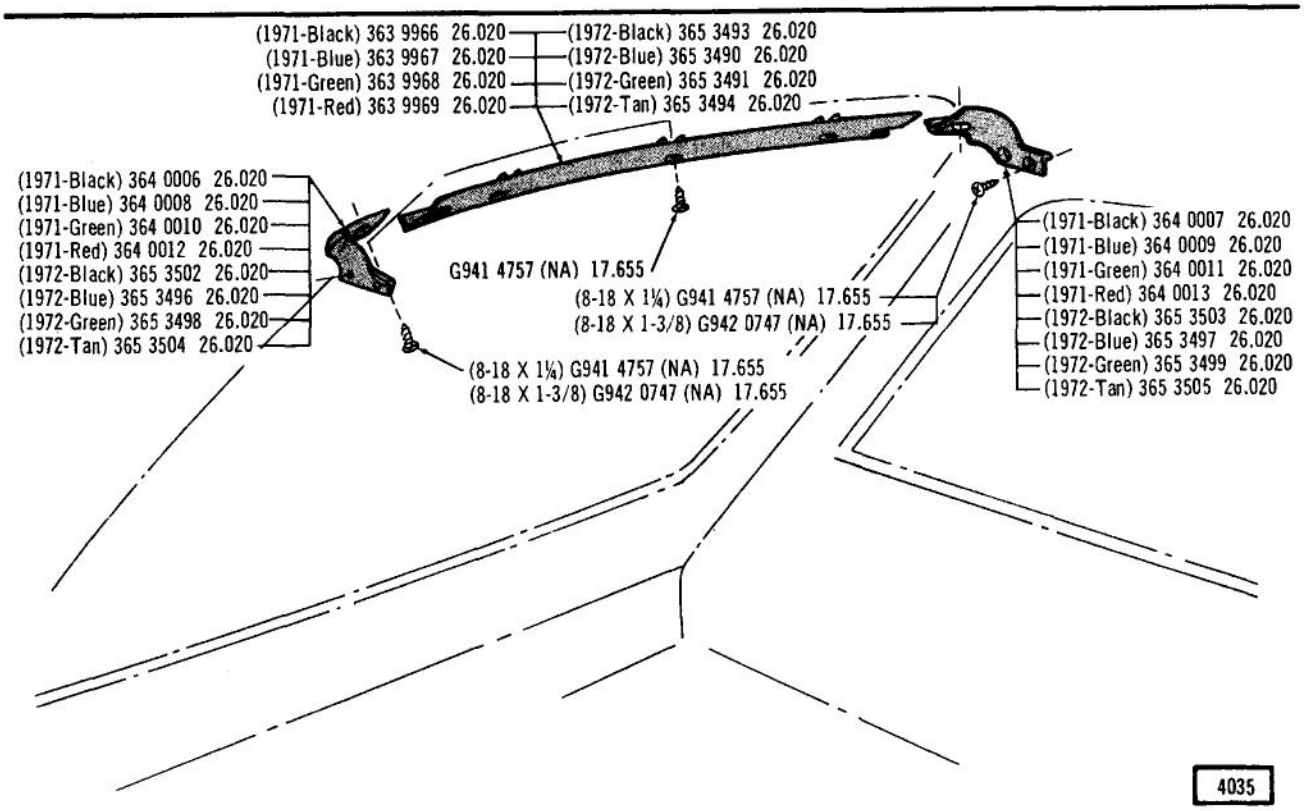

4035

REAR WINDOW FINISH MOULDINGS ... 1971/ (08)

Printed in U.S.A.

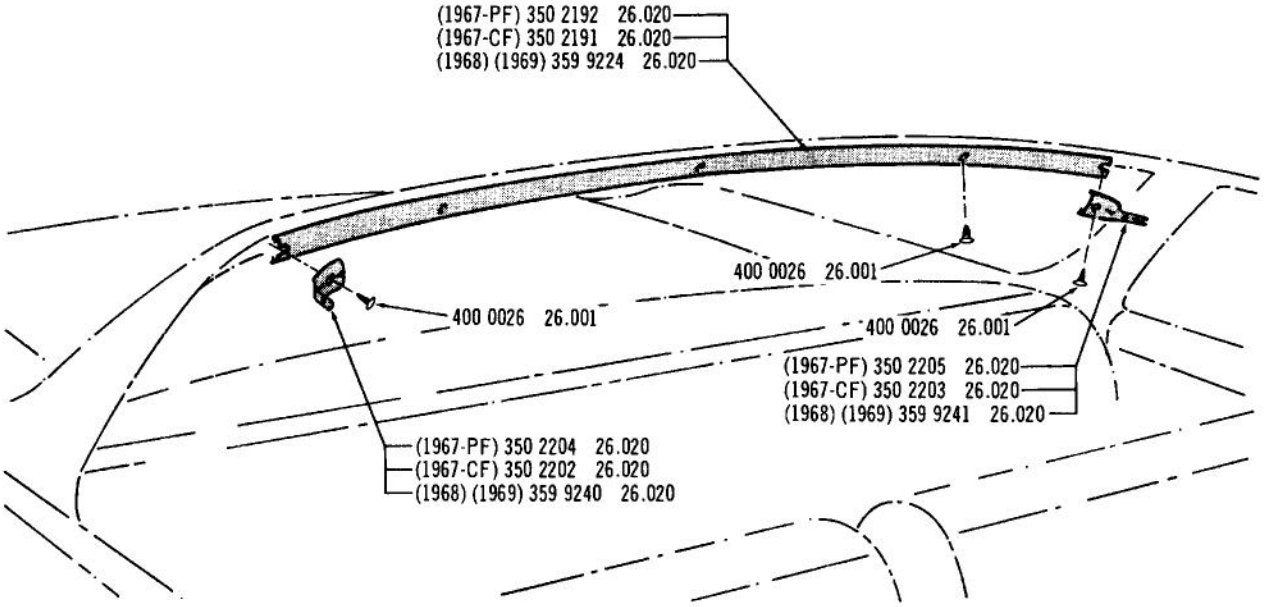

2847

REAR WINDOW FINISH MOULDINGS ... 1967/69 (09)

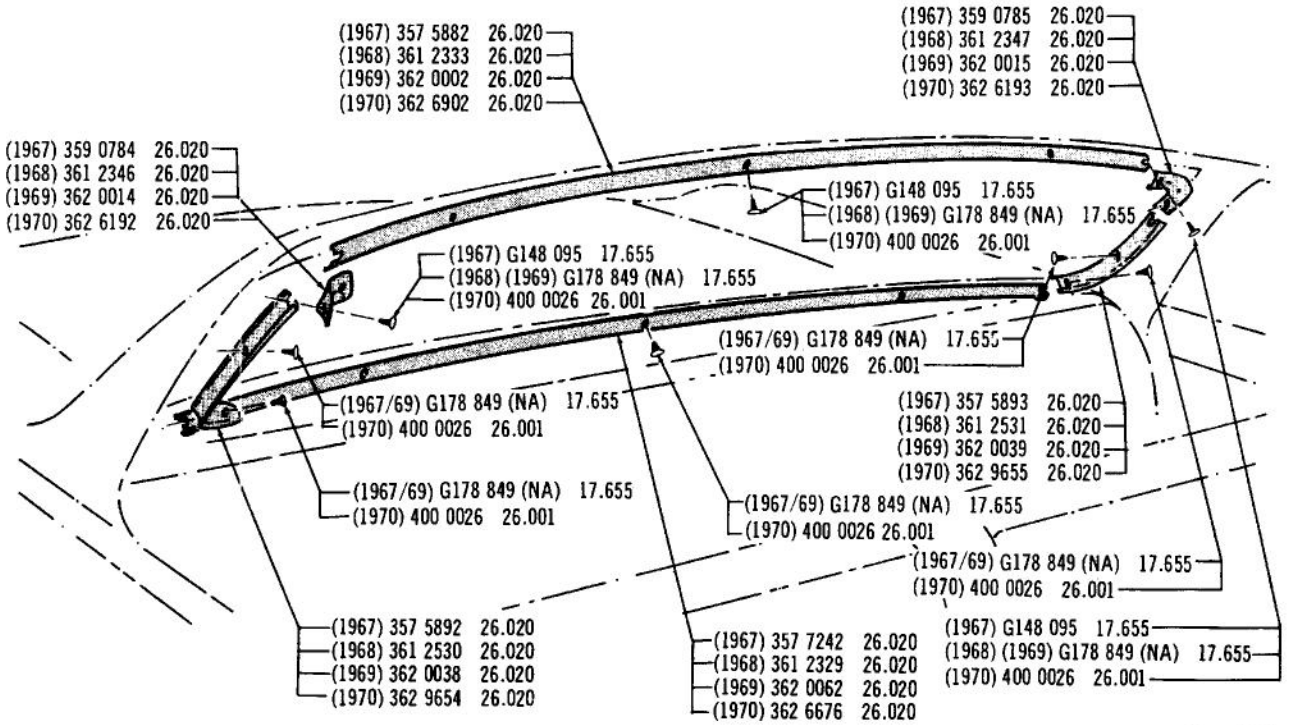

2851

REAR WINDOW FINISH MOULDINGS ... 1967/70 (15)(85)

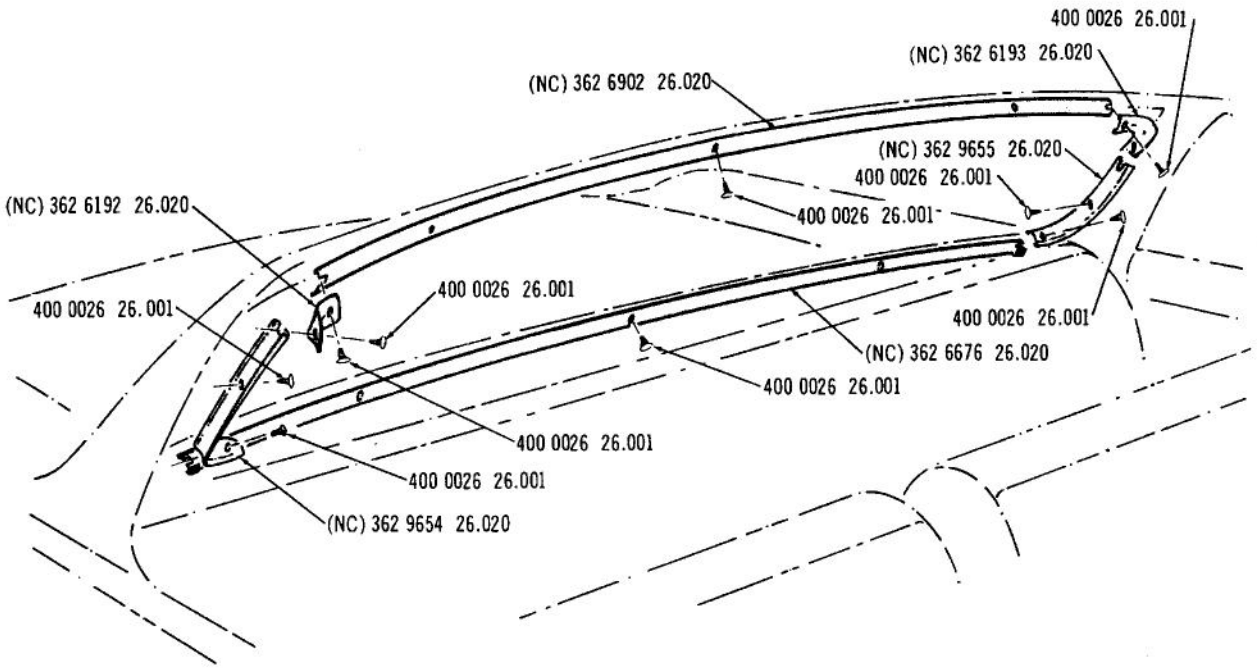

4036

REAR WINDOW FINISH MOULDINGS ... 1971/ (15)(85)

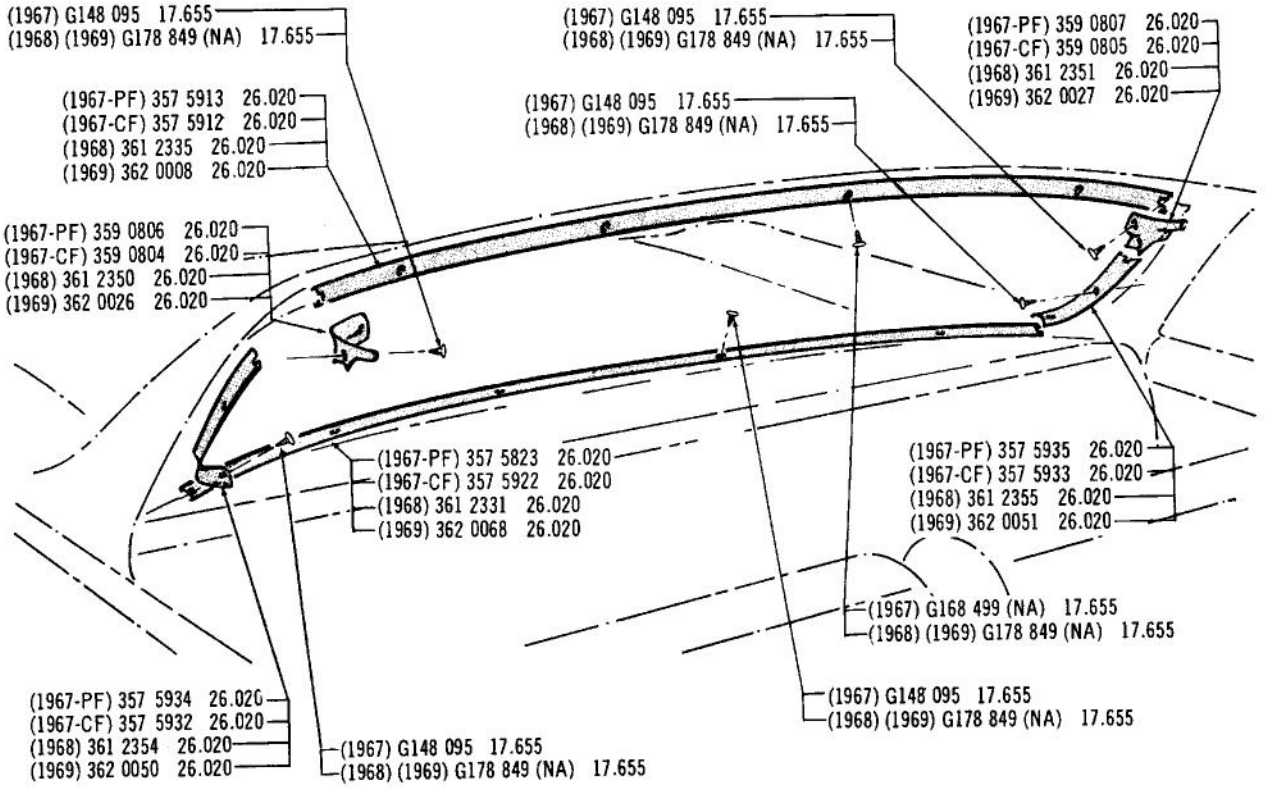

2852

REAR WINDOW FINISH MOULDINGS . . . 1967/69 (16)(19)(86)(89)

Printed in U.S.A.

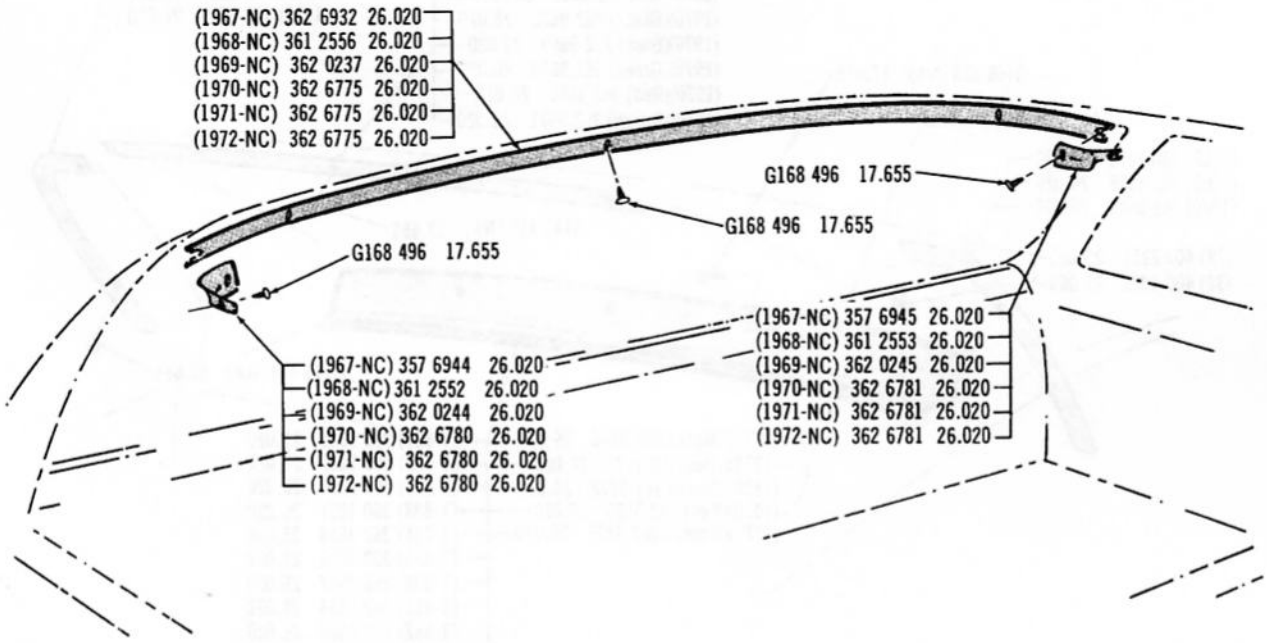

REAR WINDOW FINISH MOULDINGS ... 18, 88

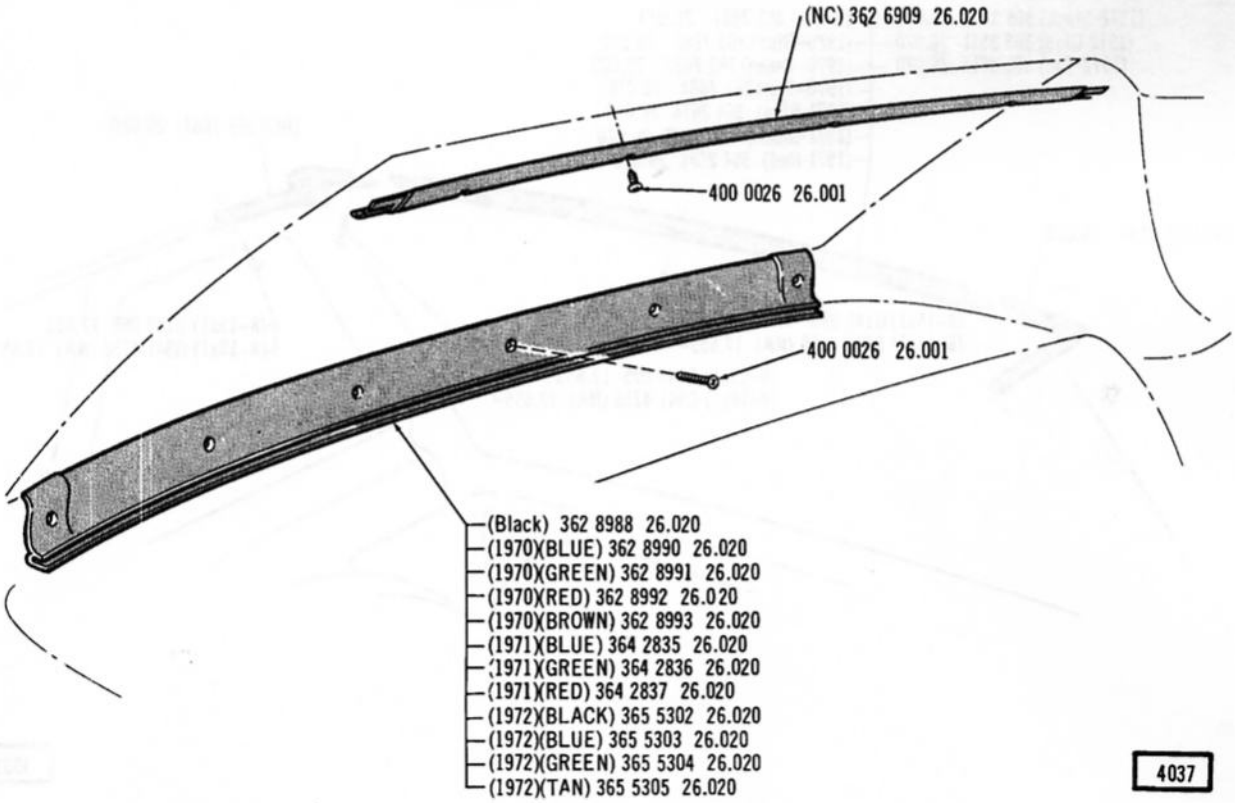

REAR WINDOW FINISH MOULDINGS . . . 1970/ (19)(89)

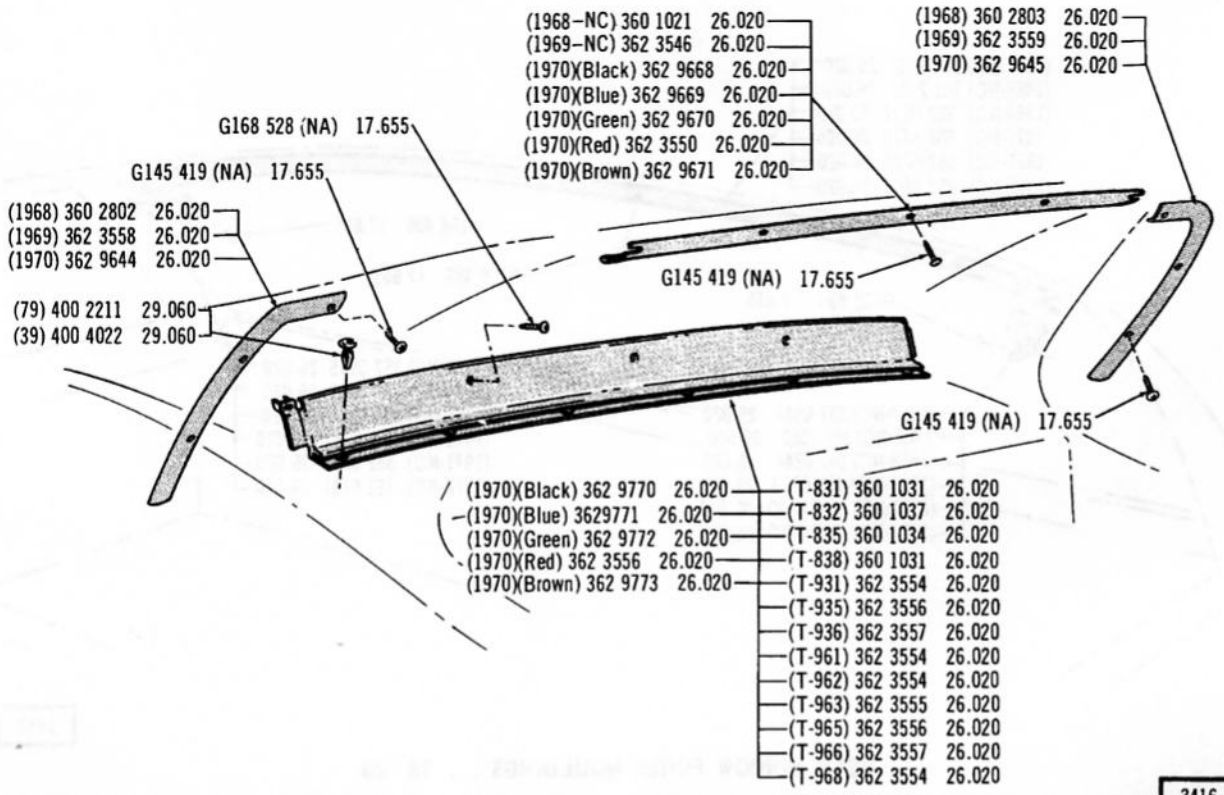

REAR WINDOW FINISH MOULDINGS . . . 1968/70 (30)(70)

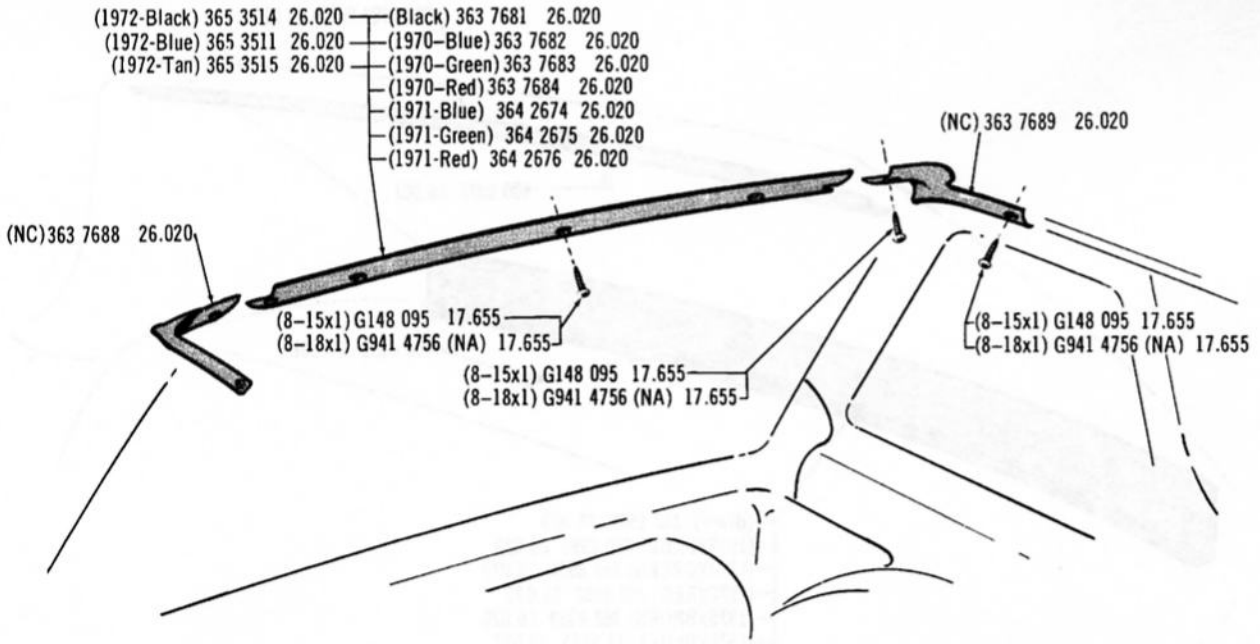

REAR WINDOW FINISH MOULDINGS ... 1970/ (40)

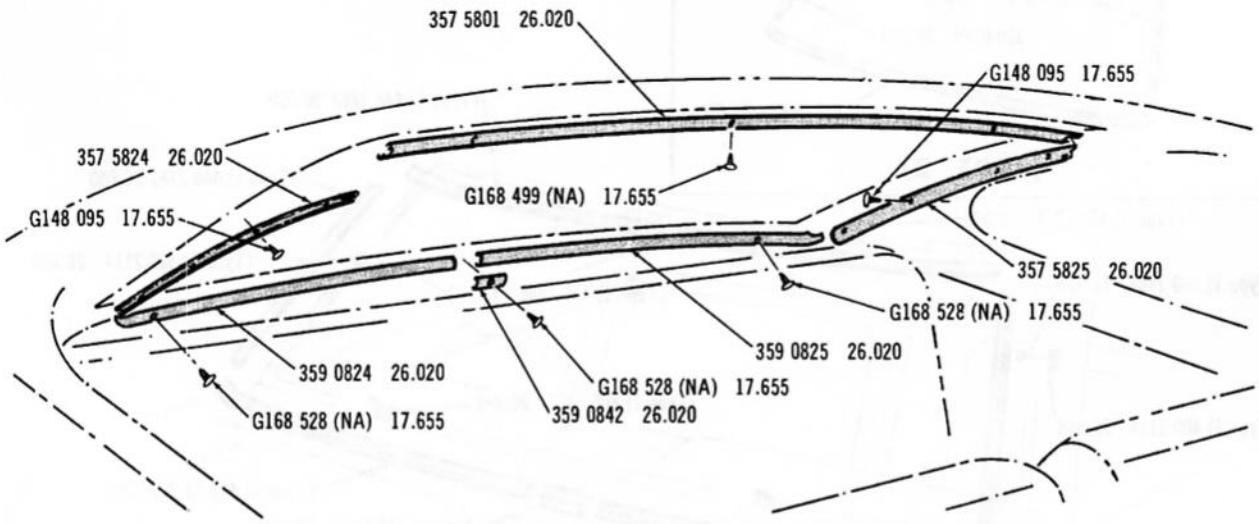

REAR WINDOW FINISH MOULDINGS ... 59

2854

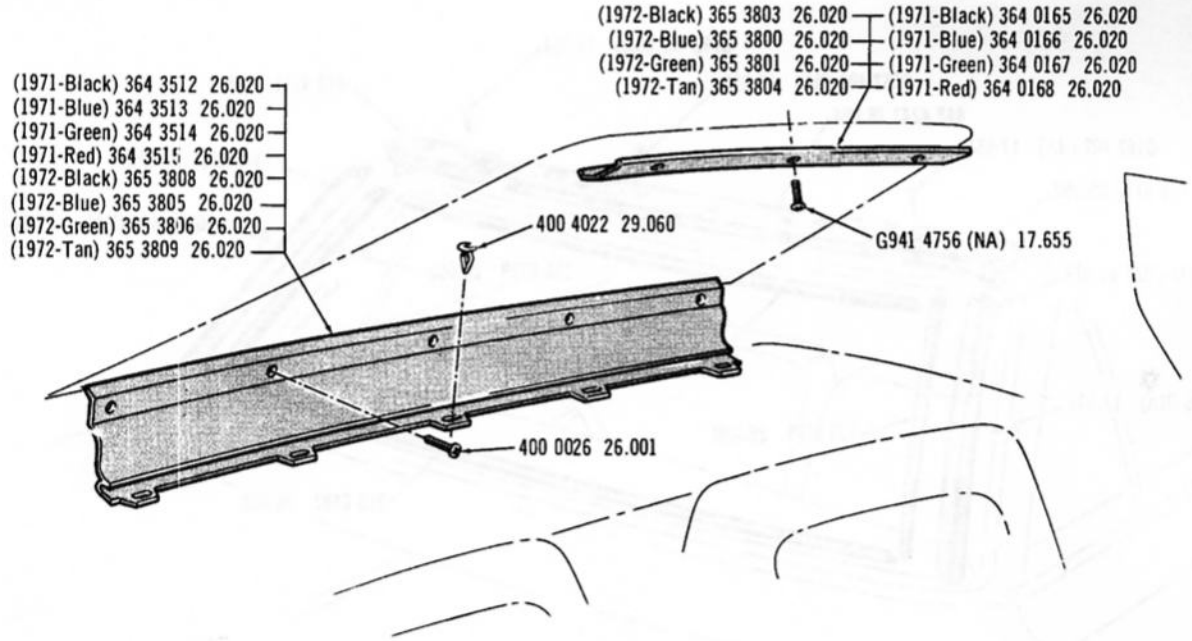

4038

REAR WINDOW FINISH MOULDINGS ... 1971/ (70)

Printed in U.S.A.

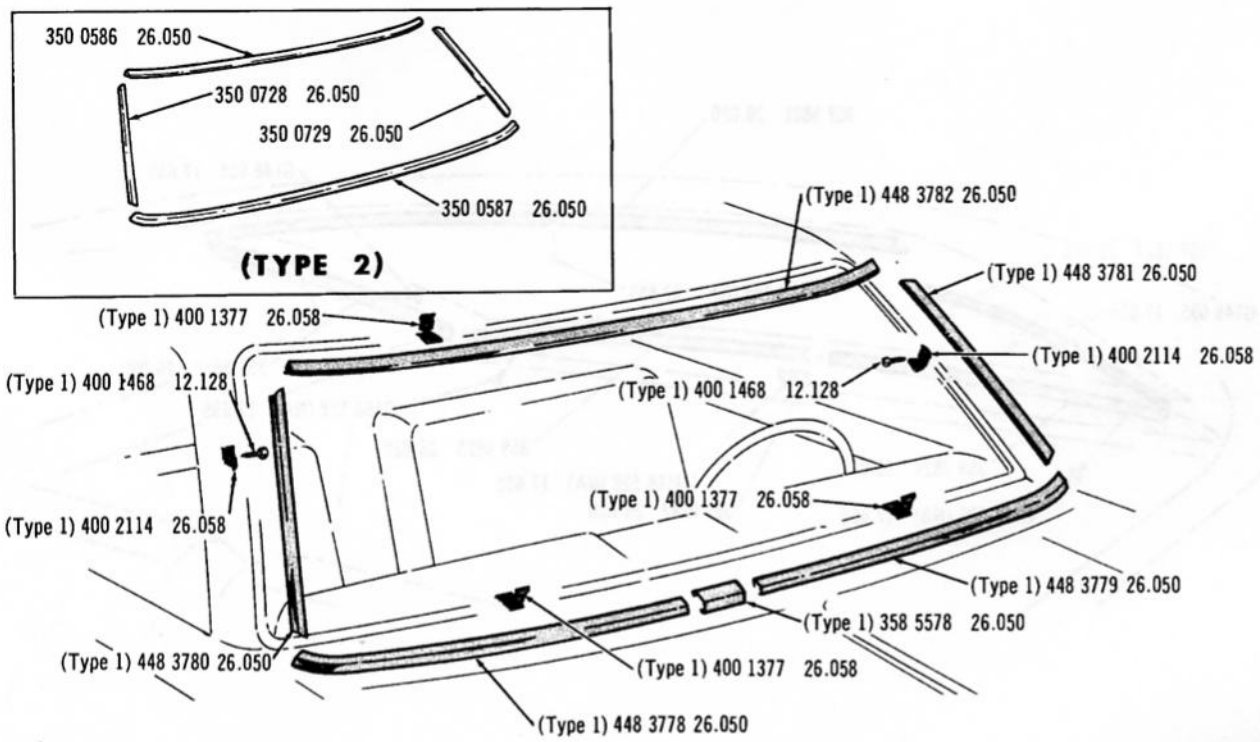

WINDSHIELD REVEAL MOULDINGS ... 1967/69 (05)(06)(08)(09) 3251

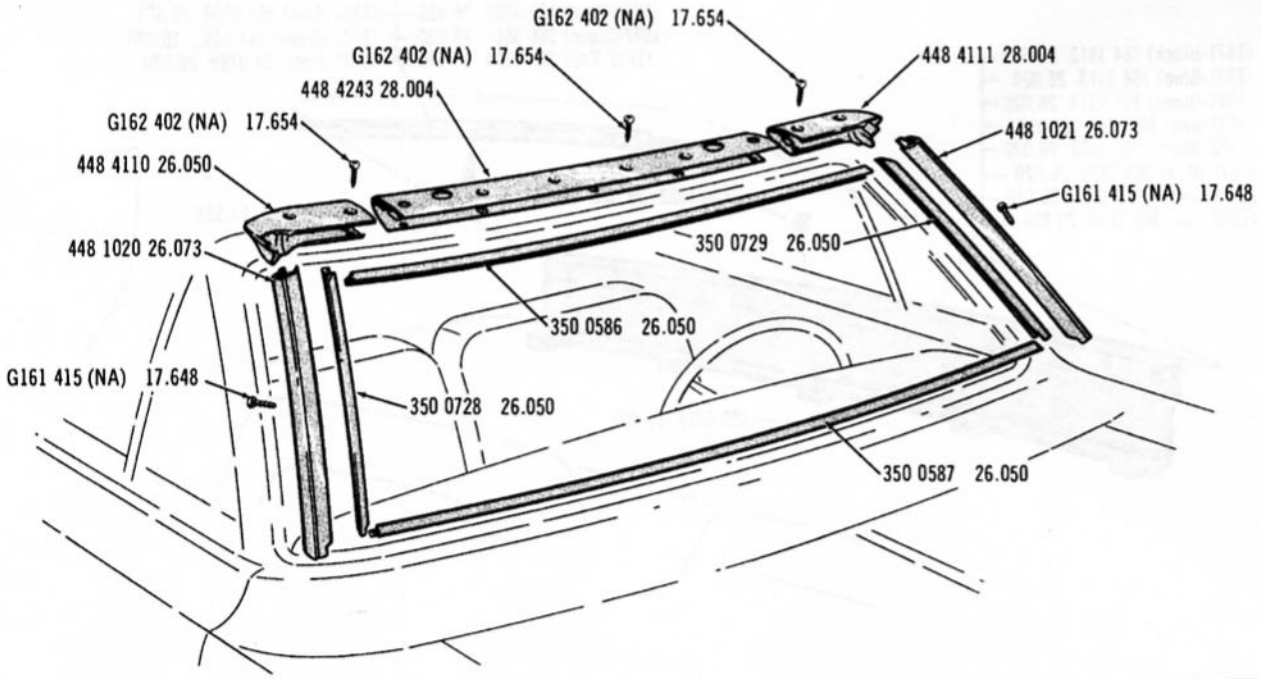

3403

WINDSHIELD REVEAL MOULDINGS ... 07

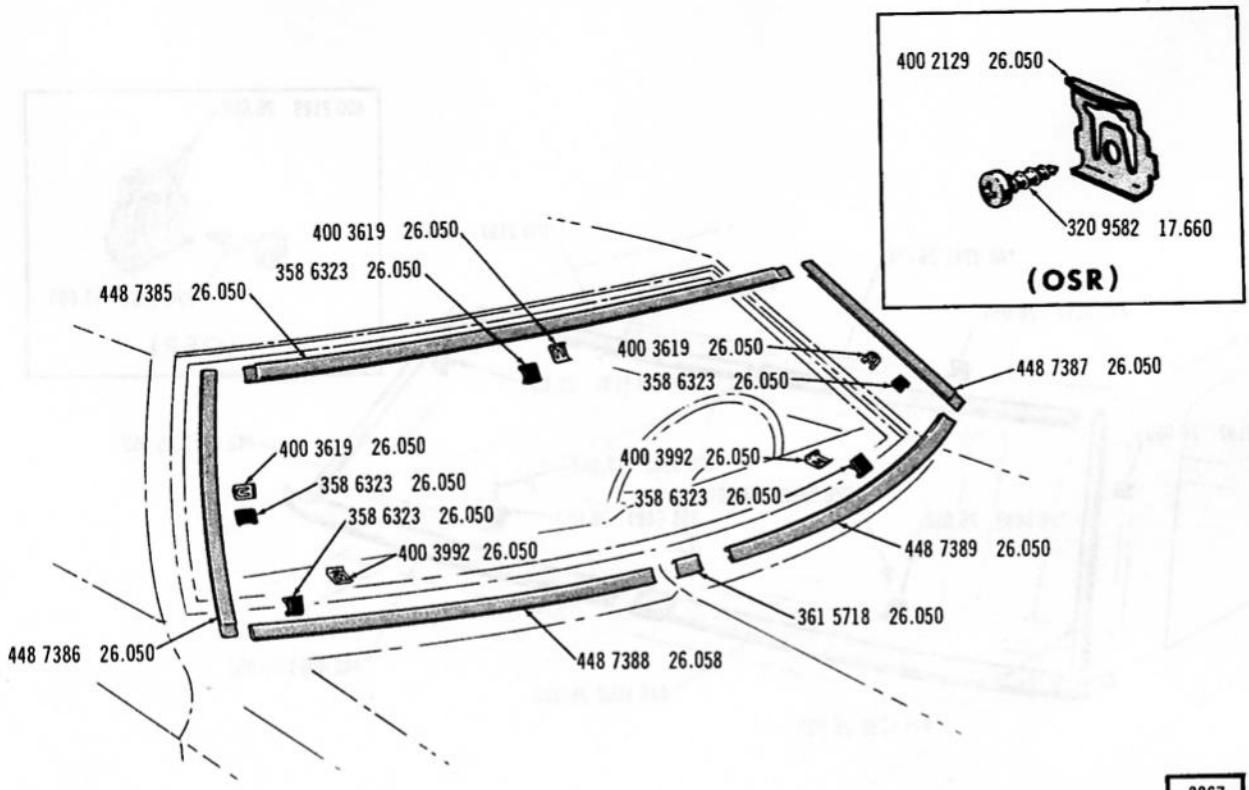

3867

WINDSHIELD REVEAL MOULDINGS ... 1970/ (01)(40)

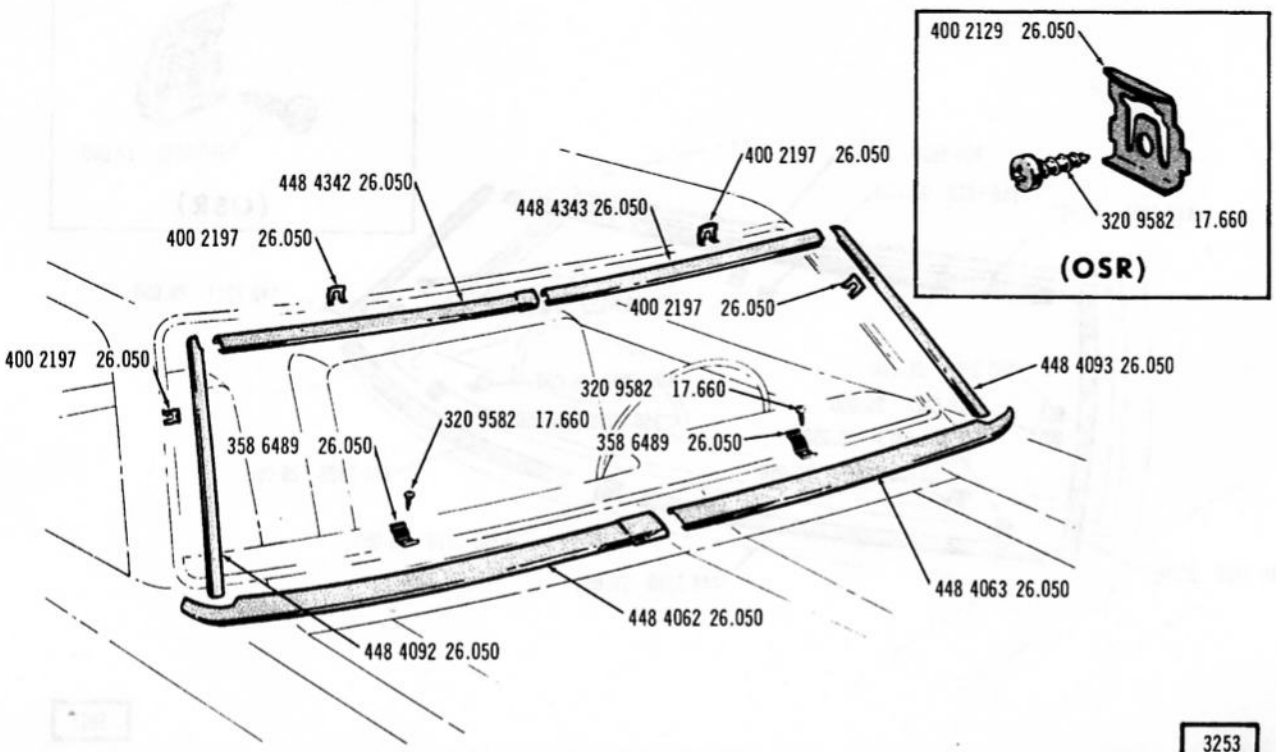

WINDSHIELD REVEAL MOULDINGS ... WITH RUBBER CHANNEL (15)(16)(18)(19)(59)(85)(86)(88)(89) 3253

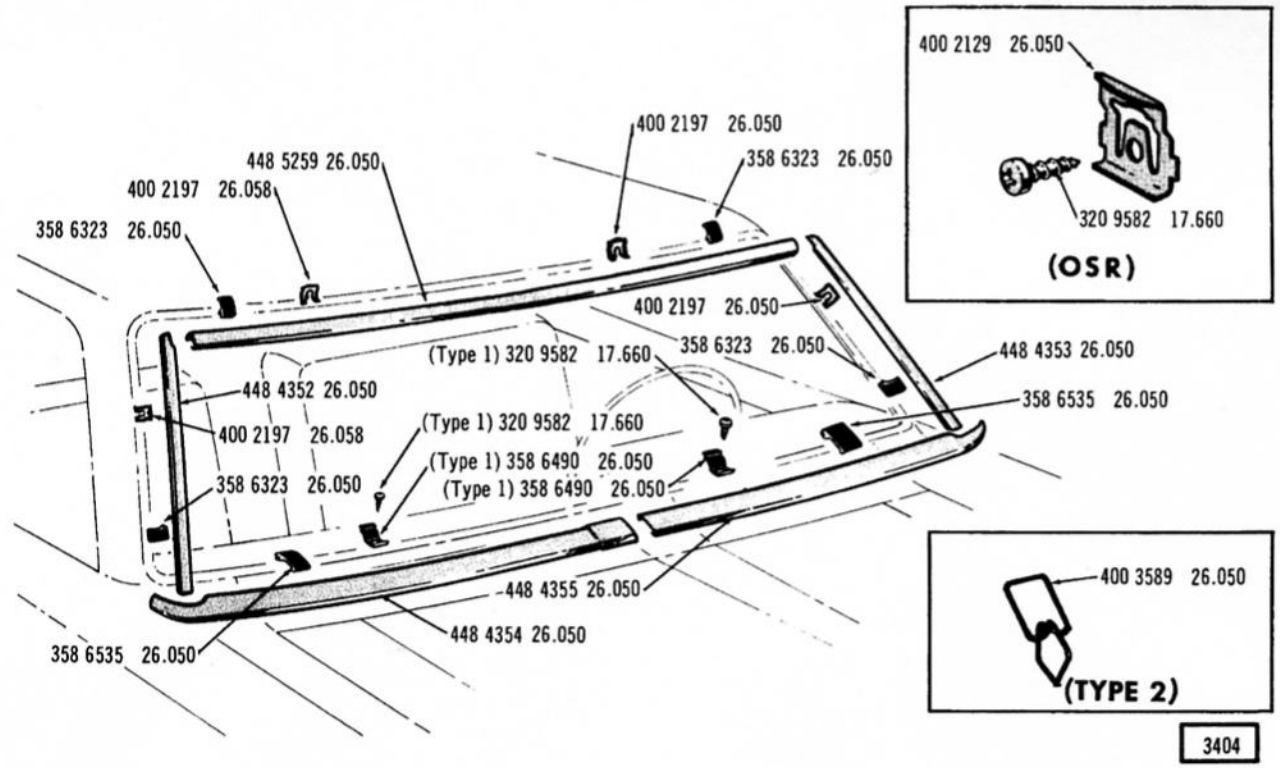

WINDSHIELD REVEAL MOULDINGS ... WITH BUTYL TAPE (15)(16)(18)(19)(59)(85)(86)(88)(89)

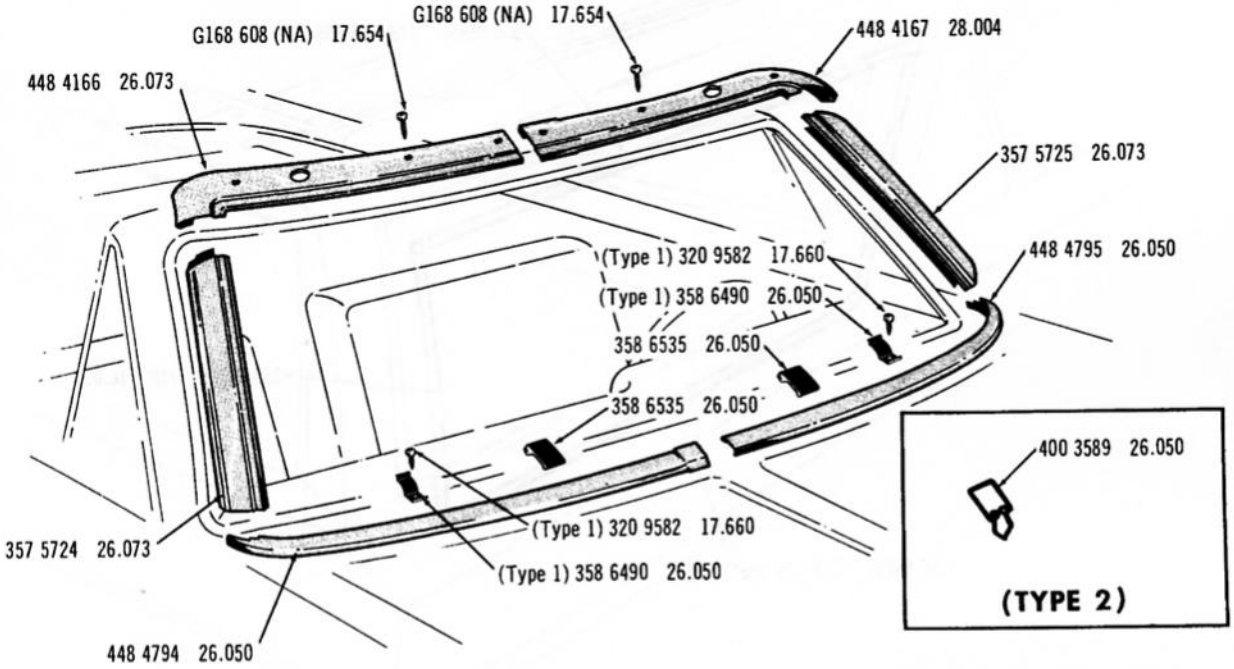

WINDSHIELD REVEAL MOULDINGS ... WITH BUTYL TAPE (17)(87)

3400

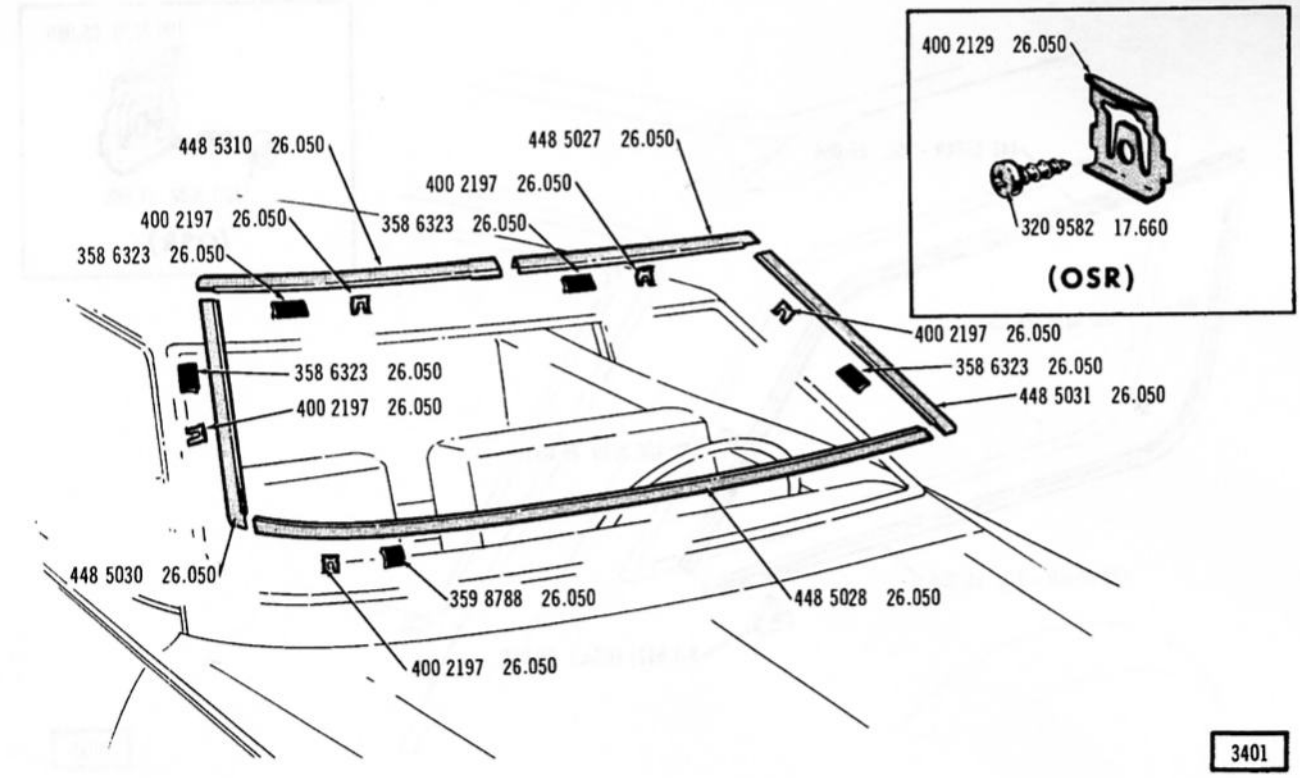

3401

WINDSHIELD REVEAL MOULDINGS ... 30, 70

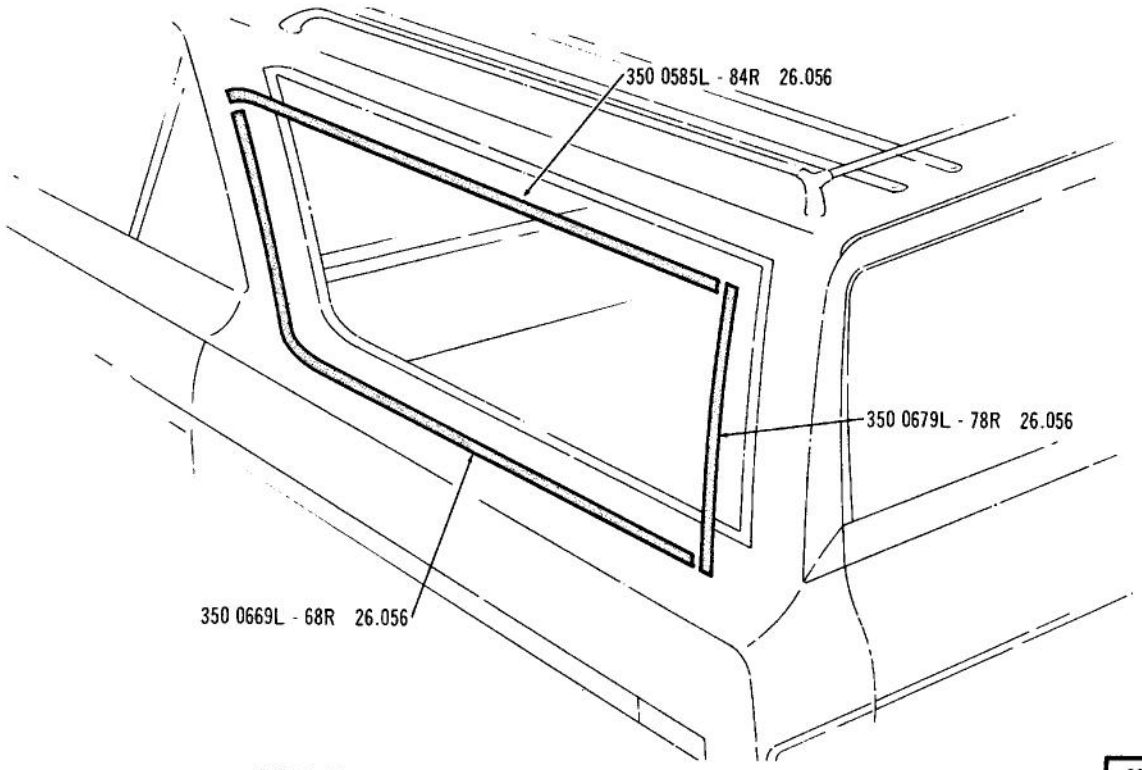

REAR QUARTER REVEAL MOULDINGS ... 1967/69 (08) 3270

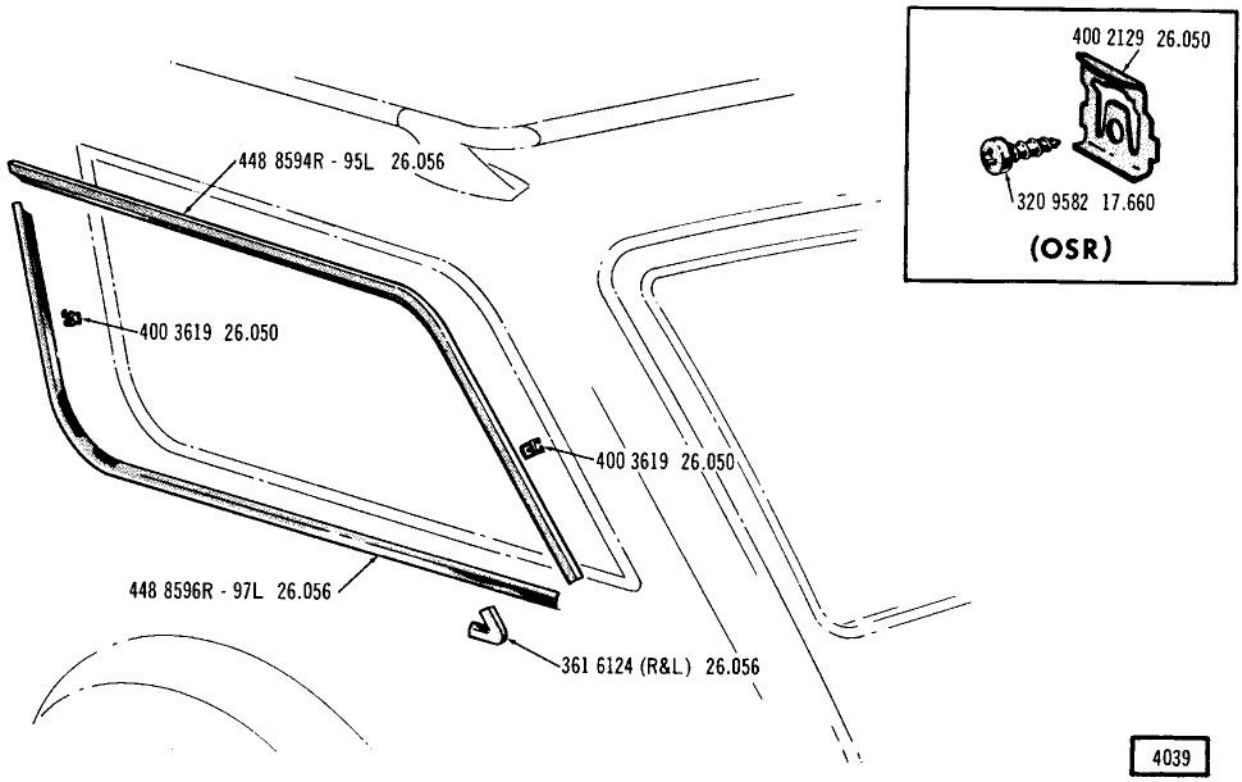

4039

REAR QUARTER REVEAL MOULDINGS ... 1971/ (08)

Printed in U.S.A.

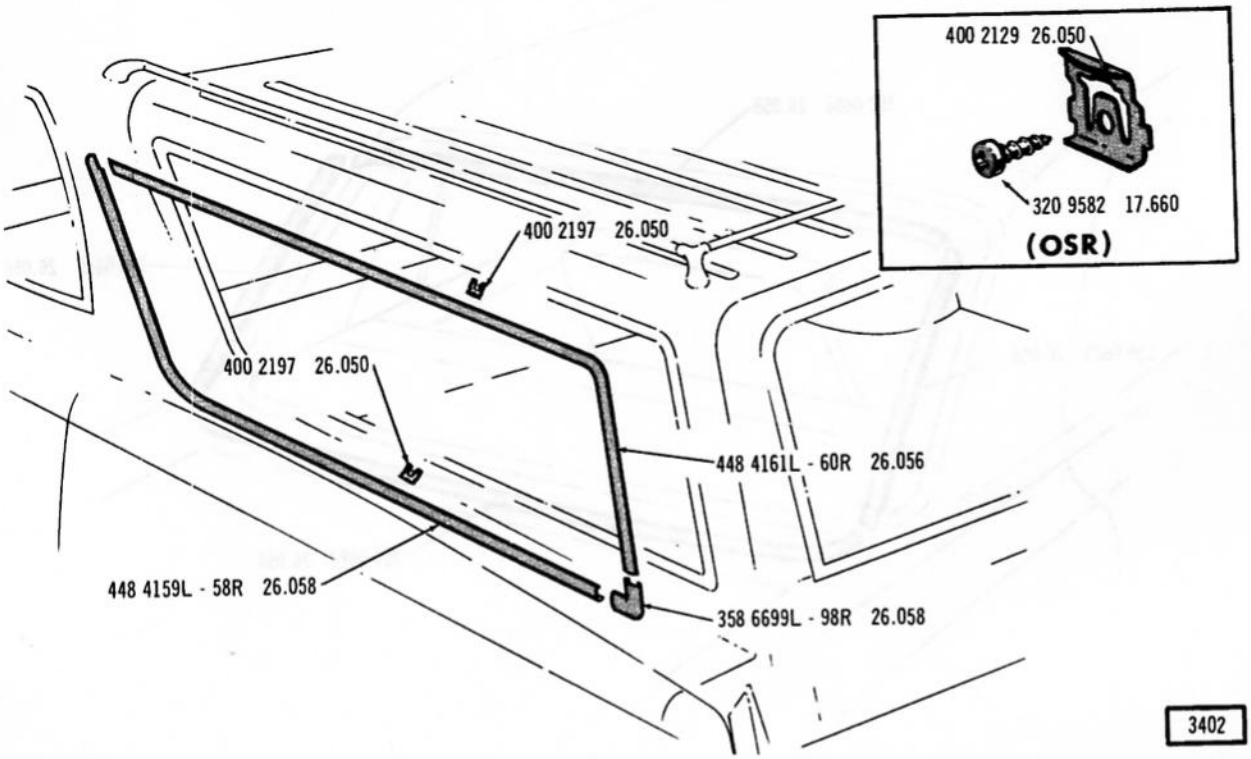

REAR QUARTER REVEAL MOULDINGS ... 18, 88

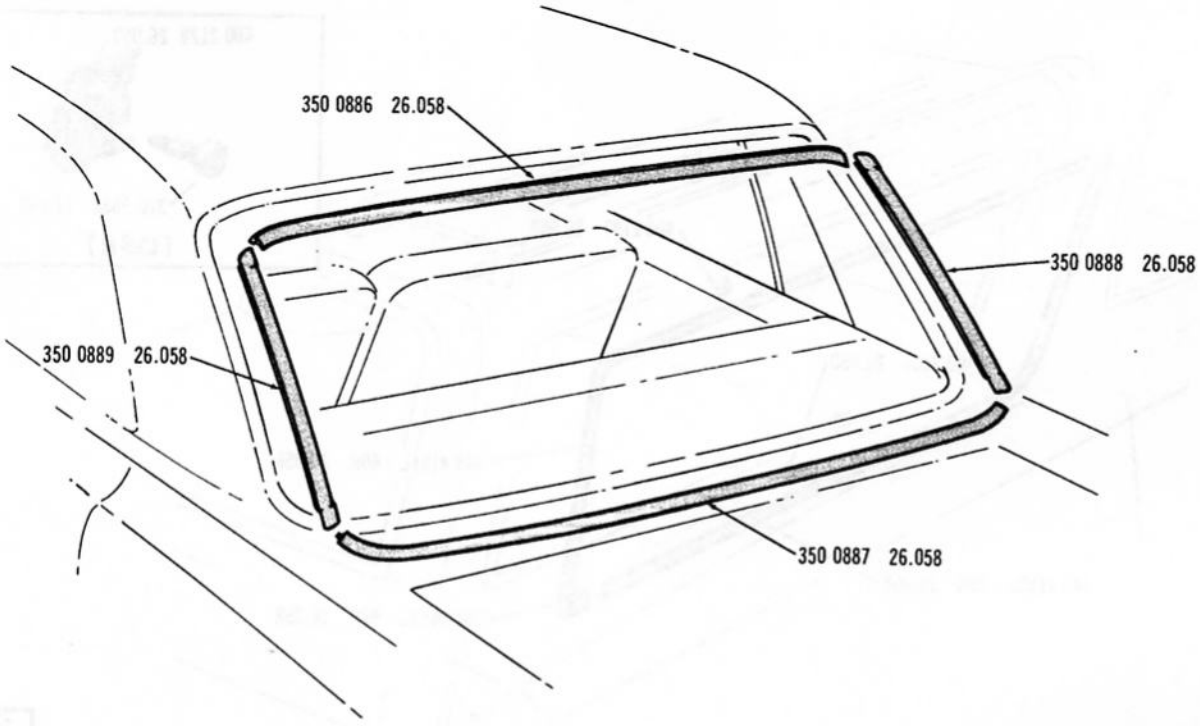

3410

REAR WINDOW REVEAL MOULDINGS ... 1967 (05)(06)

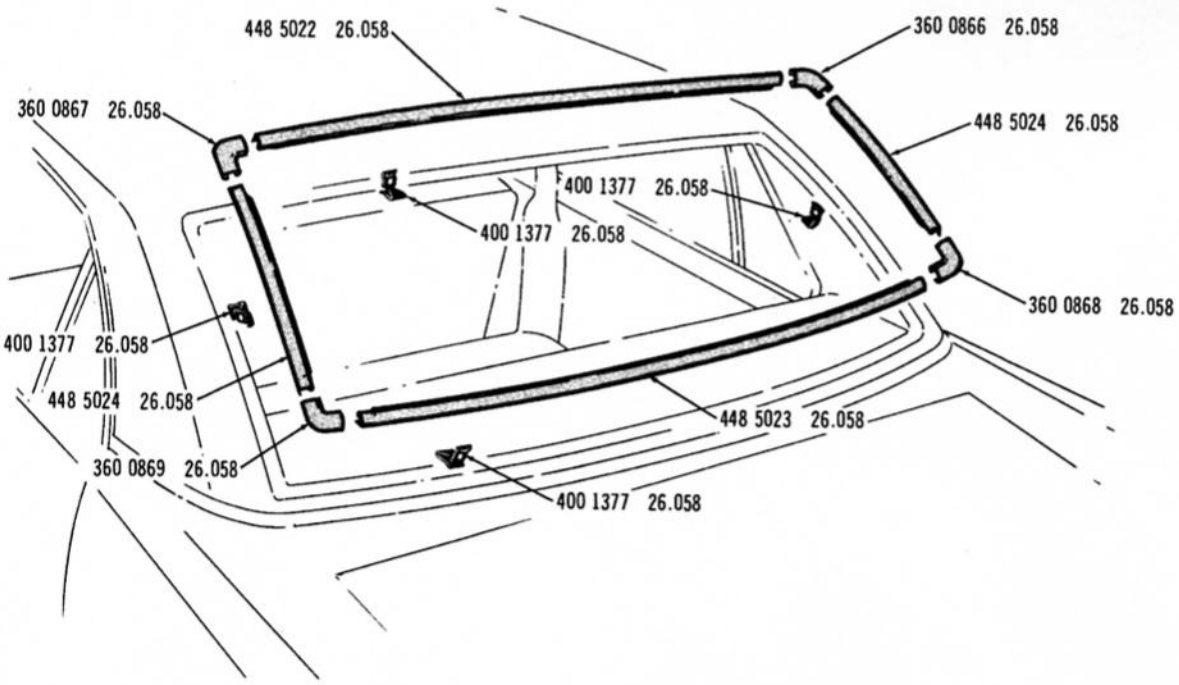

3411

REAR WINDOW REVEAL MOULDINGS ... 1968/69 (05)(06)

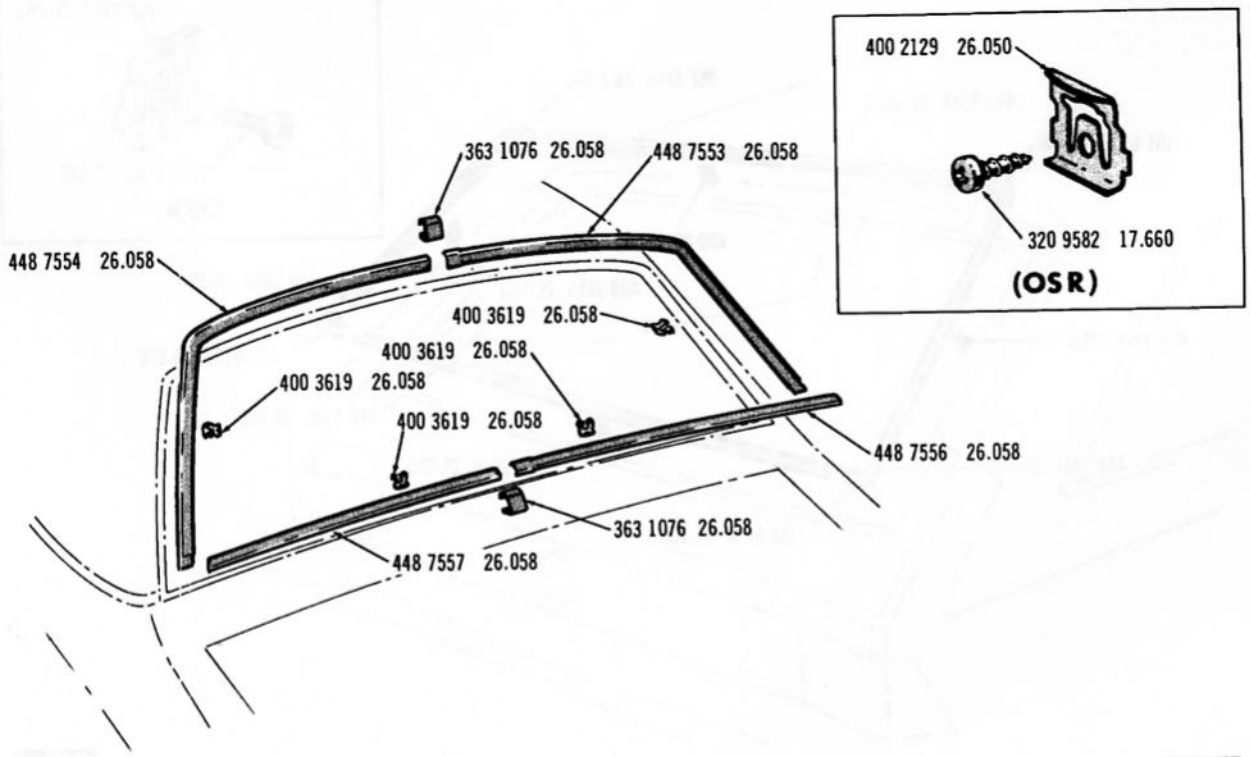

REAR WINDOW REVEAL MOULDINGS ... 1970/ (05)(06) 3868

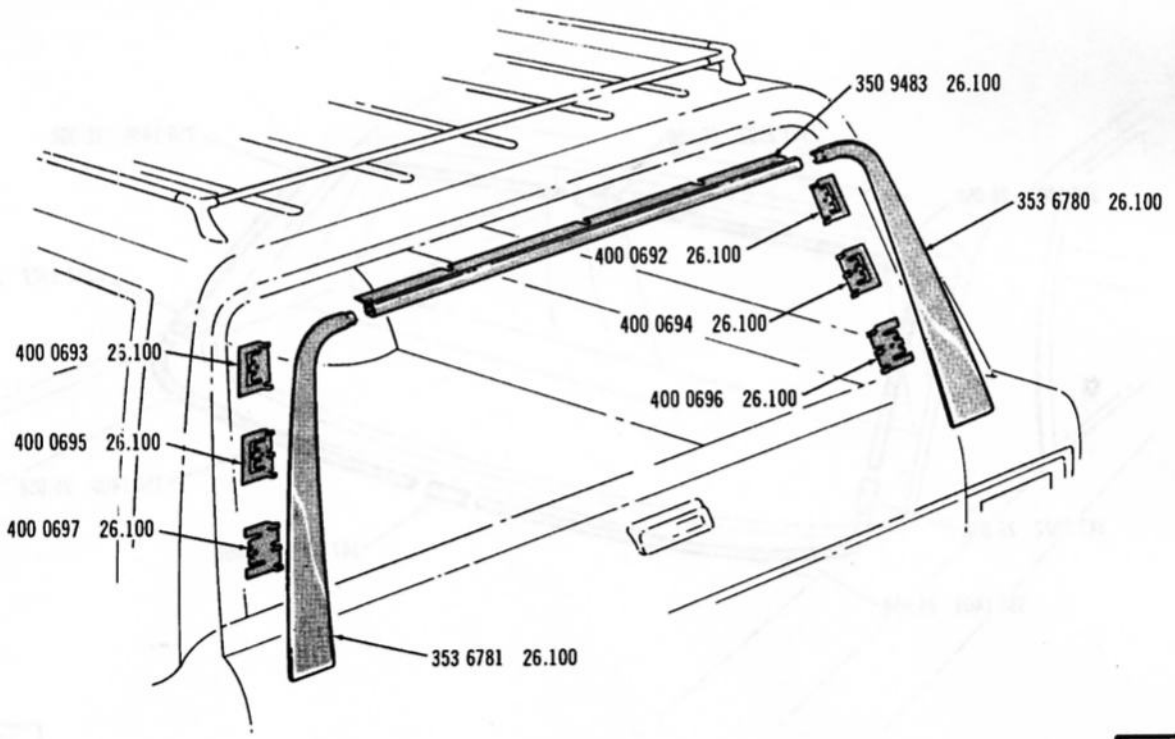

3256

REAR WINDOW REVEAL MOULDINGS ... 1967/69 (08)

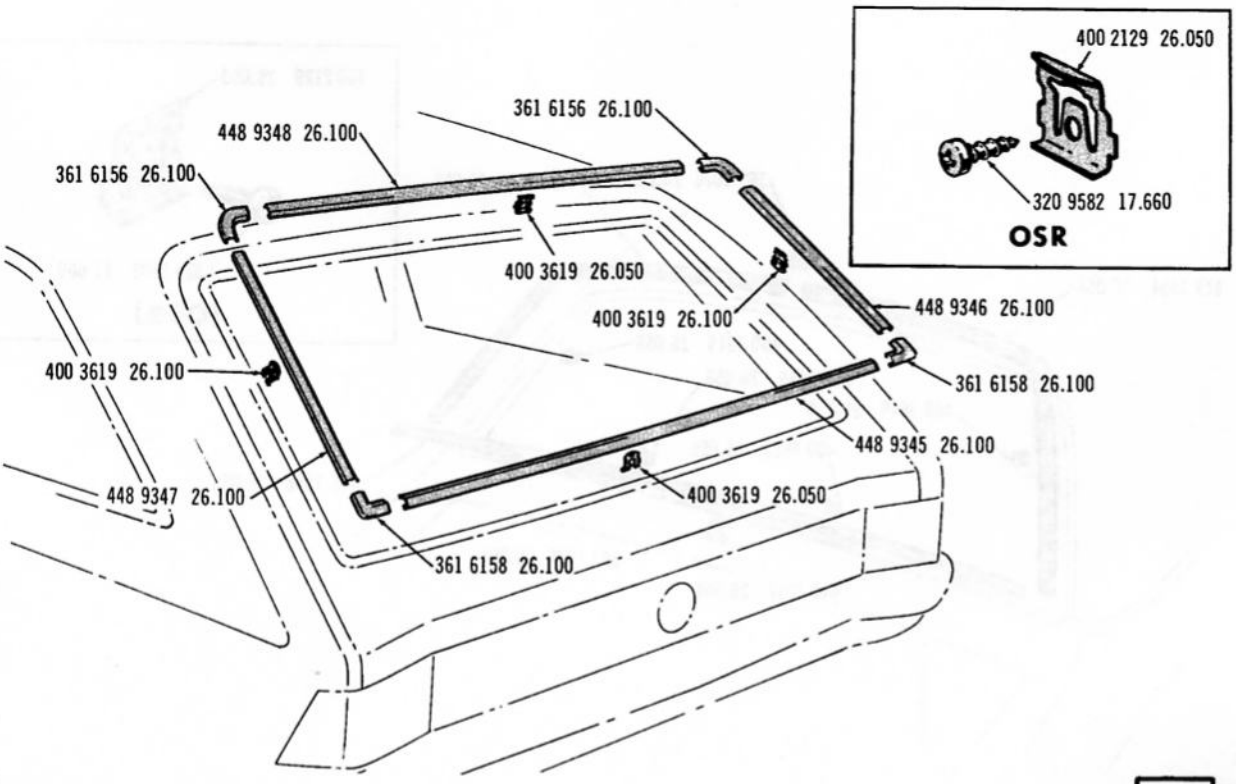

REAR WINDOW REVEAL MOULDINGS ... 1971/ (08)

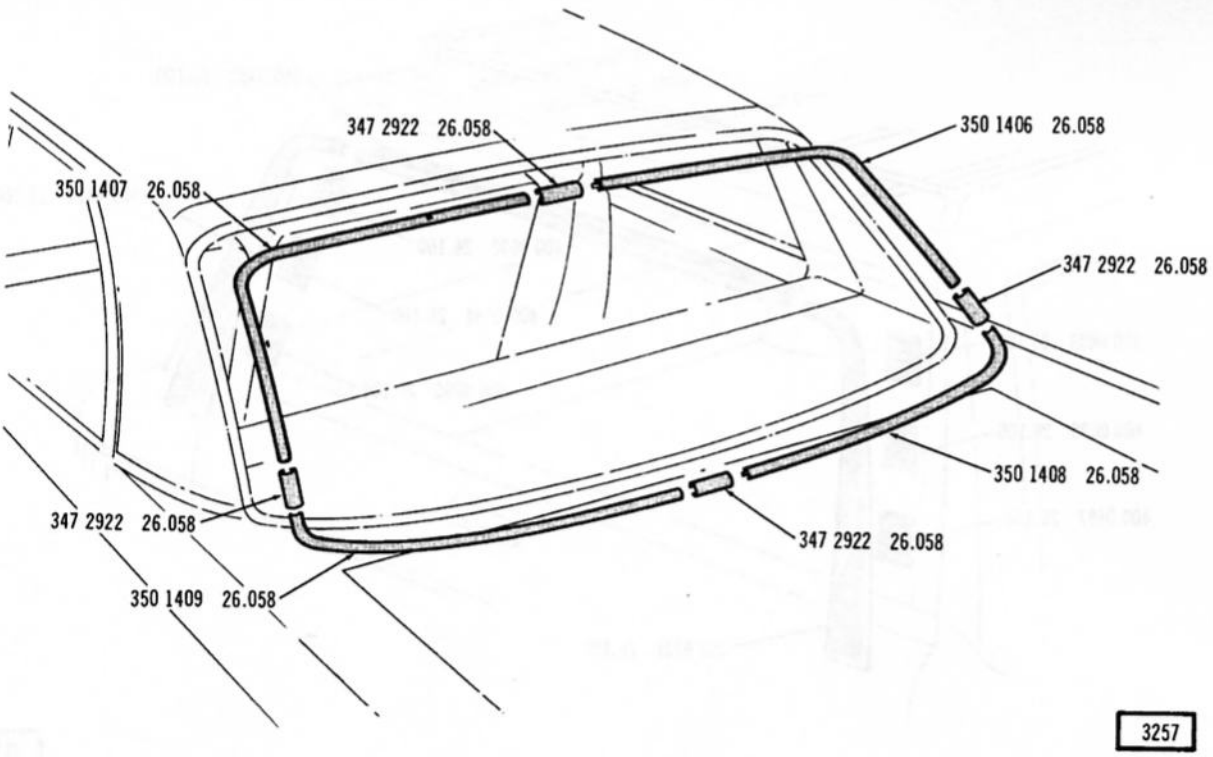

REAR WINDOW REVEAL MOULDINGS ... 09

Printed in U.S.A.

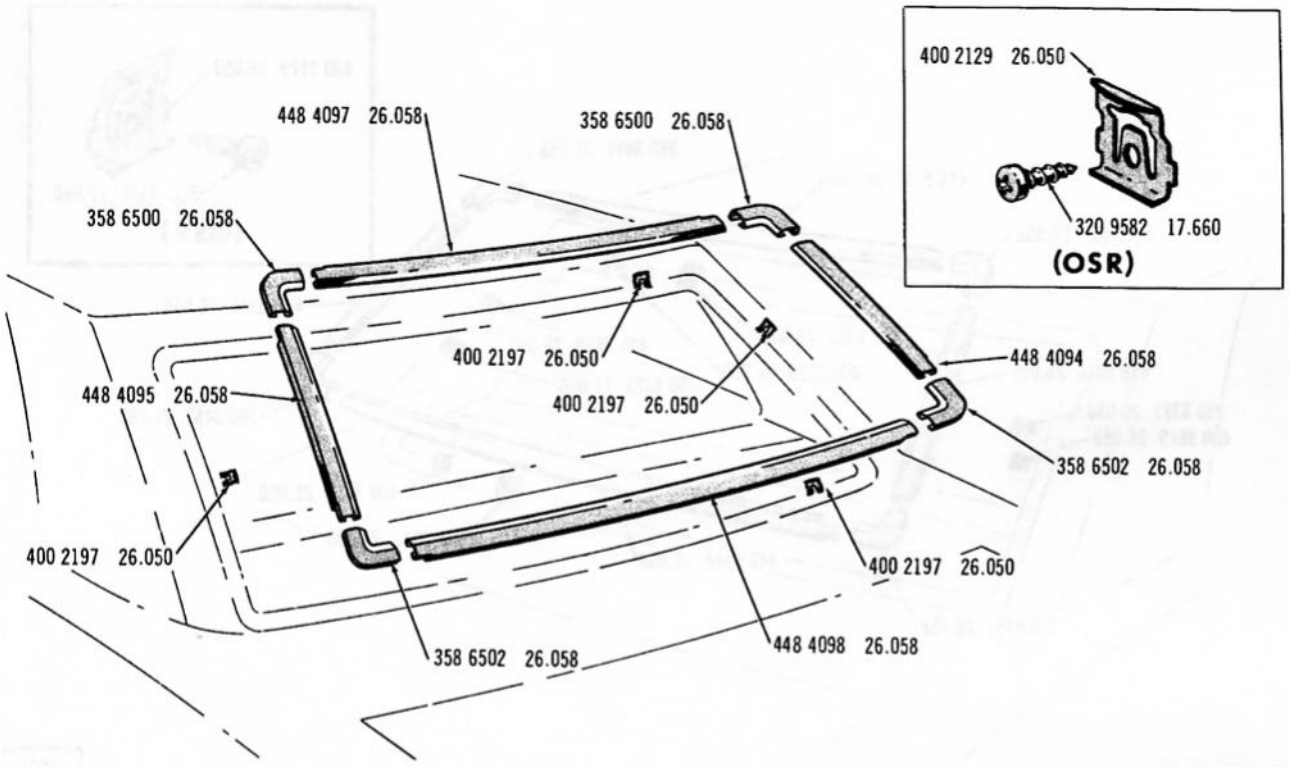

REAR WINDOW REVEAL MOULDINGS ... 1967 (15)(85)

3408

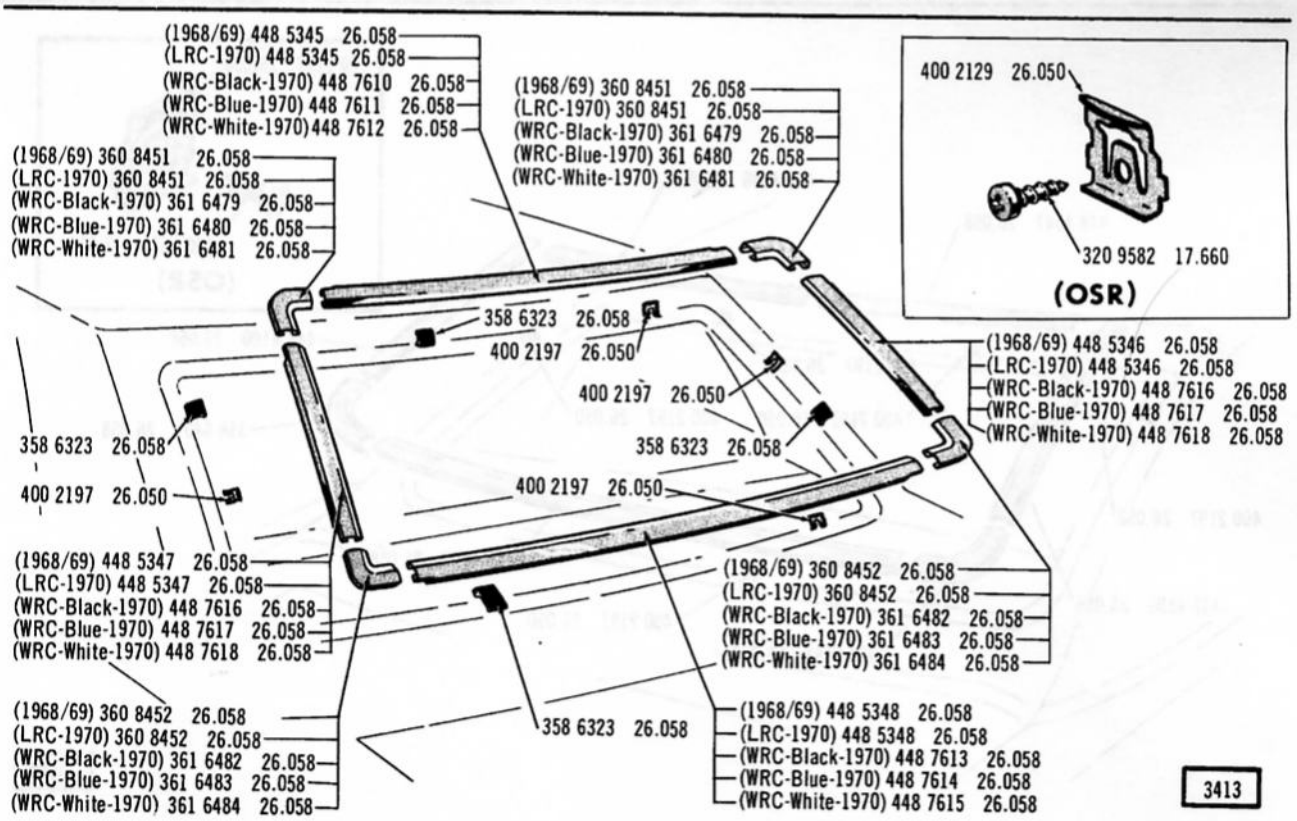

3413

REAR WINDOW REVEAL MOULDINGS ... 1968/70 (15)(85)

Printed in U.S.A.

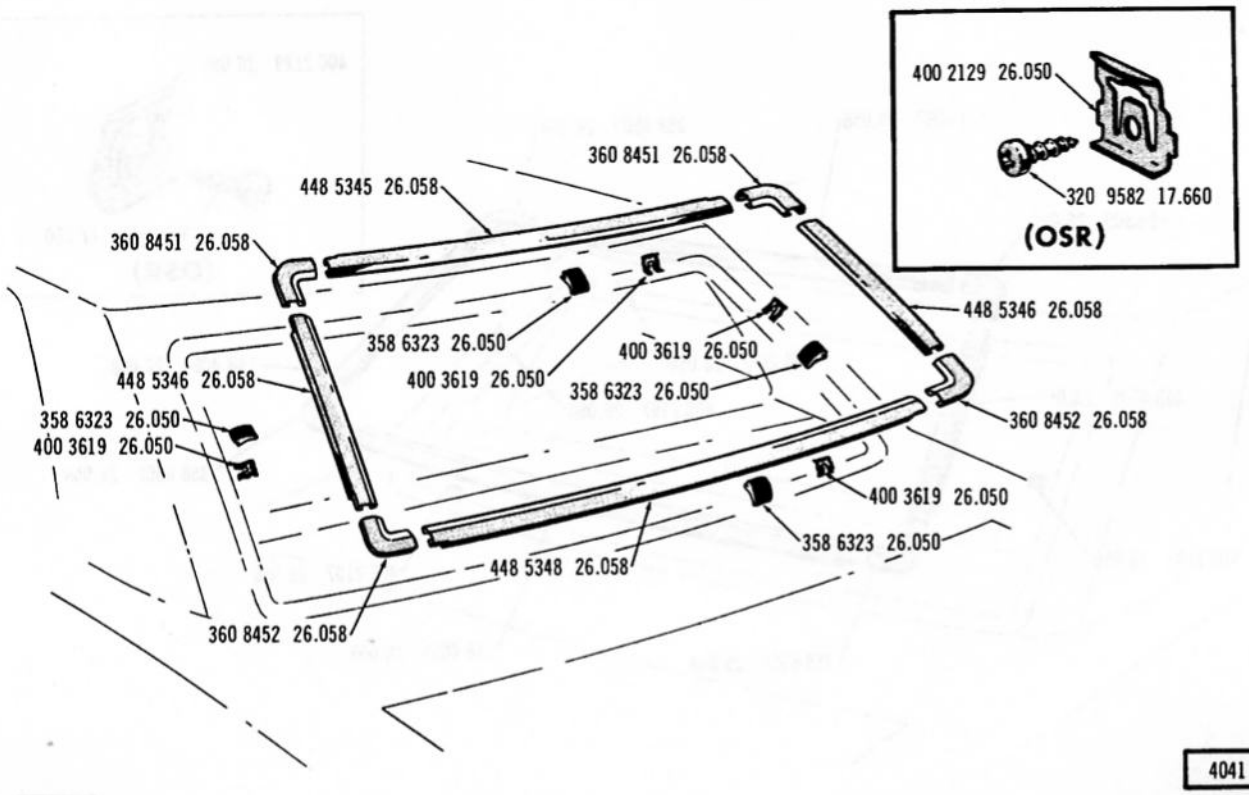

REAR WINDOW REVEAL MOULDINGS ... 1971/ (15)(85)

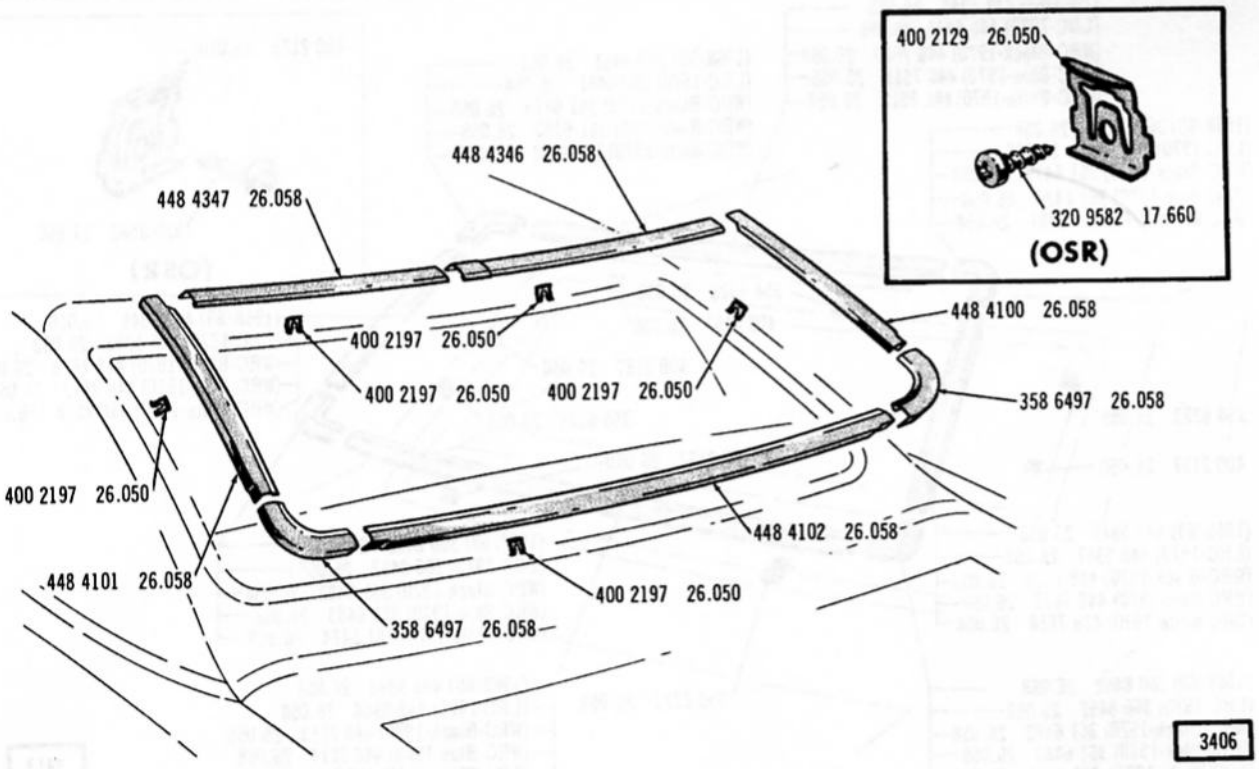

REAR WINDOW REVEAL MOULDINGS ... 1967 (16)(19)(86)(89)

Printed in U.S.A.

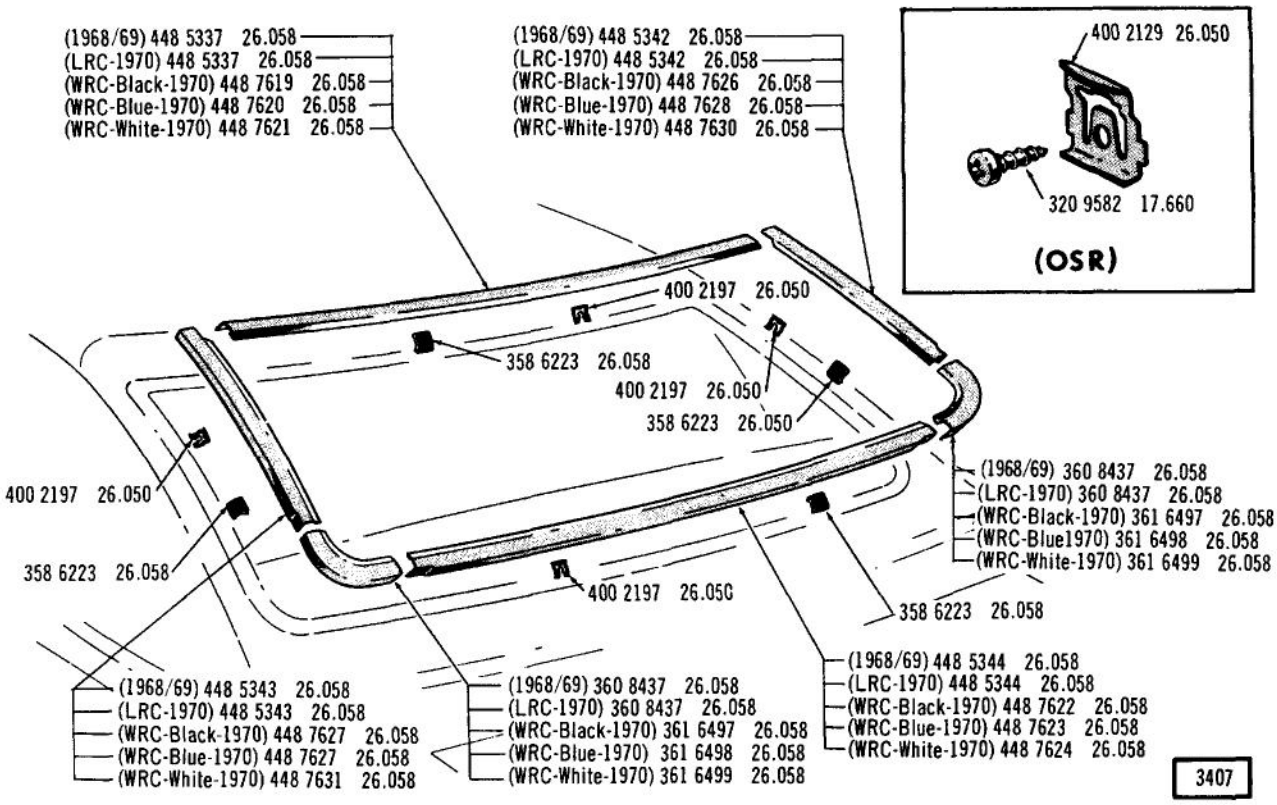

REAR WINDOW REVEAL MOULDINGS ... 1968/70 (19)(89)

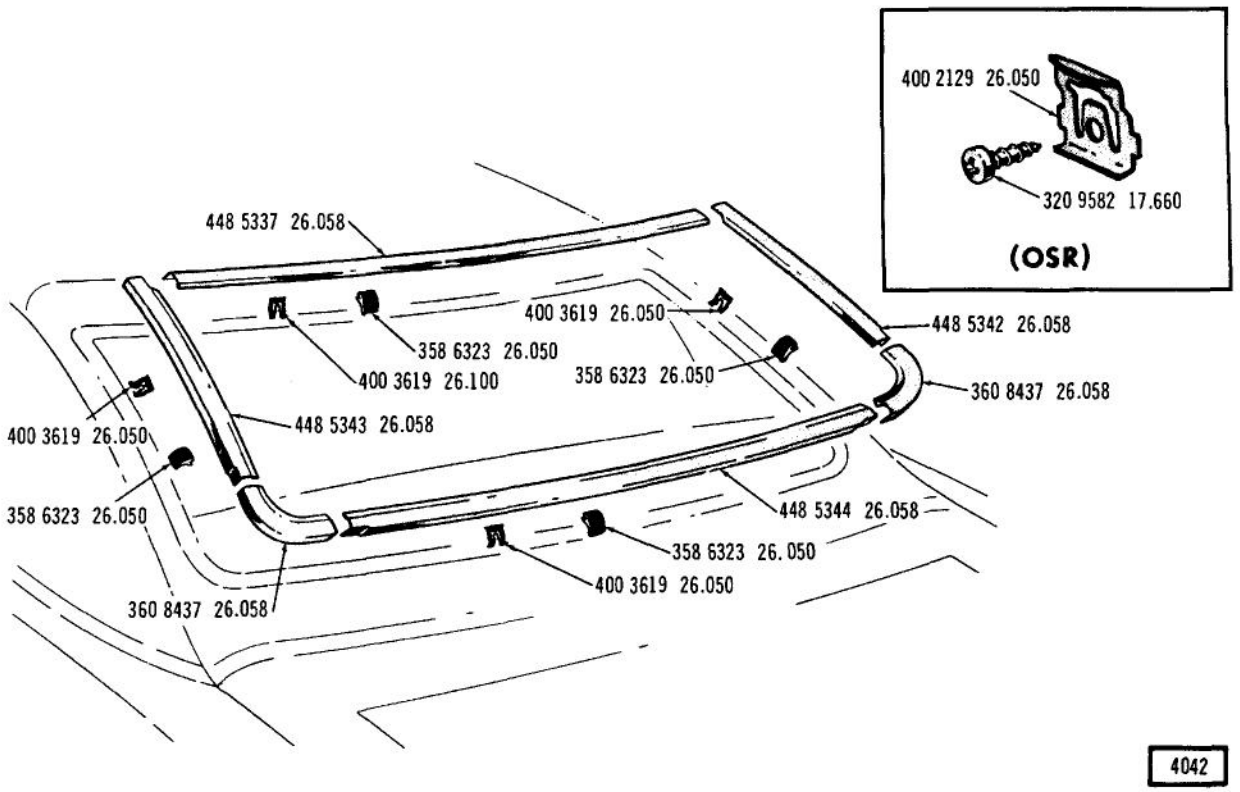

REAR WINDOW REVEAL MOULDINGS ... 1971/ (19)(89)

Printed in U.S.A.

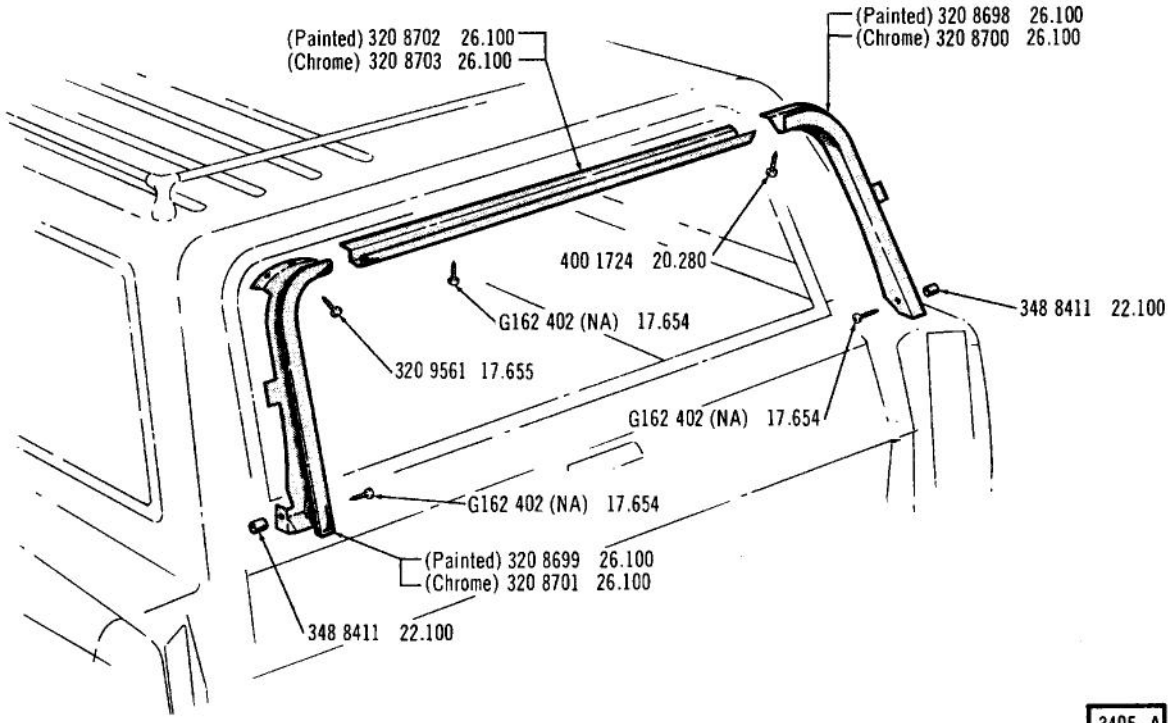

3405-A

REAR WINDOW REVEAL MOULDINGS ... 18, 88

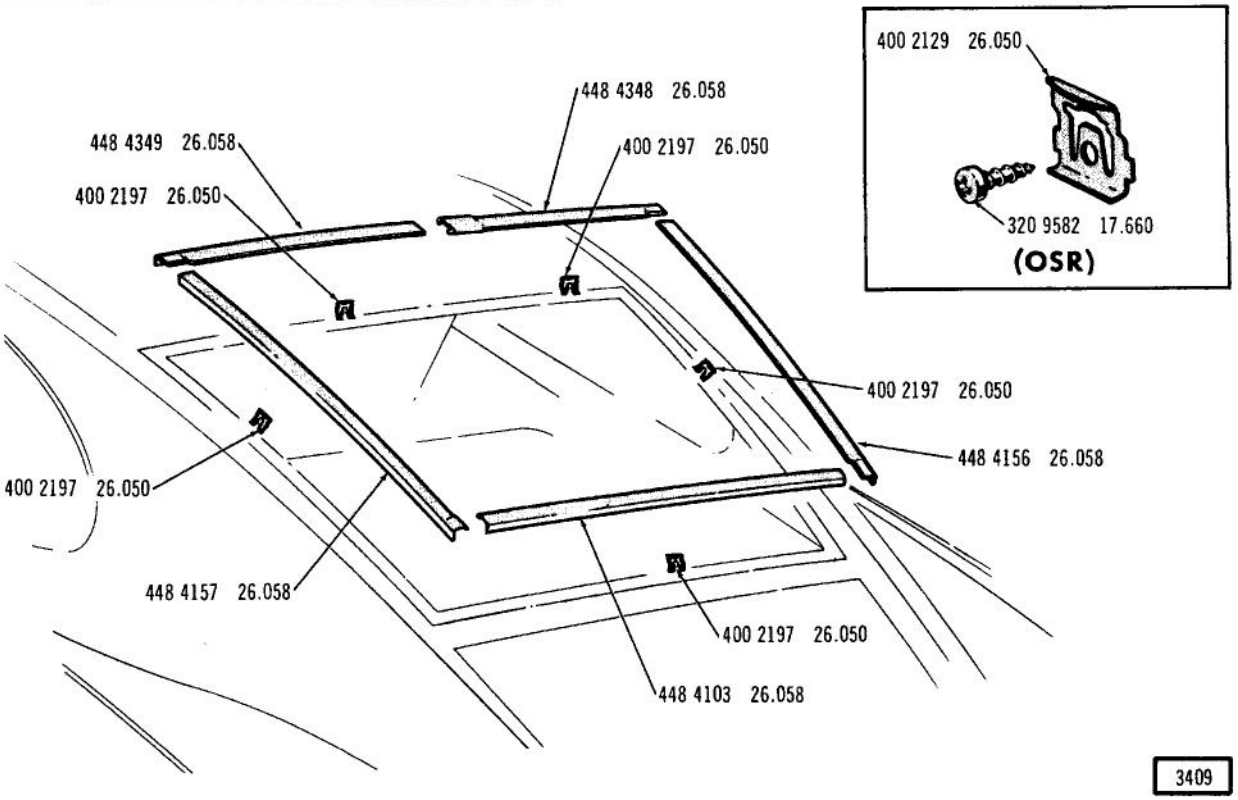

3409

REAR WINDOW REVEAL MOULDINGS ... 59

Printed in U.S.A.

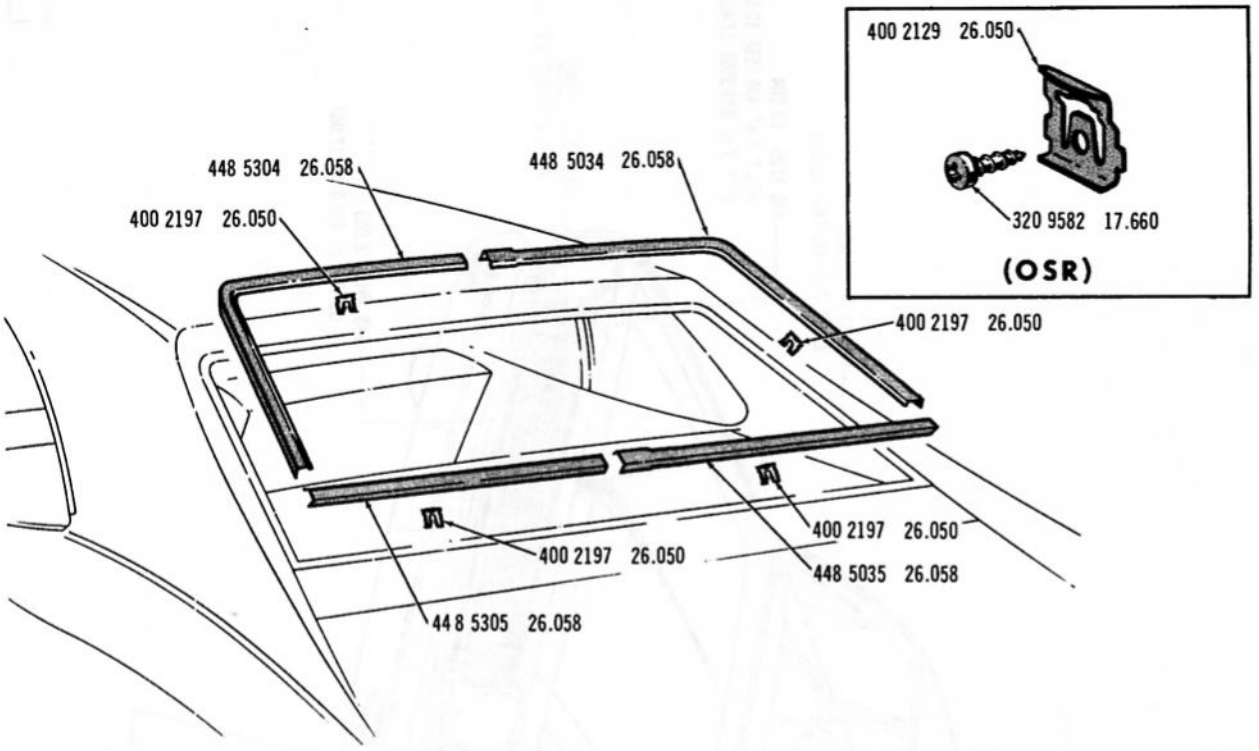

REAR WINDOW REVEAL MOULDINGS ... 1968/70 (30)(70)

3271-A

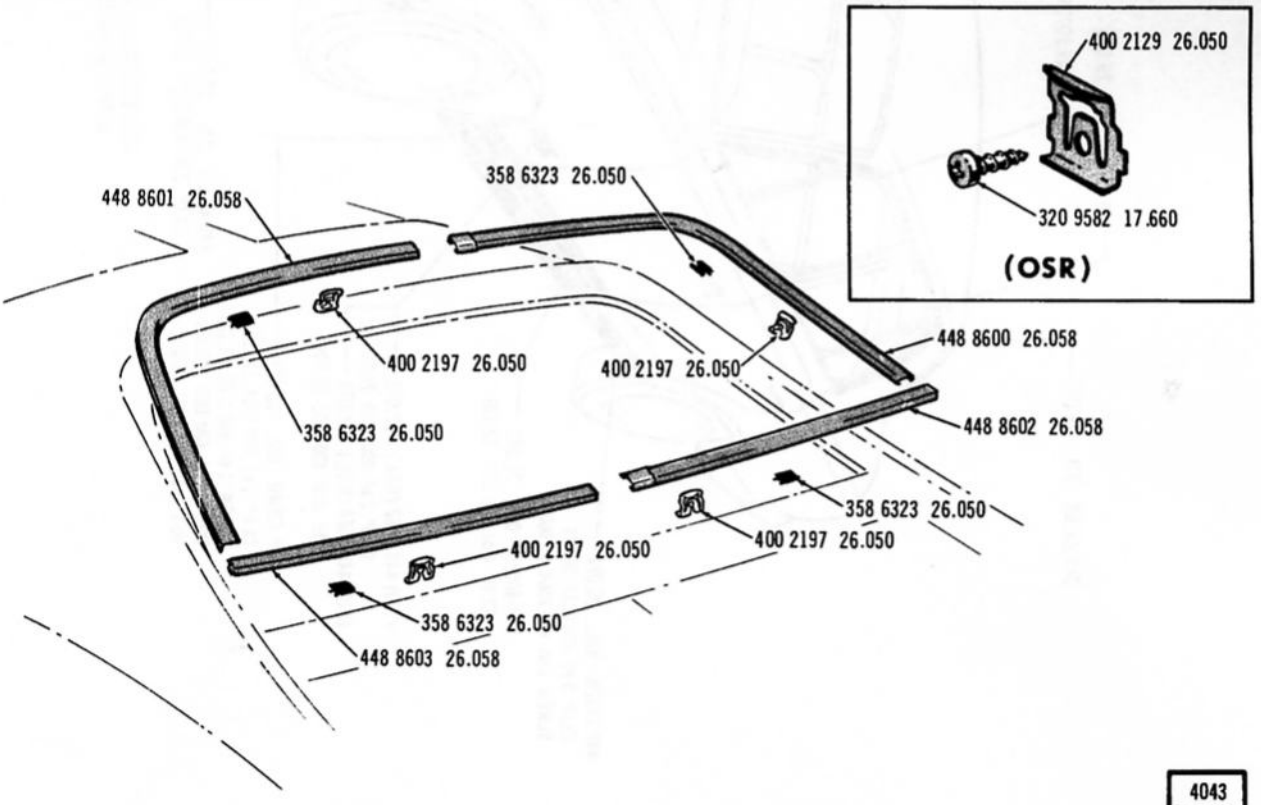

4043

REAR WINDOW REVEAL MOULDINGS ... 1971 (70)

Printed in U.S.A.

2583

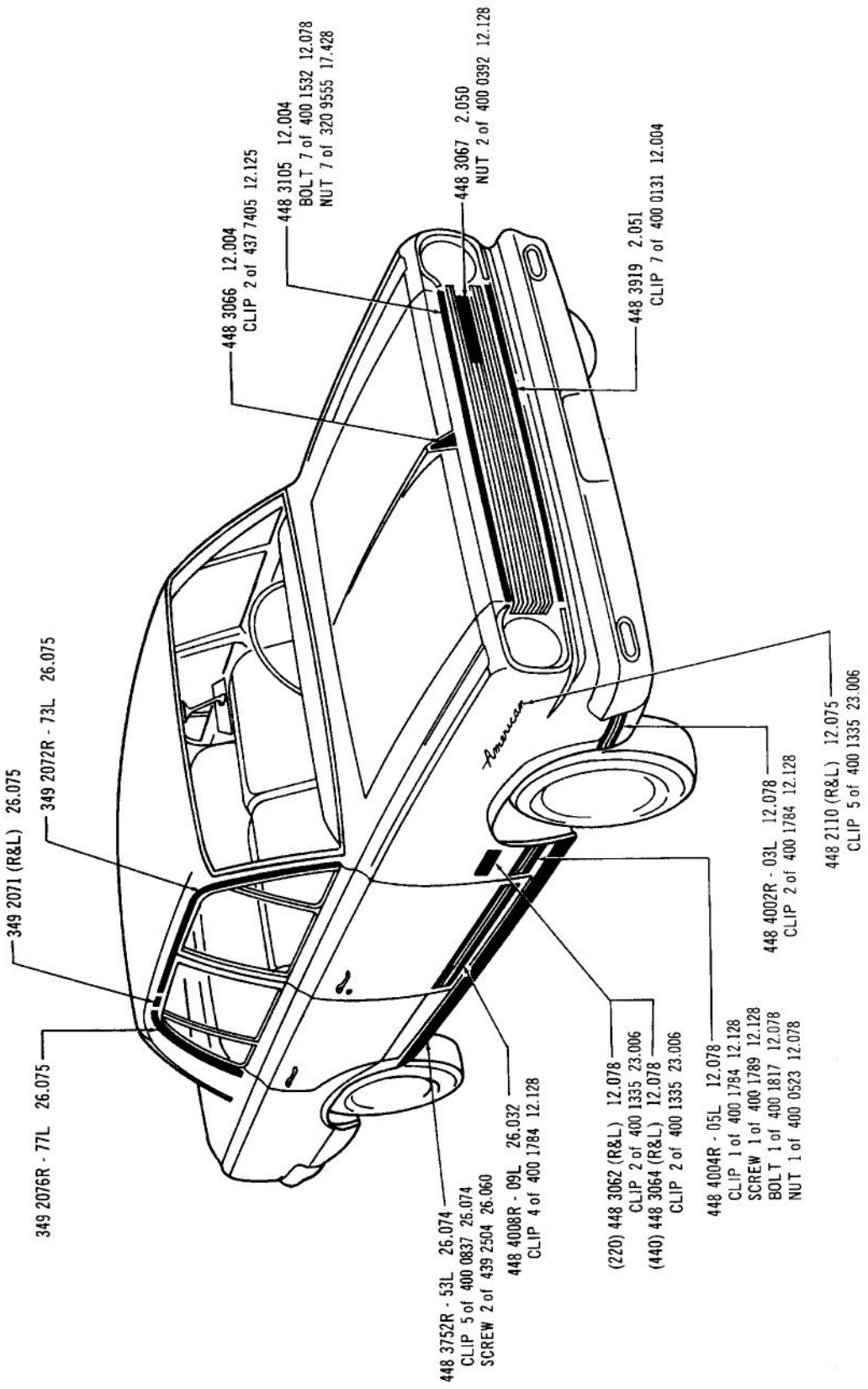

EXTERIOR ORNAMENTATION (FRONT VIEW) ... 1967 (05)

2584

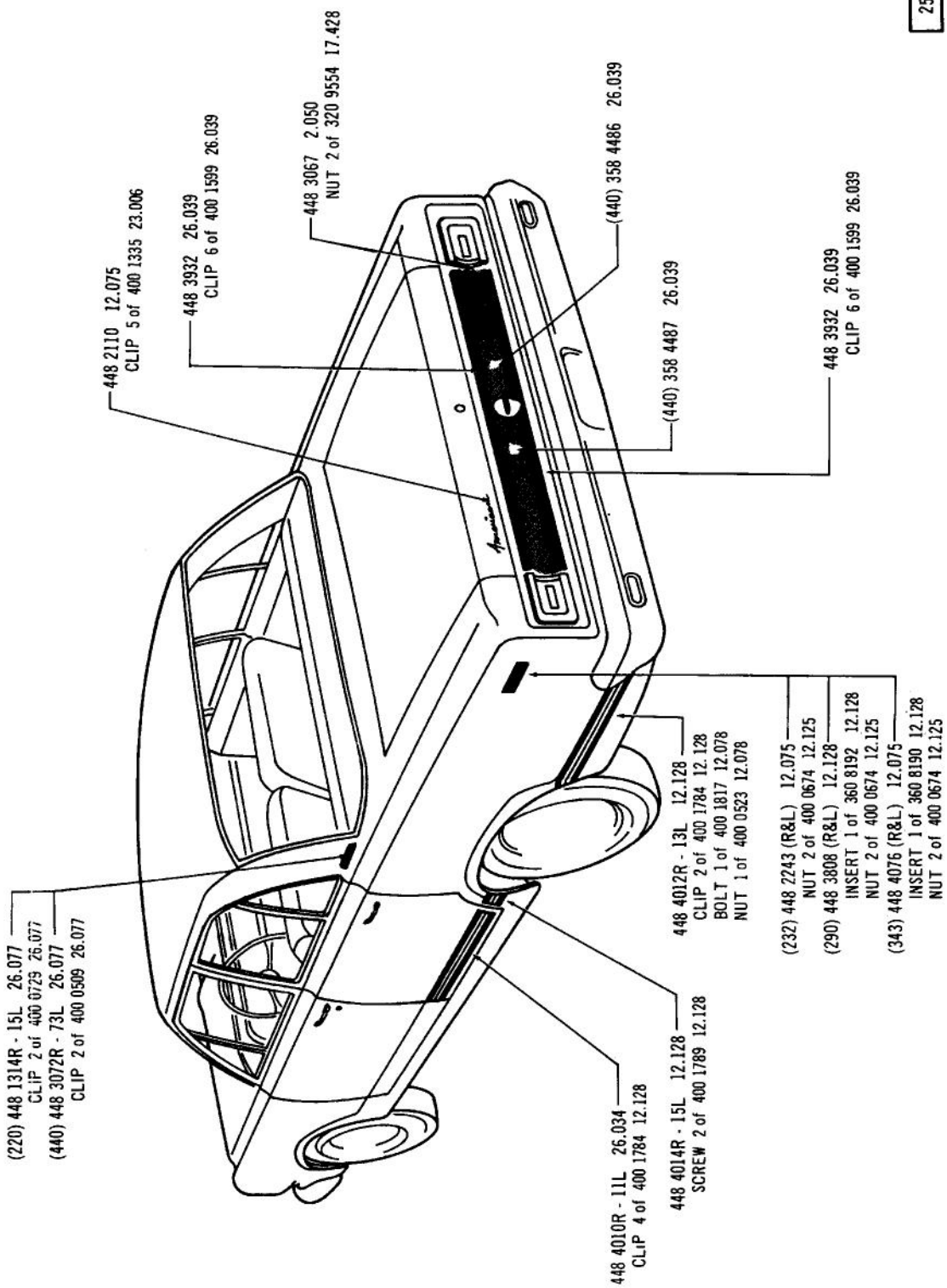

EXTERIOR ORNAMENTATION (REAR VIEW) ... 1967 (05)

2581

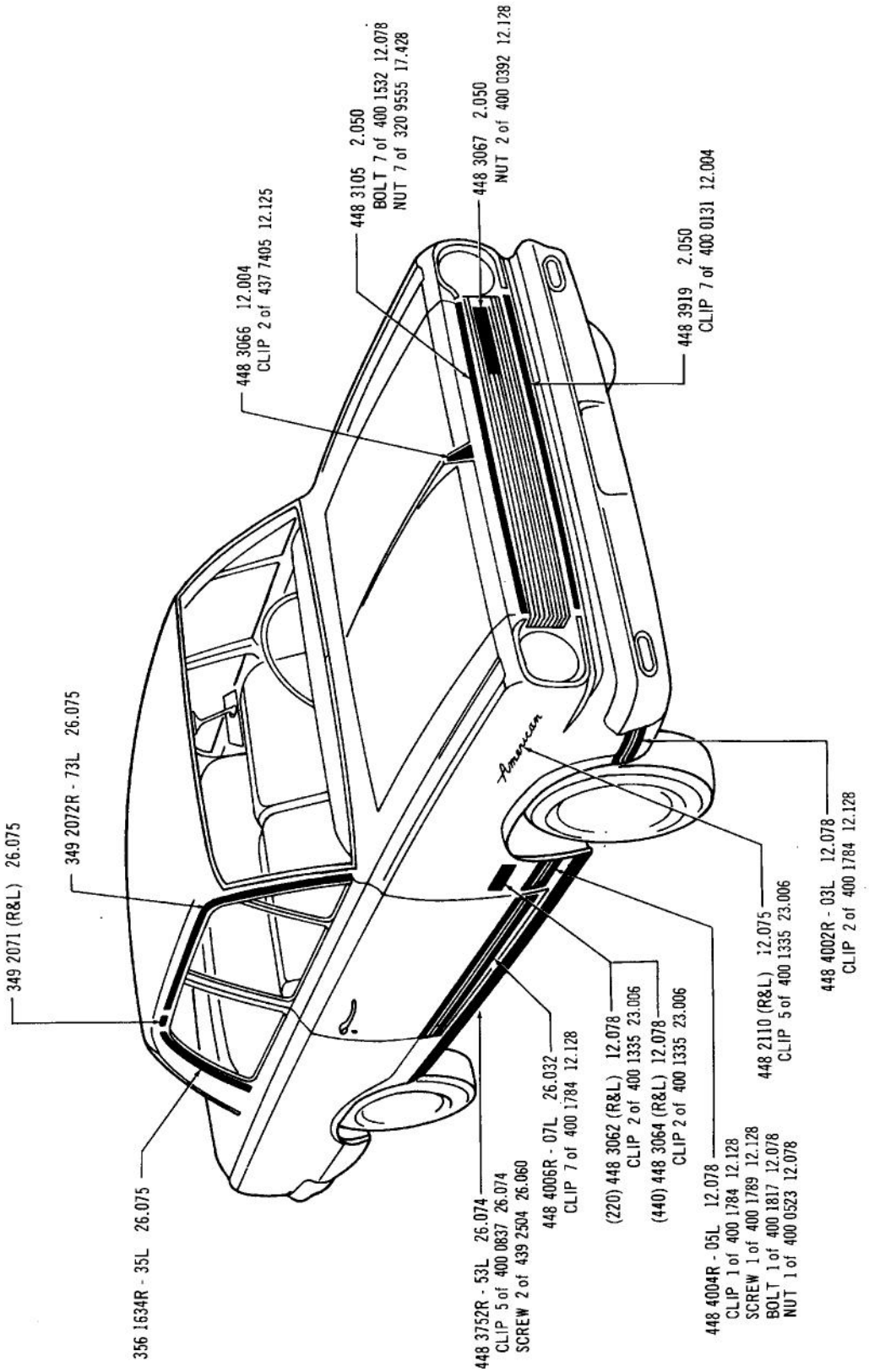

EXTERIOR ORNAMENTATION (FRONT VIEW) ... 1967 (06)

2582

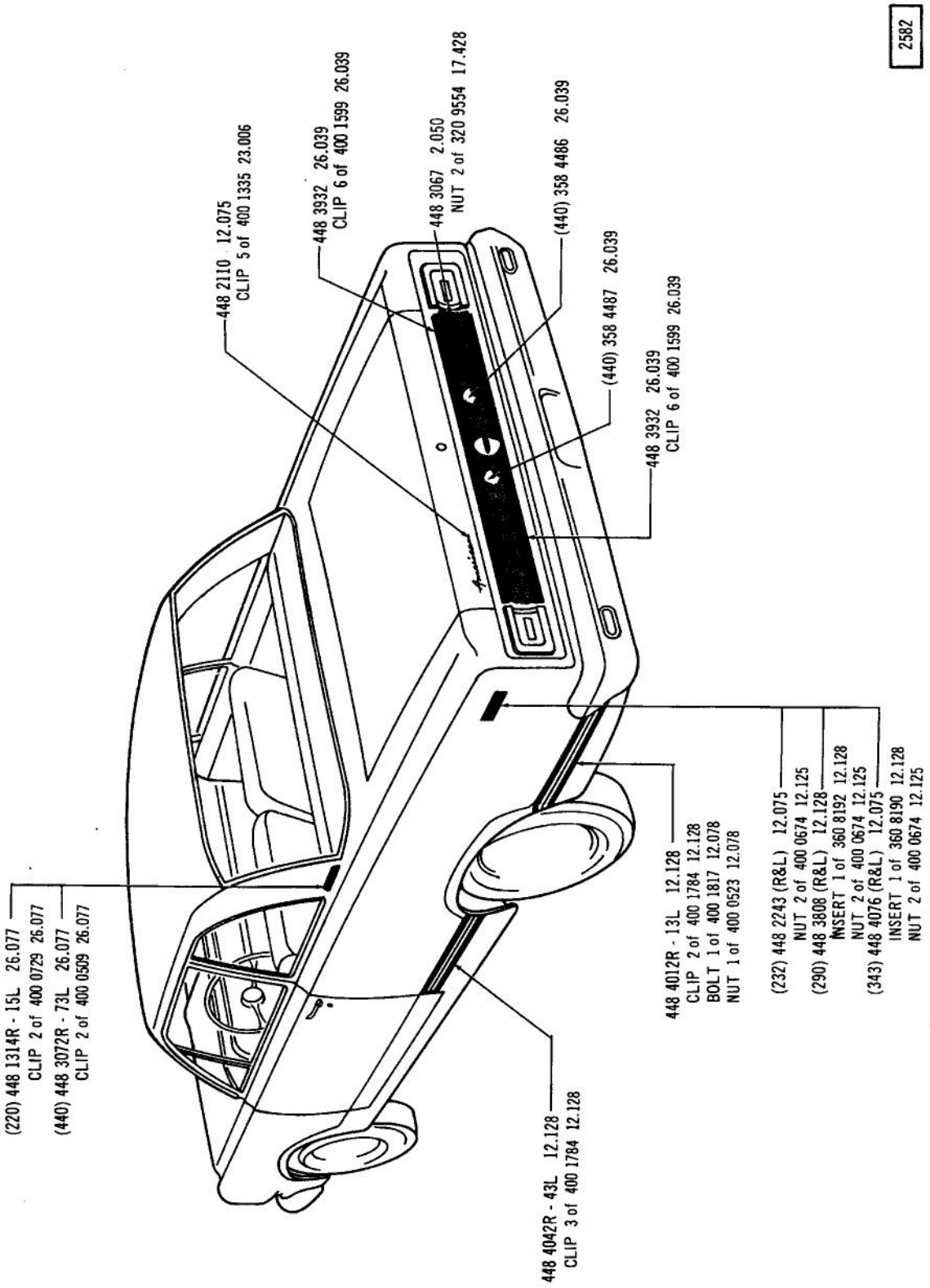

EXTERIOR ORNAMENTATION (REAR VIEW) ... 1967 (06)

2591

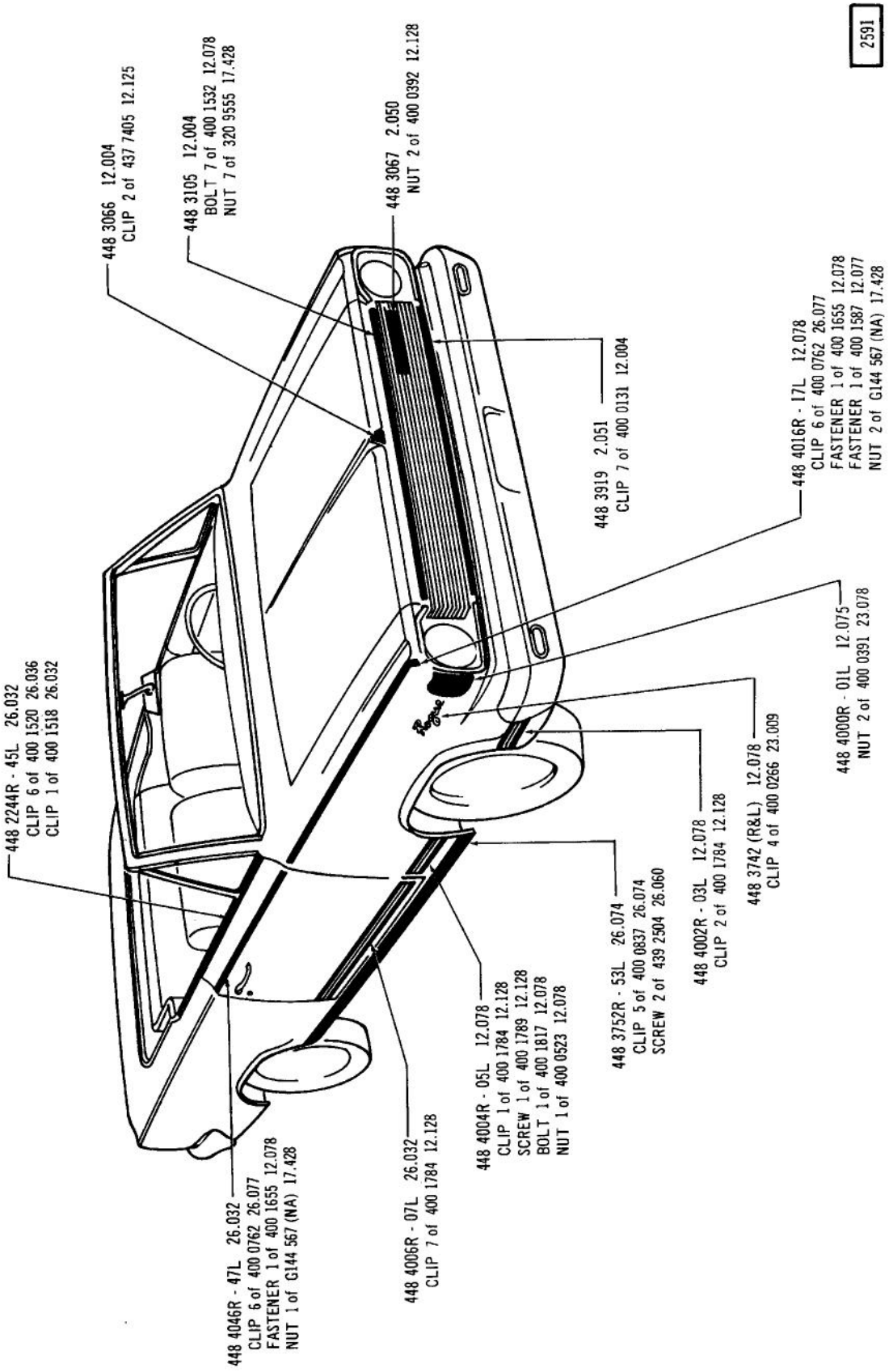

EXTERIOR ORNAMENTATION (FRONT VIEW) ... 1967 (07)

2592

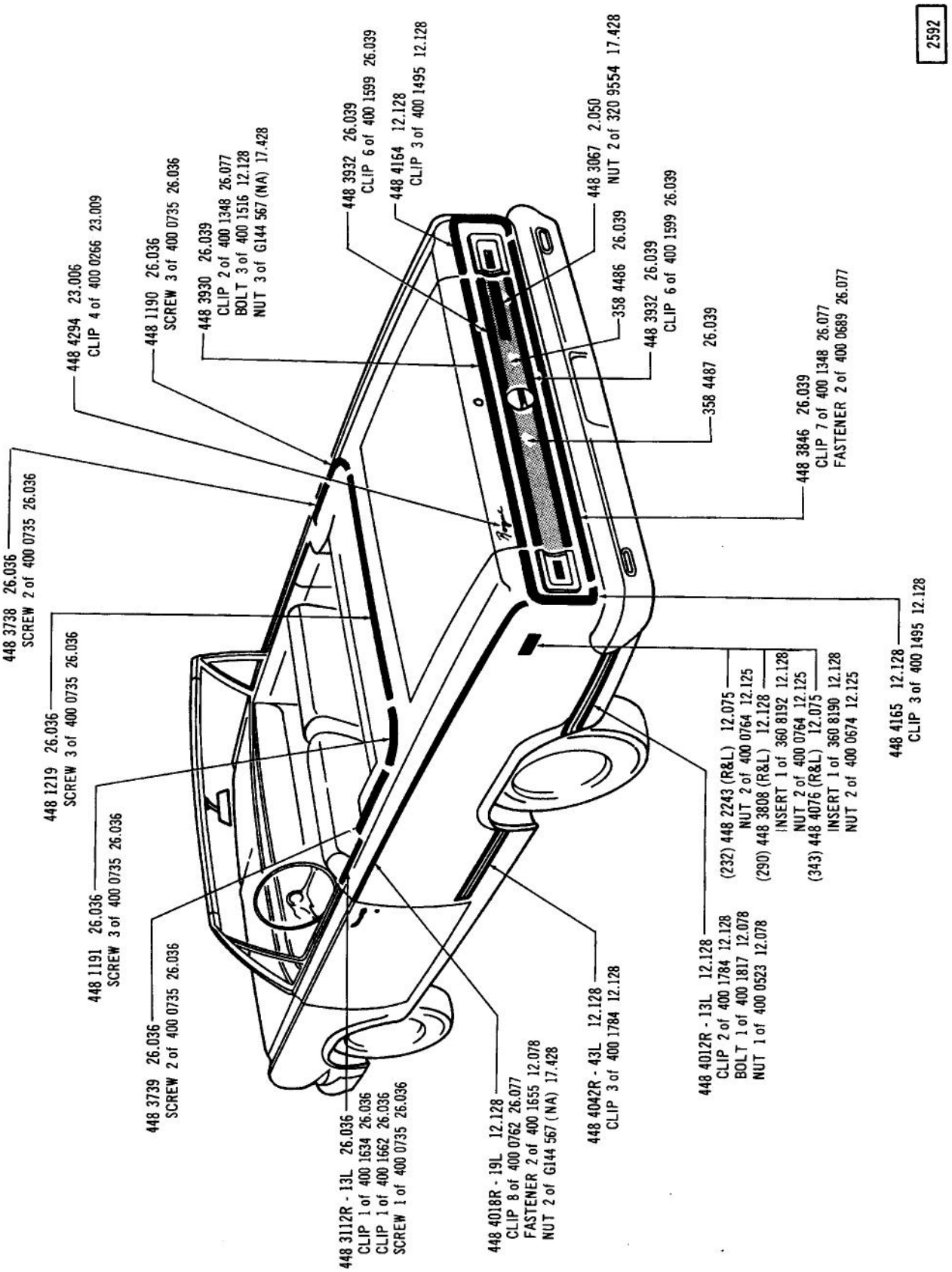

EXTERIOR ORNAMENTATION (REAR VIEW) ... 1967 (07)

2589

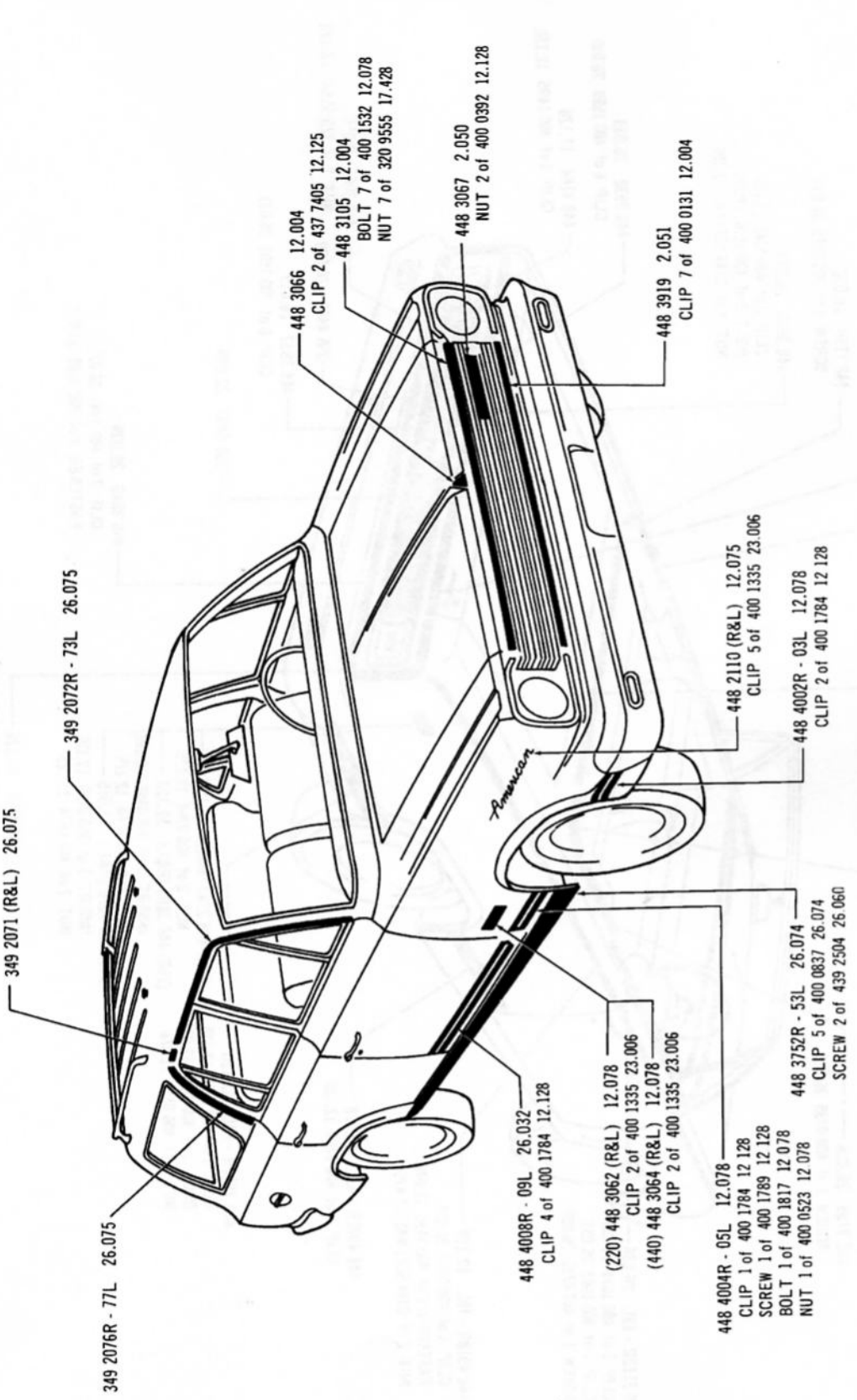

EXTERIOR ORNAMENTATION (FRONT VIEW) ... 1967 (08)

2590

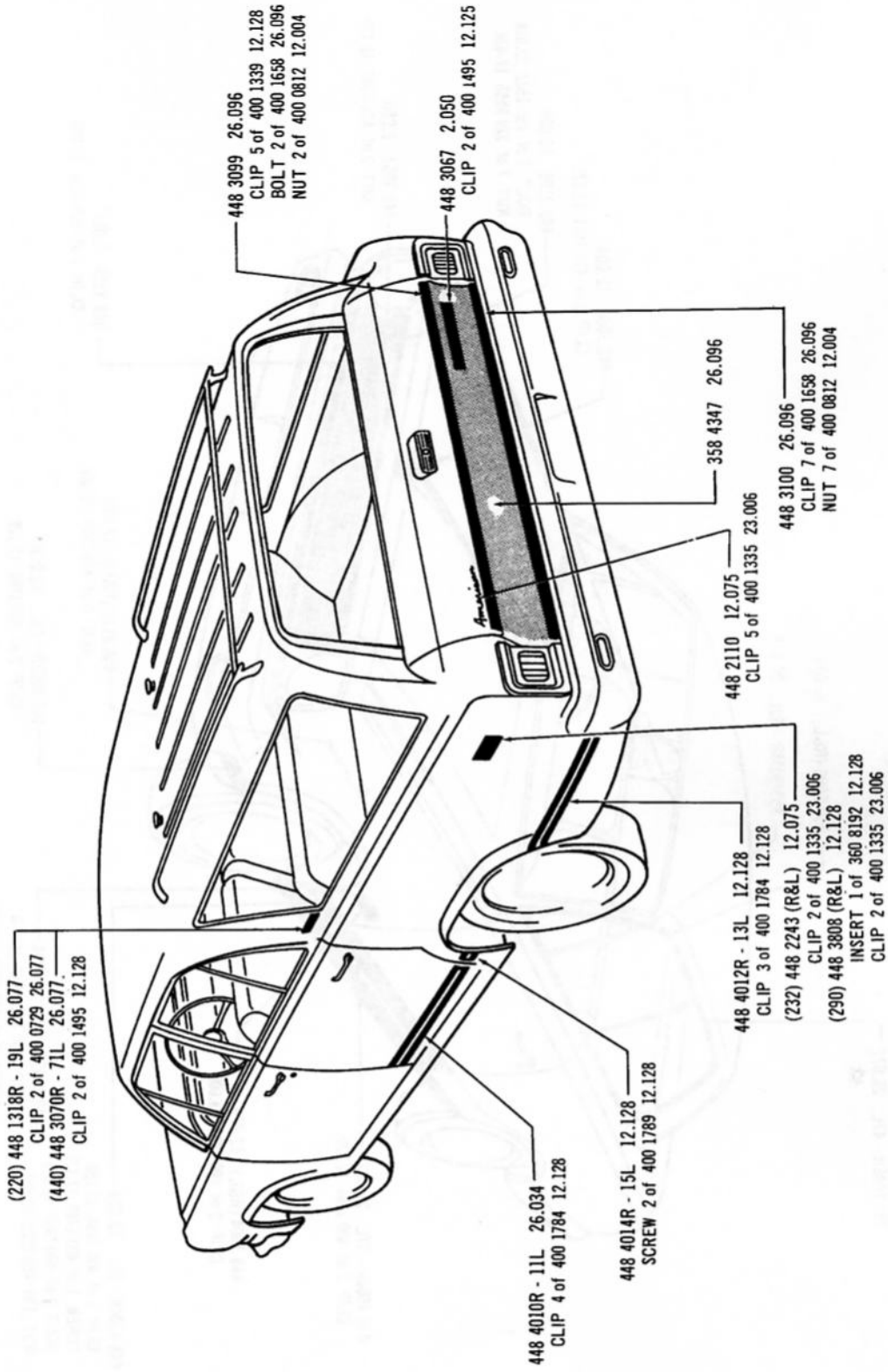

EXTERIOR ORNAMENTATION (REAR VIEW) ... 1967 (08)

2585

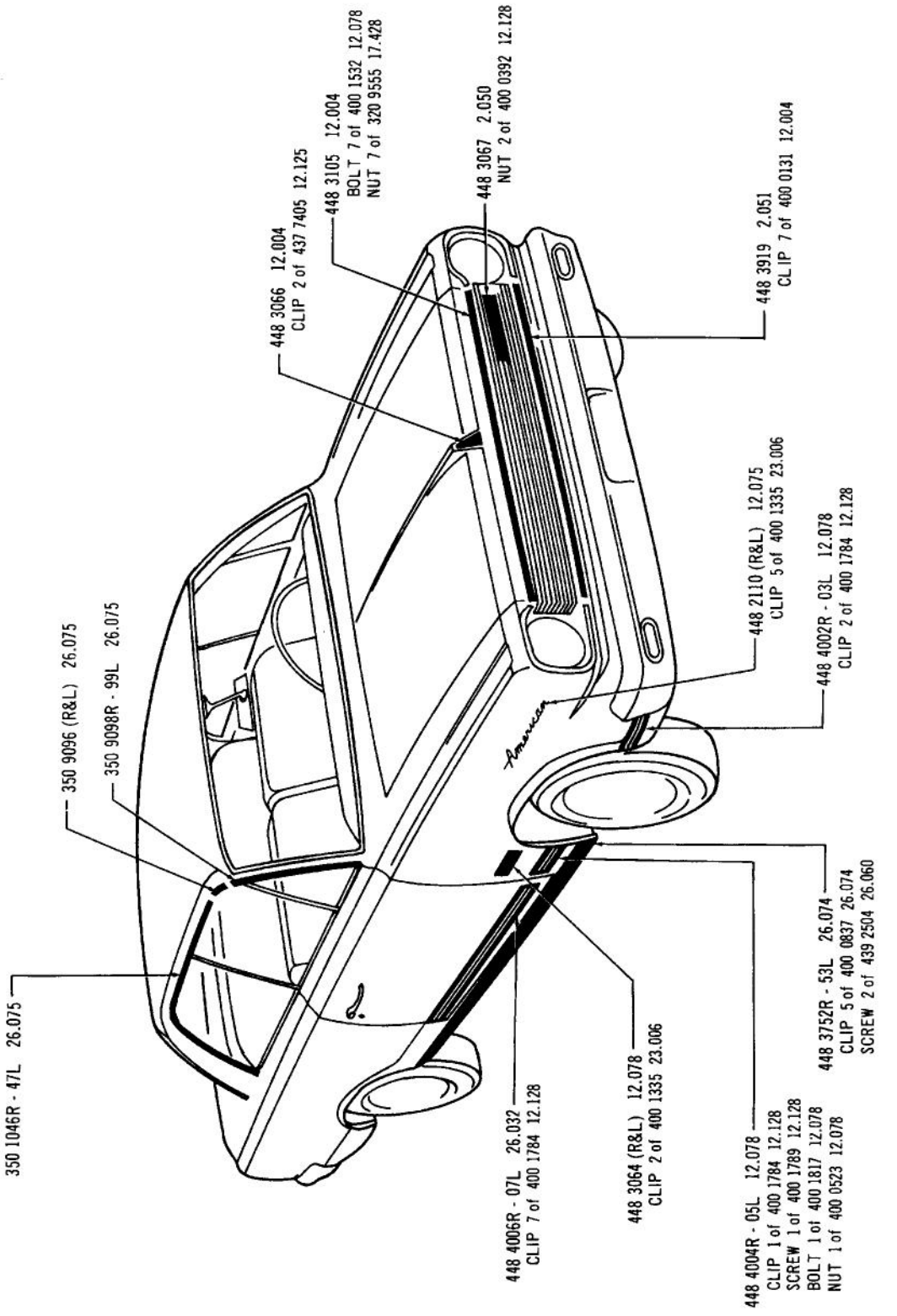

EXTERIOR ORNAMENTATION (FRONT VIEW) ... 1967 (09-440)

2586

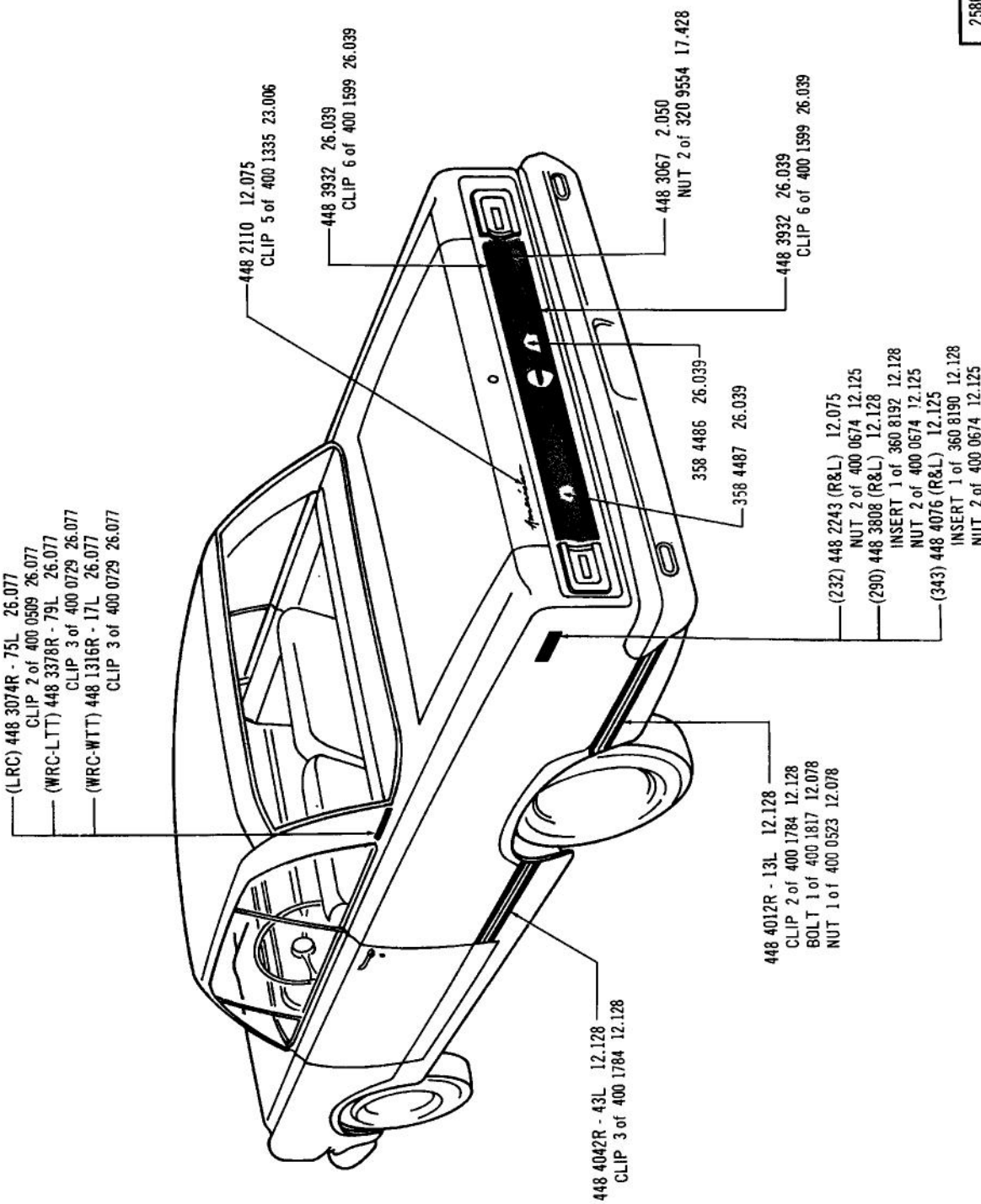

EXTERIOR ORNAMENTATION (REAR VIEW) ... 1967 (09-440)

2587

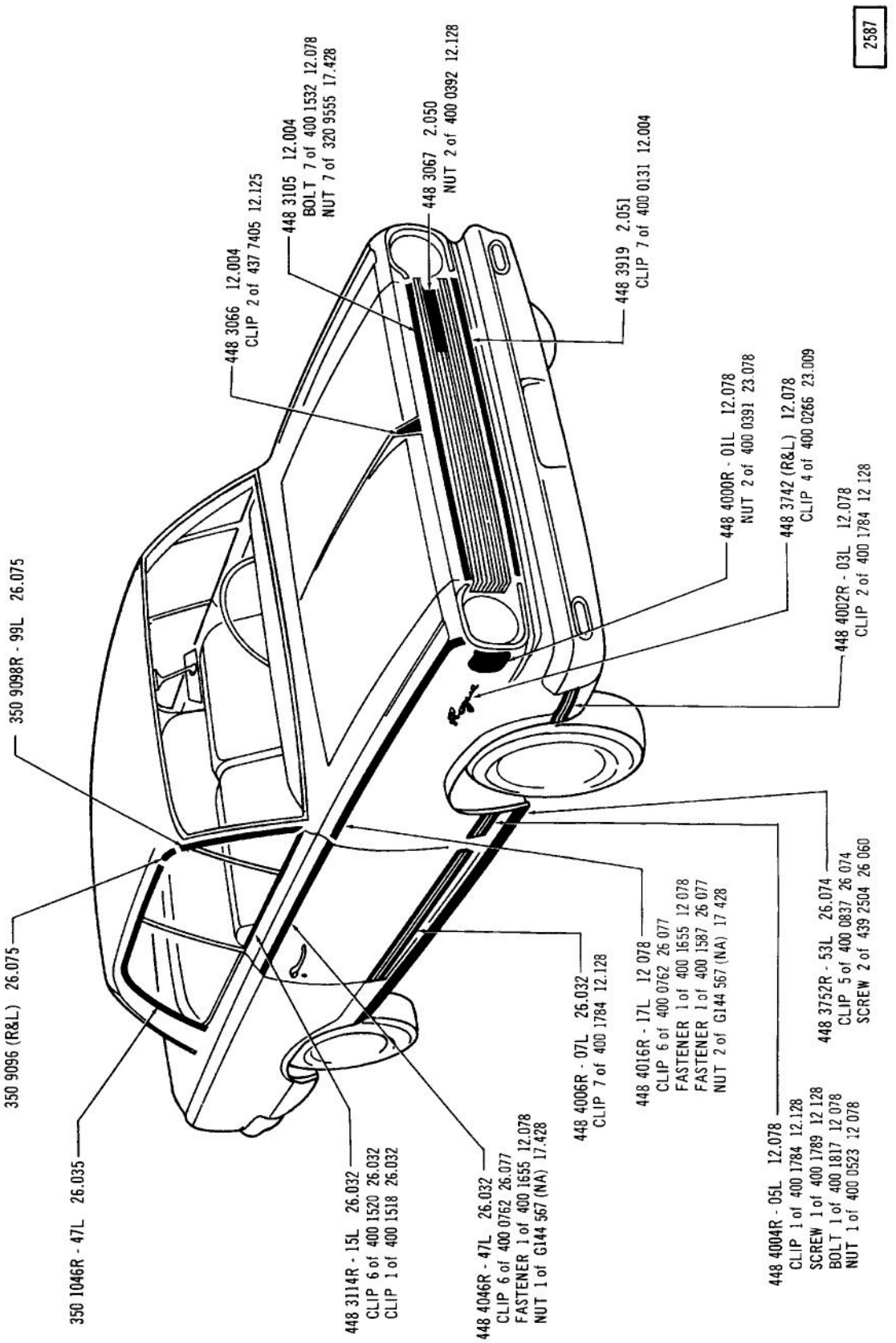

EXTERIOR ORNAMENTATION (FRONT VIEW) ... 1967 (09-ROGUE)

2588

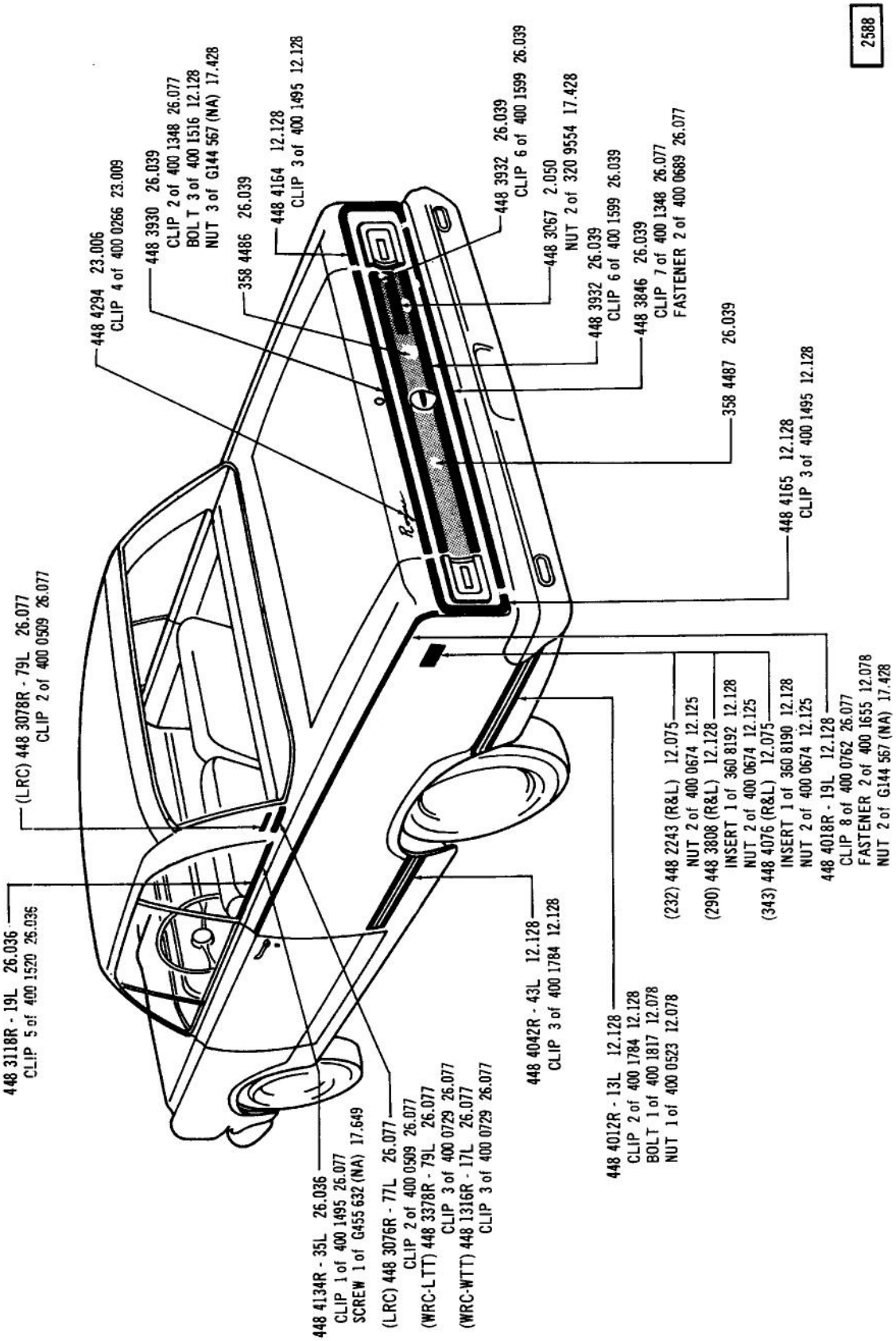

EXTERIOR ORNAMENTATION (REAR VIEW) ... 1967 (09-ROGUE)

3228

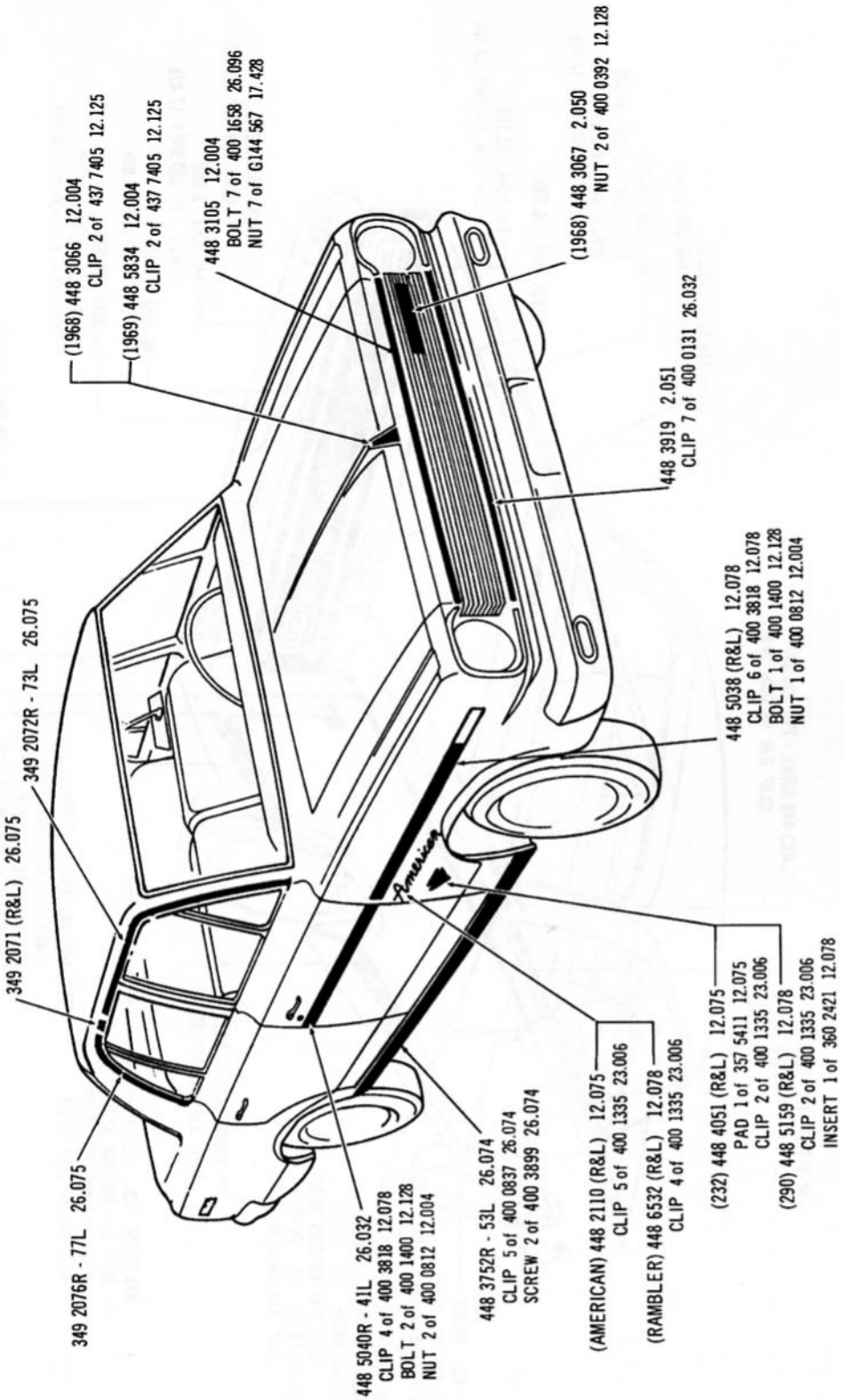

EXTERIOR ORNAMENTATION (FRONT VIEW) ... 1968 (05), 1969 (05)

Printed in U.S.A.

3229

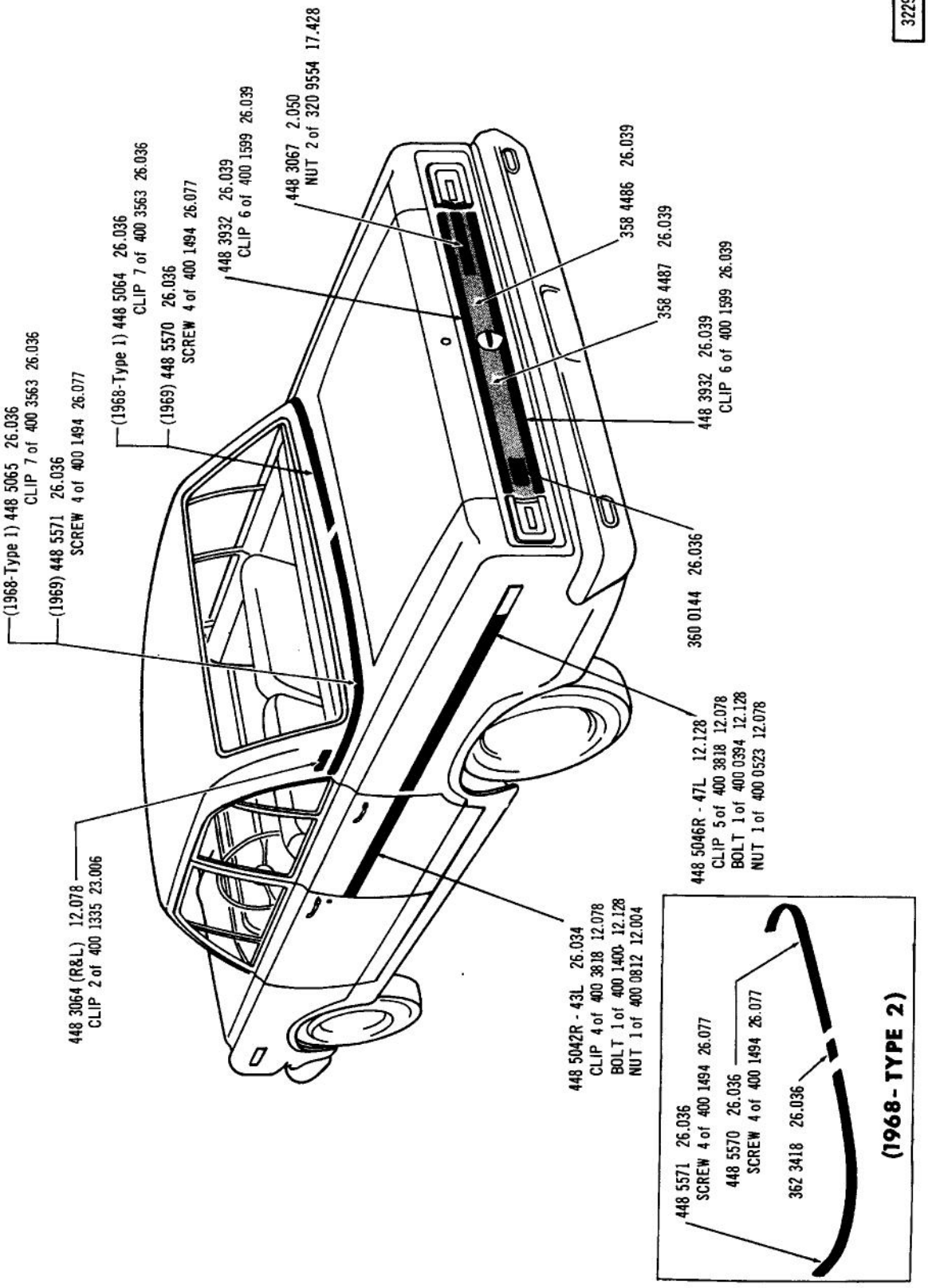

EXTERIOR ORNAMENTATION (REAR VIEW) ... 1968 (05), 1969 (05)

Printed in U.S.A.

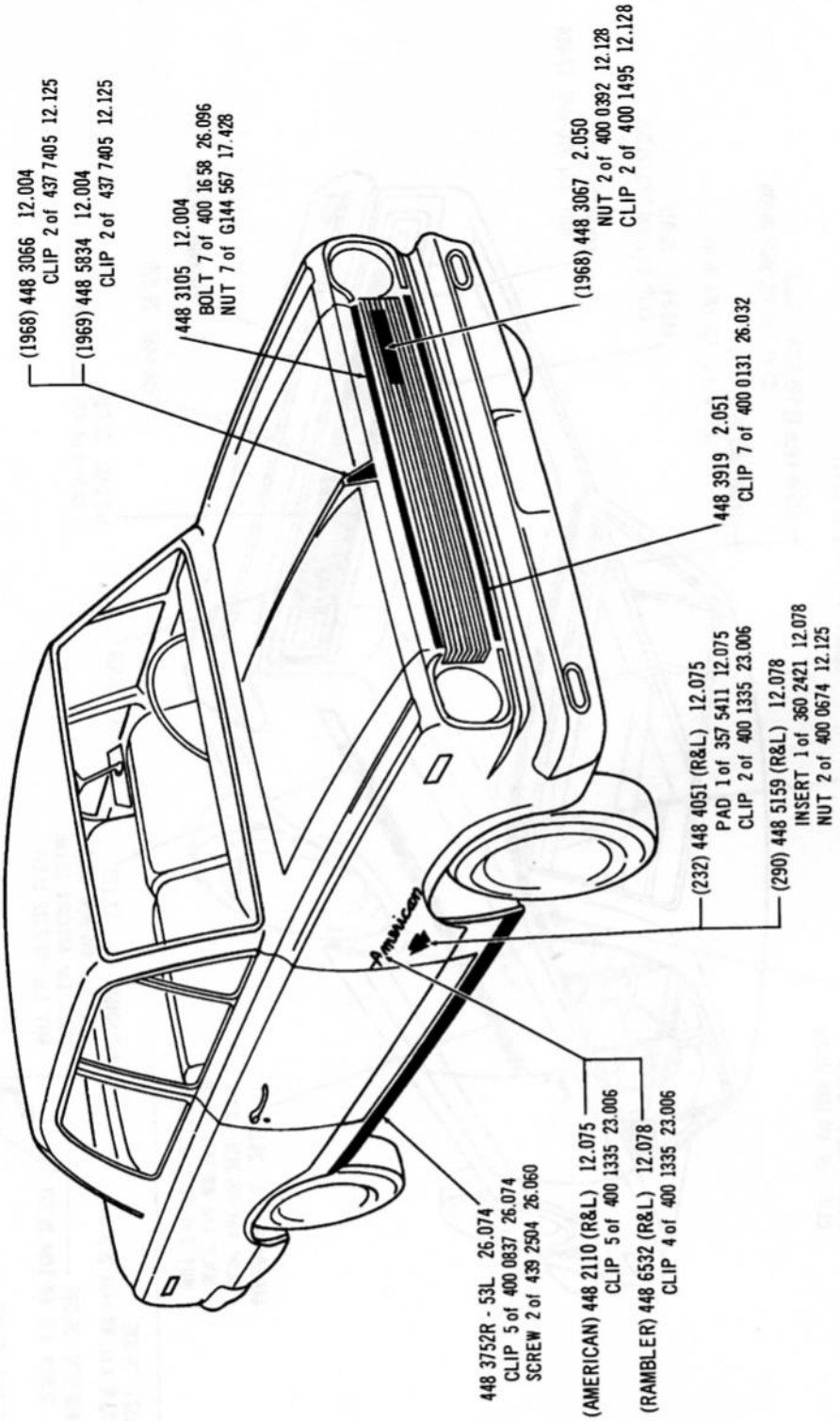

EXTERIOR ORNAMENTATION (FRONT VIEW) ... 1968 (06), 1969 (06)

3231

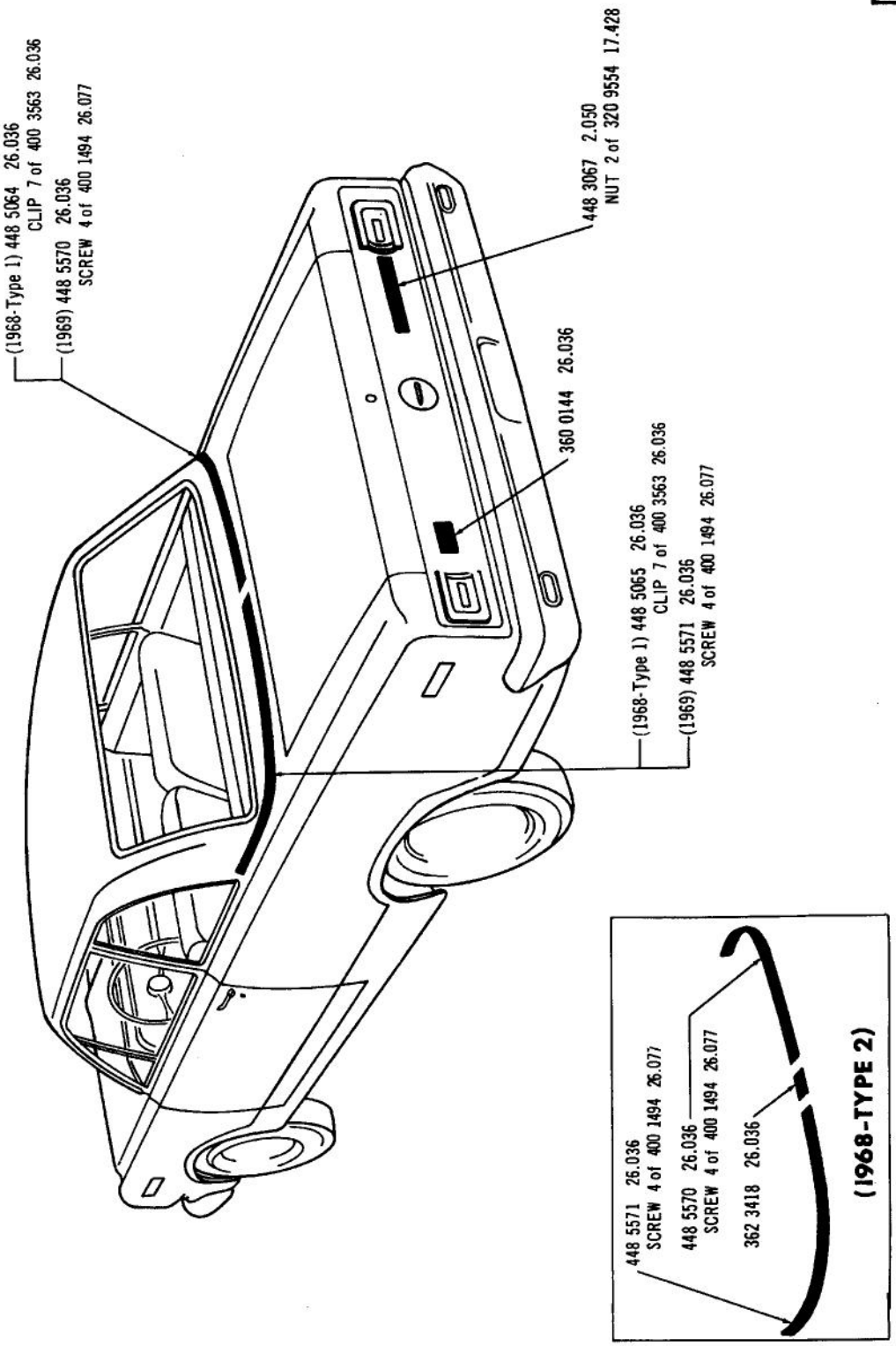

EXTERIOR ORNAMENTATION (REAR VIEW) ... 1968 (06), 1969 (06)

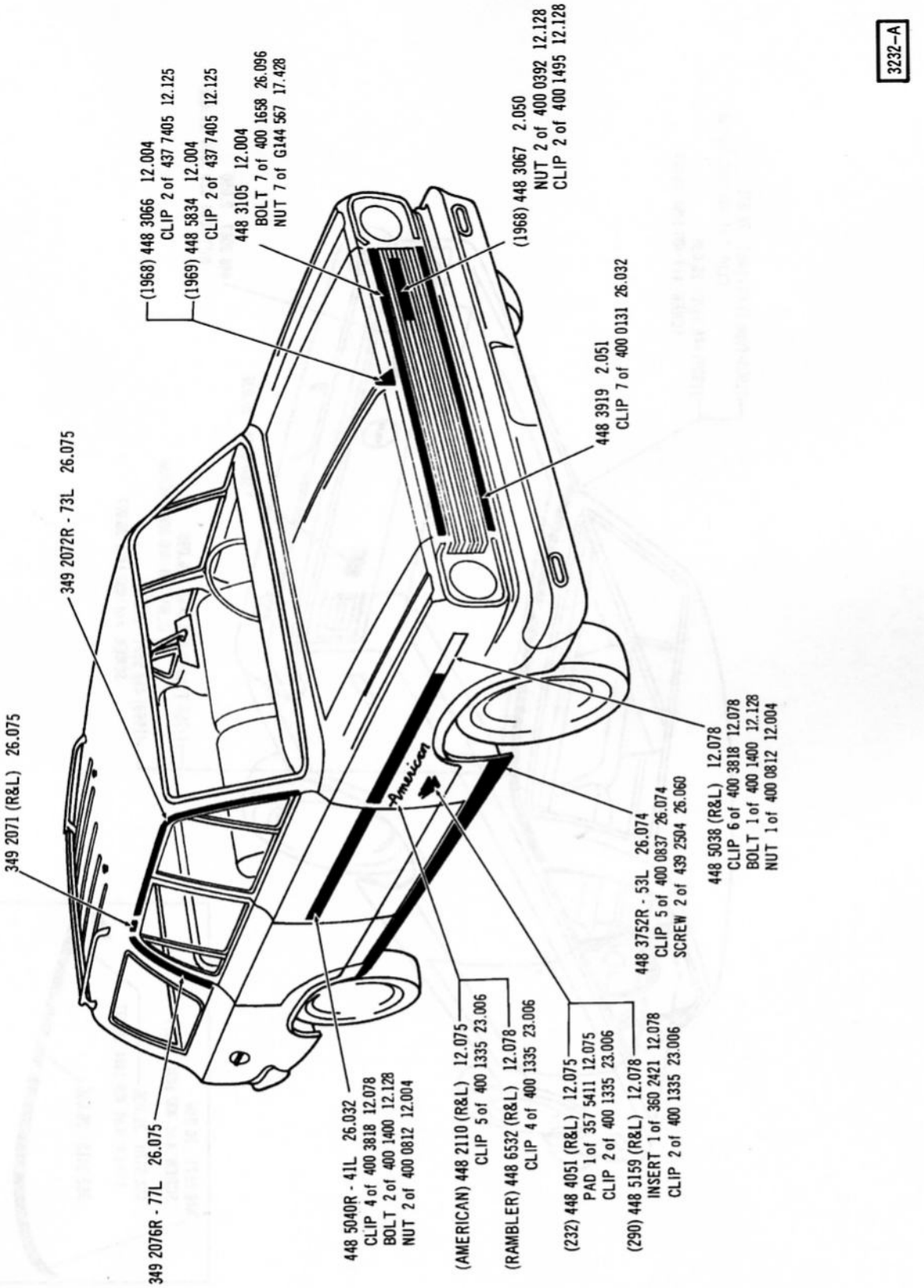

EXTERIOR ORNAMENTATION (FRONT VIEW) ... 1968 (08), 1969 (08)

3233

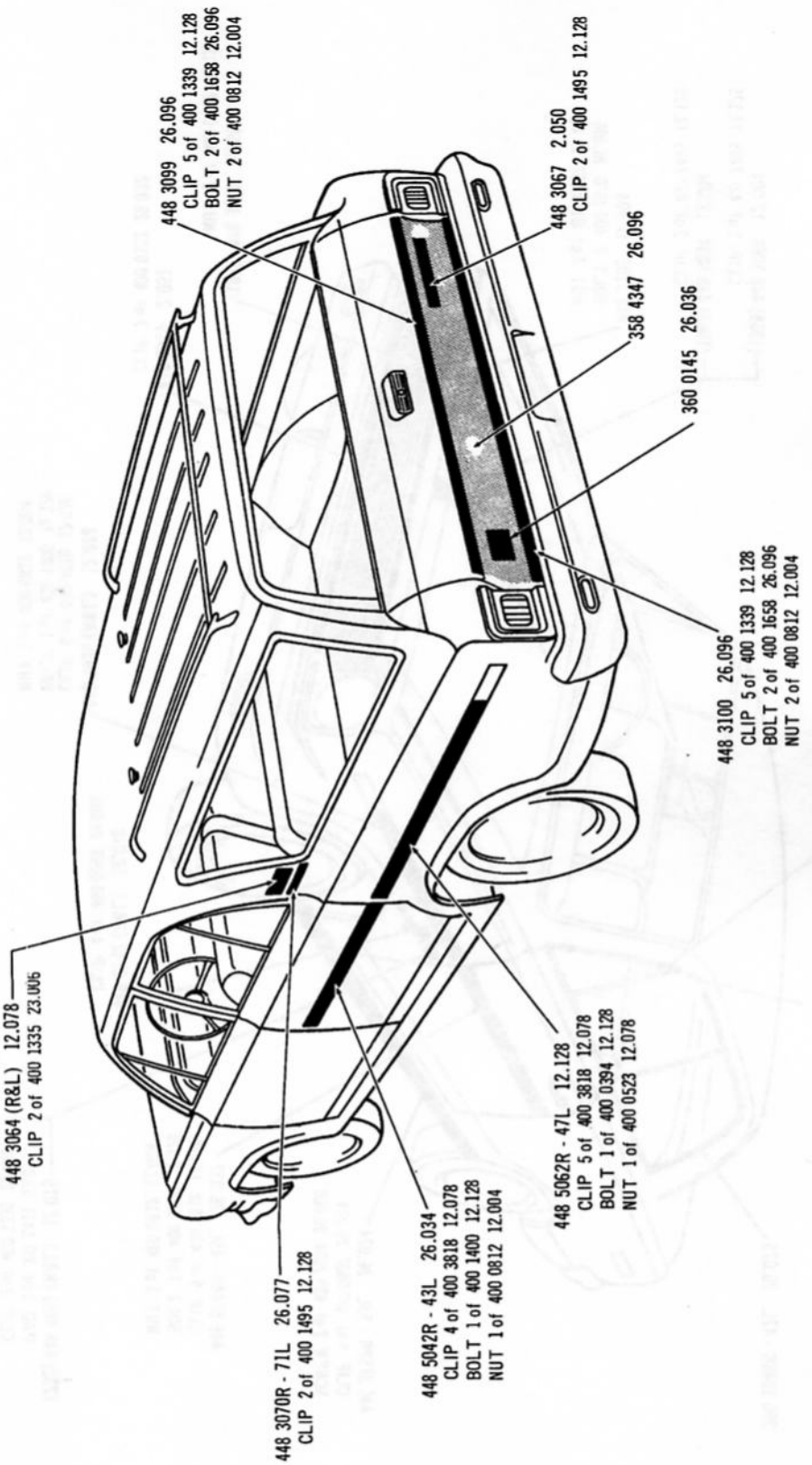

EXTERIOR ORNAMENTATION (REAR VIEW) ... 1968 (08), 1969 (08)

3234

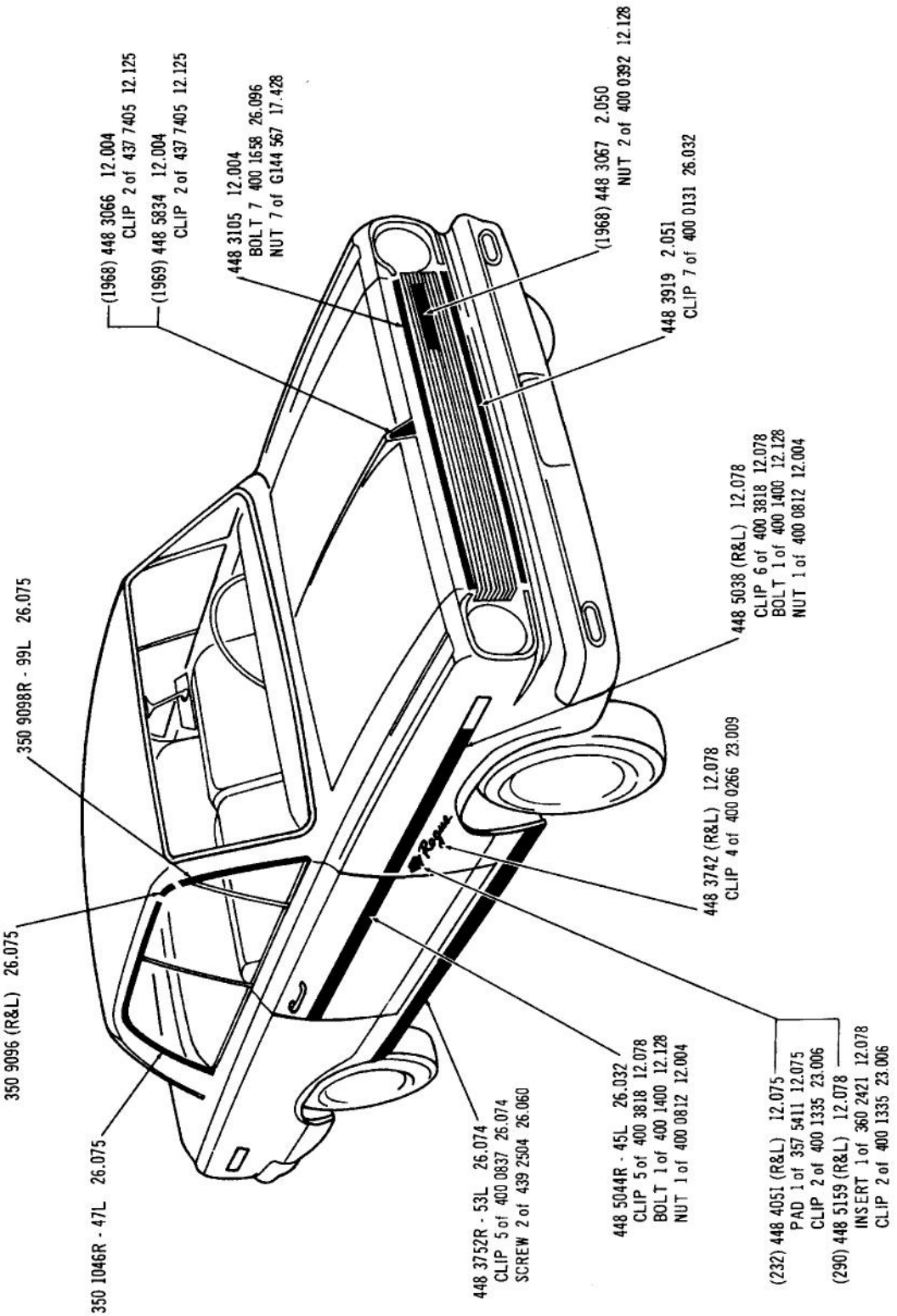

EXTERIOR ORNAMENTATION (FRONT VIEW) ... 1968 (09), 1969-09 (EXCEPT SC/RAMBLER)

Printed in U.S.A.

3235

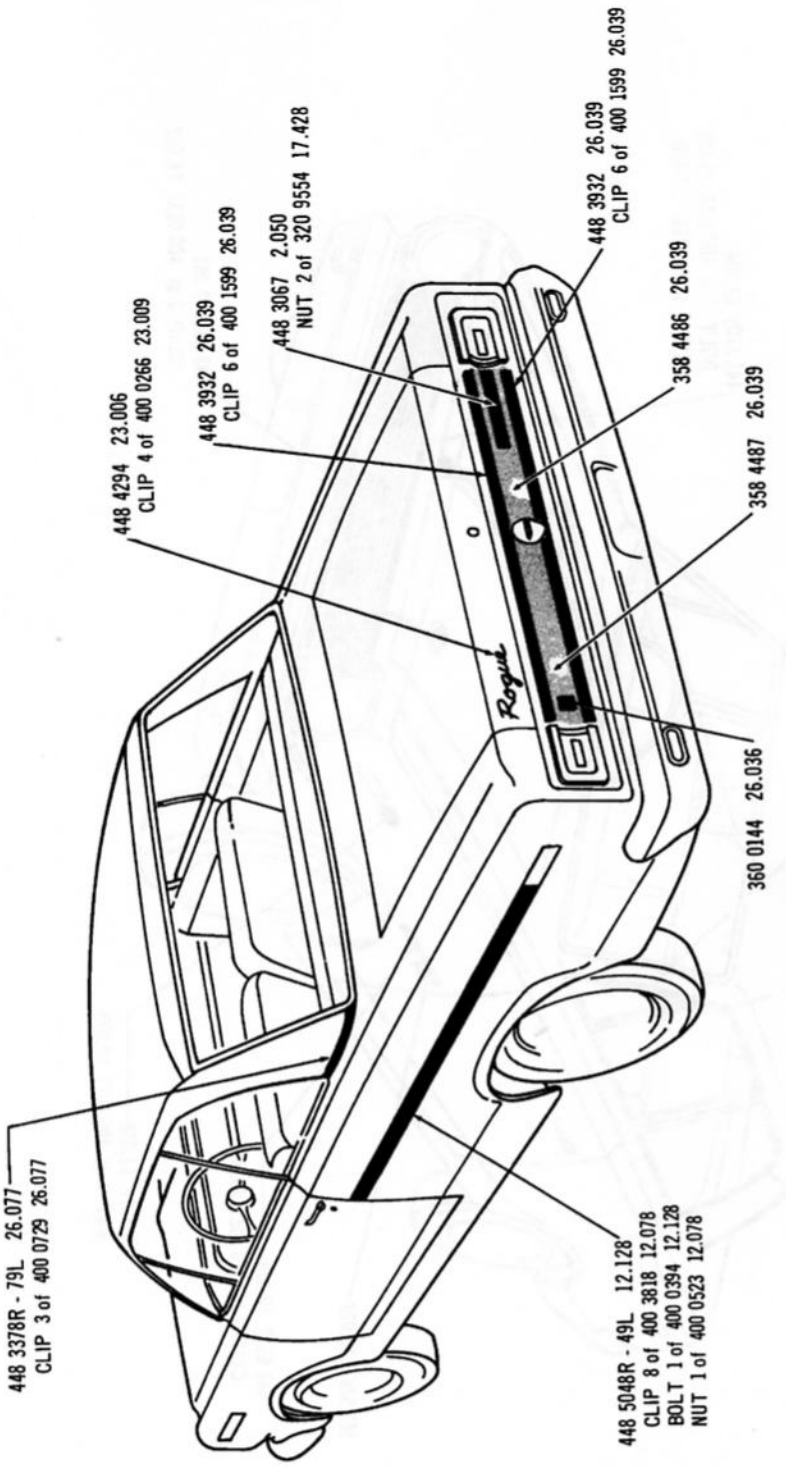

EXTERIOR ORNAMENTATION (REAR VIEW) ... 1968 (09), 1969-09 (EXCEPT SC RAMBLER)

3859

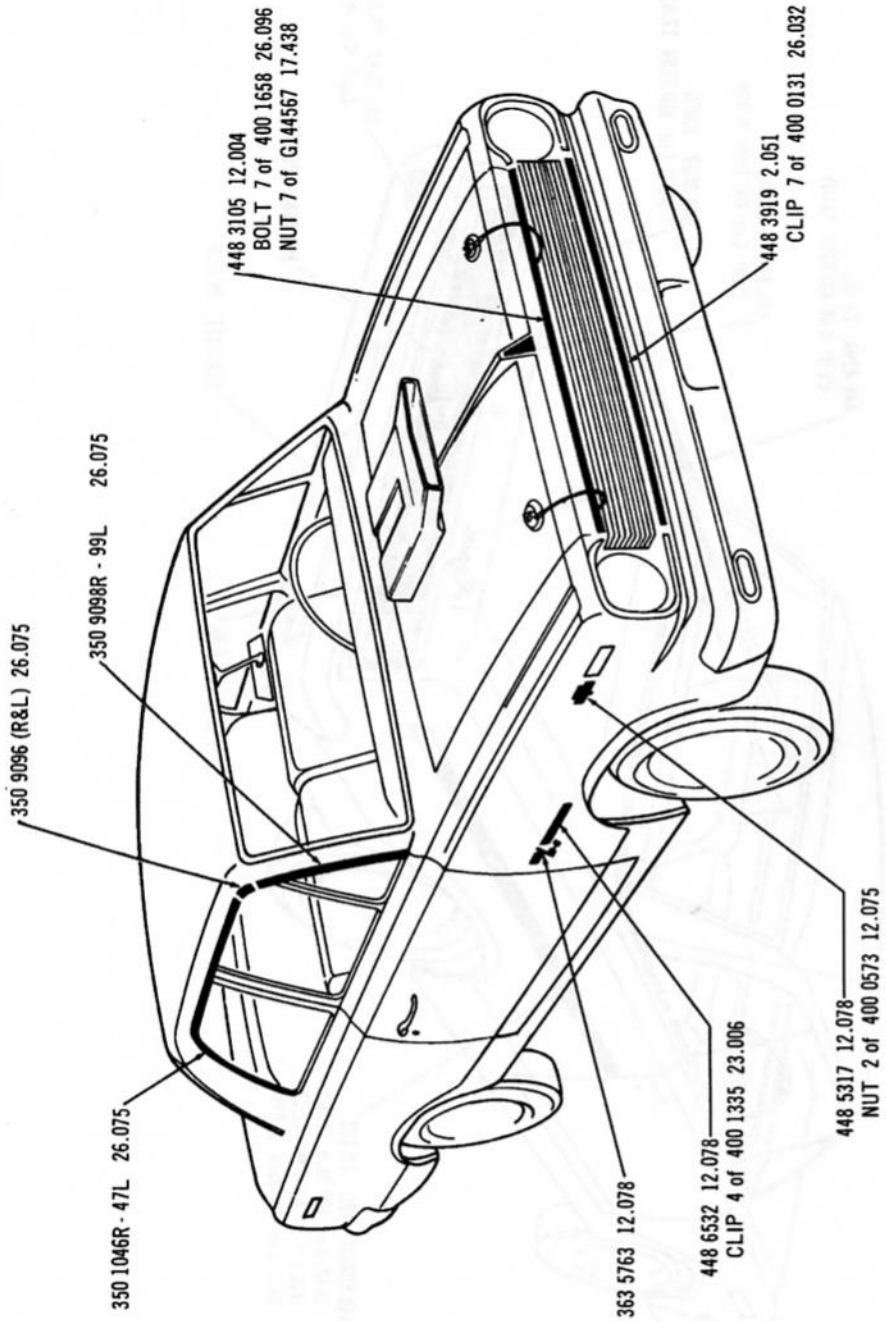

EXTERIOR ORNAMENTATION (FRONT VIEW) ... 1969-09 (SC/RAMBLER)

3860

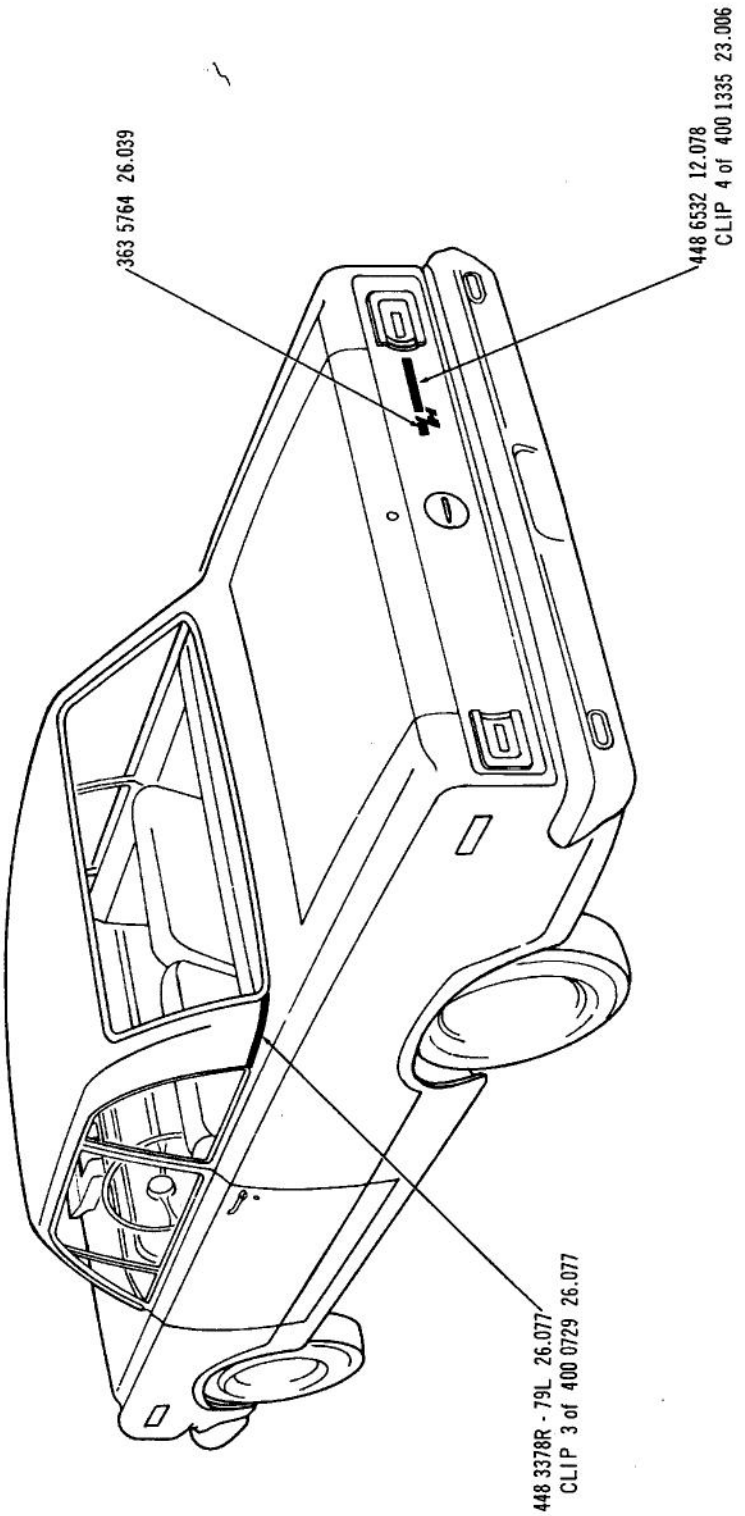

EXTERIOR ORNAMENTATION (REAR VIEW) ... 1969-09 (SC/RAMBLER)

3872

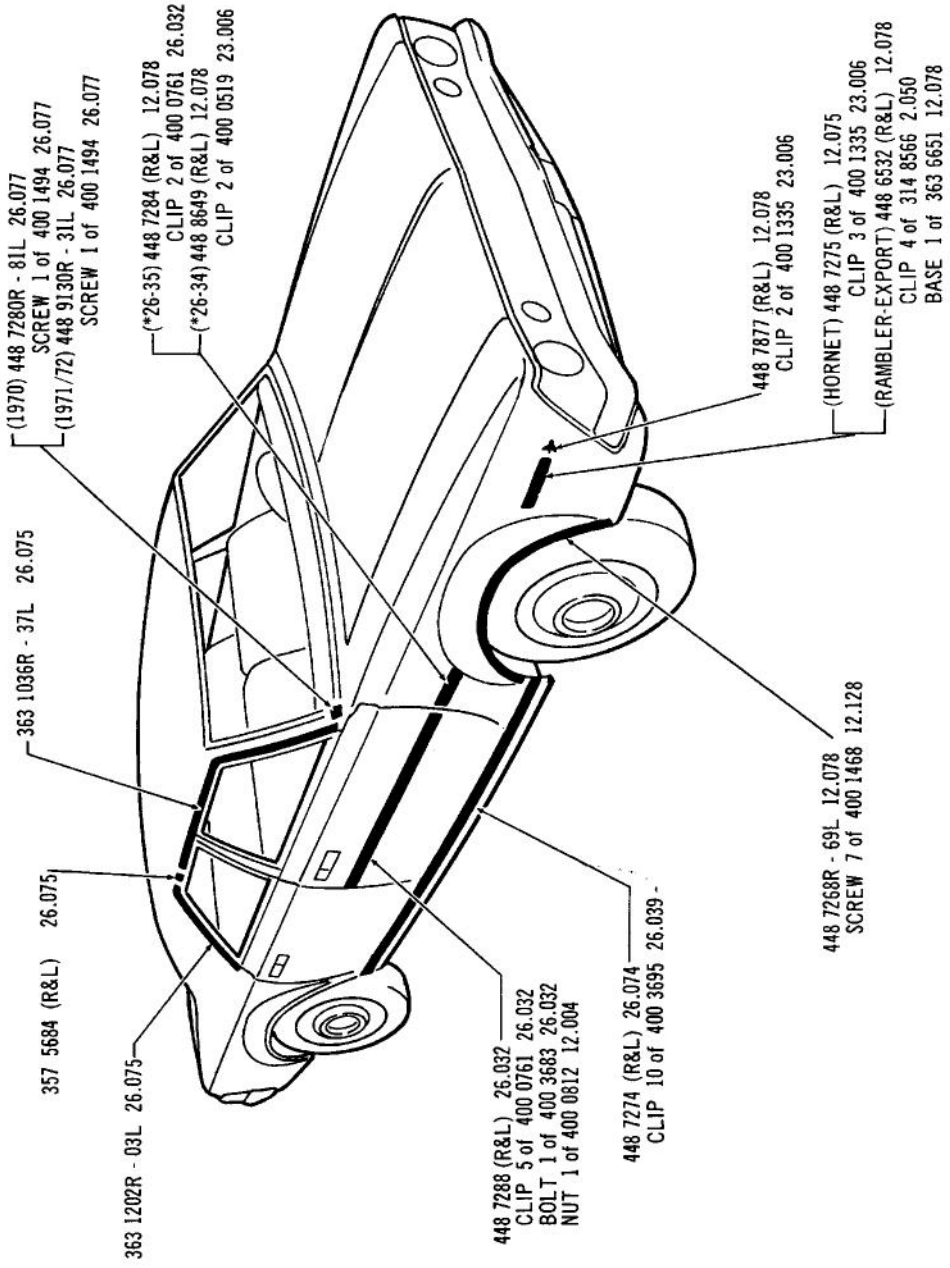

EXTERIOR ORNAMENTATION (FRONT VIEW) ... 1970/ (05)

3873

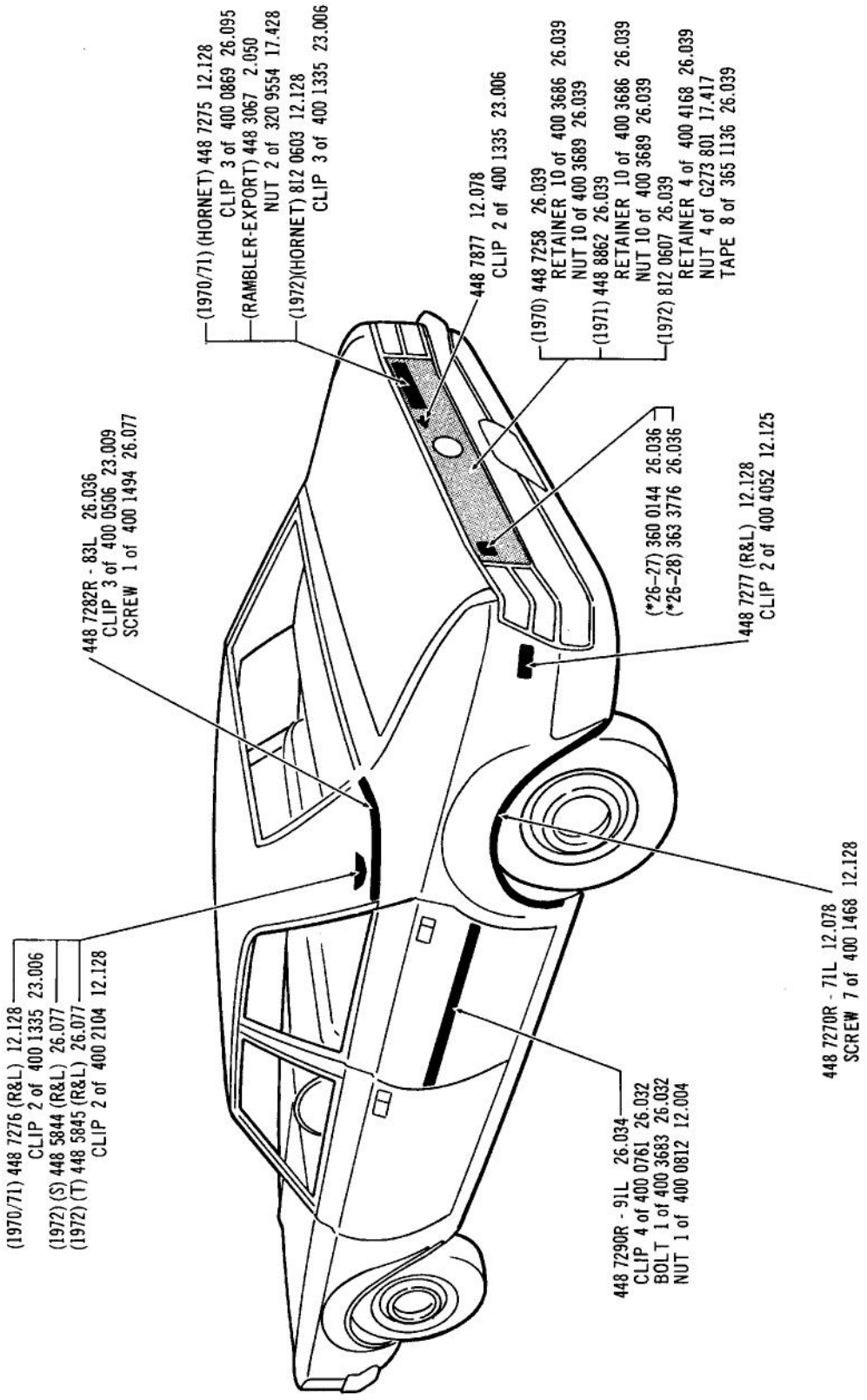

EXTERIOR ORNAMENTATION (REAR VIEW) ... 1970/ (05)

Printed in U.S.A.

3874

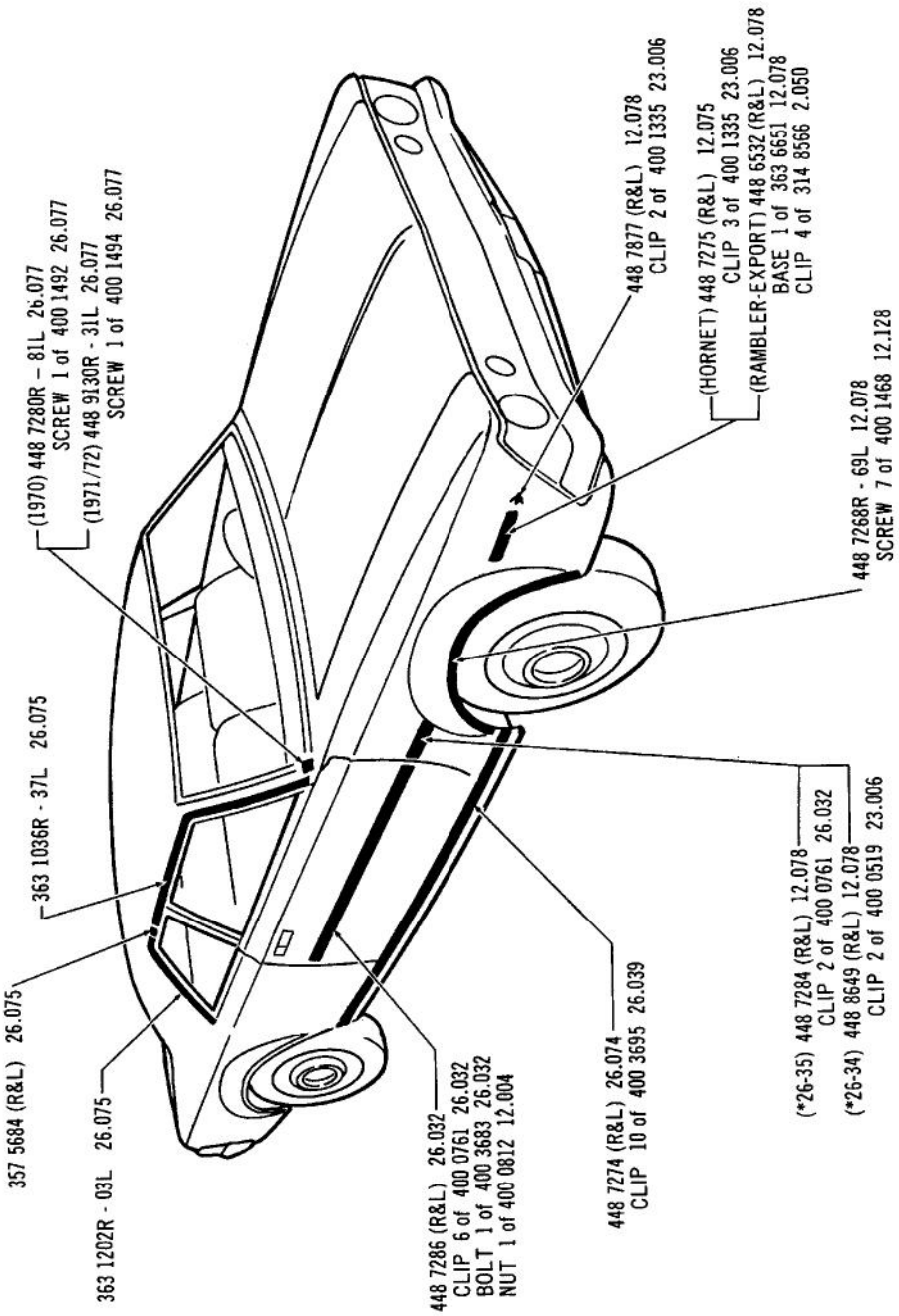

EXTERIOR ORNAMENTATION (FRONT VIEW) ... 1970/ (06)

3875

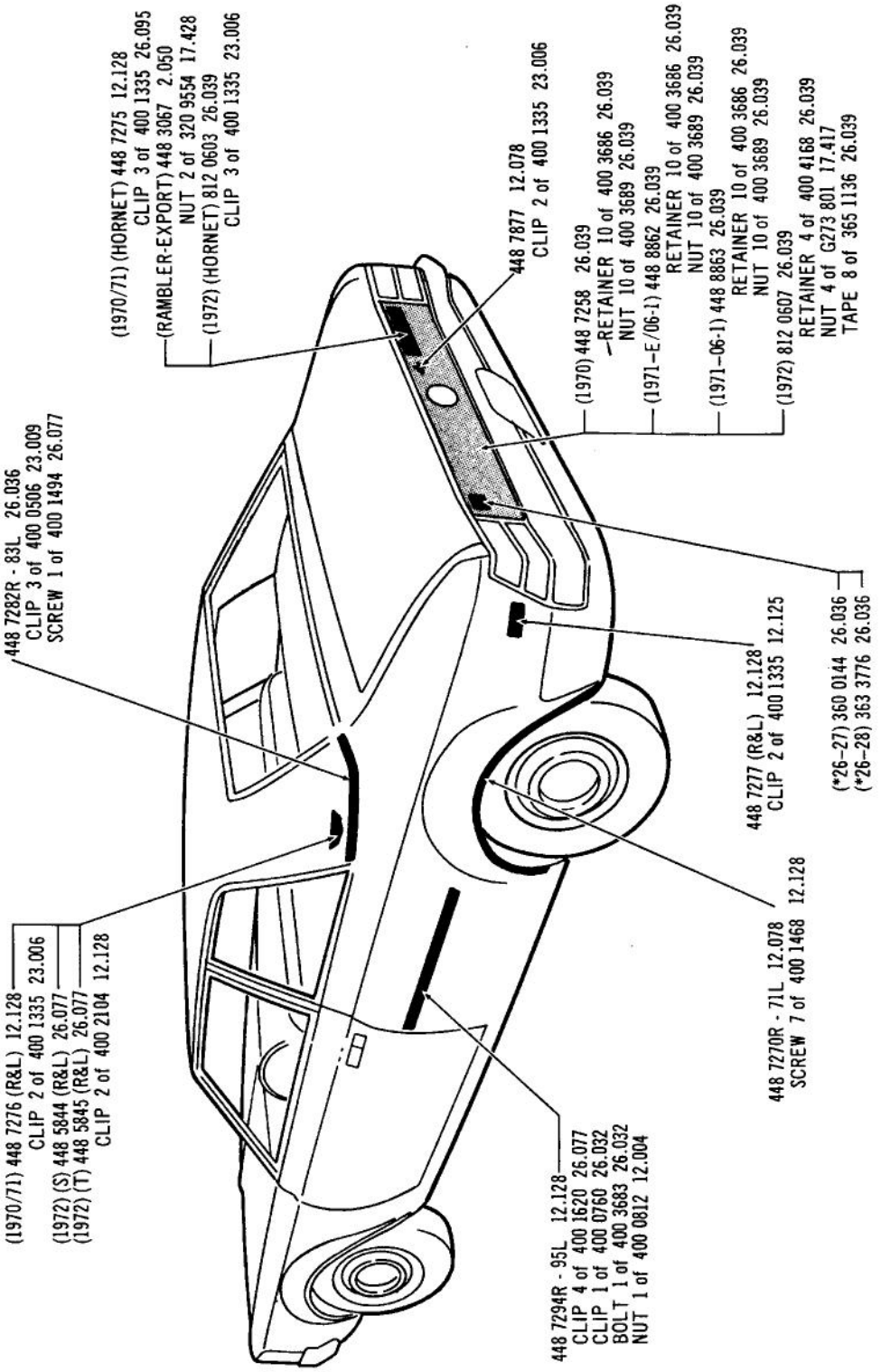

EXTERIOR ORNAMENTATION (REAR VIEW) ... 1970/ (06)

4001

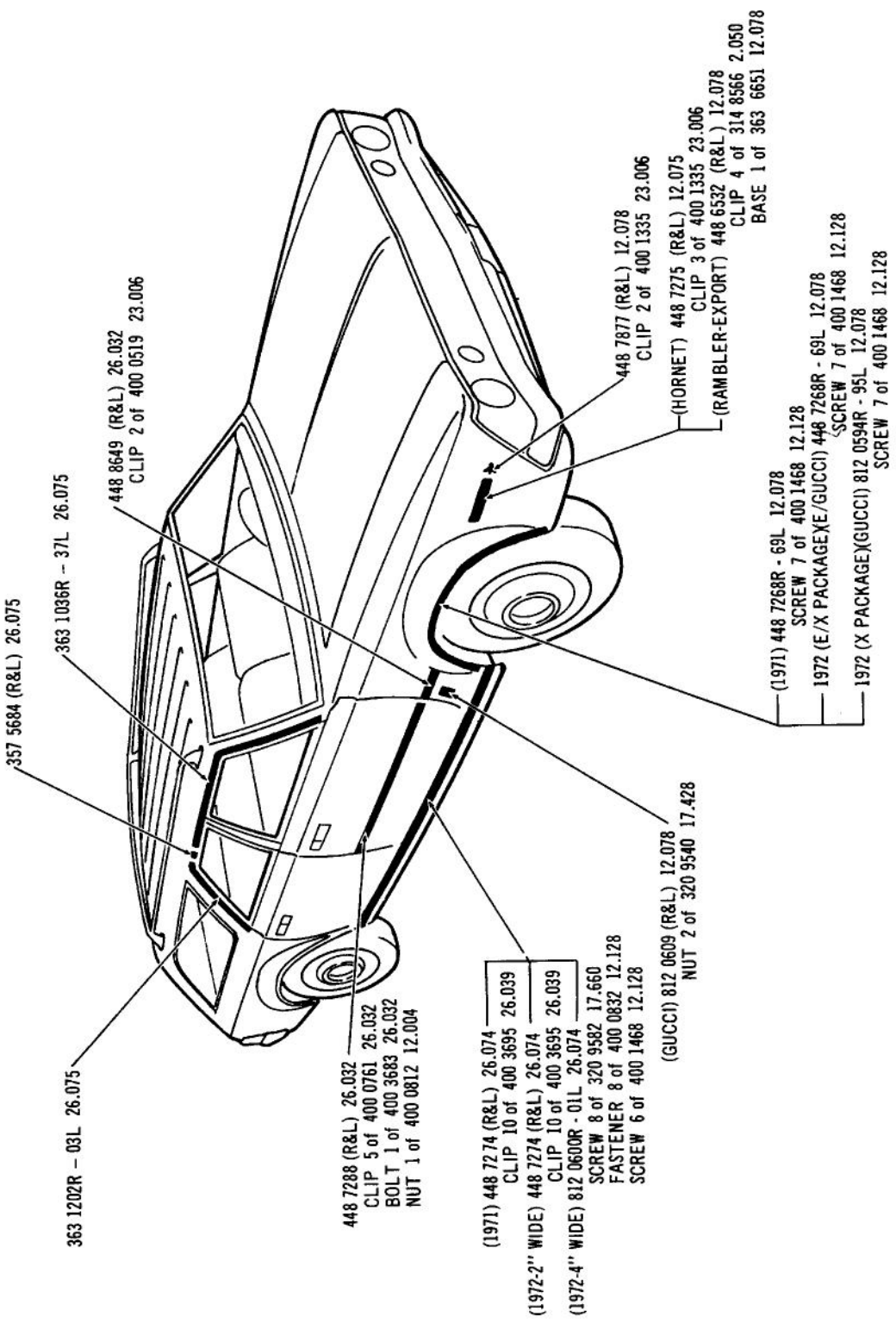

EXTERIOR ORNAMENTATION (FRONT VIEW) ... 1971/ (08-LWO)

4002

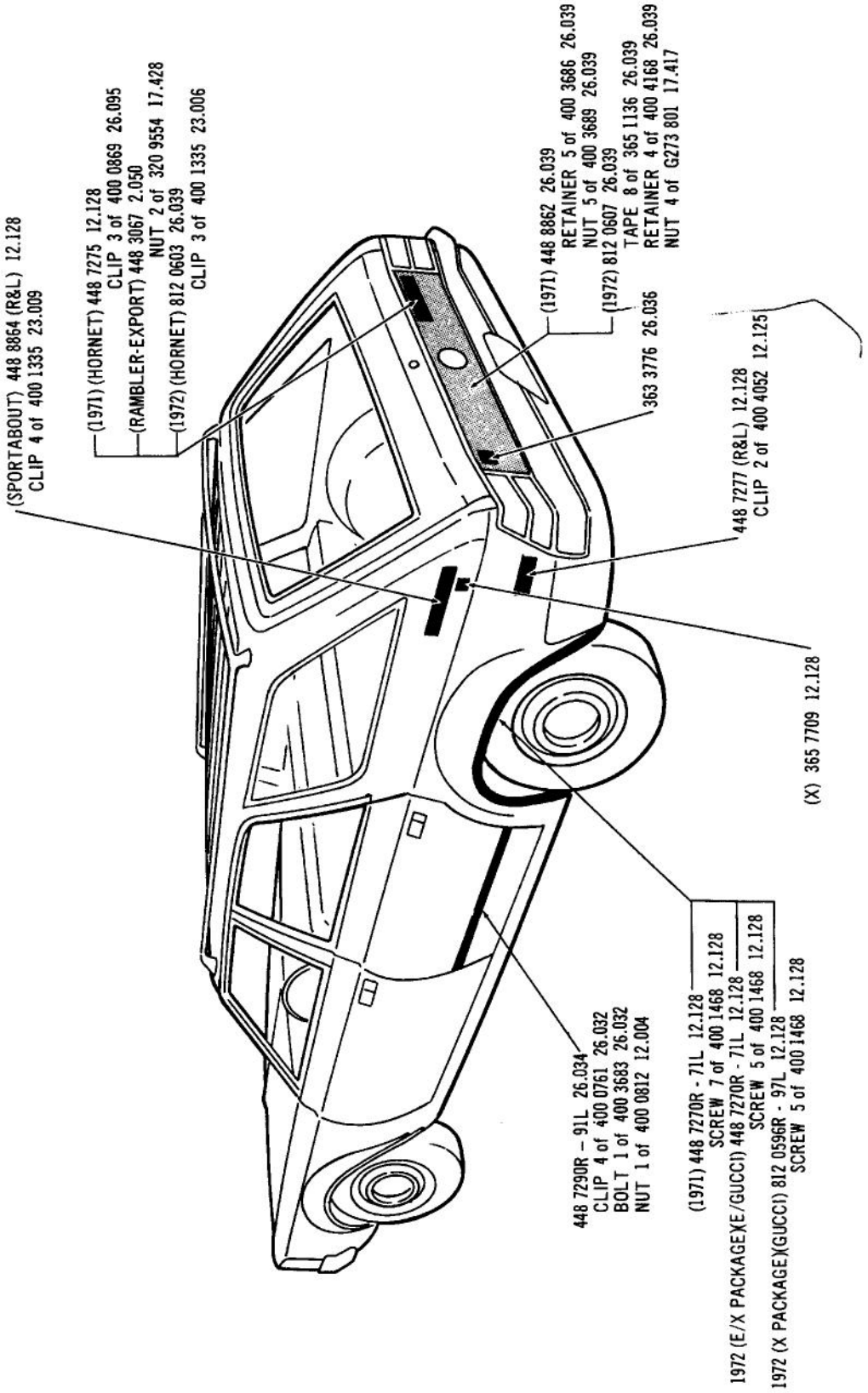

EXTERIOR ORNAMENTATION (REAR VIEW) ... 1971/ (08-LWO)

4003

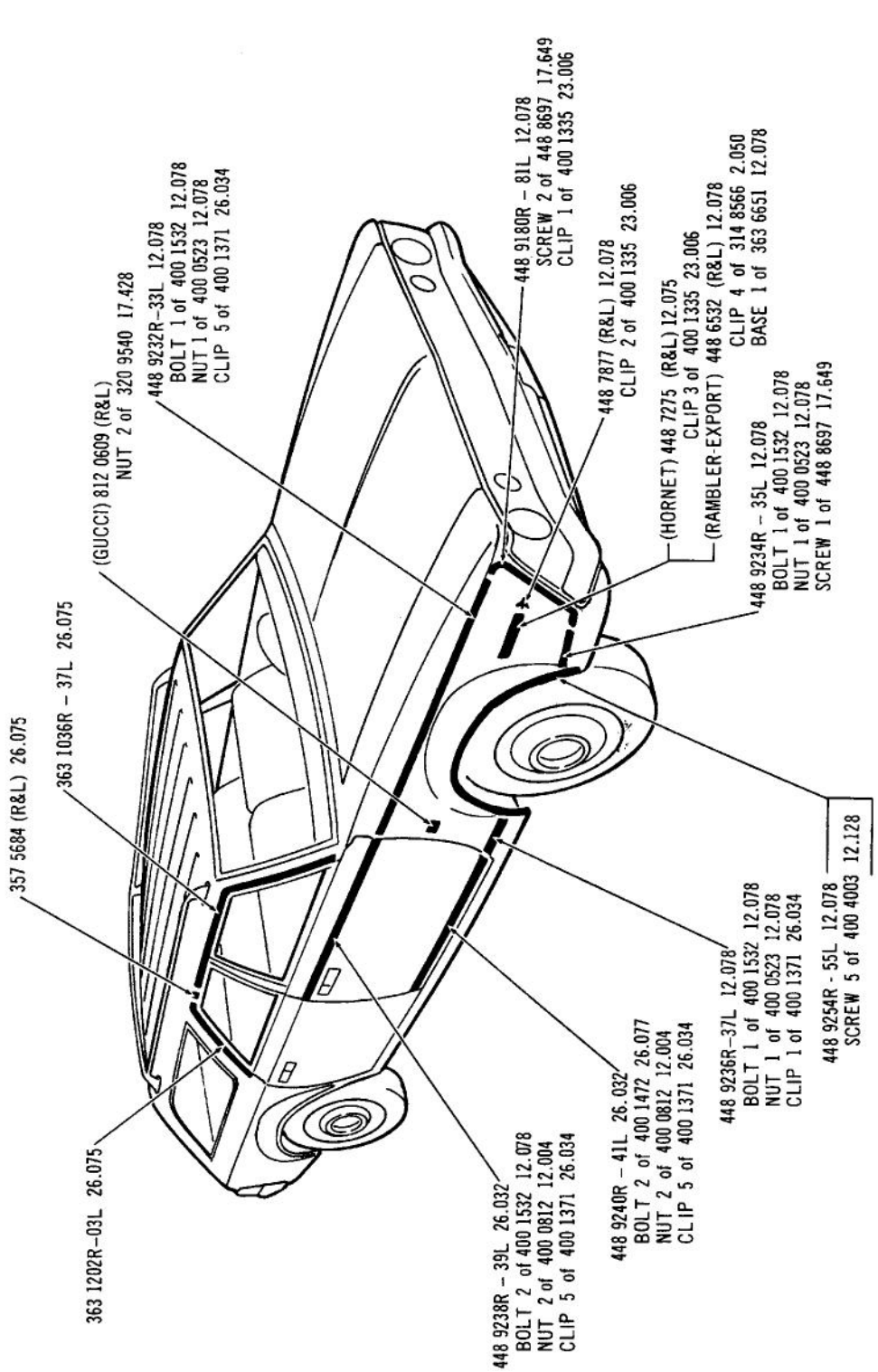

EXTERIOR ORNAMENTATION (FRONT VIEW) ... 1971/ (08-WWO)

4004

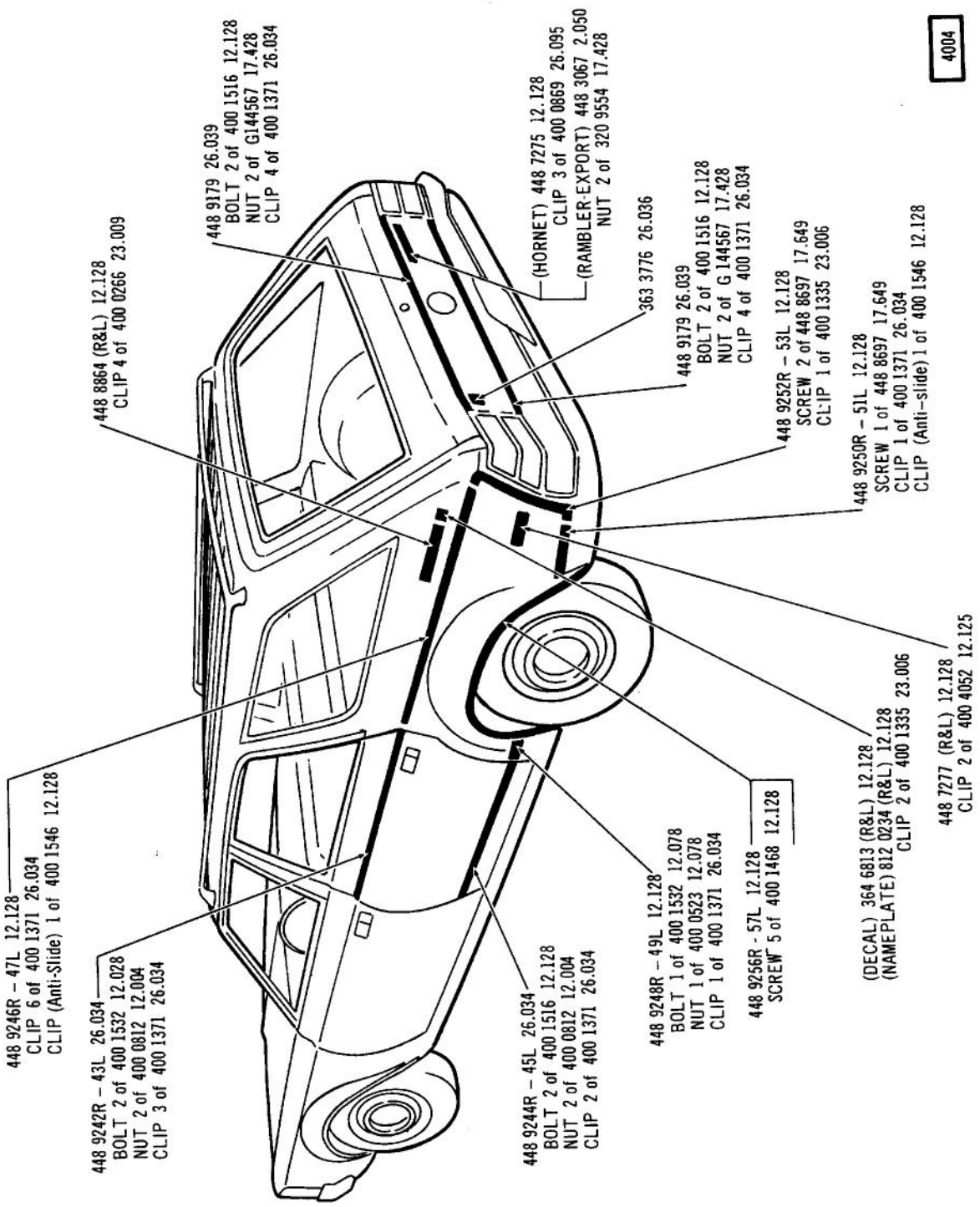

EXTERIOR ORNAMENTATION (REAR VIEW) ... 1971/ (08-WWO)

2772

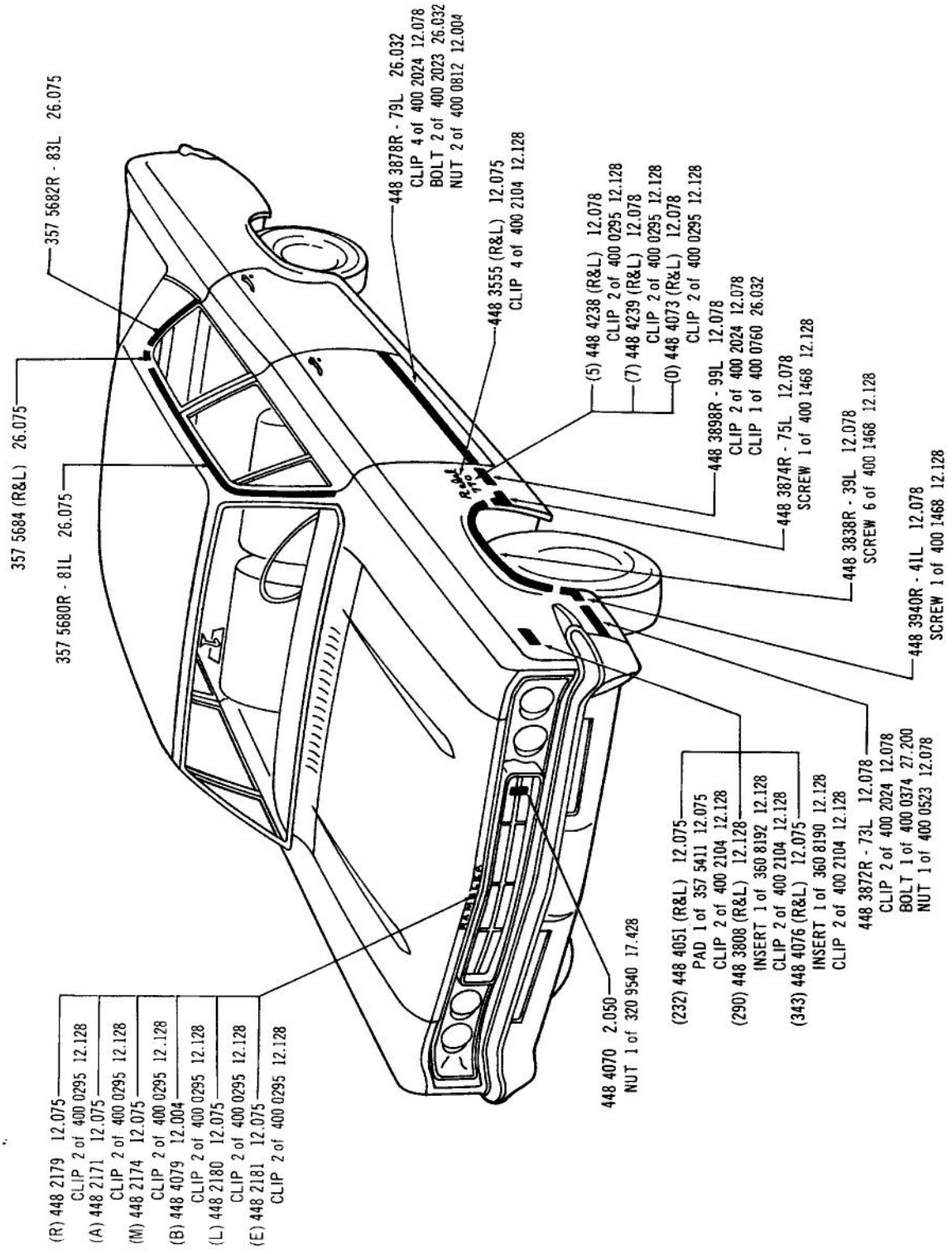

EXTERIOR ORNAMENTATION (FRONT VIEW) ... 1967 (15)

2773

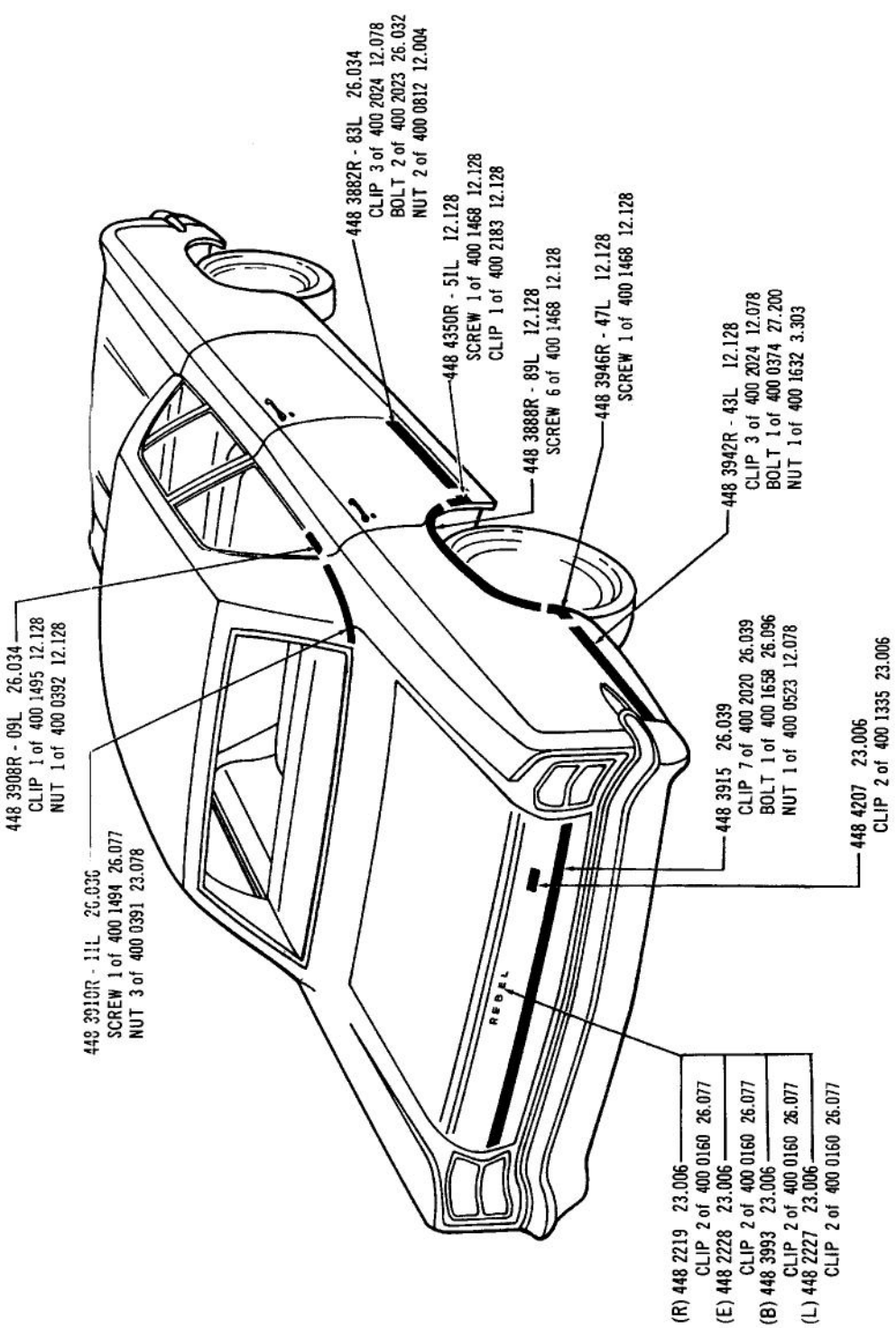

EXTERIOR ORNAMENTATION (REAR VIEW) ... 1967 (15)

2766

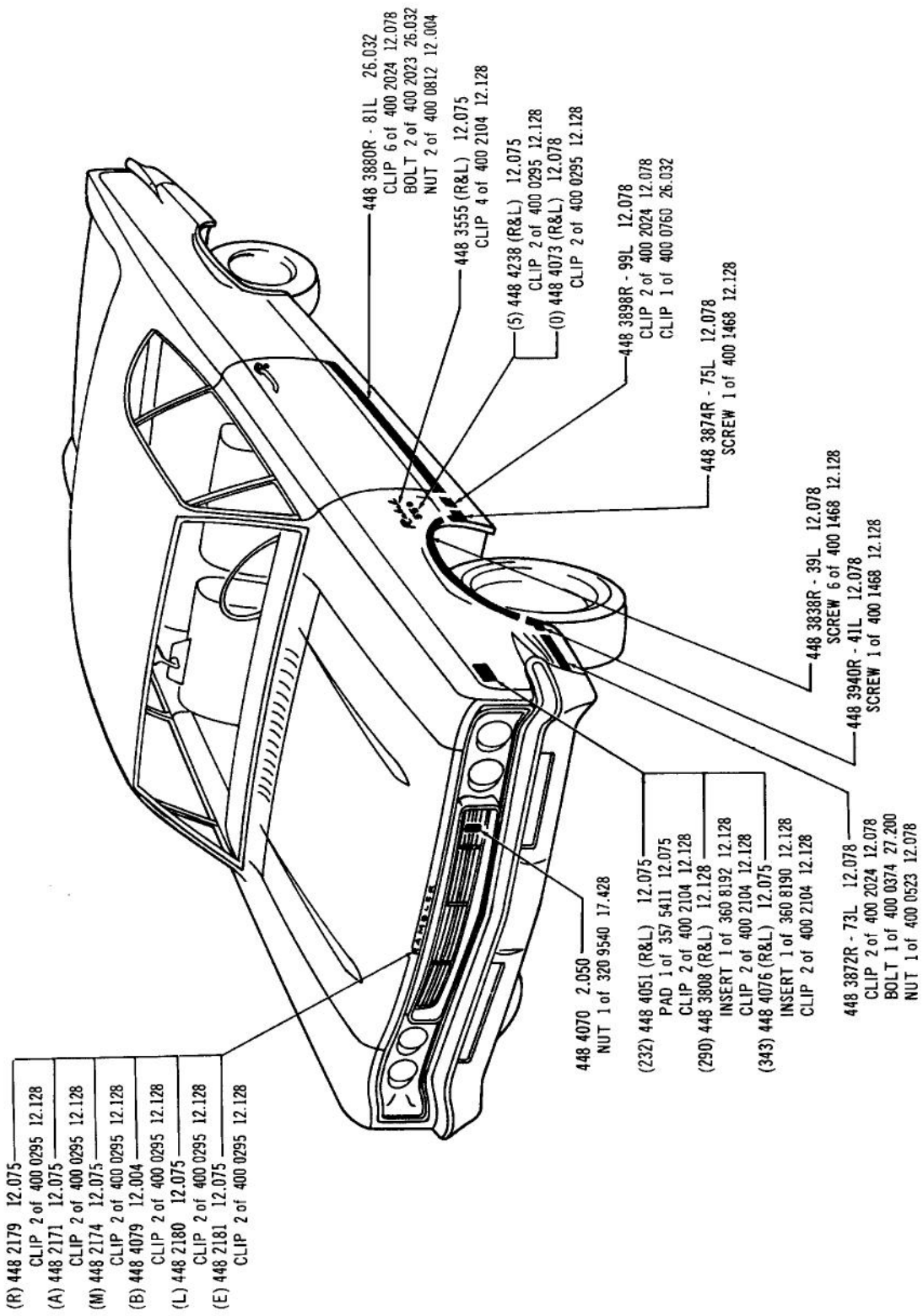

EXTERIOR ORNAMENTATION (FRONT VIEW) ... 1967 (16)

2767

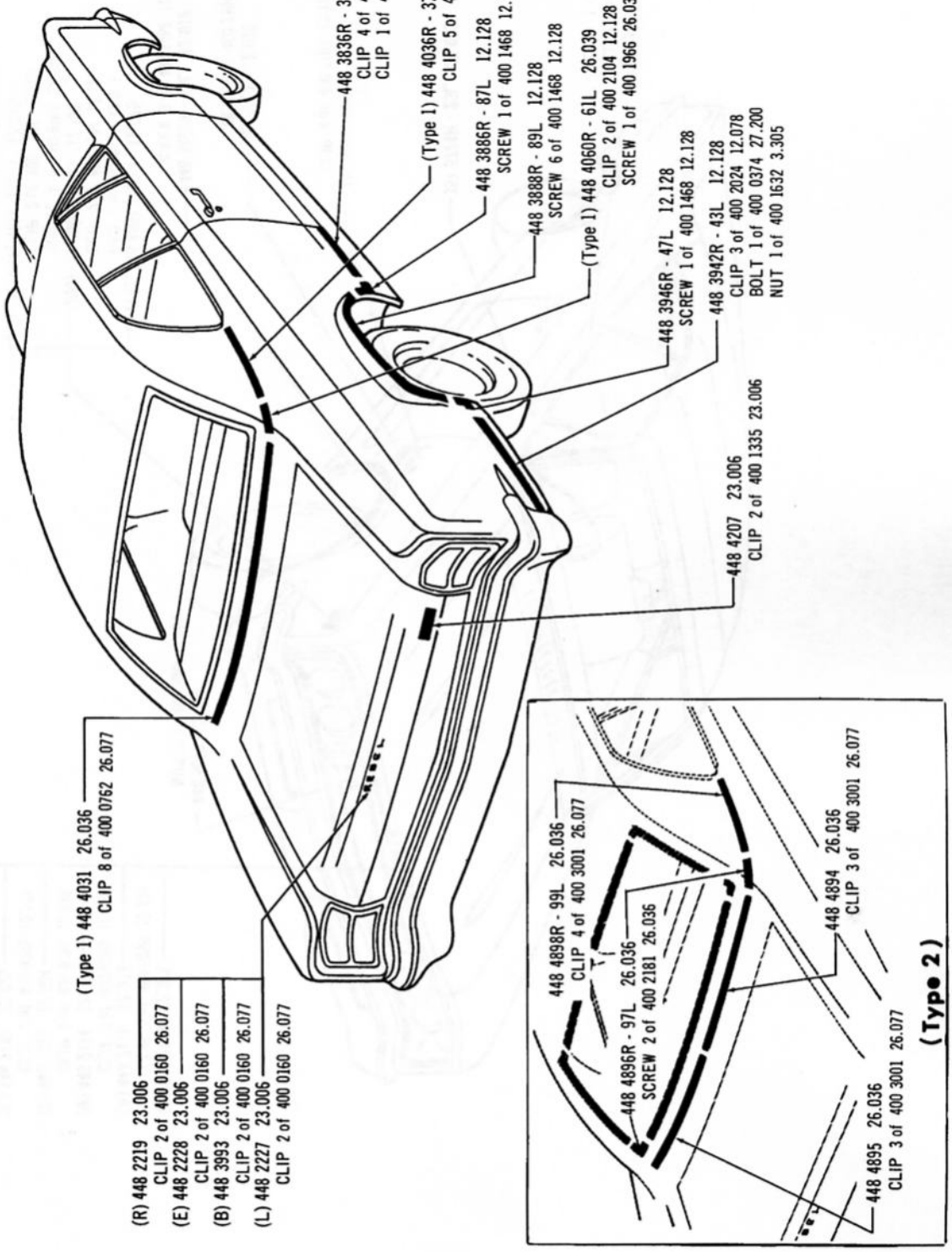

EXTERIOR ORNAMENTATION (REAR VIEW) ... 1967 (16)

2776

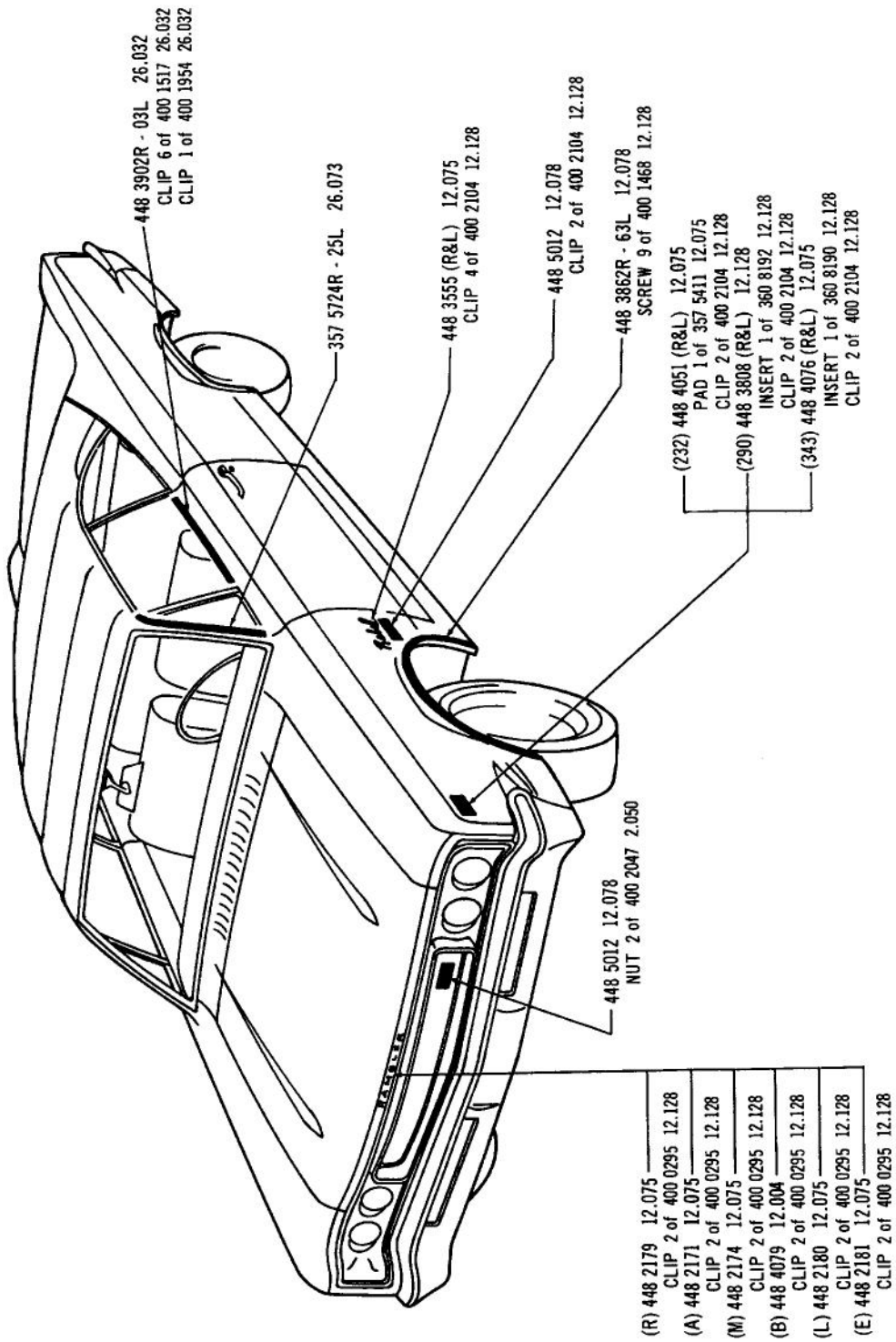

EXTERIOR ORNAMENTATION (FRONT VIEW) ... 1967 (17-SST)

Printed in U.S.A.

2777

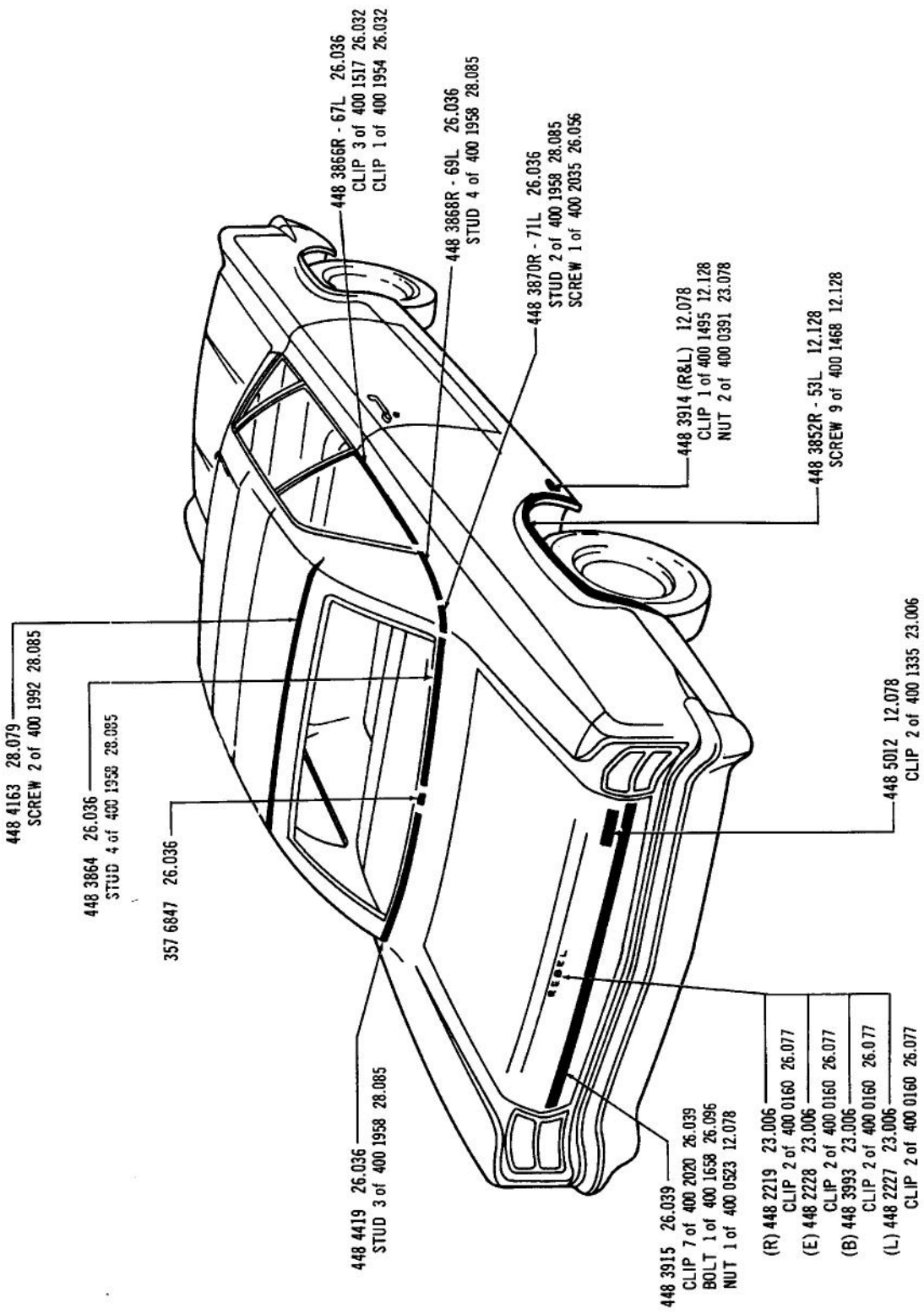

EXTERIOR ORNAMENTATION (REAR VIEW) ... 1967 (17-SST)

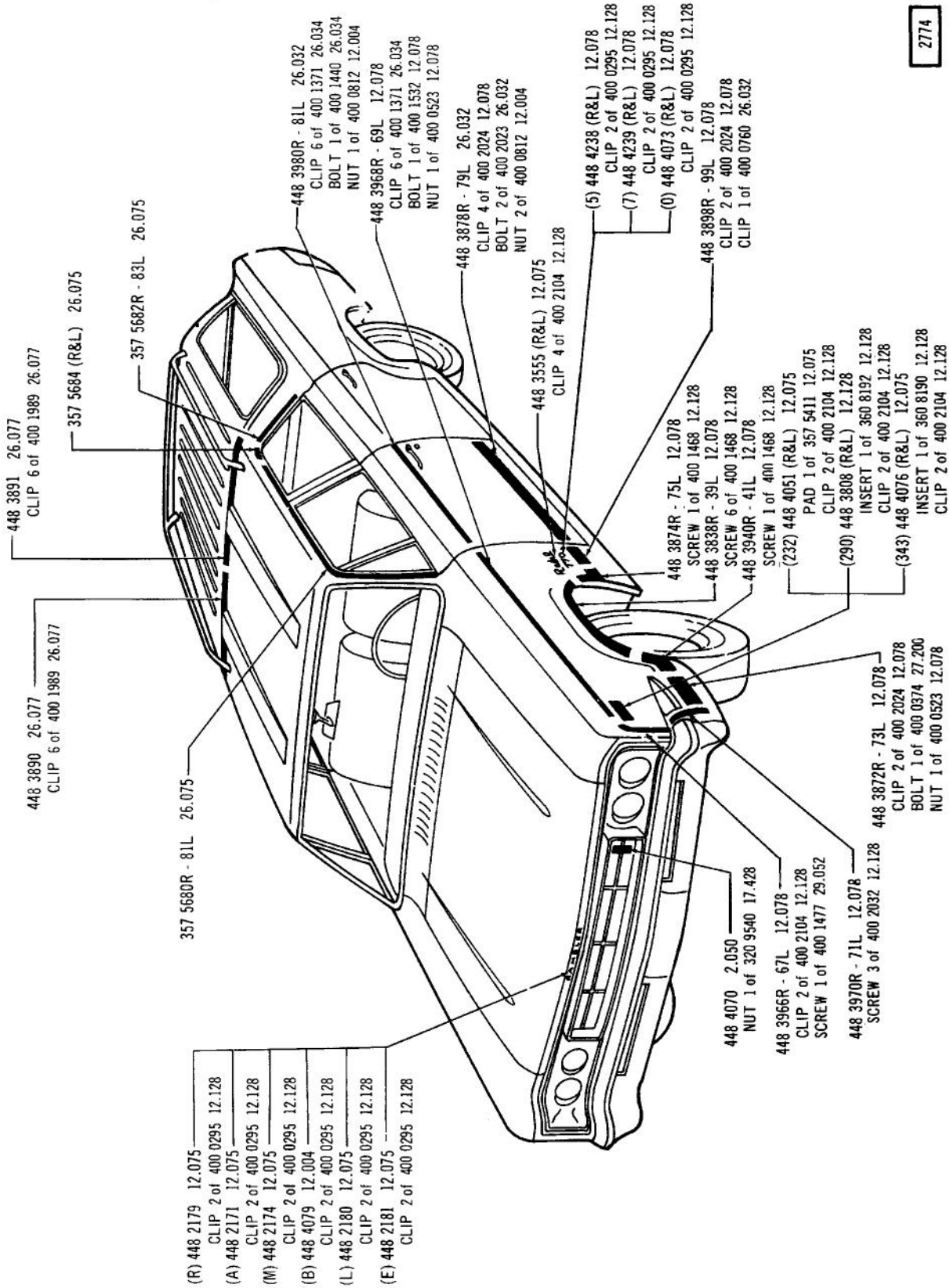

EXTERIOR ORNAMENTATION (FRONT VIEW) ... 1967 (18)

2775

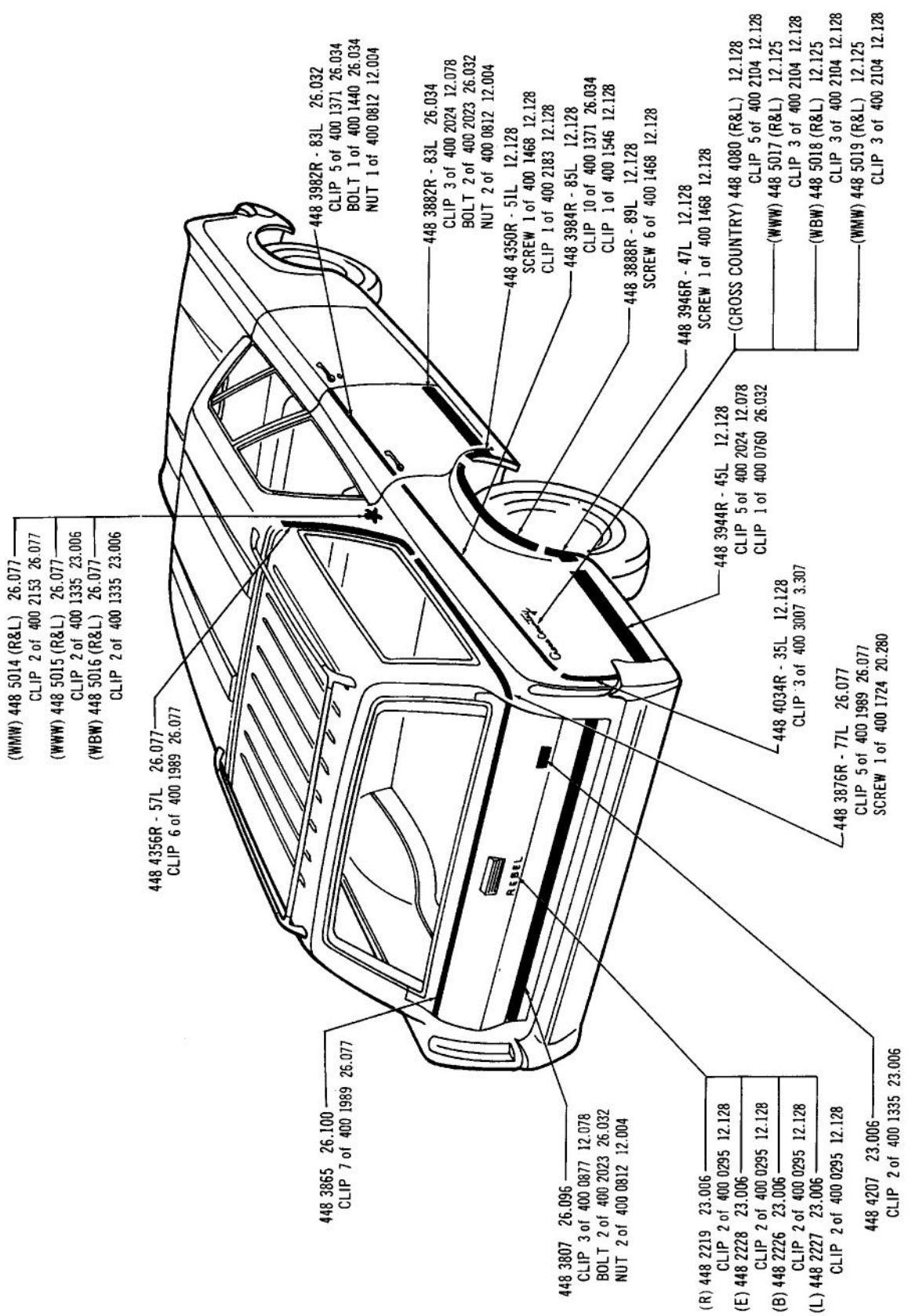

EXTERIOR ORNAMENTATION (REAR VIEW) ... 1967 (18)

2768

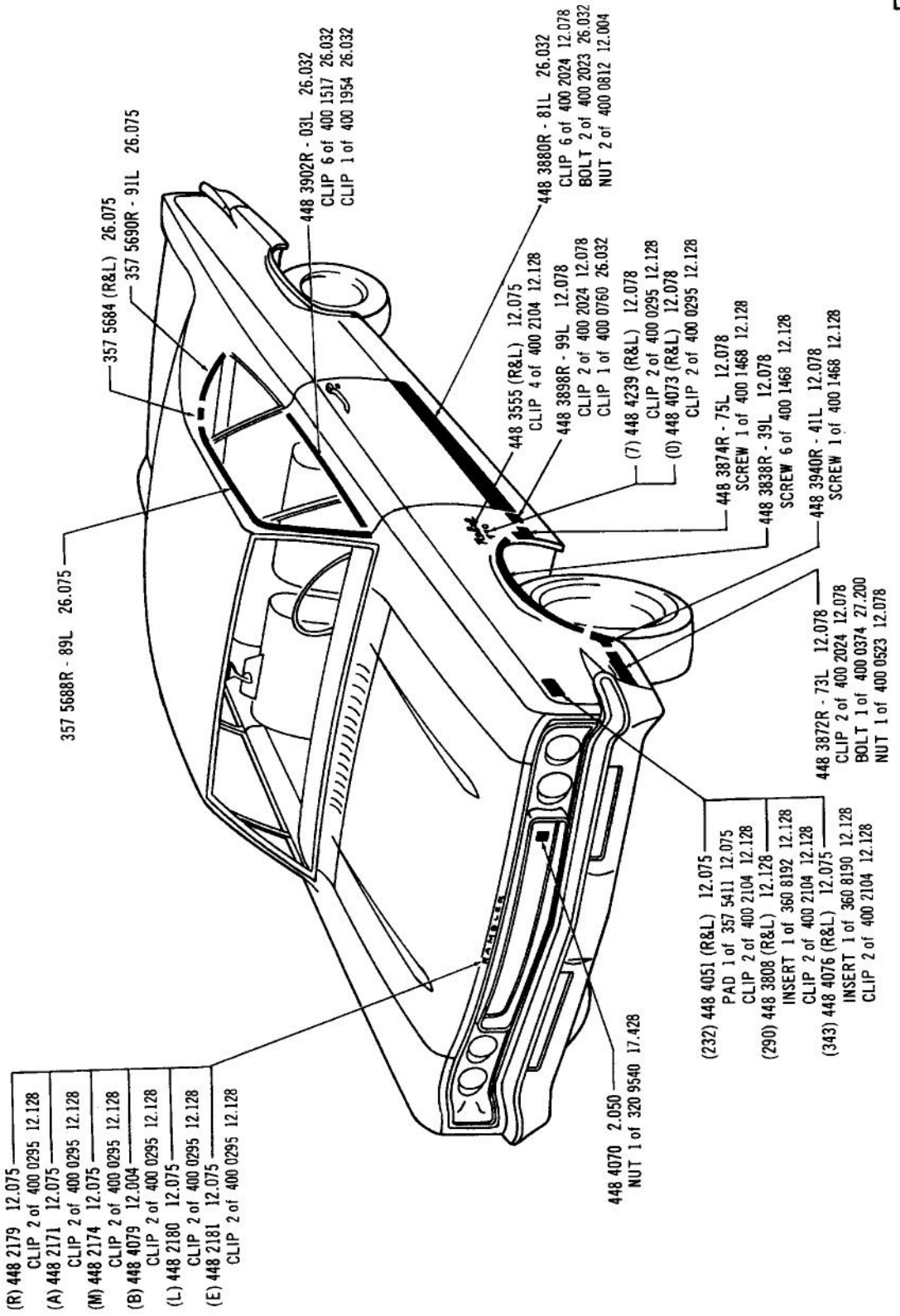

EXTERIOR ORNAMENTATION (FRONT VIEW) ... 1967 (19-770)

2769

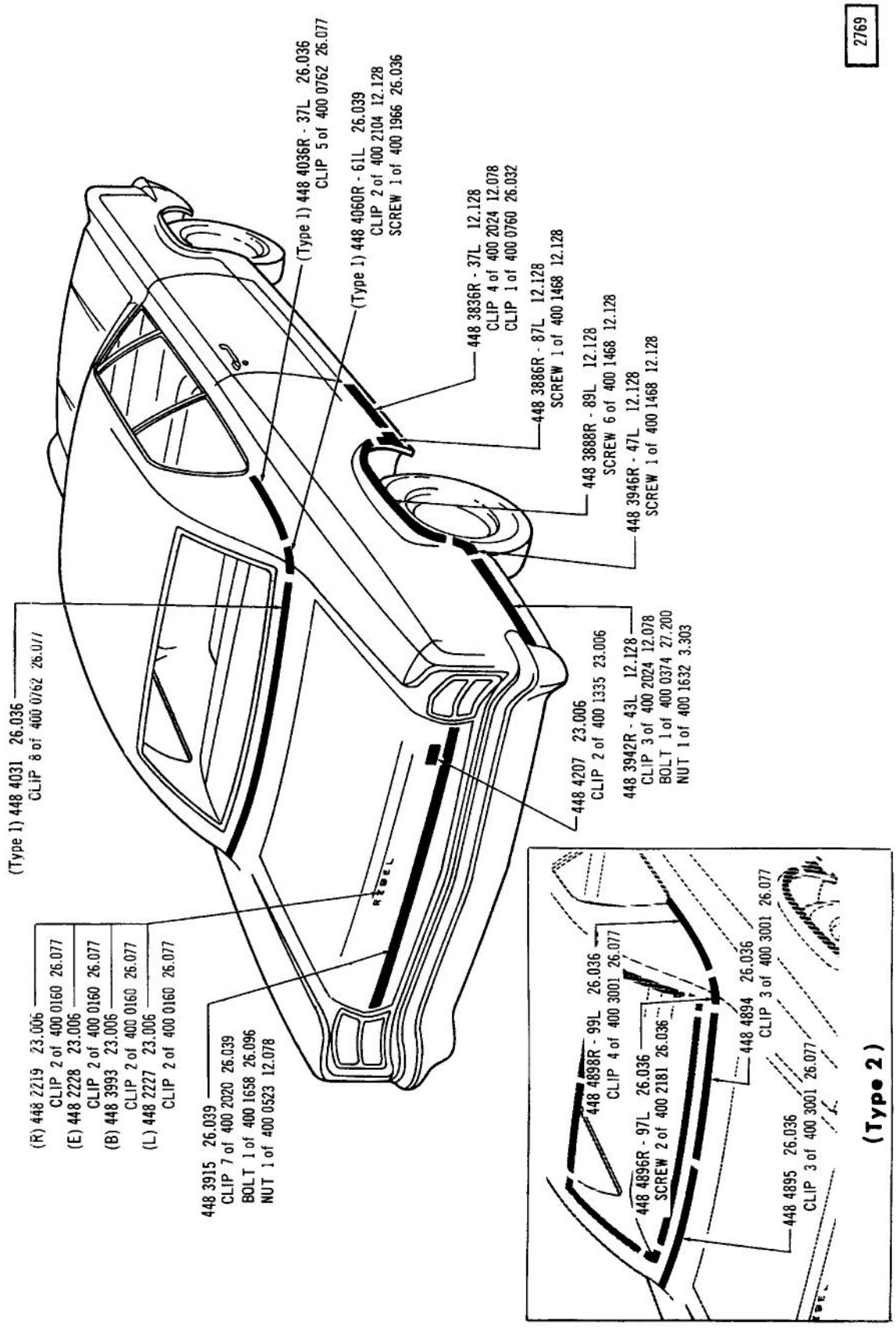

EXTERIOR ORNAMENTATION (REAR VIEW) ... 1967 (19-770)

2597

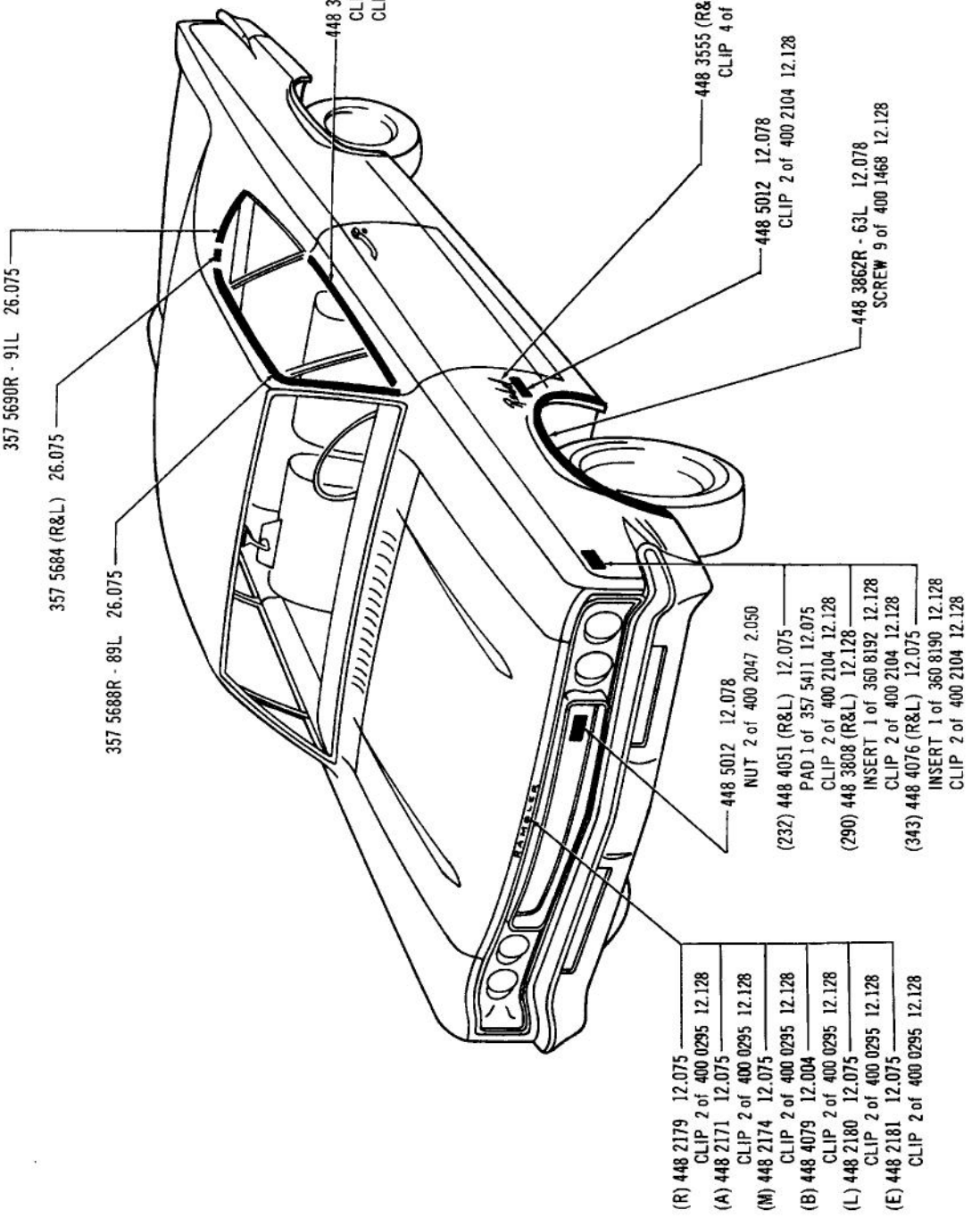

EXTERIOR ORNAMENTATION (FRONT VIEW) ... 1967 (19-SST)

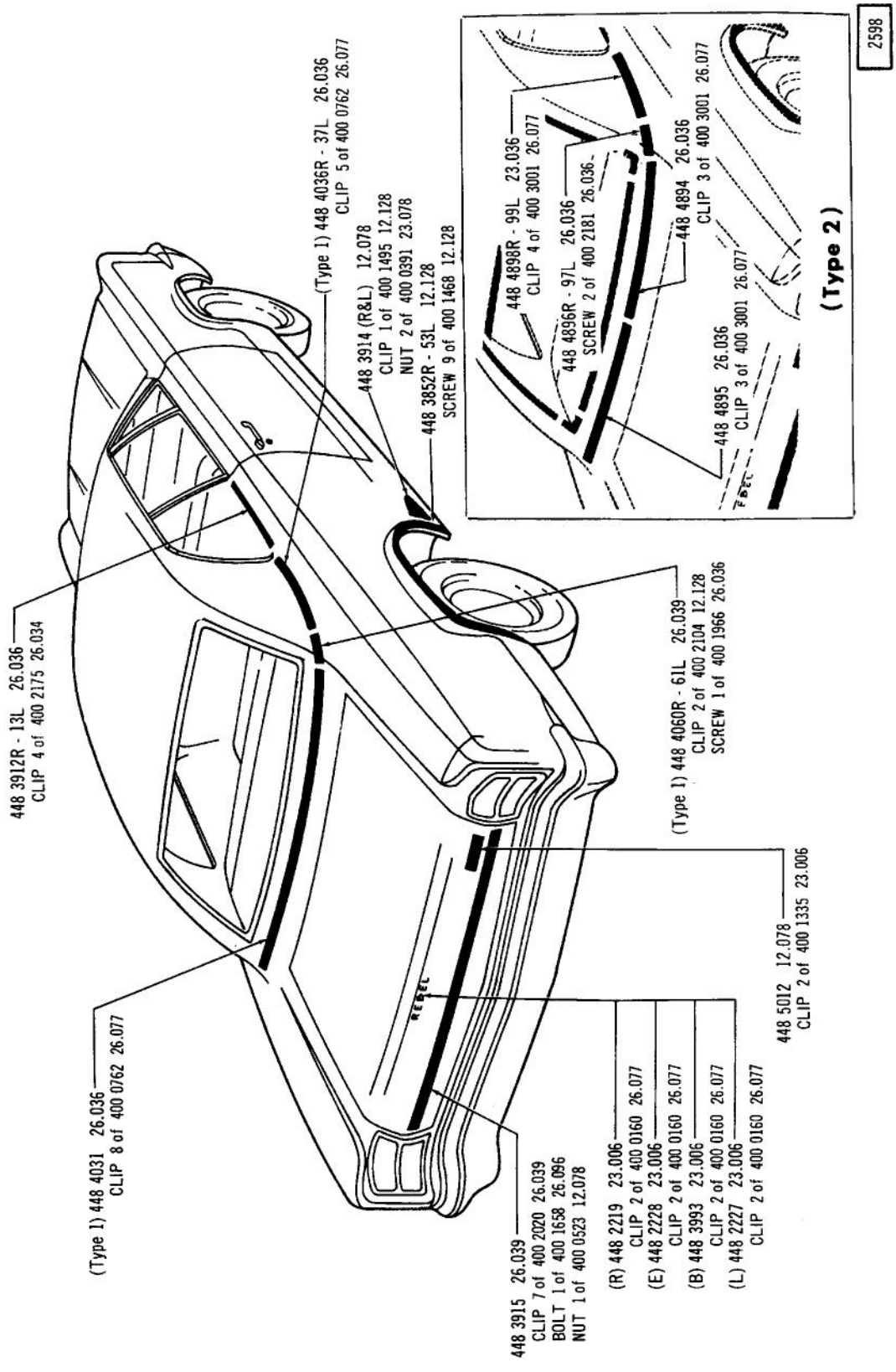

EXTERIOR ORNAMENTATION (REAR VIEW) ... 1967 (19-SST)

3258

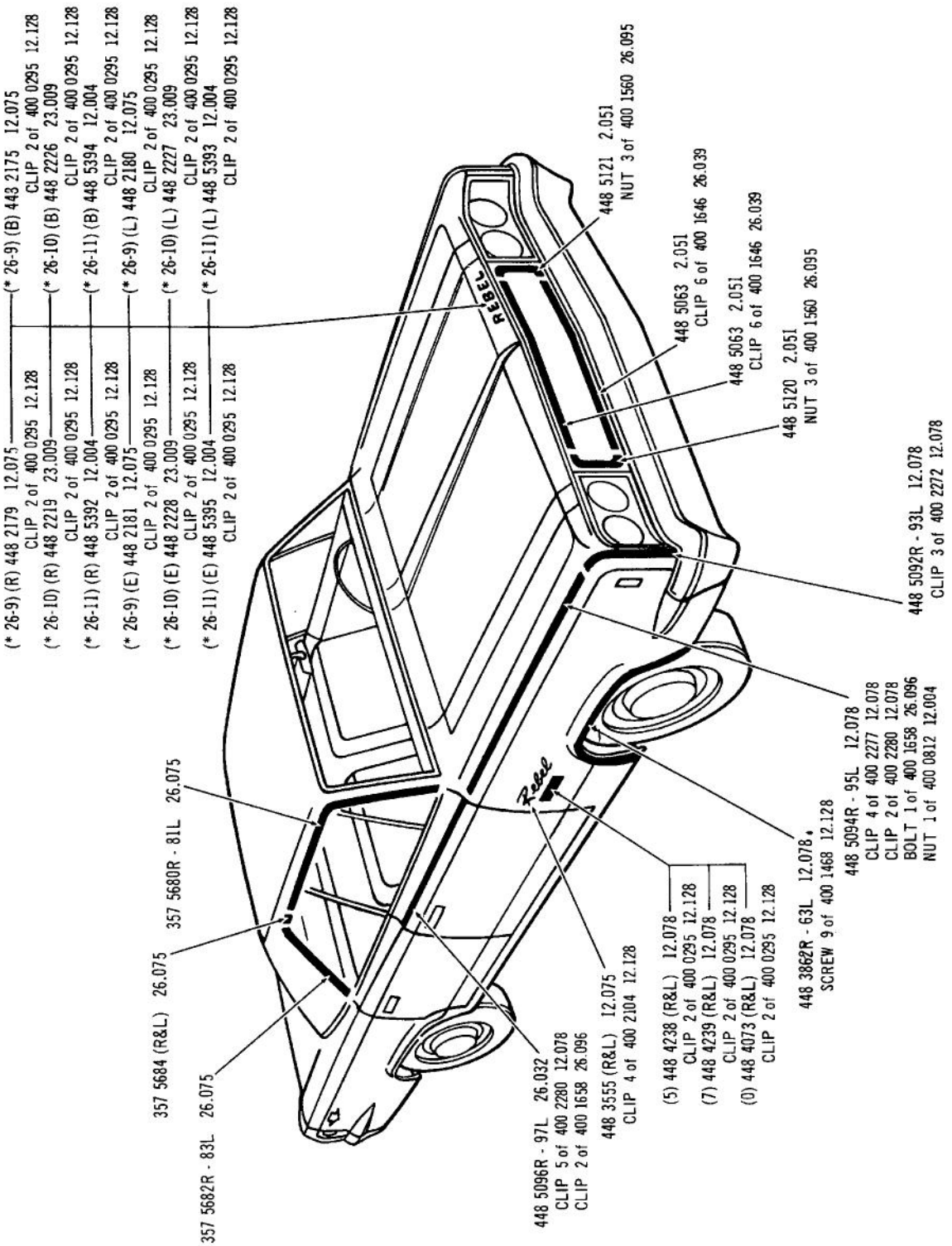

EXTERIOR ORNAMENTATION (FRONT VIEW) ... 1968 (15)

3259

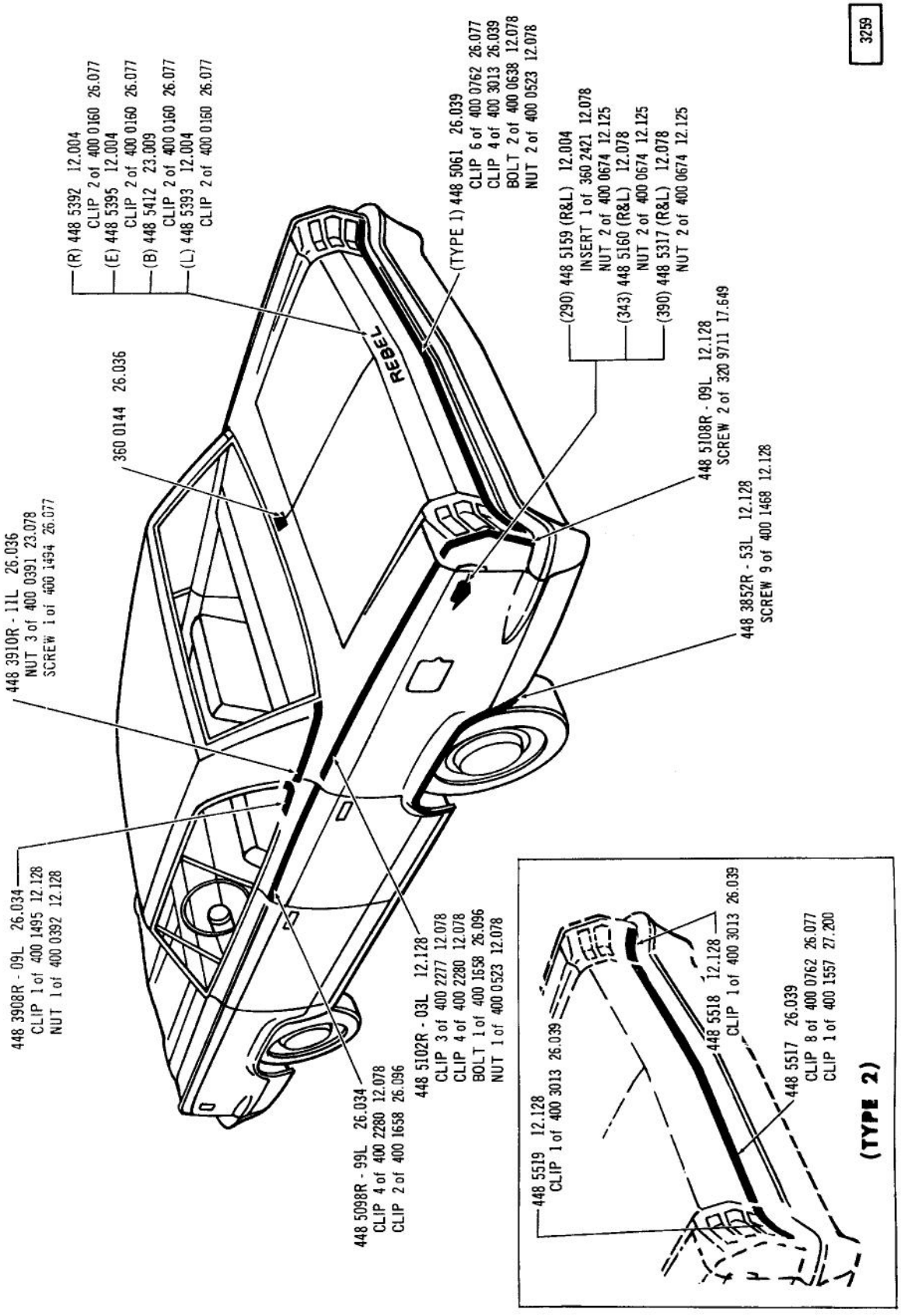

EXTERIOR ORNAMENTATION (REAR VIEW) ... 1968 (15)

Printed in U.S.A.

3260

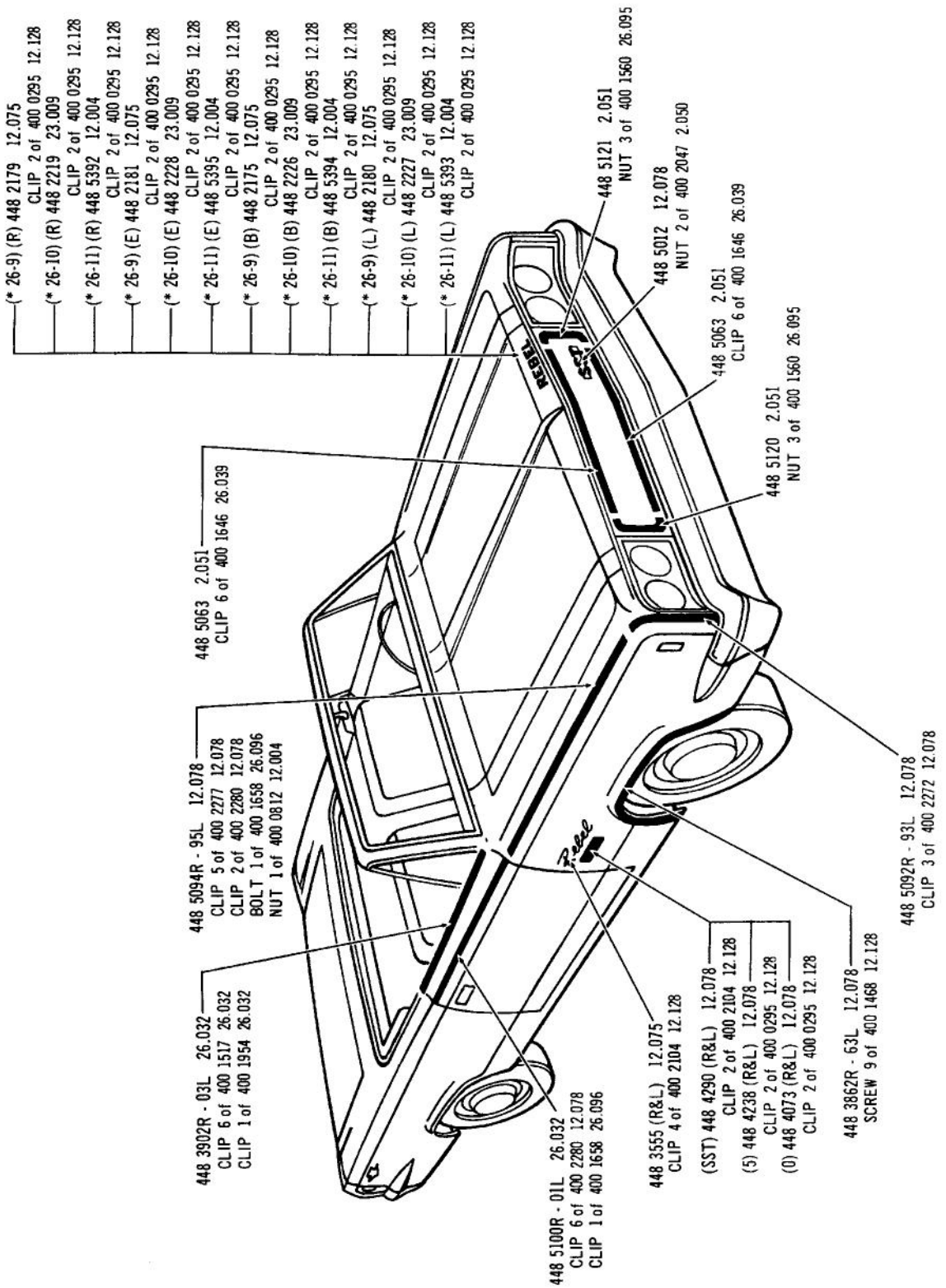

EXTERIOR ORNAMENTATION (FRONT VIEW) ... 1968 (17)

3261-A

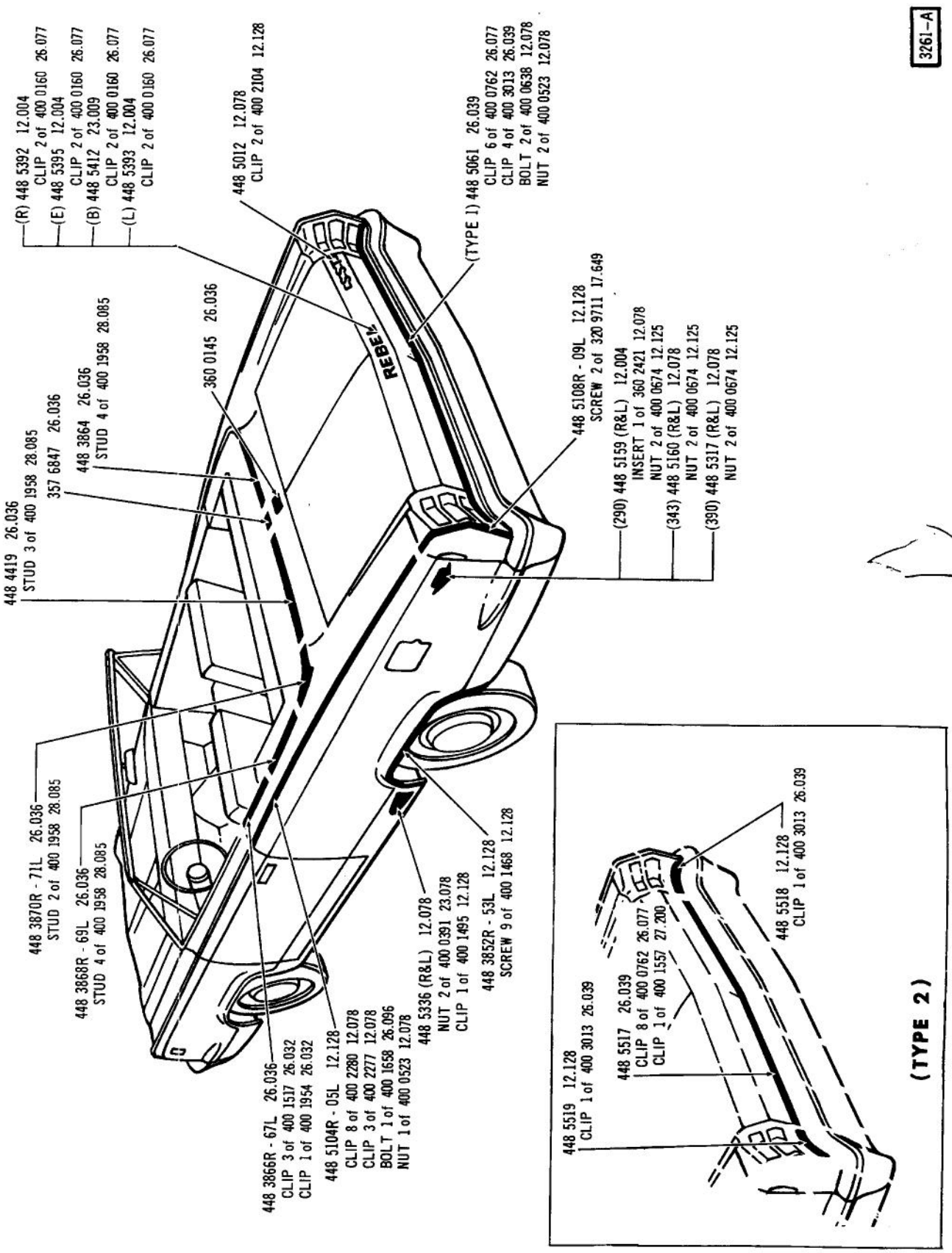

EXTERIOR ORNAMENTATION (REAR VIEW) ... 1968 (17)

Printed in U.S.A.

3262

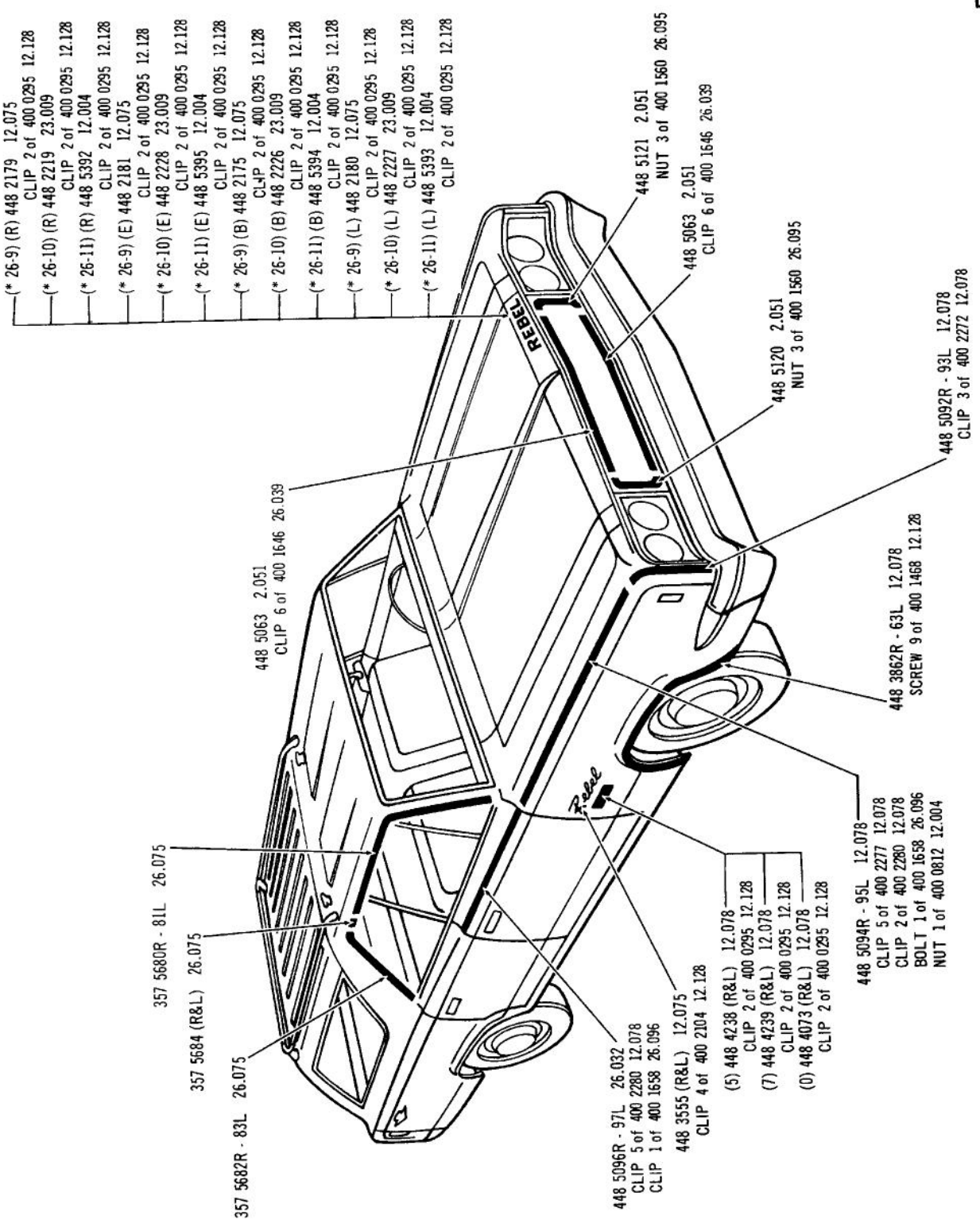

EXTERIOR ORNAMENTATION (FRONT VIEW) ... 1968 (18-LWO)(18-LTT)

3263

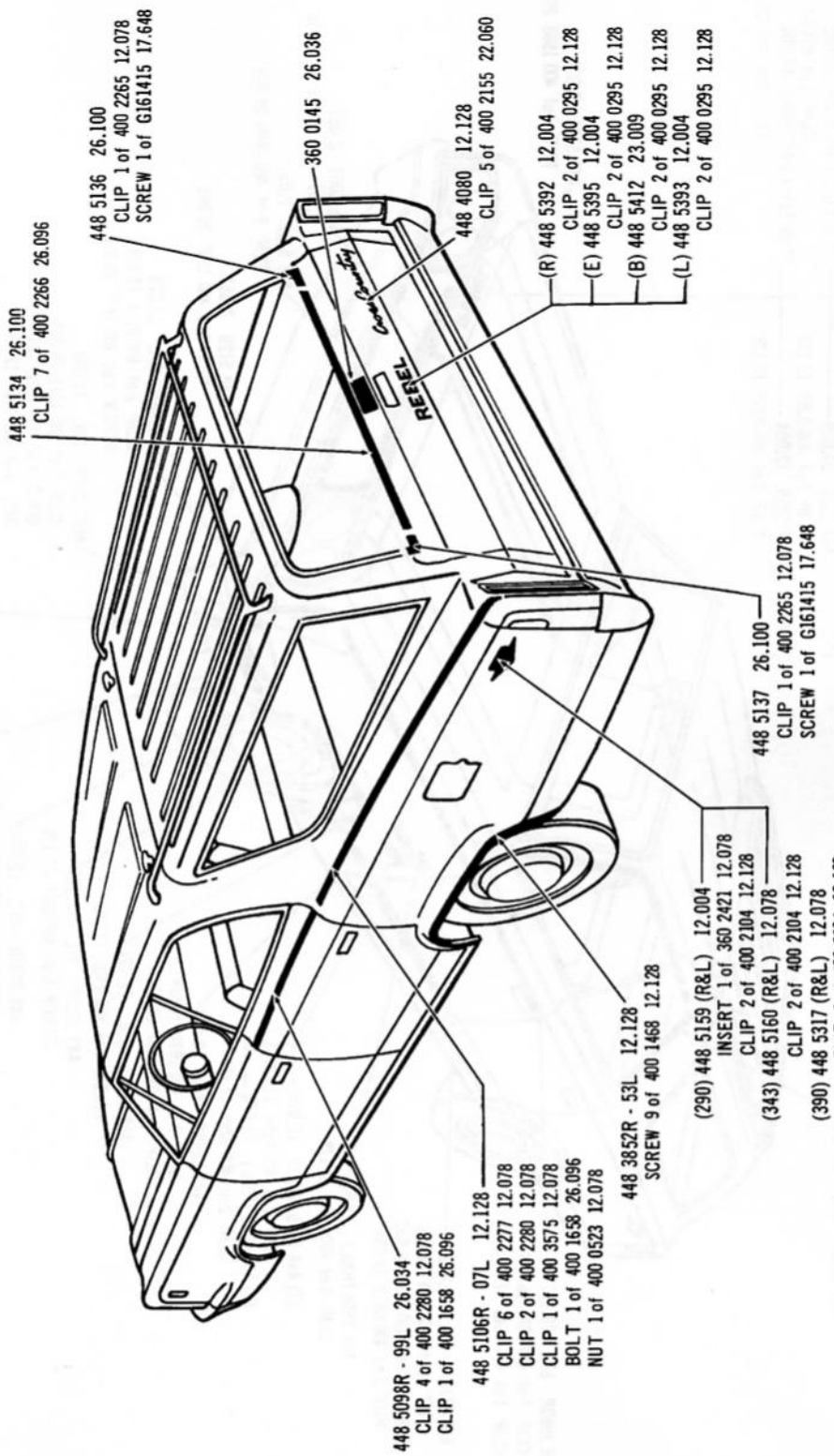

EXTERIOR ORNAMENTATION (REAR VIEW) ... 1968 (18-LWO)(18-LTT)

3264

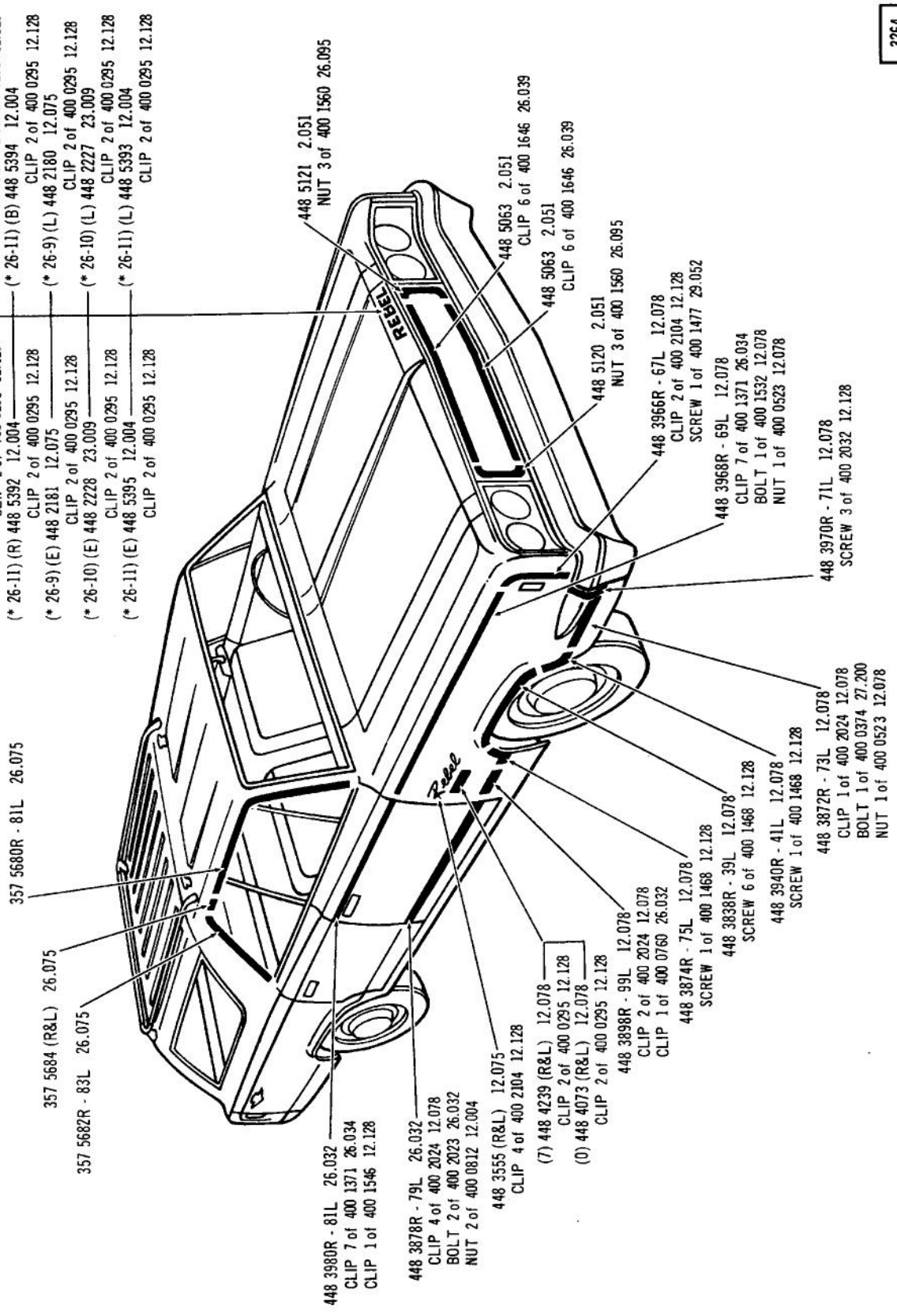

EXTERIOR ORNAMENTATION (FRONT VIEW) ... 1968 (18-WWO)(18-WTT)

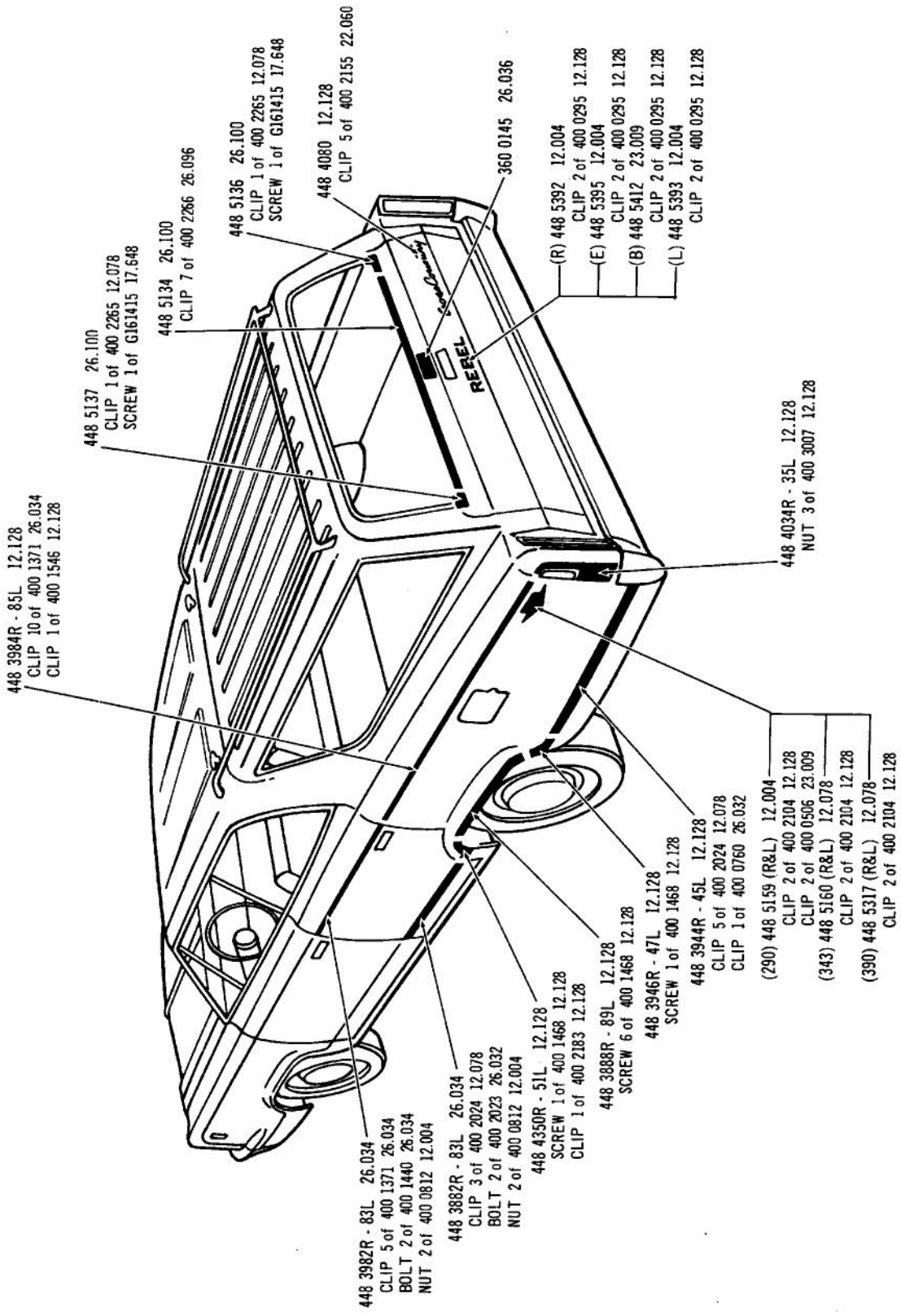

EXTERIOR ORNAMENTATION (REAR VIEW) ... 1968 (18-WWO)(18-WTT)

3266

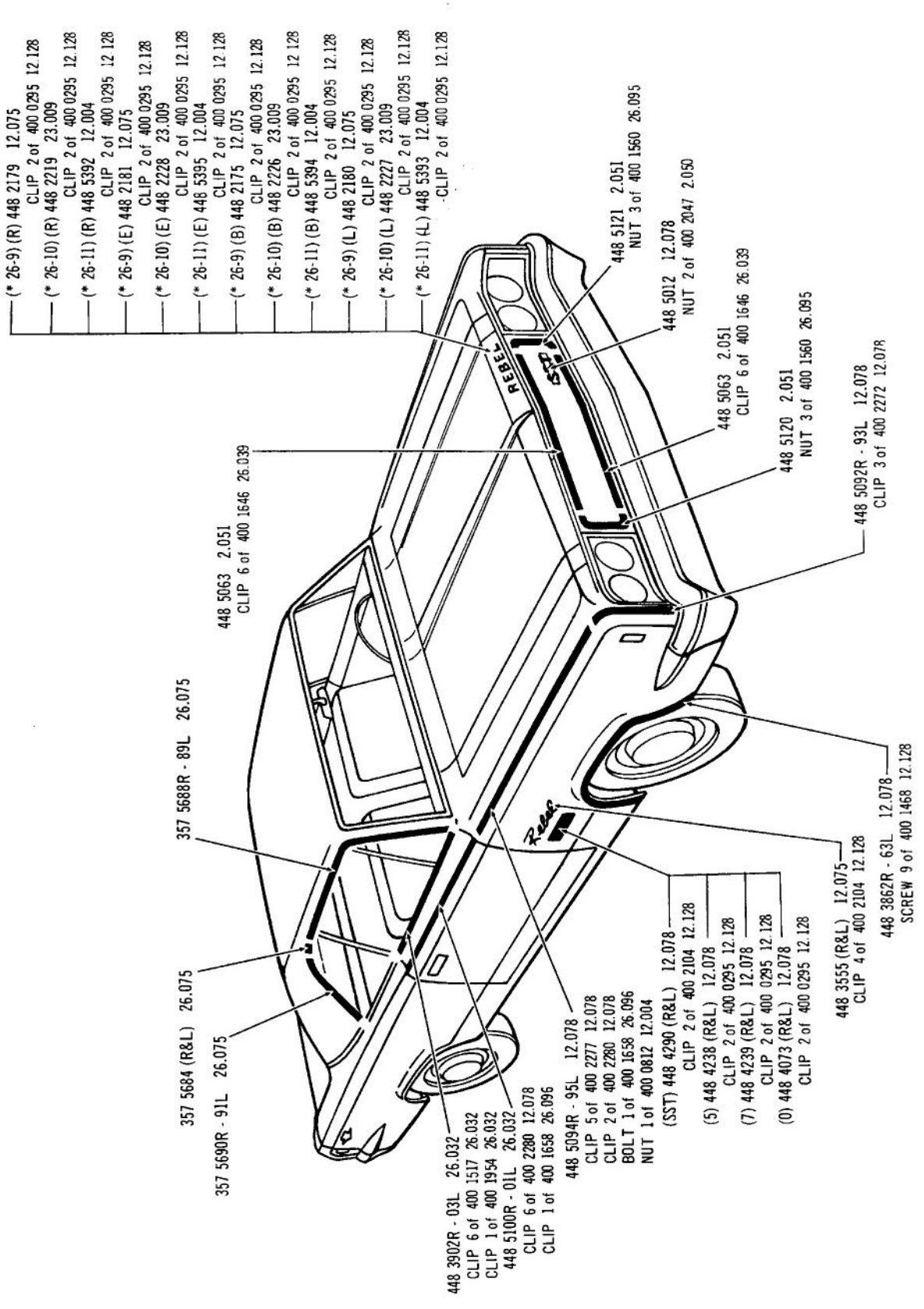

EXTERIOR ORNAMENTATION (FRONT VIEW) ... 1968 (19)

3267-A

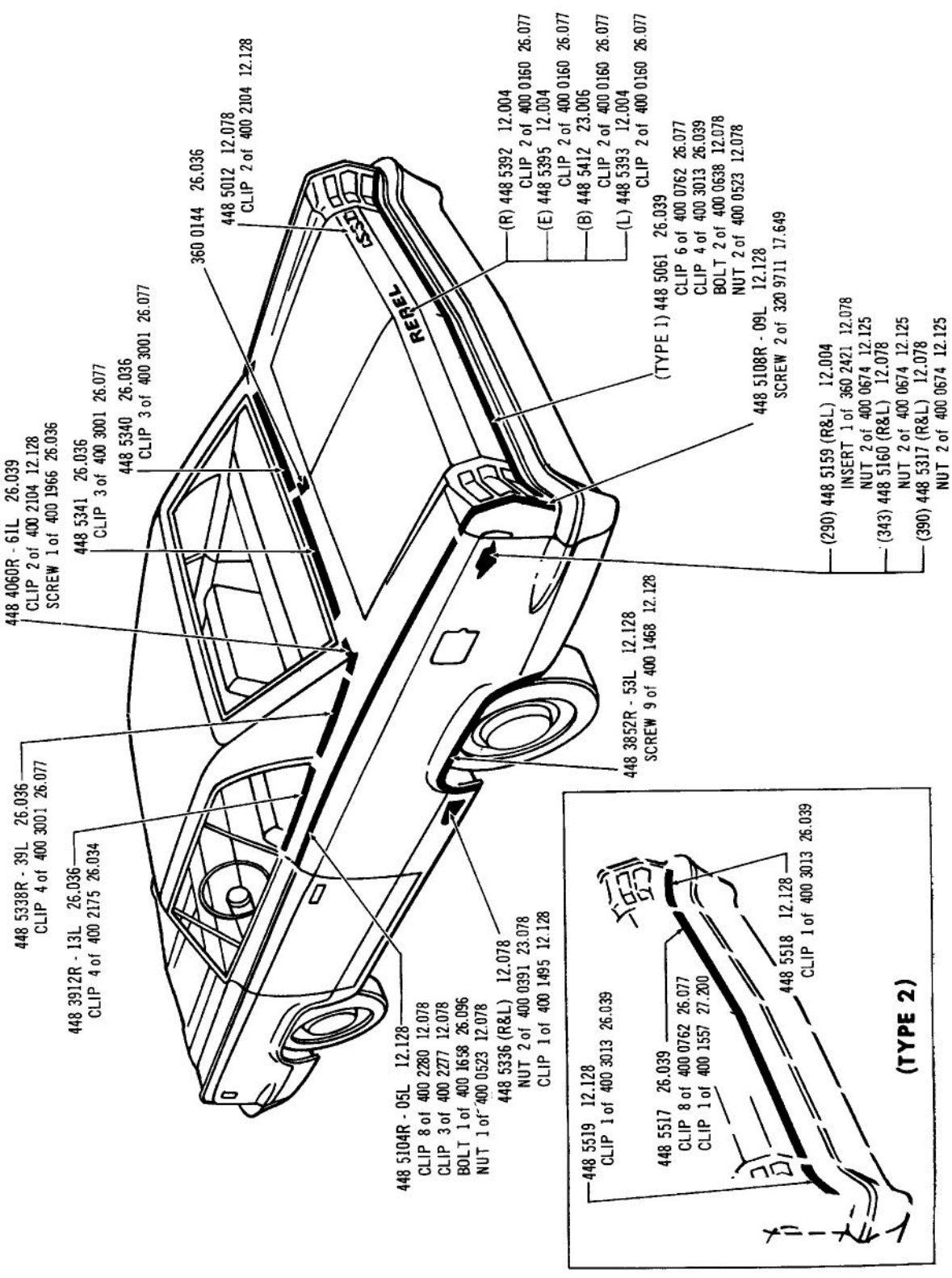

EXTERIOR ORNAMENTATION (REAR VIEW) ... 1968 (19)

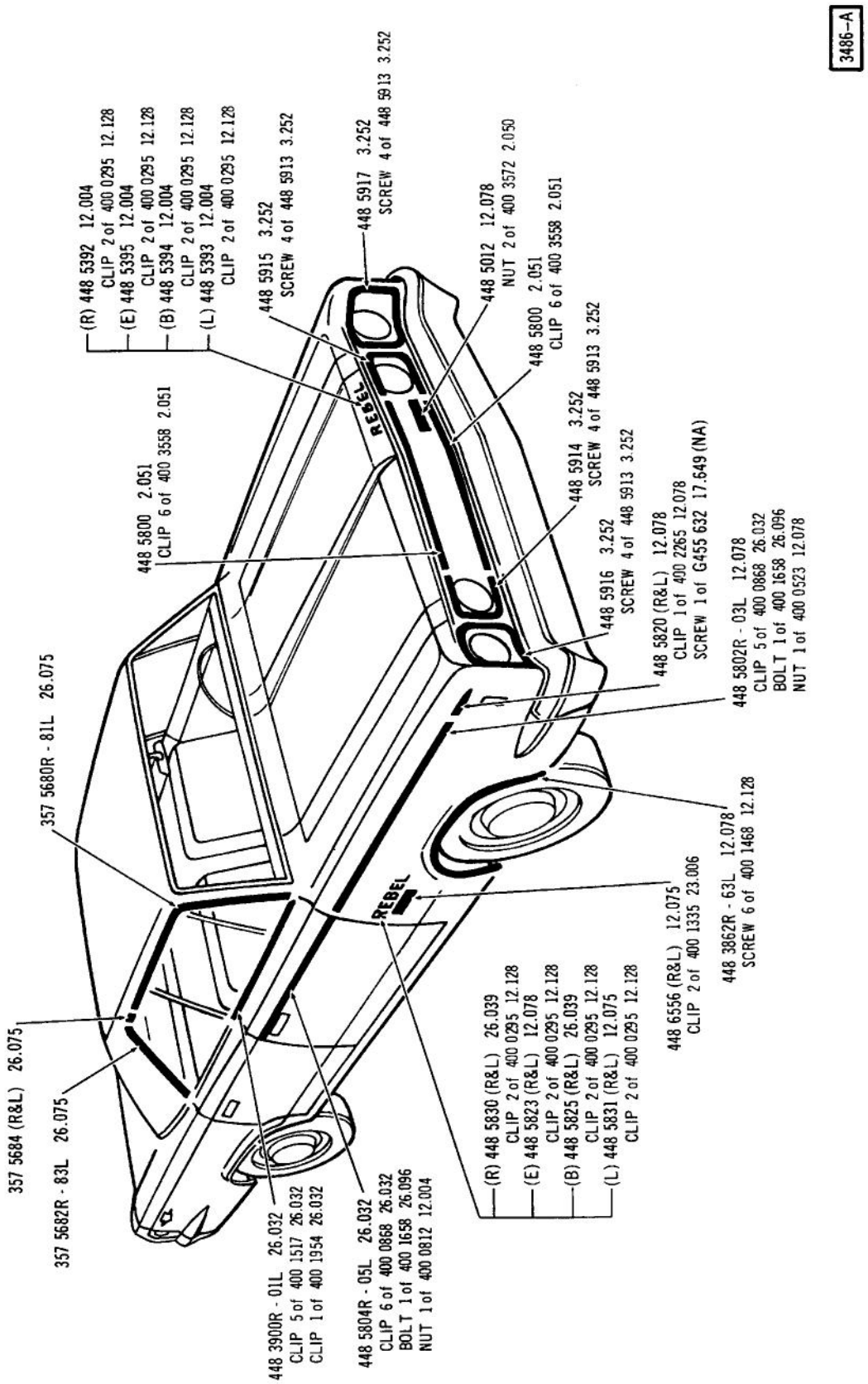

EXTERIOR ORNAMENTATION (FRONT VIEW) ... 1969 (15)

3485-A

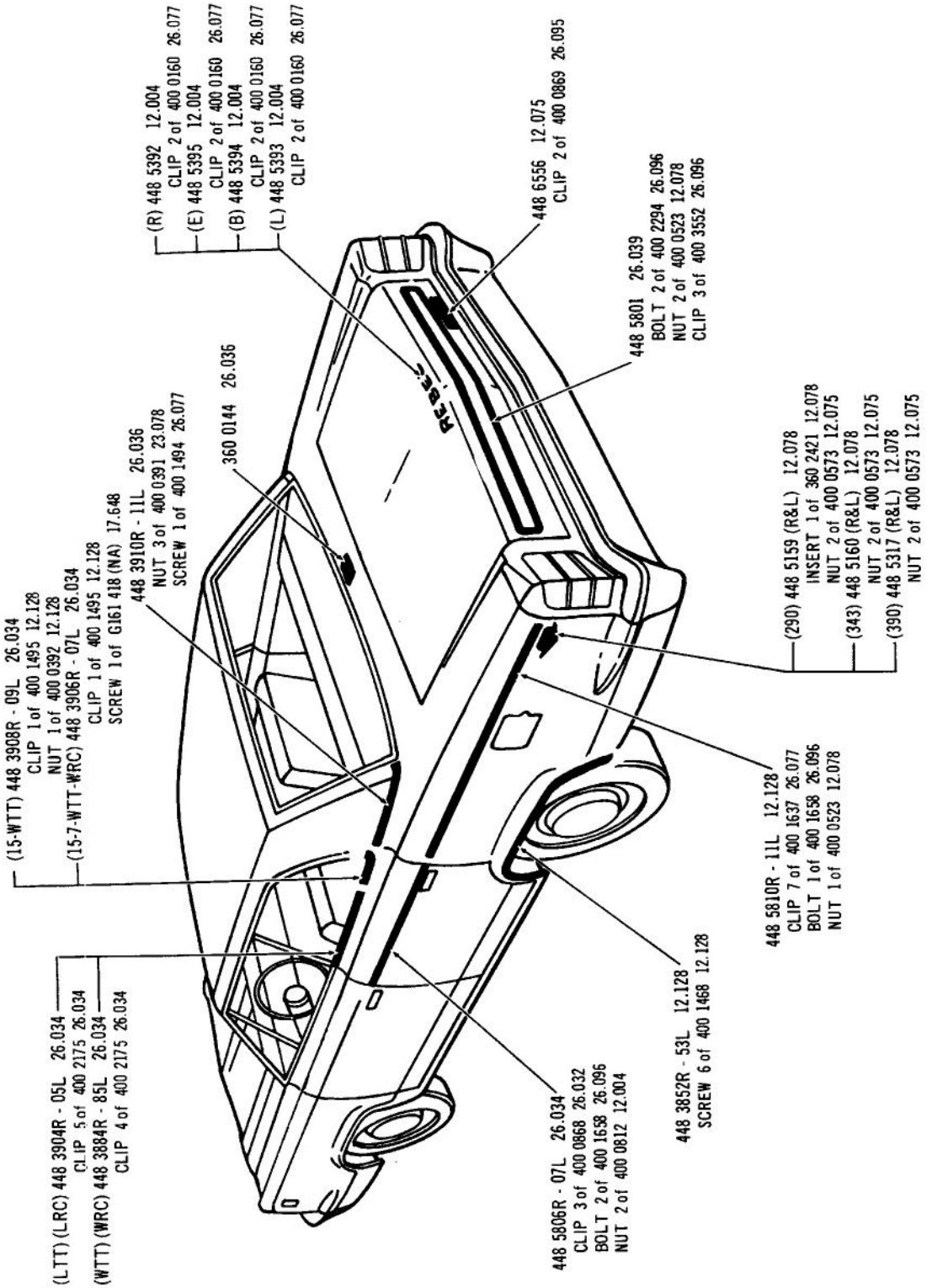

EXTERIOR ORNAMENTATION (REAR VIEW) ... 1969 (15)

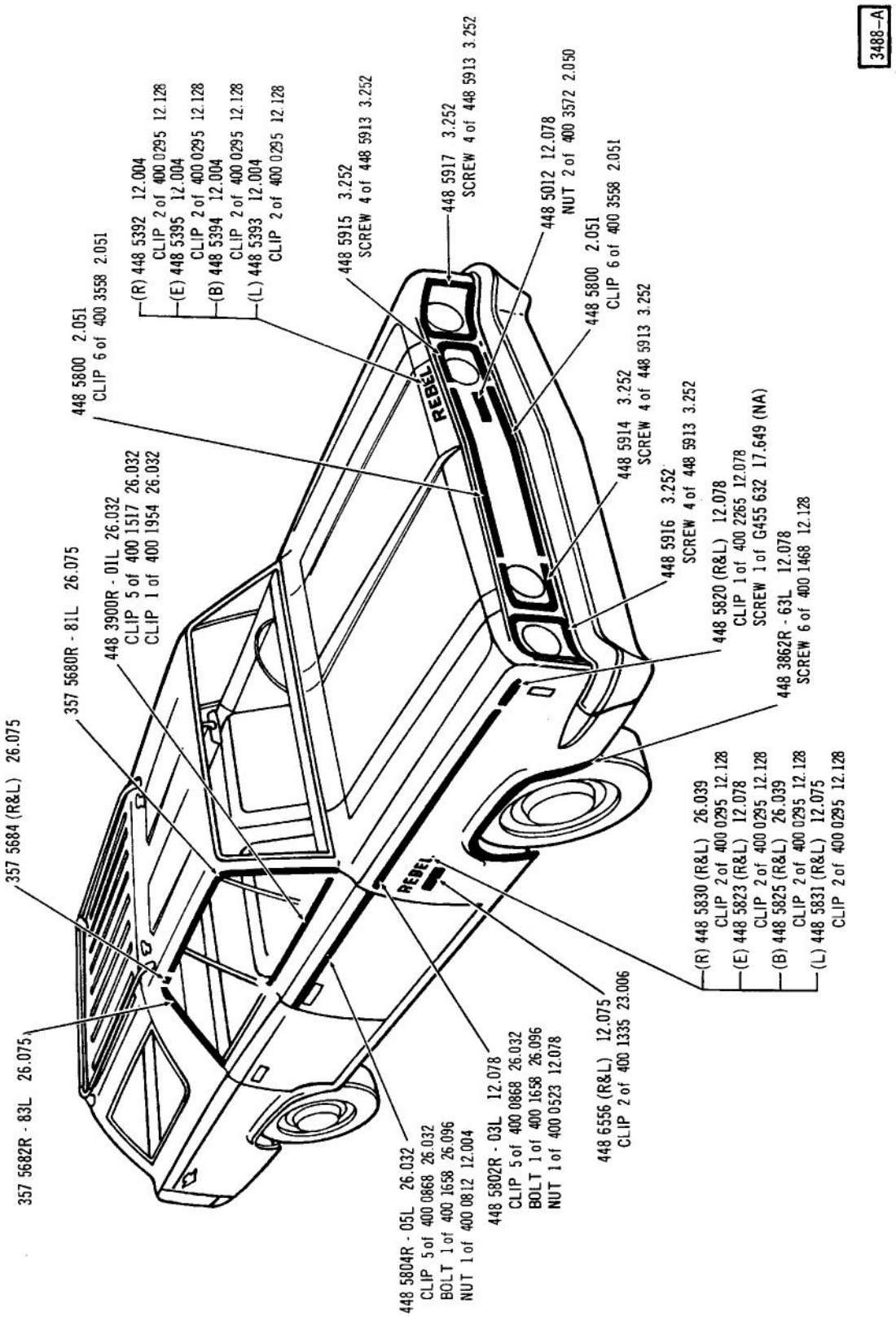

EXTERIOR ORNAMENTATION (FRONT VIEW) ... 1969 (18-LWO)(18-LTT)

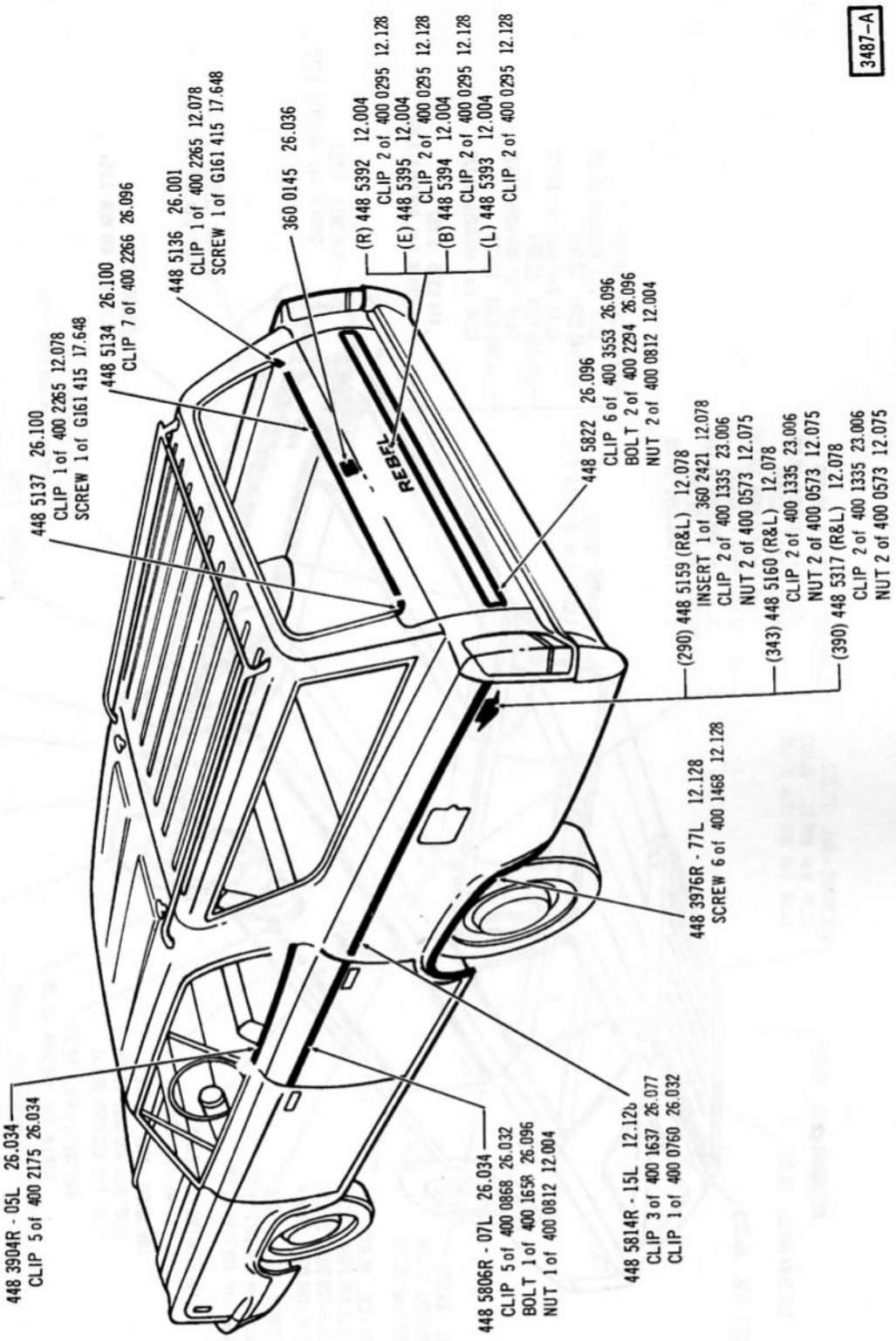

EXTERIOR ORNAMENTATION (REAR VIEW) ... 1969 (18-LWO)(18-LTT)

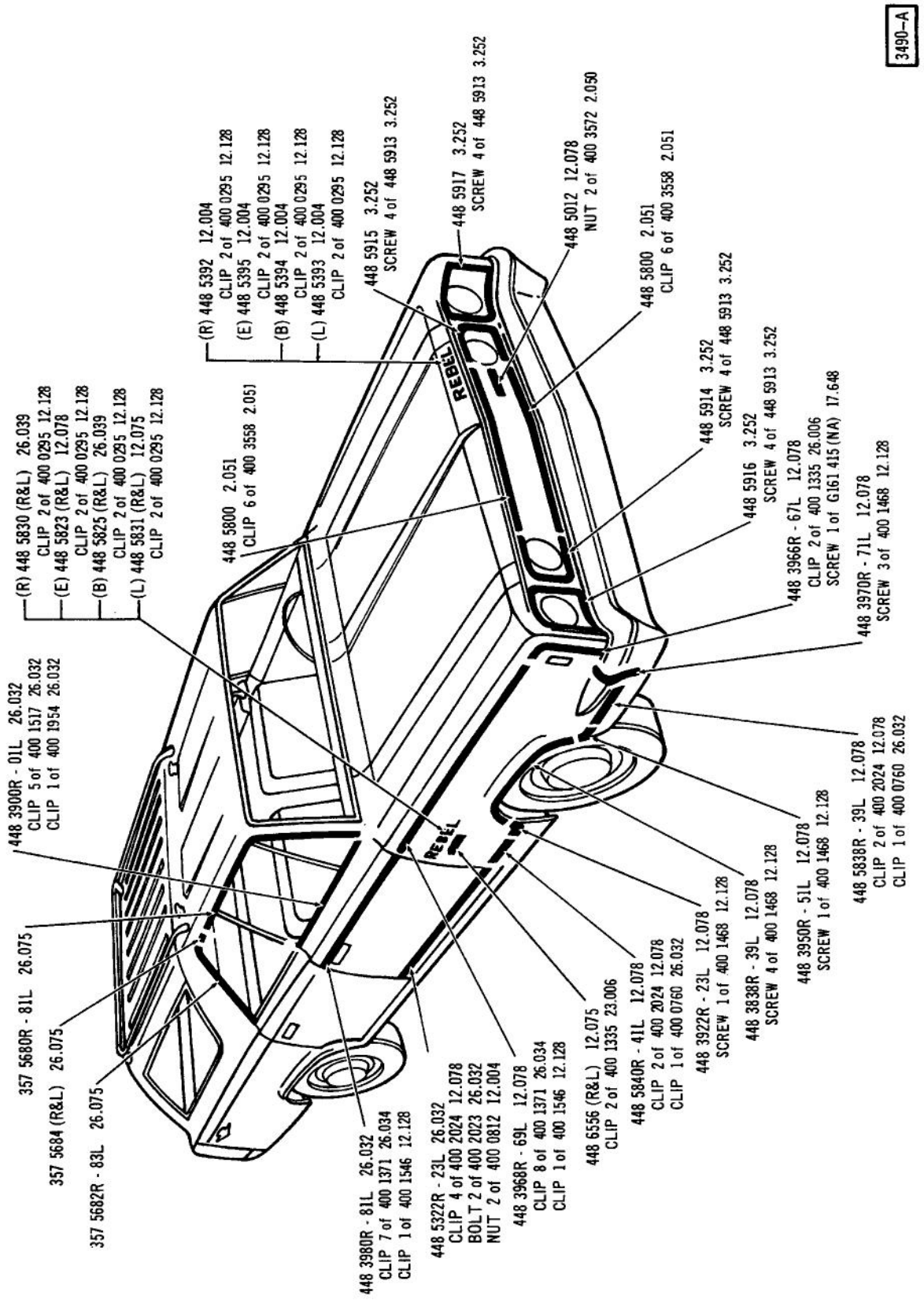

EXTERIOR ORNAMENTATION (FRONT VIEW) ... 1969 (18-WWO)(18-WTT)

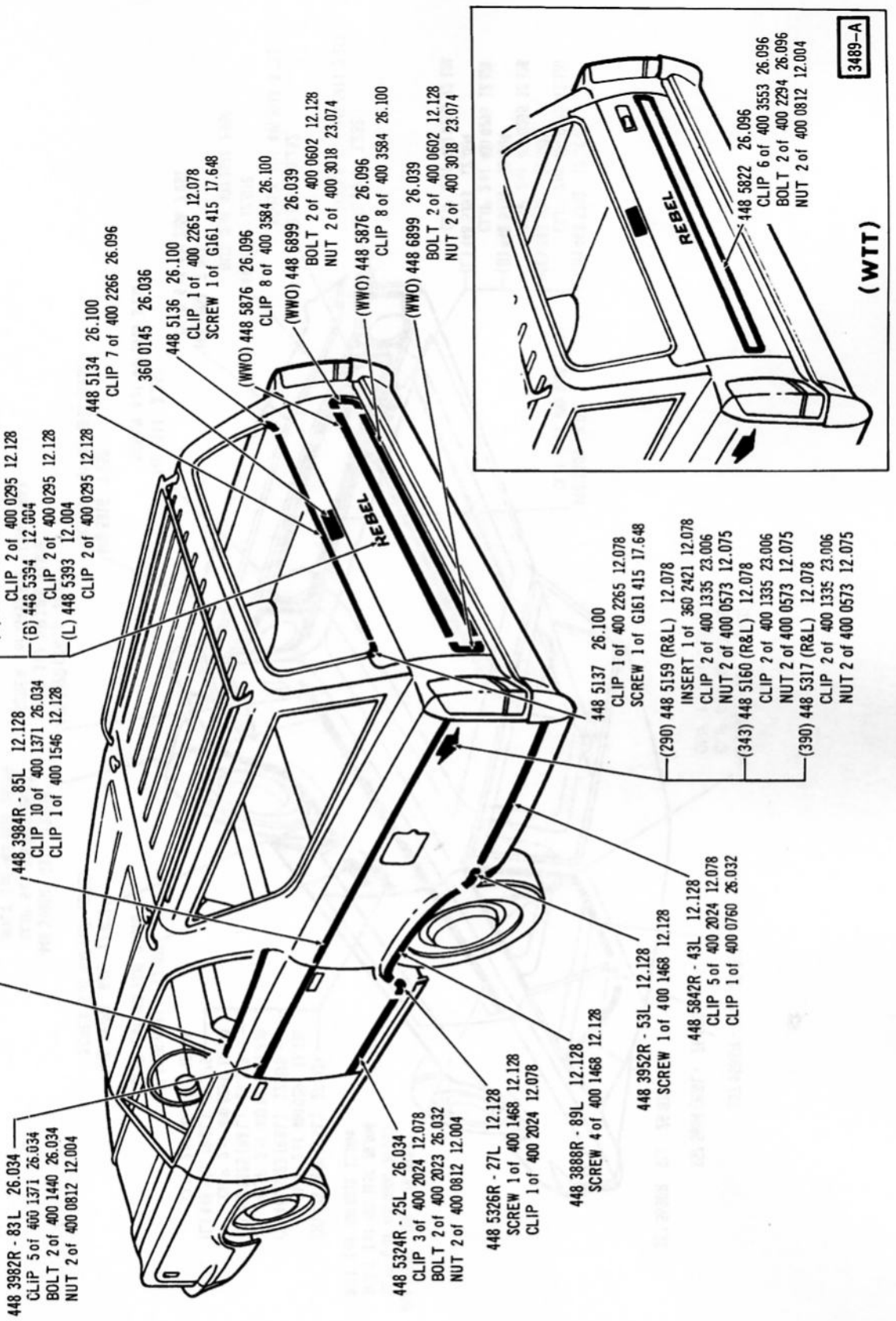

EXTERIOR ORNAMENTATION (REAR VIEW) ... 1969 (18-WWO)(18-WTT)

3483

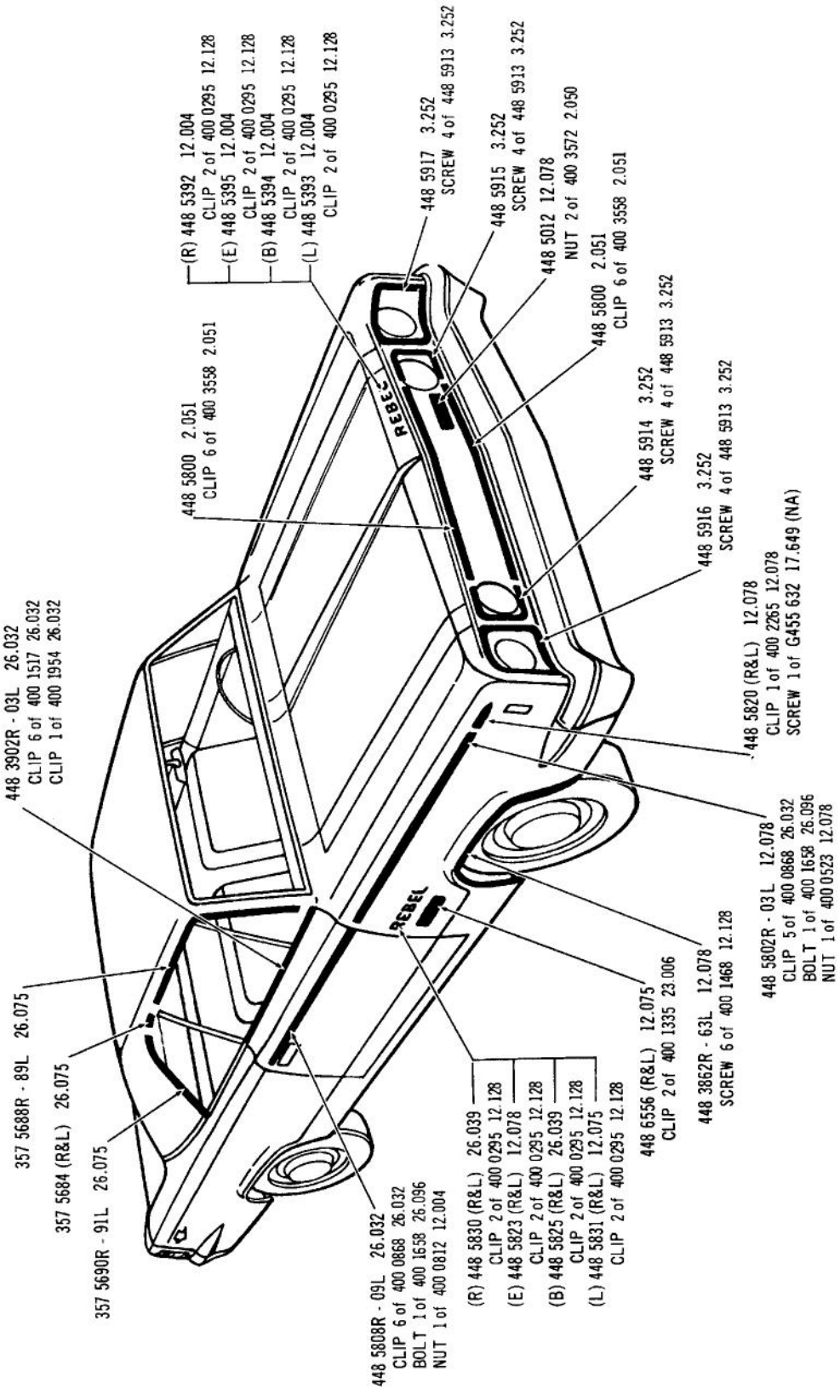

EXTERIOR ORNAMENTATION (FRONT VIEW) ... 1969 (19)

3484

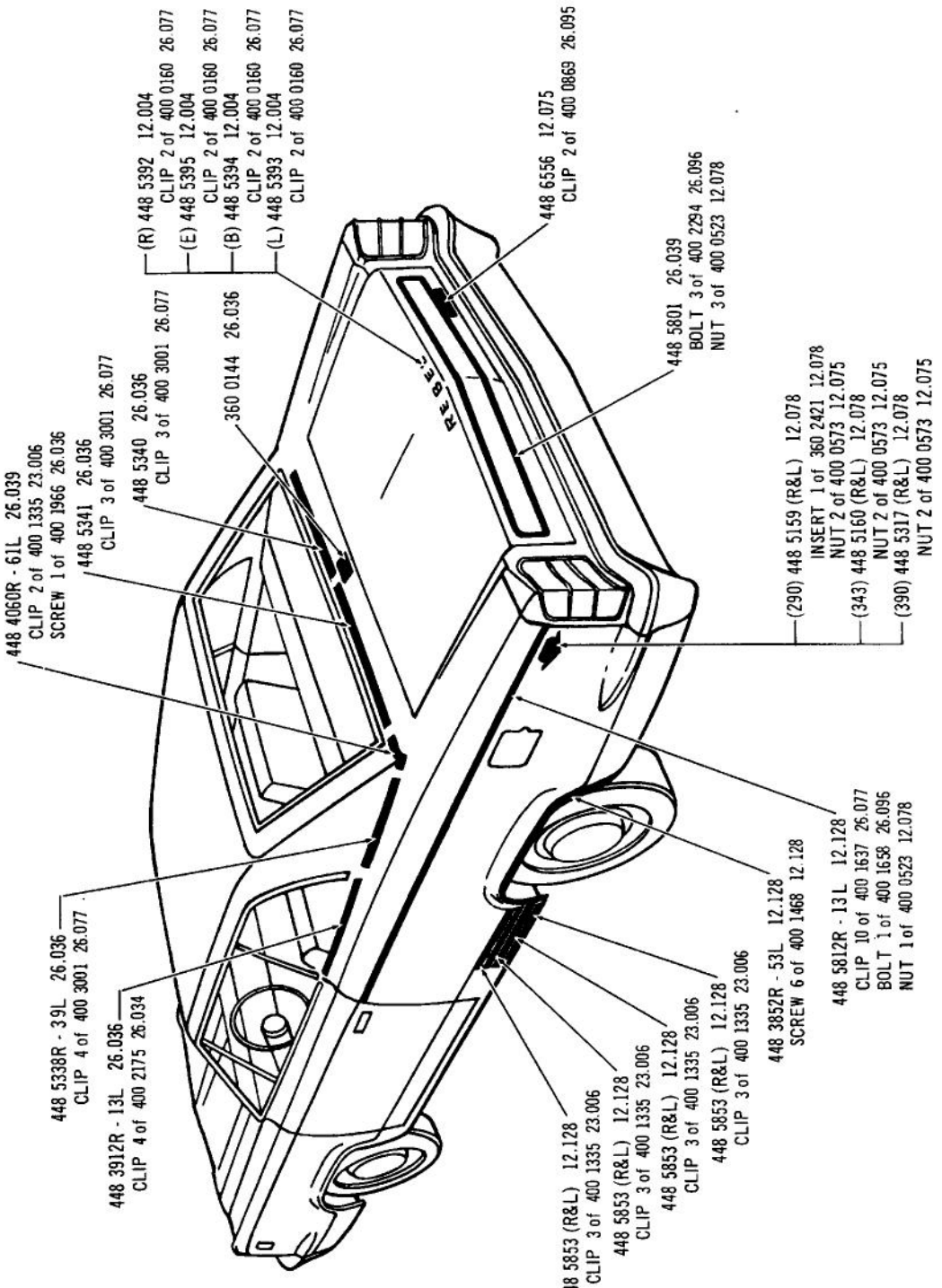

EXTERIOR ORNAMENTATION (REAR VIEW) ... 1969 (19)

3876

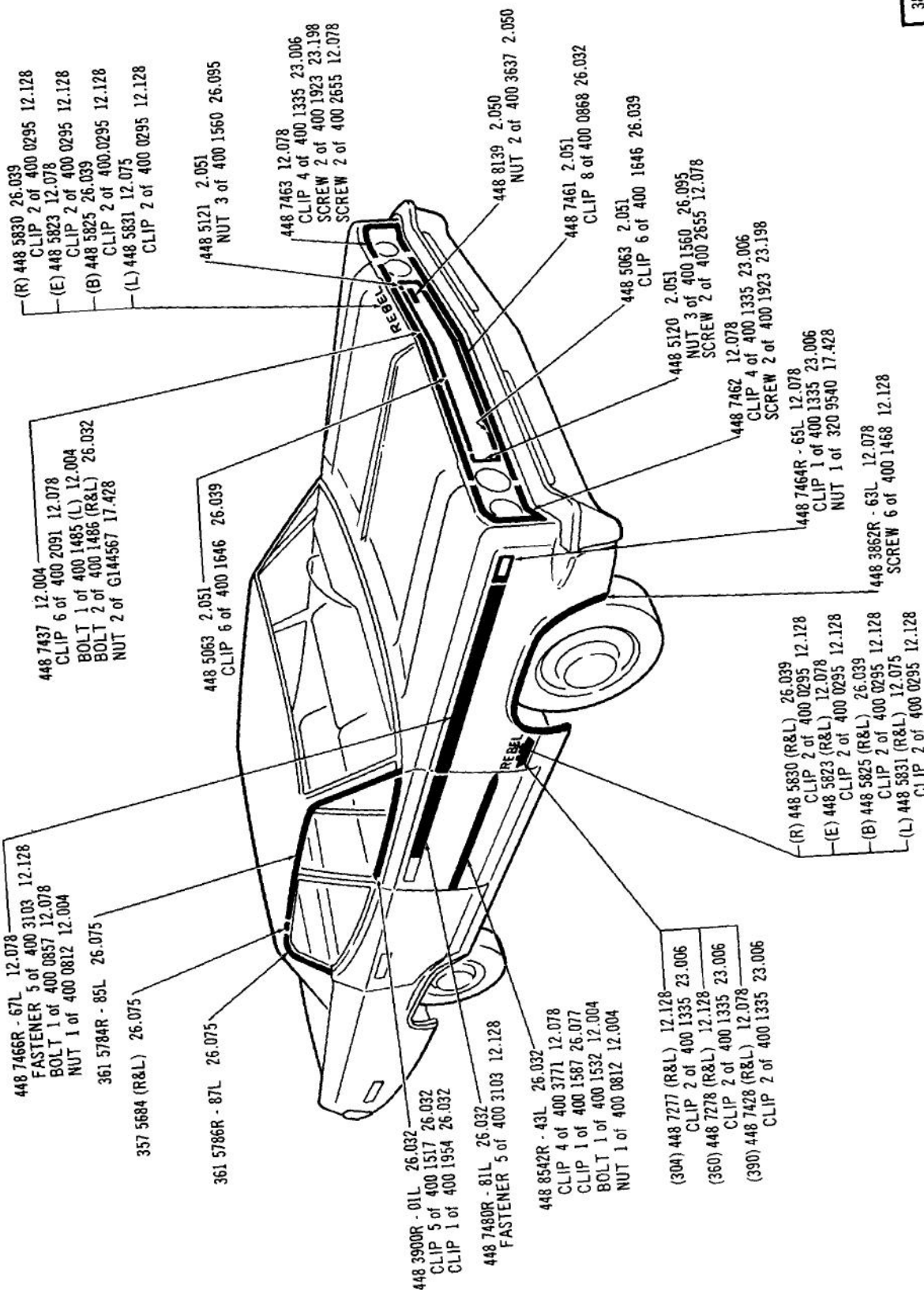

EXTERIOR ORNAMENTATION (FRONT VIEW) ... 1970 (15)

3877

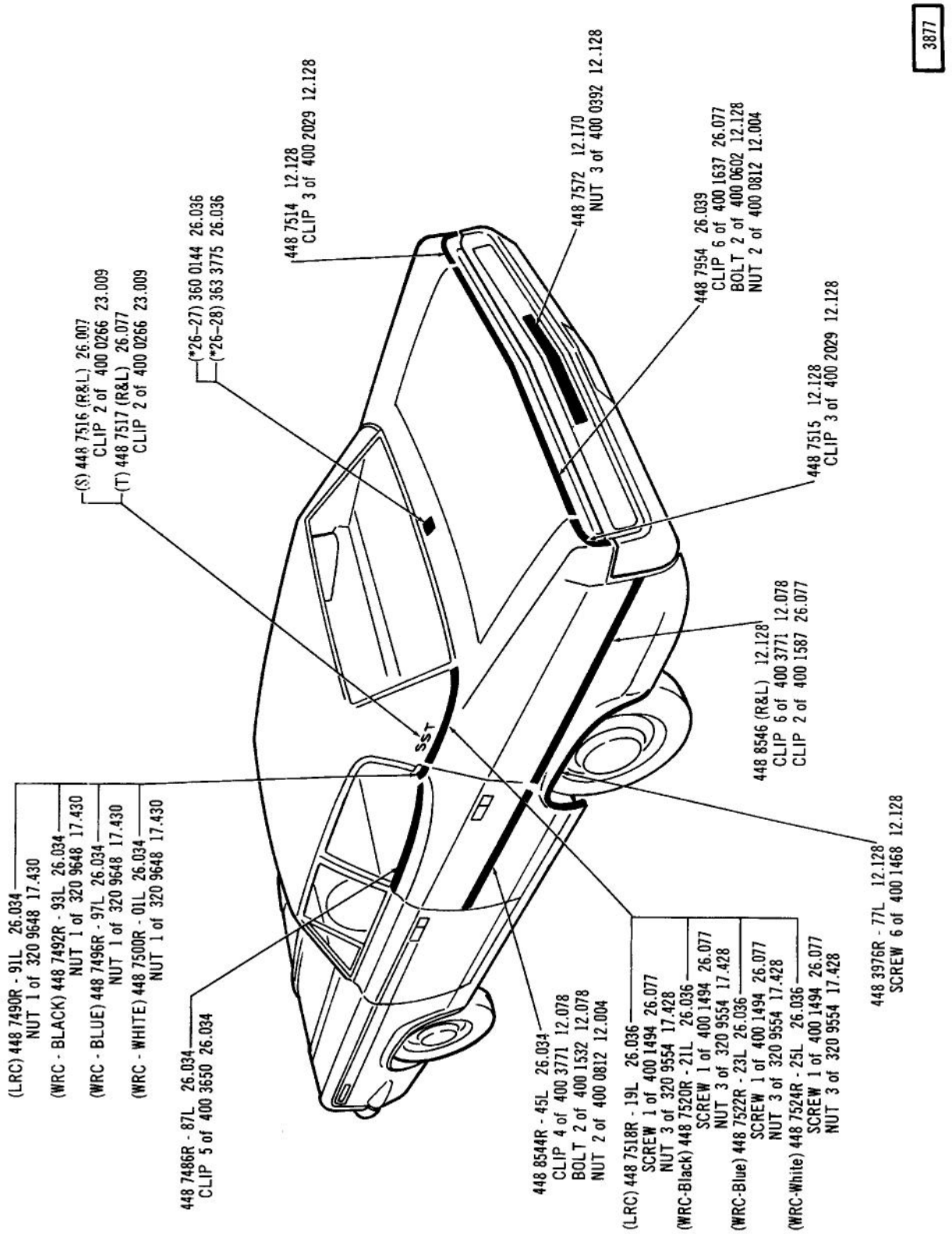

EXTERIOR ORNAMENTATION (REAR VIEW) ... 1970 (15)

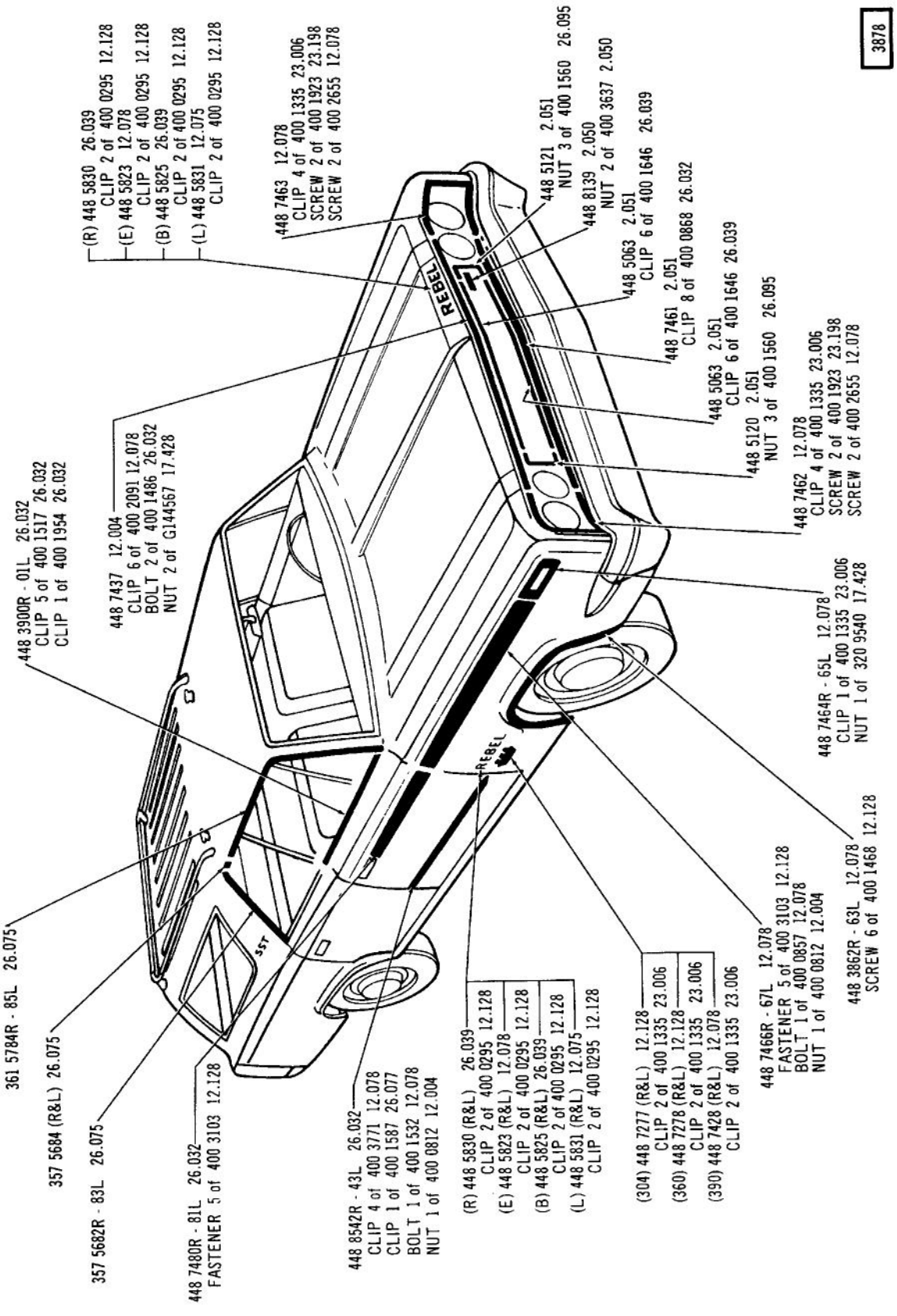

EXTERIOR ORNAMENTATION (FRONT VIEW) ... 1970 (18-LWO)(18-LTT)

3879

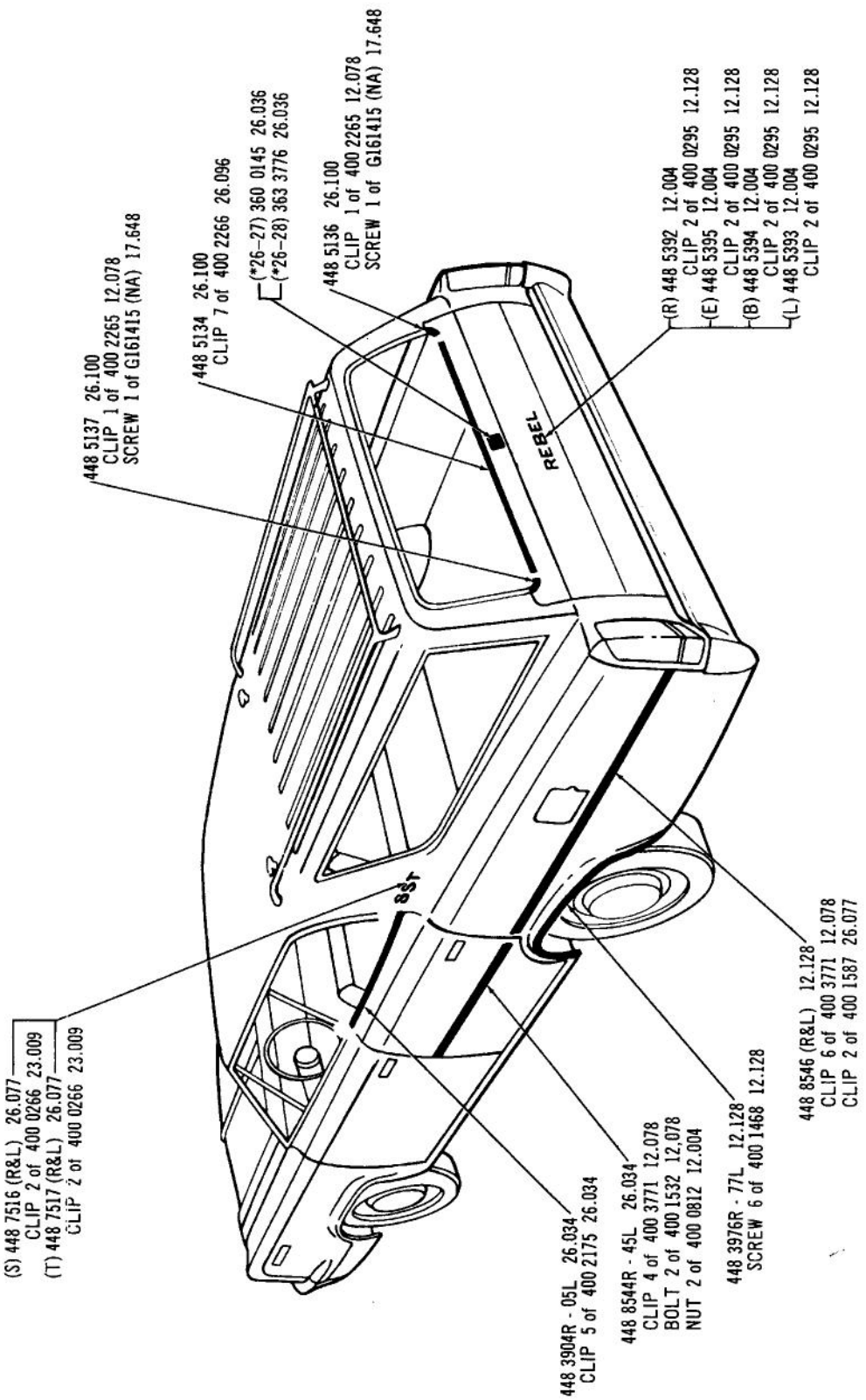

EXTERIOR ORNAMENTATION (REAR VIEW) ... 1970 (18-LWO)(18-LTT)

Printed in U.S.A.

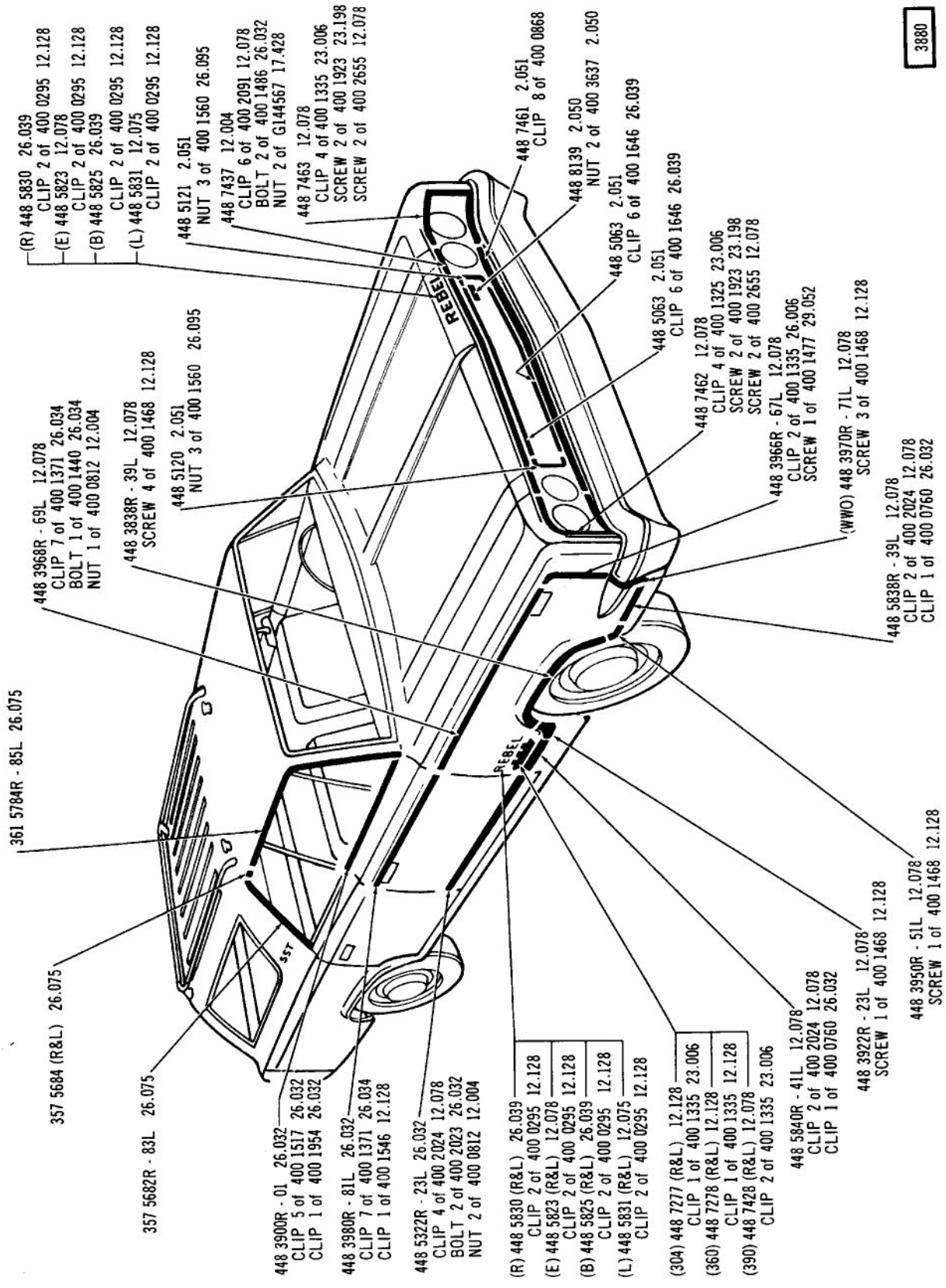

EXTERIOR ORNAMENTATION (FRONT VIEW) ... 1970 (18-WWO)(18-WTT)

3881

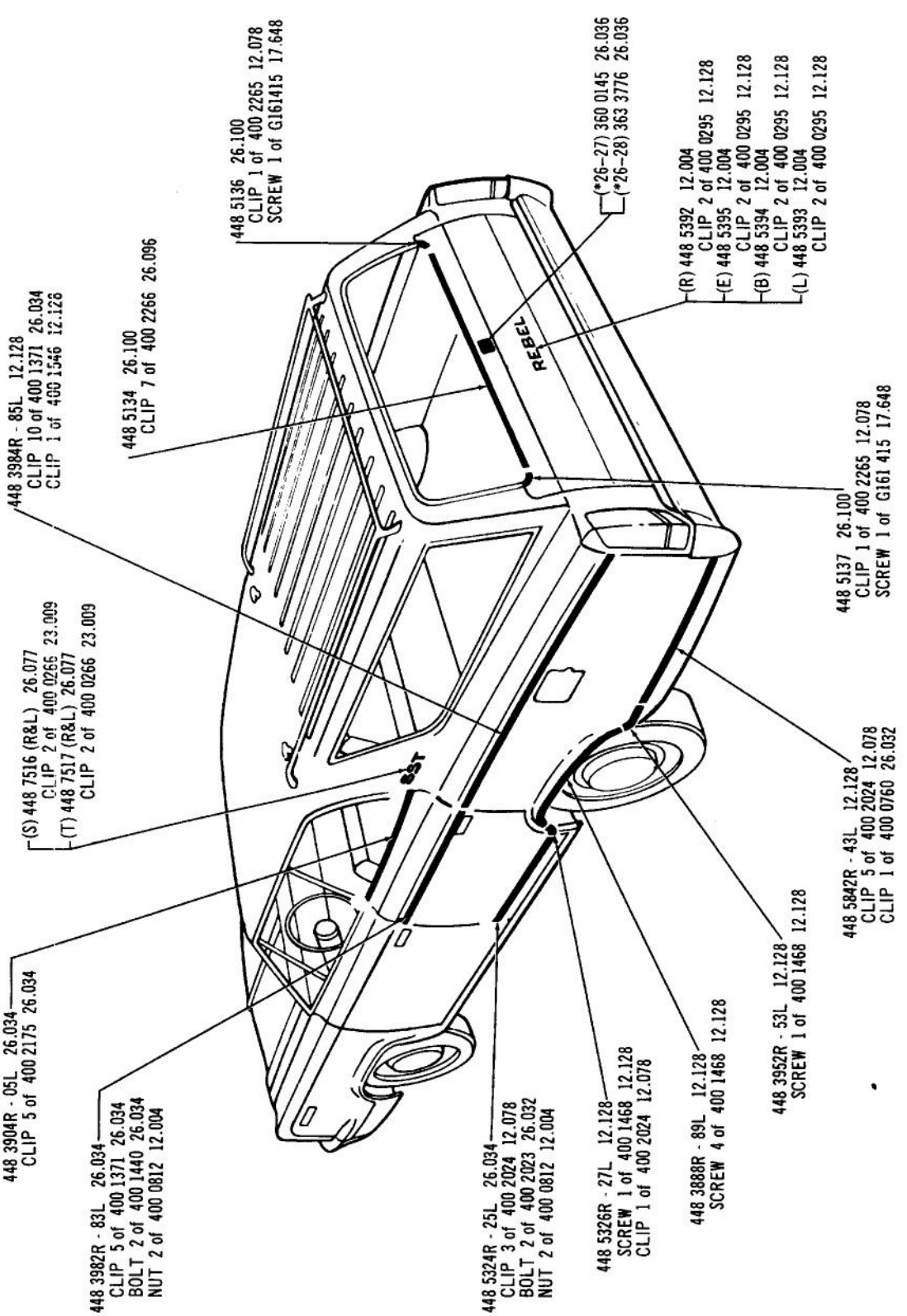

EXTERIOR ORNAMENTATION (REAR VIEW) ··· 1970 (18-WWO)(18-WTT)

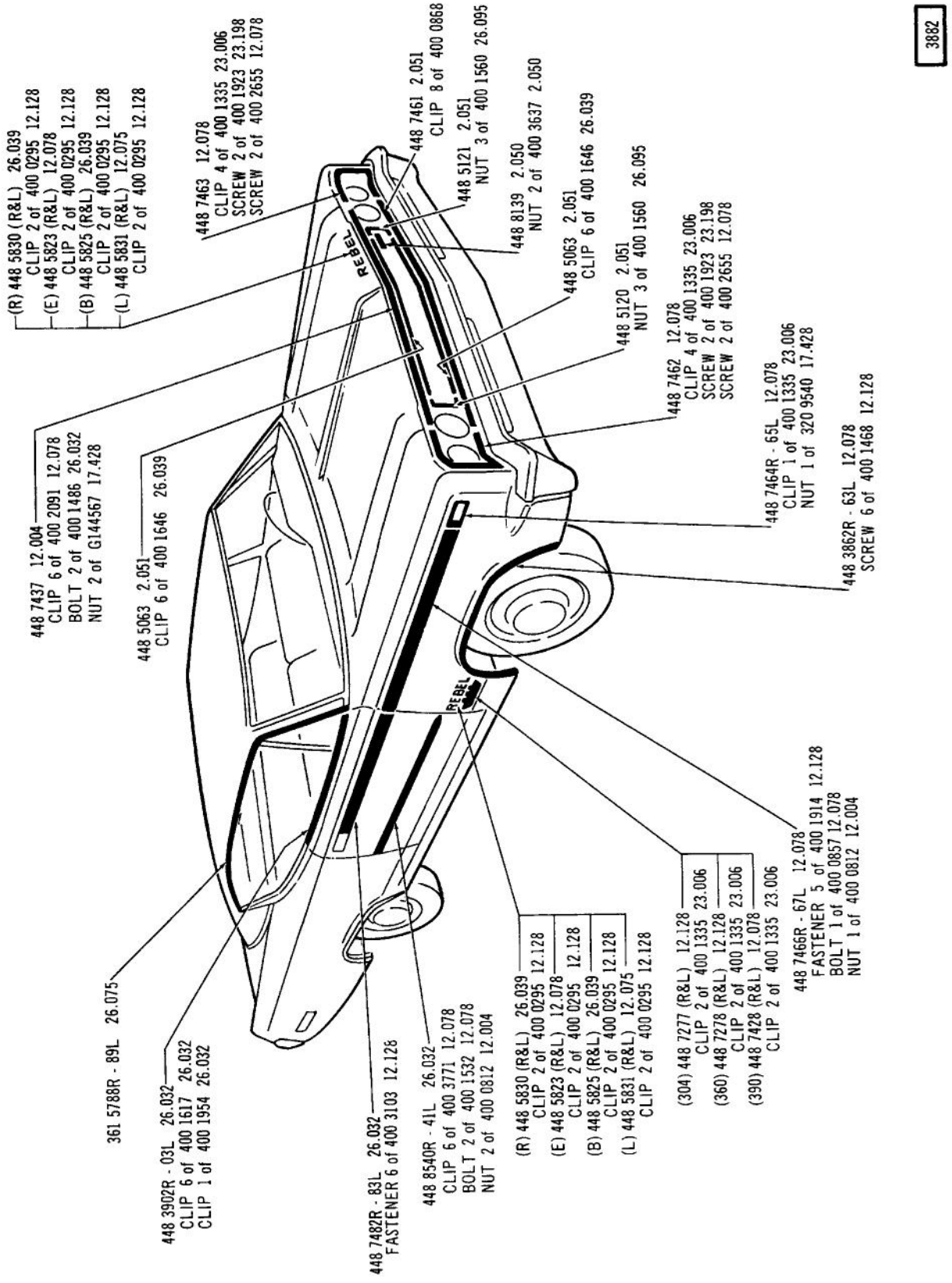

EXTERIOR ORNAMENTATION (FRONT VIEW) ... 1970-19 (EXCEPT MACHINE)

Printed In U.S.A.

3883

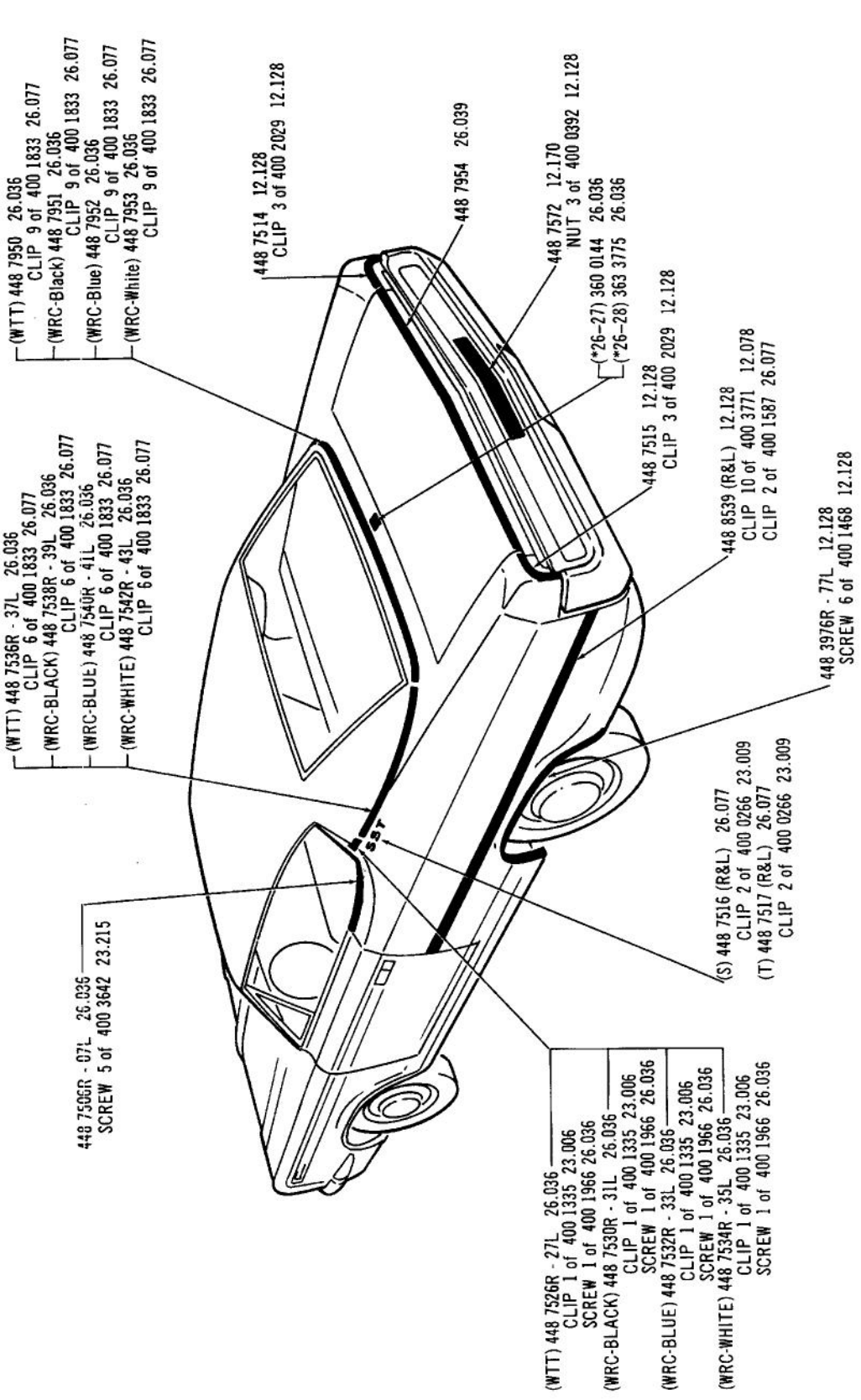

EXTERIOR ORNAMENTATION (REAR VIEW) ... 1970-19 (EXCEPT MACHINE)

3861

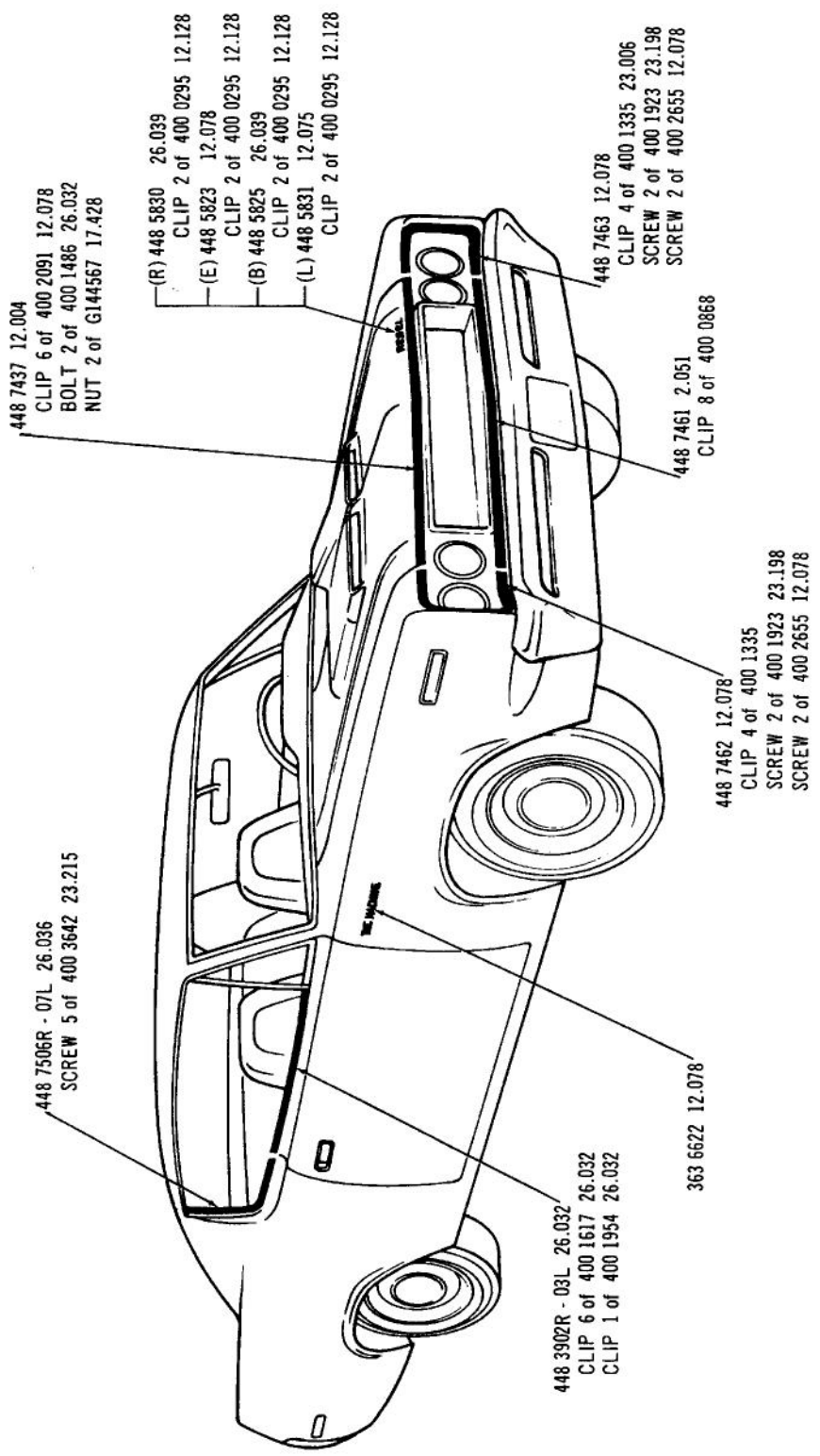

EXTERIOR ORNAMENTATION (FRONT VIEW) ... 1970-19 (MACHINE)

3862

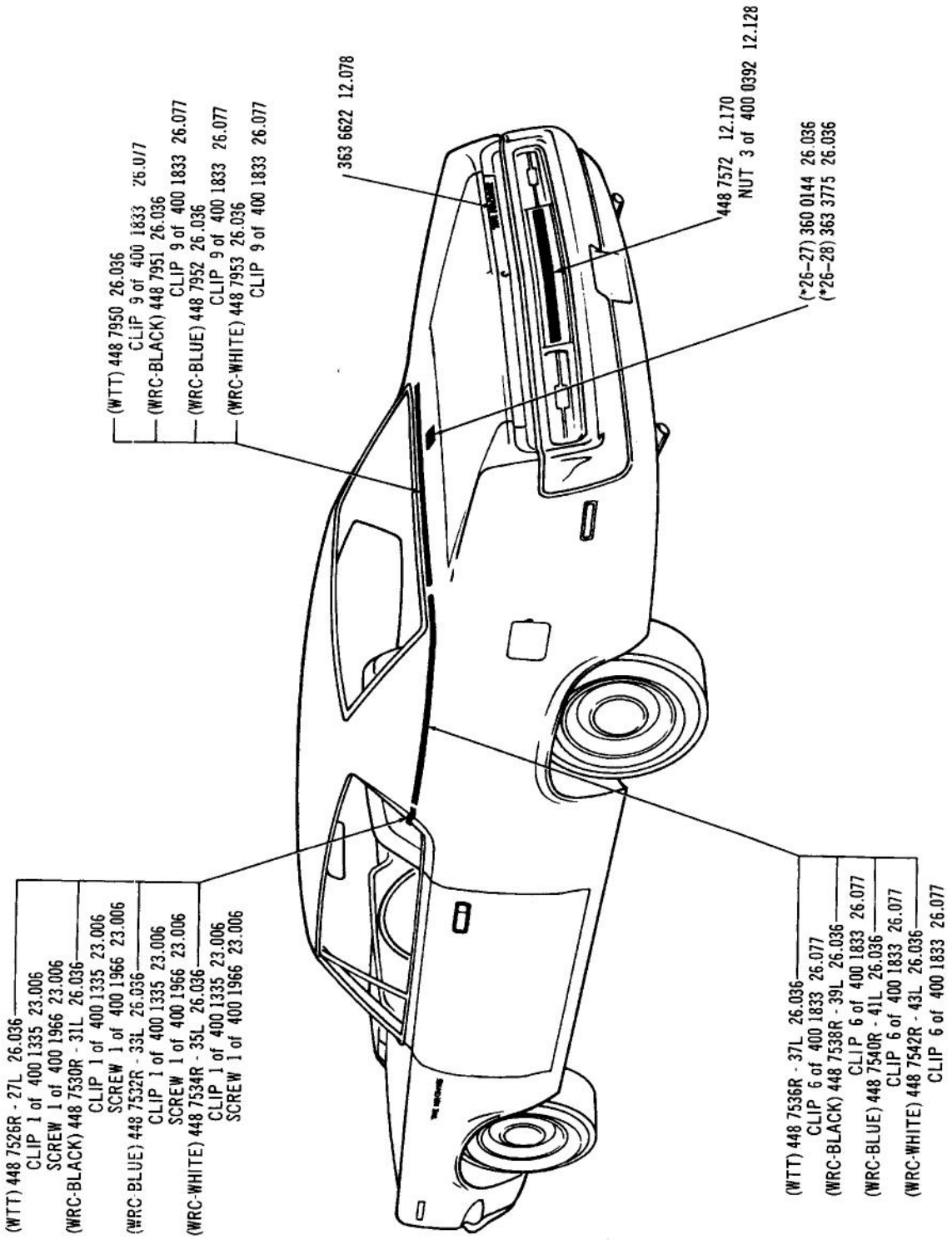

EXTERIOR ORNAMENTATION (REAR VIEW) ... 1970-19 (MACHINE)

4005

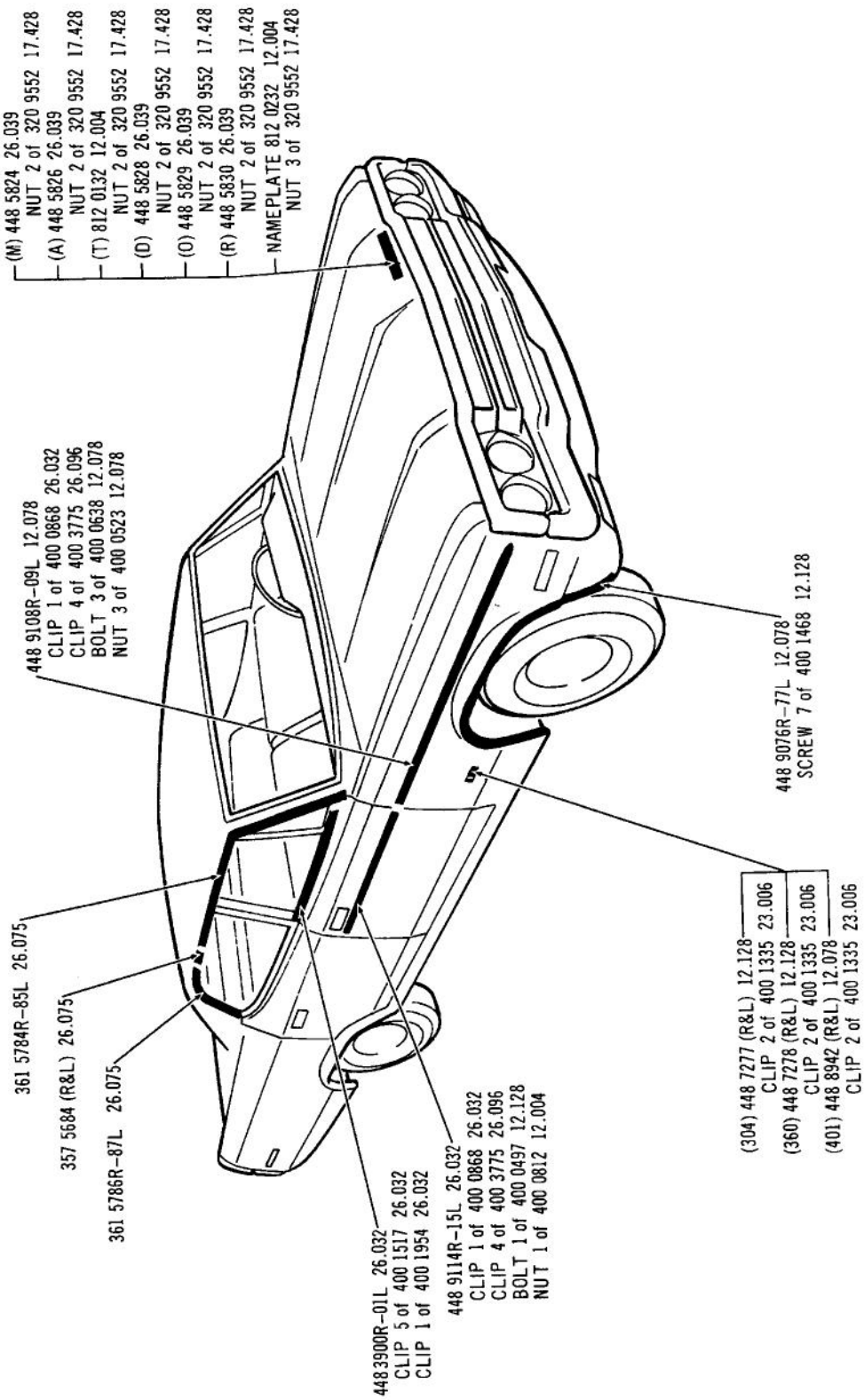

EXTERIOR ORNAMENTATION (FRONT VIEW)... 1971 (15)

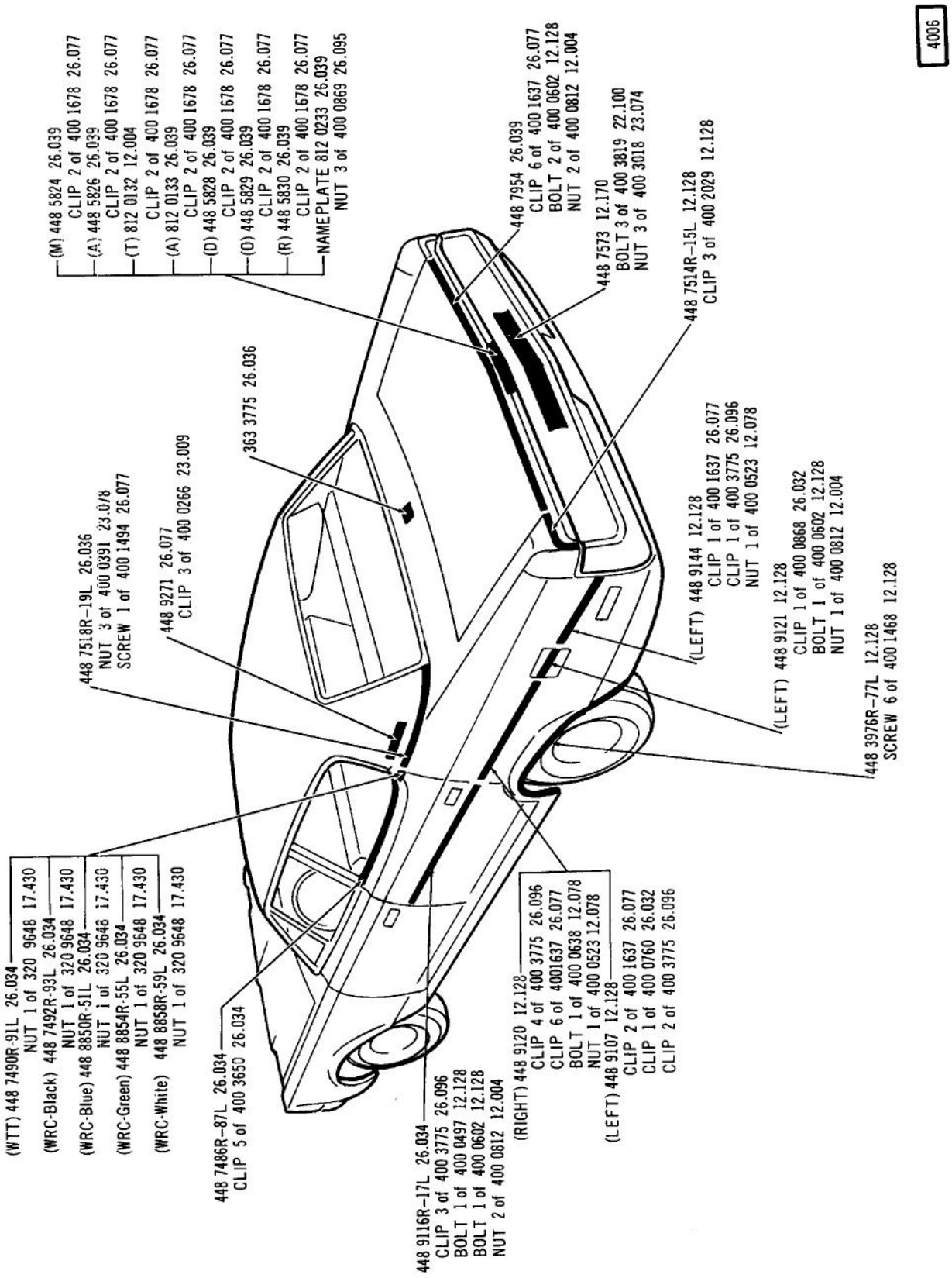

EXTERIOR ORNAMENTATION (REAR VIEW) ...1971 (15)

4007

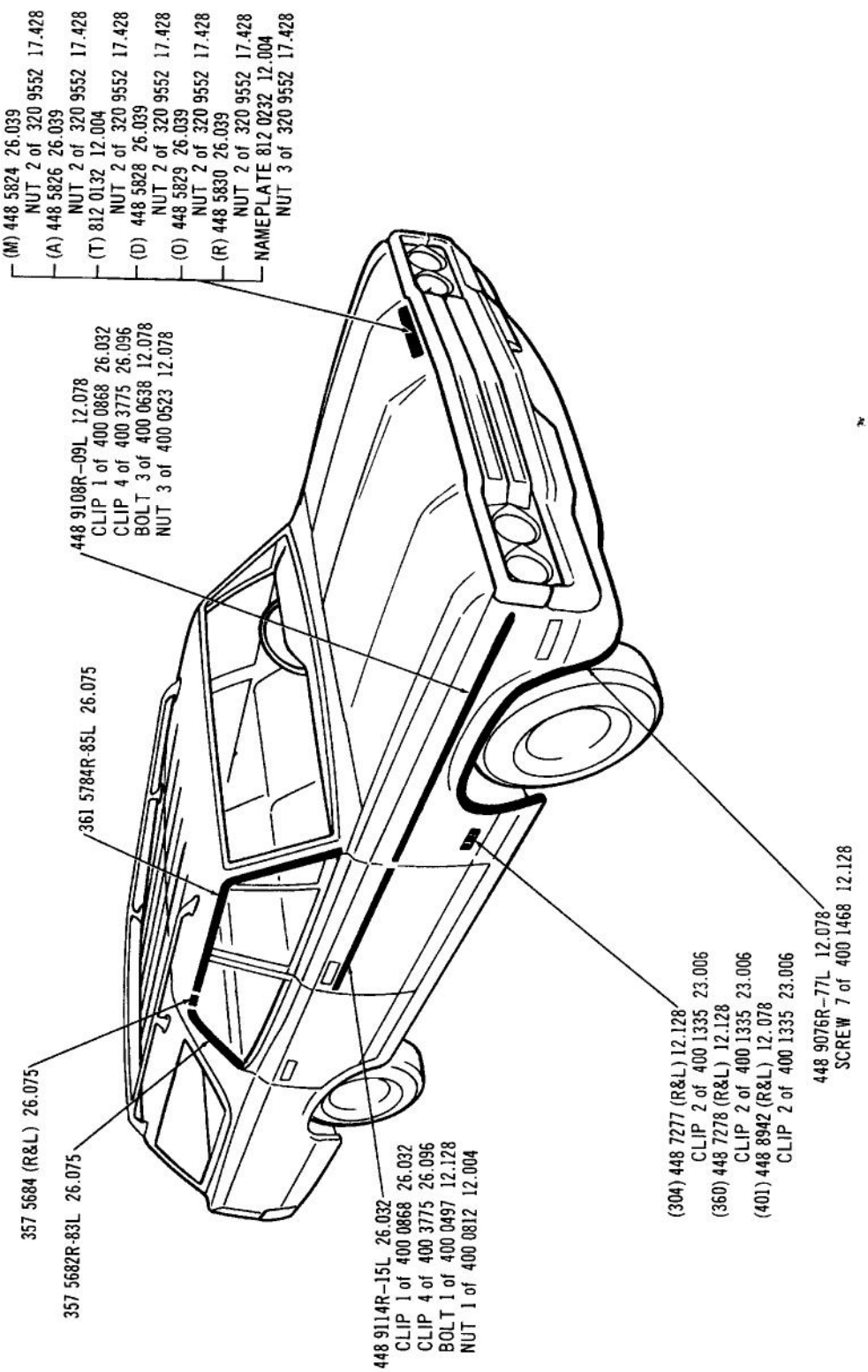

EXTERIOR ORNAMENTATION (FRONT VIEW) ... 1971 (18-LTT)(18-LWO)

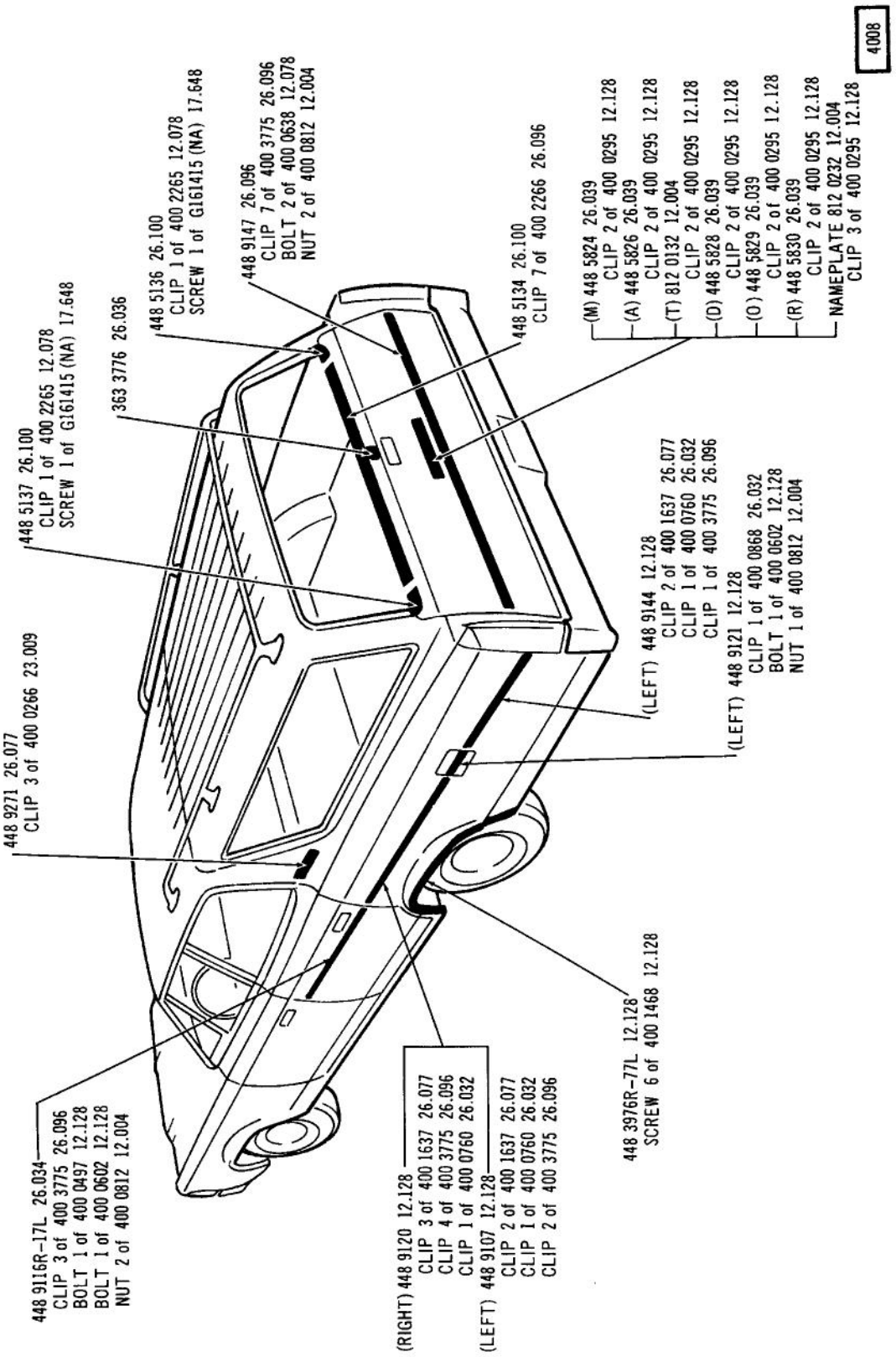

EXTERIOR ORNAMENTATION (REAR VIEW) ... 1971 (18-LTT)(18-LWO)

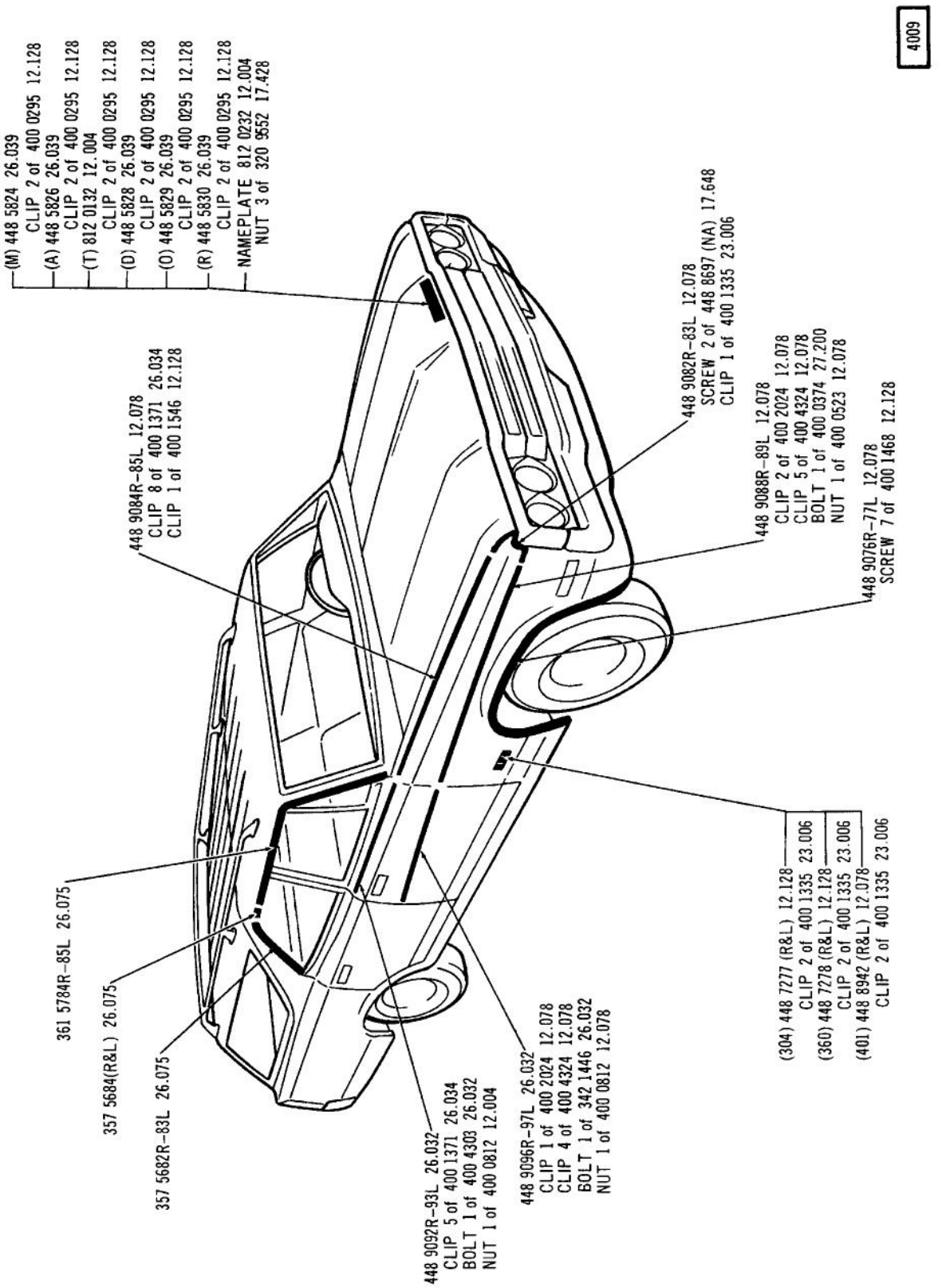

EXTERIOR ORNAMENTATION (FRONT VIEW) ... 1971 (18-WTT)(18-WWO)

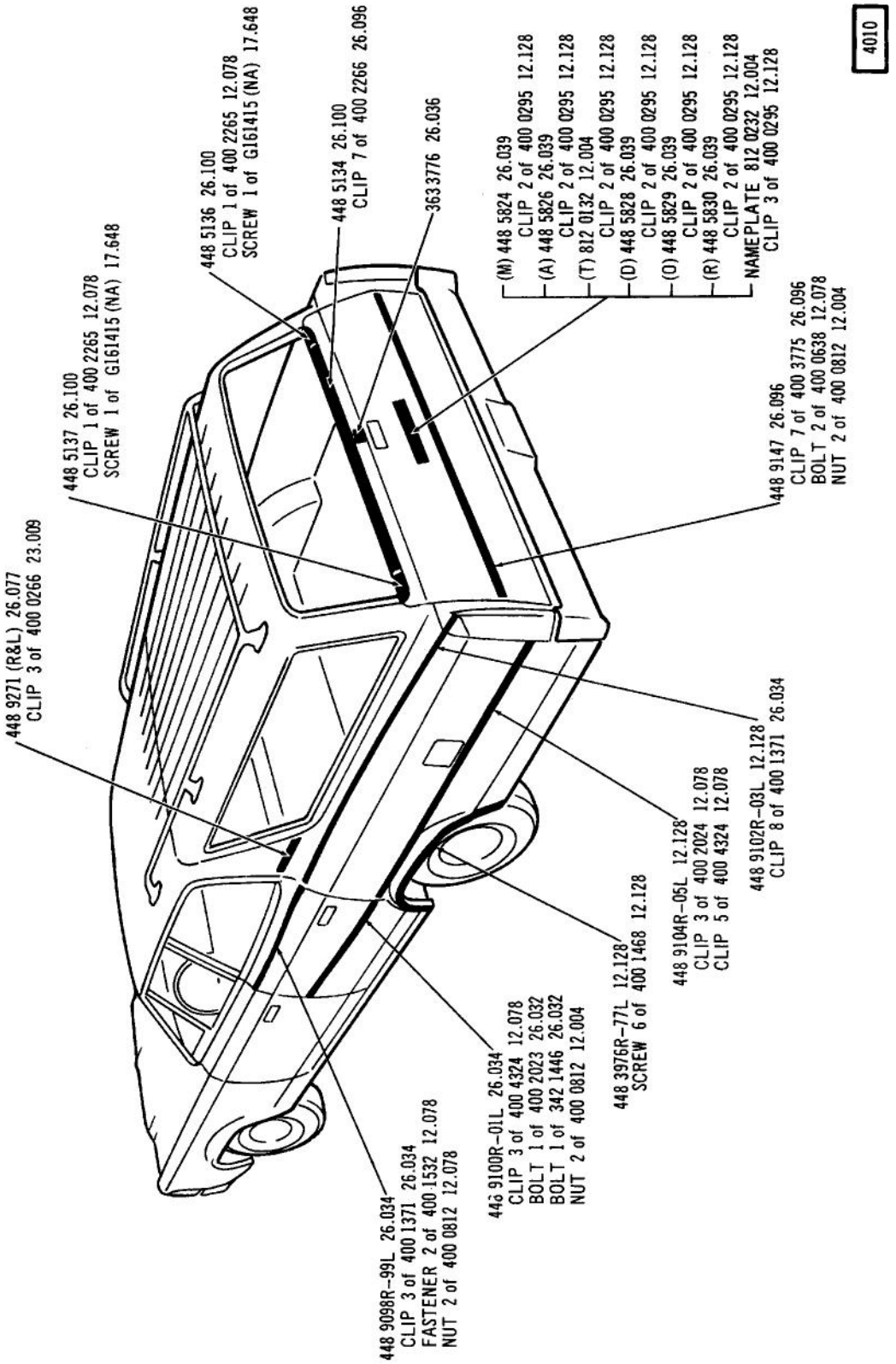

EXTERIOR ORNAMENTATION (REAR VIEW) ... 1971 (18-WTT)(18-WWO)

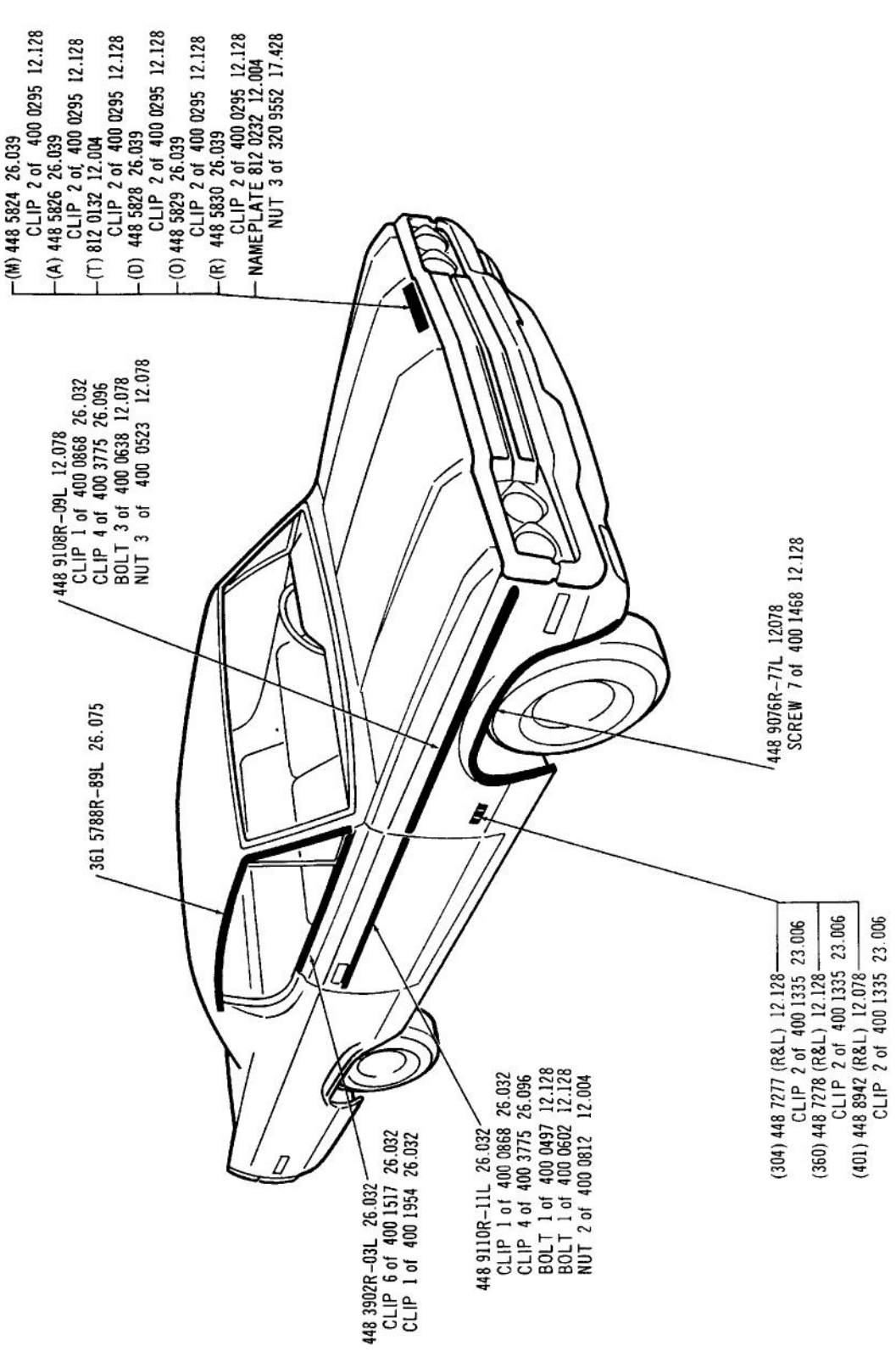

EXTERIOR ORNAMENTATION (FRONT VIEW) ... 1971 (19)

BODY MOULDINGS

GROUP 26

4012

EXTERIOR ORNAMENTATION (REAR VIEW) ... 1971 (19)

4109

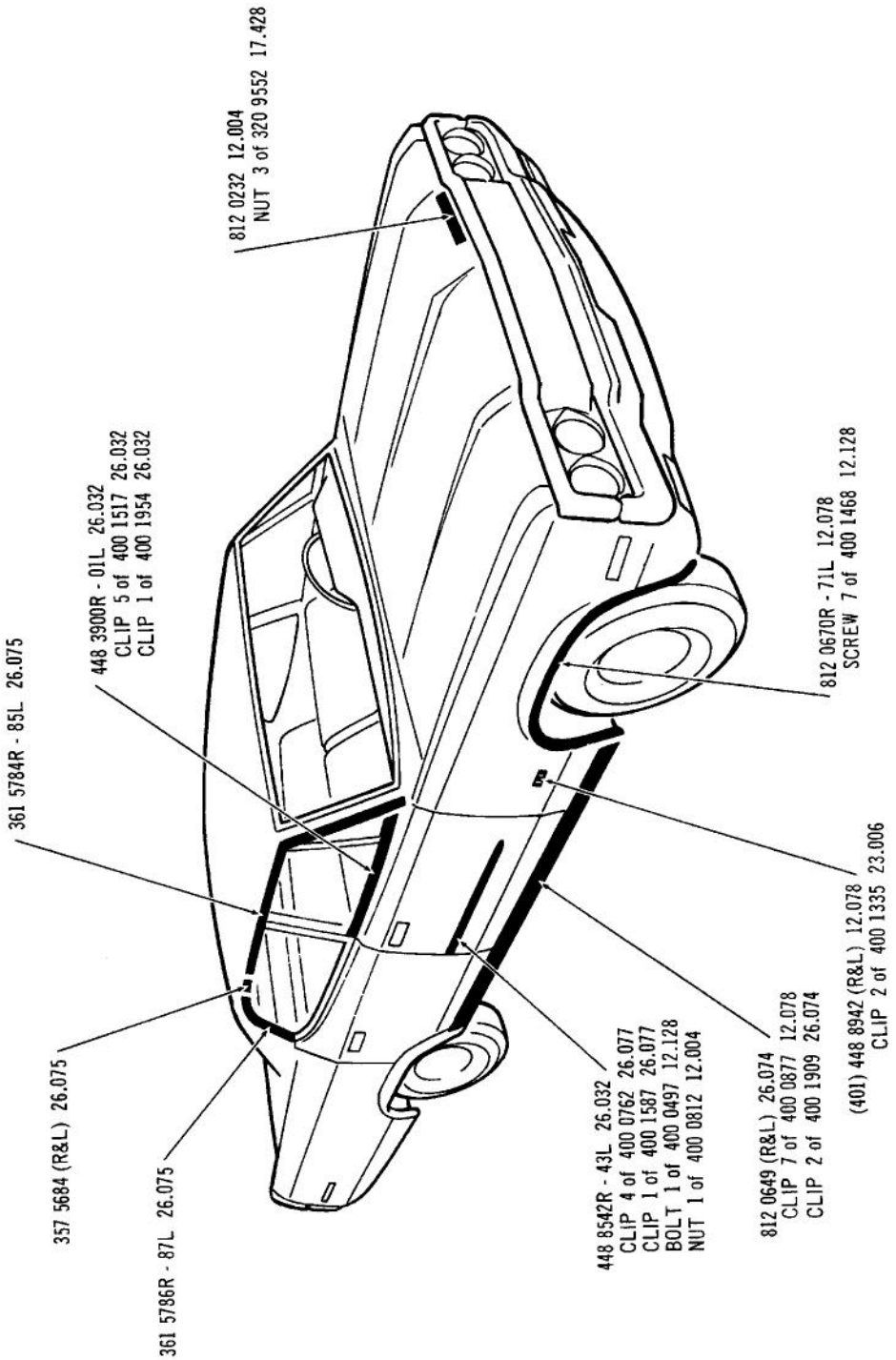

EXTERIOR ORNAMENTATION (FRONT VIEW) . . . 1972 (15)

Printed in U.S.A.

4110

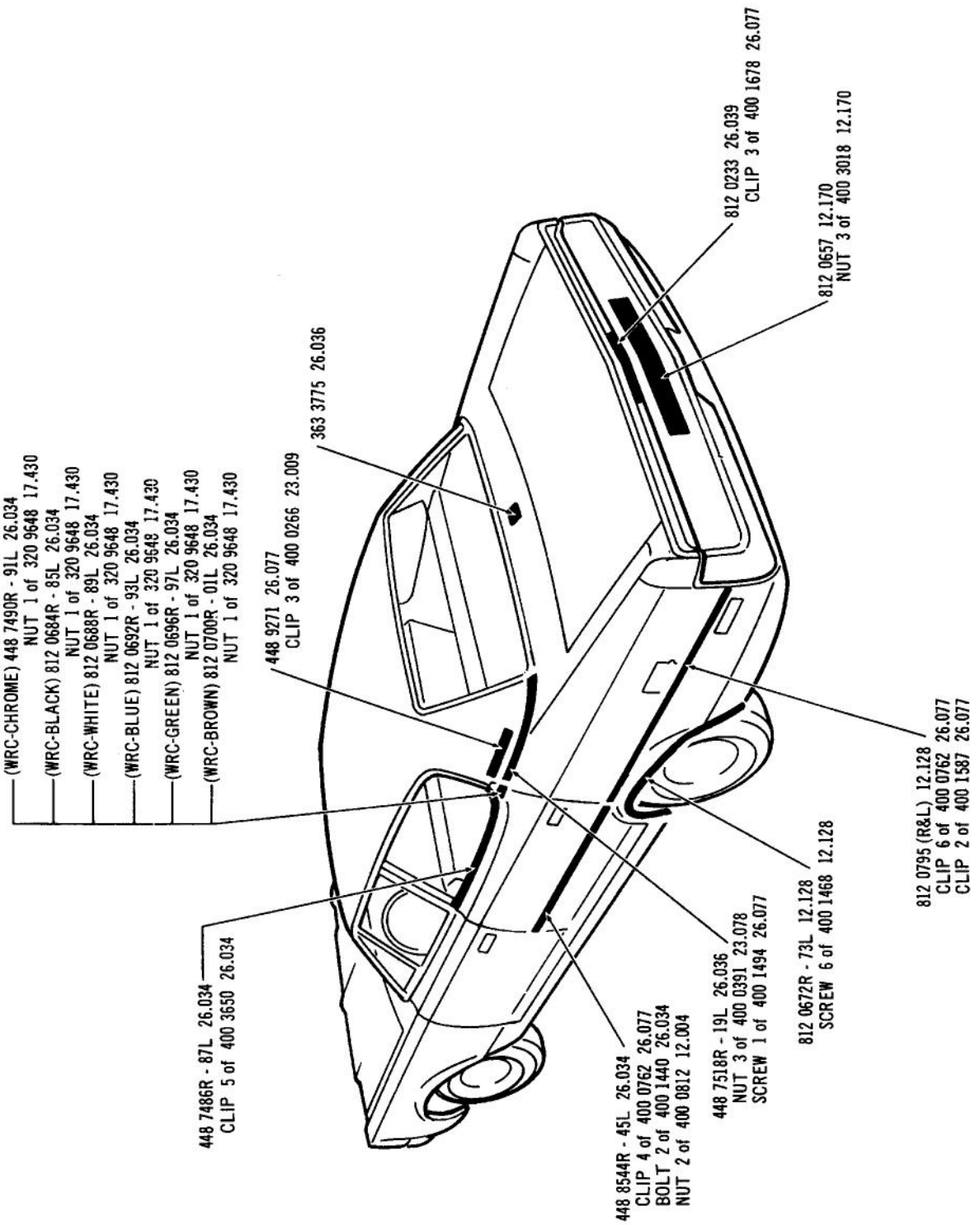

EXTERIOR ORNAMENTATION (REAR VIEW) . . . 1972 (15)

Printed in U.S.A.

4111

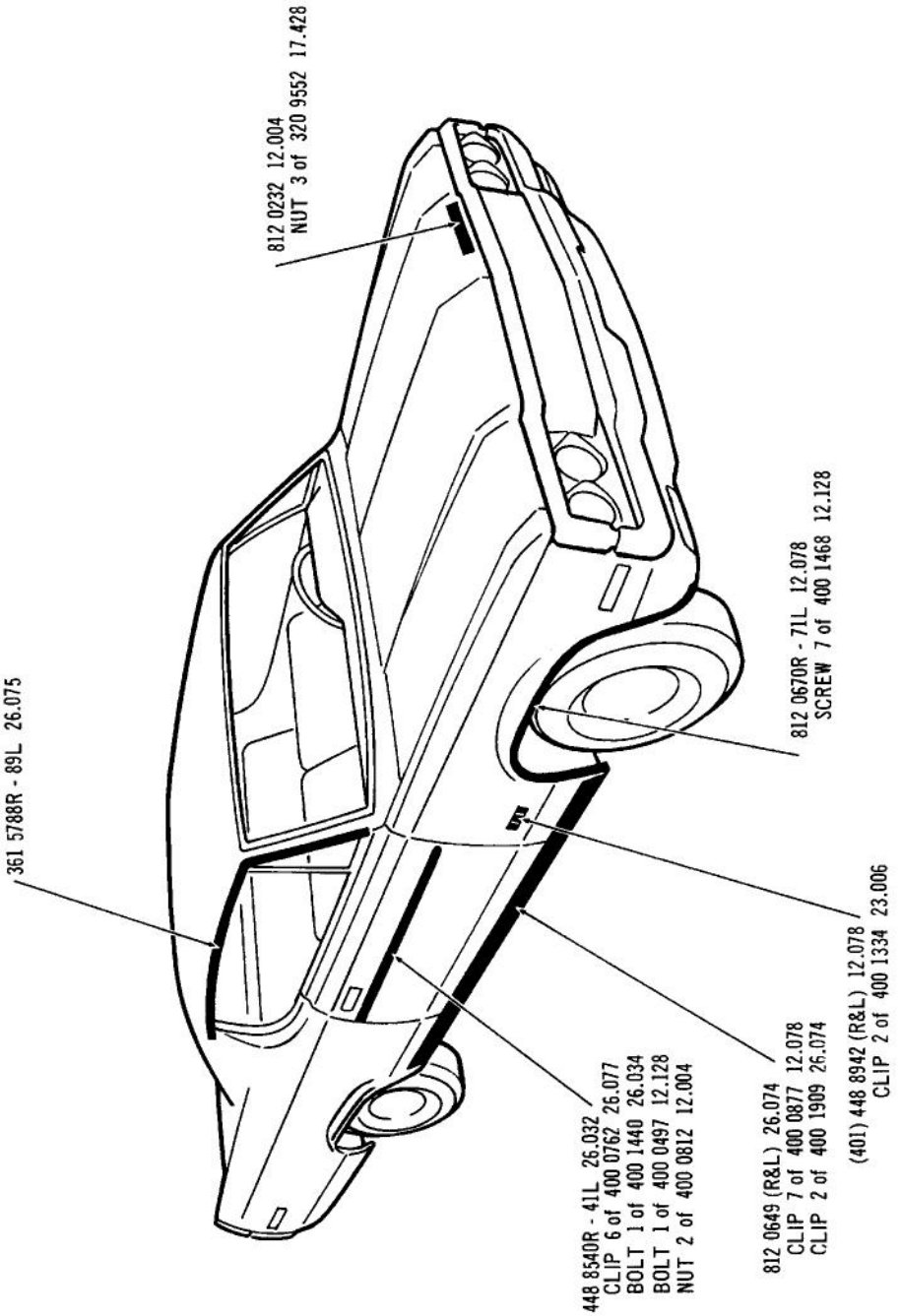

EXTERIOR ORNAMENTATION (FRONT VIEW) . . . 1972 (19)

4112

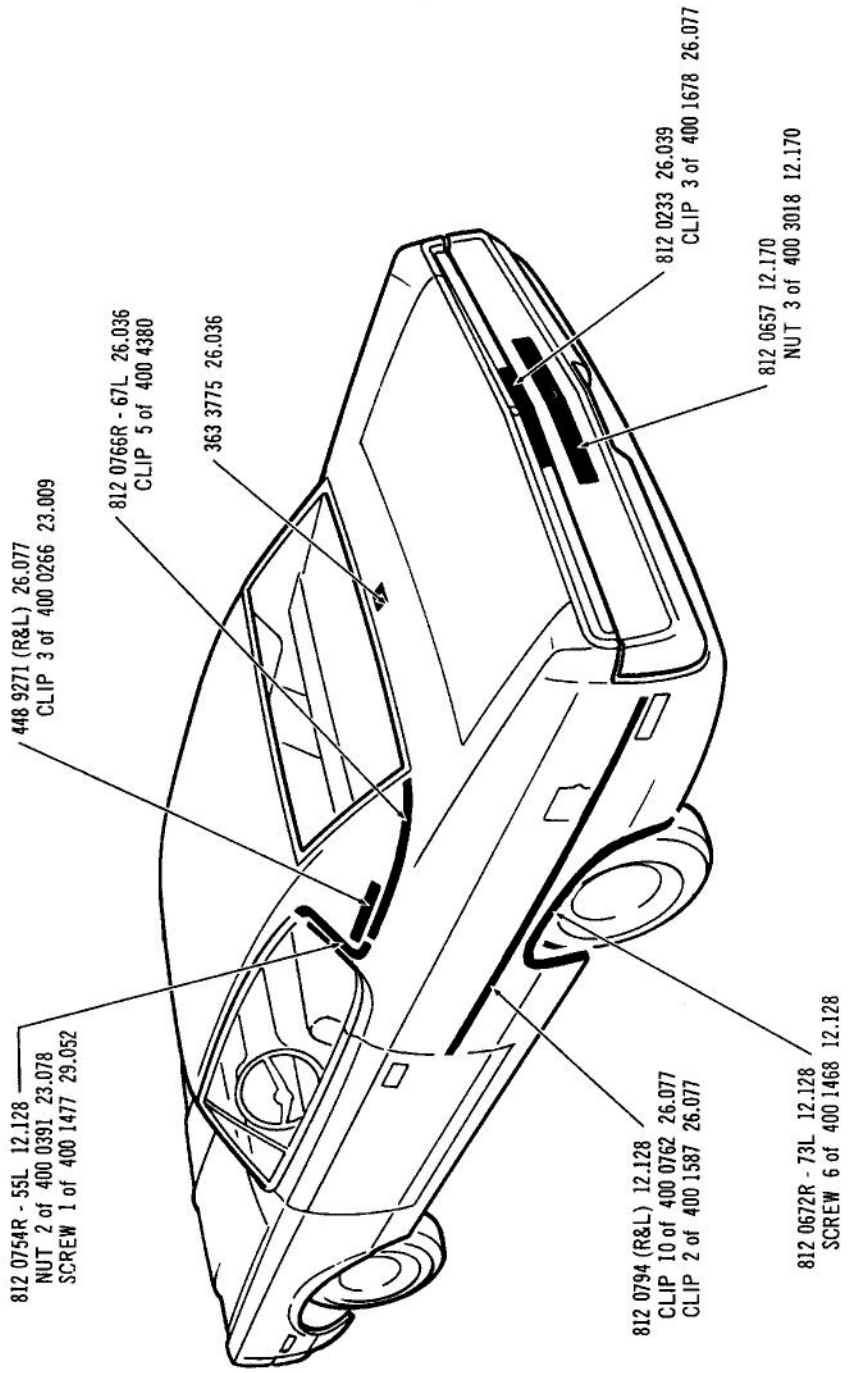

EXTERIOR ORNAMENTATION (REAR VIEW) . . . 1972 (19)

Printed in U.S.A.

4113

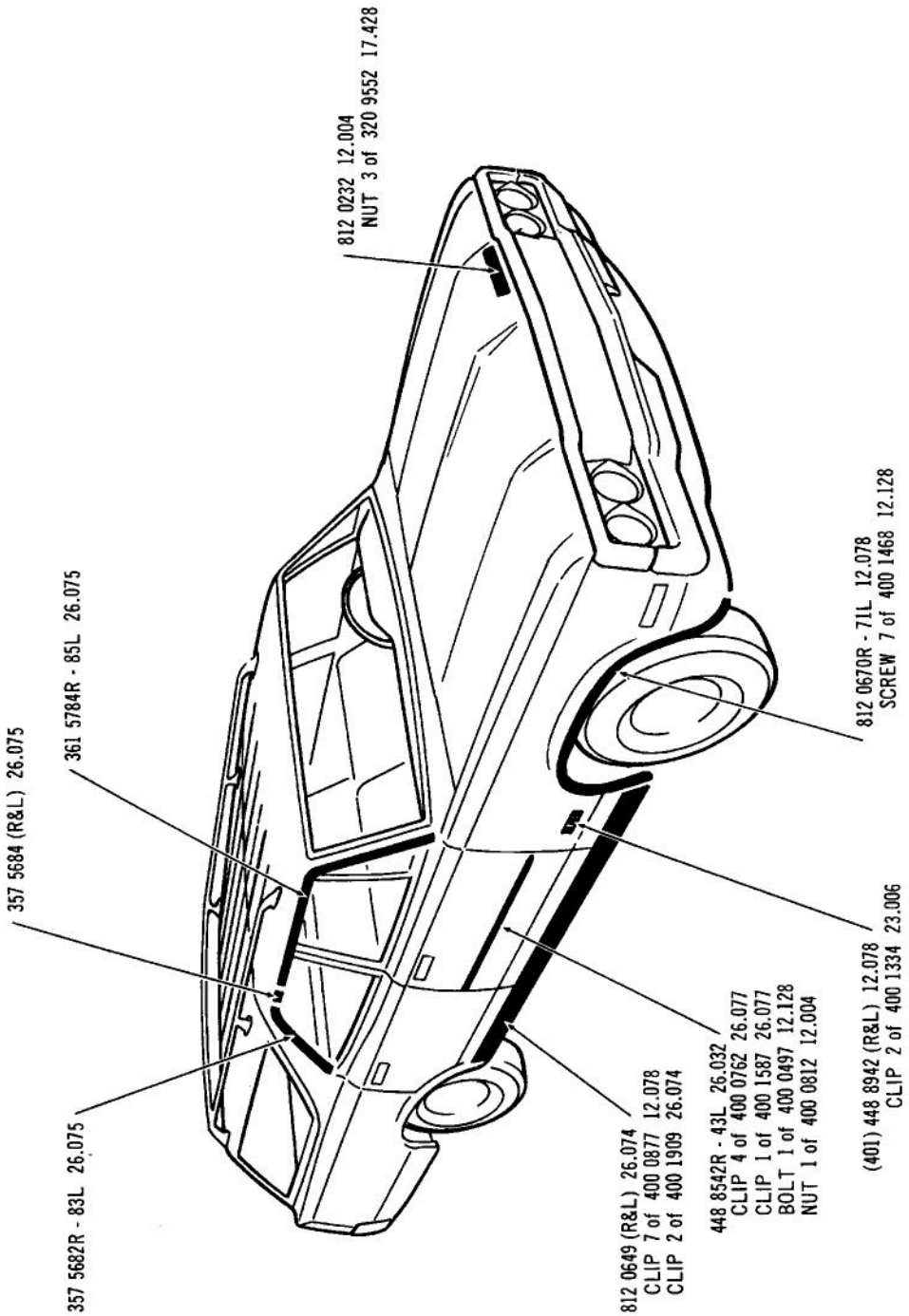

EXTERIOR ORNAMENTATION (FRONT VIEW) . . . 1972 (18-LTT)(18-LWO)

4114

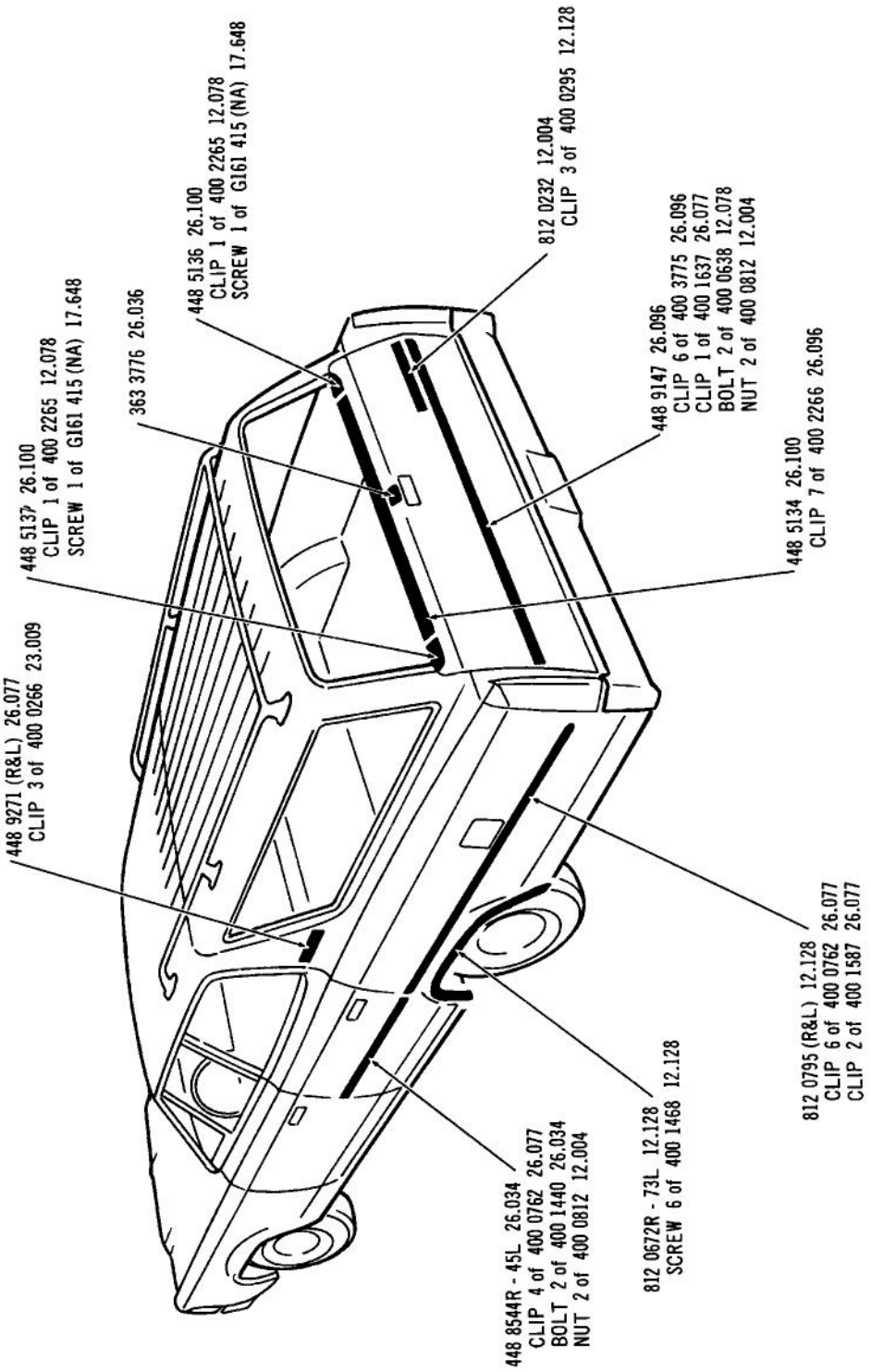

EXTERIOR ORNAMENTATION (REAR VIEW) . . . 1972 (18-LTT)(18-LWO)

Printed in U.S.A.

4115

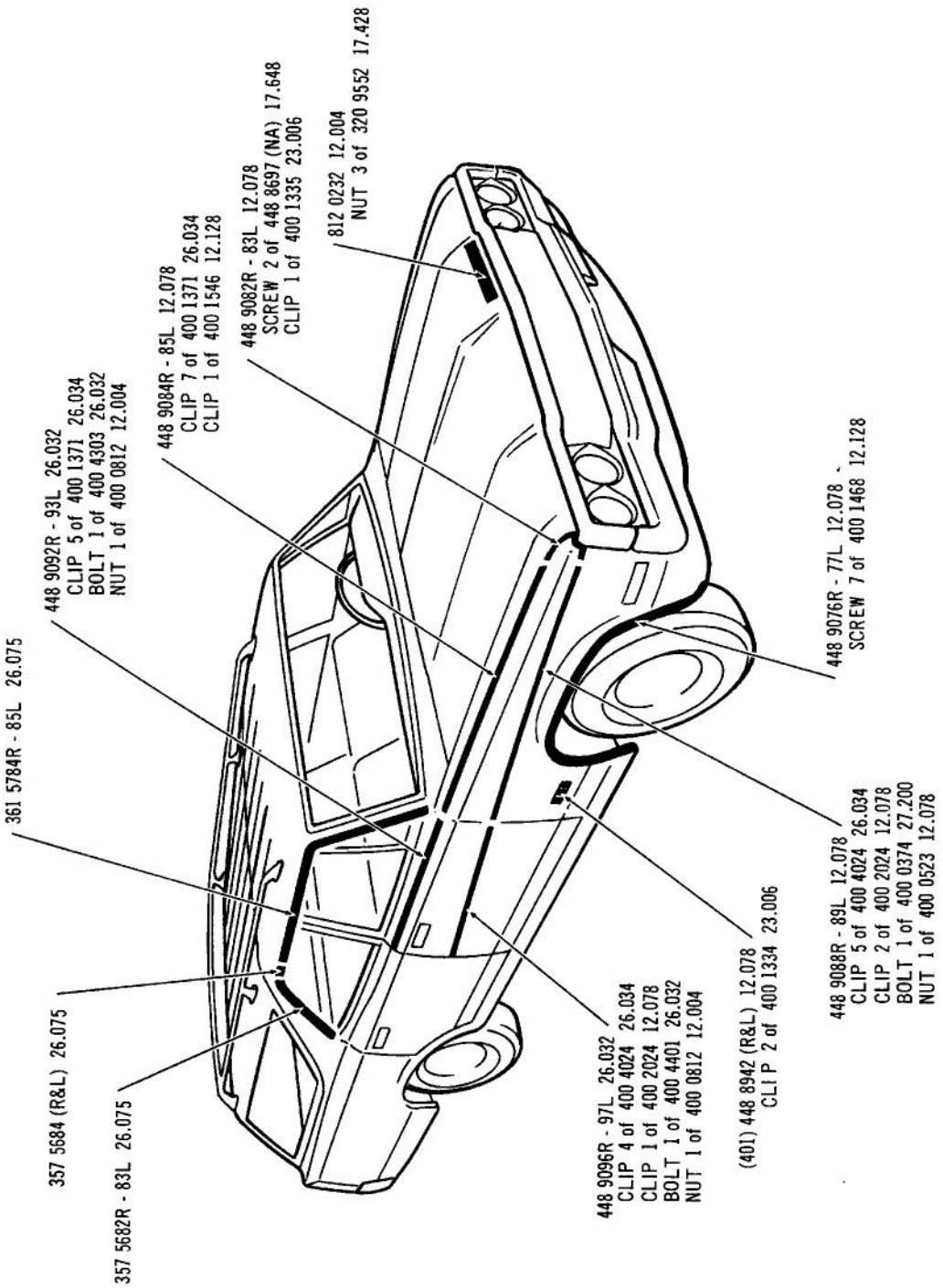

EXTERIOR ORNAMENTATION (FRONT VIEW) . . . 1972 (18-WTT)(18-WWO)

Printed in U.S.A.

4116

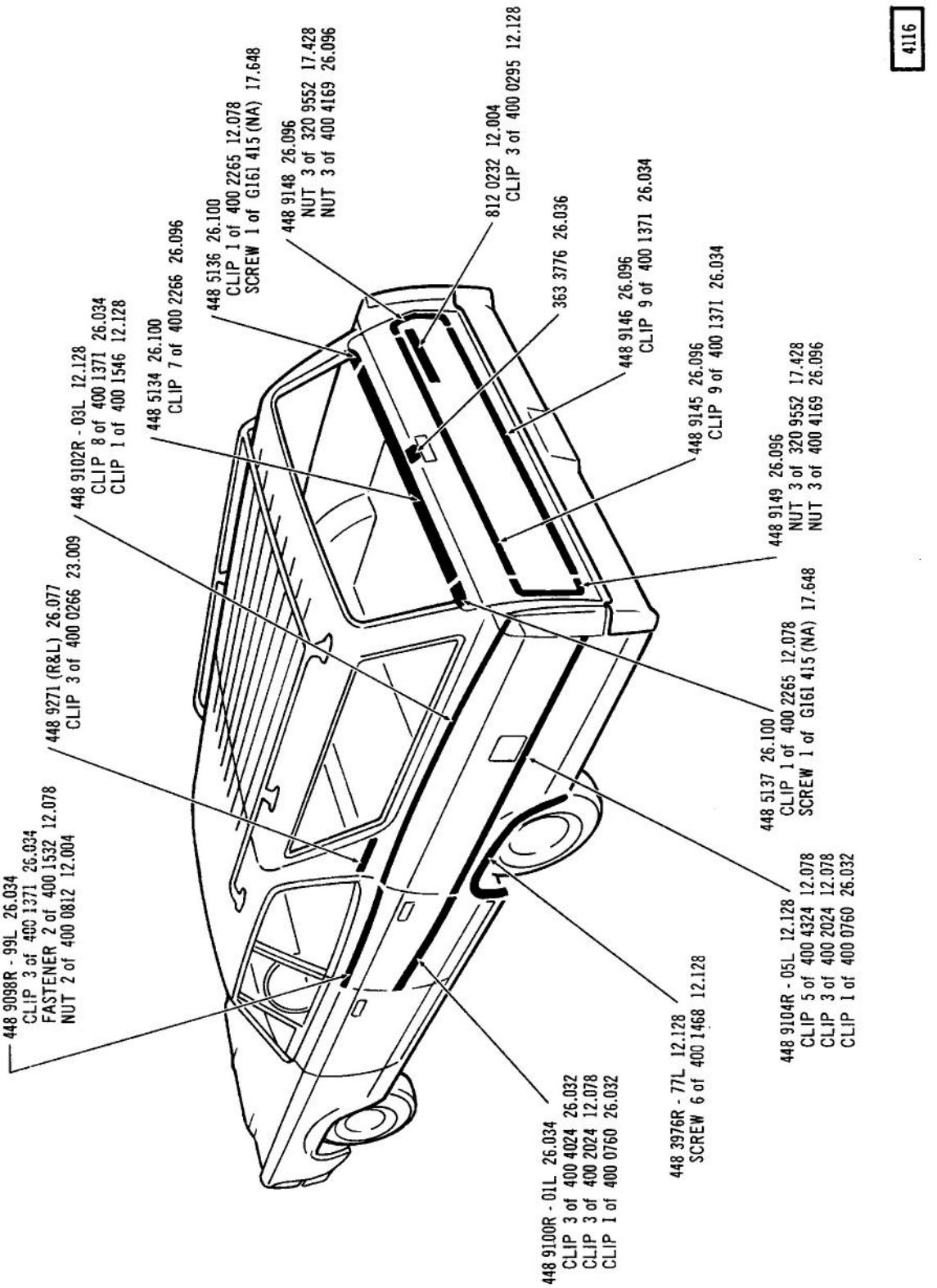

EXTERIOR ORNAMENTATION (REAR VIEW) . . . 1972 (18-WTT)(18-WWO)

Printed in U.S.A.

3459

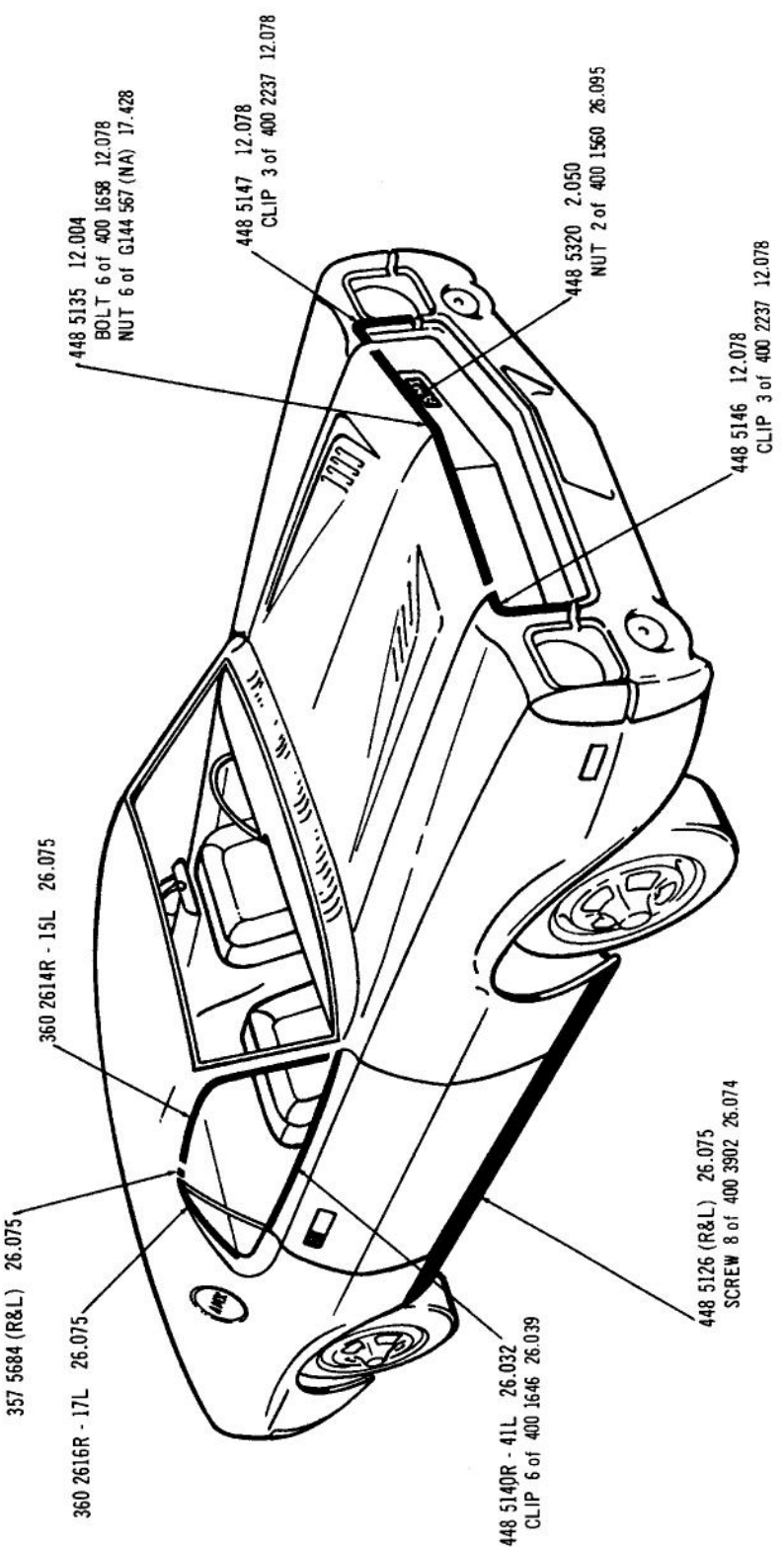

EXTERIOR ORNAMENTATION (FRONT VIEW) ... 1968/69 (30)

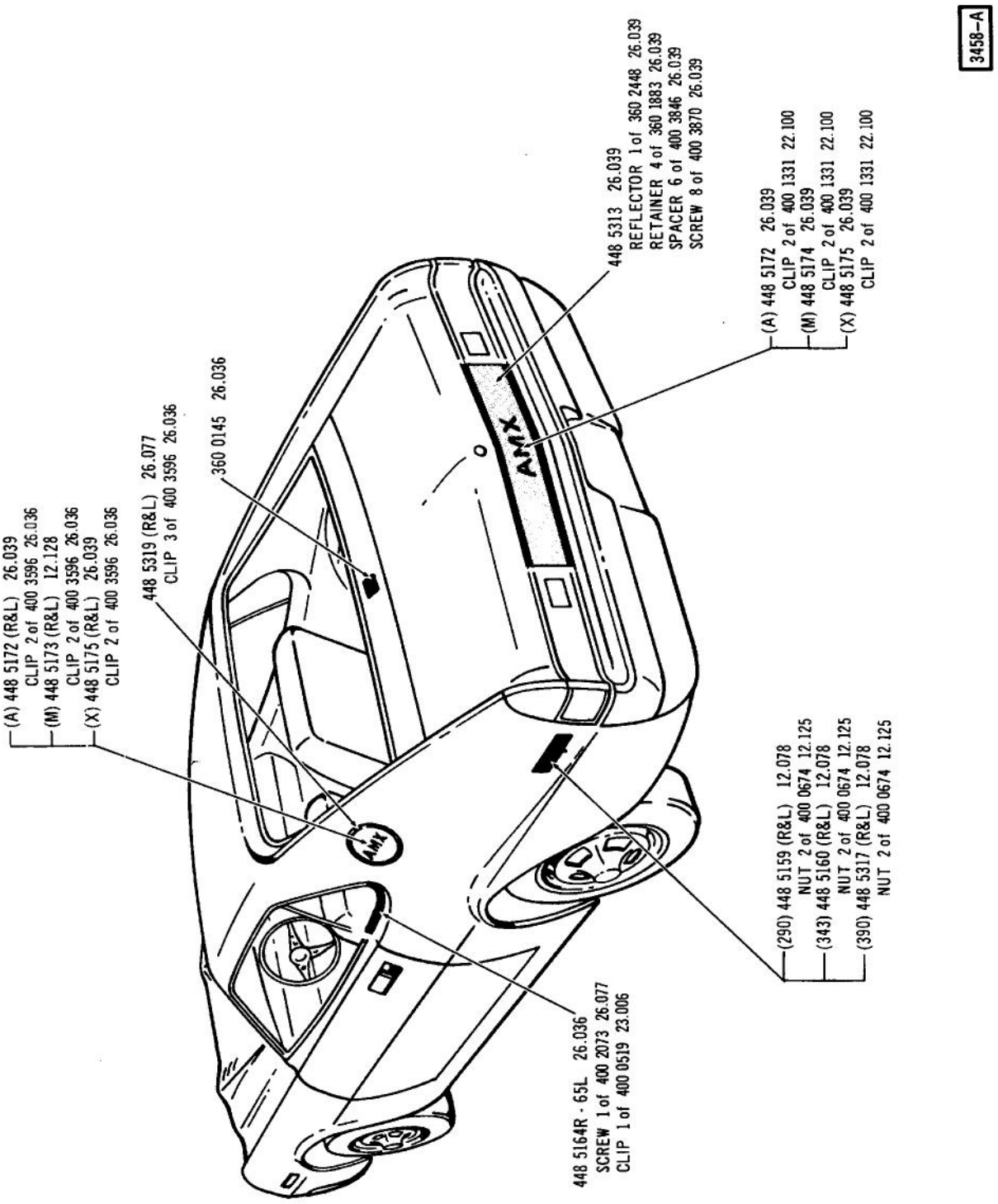

EXTERIOR ORNAMENTATION (REAR VIEW) ... 1968/69 (30)

3884

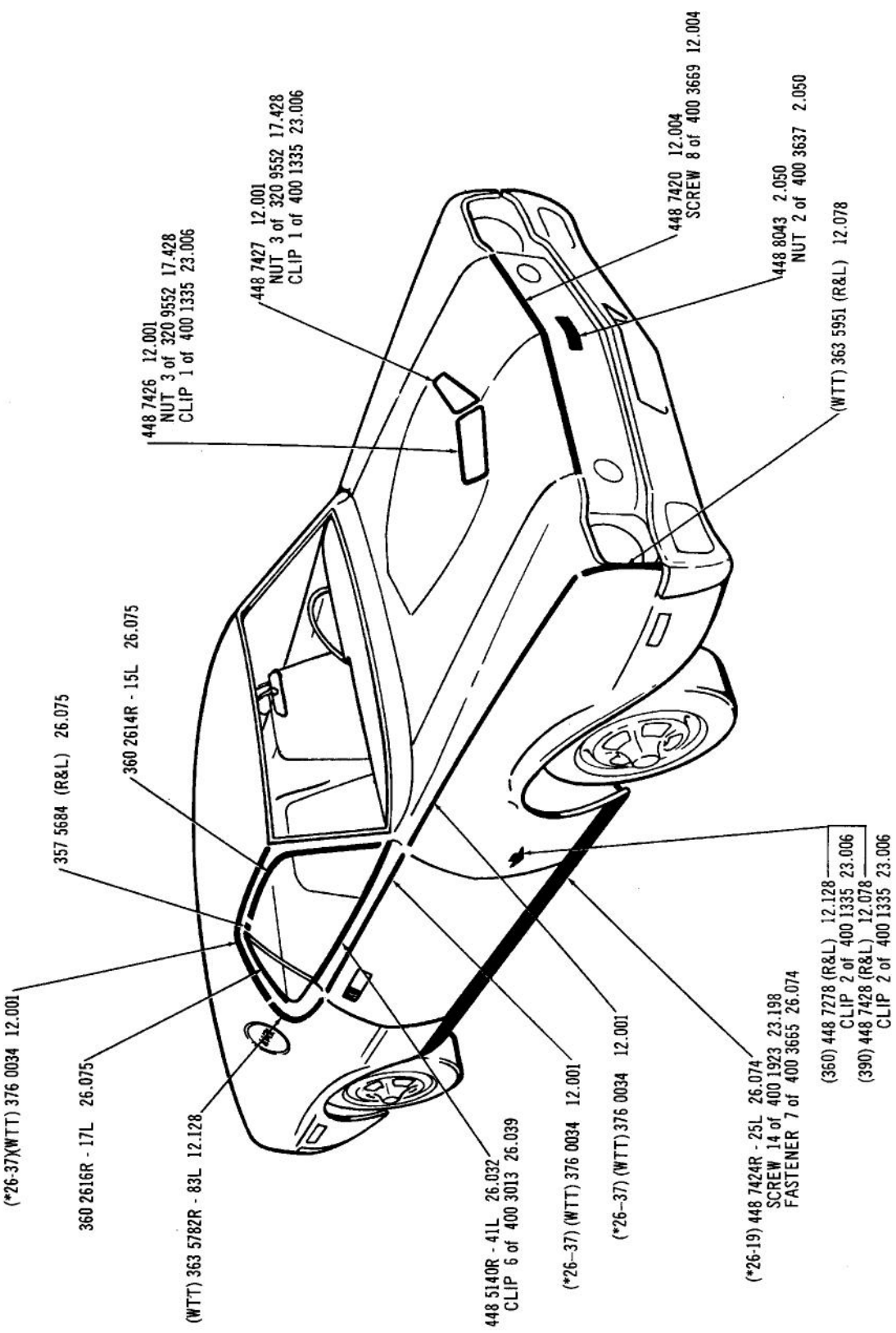

EXTERIOR ORNAMENTATION (FRONT VIEW) ... 1970 (30)

Printed in U.S.A.

3885

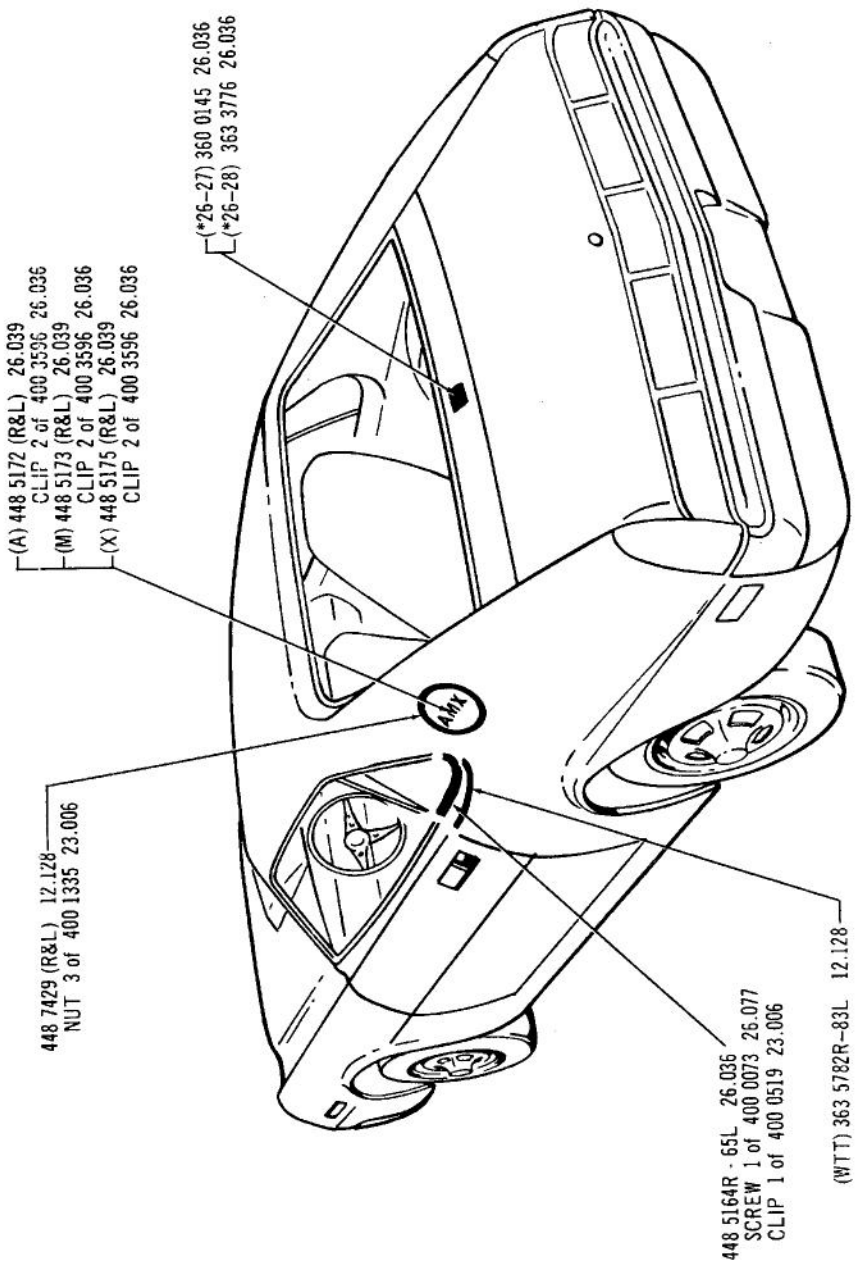

EXTERIOR ORNAMENTATION (REAR VIEW) ... 1970 (30)

3920

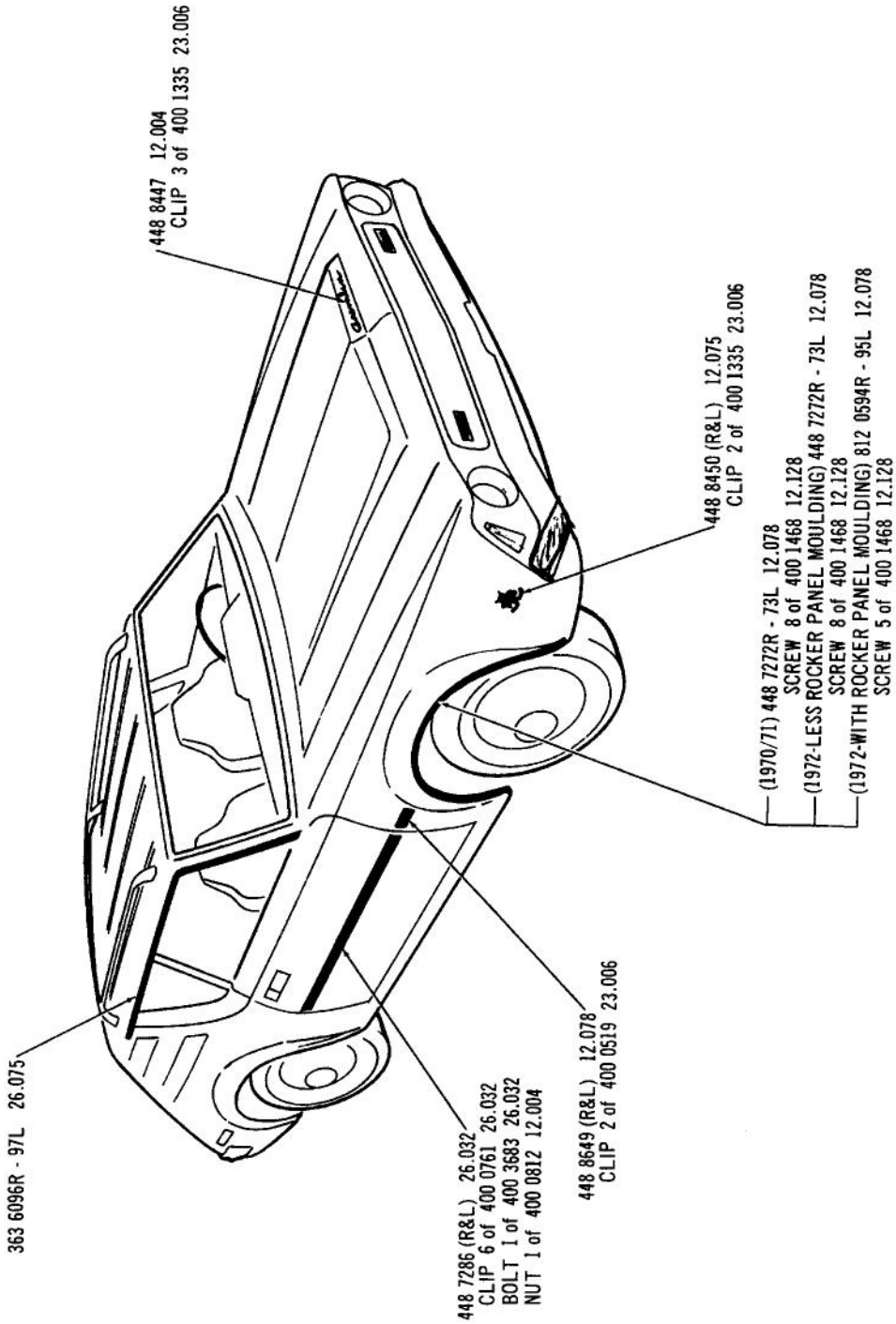

EXTERIOR ORNAMENTATION (FRONT VIEW) ... 1970/ (40)

Printed in U.S.A.

3921

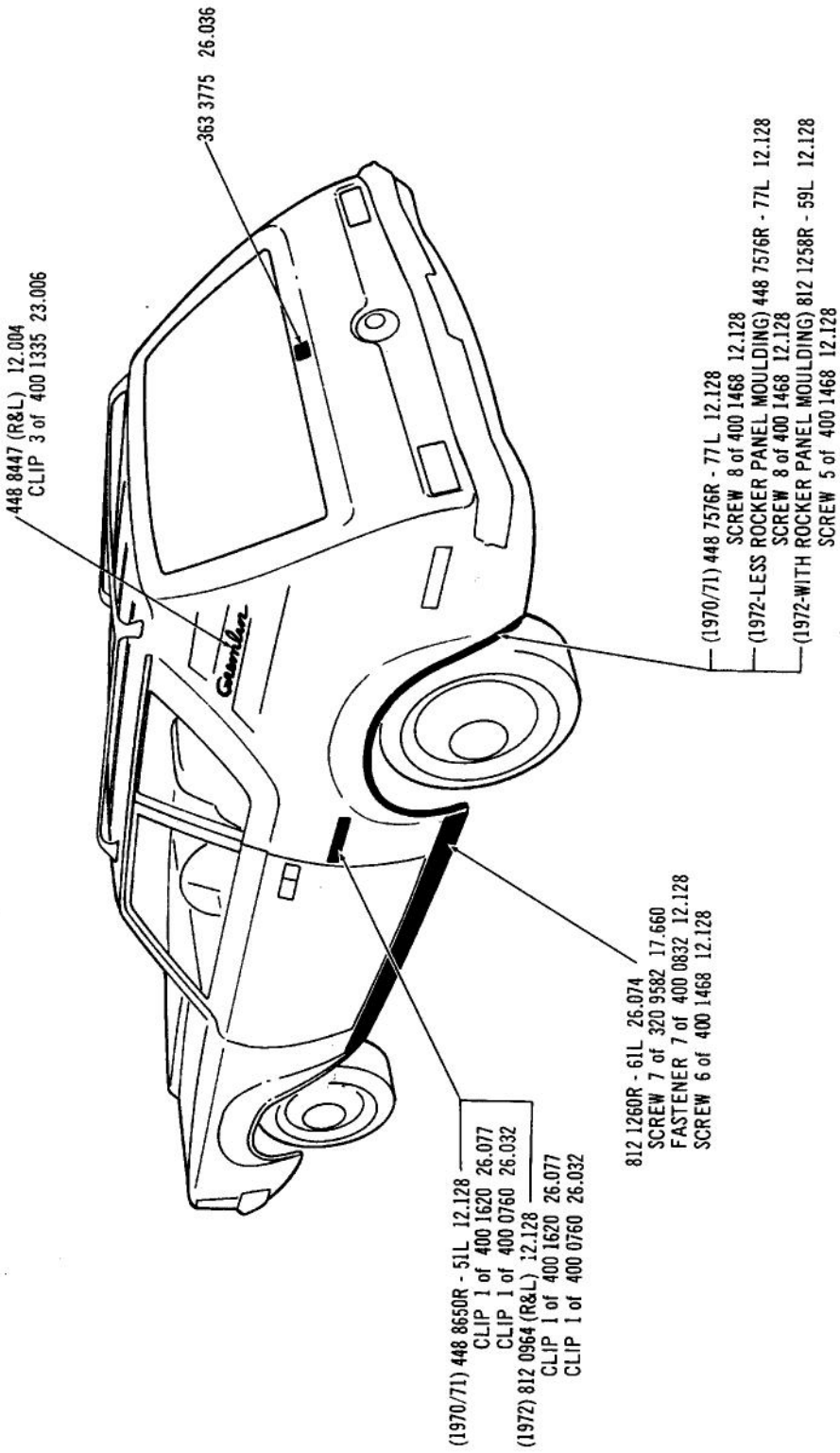

EXTERIOR ORNAMENTATION (REAR VIEW) ... 1970/ (40)

Printed in U.S.A.

2758

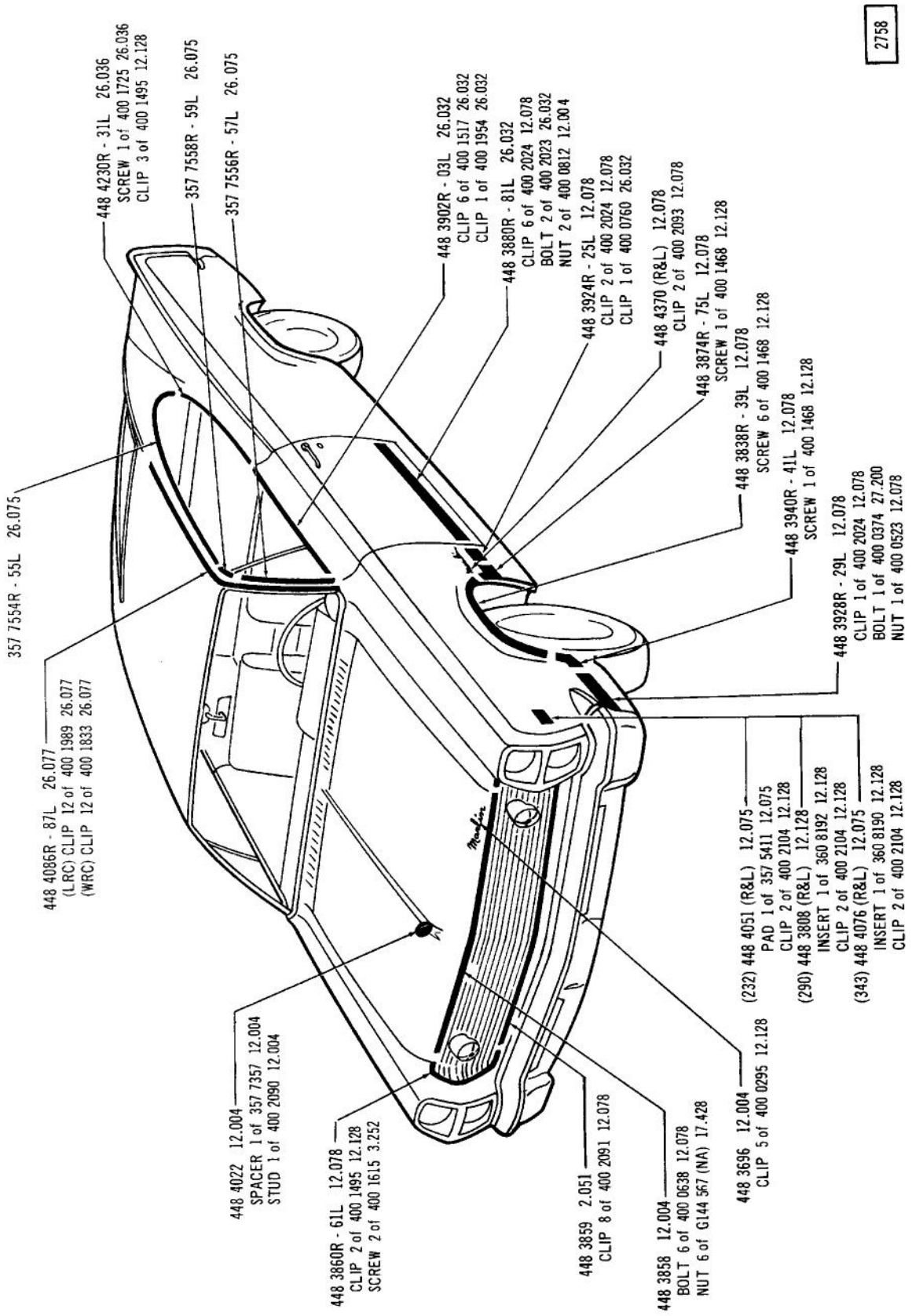

EXTERIOR ORNAMENTATION (FRONT VIEW) ... 1967 (59)

Printed in U.S.A.

2759

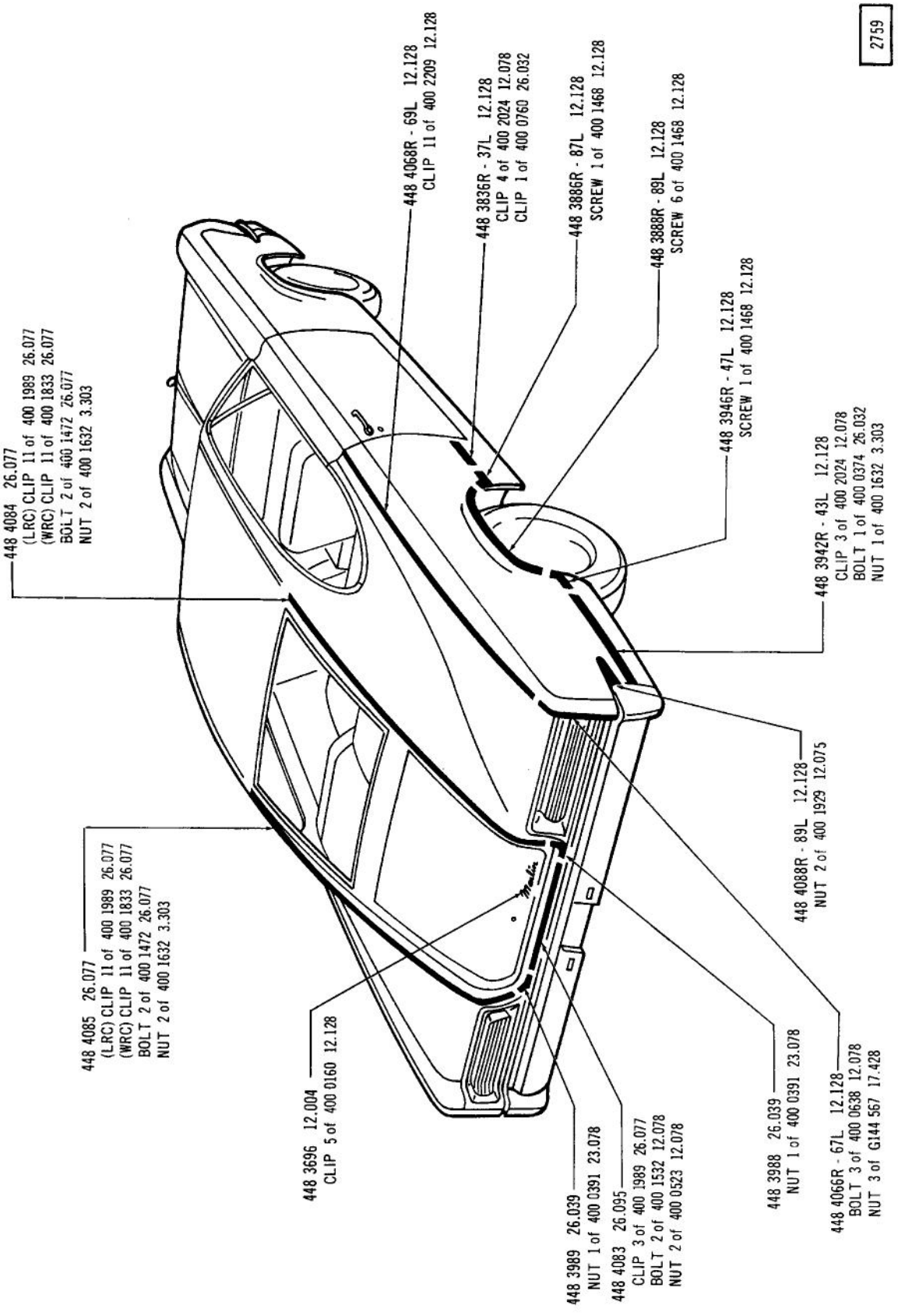

EXTERIOR ORNAMENTATION (REAR VIEW) ... 1967 (59)

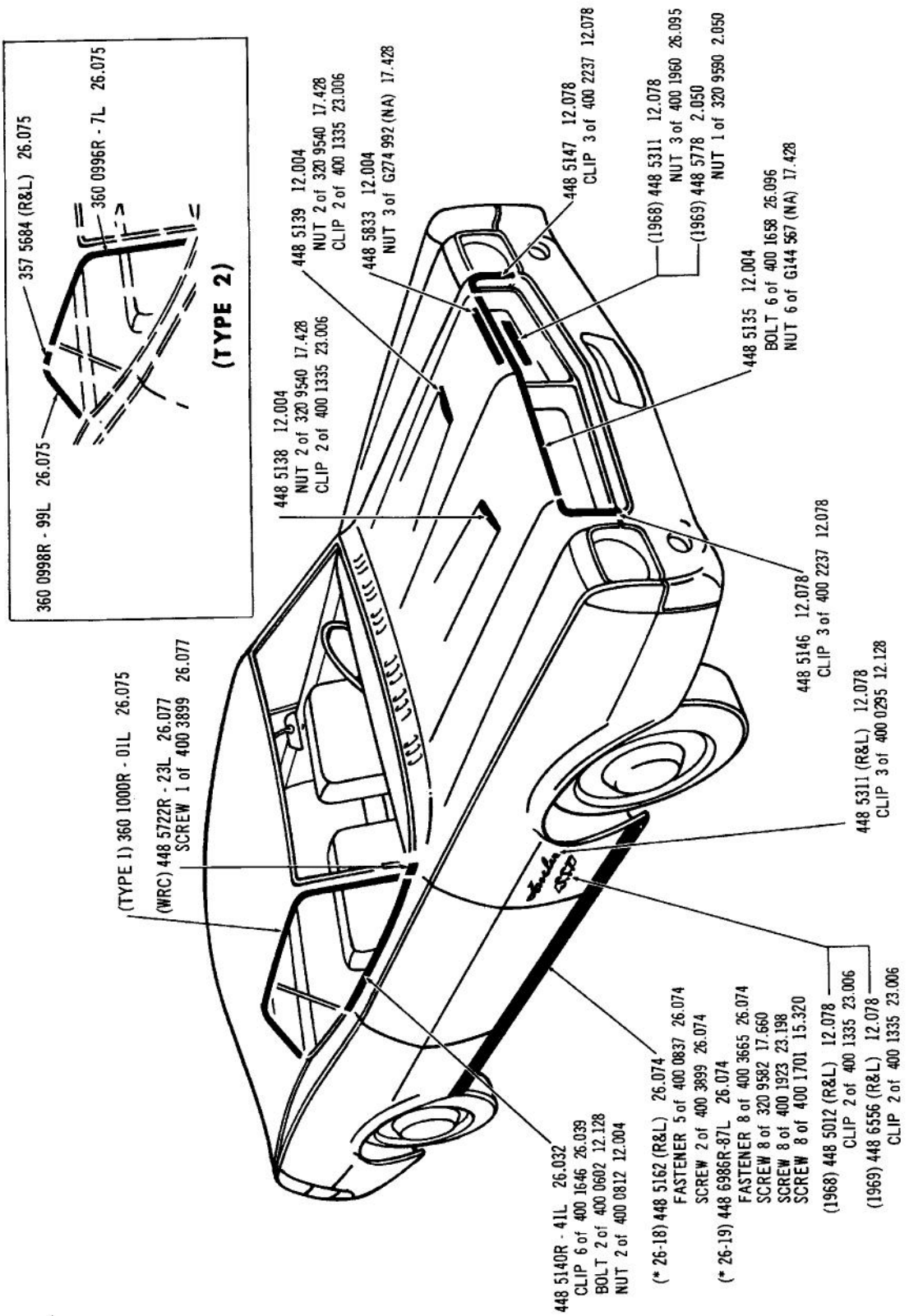

EXTERIOR ORNAMENTATION (FRONT VIEW) ... 1968/69 (70)

3269

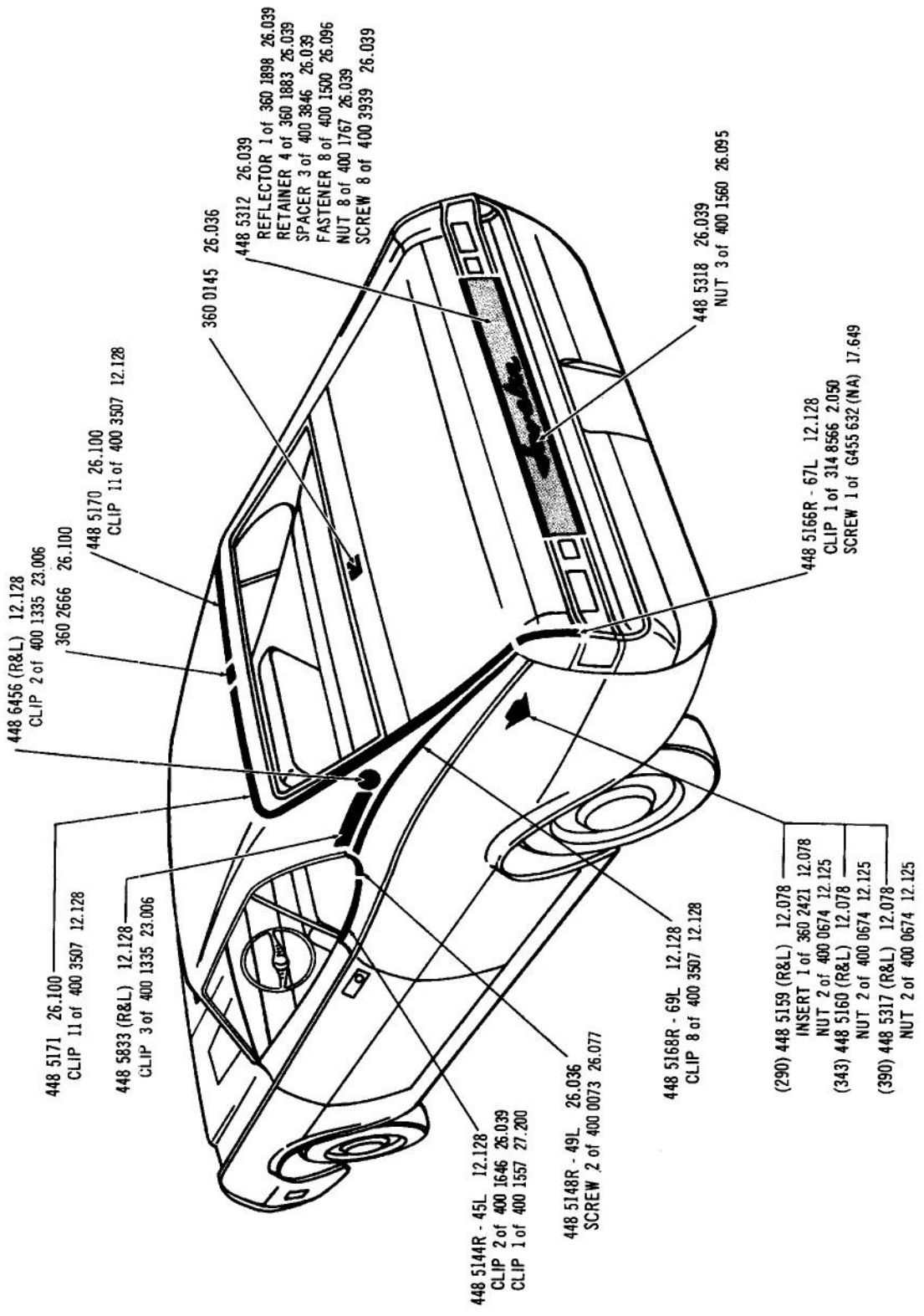

EXTERIOR ORNAMENTATION (REAR VIEW) ... 1968/69 (70)

Printed in U.S.A.

3886

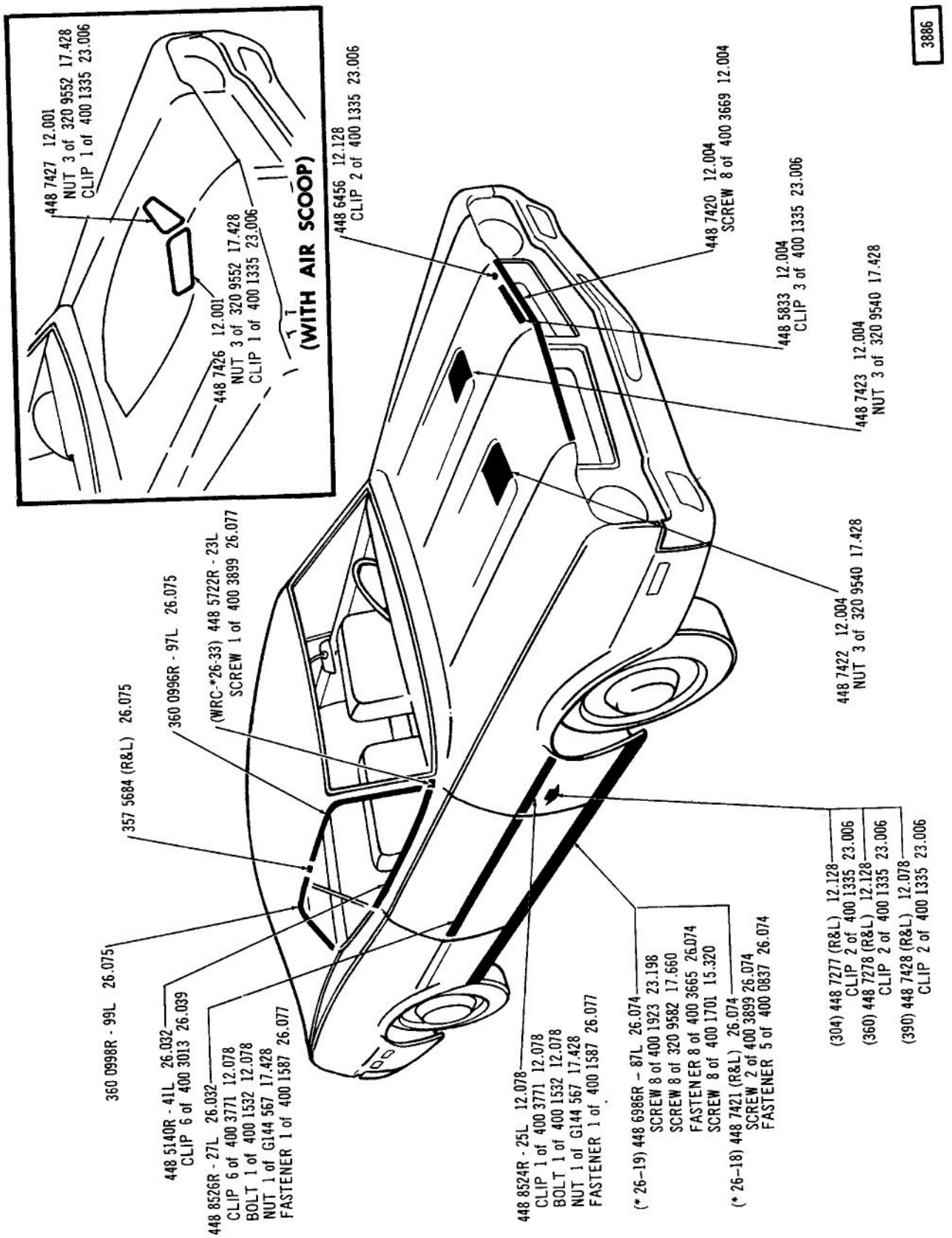

EXTERIOR ORNAMENTATION (FRONT VIEW) ... 1970 (70)

Printed in U.S.A.

3887

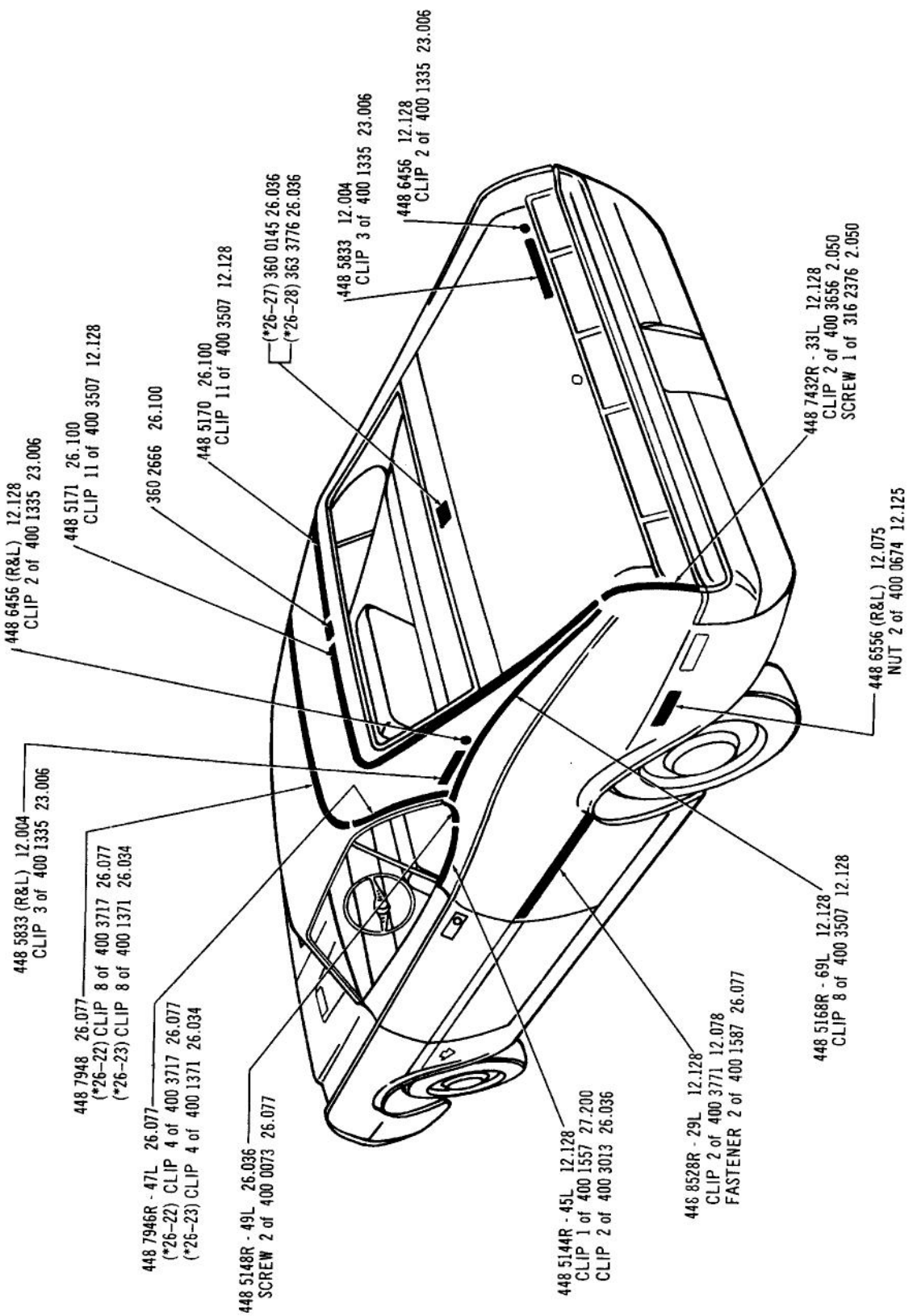

EXTERIOR ORNAMENTATION (REAR VIEW) ... 1970 (70)

Printed in U.S.A.

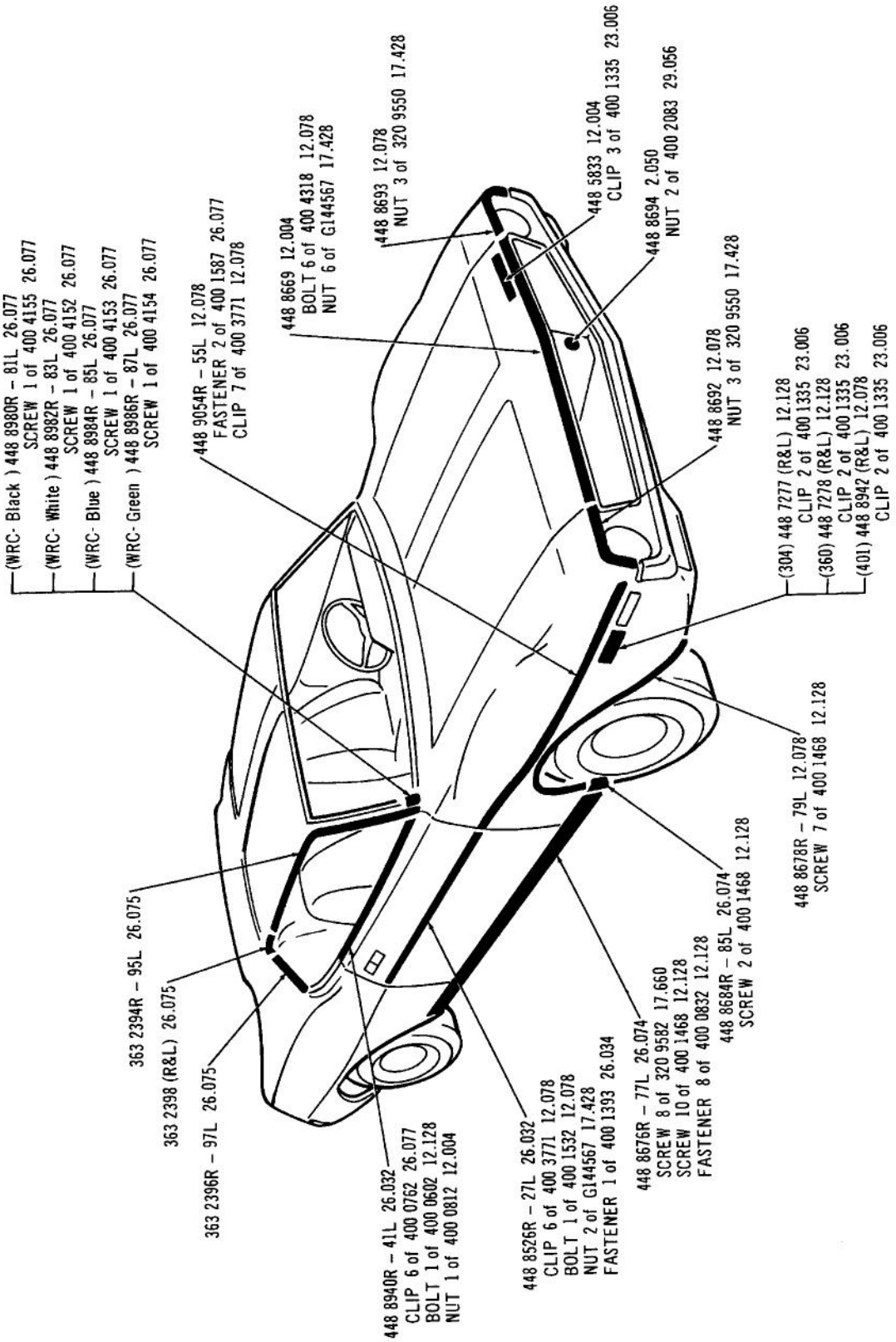

EXTERIOR ORNAMENTATION (FRONT VIEW) ... 1971 (79-5)(79-7)

4014

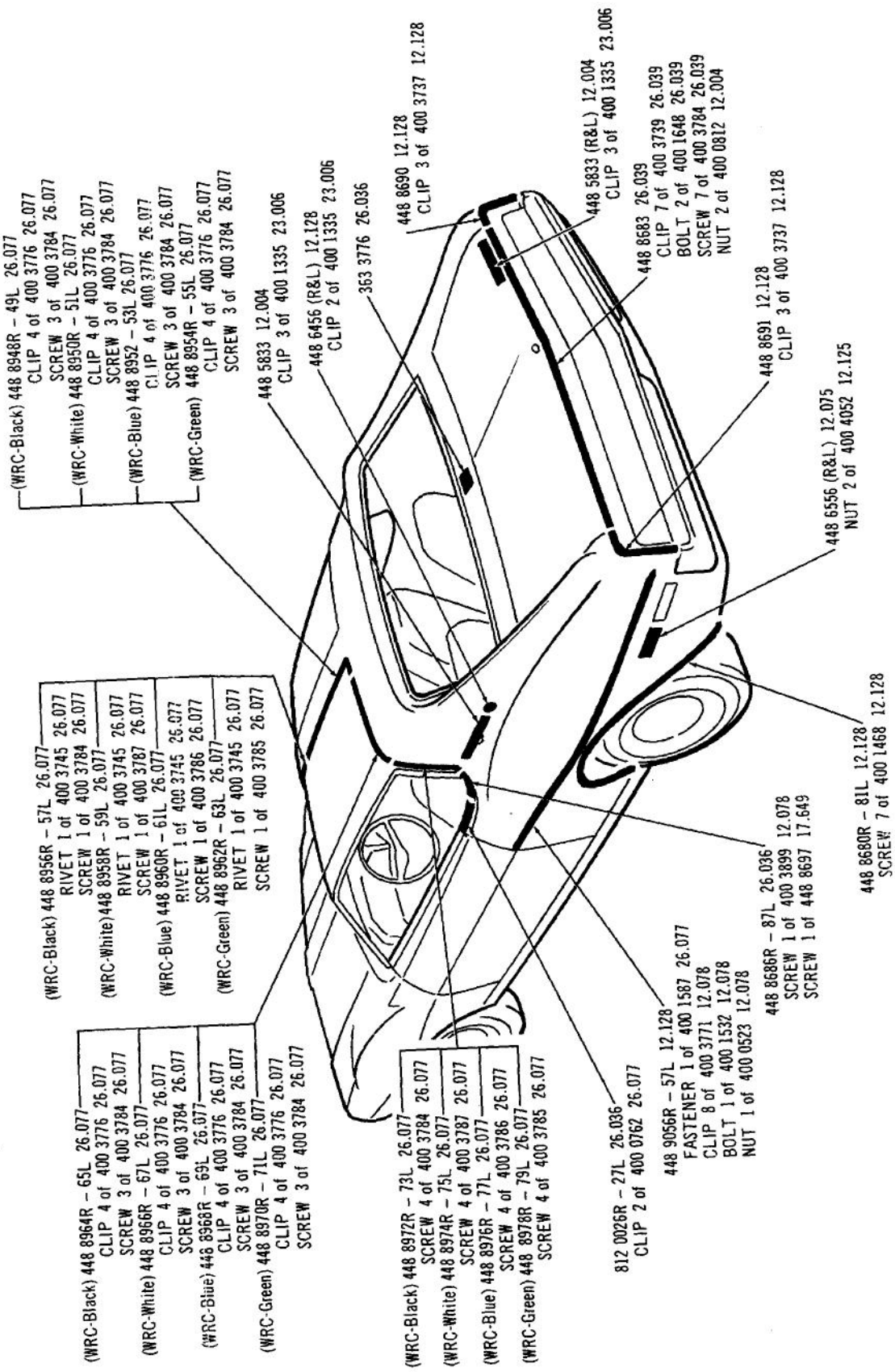

EXTERIOR ORNAMENTATION (REAR VIEW) ... 1971 (79-5)(79-7)

4015

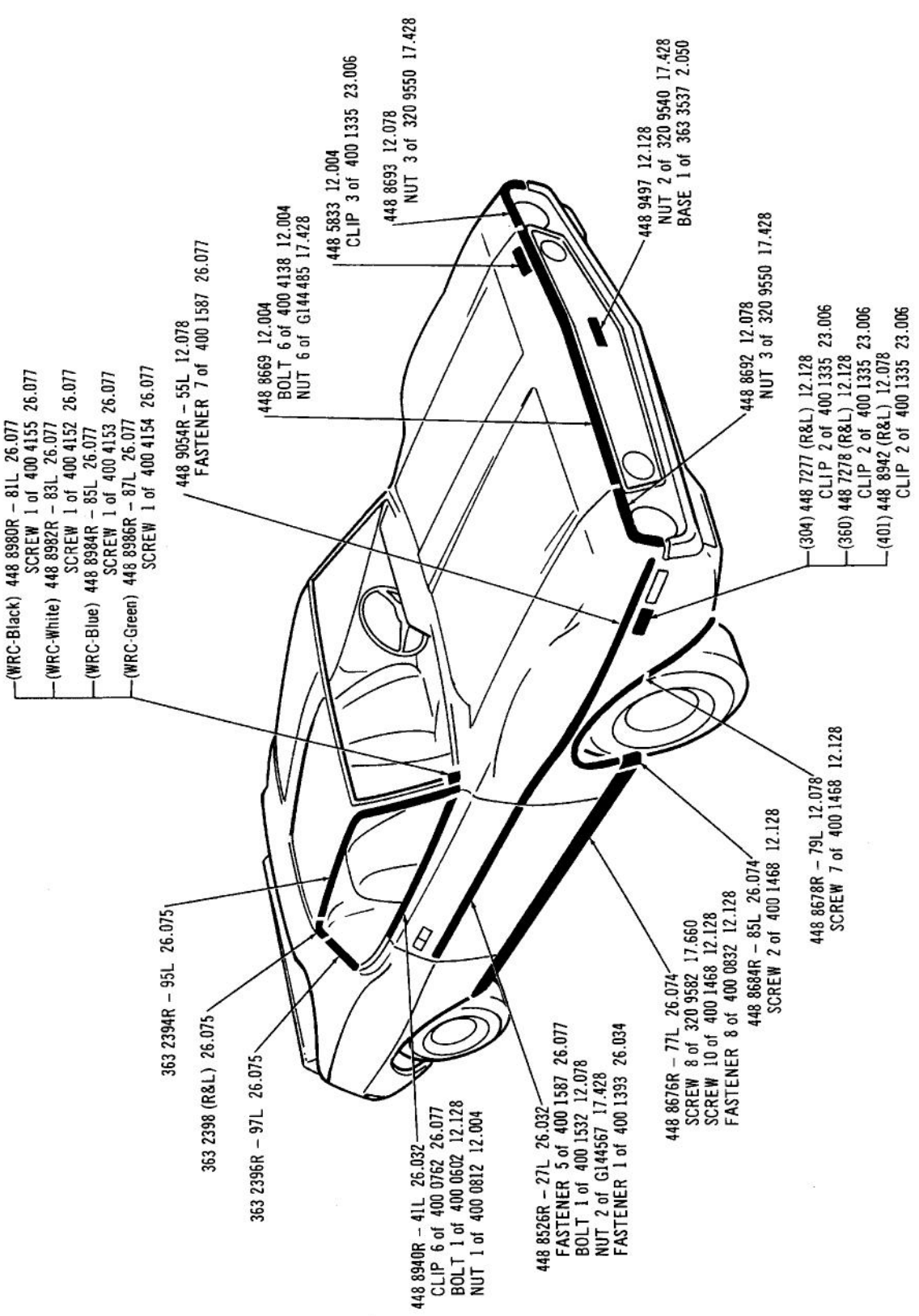

EXTERIOR ORNAMENTATION (FRONT VIEW) ... 1971 (79-8)

4016

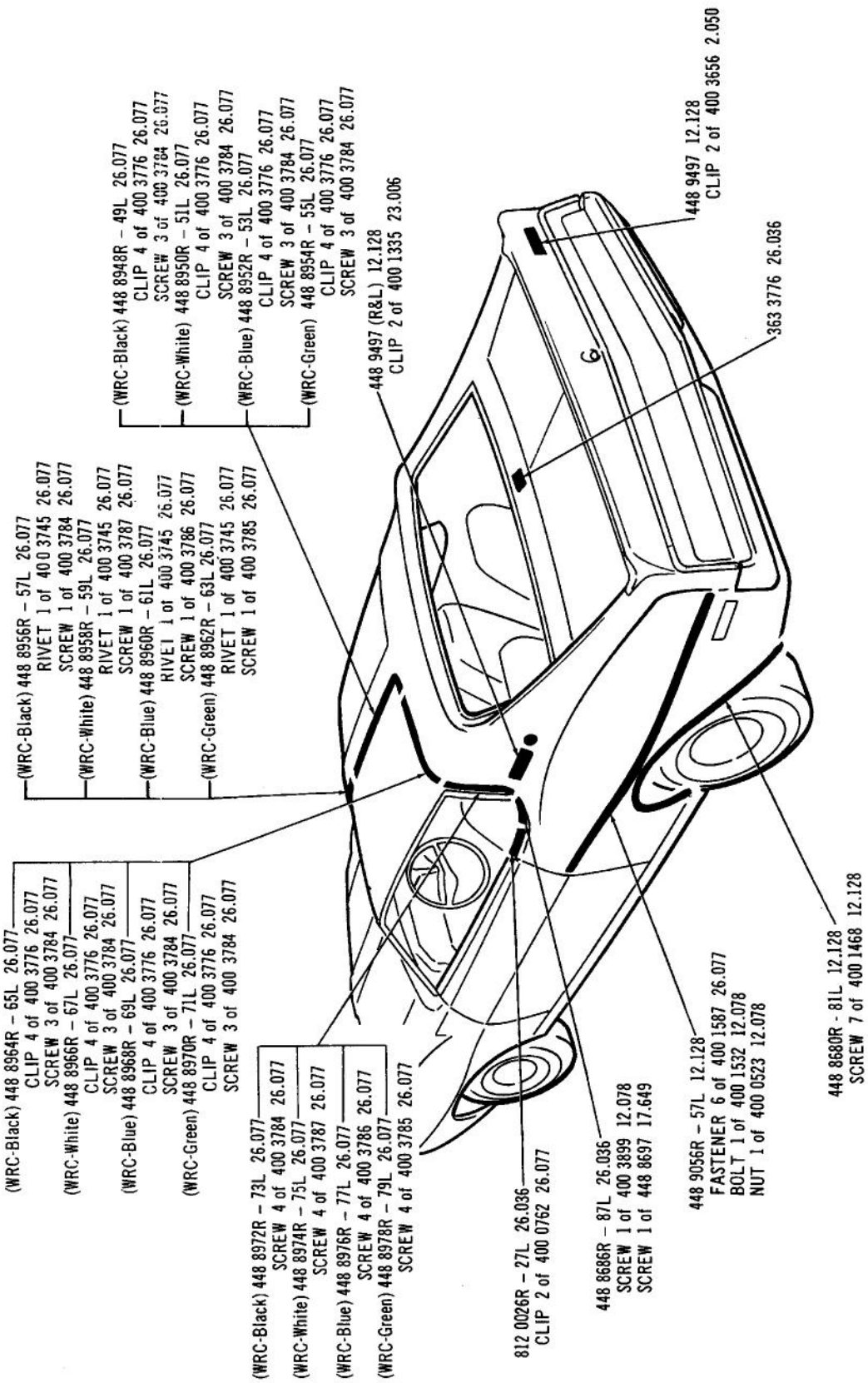

EXTERIOR ORNAMENTATION (REAR VIEW) ... 1971 (79-8)

Printed in U.S.A.

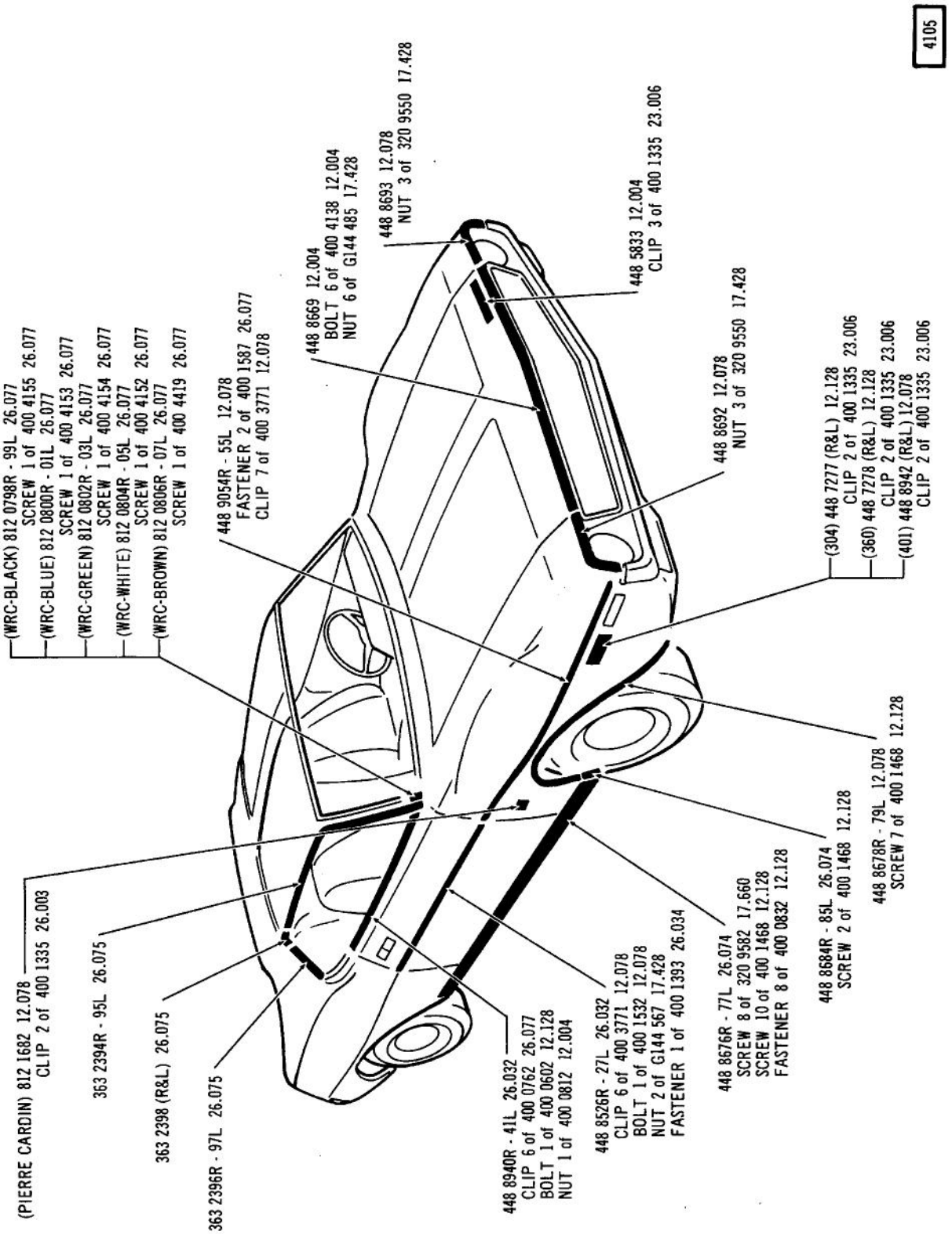

EXTERIOR ORNAMENTATION (FRONT VIEW) . . . 1972 (79-5)(79-7)

GROUP 26

BODY MOULDINGS

4103

EXTERIOR ORNAMENTATION (REAR VIEW) . . . 1972 (79-5)(79-7)

4106

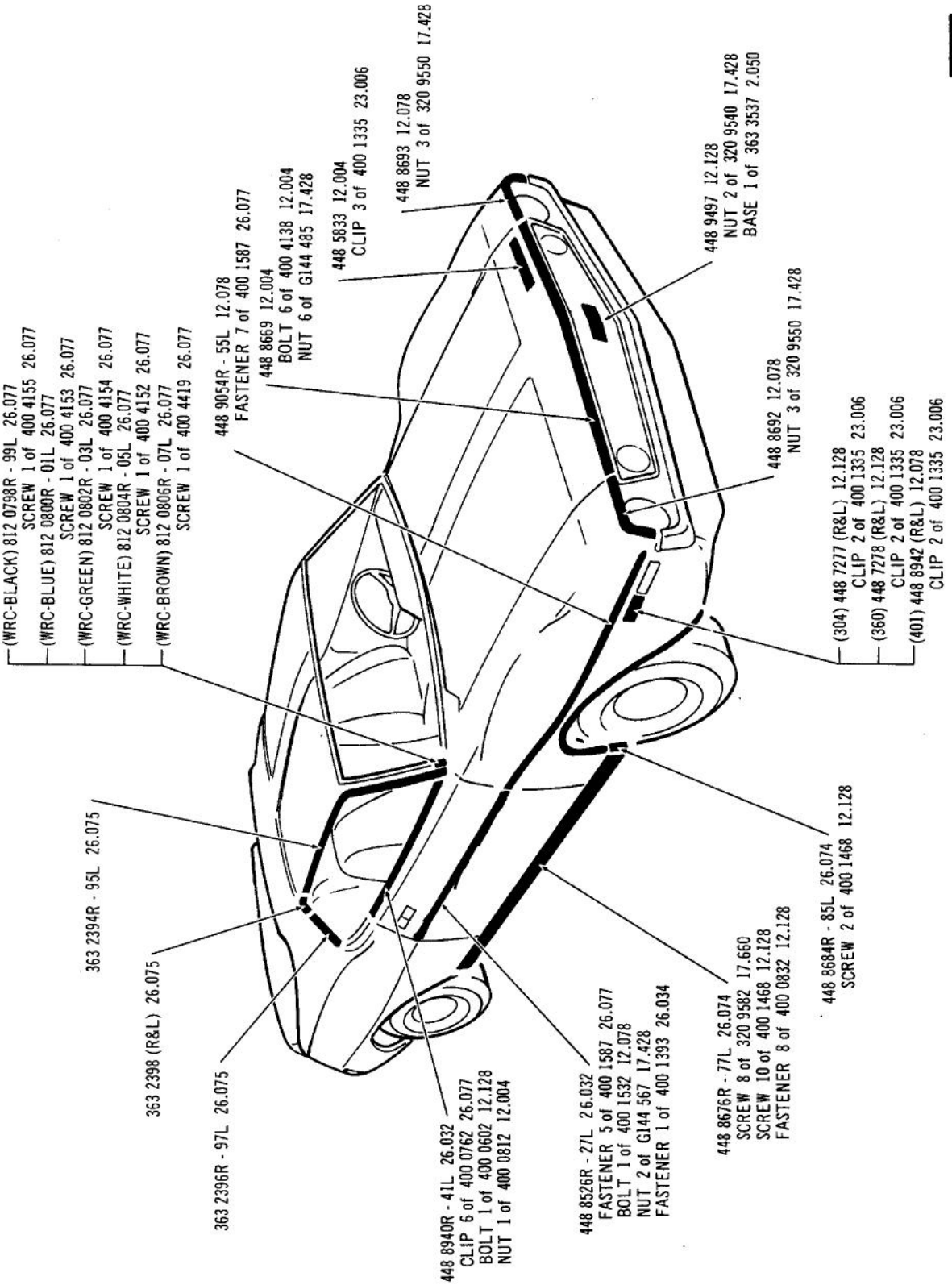

EXTERIOR ORNAMENTATION (FRONT VIEW) . . . 1972 (79-8)

Printed in U.S.A.

BODY MOULDINGS

GROUP 26

4102

EXTERIOR ORNAMENTATION (REAR VIEW) . . . 1972 (79-8)

2788

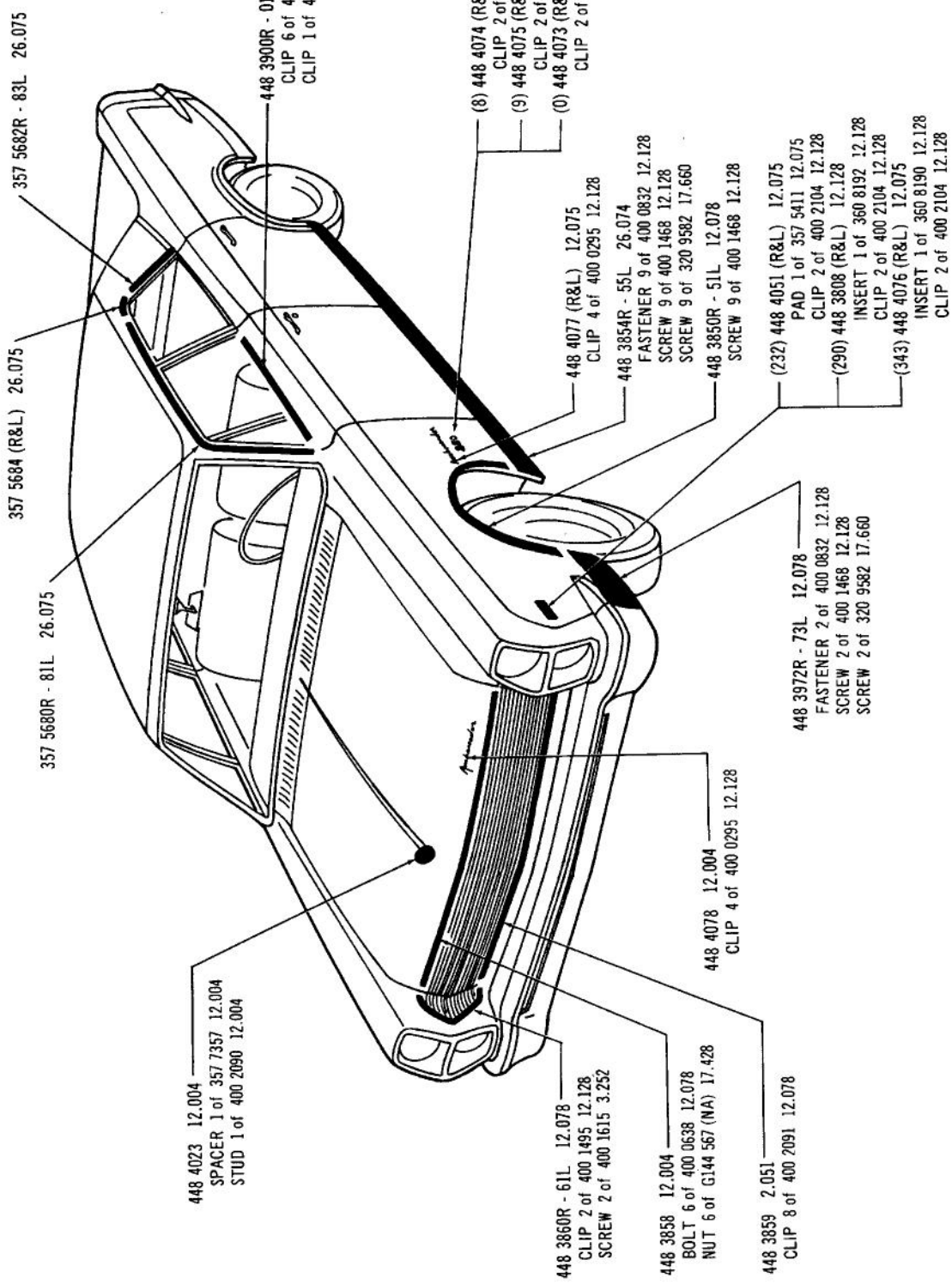

EXTERIOR ORNAMENTATION (FRONT VIEW) ... 1967 (85)

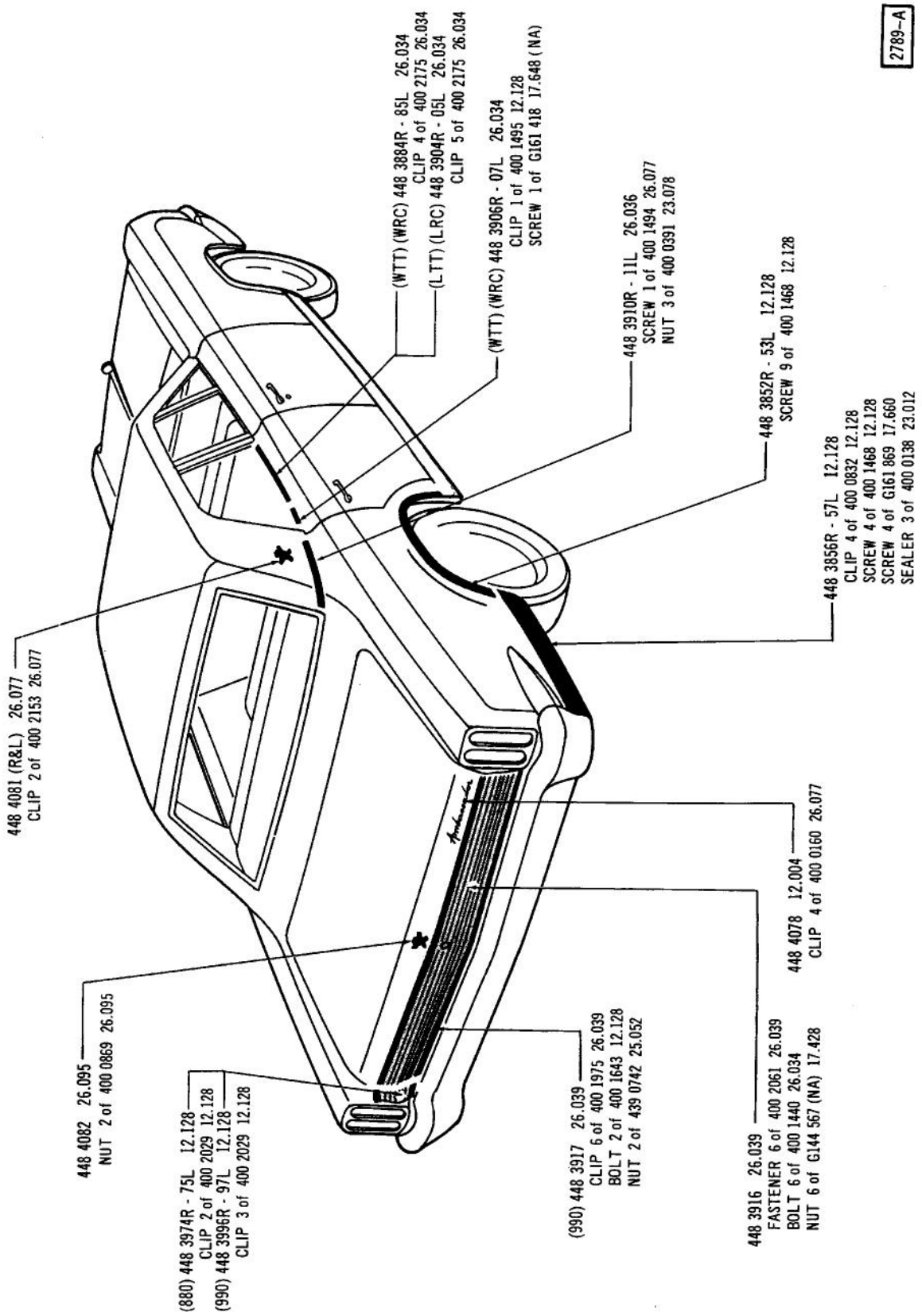

EXTERIOR ORNAMENTATION (REAR VIEW) ... 1967 (85)

Printed in U.S.A.

2786

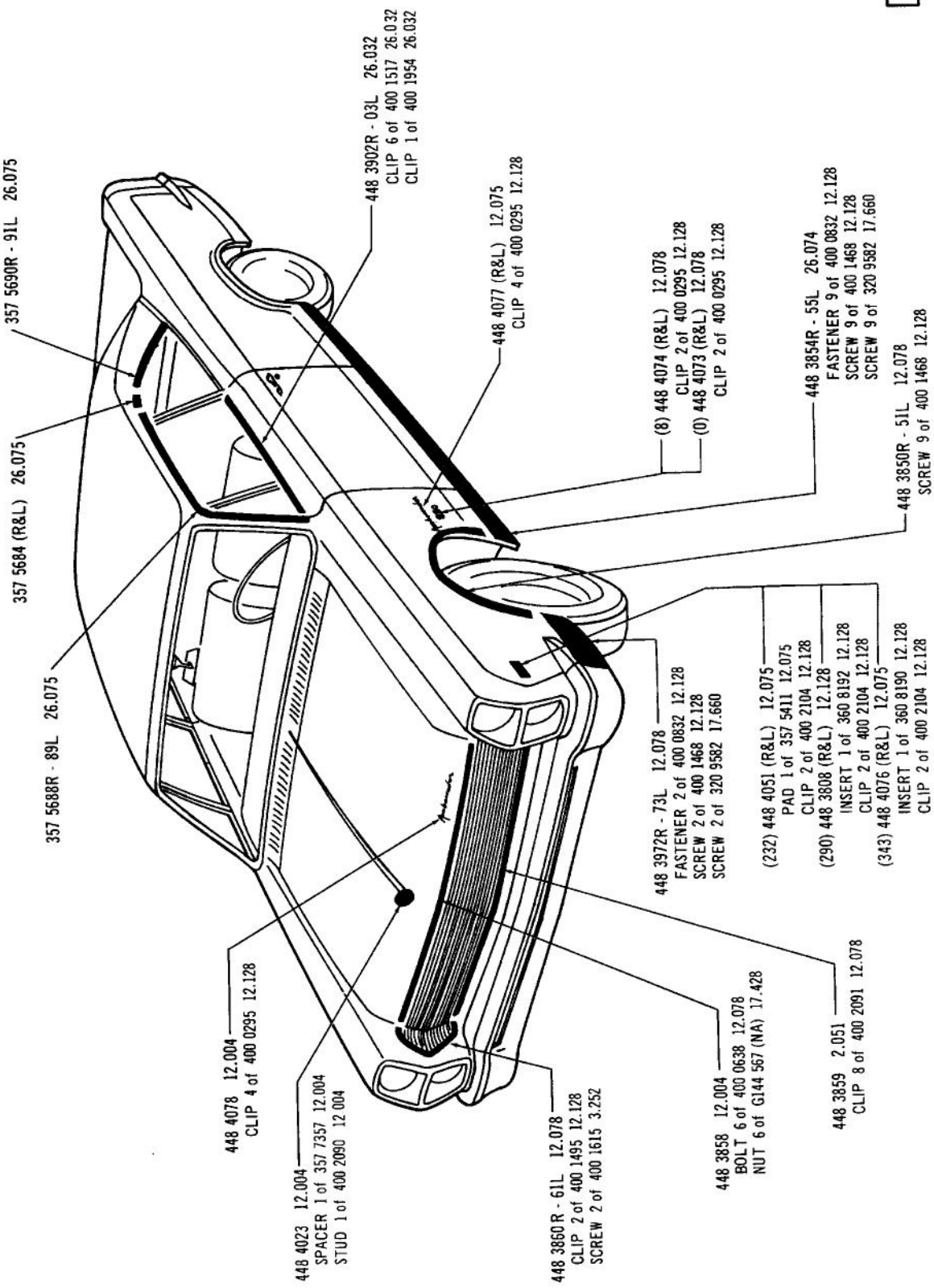

EXTERIOR ORNAMENTATION (FRONT VIEW) ... 1967 (86)

2787

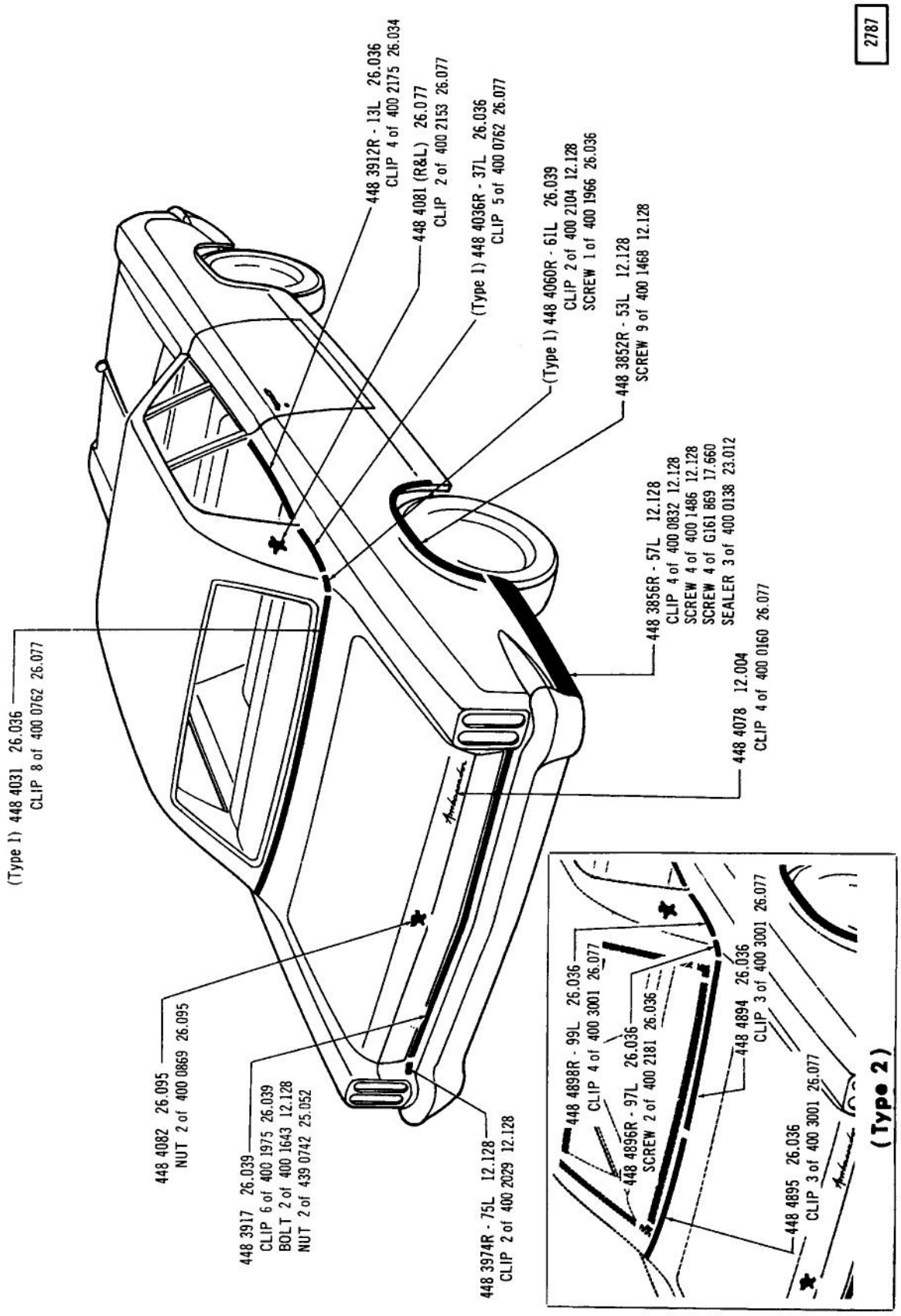

EXTERIOR ORNAMENTATION (REAR VIEW) ... 1967 (86)

2792

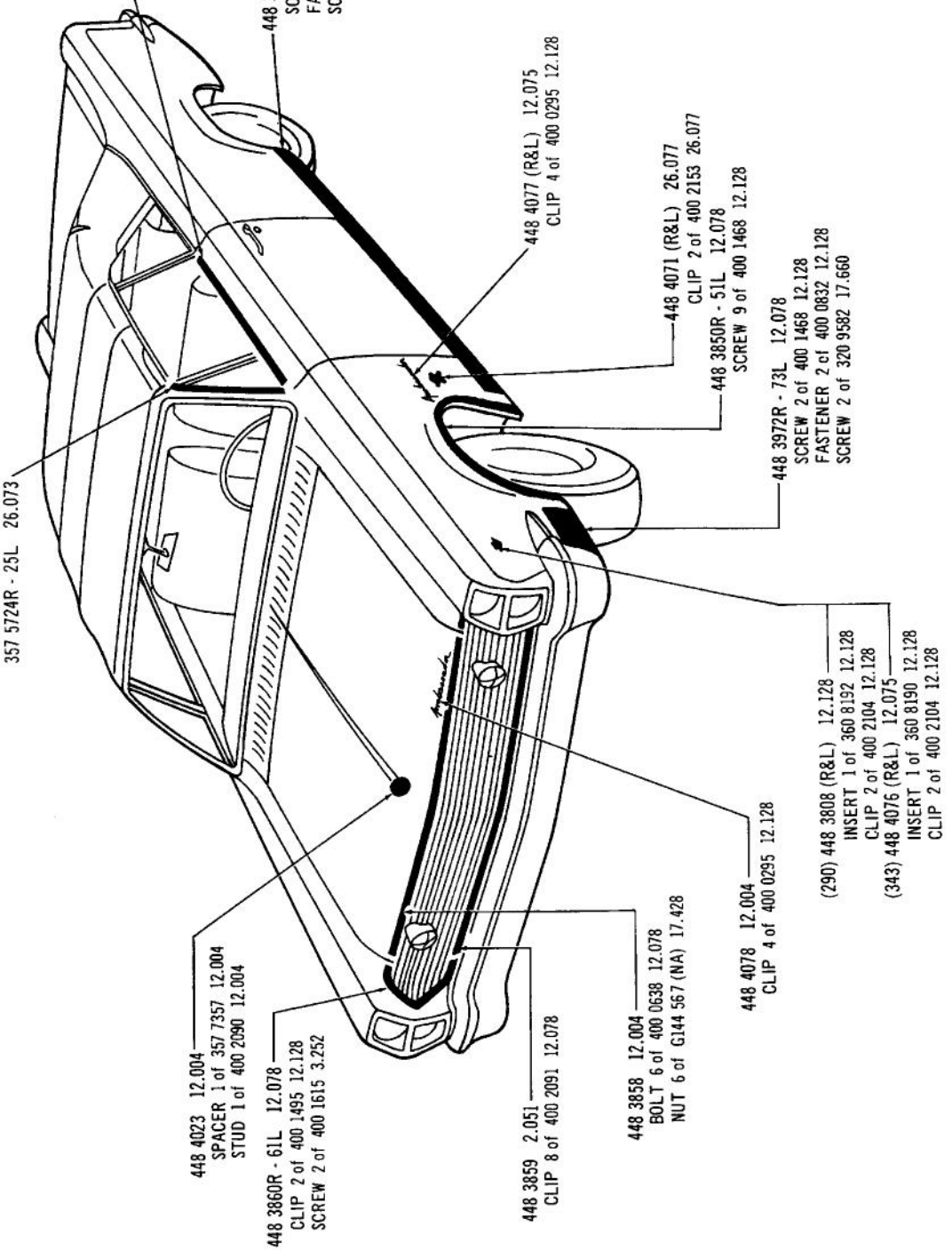

EXTERIOR ORNAMENTATION (FRONT VIEW) ... 1967 (87-DPL-E/SATIN CHROME)

2793

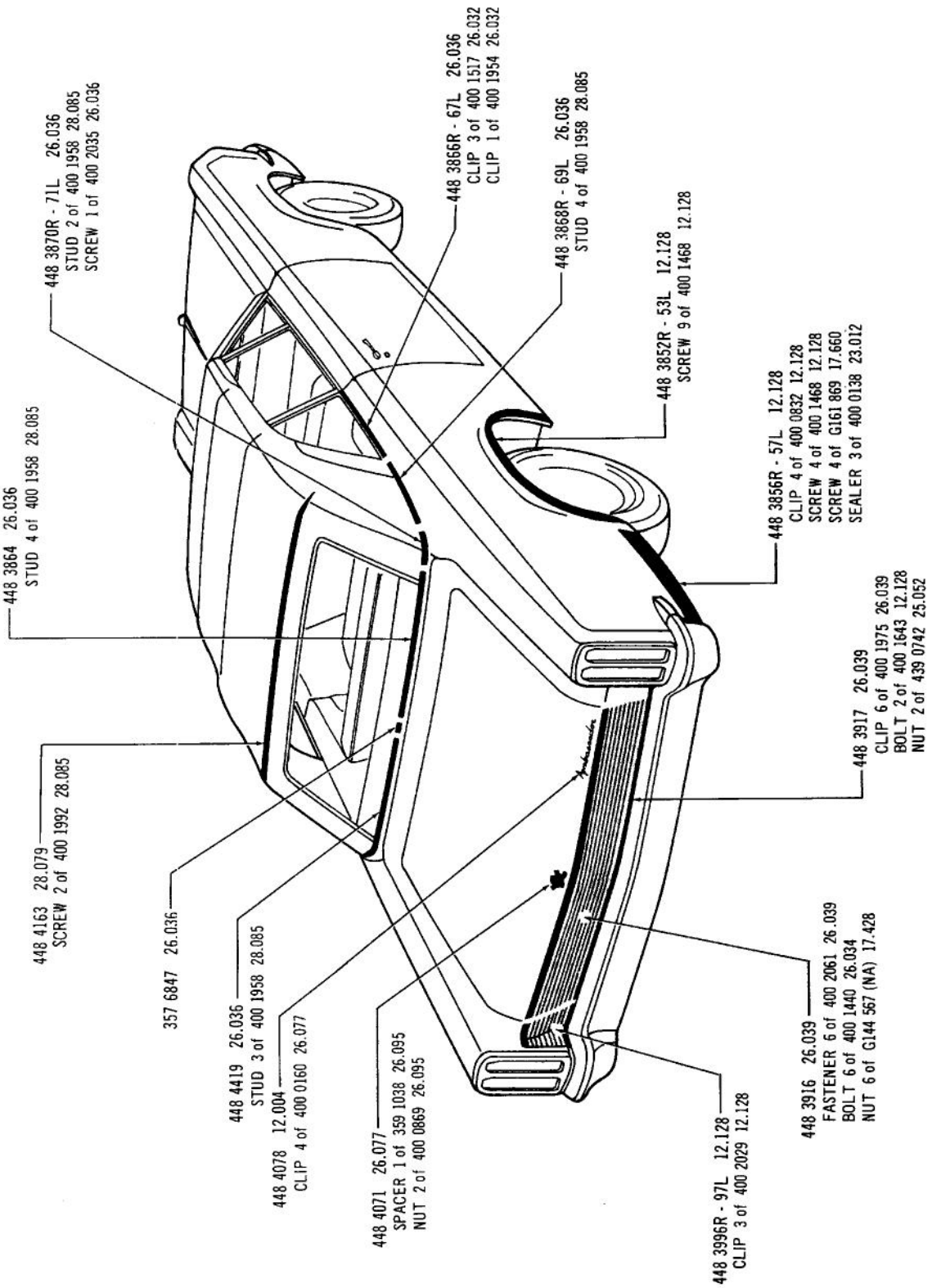

EXTERIOR ORNAMENTATION (REAR VIEW) ... 1967 (87-DPL-E/SATIN CHROME)

2834

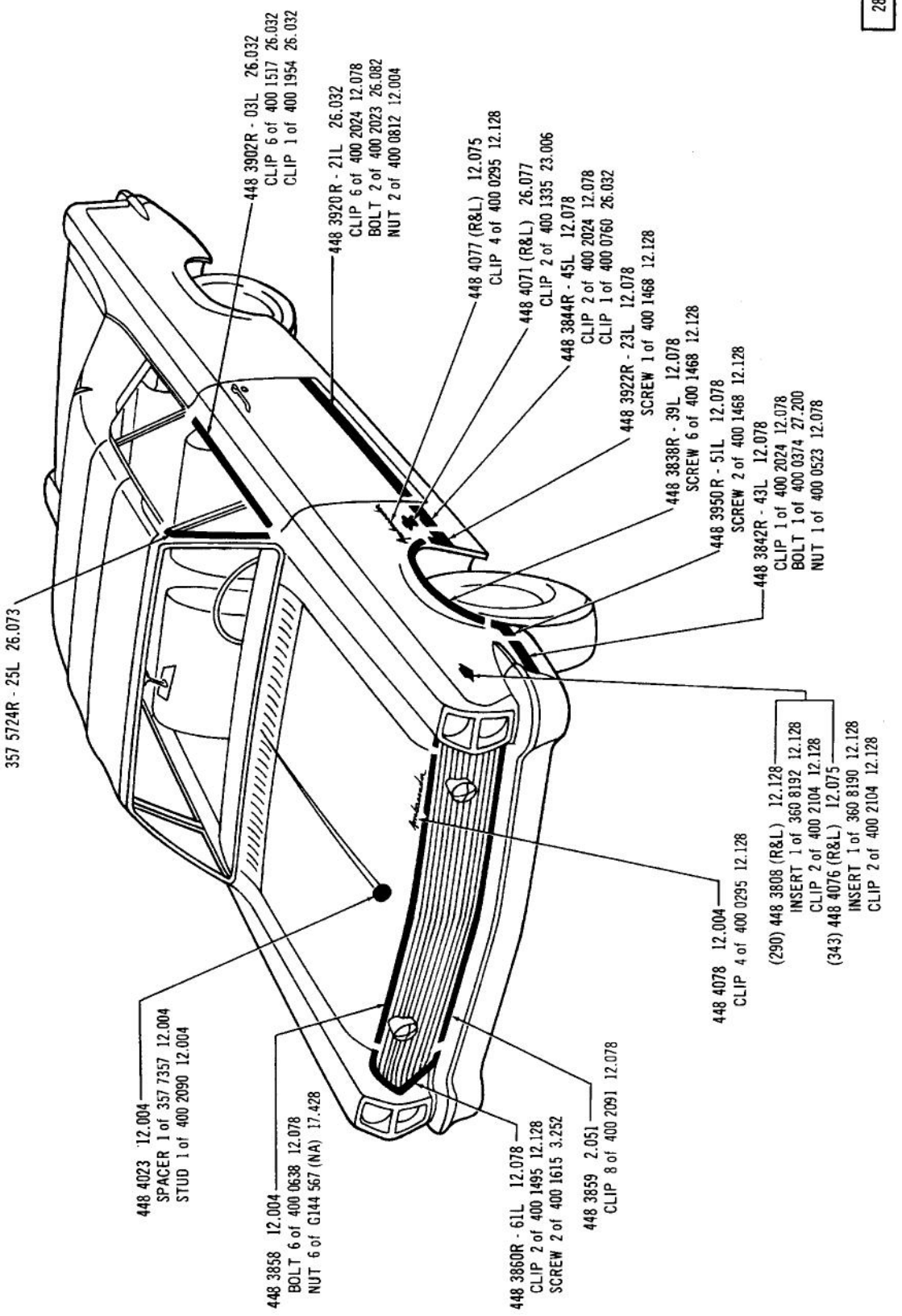

EXTERIOR ORNAMENTATION (FRONT VIEW) ... 1967 (87-DPL-SATIN CHROME)

2835

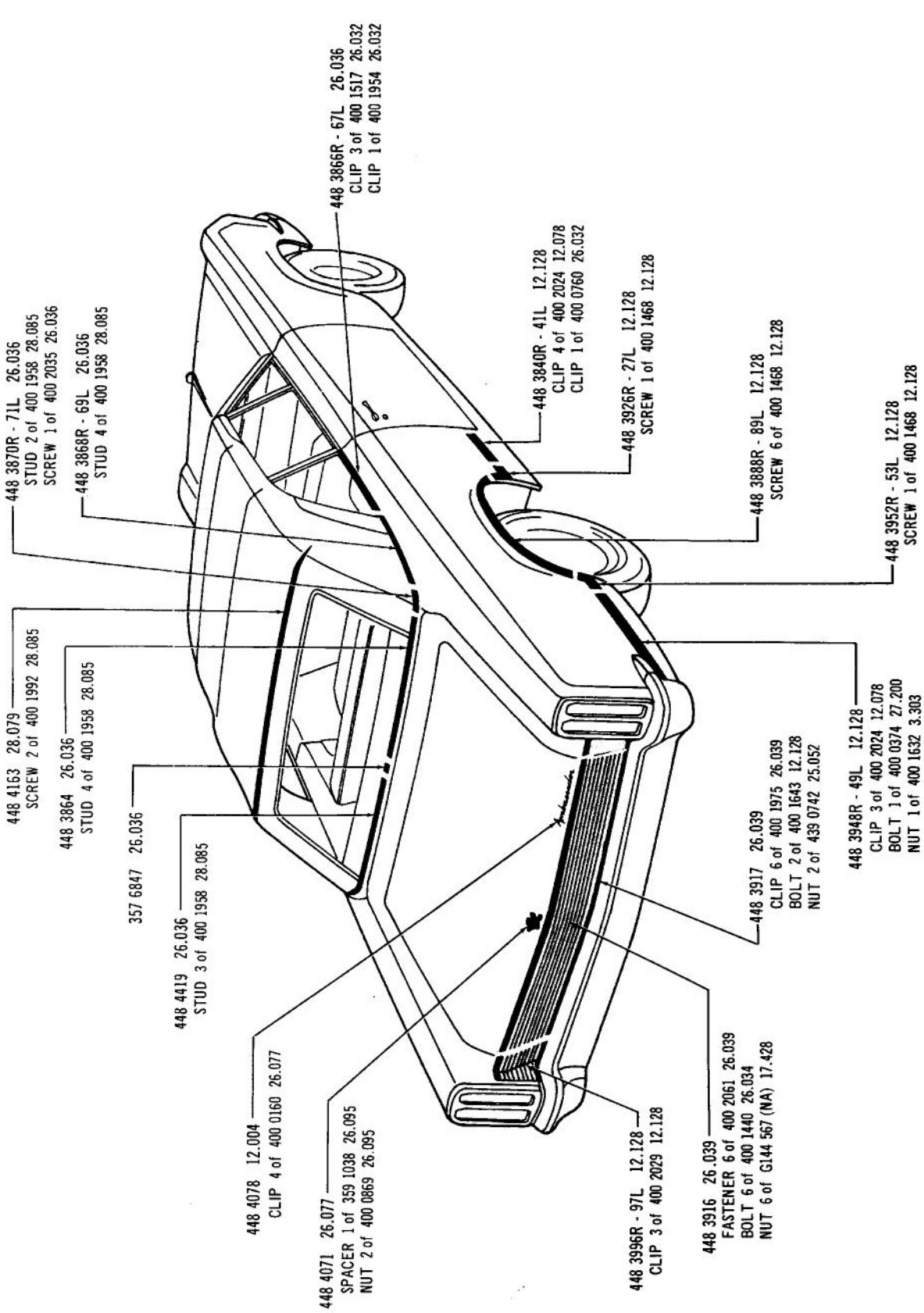

EXTERIOR ORNAMENTATION (REAR VIEW) ... 1967 (87-DPL-SATIN CHROME)

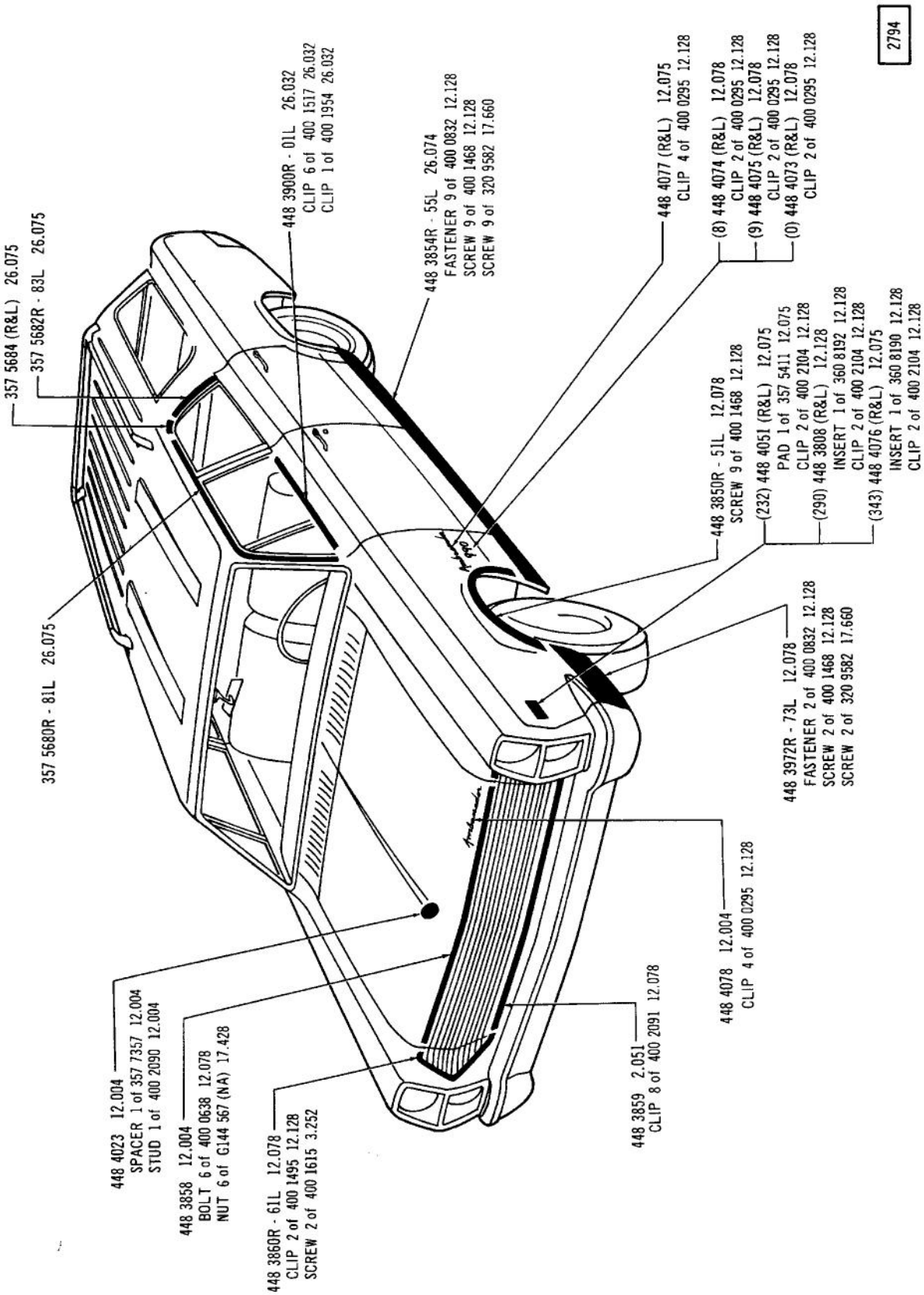

EXTERIOR ORNAMENTATION (FRONT VIEW) ... 1967 (88-LWO)(88-LTT)

2795

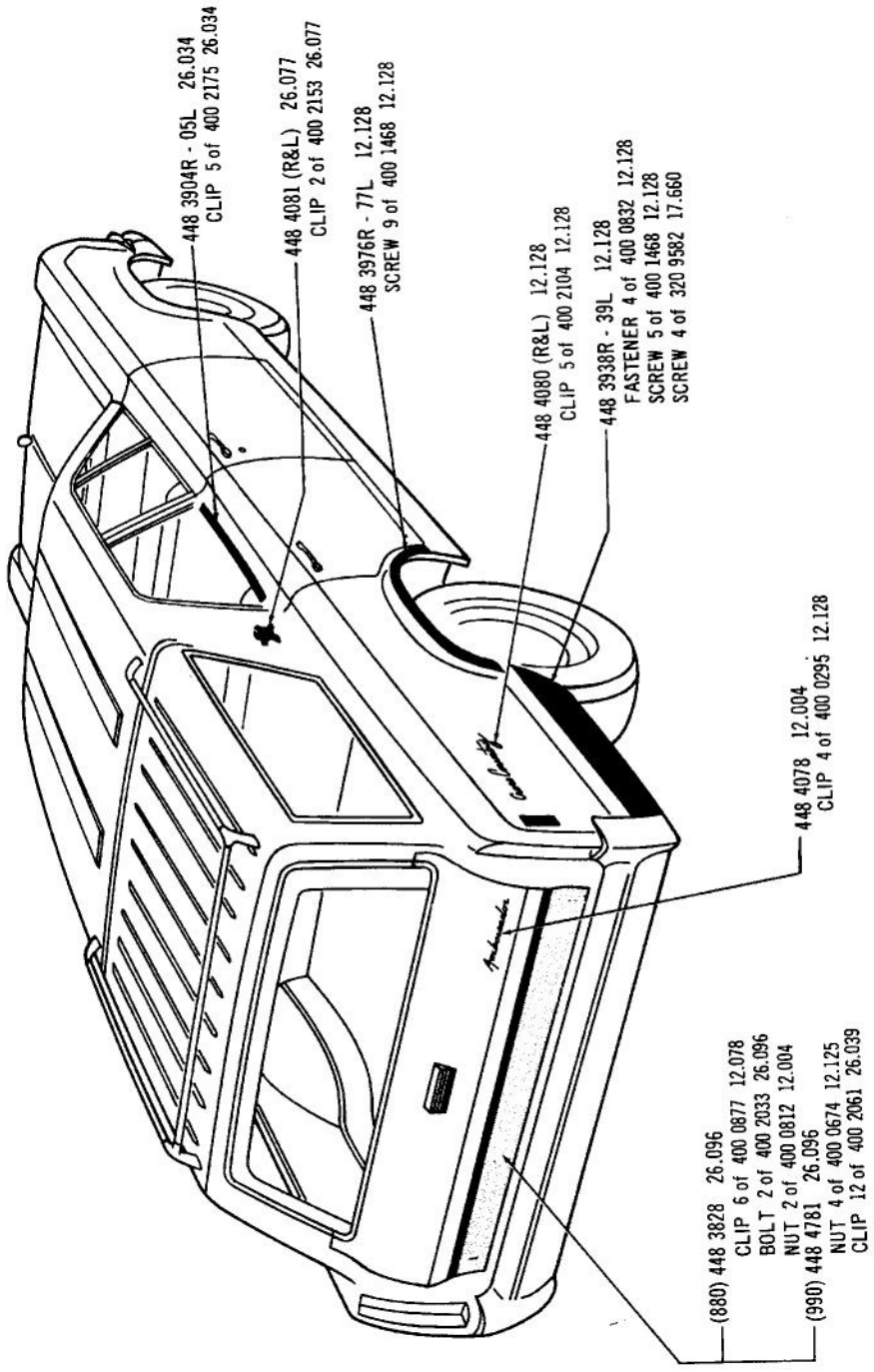

EXTERIOR ORNAMENTATION (REAR VIEW) ... 1967 (88-LWO)(88-LTT)

2796

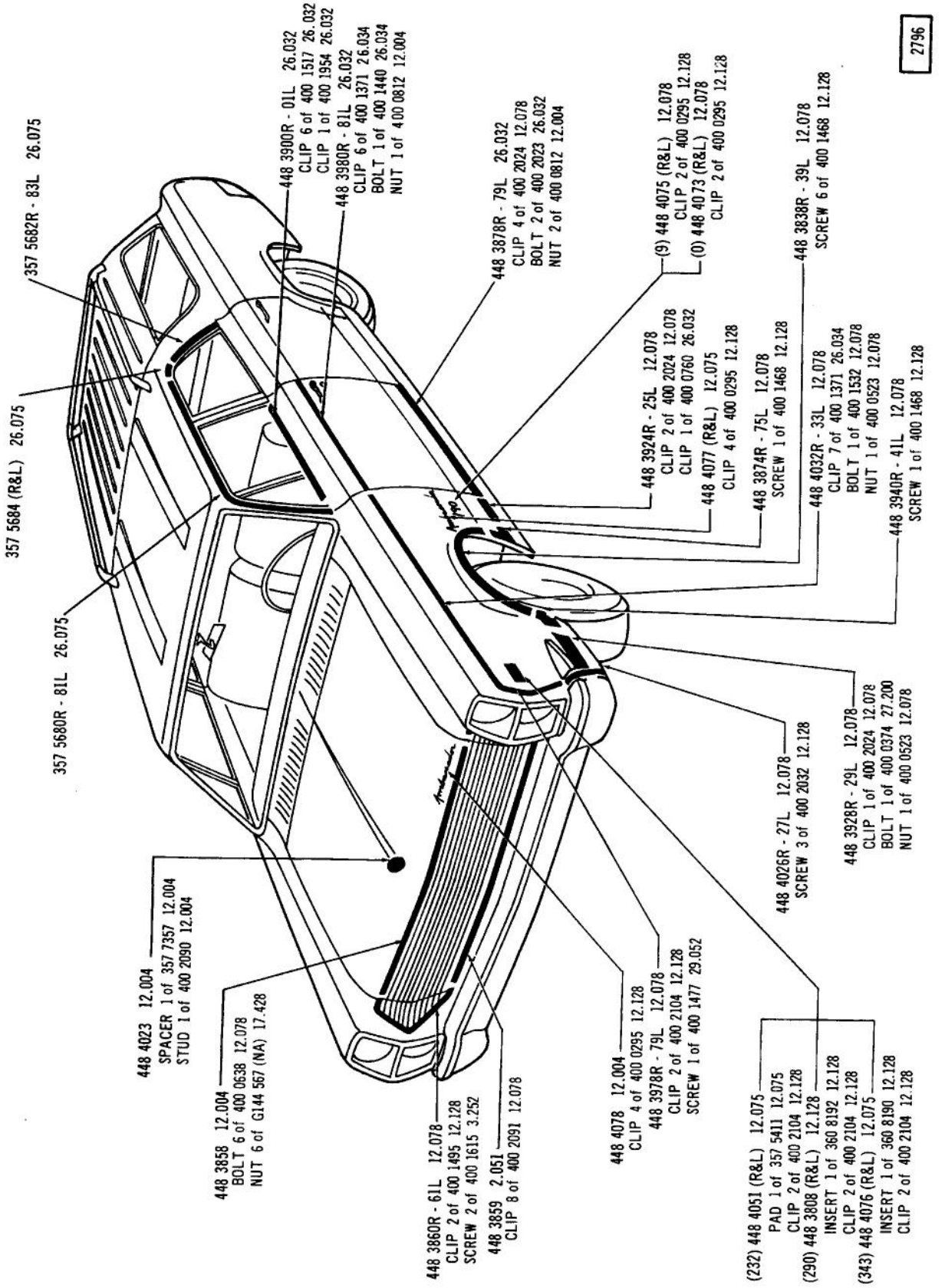

EXTERIOR ORNAMENTATION (FRONT VIEW) ... 1967 (88-WWO)(88-WTT)

Printed in U.S.A.

2797

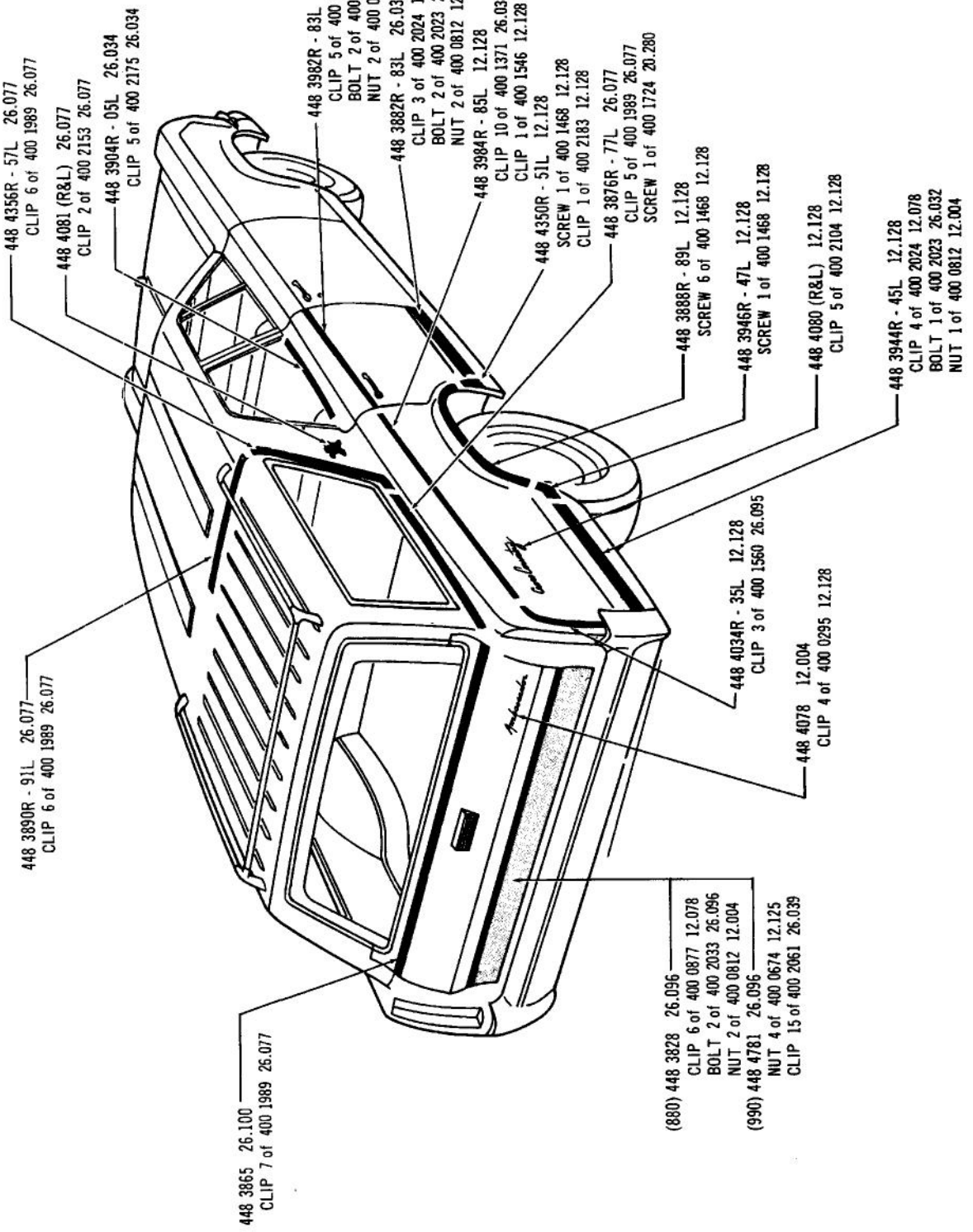

EXTERIOR ORNAMENTATION (REAR VIEW) ... 1967 (88-WWO)(88-WTT)

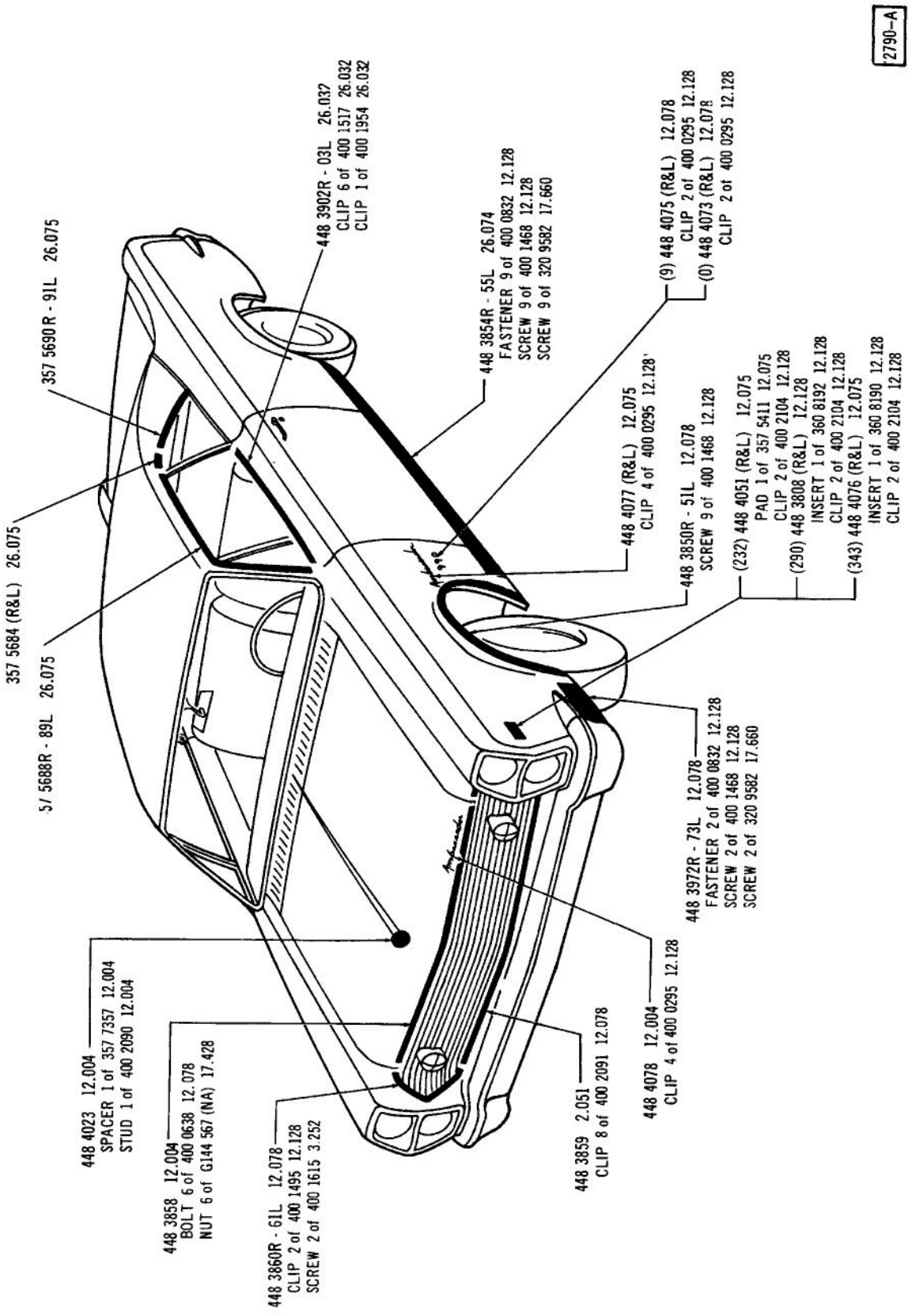

EXTERIOR ORNAMENTATION (FRONT VIEW) ... 1967 (89-DPL-E/SATIN CHROME)

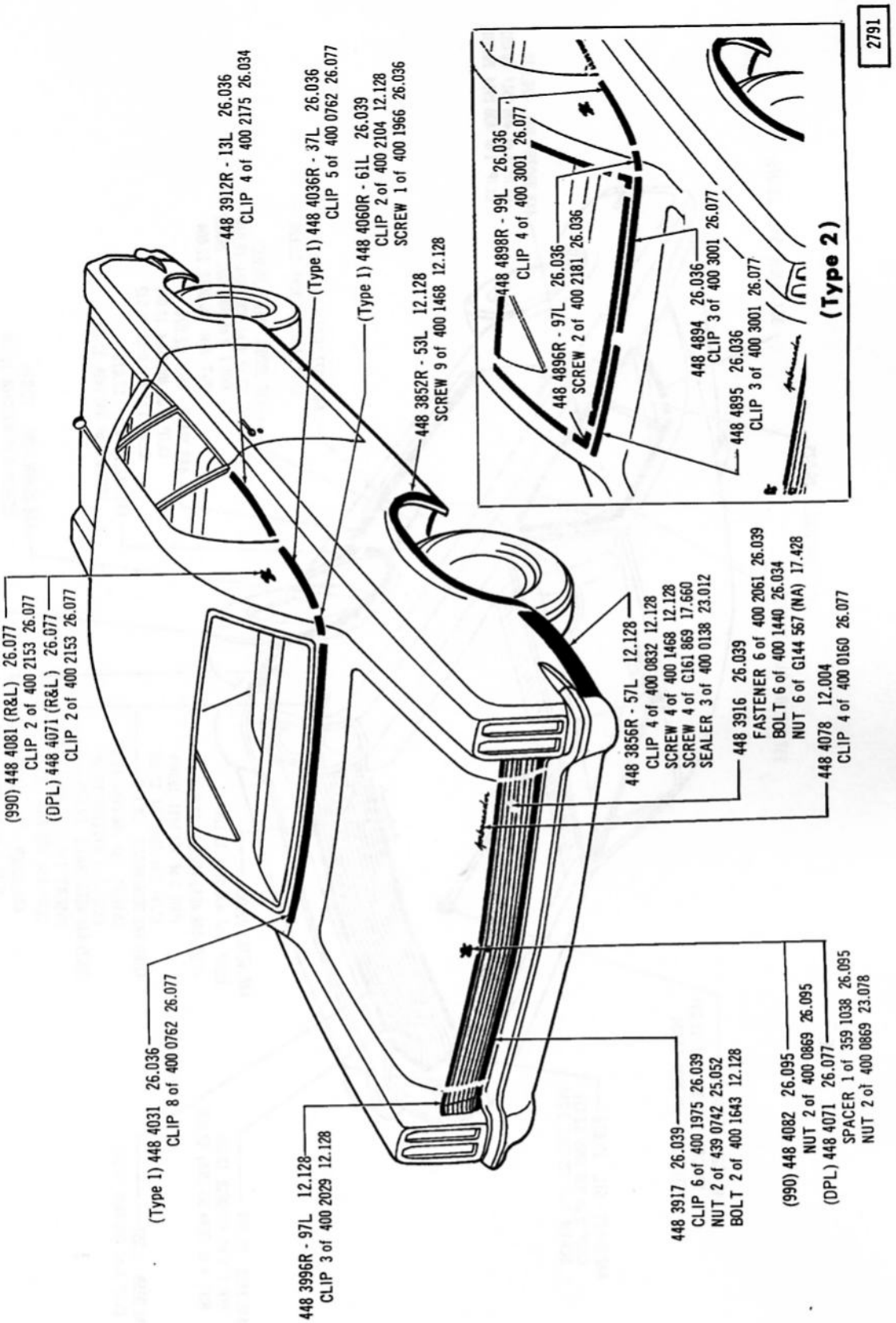

EXTERIOR ORNAMENTATION (REAR VIEW) ... 1967 (89-DPL-E/SATIN CHROME)

2836

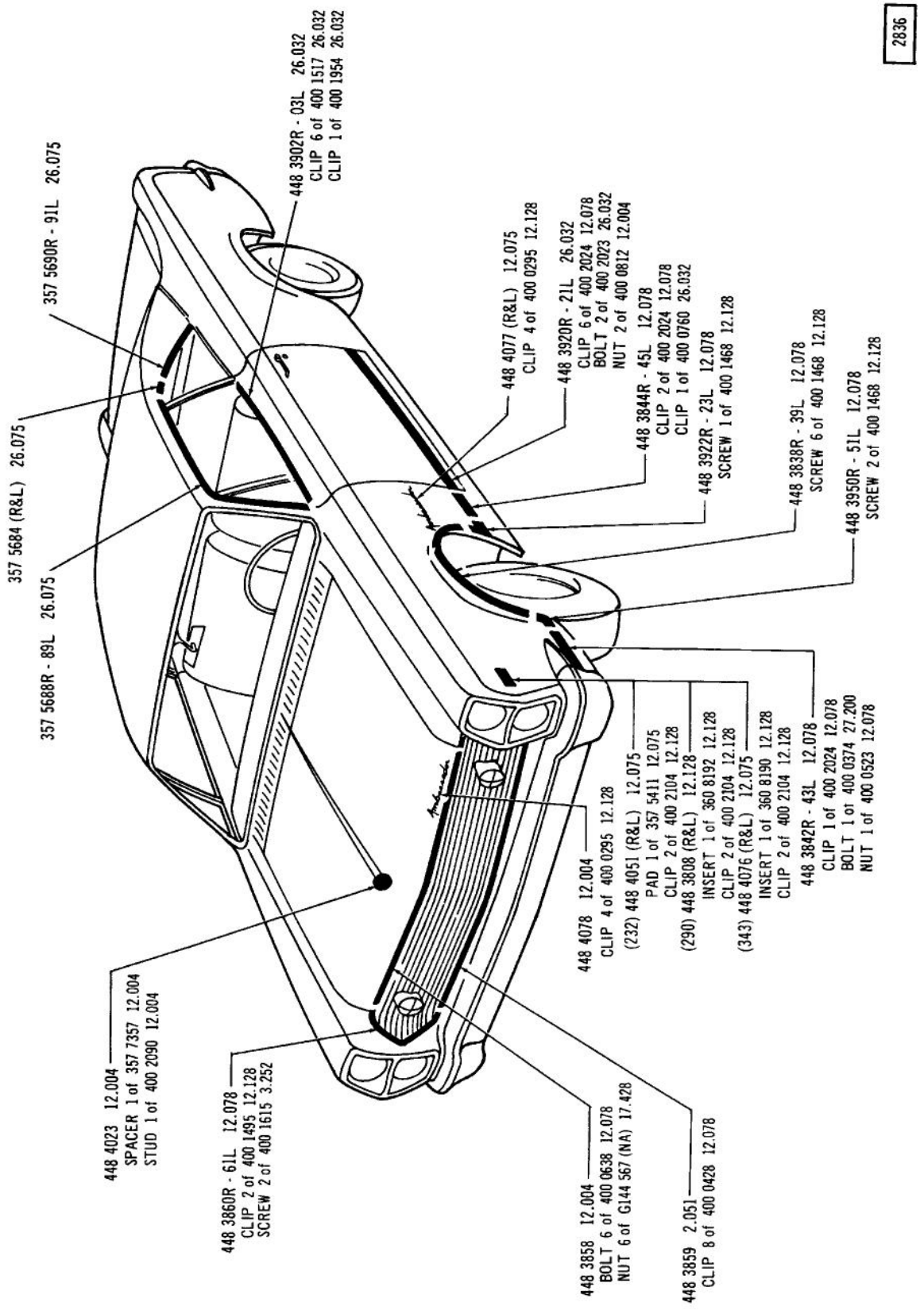

EXTERIOR ORNAMENTATION (FRONT VIEW) ... 1967 (89-DPL-SATIN CHROME)

Printed in U.S.A.

2837

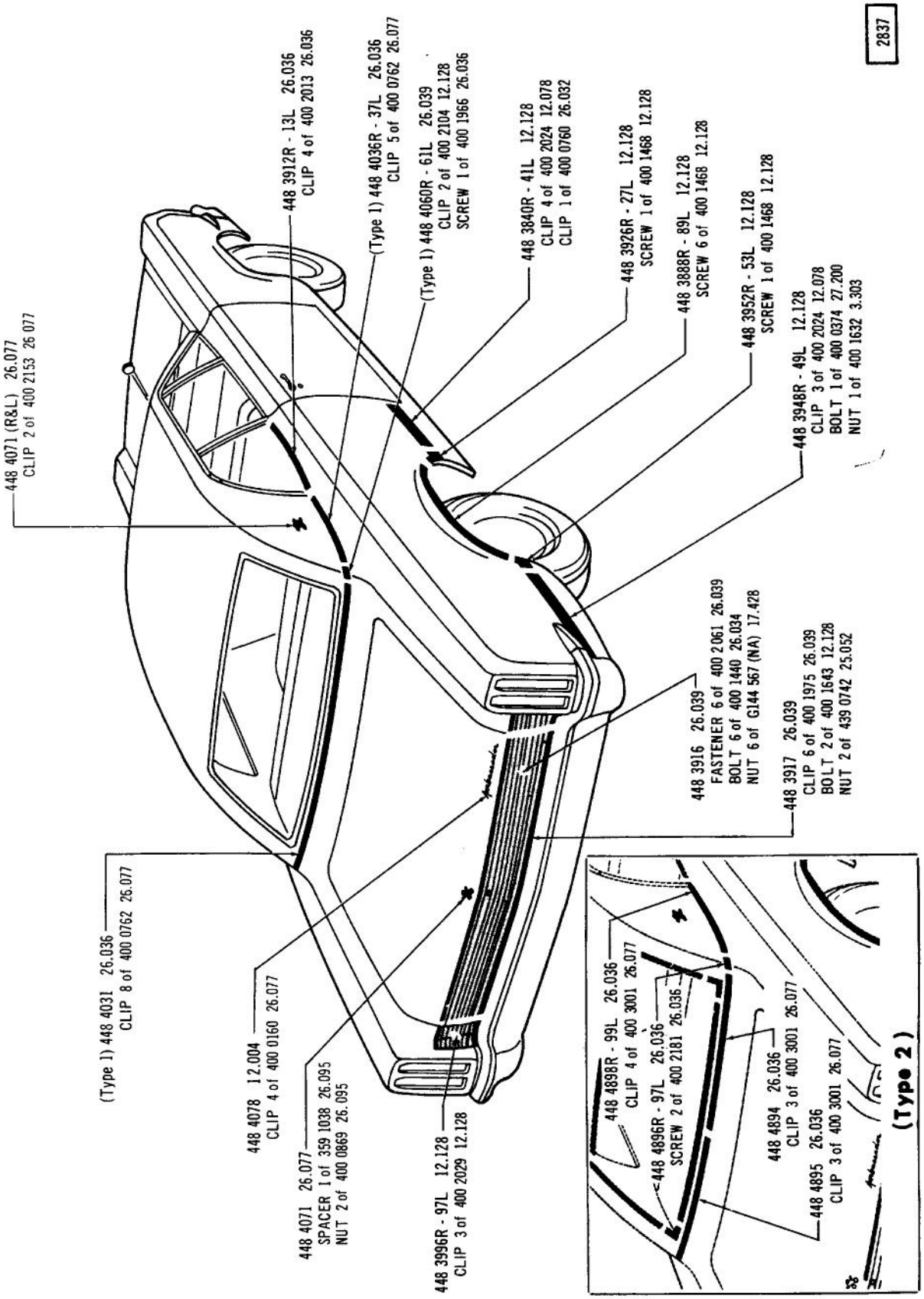

EXTERIOR ORNAMENTATION (REAR VIEW) ... 1967 (89-DPL-SATIN CHROME)

3388

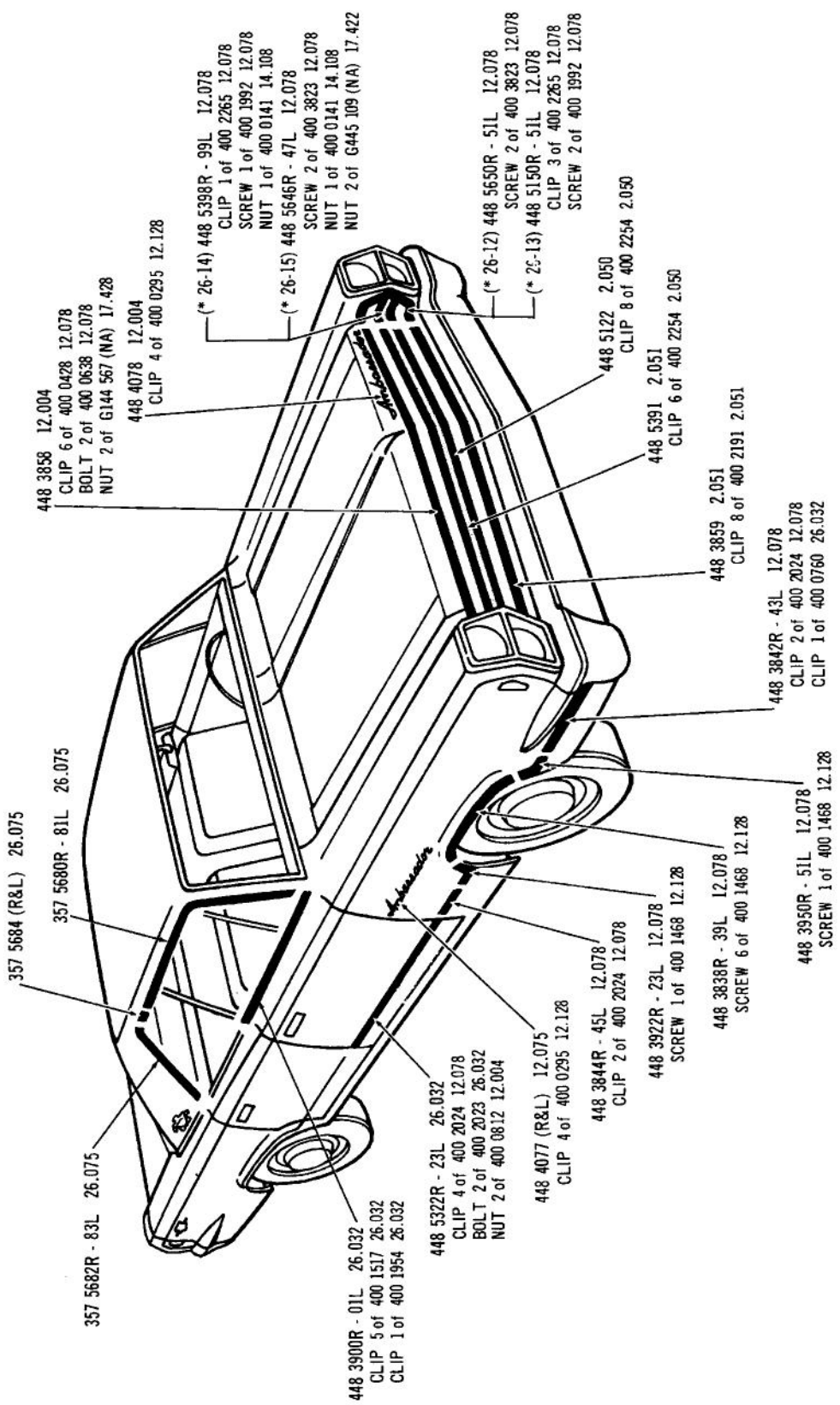

EXTERIOR ORNAMENTATION (FRONT VIEW) ... 1968 (85-2)

3389

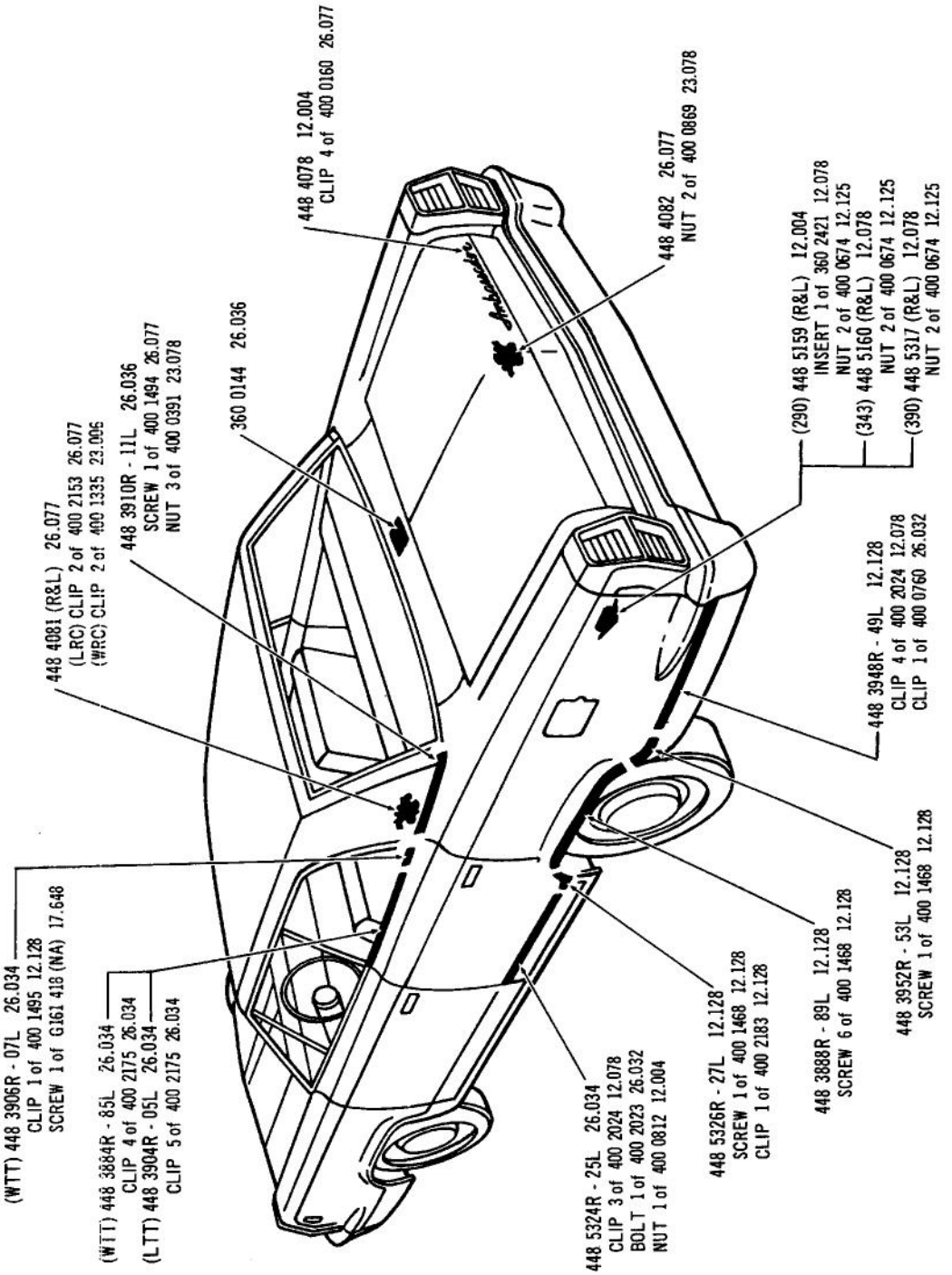

EXTERIOR ORNAMENTATION (REAR VIEW) ... 1968 (85-2)

3236

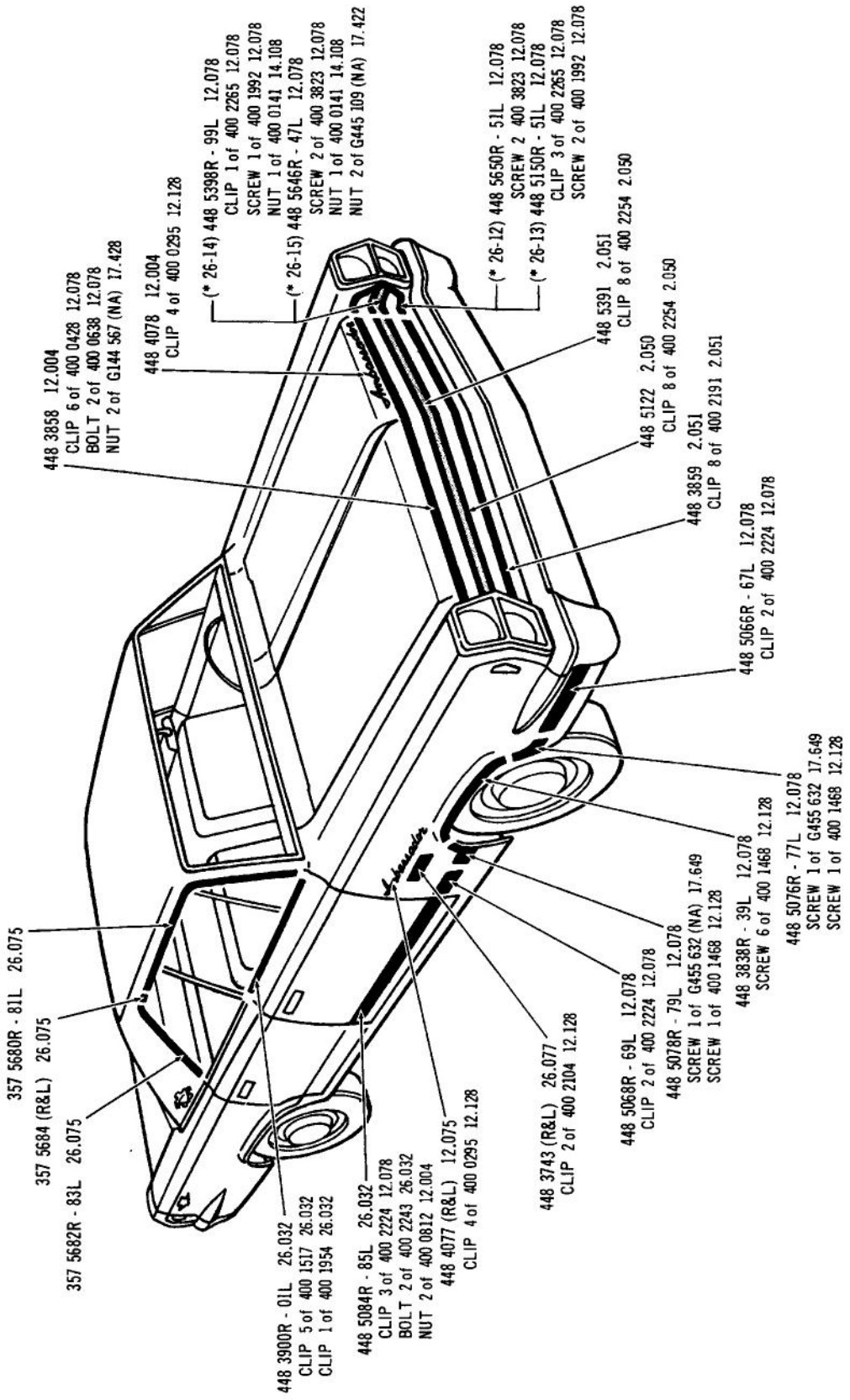

EXTERIOR ORNAMENTATION (FRONT VIEW) ... 1968 (85-5)

3237

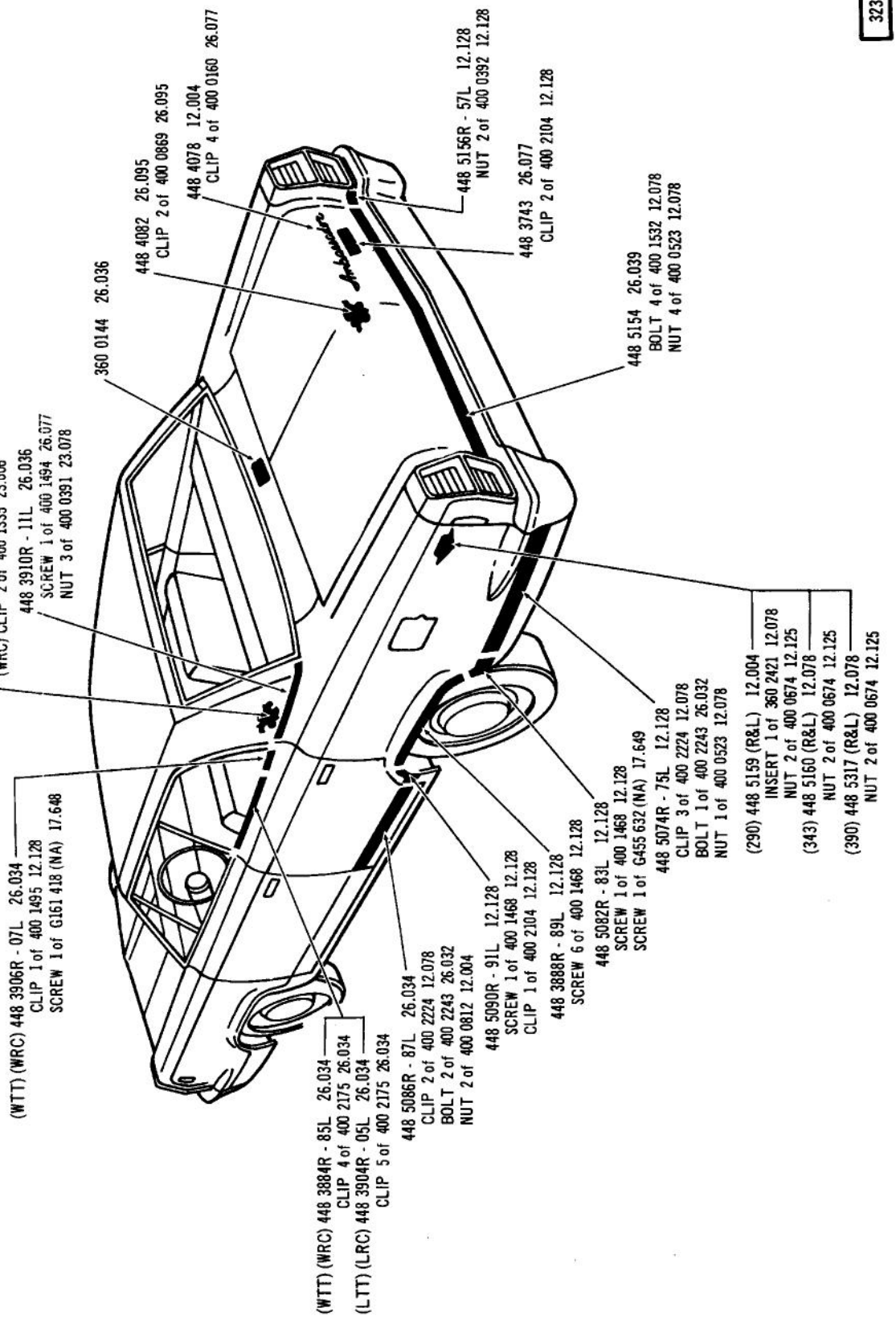

EXTERIOR ORNAMENTATION (REAR VIEW) ... 1968 (85-5)

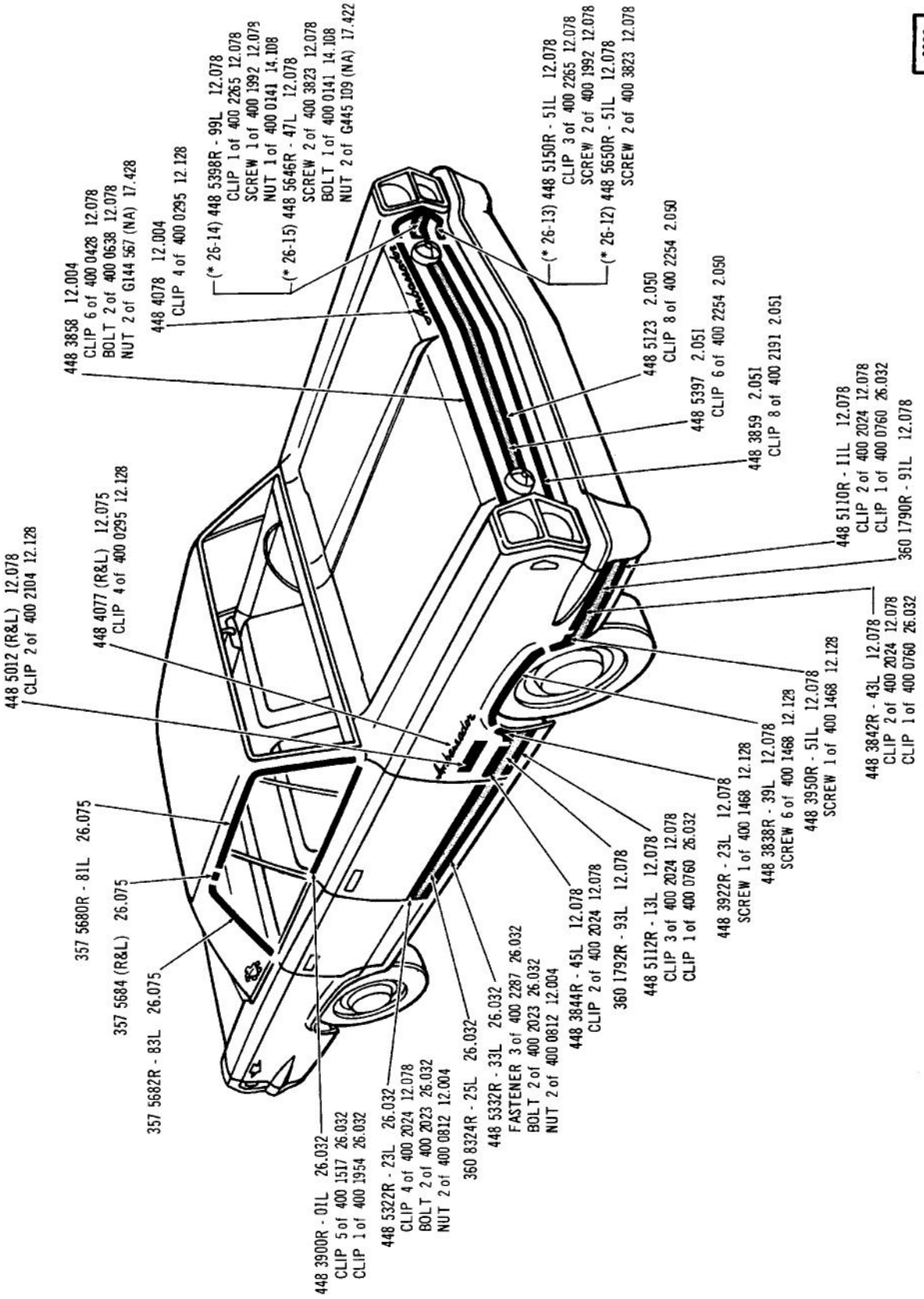

3238

EXTERIOR ORNAMENTATION (FRONT VIEW) ... 1968 (85-7)

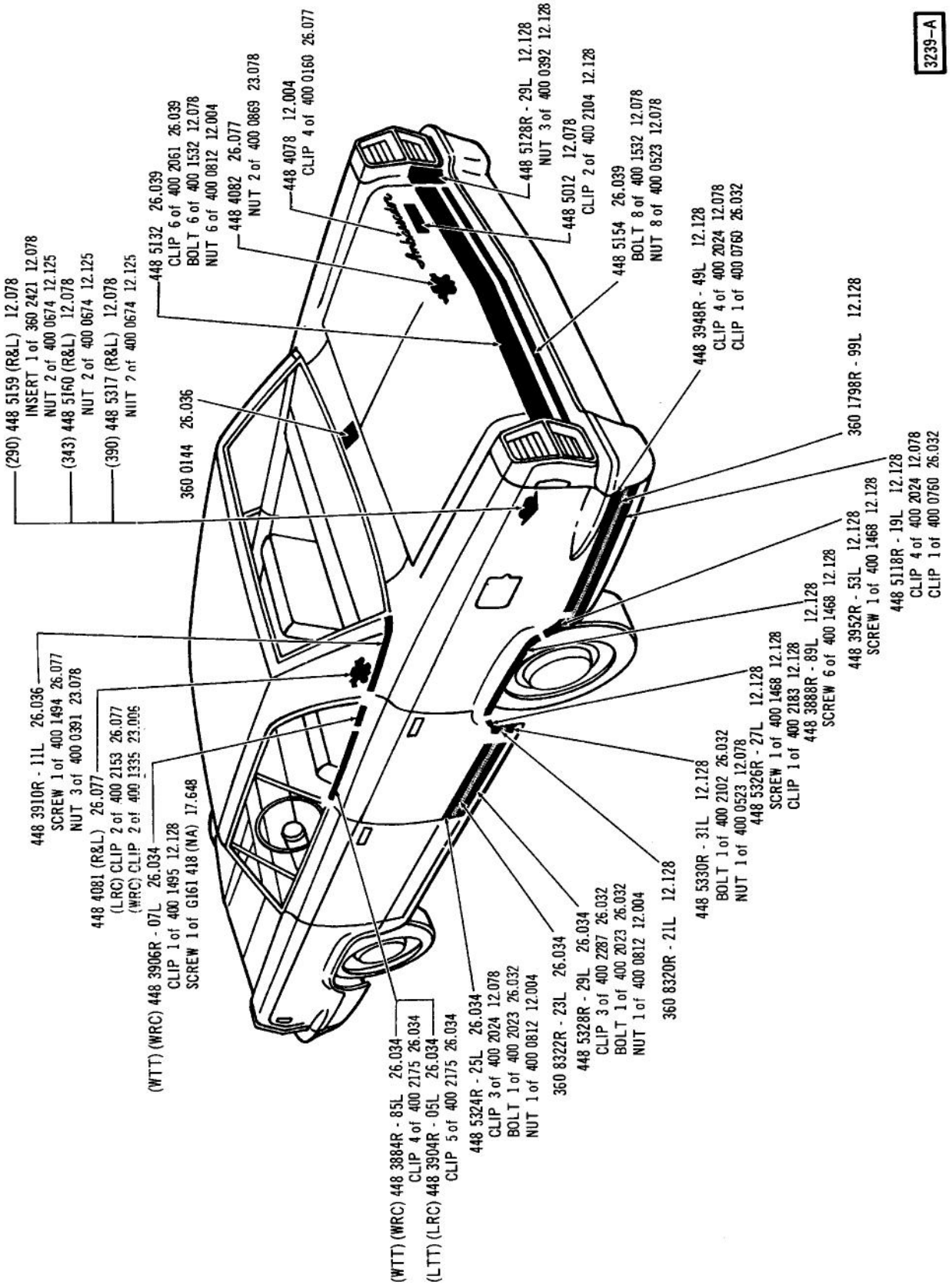

EXTERIOR ORNAMENTATION (REAR VIEW) ... 1968 (85-7)

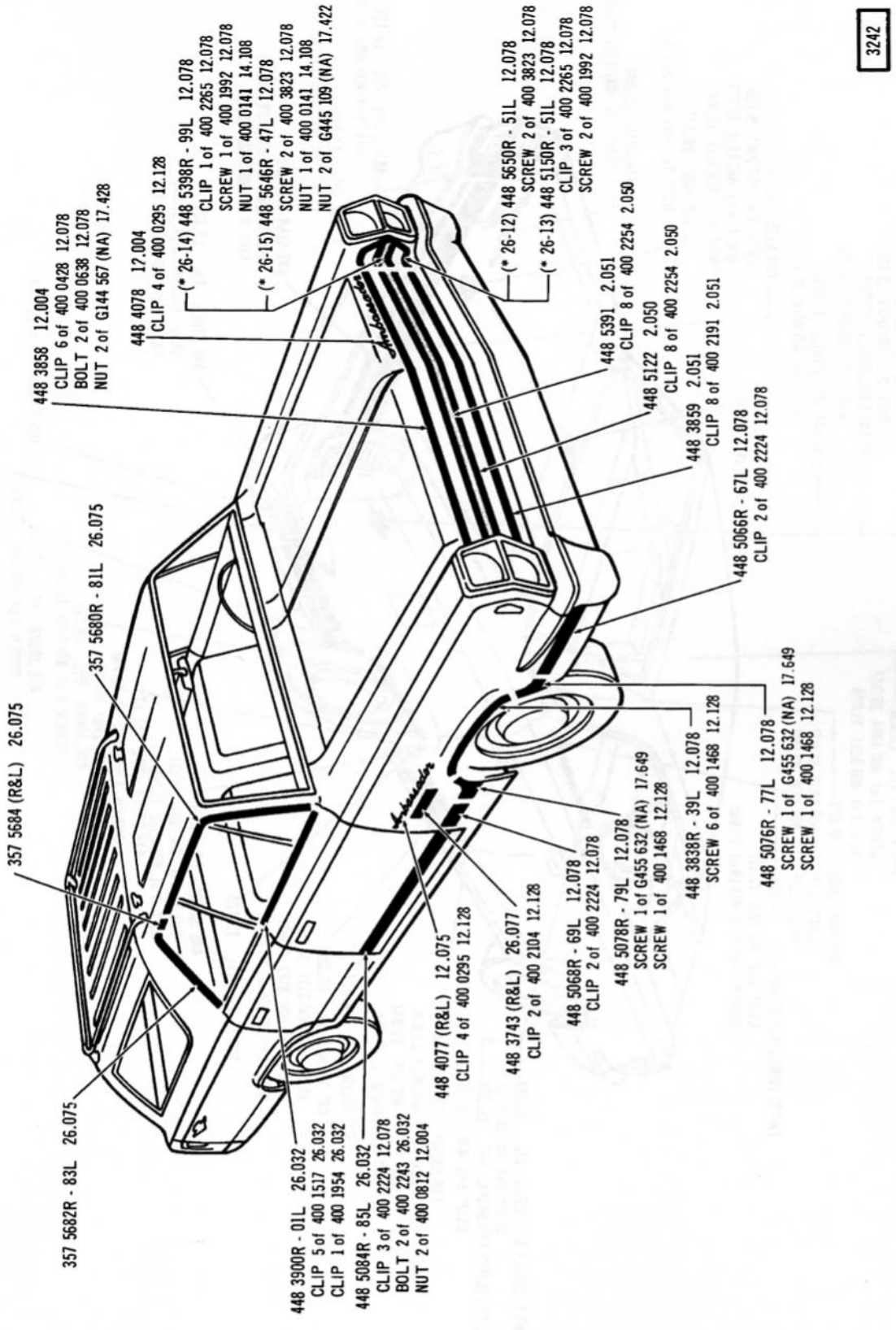

EXTERIOR ORNAMENTATION (FRONT VIEW) ... 1968 (88-LWO)(88-LTT)

3243

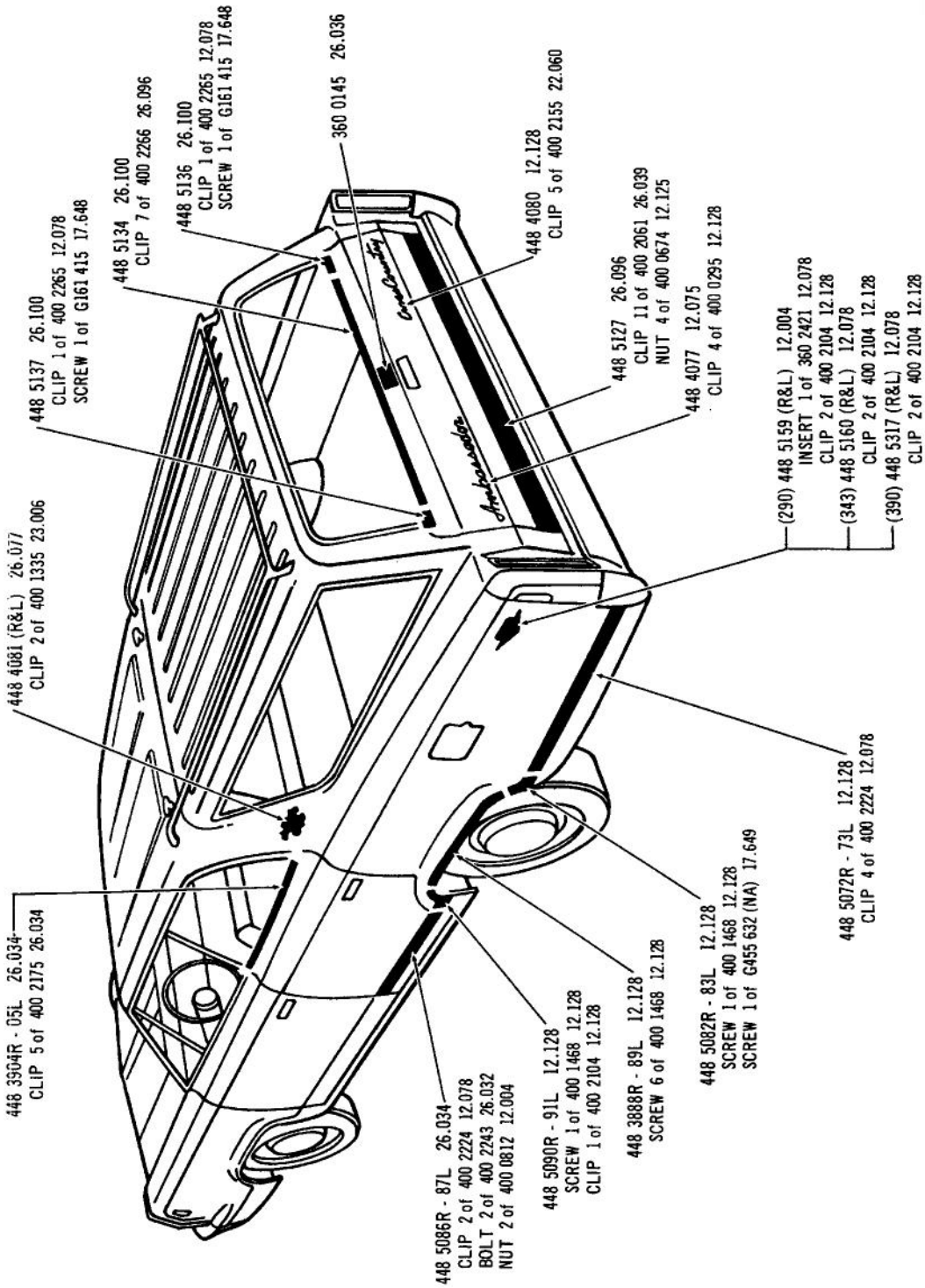

EXTERIOR ORNAMENTATION (REAR VIEW) ... 1968 (88-LWO)(88-LTT)

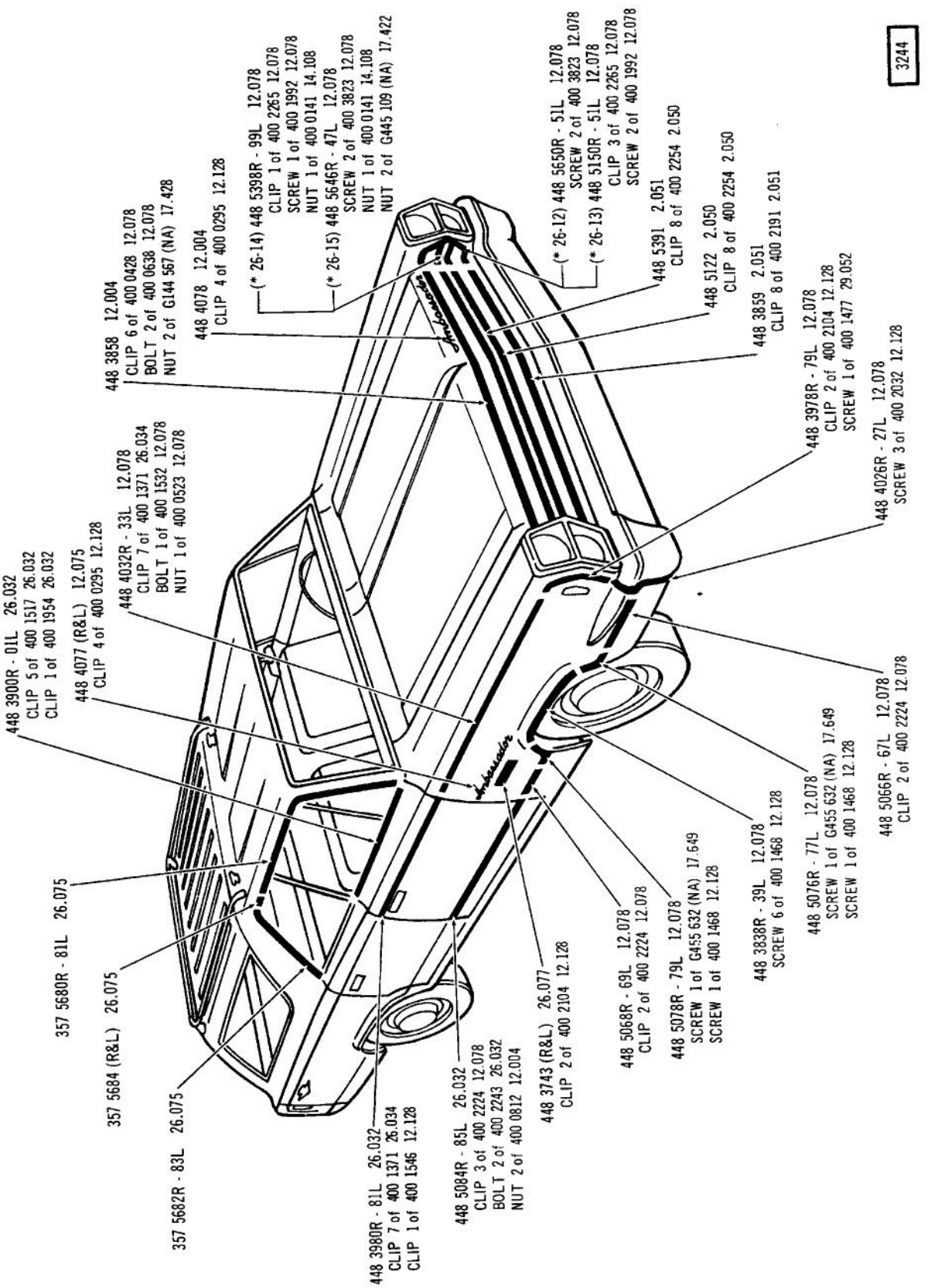

EXTERIOR ORNAMENTATION (FRONT VIEW) ... 1968 (88-WWO)(88-WTT)

3245

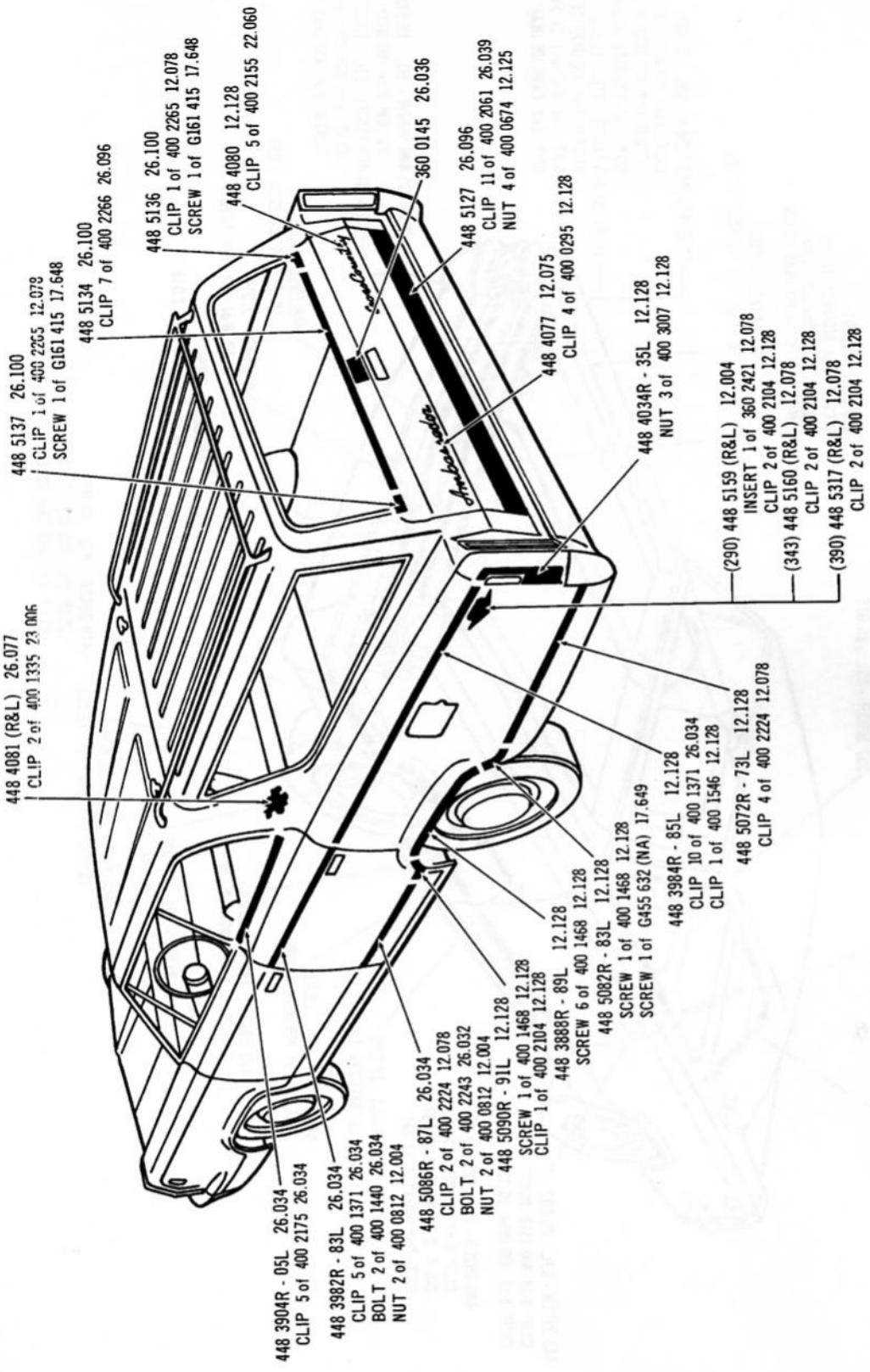

EXTERIOR ORNAMENTATION (REAR VIEW) ... 1968 (88-WWO)(88-WTT)

3391

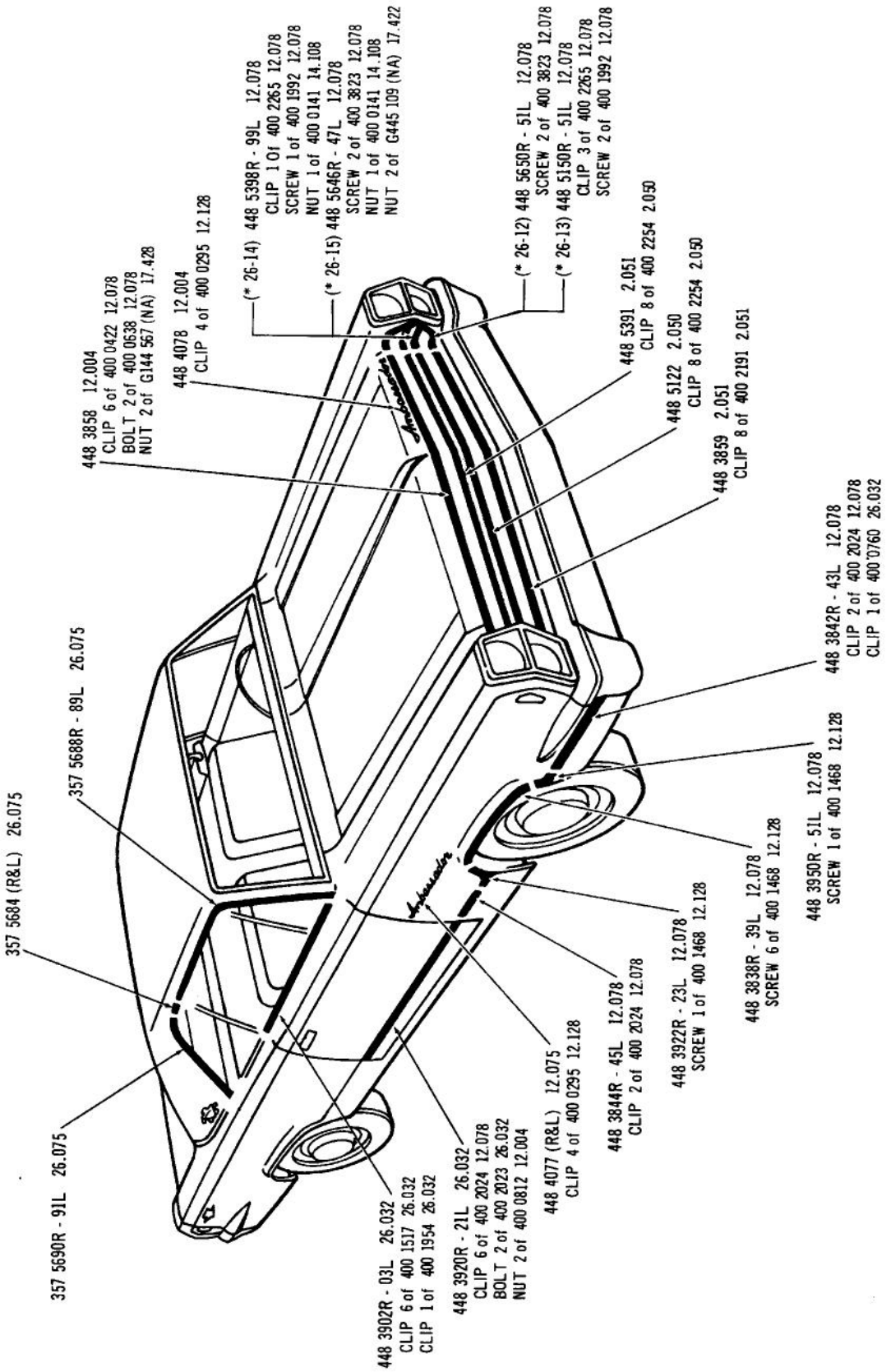

EXTERIOR ORNAMENTATION (FRONT VIEW) ... 1968 (89-2)

Printed in U.S.A.

3392

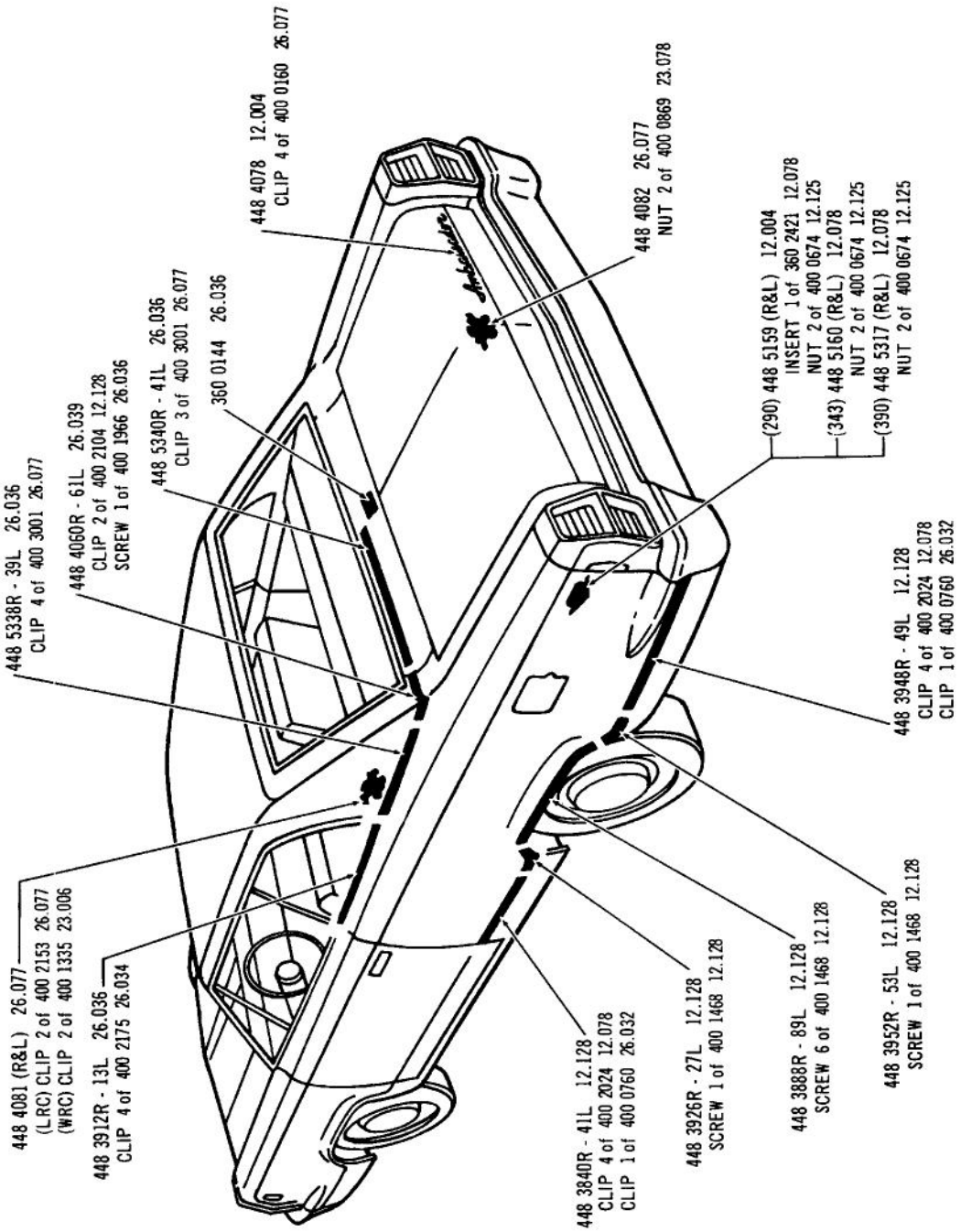

EXTERIOR ORNAMENTATION (REAR VIEW) ... 1968 (89-2)

3246

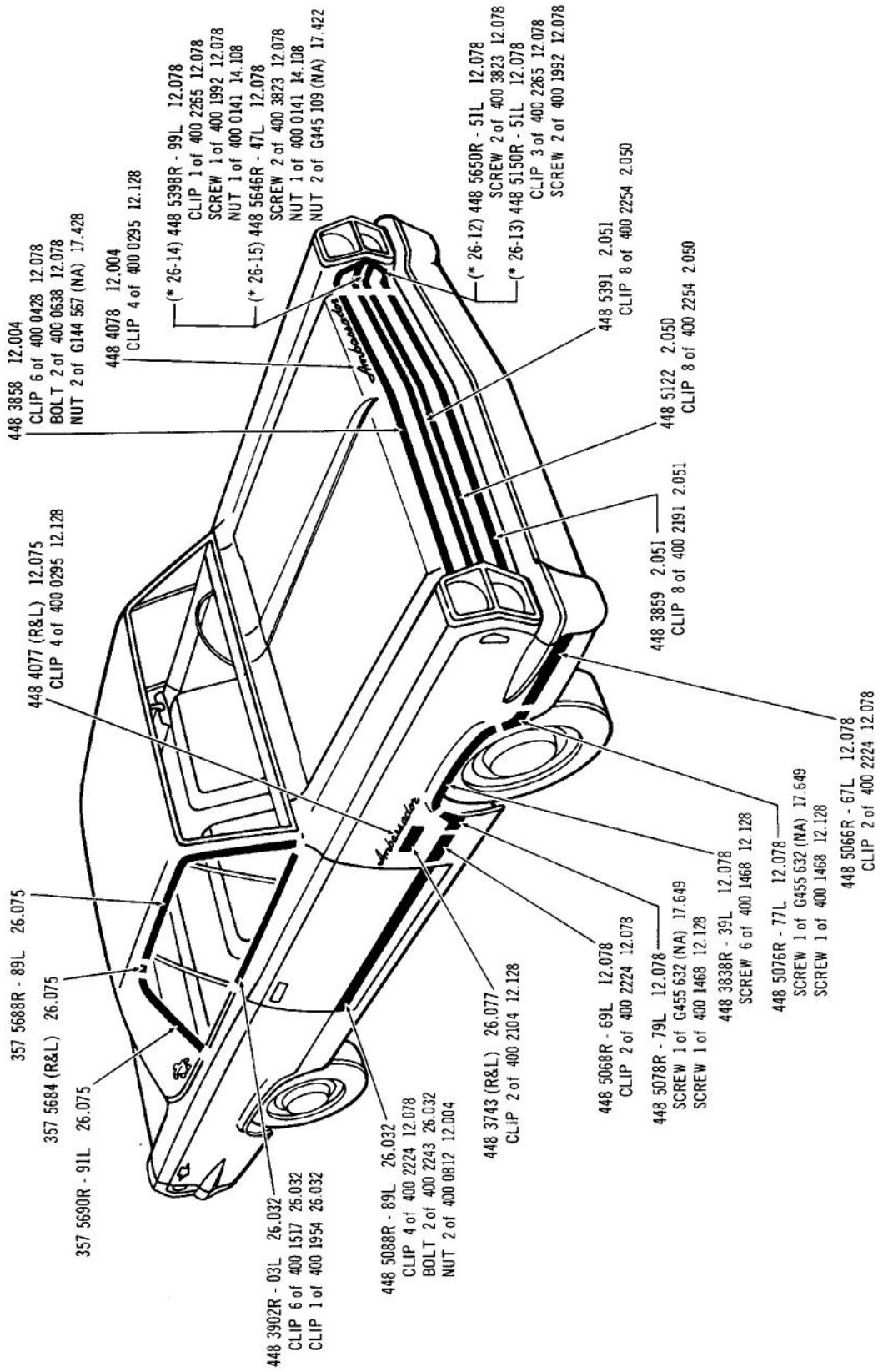

EXTERIOR ORNAMENTATION (FRONT VIEW) ... 1968 (89-5)

3247

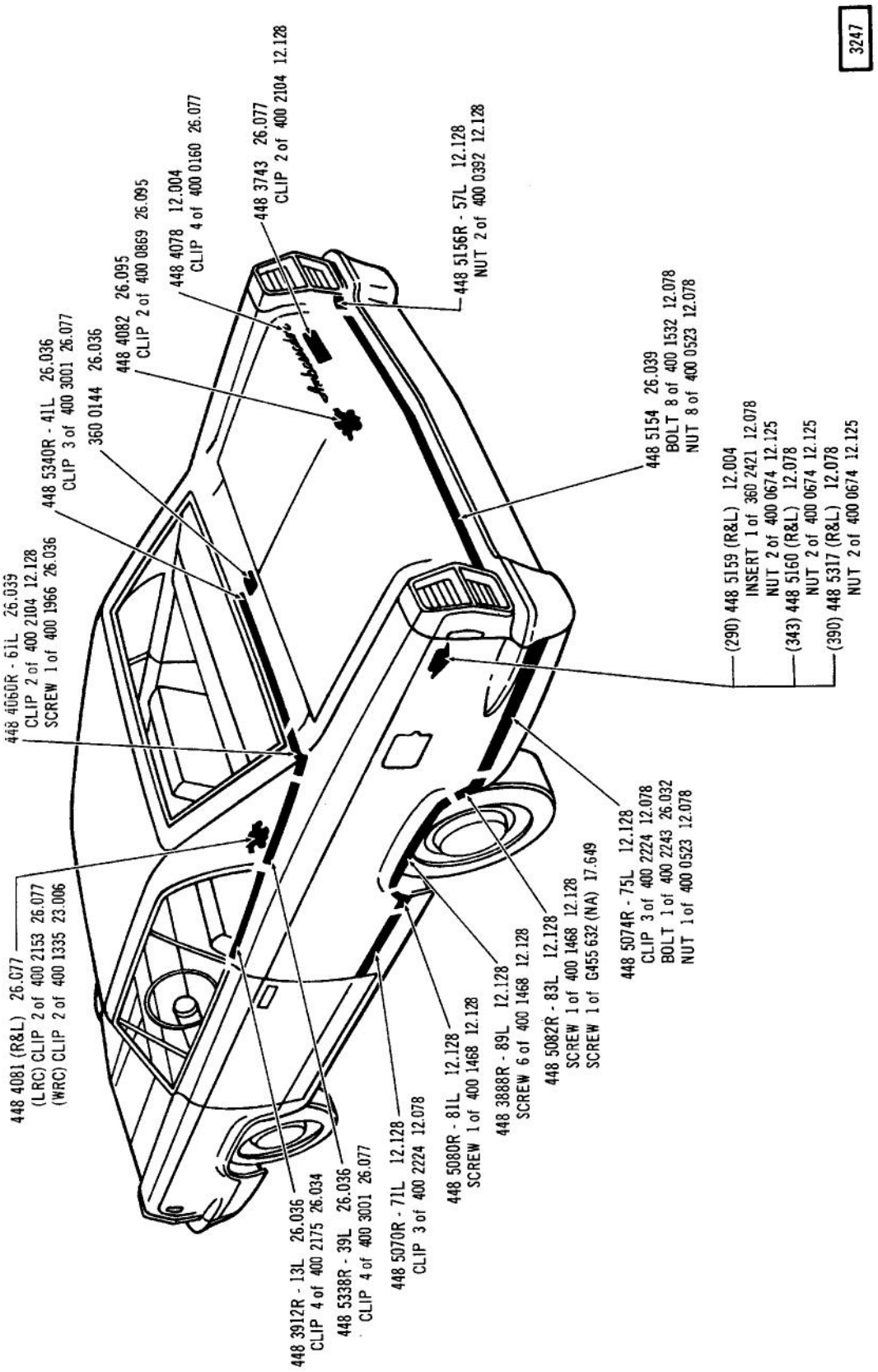

EXTERIOR ORNAMENTATION (REAR VIEW) ... 1968 (89-5)

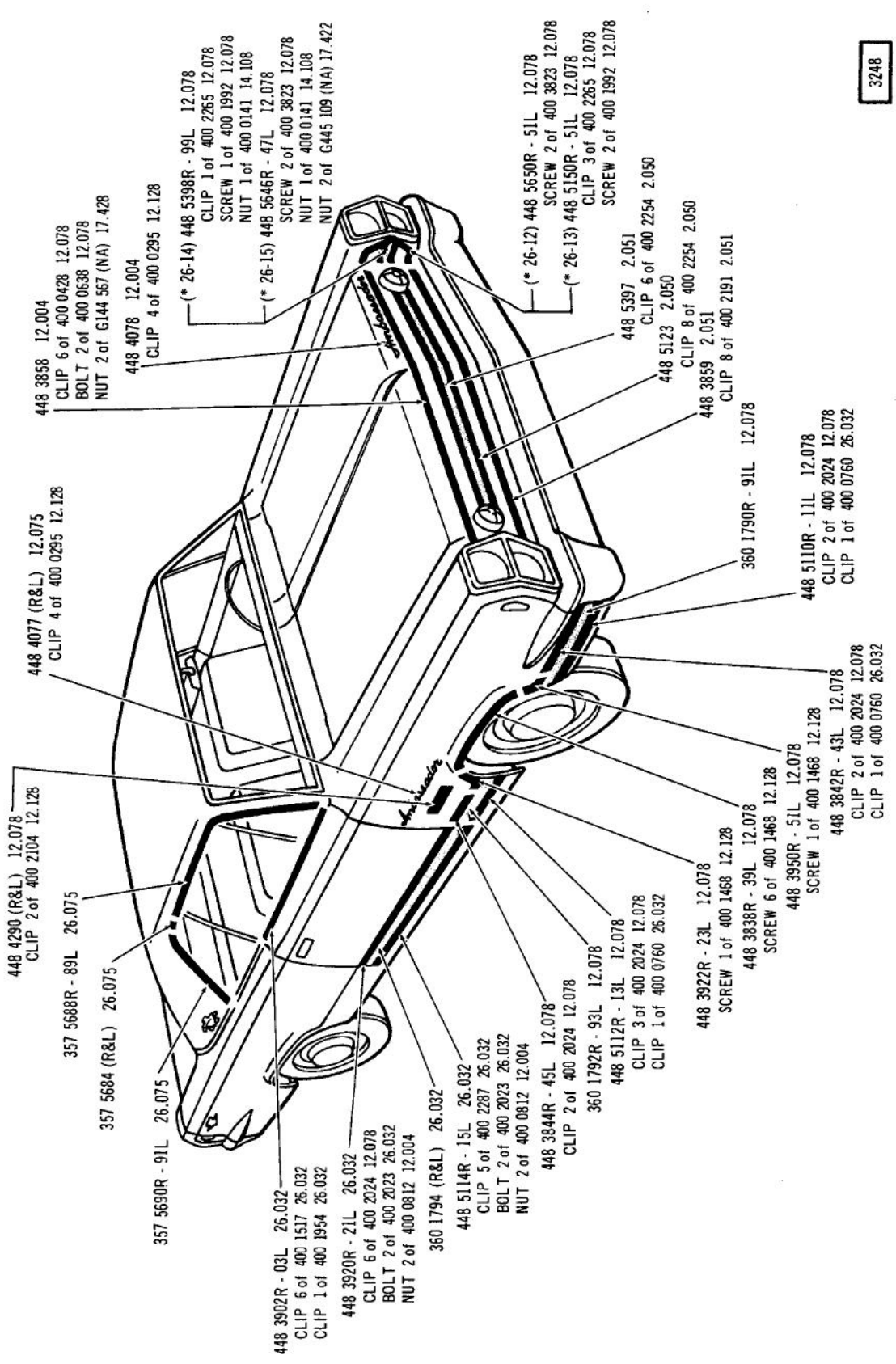

EXTERIOR ORNAMENTATION (FRONT VIEW) ... 1968 (89-7)

3249

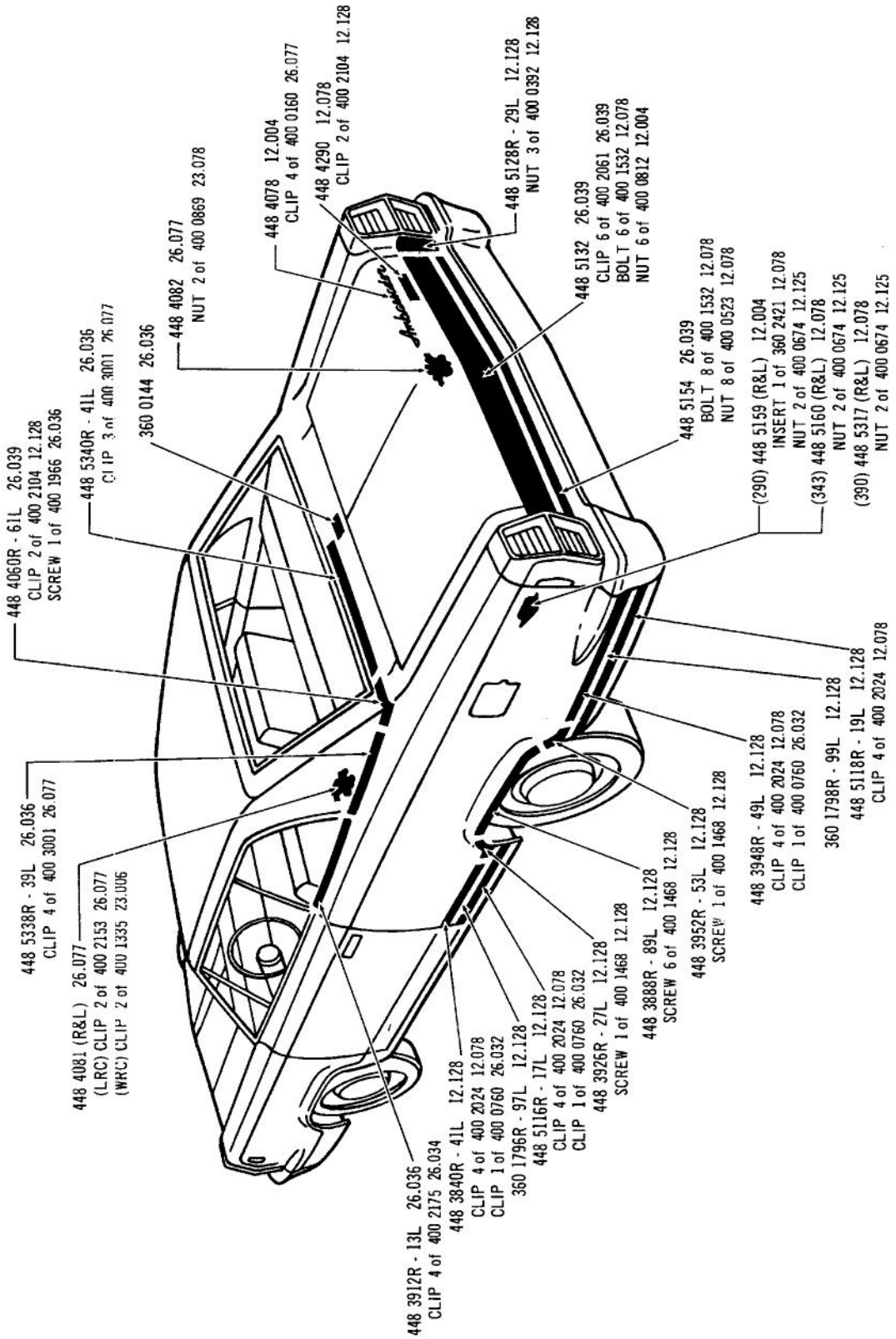

EXTERIOR ORNAMENTATION (REAR VIEW) ... 1968 (89-7)

3491-A

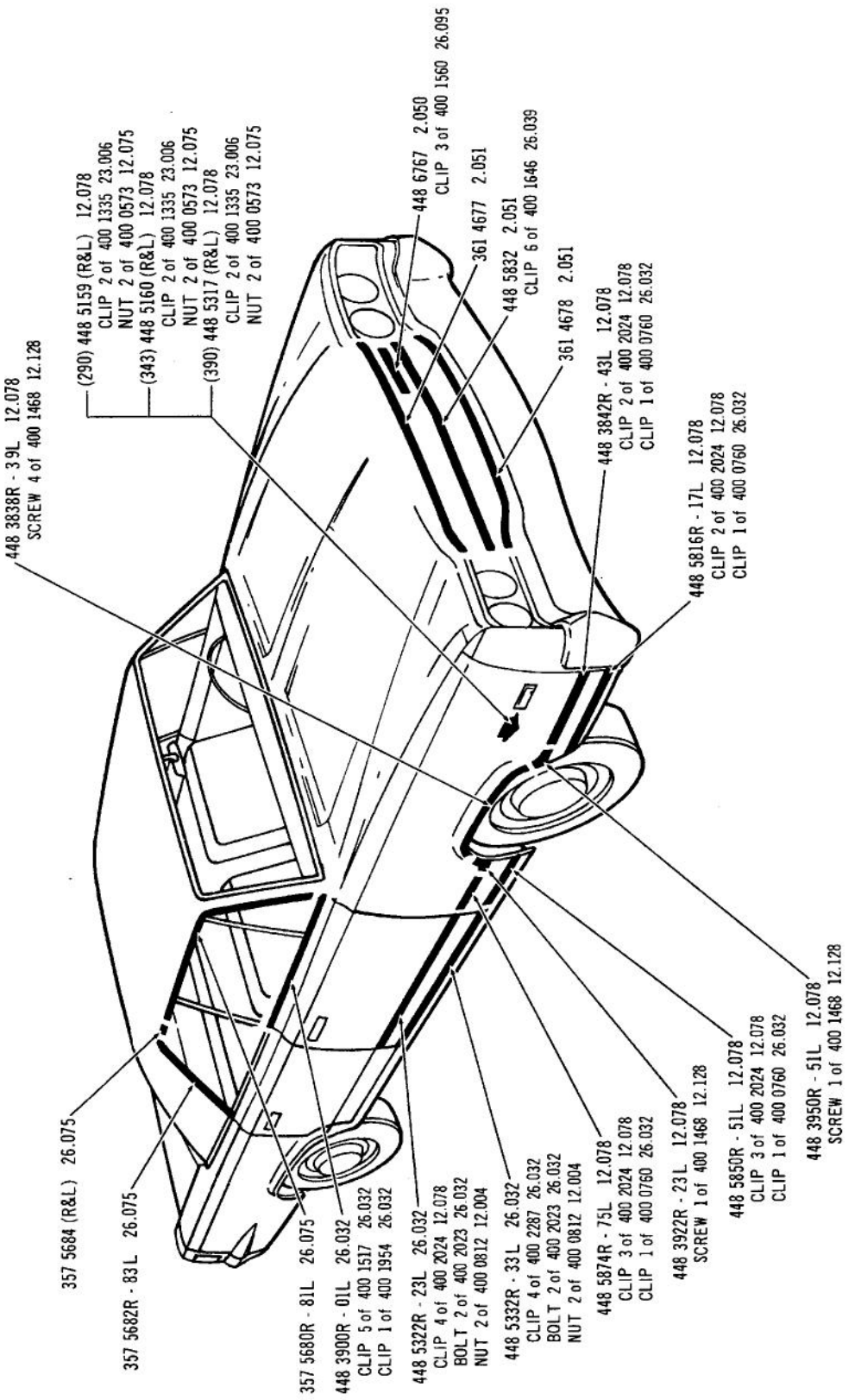

EXTERIOR ORNAMENTATION (FRONT VIEW) ... 1969 (85-2)(85-5)

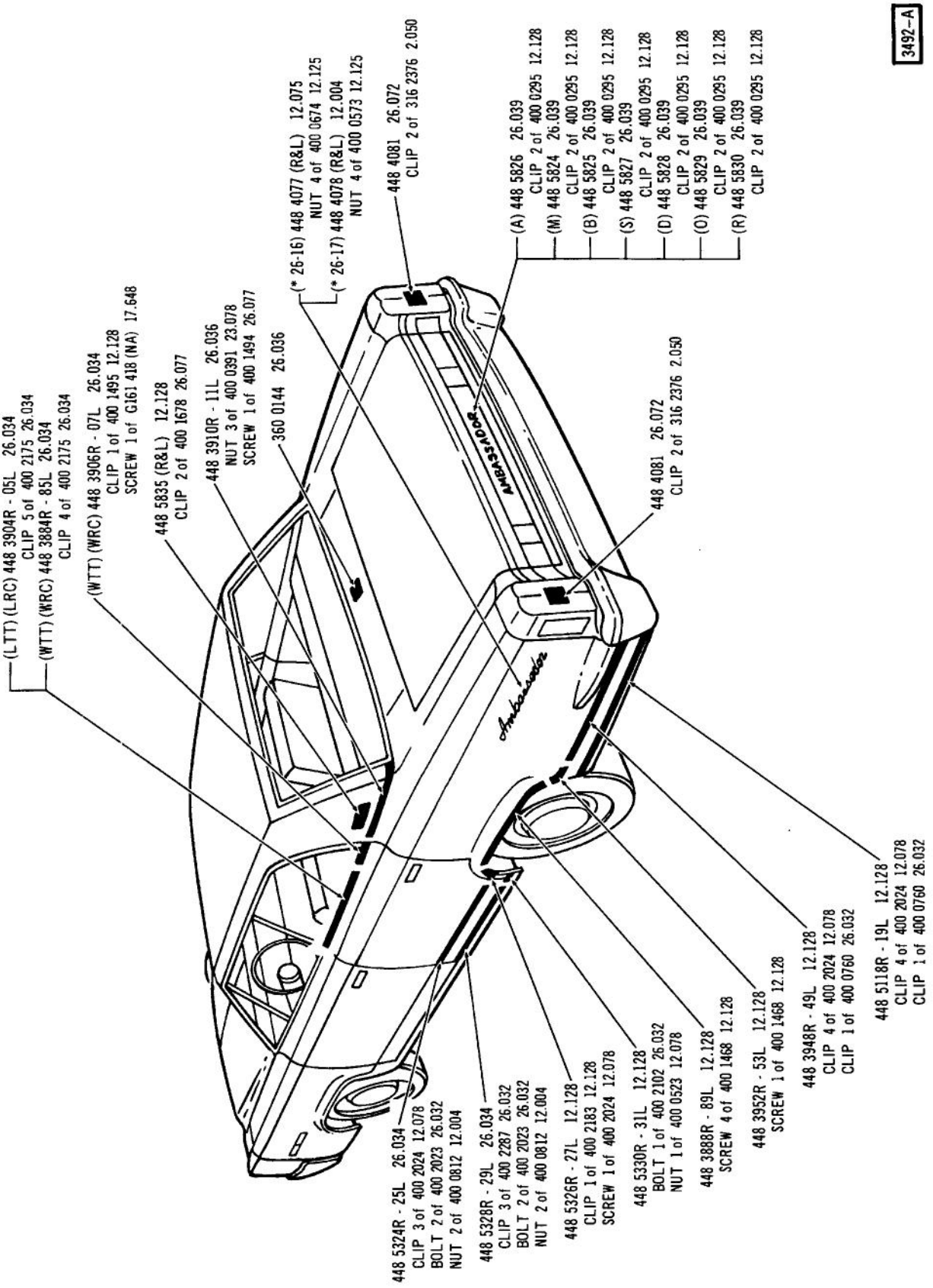

EXTERIOR ORNAMENTATION (REAR VIEW) ... 1969 (85-2)(85-5)

3493-A

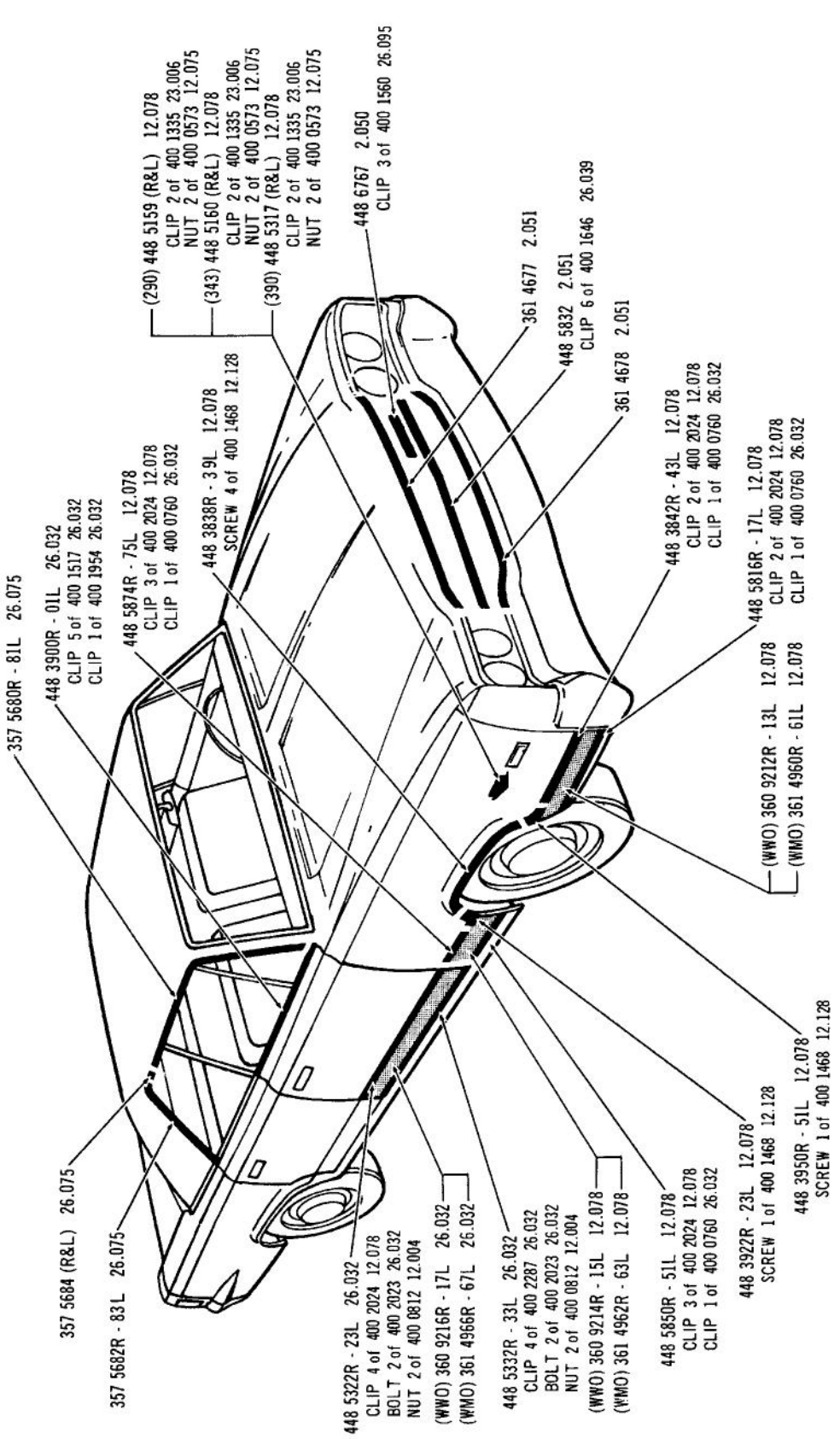

EXTERIOR ORNAMENTATION (FRONT VIEW) ... 1969 (85-7)

3494-A

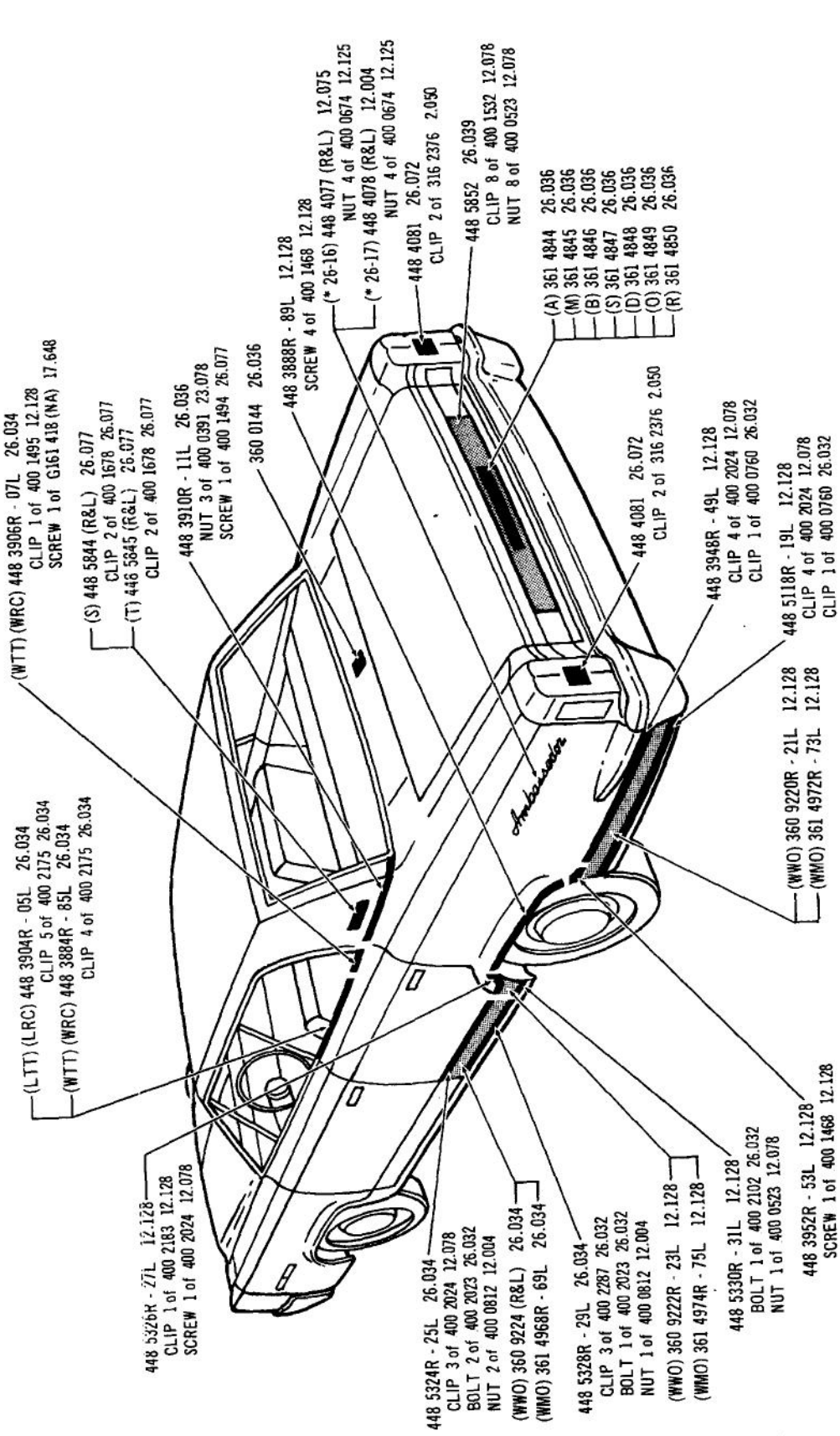

EXTERIOR ORNAMENTATION (REAR VIEW) ... 1969 (85-7)

3495-A

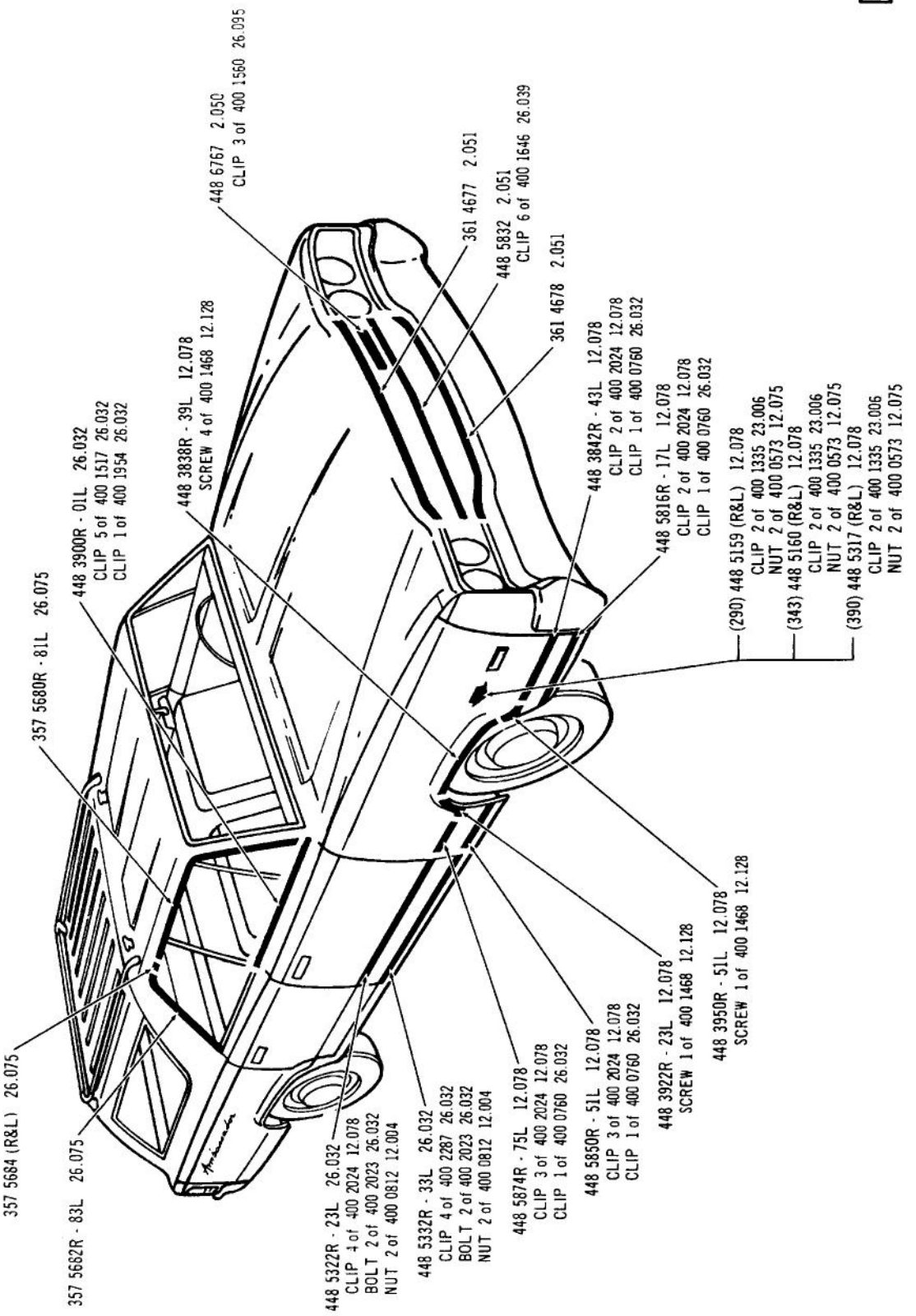

EXTERIOR ORNAMENTATION (FRONT VIEW) ... 1969 (88-LWO)(88-LTT)

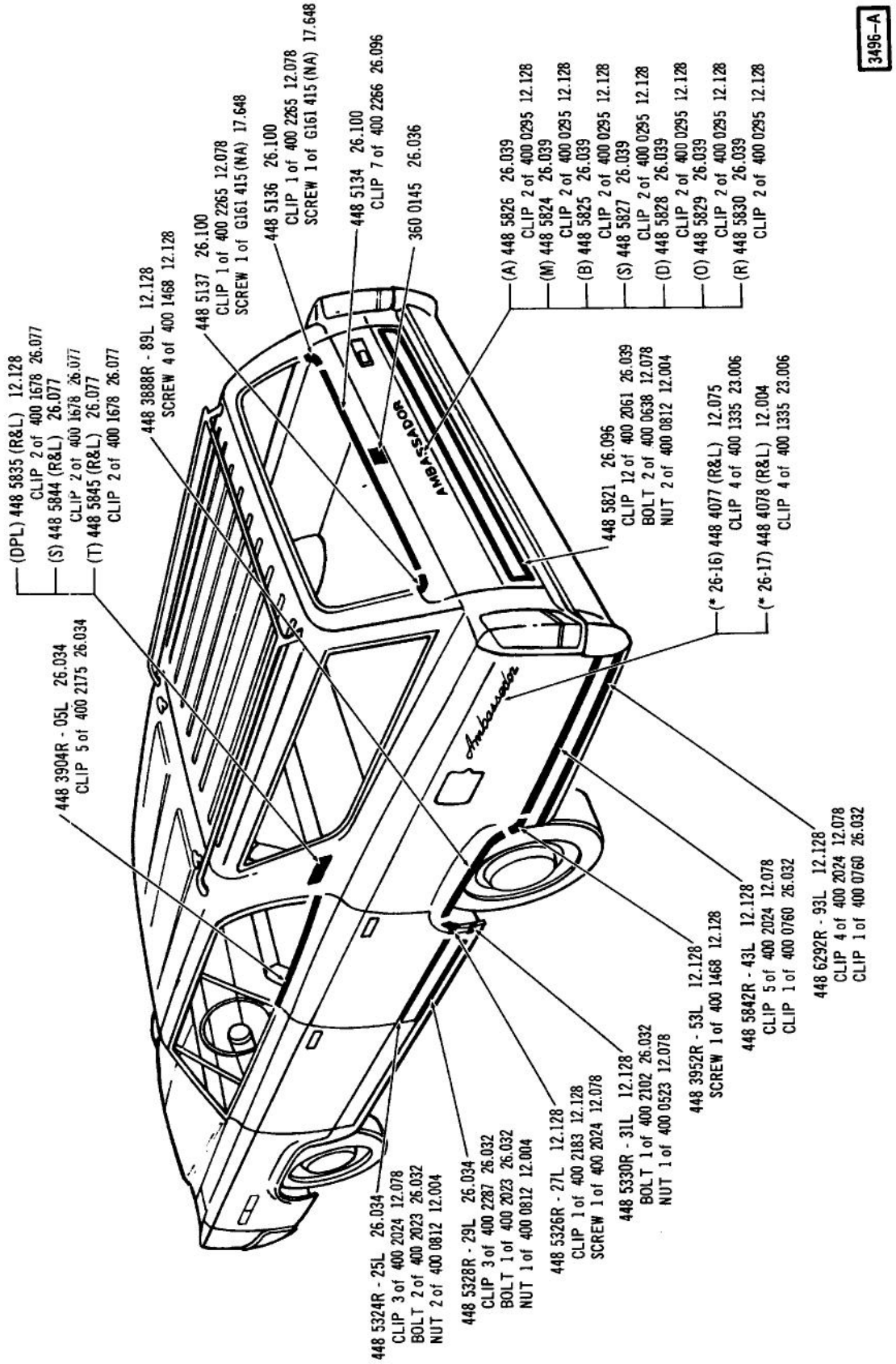

EXTERIOR ORNAMENTATION (REAR VIEW) ... 1969 (88-LWO)(88-LTT)

3497-A

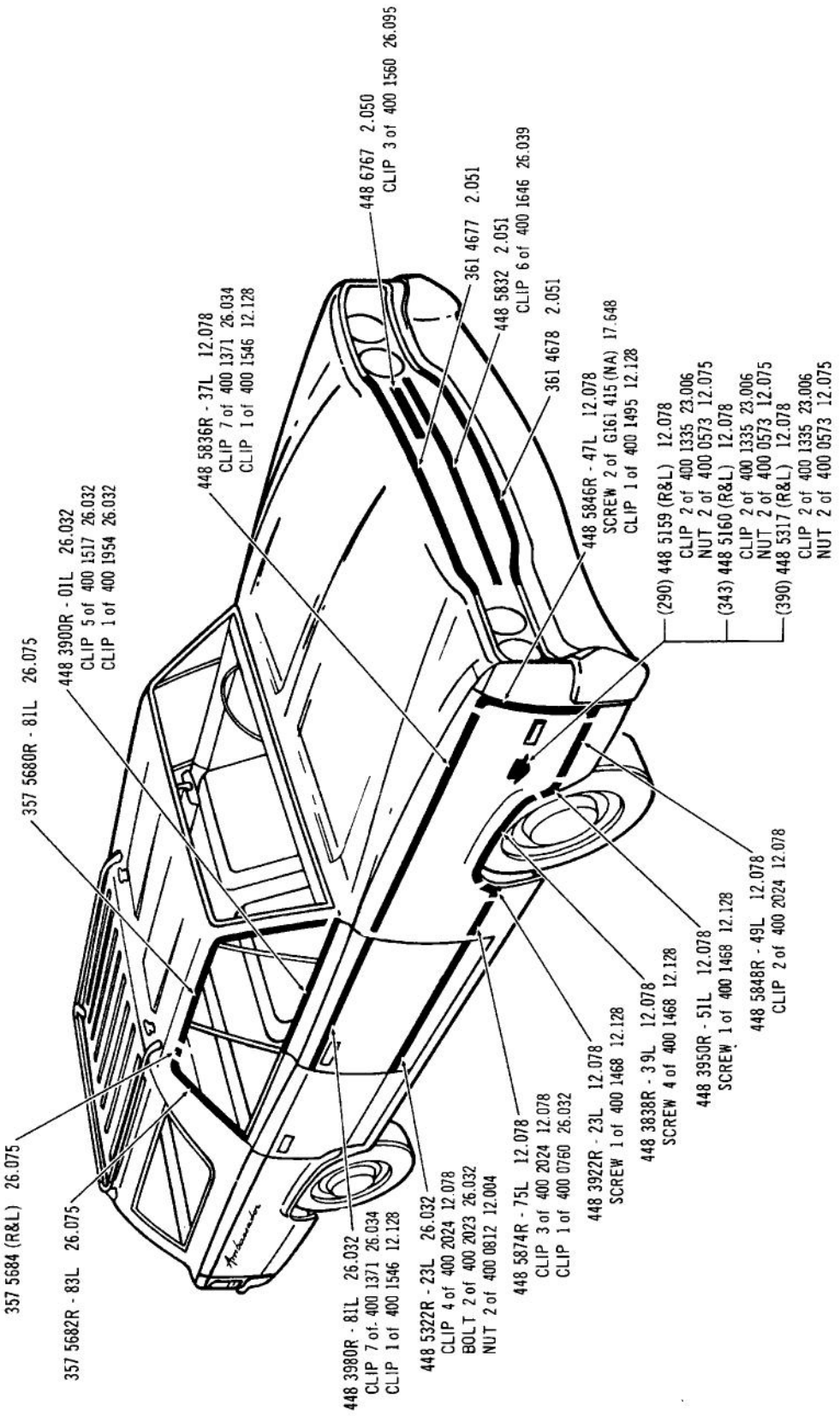

EXTERIOR ORNAMENTATION (FRONT VIEW) ... 1969 (88-WWO)(88-WTT)

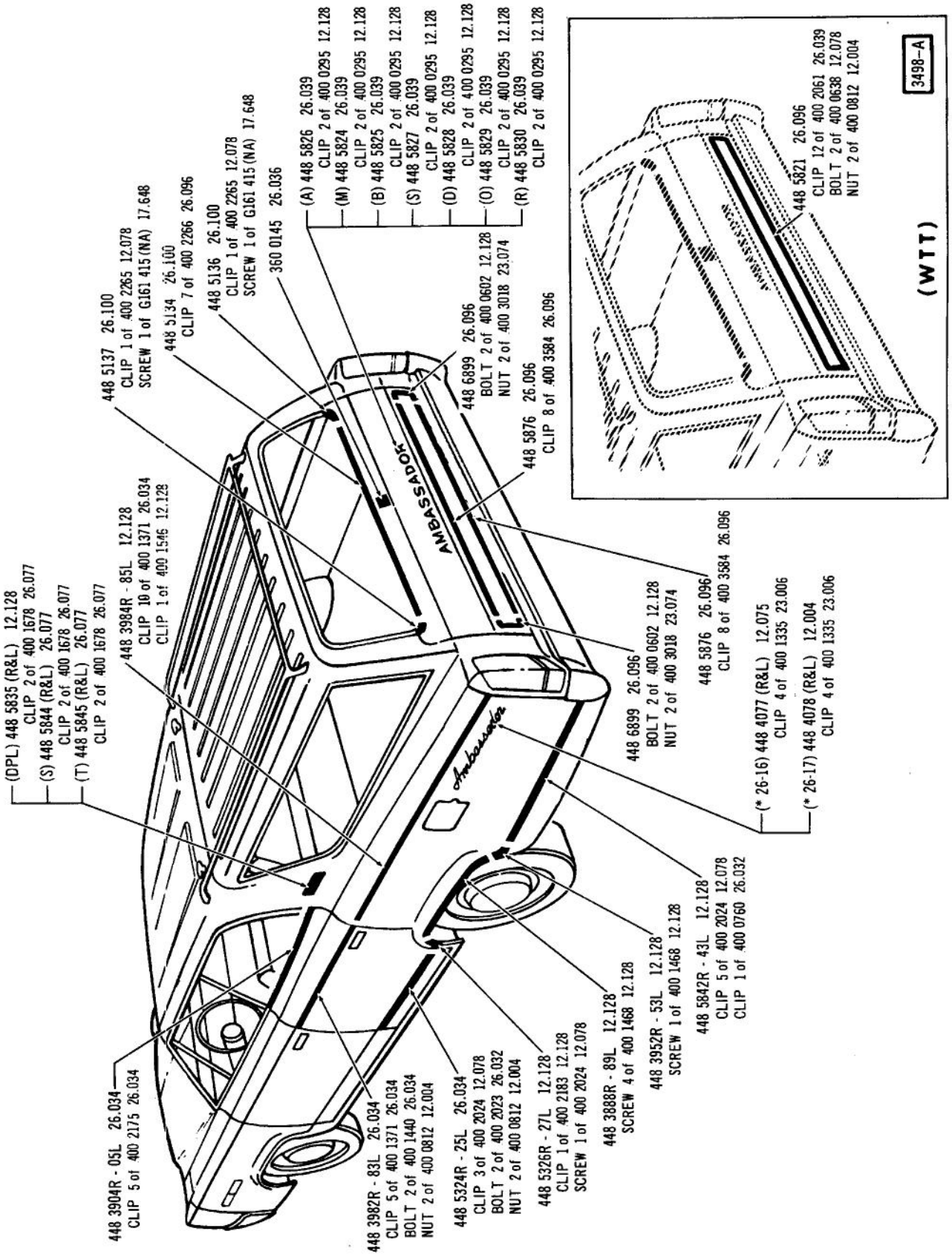

EXTERIOR ORNAMENTATION (REAR VIEW) ... 1969 (88-WWO)(88-WTT)

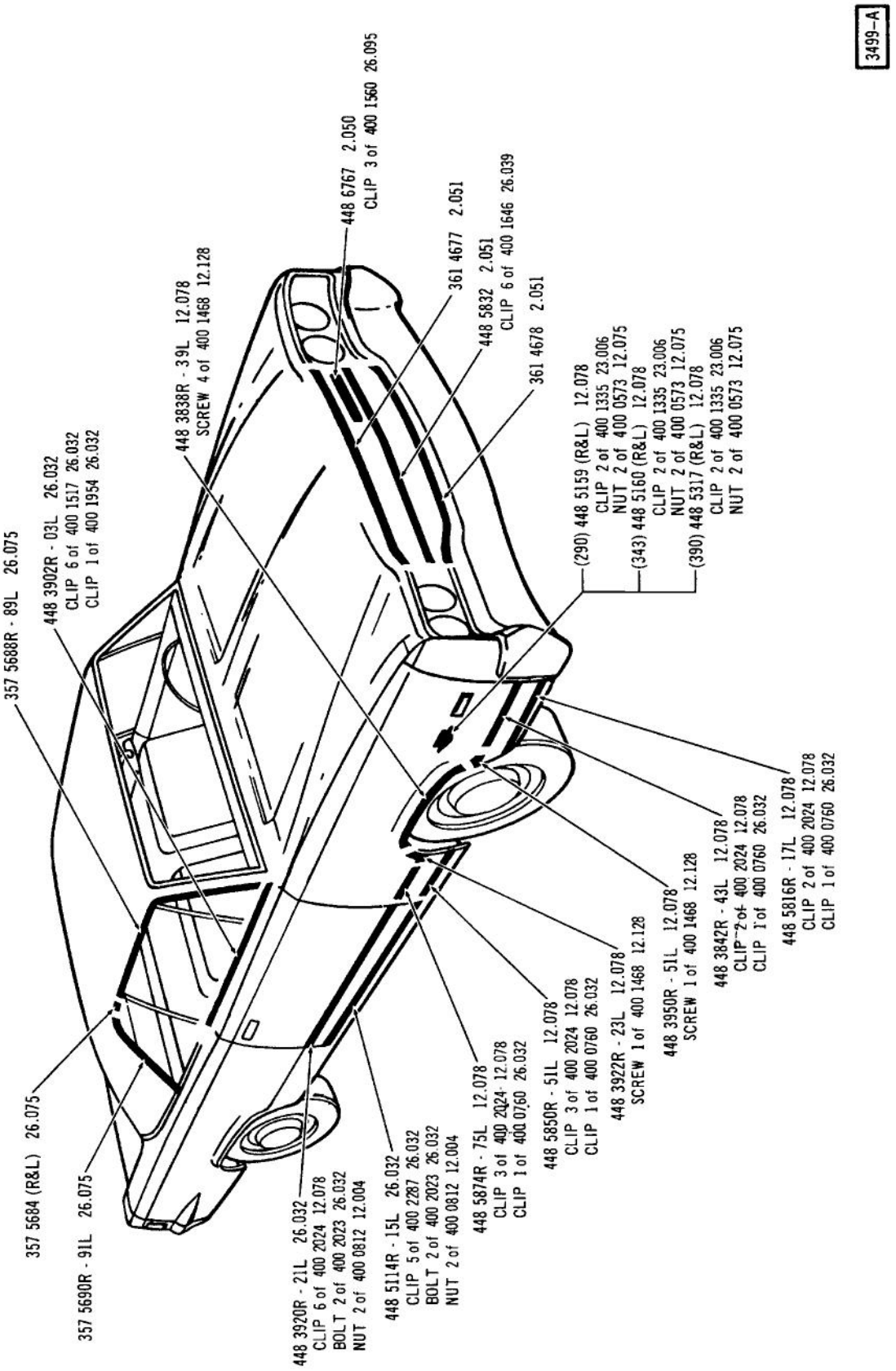

EXTERIOR ORNAMENTATION (FRONT VIEW) ... 1969 (89-2)(89-5)

3500-A

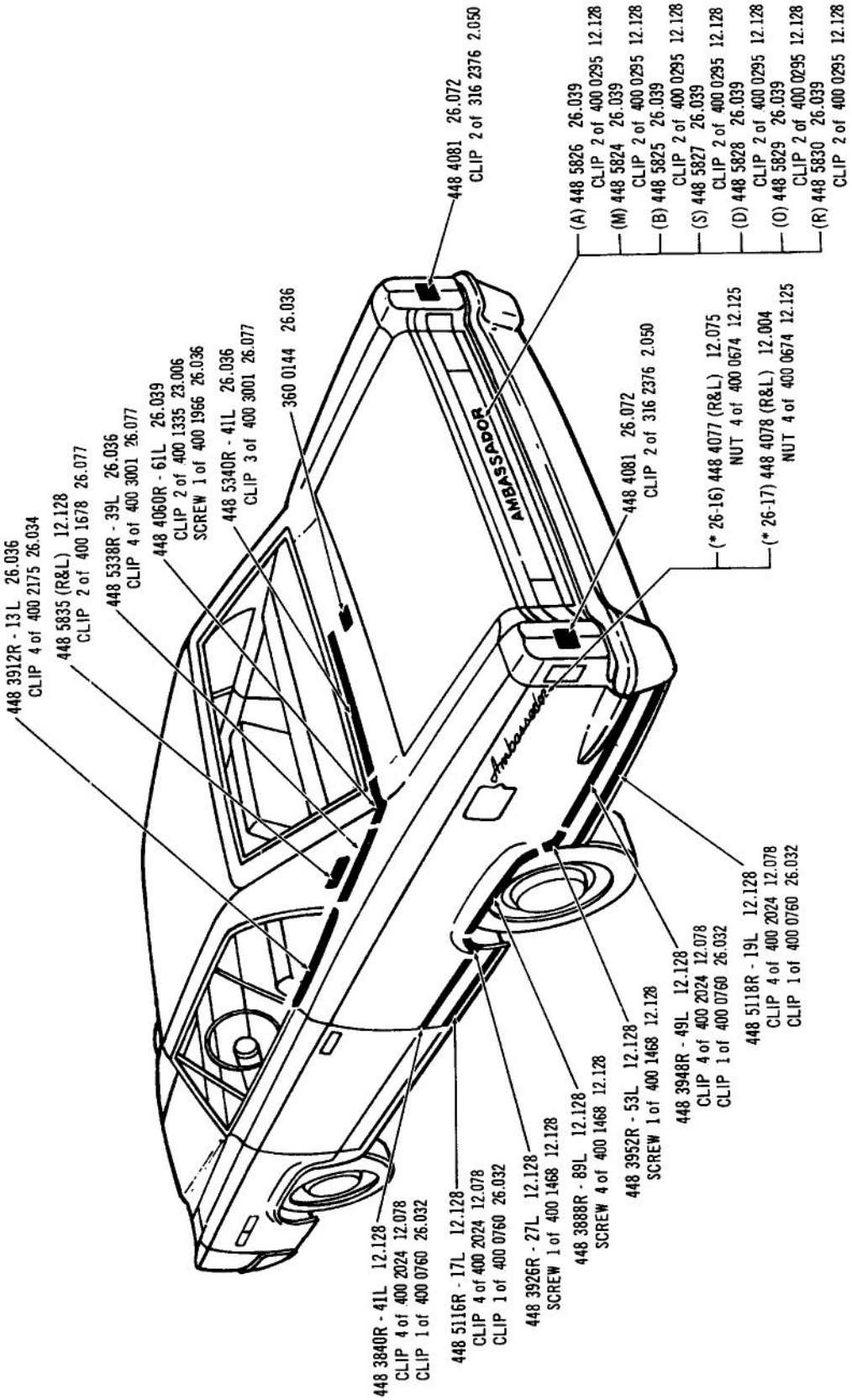

EXTERIOR ORNAMENTATION (REAR VIEW) ... 1969 (89-2)(89-5)

3501-A

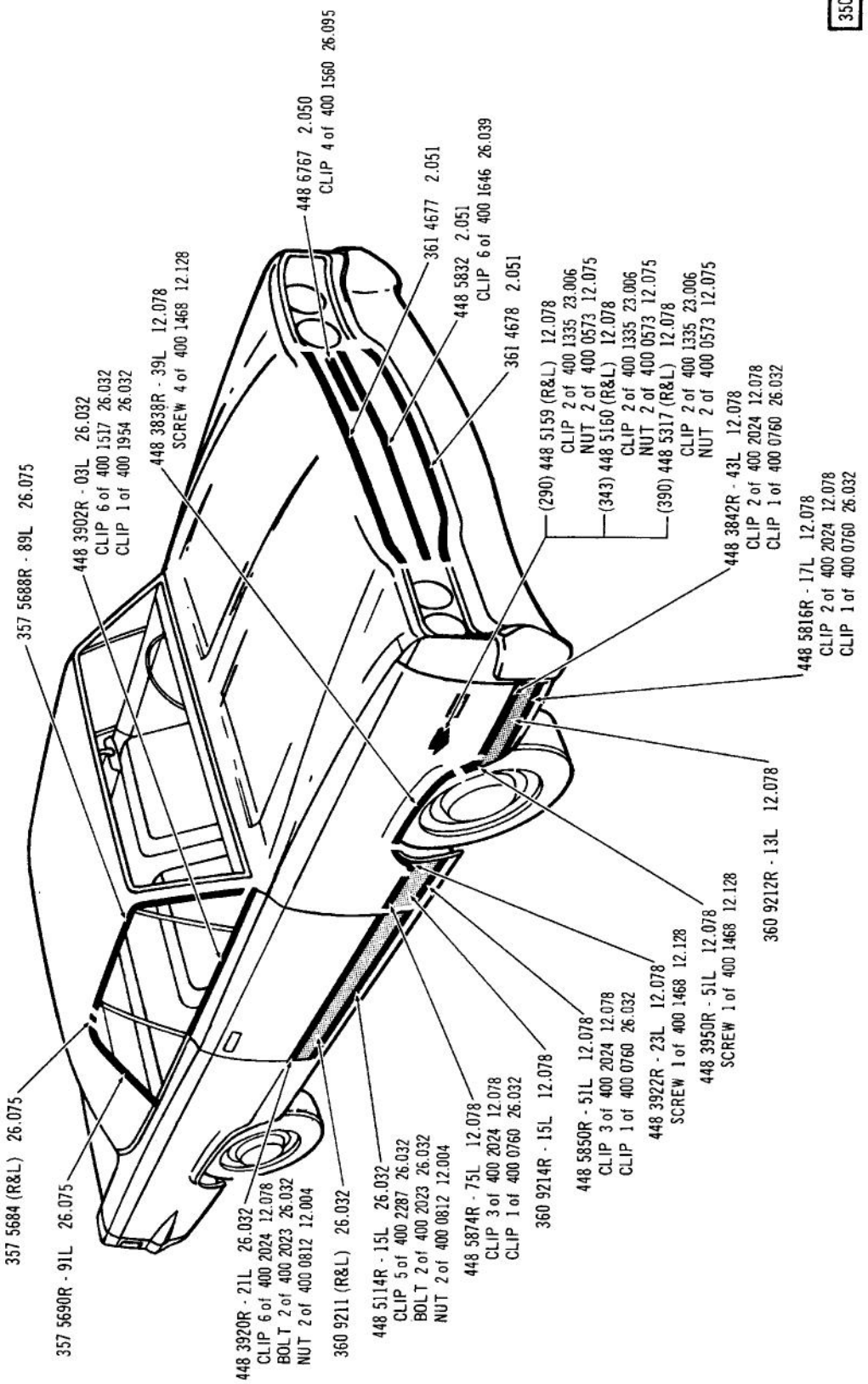

EXTERIOR ORNAMENTATION (FRONT VIEW) ... 1969 (89-7)

Printed in U.S.A.

3502-A

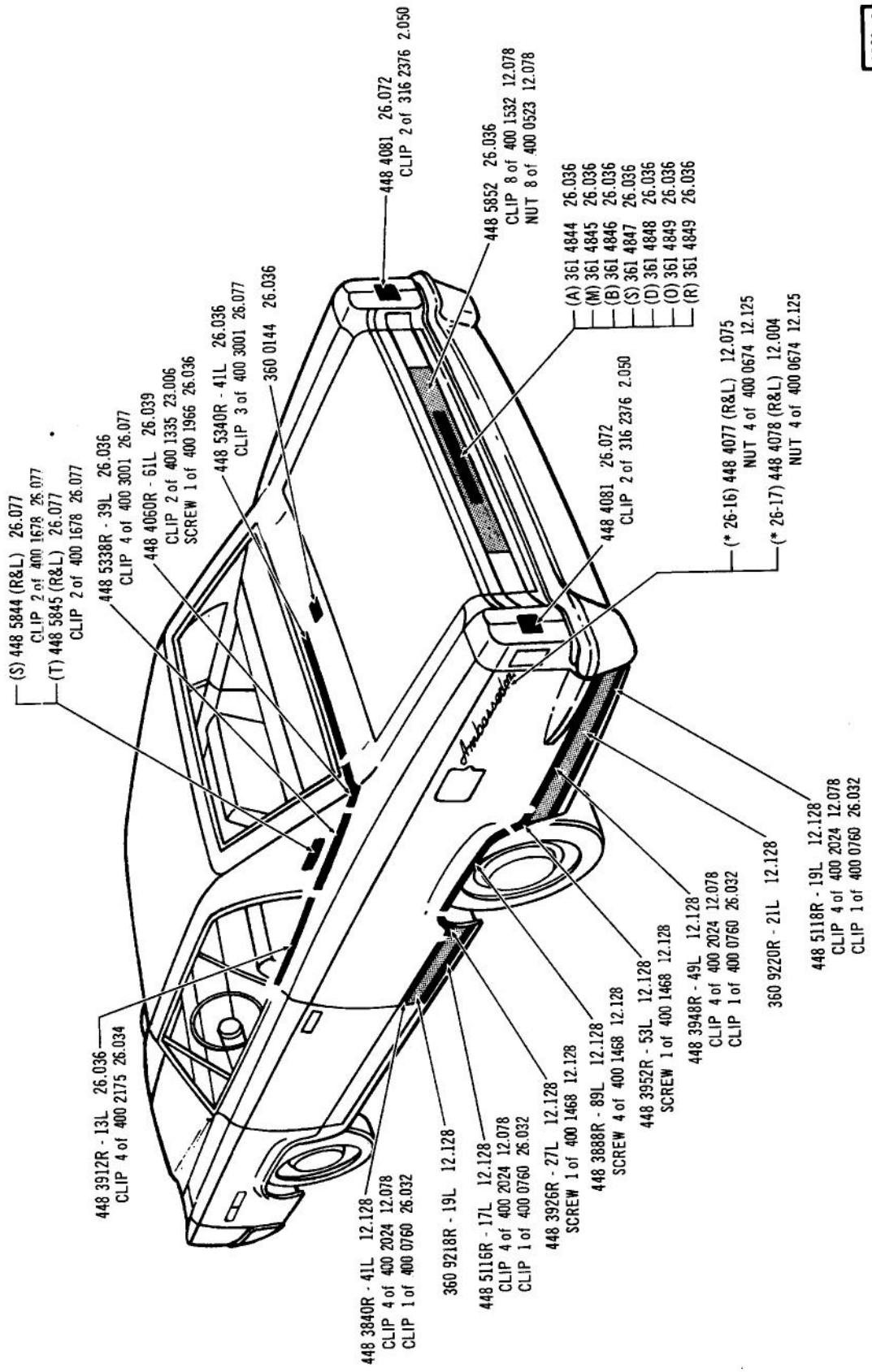

EXTERIOR ORNAMENTATION (REAR VIEW) ... 1969 (89-7)

3888

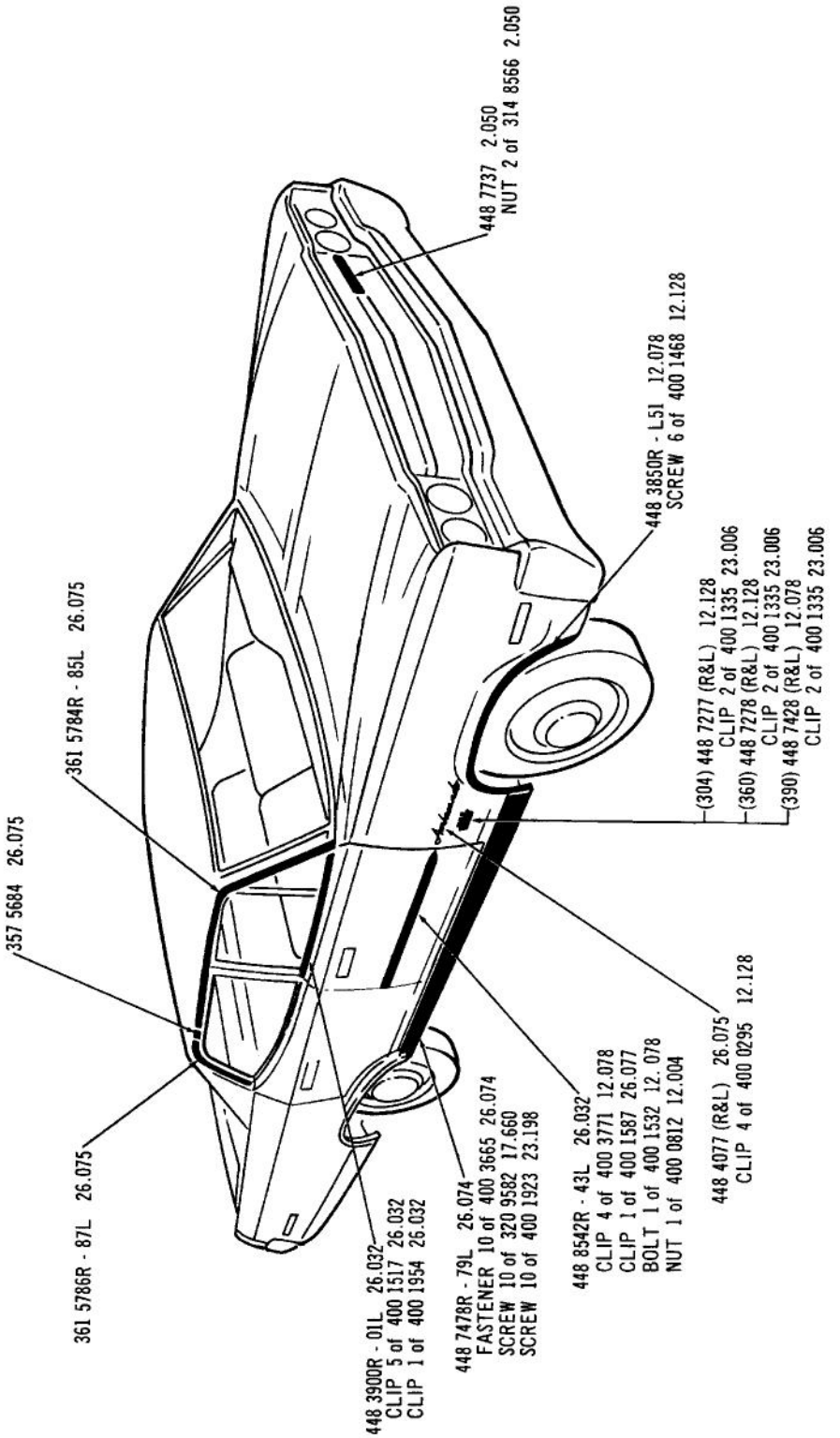

EXTERIOR ORNAMENTATION (FRONT VIEW) ... 1970 (85-2)(85-5)

Printed in U.S.A.

3889

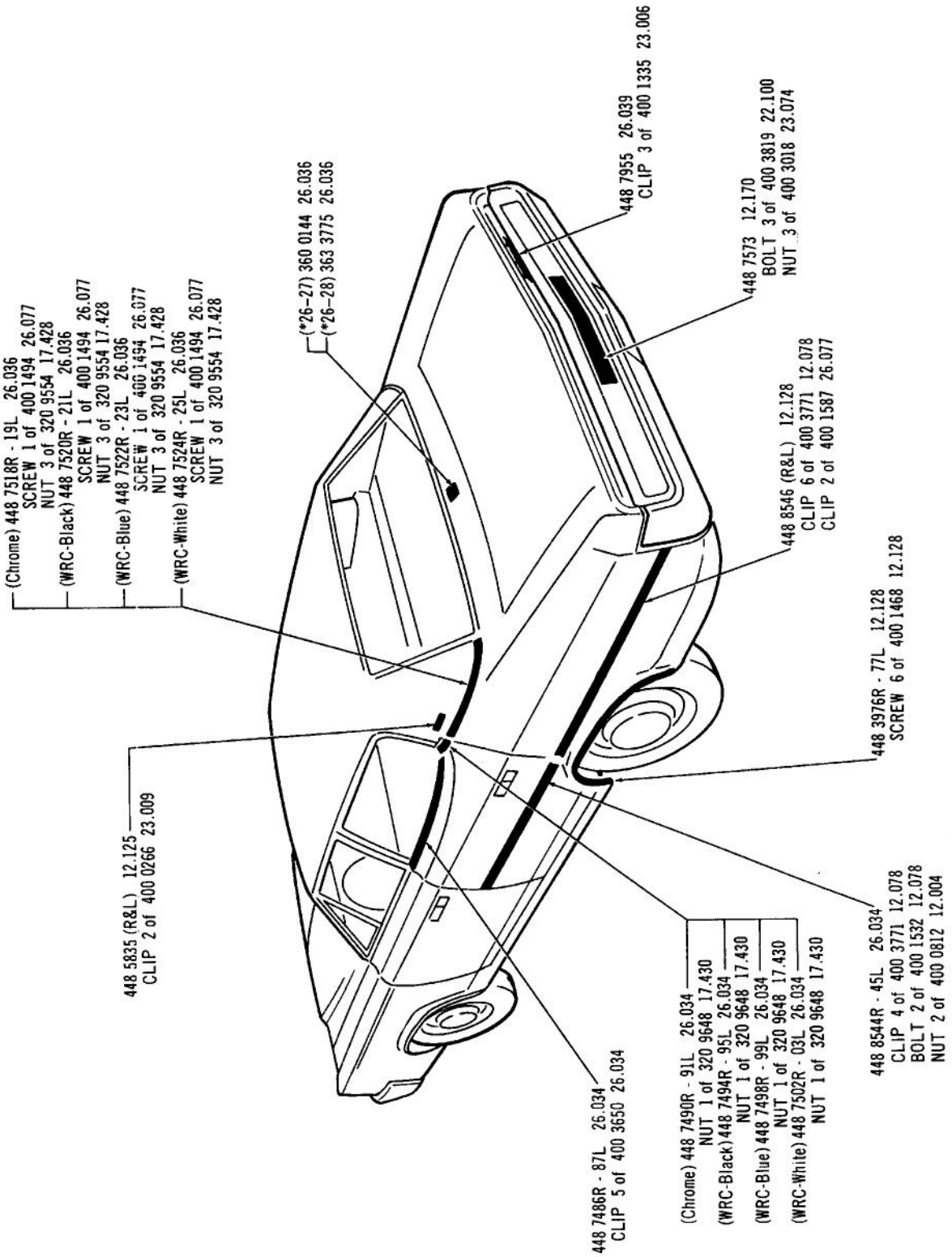

EXTERIOR ORNAMENTATION (REAR VIEW) ... 1970 (85-2)(85-5)

3890

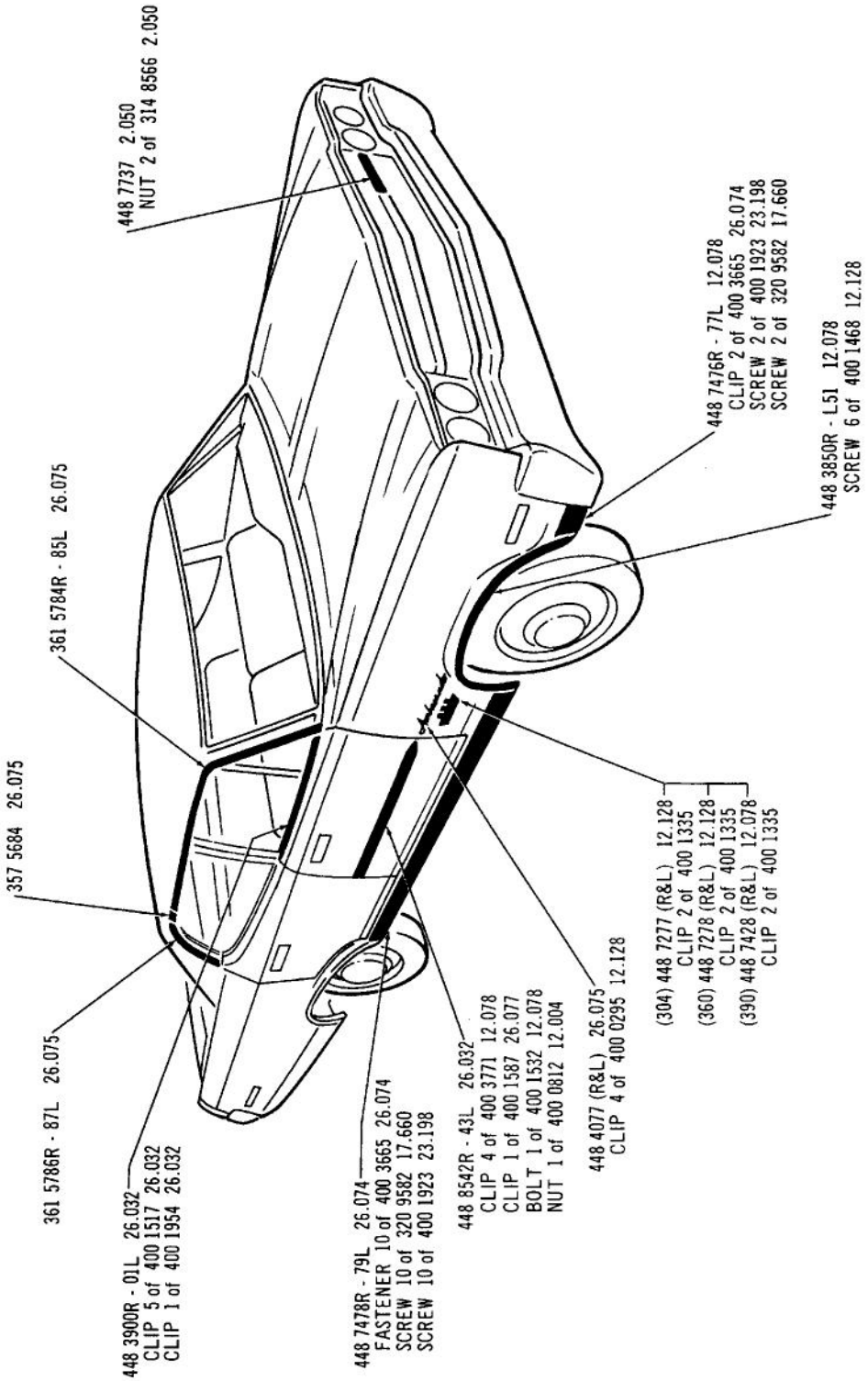

EXTERIOR ORNAMENTATION (FRONT VIEW) ... 1970 (85-7)

3891

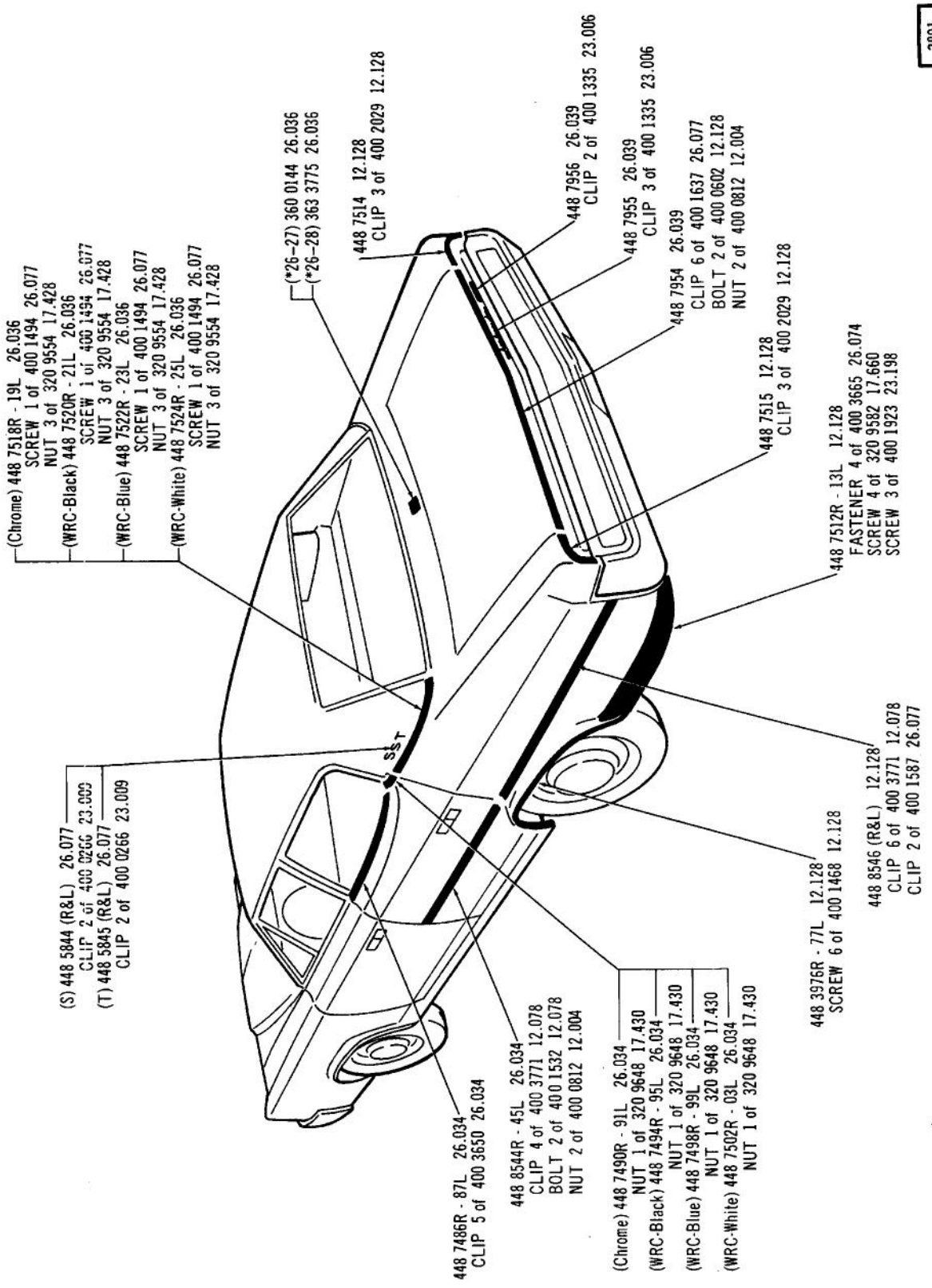

EXTERIOR ORNAMENTATION (REAR VIEW) ... 1970 (85-7)

3892

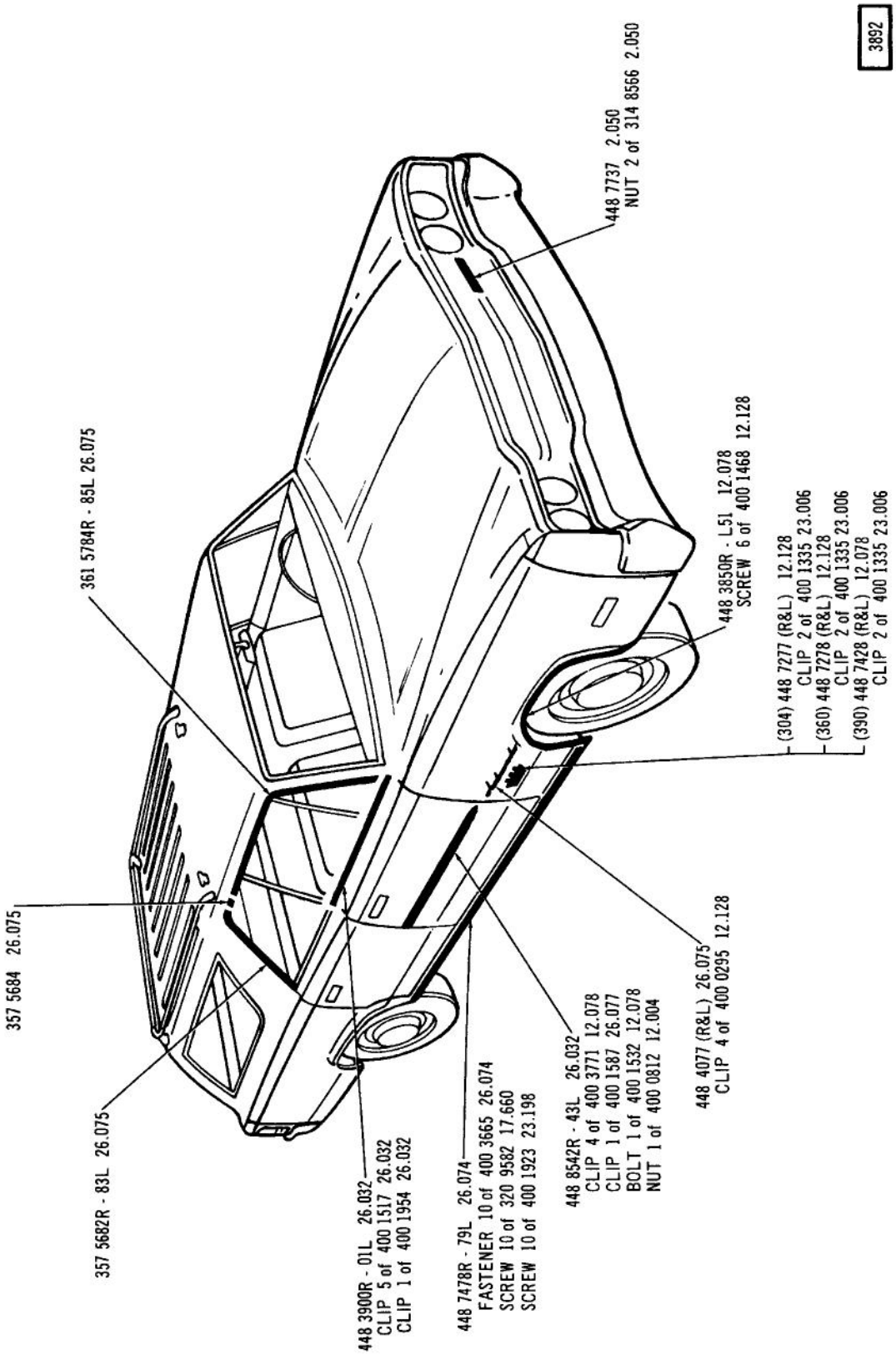

EXTERIOR ORNAMENTATION (FRONT VIEW) ... 1970 (88-LWO)(88-LTT)

3893

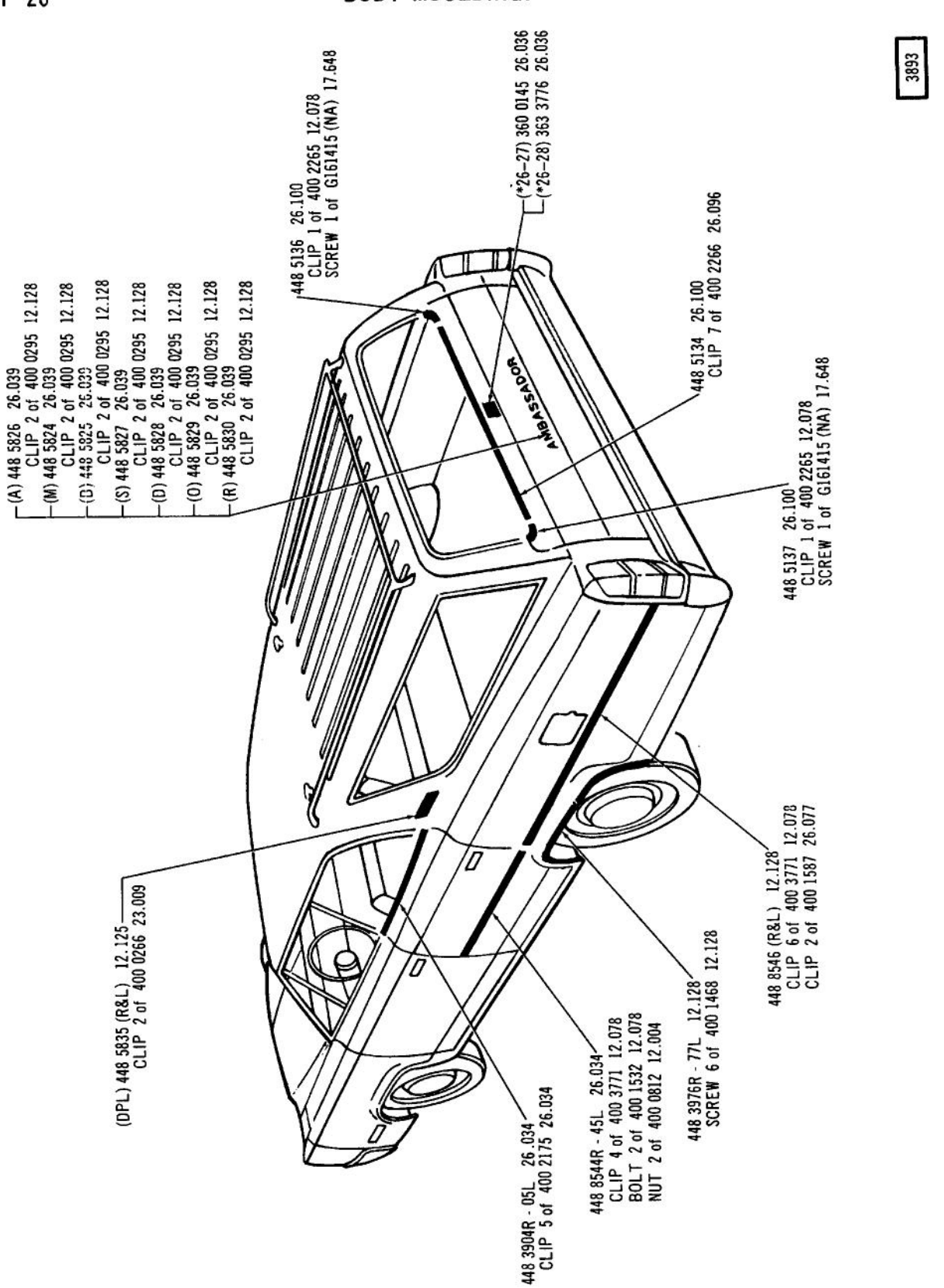

EXTERIOR ORNAMENTATION (REAR VIEW) ... 1970 (88-LWO)(88-LTT)

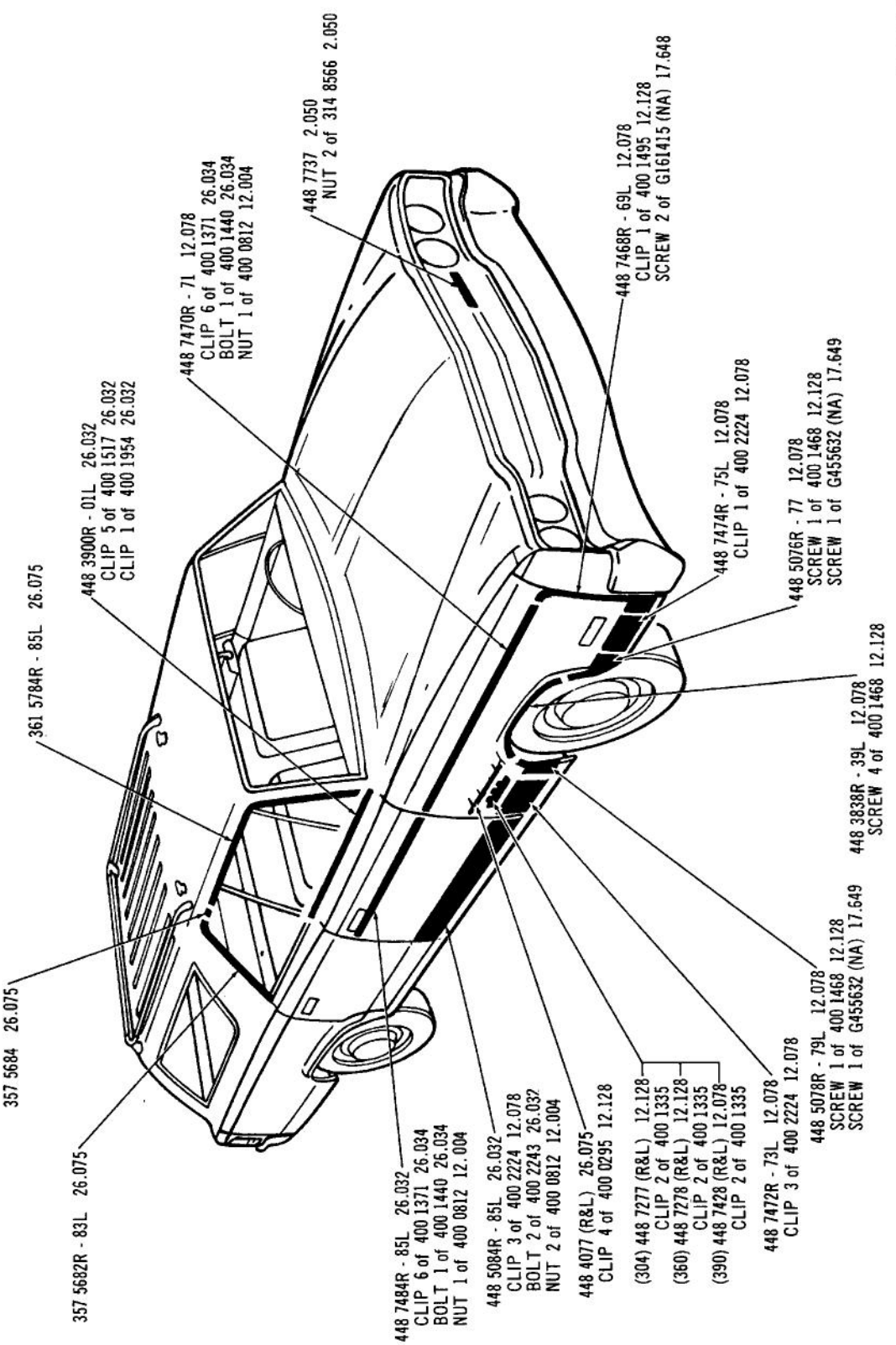

EXTERIOR ORNAMENTATION (FRONT VIEW) ... 1970 (88-WWO)(88-WTT)(SST)

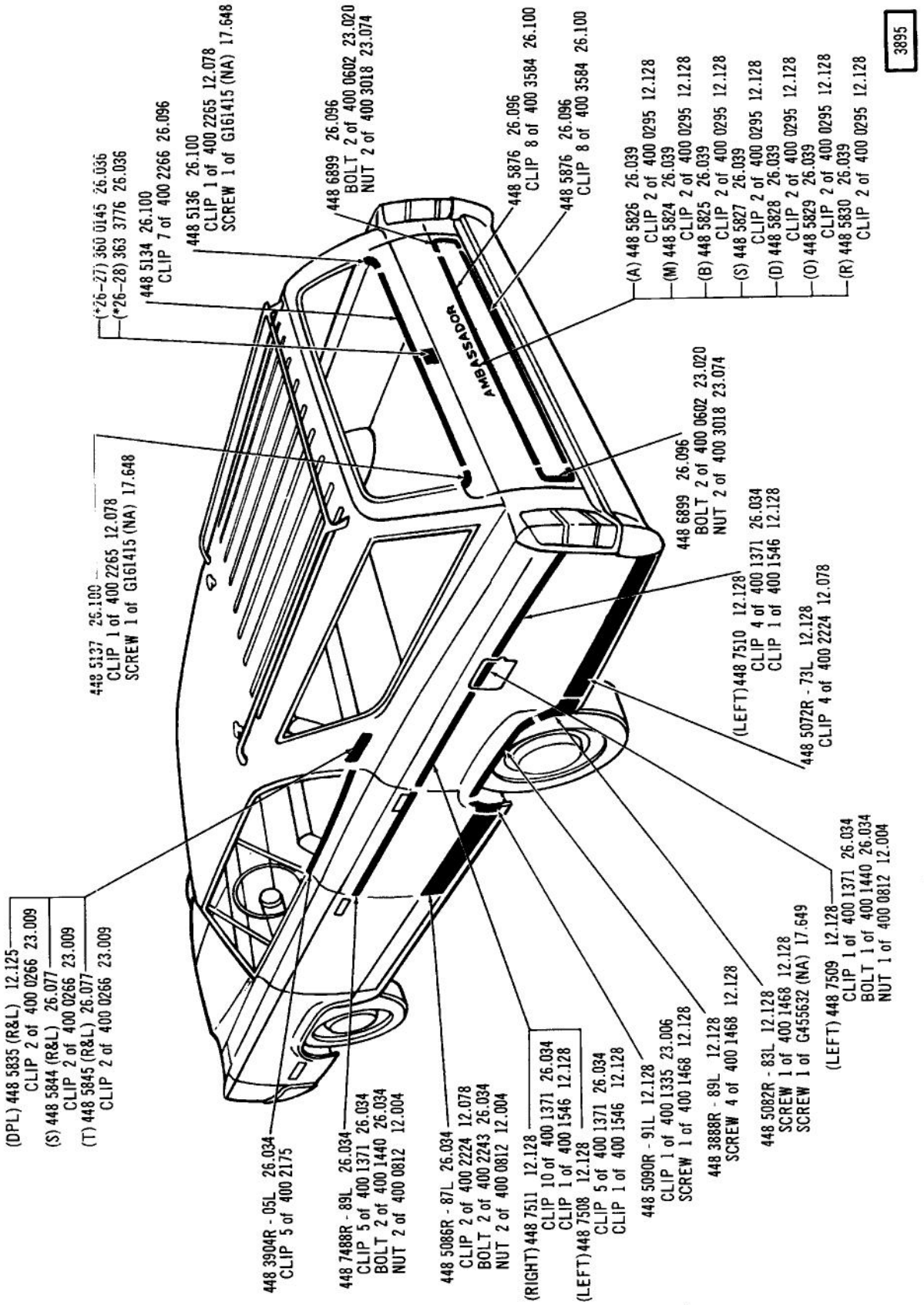

EXTERIOR ORNAMENTATION (REAR VIEW) ... 1970 (88-WWO)(88-WTT)(SST)

3896

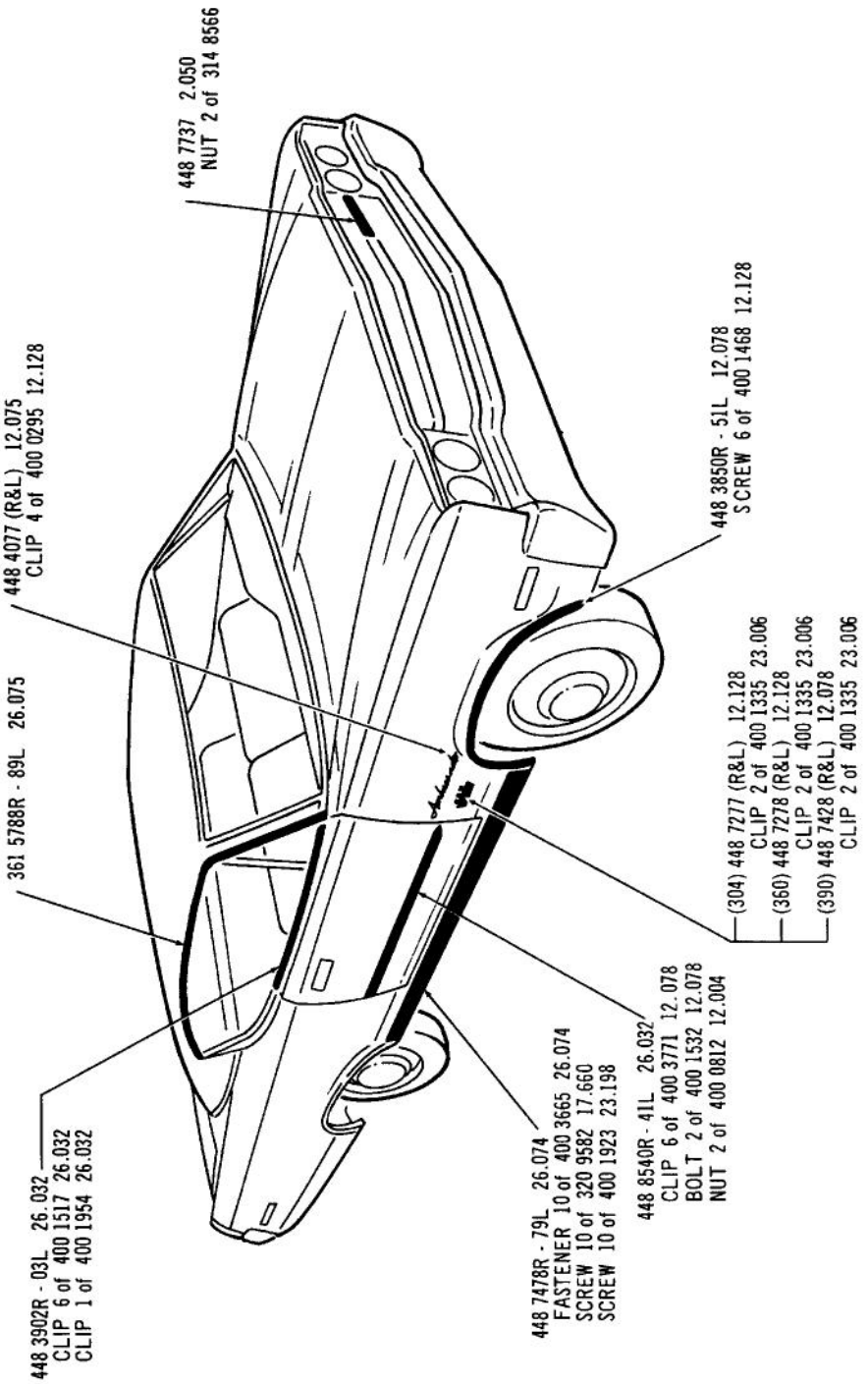

EXTERIOR ORNAMENTATION (FRONT VIEW) ... 1970 (89-5)

3897

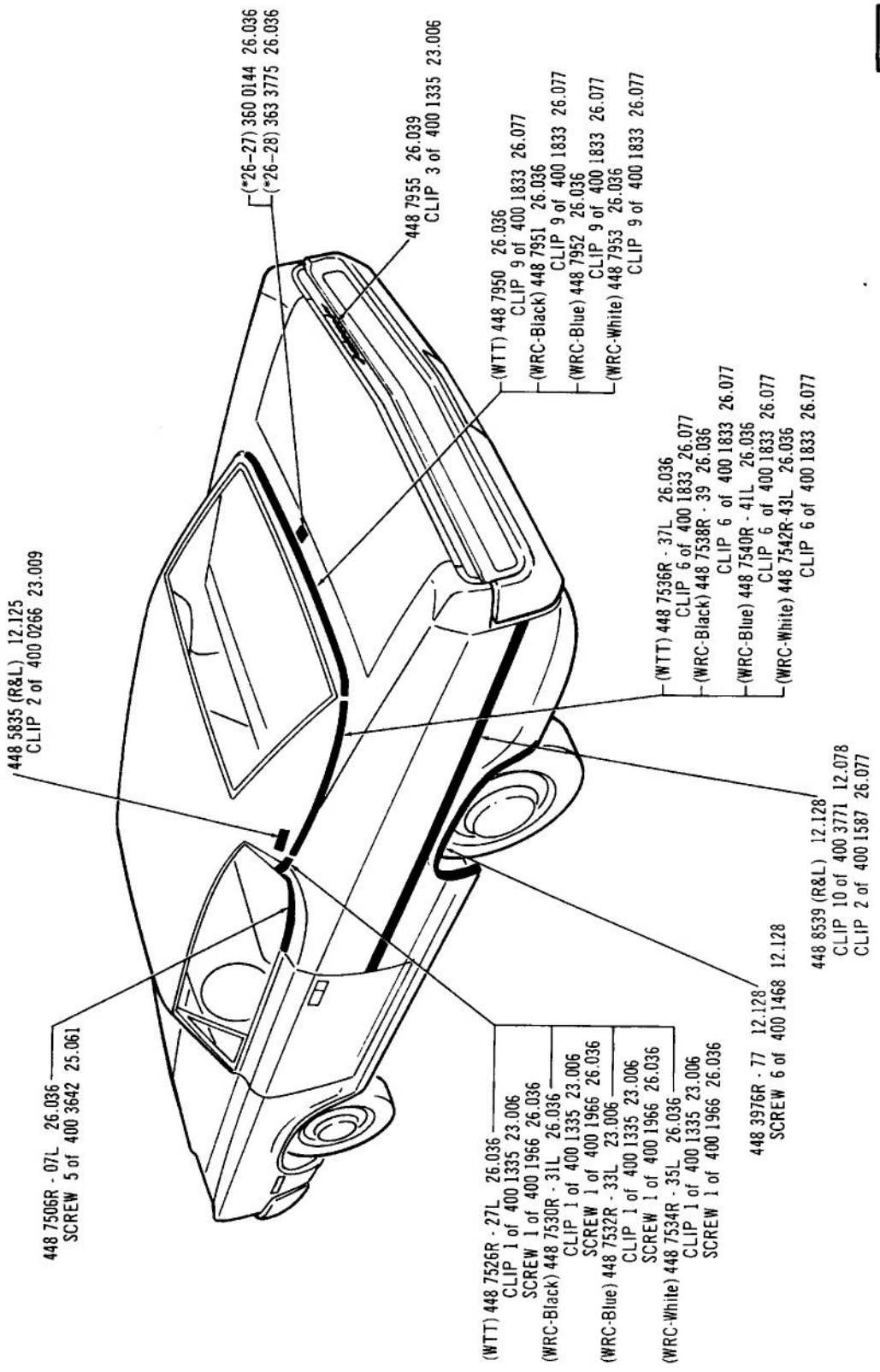

EXTERIOR ORNAMENTATION (REAR VIEW) ... 1970 (89-5)

Printed in U.S.A.

3898

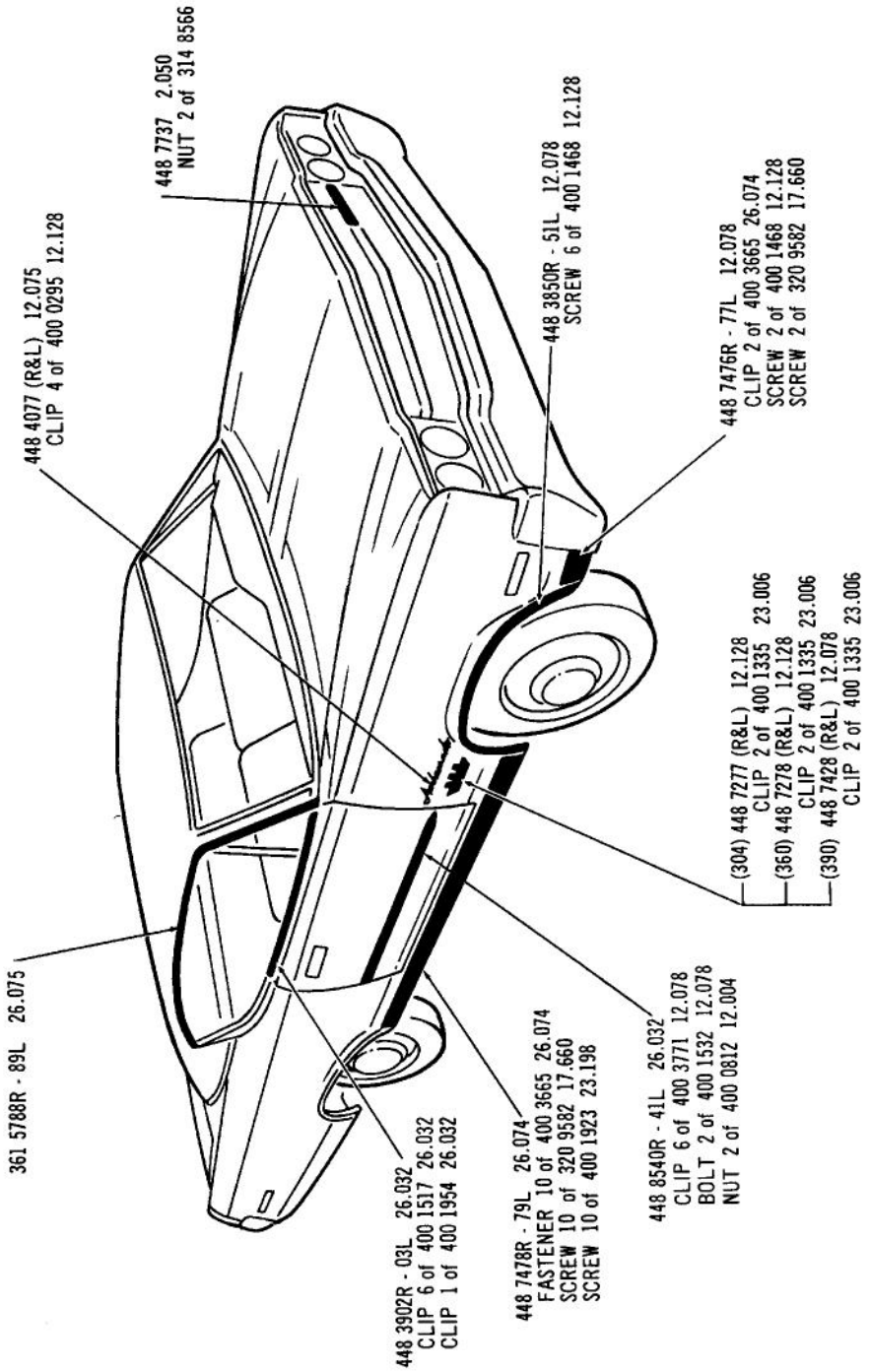

EXTERIOR ORNAMENTATION (FRONT VIEW) ··· 1970 (89-7)

Printed in U.S.A.

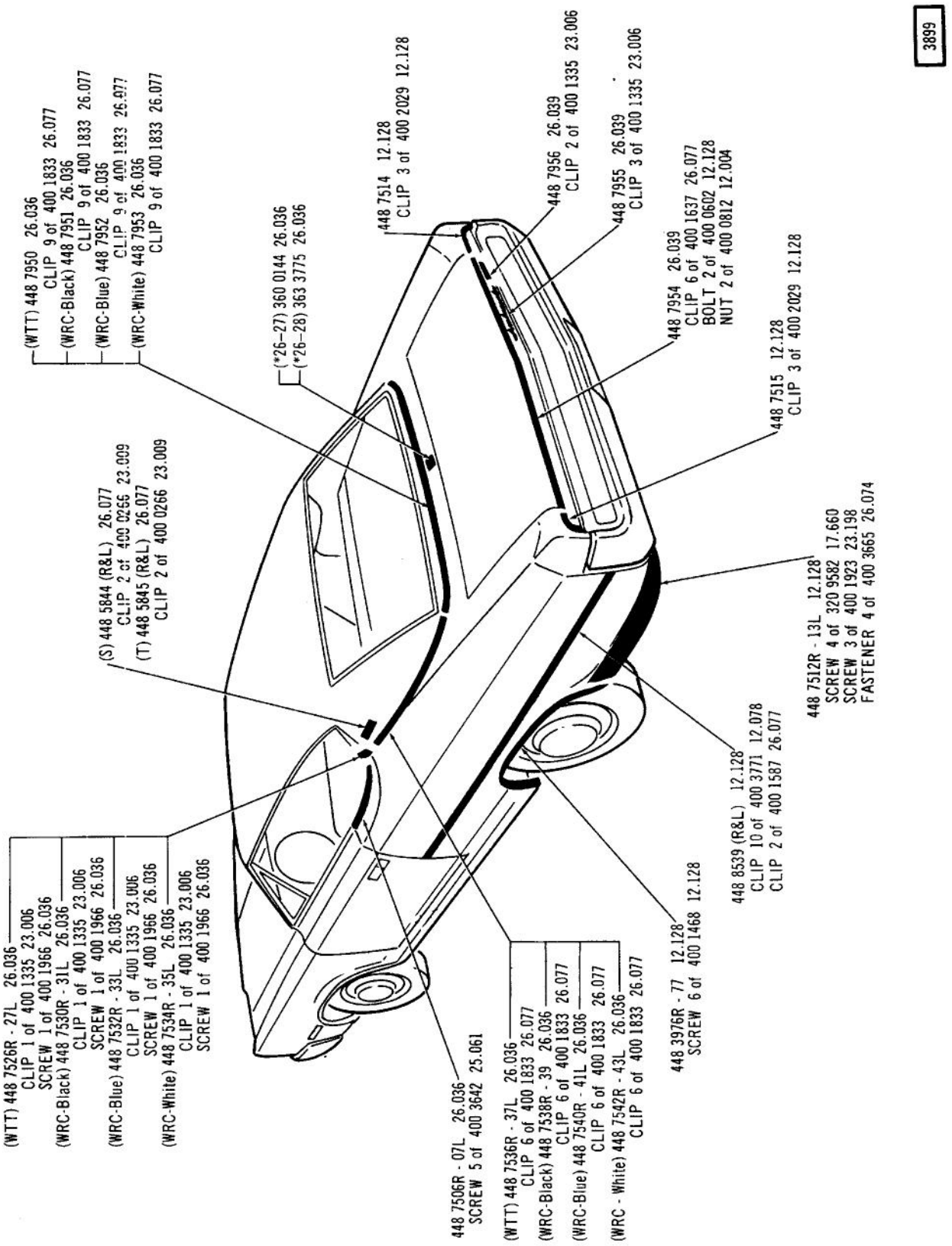

EXTERIOR ORNAMENTATION (REAR VIEW) ... 1970 (89-7)

4017

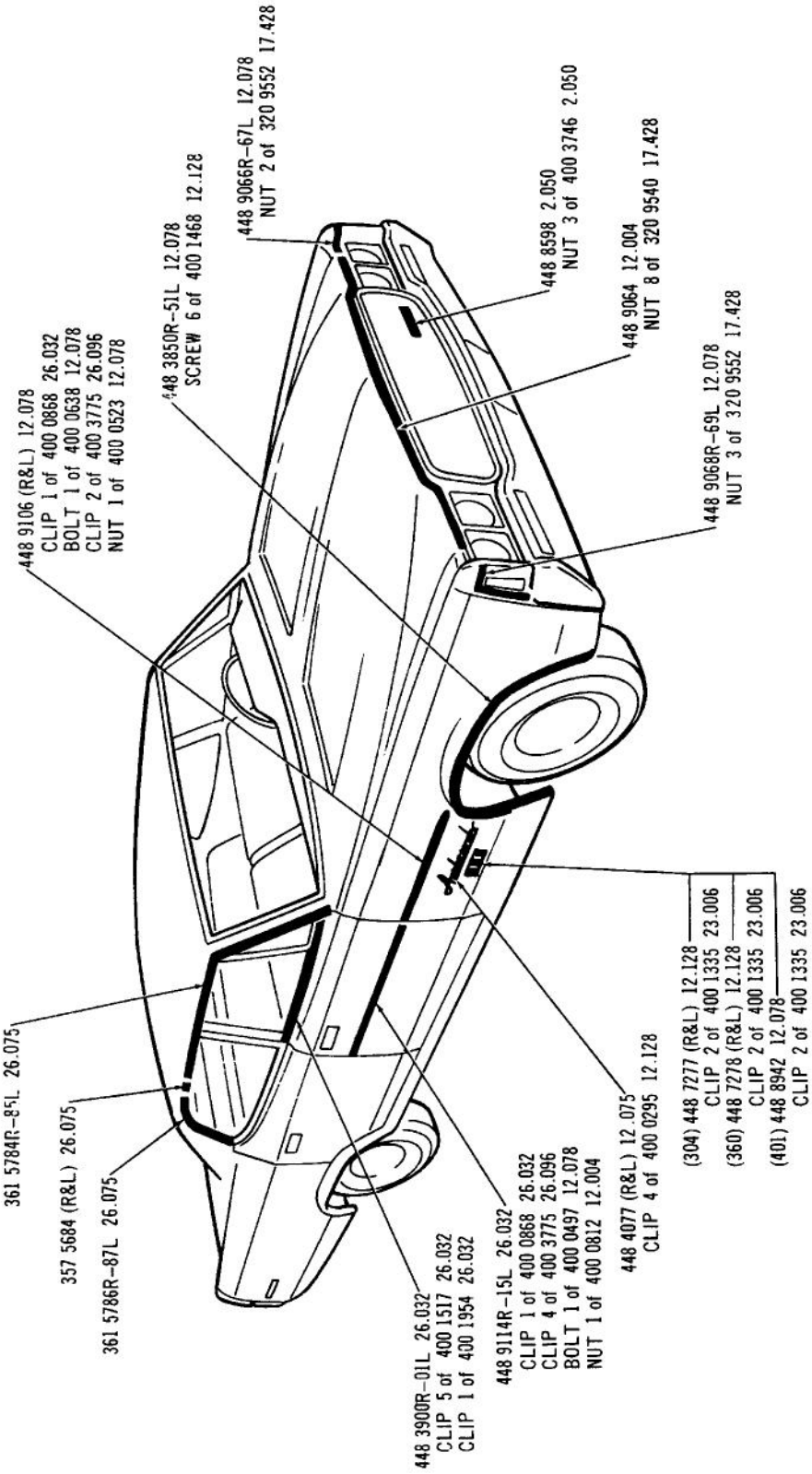

EXTERIOR ORNAMENTATION (FRONT VIEW) ... 1971 (85-2)

Printed in U.S.A.

4018

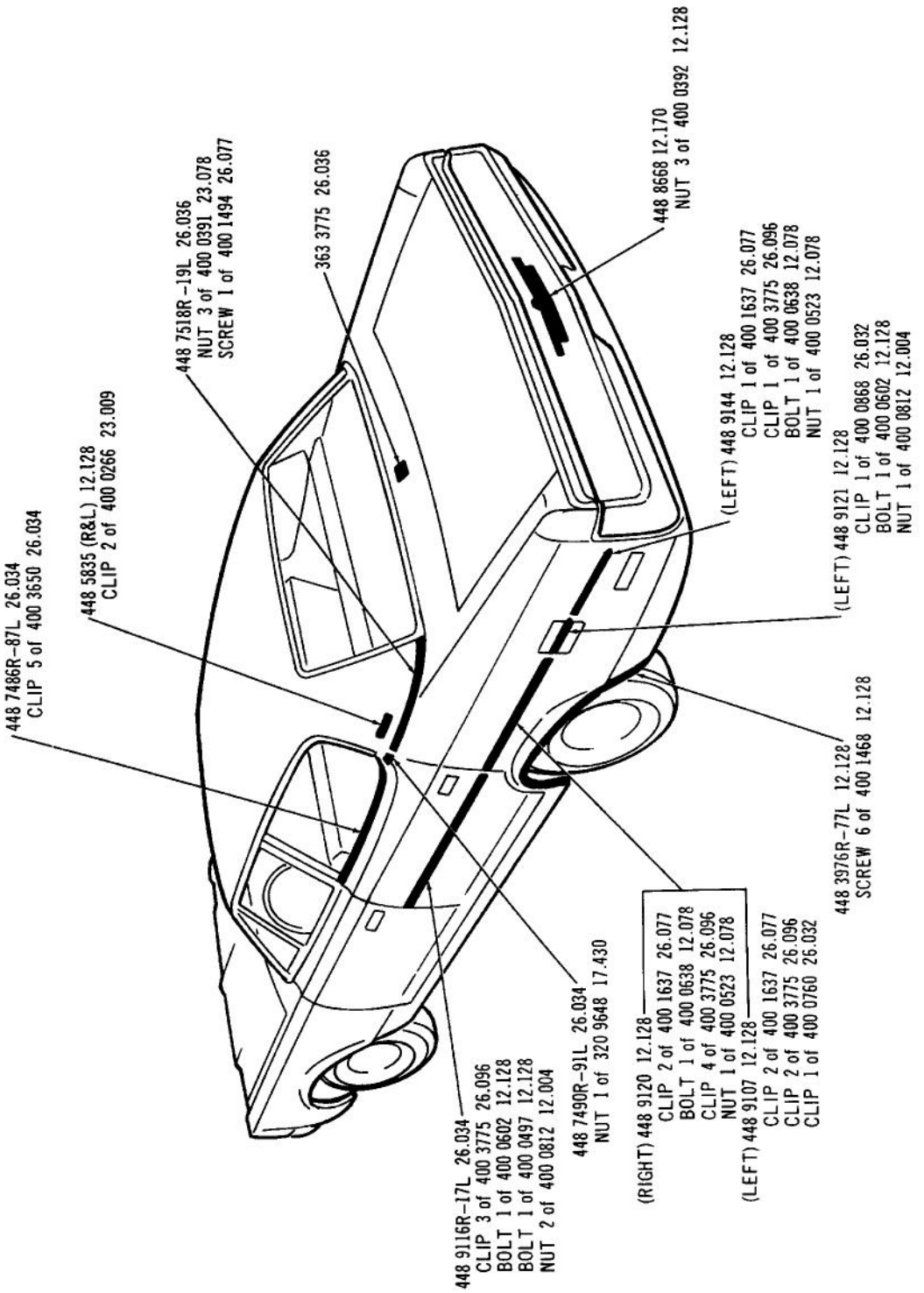

EXTERIOR ORNAMENTATION (REAR VIEW) ... 1971 (85-2)

4019

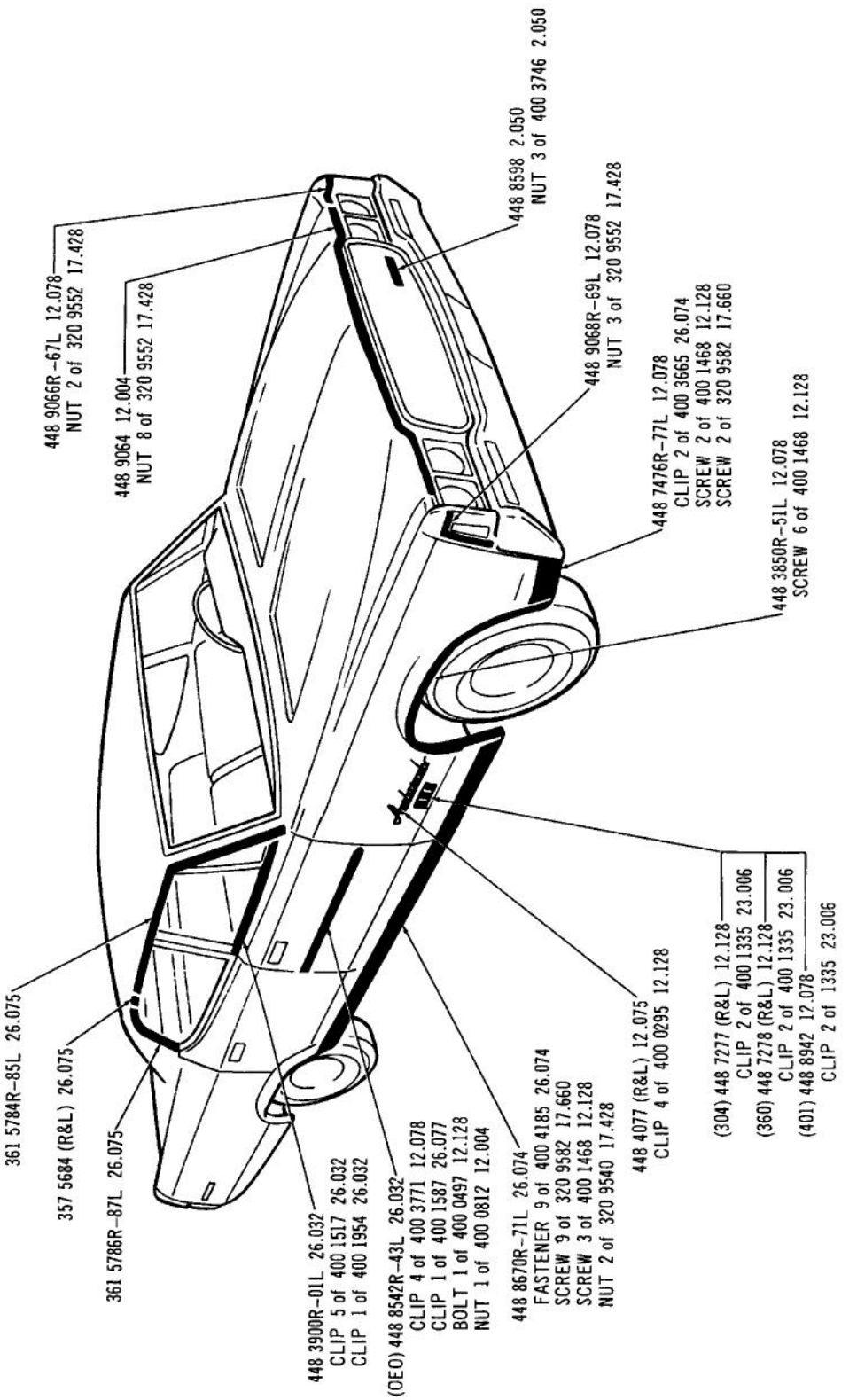

EXTERIOR ORNAMENTATION (FRONT VIEW) ... 1971 (85-5) (85-7)

BODY MOULDINGS

GROUP 26

4020

EXTERIOR ORNAMENTATION (REAR VIEW) ... 1971 (85-5) (85-7)

Printed in U.S.A.

4021

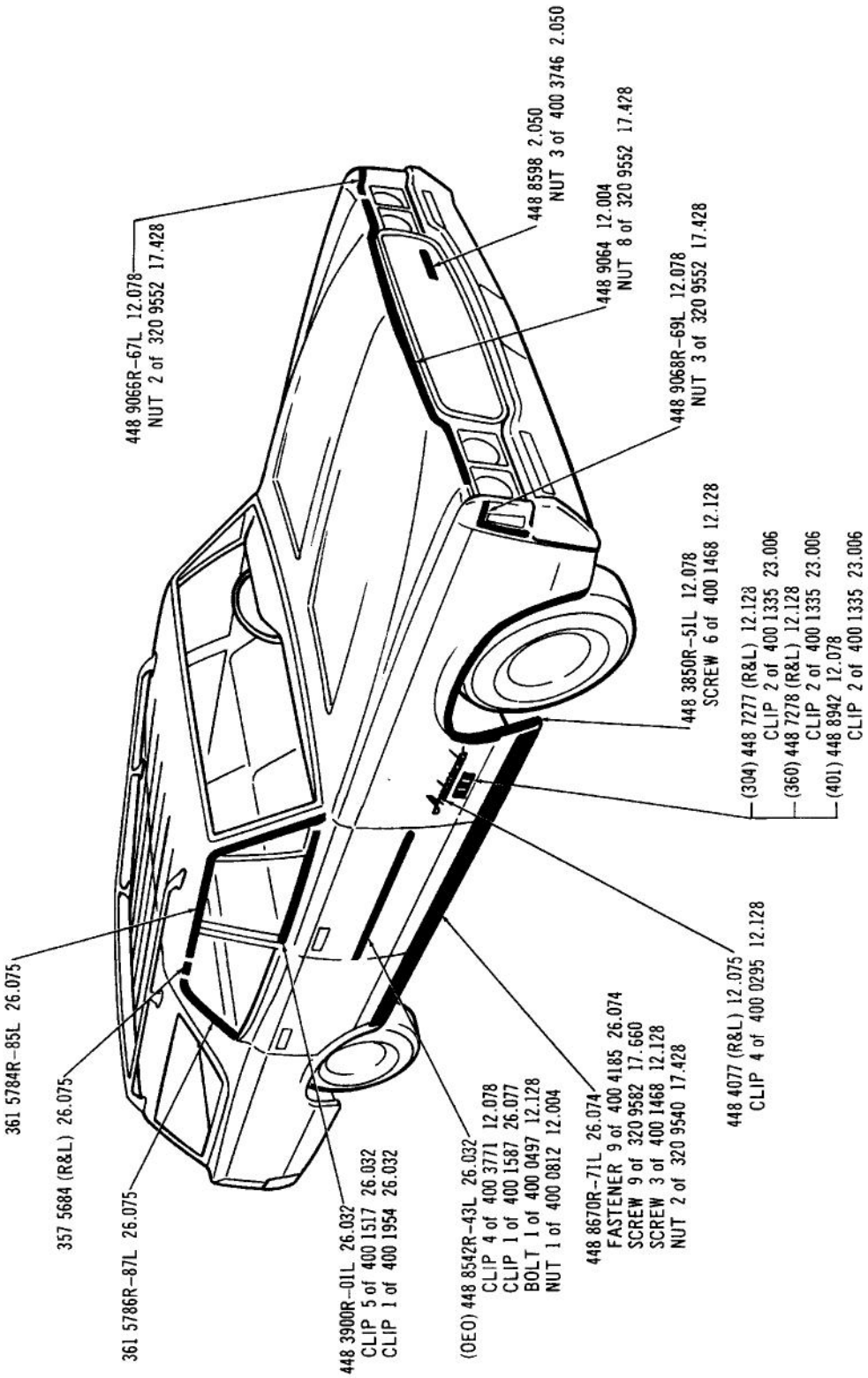

EXTERIOR ORNAMENTATION (FRONT VIEW) . . . 1971 (88-LTT)(88-LWO)

4022

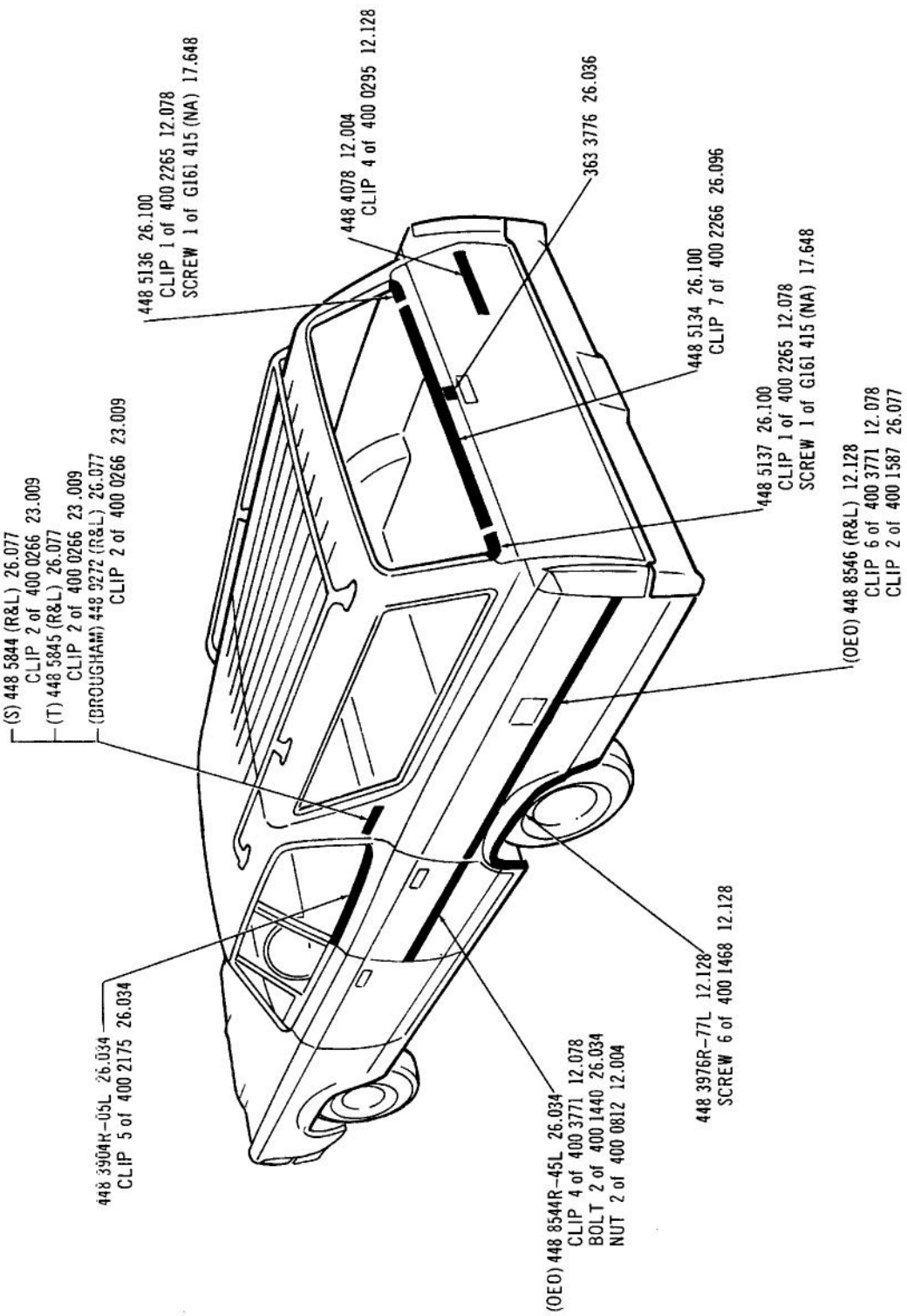

EXTERIOR ORNAMENTATION (REAR VIEW) . . . 1971 (88-LTT)(88-LWO)

Printed in U.S.A.

4023

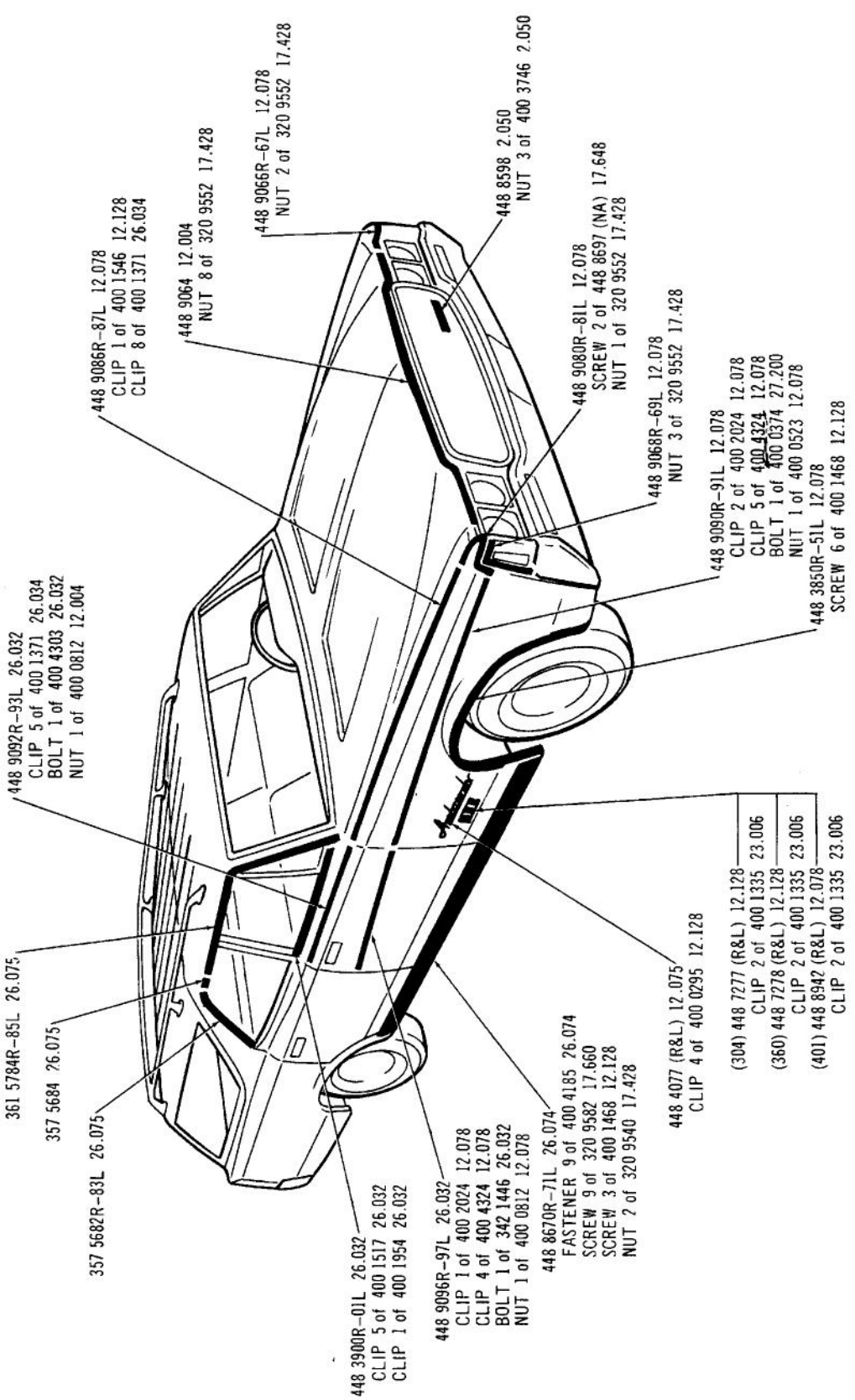

EXTERIOR ORNAMENTATION (FRONT VIEW) ... 1971 (88-WTT)(88-WWO)

Printed in U.S.A.

4024

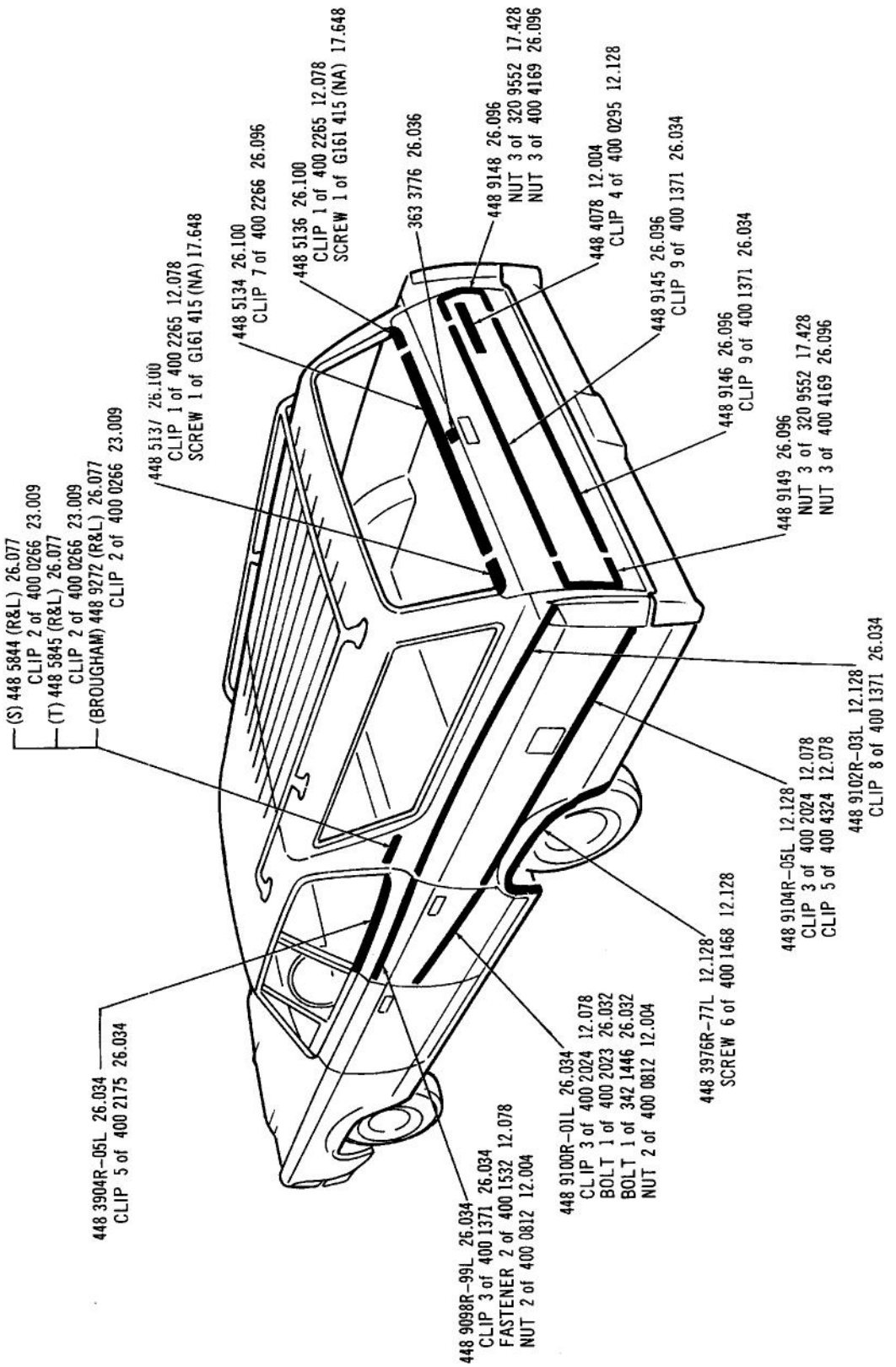

EXTERIOR ORNAMENTATION (REAR VIEW) ... 1971 (88-WTT)(88-WWO)

4025

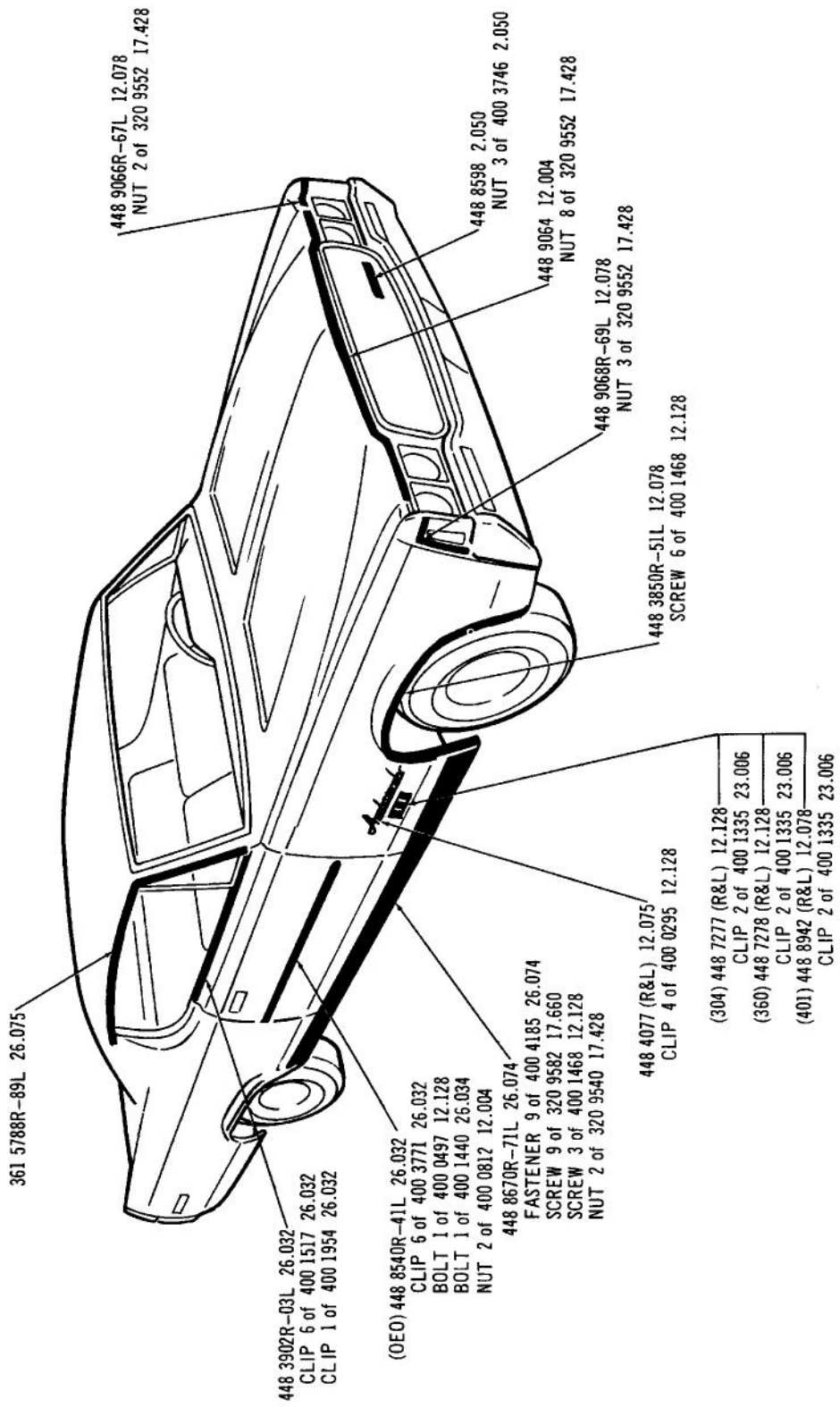

EXTERIOR ORNAMENTATION (FRONT VIEW) ... 1971 (89-5)

4026

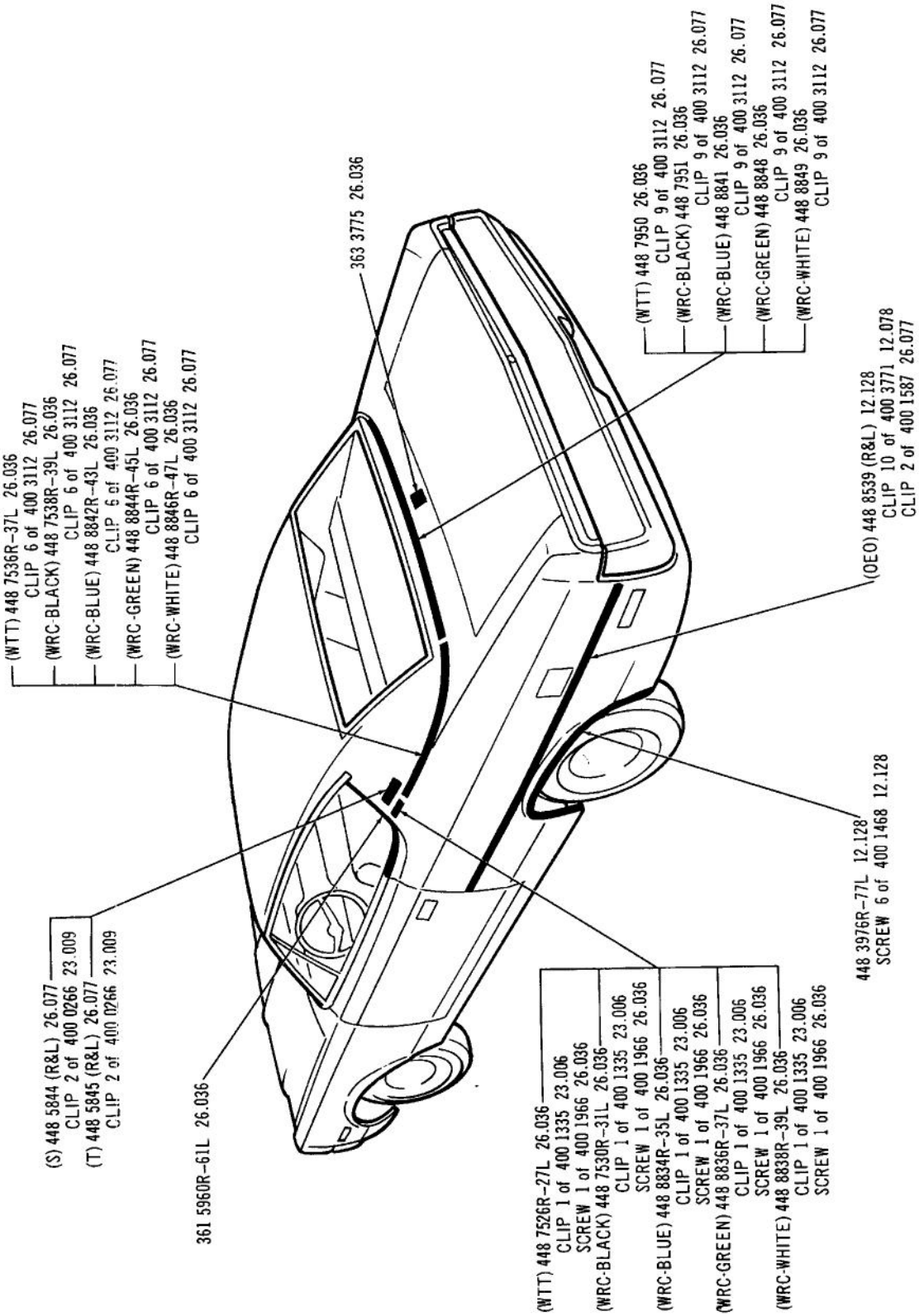

EXTERIOR ORNAMENTATION (REAR VIEW) ...1971 (89-5)

4027

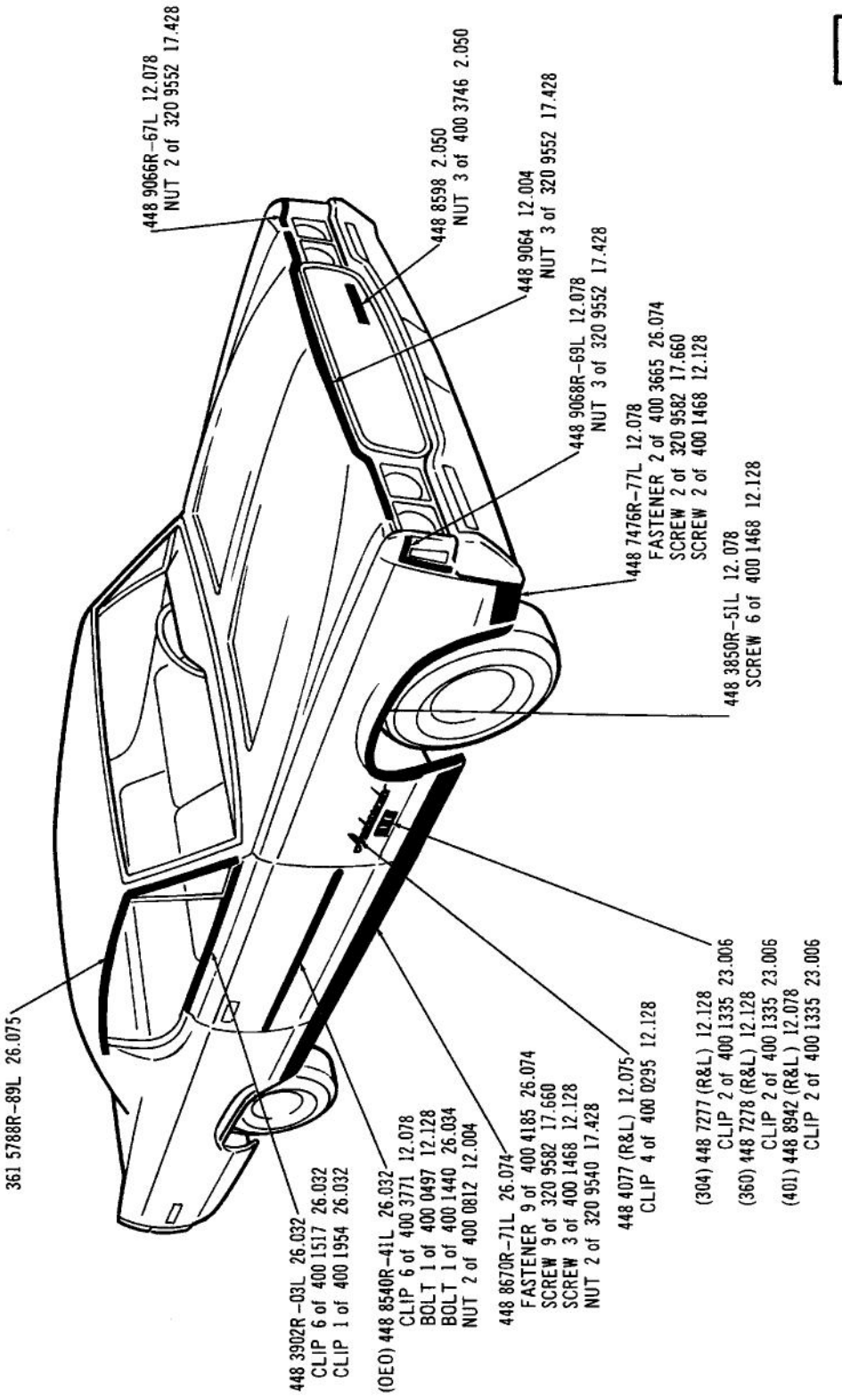

EXTERIOR ORNAMENTATION (FRONT VIEW) ... 1971 (89-7)

4028

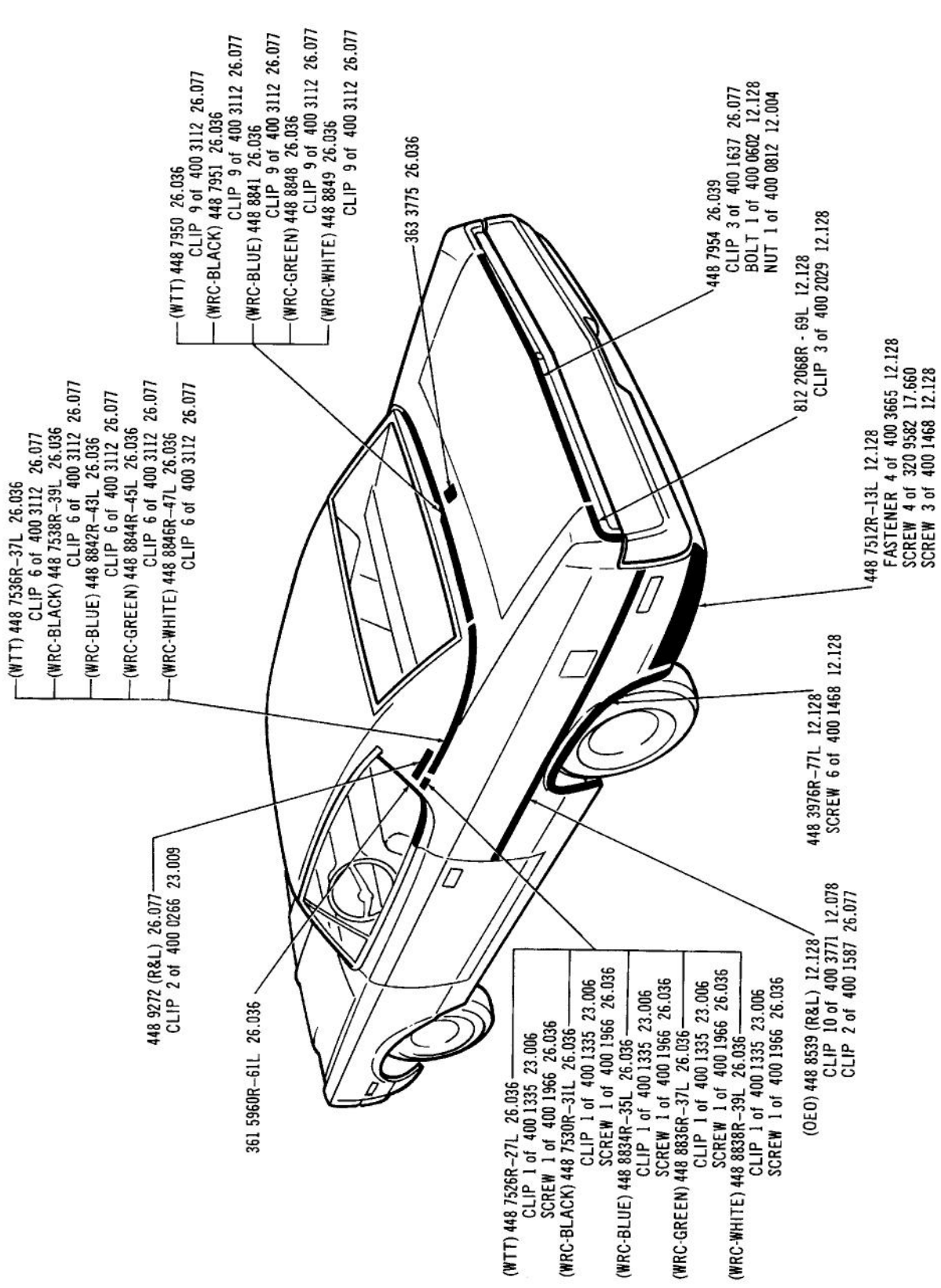

EXTERIOR ORNAMENTATION (REAR VIEW) ... 1971 (89-7)

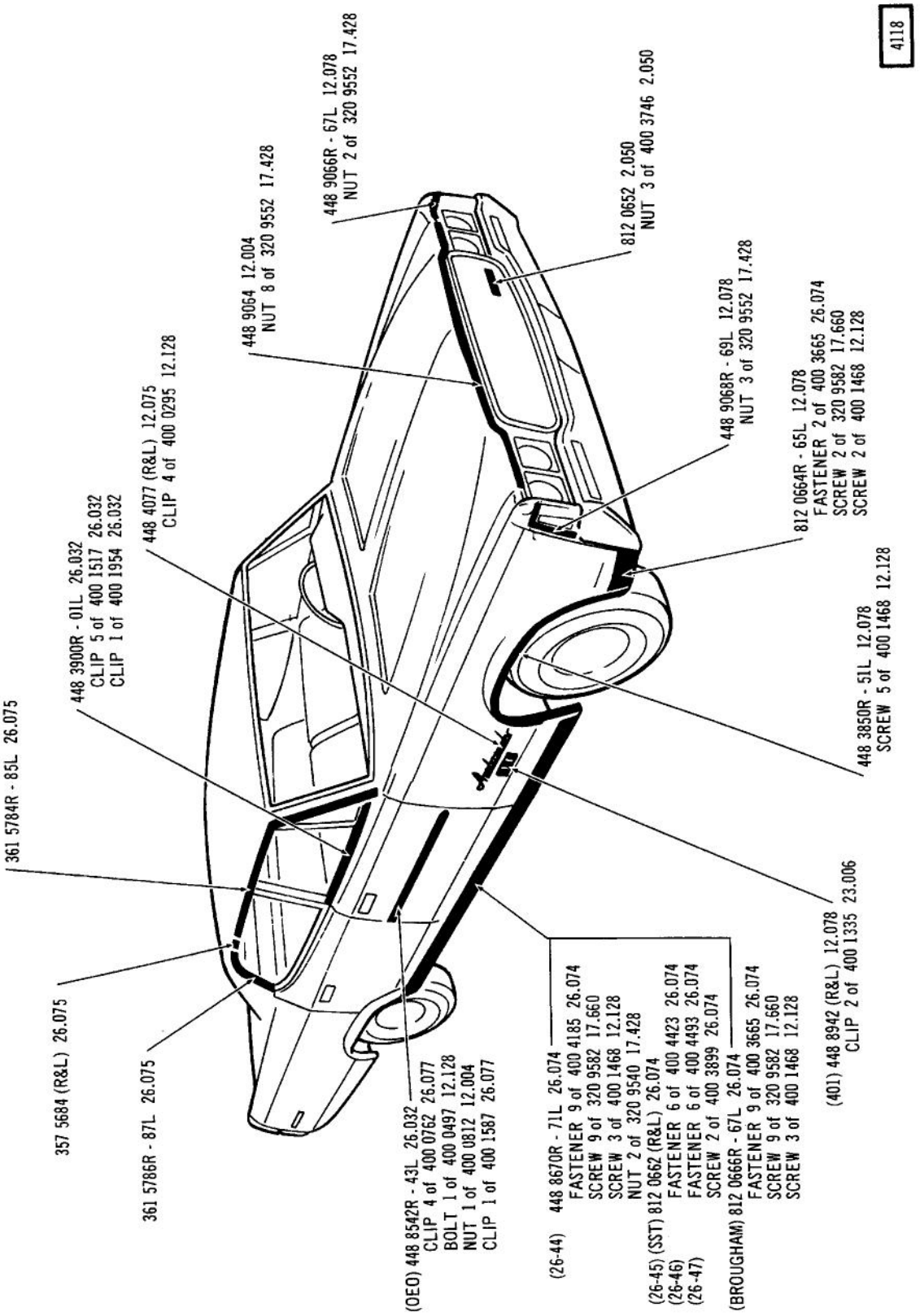

EXTERIOR ORNAMENTATION (FRONT VIEW) . . . 1972 (85)

BODY MOULDINGS

GROUP 26

4119

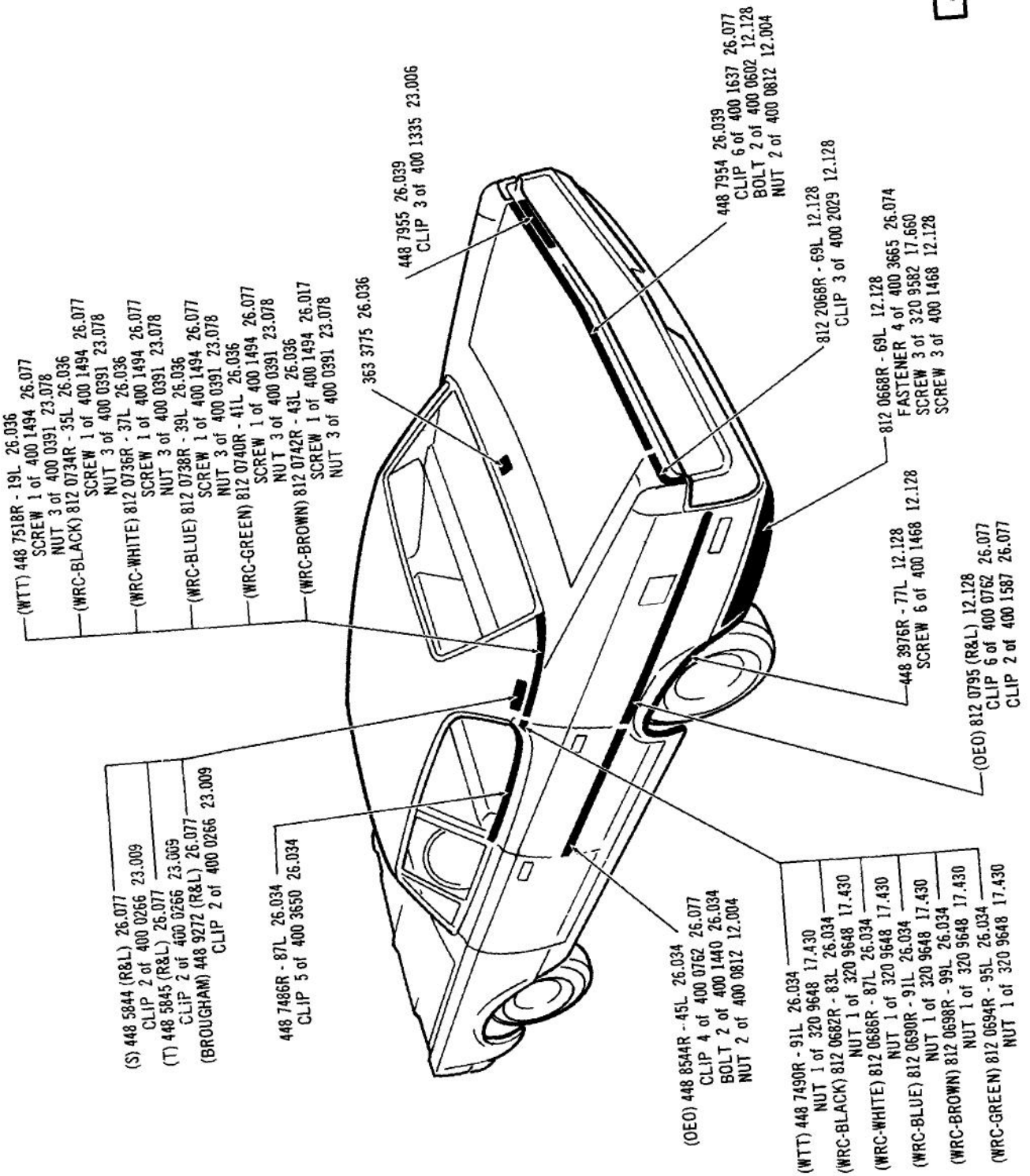

EXTERIOR ORNAMENTATION (REAR VIEW) . . . 1972 (85)

4120

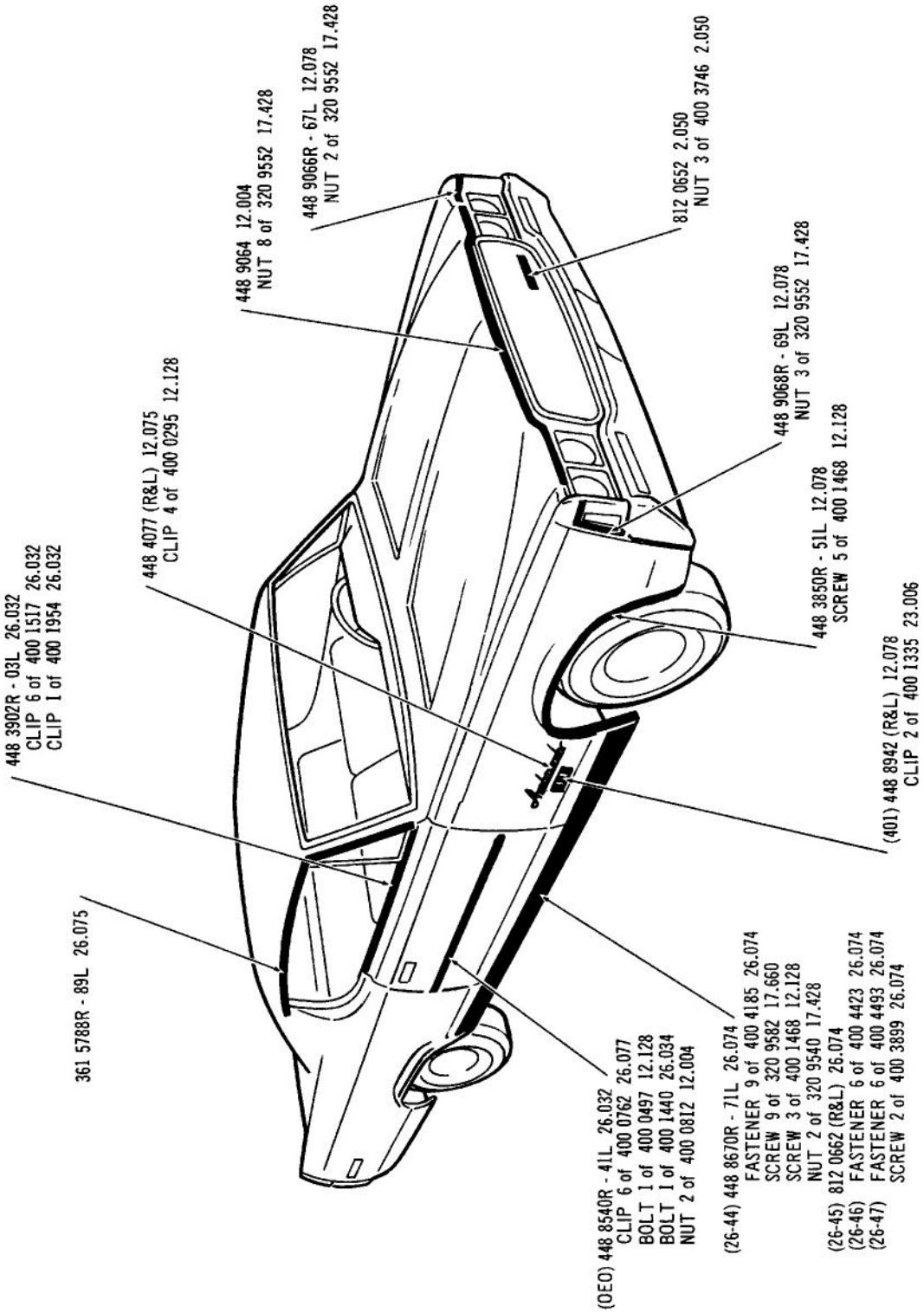

EXTERIOR ORNAMENTATION (FRONT VIEW) . . . 1972 (89-5)

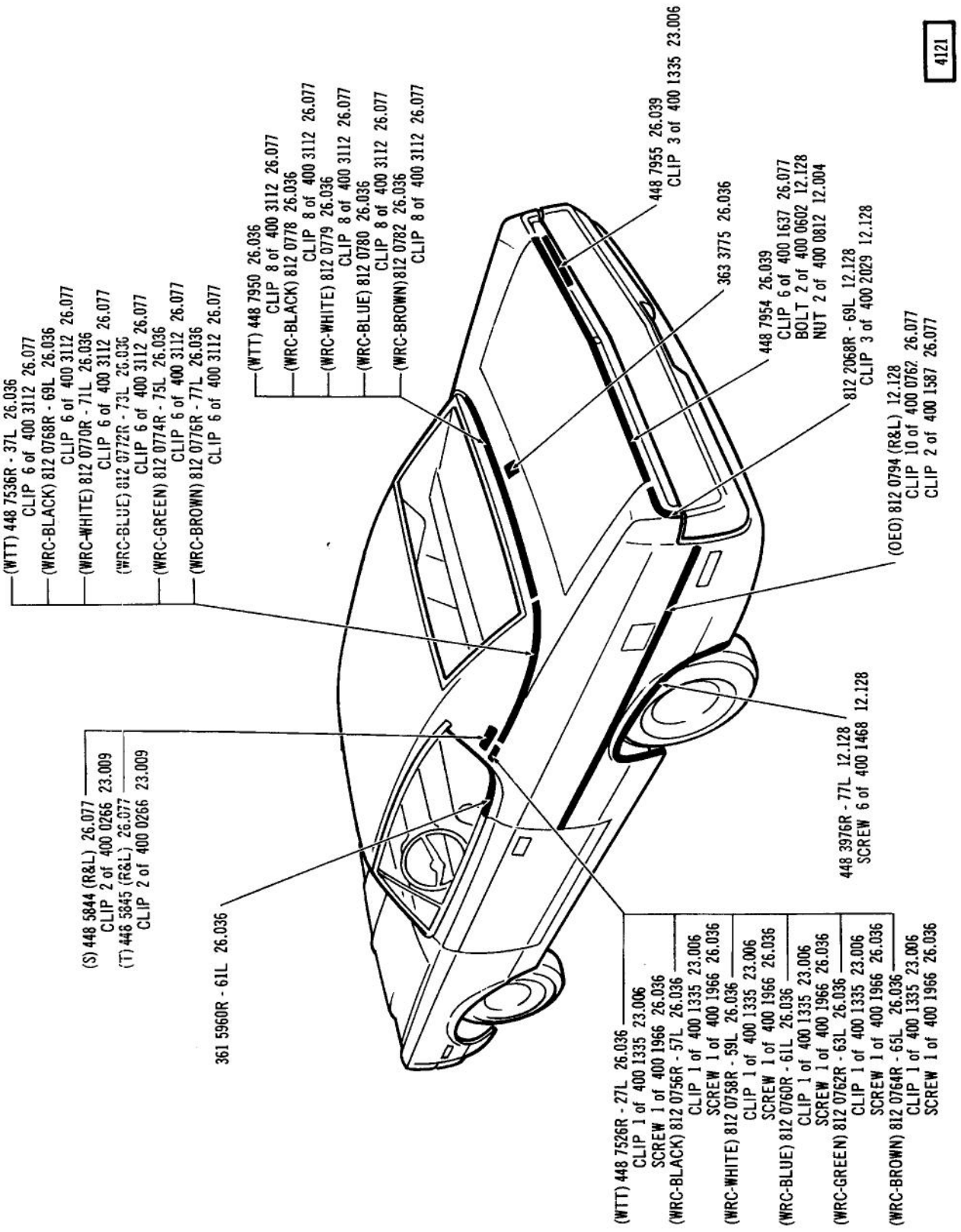

EXTERIOR ORNAMENTATION (REAR VIEW) . . . 1972 (89-5)

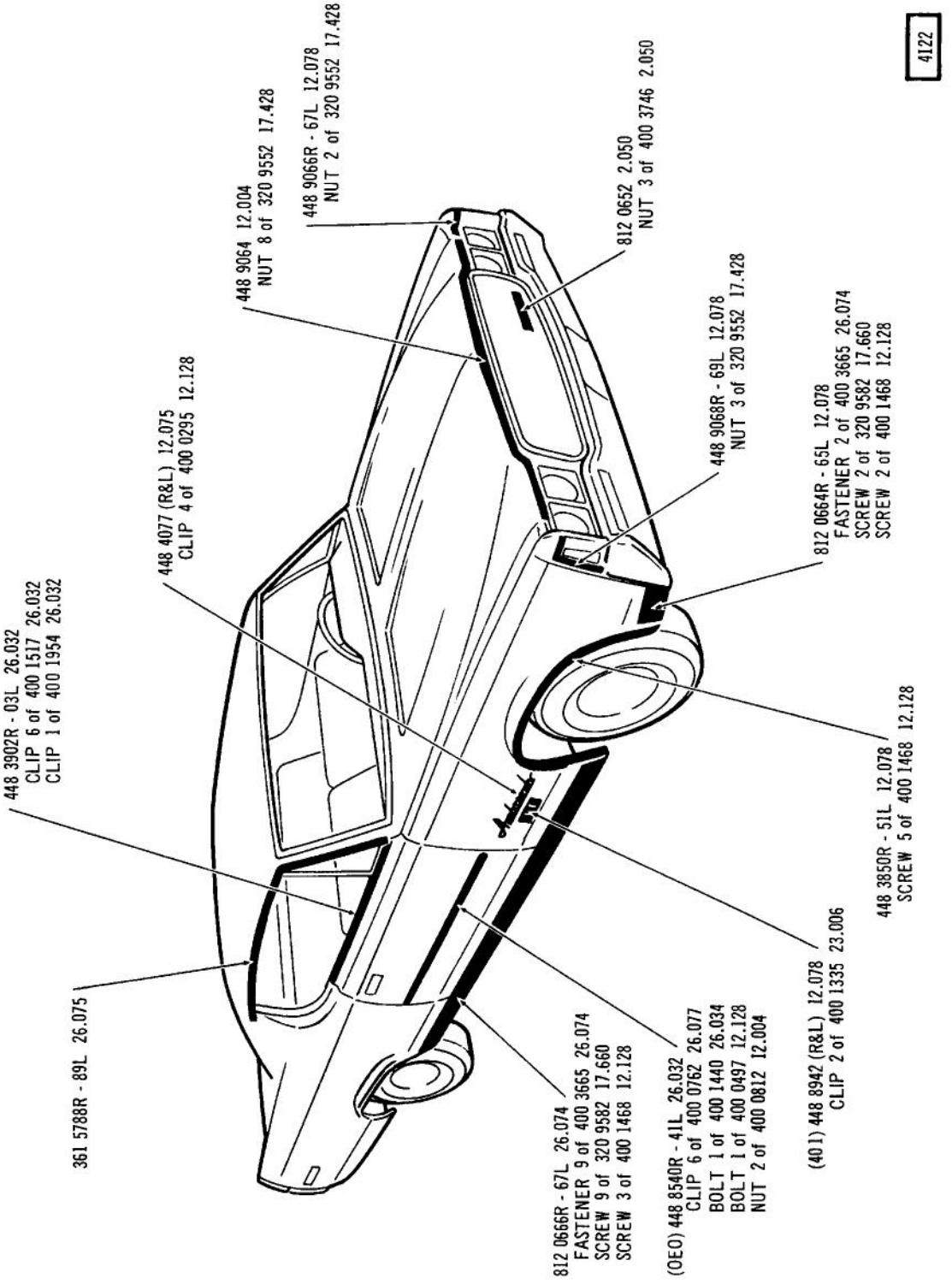

EXTERIOR ORNAMENTATION (FRONT VIEW) . . . 1972 (89-7)

Printed in U.S.A.

BODY MOULDINGS

GROUP 26

4123

(WTT) 448 7526R - 27L 26.036
CLIP 1 of 400 1335 23.006
SCREW 1 of 400 1966 26.036
(WRC-BLACK) 812 0756R - 57L 26.036
CLIP 1 of 400 1335 23.006
SCREW 1 of 400 1966 26.036
(WRC-WHITE) 812 0758R - 59L 26.036
CLIP 1 of 400 1335 23.006
SCREW 1 of 400 1966 26.036
(WRC-BLUE) 812 0760R - 61L 26.036
CLIP 1 of 400 1335 23.006
SCREW 1 of 400 1966 26.036
(WRC-GREEN) 812 0762R - 63L 26.036
CLIP 1 of 400 1335 23.006
SCREW 1 of 400 1966 26.036
(WRC-BROWN) 812 0764R - 65L 26.036
CLIP 1 of 400 1335 23.006
SCREW 1 of 400 1966 26.036

448 9272 (R&L) 26.077
CLIP 2 of 400 0266 23.009

(WTT) 448 7950 26.036
CLIP 8 of 400 3112 26.077
(WRC-BLACK) 812 0778 26.036
CLIP 8 of 400 3112 26.077
(WRC-WHITE) 812 0779 26.036
CLIP 8 of 400 3112 26.077
(WRC-BLUE) 812 0780 26.036
CLIP 8 of 400 3112 26.077
(WRC-GREEN) 812 0781 26.036
CLIP 8 of 400 3112 26.077
(WRC-BROWN) 812 0782 26.036
CLIP 8 of 400 3112 26.077

363 3775 26.036

361 5960R - 61L 26.036

(OEO) 812 0794 (R&L) 12.128
CLIP 10 of 400 0762 26.077
CLIP 2 of 400 1587 26.077

(WTT) 448 7536R - 37L 26.036
CLIP 6 of 400 3112 26.077
(WRC-BLACK) 812 0768R - 69L 26.036
CLIP 6 of 400 3112 26.077
(WRC-WHITE) 812 0770R - 71L 26.036
CLIP 6 of 400 3112 26.077
(WRC-BLUE) 812 0772R - 73L 26.036
CLIP 6 of 400 3112 26.077
(WRC-GREEN) 812 0774R - 75L 26.036
CLIP 6 of 400 3112 26.077
(WRC-BROWN) 812 0776R - 77L 26.036
CLIP 6 of 400 3112 26.077

448 7955 26.039
CLIP 3 of 400 1335 23.006

448 7954 26.039
CLIP 6 of 4001637 26.077
BOLT 2 of 400 0602 12.128
NUT 2 of 400 0812 12.004

812 2068R - 69L 12.128
CLIP 3 of 400 2029 12.128

812 0668R - 69L 12.128
FASTENER 4 of 400 3665 26.074
SCREW 4 of 320 9582 17.660
SCREW 3 of 400 1468 12.128

448 3976R - 77L 12.128
SCREW 6 of 400 1468 12.128

EXTERIOR ORNAMENTATION (REAR VIEW) . . . 1972 (89-7)

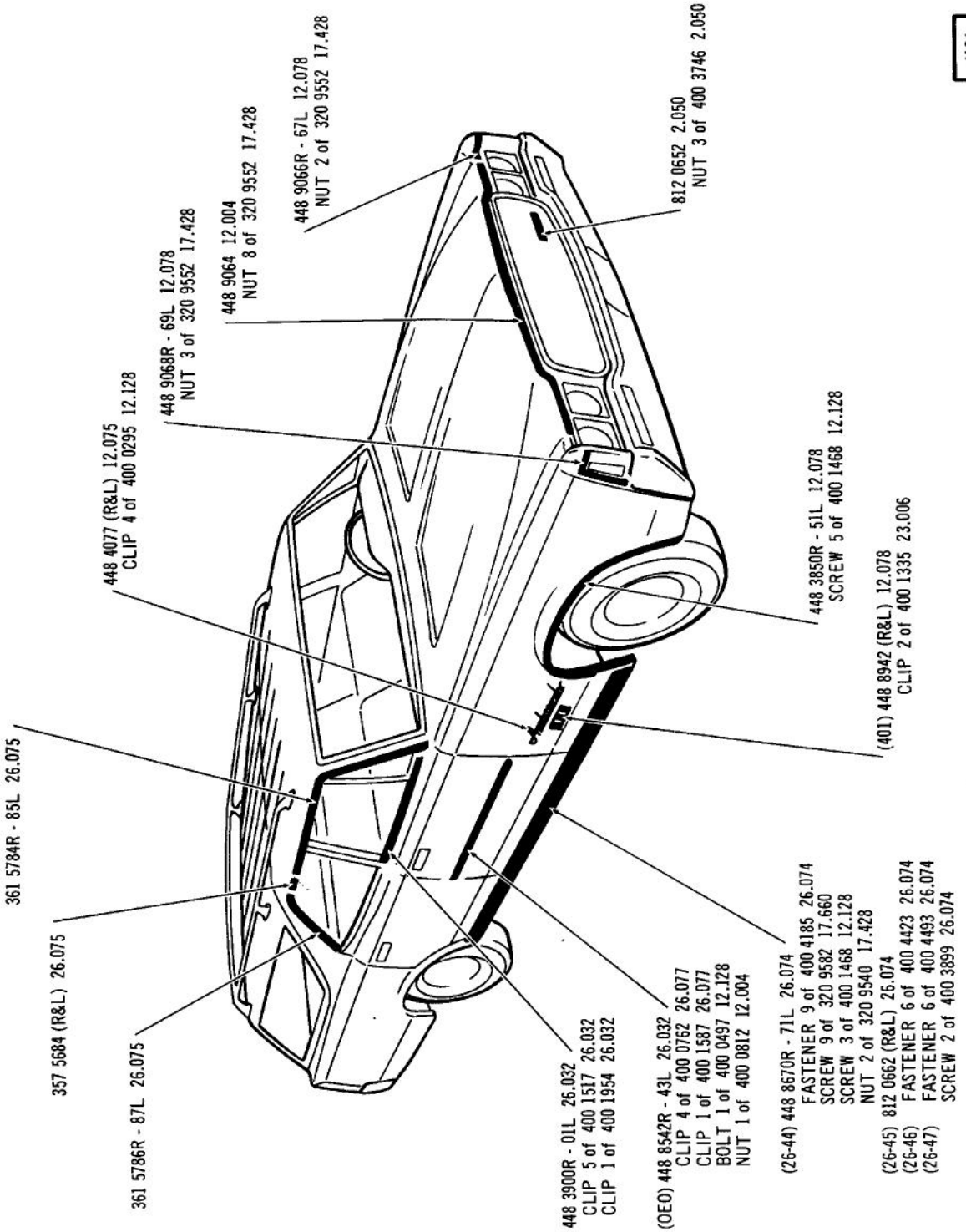

EXTERIOR ORNAMENTATION (FRONT VIEW) . . . 1972 (88-LTT)(88-LWO)

4125

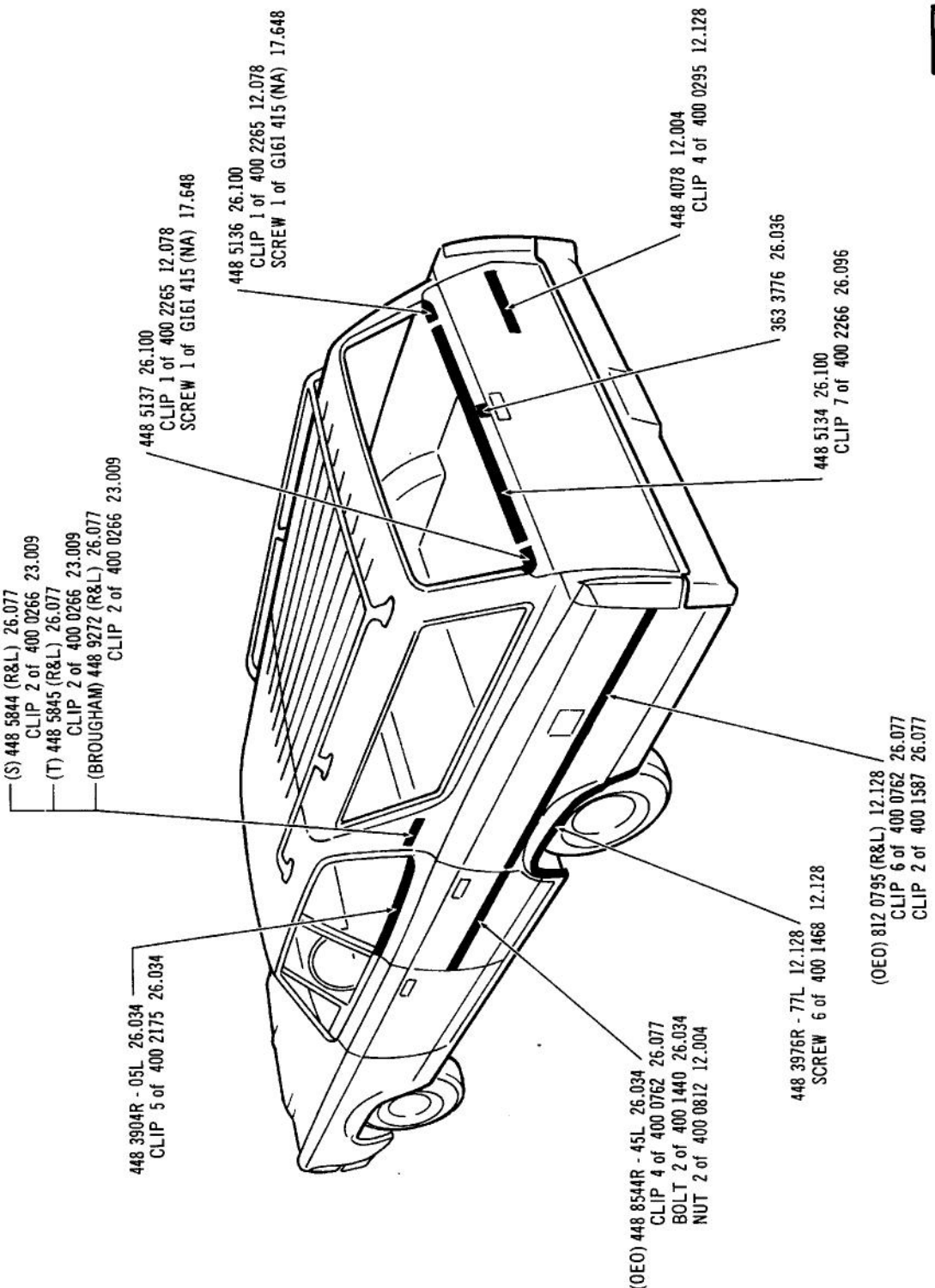

EXTERIOR ORNAMENTATION (REAR VIEW) . . . 1972 (88-LTT)(88-LWO)

4126

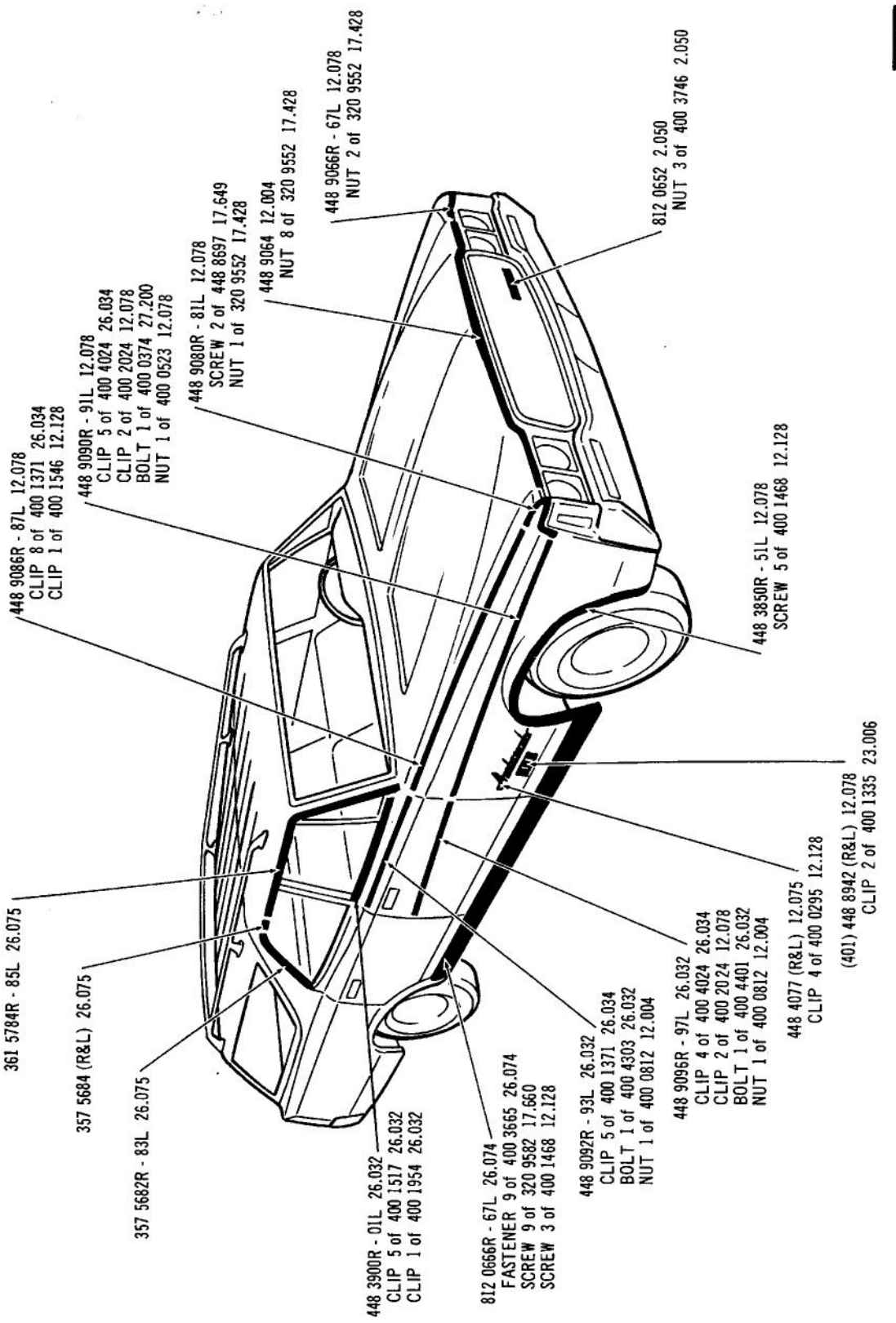

EXTERIOR ORNAMENTATION (FRONT VIEW) . . . 1972 (88-WTT)(88-WWO)

4127

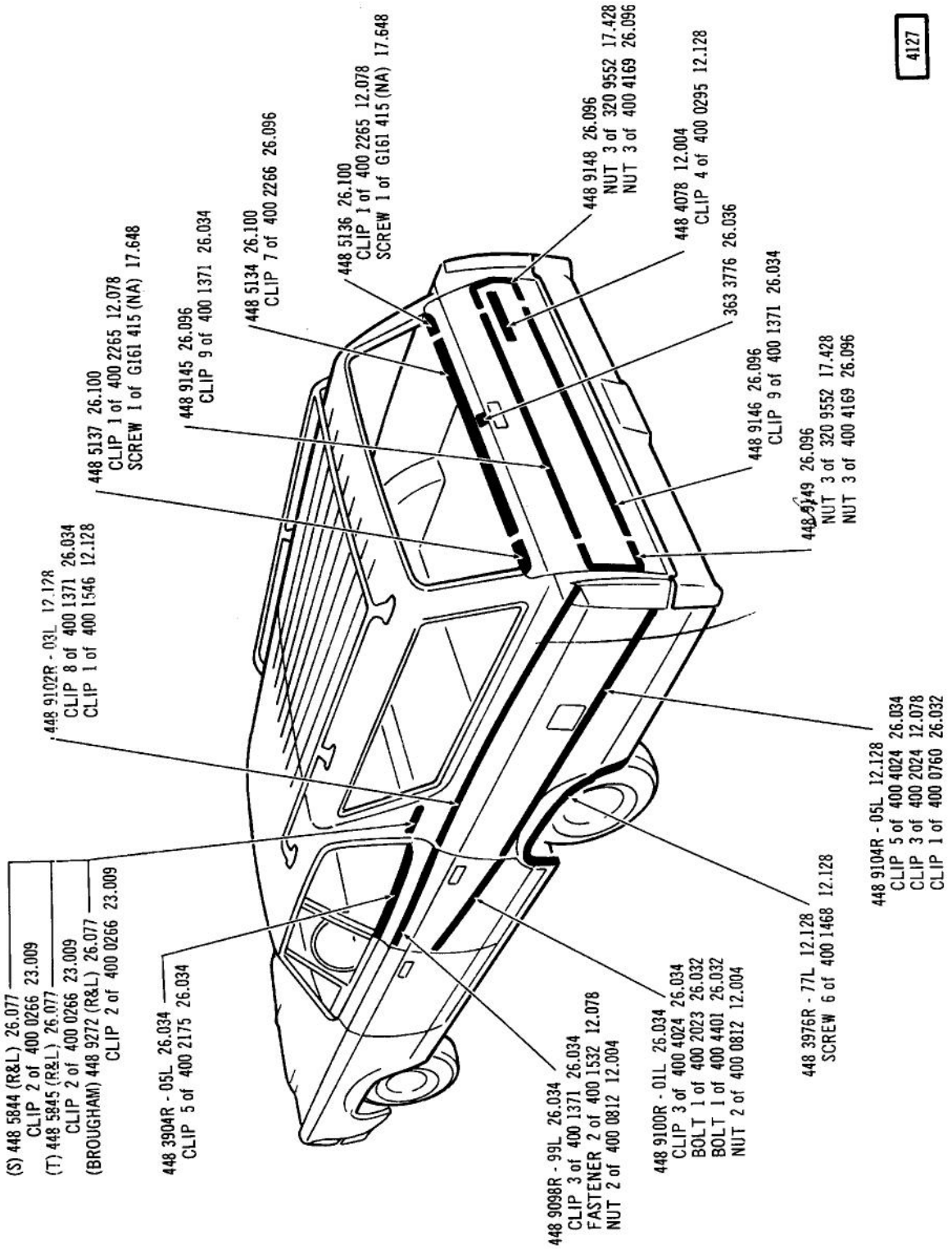

EXTERIOR ORNAMENTATION (REAR VIEW) . . . 1972 (88-WTT)(88-WWO)

Printed in U.S.A.

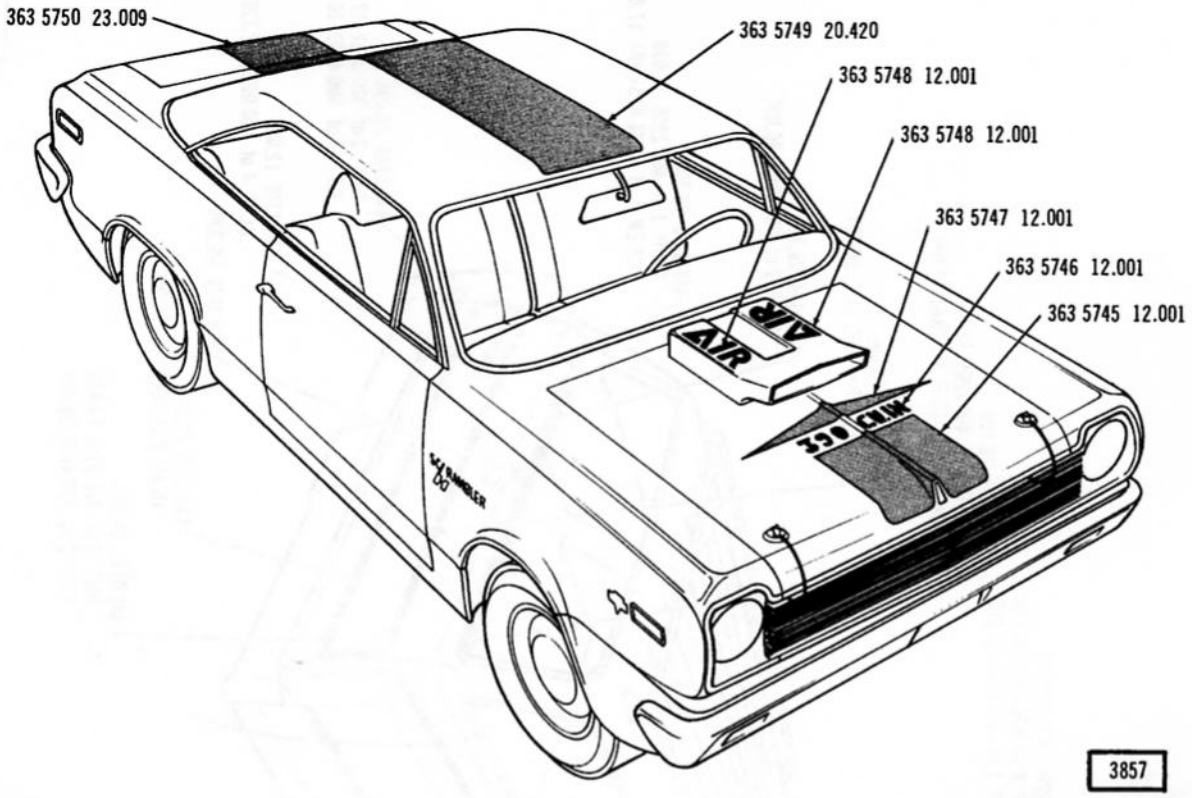

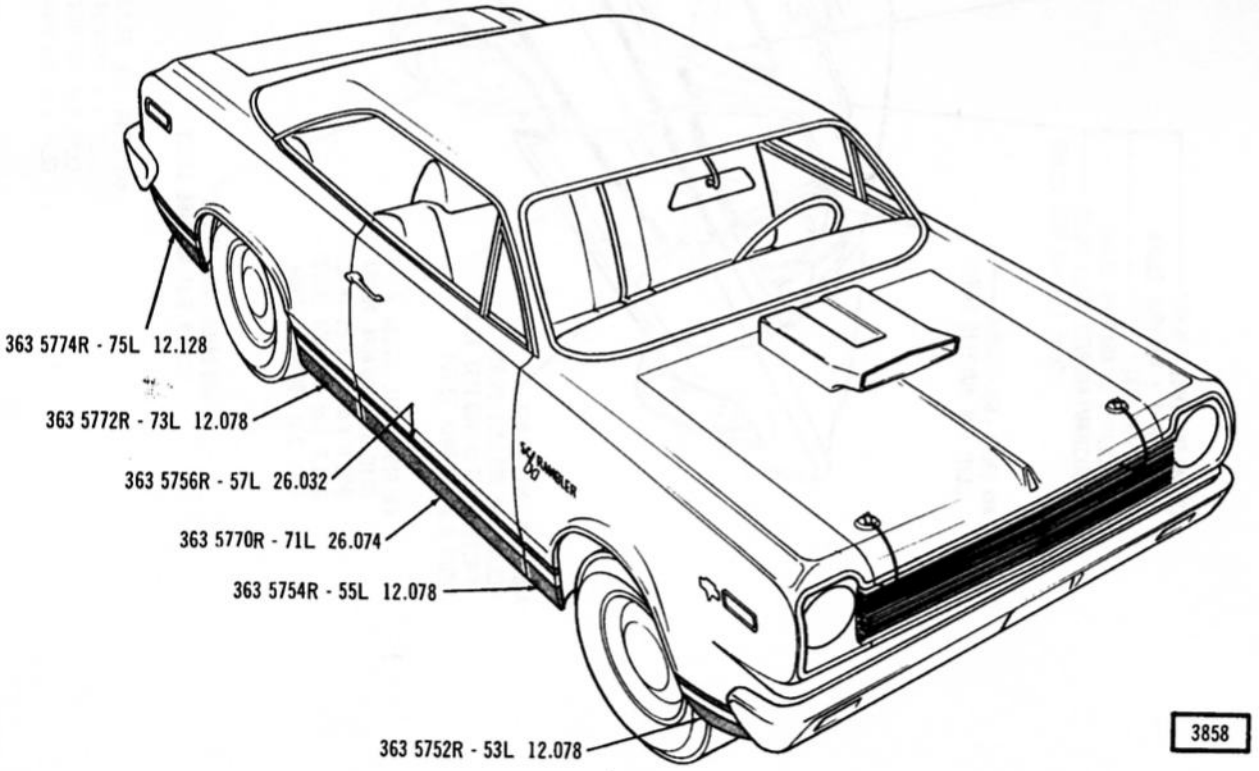

EXTERIOR DECAL RALLY STRIPE ... 1969-09 (SC/RAMBLER)

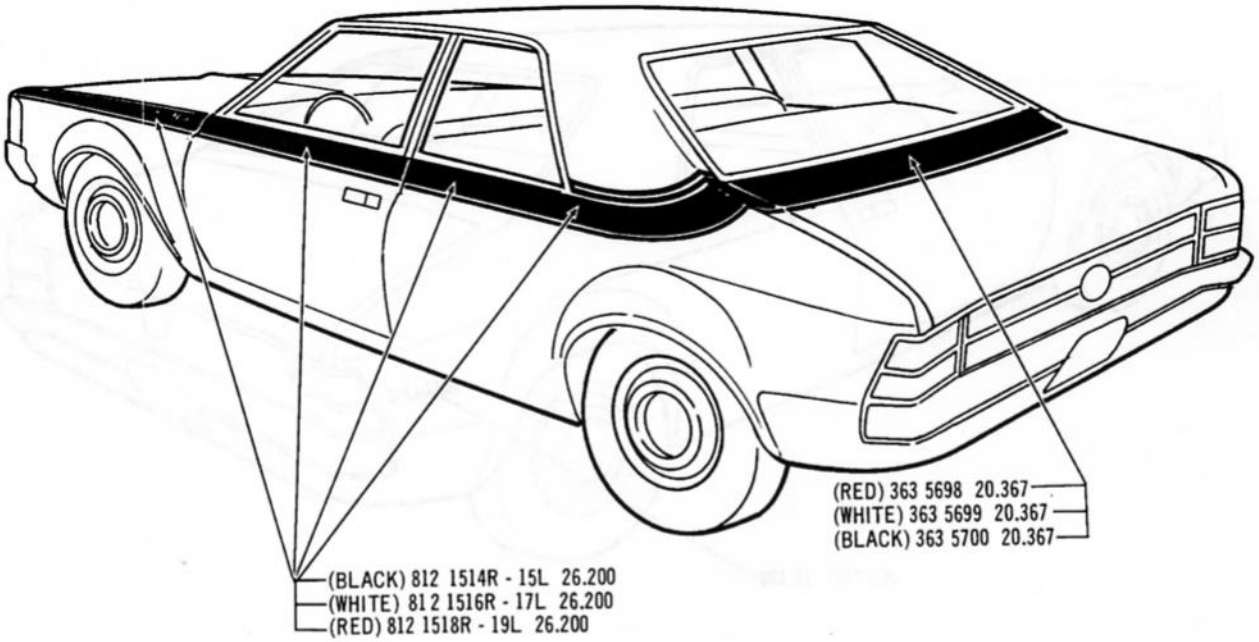

4029

EXTERIOR DECAL RALLY STRIPE ... 1971-06 (SC/360)

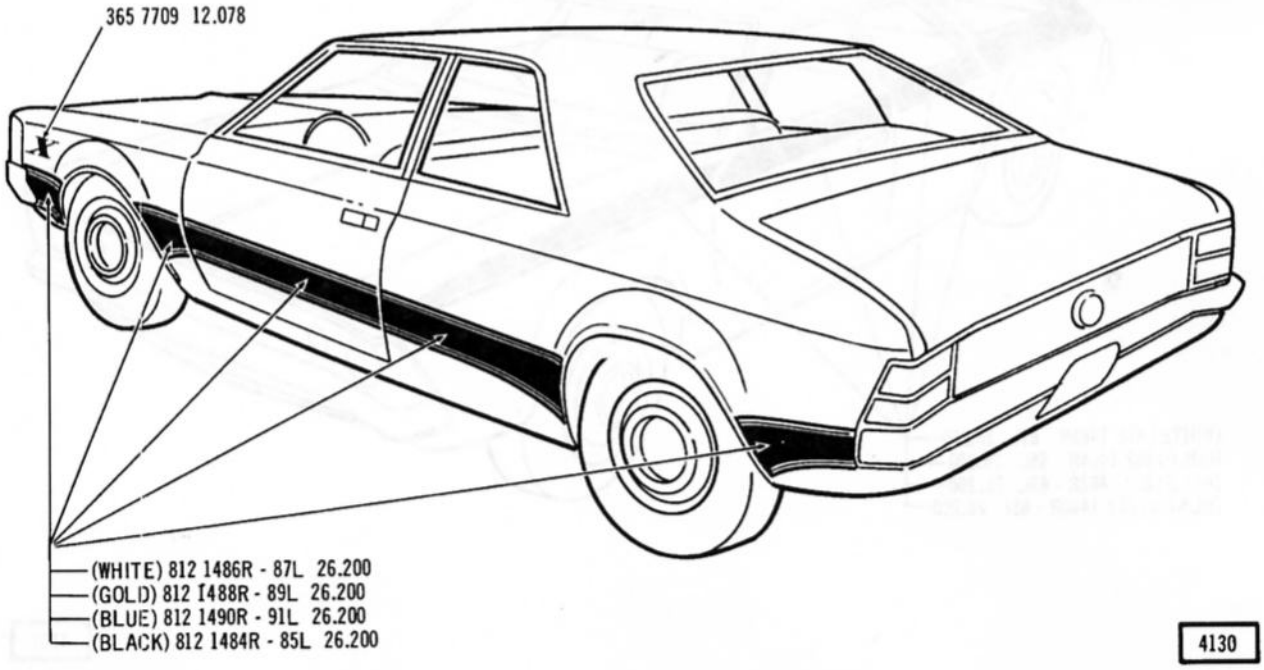

4130

EXTERIOR DECAL RALLY STRIPE ... 1972 - 06 (HORNET "X")

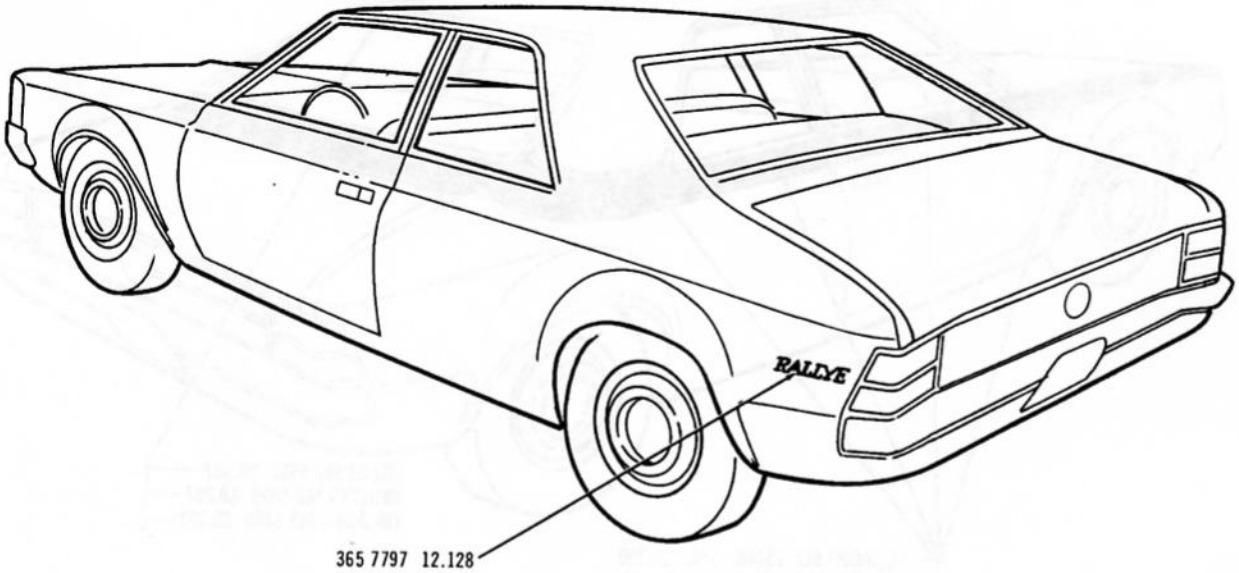

EXTERIOR DECAL . . . 1972-06 (RALLYE) 4131

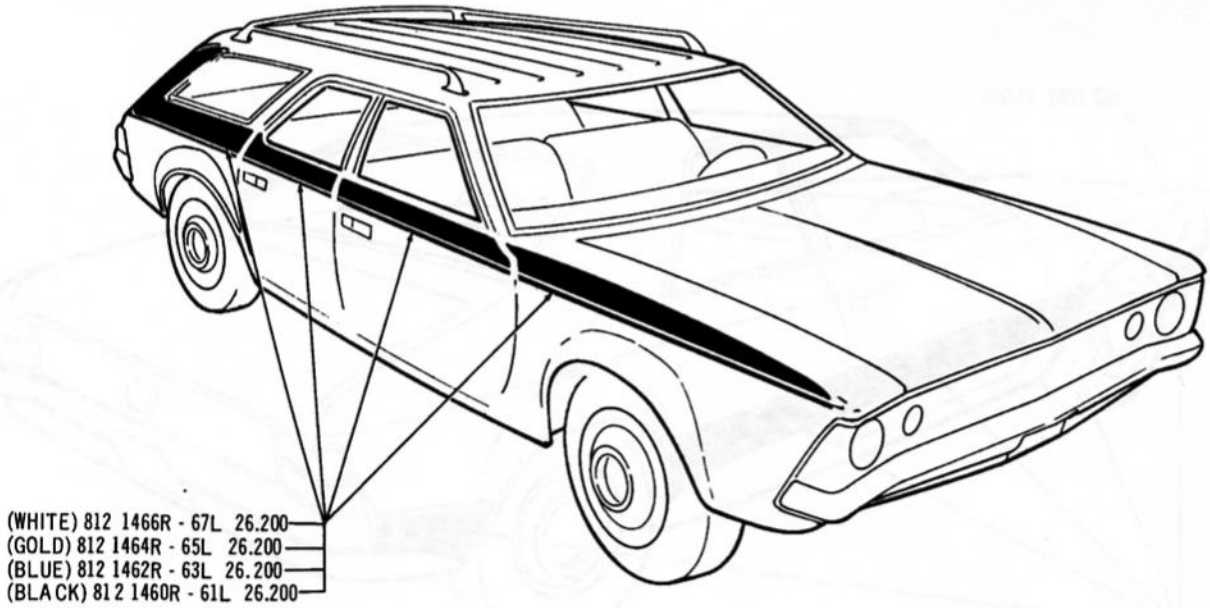

4101

EXTERIOR DECAL RALLY STRIPE . . . 1972 (08)

Printed in U.S.A.

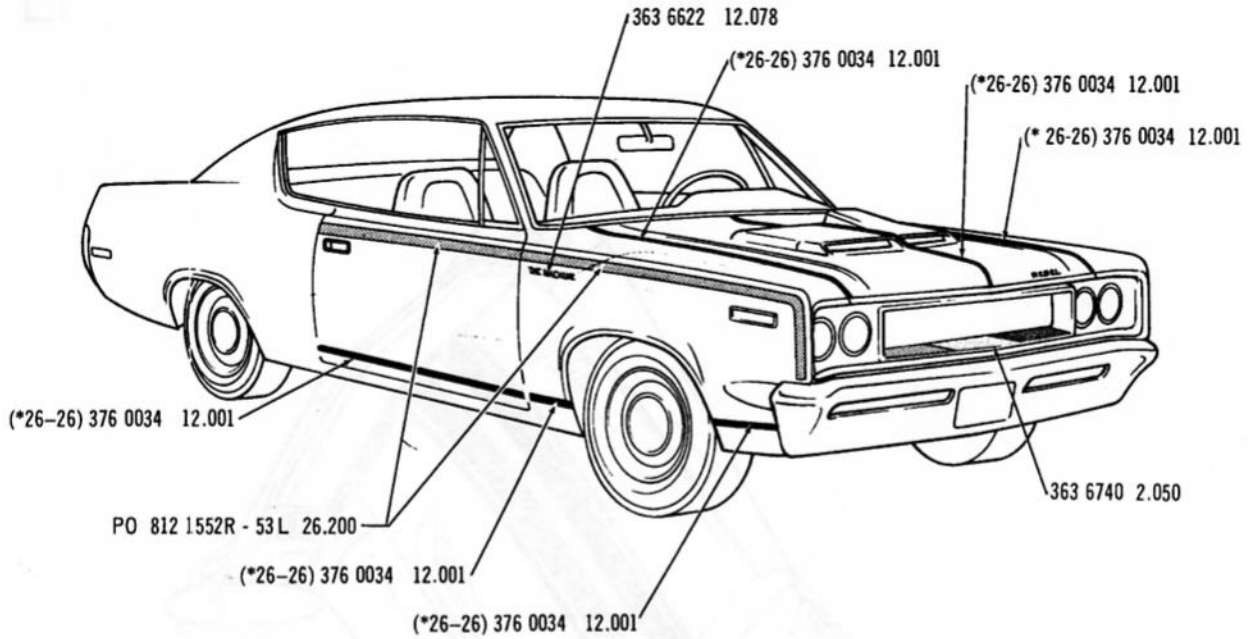

3863

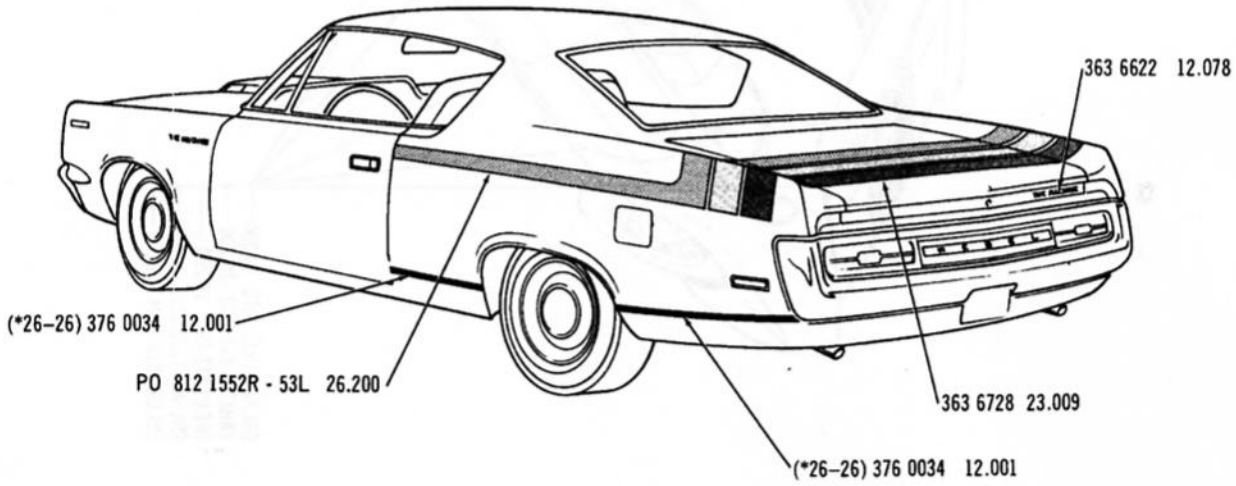

3864

EXTERIOR DECAL RALLY STRIPE ... 1970-19 (MACHINE)

Printed in U.S.A.

3460

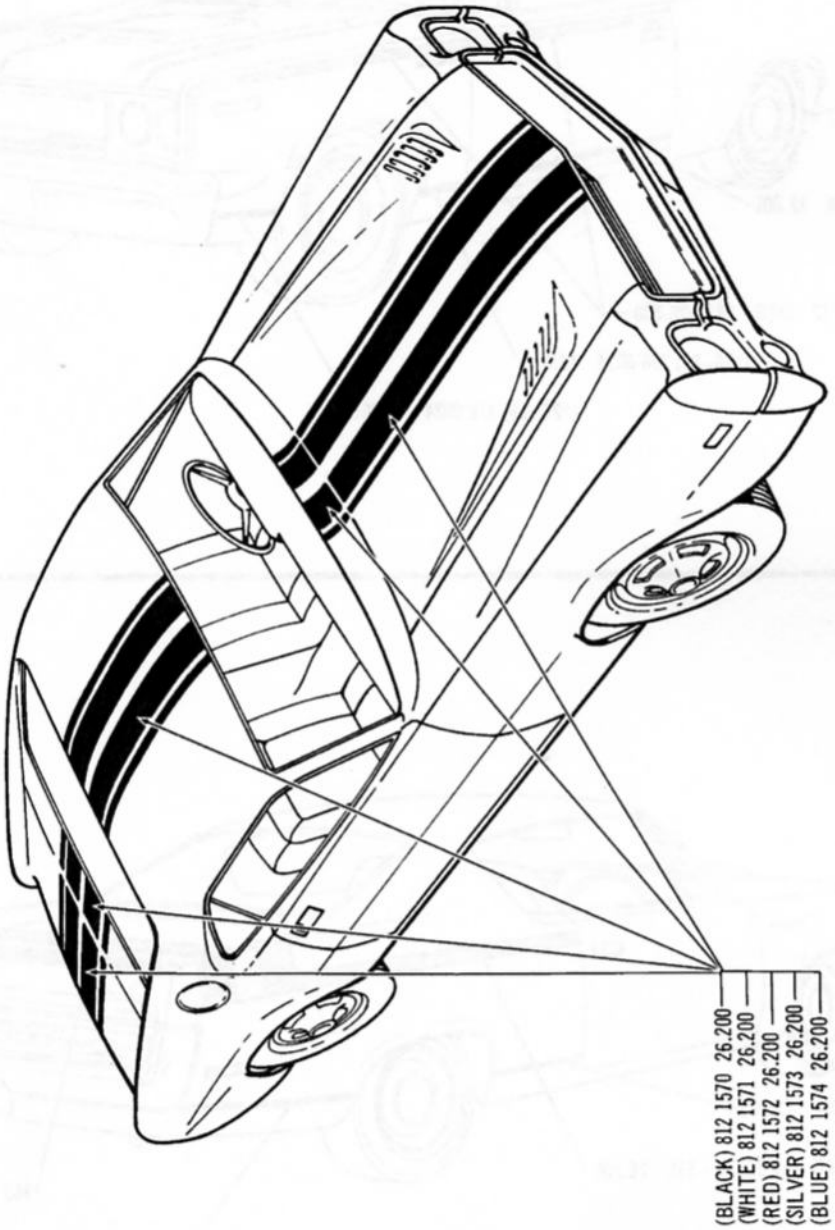

EXTERIOR DECAL RALLY STRIPE ... 1968/69 (30)

Printed in U.S.A.

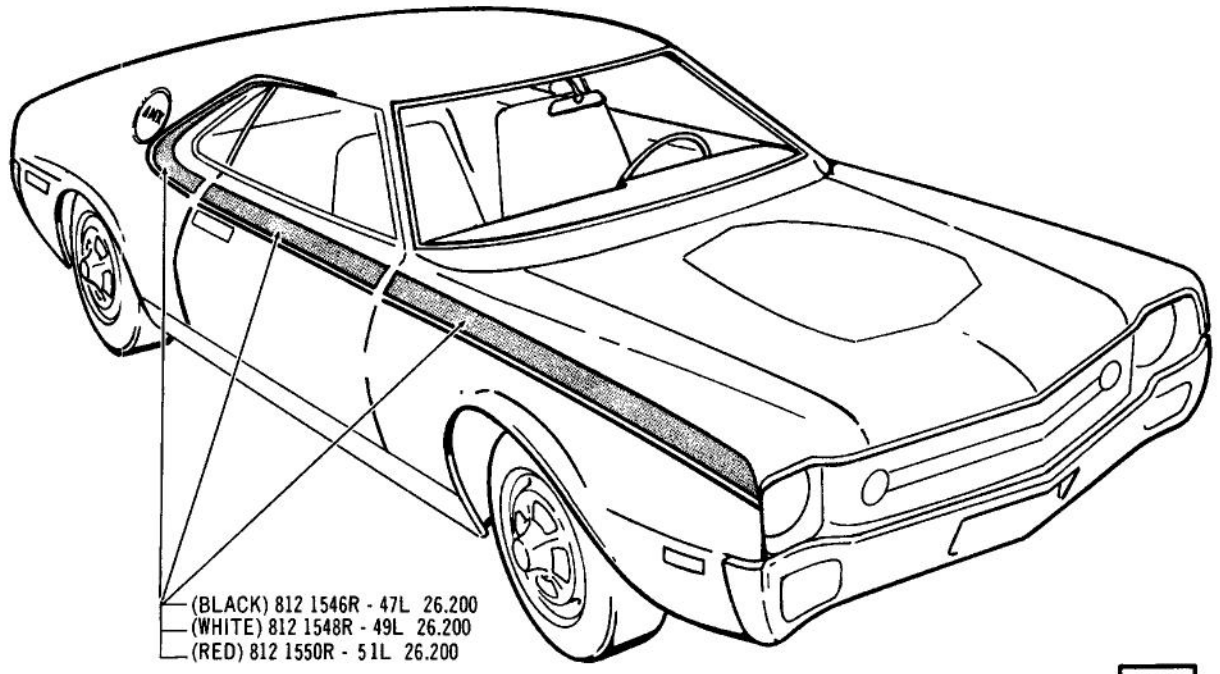

EXTERIOR DECAL RALLY STRIPE ... 1970 (30)

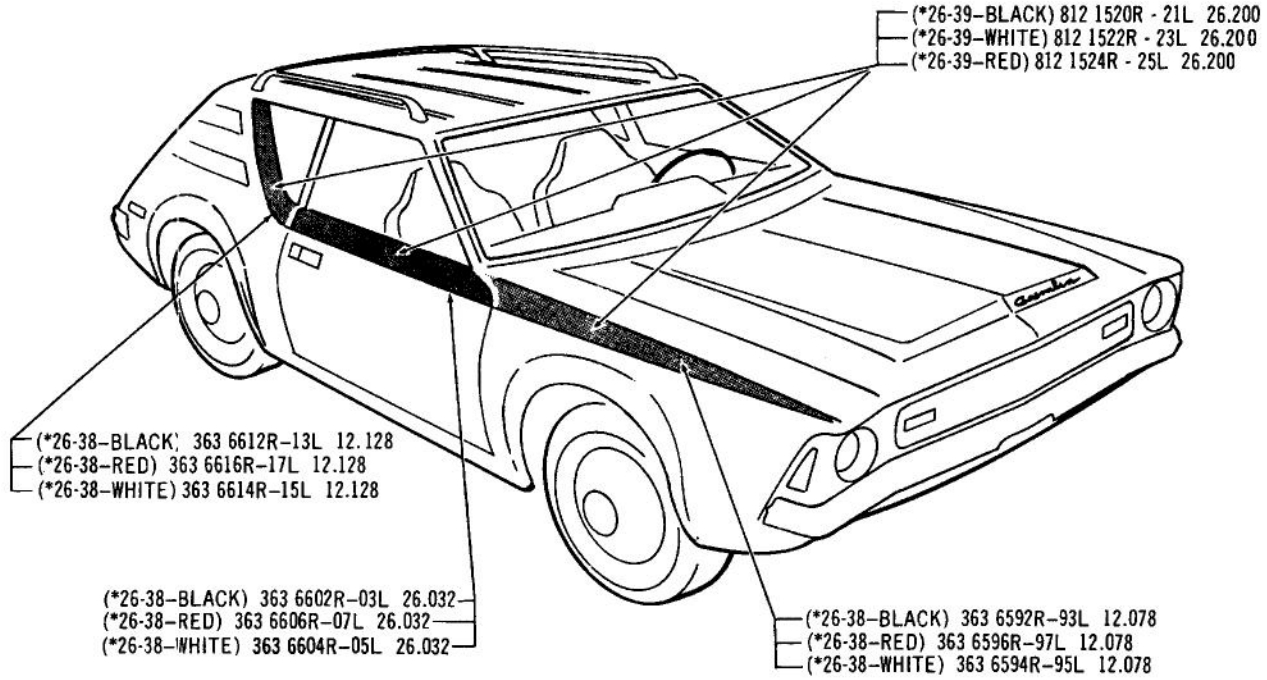

EXTERIOR DECAL RALLY STRIPE . . . 1970/71 (40-EXCEPT "X" PACKAGE)

Printed in U.S.A.

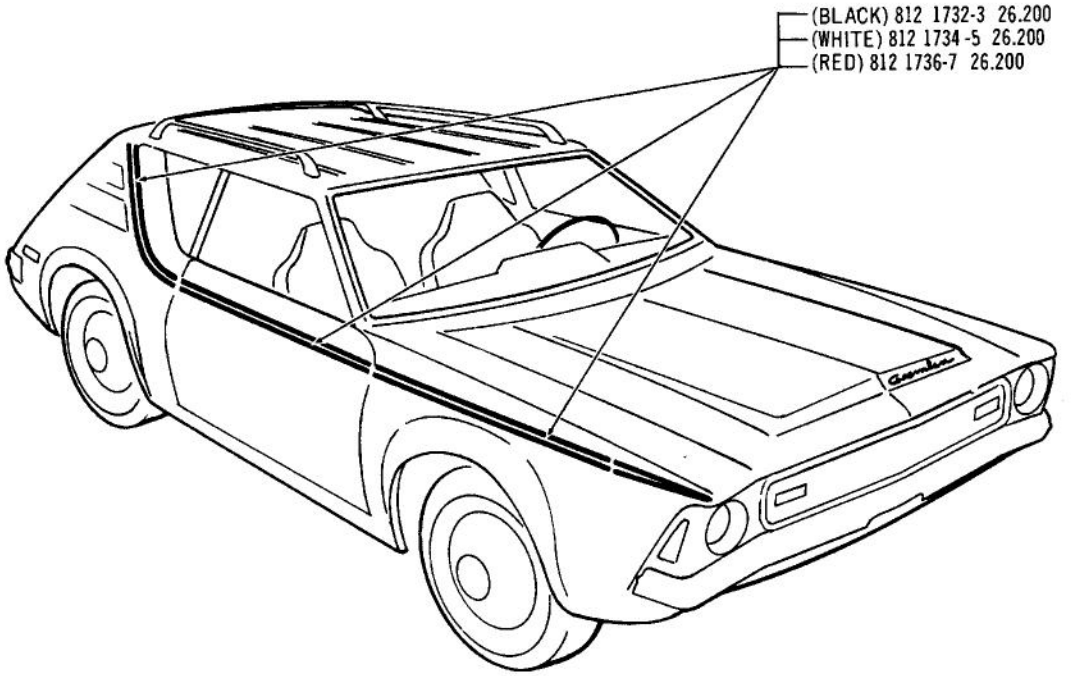

4107

EXTERIOR DECAL RALLY STRIPE . . . 1970/71 (40)

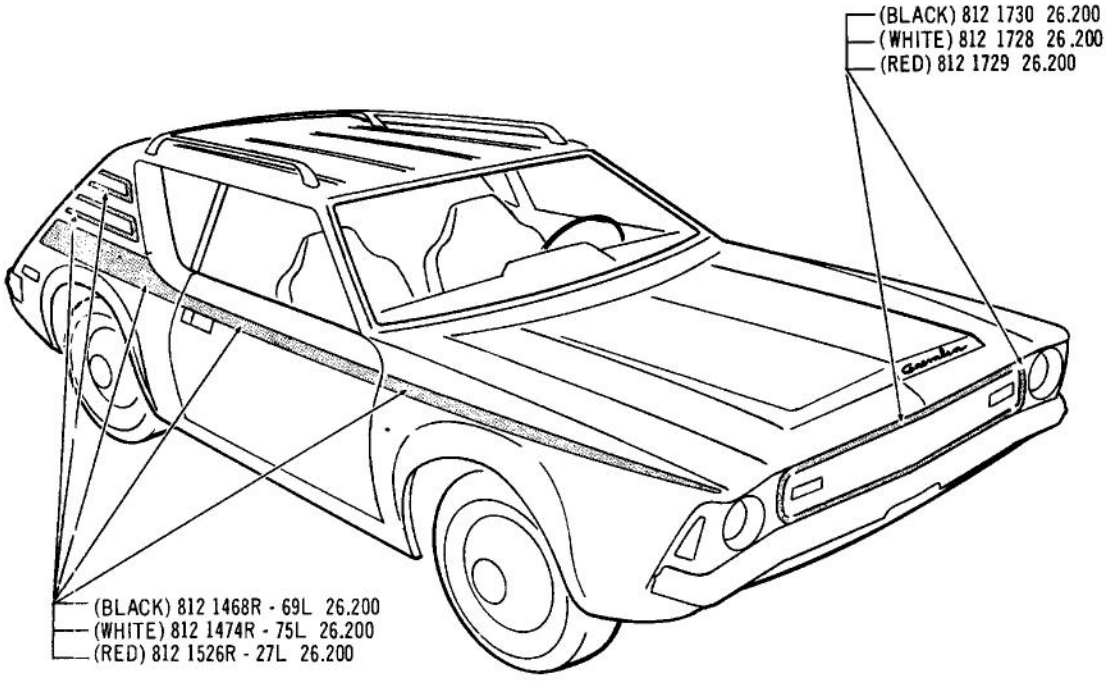

4091

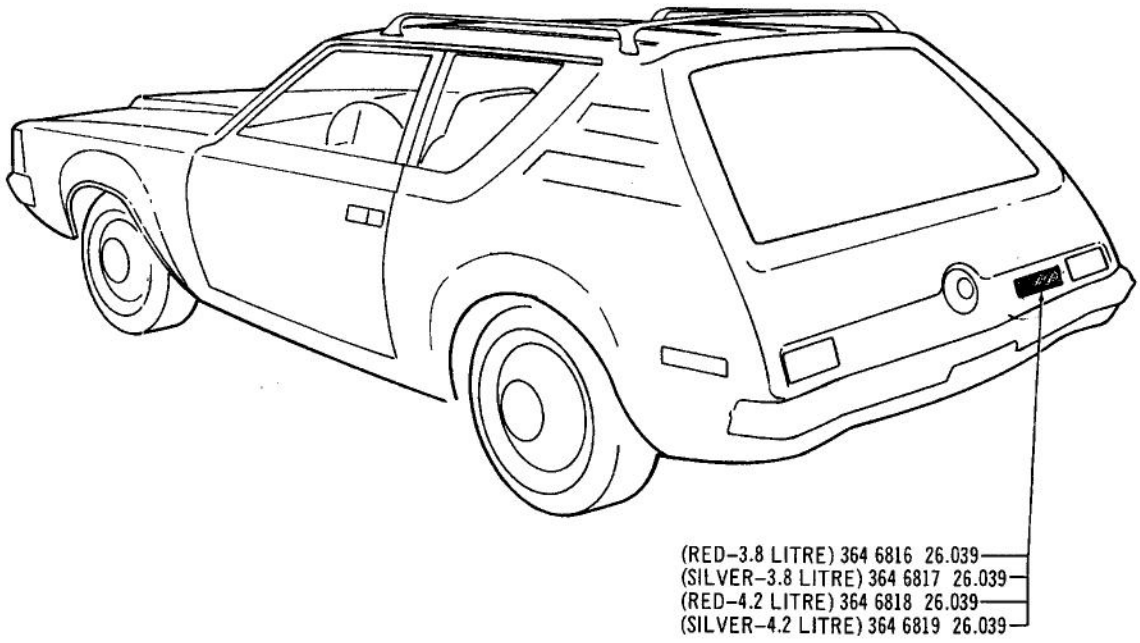

4092

EXTERIOR DECAL RALLY STRIPE . . . 1971 (40-"X" PACKAGE)

Printed in U.S.A.

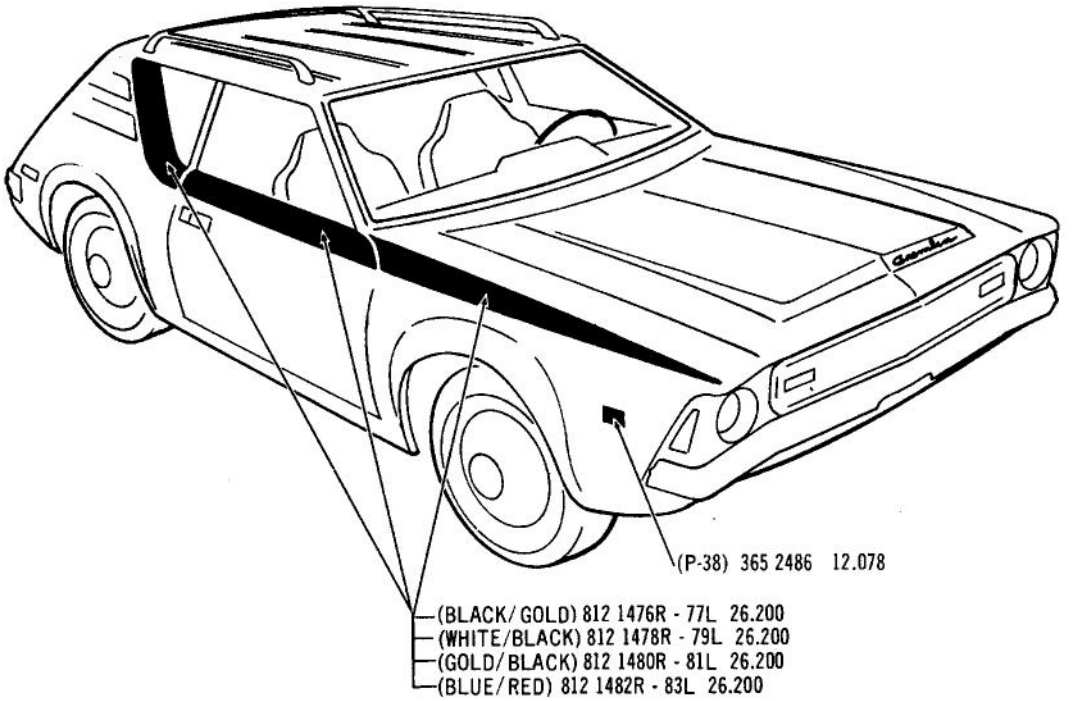

4117

EXTERIOR DECAL RALLY STRIPE . . . 1972 40 (EXCEPT "X" PACKAGE)

71

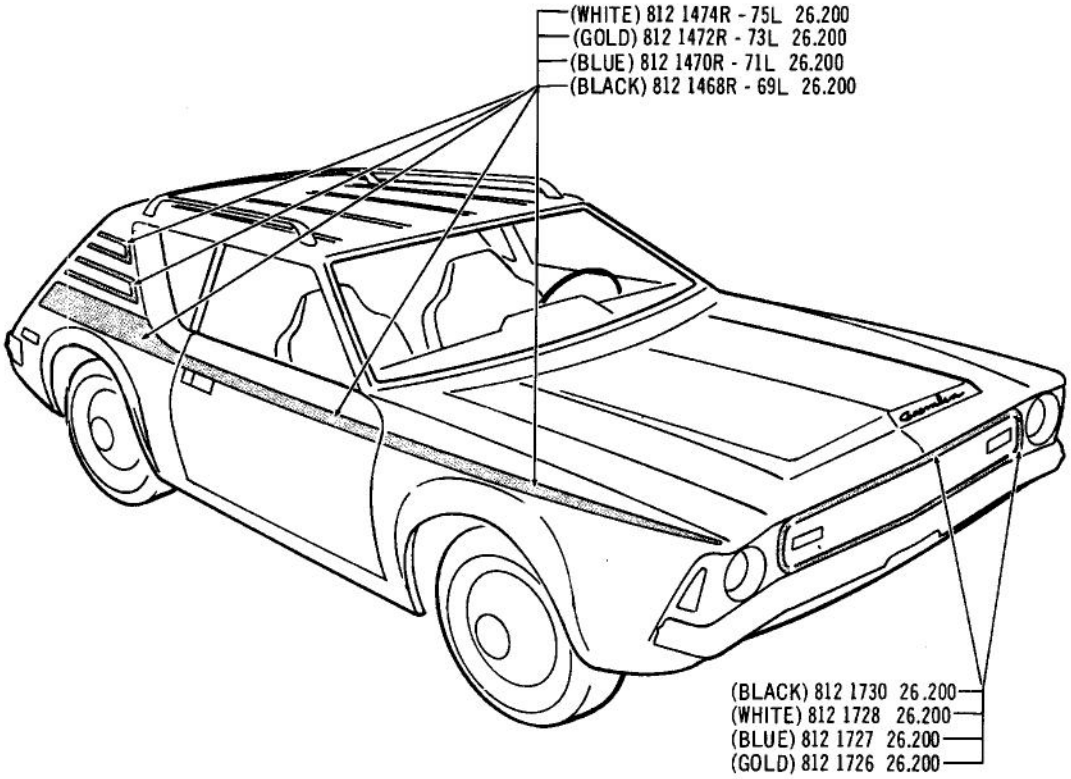

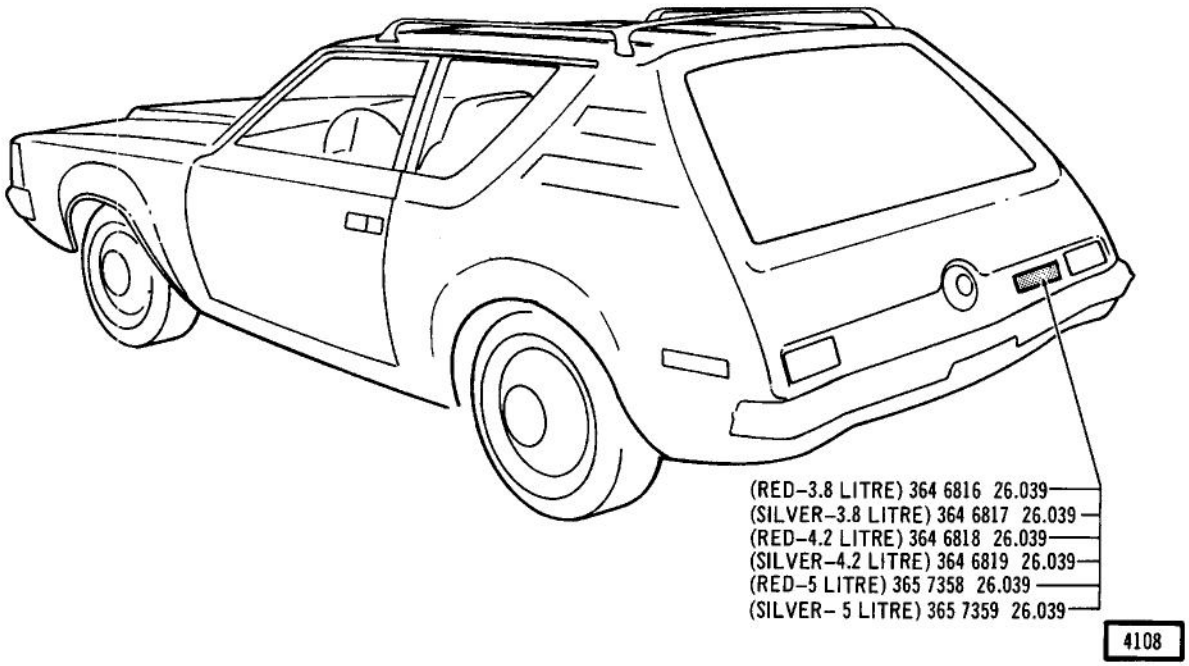

EXTERIOR DECAL RALLY STRIPE . . . 1972 40 ("X" PACKAGE)

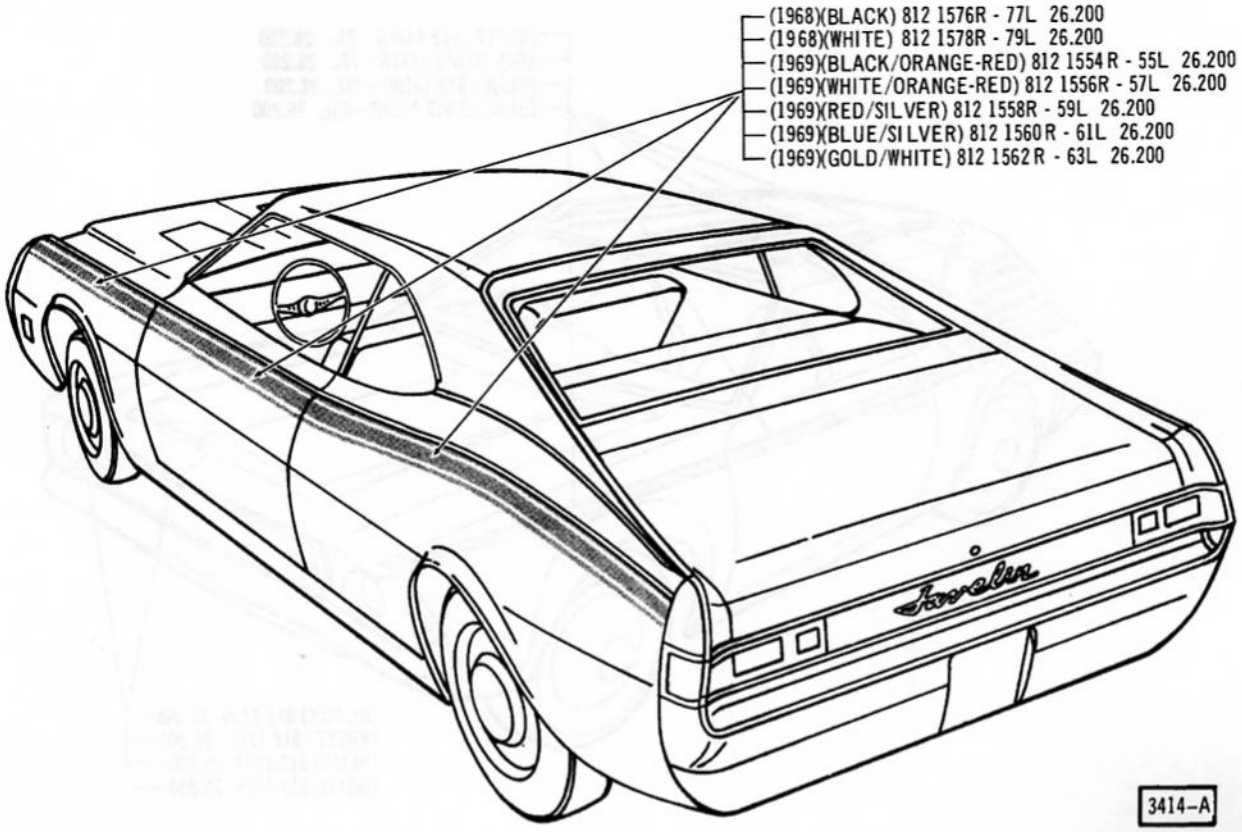

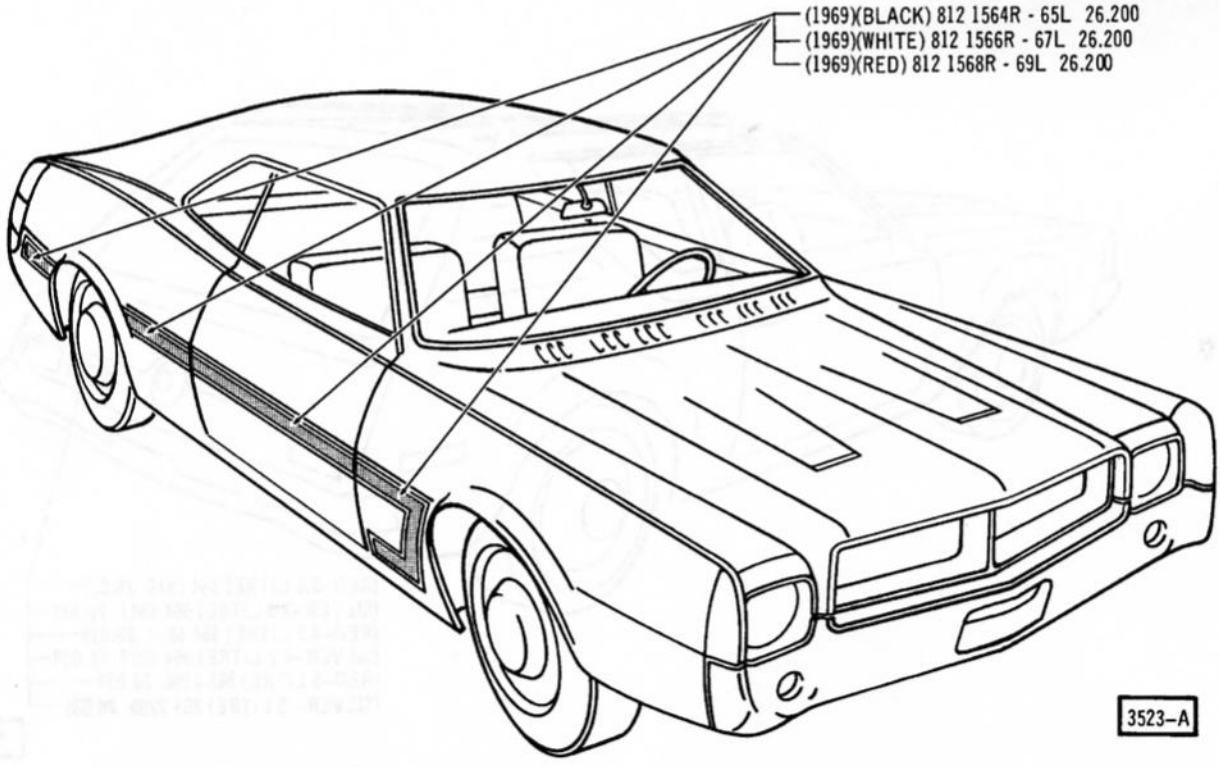

EXTERIOR DECAL STRIPE ... 1968/69 (70)

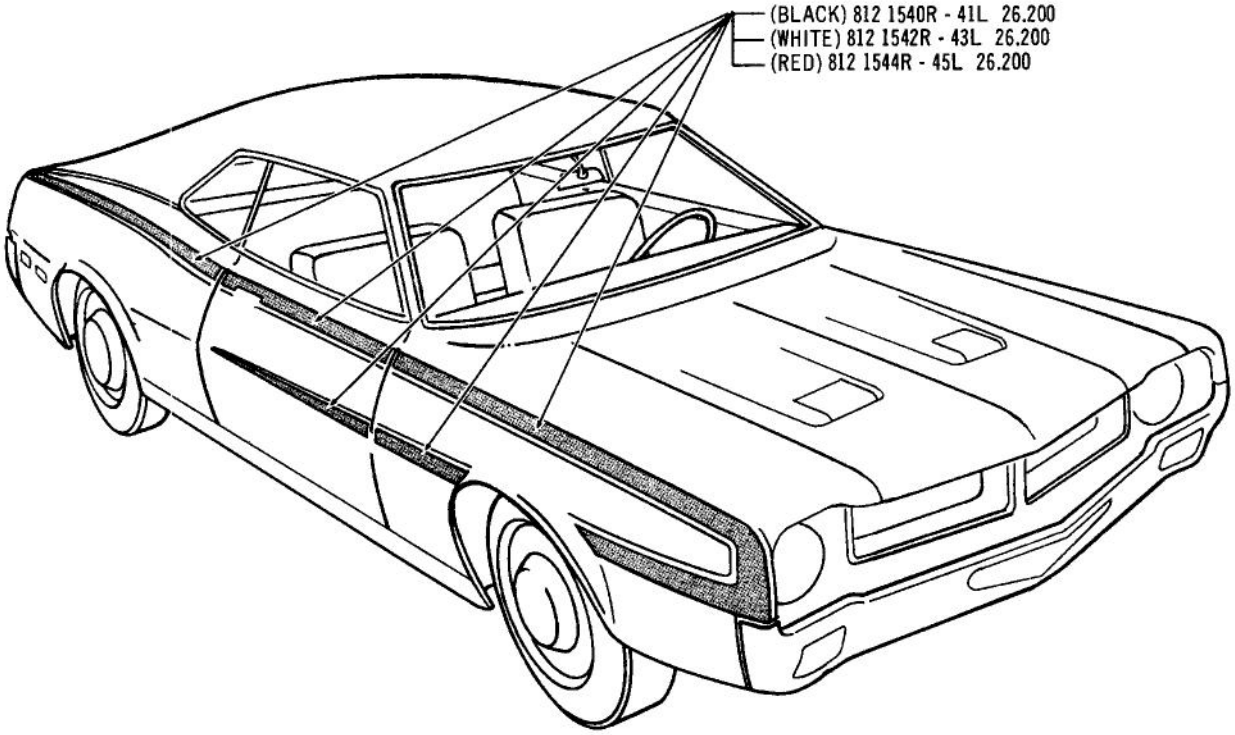

3869

EXTERIOR DECAL RALLY STRIPE ... 1970 (70)

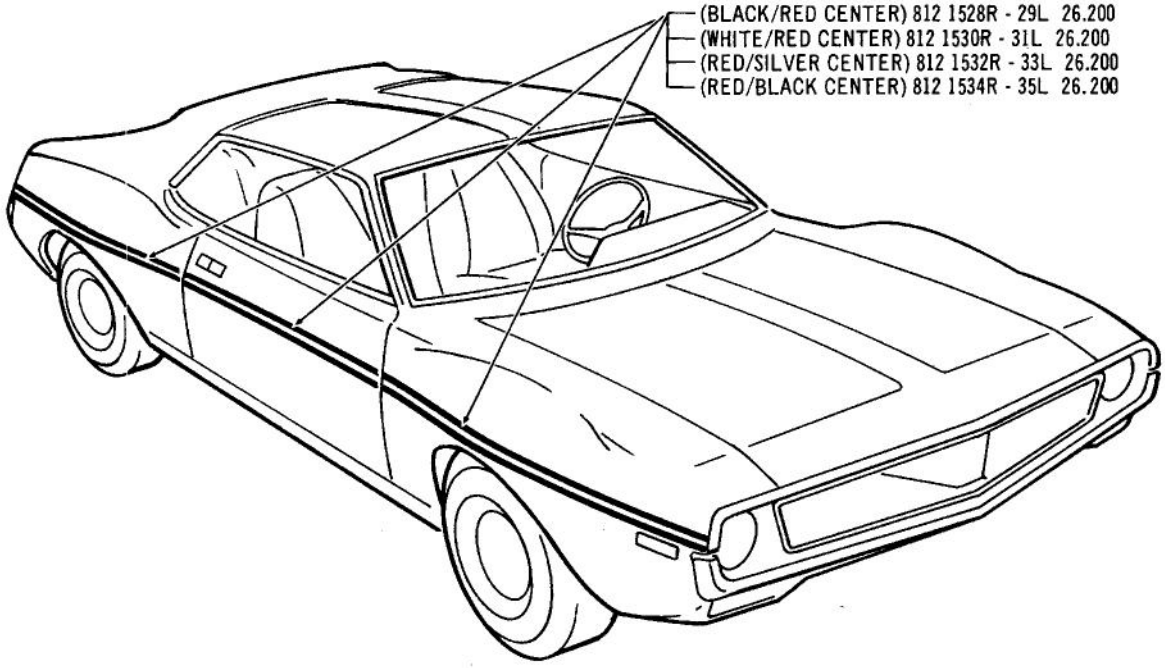

4044

EXTERIOR DECAL RALLY STRIPE ... 1971 (79-5)(79-7)

Printed in U.S.A.

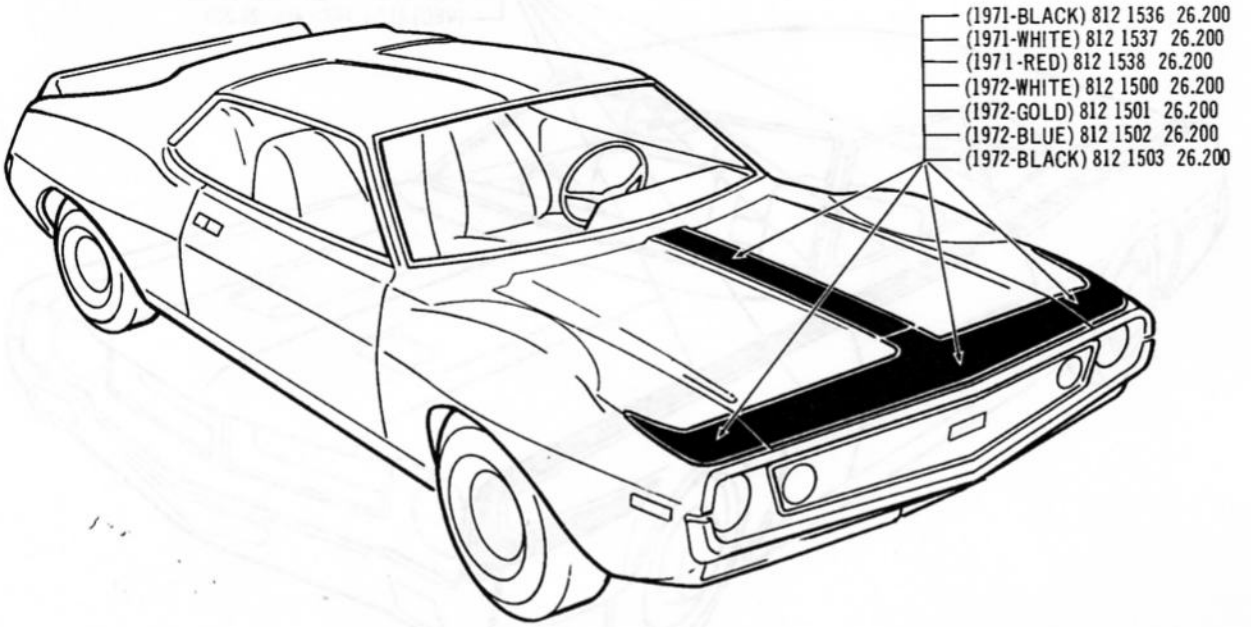

4030

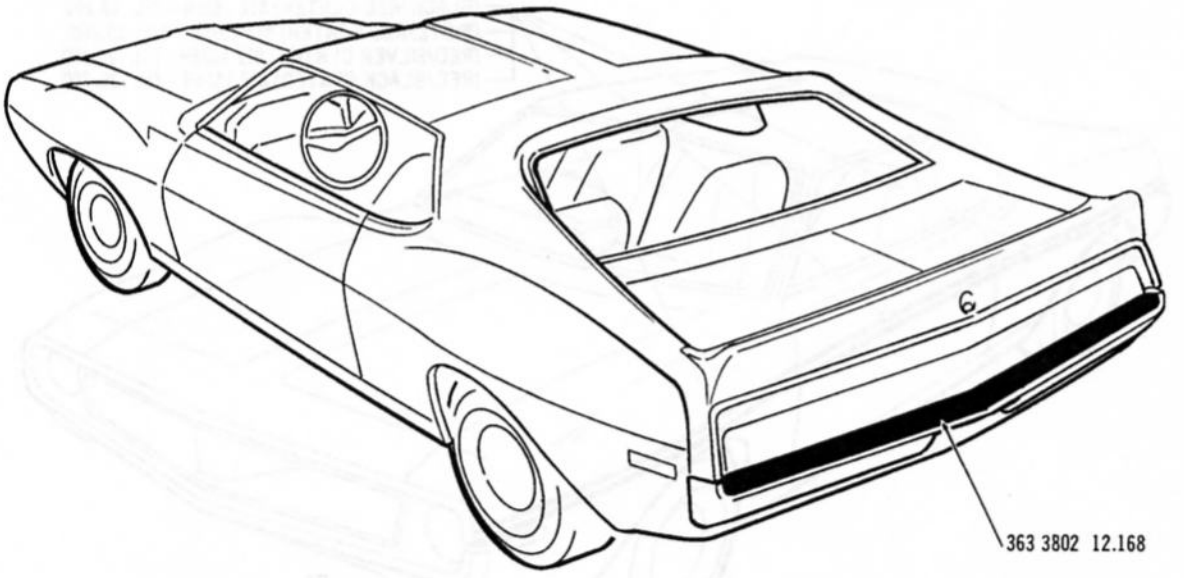

4090

EXTERIOR DECAL RALLY STRIPE ... 1971/ (79-8)



EXTERIOR DECAL RALLY STRIPE . . . 1972 (79-5)(79-7)

Printed in U.S.A.



3444

EXTERIOR DECAL RALLY STRIPE ... 1968 (19)

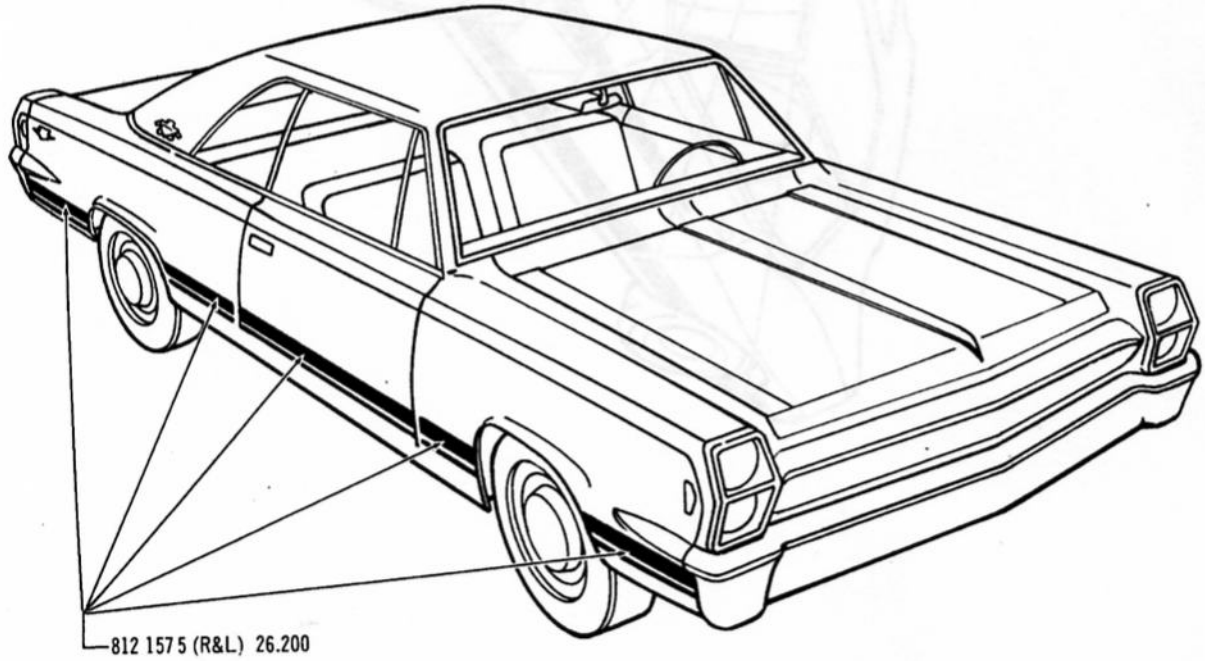

3445

EXTERIOR DECAL RALLY STRIPE ... 1968 (89)

2866

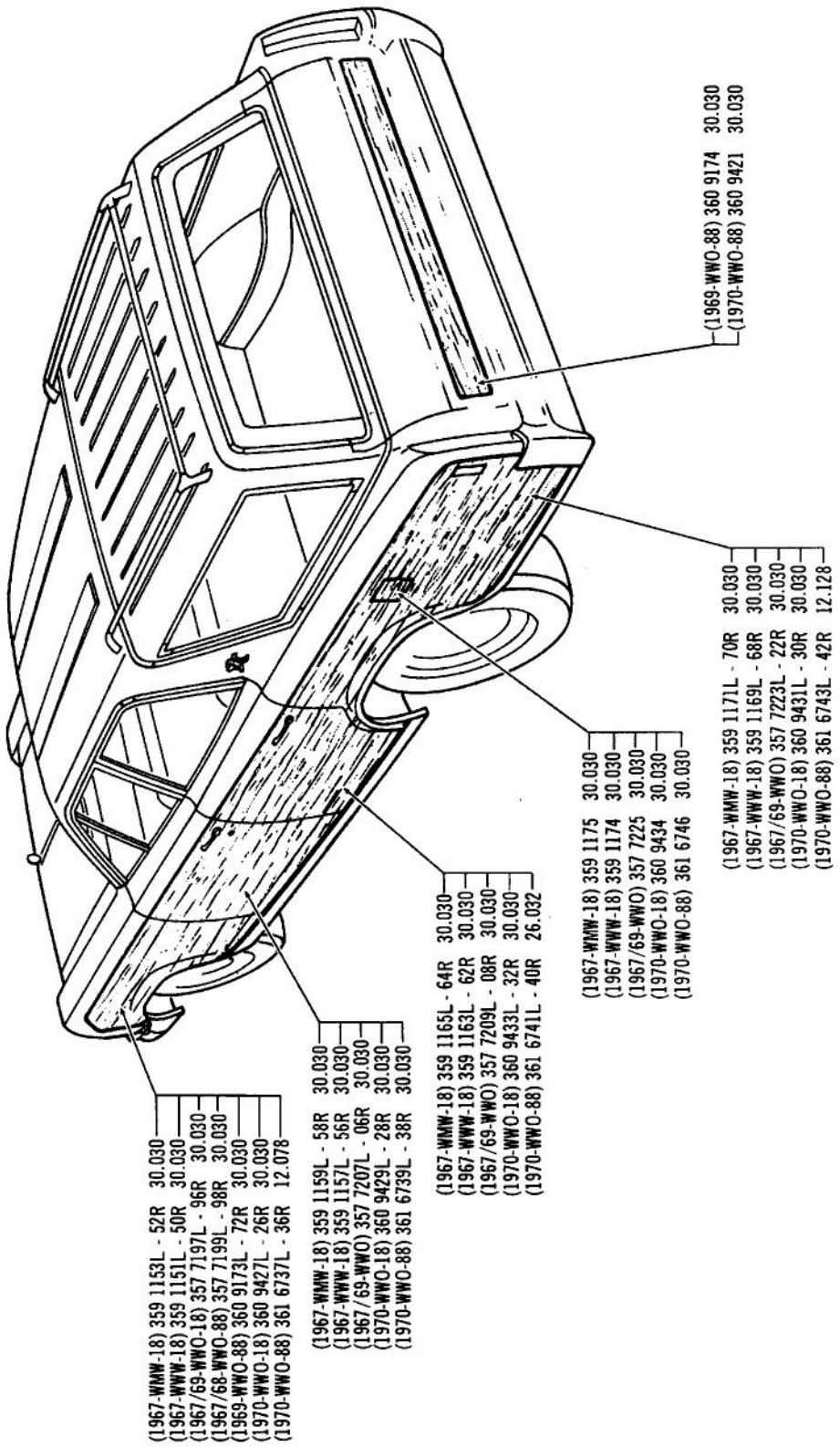

DI-NOC OVERLAY ... 1967/70 (18)(88)

4031

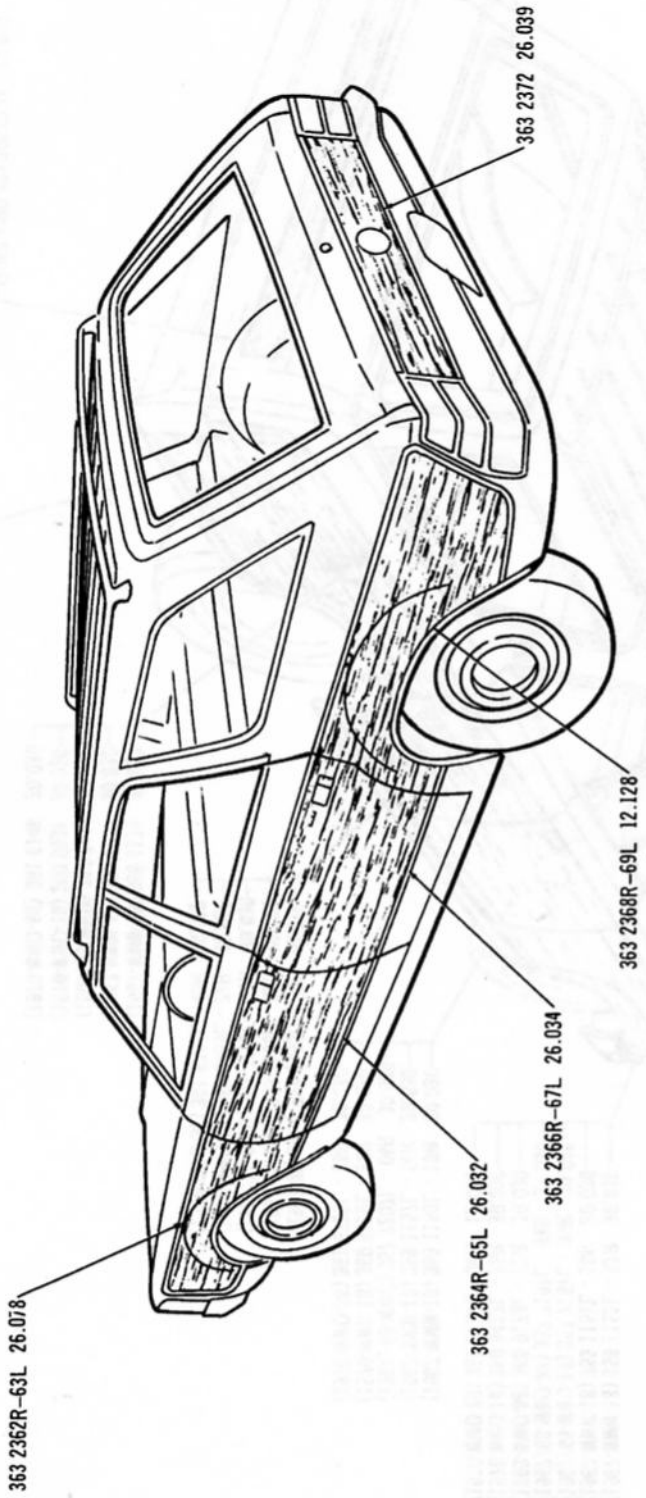

DI-NOC OVERLAY ... 1971/ (08)

Printed in U.S.A.

4032

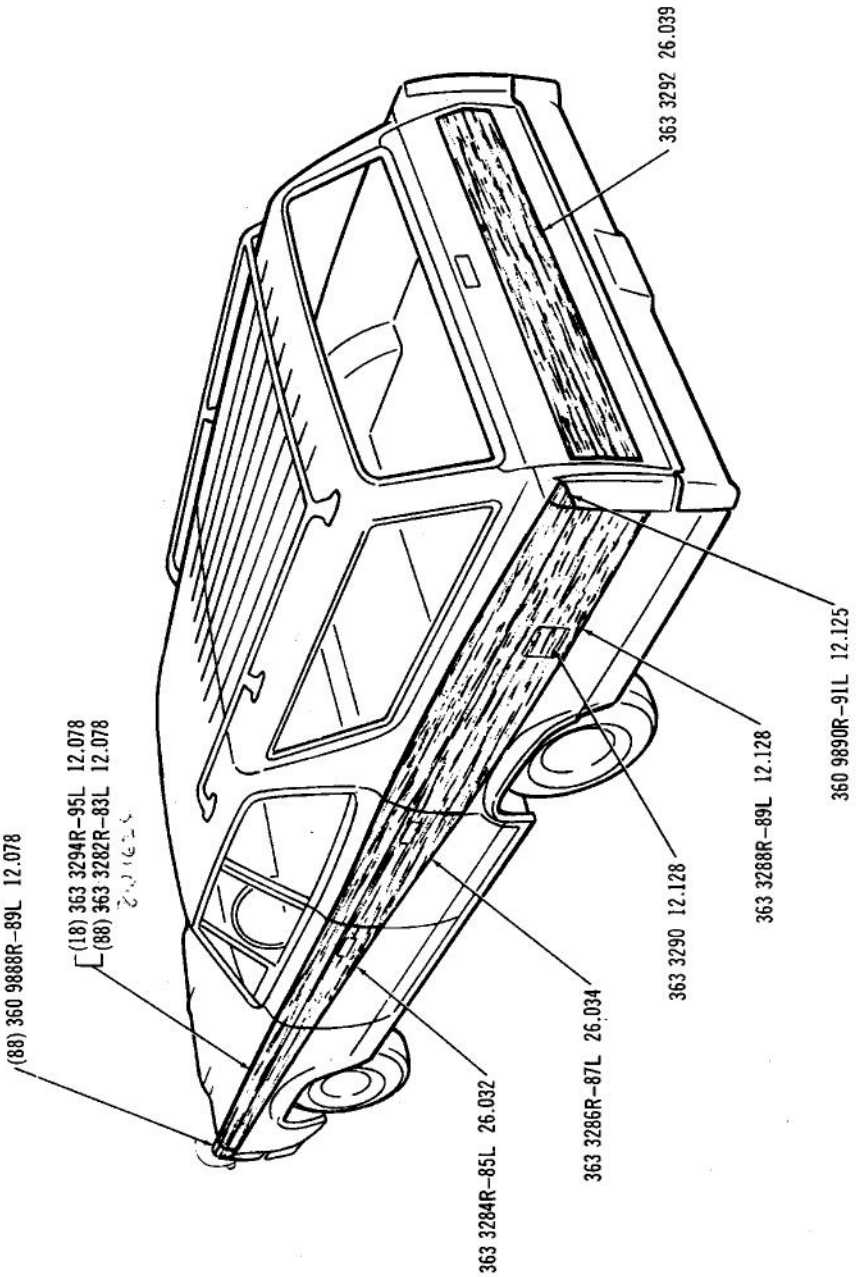

DI-NOC OVERLAY ... 1971/ (18)(88)

Printed in U.S.A.

SPECIAL INFORMATION

The Engine Build Code Number, Vehicle Identification Number and the information provided on the Unit Body Plate are often necessary when determining the proper replacement parts for your automobile. For their location refer to the General Information Section found at the front of this catalog.

NOTES

27–1 .... Is Less the Inscription "AMERICAN MOTORS".

27–2 .... Is With the Inscription "AMERICAN MOTORS".

27–11 ... The Mirror Bracket is less the Plastic Trim Cover.

27–12 ... The Mirror Bracket has a Plastic Trim Cover.

27–15 ... The holster for the front belt tip end is off set and the belt buckle is painted.

27–16 ... The holster for the front belt tip end is straight and the belt buckle is vinyl coated.

27–17 ... The length of the Seat Belt Buckle is 3 inches.

27–18 ... The length of the Seat Belt Buckle is 2-1/2 inches.

27–19 ... The length of the Plastic Boot on the Front Outer Belt is 9 inches.

27–20 ... The length of the Plastic Boot on the Front Outer Belt is 3-7/8 or 5 inches and the Webbing of the Belt has a Pebble Grain Weave in a uniform Solid Color.

27–21 ... The length of the Plastic Boot on the Front Outer Belt is 7-5/8 or 12-7/16 inches and the Webbing of the Belt has a Pebble Grain Weave in a uniform Solid Color.

27–22 ... The length of the Plastic Boot on the Front Outer Belt is 7-5/8 inches, the Webbing of the Belt has a Smooth Weave with a Two-Tone parallel Four Stripe Design and the Stowage Retainer Clips for the Shoulder Belts are Plastic.

27–23 ... The Webbing of the Belt has a Pebble Grain Weave in a uniform Solid Color.

27–24 ... Used only with Shoulder Bolt 317 3132.

27–25 ... The length of the Plastic Boot on the Front Outer Belt is 12-7/16 inches and the Webbing of the Belt has a Smooth Weave with a Two-Tone parallel Four Stripe Design.

27–26 ... The length of the Plastic Boot on the Front Outer Belt is 3-7/8 or 5 inches and the Webbing of the Belt has a Smooth Weave with a Two-Tone parallel Four Strip Design.

27–27 ... The Stowage Retainer Clips for the Shoulder Belts are Wire.

27–30 ... The connector on the Tip End of the Seat Belt has a Vertical Slot and an identifying number "645" below it.

27–31 ... The connector on the Tip End of the Seat Belt has a Horizontal Slot and an identifying number "446549" below it and is used in conjunction with the Shoulder Belt having a Slotted Connector that the Front Seat Belt goes through.

27–32 ... Screw is less Nylon Section in Thread.

27–33 ... Screw has a Nylon Section in Thread.

27–34 ... The Post is mounted to the Roof utilizing Stud and Nut fastening.

27–35 ... The Post is mounted to the Roof utilizing Machine Screw and Nut fastening.

27–36 ... The Connector on the Tip End of the Front Seat Belt is off-set and has a Slot for fastening the Shoulder Belt Buckle Grommet.

27–37 ... The Shoulder Belt has a Connector with a Slot that the Seat Belt goes through.

27–38 ... The Shoulder Belt has a Buckle with a Grommet that fastens to the Seat Belt Connector.

Printed in U.S.A.

NOTES

27–39 ... The Connector on the Tip End of the Seat Belt has a Horizontal Slot and an identifying number "446549" below it.

27–40 ... This part is used in conjunction with the Shoulder Belt having a Buckle with a Grommet that fastens to the Seat Belt Connector.

27–41 ... Used on Cars without Rear Air Deflector.

27–42 ... Used on Cars with Rear Air Deflector.

27–43 ... Console Housing extends under Instrument Panel.

27–44 ... Console Housing does not extend under Instrument Panel.

27–45 ... Mirror has Stud Ball in Mirror Head (See Type 1 Illustration).

27–46 ... Mirror does not have Stud Ball in Mirror Head (See Type 2 Illustration).

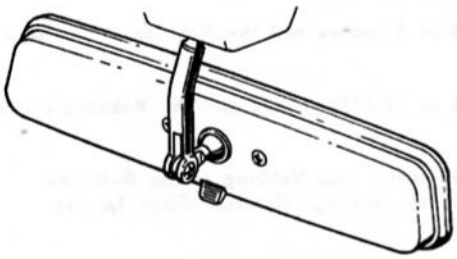

TYPE 1

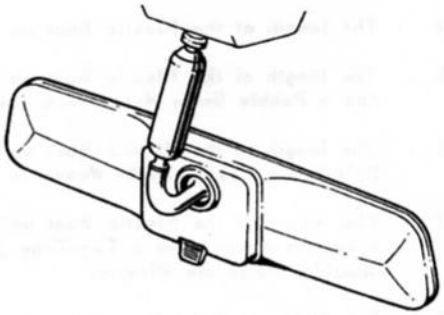

TYPE 2

27–48 ... Buckle End is 13" Long.

27–49 ... Buckle End is 15-1/2" Long.

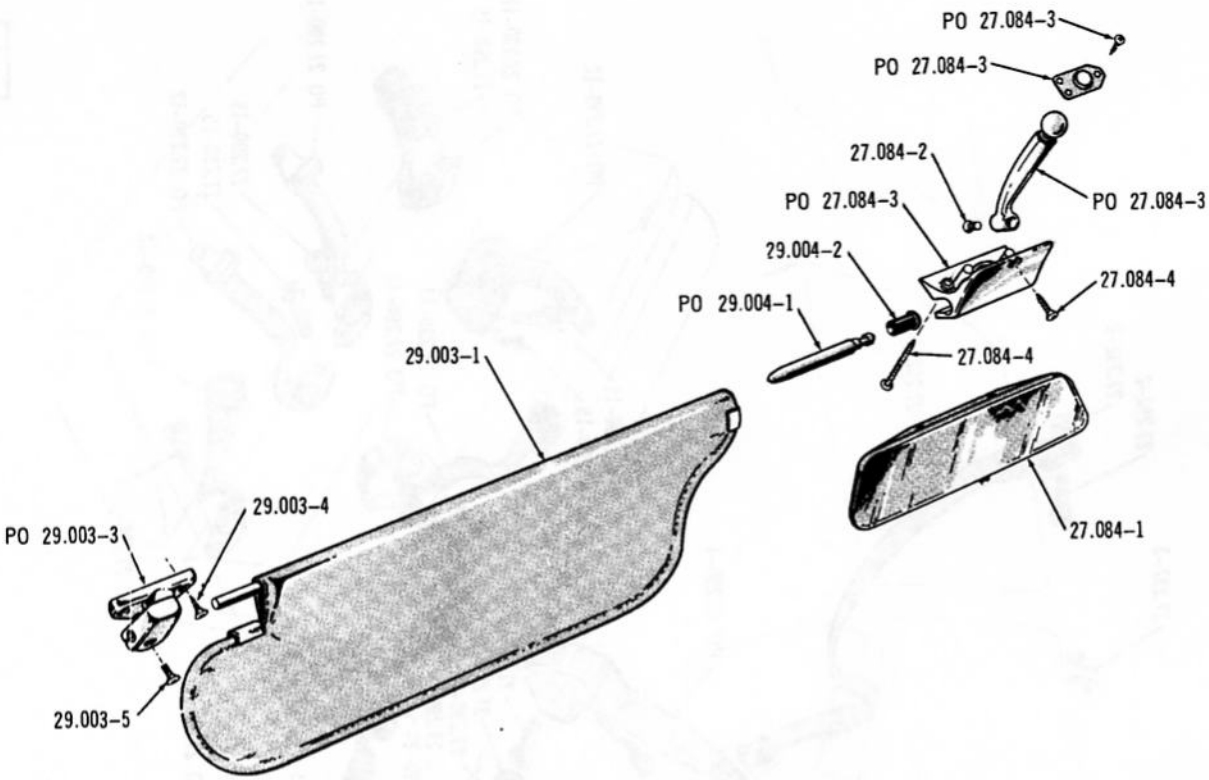

3111

SUN VISOR AND INSIDE MIRROR ... 1967 (10)(50)(80), 1968 (Type 1-E/01)

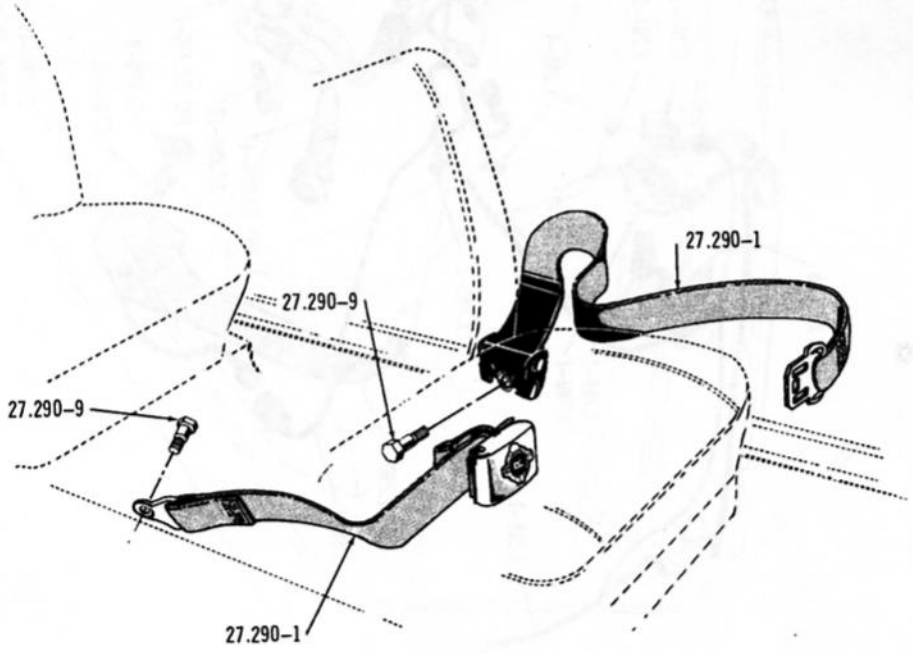

2974

FRONT SEAT BELT ... 1967

4181

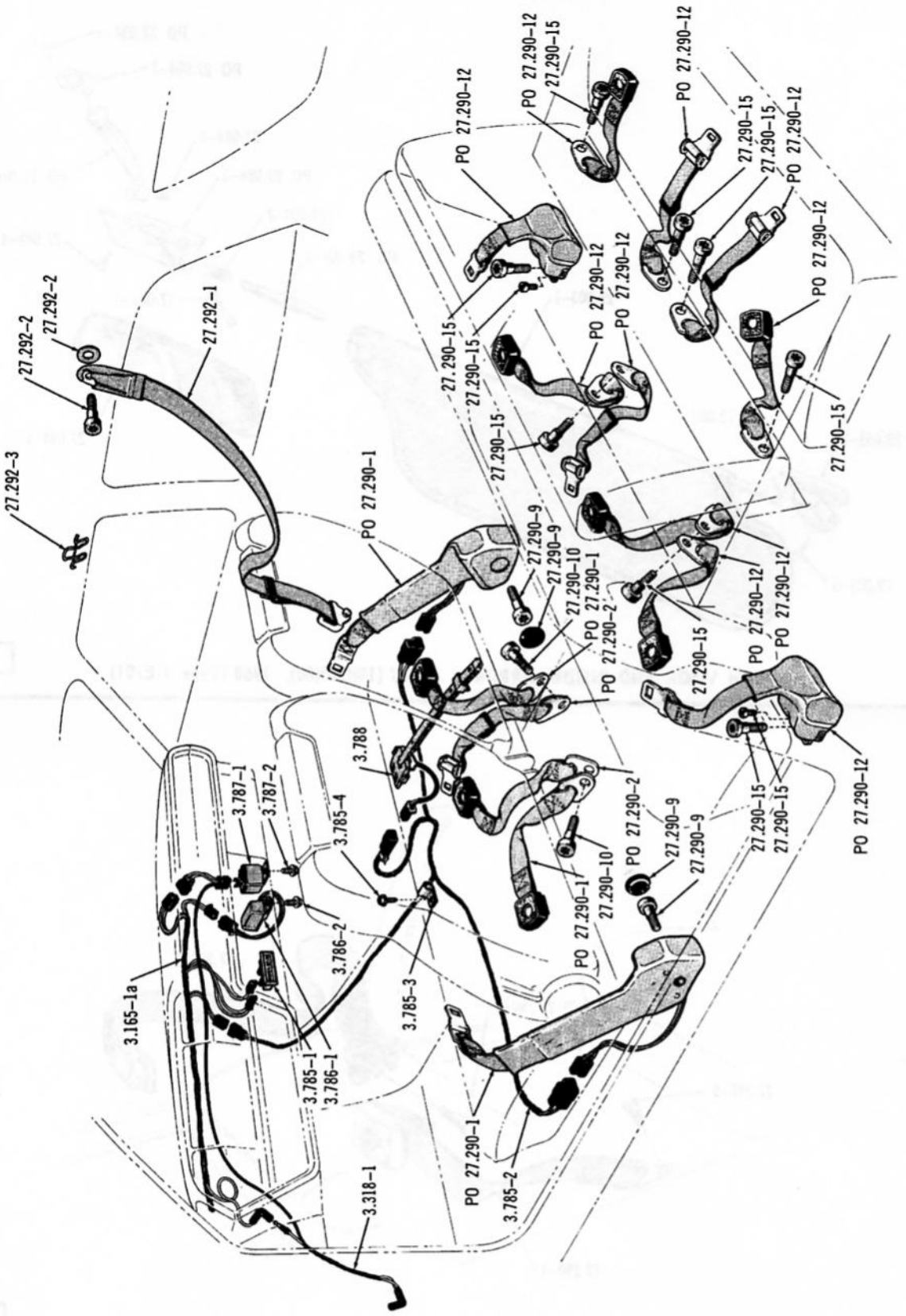

SEAT BELTS . . . 1972 (WSBW)

Printed in U.S.A.

2973

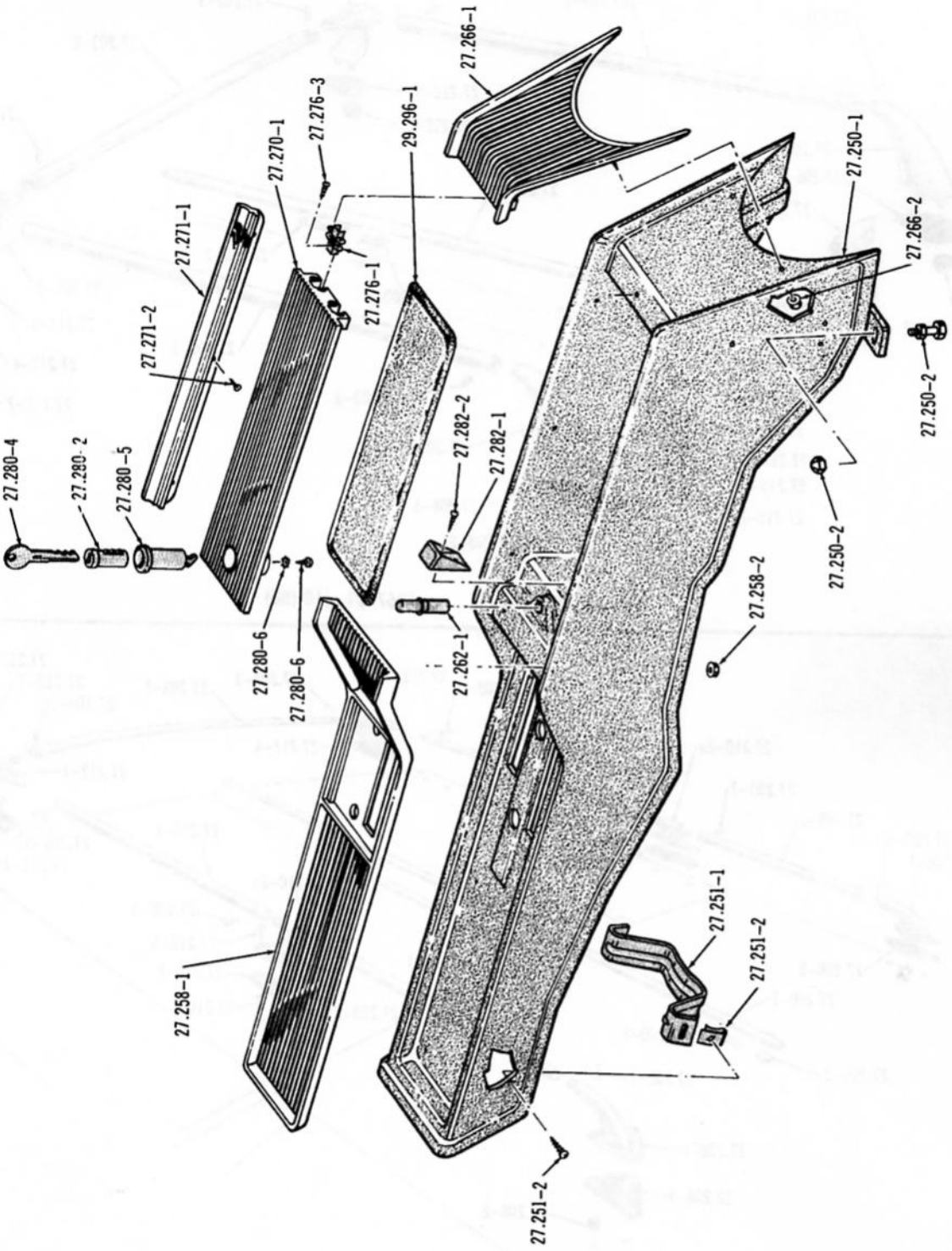

FLOOR CONSOLE ... 1967 (01)

Printed in U.S.A.

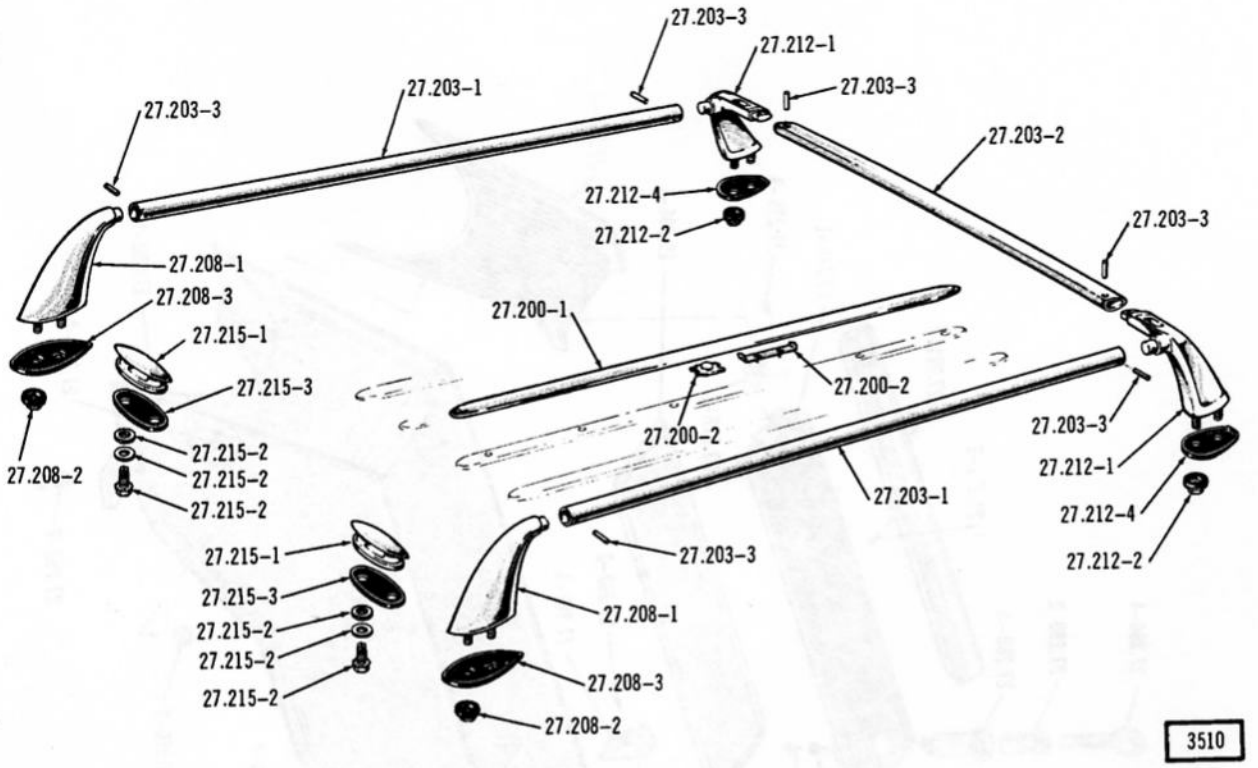

LUGGAGE RACK ... 1967/69 (18)(88)

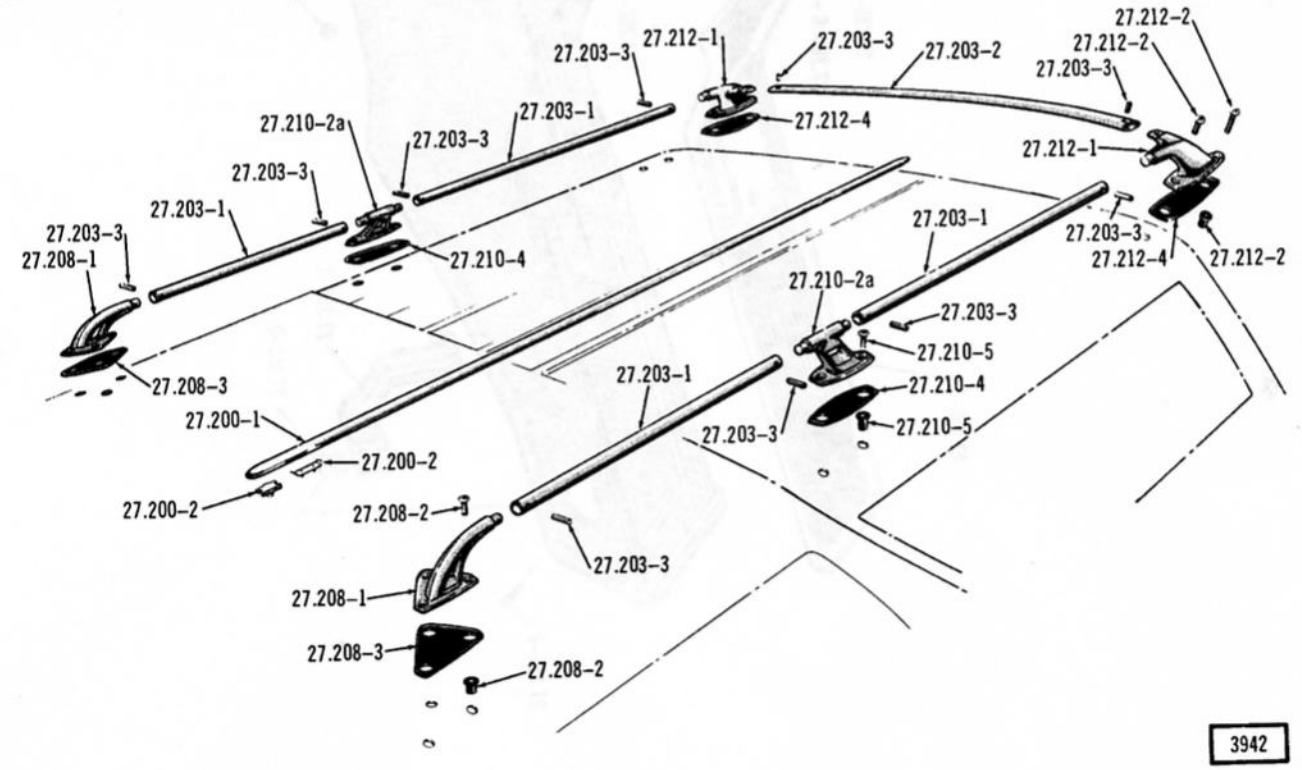

LUGGAGE RACK (EXTERNALLY MOUNTED) ... 1970/ (18)(88)

Printed in U.S.A.

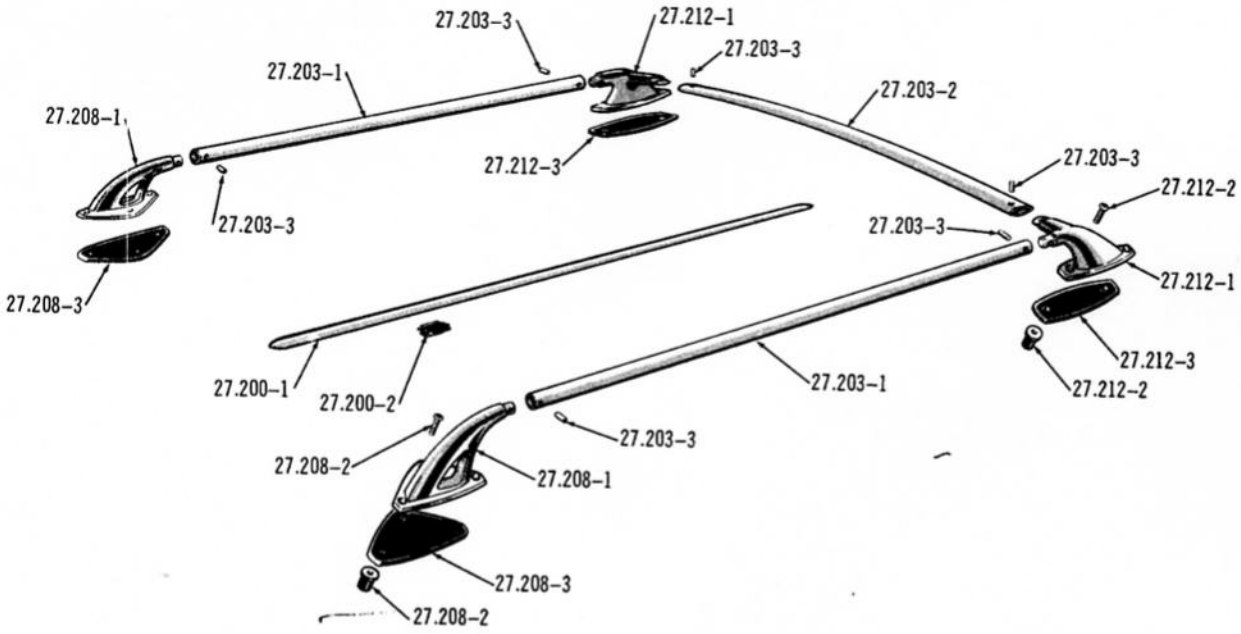

3935

LUGGAGE RACK ... 1970/ (40)

Printed in U.S.A.

GROUP NO. — DESCRIPTION — YEAR and MODEL	PAKS CODE	PRIMARY GROUP NO.	PER CAR	PART NO.	CODE
27.005–1 PLATE, Front Door Scuff					
70/ 05-08		.....	2	361 6578	
67 06-07-09 (* 27-1)		.....	2	348 2166	
67/69 06-07-09-39-79 (* 27-2)		.....	2	357 6836	
70/ 06-40		.....	2	361 6576	
67/ 15-18-85-88		.....	2	357 5568	
67/ 16-17-19-59-86-87-89		.....	2	357 5572	
70 30-70		.....	2	357 6836	
67 (Left) 05-08 (* 27-1)		.....	1	348 2165	
67/69 (Left) 05-08 (* 27-2)		.....	1	357 6835	
71/ (Left) 70		.....	1	363 2229	
67 (Right) 05-08 (* 27-1)		.....	1	348 2164	
67/69 (Right) 05-08 (* 27-2)		.....	1	357 6834	
71/ (Right) 70		.....	1	363 2228	
27.005–2 ATTACHING PARTS, Plate To Body					
SCREW, Tapping..... 67/69		..... ***(Use 448 9492)***	.....	AR	400 1407
SCREW, Tapping..... 70/		01-40	.....	AR	400 0264
SCREW, Tapping..... 70		10-80 ..... ***(Use 448 9492)***	.....	AR	400 1407
SCREW, Tapping..... 70/		30-70	3.252	AR	400 2812
SCREW, Tapping..... 71/		10-80	3.252	AR	400 2812
27.006–1 RETAINER, Door Scuff Plate Extension					
67/ 15-18-85-88			29.019	2	358 1866
67/ 16-19-59-79-86-89			29.052	2	359 1024
27.006–2 ATTACHING PARTS, Retainer To Body					
SCREW, Tapping..... 67/		16-19-59-86-89 ..... ***(Use 448 9492)***	17.654	2	G162402
27.007–1 PLATE, Rear Door Scuff					
70/ 05-08		.....	2	361 6580	
67/ 15-18-85-88		.....	2	357 5570	
67 (Left) 05-08 (* 27-1)		.....	1	347 2871	
67/69 (Left) 05-08 (* 27-2)		.....	1	357 6839	
67 (Right) 05-08 (* 27-1)		.....	1	347 2870	
67/69 (Right) 05-08 (* 27-2)		.....	1	357 6838	
27.007–2 ATTACHING PARTS, Plate To Body					
SCREW, Tapping..... 67/69		05-08-15-18-85-88 ..... ***(Use 448 9492)***	27.005	AR	400 1407
SCREW, Tapping..... 70/		05-08	.....	6	400 0264
SCREW, Tapping..... 70		15-18-85-88 ..... ***(Use 448 9492)***	27.005	12	400 1407
SCREW, Tapping..... 71/		15-18-85-88	3.252	12	400 2812

27.010–1 BRACKET, Sun Visor (Refer To Group 29.003–3)

27.010–4 BUSHING, Sun Visor Pivot Arm (Nylon)(Refer To Group 29.003–6)

27.012–1 ROD, Sun Visor End Retaining (Refer To Group 29.004–1)

27.012–2 CAP, Sun Visor End Retaining Rod (Rubber)(Refer To Group 29.004–2)

27.014–1 HANDLE, Assist (Refer To Group 23.217–3)

BODY HARDWARE

27.014–3 PAD, Assist Handle (Refer To Group 23.217–5)

27.020–1 STRIP, Rear Auxiliary Floor Carpet Skid (Refer To Group 29.421)

27.022–1 MOULDING, Headlining Side Retainer (All Metal-One Piece)(Refer To Group 29.014–1a)

27.022–2 MOULDING, Headlining Side Front Retainer (All Metal)(Refer To Group 29.014–1b)

27.022–3 MOULDING, Headlining Side Rear Retainer (All Metal)(Refer To Group 29.014–1c)

27.022–5 COVER, Headlining Side Retainer Moulding Joint (Refer To Group 29.014–5)

27.030–1 POST ASSEMBLY, Front Seat Back Headrest (Incl. Frame And Friction Catch)(Refer To Group 29.174–1)

27.030–2 CATCH, Front Seat Back Headrest Post Friction (Refer To Group 29.174–2)

27.034–1 CASING, Front Seat Back Headrest (Incl. Top Plate)(Refer To Group 29.173–1)

27.034–3 SPACER, Front Seat Back Headrest (Refer To Group 29.173–3)

27.034–4 COVER, Front Seat Back Headrest Casing Plate (Refer To Group 29.173–4)

27.038 BUTTON, Plug

72	(For 11/32" Dia. Hole-Steel)	.....	AR	400 4620
67	(For 3/8" Dia. Hole) 10-50-80	.....	1	400 0576
67/69	(For 13/32" Dia. Hole) 10-50-80	.....	2	400 0550
67/	(For 7/16" Dia. Hole)	.....	1	400 0048
67	(For 1/2" Dia. Hole-1/8" Head-Rubber) 05-06-07-09	.....	2	400 0282
67/68	(For 1/2" Dia. Hole-3/8" Head-Rubber)	.....	AR	400 0335
68/	(For 1/2" Dia. Hole-Plastic) 18-88	.....	2	400 1716
68/70	(For 1/2" Dia. Hole) 30	.....	2	400 1716
70	(For 1/2" Dia. Hole-Metal)	.....	2	400 4034
67	(For 9/16" Dia. Hole) 10-50-80	22.100	AR	400 0368
68	(For 5/8" Dia. Hole) 30-70	.....	2	400 3829
69/	(For 5/8" Dia. Hole)	17.494	2	G142081
67/	(For 3/4" Dia. Hole-Plastic)	.....	AR	400 0333
68	(For 3/4" Dia. Hole-29/64" Center Hole-Plastic) 30-70	.....	1	400 2231
67/	(For 3/4" Dia. Hole-Rubber) 10-50-80	.....	AR	400 0327
67/	(For 3/4" Dia. Hole-Steel) 10-80	.....	2	400 2140
68/	(For 7/8" Dia. Hole-Plastic) 01	16.040	1	315 7983
70/	(For 13/16" Dia. Hole) 88 (L3S)	.....	1	400 3051
67/	(For 1" Dia. Hole-23/64" Depth-Plastic)	.....	AR	400 0334
67/	(For 1" Dia. Hole-9/16" Depth-Plastic)	.....	AR	400 0377
67/	(For 1" Dia. Hole-With Seal-Steel	.....	2	400 2176
67/	(For 1" Dia. Hole-Rubber)	.....	2	400 0329
67/	(For 1-1/4" Dia. Hole-Less Center Hole)	.....	AR	400 0328
67/	(For 1-1/4" Dia. Hole-With 1/4" Center Hole-Rubber) 01-30-70 ***(Use 400 0328)***	.....	1	400 0714
67/	(For 1-1/4" Dia. Hole-With 1/4" Center Hole) 18-88 (W3S)	.....	AR	400 0331
67/	(For 1-1/2" Dia. Hole-Plastic)	.....	AR	400 0499
67/	(For 1-1/2" Dia. Hole-With Seal-Steel) 10-50-80	.....	1	400 2121
67/	(For 1-1/2" Dia. Hole-Rubber) 01-10-50-80	.....	AR	400 2172
67/68	(For 1-3/4" Dia. Hole) 05-08-15-18-85-88	.....	2	400 0534
70	(For 1-3/4" Dia. Hole) 01	.....	2	400 0534
70	(For 2-51/64" x 1" Hole) 01	20.265	2	345 9347
67/68	(For 3" Dia. Hole) 01	.....	1	400 0725
67/	(For 3" Dia. Hole) 10-50-80	.....	2	400 0507
69/	***(For 11/16" Dia. Hole)(Export-Plastic-Used Less Shoulder Belt) 10-80***	.....	2	361 3535
68/70	***(For 3/8" Dia. Hole-Clip Type)(Export-Steel-Used Less Shoulder Belt) 01-30-70***	.....	4	360 4580
69/	***(For 1-1/4" Dia. Hole-Drive Fastener)(Export-Steel-Used Less Shoulder Belt) 01-30-40-70***	.....	2	400 3535

BODY HARDWARE

27.084–1 MIRROR, Inside Rear View (Less Bracket)

67	(Chrome)	.....	1	352 0232	
67	(Silver) ***(Use 352 0232)***	.....	1	351 9144	
67	(Glareproof) ***(Use 359 1142)***	15.270	1	899 1358	
67	(Padded–Glareproof)	.....	1	359 1142	
68	(Padded–Glareproof) 01–10–59–80 (* 27–11)	.....	1	359 1142	
68	(* 27–12)	.....	1	360 1098	
69		.....	1	360 1098	
70/71	(Except Glareproof) 01–40	.....	1	363 7697	
72	(Except Glareproof) 01–40	.....	1	366 3126	
70/71	(Glareproof)	15.270	1	899 2662	
72	(Glareproof) 01–40	15.270	1	899 2843	
72	(Glareproof) 10–70–80 (* 27–45)	15.270	1	899 2662	
72	(Glareproof) 10–70–80 (* 27–46)	.....	1	365 3420	

27.084–1a KIT, Inside Rear View Mirror Mounting Support

72	01–40	25.002	1	812 0995	

27.084–2 ATTACHING PARTS, Mirror To Pivot Bracket

SCREW, Machine.....	67	.....	17.593	1	G455475 NA
SCREW, Machine.....	68	(* 27–11)	17.593	1	G455475 NA
SCREW, Machine.....	68	(* 27–12) ***(Use 362 2240)***	.....	1	360 2874
SCREW, Machine.....	69/70	(* 27–32) ***(Use 362 2240)***	.....	1	360 2874
SCREW, Machine.....	70	(* 27–33)	.....	1	362 2240
SCREW, Tapping.....	71/	.....	.....	1	362 2240

27.084–3 BRACKET, Inside Rear View Mirror

67	(Chrome)	.....	1	357 5635	
67	(Silver) 01–10–80 ***(Use 357 5635)***	.....	1	357 5634	
68	(Chrome)(* 27–11)	.....	1	357 5635	
68	01 (* 27–12)	.....	1	360 1111	
69/71	01–40	.....	1	360 1111	
68	10–30–70–80 (* 27–12)	.....	1	360 1090	
69/	10–30–70–80 (* 27–45)	.....	1	360 1090	
72	10–70–80 (* 27–46)	.....	1	365 3421	

27.084–4 ATTACHING PARTS, Inside Bracket To Body

SCREW, Tapping.....	67/68	(#8–15 × 7/8") 01–10–50–80	17.655	1	G168499 NA
SCREW, Tapping.....	67/	(#8–15 × 1–1/4")	17.655	2	G178849 NA
SCREW, Tapping.....	70	(#8–18 × 1") 30–70	.....	2	400 4102
SCREW, Tapping.....	72	70	17.660	1	448 9494

27.084–5 SPACER, Inside Rear View Mirror

67	07	.....	1	357 6295	

27.084–6 FILLER, Inside Rear View Mirror

67	07	.....	2	359 8051	

27.085–1 COVER, Inside Rear View Mirror Bracket (* 27-12)

68/69	01	.....	1	360 1078	
70/71	01–40	.....	1	362 7320	
72	01–40	.....	1	365 6158	
(T–831)		.....	1	360 1071	
(T–832)		.....	1	360 1071	
(T–835)		.....	1	360 1071	
(T–838)		.....	1	360 1078	
(T–851) 15–18–85–88		.....	1	360 1078	
(T–851) 19		.....	1	360 1071	
(T–853)		.....	1	360 1071	
(T–855) 15–18		.....	1	360 1078	
(T–855) 19		.....	1	360 1071	
(T–871) 15–18		.....	1	360 1078	
(T–871) 19		.....	1	360 1071	

Printed in U.S.A.

BODY HARDWARE

(T-873)	.....	1	360 1071
(T-874)	.....	1	360 1071
(T-875) 15-18	.....	1	360 1078
(T-875) 19	.....	1	360 1071
(T-876)	.....	1	360 1071
(T-879)	.....	1	360 1071
(T-881) 85	.....	1	360 1078
(T-881) 89	.....	1	360 1071
(T-883)	.....	1	360 1071
(T-885) 85	.....	1	360 1078
(T-885) 89	.....	1	360 1071
(T-891) 85-88	.....	1	360 1078
(T-891) 89	.....	1	360 1071
(T-893)	.....	1	360 1071
(T-894)	.....	1	360 1071
(T-895) 85-88	.....	1	360 1071
(T-895) 89	.....	1	360 1071
(T-896)	.....	1	360 1071
(T-899)	.....	1	360 1071
(T-931)	.....	1	362 0488
(T-932)	.....	1	362 0488
(T-935)	.....	1	362 0976
(T-936)	.....	1	362 0978
(T-951)	.....	1	362 0977
(T-953)	.....	1	362 0489
(T-956)	.....	1	362 0490
(T-957)	.....	1	362 0491
(T-961)	.....	1	362 0488
(T-962)	.....	1	362 0488
(T-963)	.....	1	362 0489
(T-965)	.....	1	362 0976
(T-966)	.....	1	362 0490
(T-968)	.....	1	362 0488
(T-972)	.....	1	362 0977
(T-973)	.....	1	362 0489
(T-975)	.....	1	362 0976
(T-976)	.....	1	362 0490
(T-977)	.....	1	362 0491
(T-979)	.....	1	362 0491
(T-981)	.....	1	362 0977
(T-983)	.....	1	362 0489
(T-986)	.....	1	362 0490
(T-987)	.....	1	362 0491
(T-991)	.....	1	362 0977
(T-992)	.....	1	362 0977
(T-993)	.....	1	362 0489
(T-995)	.....	1	362 0976
(T-996)	.....	1	362 0490
(T-997)	.....	1	362 0491
(T-999)	.....	1	362 0491
(T-031)	.....	1	360 1071
(T-033)	.....	1	362 9487
(T-035)	.....	1	362 0976
(T-036)	.....	1	362 9489
(T-051) 15-18-85-88	.....	1	360 1078
(T-051) 19	.....	1	360 1071
(T-053)	.....	1	362 9487
(T-054)	.....	1	362 9488
(T-056)	.....	1	362 9489
(T-061)	.....	1	360 1071
(T-063)	.....	1	362 9487

BODY HARDWARE

(T-064)	.....	1	362 9488
(T-065)	.....	1	362 0976
(T-066)	.....	1	362 9489
(T-071) 15-18	.....	1	360 1078
(T-071) 19	.....	1	360 1071
(T-073)	.....	1	362 9487
(T-074)	.....	1	362 9488
(T-075) 15-18	.....	1	360 1078
(T-075) 19	.....	1	362 0976
(T-076)	.....	1	362 9489
(T-081)	.....	1	360 1078
(T-083)	.....	1	362 9487
(T-084)	.....	1	362 9488
(T-086)	.....	1	362 9489
(T-091) 85-88	.....	1	360 1078
(T-091) 89	.....	1	360 1071
(T-093)	.....	1	362 9487
(T-094)	.....	1	362 9488
(T-095) 85-88	.....	1	360 1078
(T-095) 89	.....	1	362 0976
(T-096)	.....	1	362 9489
(T-151) 15-18-85-88	.....	1	360 1078
(T-151) 19	.....	1	360 1071
(T-153)	.....	1	362 2198
(T-154)	.....	1	362 2199
(T-161)	.....	1	360 1071
(T-163)	.....	1	362 2198
(T-164)	.....	1	362 2199
(T-165)	.....	1	362 2200
(T-168)	.....	1	360 1071
(T-171) 15-18	.....	1	360 1078
(T-171) 19	.....	1	360 1071
(T-173)	.....	1	362 2198
(T-174)	.....	1	362 2199
(T-175) 15-18	.....	1	360 1078
(T-175) 19	.....	1	362 2200
(T-181)	.....	1	360 1078
(T-183)	.....	1	362 2198
(T-184)	.....	1	362 2199
(T-191) 85-88	.....	1	360 1078
(T-191) 89	.....	1	360 1071
(T-193)	.....	1	362 2198
(T-194)	.....	1	362 2199
(T-195) 85-88	.....	1	360 1078
(T-195) 89	.....	1	362 2200
(T-261)	.....	1	360 1071
(T-263)	.....	1	365 3700
(T-264)	.....	1	365 3701
(T-265)	.....	1	360 1071
(T-266)	.....	1	365 3703
(T-268)	.....	1	360 1071
(T-271)	.....	1	360 1071
(T-273)	.....	1	365 3700
(T-274)	.....	1	365 3701
(T-276)	.....	1	365 3703
(T-291)	.....	1	360 1071
(T-293)	.....	1	365 3700
(T-294)	.....	1	365 3701
(T-296)	.....	1	365 3703

Printed in U.S.A.

BODY HARDWARE

27.085–2 ATTACHING PARTS, Cover To Cowl Top Panel

SCREW, Tapping.....	68/	(#8-15 x 1").....	17.660	1	G161878 NA
SCREW, Tapping.....	71	(#8-18 x 1").....	17.660	1	448 9494 NA
SCREW, Tapping.....	72	(#10-16 x 1").....	17.660	1	812 0615

27.130–1 HOOK, Coat

67 01.....	.....	2	356 3120
68/71 01.....	.....	2	360 5656
(T-753)(Blue).....	.....	2	357 9361
(T-758)(Off White).....	.....	2	356 3120
(T-759)(Tan).....	.....	2	357 9366
(T-771)(Black).....	.....	2	353 8256
(T-771)(Off White).....	.....	2	356 3120
(T-773)(Blue).....	.....	2	357 9361
(T-774)(Green).....	.....	2	356 3117
(T-775)(Red).....	.....	2	357 9368
(T-776)(Burgundy).....	.....	2	357 9363
(T-777)(Aqua).....	.....	2	357 9364
(T-778)(Off White).....	.....	2	356 3120
(T-779)(Tan).....	.....	2	357 9366
(T-781)(Off White).....	.....	2	356 3120
(T-783)(Blue).....	.....	2	357 9361
(T-787)(Aqua).....	.....	2	357 9364
(T-789)(Tan).....	.....	2	357 9366
(T-791)(Black).....	.....	2	353 8256
(T-791)(Off White).....	.....	2	356 3120
(T-793)(Blue) 59.....	.....	2	359 7642
(T-793)(Blue) 80.....	.....	2	357 9361
(T-794)(Green).....	.....	2	356 3117
(T-795)(Red).....	.....	2	357 9368
(T-796)(Burgundy).....	.....	2	357 9363
(T-797)(Aqua).....	.....	2	357 9364
(T-798)(Off White).....	.....	2	356 3120
(T-799)(Tan) 59.....	.....	2	359 7643
(T-799)(Tan) 80.....	.....	2	357 9366
(T-831) 39.....	.....	2	360 5657
(T-831) 79.....	.....	2	360 4313
(T-832) 39.....	.....	2	360 5658
(T-832) 79.....	.....	2	360 4314
(T-835) 39.....	.....	2	360 5653
(T-835) 79.....	.....	2	360 4315
(T-838).....	.....	2	360 4313
(T-851) 15-18-85.....	.....	2	360 5656
(T-851) 19.....	.....	2	360 5657
(T-853).....	.....	2	360 5651
(T-855) 15-18.....	.....	2	360 5656
(T-855) 19.....	.....	2	360 5653
(T-871) 15-18.....	.....	2	360 5656
(T-871) 19.....	.....	2	360 5657
(T-873).....	.....	2	360 5651
(T-874).....	.....	2	360 5652
(T-875) 15-18.....	.....	2	360 5656
(T-875) 19.....	.....	2	360 5653
(T-876).....	.....	2	360 5654
(T-879).....	.....	2	360 5655
(T-881) 85.....	.....	2	360 5656
(T-881) 89.....	.....	2	360 5657
(T-883).....	.....	2	360 5651
(T-885) 85.....	.....	2	360 5656
(T-885) 89.....	.....	2	360 5653

BODY HARDWARE

(T-891) 85-88	.....	2	360 5656
(T-891) 89	.....	2	360 5657
(T-893)	.....	2	360 5651
(T-894)	.....	2	360 5652
(T-895) 85-88	.....	2	360 5656
(T-895) 89	.....	2	360 5653
(T-896)	.....	2	360 5654
(T-899)	.....	2	360 5655
(T-931)	.....	2	362 0492
(T-932)	.....	2	362 0492
(T-935)	.....	2	362 0980
(T-936)	.....	2	362 5442
(T-951)	.....	2	362 5083
(T-953)(Blue)	.....	2	362 0493
(T-953)(Platinum)	.....	2	362 5083
(T-956)	.....	2	362 0494
(T-957)	.....	2	362 0495
(T-961)	.....	2	362 5084
(T-962)	.....	2	362 5084
(T-963)	.....	2	362 5085
(T-965)	.....	2	363 0659
(T-966)	.....	2	362 5086
(T-968)	.....	2	362 5084
(T-972)	.....	2	362 5083
(T-973)(Blue)	.....	2	362 0493
(T-973)(Platinum)	.....	2	362 5083
(T-975)	.....	2	362 0980
(T-976)	.....	2	362 0494
(T-977)	.....	2	362 0495
(T-979)	.....	2	362 0495
(T-981)	.....	2	362 5083
(T-983)	.....	2	362 0493
(T-986)	.....	2	362 0494
(T-989)	.....	2	362 0495
(T-991)	.....	2	362 5083
(T-992)	.....	2	362 5083
(T-993)(Blue)	.....	2	362 0493
(T-993)(Platinum)	.....	2	362 5083
(T-995)	.....	2	362 0980
(T-996)	.....	2	362 0494
(T-997)	.....	2	362 0495
(T-999)	.....	2	362 0495
(T-031)	.....	2	360 5657
(T-033)	.....	2	362 9342
(T-035)	.....	2	362 0980
(T-036)	.....	2	362 9343
(T-051) 15-18	.....	2	360 5656
(T-051) 19	.....	2	360 5657
(T-053)	.....	2	362 9342
(T-054)	.....	2	362 9344
(T-056)	.....	2	362 9343
(T-061)	.....	2	360 4313
(T-063)	.....	2	362 8436
(T-064)	.....	2	362 8437
(T-065)	.....	2	363 0659
(T-066)	.....	2	362 8439
(T-071) 15-18	.....	2	360 5656
(T-071) 19	.....	2	360 5657
(T-073)	.....	2	362 9342
(T-074)	.....	2	362 9344
(T-075) 15-18	.....	2	360 5656
(T-075) 19	.....	2	362 0980

Printed in U.S.A.

BODY HARDWARE

(T-076)	.....	2	362 9343
(T-081)	.....	2	360 5656
(T-083)	.....	2	362 9342
(T-084)	.....	2	362 9344
(T-086)	.....	2	362 9343
(T-091) 85-88	.....	2	360 5656
(T-091) 89	.....	2	360 5657
(T-093)	.....	2	362 9342
(T-094)	.....	2	362 9344
(T-095) 85-88	.....	2	360 5656
(T-095) 89	.....	2	362 0980
(T-096)	.....	2	362 9343
(T-151) 15-18-85-88	.....	AR	360 5656
(T-151) 19	.....	2	360 5657
(T-153)	.....	AR	364 2138
(T-154)	.....	AR	364 2139
(T-161)	.....	2	360 4313
(T-163)	.....	2	364 2162
(T-164)	.....	2	364 2163
(T-165)	.....	2	364 2164
(T-168)	.....	2	360 4313
(T-171) 15-18	.....	AR	360 5656
(T-171) 19	.....	2	360 5657
(T-173)	.....	AR	364 2138
(T-174)	.....	AR	364 2139
(T-175) 15-18	.....	AR	360 5656
(T-175) 19	.....	AR	364 2140
(T-181)	.....	2	360 5656
(T-183)	.....	2	364 2138
(T-184)	.....	2	364 2139
(T-191) 85-88	.....	AR	360 5656
(T-191) 89	.....	2	360 5657
(T-193)	.....	AR	364 2138
(T-194)	.....	AR	364 2139
(T-195) 85-88	.....	AR	360 5656
(T-195) 89	.....	2	364 2140
(T-241)	.....	2	360 5657
(T-243)	.....	2	365 4909
(T-244)	.....	2	365 4910
(T-245)	.....	2	360 5657
(T-246)	.....	2	365 4911
(T-248)	.....	2	360 5657
(T-261)	.....	2	360 4313
(T-263)	.....	2	365 0975
(T-264)	.....	2	365 0976
(T-265)	.....	2	360 4313
(T-266)	.....	2	365 3639
(T-268)	.....	2	360 4313
(T-271)	.....	2	360 5657
(T-273)	.....	2	365 4909
(T-274)	.....	2	365 4910
(T-276)	.....	2	365 4911
(T-291)	.....	2	360 5657
(T-293)	.....	2	365 4909
(T-294)	.....	2	365 4910
(T-296)	.....	2	365 4911

27.130-2 ATTACHING PARTS, Hook To Roof Rail

SCREW, Tapping.....	67	01 (#8-15 x 1-1/4")	17.655	2	G178849 NA
SCREW, Tapping.....	68/70	01-10-80 (#8-15 x 1-1/4")	17.655	AR	G178849 NA
SCREW, Tapping.....	71	01 (#8-15 x 1-1/4")	17.655	2	G178849 NA
SCREW, Tapping.....	71/	01-70 (#8-18 x 1-3/4")	22.065	2	400 1865
SCREW, Tapping.....	67	10-50-80.....	.....	2	400 2142
SCREW, Tapping.....	68/70	30.....	17.655	2	G145419 NA
SCREW, Tapping.....	68/70	70.....	17.655	2	G145420 NA
SCREW, Tapping.....	71	70 (#8-18 x 1/2")	17.655	2	G9414758 NA
SCREW, Tapping.....	72	01.....	29.010	2	400 2192

BODY HARDWARE

27.190 RACK KIT, Luggage (Complete)

67/69	08	.....	1	448	0929
71/	08	.....	1	812	0271
70/	18-88	.....	1	812	0192
70/	40	.....	1	448	9413

27.200-1 MOULDING, Luggage Rack

67/69	08...(Incl. Clips)	.....	5	448	0213
71/	08...(Incl. Clips)	.....	4	448	8593
67/69	18-88...(Incl. Clips)	.....	9	448	3847
70/	18-88...(Clips)	.....	9	448	7625
70/	40	.....	4	448	8399

27.200-2 ATTACHING PARTS, Moulding To Roof Panel

CLIP (Plastic)	67/	08-18-40-88	26.077	AR	400	0762
CLIP (Plastic-Achesive)	70/	08-40	.....	AR	400	3747
CLIP, Anti-Slide	67/	08-18-88	.....	AR	400	1557

27.203-1 RAIL, Luggage Rack Side

67/69	(Left) 08	.....	1	350	5760
67/69	(Right) 08	.....	1	350	5761
67/69	18-88	.....	2	357	5701
70	18-88 (65-31/64" Long)	.....	2	361	4282
70	18-88 (30-25/64" Long)	.....	4	363	6679
71/	18-88	.....	4	363	6679
70/	40	.....	2	363	6582

27.203-1a RAIL, Luggage Rack Side (Front)

71/	08	.....	2	361	6146

27.203-1b RAIL, Luggage Rack Side (Rear)

71/	08	.....	2	361	6147

27.203-2 RAIL, Luggage Rack Rear

67/69	08	.....	1	352	3201
71	08 (* 27-41)	.....	1	361	6148
71	08 (Air Deflector-* 27-42)	.....	1	364	6843
72	08	.....	1	364	6843
67/	18-88	.....	1	355	3402
70/	40	.....	1	363	6583

27.203-3 ATTACHING PARTS, Rail To Post

PIN	67/70	18-88 (5/8" Long)(* 27-34)	.....	2	400	1616
PIN	70	18-88 (5/8" Long)(* 27-35)	.....	2	400	3128
PIN	71/	18-88 (5/8" Long)	.....	2	400	3128
PIN	70/71	40 (5/8" Long)	.....	2	400	1616
PIN	67/	08 (21/32" Long)	.....	4	400	1722
PIN	67/	08 (25/32" Long)	.....	2	400	1721
PIN	71/	08 (9/16" Long)	.....	10	400	4330
PIN	67/	18-88 (3/4" Long)(* 27-34)	.....	AR	400	0448
PIN	70	18-88 (3/4" Long)(* 27-35)	.....	8	400	3127
PIN	71/	18-88 (3/4" Long)	.....	8	400	3127

Printed in U.S.A.

BODY HARDWARE

PIN	70/71	40 (3/4" Long)	AR	400	0448
PIN	72	40 (Side Rail)	4	400	3127
PIN	72	40 (Rear Rail)	2	400	3128
SCREW, Tapping	71/	08 (Stainless-Deflector To Rear Post)	4	812	2669
WASHER, External Tooth	71/	08 (Stainless-Deflector To Rear Post)	4	812	2670

27.208–1 POST, Luggage Rack Front

67/69	(Left) 08	1	350	0609
71/	(Left) 08	1	363	2631
67/69	(Left) 18-88	1	355	3459
70	(Left) 18-88 (* 27-34)	1	355	3459
70	(Left) 18-88 (* 27-35)	1	363	6575
71/	(Left) 18-88	1	363	6575
70/	(Left) 40	1	363	6575
67/69	(Right) 08	1	350	0608
71/	(Right) 08	1	363	2630
70	(Right) 18-88 (* 27-34)	1	355	3458
70	(Right) 18-88 (* 27-35)	1	363	6574
71/	(Right) 18-88	1	363	6574
70/	(Right) 40	1	363	6574

27.208–2 ATTACHING PARTS, Front Post To Roof Panel

NUT, Sealing	67/69	08-18-88	4	400	2117
NUT, Sealing	70	18-88 (* 27-34)	4	400	2117
NUT, Well	70	18-88 (* 27-35)	6	400	3120
NUT, Well	/1/	08-18-88	6	400	3120
NUT, Well	70/	40	10	400	3120
SCREW, Machine	71/	08 (1/4-20 × 3/4")	4	400	3121
SCREW, Machine	71/	08 (1/4-20 × 1")	6	400	3122
SCREW, Machine	70	18-88 (* 27-35)	6	400	3121
SCREW, Machine	71/	18-88	6	400	3121
SCREW, Tapping	70	40 *(Use 400 3754)*	6	400	4115
SCREW, Machine	71/	40	10	400	3121

27.208–3 SEAL, Luggage Rack Front Post

67/69	08	2	350	0620
71/	(Left) 08	1	363	2825
67/69	(Left) 18-88	1	357	5713
70	(Left) 18-88 (* 27-34)	1	357	5713
70	(Left) 18-88 (* 27-35)	1	363	6813
71/	(Left) 18-88	1	363	6813
70/	(Left) 40	1	363	6813
71/	(Right) 08	1	363	2824
67/69	(Right) 18-88	1	357	5712
70	(Right) 18-88 (* 27-34)	1	357	5712
70	(Right) 18-88 (* 27-35)	1	363	6812
71/	(Right) 18-88	1	363	6812
70/	(Right) 40	1	363	6812

27.210–1 POST, Luggage Rack Side (Inner Half)

70	(Left) 18-88 (* 27-34)	1	360	9251
70	(Right) 18-88 (* 27-34)	1	360	9250

27.210–2 POST, Luggage Rack Side (Outer Half)

70	(Left) 18-88 (* 27-34)	1	360	9253
70	(Right) 18-88 (* 27-34)	1	360	9252

BODY HARDWARE

27.210–2a POST, Luggage Rack Side

70	18–88 (* 27–35)	.....	2	363 6666
71/	18–88	.....	2	363 6666
71/	(Left) 08	.....	1	363 2635
71/	(Right) 08	.....	1	363 2634

27.210–3 ATTACHING PARTS. Side Post Inner Half To Outer Half

SCREW, Machine.....	70	18–88	27.208	2	400 1415

27.210–4 SEAL, Luggage Rack Side Post

71/	(Left) 08	.....	1	363 2827
71/	(Right) 08	.....	1	363 2826
70	18–88 (* 27–34)	.....	2	361 4280
70	18–88 (* 27–35)	.....	2	363 6668
71/	18–88	.....	2	363 6668

27.210–5 ATTACHING PARTS. Side Post To Roof Panel

NUT, Sealing.....	70	18–88 (* 27–34)	27.208	4	400 2117
NUT, Well	70	18–88 (* 27–35)	27.208	4	400 3120
NUT, Well	71/	08–18–88	27.208	4	400 3120
SCREW, Machine	71/	08	27.208	4	400 3121
SCREW, Machine.....	70	18–88 (* 27–35)	27.208	4	400 3122
SCREW, Machine	71/	18–88	27.208	4	400 3122

27.212–1 POST, Luggage Rack Rear

67/69	(Left) 08	.....	1	448 1755
71	(Left) 08 (* 27–41)	.....	1	363 2821
71	(Left) 08 (* 27–42)	.....	1	364 6845
72	(Left) 08	.....	1	364 6845
67/69	(Left) 18–88	.....	1	355 4331
70	(Left) 18–88 (* 27–34)	.....	1	355 4331
70	(Left) 18–88 (* 27–35)	.....	1	363 6675
71/	(Left) 18–88	.....	1	363 6675
70/	(Left) 40	.....	1	363 6577
67/69	(Right) 08	.....	1	448 1754
71	(Right) 08 (* 27–41)	.....	1	363 2820
71	(Right) 08 (* 27–42)	.....	1	364 6844
72	(Right) 08	.....	1	364 6844
67/69	(Right) 18–88	.....	1	355 4330
70	(Right) 18–88 (* 27–34)	.....	1	355 4330
70	(Right) 18–88 (* 27–35)	.....	1	363 6674
71/	(Right) 18–88	.....	1	363 6674
70/	(Right) 40	.....	1	363 6576

27.212–2 ATTACHING PARTS. Rear Post To Roof Panel

NUT, Sealing.....	67/70	08–18–88 (* 27–34)	27.208	4	400 2117
NUT, Well	70	18–88 (* 27–35)	27.208	4	400 3120
NUT, Well	70/	40	27.208	4	400 3120
NUT, Well	71/	08–18–88	27.208	4	400 3120
SCREW, Tapping.....	71/	08 (Stainless–Rear Post To Deflector)	27.203	4	812 2669
SCREW, Tapping.....	70	40 ***(Use 400 3754)***	.....	4	400 4115
SCREW, Machine	71/	08	27.208	4	400 3121
SCREW, Machine.....	70	18–88 (1/4–20 × 3/4")(* 27–35)	.....	2	400 3121
SCREW, Machine.....	70	18–88 (1/4–20 × 1")(* 27–35)	27.208	2	400 3122
SCREW, Machine	71/	18–88 (1/4–20 × 3/4")	.....	2	400 3121
SCREW, Machine	71/	18–88 (1/4–20 × 1")	27.208	2	400 3122
SCREW, Machine	70/	40	27.208	4	400 3121
WASHER, External Tooth	71/	08 (Stainless–Rear Post To Deflector)	27.203	4	812 2670

BODY HARDWARE

27.212–3 REINFORCEMENT, Luggage Rack Rear Post

67/69	08	.....	2	350 0386

27.212–4 SEAL, Luggage Rack Rear Post

67/69	08	.....	2	350 0621
71	(Left) 08 (Used Less Air Deflector Type Rack)	.....	1	363 2829
71	(Left) 08 (Used With Air Deflector Type Rack)	.....	1	812 1223
72	(Left) 08 (Used With Air Deflector Type Rack)	.....	1	812 1223
67/69	(Left) 18–88	.....	1	357 5715
70	(Left) 18–88 (* 27–34)	.....	1	357 5715
70	(Left) 18–88 (* 27–35)	.....	1	363 6811
71/	(Left) 18–88	.....	1	363 6811
70/	(Left) 40	.....	1	363 6811
71	(Right) 08 (Used Less Air Deflector Type Rack)	.....	1	363 2828
71	(Right) 08 (Used With Air Deflector Type Rack)	.....	1	812 1224
72	(Right) 08 (Used With Air Deflector Type Rack)	.....	1	812 1224
67/69	(Right) 18–88	.....	1	357 5714
70	(Right) 18–88 (* 27–34)	.....	1	357 5714
70	(Right) 18–88 (* 27–35)	.....	1	363 6810
71/	(Right) 18–88	.....	1	363 6810
70/	(Right) 40	.....	1	363 6810

27.212–5 POST KIT, Luggage Rack Air Deflector Center

71/	08	.....	1	812 2045

27.212–6 POST, Luggage Rack Air Deflector Center

71/	08	.....	1	366 8420

27.212–7 SEAL, Luggage Rack Air Deflector Center Post

71/	08	.....	1	366 8417

27.212–8 ATTACHING PARTS, Luggage Rack Air Deflector Center Post To Roof

SCREW, Sealed	71/	08	.....	2	400 3754

27.215–1 HANGER, Luggage Rack Strap

67/69	08–18–88	.....	2	346 5953

27.215–2 ATTACHING PARTS, Strap Hanger To Roof Panel

SCREW, Tapping	67/69	08–18–88	22.056	4	400 0032
WASHER, Sealing	67/69	08–18–88	17.814	4	400 0480
WASHER, Plain	67/69	08–18–88	12.075	4	400 0082

27.215–3 SEAL, Luggage Rack Strap Hanger

67/69	08–18–88	.....	2	437 8390

27.245–1 TRAY, Convenience (Used Less Floor Console)

(T–931)	.....	1	362 5746
(T–932)	.....	1	362 5746
(T–935)	.....	1	362 5749
(T–936)	.....	1	362 5748
(T–961)	.....	1	362 5746
(T–962)	.....	1	362 5746
(T–963)	.....	1	362 5747
(T–965)	.....	1	362 5749
(T–966)	.....	1	362 5748
(T–968)	.....	1	362 5746

27.245–2 ATTACHING PARTS. Tray To Underbody

SCREW, Tapping.....	69	39–79 (LFC–LCC)	29.010	2	400 2192

BODY HARDWARE

27.250–1 HOUSING, Console

(T-741)(WAT-WFGS)	.....	1	318 3583
(T-743)(WAT-WFGS)	.....	1	318 6614
(T-745)(WAT-WFGS)	.....	1	318 6616
(T-748)(WAT-WFGS)	.....	1	318 3583
(T-749)(WAT-WFGS)	.....	1	318 6619
(T-771)	.....	1	357 7451
(T-773)	.....	1	357 7452
(T-775)	.....	1	357 7454
(T-776)	.....	1	357 7455
(T-778)	.....	1	357 7451
(T-779)	.....	1	357 7457
(T-791)	.....	1	357 7451
(T-793)	.....	1	357 7452
(T-795)	.....	1	357 7454
(T-796)	.....	1	357 7455
(T-798)	.....	1	357 7451
(T-799)	.....	1	357 7457
(T-831)	.....	1	319 3030
(T-832)	.....	1	319 3032
(T-835)	.....	1	319 3031
(T-838)	.....	1	319 3030
(T-871)	.....	1	357 7451
(T-873)	.....	1	318 9774
(T-874)	.....	1	318 9775
(T-875)	.....	1	357 7454
(T-879)	.....	1	318 9777
(T-876)	.....	1	318 9775
(T-891)	.....	1	357 7451
(T-893)	.....	1	318 9774
(T-894)	.....	1	318 9775
(T-895)	.....	1	357 7454
(T-896)	.....	1	318 9776
(T-899)	.....	1	318 9777
(T-931)	.....	1	361 5161
(T-932)	.....	1	361 5161
(T-935)	.....	1	361 5163
(T-936)	.....	1	361 5164
(T-961)	.....	1	361 5161
(T-962)	.....	1	361 5161
(T-963)	.....	1	361 5162
(T-965)	.....	1	361 5163
(T-966)	.....	1	361 5164
(T-968)	.....	1	361 5161
(T-972)	.....	1	362 4088
(T-973)	.....	1	362 4089
(T-975)	.....	1	362 4091
(T-979)	.....	1	362 4092
(T-991)	.....	1	362 4088
(T-992)	.....	1	362 4088
(T-993)	.....	1	362 4089
(T-995)	.....	1	362 4091
(T-996)	.....	1	362 4090
(T-997)	.....	1	362 4092
(T-999)	.....	1	362 4092
(T-031)	.....	1	363 0945
(T-033)	.....	1	363 0946
(T-035)	.....	1	363 1971
(T-036)	.....	1	363 0948
(T-051)(MACHINE)	.....	1	363 0940
(T-053)(MACHINE)	.....	1	363 0941
(T-056)(MACHINE)	.....	1	363 0943
(T-061)	.....	1	363 0945
(T-063)	.....	1	363 0946
(T-064)	.....	1	363 0947
(T-065)	.....	1	363 1971

BODY HARDWARE

(T-066)		1	363 0948
(T-071)		1	363 0940
(T-073)		1	363 0941
(T-074)		1	363 0942
(T-075)		1	362 4091
(T-076)		1	363 0943
(T-091)		1	363 0940
(T-093)		1	363 0941
(T-094)		1	363 0942
(T-095)		1	362 4091
(T-096)		1	363 0943
(T-161)(WAT-WFGS-* 27-43)		1	363 3180
(T-161)(WAT-WFGS-* 27-44)	*(Use 812 0333)*	1	812 0333
(T-161)(WST-WFGS-* 27-43)		1	363 3185
(T-161)(WST-WFGS-* 27-44)		1	812 0334
(T-161)(W4ST-* 27-43)		1	363 3190
(T-161)(W4ST-* 27-44)		1	812 0335
(T-163)(WAT-WFGS-* 27-43)		1	363 3181
(T-163)(WAT-WFGS-* 27-44)	*(Use 812 0336)*	1	812 0336
(T-163)(WST-WFGS-* 27-43)		1	363 3186
(T-163)(WST-WFGS-* 27-44)		1	812 0337
(T-163)(W4ST-* 27-43)		1	363 3191
(T-163)(W4ST-* 27-44)		1	812 0338
(T-164)(WAT-WFGS-* 27-43)		1	363 3182
(T-164)(WAT-WFGS-* 27-44)		1	812 0339
(T-164)(WST-WFGS-* 27-43)		1	363 3187
(T-164)(WST-WFGS-* 27-44)		1	812 0340
(T-164)(W4ST-* 27-43)		1	363 3192
(T-164)(W4ST-* 27-44)		1	812 0341
(T-165)(WAT-WFGS-* 27-43)		1	363 3183
(T-165)(WAT-WFGS-* 27-44)		1	812 0342
(T-165)(WST-WFGS-* 27-43)		1	363 3188
(T-165)(WST-WFGS-* 27-44)		1	812 0343
(T-165)(W4ST-* 27-43)		1	363 3193
(T-165)(W4ST-* 27-44)		1	812 0344
(T-168)(WAT-WFGS-* 27-43)		1	363 3180
(T-168)(WAT-WFGS-* 27-44)		1	812 0333
(T-168)(WST-WFGS-* 27-43)		1	363 3185
(T-168)(WST-WFGS-* 27-44)		1	812 0334
(T-168)(W4ST-* 27-43)		1	363 3190
(T-168)(W4ST-* 27-44)		1	812 0335
(T-171)		1	363 0940
(T-173)		1	321 1241
(T-174)		1	321 1242
(T-175)		1	321 1243
(T-191)		1	363 0940
(T-193)		1	321 1241
(T-194)		1	321 1242
(T-195)		1	321 1243
(T-261)(WAT-WFGS)		1	365 1676
(T-261)(WST-WFGS)		1	365 1681
(T-261)(W4ST)		1	365 1686
(T-263)(WAT-WFGS)		1	365 1677
(T-263)(WST-WFGS)		1	365 1682
(T-263)(W4ST)		1	365 1687
(T-264)(WAT-WFGS)		1	365 1678
(T-264)(WST-WFGS)		1	365 1683
(T-264)(W4ST)		1	365 1688

Printed in U.S.A.

(T-265)(WAT-WFGS)			.....	1	365 1676
(T-265)(WST-WFGS)			.....	1	365 1681
(T-265)(W4ST)			.....	1	365 1686
(T-266)(WAT-WFGS)			.....	1	365 1680
(T-266)(WST-WFGS)			.....	1	365 1685
(T-266)(W4ST)			.....	1	365 1690
(T-268)(WAT-WFGS)			.....	1	365 1676
(T-268)(WST-WFGS)			.....	1	365 1681
(T-268)(W4ST)			.....	1	365 1686

27.250-2 ATTACHING PARTS. Console Housing To Floor Pan

STUD	67/71	01-10-50-80	.....	2	400 0874
WASHER, Plain	67	01	17.814	2	400 1085
SCREW, Tapping	67	10-50-80 ***(Use 400 1499)***	.....	4	400 2045
SCREW, Tapping	68/70	10-80 (1-1/4")	23.013	4	400 1499
SCREW, Tapping	70/71	10-80 (1-1/2")	13.488	4	400 2182
SCREW, Tapping	69/	30-70	29.010	3	400 2192
NUT, Stamped	67	01	17.426	2	G441262 NA

27.250-3 ATTACHING PARTS. Console Housing To Floor Pan Bracket

SCREW, Tapping	68/70	30-70	17.655	AR	G168590 NA
NUT, "U"	68/70	30-70	7.014	AR	316 7425

27.250-4 ATTACHING PARTS. Console Housing To Armrest Support

SCREW, Machine	67/71	10-50-80	17.592	6	G157402 NA
NUT, Hexagon	67/71	10-50-80	17.412	6	G271171 NA
NUT, Stamped	67/71	10-50-80	17.426	2	G441262 NA

27.250-5 PLUG. Console Housing Fastening Screw

69/70	30-70	.....	2	360 6001 NC

27.250-6 CARPET, Console Compartment Bottom (Refer To Group 29.296)

27.251-1 BRACKET. Console Housing Mounting

67	01	.....	1	350 0287
68/70	30-70 (Front)	.....	1	360 0170
68	30-70 (Rear)	.....	1	359 8849

27.251-2 ATTACHING PARTS. Console Housing To Bracket

SCREW, Tapping	67	01	17.654	4	G168608 NA
NUT, "U"	67	01	7.014	2	316 7425

27.258-1 PANEL. Console Housing Front Overlay

67	01 (WAT-WFGS)	.....	1	352 0950
67/71	10-50-80	.....	1	357 7460
69	30-70 (WCGS)	.....	1	361 6816
70	30-70 (WCGS)	.....	1	363 1496
69	30-70 (WFGS)	.....	1	361 6817
70	30-70 (WFGS)	.....	1	363 1497

27.258-2 ATTACHING PARTS. Panel To Console Housing

SCREW, Tapping	67/71	10-50-80	17.648	2	G161443 NA
NUT, Lock	67	01	12.128	6	400 0392
NUT, Speed	67/71	10-50-80	7.014	2	316 7425
PALNUT	69/70	30-70	27.270	5	400 3626

BODY HARDWARE

27.262–1 PLUNGER, Console Compartment Door Lift

67	01-10-50-80 (Spring Loaded)	.....	1	350 5178

27.263–1 BUMPER, Console Compartment Door (Rubber)

67/71	10-50-80	12.125	1	400 2003
70	30-70	.....	2	400 3720
71/	70	.....	1	363 2969

27.266–1 PANEL, Console Housing Rear Overlay

67	01	.....	1	350 9482
67/71	10-50-80	.....	1	357 7462

27.266–2 ATTACHING PARTS, Panel To Console Housing

SCREW, Tapping	67	01	17.671	1	G274627 NA
NUT, Lock	67	01	12.128	2	400 0392
NUT, Speed	67/71	10-50-80	7.215	4	400 0459

27.270–1 DOOR, Console Compartment

67	01	1	350 9472
(T-771)	.....	1	357 7471
(T-773)(Except SST)	.....	1	357 7472
(T-773)(SST)	.....	1	357 7473
(T-775)	.....	1	357 7474
(T-776)	.....	1	357 7475
(T-778)	.....	1	357 7478
(T-779)(Except SST)	.....	1	357 7477
(T-779)(SST)	.....	1	357 7476
(T-791)	.....	1	357 7471
(T-793)(Except DPL)	.....	1	357 7472
(T-793)(DPL)	.....	1	357 7473
(T-795)	.....	1	357 7474
(T-796)	.....	1	357 7475
(T-798)	.....	1	357 7478
(T-799)(Except DPL)	.....	1	357 7477
(T-799)(DPL)	.....	1	357 7476
(T-871)	.....	1	357 7471
(T-873)	.....	1	319 0699
(T-874)	.....	1	319 0700
(T-875)	.....	1	357 7474
(T-876)	.....	1	319 0701
(T-879)	.....	1	319 0702
(T-891)	.....	1	357 7471
(T-893)	.....	1	319 0699
(T-894)	.....	1	319 0700
(T-895)	.....	1	357 7474
(T-896)	.....	1	359 0701
(T-899)	.....	1	319 0702
(T-931)	.....	1	361 5173
(T-932)	.....	1	361 5173
(T-935)	.....	1	361 5175
(T-936)	.....	1	361 5176
(T-961)	.....	1	361 5173
(T-962)	.....	1	361 5173
(T-963)	.....	1	361 5174
(T-965)	.....	1	361 5175
(T-966)	.....	1	361 5176

Printed in U.S.A.

(T-968)	.....	.....	1	361 5173
(T-972)	.....	.....	1	362 4122
(T-973)	.....	.....	1	362 4123
(T-975)	.....	.....	1	357 7474
(T-979)	.....	.....	1	362 4126
(T-991)	.....	.....	1	362 4122
(T-992)	.....	.....	1	362 4122
(T-993)	.....	.....	1	362 4123
(T-995)	.....	.....	1	357 7474
(T-996)	.....	.....	1	362 4124
(T-997)	.....	.....	1	362 4126
(T-999)	.....	.....	1	362 4124
(T-031)	.....	.....	1	363 5422
(T-033)	.....	.....	1	363 5423
(T-035)	.....	.....	1	363 1970
(T-036)	.....	.....	1	363 5425
(T-051)(MACHINE)	.....	.....	1	357 7471
(T-053)(MACHINE)	.....	.....	1	363 5373
(T-056)(MACHINE)	.....	.....	1	363 5371
(T-061)	.....	.....	1	363 5422
(T-063)	.....	.....	1	363 5423
(T-064)	.....	.....	1	363 5424
(T-065)	.....	.....	1	363 1970
(T-066)	.....	.....	1	363 5425
(T-071)	.....	.....	1	357 7471
(T-073)	.....	.....	1	363 5373
(T-074)	.....	.....	1	363 5372
(T-075)	.....	.....	1	357 7474
(T-076)	.....	.....	1	363 5371
(T-091)	.....	.....	1	357 7471
(T-093)	.....	.....	1	363 5373
(T-094)	.....	.....	1	363 5372
(T-095)	.....	.....	1	357 7474
(T-096)	.....	.....	1	363 5371
(T-161)	.....	.....	1	363 3000
(T-163)	.....	.....	1	363 3001
(T-164)	.....	.....	1	363 3002
(T-165)	.....	.....	1	363 3003
(T-168)	.....	.....	1	363 3000
(T-171)	.....	.....	1	357 7471
(T-173)	.....	.....	1	364 1845
(T-174)	.....	.....	1	364 1846
(T-175)	.....	.....	1	364 1847
(T-191)	.....	.....	1	357 7471
(T-193)	.....	.....	1	364 1845
(T-194)	.....	.....	1	364 1846
(T-195)	.....	.....	1	364 1847
(T-261)	.....	.....	1	363 3000
(T-263)	.....	.....	1	365 1784
(T-264)	.....	.....	1	365 1785
(T-265)	.....	.....	1	363 3000
(T-266)	.....	.....	1	365 1786
(T-268)	.....	.....	1	363 3000

27.270–2 OVERLAY, Door Console

69	30-70	.....	1	361 6818
70	30-70	.....	1	363 1329

27.270–3 ATTACHING PARTS, Overlay To Console

PALNUT	69/70	30-70	.....	4	400 3626

Printed in U.S.A.

BODY HARDWARE

27.271–1 MOULDING, Console Compartment Door Opening

67	01	.....	2	352 0744
67/71	10-50-80	.....	2	357 7468

27.271–2 ATTACHING PARTS, Moulding To Console Housing

SCREW, Tapping	67	01	17.649	6	G274472 NA
NUT, Speed	67/71	10-50-80	7.215	6	400 0459

27.276–1 HINGE, Console Compartment Door

67	01	.....	2	350 9474
67/71	10-50-80	.....	1	357 7466
69/70	39-79	.....	1	361 5169
71/	70	.....	1	363 2968

27.276–2 ATTACHING PARTS, Hinge To Console

SCREW, Tapping	67	01	.....	4	400 0740
SCREW, Tapping	67/71	10-50-80	3.303	3	400 1629
SCREW, Tapping	69/70	30-70	17.655	3	G9417455 NA
SCREW, Tapping	71/	70	26.032	3	400 1638
NUT, Stamped	67/71	10-50-80	17.428	3	G441256 NA
NUT, Speed	69/70	30-70	.....	3	400 3627
NUT, Speed	71/	70	.....	AR	400 3841

27.276–3 ATTACHING PARTS, Hinge To Door

SCREW, Tapping	67	01	.....	4	400 0740
SCREW, Tapping	69/70	30-70	.....	3	G9417455 NA
SCREW, Tapping	71/	70	17.660	3	G9415627 NA

27.280–1 LOCK ASSEMBLY, Console Compartment Door

67/69	10-50-80 (Keyless Type)	22.073	1	346 1434
67/69	01-10-50-80 ...(Incl. Regular Keys)	22.073	1	448 4733
70	***10-80 (RHD)*** ...(Incl. Regular Keys)	22.073	1	448 4733
67/69	01-10-50-80 ...(Incl. Special Keys-Specify Key No.)	22.073	1	448 4734
70	***10-80 (RHD)*** ...(Incl. Special Keys-Specify Key No.)	22.073	1	448 4734

27.280–2 CYLINDER, Console Compartment Door Lock (Incl. Keys)

67/69	01-10-50-80 (Regular)	.....	1	447 8586
70	30-70 (Regular) ..... ***(Use 448 4733)***	22.073	1	448 2394
70	***10-80 (RHD)***(Regular)	.....	1	447 8586
67/69	01-10-50-80 (Special-Specify Key No.)	.....	1	447 8587
70	30-70 (Special-Specify Key No.) ..... ***(Use 448 4734)***	22.073	1	448 2395
70	***10-80 (RHD)***(Special-Specify Key No.)	.....	1	447 8587

27.280–2a CYLINDER, Console Compartment Door Lock (Less Keys)

70/71	10-30-70-80 (LHD)...(Less Keys-Must Be Coded Locally)	.....	1	448 7663
72	70 (LHD)...(Less Keys-Must Be Coded Locally)	.....	1	448 7663

27.280–3 RETAINER, Console Compartment Door Lock

67/71	10-30-50-70-80	.....	1	357 4369
72	70	.....	1	357 4369

27.280–4 KEY, Console Compartment Door Lock

67/69	(Blank) 01-10-50-80	23.085	2	344 5762
70	(Blank) 10-30-70-80 (LHD)	23.085	2	363 6393
71	(Blank) 10-70-80	23.085	2	364 1913
72	(Blank) 70	23.085	2	364 1913
70	***(Blank) 10-80 (RHD)***	23.085	2	344 5762
67/69	(Coded) 01-10-50-80	23.085	2	447 8593
70/71	(Coded) 10-30-70-80 (LHD)	23.085	2	448 7668
72	(Coded) 70	23.085	2	448 7668
70	***(Coded) 10-80 (RHD)***	23.085	2	447 8593

27.280–5 CASE, Console Compartment Door Lock

67/	22.073	1	447 5616

27.280–6 ATTACHING PARTS, Case To Retainer

SCREW, Machine..... 67/	17.616	1	G154976 NA

27.282–1 STRIKER, Console Compartment Door Lock

67/	.....	1	350 9476

27.282–2 ATTACHING PARTS, Striker To Console Housing

SCREW, Tapping..... 67/70	17.660	2	G161860 NA
SCREW, Tapping..... 71 10-80	17.660	2	G9414712 NA
SCREW, Tapping..... 71/ 70	17.660	2	G9414712 NA

27.282–3 SHIM, Console Compartment Door Lock Striker

67/	10.069	AR	312 4316

27.282–4 CATCH, Console Door Magnetic

69 39-79	.....	2	361.6815

27.285–1 RECEIVER ASSEMBLY, Console Ash

69/70 30-70	.....	1	447 9945
71/ 70 ...(Incl. Retainer And Tray) ...(Less Guide)	.....	1	448 8891 NC

27.285–2 RETAINER, Console Ash Receiver

69/70 30-70	.....	1	447 9946

27.285–3 SPRING, Console Ash Receiver

69/70 30-70	.....	1	447 9947

27.285–4 BALL, Console Ash Receiver

71/ 70	17.018	4	G147488

27.285–5 GUIDE, Console Ash Receiver

71/ 70	.....	1	363 2795

27.285–6 ATTACHING PARTS, Guide To Console

SCREW, Tapping..... 71/ 70	26.032	3	400 1638

Printed in U.S.A.

BODY HARDWARE

27.286–1 LENS, Console Housing

69/ 30-70	.....	1	361 6819	

27.286–2 ATTACHING PARTS, Lens To Console Housing

SCREW, Tapping 69/ 30-70	17.654	1	G163405 NA	

27.286–3 BULB, Console Light

69/ 30-70	3.215	1	320 9536	

27.290–1 BELT, Front Seat Outer (CP)(Including Retractor And Boot)(Painted Buckle)

1968 Thru 1972 MODELS

(T-828)	.....	2	361 7661	
(T-831)	.....	2	361 7661	
(T-832)	.....	2	361 7662	
(T-835)	.....	2	361 7665	
(T-838)	.....	2	361 7661	
(T-843)	.....	2	361 7663	
(T-844)	.....	2	361 7664	
(T-845)	.....	2	361 7665	
(T-848)	.....	2	361 7661	
(T-851)	.....	2	361 7661	
(T-853)	.....	2	361 7663	
(T-855)	.....	2	361 7665	
(T-871)	.....	2	361 7661	
(T-873)	.....	2	361 7663	
(T-874)	.....	2	361 7664	
(T-875)	.....	2	361 7665	
(T-876)	.....	2	361 7666	
(T-879)	.....	2	361 7667	
(T-881)	.....	2	361 7661	
(T-883)	.....	2	361 7663	
(T-885)	.....	2	361 7665	
(T-891)	.....	2	361 7661	
(T-893)	.....	2	361 7663	
(T-894)	.....	2	361 7664	
(T-895)	.....	2	361 7665	
(T-896)	.....	2	361 7666	
(T-899)	.....	2	361 7667	
(T-923)(* 27-19)	.....	2	362 0195	
(T-923)(* 27-21)	..... *(Use 363 7067)*	2	362 9185	
(T-923)(* 27-22)	.....	2	362 9031	
(T-923)(* 27-25)	.....	2	363 7067	
(T-923)(WNRS-* 27-26)	.....	2	362 9037	
(T-928)(* 27-19)	.....	2	362 0194	
(T-928)(* 27-21)	..... *(Use 363 7066)*	2	362 9184	
(T-928)(* 27-22)	.....	2	362 9030	
(T-928)(* 27-25)	.....	2	363 7066	
(T-928)(WNRS-* 27-26)	.....	2	362 9036	
(T-931)(* 27-19)	.....	2	362 0194	
(T-931)(* 27-21)	..... *(Use 363 7066)*	2	362 9184	
(T-931)(* 27-22)	.....	2	362 9030	
(T-931)(* 27-25)	.....	2	363 7066	
(T-932)(* 27-19)	.....	2	362 0194	
(T-932)(* 27-21)	..... *(Use 363 7066)*	2	362 9184	
(T-932)(* 27-22)	.....	2	362 9030	
(T-932)(* 27-25)	.....	2	363 7066	
(T-935)(* 27-19)	.....	2	362 0197	
(T-935)(* 27-21)	..... *(Use 363 7069)*	2	362 9187	
(T-935)(* 27-22)	.....	2	362 9033	
(T-935)(* 27-25)	.....	2	363 7069	

BODY HARDWARE

(T-936)(* 27-19)		2	362 0198
(T-936)(* 27-21)		2	363 7070
(T-936)(* 27-22)		2	362 9034
(T-936)(* 27-25)		2	363 7070
(T-941)(* 27-19)		2	362 0194
(T-941)(* 27-21)	*(Use 363 7066)*	2	362 9184
(T-941)(* 27-22)		2	362 9030
(T-941)(* 27-25)		2	363 7066
(T-941)(WNRS-* 27-26)		2	362 9036
(T-943)(* 27-19)		2	362 0195
(T-943)(* 27-21)	*(Use 363 7067)*	2	362 9185
(T-943)(* 27-22)		2	362 9031
(T-943)(* 27-25)		2	363 7067
(T-943)(WNRS-* 27-26)		2	362 9037
(T-944)(* 27-19)		2	362 0196
(T-944)(* 27-21)	*(Use 363 7068)*	2	362 9186
(T-944)(* 27-22)		2	362 9032
(T-944)(* 27-25)		2	363 7068
(T-944)(WNRS-* 27-26)		2	362 9040
(T-945)(* 27-19)		2	362 0197
(T-945)(* 27-21)	*(Use 363 7069)*	2	362 9187
(T-945)(* 27-22)		2	362 9033
(T-945)(* 27-25)		2	363 7069
(T-945)(WNRS-* 27-26)		2	362 9038
(T-951)(* 27-19)		2	362 0194
(T-951)(WNRS-* 27-20)		2	362 9177
(T-951)(* 27-21)	*(Use 363 7066)*	2	362 9184
(T-951)(* 27-22)		2	362 9030
(T-951)(* 27-25)		2	363 7066
(T-951)(WNRS-* 27-26)		2	362 9036
(T-953)(* 27-19)		2	362 0195
(T-953)(WNRS-* 27-20)		2	362 9178
(T-953)(* 27-21)	*(Use 363 7067)*	2	362 9185
(T-953)(* 27-22)		2	362 9031
(T-953)(* 27-25)		2	363 7067
(T-953)(WNRS-* 27-26)		2	362 9037
(T-956)(* 27-19)		2	362 0198
(T-956)(WNRS-* 27-20)		2	362 9181
(T-956)(* 27-21)		2	363 7070
(T-956)(* 27-22)		2	362 9034
(T-956)(* 27-25)		2	363 7070
(T-956)(WNRS-* 27-26)		2	362 9039
(T-957)(* 27-19)	*(Use 363 7071)*	2	362 0199
(T-957)(WNRS-* 27-20)		2	362 9182
(T-957)(* 27-21)		2	363 7071
(T-957)(* 27-22)		2	362 9035
(T-957)(* 27-25)		2	363 7071
(T-957)(WNRS-* 27-26)		2	362 9040
(T-961)(* 27-19)		2	362 0194
(T-961)(* 27-21)	*(Use 363 7066)*	2	362 9184
(T-961)(* 27-22)		2	362 9030
(T-961)(* 27-25)		2	363 7066
(T-962)(* 27-19)		2	362 0194
(T-962)(* 27-21)	*(Use 363 7066)*	2	362 9184
(T-962)(* 27-22)		2	362 9030
(T-962)(* 27-25)		2	363 7066
(T-963)(* 27-19)		2	362 0195
(T-963)(* 27-21)	*(Use 363 7067)*	2	362 9185
(T-963)(* 27-22)		2	362 9031
(T-963)(* 27-25)		2	363 7067
(T-965)(* 27-19)		2	362 0197
(T-965)(* 27-21)	*(Use 363 7069)*	2	362 9187
(T-965)(* 27-22)		2	362 9033
(T-965)(* 27-25)		2	363 7069

Printed in U.S.A.

BODY HARDWARE

(T-966)(* 27-19)		2	362 0198
(T-966)(* 27-21)		2	363 7070
(T-966)(* 27-22)		2	362 9034
(T-966)(* 27-25)		2	363 7070
(T-968)(* 27-19)		2	362 0194
(T-968)(* 27-21)	*(Use 363 7066)*	2	362 9184
(T-968)(* 27-22)		2	362 9030
(T-968)(* 27-25)		2	363 7066
(T-972)(* 27-20)		2	362 9177
(T-972)(* 27-19)		2	362 0194
(T-972)(* 27-21)	*(Use 363 7066)*	2	362 9184
(T-972)(* 27-22)		2	362 9030
(T-972)(* 27-25)		2	363 7066
(T-972)(* 27-26)		2	362 9036
(T-973)(* 27-19)		2	362 0195
(T-973)(* 27-20)		2	362 9178
(T-973)(* 27-21)	*(Use 363 7067)*	2	362 9185
(T-973)(* 27-22)		2	362 9031
(T-973)(* 27-25)		2	363 7067
(T-973)(* 27-26)		2	362 9037
(T-975)(* 27-19)		2	362 0197
(T-975)(* 27-20)		2	362 9180
(T-975)(* 27-21)	*(Use 363 7069)*	2	362 9187
(T-975)(* 27-22)		2	362 9033
(T-975)(* 27-25)		2	363 7069
(T-975)(* 27-26)		2	362 9038
(T-976)(* 27-19)		2	362 0198
(T-976)(* 27-20)		2	362 9181
(T-976)(* 27-21)		2	363 7070
(T-976)(* 27-22)		2	362 9034
(T-976)(* 27-25)		2	363 7070
(T-976)(* 27-26)		2	362 9039
(T-977)(* 27-19)	*(Use 363 7071)*	2	362 0199
(T-977)(* 27-20)		2	362 9182
(T-977)(* 27-21)		2	363 7071
(T-977)(* 27-22)		2	362 9035
(T-977)(* 27-25)		2	363 7071
(T-977)(* 27-26)		2	362 9040
(T-979)(* 27-19)	*(Use 363 7071)*	2	362 0199
(T-979)(* 27-20)		2	362 9182
(T-979)(* 27-21)		2	363 7071
(T-979)(* 27-22)		2	362 9035
(T-979)(* 27-25)		2	363 7071
(T-979)(* 27-26)		2	362 9040
(T-981)(* 27-19)		2	362 0194
(T-981)(* 27-20)		2	362 9177
(T-981)(* 27-21)	*(Use 363 7066)*	2	362 9184
(T-981)(* 27-22)		2	362 9030
(T-981)(* 27-25)		2	363 7066
(T-981)(* 27-26)		2	362 9036
(T-983)(* 27-19)		2	362 0195
(T-983)(* 27-20)		2	362 9178
(T-983)(* 27-21)	*(Use 363 7067)*	2	362 9185
(T-983)(* 27-22)		2	362 9031
(T-983)(* 27-25)		2	363 7067
(T-983)(* 27-26)		2	362 9037
(T-986)(* 27-19)		2	362 0198
(T-986)(* 27-20)		2	362 9181
(T-986)(* 27-21)		2	363 7070
(T-986)(* 27-22)		2	362 9034
(T-986)(* 27-25)		2	363 7070
(T-986)(* 27-26)		2	362 9039

Printed in U.S.A.

BODY HARDWARE

(T-987)(* 27-19)	*(Use 363 7071)*	2	362 0199
(T-987)(* 27-20)		2	362 9182
(T-987)(* 27-21)		2	363 7071
(T-987)(* 27-22)		2	362 9035
(T-987)(* 27-25)		2	363 7071
(T-987)(* 27-26)		2	362 9040
(T-991)(* 27-19)		2	362 0194
(T-991)(* 27-20)		2	362 9177
(T-991)(* 27-21)	*(Use 363 7066)*	2	362 9184
(T-991)(* 27-22)		2	362 9030
(T-991)(* 27-25)		2	363 7066
(T-991)(* 27-26)		2	362 9036
(T-992)(* 27-19)		2	362 0194
(T-992)(* 27-20)		2	362 9177
(T-992)(* 27-22)		2	362 9030
(T-992)(* 27-25)		2	363 7066
(T-992)(* 27-26)		2	362 9036
(T-993)(* 27-19)		2	362 0195
(T-993)(* 27-20)		2	362 9178
(T-993)(* 27-21)	*(Use 363 7067)*	2	362 9185
(T-993)(* 27-22)		2	362 9031
(T-993)(* 27-25)		2	363 7067
(T-993)(* 27-26)		2	362 9037
(T-995)(* 27-19)		2	362 0197
(T-995)(* 27-20)		2	362 9180
(T-995)(* 27-21)	*(Use 363 7069)*	2	362 9187
(T-995)(* 27-22)		2	362 9033
(T-995)(* 27-25)		2	363 7069
(T-995)(* 27-26)		2	362 9038
(T-996)(* 27-19)		2	362 0198
(T-996)(* 27-20)		2	362 9181
(T-996)(* 27-21)		2	363 7070
(T-996)(* 27-22)		2	362 9034
(T-996)(* 27-25)		2	363 7070
(T-996)(* 27-26)		2	362 9039
(T-997)(* 27-19)	*(Use 363 7071)*	2	362 0199
(T-997)(* 27-20)		2	362 9182
(T-997)(* 27-21)		2	363 7071
(T-997)(* 27-22)		2	362 9035
(T-997)(* 27-25)		2	363 7071
(T-997)(* 27-26)		2	362 9040
(T-999)(* 27-19)	*(Use 363 7071)*	2	362 0199
(T-999)(* 27-20)		2	362 9182
(T-999)(* 27-22)		2	362 9040
(T-999)(* 27-25)		2	363 7071
(T-999)(* 27-26)		2	362 9040
(T-001)(* 27-31)		2	364 3373
(T-001)(* 27-36)		2	364 9081
(T-008)(* 27-31)		2	364 3373
(T-008)(* 27-36)		2	364 9081
(T-011)(* 27-31)		2	364 3373
(T-011)(* 27-36)		2	364 9081
(T-013)(* 27-31)		2	364 3374
(T-013)(* 27-36)		2	364 9082
(T-014)(* 27-31)		2	364 3375
(T-014)(* 27-36)		2	364 9081
(T-015)(* 27-31)		2	364 3376
(T-015)(* 27-36)		2	364 9083
(T-021)(Black-* 27-30)		2	363 7800
(T-021)(Charcoal-* 27-30)		2	363 7066
(T-021)(* 27-31)		2	364 3373
(T-021)(* 27-36)		2	364 9081

BODY HARDWARE

(T-023)(* 27-30)	.....	2	363 7802
(T-023)(* 27-31)	.....	2	364 3374
(T-023)(* 27-36)	.....	2	364 9081
(T-024)(* 27-30)	.....	2	363 7803
(T-024)(* 27-31)	.....	2	364 3375
(T-024)(* 27-36)	.....	2	364 9081
(T-025)(* 27-30)	.....	2	363 7069
(T-025)(* 27-31)	.....	2	364 3376
(T-025)(* 27-36)	.....	2	364 9083
(T-031)(* 27-36)	.....	2	364 9081
(T-031)(* 27-30)	.....	2	363 7800
(T-031)(* 27-31)	.....	2	364 3373
(T-033)(* 27-30)	.....	2	363 7802
(T-033)(* 27-31)	.....	2	364 3374
(T-033)(* 27-36)	.....	2	364 9082
(T-035)(* 27-30)	.....	2	363 7069
(T-035)(* 27-31)	.....	2	364 3376
(T-035)(* 27-36)	.....	2	364 9083
(T-036)(* 27-30)	.....	2	363 7804
(T-036)(* 27-31)	.....	2	364 3377
(T-036)(* 27-36)	.....	2	364 9081
(T-041)(Black-* 27-30)	.....	2	363 7800
(T-041)(Charcoal-* 27-30)	.....	2	363 7066
(T-041)(* 27-31)	.....	2	364 3373
(T-041)(* 27-36)	.....	2	364 9081
(T-043)(* 27-30)	.....	2	363 7802
(T-043)(* 27-31)	.....	2	364 3374
(T-043)(* 27-36)	.....	2	364 9082
(T-044)(* 27-30)	.....	2	363 7803
(T-044)(* 27-31)	.....	2	364 3375
(T-044)(* 27-36)	.....	2	364 9081
(T-045)(* 27-30)	.....	2	363 7069
(T-045)(* 27-31)	.....	2	364 3376
(T-045)(* 27-36)	.....	2	364 9083
(T-051)(* 27-30)	.....	2	363 7800
(T-051)(* 27-31)	.....	2	364 3373
(T-051)(* 27-36)	.....	2	364 9081
(T-053)(* 27-30)	.....	2	363 7802
(T-053)(* 27-31)	.....	2	364 3374
(T-053)(* 27-36)	.....	2	364 9082
(T-054)(* 27-30)	.....	2	363 7803
(T-054)(* 27-31)	.....	2	364 3375
(T-054)(* 27-36)	.....	2	364 9081
(T-056)(* 27-30)	.....	2	363 7804
(T-056)(* 27-31)	.....	2	364 3377
(T-056)(* 27-36)	.....	2	364 9081
(T-061)(* 27-30)	.....	2	363 7800
(T-061)(* 27-31)	.....	2	364 3373
(T-061)(* 27-36)	.....	2	364 9081
(T-063)(* 27-30)	.....	2	363 7802
(T-063)(* 27-31)	.....	2	364 3374
(T-063)(* 27-36)	.....	2	364 9082
(T-064)(* 27-30)	.....	2	363 7803
(T-064)(* 27-31)	.....	2	364 3375
(T-064)(* 27-36)	.....	2	364 9081
(T-065)(* 27-30)	.....	2	363 7069
(T-065)(* 27-31)	.....	2	364 3376
(T-065)(* 27-36)	.....	2	364 9084
(T-066)(* 27-30)	.....	2	363 7804
(T-066)(* 27-31)	.....	2	364 3377
(T-066)(* 27-36)	.....	2	364 9081

BODY HARDWARE

(T-071)(* 27-30)	.....	2	363 7800
(T-071)(* 27-31)	.....	2	364 3373
(T-071)(* 27-36)	.....	2	364 9081
(T-073)(* 27-30)	.....	2	363 7802
(T-073)(* 27-31)	.....	2	364 3374
(T-073)(* 27-36)	.....	2	364 9082
(T-074)(* 27-30)	.....	2	363 7803
(T-074)(* 27-31)	.....	2	364 3375
(T-074)(* 27-36)	.....	2	364 9081
(T-075)(* 27-30)	.....	2	363 7069
(T-075)(* 27-31)	.....	2	364 3376
(T-075)(* 27-36)	.....	2	364 9084
(T-076)(* 27-30)	.....	2	363 7804
(T-076)(* 27-31)	.....	2	364 3377
(T-076)(* 27-36)	.....	2	364 9081
(T-081)(* 27-30)	.....	2	363 7800
(T-081)(* 27-31)	.....	2	364 3373
(T-081)(* 27-36)	.....	2	364 9081
(T-083)(* 27-30)	.....	2	363 7802
(T-083)(* 27-31)	.....	2	364 3374
(T-083)(* 27-36)	.....	2	364 9082
(T-084)(* 27-30)	.....	2	363 7803
(T-084)(* 27-31)	.....	2	364 3375
(T-084)(* 27-36)	.....	2	364 9081
(T-086)(* 27-30)	.....	2	363 7804
(T-086)(* 27-31)	.....	2	364 3377
(T-086)(* 27-36)	.....	2	364 9081
(T-091)(* 27-30)	.....	2	363 7800
(T-091)(* 27-31)	.....	2	364 3373
(T-091)(* 27-36)	.....	2	364 9081
(T-093)(* 27-30)	.....	2	363 7802
(T-093)(* 27-31)	.....	2	364 3374
(T-093)(* 27-36)	.....	2	364 9082
(T-094)(* 27-30)	.....	2	363 7803
(T-094)(* 27-31)	.....	2	364 3375
(T-094)(* 27-36)	.....	2	364 9081
(T-095)(* 27-30)	.....	2	363 7069
(T-095)(* 27-31)	.....	2	364 3376
(T-095)(* 27-36)	.....	2	364 9084
(T-096)(* 27-30)	.....	2	363 7804
(T-096)(* 27-31)	.....	2	364 3377
(T-096)(* 27-36)	.....	2	364 9081
(T-101)	.....	2	364 9081
(T-103)(Blue)	.....	2	364 9082
(T-103)(Black)	.....	2	364 9081
(T-104)	.....	2	364 9081
(T-108)	.....	2	364 9081
(T-111)	.....	2	364 9081
(T-113)	.....	2	364 9082
(T-114)	.....	2	364 9083
(T-115)	.....	2	364 9084
(T-121)	.....	2	364 9081
(T-123)	.....	2	364 9082
(T-124)	.....	2	364 9083
(T-128)	.....	2	364 9081
(T-141)	.....	2	364 9081
(T-143)	.....	2	364 9082
(T-144)	.....	2	364 9083
(T-145)	.....	2	364 9084
(T-151)	.....	2	364 9081
(T-153)	.....	2	364 9082
(T-154)	.....	2	364 9083
(T-161)	.....	2	364 9081
(T-163)	.....	2	364 9082
(T-164)	.....	2	364 9083
(T-165)	.....	2	364 9084
(T-168)	.....	2	364 9081

Printed in U.S.A.

(T-171)	2	364	9081
(T-173)	2	364	9082
(T-174)	2	364	9083
(T-175)	2	364	9084
(T-176)	2	364	9081
(T-181)	2	364	9081
(T-183)	2	364	9082
(T-184)	2	364	9083
(T-186)	2	364	9081
(T-191)	2	364	9081
(T-193)	2	364	9082
(T-194)	2	364	9083
(T-195)	2	364	9084
(T-196)	2	364	9081

1972 MODELS - LESS SEAT BELT WARNING SYSTEM (Lift Buckle Type)

(T-201)	2	364	9081
(T-203)	2	365	3055
(T-206)	2	365	3058
(T-211)	2	364	9081
(T-213)	2	365	3055
(T-215)	2	364	9081
(T-216)	2	365	3058
(T-241)	2	364	9081
(T-243)	2	365	3055
(T-244)	2	365	3056
(T-246)	2	365	3058
(T-261)	2	364	9081
(T-263)	2	365	3055
(T-264)	2	365	3056
(T-265)	2	364	9081
(T-266)	2	365	3058
(T-268)	2	364	9081
(T-271)	2	364	9081
(T-273)	2	365	3055
(T-274)	2	365	3056
(T-276)	2	365	3058
(T-291)	2	364	9081
(T-293)	2	365	3055
(T-294)	2	365	3056
(T-296)	2	365	3058

1972 MODELS - WITH SEAT BELT WARNING SYSTEM (Black-Push Button Buckle Type)

72	(Left) 01-40 (* 27-48)	1	366	3651
72	(Left) 01-40 (* 27-49)	1	365	6437
72	(Left) 10-70-80 (* 27-48)	1	366	3441
72	(Left) 10-70-80 (* 27-49)	1	365	6435
72	(Right) 01-40 (* 27-48)	1	366	3650
72	(Right) 01-40 (* 27-49)	1	365	6436
72	(Right) 10-70-80 (* 27-48)	1	366	3440
72	(Right) 10-70-80 (* 27-49)	1	365	6434

27.290-2 BELT, Front Seat Inner (CP)

1968 Thru 1972 MODELS

(T-828)	1	361	7676
(T-843)	1	361	7677
(T-844)	1	361	7678
(T-845)	1	361	7679
(T-848)	1	361	7676
(T-851)	1	361	7676
(T-853)	1	361	7677
(T-855)(* 27-16)	1	361	7679
(T-871)	1	361	7676
(T-873)	1	361	7677
(T-874)	1	361	7678
(T-875)	1	361	7679
(T-876)	1	361	7680
(T-879)	1	361	7681

BODY HARDWARE

(T-881)	.....	1	361 7676
(T-883)	.....	1	361 7677
(T-885)	.....	1	361 7679
(T-891)	.....	1	361 7676
(T-893)	.....	1	361 7677
(T-894)	.....	1	361 7678
(T-895)(* 27-16)	.....	1	361 7679
(T-896)	.....	1	361 7680
(T-899)	.....	1	361 7681
(T-923)(* 27-23) ..... *(Use 362 8878)*	.....	1	362 0201
(T-923)(* 27-22)	.....	1	362 9043
(T-928)(* 27-23) ..... *(Use 362 8877)*	.....	1	362 0200
(T-928)(* 27-22)	.....	1	362 9042
(T-941)(* 27-23) ..... *(Use 362 8877)*	.....	1	362 0200
(T-941)(* 27-22)	.....	1	362 9042
(T-943)(* 27-23) ..... *(Use 362 8878)*	.....	1	362 0201
(T-943)(* 27-22)	.....	1	362 9043
(T-944)(* 27-23) ..... *(Ord. 362 9044)*	.....	1	362 0202
(T-944)(* 27-22)	.....	1	362 9044
(T-945)(* 27-23)	.....	1	362 8880
(T-945)(* 27-22)	.....	1	362 9045
(T-951)(* 27-23) ..... *(Use 362 8877)*	.....	1	362 0200
(T-951)(* 27-22)	.....	1	362 9042
(T-953)(* 27-23) ..... *(Use 362 8877)*	.....	1	362 0201
(T-953)(* 27-22)	.....	1	362 9043
(T-956)(* 27-23) ..... *(Use 362 8881)*	.....	1	362 0204
(T-956)(* 27-22)	.....	1	362 9046
(T-957)(* 27-23)	.....	1	362 8882
(T-957)(* 27-22)	.....	1	362 9047
(T-972)(* 27-23) ..... *(Use 362 8877)*	.....	1	362 0200
(T-972)(* 27-22)	.....	1	362 9042
(T-973)(* 27-23) ..... *(Use 362 8878)*	.....	1	362 0201
(T-973)(* 27-22)	.....	1	362 9043
(T-975)(* 27-23)	.....	1	362 8880
(T-975)(* 27-22)	.....	1	362 9045
(T-976)(* 27-23) ..... *(Use 362 8881)*	.....	1	362 0204
(T-976)(* 27-22)	.....	1	362 9046
(T-977)(* 27-23)	.....	1	362 8882
(T-977)(* 27-22)	.....	1	362 9047
(T-979)(* 27-23)	.....	1	362 8882
(T-979)(* 27-22)	.....	1	362 9047
(T-981)(* 27-23) ..... *(Use 362 8877)*	.....	1	362 0200
(T-981)(* 27-22)	.....	1	362 9042
(T-983)(* 27-23) ..... *(Use 362 8878)*	.....	1	362 0201
(T-983)(* 27-22)	.....	1	362 9043
(T-986)(* 27-23) ..... *(Use 362 8881)*	.....	1	362 0204
(T-986)(* 27-22)	.....	1	362 9046
(T-987)(* 27-23)	.....	1	362 8882
(T-987)(* 27-22)	.....	1	362 9047
(T-991)(* 27-23) ..... *(Use 362 8877)*	.....	1	362 0200
(T-991)(* 27-22)	.....	1	362 9042
(T-992)(* 27-23) ..... *(Use 362 8877)*	.....	1	362 0200
(T-992)(* 27-22)	.....	1	362 9042
(T-993)(* 27-23) ..... *(Use 362 8878)*	.....	1	362 0201
(T-993)(* 27-22)	.....	1	362 9043
(T-995)(* 27-23)	.....	1	362 8880
(T-995)(* 27-22)	.....	1	362 9045
(T-996)(* 27-23) ..... *(Use 362 8881)*	.....	1	362 0204
(T-996)(* 27-22)	.....	1	362 9046
(T-997)(* 27-23)	.....	1	362 8882
(T-997)(* 27-22)	.....	1	362 9047
(T-999)(* 27-23)	.....	1	362 8882
(T-999)(* 27-22)	.....	1	362 9047
(T-021)(Black-* 27-30)	.....	1	363 4395
(T-021)(Charcoal-* 27-30)	.....	1	362 9042
(T-021)(* 27-39)	.....	1	364 3320
(T-023)(* 27-30)	.....	1	363 4397
(T-023)(* 27-31)	.....	1	364 3321
(T-023)(* 27-40)	.....	1	364 3327

BODY HARDWARE

(T-024)(* 27-30)	.....	1	363 4398
(T-024)(* 27-31)	.....	1	364 3322
(T-024)(Black-* 27-31)	.....	1	364 3320
(T-025)(* 27-30)	.....	1	362 9045
(T-025)(* 27-31)	.....	1	364 3323
(T-025)(* 27-40)	.....	1	364 3329
(T-041)(Black-* 27-30)	.....	1	363 4395
(T-041)(Charcoal-* 27-30)	.....	1	362 9042
(T-041)(* 27-39)	.....	1	364 3320
(T-043)(* 27-30)	.....	1	363 4397
(T-043)(* 27-31)	.....	1	364 3321
(T-043)(* 27-40)	.....	1	364 3327
(T-044)(* 27-30)	.....	1	363 4398
(T-044)(* 27-31)	.....	1	364 3322
(T-044)(Black-* 27-31)	.....	1	364 3320
(T-045)(* 27-30)	.....	1	362 9045
(T-045)(* 27-31)	.....	1	364 3323
(T-045)(* 27-40)	.....	1	364 3329
(T-051)(* 27-30)	.....	1	363 4395
(T-051)(* 27-39)	.....	1	364 3320
(T-053)(* 27-40)	.....	1	364 3327
(T-053)(* 27-30)	.....	1	363 4397
(T-053)(* 27-31)	.....	1	364 3321
(T-054)(Black-* 27-31)	.....	1	364 3320
(T-054)(* 27-30)	.....	1	363 4398
(T-054)(* 27-31)	.....	1	364 3322
(T-056)(* 27-30)	.....	1	363 4399
(T-056)(* 27-31)	.....	1	364 3324
(T-056)(Black-* 27-31)	.....	1	364 3320
(T-071)(* 27-30)	.....	1	363 4395
(T-071)(* 27-39)	.....	1	364 3320
(T-073)(* 27-30)	.....	1	363 4397
(T-073)(* 27-31)	.....	1	364 3321
(T-073)(* 27-40)	.....	1	364 3327
(T-074)(* 27-30)	.....	1	363 4398
(T-074)(* 27-31)	.....	1	364 3322
(T-074)(Black-* 27-31)	.....	1	364 3320
(T-075)(* 27-30)	.....	1	362 9045
(T-075)(* 27-31)	.....	1	364 3323
(T-075)(* 27-40)	.....	1	364 3329
(T-076)(* 27-30)	.....	1	363 4399
(T-076)(* 27-31)	.....	1	364 3324
(T-076)(Black-* 27-31)	.....	1	364 3320
(T-081)(* 27-30)	.....	1	363 4395
(T-081)(* 27-39)	.....	1	364 3320
(T-083)(* 27-30)	.....	1	363 4397
(T-083)(* 27-31)	.....	1	364 3321
(T-083)(* 27-40)	.....	1	364 3327
(T-084)(* 27-30)	.....	1	363 4398
(T-084)(* 27-31)	.....	1	364 3322
(T-084)(Black-* 27-31)	.....	1	364 3320
(T-086)(* 27-30)	.....	1	363 4399
(T-086)(* 27-31)	.....	1	364 3324
(T-086)(Black-* 27-31)	.....	1	364 3320
(T-091)(* 27-30)	.....	1	363 4395
(T-091)(* 27-39)	.....	1	364 3320
(T-093)(* 27-30)	.....	1	363 4397
(T-093)(* 27-31)	.....	1	364 3321
(T-093)(* 27-40)	.....	1	364 3327
(T-094)(* 27-30)	.....	1	363 4398
(T-094)(* 27-31)	.....	1	364 3322
(T-094)(Black-* 27-31)	.....	1	364 3320
(T-095)(* 27-30)	.....	1	362 9045
(T-095)(* 27-31)	.....	1	364 3323
(T-095)(* 27-40)	.....	1	364 3329
(T-096)(* 27-30)	.....	1	363 4399
(T-096)(* 27-31)	.....	1	364 3324
(T-096)(Black-* 27-31)	.....	1	364 3320

(T-121)	.....	1	364	3320
(T-123)	.....	1	364	3327
(T-124)	.....	1	364	3328
(T-128)	.....	1	364	3320
(T-141)	.....	1	364	3320
(T-143)	.....	1	364	3327
(T-144)	.....	1	364	3328
(T-145)	.....	1	364	3329
(T-151)	.....	1	364	3320
(T-153)	.....	1	364	3327
(T-154)	.....	1	364	3328
(T-171)	.....	1	364	3320
(T-173)	.....	1	364	3327
(T-174)	.....	1	364	3328
(T-175)	.....	1	364	3329
(T-176)	.....	1	364	3320
(T-181)	.....	1	364	3320
(T-183)	.....	1	364	3327
(T-184)	.....	1	364	3328
(T-186)	.....	1	364	3320
(T-191)	.....	1	364	3320
(T-193)	.....	1	364	3327
(T-194)	.....	1	364	3328
(T-195)	.....	1	364	3329
(T-196)	.....	1	364	3320

1972 MODELS - LESS SEAT BELT WARNING SYSTEM

(T-201)	.....	1	364	3320
(T-203)	.....	1	365	3045
(T-206)	.....	1	365	3048
(T-211)	.....	1	364	3320
(T-213)	.....	1	365	3045
(T-215)	.....	1	364	3320
(T-216)	.....	1	365	3048
(T-241)	.....	1	364	3320
(T-243)	.....	1	365	3045
(T-244)	.....	1	365	3046
(T-245)	.....	2	364	3320
(T-246)	.....	1	365	3048
(T-271)	.....	1	364	3320
(T-273)	.....	1	365	3045
(T-274)	.....	1	365	3046
(T-276)	.....	1	365	3048
(T-291)	.....	1	364	3320
(T-293)	.....	1	365	3045
(T-294)	.....	1	365	3046
(T-296)	.....	1	365	3048

1972 MODELS - WITH SEAT BELT WARNING SYSTEM (Black)

72	01 (* 27-48)	.....	1	366	3579
72	10-80 (* 27-48)	.....	1	366	3659
72	01-10-80 (* 27-49)	.....	1	366	2583

27.290-3 BELT, Front, Rear And Third Seat (Incl. Painted Buckle)(Buckle End Only)

1967 MODELS

(T-723)	.....	AR	320	7903
(T-728)	15.365	AR	320	6974
(T-729)	.....	AR	320	7913
(T-741)	15.365	AR	320	6974
(T-743)	.....	AR	320	7903
(T-744)	.....	AR	320	7905
(T-745)	.....	AR	320	7907
(T-747)	.....	AR	320	7911
(T-748)	15.365	AR	320	6974
(T-749)	.....	AR	320	7913
(T-753)	.....	AR	320	7903
(T-758)	15.365	AR	320	6974

(T-759)	.....	AR	320 7913
(T-771)	15.365	AR	320 6974
(T-773)	.....	AR	320 7903
(T-774)	.....	AR	320 7905
(T-775)	.....	AR	320 7907
(T-776)	.....	AR	320 7909
(T-777)	.....	AR	320 7911
(T-778)	15.365	AR	320 6974
(T-779)	.....	AR	320 7913
(T-781)	15.365	AR	320 6974
(T-783)	.....	AR	320 7903
(T-787)	.....	AR	320 7911
(T-789)	.....	AR	320 7913
(T-791)	15.365	AR	320 6974
(T-793)	.....	AR	320 7903
(T-794)	.....	AR	320 7905
(T-795)	.....	AR	320 7907
(T-796)	.....	AR	320 7909
(T-797)	.....	AR	320 7911
(T-798)	15.365	AR	320 6974
(T-799)	.....	AR	320 7913

27.290–4 BELT, Front, Rear And Third Seat Tip End (Non-Retractable Type)(Tip End Only)

1967 MODELS

(T-723)(* 27-18)	.....	AR	320 7904
(T-728)(* 27-18)	15.365	AR	320 6984
(T-729)(* 27-18)	.....	AR	320 7914
(T-741)(* 27-18)	15.365	AR	320 6984
(T-743)(* 27-18)	.....	AR	320 7904
(T-744)(* 27-18)	.....	AR	320 7906
(T-745)(* 27-18)	.....	AR	320 7908
(T-747)(* 27-18)	.....	AR	320 7912
(T-748)(* 27-18)	15.365	AR	320 6984
(T-749)(* 27-18)	.....	AR	320 7914
(T-753)(* 27-18)	.....	AR	320 7904
(T-758)(* 27-18)	15.365	AR	320 6984
(T-759)(* 27-18)	.....	AR	320 7914
(T-771)(* 27-18)	15.365	AR	320 6984
(T-773)(* 27-18)	.....	AR	320 7904
(T-774)(* 27-18)	.....	AR	320 7906
(T-775)(* 27-18)	.....	AR	320 7908
(T-776)(* 27-18)	.....	AR	320 7910
(T-777)(* 27-18)	.....	AR	320 7912
(T-778)(* 27-18)	15.365	AR	320 6984
(T-779)(* 27-18)	.....	AR	320 7914
(T-781)(* 27-18)	15.365	AR	320 6984
(T-783)(* 27-18)	.....	AR	320 7904
(T-787)(* 27-18)	.....	AR	320 7912
(T-789)(* 27-18)	.....	AR	320 7914
(T-791)(* 27-18)	15.365	AR	320 6984
(T-793)(* 27-18)	.....	AR	320 7904
(T-794)(* 27-18)	.....	AR	320 7906
(T-795)(* 27-18)	.....	AR	320 7908
(T-796)(* 27-18)	.....	AR	320 7910
(T-797)(* 27-18)	.....	AR	320 7912
(T-798)(* 27-18)	15.365	AR	320 6984
(T-799)(* 27-18)	.....	AR	320 7914

27.290–5 BELT, Front Seat (Incl. Chrome Buckle)(Non Auto-Loc Retractable Type)(Buckle End Only)

1967 MODELS

(T-723)(* 27-17)	.....	AR	359 7486
(T-728)(* 27-17)	15.365	AR	320 7630
(T-729)(* 27-17)	.....	AR	359 7491
(T-741)(* 27-17)	15.365	AR	320 7630
(T-741)(* 27-18)	.....	AR	320 8596
(T-743)(* 27-17)	.....	AR	359 7486
(T-743)(* 27-18) *(Use 358 9858)*	.....	AR	320 8597
(T-744)(* 27-17)	.....	AR	359 7487
(T-744)(* 27-18)	.....	AR	320 8598
(T-745)(* 27-17)	.....	AR	359 7488
(T-745)(* 27-18)	.....	AR	320 8599
(T-747)(* 27-17)	.....	AR	359 7490
(T-747)(* 27-18)	.....	AR	320 8601
(T-748)(* 27-17)	15.365	AR	320 7630
(T-748)(* 27-18)	.....	AR	320 8596
(T-749)(* 27-17)	.....	AR	359 7491
(T-749)(* 27-18)	.....	2	320 8602
(T-753)(* 27-17)	.....	AR	359 7486
(T-758)(* 27-17)	15.365	AR	320 7630
(T-759)(* 27-17)	.....	AR	359 7491
(T-771)(* 27-17)	15.365	AR	320 7630
(T-771)(* 27-18)	.....	AR	320 8596
(T-773)(* 27-17)	.....	AR	359 7486
(T-773)(* 27-18) *(Use 358 9861)*	.....	AR	320 8597
(T-774)(* 27-17)	.....	AR	359 7487
(T-774)(* 27-18)	.....	AR	320 8598
(T-775)(* 27-17)	.....	AR	359 7488
(T-775)(* 27-18)	.....	AR	320 8599
(T-776)(* 27-17)	.....	AR	357 9656
(T-776)(* 27-18)	.....	AR	358 9861
(T-777)(* 27-17)	.....	AR	359 7490
(T-777)(* 27-18)	.....	AR	320 8601
(T-778)(* 27-17)	15.365	AR	320 7630
(T-778)(* 27-18)	.....	AR	320 8596
(T-779)(* 27-17)	.....	AR	359 7491
(T-779)(* 27-18)	.....	AR	320 8602
(T-781)(* 27-17)	15.365	AR	320 7630
(T-783)(* 27-17)	.....	AR	359 7486
(T-787)(* 27-17)	.....	AR	359 7490
(T-789)(* 27-17)	.....	AR	359 7491
(T-791)	15.365	AR	320 7630
(T-793)	.....	AR	359 7486
(T-794)	.....	AR	359 7487
(T-795)	.....	AR	359 7488
(T-796)	.....	AR	357 9656
(T-797)	.....	AR	359 7490
(T-798)	15.365	AR	320 7630
(T-799)	.....	AR	359 7491

27.290–6 BELT, Front Seat Tip End (Incl. Retractor And Cover)(Non Auto-Loc Retractable Type)(Tip End Only)

1967 MODELS

(T-723)(* 27-17)	.....	2	359 7492
(T-723)(* 27-18) *(Ref. Pr. List)*	.....	AR	320 8593
(T-728)(* 27-17)	15.365	2	353 0847
(T-728)(* 27-18) *(Ref. Pr. List)*	.....	AR	320 8592
(T-729)(* 27-17)	.....	2	359 7497
(T-729)(* 27-18) *(Ref. Pr. List)*	.....	AR	320 8595
(T-741)(* 27-17)	15.365	2	353 0847
(T-741)(* 27-18) *(Ref. Pr. List)*	.....	AR	320 8592

(T-743)(* 27-17)	.....	2	359 7492
(T-743)(* 27-18) (Ref. Pr. List)	.....	AR	320 8593
(T-744)(* 27-17)	.....	2	359 7493
(T-744)(* 27-18)	.....	AR	320 8603
(T-745)(* 27-17)	.....	2	359 7494
(T-745)(* 27-18)	.....	AR	320 8604
(T-747)(* 27-17)	.....	2	359 7496
(T-747)(* 27-18)	.....	AR	320 8594
(T-748)(* 27-17)	15.365	2	353 0847
(T-748)(* 27-18) (Ref. Pr. List)	.....	AR	320 8592
(T-749)(* 27-17)	.....	2	359 7497
(T-749)(* 27-18) (Ref. Pr. List)	.....	AR	320 8595
(T-753)(* 27-17)	.....	2	359 7492
(T-753)(* 27-18) (Ref. Pr. List)	.....	AR	320 8593
(T-758)(* 27-17)	15.365	2	353 0847
(T-758)(* 27-18) (Ref. Pr. List)	.....	AR	320 8592
(T-759)(* 27-17)	.....	2	359 7497
(T-759)(* 27-18) (Ref. Pr. List)	.....	AR	320 8595
(T-771)(* 27-17)	15.365	2	353 0847
(T-771)(* 27-18) (Ref. Pr. List)	.....	AR	320 8592
(T-773)(* 27-17)	.....	2	359 7492
(T-773)(* 27-18) (Ref. Pr. List)	.....	AR	320 8593
(T-774)(* 27-17)	.....	2	359 7493
(T-774)(* 27-18)	.....	AR	320 8603
(T-775)(* 27-17)	.....	2	359 7494
(T-775)(* 27-18)	.....	AR	320 8604
(T-776)(* 27-17)	.....	2	359 7495
(T-776)(* 27-18)	.....	AR	358 9861
(T-777)(* 27-17)	.....	2	359 7496
(T-777)(* 27-18)	.....	AR	320 8594
(T-778)(* 27-17)	15.365	2	353 0847
(T-778)(* 27-18) (Ref. Pr. List)	.....	AR	320 8592
(T-779)(* 27-17)	.....	2	359 7497
(T-779)(* 27-18) (Ref. Pr. List)	.....	AR	320 8595
(T-781)(* 27-17)	15.365	2	353 0847
(T-781)(* 27-18) (Ref. Pr. List)	.....	AR	320 8592
(T-783)(* 27-17)	.....	2	359 7492
(T-783)(* 27-18) (Ref. Pr. List)	.....	AR	320 8593
(T-787)(* 27-17)	.....	2	359 7496
(T-787)(* 27-18)	.....	AR	320 8594
(T-789)(* 27-17)	.....	2	359 7497
(T-789)(* 27-18) (Ref. Pr. List)	.....	AR	320 8595
(T-791)	15.365	2	353 0847
(T-793)	.....	2	359 7492
(T-794)	.....	2	359 7493
(T-795)	.....	2	359 7494
(T-796)	.....	2	359 7495
(T-797)	.....	2	359 7496
(T-798)	15.365	2	353 0847
(T-799)	.....	2	359 7497

27.290–7 BELT, Front Seat (Incl. Chrome Buckle)(Auto-Loc Retractable Type)(Buckle End Only)

1967 MODELS

(T-741)(WBS)	15.365	2	356 4313
(T-743)(WBS)	.....	2	359 7498
(T-745)(WBS)	.....	2	359 7500
(T-748)(WBS)	.....	2	356 4313
(T-749)(WBS)	.....	2	359 7503
(T-771)(WBS)	15.365	2	356 4313
(T-773)(WBS)	.....	2	359 7498
(T-775)(WBS)	.....	2	359 7500

(T-776)(WBS)	.....	2	359 7501
(T-778)(WBS)	15.365	2	356 4313
(T-779)(WBS)	.....	2	359 7503
(T-791)(WBS)	15.365	2	356 4313
(T-793)(WBS)	.....	2	359 7498
(T-795)(WBS)	.....	2	359 7500
(T-796)(WBS)	.....	2	359 7501
(T-798)(WBS)	15.365	2	356 4313
(T-799)(WBS)	.....	2	359 7503

27.290–8 BELT, Front Seat (Incl. Automatic Retractor And Housing)(Auto-Loc Retractable Type)(Tip End Only)

1967 MODELS

(T-741)(WBS)	15.365	2	356 4327
(T-743)(WBS)	.....	2	359 7504
(T-745)(WBS)	.....	2	359 7506
(T-748)(WBS)	15.365	2	356 4327
(T-749)(WBS)	.....	2	359 7508
(T-771)(WBS)	15.365	2	356 4327
(T-773)(WBS)	.....	2	359 7504
(T-775)(WBS)	.....	2	359 7506
(T-776)(WBS)	.....	2	359 7507
(T-778)(WBS)	15.365	2	356 4327
(T-779)(WBS)	.....	2	359 7508
(T-791)(WBS)	15.365	2	356 4327
(T-793)(WBS)	.....	2	359 7504
(T-795)(WBS)	.....	2	359 7506
(T-796)(WBS)	.....	2	359 7507
(T-798)(WBS)	15.365	2	356 4327
(T-799)(WBS)	.....	2	359 7508

27.290–9 ATTACHING PARTS, Front Belt To Side Sill

BOLT, Nylock	67	.....	15.365	2	400 1937
BOLT, Shoulder	68/	(7/16"-20 x 1-21/32")(LSBW)	.....	6	400 3518
BOLT, Shoulder	71	(7/16"-20 x 2") 70	.....	6	400 3758
BOLT, Shoulder	72	(7/16"-20 x 1-13/32"-Outer)(WSBW)	.....	2	400 4485
PLUG	72	(Black-Outer)(WSBW)	.....	2	364 7437

27.290–10 ATTACHING PARTS, Front Belt To Floor Pan

BOLT, Nylock	67	.....	15.365	4	317 3132
BOLT, Shoulder	68/	(7/16"-20 x 1-21/32")(LSBW)	.....	2	400 3518
BOLT, Shoulder	72	(7/16"-20 x 1-7/16"-Inner)(WSBW)	.....	2	400 4541
BOLT, Shoulder	72	(7/16"-20 x 2") 70 (WSBW)	.....	2	400 4543

27.290–11 ATTACHING PARTS, Front Outer Belt To Body

WASHER, Plain	67/	.....	17.814	2	448 8495

27.290–12 BELT, Rear And Third Seat (CP)(Painted Buckle)

1968 Thru 1972 MODELS

(T-828)	.....	AR	361 7691
(T-831)	.....	AR	361 7691
(T-832)	.....	AR	361 7692
(T-835)	.....	AR	361 7695
(T-838)	.....	AR	361 7691
(T-843)	.....	AR	361 7693
(T-844)	.....	AR	361 7694
(T-845)	.....	AR	361 7695
(T-848)	.....	AR	361 7691
(T-851)	.....	AR	361 7691
(T-853)	.....	AR	361 7693
(T-855)	.....	AR	361 7695
(T-871)	.....	AR	361 7691

BODY HARDWARE

(T-873)	.....	AR	361 7693
(T-874)	.....	AR	361 7694
(T-875)	.....	AR	361 7695
(T-876)	.....	AR	361 7696
(T-879)	.....	AR	361 7697
(T-881)	.....	AR	361 7691
(T-883)	.....	AR	361 7693
(T-885)	.....	AR	361 7695
(T-891)	.....	AR	361 7691
(T-893)	.....	AR	361 7693
(T-894)	.....	AR	361 7694
(T-895)	.....	AR	361 7695
(T-896)	.....	AR	361 7696
(T-899)	.....	AR	361 7697
(T-923)(* 27-23)	.....	AR	362 8878
(T-923)(* 27-22)	.....	AR	362 9043
(T-928)(* 27-23)	.....	AR	362 8877
(T-928)(* 27-22)	.....	AR	362 9042
(T-941)(* 27-23)	.....	AR	362 8877
(T-941)(* 27-22)	.....	AR	362 9042
(T-943)(* 27-23)	.....	AR	362 8878
(T-943)(* 27-22)	.....	AR	362 9043
(T-944)(* 27-23)	..... *(Ord. 362 9044)*	AR	362 8879
(T-944)(* 27-22)	.....	AR	362 9044
(T-945)(* 27-23)	.....	AR	362 8880
(T-945)(* 27-22)	.....	AR	362 9043
(T-951)(* 27-23)	.....	AR	362 8877
(T-951)(* 27-22)	.....	AR	362 9042
(T-953)(* 27-23)	.....	AR	362 8878
(T-953)(* 27-22)	.....	AR	362 9043
(T-956)(* 27-23)	.....	AR	362 8881
(T-956)(* 27-22)	.....	AR	362 9046
(T-957)(* 27-23)	.....	AR	362 8882
(T-957)(* 27-22)	.....	AR	362 9047
(T-961)(* 27-23)	.....	AR	362 8877
(T-961)(* 27-22)	.....	AR	362 9042
(T-962)(* 27-23)	.....	AR	362 8877
(T-962)(* 27-22)	.....	AR	362 9042
(T-963)(* 27-23)	.....	AR	362 8878
(T-963)(* 27-22)	.....	AR	362 9043
(T-965)(* 27-23)	.....	AR	362 8880
(T-965)(* 27-22)	.....	AR	362 9045
(T-966)(* 27-23)	.....	AR	362 8881
(T-966)(* 27-22)	.....	AR	362 9046
(T-968)(* 27-23)	.....	AR	362 8877
(T-968)(* 27-22)	.....	AR	362 9042
(T-972)(* 27-23)	.....	AR	362 8877
(T-972)(* 27-22)	.....	AR	362 9042
(T-973)(* 27-23)	.....	AR	362 8878
(T-973)(* 27-22)	.....	AR	362 9043
(T-975)(* 27-23)	.....	AR	362 8880
(T-975)(* 27-22)	.....	AR	362 9045
(T-976)(* 27-23)	.....	AR	362 8881
(T-976)(* 27-22)	.....	AR	362 9046
(T-977)(* 27-23)	.....	AR	362 8882
(T-977)(* 27-22)	.....	AR	362 9047
(T-979)(* 27-23)	.....	AR	362 8882
(T-979)(* 27-22)	.....	AR	362 9047
(T-981)(* 27-23)	.....	AR	362 8877
(T-981)(* 27-22)	.....	AR	362 9042

BODY HARDWARE

(T-983)(* 27-23)	AR	362	8878
(T-983)(* 27-22)	AR	362	9043
(T-986)(* 27-23)	AR	362	8881
(T-986)(* 27-22)	AR	362	9046
(T-987)(* 27-23)	AR	362	8882
(T-987)(* 27-22)	AR	362	9047
(T-991)(* 27-23)	AR	362	8877
(T-991)(* 27-22)	AR	362	9042
(T-992)(* 27-23)	AR	362	8877
(T-992)(* 27-22)	AR	362	9042
(T-993)(* 27-23)	AR	362	8878
(T-993)(* 27-22)	AR	362	9043
(T-995)(* 27-23)	AR	362	8880
(T-995)(* 27-22)	AR	362	9045
(T-996)(* 27-23)	AR	362	8881
(T-996)(* 27-22)	AR	362	9046
(T-997)(* 27-23)	AR	362	8882
(T-997)(* 27-22)	AR	362	9047
(T-999)(* 27-23)	AR	362	8882
(T-999)(* 27-22)	AR	362	9047
(T-001)	AR	364	3320
(T-008)	AR	364	3320
(T-011)	AR	364	3320
(T-013)(* 27-40)	AR	364	3327
(T-013)(* 27-31)	AR	364	3321
(T-014)(Black-* 27-40)	AR	364	3320
(T-014)(* 27-31)	AR	364	3322
(T-015)(* 27-40)	AR	364	3329
(T-015)(* 27-31)	AR	364	3323
(T-021)(Black-* 27-30)	AR	363	4395
(T-021)(Charcoal-* 27-30)	AR	362	9042
(T-021)(* 27-39)	AR	364	3320
(T-023)(* 27-30)	AR	363	4397
(T-023)(* 27-31)	AR	364	3321
(T-023)(* 27-40)	AR	364	3327
(T-024)(* 27-30)	AR	363	4398
(T-024)(* 27-31)	AR	364	3322
(T-024)(Black-* 27-40)	AR	364	3320
(T-025)(* 27-30)	AR	362	9045
(T-025)(* 27-31)	AR	364	3323
(T-025)(* 27-40)	AR	364	3329
(T-041)(Black-* 27-30)	AR	363	4395
(T-041)(Charcoal-* 27-30)	AR	362	9042
(T-041)(* 27-39)	AR	364	3320
(T-043)(* 27-30)	AR	363	4397
(T-043)(* 27-31)	AR	364	3321
(T-043)(* 27-40)	AR	364	3327
(T-044)(* 27-30)	AR	363	4398
(T-044)(* 27-31)	AR	364	3322
(T-044)(Black-* 27-40)	AR	364	3320
(T-045)(* 27-30)	AR	362	9045
(T-045)(* 27-31)	AR	364	3323
(T-045)(* 27-40)	AR	364	3329
(T-051)(* 27-30)	AR	363	4395
(T-051)(* 27-39)	AR	364	3320
(T-053)(* 27-30)	AR	363	4397
(T-053)(* 27-31)	AR	364	3321
(T-053)(* 27-40)	AR	364	3327
(T-054)(* 27-30)	AR	363	4398
(T-054)(* 27-31)	AR	364	3322
(T-054)(Black-* 27-40)	AR	364	3320
(T-056)(* 27-30)	AR	363	4399
(T-056)(* 27-31)	AR	364	3324
(T-056)(Black-* 27-40)	AR	364	3320

BODY HARDWARE

(T-061)(* 27-30)	.....	AR	363 4395
(T-061)(* 27-39)	.....	AR	364 3320
(T-063)(* 27-30)	.....	AR	363 4397
(T-063)(* 27-31)	.....	AR	364 3321
(T-063)(* 27-40)	.....	AR	364 3327
(T-064)(* 27-30)	.....	AR	363 4398
(T-064)(* 27-31)	.....	AR	364 3322
(T-064)(Black-* 27-40)	.....	AR	364 3320
(T-065)(* 27-30)	.....	AR	362 9045
(T-065)(* 27-31)	.....	AR	364 3323
(T-065)(* 27-40)	.....	AR	364 3329
(T-066)(* 27-30)	.....	AR	363 4399
(T-066)(* 27-31)	.....	AR	364 3324
(T-066)(Black-* 27-40)	.....	AR	364 3320
(T-071)(* 27-30)	.....	AR	363 4395
(T-071)(* 27-39)	.....	AR	364 3320
(T-073)(* 27-30)	.....	AR	363 4397
(T-073)(* 27-31)	.....	AR	364 3321
(T-073)(* 27-40)	.....	AR	364 3327
(T-074)(* 27-30)	.....	AR	363 4398
(T-074)(* 27-31)	.....	AR	364 3322
(T-074)(Black-* 27-40)	.....	AR	364 3320
(T-075)(* 27-30)	.....	AR	362 9045
(T-075)(* 27-31)	.....	AR	364 3323
(T-075)(* 27-40)	.....	AR	364 3329
(T-076)(* 27-30)	.....	AR	363 4399
(T-076)(* 27-31)	.....	AR	364 3324
(T-076)(Black-* 27-40)	.....	AR	364 3320
(T-081)(* 27-30)	.....	AR	363 4395
(T-081)(* 27-39)	.....	AR	364 3320
(T-083)(* 27-30)	.....	AR	363 4397
(T-083)(* 27-31)	.....	AR	364 3321
(T-083)(* 27-40)	.....	AR	364 3327
(T-084)(* 27-30)	.....	AR	363 4398
(T-084)(* 27-31)	.....	AR	364 3322
(T-084)(Black-* 27-40)	.....	AR	364 3320
(T-091)(* 27-30)	.....	AR	363 4395
(T-091)(* 27-39)	.....	AR	364 3320
(T-093)(* 27-30)	.....	AR	363 4397
(T-093)(* 27-31)	.....	AR	364 3321
(T-093)(* 27-40)	.....	AR	364 3327
(T-094)(* 27-30)	.....	AR	363 4398
(T-094)(* 27-31)	.....	AR	364 3322
(T-094)(Black-* 27-40)	.....	AR	364 3320
(T-095)(* 27-30)	.....	AR	362 9045
(T-095)(* 27-31)	.....	AR	364 3323
(T-095)(* 27-40)	.....	AR	364 3329
(T-096)(* 27-30)	.....	AR	363 4399
(T-096)(* 27-31)	.....	AR	364 3324
(T-096)(Black-* 27-40)	.....	AR	364 3320
(T-101)	.....	AR	364 3320
(T-103)(Blue)	.....	AR	364 3327
(T-103)(Black)	.....	AR	364 3320
(T-104)	.....	AR	364 3320
(T-108)	.....	1	364 3320
(T-111)	.....	AR	364 3320
(T-113)	.....	AR	364 3327
(T-114)	.....	AR	364 3328
(T-115)	.....	AR	364 3329
(T-121)	.....	AR	364 3320
(T-123)	.....	AR	364 3327
(T-124)	.....	AR	364 3328
(T-128)	.....	1	364 3320
(T-141)	.....	AR	364 3320
(T-143)	.....	AR	364 3327
(T-144)	.....	AR	364 3328
(T-145)	.....	AR	364 3329

(T-151)	.....	AR	364	3320
(T-153)	.....	AR	364	3327
(T-154)	.....	AR	364	3328
(T-161)	.....	AR	364	3320
(T-163)	.....	AR	364	3327
(T-164)	.....	AR	364	3328
(T-165)	.....	AR	364	3329
(T-168)	.....	1	364	3320
(T-171)	.....	AR	364	3320
(T-173)	.....	AR	364	3327
(T-174)	.....	AR	364	3328
(T-175)	.....	AR	364	3329
(T-176)	.....	AR	364	3320
(T-181)	.....	AR	364	3320
(T-183)	.....	AR	364	3327
(T-184)	.....	AR	364	3328
(T-186)	.....	AR	364	3320
(T-191)	.....	AR	364	3320
(T-193)	.....	AR	364	3327
(T-194)	.....	AR	364	3328
(T-195)	.....	AR	364	3329
(T-196)	.....	AR	364	3320

1972 MODELS - LESS SEAT BELT WARNING SYSTEM (Lift Buckle Type)

(T-201)	.....	AR	364	3320
(T-203)	.....	AR	365	3045
(T-206)	.....	AR	365	3048
(T-211)	.....	AR	364	3320
(T-213)	.....	AR	365	3045
(T-215)	.....	AR	364	3320
(T-216)	.....	AR	365	3048
(T-241)	.....	AR	364	3320
(T-243)	.....	AR	365	3045
(T-244)	.....	AR	365	3046
(T-245)	.....	AR	364	3320
(T-246)	.....	AR	365	3048
(T-261)	.....	AR	364	3320
(T-263)	.....	AR	365	3045
(T-264)	.....	AR	365	3046
(T-265)	.....	AR	364	3320
(T-266)	.....	AR	365	3048
(T-268)	.....	AR	364	3320
(T-271)	.....	AR	364	3320
(T-273)	.....	AR	365	3045
(T-274)	.....	AR	365	3046
(T-276)	.....	AR	365	3048
(T-291)	.....	AR	364	3320
(T-293)	.....	AR	365	3045
(T-294)	.....	AR	365	3046
(T-296)	.....	AR	365	3048

1972 MODELS - WITH SEAT BELT WARNING SYSTEM (REAR SEAT)(Black-Push Button Buckle Type)

72	(Outer) 01	.....	2	366	3654
72	(Outer) 15-18-85-88	.....	2	366	3498
72	(Outer) 19-89	.....	2	366	3655
72	(Outer) 40	.....	2	366	3657
72	(Outer) 70	.....	2	366	3576
72	(Inner) 10-80 (* 27-48)	.....	1	366	3659
72	(Inner) 10-80 (* 27-49)	.....	1	366	2583

1972 MODELS - WITH SEAT BELT WARNING SYSTEM (THIRD SEAT)(Black-Push Button Buckle Type)

72	18-88 (* 27-48)	.....	2	366	3659
72	18-88 (* 27-49)	.....	2	366	2583

BODY HARDWARE

27.290–13 BELT, Rear And Third Seat (Incl. Chrome Buckle)(Buckle End Only)

1967 MODELS

(T-723)(* 27-17)	.....	2	359 7486
(T-728)(* 27-17)	15.365	2	320 7630
(T-729)(* 27-17)	.....	2	359 7491
(T-741)(* 27-17)	15.365	2	320 7630
(T-741)(* 27-18)	.....	AR	320 8596
(T-743)(* 27-17)	.....	2	359 7486
(T-743)(* 27-18)	*(Use 358 9858)*	AR	320 8597
(T-744)(* 27-17)	.....	2	359 7510
(T-744)(* 27-18)	.....	AR	320 8598
(T-745)(* 27-17)	.....	2	359 7511
(T-745)(* 27-18)	.....	AR	320 8599
(T-747)(* 27-17)	.....	2	357 8856
(T-747)(* 27-18)	.....	AR	320 8601
(T-748)(* 27-17)	15.365	2	320 7630
(T-748)(* 27-18)	.....	AR	320 8596
(T-749)(* 27-17)	.....	2	359 7491
(T-749)(* 27-18)	.....	AR	320 8602
(T-753)(* 27-17)	.....	2	359 7486
(T-758)(* 27-17)	15.365	2	320 7630
(T-759)(* 27-17)	.....	2	359 7491
(T-771)(* 27-17)	15.365	2	320 7630
(T-771)(* 27-18)	.....	AR	320 8596
(T-773)(* 27-17)	.....	2	359 7486
(T-773)(* 27-18)	*(Use 358 9858)*	AR	320 8597
(T-774)(* 27-17)	.....	2	359 7510
(T-774)(* 27-18)	.....	AR	320 8598
(T-775)(* 27-17)	.....	2	359 7511
(T-775)(* 27-18)	.....	AR	320 8599
(T-776)(* 27-17)	.....	2	359 7512
(T-776)(* 27-18)	.....	AR	358 9861
(T-777)(* 27-17)	.....	2	357 8856
(T-777)(* 27-18)	.....	AR	320 8601
(T-778)(* 27-17)	15.365	2	320 7630
(T-778)(* 27-18)	.....	AR	320 8596
(T-779)(* 27-17)	.....	2	359 7491
(T-779)(* 27-18)	.....	AR	320 8602
(T-781)(* 27-17)	15.365	2	320 7630
(T-783)(* 27-17)	.....	2	359 7486
(T-787)(* 27-17)	.....	2	357 8856
(T-789)(* 27-17)	.....	2	359 7491
(T-791)	15.365	2	320 7630
(T-793)	.....	2	359 7486
(T-794)	.....	2	359 7510
(T-795)	.....	2	359 7511
(T-796)	.....	2	359 7512
(T-797)	.....	2	357 8856
(T-798)	15.365	2	320 7630
(T-799)	.....	2	359 7491

27.290–14 BELT, Rear And Third Seat Tip End

1967 MODELS

(T-723)(* 27-17)	.....	2	359 7515
(T-723)(* 27-18)	.....	AR	320 7904
(T-728)(* 27-17)	15.365	2	356 5026
(T-728)(* 27-18)	15.365	AR	320 6984
(T-729)(* 27-17)	.....	2	359 7520
(T-729)(* 27-18)	.....	AR	320 7914
(T-741)(* 27-17)	15.365	2	356 5026
(T-741)(* 27-18)	15.365	AR	320 6984
(T-743)(* 27-17)	.....	2	359 7515
(T-743)(* 27-18)	.....	AR	320 7904
(T-744)(* 27-17)	.....	2	359 7516
(T-744)(* 27-18)	.....	AR	320 7906

BODY HARDWARE

(T-745)(* 27-17)	.....	2	359 7517
(T-745)(* 27-18)	.....	AR	320 7908
(T-747)(* 27-17)	.....	2	359 7519
(T-747)(* 27-18)	.....	AR	320 7912
(T-748)(* 27-17)	15.365	2	356 5026
(T-748)(* 27-18)	15.365	AR	320 6984
(T-749)(* 27-17)	.....	2	359 7520
(T-749)(* 27-18)	.....	AR	320 7914
(T-753)(* 27-17)	.....	2	359 7515
(T-753)(* 27-18)	.....	AR	320 7904
(T-758)(* 27-17)	15.365	2	356 5026
(T-758)(* 27-18)	15.365	AR	320 6984
(T-759)(* 27-17)	.....	2	359 7520
(T-759)(* 27-18)	.....	AR	320 7914
(T-771)(* 27-17)	15.365	2	356 5026
(T-771)(* 27-18)	15.365	AR	320 6984
(T-773)(* 27-17)	.....	2	359 7515
(T-773)(* 27-18)	.....	AR	320 7904
(T-774)(* 27-17)	.....	2	359 7516
(T-774)(* 27-18)	.....	AR	320 7906
(T-775)(* 27-17)	.....	2	359 7517
(T-775)(* 27-18)	.....	AR	320 7908
(T-776)(* 27-17)	.....	2	359 7518
(T-776)(* 27-18)	.....	AR	320 7910
(T-777)(* 27-17)	.....	2	359 7519
(T-777)(* 27-18)	.....	AR	320 7912
(T-778)(* 27-17)	15.365	2	356 5026
(T-778)(* 27-18)	15.365	AR	320 6984
(T-779)(* 27-17)	.....	2	359 7520
(T-779)(* 27-18)	.....	AR	320 7914
(T-781)(* 27-17)	15.365	2	356 5026
(T-781)(* 27-18)	15.365	AR	320 6984
(T-783)(* 27-17)	.....	2	359 7515
(T-783)(* 27-18)	.....	AR	320 7904
(T-787)(* 27-17)	.....	2	359 7519
(T-878)(* 27-18)	.....	AR	320 7912
(T-789)(* 27-17)	.....	2	359 7520
(T-789)(* 27-18)	.....	AR	320 7914
(T-791)	15.365	2	356 5026
(T-793)	.....	2	359 7515
(T-794)	.....	2	359 7516
(T-795)	.....	2	359 7517
(T-796)	.....	2	359 7518
(T-797)	.....	2	359 7519
(T-798)	15.365	2	356 5026
(T-799)	.....	2	359 7520

27.290–15 ATTACHING PARTS, Rear Belt To Floor Pan

BOLT, Nylock	67	(Outer)	17.038	AR	400 1940
BOLT, Shoulder	68/	(1-1/32" Long-Outer)	15.365	AR	400 1937
BOLT, Shoulder	67	(Inner)	.....	AR	400 2089
BOLT, Shoulder	68/	(2-7/16"-Inner)	.....	AR	400 3512
BOLT, Shoulder	69	(1-21/64" Long) 01-70	15.365	2	317 3132
BOLT, Shoulder	72	(7/16"-20 x 13/32"-Outer)(WSBW)	.....	2	400 4485
BOLT, Shoulder	72	(7/16"-20 x 5/32"-Inner)(WSBW)	.....	2	400 4542
BOLT, Shoulder	72	(1/4"-20 x 3/4")(WSBS)	.....	2	400 4584
WASHER, Flat	69	(Steel) 01-70 (* 27-24)	11.228	2	316 7602
WASHER, Lock	69	01-70 (* 27-24)	17.820	2	G120384
WASHER, Plain	69/	(Steel) 18-88 (W3S)	17.814	4	448 8495
WASHER, Plain	67/	(1-3/4" O.D.-Rubber)	.....	AR	400 2167

27.290–16 ATTACHING PARTS, Third Belt To Floor Pan

BOLT, Shoulder	67	01	15.365	2	317 3132

BODY HARDWARE

27.290–17 RETRACTOR, Seat Belt

67	.....	15.365	2	320 5508	
68	.....	.....	2	448 6526	
69	(* 27-19)	.....	2	448 6526	

27.290–18 BOOT, Seat Belt And Retractor

67	.....	15.365	2	320 7122	NC
68	.....	.....	2	448 6527	NC
69	(* 27-19)	.....	2	448 6527	NC

27.290–19 RECEPTACLE, Front Seat Belt Buckle (On Console)

1967 Thru 1971 MODELS

(T-741)(WFC)	15.365	2	353 0831
(T-743)(WFC)	.....	2	357 8111
(T-745)(WFC)	.....	2	357 8112
(T-748)(WFC)	15.365	2	353 0831
(T-749)(WFC)	.....	2	358 1742
(T-771)(WFC)	.....	1	358 1738
(T-773)(WFC)	.....	1	358 1739
(T-775)(WFC)	.....	1	358 1740
(T-776)(WFC)	.....	1	358 1741
(T-778)(WFC)	.....	1	358 1738
(T-779)(WFC)	.....	1	358 1742
(T-791)(WFC)	.....	1	358 1738
(T-793)(WFC)	.....	1	358 1739
(T-795)(WFC)	.....	1	358 1740
(T-796)(WFC)	.....	1	358 1741
(T-798)(WFC)	.....	1	358 1738
(T-799)(WFC)	.....	1	358 1742
(T-831)(WFC)	.....	1	360 7981
(T-832)(WFC)	.....	1	360 7987
(T-835)(WFC)	.....	1	360 7984
(T-871)(WFC)	.....	1	358 1738
(T-873)(WFC)	.....	1	319 0015
(T-874)(WFC)	.....	1	319 0016
(T-875)(WFC)	.....	1	358 1740
(T-876)(WFC)	.....	1	319 0018
(T-879)(WFC)	.....	1	319 0017
(T-893)(WFC)	.....	1	319 0015
(T-894)(WFC)	.....	1	319 0016
(T-896)(WFC)	.....	1	319 0018
(T-899)(WFC)	.....	1	319 0017
(T-972)(WFC)	.....	1	362 4112
(T-973)(WFC)	.....	1	362 4113
(T-975)(WFC)	.....	1	319 4748
(T-979)(WFC)	.....	1	362 4115
(T-991)(WFC)	.....	1	362 4112
(T-992)(WFC)	.....	1	362 4112
(T-993)(WFC)	.....	1	362 4113
(T-995)(WFC)	.....	1	319 4748
(T-996)(WFC)	.....	1	362 4114
(T-997)(WFC)	.....	1	362 4115
(T-999)(WFC)	.....	1	362 4115
(T-071)(WFC)	.....	1	358 1738
(T-073)(WFC)	.....	1	362 9777
(T-074)(WFC)	.....	1	362 9778
(T-075)(WFC)	.....	1	319 4748
(T-076)(WFC)	.....	1	362 9779
(T-091)(WFC)	.....	1	358 1738
(T-093)(WFC)	.....	1	362 9777
(T-094)(WFC)	.....	1	362 9778
(T-095)(WFC)	.....	1	319 4748
(T-096)(WFC)	.....	1	362 9779

(T-151)(WFC)				1	358 1738
(T-153)(WFC)				1	321 1245
(T-154)(WFC)				1	321 1247
(T-171)(WFC)				1	358 1738
(T-173)(WFC)				1	321 1245
(T-174)(WFC)				1	321 1247
(T-175)(WFC)				1	321 1246
(T-181)(WFC)				1	358 1738
(T-183)(WFC)				1	321 1245
(T-184)(WFC)				1	321 1247
(T-191)(WFC)				1	358 1738
(T-193)(WFC)				1	321 1245
(T-194)(WFC)				1	321 1247
(T-195)(WFC)				1	321 1246

27.290–20 ATTACHING PARTS, Receptacle To Console

FASTENER	67		15.365	4	400 1588
SCREW, Tapping	67/71	10-50-80	17.660	2	G163102 NA
SCREW, Tapping	68	(#8-18 x 1/2") 30-70	12.128	1	400 2032
SCREW, Tapping	68	(#10-12 x 3/4") 30-70	17.660	3	G161904
WASHER, Plain	67/71	10-50-80	17.814	2	G446121 NA

27.290–20a RECEPTACLE, Front Seat Belt (On Seat)

1970 Thru 1972 MODELS

(T-021)(WFS)			2	362 7452
(T-023)(WFS)			2	362 7453
(T-041)(WFS)			2	362 7451
(T-043)(WFS)			2	362 7453
(T-045)(WFS)			2	362 7455
(T-121)(WFS)			2	362 7451
(T-123)(WFS)			2	364 2178
(T-124)(WFS)			2	364 2179
(T-128)(WFS)			2	362 7451
(T-141)(WFS)			2	362 7451
(T-143)(WFS)			2	364 2178
(T-144)(WFS)			2	364 2179
(T-145)(WFS)			2	364 2180
(T-241)(WFS)			2	365 3153
(T-243)(WFS)			2	365 3149
(T-244)(WFS)			2	365 3150
(T-246)(WFS)			2	365 3152

27.290–20b ATTACHING PARTS, Receptable To Seat Frame

SCREW, Tapping	70/	05-08 (WFS)	13.510	4	400 2457

27.290–21 MAGNET, Seat Belt Buckle (Incl. Retainer)

69/	30-70 (WFC)		2	319 5293

27.290–22 PLUG, Front Seat Belt Holster

72	(WSBW)		2	364 7437

27.290–23 CLIP, Seat Belt Connector (Nylon)

72			4	366 9504

27.292–1 BELT, Shoulder

1967 Thru 1972 MODELS

67	01-10-50-80		2	359 9308
(T-828)			2	361 7683
(T-831)			2	361 7683
(T-832)			2	361 7684

BODY HARDWARE

(T-835)		2	361 7687
(T-838)		2	361 7683
(T-843)		2	361 7685
(T-844)		2	361 7686
(T-845)		2	361 7687
(T-848)		2	361 7683
(T-851)		2	361 7683
(T-853)		2	361 7685
(T-855)		2	361 7687
(T-871)		2	361 7683
(T-873)		2	361 7685
(T-874)		2	361 7686
(T-875)		2	361 7687
(T-876)		2	361 7688
(T-879)		2	361 7689
(T-881)		2	361 7683
(T-883)		2	361 7685
(T-885)		2	361 7687
(T-891)		2	361 7683
(T-893)		2	361 7685
(T-894)		2	361 7686
(T-895)		2	361 7687
(T-896)		2	361 7688
(T-899)		2	361 7689
(T-923)(* 27-22)		2	362 9065
(T-923)(* 27-23)	***(Use 362 9065)***	2	362 8899
(T-923)(* 27-27)		2	363 7026
(T-928)(* 27-22)		2	362 9064
(T-928)(* 27-23)		2	362 8898
(T-928)(* 27-27)		2	363 7025
(T-931)(* 27-22)		2	362 9064
(T-931)(* 27-23)		2	362 8898
(T-931)(* 27-27)		2	363 7025
(T-932)(* 27-22)		2	362 9064
(T-932)(* 27-23)		2	362 8898
(T-932)(* 27-27)		2	363 7025
(T-935)(* 27-22)		2	362 9067
(T-935)(* 27-23)		2	362 8901
(T-935)(* 27-27)		2	363 7028
(T-936)(* 27-22)		2	362 9068
(T-936)(* 27-23)		2	362 8902
(T-936)(* 27-27)		2	363 7029
(T-941)(* 27-22)		2	362 9064
(T-941)(* 27-23)		2	362 8898
(T-941)(* 27-27)		2	363 7025
(T-943)(* 27-22)		2	362 9065
(T-943)(* 27-23)	***(Use 362 9065)***	2	362 8899
(T-943)(* 27-27)		2	363 7026
(T-944)(* 27-22)	***(Use 363 7027)***	2	362 9066
(T-944)(* 27-23)		2	362 0227
(T-944)(* 27-27)		2	363 7027
(T-945)(* 27-22)		2	362 9067
(T-945)(* 27-23)		2	362 8901
(T-945)(* 27-27)		2	363 7028
(T-951)(* 27-22)		2	362 9064
(T-951)(* 27-23)		2	362 8898
(T-951)(* 27-27)		2	363 7025
(T-953)(* 27-22)		2	362 9065
(T-953)(* 27-23)	***(Use 362 9065)***	2	362 8899
(T-953)(* 27-27)		2	363 7026
(T-956)(* 27-22)		2	362 9068
(T-956)(* 27-23)		2	362 8902
(T-956)(* 27-27)		2	363 7029
(T-957)(* 27-22)	***(Use 363 4363)***	2	362 9069
(T-957)(* 27-23)		2	362 8903
(T-957)(* 27-27)	***(Use 363 4363)***	2	363 7030

BODY HARDWARE

(T-961)(* 27-22)	.....	2	362 9064
(T-961)(* 27-23)	.....	2	362 8898
(T-961)(* 27-27)	.....	2	363 7025
(T-962)(* 27-22)	.....	2	362 9064
(T-962)(* 27-23)	.....	2	362 8898
(T-962)(* 27-27)	.....	2	363 7025
(T-963)(* 27-22)	*(Use 362 9065)*	2	362 9065
(T-963)(* 27-23)	.....	2	362 8899
(T-963)(* 27-27)	.....	2	363 7026
(T-965)(* 27-22)	.....	2	362 9067
(T-965)(* 27-23)	.....	2	362 8901
(T-965)(* 27-27)	.....	2	363 7028
(T-966)(* 27-22)	.....	2	362 9068
(T-966)(* 27-23)	.....	2	362 8902
(T-966)(* 27-27)	.....	2	363 7029
(T-968)(* 27-22)	.....	2	362 9064
(T-968)(* 27-23)	.....	2	362 8898
(T-968)(* 27-27)	.....	2	363 7025
(T-972)(* 27-22)	.....	2	362 9064
(T-972)(* 27-23)	.....	2	362 8898
(T-972)(* 27-27)	.....	2	363 7025
(T-973)(* 27-22)	*(Use 362 9065)*	2	362 9065
(T-973)(* 27-23)	.....	2	362 8899
(T-973)(* 27-27)	.....	2	363 7026
(T-975)(* 27-22)	.....	2	362 9067
(T-975)(* 27-23)	.....	2	362 8901
(T-975)(* 27-27)	.....	2	363 7028
(T-976)(* 27-22)	.....	2	362 9068
(T-976)(* 27-23)	.....	2	362 8902
(T-976)(* 27-27)	*(Use 363 4363)*	2	363 7029
(T-977)(* 27-22)	.....	2	362 9069
(T-977)(* 27-23)	*(Use 363 4363)*	2	362 8903
(T-977)(* 27-27)	*(Use 363 4363)*	2	363 7030
(T-979)(* 27-22)	.....	2	362 9069
(T-979)(* 27-23)	*(Use 363 4363)*	2	362 8903
(T-979)(* 27-27)	.....	2	363 7030
(T-981)(* 27-22)	.....	2	362 9064
(T-981)(* 27-23)	.....	2	362 8898
(T-981)(* 27-27)	.....	2	363 7025
(T-983)(* 27-22)	*(Use 362 9065)*	2	362 9065
(T-983)(* 27-23)	.....	2	362 8899
(T-983)(* 27-27)	.....	2	363 7026
(T-986)(* 27-22)	.....	2	362 9068
(T-986)(* 27-23)	.....	2	362 8902
(T-986)(* 27-27)	*(Use 363 4363)*	2	363 7029
(T-987)(* 27-22)	.....	2	362 9069
(T-987)(* 27-23)	*(Use 363 4363)*	2	362 8903
(T-987)(* 27-27)	.....	2	363 7030
(T-991)(* 27-22)	.....	2	362 9064
(T-991)(* 27-23)	.....	2	362 8898
(T-991)(* 27-27)	.....	2	363 7025
(T-992)(* 27-22)	.....	2	362 9064
(T-992)(* 27-23)	.....	2	362 8898
(T-992)(* 27-27)	.....	2	363 7025
(T-993)(* 27-22)	*(Use 362 9065)*	2	362 9065
(T-993)(* 27-23)	.....	2	362 8899
(T-993)(* 27-27)	.....	2	363 7026
(T-995)(* 27-22)	.....	2	362 9067
(T-995)(* 27-23)	.....	2	362 8901
(T-995)(* 27-27)	.....	2	363 7028

BODY HARDWARE

(T-996)(* 27-22)	.....	2	362 9068
(T-996)(* 27-23)	.....	2	362 8902
(T-996)(* 27-27)	.....	2	363 7029
(T-997)(* 27-22) ***(Use 363 4363)***	.....	2	362 9069
(T-997)(* 27-23)	.....	2	362 8903
(T-997)(* 27-27) ***(Use 363 4363)***	.....	2	363 7030
(T-999)(* 27-22) ***(Use 363 4363)***	.....	2	362 9069
(T-999)(* 27-23)	.....	2	362 8903
(T-999)(* 27-27) ***(Use 363 4363)***	.....	2	363 7030
(T-001)(* 27-37)	.....	2	363 4360
(T-001)(* 27-38)	.....	2	364 9107
(T-008)(* 27-37)	.....	2	363 4360
(T-008)(* 27-38)	.....	2	364 9107
(T-011)(* 27-37)	.....	2	363 4360
(T-011)(* 27-38)	.....	2	364 9107
(T-013)(* 27-37)	.....	2	363 4362
(T-013)(* 27-38)	.....	2	364 9108
(T-014)(* 27-37)	.....	2	363 4363
(T-014)(* 27-38)	.....	2	364 9107
(T-015)(* 27-37)	.....	2	363 7028
(T-015)(* 27-38)	.....	2	364 9110
(T-021)(Black-* 27-37)	.....	2	363 4360
(T-021)(Charcoal-* 27-37)	.....	2	363 7025
(T-021)(* 27-38)	.....	2	364 9107
(T-023)(* 27-37)	.....	2	363 4362
(T-023)(* 27-38)	.....	2	364 9108
(T-024)(* 27-37)	.....	2	363 4363
(T-024)(* 27-38)	.....	2	364 9107
(T-025)(* 27-37)	.....	2	363 7028
(T-025)(* 27-38)	.....	2	364 9110
(T-031)(27-37)	.....	2	363 4360
(T-031)(* 27-38)	.....	2	364 9107
(T-033)(* 27-37)	.....	2	363 4362
(T-033)(* 27-38)	.....	2	364 9108
(T-035)(* 27-37)	.....	2	363 7028
(T-035)(* 27-38)	.....	2	364 9110
(T-036)(* 27-37)	.....	2	363 4364
(T-036)(* 27-38)	.....	2	364 9107
(T-041)(Black-* 27-37)	.....	2	363 4360
(T-041)(Charcoal-* 27-37)	.....	2	363 7025
(T-041)(* 27-38)	.....	2	364 9107
(T-043)(* 27-37)	.....	2	363 4362
(T-043)(* 27-38)	.....	2	364 9108
(T-044)(* 27-37)	.....	2	363 4363
(T-044)(* 27-38)	.....	2	364 9107
(T-045)(* 27-37)	.....	2	363 7028
(T-045)(* 27-38)	.....	2	364 9110
(T-051)(* 27-37)	.....	2	363 4360
(T-051)(* 27-38)	.....	2	364 9107
(T-053)(* 27-37)	.....	2	363 4362
(T-053)(* 27-38)	.....	2	364 9108
(T-054)(* 27-37)	.....	2	363 4363
(T-054)(* 27-38)	.....	2	364 9107
(T-056)(* 27-37)	.....	2	363 4364
(T-056)(* 27-38)	.....	2	364 9107
(T-061)(* 27-37)	.....	2	363 4360
(T-061)(* 27-38)	.....	2	364 9107
(T-063)(* 27-37)	.....	2	363 4362
(T-063)(* 27-38)	.....	2	364 9107
(T-064)(* 27-37)	.....	2	363 4363

Printed in U.S.A.

BODY HARDWARE

(T-064)(* 27-38)	.....	2	364 9107
(T-065)(* 27-37)	.....	2	363 7028
(T-065)(* 27-38)	.....	2	364 9110
(T-066)(* 27-37)	.....	2	363 4364
(T-066)(* 27-38)	.....	2	364 9107
(T-071)(* 27-37)	.....	2	363 4360
(T-071)(* 27-38)	.....	2	364 9107
(T-073)(* 27-37)	.....	2	363 4362
(T-073)(* 27-38)	.....	2	364 9108
(T-074)(* 27-37)	.....	2	363 4363
(T-074)(* 27-38)	.....	2	364 9107
(T-075)(* 27-37)	.....	2	363 7028
(T-075)(* 27-38)	.....	2	364 9110
(T-076)(* 27-37)	.....	2	363 4364
(T-076)(* 27-38)	.....	2	364 9107
(T-081)(* 27-37)	.....	2	363 4360
(T-081)(* 27-38)	.....	2	364 9107
(T-083)(* 27-37)	.....	2	363 4362
(T-083)(* 27-38)	.....	2	364 9108
(T-084)(* 27-37)	.....	2	363 4363
(T-084)(* 27-38)	.....	2	364 9107
(T-086)(* 27-37)	.....	2	363 4364
(T-086)(* 27-38)	.....	2	364 9107
(T-091)(* 27-37)	.....	2	363 4360
(T-091)(* 27-38)	.....	2	364 9107
(T-093)(* 27-37)	.....	2	363 4362
(T-093)(* 27-38)	.....	2	364 9108
(T-094)(* 27-37)	.....	2	363 4363
(T-094)(* 27-38)	.....	2	364 9107
(T-095)(* 27-37)	.....	2	363 7028
(T-095)(* 27-38)	.....	2	364 9110
(T-096)(* 27-37)	.....	2	363 4364
(T-096)(* 27-38)	.....	2	364 9107
(T-101)	.....	2	364 9107
(T-103)(Blue)	.....	2	364 9108
(T-103)(Black)	.....	2	364 9107
(T-104)	.....	2	364 9107
(T-108)	.....	2	364 9107
(T-111)	.....	2	364 9107
(T-113)	.....	2	364 9108
(T-114)	.....	2	364 9109
(T-115)	.....	2	364 9110
(T-121)	.....	2	364 9107
(T-123)	.....	2	364 9108
(T-124)	.....	2	364 9109
(T-128)	.....	2	364 9107
(T-141)	.....	2	364 9107
(T-143)	.....	2	364 9108
(T-144)	.....	2	364 9109
(T-145)	.....	2	364 9110
(T-151)	.....	2	364 9107
(T-153)	.....	2	364 9108
(T-154)	.....	2	364 9109
(T-161)	.....	2	364 9107
(T-163)	.....	2	364 9108
(T-164)	.....	2	364 9109
(T-165)	.....	2	364 9110
(T-168)	.....	2	364 9107
(T-171)	.....	2	364 9107
(T-173)	.....	2	364 9108

(T-174)			2	364 9109
(T-175)			2	364 9110
(T-176)			2	364 9107
(T-181)			2	364 9107
(T-183)			2	364 9108
(T-184)			2	364 9109
(T-186)			2	364 9107
(T-191)			2	364 9107
(T-193)			2	364 9108
(T-194)			2	364 9109
(T-195)			2	364 9110
(T-196)			2	364 9107

1972 MODELS - LESS SEAT BELT WARNING SYSTEM

(T-201)			2	364 9107
(T-203)			2	365 3605
(T-206)			2	365 3608
(T-211)			2	364 9107
(T-213)			2	365 3605
(T-215)			2	364 9107
(T-216)			2	365 3608
(T-241)			2	364 9107
(T-243)			2	365 3605
(T-244)			2	365 3606
(T-245)			2	364 9107
(T-246)			2	365 3608
(T-261)			2	364 9107
(T-263)			2	365 3605
(T-264)			2	365 3606
(T-265)			2	364 9107
(T-266)			2	365 3608
(T-271)			2	364 9107
(T-273)			2	365 3605
(T-274)			2	365 3606
(T-276)			2	365 3608
(T-291)			2	364 9107
(T-293)			2	365 3605
(T-294)			2	365 3606
(T-296)			2	365 3608

1972 MODELS - WITH SEAT BELT WARNING SYSTEM (Black)

72	(Except Fleet)		2	366 3496
72	***(Left)(Fleet)***		1	365 7901
72	***(Right)(Fleet)***		1	366 3496

27.292-2 ATTACHING PARTS, Belt To Roof Rail

BOLT, Hexagon	67	01-10-50		2	400 1872
BOLT, Shoulder	68/	(1-3/4" Long)		2	400 3521
BOLT, Shoulder	68/	(2-5/64" Long) 70		2	400 3520
BOLT, Shoulder	72	(3/8"-16 x 1-3/4")(WSBW)		2	400 4544
BOLT, Shoulder	68/	(1-3/4" Long)		2	400 3521
WASHER, Plain	67/70	(2-9/64" O.D.)	23.058	2	350 9687
WASHER (Nylon)	69/	(2-1/64" O.D.)	23.124	2	361 3467

27.292–3 CLIP, Shoulder Belt Retaining

67		.....	2	361 7021	NC
69	(Plastic)	.....	2	362 0645	NC
69/	(Wire-2-5/16" High)	.....	4	362 5627	
70	01-10-80 (3" High x 15-1/8" Wide)	.....	2	360 9558	
70	39-79 (Wire-2-5/8" High)	.....	4	363 5922	
70/	(3" High x 3-3/8" Wide)	.....	2	364 9125	
(T-828)		.....	2	361 7021	
(T-831)		.....	2	361 7021	
(T-832)		.....	2	361 7027	
(T-835)		.....	2	361 7024	
(T-838)		.....	2	361 7021	
(T-843)		.....	2	361 7022	
(T-844)		.....	2	361 7023	
(T-845)		.....	2	361 7024	
(T-848)		.....	2	361 7021	
(T-851)		.....	2	361 7021	
(T-853)		.....	2	361 7022	
(T-855)		.....	2	361 7024	
(T-871)		.....	2	361 7021	
(T-873)		.....	2	361 7022	
(T-874)		.....	2	361 7023	
(T-875)		.....	2	361 7024	
(T-876)		.....	2	361 7025	
(T-879)		.....	2	361 7026	
(T-881)		.....	2	361 7021	
(T-883)		.....	2	361 7022	
(T-885)		.....	2	361 7024	
(T-891)		.....	2	361 7021	
(T-893)		.....	2	361 7022	
(T-894)		.....	2	361 7023	
(T-895)		.....	2	361 7024	
(T-896)		.....	2	361 7025	
(T-899)		.....	2	361 7026	

27.292–4 ATTACHING PARTS, Clip To Body

SCREW, Tapping.....	68	01-10-70-80...(Less Washer)	***(Use 448 9492)***	17.654	4	G162402
SCREW, Tapping.....	67/69	...(Incl. Washer-1" Long)		15.365	4	400 2214
SCREW, Tapping.....	68/69	...(Incl. Washer-7/8" Long)		.....	4	400 2292
SCREW, Tapping.....	70	01 (8-18 x 5/8")		29.052	8	400 2151
SCREW, Tapping.....	70	30-70 (8-18 x 9/16")		29.060	8	400 1776
SCREW, Tapping.....	69	10-80 (10-12 x 3/4"-Oval Head)		17.654	4	G162474 NA
SCREW, Tapping.....	69	10-80 (10-3/4-Spin Head)		.....	4	400 3075
SCREW, Tapping.....	69	...(Incl. Washer-#8-18 x 3/4")		29.019	4	439 5412

27.292–4a RETAINER, Shoulder Belt Wire

69/70	.....	.....	4	362 5626	

27.292–4b ATTACHING PARTS, Retainer To Body

SCREW, Tapping.....	69/70	(8-15 x 1-1/4")		17.655	8	G178849 NA

27.292–5 BOOT, Shoulder Belt

68/69	.....	.....	2	448 6517	NC

27.300–1 MOULDING, Rear Shelf Panel Front (Refer To Group 29.034–3a)

SPECIAL INFORMATION

The Engine Build Code Number, Vehicle Identification Number and the information provided on the Unit Body Plate are often necessary when determining the proper replacement parts for your automobile. For their location refer to the General Information Section found at the front of this catalog.

NOTES

28–1 .... Power Unit uses Autolite Motor ESQ-4001.

SPECIAL INFORMATION

NOTES

2134

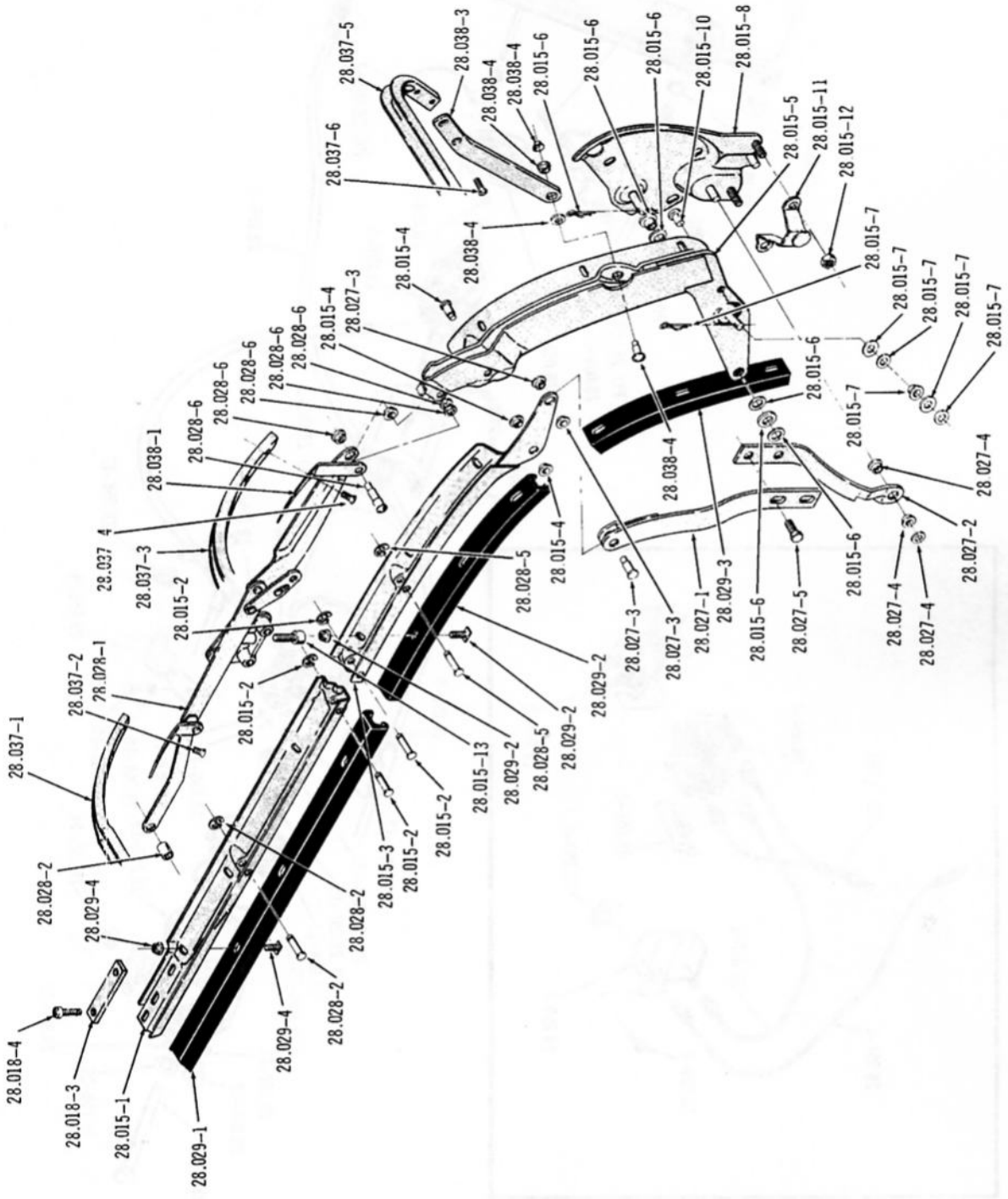

FOLDING TOP RAILS, LINKS AND WEATHERSEALS

Printed in U.S.A.

2132

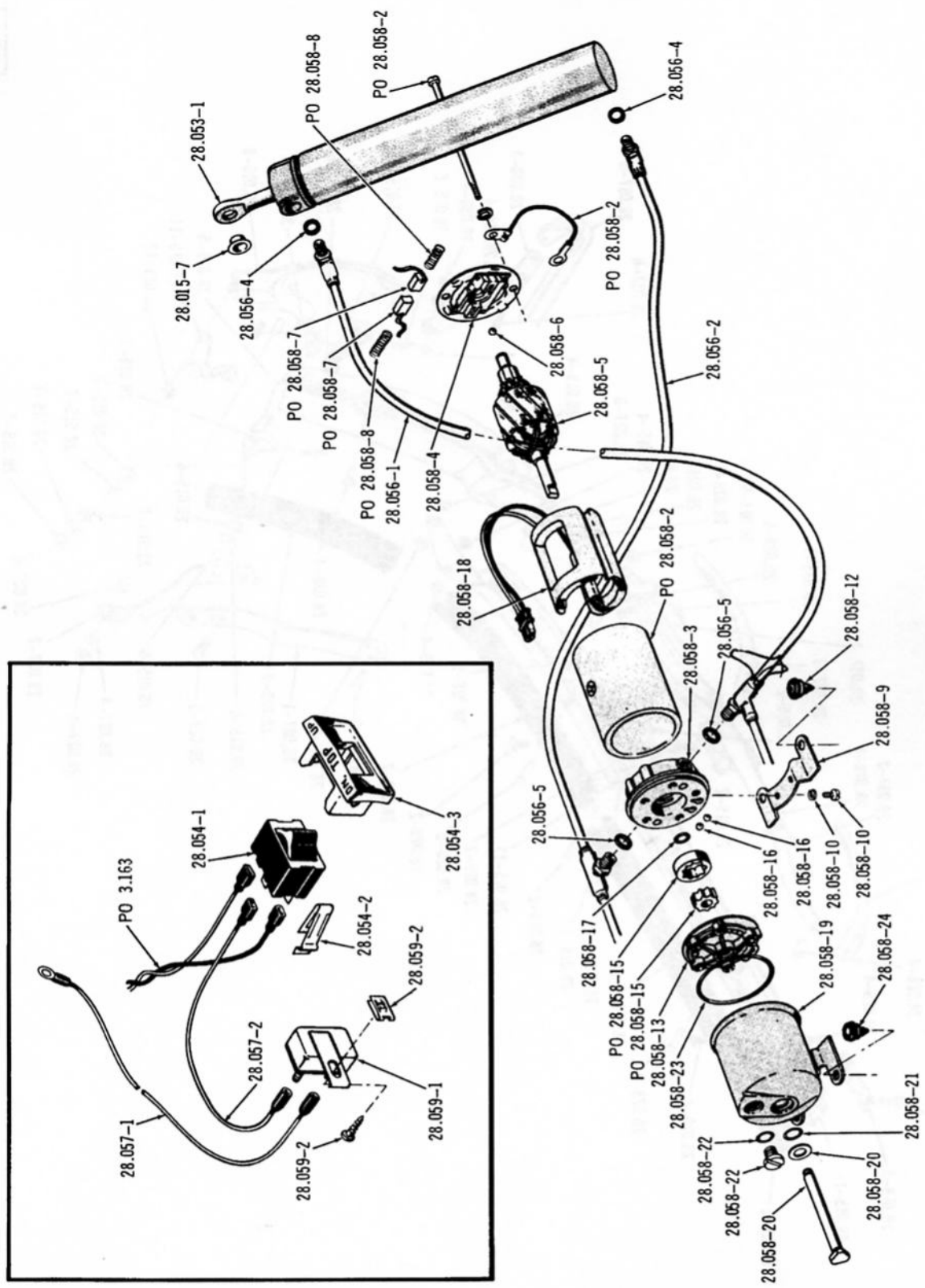

FOLDING TOP HYDRAULIC CYLINDER AND POWER UNIT

2539

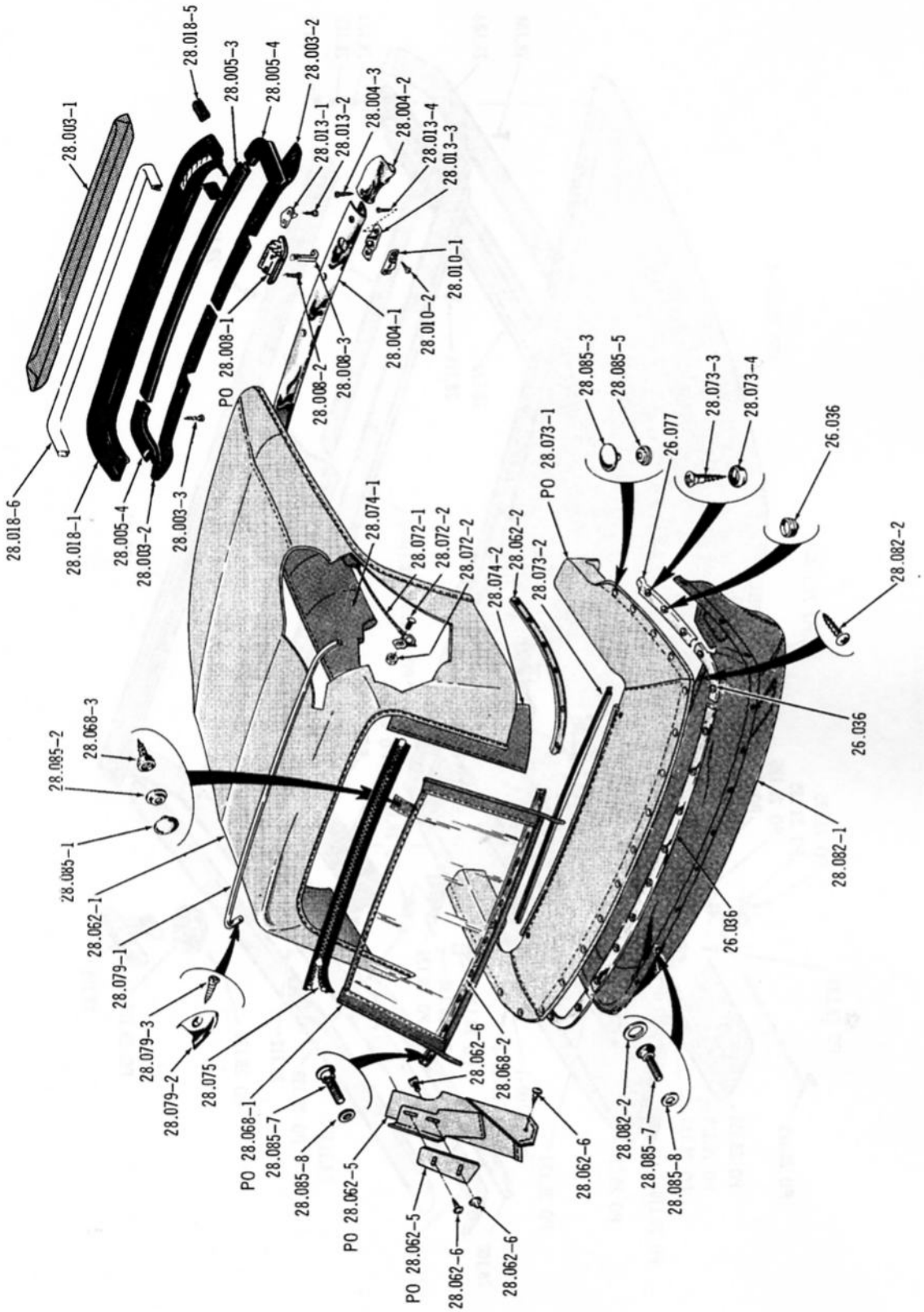

FOLDING TOP COVERING AND HEADER

Printed in U.S.A.

4094

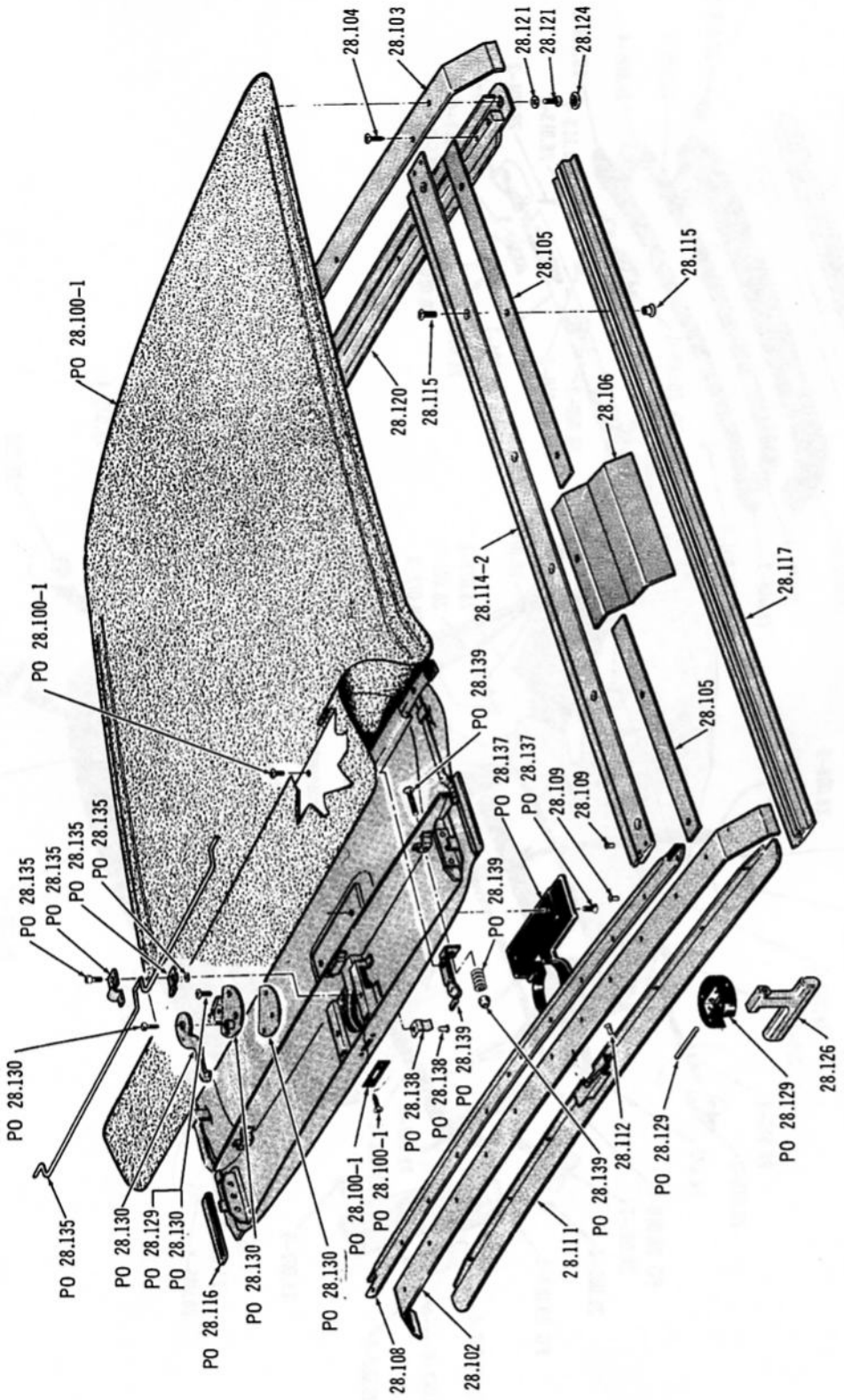

SUN ROOF . . . 1971/ (06)(40)

Copyright 1966 American Motors Corp.

Printed in U. S. A.

CONVERTIBLE TOP - SUN ROOF

GROUP NO. — DESCRIPTION — YEAR and MODEL	PAKS	PRIMARY GROUP NO.	PER CAR	PART NO.	CODE
28.000 TOP ASSEMBLY, Folding (Less Trim)(Incl. Bows, Header, Rails, Links And Supports)					
67 07		.....	1	351 9080	
67/68 17-87		.....	1	358 1890	
28.003–1 WEATHERSTRIP, Folding Top Header					
67 (Black) 07		.....	1	353 2289	
67 (Black) 17-87		.....	1	357 8184	
68 (Black) 17-87		.....	1	359 0129	
67 (White) 07		.....	1	353 2293	
67 (White) 17-87		.....	1	357 8185	
68 (White) 17-87		.....	1	359 0130	
67 (Tan) 07		.....	1	357 7707	
67 (Tan) 17-87		.....	1	357 8187	
28.003–2 RETAINER, Folding Top Header Weatherstrip					
67 07		.....	2	350 2345	
67/68 17-87		.....	1	357 7892	
28.003–3 ATTACHING PARTS, Weatherstrip To Header					
SCREW, Tapping..... 67 07		.....	14	400 0161	
SCREW, Machine..... 67/68 17-87		28.018	5	400 2010	
28.004–1 MOULDING, Windshield Header Trim Center (Incl. Attaching Parts)					
67 07		.....	1	448 4243	
28.004–2 MOULDING, Windshield Header Trim End (Incl. Attaching Parts)					
67 (Left) 07		.....	1	448 4111	
67/68 (Left) 17-87		.....	1	448 4167	
67 (Right) 07		.....	1	448 4110	
67/68 (Right) 17-87		.....	1	448 4166	
28.004–3 ATTACHING PARTS, Moulding To Windshield Header					
SCREW, Tapping..... 67 07 ***(Use 448 9492)***		17.654	8	G162402	
SCREW, Tapping..... 67/68 17-87		17.654	5	G168608	NA
28.005–1 WEATHERSEAL, Folding Top Front Header (Incl. Corners And Front Sides)					
67 07	217	.....	1	352 0640	
67/68 17-87	217	.....	1	357 7808	
28.005–2 ATTACHING PARTS, Weatherseal To Header					
SCREW, Tapping..... 67 07		17.669	2	400 1264	
SCREW, Tapping..... 67/68 17-87		.....	2	400 1841	
28.005–3 WEATHERSEAL, Folding Top Front Header (Front)					
67/68		.....	1	350 2340	
28.005–4 SEALER, Folding Top Front Header Corner					
67 (Left) 07		.....	1	350 2343	
67/68 (Left) 17-87		.....	1	357 7835	
67 (Right) 07		.....	1	350 2342	
67/68 (Right) 17-87		.....	1	357 7834	
28.005–5 ATTACHING PARTS, Corner Sealer To Header					
SCREW, Tapping..... 67 07		17.669	2	400 1264	
SCREW, Tapping..... 67/68 17-87		3.033	2	400 1629	

CONVERTIBLE TOP - SUN ROOF

28.008–1 LATCH, Folding Top Front Header

67	07	216	.....	2	320 6139
67/68	(Chrome) 17-87	216	.....	2	358 1974
68	(Painted) 17-87	216	.....	2	361 2484

28.008–2 ATTACHING PARTS, Latch To Header

SCREW, Machine.....	67/68		17.626	8	G425623 NA

28.008–3 HOOK, Folding Top Front Header Latch

67	07		.....	2	354 9209
67/68	(Chrome) 17-87		.....	2	358 1979
68	(Painted) 17-87		.....	2	361 2481

28.010–1 STRIKER, Folding Top Front Header Latch

67	07		.....	2	350 1073
67/68	17-87		.....	2	357 5979

28.010–2 ATTACHING PARTS, Striker To Windshield Header Bar

SCREW, Tapping.....	67/68		17.654	4	G167562 NA

28.013–1 DOWEL, Folding Top Front Header

67	07		.....	2	320 6138
67/68	17-87		.....	2	358 1962

28.013–2 ATTACHING PARTS, Dowel To Folding Top Front Header

SCREW, Machine.....	67	07	17.592	4	G446632 NA
SCREW, Machine.....	67/68	17-87	.....	8	400 2017

28.013–3 BRACKET, Folding Top Front Header

67	07		.....	2	350 1048
67	17-87		.....	2	357 5978
68	17-87		.....	2	361 2485

28.013–4 ATTACHING PARTS, Bracket To Cowl Top

SCREW, Tapping.....	67/68		17.648	4	G449249 NA

28.015–1 RAIL, Folding Top Side Front

67	(Left) 07		.....	1	350 8727
67/68	(Left) 17-87		.....	1	358 1899
67	(Right) 07		.....	1	350 8726
67/68	(Right) 17-87		.....	1	358 1898

28.015–2 ATTACHING PARTS, Front Rail To Center Rail

PIN, Pivot	67	07	.....	4	320 5860
RETAINER.....	67	07	.....	4	350 8733
RIVET	67/68	17-87	28.028	2	358 1990

28.015–3 RAIL, Folding Top Side Center

67	(Left) 07		.....	1	351 9787
67/68	(Left) 17-87		.....	1	358 1909
67	(Right) 07		.....	1	351 9786
67/68	(Right) 17-87		.....	1	358 1908

CONVERTIBLE TOP - SUN ROOF

28.015–4 ATTACHING PARTS, Center Rail To Rear Rail

BUSHING, Nylon	67	07	.....	4	353 1980
BUSHING, Nylon	67/68	17-87 (1/2" Length)	.....	2	350 8960
BUSHING, Nylon	67/68	17-87 (9/64" Length)	.....	4	357 7759
RIVET	67	07	.....	2	350 1937
RIVET	67/68	17-87	.....	2	358 1986

28.015–5 RAIL, Folding Top Side Rear

67	(Left) 07	.....	1	351 9775
67/68	(Left) 17-87	.....	1	358 1933
67	(Right) 07	.....	1	351 9774
67/68	(Right) 17-87	.....	1	358 1932

28.015–6 ATTACHING PARTS, Rear Rail To Support

BUSHING, Nylon	67	07	.....	2	350 8962
BUSHING, Nylon	67/68	17-87 (3/8" Length)	.....	2	350 8962
BUSHING, Nylon	67/68	17-87 (1/2" Length)	.....	4	350 8960
WASHER, Plain	67	07	17.814	2	G120394 NA
WASHER, Nylon	67	07	.....	2	350 2139
WASHER, Rubber	67/68	.....	.....	2	350 8963
PIN, Locking	67	07	29.162	2	400 0407
RIVET	67/68	17-87	.....	2	358 1999

28.015–7 ATTACHING PARTS, Rear Rail To Hydraulic Cylinder

BUSHING, Nylon	67/68	.....	.....	2	350 8962
WASHER, Rubber	67/68	.....	.....	2	350 8963
WASHER, Nylon	67	07	.....	2	350 8964
WASHER, Plain	67	07	17.814	2	G120394 NA
PIN, Locking	67	07	29.162	2	400 0407

28.015–8 SUPPORT, Folding Top Rear Side Rail

67	(Left) 07	.....	1	351 9763
67/68	(Left) 17-87	.....	1	358 1825
67	(Right) 07	.....	1	351 9762
67/68	(Right) 17-87	.....	1	358 1824

28.015–9 ATTACHING PARTS, Support To Body

BOLT, Hexagon	67/68	.....	17.038	6	G448695 NA
SCREW, Machine	67/68	17-87	17.626	2	G446895 NA
WASHER, Lock	67/68	.....	17.820	6	G120382 NA
WASHER, Plain	67/68	.....	17.814	6	G446548 NA

28.015–10 GLIDE, Folding Top Cam

67	07	.....	2	350 2199

28.015–11 RETAINER, Folding Top Pivot Support

67	(Left) 07	.....	1	351 9771
67	(Right) 07	.....	1	351 9770
67/68	17-87	.....	2	358 1834

28.015–12 ATTACHING PARTS, Retainer To Pivot Support

NUT, Hexagon	67	07	17.412	4	G271193 NA
SCREW, Machine	67/68	17-87	17.626	2	G425859

28.015–13 SCREW, Folding Top Rail Stop

67	01	.....	.....	2	354 9149
67/68	17-87	.....	23.087	2	400 1573

CONVERTIBLE TOP - SUN ROOF

28.018–1 HEADER, Folding Top Front

67	07	.....	.....	1	448 1262
67/68	17-87	.....	.....	1	358 1965

28.018–2 ATTACHING PARTS, Header To Side Rails

SCREW, Machine.....	67/68	17-87.....	.....	2	G273521
NUT, Hexagon.....	67/68	17-87.....	.....	2	400 2085

28.018–3 PLATE, Front Rail Tapping

67	07.....		.....	2	345 8937

28.018–4 ATTACHING PARTS, Front Rail Tapping Plate

SCREW, Machine.....	67	07.....	17.598	4	G274857 NA

28.018–5 FILLER, Folding Top Front Header Side

67	07.....		.....	2	350 8718

28.018–6 WELT, Folding Top Front Header

67	07.....		.....	1	353 2292

28.018–7 TACKING STRIP, Folding Top Header (Upper)

67/68	17-87.....		.....	2	358 1961

28.018–8 ATTACHING PARTS, Strip To Header

SCREW, Machine.....	67/68	17-87.....	.....	11	400 2010

28.018–9 TACKING STRIP, Folding Top Header (Lower)

67/68	17-87.....		.....	2	357 7734

28.018–10 ATTACHING PARTS, Strip To Header

SCREW, Machine.....	67/68	17-87.....	.....	6	400 2011

28.025–1 LINK, Folding Top Power

67/68	17-87.....		.....	2	358 1822

28.025–2 ATTACHING PARTS, Power Link To Rear Rail

WASHER, Nylon	67/68	17-87.....	.....	2	346 0092
RIVET.....	67/68	17-87.....	.....	2	358 1987

28.025–3 LINK, Folding Top Drive

67/68	(Left) 17-87		.....	1	358 1861
67/68	(Right) 17-87		.....	1	358 1860

28.025–4 ATTACHING PARTS, Drive Link To Support

BUSHING, Nylon.....	67/68	17-87.....	.....	4	357 7757
RIVET.....	67/68	17-87.....	.....	2	358 1805

28.025–5 ATTACHING PARTS, Drive Link To Power Link

BUSHING, Nylon.....	67/68	17-87.....	.....	4	357 7757
RIVET.....	67/68	17-87.....	.....	2	358 1810

Printed in U.S.A.

CONVERTIBLE TOP - SUN ROOF

28.025–6 ATTACHING PARTS, Drive Link To Cylinder

BUSHING, Nylon	67/68	17-87	.....	4	357 7760
PIN, Pivot	67/68	17-87	28.015	2	358 1891
PIN, Locking	67/68	17-87	.....	2	400 0407

28.027–1 LINK, Folding Top Balance Upper

67	(Left) 07	.....	1	353 1743
67/68	(Left) 17-87	.....	1	358 1817
67	(Right) 07	.....	1	353 1742
67/68	(Right) 17-87	.....	1	358 1816

28.027–2 LINK, Folding Top Balance Lower

67	(Left) 07	.....	1	352 0287
67/68	(Left) 17-87	.....	1	358 1797
67	(Right) 07	.....	1	352 0286
67/68	(Right) 17-87	.....	1	358 1796

28.027–3 ATTACHING PARTS, Balance Link To Center Rail

BUSHING, Nylon	67	07	28.015	4	353 1980
WASHER, Nylon	67/68	17-87	.....	2	346 0091
RIVET	67	07	.....	2	350 1940
RIVET	67/68	17-87	.....	2	358 1988

28.027–4 ATTACHING PARTS, Balance Link To Rear Side Rail Support

BUSHING, Nylon	67	07	28.015	4	353 1980
WASHER, Plain	67	07	17.814	2	G446188 NA
WASHER, Nylon	67/68	17-87	.....	2	346 0092
PIN, Locking	67	07	29.162	2	400 0407
RIVET	67/68	17-87	.....	2	358 1809

28.027–5 ATTACHING PARTS, Upper Balance Link To Lower Balance Link

SCREW, Machine	67	07	17.626	4	G425900 NA
SCREW, Machine	67/68	17-87	17.629	4	G274683 NA

28.028–1 LINK ASSEMBLY, Folding Top Side

67	(Left) 07	.....	1	350 1929
67/68	(Left) 17-87	.....	1	358 1919
67	(Right) 07	.....	1	350 1928
67/68	(Right) 17-87	.....	1	358 1918

28.028–2 ATTACHING PARTS, Link To Front Rail (Front)

SLEEVE	67	07	.....	2	350 2258
PIN, Pivot	67	07	.....	2	320 5861
RETAINER	67	07	28.015	2	350 8733
RIVET	67/68	17-87	.....	2	358 1990

28.028–3 ATTACHING PARTS, Link To Front Rail (Rear)

PIN, Pivot	67	07	.....	2	320 5860
RETAINER	67	07	28.015	2	350 8733
RIVET	67/68	17-87	.....	2	358 1990

28.028–4 ATTACHING PARTS, Link To Center Rail (Front)

PIN, Pivot	67	07	28.015	2	320 5860
RETAINER	67	07	28.015	2	350 8733
RIVET	67/68	17-87	.....	2	358 1990

CONVERTIBLE TOP - SUN ROOF

28.028–5 ATTACHING PARTS, Link To Center Rail (Center)

PIN, Pivot	67	07	28.015	2	320 5861
RETAINER	67	07	28.015	2	350 8733

28.028–6 ATTACHING PARTS, Link To Rear Rail

BUSHING, Nylon	67	07	.....	4	346 0577
WASHER, Nylon	67	07	.....	4	346 0091
RIVET	67	07	.....	2	350 1941

28.029–1 WEATHERSEAL, Folding Top Side Rail Front

67	(Left) 07	.....	1	350 8883
67/68	(Left) 17-87	.....	1	357 7839
67	(Right) 07	.....	1	350 8882
67/68	(Right) 17-87	.....	1	357 7838

28.029–2 WEATHERSEAL, Folding Top Side Rail Center

67	(Left) 07	.....	1	350 8885
67/68	(Left) 17-87	.....	1	357 7813
67	(Right) 07	.....	1	350 8884
67	(Right) 17-87	.....	1	357 7812

28.029–3 WEATHERSEAL, Folding Top Side Rail Rear

67	(Left) 07	.....	1	350 8887
67/68	(Left) 17-87	.....	1	357 9611
67	(Right) 07	.....	1	350 8886
67/68	(Right) 17-87	.....	1	357 9610

28.029–4 ATTACHING PARTS, Weatherseal To Side Rail

BOLT, Tee	67	07	.....	20	400 0237
BOLT, Tee	67/68	17-87	.....	16	400 0603
NUT, Hexagon	67	07	25.052	14	439 0742
NUT, Hexagon	67/68	17-87	25.052	10	439 0742
NUT, Stamped	67/68	.....	26.096	6	400 0802

28.029–5 SHIM, Folding Top Side Rail Front Weatherseal

67	07	.....	2	353 5999

28.029–6 WEATHERSEAL, Folding Top Rear Rail To Waterdam

67/68	(Left) 17-87	.....	1	357 7821
67/68	(Right) 17-87	.....	1	357 7820

28.029–7 ATTACHING PARTS, Weatherseal To Rear Rail

SCREW, Tapping	67/68	17-87	26.032	4	400 1638

28.037–1 BOW, Folding Top Front

67	07	.....	1	350 8708
67/68	17-87	.....	1	358 1942

28.037–2 ATTACHING PARTS, Front Bow To Side Link Assembly

SCREW, Tapping	67/68	.....	.....	4	400 1978

28.037–3 BOW, Folding Top Center

67	07	.....	1	350 8708
67/68	17-87	.....	1	358 1942

CONVERTIBLE TOP - SUN ROOF

28.037–4 ATTACHING PARTS, Center Bow To Slat

SCREW, Tapping	67/68	.....	.....	4	400 1978

28.037–5 BOW, Folding Top Rear

67	07	.....	.....	1	448 2253
67/68	17-87	.....	.....	1	358 1946

28.037–6 ATTACHING PARTS, Rear Bow To Slat

SCREW, Tapping	67/68	.....	.....	4	346 4811

28.038–1 SLAT, Folding Top Center Bow

67	07	.....	.....	2	353 1076
67/68	17-87	.....	.....	2	357 7640

28.038–2 ATTACHING PARTS, Center Bow Slat To Center Side Rail

BUSHING, Nylon	67	07	.....	28.027	4	346 0577
BUSHING, Nylon	67/68	17-87	.....	28.025	4	357 7760
WASHER, Nylon	67	07	.....	28.028	4	346 0091
RIVET	67	07	.....	.....	2	350 1941
RIVET	67/68	17-87	.....	28.028	2	358 1989

28.038–3 SLAT, Folding Top Rear Bow

67	(Left) 07	.....	.....	1	351 9799
67/68	(Left) 17-87	.....	.....	1	358 1955
67	(Right) 07	.....	.....	1	351 9798
67/68	(Right) 17-87	.....	.....	1	358 1954

28.038–4 ATTACHING PARTS, Rear Bow Slat To Rear Side Rail

PIN, Pivot	67	07	.....	.....	2	351 9767
RIVET	67/68	17-87 (Flat Head)	.....	.....	2	358 1799
BUSHING, Nylon	67	07	.....	28.015	4	353 1980
BUSHING, Nylon	67/68	17-87	.....	.....	4	357 7757
WASHER, Plain	67	07	.....	17.814	2	G446188 NA
NUT, Push	67	07	.....	.....	2	353 1671

28.053–1 CYLINDER, Folding Top Hydraulic Operating

67/68	.....	.....	2	350 8776

28.053–2 ATTACHING PARTS, Cylinder To Support

BUSHING, Nylon	67/68	.....	.....	4	350 8960

28.053–3 ATTACHING PARTS, Cylinder To Retainer

BUSHING, Nylon	67	17-87	.....	2	350 8960

28.054–1 SWITCH, Folding Top Operating Control

67	07	.....	.....	1	317 6907
67/68	17-87	.....	.....	1	357 6570

28.054–2 ATTACHING PARTS, Switch To Escutcheon

SPRING	67	07	.....	24.220	1	437 7109

28.054–3 ESCUTCHEON, Folding Top Operating Control Switch

67	07	.....	.....	1	350 1037
67/68	17-87	.....	.....	1	357 7069

CONVERTIBLE TOP - SUN ROOF

28.054–4 ATTACHING PARTS, Escutcheon To Instrument Panel

NUT, Round	67	17-87	22.100	2	400 1331	
NUT, Stamped	68	17-87	22.100	2	400 1498	

28.054–5 BRACKET, Folding Top Operating Switch Mounting

67	17-87	23.330	1	358 6796	
68	17-87 (LHD)	23.330	1	360 2193	
68	*17-87 (RHD)*	23.330	1	358 6796	

28.054–6 ATTACHING PARTS, Bracket To Instrument Panel

SCREW, Tapping	67	17-87	17.660	2	G161860	NA
SCREW, Tapping	68	17-87 (1/2" Long)	17.660	1	G161860	NA
SCREW, Tapping	68	17-87 (3/4" Long)	17.671	1	400 1037	
WASHER, Plain	68	17-87 (LOD)	17.814	3	G446179	NA

28.054–7 WIRE, Folding Top Operating Control Switch Extension

67/68	*17-87 (RHD)*	.....	1	318 1059	

28.056–1 HOSE, Folding Top Power Unit To Hydraulic Cylinder Bottom

67	07	.....	1	350 9334	
67/68	17-87	.....	1	357 6162	

28.056–2 HOSE, Folding Top Power Unit To Hydraulic Cylinder Top

67	07	.....	1	350 9335	
67/68	17-87	.....	1	357 6162	

28.056–3 ATTACHING PARTS, Hose To Floor Pan

CLIP	67/68	17-87	3.165	6	400 0553	
SCREW, Tapping	67/68	17-87	17.669	6	G457002	NA

28.056–4 PACKING, Folding Top Power Unit To Hydraulic Cylinder Hose (At Cylinder)

67/68	.....	.....	2	448 0854	

28.056–5 PACKING, Folding Top Power Unit To Hydraulic Cylinder Hose (At Power Unit)

67/68	.....	.....	2	447 9154	

28.057–1 WIRE, Ignition Switch To Circuit Breaker

67	07	.....	1	318 6840	
67/68	*17-87 (RHD)*	.....	1	318 8979	

28.057–2 WIRE, Circuit Breaker Jumper

67/68	17-87 (WER)	23.320	1	318 6839	

28.058–1 POWER UNIT, Folding Top Operating (Incl. Motor And Pump)

67/68	 213	.....	1	350 9332	

28.058–2 MOTOR, Folding Top Operating Power Unit (Incl. Mounting Bracket And Cushion)

67/68	 212	.....	1	448 1271	

28.058–3 HEAD, Folding Top Operating Power Unit Motor (Drive End)

67/68	(* 28-1)	.....	1	448 0883	

CONVERTIBLE TOP - SUN ROOF

28.058–4 HEAD, Folding Top Operating Power Unit Motor (Commutator End)

67/68	(* 28-1)	.....	.....	1	448 0885

28.058–5 ARMATURE, Folding Top Operating Power Unit Motor

67/68	(* 28-1)	.....	.....	1	448 0887

28.058–6 BALL, Folding Top Operating Power Unit Motor Armature

67/68	(* 28-1)	.....	17.018	1	G145637

28.058–7 BRUSH SET, Folding Top Operating Power Unit Motor

67/68	(* 28-1)	211	.....	1	448 0886

28.058–8 SPRING SET, Folding Top Operating Power Unit Motor Brush

67/68	(* 28-1)	215	.....	1	448 0882

28.058–9 BRACKET, Folding Top Operating Power Unit Motor Mounting

67/68	.....		.....	1	448 1273

28.058–10 ATTACHING PARTS, Mounting Bracket To Motor

SCREW, Machine	67/68	.....	17.602	2	G120216 NA
WASHER, Lock	67/68	.....	17.820	2	G131183 NA

28.058–11 ATTACHING PARTS, Motor Ground Wire To Seat Back Panel

SCREW, Machine	67/68	.....	17.598	1	G454542 NA
WASHER, Lock	67/68	.....	17.820	1	G120380 NA
NUT, Hexagon	67/68	.....	17.406	1	G120375

28.058–12 CUSHION, Folding Top Operating Power Unit Motor Mounting

67/68	.....		.....	2	345 8811

28.058–13 PLATE, Folding Top Operating Power Unit Pump Cover (Incl. Rocker Arm)

67/68	.....		.....	1	448 0849

28.058–14 ATTACHING PARTS, Pump Cover Plate To Motor

BOLT, Hexagon	67/68	.....	.....	5	448 0855
WASHER, Lock	67/68	.....	.....	5	447 9159

28.058–15 ROTOR SET, Folding Top Operating Power Unit Pump

67/68	.....	214	.....	1	448 2981

28.058–16 BALL, Folding Top Operating Power Unit Pump Drive

67/68	.....		17.018	2	G145639

28.058–17 RING, Folding Top Operating Power Unit Pump Armature Shaft "O"

67/68	.....		.....	1	448 0850

28.058–18 COIL, Folding Top Operating Power Unit Motor Field

67/68	(* 28-1)	.....	.....	1	448 0884

28.058–19 RESERVOIR, Folding Top Operating Power Unit

67/68	.....		.....	1	448 1274

CONVERTIBLE TOP - SUN ROOF

28.058–20 ATTACHING PARTS, Reservoir To Pump Cover

BOLT	67/68	.....	1	448 1272
WASHER, Plain	67/68	.....	1	447 9161

28.058–21 RING, Reservoir To Pump Cover Bolt "O"

67/68	.....	1	447 9155

28.058–22 PLUG, Folding Top Operating Power Unit Reservoir Filler (Incl. "O" Ring)

67/68	.....	1	447 9146

28.058–23 RING, Folding Top Operating Unit Reservoir End "O"

67/68	.....	1	447 9156

28.058–24 CUSHION, Folding Operating Unit Reservoir Mounting

67/68	.....	2	345 8811

28.059–1 BREAKER, Folding Top Operating Circuit

67/68	.....	1	318 1127

28.059–2 ATTACHING PARTS, Breaker To Instrument Panel

SCREW, Tapping	67	07	17.660	1	G161895	NA
SCREW, Machine	67/68	17-87	17.598	1	G453048	NA
WASHER, Lock	67/68	17-87	17.820	1	G131096	NA
NUT, Hexagon	67/68	17-87	17.412	1	G120614	NA
NUT, Speed	***67***	***07 (RHD)***	23.110	1	400 0196	

28.062–1 COVERING, Folding Top (Less Back Curtain)

67	(Black) 07	.....	1	353 2076
67	(Black) 17-87	.....	1	357 8565
68	(Black) 17-87	.....	1	360 6821
67	(White) 07	.....	1	353 2073
67	(White) 17-87	.....	1	357 8566
68	(White) 17-87	.....	1	360 6822
67	(Tan) 07	.....	1	357 7876
67	(Tan) 17-87	.....	1	357 8567

28.062–2 RETAINER, Folding Top Covering To Side Belt Rail

67	(Left) 07	.....	1	350 8927
67/68	(Left) 17-87	.....	1	357 7831
67	(Right) 07	.....	1	350 8926
67/68	(Right) 17-87	.....	1	357 7830

28.062–3 RETAINER, Folding Top Covering To Front And Center Bows

67	07	.....	2	350 8957
67/68	17-87	.....	2	351 7507

28.062–4 ATTACHING PARTS, Covering To Front And Center Bows

SCREW, Tapping	67/68	.....	17.660	6	G163098 NA

28.062–5 BAFFLE KIT, Folding Top Covering Belt Rail Water

67	07	306	.....	1	320 6991

CONVERTIBLE TOP - SUN ROOF

28.062–6 ATTACHING PARTS, Baffle Kit To Side Rail

SCREW, Tapping	67	07		17.660	2	G161790 NA
BOLT, Tee	67	07		.....	1	400 0237
NUT, Stamped	67	07		.....	1	400 0807

28.062–7 DEFLECTOR, Rear Quarter Belt Rail Water (Rubber)

67/	17-87		.....	2	359 9334

28.068–1 CURTAIN, Folding Top Back (Incl. Window And Slide Fastener)

67	07	309	.....	1	352 0546
67	(Black) 17-87	308	.....	1	357 9207
68	(Black) 17-87	308	.....	1	360 6824
67	(White) 17-87	308	.....	1	357 9208
68	(White) 17-87	308	.....	1	360 6825
67	(Tan) 17-87	308	.....	1	357 9209

28.068–2 RETAINER, Curtain To Center Belt Rail

67	07		.....	1	350 8928
67/68	17-87		28.062	1	357 7832

28.068–3 ATTACHING PARTS, Curtain Strap To Rear Bow

STUD	67/68		.....	1	346 0054

28.072–1 CABLE, Folding Top Side Quarter Retainer

67	07		.....	2	353 1914
67/68	17-87		.....	1	357 9850

28.072–2 ATTACHING PARTS, Cable To Rail

SCREW, Machine	67	07		17.598	4	G436732 NA
SCREW, Tapping	67/68	17-87		25.054	2	400 0658
WASHER, Lock	68	17-87		17.822	2	G138479 NA
NUT, Hexagon	67	07		25.052	4	439 0742
RIVET	67/68	17-87		.....	2	357 9853

28.073–1 BOOT, Folding Top Dust (Incl. Buttons And Sockets)

(T-741)	.....	1	358 1432
(T-743)	.....	1	358 1433
(T-745)	.....	1	358 1435
(T-748)	.....	1	358 1432
(T-749)	.....	1	358 1436
(T-771)	.....	1	357 9591
(T-773)	.....	1	357 9592
(T-775)	.....	1	357 9594
(T-776)	.....	1	357 9595
(T-778)	.....	1	357 9591
(T-779)	.....	1	357 9596
(T-791)	.....	1	357 9591
(T-793)	.....	1	357 9592
(T-795)	.....	1	357 9594
(T-796)	.....	1	357 9595
(T-798)	.....	1	357 9591
(T-799)	.....	1	357 9596
(T-851)	.....	1	357 9591
(T-871)	.....	1	357 9591
(T-873)	.....	1	360 5758
(T-874)	.....	1	360 5759
(T-875)	.....	1	357 9594
(T-876)	.....	1	360 5761
(T-878)	.....	1	357 9591
(T-879)	.....	1	360 5763
(T-891)	.....	1	357 9591

CONVERTIBLE TOP - SUN ROOF

(T-893)				1	360 5758
(T-894)				1	360 5759
(T-895)				1	357 9594
(T-896)				1	360 5761
(T-898)				1	357 9591

28.073–2 RETAINER, Folding Top Dust Boot To Rear Seat Back

67	07			1	350 2338
67/68	17-87			1	358 0399

28.073–3 ATTACHING PARTS, Boat To Rear Seat Back

SCREW, Tapping	67	07	17.666	7	G161651	NA
SCREW, Tapping	67/68	17-87	17.666	7	G161645	NA

28.073–4 STUD, Boot To Rear Quarter Support Trim Panel

67	07 (1/2" Long)		2	400 0822
67	07 (5/8" Long)		2	400 0821
67/68	17-87		2	400 0821

28.074–1 PAD, Folding Top Quarter Stay Side

67	(Left) 07		1	352 0542
67/68	(Left) 17-87		1	357 7843
67	(Right) 07		1	352 0543
67/68	(Right) 17-87		1	357 7842

28.074–2 PAD, Folding Top Quarter Stay Rear

67/68	(Left) 17-87		1	357 7845
67/68	(Right) 17-87		1	357 7844

28.075 FASTENER, Folding Top Back Curtain Slide (Zipper)

67	07	*(Use 812 0017)*	1	353 4878
67/68	17-87	*(Use 812 0017)*	1	358 1100

28.079–1 MOULDING, Folding Top Wire On

67	(Black) 07		1	448 2820
67	(White) 07		1	448 2821
67	(Tan) 07		1	448 4148

28.079–2 CAP, Folding Top Wire On Moulding End

67	(Left) 07		1	346 0523
67	(Right) 07		1	346 0522

28.079–3 ATTACHING PARTS, Cap To Rear Bow

SCREW, Tapping	67	07	17.654	2	G9411797	NA

28.079–4 MOULDING, Folding Top Rear Bow

67/68	17-87		1	448 4163

28.079–5 ATTACHING PARTS, Moulding To Bow

SCREW, Tapping	67/68	17-87		2	400 3823

28.079–6 RETAINER, Folding Top Rear Bow Moulding

67/68	17-87		1	357 7741

28.082–1 LINING, Folding Top Well

67	07		1	350 2336
67/68	17-87		1	357 9600

CONVERTIBLE TOP - SUN ROOF

28.082–2 ATTACHING PARTS, Lining To Rear Wheelhouse To Floor Reinforcement

SCREW, Tapping	67	07	.....	9	400 0745
WASHER, Plastic	67/68	.....	.....	AR	400 0250
WASHER, Plain	67/68	.....	17.814	AR	G446152 NA

28.082–3 ATTACHING PARTS, Lining To Rear Seat Back

SCREW, Tapping	67/68	17-87	29.060	4	400 1776

28.085–1 BUTTON, Folding Top Back Curtain Fastener (Chrome)

67/68	.....	17.270	1	G141994

28.085–2 SOCKET, Folding Top Back Curtain Fastener (Chrome)

67/68	.....	17.270	1	G141998

28.085–3 BUTTON, Folding Top Dust Boot Fastener (Chrome)

67/68	.....	17.270	AR	G141994

28.085–4 SOCKET ASSEMBLY, Folding Top Dust Boot Fastener (Incl. Plate And Socket)

67/68	17-87	.....	.....	19	400 2205

28.085–5 SOCKET, Folding Top Dust Boot Fastener (Chrome)

67/68	.....	17.270	AR	G141998

28.085–6 STUD, Folding Top Dust Boot Fastener (Chrome)

67	07	.....	26.036	23	400 0823
67/68	17-87	.....	.....	19	400 1958

28.085–7 STUD, Folding Top Well Lining Fastener

67/68	.....	28.062	AR	400 0229

28.085–8 WASHER, Folding Top Well Lining Fastener Stud

67/68	(Plastic)	.....	28.082	AR	400 0250
67/68	(Plain)	.....	17.814	AR	G446152 NA

28.100–1 TOP ASSEMBLY, Sun Roof (Black)

71/	06-40	.....	.....	1	812 0503
71/	08	.....	.....	1	812 0504

28.100–2 REPAIR KIT, Sun Roof Header Adhesive (Service Fix)

71	06-08-40	.....	.....	1	812 1388

28.102 STIFFENER, Roof Panel Front

71/	06-08-40	.....	.....	1	366 1142

28.103 STIFFENER, Roof Panel Rear

71/	06-08-40	.....	.....	1	366 1143

28.104 ATTACHING PARTS, Rear Roof Stiffener To Rear Inner Retainer

SCREW, Tapping	71/	06-08-40	3.303	4	400 2218

CONVERTIBLE TOP - SUN ROOF

28.105 STIFFENER, Roof Panel Side

71/	(Front) 06-08-40	.....	2	366 1161
71/	(Rear) 06-08-40	.....	2	366 1162

28.106 BRACKET, Roof Panel Side Support

71/	06-08-40	.....	2	366 1144

28.108 RETAINER, Sun Roof Front (Inner)

71/	06-08-40	.....	1	363 2275

28.109 ATTACHING PARTS, Inner Retainer To Outer Retainer

RIVET	71/	06-08-40	.....	9	400 4434

28.111 RETAINER, Sun Roof Front (Outer)

71/	06-40	.....	1	363 2272
71/	08	.....	1	363 2273

28.112 ATTACHING PARTS, Outer Retainer To Front Stiffener

RIVET	71/	06-08-40	28.109	12	400 4434

28.114-1 REPAIR KIT, Sun Roof Slide Channel Water Leak (Service Fix)

71/	08	.....	1	812 1750

28.114-2 CHANNEL, Sun Roof Slide

71/	(Left) 06-08-40	.....	1	363 2377
71/	(Right) 06-08-40	.....	1	363 2376

28.115 ATTACHING PARTS, Channel To Trim Moulding

SCREW, Machine	71/	06-08-40	23.078	12	400 0429
NUT, Special	71/	06-08-40	.....	12	363 2430

28.116 SLIDER KIT, Sun Roof Channel

71/	06-08-40 (Set Of 6)	.....	1	812 1234

28.117 MOULDING, Sun Roof Interior Trim (Side)

71/	(Left) 06-08-40	.....	1	363 2409
71/	(Right) 06-08-40	.....	1	363 2408

28.118 ATTACHING PARTS, Moulding To Slide Channel

SCREW, Machine	71/	06-08-40	23.078	12	400 0429
NUT, Special	71/	06-08-40	.....	12	363 2430

28.120-1 RETAINER, Sun Roof Rear

71/	06-08-40	.....	1	363 2412

28.120-2 SEALER, Sun Roof Rear To Roof Panel

71/	06-08-40 (78-1/2" Long)	.....	AR	360 9111

28.121 ATTACHING PARTS, Retainer To Sun Roof

SCREW, Machine	71/	06-08-40	17.616	4	G155193 NA
WASHER, Plain	71/	06-08-40	17.814	4	G120391 NA

CONVERTIBLE TOP - SUN ROOF

28.124	**PLUG, Button Rear Inner Retainer**			
71/	06-08-40	.....	4	400 4392
28.126	**HANDLE, Sun Roof Latch**			
71/	06-08-40	.....	1	812 0630
28.129	**BLOCK, Handle And Latch Mounting**			
71/	06-08-40...(Incl. Attaching Parts)	.....	1	812 0632
28.130	**LATCH KIT, Sun Roof**			
71/	06-08-40...(Incl. Pawl And Attaching Parts)	.....	1	812 0633
28.135	**ROD KIT, Sun Roof Latch**			
71/	06-08-40...(Incl. Attaching Parts)	.....	1	812 0636
28.137	**ESCUTCHEON, Sun Roof Latch Handle**			
71/	06-08-40...(Incl. Attaching Parts)	.....	1	812 0638
28.138	**RETAINER KIT, Sun Roof Handle**			
71/	06-08-40	.....	1	812 1237
28.139	**SPRING KIT, Sun Roof Latch Rod**			
71/	06-08-40	.....	1	812 1235

SPECIAL INFORMATION

The Engine Build Code Number, Vehicle Identification Number and the information provided on the Unit Body Plate are often necessary when determining the proper replacement parts for your automobile. For their location refer to the General Information Section found at the front of this catalog.

NOTES

29–1 .... The Sun Visor Bracket and Rod is listed in Group 29.003–3 and 29.004–1.

29–2 .... The Sun Visor Mounting Rod is a part of the Sun Visor.

29–3 .... The Sun Visor Mounting Rod is a part of the Bracket and Rod Assembly.

29–4 .... The Sun Visor has a Plastic Molded Covering.

29–5 .... The Sun Visor has a Sewn Vinyl Covering.

29–6 .... Bracket consists of a Bracket and Rod Assembly.

29–7 .... This Part No. includes both Front and Rear Retainers.

29–8 .... Used with a Rear View Mirror Bracket less the Plastic Trim Cover.

29–9 .... Used with a Rear View Mirror Bracket with the Plastic Trim Cover.

29–10 ... Trim Panel has a Two-Tone Color.

29–11 ... Trim Panel has a Solid Color.

29–12 ... On the 59 Models the Trim Panel has a Silver Engine Turned Overlay.

29–13 ... On the 59 Models the Trim Panel has a Walnut Wood Grain Overlay.

29–14 ... The Rear Quarter Side Trim Panel Mouldings are listed in Group 24.065.

29–15 ... Trim Panel has a Ventilair or Cloth Insert, same as used on Seat Inserts.

29–16 ... Trim Panel used on the 68 17-19 Models has a Vinyl Antelope Grain Insert with six vertical die electric lines on either side of the SST Nameplate. It also has a Plastic Vertical Moulding and a Metal Insert Moulding 1/2" wide.

29–17 ... Trim Panel used on the 68 17-19 Models has a Vinyl Antelope Grain Insert with six vertical die electric lines on either side of the SST Nameplate. It also has a Plastic Vertical Moulding and a Plastic Insert Moulding 3/8" wide.

29–18 ... The Reclining Back Handle has a Right Angle Shape.

29–19 ... Unless otherwise listed, these parts are serviced in one color only. Dealer must paint to the color desired.

29–20 ... The front edge of Trim Panel is covered with a Retainer.

29–21 ... The front edge of Trim Panel is extended to fit under the Stormstrip.

29–22 ... The Roof and Headlining Side Mouldings are listed in Group 29.014.

29–23 ... The Door Mouldings are listed in Group 23.198.

29–24 ... The top portion of the Trim Panel matches the color in the Vertical Insert.

29–25 ... The top portion of the Trim Panel does not match the color in the Vertical Insert.

29–26 ... Trim Panel has a Vinyl Antelope Grain Insert.

29–27 ... Trim Panel has a Loop Type Carpet.

29–28 ... Trim Panel has a Cut Pile Type Carpet.

29–29 ... Trim Panel has a Luxury Type Carpet.

Printed in U.S.A.

29–30 ... Carpet is a Loop Type.

29–31 ... Carpet has a Cut Pile.

29–32 ... Carpet is the Luxury Type.

29–33 ... The Armrest is 12.90" long across the top edge and 7.25" along the side.

29–34 ... The Armrest is 9.45" long across the top edge and 10.45" long on the rear edge. It is identical to the Rear Armrest.

29–35 ... The Front Seats are available in 6 Distinct Types. They are:

WFS - With Full Seat	- 1 Piece Cushion - 1 Piece Back
WNRS - With Non-Reclining Seat	- 1 Piece Cushion - 2 Piece Back
WRS - With Reclining Seat	- 1 Piece Cushion - 2 Piece Back
WIRS - With Individual Reclining Seat	- 2 Piece Cushion - 2 Piece Back
WBS - With Non-Reclining or Reclining Bucket Seat	- 2 Piece Cushion - 2 Piece Back
WNBS - With Non-Reclining Bucket Seat	- 2 Piece Cushion - 2 Piece Back
WRBS - With Reclining Bucket Seat	- 2 Piece Cushion - 2 Piece Back

It is important that all requests for Seat Parts include this information. Also be sure to specify Left or Right in all cases where a 2 Piece Cushion or a 2 Piece Back is involved.

29–36 ... On the 68 01-10-80 (LBS) Models the width of the Side Facing at the top of the Seat Back measures 5-1/2" and the distance from the Welt at the top of the Back to the top of the Kickpad Panel measures 12". On the 68 10-80 (WBS) Models the distance from the Welt at the top of the Back to the top of the Kickpad Panel measures 6-1/2".

29–37 ... On the 68 01-10-80 (LBS) Models the width of the Side Facing at the top of the Seat Back measures 6" and the distance from the Welt at the top of the Back to the top of the Kickpad Panel measures 14". On the 68 10-80 (WBS) the distance from the Welt at the top of the Back to the top of the Kickpad Panel Measures 9-1/2".

29–38 ... Embossed Vinyl has an all Red Color Finish.

29–39 ... Embossed Vinyl has dark shading between the Raised Portions of the Finish.

29–40 ... Used with a Back Frame that measures 20-41/64" from top to bottom.

29–41 ... Used with a Back Frame that measures 22-3/32" from top to bottom.

29–42 ... Is a Machine Screw and is used with a Weld Nut.

29–43 ... Is a Self Tapping Screw and is used less Weld Nut.

29–44 ... The height of the Tubular Frame from top to bottom is 20-19/64 inches.

29–45 ... The height of the Tubular Frame from top to bottom is 17-3/32 inches.

29–46 ... The Anchor End of Handle has a Tapered Edge and the Tip End bends inward.

29–47 ... The Anchor End of Handle has a Flat Surface with a 1/2" Raised Edge.

29–48 ... The height of the Top Rim Wire of the Seat Back Spring from top to bottom is 20-41/64 inches.

29–49 ... The height of the Top Rim Wire of the Seat Back Spring from top to bottom is 22-3/32 inches.

29–50 ... The width of the Pad at the top of the Seat Back is about 6-3/4 inches on the 68 01-10-80 (LBS) and about 5 inches on the 68 10-80 (WBS) Models.

29–51 ... The width of the Pad at the top of the Seat Back is about 4-5/8 inches on the 68 01-10-80 (LBS) and about 2 inches on the 68 10-80 (WBS) Models.

29–52 ... This Pad is used in conjunction with the first type Frame Assy., (* 29–48).

29–53 ... This Pad is used in conjunction with the second type Frame Assy., (* 29–49).

29–54 ... The end is evenly squared off and is used in conjunction with (* 29–50).

29–55 ... The top end is indented and rounded in shape and is used in conjunction with (* 29–51).

29–56 ... Ragboard has a 5/8" thick Amberlite insulation cemented to it.

29–57 ... Ragboard is less the Amberlite insulation.

29–58 ... The Ragboard measures 17-1/4" from top to bottom.

29–59 ... The Ragboard measures 14-1/2" from top to bottom.

29–60 ... The distance between the Front and Rear Mounting Holes to the Floor Pan is 14 inches.

29–61 ... The distance between the Front and Rear Mounting Holes to the Floor Pan is 16 inches.

29–62 ... The Headrest Post Assembly, Casing, Spacer and Catch are listed in Group 29. 173 thru 29. 174.

29–63 ... The Headrest Casing and Screws are listed in Group 29. 173.

29–64 ... On the 68 10-80 (LBS), the width of the Headrest at the Rear Bottom measures 14-1/2 inches from end to end. On the 68 10-80 (WBS), the Side width of the Headrest measures 7-1/2 inches from front to back.

29–65 ... On the 68 10-80 (LBS), the width of the Headrest at the Rear Bottom measures 13-1/8 inches. On the 68 10-80 (WBS), the Side width of the Headrest measures 5-27/64 inches from front to back.

29–66 ... This part was used prior to Body #46307 on the 68 18-88 Models and prior to Body #48212 on the 68 08 Models.

29–67 ... This part was used after Body #46307 on the 68 18-88 Models and after Body #48212 on the 68 08 Models.

29–68 ... The width of the Frame is 37-5/8 inches.

29–69 ... The width of the Frame is 37-3/8 inches.

29–70 ... The Overlap Portion on the Moulding is 1/2".

29–71 ... The Overlap Portion on the Moulding is 45/64".

29–72 ... Carpet material used is a "Loop" type.

29–73 ... Carpet material used is a "Cut Pile" less molded type and the Heel Patch is 5 sided.

29–74 ... Carpet material used is the "Luxury" type.

29–75 ... Carpet is a "Cut Pile" molded type with a rectangular 4 sided Heel Patch.

29–76 ... When ordering Bulk Materials, please specify the exact size desired. Yard quantities are sold in roll widths only, which vary in size from 50 to 64 inches.

29–77 ... Stormstrip is supplied in pre-cut lengths and may require cutting to obtain the needed length; (4 required on 4 dr. Models and 2 required on 2 dr. Models except where noted).

29–78 ... To identify this part, refer to Stormstrip Cross Section listed below as Type 1.

29–79 ... To identify this part, refer to Stormstrip Cross Section listed below as Type 2.



TYPE 1



TYPE 2

29–80 ... Stormstrip has a Heat Sealed Cap on the top end.

29–81 ... Stormstrip is used in conjunction with a separate Plastic Cup.

29–82 ... The Skid Stripes are serviced separately and are listed in Group 29.421.

29–83 ... The width of the Carpet is 37-5/8 inches.

29–84 ... The width of the Carpet is 37-3/8 inches.

29–87.... Crash Pad is less the Retainer.

29–88 ... Crash Pad includes a Retainer.

29–90 ... Trim Panel is two tone.

29–91 ... Trim Panel has a single color.

29–92 ... Used on the 69 30-70 Models. Headrest width at the bottom measures 13-7/16 inches.

29–93 ... Headrest width at the bottom measures 11-23/64 inches.

29–94 ... The Reclining Back Handle has a tapered edge on the Anchor End and a straight point on the Tip End.

29–95 ... The Outer Hinge Bushing is 19/32" thick and the Forward Tilt Lock Clevis Pin is 1-29/64" long.

29–96 ... The Outer Hinge Bushing is 27/32" thick and the Forward Tilt Lock Clevis is 1-45/64" lona.

29–97 ... Insulation measures (23-1/8" x 13-1/2").

29–98 ... Insulation measures (21-1/8" x 12").

29–99 ... Sidewing Panel is less the cut out for the Seat Belt.

29–100 .. Sidewing Panel has a cut out for the Seat Belt.

29–101 .. Sidewing Panel is fastened to the Seat Frame by a Drive Fastener.

29–102 .. Sidewing Panel is fastened to the Seat Frame by a Tapping Screw.

29–103 .. This Part was used prior to Body Number R-006342 on T-961E and prior to R-006301 on T-962E.

29–104 .. This Part was used beginning with Body Number R-006342 on T-961E and beginning with R-006301 on T-962E.

29–105 .. This Carpet is the 2 piece Cut and Sew Type.

29–106 .. This Carpet is the 1 piece Molded Type.

29–107 .. On the 4 Door Models, Headlining is used with Plastic Stowage Retaining Clips for the Shoulder Belts.

29–108 .. On the 4 Door Models, Headlining is used with Wire Stowage Retaining Clips for the Shoulder Belts.

29–109 .. This Carpet is used with a Finish Panel having depressions for the Tailgate Remote Control Handles with vertical sides that are symmetrical and measure 2-3/4 inches.

29–110 .. This Carpet is used with a Finish Panel having depressions for the Tailgate Remote Control Handles with vertical sides that are not symmetrical and measure 2-3/4 inches on one side and 3-3/4 inches on the other side.

29–111 .. Headrest Cover is Vinyl Material.

29–112 .. Headrest Cover is Velour Cloth Material.

29–115 .. Length of the Rod is 3-21/32 inches and a Rubber Cap is used at the Mirror End.

29–116 .. Mirror End of the Rod is smooth and is less the Rubber Cap.

29–117 .. Length of the Rod is 4-35/64 inches and a Rubber Cap is used at the Mirror End.

29–118 .. Panel used with Bucket Seats, has a high gloss Metallic Finish.

29–119 .. Panel used with Bucket Seats, has a dull Non-Metallic Finish.

29–120 .. The Upper Extension Pad is a separate part from the Front Seat Back Pad.

29–121 .. The Upper Extension Pad is incorporated into the Front Seat Back Pad.

29–122 .. This Bracket has a Weld Nut for fastening the Forward Tilt Lock Bolt.

29–123 .. This Bracket has an Extruded Area which is tapped for fastening the Forward Tilt Lock Bolt.

29–124 .. The Outer Hinge Bracket on this Back Frame has a Weld Nut for fastening the Forward Tilt Lock Bolt.

29–125 .. The Outer Hinge Bracket on this Back Frame has an Extruted Area which is tapped for fastening the Forward Tilt Lock Bolt.

29–126 .. The Shape of this Button is rectangular.

29–127 .. The Shape of this Button is round.

29–128 .. Skid Strip has a center indentation.

29–129 .. Skid Strip is less center indentation.

29–130 .. This Headlining has a Waffle Pattern Finish Design.

29–131 .. This Headlining has Five Center Grooves running from Front to Back.

29–132 .. This Sun Visor is approximately 1" thick.

29–133 .. This Sun Visor is approximately 1/2" thick.

29–134 .. This Spring measures 6-45/64" from the Front Top Spring Wire to the Bottom Frame Bracket.

29–135 .. This Spring measures 6-1/2" from the Front Top Spring Wire to the Bottom Frame Bracket.

29–136 .. The Front Seat Back Upholstery does not have a Deck Seam stitched parallel to the Welt.

29–137 .. The Front Seat Back Upholstery has a Deck Seam stitched parallel to the Welt.

29–138 .. Used with separate spacers joining the Quarter Side Trim Panel with the Rear Panel.

29–139 .. Used less separate spacers joining the Quarter Side Trim Panel with the Rear Panel. The spacers are molded into the Rear Panel.

29–140 .. Thr Front Seat Slide Adjuster Top Studs size are 5/16"-24.

29–141 .. The Front Seat Slide Adjuster Top Studs are 5/16"-18.

29–143 .. These Wires are available in the lengths indicated; if a shorter length is needed, cut to size.

29–144 .. The Headrest Upholstery Cover has a deck seam joining the Side Facings with the Center Panel.

29–145 .. The Headrest Upholstery Cover has a Welt joining the Side Facings with the Center Panel.

29–146 .. This Part was used prior to Body Sequence No. 268 123.

29–147 .. This Part was used beginning with Body Sequence No. 268 123.

29–148 .. This Headlining has a Circle Pattern with a Dull Finish.

29–149 .. This Headlining has a Diamond Pattern with a Glossy Finish.

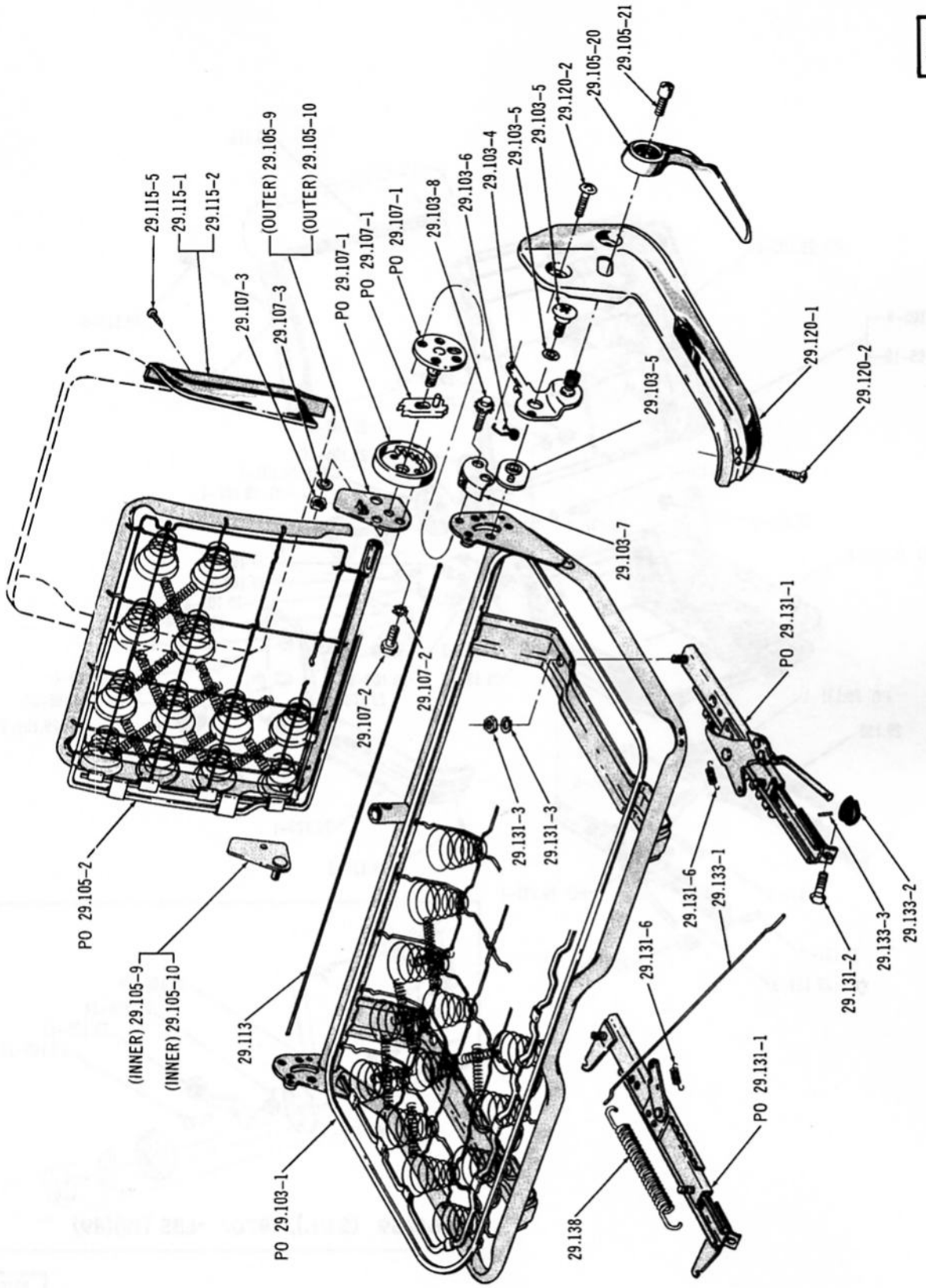

FRONT SEAT ... 1967-01 (WRS)

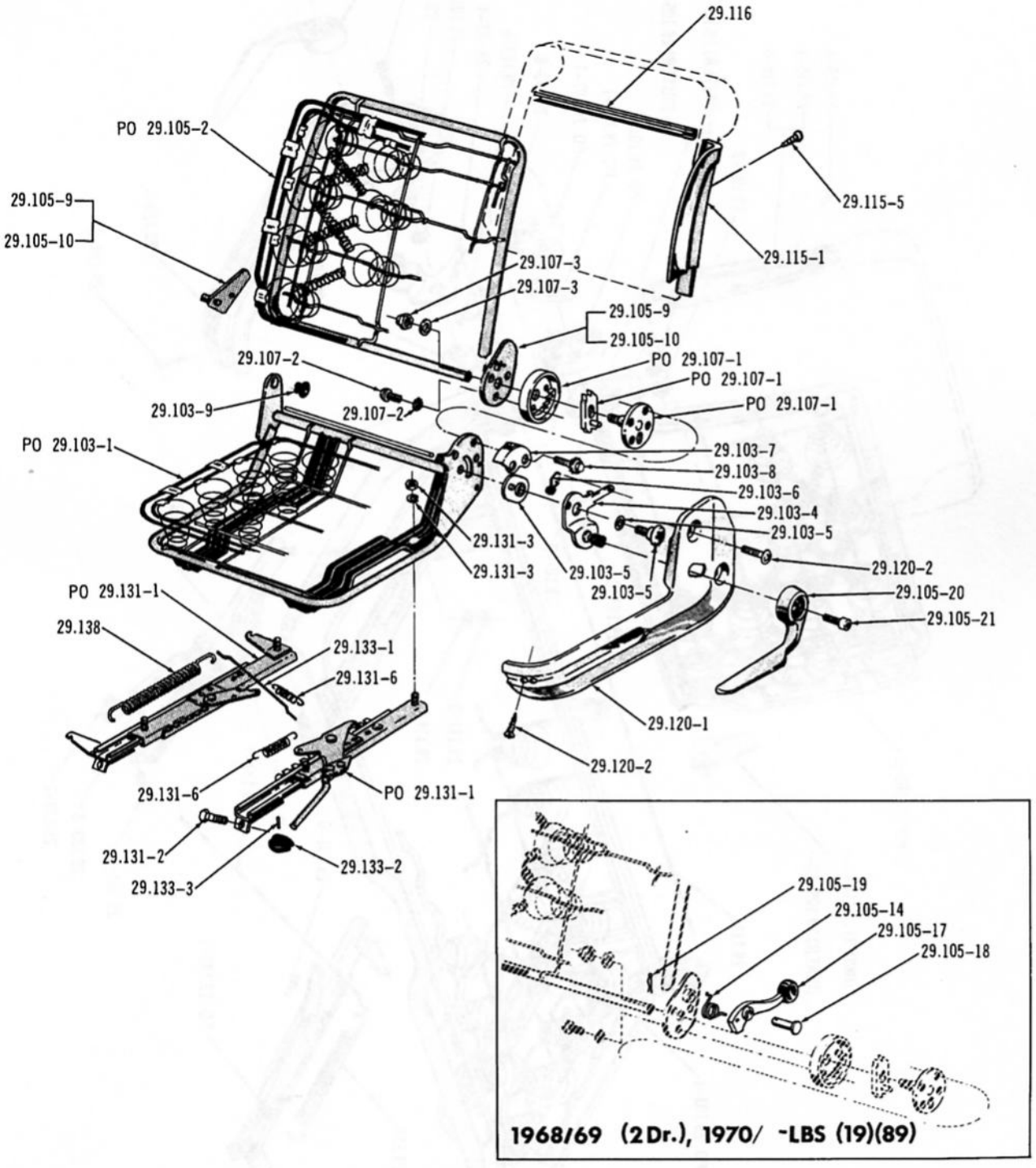

2976

FRONT SEAT ... WIR-1967/70 (01), WBS-(1967/69), LBS-1967/71 (10)(80)

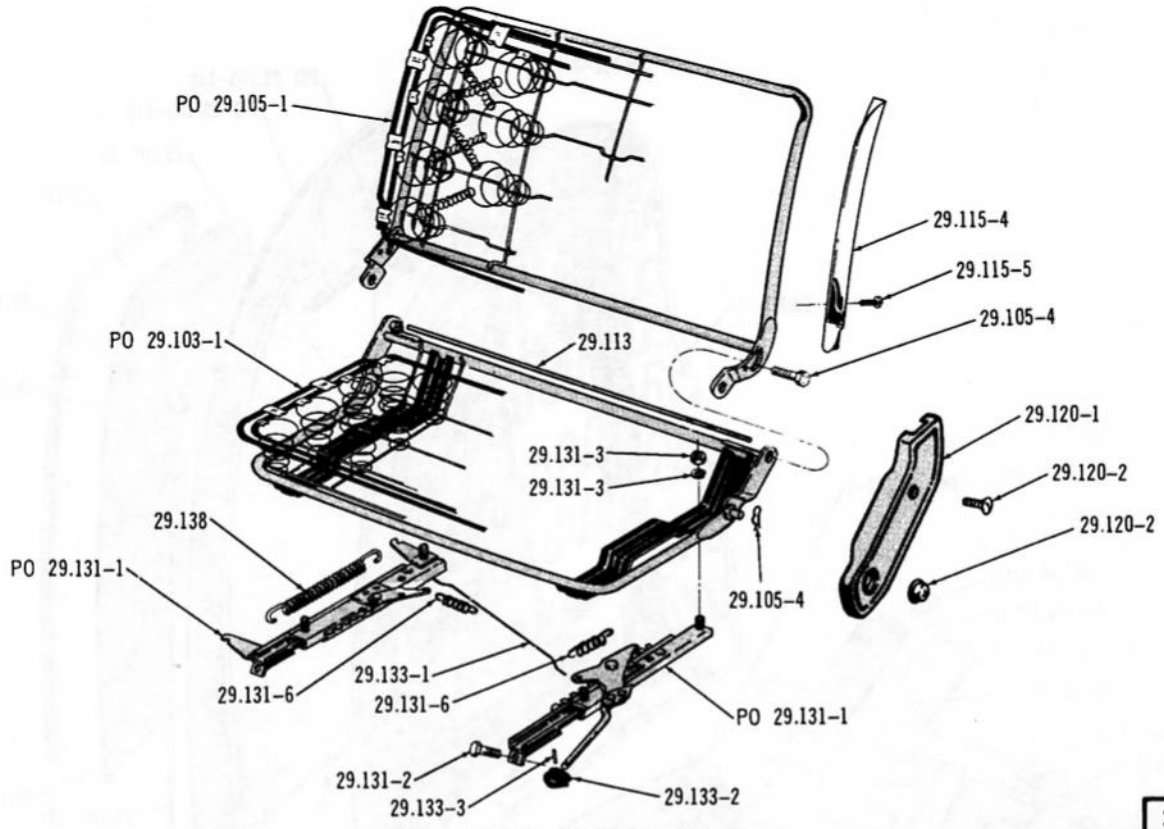

2977

FRONT SEAT ... WFS

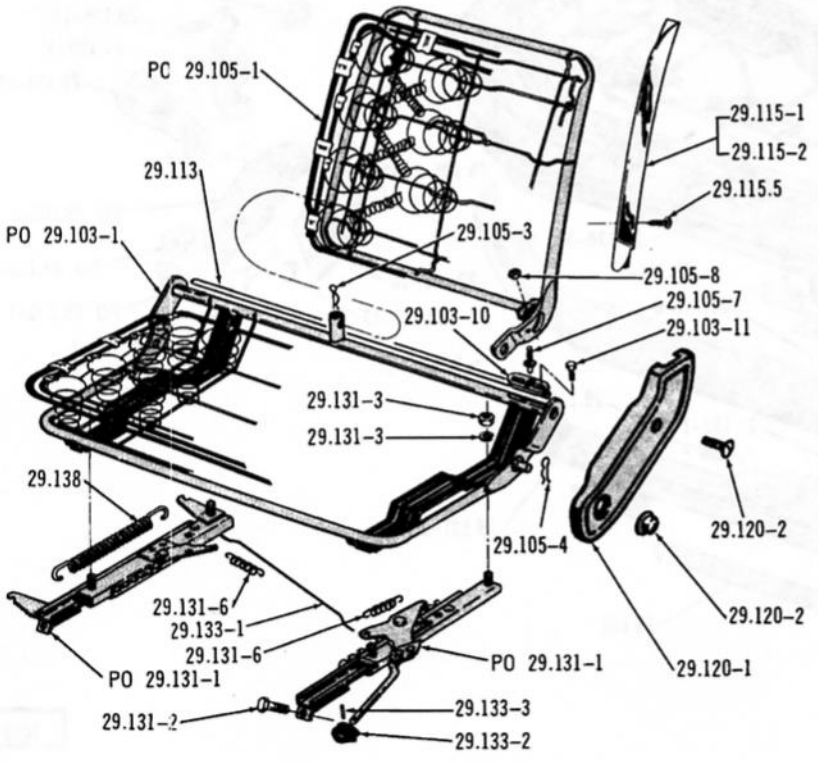

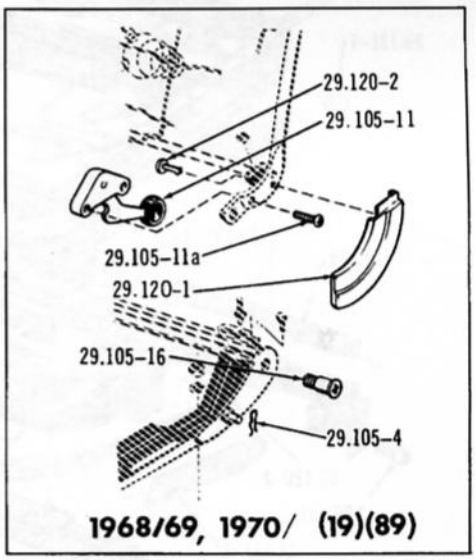

1968/69, 1970/ (19)(89)

2978

FRONT SEAT ... WNRS

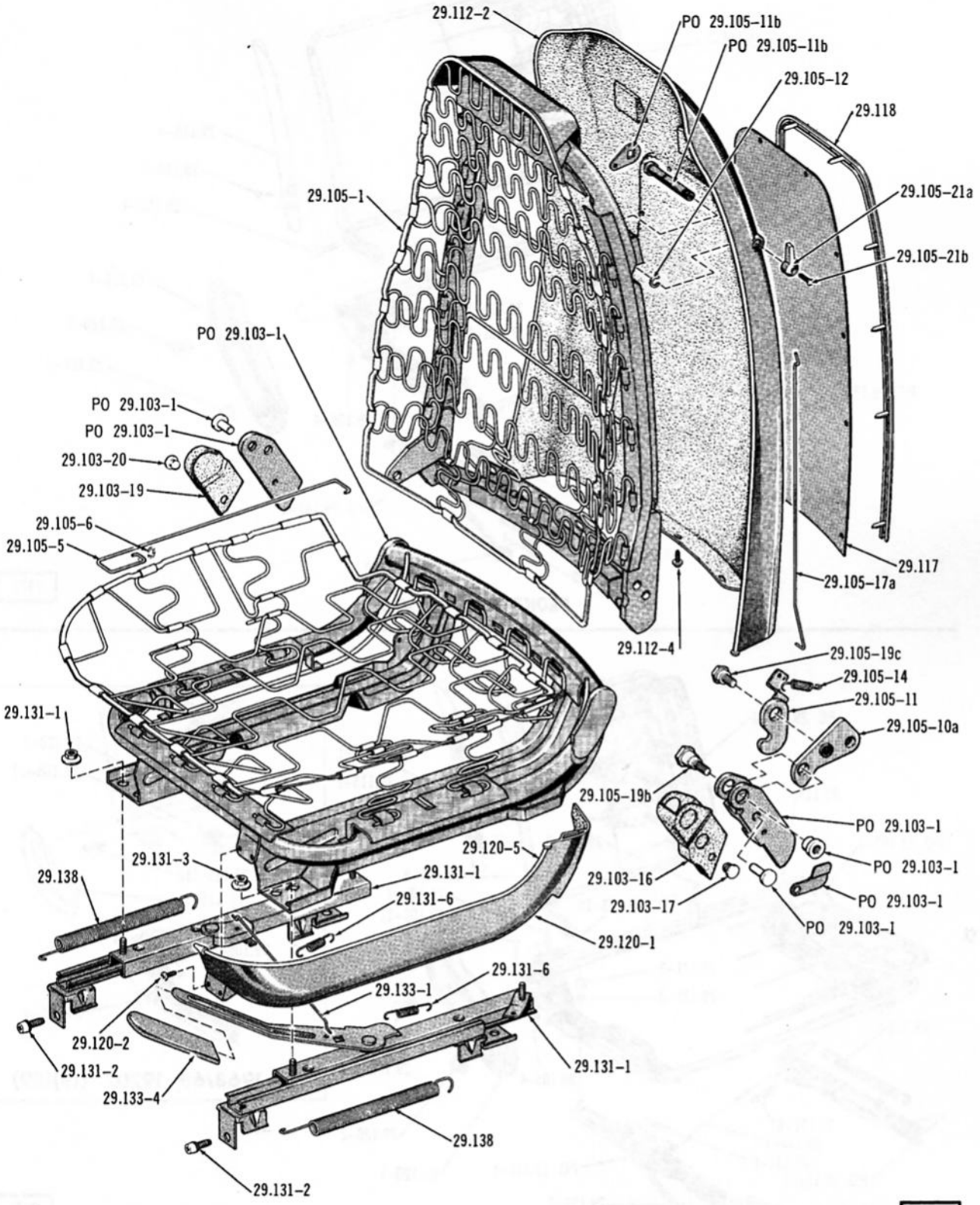

3800

FRONT SEAT ... 1970/ (WNBS)

4045

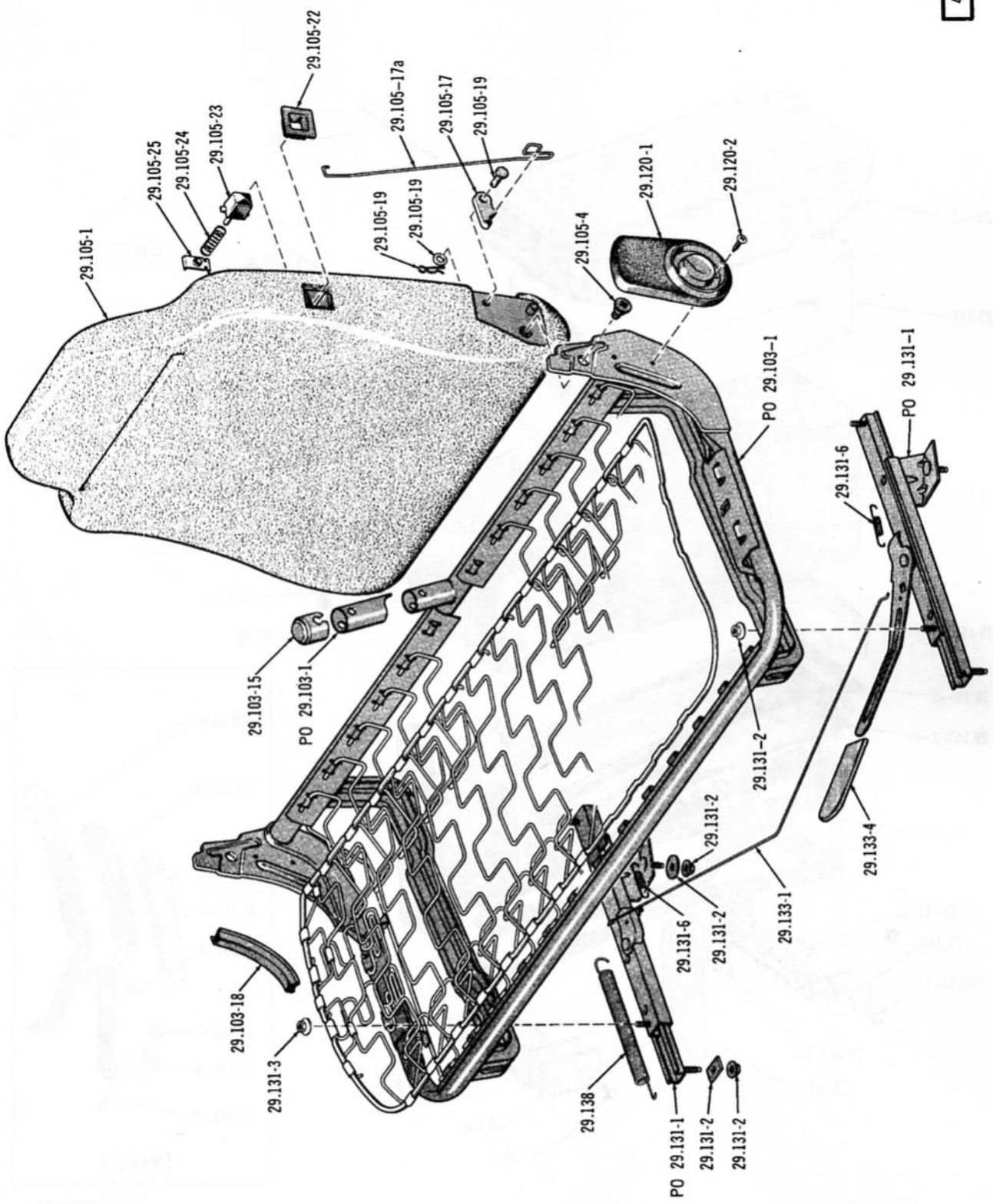

FRONT SEAT ... (40)

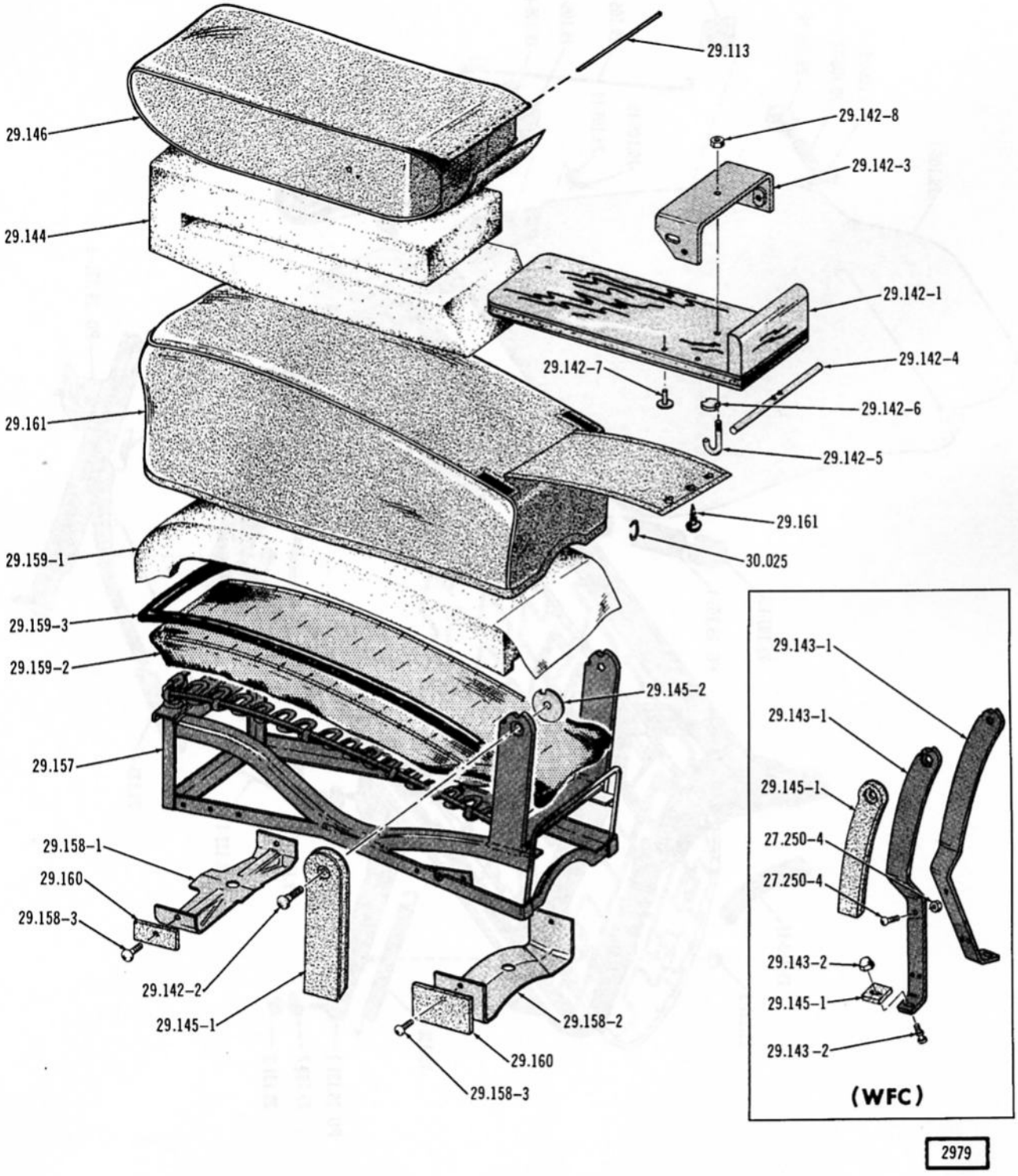

FRONT SEAT CENTER CUSHION AND ARM REST ... WBS

2980

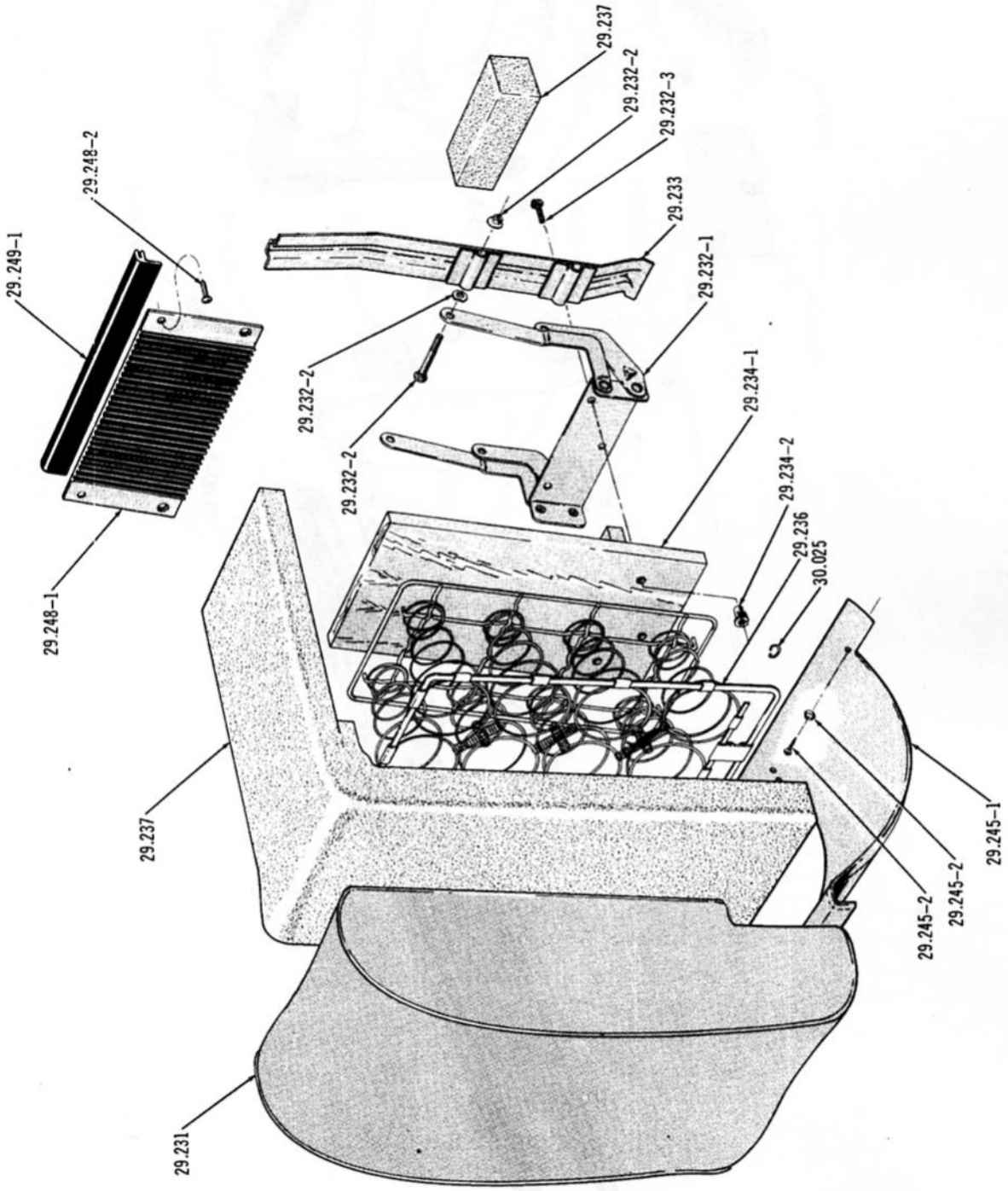

REAR SEAT CENTER ARM REST ... 1967 (50)(80)

3646

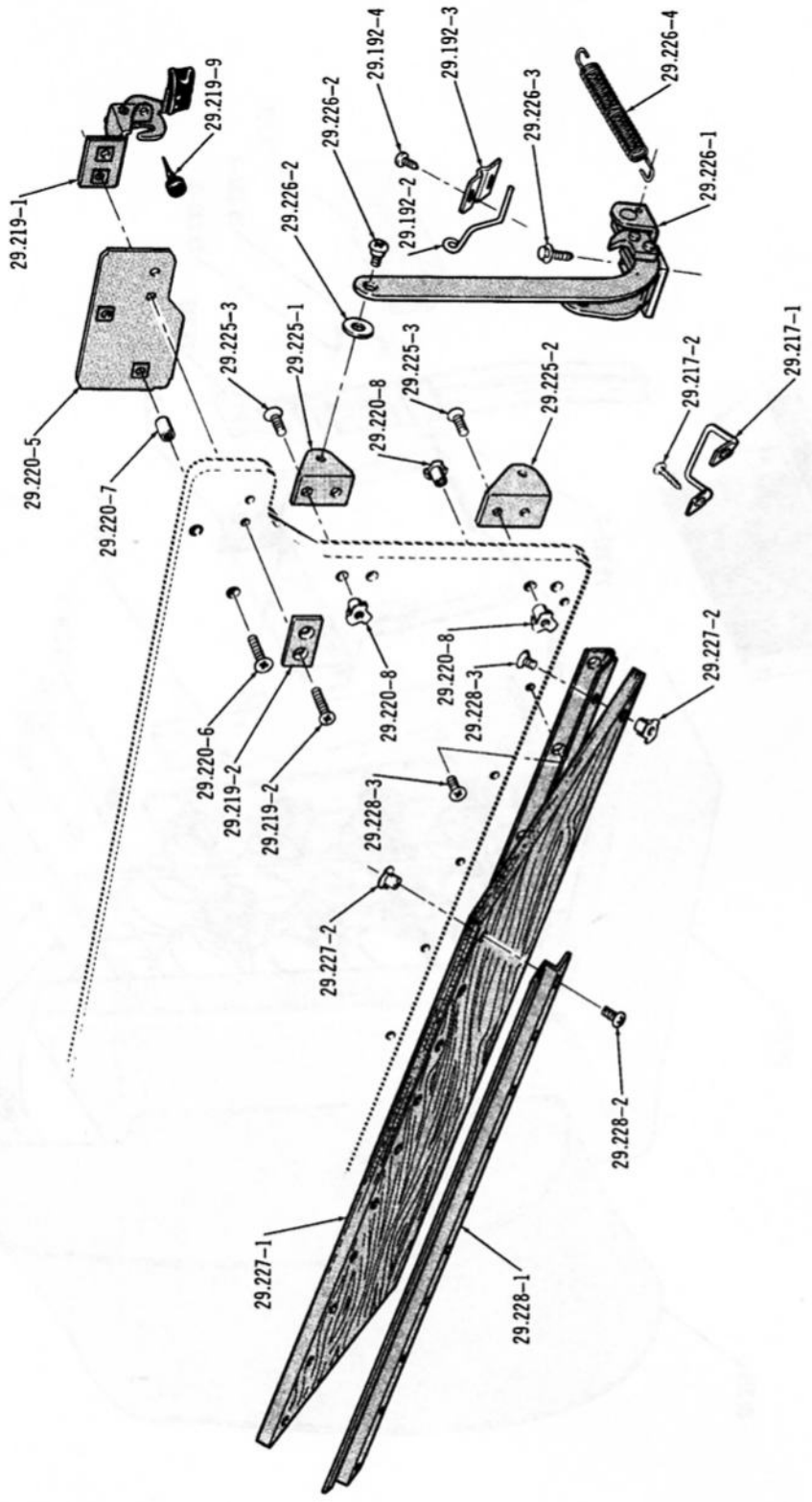

REAR SEAT BACK SIDE ARMS AND EXTENSION ... 1967/ (18)(88)

Printed in U.S.A.

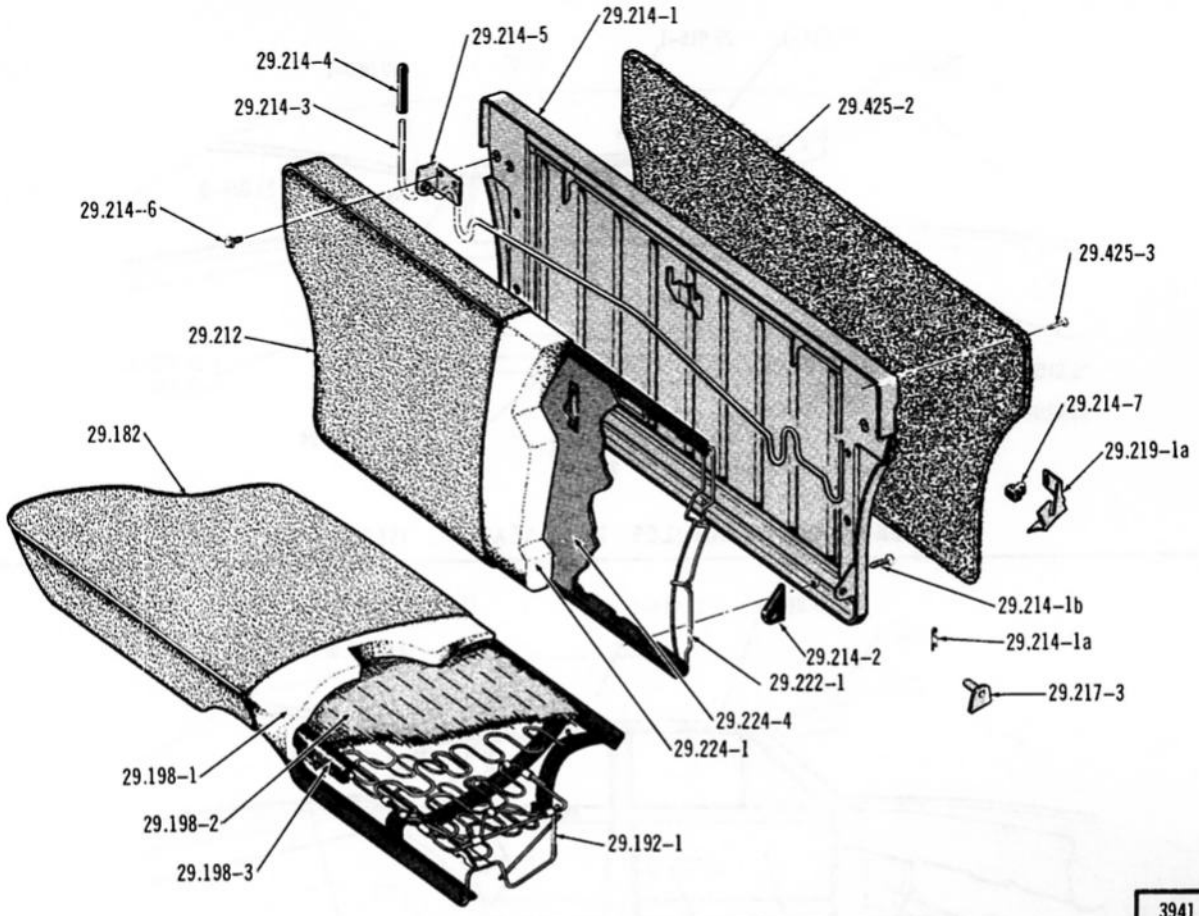

REAR SEAT CUSHION AND BACK . . . 1970/71 (40), 1971 (08)

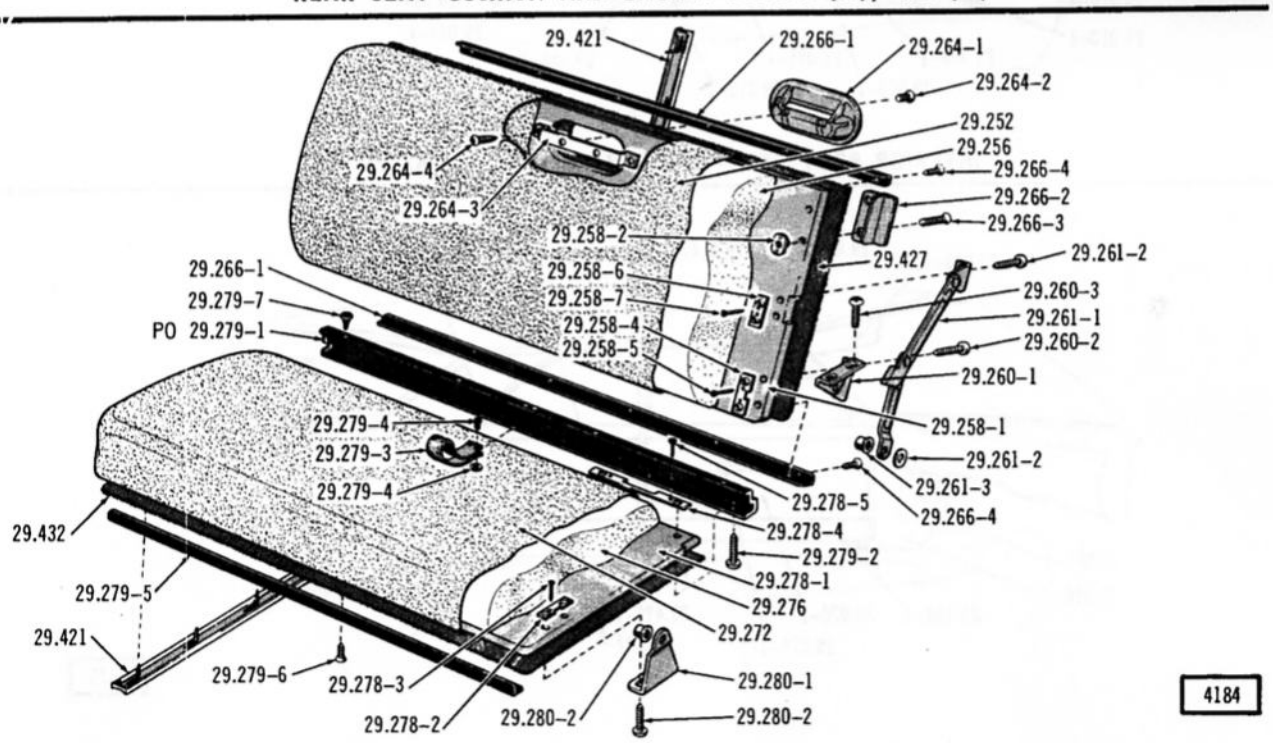

THIRD SEAT CUSHION AND BACK . . . 1967/ (10)(80)

Printed in U.S.A.

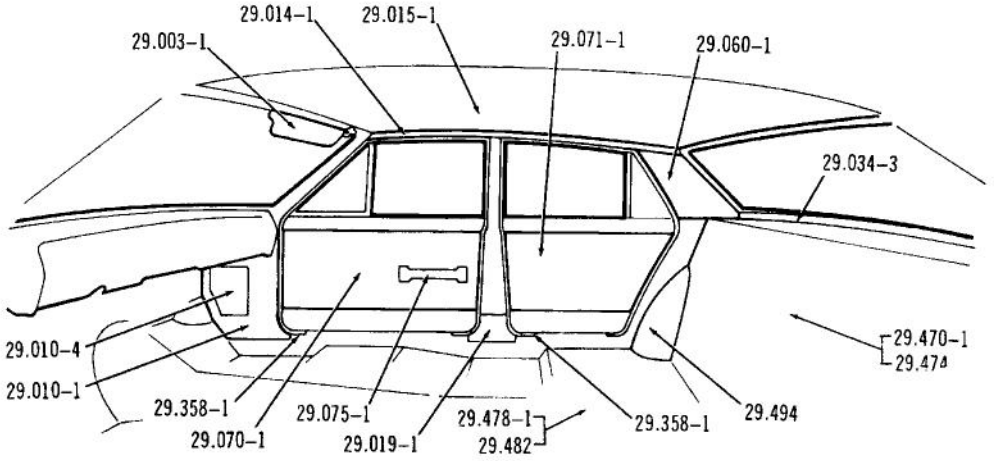

INTERIOR BODY TRIM (LESS REAR SEAT) ... 1967/69 (05)

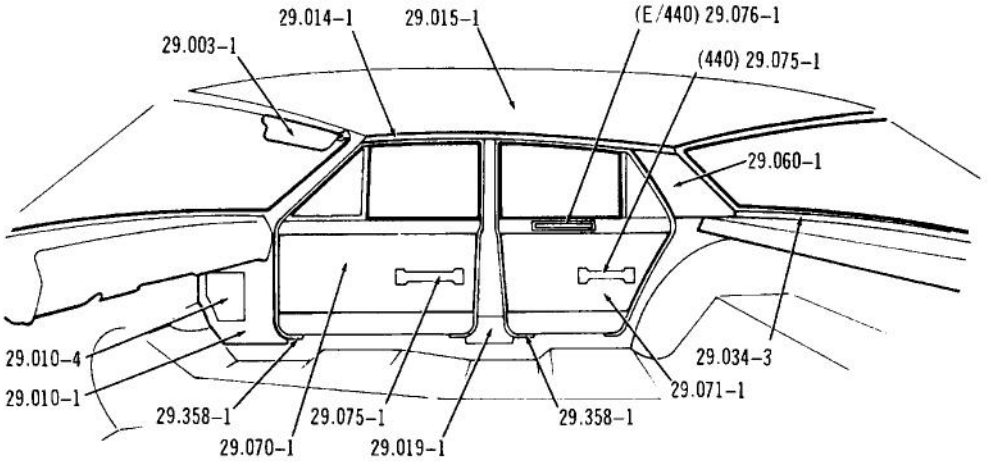

INTERIOR BODY TRIM (WITH REAR SEAT) ... 1967/69 (05)

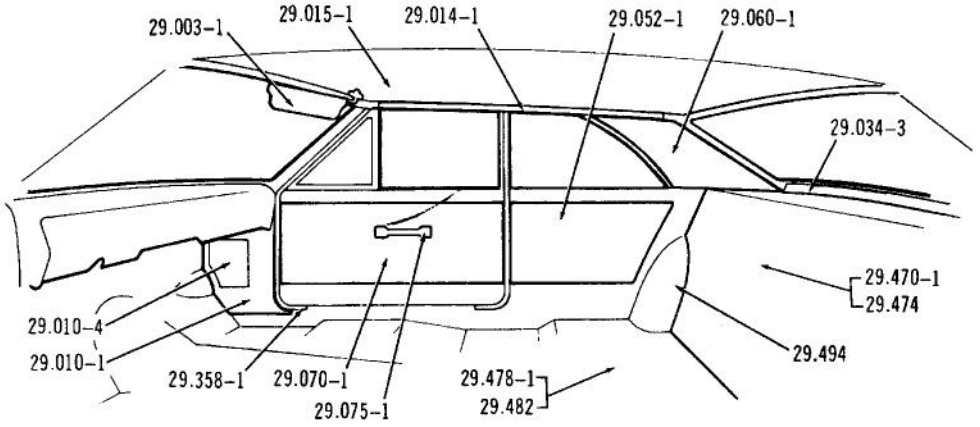

3675

INTERIOR BODY TRIM (LESS REAR SEAT) ... 1967/69 (06)

Printed in U.S.A.

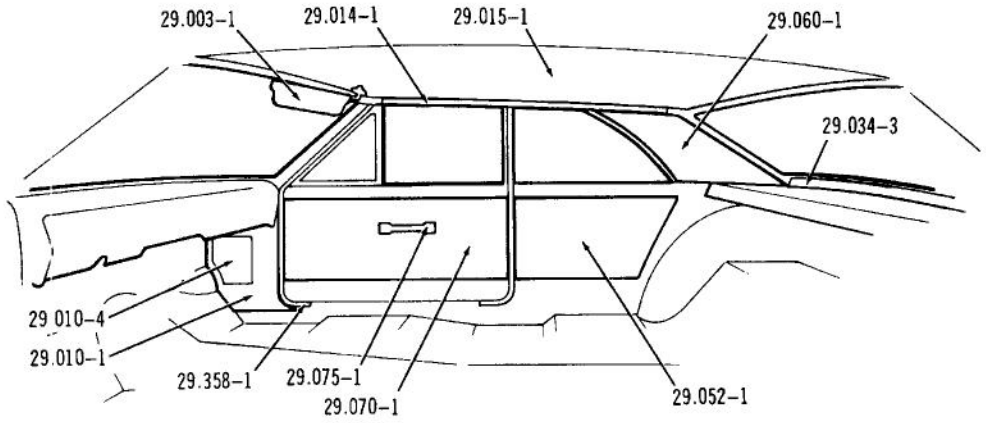

INTERIOR BODY TRIM (WITH REAR SEAT) ... 1967/69 (06)

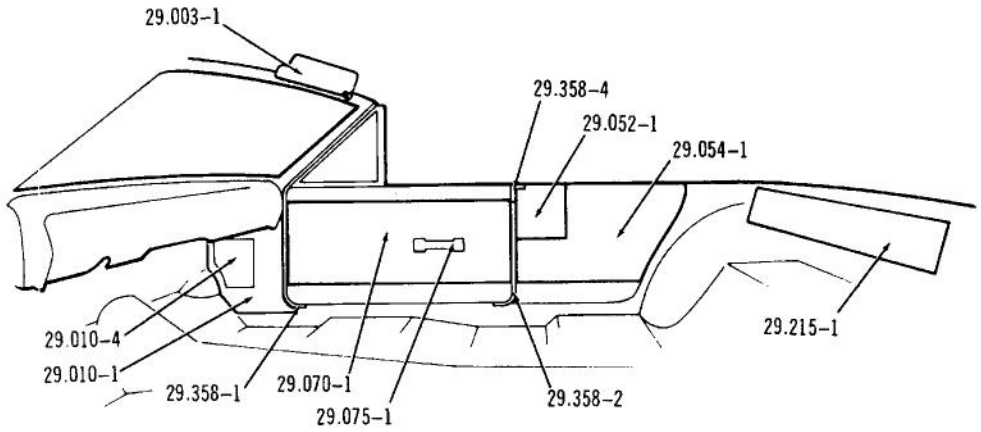

INTERIOR BODY TRIM ... 1967 (07)

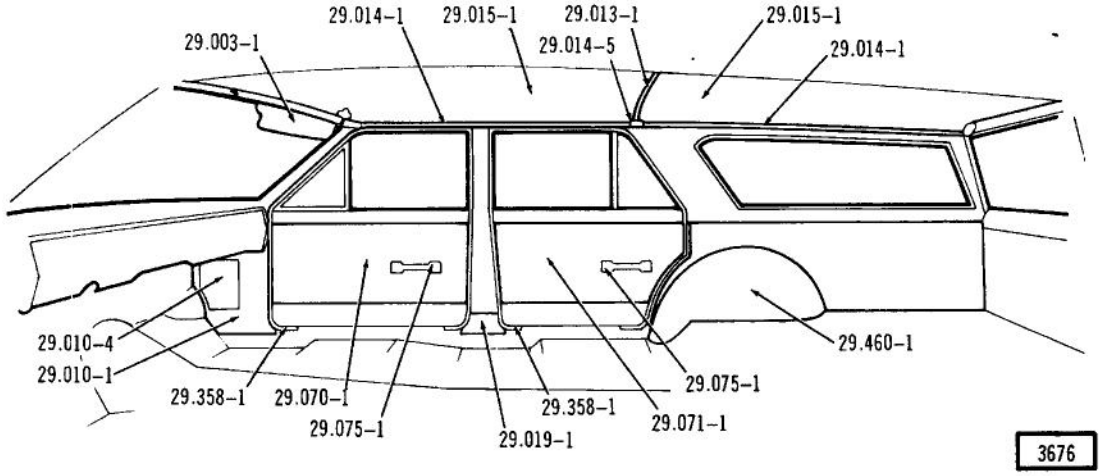

INTERIOR BODY TRIM ... 1967/69 (08)

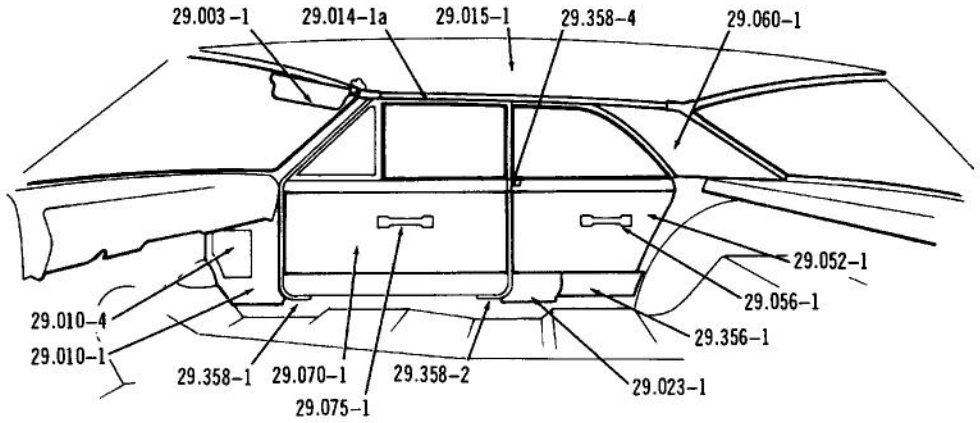

INTERIOR BODY TRIM ... 1967/69 (09)

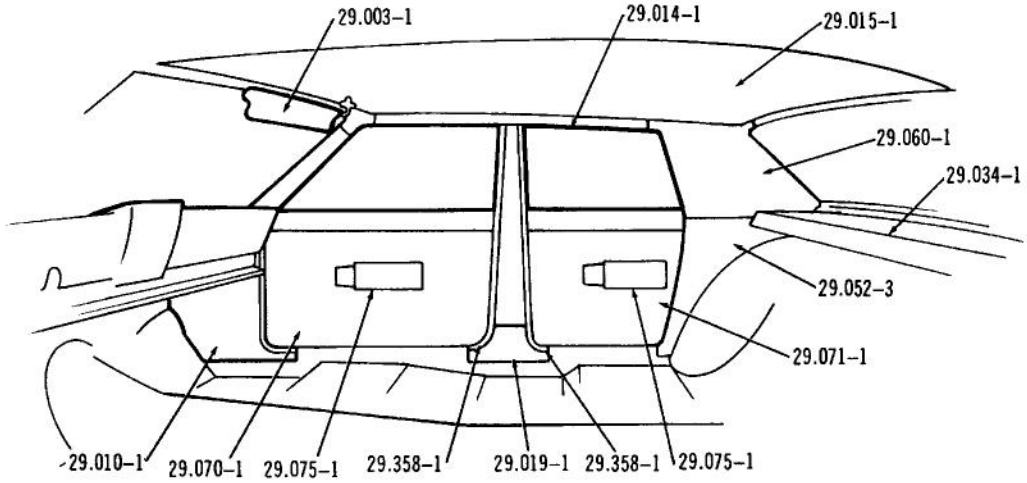

INTERIOR BODY TRIM ... 1970/ (05)

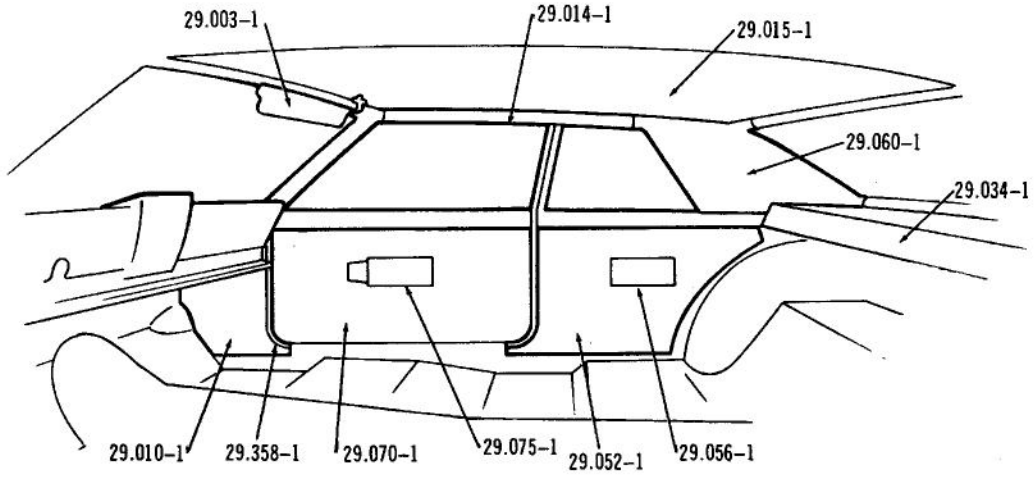

3943

INTERIOR BODY TRIM ... 1970/ (06)

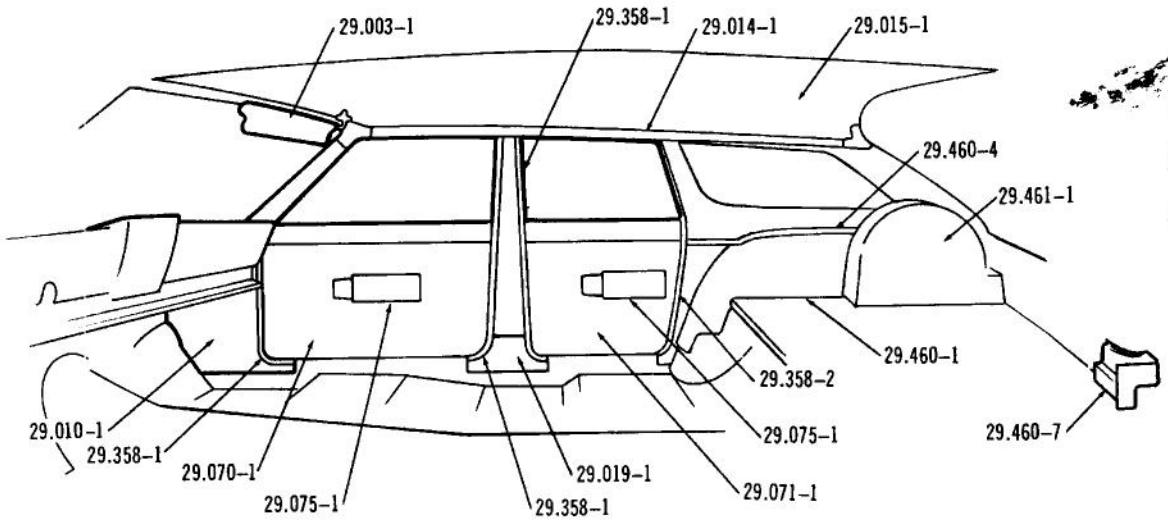

INTERIOR BODY TRIM . . . 1971/ (08)

3689

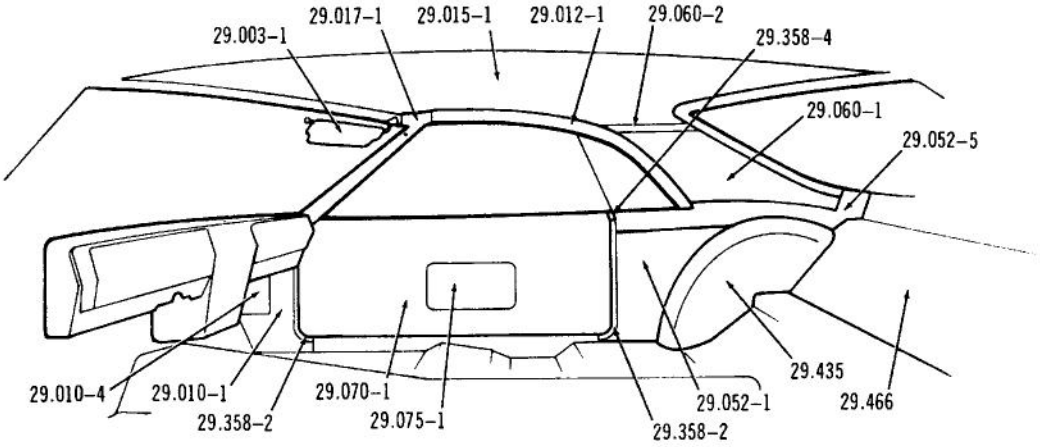

INTERIOR BODY TRIM ... 1968/70 (30)

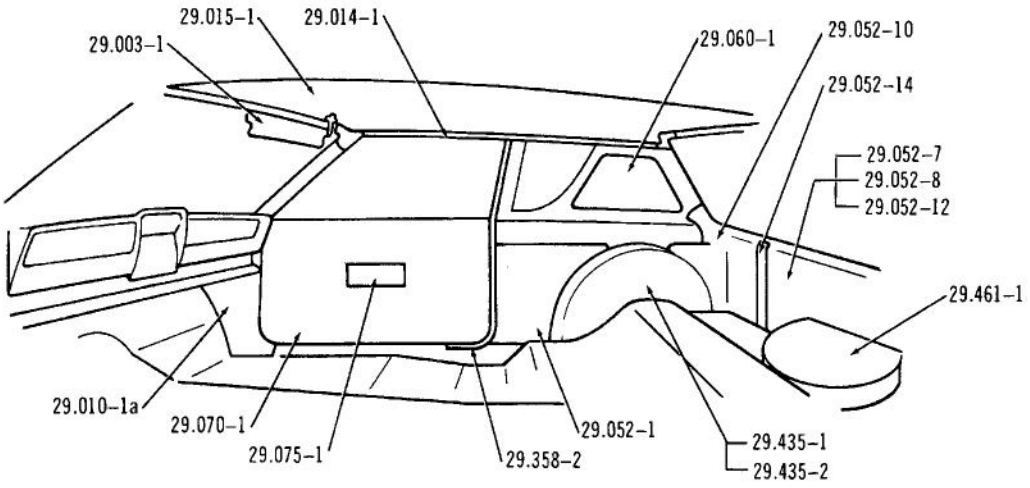

INTERIOR BODY TRIM ... 1970/ (40)

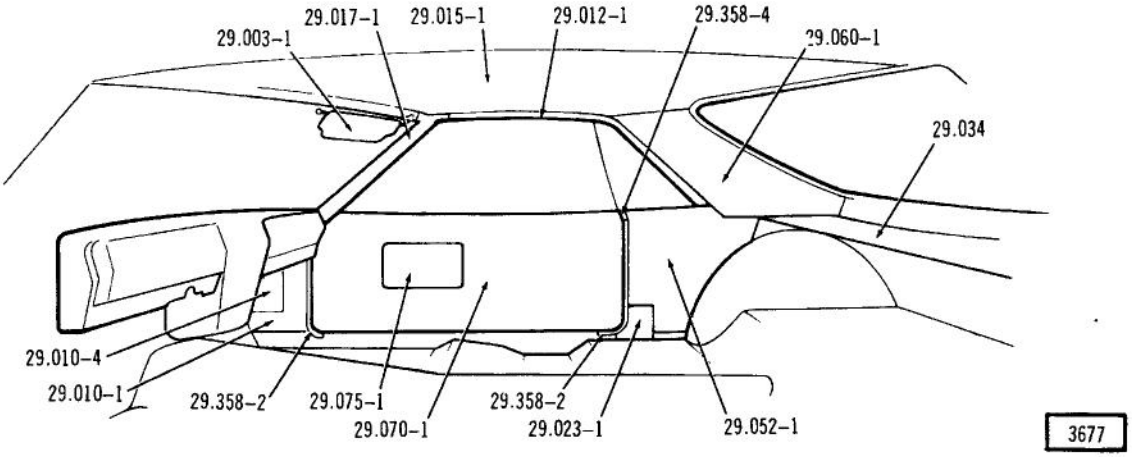

INTERIOR BODY TRIM ... 1968/70 (70)

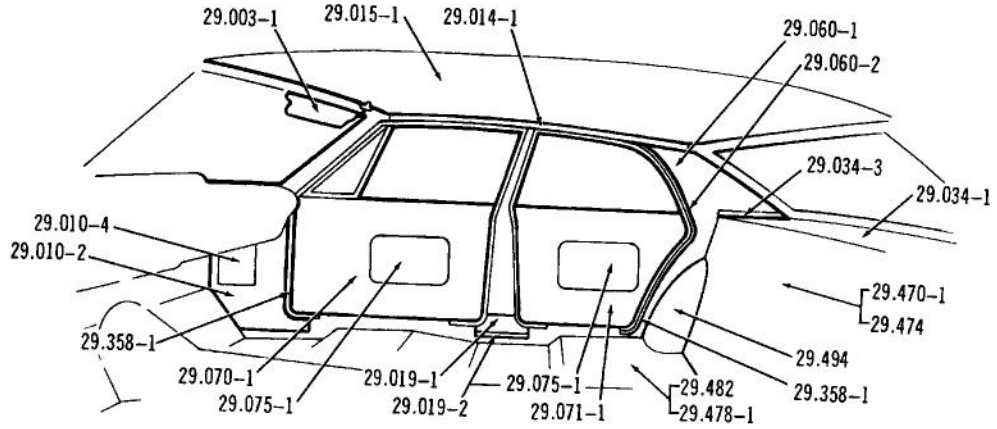

INTERIOR BODY TRIM (LESS REAR SEAT) ... 1967/ (15)(85)

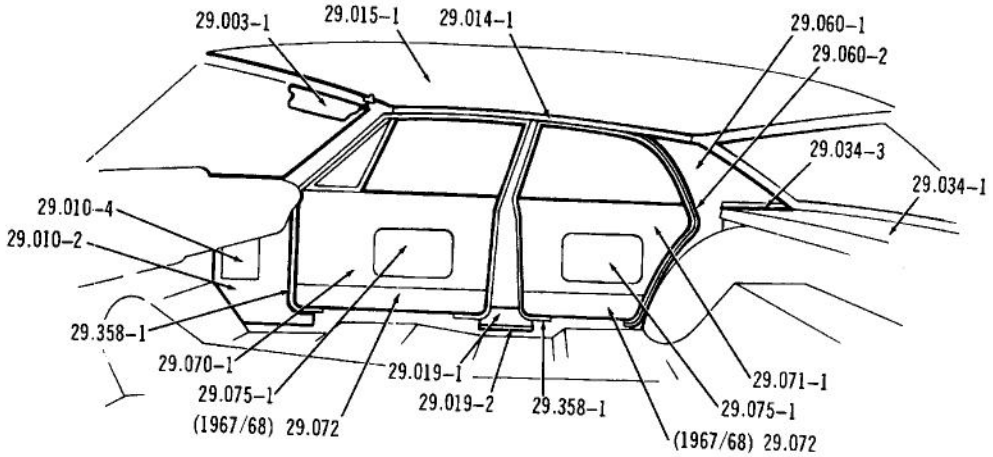

INTERIOR BODY TRIM (WITH REAR SEAT)... 1967/ (15)(85)

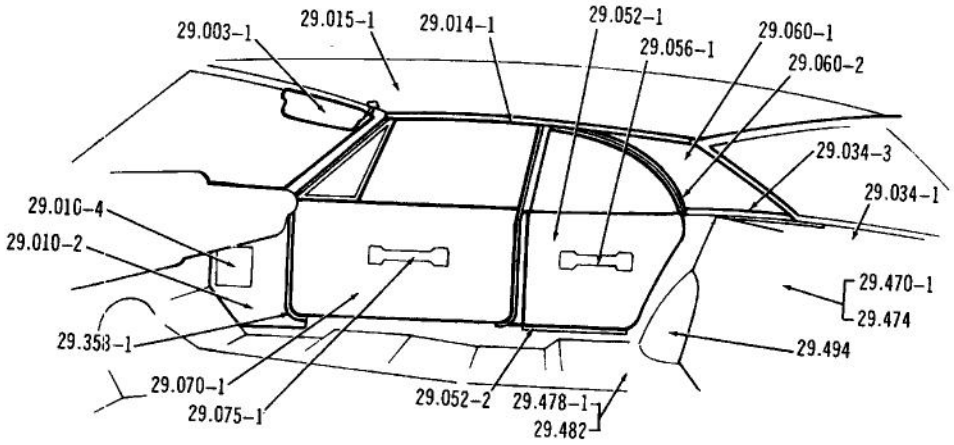

3678

INTERIOR BODY TRIM (LESS REAR SEAT) ... 1967 (16)(86)

Printed in U.S.A.

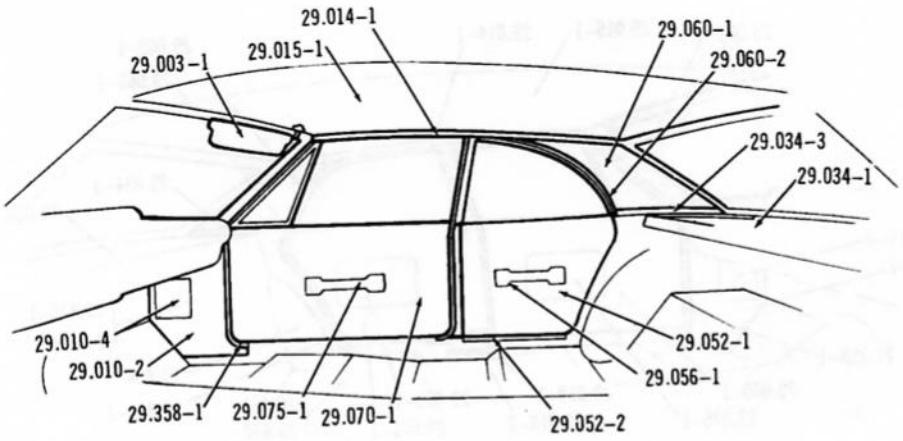

INTERIOR BODY TRIM (WITH REAR SEAT) ... 1967 (16)(86)

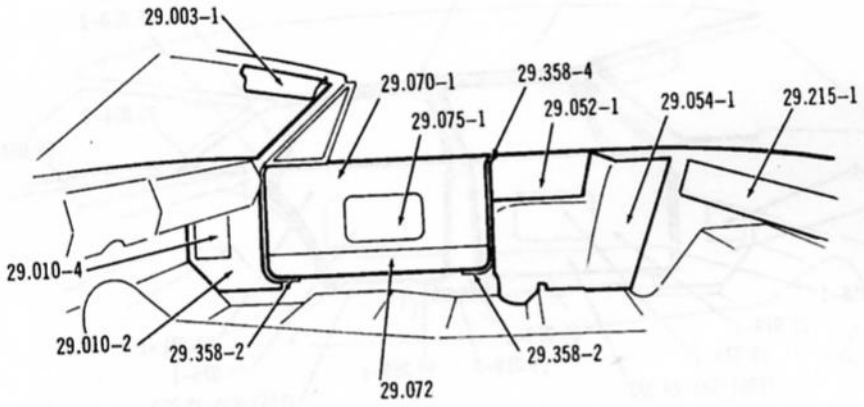

INTERIOR BODY TRIM ... 1967 (17)(87), 1968 (17)

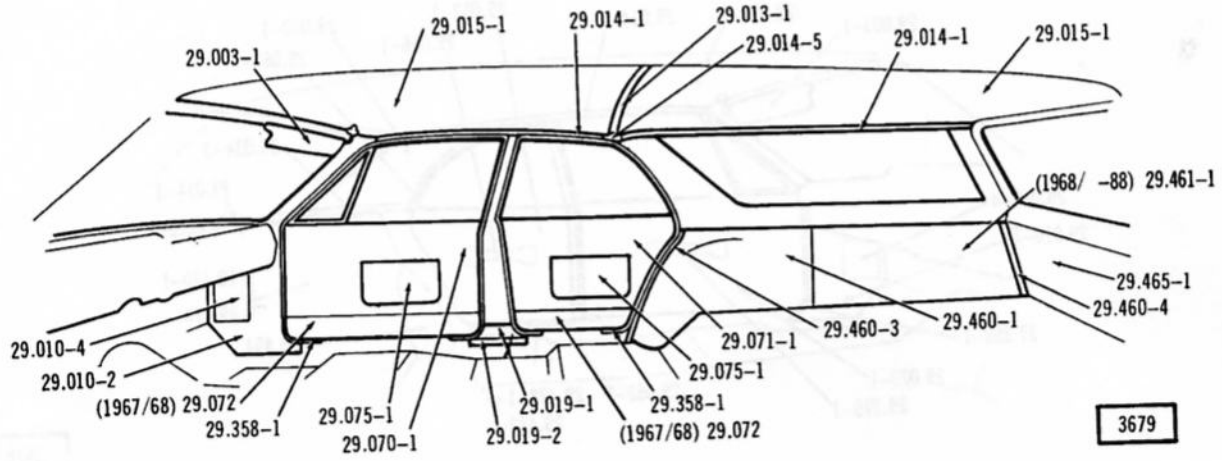

INTERIOR BODY TRIM ... 1967/ (18-L3S)(88-L3S)

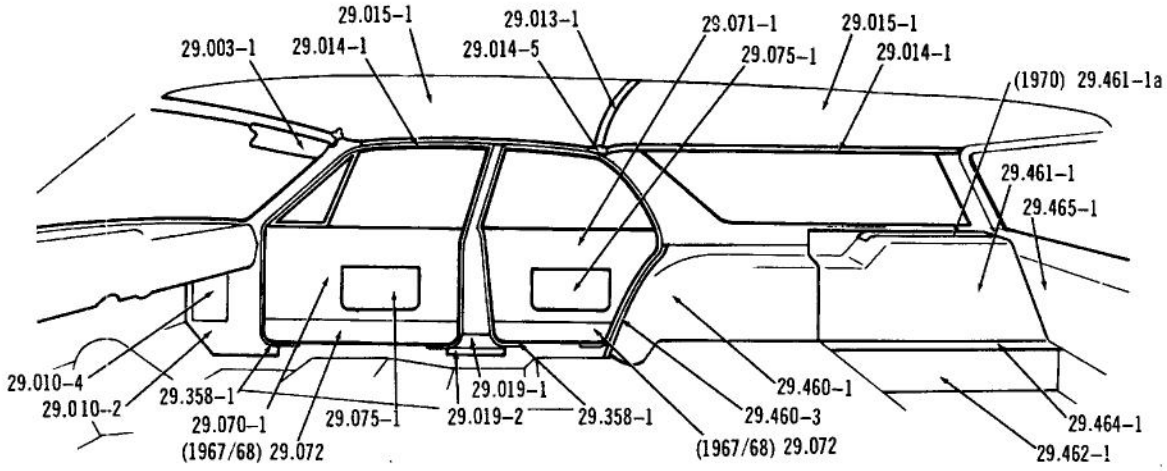

INTERIOR BODY TRIM ... 1967/ (18-W3S)(88-W3S)

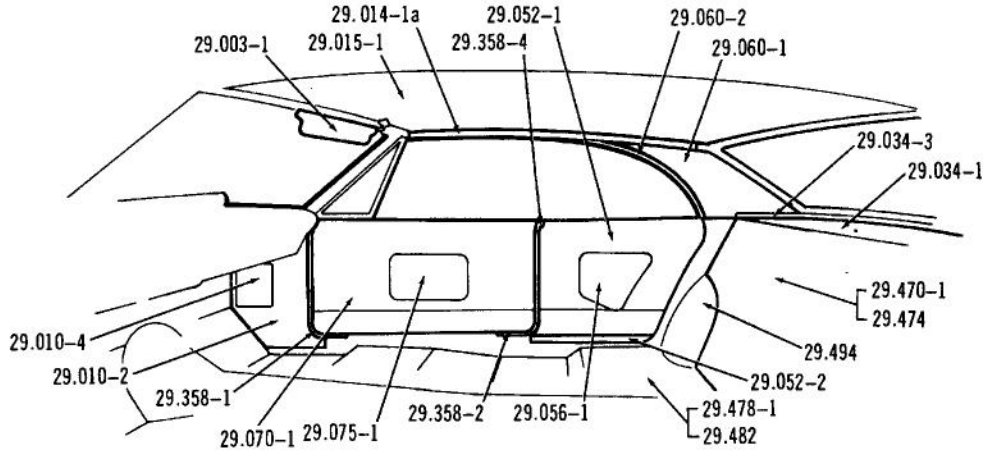

INTERIOR BODY TRIM (LESS REAR SEAT) ... 1967/ (19)(89)

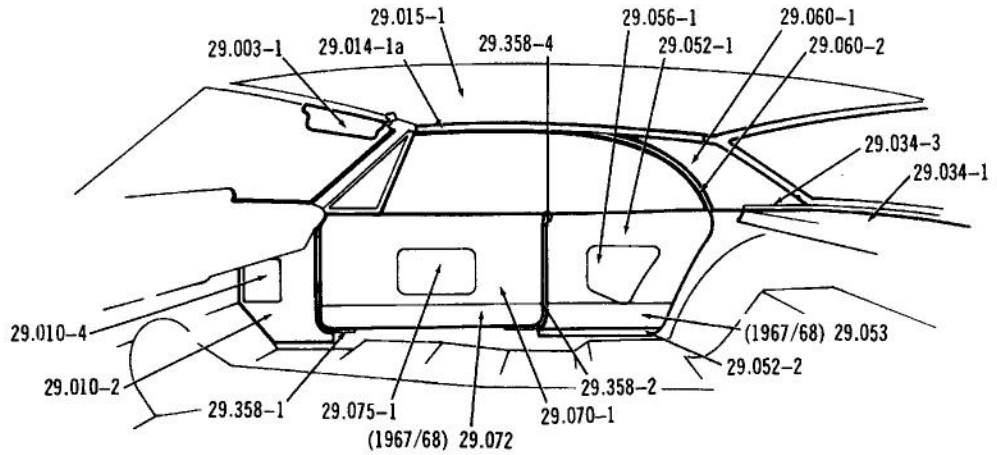

3680

INTERIOR BODY TRIM (WITH REAR SEAT) ... 1967/ (19)(89)

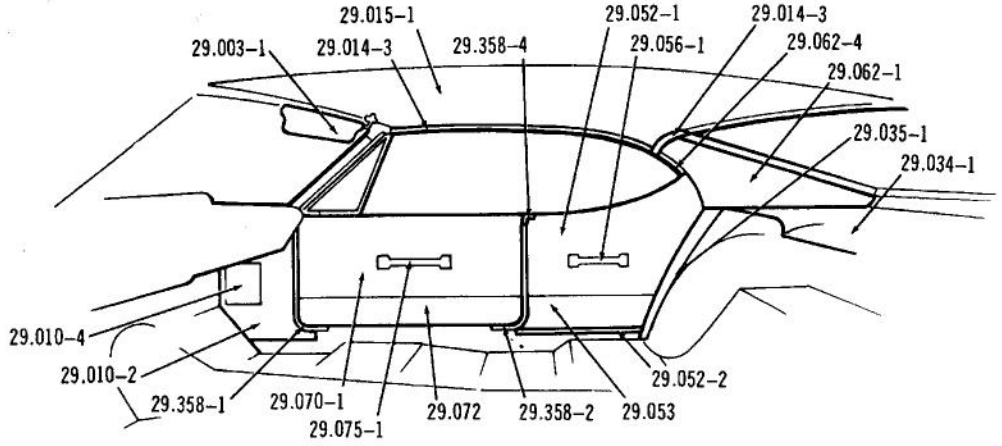

INTERIOR BODY TRIM ... 1967 (59)

3681

SEATS - SOFT TRIM

29.003–1 VISOR, Sun (Less Mounting Bracket And Retaining Rod - * 29-1)

1967 MODELS

67 05-06-08-09 ..... 2 448 4146

Trim No.			Per Car	10-80 (LCV)	07-17-87	59	
T-741	Left		1		448 4139		
	Right		1		448 4138		
T-743	Left		1		448 4141		
	Right		1		448 4140		
T-745	Left		1		448 4143		
	Right		1		448 4142		
T-748	Left		1		448 4139		
	Right		1		448 4138		
T-749	Left		1		448 4145		
	Right		1		448 4144		
T-753		Blue	2	448 4201			
		Off White	2	448 4200			
T-758		Off White	2	448 4200			
T-759		Tan	2	448 4204			
		Off White	2	448 4200			
T-771		Black	2	448 4206			
		Off White	2	448 4200			
	Left	(* 29-4)	1		448 4209		
		(* 29-5)	1		448 5403		
	Right	(* 29-4)	1		448 4208		
		(* 29-5)	1		448 5402		
T-773		Blue	2	448 4201			
		Off White	2	448 4200			
	Left	(* 29-4)	1		448 4211		
		(* 29-5)	1		448 5405		
	Right	(* 29-4)	1		448 4210		
		(* 29-5)	1		448 5404		
T-774		Green	2	448 4202			
		Off White	2	448 4200			
T-775		Red	2	448 4277			
		Off White	2	448 4200			
	Left	(* 29-4)	1		448 4215		
		(* 29-5)	1		448 5407		
	Right	(* 29-4)	1		448 4214		
		(* 29-5)	1		448 5406		
T-776		Off White	2	448 4200			
		Burgundy	2	448 4205			
	Left	(* 29-4)	1		448 4217		
		(* 29-5)	1		448 5409		
	Right	(* 29-4)	1		448 4216		
		(* 29-5)	1		448 5408		
T-777		Aqua	2	448 4203			
		Off White	2	448 4200			
T-778		Off White	2	448 4200			
	Left	(* 29-4)	1		448 4209		
		(* 29-5)	1		448 5403		
	Right	(* 29-4)	1		448 4208		
		(* 29-5)	1		448 5402		
T-779		Tan	2	448 4204			
		Off White	2	448 4200			
	Left	(* 29-4)	1		448 4219		
		(* 29-5)	1		448 5411		
	Right	(* 29-4)	1		448 4218		
		(* 29-5)	1		448 5410		
T-781		Off White	2	448 4200			
T-783		Blue	2	448 4201			
		Off White	2	448 4200			
T-787		Aqua	2	448 4203			
		Off White	2	448 4200			

SEATS - SOFT TRIM

Trim No.			Per Car	10-80 (LCV)	07-17-87	59	
T-789		Tan	2	448 4204	... .	... .	... .
		Off White	2	448 4200	... .	... .	... .
T-791		Black	2	448 4206	... .	448 4206	... .
		Off White	2	448 4200	... .	... .	... .
	Left	(* 29-4)	1	... .	448 4209	... .	... .
		(* 29-5)	1	... .	448 5403	... .	... .
	Right	(* 29-4)	1	... .	448 4208	... .	... .
		(* 29-5)	1	... .	448 5402	... .	... .
T-793		Blue	2	448 4201	... .	448 4841	... .
		Off White	2	448 4200	... .	... .	... .
	Left	(* 29-4)	1	... .	448 4211	... .	... .
		(* 29-5)	1	... .	448 5405	... .	... .
	Right	(* 29-4)	1	... .	448 4210	... .	... .
		(* 29-5)	1	... .	448 5404	... .	... .
T-794		Green	2	448 4202	... .	... .	... .
		Off White	2	448 4200	... .	... .	... .
T-795		Red	2	448 4277	... .	448 4277	... .
		Off White	2	448 4200	... .	... .	... .
	Left	(* 29-4)	1	... .	448 4215	... .	... .
		(* 29-5)	1	... .	448 5407	... .	... .
	Right	(* 29-4)	1	... .	448 4214	... .	... .
		(* 29-5)	1	... .	448 5406	... .	... .
T-796		Burgundy	2	448 4205	... .	... .	... .
		Off White	2	448 4200	... .	... .	... .
	Left	(* 29-4)	1	... .	448 4217	... .	... .
		(* 29-5)	1	... .	448 5409	... .	... .
	Right	(* 29-4)	1	... .	448 4216	... .	... .
		(* 29-5)	1	... .	448 5408	... .	... .
T-797		Aqua	2	448 4203	... .	... .	... .
		Off White	2	448 4200	... .	... .	... .
T-798		Off White	2	448 4200	... .	... .	... .
	Left	(* 29-4)	1	... .	448 4209	... .	... .
		(* 29-5)	1	... .	448 5403	... .	... .
	Right	(* 29-4)	1	... .	448 4208	... .	... .
		(* 29-5)	1	... .	448 5402	... .	... .
T-799		Tan	2	448 4204	... .	448 4842	... .
		Off White	2	448 4200	... .	... .	... .
	Left	(* 29-4)	1	... .	448 4219	... .	... .
		(* 29-5)	1	... .	448 5411	... .	... .
	Right	(* 29-4)	1	... .	448 4218	... .	... .
		(* 29-5)	1	... .	448 5410	... .	... .

1968 MODELS

68 01 ..... 2 448 5354

Trim No.			Per Car	30-70	15-18-85-88	17	19-89
T-831			2	448 5355	... .	... .	... .
T-832			2	448 5357	... .	... .	... .
T-835			2	448 5356	... .	... .	... .
T-851		(* 29-2)	2	... .	448 4200	... .	448 4206
		(* 29-3)	2	... .	448 5367	... .	448 5362
	Left		1	... .	... .	448 5371	... .
	Right		1	... .	... .	448 5370	... .
T-853		(* 29-2)	2	... .	448 5358	... .	448 5358
		(* 29-3)	2	... .	448 5363	... .	448 5363
	Left		1	... .	... .	448 5373	... .
	Right		1	... .	... .	448 5372	... .
T-855		(* 29-2)	2	... .	448 4200	... .	448 4277
		(* 29-3)	2	... .	448 5367	... .	448 5365
	Left		1	... .	... .	448 5377	... .
	Right		1	... .	... .	448 5376	... .

SEATS - SOFT TRIM

Trim No.			Per Car	30-70	15-18-85-88	17	19-89
T-871		(* 29-2)	2	... .	448 4200	... .	448 4206
		(* 29-3)	2	... .	448 5367	... .	448 5362
	Left		1	... .	... .	448 5371	... .
	Right		1	... .	... .	448 5370	... .
T-873		(* 29-2)	2	... .	448 5358	... .	448 5358
		(* 29-3)	2	... .	448 5363	... .	448 5363
	Left		1	... .	... .	448 5373	... .
	Right		1	... .	... .	448 5372	... .
T-874		(* 29-2)	2	... .	448 5359	... .	448 5359
		(* 29-3)	2	... .	448 5364	... .	448 5364
	Left		1	... .	... .	448 5375	... .
	Right		1	... .	... .	448 5374	... .
T-875		(* 29-2)	2	... .	448 4200	... .	448 4277
		(* 29-3)	2	... .	448 5367	... .	448 5365
	Left		1	... .	... .	448 5377	... .
	Right		1	... .	... .	448 5376	... .
T-876		(* 29-2)	2	... .	448 5360	... .	448 5360
		(* 29-3)	2	... .	448 5366	... .	448 5366
	Left		1	... .	... .	448 5379	... .
	Right		1	... .	... .	448 5378	... .
T-879		(* 29-2)	2	... .	448 5361	... .	448 5361
		(* 29-3)	2	... .	448 5368	... .	448 5368
	Left		1	... .	... .	448 5381	... .
	Right		1	... .	... .	448 5380	... .
T-881		(* 29-2)	2	... .	448 4200	... .	448 4206
		(* 29-3)	2	... .	448 5367	... .	448 5362
T-883		(* 29-2)	2	... .	448 5358	... .	448 5358
		(* 29-3)	2	... .	448 5363	... .	448 5363
T-885		(* 29-2)	2	... .	448 4200	... .	448 4277
		(* 29-3)	2	... .	448 5367	... .	448 5365
T-891		(* 29-2)	2	... .	448 4200	... .	448 4206
		(* 29-3)	2	... .	448 5367	... .	448 5362
T-893		(* 29-2)	2	... .	448 5358	... .	448 5358
		(* 29-3)	2	... .	448 5363	... .	448 5363
T-894		(* 29-2)	2	... .	448 5359	... .	448 5359
		(* 29-3)	2	... .	448 5364	... .	448 5364
T-895		(* 29-2)	2	... .	448 4200	... .	448 4277
		(* 29-3)	2	... .	448 5367	... .	448 5365
T-896		(* 29-2)	2	... .	448 5360	... .	448 5360
		(* 29-3)	2	... .	448 5366	... .	448 5366
T-899		(* 29-2)	2	... .	448 5361	... .	448 5361
		(* 29-3)	2	... .	448 5368	... .	448 5368

1969 MODELS

69 01 .... 2 448 5354

Trim No.		Per Car	30-70	10-80		
T-000		2	... .	448 6634	... .	... .
T-931		2	448 6627	... .	... .	... .
T-932		2	448 6627	... .	... .	... .
T-935		2	448 5356	... .	... .	... .
T-936		2	448 6629	... .	... .	... .
T-951		2	... .	448 6634	... .	... .
T-953	Blue	2	... .	448 6633	... .	... .
	Platinum	2	... .	448 6634	... .	... .
T-956		2	... .	448 6632	... .	... .
T-957		2	... .	448 6631	... .	... .
T-961		2	448 6627	... .	... .	... .

SEATS - SOFT TRIM

Trim No.		Per Car	30-70	10-80		
T-962		2	448 6627	... .	... .	... .
T-963		2	448 6628	... .	... .	... .
T-965		2	448 5356	... .	... .	... .
T-966		2	448 6630	... .	... .	... .
T-972		2	... .	448 6634	... .	... .
T-973	Blue	2	... .	448 6633	... .	... .
	Platinum	2	... .	448 6634	... .	... .
T-975		2	... .	448 5365	... .	... .
T-976		2	... .	448 6632	... .	... .
T-977		2	... .	448 6631	... .	... .
T-979		2	... .	448 6631	... .	... .
T-981		2	... .	448 6634	... .	... .
T-983		2	... .	448 6633	... .	... .
T-986		2	... .	448 6632	... .	... .
T-987		2	... .	448 6631	... .	... .
T-991		2	... .	448 6634	... .	... .
T-992		2	... .	448 6634	... .	... .
T-993	Blue	2	... .	448 6633	... .	... .
	Platinum	2	... .	448 6634	... .	... .
T-995		2	... .	448 5365	... .	... .
T-996		2	... .	448 6632	... .	... .
T-997		2	... .	448 6631	... .	... .
T-999		2	... .	448 6631	... .	... .

1970 MODELS

70 01-40 ..... 2 448 7945

Trim No.		Per Car	10-30-70-80
T-031		2	448 7920
T-033		2	448 7921
T-035		2	448 7923
T-036		2	448 7924
T-051	(15)(18)(85)(88)	2	448 7912
	(19)	2	448 7913
T-053		2	448 7914
T-054		2	448 7915
T-056		2	448 7917
T-061		2	448 7920
T-063		2	448 7921
T-064		2	448 7922
T-065		2	448 7923
T-066		2	448 7924
T-071	(15)(18)	2	448 7912
	(19)	2	448 7913
T-073		2	448 7914
T-074		2	448 7915
T-075	(15)(18)	2	448 7912
	(19)	2	448 7916
T-076		2	448 7917
T-081		2	448 7912
T-083		2	448 7914
T-084		2	448 7915
T-086		2	448 7917
T-091	(85)(88)	2	448 7912
	(89)	2	448 7913
T-093		2	448 7914
T-094		2	448 7915
T-095	(85)(88)	2	448 7912
	(89)	2	448 7916
T-096		2	448 7917

SEATS - SOFT TRIM

1971 - 1972 MODELS

71	01-40 (* 29-132)	2	448 9231
71	01-40 (* 29-133)	2	812 0198
72	01-40 (Except Gucci Trim)	2	812 1289
72	08 (Gucci Trim)	2	812 0628

Trim No.			Per Car	10-70-80
T-151	(15)(18)	(* 29-132)	2	448 9273
		(* 29-133)	2	812 0203
	(19)	(* 29-132)	2	448 9274
		(* 29-133)	2	812 0204
T-153		(* 29-132)	2	448 9275
		(* 29-133)	2	812 0205
T-154		(* 29-132)	2	448 9276
		(* 29-133)	2	812 0206
T-161		(* 29-132)	2	448 9267
		(* 29-133)	2	812 0199
T-163		(* 29-132)	2	448 9268
		(* 29-133)	2	812 0200
T-164		(* 29-132)	2	448 9269
		(* 29-133)	2	812 0201
T-165		(* 29-132)	2	448 9270
		(* 29-133)	2	812 0202
T-168		(* 29-132)	2	448 9267
		(* 29-133)	2	812 0199
T-171	(15)(18)	(* 29-132)	2	448 9273
		(* 29-133)	2	812 0203
	(19)	(* 29-132)	2	448 9274
		(* 29-133)	2	812 0204
T-173		(* 29-132)	2	448 9275
		(* 29-133)	2	812 0205
T-174		(* 29-132)	2	448 9276
		(* 29-133)	2	812 0206
T-175	(15)(18)	(* 29-132)	2	448 9273
		(* 29-133)	2	812 0203
	(19)	(* 29-132)	2	448 9277
		(* 29-133)	2	812 0207
T-176	(15)(18)	(* 29-132)	2	448 9273
		(* 29-133)	2	812 0203
	(19)	(* 29-132)	2	448 9274
		(* 29-133)	2	812 0204
T-181		(* 29-132)	2	448 9273
		(* 29-133)	2	812 0203
T-183		(* 29-132)	2	448 9275
		(* 29-133)	2	812 0205
T-184		(* 29-132)	2	448 9276
		(* 29-133)	2	812 0206
T-186		(* 29-132)	2	448 9273
		(* 29-133)	2	812 0203
T-191	(85)(88)	(* 29-132)	2	448 9273
		(* 29-133)	2	812 0203
	(89)	(* 29-132)	2	448 9274
		(* 29-133)	2	812 0204
T-193		(* 29-132)	2	448 9275
		(* 29-133)	2	812 0205
T-194		(* 29-132)	2	448 9276
		(* 29-133)	2	812 0206

Printed in U.S.A.

Trim No.			Per Car	10-70-80
T-195	(85)(88)	(* 29-132)	2	448 9273
		(* 29-133)	2	812 0203
	(89)	(* 29-132)	2	448 9277
		(* 29-133)	2	812 0204
T-196	(85)(88)	(* 29-132)	2	448 9273
		(* 29-133)	2	812 0203
	(89)	(* 29-132)	2	448 9274
		(* 29-133)	2	812 0204
T-261			2	812 0653
T-263			2	812 0654
T-264			2	812 0655
T-265			2	812 0653
T-266			2	812 0656
T-271			2	812 0820
T-273			2	812 0821
T-274			2	812 0822
T-276			2	812 0823
T-291			2	812 0820
T-293			2	812 0821
T-294			2	812 0822
T-296			2	812 0823

29.003–2 ATTACHING PARTS, Visor Rod To Pivot Arm

SCREW, Machine	67/68	10-50-80 (LCV-* 29-2)	17.598	2	G159921	
SCREW, Machine	67	17-87 (* 29-2)	17.598	2	G159914	

29.003–3 BRACKET, Sun Visor

70/	01-40	27.010	2	362 7184
67	(Chrome-Left) 05-06-08-09	27.010	1	357 3057
67	(Silver-Left) 05-06-08	27.010	1	357 3055
67	(Left) 07	27.010	1	350 1969
68/69	(Left) 01	27.010	1	359 8847
67	(Chrome-Left) 15-18-19-59-85-88-89	27.010	1	357 9561
68	(Left) 15-18-19-85-88-89 (* 29-85)	27.010	1	357 9561
69/	(Left) 10-30-70-80	27.010	1	360 4337
68	(Left) 15-18-19-39-79-85-88-89 (* 29-6)	27.010	1	360 4337
67	(Left) 17-87	27.010	1	357 9565
68	(Left) 17	27.010	1	361 2463
67	(Chrome-Right) 05-06-08-09	27.010	1	357 3056
67	(Silver-Right) 05-06-08	27.010	1	357 3054
67	(Right) 07	27.010	1	350 1968
68/69	(Right) 01	27.010	1	359 8846
67	(Chrome-Right) 15-18-19-59-85-88-89	27.010	1	357 9560
68	(Right) 15-18-19-85-88 (* 29-85)	27.010	1	357 9560
68	(Right) 15-18-19-39-79-86-88 (* 29-6)	27.010	1	360 4336
69/	(Right) 10-30-70-80	27.010	1	360 4336
67	(Right) 17-87	27.010	1	357 9564
68	(Right) 17	27.010	1	361 2462

29.003–4 ATTACHING PARTS, Bracket To Windshield Header Bar

SCREW, Tapping	67/	05-06-08-09-46	17.654	6	G162474	NA
SCREW, Tapping	67	07 (7/8" Long)	17.654	2	G162479	NA
SCREW, Tapping	67	07 (1-1/2" Long)	17.654	2	G162488	NA
SCREW, Tapping	67	10-50-80 ***(Use 448 9492)***	17.654	6	G162402	
SCREW, Tapping	68/	15-18-19-39-79-85-88-89 ***(Use 448 9492)***	17.654	6	G162402	
SCREW, Tapping	68	17	17.654	6	G168608	NA

Printed in U.S.A.

SEATS - SOFT TRIM

29.003–5 ATTACHING PARTS, Pivot Arm To Sun Visor

SCREW, Machine.....	67/68	10-50-80 (* 29-6)	17.598	2	G159921 NA

29.003–6 BUSHING, Sun Visor Pivot Arm (Nylon)

67/68	10-50-80 (* 29-6)	27.010	2	357 9586

29.004–1 ROD, Sun Visor End Retaining

67/68	01-10-50-80 (* 29-115) ...(Incl. Rubber Cap)	27.012	2	353 1911
68	01-10-70-80 (* 29-116)	27.012	2	360 4454
68	(LCV-* 29-117) ...(Incl. Rubber Cap)	27.012	2	360 4834
69	...(Incl. Rubber Cap)	27.012	2	360 4834
70/	10-30-70-80...(Incl. Rubber Cap)	27.012	2	360 4834

29.004–2 CAP, Sun Visor End Retaining Rod (Rubber)

67/68	01-10-50-70-80 (* 29-115)(Black)	27.012	2	353 1913
68	(LCV-* 29-117)(Black)	27.012	2	360 4833
67/68	10-50-80 (* 29-115)(Gray) ..... *(Use 360 4834)*	27.012	2	448 7138
69	.....	27.012	2	360 4833
70/	10-30-70-80.....	27.012	2	360 4833

29.005–1 STRAP, Assist

67/71	*15-85 (Taxi)*	.....	2	348 8319
72	*15 (Taxi)*	.....	2	366 4897

29.005–1a PAD, Assist Strap

67/71	*15-85 (Taxi)*	.....	2	348 8302

29.005–2 ATTACHING PARTS, Assist Strap

SCREW, Tapping.....	67/	.....	17.666	2	G162996 NA

29.010–1 PANEL, Cowl Trim (Less Door, Gaskets, Seal And Filler)(For 70 01 Refer To Group 29.010–1a)

1967 Thru 1969 MODELS

Trim No.			Per Car	01-30-70 (LCV)	07		
T-723	Left	.....	1	358 1055	... .	... .	... .
	Right	.....	1	358 1054	... .	... .	... .
T-728	Left	.....	1	350 1797	... .	... .	... .
	Right	.....	1	350 1796	... .	... .	... .
T-729	Left	.....	1	358 1063	... .	... .	... .
	Right	.....	1	358 1062	... .	... .	... .
T-741	Left	.....	1	350 1797	... .	... .	... .
		Upper.....	1	... .	350 2561	... .	... .
		Lower	1	... .	350 2583	... .	... .
	Right	.....	1	350 1796	... .	... .	... .
		Upper.....	1	... .	350 2560	... .	... .
		Lower	1	... .	350 2582	... .	... .
T-743	Left	.....	1	358 1055	... .	... .	... .
		Upper.....	1	... .	358 1073	... .	... .
		Lower	1	... .	358 1093	... .	... .
	Right	.....	1	358 1054	... .	... .	... .
		Upper.....	1	... .	358 1072	... .	... .
		Lower	1	... .	358 1092	... .	... .

SEATS - SOFT TRIM

Trim No.			Per Car	01-30-70 (LCV)	07		
T-744	Left		1	356 3141	... .	... .	... .
	Right		1	356 3140	... .	... .	... .
T-745	Left		1	358 1059	... .	... .	... .
		Upper	1	... .	358 1077	... .	... .
		Lower	1	... .	358 1097	... .	... .
	Right		1	358 1058	... .	... .	... .
		Upper	1	... .	358 1076	... .	... .
		Lower	1	... .	358 1096	... .	... .
T-747	Left		1	353 8117	... .	... .	... .
	Right		1	353 8116	... .	... .	... .
T-748	Left		1	350 1797	... .	... .	... .
		Upper	1	... .	350 2561	... .	... .
		Lower	1	... .	350 2583	... .	... .
	Right		1	350 1796	... .	... .	... .
		Upper	1	... .	350 2560	... .	... .
		Lower	1	... .	350 2582	... .	... .
T-749	Left		1	358 1063	... .	... .	... .
		Upper	1	... .	358 1079	... .	... .
		Lower	1	... .	358 1099	... .	... .
	Right		1	358 1062	... .	... .	... .
		Upper	1	... .	358 1078	... .	... .
		Lower	1	... .	358 1098	... .	... .
T-828	Left		1	359 2621	... .	... .	... .
	Right		1	359 2620	... .	... .	... .
T-831	Left		1	360 4223	... .	... .	... .
	Right		1	360 4222	... .	... .	... .
T-832	Left		1	359 9259	... .	... .	... .
	Right		1	359 9258	... .	... .	... .
T-835	Left		1	360 4215	... .	... .	... .
	Right		1	360 4214	... .	... .	... .
T-838	Left		1	360 4223	... .	... .	... .
	Right		1	360 4222	... .	... .	... .
T-843	Left		1	360 7031	... .	... .	... .
	Right		1	360 7030	... .	... .	... .
T-844	Left		1	360 7033	... .	... .	... .
	Right		1	360 7032	... .	... .	... .
T-845	Left		1	359 2623	... .	... .	... .
	Right		1	359 2622	... .	... .	... .
T-848	Left		1	359 2621	... .	... .	... .
	Right		1	359 2620	... .	... .	... .
T-923	Left		1	362 3929	... .	... .	... .
	Right		1	362 3928	... .	... .	... .
T-928	Left		1	362 3927	... .	... .	... .
	Right		1	362 3926	... .	... .	... .
T-931	Left		1	362 3937	... .	... .	... .
	Right		1	362 3936	... .	... .	... .
T-932	Left		1	362 3937	... .	... .	... .
	Right		1	362 3936	... .	... .	... .
T-935	Left		1	362 3943	... .	... .	... .
	Right		1	362 3942	... .	... .	... .
T-936	Left		1	362 3941	... .	... .	... .
	Right		1	362 3940	... .	... .	... .
T-941	Left		1	362 3927	... .	... .	... .
	Right		1	362 3926	... .	... .	... .
T-943	Left		1	362 3929	... .	... .	... .
	Right		1	362 3928	... .	... .	... .
T-944	Left		1	362 3931	... .	... .	... .
	Right		1	362 3930	... .	... .	... .

SEATS - SOFT TRIM

Trim No.		Per Car	01-30-70 (LCV)	07		
T-945	Left	1	362 3935	... .	... .	... .
	Right	1	362 3934	... .	... .	... .
T-961	Left	1	362 3937	... .	... .	... .
	Right	1	362 3936	... .	... .	... .
T-962	Left	1	362 3937	... .	... .	... .
	Right	1	362 3936	... .	... .	... .
T-963	Left	1	362 3939	... .	... .	... .
	Right	1	362 3938	... .	... .	... .
T-965	Left	1	362 3943	... .	... .	... .
	Right	1	362 3942	... .	... .	... .
T-966	Left	1	362 3941	... .	... .	... .
	Right	1	362 3940	... .	... .	... .
T-968	Left	1	362 3937	... .	... .	... .
	Right	1	362 3936	... .	... .	... .

1970 MODELS

Trim No.		Per Car	30-70
T-031	Left	1	360 4223
	Right	1	360 4222
T-033	Left	1	362 9607
	Right	1	362 9606
T-035	Left	1	362 3943
	Right	1	362 3942
T-036	Left	1	362 9611
	Right	1	362 9610
T-061	Left	1	360 4223
	Right	1	360 4222
T-063	Left	1	362 9607
	Right	1	362 9606
T-064	Left	1	362 9609
	Right	1	362 9608
T-065	Left	1	362 3943
	Right	1	362 3942
T-066	Left	1	362 9611
	Right	1	362 9610

1971 - 1972 MODELS (Less Insulation)

Trim No.		Per Car	70
T-161	Left	1	363 9215
	Right	1	363 9234
T-163	Left	1	363 9216
	Right	1	363 9235
T-164	Left	1	363 9217
	Right	1	363 9236
T-165	Left	1	363 9218
	Right	1	363 9237
T-168	Left	1	363 9215
	Right	1	363 9234
T-261	Left	1	363 9215
	Right	1	365 3684
T-263	Left	1	365 3670
	Right	1	365 3685

Printed in U.S.A.

SEATS - SOFT TRIM

Trim No.			Per Car	70
T-264	Left		1	365 3671
	Right		1	365 3686
T-265	Left		1	363 9215
	Right		1	365 3684
T-266	Left		1	365 3673
	Right		1	365 3688
T-268	Left		1	363 9215
	Right		1	365 3684

29.010–1a PANEL, Cowl Trim (Less Insulation)

1970 Thru 1972 MODELS

Trim No.			Per Car	01-40
T-001	Left		1	362 7009
	Right		1	362 7008
T-008	Left		1	362 7009
	Right		1	362 7008
T-011	Left		1	362 7009
	Right		1	362 7008
T-013	Left		1	362 7011
	Right		1	362 7010
T-014	Left		1	362 7013
	Right		1	362 7012
T-015	Left		1	362 7015
	Right		1	362 7014
T-021	Left		1	362 7009
	Right		1	362 7008
T-023	Left		1	362 7011
	Right		1	362 7010
T-024	Left		1	362 7013
	Right		1	362 7012
T-025	Left		1	362 7015
	Right		1	362 7014
T-041	Left		1	362 7009
	Right		1	362 7008
T-043	Left		1	362 7011
	Right		1	362 7010
T-044	Left		1	362 7013
	Right		1	362 7012
T-045	Left		1	362 7015
	Right		1	362 7014
T-101	Left		1	362 7009
	Right		1	362 7008
T-103	Left	Except "A" Trim	1	363 8843
	Right	Except "A" Trim	1	363 8842
T-103A	Left		1	362 7009
	Right		1	362 7008
T-104A	Left		1	362 7009
	Right		1	362 7008
T-108	Left		1	362 7009
	Right		1	362 7008
T-111	Left		1	362 7009
	Right		1	362 7008
T-113	Left		1	363 8843
	Right		1	363 8842
T-114	Left		1	363 8845
	Right		1	363 8844
T-115	Left		1	363 8847
	Right		1	363 8846

SEATS - SOFT TRIM

Trim No.		Per Car	01-40
T-121	Left	1	362 7009
	Right	1	362 7008
T-123	Left	1	363 8843
	Right	1	363 8842
T-124	Left	1	363 8845
	Right	1	363 8844
T-128	Left	1	362 7009
	Right	1	362 7008
T-141	Left	1	362 7009
	Right	1	362 7008
T-143	Left	1	363 8843
	Right	1	363 8842
T-144	Left	1	363 8845
	Right	1	363 8844
T-145	Left	1	363 8847
	Right	1	363 8846
T-201	Left	1	365 3097
	Right	1	365 3096
T-203	Left	1	365 3091
	Right	1	365 3090
T-206	Left	1	365 3099
	Right	1	365 3098
T-208	Left	1	365 3097
	Right	1	365 3096
T-211	Left	1	365 3097
	Right	1	365 3096
T-213	Left	1	365 3091
	Right	1	365 3090
T-215	Left	1	365 3097
	Right	1	365 3096
T-216	Left	1	365 3099
	Right	1	365 3098
T-218	Left	1	365 3097
	Right	1	365 3096
T-221	Left	1	365 3097
	Right	1	365 3096
T-223	Left	1	365 3091
	Right	1	365 3090
T-224	Left	1	365 3093
	Right	1	365 3092
T-226	Left	1	365 3099
	Right	1	365 3098
T-241	Left	1	365 3097
	Right	1	365 3096
T-243	Left	1	365 3091
	Right	1	365 3090
T-244	Left	1	365 3093
	Right	1	365 3092
T-245	Left	1	365 3097
	Right	1	365 3096
T-246	Left	1	365 3099
	Right	1	365 3098
T-248	Left	1	365 3097
	Right	1	365 3096

Printed in U.S.A.

SEATS - SOFT TRIM

29.010–1b INSULATION, Panel Cowl Trim

70/	(Left) 01–40	1	363 5737
70/	(Right) 01–40	1	363 5736
71/	70 (Used On Right Side Only)	1	365 0565

29.010–2 PANEL, Cowl Trim (Less Door, Grille And Gasket)

1967 Thru 1969 MODELS

Trim No.			Per Car	10-50-80 (LCV)	17-87		
T–753	Left		1	357 8675			
	Right		1	357 8674			
T–758	Left		1	357 8673			
	Right		1	357 8672			
T–759	Left		1	357 8683			
	Right		1	357 8682			
T–771	Left		1	357 8673			
		Upper	1		357 8693		
		Lower	1		358 1567		
	Right		1	357 8672			
		Upper	1		357 8692		
		Lower	1		358 1566		
T–773	Left		1	357 8675			
		Upper	1		357 8695		
		Lower	1		358 1569		
	Right		1	357 8674			
		Upper	1		357 8694		
		Lower	1		358 1568		
T–774	Left		1	357 8677			
	Right		1	357 8676			
T–775	Left		1	357 8679			
		Upper	1		357 8699		
		Lower	1		358 1573		
	Right		1	357 8678			
		Upper	1		357 8698		
		Lower	1		358 1572		
T–776	Left		1	357 8685			
		Upper	1		357 8703		
		Lower	1		358 1577		
	Right		1	357 8684			
		Upper	1		357 8702		
		Lower	1		358 1576		

SEATS - SOFT TRIM

Trim No.			Per Car	10-50-80 (LCV)	17-87			
T-777	Left		1	357 8681				
	Right		1	357 8680				
T-778	Left		1	357 8673				
		Upper	1		357 8693			
		Lower	1		358 1567			
	Right		1	357 8672				
		Upper	1		357 8692			
		Lower	1		358 1566			
T-779	Left		1	357 8683				
		Upper	1		357 8701			
		Lower	1		358 1575			
	Right		1	357 8682				
		Upper	1		357 8700			
		Lower	1		358 1574			
T-781	Left		1	357 8673				
	Right		1	357 8672				
T-783	Left		1	357 8675				
	Right		1	357 8674				
T-787	Left		1	357 8681				
	Right		1	357 8680				
T-789	Left		1	357 8683				
	Right		1	357 8682				
T-791	Left		1	357 8673				
		Upper	1		357 8693			
		Lower	1		358 1567			
	Right		1	357 8672				
		Upper	1		357 8692			
		Lower	1		358 1566			
T-793	Left		1	357 8675				
		Upper	1		357 8695			
		Lower	1		358 1569			
	Right		1	357 8674				
		Upper	1		357 8694			
		Lower	1		358 1568			
T-794	Left		1	357 8677				
	Right		1	357 8676				
T-795	Left		1	357 8679				
		Upper	1		357 8699			
		Lower	1		358 1573			
	Right		1	357 8678				
		Upper	1		357 8698			
		Lower	1		358 1572			
T-796	Left		1	357 8685				
		Upper	1		357 8703			
		Lower	1		358 1577			
	Right		1	357 8684				
		Upper	1		357 8702			
		Lower	1		358 1576			
T-797	Left		1	357 8681				
	Right		1	357 8680				
T-798	Left		1	357 8673				
		Upper	1		357 8693			
		Lower	1		358 1567			
	Right		1	357 8672				
		Upper	1		357 8692			
		Lower	1		358 1566			
T-799	Left		1	357 8683				
		Upper	1		357 8701			
		Lower	1		358 1575			
	Right		1	357 8682				
		Upper	1		357 8700			
		Lower	1		358 1574			

Printed in U.S.A.

SEATS - SOFT TRIM

Trim No.			Per Car	10-50-80 (LCV)	17-87		
T-851	Left		1	357 8673	... .	... .	... .
		Upper	1	... .	357 8693	... .	... .
		Lower	1	... .	358 1567	... .	... .
	Right		1	357 8672	... .	... .	... .
		Upper	1	... .	357 8692	... .	... .
		Lower	1	... .	358 1566	... .	... .
T-853	Left		1	360 5287	... .	... .	... .
		Upper	1	... .	360 5301	... .	... .
		Lower	1	... .	360 5315	... .	... .
	Right		1	360 5286	... .	... .	... .
		Upper	1	... .	360 5300	... .	... .
		Lower	1	... .	360 5314	... .	... .
T-855	Left		1	357 8679	... .	... .	... .
		Upper	1	... .	357 8699	... .	... .
		Lower	1	... .	358 1573	... .	... .
	Right		1	357 8678	... .	... .	... .
		Upper	1	... .	357 8698	... .	... .
		Lower	1	... .	358 1572	... .	... .
T-871	Left		1	357 8673	... .	... .	... .
		Upper	1	... .	357 8693	... .	... .
		Lower	1	... .	358 1567	... .	... .
	Right		1	357 8672	... .	... .	... .
		Upper	1	... .	357 8692	... .	... .
		Lower	1	... .	358 1566	... .	... .
T-873	Left		1	360 5287	... .	... .	... .
		Upper	1	... .	360 5301	... .	... .
		Lower	1	... .	360 5315	... .	... .
	Right		1	360 5286	... .	... .	... .
		Upper	1	... .	360 5300	... .	... .
		Lower	1	... .	360 5314	... .	... .
T-874	Left		1	360 5289	... .	... .	... .
		Upper	1	... .	360 5303	... .	... .
		Lower	1	... .	360 5317	... .	... .
	Right		1	360 5288	... .	... .	... .
		Upper	1	... .	360 5302	... .	... .
		Lower	1	... .	360 5316	... .	... .
T-875	Left		1	357 8679	... .	... .	... .
		Upper	1	... .	357 8699	... .	... .
		Lower	1	... .	358 1573	... .	... .
	Right		1	357 8678	... .	... .	... .
		Upper	1	... .	357 8698	... .	... .
		Lower	1	... .	358 1572	... .	... .
T-876	Left		1	360 5293	... .	... .	... .
		Upper	1	... .	360 5307	... .	... .
		Lower	1	... .	360 5321	... .	... .
	Right		1	360 5292	... .	... .	... .
		Upper	1	... .	360 5306	... .	... .
		Lower	1	... .	360 5320	... .	... .
T-879	Left		1	360 5297	... .	... .	... .
		Upper	1	... .	360 5311	... .	... .
		Lower	1	... .	360 5325	... .	... .
	Right		1	360 5296	... .	... .	... .
		Upper	1	... .	360 5310	... .	... .
		Lower	1	... .	360 5324	... .	... .
T-881	Left		1	357 8673	... .	... .	... .
	Right		1	357 8672	... .	... .	... .
T-883	Left		1	360 5287	... .	... .	... .
	Right		1	360 5286	... .	... .	... .
T-885	Left		1	357 8679	... .	... .	... .
	Right		1	357 8678	... .	... .	... .

Printed in U.S.A.

SEATS - SOFT TRIM

Trim No.		Per Car	10-50-80 (LCV)	17-87		
T-891	Left	1	357 8673			
	Right	1	357 8672			
T-893	Left	1	360 5287			
	Right	1	360 5286			
T-894	Left	1	360 5289			
	Right	1	360 5288			
T-895	Left	1	357 8679			
	Right	1	357 8678			
T-896	Left	1	360 5293			
	Right	1	360 5292			
T-899	Left	1	360 5297			
	Right	1	360 5296			
T-000	Left	1	362 0283			
	Right	1	362 0282			
T-951	Left	1	362 0283			
	Right	1	362 0282			
T-953	Left	1	362 0285			
	Right	1	362 0284			
T-956	Left	1	362 0289			
	Right	1	362 0288			
T-957	Left	1	362 0291			
	Right	1	362 0290			
T-972	Left	1	362 0283			
	Right	1	362 0282			
T-973	Left	1	362 0285			
	Right	1	362 0284			
T-975	Left	1	362 0287			
	Right	1	362 0286			
T-976	Left	1	362 0289			
	Right	1	362 0288			
T-977	Left	1	362 0291			
	Right	1	362 0290			
T-979	Left	1	362 0291			
	Right	1	362 0290			
T-981	Left	1	362 0283			
	Right	1	362 0282			
T-983	Left	1	362 0285			
	Right	1	362 0284			
T-986	Left	1	362 0289			
	Right	1	362 0288			
T-987	Left	1	362 0291			
	Right	1	362 0290			
T-991	Left	1	362 0283			
	Right	1	362 0282			
T-992	Left	1	362 0283			
	Right	1	362 0282			
T-993	Left	1	362 0285			
	Right	1	362 0284			
T-995	Left	1	362 0287			
	Right	1	362 0286			
T-996	Left	1	362 0289			
	Right	1	362 0288			
T-997	Left	1	362 0291			
	Right	1	362 0290			
T-999	Left	1	362 0291			
	Right	1	362 0290			

SEATS - SOFT TRIM

1970 Thru 1972 MODELS

Trim No.		Per Car	10-80
T-051	Left	1	362 9551
	Right	1	362 9550
T-053	Left	1	362 9555
	Right	1	362 9554
T-054	Left	1	362 9557
	Right	1	362 9556
T-056	Left	1	362 9559
	Right	1	362 9558
T-071	Left	1	362 9551
	Right	1	362 9550
T-073	Left	1	362 9555
	Right	1	362 9554
T-074	Left	1	362 9557
	Right	1	362 9556
T-075	Left	1	362 0287
	Right	1	362 0286
T-076	Left	1	362 9559
	Right	1	362 9558
T-081	Left	1	362 9551
	Right	1	362 9550
T-083	Left	1	362 9555
	Right	1	362 9554
T-084	Left	1	362 9557
	Right	1	362 9556
T-086	Left	1	362 9559
	Right	1	362 9558
T-091	Left	1	362 9551
	Right	1	362 9550
T-093	Left	1	362 9555
	Right	1	362 9554
T-094	Left	1	362 9557
	Right	1	362 9556
T-095	Left	1	362 0287
	Right	1	362 0286
T-096	Left	1	362 9559
	Right	1	362 9558
T-151	Left	1	362 9551
	Right	1	362 9550
T-153	Left	1	364 2933
	Right	1	364 2932
T-154	Left	1	364 2935
	Right	1	364 2934
T-171	Left	1	362 9551
	Right	1	362 9550
T-173	Left	1	364 2933
	Right	1	364 2932
T-174	Left	1	364 2935
	Right	1	364 2934
T-175	Left	1	364 2937
	Right	1	364 2936
T-176	Left	1	362 9551
	Right	1	362 9550
T-181	Left	1	362 9551
	Right	1	362 9550
T-183	Left	1	364 2933
	Right	1	364 2932
T-184	Left	1	364 2935
	Right	1	364 2934
T-186	Left	1	362 9551
	Right	1	362 9550

SEATS - SOFT TRIM

Trim No.		Per Car	10-80
T-191	Left	1	362 9551
	Right	1	362 9550
T-193	Left	1	364 2933
	Right	1	364 2932
T-194	Left	1	364 2935
	Right	1	364 2934
T-195	Left	1	364 2937
	Right	1	364 2936
T-196	Left	1	362 9551
	Right	1	362 9550
T-271	Left	1	365 4611
	Right	1	365 4610
T-273	Left	1	365 4605
	Right	1	365 4604
T-274	Left	1	365 4607
	Right	1	365 4606
T-276	Left	1	365 4609
	Right	1	365 4608
T-291	Left	1	365 4611
	Right	1	365 4610
T-293	Left	1	365 4605
	Right	1	365 4604
T-294	Left	1	365 4607
	Right	1	365 4606
T-296	Left	1	365 4609
	Right	1	365 4608

29.010–3 ATTACHING PARTS, Panel To Body

SCREW, Tapping.....	67/69	01 (LCV-#8-15 × 3/4)	17.655	13	G168496
SCREW, Tapping.....	67	07 (#8-15 × 3/4)	17.655	5	G168496
SCREW, Tapping.....	67	07 (#8-15 × 7/8)	17.655	4	G168499 NA
SCREW, Tapping.....	67	07 (#8-32 × 3/4)	.....	4	400 0739
SCREW, Tapping.....	70	01 (#8-18 × 1/2)	.....	8	400 2032
SCREW, Tapping.....	70/	01-40 (1" Long)...(Incl. Washer)	.....	6	400 4556
SCREW, Tapping.....	67	10-50-80 (#8-15 × 1-1/4)	17.654	4	G162416 NA
SCREW, Tapping.....	67	10-50-80 (LCV-#8-15 × 3/4)	17.660	8	G161871 NA
SCREW, Tapping.....	67/	10-50-80 (#8-18 × 1-1/4)	.....	8	400 2192
SCREW, Tapping.....	67/	10-50-80 (#8-15 × 1-3/8)	17.655	4	G188145 NA
SCREW, Tapping.....	67	17-87 (#8-32 × 1-1/4)	17.592	6	G169234 NA
SCREW, Tapping.....	67/68	17-87 (#8-15 × 2-1/4) ..... ***(Use 400 2196)***	.....	2	400 2037
SCREW, Tapping.....	68/70	30-70 (#8-15 × 3/4)	17.655	13	G168496
SCREW, Tapping.....	71/	70 (#8-18 × 3/4)	.....	2	G9414754 NA
SCREW, Tapping.....	71	(Left) 70 (#8-15 × 3/4).....	17.655	2	G168496
SCREW, Tapping.....	71	(Left) 70 (#8-18 × 1).....	.....	2	320 9830
SCREW, Tapping.....	71/	(Right) 70 (#8-18 × 1/2).....	25.029	3	400 3814
SCREW, Tapping.....	71	(Right) 70 (#8-15 × 3/4).....	17.655	2	G168496
SCREW, Tapping.....	71/	(Right) 70 (#8-18 × 7/8).....	22.056	1	400 2876

29.010–3a EXTENSION, Cowl Trim Panel (Left Side)

1971 - 1972 MODELS

Trim No.	Per Car	70
T-161	1	363 9244
T-163	1	363 9245
T-164	1	363 9246
T-165	1	363 9247
T-168	1	363 9244
T-261	1	363 9244
T-263	1	365 3680
T-264	1	365 3681
T-265	1	363 9244
T-266	1	365 3683
T-268	1	363 9244

Printed in U.S.A.

SEATS - SOFT TRIM

29.010–3b ATTACHING PARTS, Cowl Trim Panel Extension

SCREW, Tapping.....	71/	70 (# 10-16 x 1/2")	17.660	3	812 0052

29.010–4 DOOR, Cowl Trim Panel Air Intake

67/69	(Left) 01	.....	1	350 1817
67/	(Left) 10-50-80	.....	1	358 1551
68/	(Left) 30-70	.....	1	350 1817
67/69	(Right) 01	.....	1	350 1816
67/	(Right) 10-50-80	.....	1	358 1550
68/70	(Right) 30-70	.....	1	350 1816

29.010–5 GASKET, Cowl Trim Panel Door

67/69	01.....	.....	4	351 0436
67/	10-50-80.....	.....	2	358 1563
68/70	30-70.....	.....	4	351 0436
71/	70.....	.....	2	351 0436

29.010–6 SEAL, Cowl Trim Panel Door

67/69	(End) 01	.....	2	348 8882
68/	(End) 30-70	.....	2	348 8882
67/69	(Left) 01	.....	1	350 1839
68/	(Left) 30-70	.....	1	350 1839
67/69	(Right) 01	.....	1	350 1838
68/70	(Right) 30-70	.....	1	350 1838

29.010–7 FILLER, Cowl Trim Panel Door Handle Opening

67/69	01.....	.....	2	351 0438
68/	30-70.....	.....	2	351 0438

29.010–8 GRILLE, Cowl Trim Panel

1967 Thru 1969 MODELS

Trim No.		Per Car	10-50-80			
T-753	Left	1	358 1631	... .	... .	... .
	Right	1	358 1630	... .	... .	... .
T-758	Left	1	358 1629	... .	... .	... .
	Right	1	358 1628	... .	... .	... .
T-759	Left	1	358 1641	... .	... .	... .
	Right	1	358 1640	... .	... .	... .
T-771	Left	1	358 1629	... .	... .	... .
	Right	1	358 1628	... .	... .	... .
T-773	Left	1	358 1631	... .	... .	... .
	Right	1	358 1630	... .	... .	... .
T-774	Left	1	358 1633	... .	... .	... .
	Right	1	358 1632	... .	... .	... .
T-775	Left	1	358 1635	... .	... .	... .
	Right	1	358 1634	... .	... .	... .
T-776	Left	1	358 1637	... .	... .	... .
	Right	1	358 1636	... .	... .	... .
T-777	Left	1	358 1639	... .	... .	... .
	Right	1	358 1638	... .	... .	... .
T-778	Left	1	358 1629	... .	... .	... .
	Right	1	358 1628	... .	... .	... .
T-779	Left	1	358 1641	... .	... .	... .
	Right	1	358 1640	... .	... .	... .
T-781	Left	1	358 1629	... .	... .	... .
	Right	1	358 1628	... .	... .	... .

Printed in U.S.A.

SEATS - SOFT TRIM

Trim No.		Per Car	10-50-80
T-783	Left	1	358 1631
	Right	1	358 1630
T-787	Left	1	358 1639
	Right	1	358 1638
T-789	Left	1	358 1641
	Right	1	358 1640
T-791	Left	1	358 1629
	Right	1	358 1628
T-793	Left	1	358 1631
	Right	1	358 1630
T-794	Left	1	358 1633
	Right	1	358 1632
T-795	Left	1	358 1635
	Right	1	358 1634
T-796	Left	1	358 1637
	Right	1	358 1636
T-797	Left	1	358 1639
	Right	1	358 1638
T-798	Left	1	358 1629
	Right	1	358 1628
T-799	Left	1	358 1641
	Right	1	358 1640
T-851	Left	1	358 1629
	Right	1	358 1628
T-853	Left	1	360 5357
	Right	1	360 5356
T-855	Left	1	358 1635
	Right	1	358 1634
T-871	Left	1	358 1629
	Right	1	358 1628
T-873	Left	1	360 5357
	Right	1	360 5356
T-874	Left	1	360 5359
	Right	1	360 5358
T-875	Left	1	358 1635
	Right	1	358 1634
T-876	Left	1	360 5363
	Right	1	360 5362
T-879	Left	1	360 5367
	Right	1	360 5366
T-881	Left	1	358 1629
	Right	1	358 1628
T-883	Left	1	360 5357
	Right	1	360 5356
T-885	Left	1	358 1635
	Right	1	358 1634
T-891	Left	1	358 1629
	Right	1	358 1628
T-893	Left	1	360 5357
	Right	1	360 5356
T-894	Left	1	360 5359
	Right	1	360 5358
T-895	Left	1	358 1635
	Right	1	358 1634
T-896	Left	1	360 5363
	Right	1	360 5362
T-899	Left	1	360 5367
	Right	1	360 5366
T-951	Left	1	362 0303
	Right	1	362 0302

SEATS - SOFT TRIM

Trim No.			Per Car	10-50-80
T-953	Left		1	362 0305
	Right		1	362 0304
T-956	Left		1	362 0309
	Right		1	362 0308
T-957	Left		1	362 0311
	Right		1	362 0310
T-972	Left		1	362 0303
	Right		1	362 0302
T-973	Left		1	362 0305
	Right		1	362 0304
T-975	Left		1	362 0307
	Right		1	362 0306
T-976	Left		1	362 0309
	Right		1	362 0308
T-977	Left		1	362 0311
	Right		1	362 0310
T-979	Left		1	362 0311
	Right		1	362 0310
T-981	Left		1	362 0303
	Right		1	362 0302
T-983	Left		1	362 0305
	Right		1	362 0304
T-986	Left		1	362 0309
	Right		1	362 0308
T-987	Left		1	362 0311
	Right		1	362 0310
T-991	Left		1	362 0303
	Right		1	362 0302
T-992	Left		1	362 0303
	Right		1	362 0302
T-993	Left		1	362 0305
	Right		1	362 0304
T-995	Left		1	362 0307
	Right		1	362 0306
T-996	Left		1	362 0309
	Right		1	362 0308
T-997	Left		1	362 0311
	Right		1	362 0310
T-999	Left		1	362 0311
	Right		1	362 0310

1970 Thru 1972 MODELS

Trim No.			Per Car	10-80
T-051	Left		1	362 9565
	Right		1	362 9564
T-053	Left		1	362 9569
	Right		1	362 9568
T-054	Left		1	362 9571
	Right		1	362 9570
T-056	Left		1	362 9573
	Right		1	362 9572
T-071	Left		1	362 9565
	Right		1	362 9564
T-073	Left		1	362 9569
	Right		1	362 9568

SEATS - SOFT TRIM

Trim No.		Per Car	10-80
T-074	Left	1	362 9571
	Right	1	362 9570
T-075	Left	1	362 0307
	Right	1	362 0306
T-076	Left	1	362 9573
	Right	1	362 9572
T-081	Left	1	362 9565
	Right	1	362 9564
T-083	Left	1	362 9569
	Right	1	362 9568
T-084	Left	1	362 9571
	Right	1	362 9570
T-086	Left	1	362 9573
	Right	1	362 9572
T-091	Left	1	362 9565
	Right	1	362 9564
T-093	Left	1	362 9569
	Right	1	362 9568
T-094	Left	1	362 9571
	Right	1	362 9570
T-095	Left	1	362 0307
	Right	1	362 0306
T-096	Left	1	362 9573
	Right	1	362 9572
T-151	Left	1	362 9565
	Right	1	362 9564
T-153	Left	1	364 2943
	Right	1	364 2942
T-154	Left	1	364 2945
	Right	1	364 2944
T-171	Left	1	362 9565
	Right	1	362 9564
T-173	Left	1	364 2943
	Right	1	364 2942
T-174	Left	1	364 2945
	Right	1	364 2944
T-175	Left	1	364 2947
	Right	1	364 2946
T-176	Left	1	362 9565
	Right	1	362 9564
T-181	Left	1	362 9565
	Right	1	362 9564
T-183	Left	1	364 2943
	Right	1	364 2942
T-184	Left	1	364 2945
	Right	1	364 2944
T-186	Left	1	362 9565
	Right	1	362 9564
T-191	Left	1	362 9565
	Right	1	362 9564
T-193	Left	1	364 2943
	Right	1	364 2942
T-194	Left	1	364 2945
	Right	1	364 2944
T-195	Left	1	364 2947
	Right	1	364 2946
T-196	Left	1	362 9565
	Right	1	362 9564

SEATS - SOFT TRIM

Trim No.			Per Car	10-80
T-271	Left		1	365 4621
	Right		1	365 4620
T-273	Left		1	365 4615
	Right		1	365 4614
T-274	Left		1	365 4617
	Right		1	365 4616
T-276	Left		1	365 4619
	Right		1	365 4618
T-291	Left		1	365 4621
	Right		1	365 4620
T-293	Left		1	365 4615
	Right		1	365 4614
T-294	Left		1	365 4617
	Right		1	365 4616
T-296	Left		1	365 4619
	Right		1	365 4618

29.010–9 CONTROL, Cowl Trim Panel Door

67/ 10-50-80 ..... 2 358 1584

29.010–10 ATTACHING PARTS, Control To Panel

RING, Retaining ..... 67/ 10-50-80 ..... 2 400 2027

29.010–11 ATTACHING PARTS, Control Wire To Door

FASTENER ..... 67/ 10-50-80 ..... ***(Use 400 1714)*** 13.017 2 400 1470

29.012–1 PAD, Headlining Retainer Crash

1968 - 1969 MODELS

Trim No.			Per Car	30	70		
T-831			2	360 7428	360 6070	... .	... .
T-832			2	360 7430	359 9204	... .	... .
T-835			2	360 7470	360 6076	... .	... .
T-838			2	... .	360 6070	... .	... .
T-931	Left		1	363 0593	... .	... .	... .
	Right		1	363 0592	... .	... .	... .
T-932	Left		1	363 0593	... .	... .	... .
	Right		1	363 0592	... .	... .	... .
T-935	Left		1	363 0663	... .	... .	... .
	Right		1	363 0662	... .	... .	... .
T-936	Left		1	363 0595	... .	... .	... .
	Right		1	363 0594	... .	... .	... .
T-961	Left		1	... .	363 0587	... .	... .
	Right		1	... .	363 0586	... .	... .
T-962	Left		1	... .	363 0587	... .	... .
	Right		1	... .	363 0586	... .	... .
T-963	Left		1	... .	363 0589	... .	... .
	Right		1	... .	363 0588	... .	... .
T-965	Left		1	... .	363 0661	... .	... .
	Right		1	... .	363 0660	... .	... .
T-966	Left		1	... .	363 0591	... .	... .
	Right		1	... .	363 0590	... .	... .
T-968	Left		1	... .	363 0587	... .	... .
	Right		1	... .	363 0586	... .	... .

SEATS - SOFT TRIM

1970 Thru 1972 MODELS

Trim No.		Per Car	30-70
T-031		2	360 7428
T-033		2	362 9516
T-035		2	363 0662
T-036		2	362 9518
T-061	Left	1	360 6071
	Right	1	448 6569
T-063	Left	1	362 9525
	Right	1	362 9524
T-064	Left	1	362 9527
	Right	1	362 9526
T-065	Left	1	363 0661
	Right	1	363 0660
T-066	Left	1	362 9529
	Right	1	362 9528
T-161		2	364 8614
T-163		2	364 8616
T-164		2	364 8618
T-165		2	364 8620
T-168		2	364 8614
T-261		2	364 8614
T-263		2	365 3720
T-264		2	365 3722
T-265		2	364 8614
T-266		2	365 3726
T-268		2	364 8614

29.013–1 MOULDING, Headlining Center Joint

67/69	08	1	354 8077	

1967 - 1968 MODELS

Trim No.	Per Car	18-88			
T-753	1	357 9342			
T-758	1	357 9341			
T-759	1	357 9346			
T-771	1	357 9341			
T-773	1	357 9342			
T-774	1	357 9343			
T-776	1	357 9344			
T-777	1	357 9345			
T-779	1	357 9346			
T-781	1	357 9341			
T-783	1	357 9342			
T-787	1	357 9345			
T-789	1	357 9346			
T-791	1	357 9341			
T-793	1	357 9342			
T-794	1	357 9343			
T-796	1	357 9344			

Printed in U.S.A.

SEATS - SOFT TRIM

Trim No.	Per Car	18-88
T-797	1	357 9345
T-799	1	357 9346
T-851	1	357 9341
T-853	1	360 5643
T-855	1	357 9341
T-871	1	357 9341
T-873	1	360 5643
T-874	1	360 5644
T-875	1	357 9341
T-876	1	360 5646
T-879	1	360 5648
T-881	1	357 9341
T-883	1	360 5643
T-885	1	357 9341
T-891	1	357 9341
T-893	1	360 5643
T-894	1	360 5644
T-895	1	357 9341
T-896	1	360 5646
T-899	1	360 5648

1969 Thru 1972 MODELS

69	18-88	1	362 5390 NC
70/	18-88	1	357 9341 NC

29.013-2 ATTACHING PARTS, Moulding To Roof Panel

CLIP	67/69	08	4	400 0342
CLIP	67/	18-88	4	400 1565

29.014-1 MOULDING, Headlining Side Retainer (With Lace Or Vinyl Covering)(* 29-19 NC)

1967 - 1968 MODELS

Trim No.			Per Car	05-06	08	15-85	18-88
T-723	Left		1	358 1333			
		Front	1		358 1351		
		Rear	1		358 1369		
	Right		1	358 1332			
		Front	1		358 1350		
		Rear	1		358 1368		
T-728	Left		1	448 2867			
		Front (* 29-7)	1		448 3727		
		Rear (* 29-7)	1		448 3727		
	Right		1	448 2866			
		Front (* 29-7)	1		448 3726		
		Rear (* 29-7)	1		448 3726		

SEATS - SOFT TRIM

Trim No.			Per Car	05-06	08	15-85	18-88
T-729	Left		1	358 1341	... .	... .	... .
		Front	1	... .	358 1359	... .	... .
		Rear	1	... .	358 1377	... .	... .
	Right		1	358 1340	... .	... .	... .
		Front	1	... .	358 1358	... .	... .
		Rear	1	... .	358 1376	... .	... .
T-741	Left		1	448 2867	... .	... .	... .
		Front (* 29-7)	1	... .	448 3727	... .	... .
		Rear (* 29-7)	1	... .	448 3727	... .	... .
	Right		1	448 2866	... .	... .	... .
		Front (* 29-7)	1	... .	448 3726	... .	... .
		Rear (* 29-7)	1	... .	448 3726	... .	... .
T-743	Left		1	358 1333	... .	... .	... .
		Front	1	... .	358 1351	... .	... .
		Rear	1	... .	358 1369	... .	... .
	Right		1	358 1332	... .	... .	... .
		Front	1	... .	358 1350	... .	... .
		Rear	1	... .	358 1368	... .	... .
T-744	Left		1	356 2255	... .	... .	... .
		Front	1	... .	356 2245	... .	... .
		Rear	1	... .	356 2237	... .	... .
	Right		1	356 2254	... .	... .	... .
		Front	1	... .	356 2244	... .	... .
		Rear	1	... .	356 2236	... .	... .
T-745	Left		1	358 1337	... .	... .	... .
		Front	1	... .	358 1355	... .	... .
		Rear	1	... .	358 1373	... .	... .
	Right		1	358 1336	... .	... .	... .
		Front	1	... .	358 1354	... .	... .
		Rear	1	... .	358 1372	... .	... .
T-747	Left		1	358 1339	... .	... .	... .
		Front	1	... .	358 1357	... .	... .
		Rear	1	... .	358 1375	... .	... .
	Right		1	358 1338	... .	... .	... .
		Front	1	... .	358 1356	... .	... .
		Rear	1	... .	358 1376	... .	... .
T-748	Left		1	448 2867	... .	... .	... .
		Front (* 29-7)	1	... .	448 3727	... .	... .
		Rear (* 29-7)	1	... .	448 3727	... .	... .
	Right		1	448 2866	... .	... .	... .
		Front (* 29-7)	1	... .	448 3726	... .	... .
		Rear (* 29-7)	1	... .	448 3726	... .	... .
T-749	Left		1	358 1341	... .	... .	... .
		Front	1	... .	358 1359	... .	... .
		Rear	1	... .	358 1377	... .	... .
	Right		1	358 1340	... .	... .	... .
		Front	1	... .	358 1358	... .	... .
		Rear	1	... .	358 1376	... .	... .
T-753	Left		1	... .	... .	357 9225	... .
		Front	1	... .	... .	... .	357 9305
		Rear	1	... .	... .	... .	357 9325
	Right		1	... .	... .	357 9224	... .
		Front	1	... .	... .	... .	357 9304
		Rear	1	... .	... .	... .	357 9324

SEATS - SOFT TRIM

Trim No.			Per Car	05-06	08	15-85	18-88
T-758	Left	.....	1	... .	... .	357 9223	... .
		Front	1	... .	... .	... .	357 9303
		Rear	1	... .	... .	... .	357 9323
	Right	.....	1	... .	... .	357 9222	... .
		Front	1	... .	... .	... .	357 9302
		Rear	1	... .	... .	... .	357 9322
T-759	Left	.....	1	... .	... .	357 9235	... .
		Front	1	... .	... .	... .	357 9315
		Rear	1	... .	... .	... .	357 9335
	Right	.....	1	... .	... .	357 9234	... .
		Front	1	... .	... .	... .	357 9314
		Rear	1	... .	... .	... .	357 9334
T-771	Left	.....	1	... .	... .	357 9223	... .
		Front	1	... .	... .	... .	357 9303
		Rear	1	... .	... .	... .	357 9323
	Right	.....	1	... .	... .	357 9222	... .
		Front	1	... .	... .	... .	357 9302
		Rear	1	... .	... .	... .	357 9322
T-773	Left	.....	1	... .	... .	357 9225	... .
		Front	1	... .	... .	... .	357 9305
		Rear	1	... .	... .	... .	357 9325
	Right	.....	1	... .	... .	357 9224	... .
		Front	1	... .	... .	... .	357 9304
		Rear	1	... .	... .	... .	357 9324
T-774	Left	.....	1	... .	... .	357 9227	... .
		Front	1	... .	... .	... .	357 9307
		Rear	1	... .	... .	... .	357 9327
	Right	.....	1	... .	... .	357 9226	... .
		Front	1	... .	... .	... .	357 9306
		Rear	1	... .	... .	... .	357 9326
T-776	Left	.....	1	... .	... .	357 9231	... .
		Front	1	... .	... .	... .	357 9311
		Rear	1	... .	... .	... .	357 9331
	Right	.....	1	... .	... .	357 9230	... .
		Front	1	... .	... .	... .	357 9310
		Rear	1	... .	... .	... .	357 9330
T-777	Left	.....	1	... .	... .	357 9233	... .
		Front	1	... .	... .	... .	357 9313
		Rear	1	... .	... .	... .	357 9333
	Right	.....	1	... .	... .	357 9232	... .
		Front	1	... .	... .	... .	357 9312
		Rear	1	... .	... .	... .	357 9332
T-779	Left	.....	1	... .	... .	357 9235	... .
		Front	1	... .	... .	... .	357 9315
		Rear	1	... .	... .	... .	357 9335
	Right	.....	1	... .	... .	357 9234	... .
		Front	1	... .	... .	... .	357 9314
		Rear	1	... .	... .	... .	357 9334

SEATS - SOFT TRIM

Trim No.			Per Car	05-06	08	15-85	18-88
T-781	Left		1	... .	... .	357 9223	... .
		Front	1	... .	... .	... .	357 9303
		Rear	1	... .	... .	... .	357 9323
	Right		1	... .	... .	357 9222	... .
		Front	1	... .	... .	... .	357 9302
		Rear	1	... .	... .	... .	357 9322
T-783	Left		1	... .	... .	357 9225	... .
		Front	1	... .	... .	... .	357 9305
		Rear	1	... .	... .	... .	357 9325
	Right		1	... .	... .	357 9224	... .
		Front	1	... .	... .	... .	357 9304
		Rear	1	... .	... .	... .	357 9324
T-787	Left		1	... .	... .	357 9233	... .
		Front	1	... .	... .	... .	357 9313
		Rear	1	... .	... .	... .	357 9333
	Right		1	... .	... .	357 9232	... .
		Front	1	... .	... .	... .	357 9312
		Rear	1	... .	... .	... .	357 9332
T-789	Left		1	... .	... .	357 9235	... .
		Front	1	... .	... .	... .	357 9315
		Rear	1	... .	... .	... .	357 9335
	Right		1	... .	... .	357 9234	... .
		Front	1	... .	... .	... .	357 9314
		Rear	1	... .	... .	... .	357 9334
T-791	Left		1	... .	... .	357 9223	... .
		Front	1	... .	... .	... .	357 9303
		Rear	1	... .	... .	... .	357 9323
	Rear		1	... .	... .	357 9222	... .
		Front	1	... .	... .	... .	357 9302
		Rear	1	... .	... .	... .	357 9322
T-793	Left		1	... .	... .	357 9225	... .
		Front	1	... .	... .	... .	357 9305
		Rear	1	... .	... .	... .	357 9325
	Right		1	... .	... .	357 9224	... .
		Front	1	... .	... .	... .	357 9304
		Rear	1	... .	... .	... .	357 9324
T-794	Left		1	... .	... .	357 9227	... .
		Front	1	... .	... .	... .	357 9307
		Rear	1	... .	... .	... .	357 9327
	Right		1	... .	... .	357 9226	... .
		Front	1	... .	... .	... .	357 9306
		Rear	1	... .	... .	... .	357 9326
T-796	Left		1	... .	... .	357 9231	... .
		Front	1	... .	... .	... .	357 9311
		Rear	1	... .	... .	... .	357 9331
	Right		1	... .	... .	357 9230	... .
		Front	1	... .	... .	... .	357 9310
		Rear	1	... .	... .	... .	357 9330
T-797	Left		1	... .	... .	357 9233	... .
		Front	1	... .	... .	... .	357 9313
		Rear	1	... .	... .	... .	357 9333
	Right		1	... .	... .	357 9232	... .
		Front	1	... .	... .	... .	357 9312
		Rear	1	... .	... .	... .	357 9332
T-799	Left		1	... .	... .	357 9235	... .
		Front	1	... .	... .	... .	357 9315
		Rear	1	... .	... .	... .	357 9335
	Right		1	... .	... .	357 9234	... .

Printed in U.S.A.

SEATS - SOFT TRIM

Trim No.			Per Car	05-06	08	15-85	18-88
		Front	1	... .	... .	... .	357 9314
		Rear	1	... .	... .	... .	357 9334
T-828	Left		1	359 9453	... .	... .	... .
	Right		1	359 9452	... .	... .	... .
T-843	Left		1	359 9455	... .	... .	... .
		Front	1	... .	359 9465	... .	... .
		Rear	1	... .	359 9475	... .	... .
	Right		1	359 9454	... .	... .	... .
		Front	1	... .	359 9464	... .	... .
		Rear	1	... .	359 9474	... .	... .
T-844	Left		1	359 9457	... .	... .	... .
		Front	1	... .	359 9467	... .	... .
		Rear	1	... .	359 9477	... .	... .
	Right		1	359 9456	... .	... .	... .
		Front	1	... .	359 9466	... .	... .
		Rear	1	... .	359 9476	... .	... .
T-845	Left		1	359 9459	... .	... .	... .
		Front	1	... .	359 9469	... .	... .
		Rear	1	... .	359 9479	... .	... .
	Right		1	359 9458	... .	... .	... .
		Front	1	... .	359 9468	... .	... .
		Rear	1	... .	359 9478	... .	... .
T-848	Left		1	359 9453	... .	... .	... .
		Front	1	... .	359 9463	... .	... .
		Rear	1	... .	359 9473	... .	... .
	Right		1	359 9452	... .	... .	... .
		Front	1	... .	359 9462	... .	... .
		Rear	1	... .	359 9472	... .	... .
T-851	Left		1	... .	... .	357 9223	... .
		Front	1	... .	... .	... .	357 9303
		Rear	1	... .	... .	... .	357 9323
	Right		1	... .	... .	357 9222	... .
		Front	1	... .	... .	... .	357 9302
		Rear	1	... .	... .	... .	357 9322
T-853	Left		1	... .	... .	360 5581	... .
		Front	1	... .	... .	... .	360 5609
		Rear	1	... .	... .	... .	360 5623
	Right		1	... .	... .	360 5580	... .
		Front	1	... .	... .	... .	360 5608
		Rear	1	... .	... .	... .	360 5622
T-855	Left		1	... .	... .	357 9229	... .
		Front	1	... .	... .	... .	357 9309
		Rear	1	... .	... .	... .	357 9329
	Right		1	... .	... .	357 9228	... .
		Front	1	... .	... .	... .	357 9308
		Rear	1	... .	... .	... .	357 9328
T-871	Left		1	... .	... .	357 9223	... .
		Front	1	... .	... .	... .	357 9303
		Rear	1	... .	... .	... .	357 9323
	Right		1	... .	... .	357 9222	... .
		Front	1	... .	... .	... .	357 9302
		Rear	1	... .	... .	... .	357 9322
T-873	Left		1	... .	... .	360 5581	... .
		Front	1	... .	... .	... .	360 5609
		Rear	1	... .	... .	... .	360 5623
	Right		1	... .	... .	360 5580	... .
		Front	1	... .	... .	... .	360 5608
		Rear	1	... .	... .	... .	360 5622

Printed in U.S.A.

SEATS - SOFT TRIM

Trim No.			Per Car	05-06	08	15-85	18-88
T-874	Left		1	... .	... .	360 5583	... .
		Front	1	... .	... .	... .	360 5611
		Rear	1	... .	... .	... .	360 5625
	Right		1	... .	... .	360 5582	... .
		Front	1	... .	... .	... .	360 5610
		Rear	1	... .	... .	... .	360 5624
T-875	Left		1	... .	... .	357 9229	... .
		Front	1	... .	... .	... .	357 9309
		Rear	1	... .	... .	... .	357 9329
	Right		1	... .	... .	359 9228	... .
		Front	1	... .	... .	... .	357 9308
		Rear	1	... .	... .	... .	357 9328
T-876	Left		1	... .	... .	360 5587	... .
		Front	1	... .	... .	... .	360 5615
		Rear	1	... .	... .	... .	360 5629
	Right		1	... .	... .	360 5586	... .
		Front	1	... .	... .	... .	360 5614
		Rear	1	... .	... .	... .	360 5628
T-879	Left		1	... .	... .	360 5591	... .
		Front	1	... .	... .	... .	360 5619
		Rear	1	... .	... .	... .	360 5633
	Right		1	... .	... .	360 5590	... .
		Front	1	... .	... .	... .	360 5618
		Rear	1	... .	... .	... .	360 5632
T-881	Left		1	... .	... .	357 9223	... .
		Front	1	... .	... .	... .	357 9303
		Rear	1	... .	... .	... .	357 9323
	Right		1	... .	... .	357 9222	... .
		Front	1	... .	... .	... .	357 9302
		Rear	1	... .	... .	... .	357 9322
T-883	Left		1	... .	... .	360 5581	... .
		Front	1	... .	... .	... .	360 5609
		Rear	1	... .	... .	... .	360 5623
	Right		1	... .	... .	360 5580	... .
		Front	1	... .	... .	... .	360 5608
		Rear	1	... .	... .	... .	360 5622
T-885	Left		1	... .	... .	357 9229	... .
		Front	1	... .	... .	... .	357 9309
		Rear	1	... .	... .	... .	357 9329
	Right		1	... .	... .	357 9228	... .
		Front	1	... .	... .	... .	357 9308
		Rear	1	... .	... .	... .	357 9328
T-891	Left		1	... .	... .	357 9223	... .
		Front	1	... .	... .	... .	357 9303
		Rear	1	... .	... .	... .	357 9323
	Right		1	... .	... .	357 9222	... .
		Front	1	... .	... .	... .	357 9302
		Rear	1	... .	... .	... .	357 9322
T-893	Left		1	... .	... .	360 5581	... .
		Front	1	... .	... .	... .	360 5609
		Rear	1	... .	... .	... .	360 5623
	Right		1	... .	... .	360 5580	... .
		Front	1	... .	... .	... .	360 5608
		Rear	1	... .	... .	... .	360 5622
T-894	Left		1	... .	... .	360 5583	... .
		Front	1	... .	... .	... .	360 5611
		Rear	1	... .	... .	... .	360 5625
	Right		1	... .	... .	360 5582	... .
		Front	1	... .	... .	... .	360 5610
		Rear	1	... .	... .	... .	360 5624

SEATS - SOFT TRIM

Trim No.			Per Car	05-06	08	15-85	18-88
T-895	Left		1	....	....	357 9229	....
		Front	1	....	....	....	357 9309
		Rear	1	....	....	....	357 9329
	Right		1	....	....	357 9228	....
		Front	1	....	....	....	357 9308
		Rear	1	....	....	....	357 9328
T-896	Left		1	....	....	360 5587	....
		Front	1	....	....	....	360 5615
		Rear	1	....	....	....	360 5629
	Right		1	....	....	360 5586	....
		Front	1	....	....	....	360 5614
		Rear	1	....	....	....	360 5628
T-899	Left		1	....	....	360 5591	....
		Front	1	....	....	....	360 5619
		Rear	1	....	....	....	360 5633
	Right		1	....	....	360 5590	....
		Front	1	....	....	....	360 5618
		Rear	1	....	....	....	360 5632

1969 MODELS (* 29-19 NC)

Description			Per Car	05-06	08	15-85	18-88
MOULDING	Left		1	362 4477	....	362 0785	....
		Front	1	....	362 4487	....	362 0793
		Rear	1	....	362 4467	....	362 0801
	Right		1	362 4476	....	362 0784	....
		Front	1	....	362 4486	....	362 0792
		Rear	1	....	362 4466	....	362 0800

1970 Thru 1972 MODELS (* 29-19 NC)

70	(Left) 05-06	.....	1	362 7137
70	(Left) 15-85	.....	1	362 9949
70	(Left-Front) 18-88	.....	1	362 9963
70	(Left-Rear) 18-88	.....	1	362 9977
70	(Left) 46	.....	1	364 0911
71/	(Left) 05-06	.....	1	364 0719
71/	(Left) 08	.....	1	363 8913
71/	(Left) 15-85	.....	1	364 9431
71/	(Left-Front) 18-88	.....	1	364 2707
71/	(Left-Rear) 18-88	.....	1	364 2717
71/	(Left) 46	.....	1	364 9429
70	(Right) 05-06	.....	1	362 7136
70	(Right) 15-85	.....	1	362 9948
70	(Right-Front) 18-88	.....	1	362 9962
70	(Right-Rear) 18-88	.....	1	362 9976
70	(Right) 46	.....	1	364 0910
71/	(Right) 05-06	.....	1	364 0718
71/	(Right) 08	.....	1	363 8912
71/	(Right) 15-85	.....	1	364 9430
71/	(Right-Front) 18-88	.....	1	364 2706
71/	(Right-Rear) 18-88	.....	1	364 2716
71/	(Right) 46	.....	1	364 9428

Printed in U.S.A.

SEATS - SOFT TRIM

29.014–1a MOULDING, Headlining Side Retainer (All Metal-One Piece)(* 29-19 NC)

68	79	27.022	6	360 4300
68	(Left) 05-06	27.022	1	359 9539
67/68	(Left) 09 (440)	27.022	1	359 8043
67	(Left) 09 (Rogue)	27.022	1	359 8041
69	(Left) 09	27.022	1	362 3777
68	(Left) 15-85 *(Ref. Pr. List)*	27.022	1	361 2853
67	(Left) 16-86 *(Use 361 2359)*	27.022	1	357 9243
67	(Left) 19 (550)(770) *(Use 361 2359)*	27.022	1	357 9243
67	(Left) 19 (SST)	27.022	1	357 9255
68/69	(Left) 19-89	27.022	1	361 2359
70/71	(Left) 19-89	.....	1	363 4443
72	(Left) 19-89	.....	1	365 4807
68	(Left) 39	27.022	1	360 7473
67	(Left) 59	27.022	1	358 0791
67	(Left) 89 (880)(990) *(Use 361 2359)*	27.022	1	357 9243
67	(Left) 89 (DPL)	27.022	1	357 9255
68	(Right) 05-06	27.022	1	359 9538
67/68	(Right) 09 (440)	27.022	1	359 8042
67	(Right) 09 (Rouge)	27.022	1	359 8040
69	(Right) 09	27.022	1	362 3776
68	(Right) 15-85	27.020	1	362 2852
67	(Right) 16-86 *(Use 361 2358)*	27.022	1	357 9242
67	(Right) 19 (SST)	27.022	1	357 9254
68/69	(Right) 19-89	27.022	1	357 9242
70/71	(Right) 19-89 *(Use 361 2358)*	.....	1	363 4442
72	(Right) 19-89	.....	1	365 4806
68	(Right) 39	27.022	1	360 7472
67	(Right) 59	27.022	1	358 0790
67	(Right) 89 (DPL)	27.022	1	357 9254

29.014–1b MOULDING, Headlining Side Front Retainer (All Metal)(* 29-19 NC)

68	(Left) 08	27.022	1	359 9523
68	(Left) 18-88	27.022	1	361 2865
68	(Right) 08	27.022	1	359 9522
68	(Right) 18-88	27.022	1	361 2864

29.014–1c MOULDING, Headlining Side Rear Retainer (All Metal)(* 29-19 NC)

68	(Left) 08	27.022	1	359 9531
68	(Left) 18-88	27.022	1	361 2877
68	(Right) 08	27.022	1	359 9530
68	(Right) 18-88 *(Ord. 357 9322, 357 9323)*	27.022	1	361 2876

29.014–2 ATTACHING PARTS, Moulding Retainer To Roof Panel

CLIP 67/	.....	.....	AR	400 0322

29.014–3 MOULDING, Headlining Rear Side (Chrome-Plastic)

67	(Left) 59	.....	1	357 8377
67	(Right) 59	.....	1	357 8376

29.014–4 ATTACHING PARTS, Moulding To Roof Panel

SCREW, Tapping..... 67 59	.....	17.655	4	G168499 NA

Printed in U.S.A.

SEATS - SOFT TRIM

29.014–5 COVER, Headlining Side Retainer Moulding Joint (* 29-19 NC)

1967 MODELS

Trim No.	Per Car	08-18-88			
T-723	2	358 1404	... .	... .	... .
T-728	2	351 9330	... .	... .	... .
T-729	2	358 1408	... .	... .	... .
T-741	2	351 9330	... .	... .	... .
T-743	2	358 1404	... .	... .	... .
T-744	2	356 2344	... .	... .	... .
T-745	2	358 1406	... .	... .	... .
T-747	2	358 1407	... .	... .	... .
T-748	2	351 9330	... .	... .	... .
T-749	2	358 1408	... .	... .	... .
T-753	2	357 9352	... .	... .	... .
T-758	2	357 9351	... .	... .	... .
T-759	2	357 9357	... .	... .	... .
T-771	2	357 9351	... .	... .	... .
T-773	2	357 9352	... .	... .	... .
T-774	2	357 9353	... .	... .	... .
T-776	2	357 9355	... .	... .	... .
T-777	2	357 9356	... .	... .	... .
T-779	2	357 9357	... .	... .	... .
T-781	2	357 9351	... .	... .	... .
T-783	2	357 9352	... .	... .	... .
T-787	2	357 9356	... .	... .	... .
T-789	2	357 9357	... .	... .	... .
T-791	2	357 9351	... .	... .	... .
T-793	2	357 9352	... .	... .	... .
T-794	2	357 9353	... .	... .	... .
T-796	2	357 9355	... .	... .	... .
T-797	2	357 9356	... .	... .	... .
T-799	2	357 9357	... .	... .	... .

1968 Thru 1972 MODELS

68	08 (Plastic Covered)	.....	2	359 9824	
68	08 (All Metal)	.....	2	359 9829	
69	08	.....	2	362 4460	
68	18-88	.....	2	361 2498	NC
69	18-88	.....	2	362 0219	NC
70/	18-88	.....	2	362 6136	NC

29.014–6 ATTACHING PARTS, Cover To Headlining Retainer

SCREW, Tapping	67/69	08	17.655	2	G168499	NA
SCREW, Tapping	67/70	18-88	17.655	2	G168499	NA
SCREW, Tapping	71/	18-88	17.655	2	G9414755	

29.015–1 HEADLINING

1967 Thru 1969 MODELS

67	05-06	.....	1	356 2579	
68/69	05-06	.....	1	362 4370	
67	09	.....	1	356 2805	
68/69	09	.....	1	362 4372	
67	(Front) 08	.....	1	356 2512	
68/69	(Front) 08	.....	1	362 4375	
67/69	(Rear) 08	.....	1	356 2522	

SEATS - SOFT TRIM

Trim No.		Per Car	15-85	16-86	19-39-89	59-79
T-753	Blue	1	357 9152	357 8395	... .	... .
	Off White	1	... .	357 8394	... .	... .
T-758	Off White	1	357 9151	357 8394	... .	... .
T-759	Tan	1	357 9156	357 8397	... .	... .
	Off White	1	... .	357 8394	... .	... .
T-771	Off White	1	357 9151	... .	357 8272	... .
	Black	1	... .	... .	357 8266	... .
T-773	Blue	1	357 9152	... .	357 8267	... .
	Off White	1	... .	... .	357 8272	... .
T-774	Green	1	357 9153	... .	357 8268	... .
	Off White	1	... .	... .	357 8272	... .
T-775	Red	1	... .	... .	357 8269	... .
	Off White	1	... .	... .	357 8272	... .
T-776	Burgundy	1	357 9154	... .	357 8270	... .
	Off White	1	... .	... .	357 8272	... .
T-777	Aqua	1	357 9155	... .	357 8271	... .
	Off White	1	... .	... .	357 8272	... .
T-778	Off White	1	357 9156	... .	357 8273	... .
T-779	Tan	1	... .	... .	357 8272	... .
	Off White	1	357 9151	357 8394	... .	... .
T-781	Off White	1	357 9152	357 8395	... .	... .
T-783	Blue	1	... .	357 8394	... .	... .
	Off White	1	357 9155	357 8396	... .	... .
T-787	Aqua	1	... .	357 8394	... .	... .
	Off White	1	357 9156	357 8397	... .	... .
T-789	Tan	1	... .	357 8394	357 8266	357 8275
	Off White	1	357 9151	... .	357 8272	... .
T-791	Black	1	357 9152	... .	357 8267	357 8276
	Off White	1	... .	... .	357 8272	... .
T-793	Blue	1	357 9153	... .	357 8268	... .
	Off White	1	... .	... .	357 8272	... .
T-794	Green	1	... .	... .	357 8269	357 8277
	Off White	1	357 9154	... .	357 8272	... .
T-795	Red	1	... .	... .	357 8270	... .
	Off White	1	357 9155	... .	357 8272	... .
T-796	Burgundy	1	... .	... .	357 8271	... .
	Off White	1	357 9156	... .	357 8272	... .
T-797	Aqua	1	... .	... .	357 8272	... .
	Off White	1	357 9151	... .	357 8273	357 8278
T-798	Off White	1	357 9152	... .	357 8272	... .
T-799	Tan	1	... .	... .	359 9780	358 0575
	Off White	1	357 9153	... .	... .	358 0573
T-831	Black	1	... .	... .	359 9781	358 0576
T-832	(* 29-8)	1	357 9154	... .	362 4414	358 0577
	(* 29-9)	1	... .	... .	... .	358 0575
T-835	Red	1	357 9155	... .	... .	358 0575
	Black	1	... .	... .	357 8266	... .
T-838	Black	1	357 9156	... .	358 0834	... .
T-851	(* 29-8)	1	... .	... .	361 2160	... .
	(* 29-9)	1	357 9151	... .	358 0835	... .
T-853	(* 29-8)	1	358 1138	... .	357 8269	... .
	(* 29-9)	1	361 2146	... .	358 0837	... .
T-855	(* 29-8)	1	358 1139	... .	357 8266	... .
	(* 29-9)	1	357 9151	... .	358 0834	... .
T-871	(* 29-8)	1	358 1138	... .	361 2160	... .
	(* 29-9)	1	357 9151	... .	358 0835	... .
T-873	(* 29-8)	1	358 1138	... .	361 2161	... .
	(* 29-9)	1	361 2146	... .	358 0836	... .
T-874	(* 29-8)	1	358 1139	... .		
	(* 29-9)	1	361 2147	... .		
		1	358 1140	... .		

Printed in U.S.A.

SEATS - SOFT TRIM

Trim No.			Per Car	15-85	16-86	19-39-89	59-79
T-875		(* 29-8)	1	357 9151	... .	357 8269	... .
		(* 29-9)	1	358 1138	... .	358 0837	... .
T-876		(* 29-8)	1	361 2148	... .	361 2162	... .
		(* 29-9)	1	358 1141	... .	358 0838	... .
T-879		(* 29-8)	1	361 2149	... .	361 2163	... .
		(* 29-9)	1	358 1142	... .	358 0839	... .
T-881		(* 29-8)	1	357 9151	... .	357 8266	... .
		(* 29-9)	1	358 1138	... .	358 0834	... .
T-883		(* 29-8)	1	361 2146	... .	361 2160	... .
		(* 29-9)	1	358 1139	... .	358 0835	... .
T-885		(* 29-8)	1	357 9151	... .	357 8269	... .
		(* 29-9)	1	358 1138	... .	358 0837	... .
T-891		(* 29-8)	1	357 9151	... .	357 8266	... .
		(* 29-9)	1	358 1138	... .	358 0834	... .
T-893		(* 29-8)	1	361 2146	... .	361 2160	... .
		(* 29-9)	1	358 1139	... .	358 0835	... .
T-894		(* 29-8)	1	361 2147	... .	361 2161	... .
		(* 29-9)	1	358 1140	... .	358 0836	... .
T-895		(* 29-8)	1	357 9151	... .	357 8269	... .
		(* 29-9)	1	358 1138	... .	358 0837	... .
T-896		(* 29-8)	1	361 2148	... .	361 2162	... .
		(* 29-9)	1	358 1141	... .	358 0838	... .
T-899		(* 29-8)	1	361 2149	... .	361 2163	
		(* 29-9)	1	358 1142	... .	358 0839	... .
T-000			1	... .	... .	362 5270	... .
T-931			1	... .	... .	362 5906	... .
T-932			1	... .	... .	362 5906	... .
T-935			1	... .	... .	362 5907	... .
T-936			1	... .	... .	362 5908	... .
T-951	Platinum	(* 29-107)	1	362 5266	... .	362 5270	... .
		(* 29-108)	1	448 7267	... .	... .	... .
	Black		1	... .	... .	448 6180	... .
T-953	Blue	(* 29-107)	1	362 0779	... .	362 0773	... .
		(* 29-108)	1	448 7264	... .	... .	... .
	Platinum		1	... .	... .	362 5270	... .
T-956		(* 29-107)	1	362 0780	... .	362 0775	... .
		(* 29-108)	1	448 7265	... .	... .	... .
T-957		(* 29-107)	1	362 0781	... .	362 0776	... .
		(* 29-108)	1	448 7266	... .	... .	... .
T-961			1	... .	... .	... .	362 4607
T-962			1	... .	... .	... .	362 4607
T-963			1	... .	... .	... .	362 4608
T-965			1	... .	... .	... .	358 0577
T-966			1	... .	... .	... .	362 4609
T-968			1	... .	... .	... .	362 4607
T-972	Platinum	(* 29-107)	1	362 5266	... .	362 5270	... .
		(* 29-108)	1	448 7267	... .	... .	... .
	Black		1	... .	... .	448 6180	... .
T-973	Blue	(* 29-107)	1	362 0779	... .	362 0773	... .
		(* 29-108)	1	448 7264	... .	... .	... .
	Platinum		1	... .	... .	362 5270	... .
T-975			1	... .	... .	358 0837	... .
T-976		(* 29-107)	1	362 0780	... .	362 0775	... .
		(* 29-108)	1	448 7265	... .	... .	... .
T-977		(* 29-107)	1	362 0781	... .	362 0776	... .
		(* 29-108)	1	448 7266	... .	... .	... .
T-979		(* 29-107)	1	... .	... .	362 0776	... .
T-981		(* 29-107)	1	362 5266	... .	... .	... .
		(* 29-108)	1	448 7267	... .	... .	... .

SEATS - SOFT TRIM

Trim No.			Per Car	15-85	16-86	19-39-89	59-79
T-983		(* 29-107)	1	362 0779	... .	... .	... .
		(* 29-108)	1	448 7264	... .	... .	... .
T-986		(* 29-107)	1	362 0780	... .	... .	... .
		(* 29-108)	1	448 7265	... .	... .	... .
T-987		(* 29-107)	1	362 0781	... .	... .	... .
		(* 29-108)	1	448 7266	... .	... .	... .
T-991	Platinum	(* 29-107)	1	362 5266	... .	362 5270	... .
		(* 29-108)	1	448 7267			
	Black		1	... .	... .	448 6180	... .
T-992	Platinum	(* 29-107)	1	362 5266	... .	362 5270	... .
		(* 29-108)	1	448 7267	... .	... .	... .
	Black		1	... .	... .	448 6180	... .
T-993	Blue	(* 29-107)	1	362 0779	... .	362 0773	... .
		(* 29-108)	1	448 7264	... .	... .	... .
	Platinum		1	... .	... .	362 5270	... .
T-995			1	... .	... .	358 0837	... .
T-996		(* 29-107)	1	362 0780	... .	362 0775	... .
		(* 29-108)	1	448 7265	... .	... .	... .
T-997		(* 29-107)	1	362 0781	... .	362 0776	... .
		(* 29-108)	1	448 7266	... .	... .	... .
T-999			1	... .	... .	362 0776	... .

1970 Thru 1972 MODELS

70/71	05-06	.....	1	362 7111
72	05-06	.....	1	364 7979
71	08	.....	1	363 8896
72	08 (Except Gucci Trim)	.....	1	365 4559
72	08 (Gucci Trim)	.....	1	365 6310
70/71	40 (* 29-130)	***(Use 365 4441)***	1	363 7645
71	40 (* 29-131)	.....	1	365 4441
72	40	.....	1	364 7486

Trim No.		Per Car	15-85	19-39-79-89
T-031		1	... .	362 9840
T-033		1	... .	362 9841
T-035		1	... .	362 5907
T-036		1	... .	362 9842
T-051	White	1	362 0778	... .
	Platinum	1	448 7267	... .
	Black	1	... .	362 9946
T-053		1	362 9925	362 9943
T-054		1	362 9926	362 9944
T-056		1	362 9927	362 9945
T-061		1	... .	358 0575
T-063		1	... .	362 8426
T-064		1	... .	362 8427
T-065		1	... .	358 0577
T-066		1	... .	362 8429
T-071		1	362 0778	362 9946
T-073		1	362 9925	362 9943
T-074		1	362 9926	362 9944
T-075		1	362 0778	362 9947
T-076		1	362 9927	362 9945
T-081		1	362 0778	... .
T-083		1	362 9925	... .

SEATS - SOFT TRIM

Trim No.	Per Car	15-85	19-39-79-89
T-084	1	362 9926	... .
T-086	1	362 9927	... .
T-091	1	362 0778	362 9946
T-093	1	362 9925	362 9943
T-094	1	362 9926	362 9944
T-095	1	362 0778	362 9947
T-096	1	362 9927	362 9945
T-151	1	362 0778	362 9946
T-153	1	365 3145	364 8708
T-154	1	365 3146	364 8709
T-161	1	... .	364 0172
T-163	1	... .	364 0173
T-164	1	... .	364 0174
T-165	1	... .	364 0175
T-168	1	... .	364 0172
T-171	1	362 0778	362 9946
T-173	1	365 3145	364 8708
T-174	1	365 3146	364 8709
T-175	1	362 0778	364 8710
T-176	1	362 0778	362 9946
T-181	1	362 0778	... .
T-183	1	365 3145	... .
T-184	1	365 3146	... .
T-186	1	362 0778	... .
T-191	1	362 0778	362 9946
T-193	1	365 3145	364 8708
T-194	1	365 3146	364 8709
T-195	1	362 0778	364 8710
T-196	1	362 0778	362 9946
T-261W	1	... .	366 3751
T-261 Except "W" Trim	1	... .	364 0172
T-263	1	... .	365 3746
T-264	1	... .	365 3747
T-265	1	... .	364 0172
T-266	1	... .	365 3749
T-268	1	... .	364 0172
T-271	1	365 4889	362 9946
T-273	1	365 4886	365 4904
T-274	1	365 4887	365 4905
T-276	1	365 4888	365 4906
T-291	1	365 4889	362 9946
T-293	1	365 4886	365 4904
T-294	1	365 4887	365 4905
T-296	1	365 4888	365 4906

1967 Thru 1969 MODELS

Trim No.		Per Car	18-88			
T-753	Front	1	357 9192	... .	... .	... .
	Rear	1	357 9212	... .	... .	... .
T-758	Front	1	357 9191	... .	... .	... .
	Rear	1	357 9211	... .	... .	... .
T-759	Front	1	357 9196	... .	... .	... .
	Rear	1	357 9216	... .	... .	... .
T-771	Front	1	357 9191	... .	... .	... .
	Rear	1	357 9211	... .	... .	... .
T-773	Front	1	357 9192	... .	... .	... .
	Rear	1	357 9212	... .	... .	... .

SEATS - SOFT TRIM

Trim No.			Per Car	18-88			
T-774	Front	.....	1	357 9193	... .	... .	... .
	Rear	.....	1	357 9213	... .	... .	... .
T-776	Front	.....	1	357 9194	... .	... .	... .
	Rear	.....	1	357 9214	... .	... .	... .
T-777	Front	.....	1	357 9195	... .	... .	... .
	Rear	.....	1	357 9215	... .	... .	... .
T-779	Front	.....	1	357 9196	... .	... .	... .
	Rear	.....	1	357 9216	... .	... .	... .
T-781	Front	.....	1	357 9191	... .	... .	... .
	Rear	.....	1	357 9211	... .	... .	... .
T-783	Front	.....	1	357 9192	... .	... .	... .
	Rear	.....	1	357 9212	... .	... .	... .
T-787	Front	.....	1	357 9195	... .	... .	... .
	Rear	.....	1	357 9215	... .	... .	... .
T-789	Front	.....	1	357 9196	... .	... .	... .
	Rear	.....	1	357 9216	... .	... .	... .
T-791	Front	.....	1	357 9191	... .	... .	... .
	Rear	.....	1	357 9211	... .	... .	... .
T-793	Front	.....	1	357 9192	... .	... .	... .
	Rear	.....	1	357 9212	... .	... .	... .
T-794	Front	.....	1	357 9193	... .	... .	... .
	Rear	.....	1	357 9213	... .	... .	... .
T-796	Front	.....	1	357 9194	... .	... .	... .
	Rear	.....	1	357 9214	... .	... .	... .
T-797	Front	.....	1	357 9195	... .	... .	... .
	Rear	.....	1	357 9215	... .	... .	... .
T-799	Front	.....	1	357 9196	... .	... .	... .
	Rear	.....	1	357 9216	... .	... .	... .
T-851	Front	(* 29-8).....	1	357 9191	... .	... .	... .
		(* 29-9).....	1	358 0695	... .	... .	... .
	Rear	.....	1	361 2687	... .	... .	... .
T-853	Front	(* 29-8).....	1	361 2152	... .	... .	... .
		(* 29-9).....	1	358 0696	... .	... .	... .
	Rear	.....	1	360 5572	... .	... .	... .
T-855	Front	(* 29-8).....	1	357 9191	... .	... .	... .
		(* 29-9).....	1	358 0695	... .	... .	... .
	Rear	.....	1	361 2687	... .	... .	... .
T-871	Front	(* 29-8).....	1	357 9191	... .	... .	... .
		(* 29-9).....	1	358 0695	... .	... .	... .
	Rear	.....	1	361 2687	... .	... .	... .
T-873	Front	(* 29-8).....	1	361 2152	... .	... .	... .
		(* 29-9).....	1	358 0696	... .	... .	... .
	Rear	.....	1	360 5572	... .	... .	... .
T-874	Front	(* 29-8).....	1	361 2153	... .	... .	... .
		(* 29-9).....	1	358 0697	... .	... .	... .
	Rear	.....	1	360 5573	... .	... .	... .
T-875	Front	(* 29-8).....	1	357 9191	... .	... .	... .
		(* 29-9).....	1	358 0695	... .	... .	... .
	Rear	.....	1	361 2687	... .	... .	... .
T-876	Front	(* 29-8).....	1	361 2154	... .	... .	... .
		(* 29-9).....	1	358 0698	... .	... .	... .
	Rear	.....	1	360 5574	... .	... .	... .
T-879	Front	(* 29-8).....	1	361 2155	... .	... .	... .
		(* 29-9).....	1	358 0699	... .	... .	... .
	Rear	.....	1	360 5576	... .	... .	... .
T-891	Front	(* 29-8).....	1	357 9191	... .	... .	... .
		(* 29-9).....	1	358 0695	... .	... .	... .
	Rear	.....	1	361 2687	... .	... .	... .

SEATS - SOFT TRIM

Trim No.			Per Car	18-88			
T-893	Front	(* 29-8)	1	361 2152			
		(* 29-9)	1	358 0696			
	Rear		1	360 5572			
T-894	Front	(* 29-8)	1	361 2153			
		(* 29-9)	1	358 0697			
	Rear		1	360 5573			
T-895	Front	(* 29-8)	1	357 9191			
		(* 29-9)	1	358 0695			
	Rear		1	361 2687			
T-896	Front	(* 29-8)	1	361 2154			
		(* 29-9)	1	358 0698			
	Rear		1	360 5574			
T-899	Front	(* 29-8)	1	361 2155			
		(* 29-9)	1	358 0699			
	Rear		1	360 5576			
T-951	Front	(* 29-107)	1	362 5268			
		(* 29-108)	1	448 7263			
	Rear		1	362 5264			
T-953	Front	(* 29-107)	1	362 0769			
		(* 29-108)	1	448 7260			
	Rear		1	362 0760			
T-956	Front	(* 29-107)	1	362 0770			
		(* 29-108)	1	448 7261			
	Rear		1	362 0761			
T-957	Front	(* 29-107)	1	362 0771			
		(* 29-108)	1	448 7262			
	Rear		1	362 0762			
T-972	Front	(* 29-107)	1	362 5268			
		(* 29-108)	1	448 7263			
	Rear		1	362 5264			
T-973	Front	(* 29-107)	1	362 0769			
		(* 29-108)	1	448 7260			
	Rear		1	362 0760			
T-976	Front	(* 29-107)	1	362 0770			
		(* 29-108)	1	448 7261			
	Rear		1	362 0761			
T-977	Front	(* 29-107)	1	362 0771			
		(* 29-108)	1	448 7262			
	Rear		1	362 0762			
T-991	Front	(* 29-107)	1	362 5268			
		(* 29-108)	1	448 7263			
	Rear		1	362 5264			
T-993	Front	(* 29-107)	1	362 0769			
		(* 29-108)	1	448 7260			
	Rear		1	362 0760			
T-996	Front	(* 29-107)	1	362 0770			
		(* 29-108)	1	448 7261			
	Rear		1	362 0761			
T-997	Front	(* 29-107)	1	362 0771			
		(* 29-108)	1	448 7262			
	Rear		1	362 0762			

SEATS - SOFT TRIM

1970 Thru 1972 MODELS

Trim No.			Per Car	18-88
T-051	Front		1	362 0768
	Rear		1	361 2687
T-053	Front		1	362 9931
	Rear		1	362 9937
T-054	Front		1	362 9932
	Rear		1	362 9938
T-056	Front		1	362 9933
	Rear		1	362 9939
T-071	Front		1	362 0768
	Rear		1	361 2687
T-073	Front		1	362 9931
	Rear		1	362 9937
T-074	Front		1	362 9932
	Rear		1	362 9938
T-075	Front		1	362 0768
	Rear		1	361 2687
T-076	Front		1	362 9933
	Rear		1	362 9939
T-091	Front		1	362 0768
	Rear		1	361 2687
T-093	Front		1	362 9931
	Rear		1	362 9937
T-094	Front		1	362 9932
	Rear		1	362 9938
T-095	Front		1	362 0768
	Rear		1	361 2687
T-096	Front		1	362 9933
	Rear		1	362 9939
T-151	Front		1	362 0768
	Rear		1	361 2687
T-153	Front		1	365 3142
	Rear		1	365 3139
T-154	Front		1	365 3143
	Rear		1	365 3140
T-171	Front		1	362 0768
	Rear		1	361 2687
T-173	Front		1	365 3142
	Rear		1	365 3139
T-174	Front		1	365 3143
	Rear		1	365 3140
T-175	Front		1	362 0768
	Rear		1	361 2687
T-176	Front		1	362 0768
	Rear		1	361 2687
T-191	Front		1	362 0768
	Rear		1	361 2687
T-193	Front		1	365 3142
	Rear		1	365 3139
T-194	Front		1	365 3143
	Rear		1	365 3140
T-195	Front		1	362 0768
	Rear		1	361 2687
T-196	Front		1	362 0768
	Rear		1	361 2687
T-271	Front	(* 29-148)	1	365 4861
		(* 29-149)	1	364 9691
	Rear	(* 29-148)	1	365 4866
		(* 29-149)	1	364 9699
T-273	Front	(* 29-148)	1	365 4858
		(* 29-149)	1	364 9692
	Rear	(* 29-148)	1	365 4863
		(* 29-149)	1	364 9700

SEATS - SOFT TRIM

Trim No.			Per Car	18-88
T-274	Front	(* 29-148)	1	365 4859
		(* 29-149)	1	364 9693
	Rear	(* 29-148)	1	365 4864
		(* 29-149)	1	364 9701
T-276	Front	(* 29-148)	1	365 4860
		(* 29-149)	1	364 9694
	Rear	(* 29-148)	1	365 4865
		(* 29-149)	1	364 9702
T-291	Front	(* 29-148)	1	365 4861
		(* 29-149)	1	364 9691
	Rear	(* 29-148)	1	365 4866
		(* 29-149)	1	364 9699
T-293	Front	(* 29-148)	1	365 4858
		(* 29-149)	1	364 9692
	Rear	(* 29-148)	1	365 4863
		(* 29-149)	1	364 9700
T-294	Front	(* 29-148)	1	365 4859
		(* 29-149)	1	364 9693
	Rear	(* 29-148)	1	365 4864
		(* 29-149)	1	364 9701
T-296	Front	(* 29-148)	1	365 4860
		(* 29-149)	1	364 9694
	Rear	(* 29-148)	1	365 4865
		(* 29-149)	1	364 9702

29.015-2 PAD, Rear Window Reveal Moulding (Upper)

72	*Taxi*	.....	AR	812 2057

29.017-1 PAD, Front Pillar Crash

1968 - 1969 MODELS

Trim No.			Per Car	39-79
T-831	Left		1	360 7017
	Right		1	360 7016
T-832	Left		1	360 4677
	Right		1	360 4676
T-835	Left		1	360 7023
	Right		1	360 7022
T-838	Left		1	360 7017
	Right		1	360 7016
T-931	Left	(* 29-87)	1	362 3715
		(* 29-88)	1	362 5561
	Right	(* 29-87)	1	362 3714
		(* 29-88)	1	362 5560
T-932	Left	(* 29-87)	1	362 3715
		(* 29-88)	1	362 5561
	Right	(* 29-87)	1	362 3714
		(* 29-88)	1	362 5560
T-935	Left	(* 29-87)	1	362 3719
		(* 29-88)	1	362 5565
	Right	(* 29-87)	1	362 3718
		(* 29-88)	1	362 5564
T-936	Left	(* 29-87)	1	362 3721
		(* 29-88)	1	362 5567
	Right	(* 29-87)	1	362 3720
		(* 29-88)	1	362 5566
T-961	Left	(* 29-87)	1	362 3715
		(* 29-88)	1	362 5561
	Right	(* 29-87)	1	362 3714
		(* 29-88)	1	362 5560
T-962	Left	(* 29-87)	1	362 3715
		(* 29-88)	1	362 5561

SEATS - SOFT TRIM

Trim No.			Per Car	39-79			
	Right	(* 29-87)	1	362 3714	... .	... .	... .
		(* 29-88)	1	362 5560	... .	... .	... .
T-963	Left	(* 29-87)	1	362 3717	... .	... .	... .
		(* 29-88)	1	362 5563	... .	... .	... .
	Right	(* 29-87)	1	362 3716	... .	... .	... .
		(* 29-88)	1	362 5562	... .	... .	... .
T-965	Left	(* 29-87)	1	362 3719	... .	... .	... .
		(* 29-88)	1	362 5565	... .	... .	... .
	Right	(* 29-87)	1	362 3718	... .	... .	... .
		(* 29-88)	1	362 5564	... .	... .	... .
T-966	Left	(* 29-87)	1	362 3721	... .	... .	... .
		(* 29-88)	1	362 5567	... .	... .	... .
	Right	(* 29-87)	1	362 3720	... .	... .	... .
		(* 29-88)	1	362 5566	... .	... .	... .
T-968	Left	(* 29-87)	1	362 3715	... .	... .	... .
		(* 29-88)	1	362 5561	... .	... .	... .
	Right	(* 29-87)	1	362 3714	... .	... .	... .
		(* 29-88)	1	362 5560	... .	... .	... .

1970 MODELS

Trim No.		Per Car	39-79
T-031	Left	1	362 9091
	Right	1	362 9090
T-033	Left	1	362 9093
	Right	1	362 9092
T-035	Left	1	362 5565
	Right	1	362 5564
T-036	Left	1	362 9097
	Right	1	362 9096
T-061	Left	1	362 9091
	Right	1	362 9090
T-063	Left	1	362 9093
	Right	1	362 9092
T-064	Left	1	362 9095
	Right	1	362 9094
T-065	Left	1	362 5565
	Right	1	362 5564
T-066	Left	1	362 9097
	Right	1	362 9096

29.017-2 ATTACHING PARTS, Pad To Body

SCREW, Tapping.....	68	30-70.....	.....	6	400 2293
SCREW, Tapping.....	69/70	30-70 (8-15 x 1-1/2)	.....	4	400 2293
SCREW, Tapping.....	69/70	30-70 (8-15 x 1)	15.365	AR	400 2214
FASTENER	68/70	30-70.....	22.100	2	400 1911

29.017-3 COVER, Front Pillar

Trim No.		Per Car	79
T-161	Left	1	363 9738
	Right	1	363 9722
T-163	Left	1	363 9739
	Right	1	363 9723
T-164	Left	1	363 9740
	Right	1	363 9724
T-165	Left	1	363 9741
	Right	1	363 9725
T-168	Left	1	363 9738
	Right	1	363 9722

SEATS - SOFT TRIM

Trim No.		Per Car	79
T-261	Left	1	365 3844
	Right	1	365 3839
T-263	Left	1	365 3841
	Right	1	365 3836
T-264	Left	1	365 3842
	Right	1	365 3837
T-265	Left	1	365 3844
	Right	1	365 3839
T-266	Left	1	365 3845
	Right	1	365 3840
T-268	Left	1	365 3844
	Right	1	365 3839

29.017–4 ATTACHING PARTS, Cover To Pillar

SCREW, Tapping	71/	79 (8-18 x 1)	17.655	1	448 9495
SCREW, Tapping	71/	79 (8-18 x 1/2)	25.019	1	400 1479
CLIP	71/	79 *(Use 400 3681)*	.....	4	400 3682

29.019–1 PANEL, Center Pillar Trim

1967 - 1968 MODELS

Trim No.	Per Car	05-08-15-18 -85-88			
T-723	2	358 1108	... .	... .	... .
T-728	2	348 3374	... .	... .	... .
T-729	2	358 1112	... .	... .	... .
T-741	2	348 3374	... .	... .	... .
T-743	2	358 1108	... .	... .	... .
T-744	2	356 3233	... .	... .	... .
T-745	2	358 1110	... .	... .	... .
T-747	2	353 8132	... .	... .	... .
T-749	2	358 1112	... .	... .	... .
T-753	2	358 1848	... .	... .	... .
T-758	2	358 1847	... .	... .	... .
T-759	2	358 1853	... .	... .	... .
T-771	2	358 1847	... .	... .	... .
T-773	2	358 1848	... .	... .	... .
T-774	2	358 1849	... .	... .	... .
T-776	2	358 1851	... .	... .	... .
T-777	2	358 1852	... .	... .	... .
T-779	2	358 1853	... .	... .	... .
T-781	2	358 1847	... .	... .	... .
T-783	2	358 1848	... .	... .	... .
T-787	2	358 1852	... .	... .	... .
T-789	2	358 1853	... .	... .	... .
T-791	2	358 1847	... .	... .	... .
T-793	2	358 1848	... .	... .	... .
T-794	2	358 1849	... .	... .	... .
T-796	2	358 1851	... .	... .	... .
T-797	2	358 1852	... .	... .	... .
T-799	2	358 1853	... .	... .	... .
T-828	2	348 3374	... .	... .	... .
T-843	2	360 4696	... .	... .	... .
T-844	2	360 4697	... .	... .	... .
T-845	2	358 1110	... .	... .	... .
T-848	2	348 3374	... .	... .	... .

SEATS - SOFT TRIM

Trim No.	Per Car	05-08-15-18 -85-88			
T-851	2	358 1847	... .	... .	... .
T-853	2	360 5370	... .	... .	... .
T-855	2	358 1850	... .	... .	... .
T-871	2	358 1847	... .	... .	... .
T-873	2	360 5370	... .	... .	... .
T-874	2	360 5371	... .	... .	... .
T-875	2	358 1850	... .	... .	... .
T-876	2	360 5373	... .	... .	... .
T-879	2	360 5374	... .	... .	... .
T-881	2	358 1847	... .	... .	... .
T-883	2	360 5370	... .	... .	... .
T-885	2	358 1850	... .	... .	... .
T-891	2	358 1847	... .	... .	... .
T-893	2	360 5370	... .	... .	... .
T-894	2	360 5371	... .	... .	... .
T-895	2	358 1850	... .	... .	... .
T-896	2	360 5373	... .	... .	... .
T-899	2	360 5374	... .	... .	... .

1969 Thru 1972 MODELS (* 29-19 NC)

69	05-08	.....	2	362 4362
69	15-18-85-88	.....	2	362 0322
70/71	15-18-85-88	.....	2	358 1847
72	15-18-85-88 (Used With Aluminum Lower Cover Retainer)	.....	2	365 4634 NC
70	(Left) 05	.....	1	362 8639
71	(Left) 05-08	.....	1	362 8638
72	(Left) 05-08	.....	1	365 3107
72	(Left) 15-18-85-88 (Used Less Aluminum Lower Cover Retainer)	.....	1	366 1953 NC
70	(Right) C5	.....	1	362 8638
71	(Right) C5-08	.....	1	362 8639
72	(Right) 05-08	.....	1	365 3106
72	(Right) 15-18-85-88 (Used Less Aluminum Lower Cover Retainer)	.....	1	366 1952 NC

29.019-2 ATTACHING PARTS, Cover To Center Body Pillar

SCREW, Tapping	67/69	05-08	29.070	4	400 0273
SCREW, Tapping	70/	05-08	.....	4	400 1776
SCREW, Tapping	67/	15-18-85-88	29.070	4	400 0273
RETAINER	67/	15-18-85-88	.....	2	358 1866

29.023-1 PANEL, Lock Pillar Trim (Cover-Rear)

1967 - 1968 MODELS

Trim No.		Per Car	09-39-79	16-19-59-86 -89	17-87	
T-741	Left	1	352 0575	... .	... .	... .
	Right	1	352 0574	... .	... .	... .
T-743	Left	1	358 1269	... .	... .	... .
	Right	1	358 1268	... .	... .	... .
T-744	Left	1	356 4251	... .	... .	... .
	Right	1	356 4250	... .	... .	... .
T-745	Left	1	358 1273	... .	... .	... .
	Right	1	358 1272	... .	... .	... .
T-747	Left	1	354 1821	... .	... .	... .
	Right	1	354 1820	... .	... .	... .
T-748	Left	1	352 0575	... .	... .	... .
	Right	1	352 0574	... .	... .	... .

SEATS - SOFT TRIM

Trim No.		Per Car	09-39-79	16-19-59-86 -89	17-87	
T-749	Left	1	358 1277	... .	... .	... .
	Right	1	358 1276	... .	... .	... .
T-753	Left	1	... .	358 0727	... .	... .
	Right	1	... .	358 0726	... .	... .
T-758	Left	1	... .	358 0725	... .	... .
	Right	1	... .	358 0724	... .	... .
T-759	Left	1	... .	358 0737	... .	... .
	Right	1	... .	358 0736	... .	... .
T-771	Left	1	... .	358 0725	358 1173	... .
	Right	1	... .	358 0724	358 1172	... .
T-773	Left	1	... .	358 0727	358 1175	... .
	Right	1	... .	358 0726	358 1174	... .
T-774	Left	1	... .	358 0729	... .	... .
	Right	1	... .	358 0728	... .	... .
T-775	Left	1	... .	358 0731	358 1177	... .
	Right	1	... .	358 0730	358 1176	... .
T-776	Left	1	... .	358 0733	358 1179	... .
	Right	1	... .	358 0732	358 1178	... .
T-777	Left	1	... .	358 0735	... .	... .
	Right	1	... .	358 0734	... .	... .
T-778	Left	1	... .	358 0725	358 1173	... .
	Right	1	... .	358 0724	358 1172	... .
T-779	Left	1	... .	358 0737	358 1181	... .
	Right	1	... .	358 0736	358 1180	... .
T-781	Left	1	... .	358 0725	... .	... .
	Right	1	... .	358 0724	... .	... .
T-783	Left	1	... .	358 0727	... .	... .
	Right	1	... .	358 0726	... .	... .
T-787	Left	1	... .	358 0735	... .	... .
	Right	1	... .	358 0734	... .	... .
T-789	Left	1	... .	358 0737	... .	... .
	Right	1	... .	358 0736	... .	... .
T-791	Left	1	... .	358 0725	358 1173	... .
	Right	1	... .	358 0724	358 1172	... .
T-793	Left	1	... .	358 0727	358 1175	... .
	Right	1	... .	358 0726	358 1174	... .
T-794	Left	1	... .	358 0729	... .	... .
	Right	1	... .	358 0728	... .	... .
T-795	Left	1	... .	358 0731	358 1177	... .
	Right	1	... .	358 0730	358 1176	... .
T-796	Left	1	... .	358 0733	358 1179	... .
	Right	1	... .	358 0732	358 1178	... .
T-797	Left	1	... .	358 0735	... .	... .
	Right	1	... .	358 0734	... .	... .
T-798	Left	1	... .	358 0725	358 1173	... .
	Right	1	... .	358 0724	358 1172	... .
T-799	Left	1	... .	358 0737	358 1181	... .
	Right	1	... .	358 0736	358 1180	... .
T-831	Left	1	360 4227	... .	... .	... .
	Right	1	360 4226	... .	... .	... .
T-832	Left	1	360 4237	... .	... .	... .
	Right	1	360 4236	... .	... .	... .
T-835	Left	1	360 4233	... .	... .	... .
	Right	1	360 4232	... .	... .	... .
T-838	Left	1	360 4227	... .	... .	... .
	Right	1	360 4226	... .	... .	... .
T-843	Left	1	360 4775	... .	... .	... .
	Right	1	360 4774	... .	... .	... .

SEATS - SOFT TRIM

Trim No.		Per Car	09-39-79	16-19-59 -86-89	17-87	
T-844	Left	1	360 4777			
	Right	1	360 4776			
T-845	Left	1	358 1273			
	Right	1	358 1272			
T-848	Left	1	352 0575			
	Right	1	352 0574			
T-851	Left	1		358 0725	358 1173	
	Right	1		358 0724	358 1172	
T-853	Left	1		360 6455	360 5407	
	Right	1		360 6454	360 5406	
T-855	Left	1		358 0731	358 1177	
	Right	1		358 0730	358 1176	
T-871	Left	1		358 0725	358 1173	
	Right	1		358 0724	358 1172	
T-873	Left	1		360 6455	360 5407	
	Right	1		360 6454	360 5406	
T-874	Left	1		360 6457	360 5409	
	Right	1		360 6456	360 5408	
T-875	Left	1		358 0731	358 1177	
	Right	1		358 0730	358 1176	
T-876	Left	1		360 6459	360 5413	
	Right	1		360 6458	360 5412	
T-879	Left	1		360 6461	360 5417	
	Right	1		360 6460	360 5416	
T-881	Left	1		358 0725		
	Right	1		358 0724		
T-883	Left	1		360 6455		
	Right	1		360 6454		
T-885	Left	1		358 0731		
	Right	1		358 0730		
T-891	Left	1		358 0725		
	Right	1		358 0724		
T-893	Left	1		360 6455		
	Right	1		360 6454		
T-894	Left	1		360 6457		
	Right	1		360 6456		
T-895	Left	1		358 0731		
	Right	1		358 0730		
T-896	Left	1		360 6459		
	Right	1		360 6458		
T-899	Left	1		360 6461		
	Right	1		360 6460		

1969 Thru 1972 MODELS (* 29-19 NC)

69	(Left) 09	1	362 3887
69	(Left) 19-89	1	362 0339
70/	(Left) 19-89	1	358 0725
69	(Left) 79	1	361 9385
70	(Left) 79	1	360 4227
69	(Right) 09	1	362 3886
69	(Right) 19-89	1	362 0338
70/	(Right) 19-89	1	358 0724
69	(Right) 79	1	361 9384
70	(Right) 79	1	360 4226

29.023-2 ATTACHING PARTS, Panel To Body

SCREW, Tapping	67/69	09 (8-15 x 5/8)	10	400 1309
SCREW, Tapping	68	39-79 (8-15 x 5/8)	8	400 1309
SCREW, Tapping	69	79 (8-18 x 3/4)	6	439 5412
SCREW, Tapping	70	79 (8-15 x 5/8)	6	400 1309

Printed in U.S.A.

SEATS - SOFT TRIM

29.034–1 PANEL, Rear Shelf Trim

1967 Thru 1969 MODELS

Trim No.	Per Car	15-85	16-19-86-89	59-79	
T-753	1	357 8803	357 9773	... .	... .
T-758	1	357 8802	357 9772	... .	... .
T-759	1	357 8808	357 9778	... .	... .
T-771	1	357 8802	357 9772	... .	... .
T-773	1	357 8803	357 9773	... .	... .
T-774	1	357 8804	357 9774	... .	... .
T-775	1	... .	357 9775	... .	... .
T-776	1	357 8806	357 9776	... .	... .
T-777	1	357 8807	357 9777	... .	... .
T-778	1	357 8802	357 9772	... .	... .
T-779	1	357 8808	357 9778	... .	... .
T-781	1	357 8802	357 9772	... .	... .
T-783	1	357 8803	357 9773	... .	... .
T-787	1	357 8807	357 9777	... .	... .
T-789	1	357 8808	357 9778	... .	... .
T-791	1	357 8802	357 9772	353 1267	... .
T-793	1	357 8803	357 9773	358 0812	... .
T-794	1	357 8804	357 9774	... .	... .
T-795	1	... .	357 9775	358 0813	... .
T-796	1	357 8806	357 9776	... .	... .
T-797	1	357 8807	357 9777	... .	... .
T-798	1	357 8802	357 9772	... .	... .
T-799	1	357 8808	357 9778	358 0814	... .
T-831	1	... .	... .	360 7752	... .
T-832	1	... .	... .	360 7754	... .
T-835	1	... .	... .	360 7753	... .
T-838	1	... .	... .	360 7752	... .
T-851	1	361 2843	361 2846	... .	... .
T-853	1	361 1821	361 1817	... .	... .
T-855	1	361 2843	261 2847	... .	... .
T-871	1	361 2842	361 2846	... .	... .
T-873	1	361 1821	361 1817	... .	... .
T-874	1	361 1822	361 1818	... .	... .
T-875	1	361 2843	361 2847	... .	... .
T-876	1	361 1823	361 1819	... .	... .
T-879	1	361 1824	361 1820	... .	... .
T-881	1	361 2842	361 2846	... .	... .
T-883	1	361 1821	361 1817	... .	... .
T-885	1	361 2843	361 2847	... .	... .
T-891	1	361 2842	361 2846	... .	... .
T-893	1	361 1821	361 1817	... .	... .
T-894	1	361 1822	361 1818	... .	... .
T-895	1	361 2843	361 2847	... .	... .
T-896	1	361 1823	361 1819	... .	... .
T-899	1	361 1824	361 1820	... .	... .
T-000	1	... .	362 0629	... .	... .
T-951	1	362 0619	362 0629	... .	... .
T-953	1	362 0620	362 0630	... .	... .
T-956	1	362 0622	362 0632	... .	... .
T-957	1	362 0623	362 0633	... .	... .
T-961	1	... .	... .	362 4533	... .
T-962	1	... .	... .	362 4533	... .
T-963	1	... .	... .	362 4536	... .
T-965	1	... .	... .	362 4534	... .

SEATS - SOFT TRIM

Trim No.	Per Car	15-85	16-19-86-89	59-79	
T-966	1	... .	... .	362 4535	... .
T-968	1	... .	... .	362 4533	... .
T-972	1	362 0619	362 0629	... .	... .
T-973	1	362 0620	362 0630	... .	... .
T-975	1	... .	362 0631	... .	... .
T-976	1	362 0622	362 0632	... .	... .
T-977	1	362 0623	362 0633	... .	... .
T-979	1	362 0623	362 0633	... .	... .
T-981	1	362 0619	362 0629	... .	... .
T-983	1	362 0620	362 0630	... .	... .
T-986	1	362 0622	362 0632	... .	... .
T-987	1	362 0623	362 0633	... .	... .
T-991	1	362 0619	362 0629	... .	... .
T-992	1	362 0619	362 0629	... .	... .
T-993	1	362 0620	362 0630	... .	... .
T-995	1	... .	362 0631	... .	... .
T-996	1	362 0622	362 0632	... .	... .
T-997	1	362 0623	362 0633	... .	... .
T-999	1	362 0623	362 0633	... .	... .

1970 Thru 1972 MODELS

Trim No.	Per Car	05-06-15-85	19-79-89
T-021	1	362 7357	... .
T-023	1	362 7358	... .
T-024	1	362 7359	... .
T-025	1	362 7360	... .
T-041	1	362 7357	... .
T-043	1	362 7358	... .
T-044	1	362 7359	... .
T-045	1	362 7360	... .
T-051	1	362 7637	363 4041
T-053	1	362 7638	363 4043
T-054	1	362 7639	363 4044
T-056	1	362 7640	363 4046
T-061	1	... .	362 9798
T-063	1	... .	362 9799
T-064	1	... .	362 9800
T-065	1	... .	362 4534
T-066	1	... .	362 9801
T-071	1	362 7637	363 4041
T-073	1	362 7638	363 4043
T-074	1	362 7639	363 4044
T-075	1	362 6368	363 4045
T-076	1	362 7640	363 4046
T-081	1	362 7637	... .
T-083	1	362 7638	... .
T-084	1	362 7639	... .
T-086	1	362 7640	... .
T-091	1	362 7637	363 4041
T-093	1	362 7638	363 4043
T-094	1	362 7639	363 4044
T-095	1	362 6368	363 4045
T-096	1	362 7640	363 4046
T-121	1	362 7357	... .
T-123	1	364 0701	... .

Printed in U.S.A.

SEATS - SOFT TRIM

Trim No.	Per Car	05-06-15-85	19-79-89
T-124	1	364 0702	... .
T-128	1	362 7357	... .
T-141	1	362 7357	... .
T-143	1	364 0701	... .
T-144	1	364 0702	... .
T-145	1	364 0703	... .
T-151	1	362 7637	363 4041
T-153	1	362 2159	362 2165
T-154	1	362 2160	362 2166
T-161	1	... .	364 0155
T-163	1	... .	364 0156
T-164	1	... .	364 0157
T-165	1	... ...	364 0158
T-168	1	... .	364 0155
T-171	1	362 7637	363 4041
T-173	1	362 2159	362 2165
T-174	1	362 2160	362 2166
T-175	1	362 2161	362 2167
T-176	1	362 7637	363 4041
T-181	1	362 7637	... .
T-183	1	362 2159	... .
T-184	1	362 2160	... .
T-186	1	362 7637	... .
T-191	1	362 7637	363 4041
T-193	1	362 2159	362 2165
T-194	1	362 2160	362 2166
T-195	1	362 2161	362 2167
T-196	1	362 7637	363 4041
T-241	1	365 3461	... .
T-243	1	365 3458	... .
T-244	1	365 3459	... .
T-245	1	365 3461	... .
T-246	1	365 3462	... .
T-248	1	365 3461	... .
T-261	1	... .	365 3819
T-263	1	... .	365 3816
T-264	1	... .	365 3817
T-265	1	... .	365 3819
T-266	1	... .	365 3820
T-268	1	... .	365 3819
T-271	1	365 4120	365 4130
T-273	1	365 4121	365 4131
T-274	1	365 4122	365 4132
T-276	1	365 4123	365 4133
T-291	1	365 4120	365 4130
T-293	1	365 4121	365 4131
T-294	1	365 4122	365 4132
T-296	1	365 4123	365 4133

29.034-2 ATTACHING PARTS, Shelf Panel To Body

BUTTON	67/	15-85 (* 29-19 NC) ***(Use 361 2850)***	.....	4	358 0118
SCREW, Washer Head	67	59 (#10-12 x 5/8) ***(Use 318 9013)***	17.671	4	400 0478
SCREW, Oval Head	67	59 (#8-18 x 3/4)	29.019	2	439 5412
SCREW, Tapping	67	59 (#8-18 x 1/2)	29.070	2	400 0273
SCREW, Tapping	67	59 (#12-11 x 5/8)	17.666	2	G162006 NA
SCREW, Tapping	67	59 (#12-11 x 1-1/4)	17.666	2	G162022 NA
NUT, Speed	67	59	17.426	2	400 1556
WASHER, Plain	67	59	17.814	4	400 1081

SEATS - SOFT TRIM

29.034–3 MOULDING, Rear Shelf Panel (Vinyl)

1967 Thru 1969 MODELS

Trim No.	Per Car	05-06-15-85	16-19-86-89		
T-753	2	357 9284	... .	... .	... .
	1	... .	357 9441	... .	... .
T-758	2	357 9283	... .	... .	... .
	1	... .	357 9440	... .	... .
T-759	2	357 9288	... .	... .	... .
	1	... .	357 9446	... .	... .
T-771	2	357 9283	... .	... .	... .
	1	... .	357 9440	... .	... .
T-773	2	357 9284	... .	... .	... .
	1	... .	357 9441	... .	... .
T-774	2	357 9285	... .	... .	... .
	1	... .	357 9442	... .	... .
T-775	1	... .	357 9443	... .	... .
T-776	2	357 9286	... .	... .	... .
	1	... .	357 9444	... .	... .
T-777	2	357 9287	... .	... .	... .
	1	... .	357 9445	... .	... .
T-778	1	... .	357 9440	... .	... .
T-779	2	357 9288	... .	... .	... .
	1	... .	357 9446	... .	... .
T-781	2	357 9283	... .	... .	... .
	1	... .	357 9440	... .	... .
T-783	2	357 9284	... .	... .	... .
	1	... .	357 9441	... .	... .
T-787	2	357 9287	... .	... .	... .
	1	... .	357 9445	... .	... .
T-789	2	357 9288	... .	... .	... .
	1	... .	357 9446	... .	... .
T-791	2	357 9283	... .	... .	... .
	1	... .	357 9440	... .	... .
T-793	2	357 9284	... .	... .	... .
	1	... .	357 9441	... .	... .
T-794	2	357 9285	... .	... .	... .
	1	... .	357 9442	... .	... .
T-795	1	... .	357 9443	... .	... .
T-796	2	357 9286	... .	... .	... .
	1	... .	357 9444	... .	... .
T-797	2	357 9287	... .	... .	... .
	1	... .	357 9445	... .	... .
T-798	1	... .	357 9440	... .	... .
T-799	2	357 9288	... .	... .	... .
	1	... .	357 9446	... .	... .
T-828	1	360 6219	... .	... .	... .
T-843	1	360 6220	... .	... .	... .
T-844	1	360 6221	... .	... .	... .
T-845	1	360 6222	... .	... .	... .
T-848	1	360 6219	... .	... .	... .
T-851	2	357 9283	... .	... .	... .
	1	... .	357 9440	... .	... .
T-853	2	360 5751	... .	... .	... .
	1	... .	360 5744	... .	... .
T-855	2	360 5753	... .	... .	... .
	1	... .	357 9443	... .	... .

Printed in U.S.A.

SEATS - SOFT TRIM

Trim No.	Per Car	05-06-15-85	16-19-86-89		
T-871	2	357 9283			
	1		357 9440		
T-873	2	360 5751			
	1		360 5744		
T-874	2	360 5752			
	1		360 5745		
T-875	2	360 5753			
	1		357 9443		
T-876	2	360 5754			
	1		360 5747		
T-879	2	360 5756			
	1		360 5749		
T-881	2	357 9283			
	1		357 9440		
T-883	2	360 5751			
	1		360 5744		
T-885	2	360 5753			
	1		357 9443		
T-891	2	357 9283			
	1		357 9440		
T-893	2	360 5751			
	1		360 5744		
T-894	2	360 5752			
	1		360 5745		
T-895	2	360 5753			
	1		357 9443		
T-896	2	360 5754			
	1		360 5747		
T-899	2	360 5756			
	1		360 5749		
T-000	1		362 0536		
T-923	1	362 3637			
T-928	1	362 3636			
T-941	1	362 3636			
T-943	1	362 3637			
T-944	1	362 3638			
T-945	1	362 3639			
T-951	2	362 0540			
	1		362 0536		
T-953	2	362 0541			
	1		362 0537		
T-956	2	362 0542			
	1		362 0538		
T-957	2	362 0543			
	1		362 0539		
T-972	2	362 0540			
	1		362 0536		
T-973	2	362 0541			
	1		362 0537		
T-975	1		357 9443		
T-976	2	362 0542			
	1		362 0538		
T-977	2	362 0543			
	1		362 0539		
T-979	1		362 0539		
T-981	2	362 0540			
T-983	2	362 0541			
T-986	2	362 0542			

SEATS - SOFT TRIM

Trim No.	Per Car	05-06-15-85	16-19-86-89		
T-987	2	362 0543	... .	... .	... .
T-991	2	362 0540	... .	... .	... .
	1	... .	362 0536	... .	... .
T-992	2	362 0540	... .	... .	... .
	1	... .	362 0536	... .	... .
T-993	2	362 0541	... .	... .	... .
	1	... .	362 0537	... .	... .
T-995	1	... .	357 9443	... .	... .
T-996	2	362 0542	... .	... .	... .
	1	... .	362 0538	... .	... .
T-997	2	362 0543	... .	... .	... .
	1	... .	362 0539	... .	... .
T-999	1	... .	362 0539	... .	... .

1970 Thru 1972 MODELS

Trim No.	Per Car	15-85
T-051	2	357 9283
T-053	2	362 8396
T-054	2	362 8397
T-056	2	362 8398
T-071	2	357 9283
T-073	2	362 8396
T-074	2	362 8397
T-075	2	362 8399
T-076	2	362 8398
T-081	2	357 9283
T-083	2	362 8396
T-084	2	362 8397
T-086	2	362 8398
T-091	2	357 9283
T-093	2	362 8396
T-094	2	362 8397
T-095	2	362 8399
T-096	2	362 8398
T-151	2	357 9283
T-153	2	362 2202
T-154	2	362 2203
T-171	2	357 9283
T-173	2	362 2202
T-174	2	362 2203
T-175	2	362 2204
T-176	2	357 9283
T-181	2	357 9283
T-183	2	362 2202
T-184	2	362 2203
T-186	2	357 9283
T-191	2	357 9283
T-193	2	362 2202
T-194	2	362 2203
T-195	2	362 2204
T-196	2	357 9283
T-271	2	357 9283
T-273	2	365 4984

SEATS - SOFT TRIM

Trim No.		Per Car	15-85
T-274		2	365 4985
T-276		2	365 4986
T-291		2	357 9283
T-293		2	365 4984
T-294		2	365 4985
T-296		2	365 4986

29.034–3a MOULDING, Rear Shelf Panel Front (Metal)

67	59		27.300	2	351 7807	

29.034–4 ATTACHING PARTS, Moulding To Shelf Panel

SCREW, Tapping	67/69	05	17.655	5	G168499	NA

29.034–5 GRILLE, Rear Window Defogger

72	*05-06-15-85 (Fleet)*		.....	1	365 7881	

29.035–1 PANEL, Rear Shelf Side Extension Trim

Trim No.		Per Car	59
T-791	Left	1	357 9271
	Right	1	357 9270
T-793	Left	1	357 9273
	Right	1	357 9272
T-795	Left	1	357 9275
	Right	1	357 9274
T-799	Left	1	357 9277
	Right	1	357 9277

29.035–2 ATTACHING PARTS, Panel To Uniside

SCREW, Tapping	67	59	23.198	6	400 1923	

29.035–3 ATTACHING PARTS, Panel To Rear Quarter Roof Side Trim

SCREW, Tapping	67	59	.....	4	439 5412	
NUT, Spring	67	59	17.422	4	G445109	NA

SEATS - SOFT TRIM

29.052–1 PANEL, Rear Quarter Side Trim (* 29-14)(Two Door Models-Except 67 89)

1967 MODELS

Trim No.		Per Car	06-16:19 (Except "W" Trim) :59(LER) :86	07:17(LER) :87	09:19("W" Trim): 59 (WER)	17(WER)
T-723	Left	1	358 4123	... .	... .	... .
	Right	1	358 4122	... .	... .	... .
T-728	Left	1	358 4125	... .	... .	... .
	Right	1	358 4124	... .	... .	... .
T-729	Left	1	358 4127	... .	... .	... .
	Right	1	358 4126	... .	... .	... .
T-741	Left	1	359 2351	358 4143	358 4157	... .
	Right	1	359 2350	358 4142	358 4156	... .
T-743	Left	1	358 4129	358 4145	358 4159	... .
	Right	1	358 4128	358 4144	358 4158	... .
T-744	Left	1	358 4131	... .	358 4161	... .
	Right	1	358 4130	... .	358 4160	... .
T-745	Left	1	358 4133	358 4149	358 4163	... .
	Right	1	358 4132	358 4148	358 4162	... .
T-747	Left	1	358 4135	... .	358 4165	... .
	Right	1	358 4134	... .	358 4164	... .
T-748	Left	1	... .	358 4151	358 4167	... .
	Right	1	... .	358 4150	358 4166	... .
T-749	Left	1	358 4137	358 4153	358 4169	... .
	Right	1	358 4136	358 4152	358 4168	... .
T-753	Left	1	650 5317	... .	... .	... .
	Right	1	650 5316	... .	... .	... .
T-758	Left	1	650 5319	... .	... .	... .
	Right	1	650 5318	... .	... .	... .
T-759	Left	1	650 5321	... .	... .	... .
	Right	1	650 5320	... .	... .	... .
T-771	Left	1	650 5323	650 5563	448 4605	650 5575
	Right	1	650 5322	650 5562	448 4604	650 5574
T-773	Left	1	650 5325	650 5565	448 4607	650 5577
	Right	1	650 5324	650 5564	448 4606	650 5576
T-774	Left	1	650 5327	... .	... .	... .
	Right	1	650 5326	... .	... .	... .
T-775	Left	1	650 5329	650 5567	448 4609	650 5579
	Right	1	650 5328	650 5566	448 4608	650 5578
T-776	Left	1	650 5331	650 5569	448 4611	650 5581
	Right	1	650 5330	650 5568	448 4610	650 5580
T-777	Left	1	650 5333	... .	... .	... .
	Right	1	650 5332	... .	... .	... .
T-778	Left	1	650 5335	650 5571	... .	650 5583
	Right	1	650 5334	650 5570	... .	650 5582
T-779	Left	1	650 5337	650 5573	448 4613	650 5585
	Right	1	650 5336	650 5572	448 4612	650 5584
T-781	Left	1	650 5349	... .	... .	... .
	Right	1	650 5348	... .	... .	... .

SEATS - SOFT TRIM

Trim No.			Per Car	06-16:19 (Except "W" Trim) :59(LER) :86	07:17(LER) :87	09:19("W" Trim):59 (WER)	17(WER)
T-783	Left	(* 29-10)	1	650 5351	... .	... .	... .
		(* 29-11)	1	650 6041	... .	... .	... .
	Right	(* 29-10)	1	650 5350	... .	... .	... .
		(* 29-11)	1	650 6040	... .	... .	... .
T-787	Left	(* 29-10)	1	650 5353	... .	... .	... .
		(* 29-11)	1	650 6043	... .	... .	... .
	Right	(* 29-10)	1	650 5352	... .	... .	... .
		(* 29-11)	1	650 6042	... .	... .	... .
T-789	Left	(* 29-10)	1	650 5355	... .	... .	... .
		(* 29-11)	1	650 6045	... .	... .	... .
	Right	(* 29-10)	1	650 5354	... .	... .	... .
		(* 29-11)	1	650 6044	... .	... .	... .
T-791	Left	(* 29-12)	1	448 4647	650 5623	448 4655	... .
		(* 29-13)	1	448 4879	... .	448 4887	... .
	Right	(* 29-12)	1	448 4646	650 5622	448 4654	... .
		(* 29-13)	1	448 4878	... .	448 4886	... .
T-793	Left	(* 29-12)	1	448 4649	650 5625	... .	... .
		(* 29-13)	1	448 4881	... .	448 4889	... .
	Right	(* 29-12)	1	448 4648	650 5624	... .	... .
		(* 29-13)	1	448 4880	... .	448 4888	... .
T-795	Left	(* 29-12)(* 29-26)	1	448 4651	650 5627	... .	... .
		(* 29-13)(* 29-26)	1	448 4883	... .	448 4891	... .
		(* 29-13)(* 29-28)	1	650 6455	... .	650 6457	... .
	Right	(* 29-12)(* 29-26)	1	448 4650	650 5626	... .	... .
		(* 29-13)(* 29-26)	1	448 4882	... .	448 4890	... .
		(* 29-13)(* 29-28)	1	650 6454	... .	650 6456	... .
T-796	Left		1	... .	650 5629	... .	... .
	Right		1	... .	650 5628	... .	... .
T-798	Left		1	... .	650 5631	... .	... .
	Right		1	... .	650 5630	... .	... .
T-799	Left	(* 29-12)	1	448 4653	650 5633	... .	... .
		(* 29-13)	1	448 4885	... .	448 4893	... .
	Right	(* 29-12)	1	448 4652	650 5632	... .	... .
		(* 29-13)	1	448 4884	... .	448 4892	... .

Printed in U.S.A.

SEATS - SOFT TRIM

67 89 "AMBASSADOR" Hardtop Models

Trim No.			Per Car	89(LER-Except "W" Trim)	89(LER-"W" Trim)	89(WER-Except "W" Trim)	89(WER-"W" Trim)
T-791	Left		1	448 4615	448 4663	448 4631	448 4673
	Right		1	448 4614	448 4662	448 4630	448 4672
T-793	Left		1	448 4617	448 4665	448 4633	448 4675
	Right		1	448 4616	448 4664	448 4632	448 4674
T-794	Left		1	448 4619	....	448 4635	....
	Right		1	448 4618	....	448 4634	....
T-795	Left	(* 29-26)	1	448 4621	448 4667	448 4637	448 4677
		(* 29-28)	1	650 6451	....	650 6453	....
	Right	(* 29-26)	1	448 4620	448 4666	448 4636	448 4676
		(* 29-28)	1	650 6450	....	650 6452	....
T-796	Left		1	448 4623	448 4669	448 4639	448 4679
	Right		1	448 4622	448 4668	448 4638	448 4678
T-797	Left		1	448 4625	....	448 4641	....
	Right		1	448 4624	....	448 4640	....
T-798	Left		1	448 4627	....	448 4643	....
	Right		1	448 4626	....	448 4642	....
T-799	Left		1	448 4629	448 4671	448 4645	448 4681
	Right		1	448 4628	448 4670	448 4644	448 4680

1968 - 1969 MODELS

Trim No.			Per Car	06-17	09-19-39	79-89	
T-828	Left		1	362 3171	....	....	....
	Right		1	362 3170	....	....	....
T-831	Left		1	....	362 3041	359 8245	....
	Right		1	....	362 3040	359 8244	....
T-832	Left		1	....	362 3043	359 8859	....
	Right		1	....	362 3042	359 8858	....
T-835	Left		1	....	362 3849	359 8251	....
	Right		1	....	362 3848	359 8250	....
T-838	Left		1	....	....	362 3085	....
	Right		1	....	....	362 3084	....
T-843	Left		1	....	448 6707	....	....
	Right		1	....	448 6706	....	....
T-844	Left		1	....	448 6709	....	....
	Right		1	....	448 6708	....	....
T-845	Left		1	....	448 6711	....	....
	Right		1	....	448 6710	....	....
T-848	Left		1	....	448 6705	....	....
	Right		1	....	448 6704	....	....
T-851	Left		1	651 3973	651 2947	651 2947	....
	Right		1	651 3972	651 2946	651 2946	....
T-853	Left		1	651 3975	651 2949	....	....
	Right		1	651 3974	651 2948	....	....
T-855	Left		1	651 3977	651 2951	....	....
	Right		1	651 3976	651 2950	....	....
T-871C	Left		1	....	651 2969	....	....
	Right		1	....	651 2968	....	....
T-871E	Left	(* 29-15)	1	651 2955	651 3161	....	....
		(* 29-16)	1	651 6069	651 6081	....	....
		(* 29-17)	1	651 6427	651 6435	....	....
	Right	(* 29-15)	1	651 2954	651 3160	....	....
		(* 29-16)	1	651 6068	651 6080	....	....
		(* 29-17)	1	651 6426	651 6434	....	....

SEATS - SOFT TRIM

Trim No.			Per Car	06-17	09-19-39	79-89	
T-871K	Left	(* 29-15)	1	651 2955	651 3161	... .	... .
		(* 29-16)	1	651 6069	651 6081	... .	... .
		(* 29-17)	1	651 6427	651 6435	... .	... .
	Right	(* 29-15)	1	651 2954	651 3160	... .	... .
		(* 29-16)	1	651 6068	651 6080	... .	... .
		(* 29-17)	1	651 6426	651 6434	... .	... .
T-871V	Left		1	... .	651 2969	... .	... .
	Right		1	... .	651 2968	... .	... .
T-871W	Left	(* 29-15)	1	... .	651 2983	... .	... .
		(* 29-16)	1	... .	651 6081	... .	... .
	Right	(* 29-15)	1	... .	651 2982	... .	... .
		(* 29-16)	1	... .	651 6080	... .	... .
T-873C	Left		1	... .	651 2971	... .	... .
	Right		1	... .	651 2970	... .	... .
T-873E	Left	(* 29-15)	1	651 2957	... ...	... .	... .
		(* 29-16)	1	448 6233	448 6237	... .	... .
		(* 29-17)	1	651 6071	651 6083	... .	... .
	Right	(* 29-15)	1	651 2956	... .	... .	... .
		(* 29-16)	1	448 6232	448 6236	... .	... .
		(* 29-17)	1	651 6070	651 6082	... .	... .
T-873K	Left	(* 29-15)	1	651 2957	... .	... .	... .
		(* 29-16)	1	448 6233	448 6237	... .	... .
		(* 29-17)	1	651 6071	651 6083	... .	... .
	Right	(* 29-15)	1	651 2956	... .	... .	... .
		(* 29-16)	1	448 6232	448 6236	... .	... .
		(* 29-17)	1	651 6070	651 6082	... .	... .
T-873V	Left		1	... .	651 2971	... .	... .
	Right		1	... .	651 2970	... .	... .
T-873W	Left		1	... .	651 6083	... .	... .
	Right		1	... .	651 6082	... .	... .
T-874C	Left		1	... .	651 2973	... .	... .
	Right		1	... .	651 2972	... .	... .
T-874E	Left	(* 29-16)	1	448 6235	448 6239	... .	... .
		(* 29-17)	1	651 6073	651 6085	... .	... .
	Right	(* 29-16)	1	448 6234	448 6238	... .	... .
		(* 29-17)	1	651 6072	651 6084	... .	... .
T-874K	Left	(* 29-16)	1	448 6235	448 6239	... .	... .
		(* 29-17)	1	651 6073	651 6085	... .	... .
	Right	(* 29-16)	1	448 6234	448 6238	... .	... .
		(* 29-17)	1	651 6072	651 6084	... .	... .
T-874V	Left		1	... .	651 2973	... .	... .
	Right		1	... .	651 2972	... .	... .
T-874W	Left		1	... .	651 6085	... .	... .
	Right		1	... .	651 6084	... .	... .
T-875E	Left	(* 29-16)	1	651 6075	651 6087	... .	... .
		(* 29-17)	1	651 6429	651 6437	... .	... .
	Right	(* 29-16)	1	651 6074	651 6086	... .	... .
		(* 29-17)	1	651 6428	651 6436	... .	... .
T-875K	Left	(* 29-16)	1	651 6075	651 6087	... .	... .
		(* 29-17)	1	651 6429	651 6437	... .	... .
	Right	(* 29-16)	1	651 6074	651 6086	... .	... .
		(* 29-17)	1	651 6428	651 6436	... .	... .
T-875V	Left		1	... .	651 2975	... .	... .
	Right		1	... .	651 2974	... .	... .
T-875W	Left		1	... .	651 6087	... .	... .
	Right		1	... .	651 6086	... .	... .
T-876C	Left		1	... .	651 2977	... .	... .
	Right		1	... .	651 2976	... .	... .
T-876E	Left	(* 29-16)	1	651 6077	651 6089	... .	... .
		(* 29-17)	1	651 6431	651 6439	... .	... .
	Right	(* 29-16)	1	651 6076	651 6088	... .	... .
		(* 29-17)	1	651 6430	651 6438	... .	... .

SEATS - SOFT TRIM

Trim No.			Per Car	06-17	09-19-39	79-89	
T-876K	Left	(* 29-16)	1	651 6077	651 6089	....	....
		(* 29-17)	1	651 6431	651 6439	....	....
	Right	(* 29-16)	1	651 6076	651 6088	....	....
		(* 29-17)	1	651 6430	651 6438	....	....
T-876V	Left		1	....	651 2977	....	....
	Right		1	....	651 2976	....	....
T-876W	Left		1	....	651 6089	....	....
	Right		1	....	651 6088	....	....
T-879C	Left		1	....	651 2981	....	....
	Right		1	....	651 2980	....	....
T-879E	Left	(* 29-16)	1	651 6079	651 6091	....	....
		(* 29-17)	1	651 6433	651 6441	....	....
	Right	(* 29-16)	1	651 6078	651 6090	....	....
		(* 29-17)	1	651 6432	651 6440	....	....
T-879K	Left	(* 29-16)	1	651 6079	651 6091	....	....
		(* 29-17)	1	651 6433	651 6441	....	....
	Right	(* 29-16)	1	651 6078	651 6090	....	....
		(* 29-17)	1	651 6432	651 6440	....	....
T-879V	Left		1	....	651 2981	....	....
	Right		1	....	651 2980	....	....
T-879W	Left	(* 29-15)	1	....	651 2993	....	....
		(* 29-16)	1	....	651 6091	....	....
		(* 29-17)	1	....	651 6441	....	....
	Right	(* 29-15)	1	....	651 2992	....	....
		(* 29-16)	1	....	651 6090	....	....
		(* 29-17)	1	....	651 6440	....	....
T-881	Left		1	....	....	651 2995	....
	Right		1	....	....	651 2994	....
T-883	Left		1	....	....	651 2997	....
	Right		1	....	....	651 2996	....
T-885	Left		1	....	....	651 2999	....
	Right		1	....	....	651 2998	....
T-891C	Left	(* 29-27)	1	....	....	448 6493	....
		(* 29-28)	1	....	....	651 3031	....
	Right	(* 29-27)	1	....	....	448 6492	....
		(* 29-28)	1	....	....	651 3030	....
T-891E	Left	(* 29-15)	1	....	....	651 2935	....
		(* 29-26)(* 29-27)	1	....	....	448 6505	....
		(* 29-26)(* 29-28)	1	....	....	651 6093	....
	Right	(* 29-15)	1	....	....	651 2934	....
		(* 29-26)(* 29-27)	1	....	....	448 6504	....
		(* 29-26)(* 29-28)	1	....	....	651 6092	....
T-891K	Left	(* 29-15)	1	....	....	651 2935	....
		(* 29-26)(* 29-27)	1	....	....	448 6505	....
		(* 29-26)(* 29-28)	1	....	....	651 6093	....
	Right	(* 29-15)	1	....	....	651 2934	....
		(* 29-26)(* 29-27)	1	....	....	448 6504	....
		(* 29-26)(* 29-28)	1	....	....	651 6092	....
T-891V	Left	(* 29-27)	1	....	....	448 6493	....
		(* 29-28)	1	....	....	651 3031	....
	Right	(* 29-27)	1	....	....	448 6492	....
		(* 29-28)	1	....	....	651 3030	....
T-891W	Left	(* 29-26)(* 29-27)	1	....	....	448 6505	....
		(* 29-28)	1	....	....	651 6093	....
	Right	(* 29-26)(* 29-27)	1	....	....	448 6504	....
		(* 29-28)	1	....	....	651 6092	....
T-893C	Left	(* 29-27)	1	....	....	448 6495	....
		(* 29-28)	1	....	....	651 3033	....
	Right	(* 29-27)	1	....	....	448 6494	....
		(* 29-28)	1	....	....	651 3032	....

Printed in U.S.A.

SEATS - SOFT TRIM

Trim No.			Per Car	06-17	09-19-39	79-89	
T-893E	Left	(* 29-26)(* 29-27)	1	... .	... .	448 6507	... .
		(* 29-28)	1	... .	... .	651 6095	... .
	Right	(* 29-26)(* 29-27)	1	... .	... .	448 6506	... .
		(* 29-28)	1	... .	... .	651 6094	... .
T-893K	Left	(* 29-26)(* 29-27)	1	... .	... .	448 6507	... .
		(* 29-28)	1	... .	... .	651 6095	... .
	Right	(* 29-26)(* 29-27)	1	... .	... .	448 6506	... .
		(* 29-28)	1	... .	... .	651 6094	... .
T-893V	Left	(* 29-27)	1	... .	... .	448 6495	... .
		(* 29-28)	1	... .	... .	651 3033	... .
	Right	(* 29-27)	1	... .	... .	448 6494	... .
		(* 29-28)	1	... .	... .	651 3032	... .
T-893W	Left	(* 29-15)	1	... .	... .	651 3047	... .
		(* 29-26)(* 29-27)	1	... .	... .	448 6507	... .
		(* 29-26)(* 29-28)	1	... .	... .	651 6095	... .
	Right	(* 29-15)	1	... .	... .	651 3046	... .
		(* 29-26)(* 29-27)	1	... .	... .	448 6506	... .
		(* 29-26)(* 29-28)	1	... .	... .	651 6094	... .
T-894C	Left	(* 29-27)	1	... .	... .	448 6497	... .
		(* 29-28)	1	... .	... .	651 3035	... .
	Right	(* 29-27)	1	... .	... .	448 6496	... .
		(* 29-28)	1	... .	... .	651 3034	... .
T-894E	Left	(* 29-15)	1	... .	... .	651 2939	... .
		(* 29-26)(* 29-27)	1	... .	... .	448 6509	... .
		(* 29-26)(* 29-28)	1	... .	... .	651 6097	... .
	Right	(* 29-15)	1	... .	... .	651 2938	... .
		(* 29-26)(* 29-27)	1	... .	... .	448 6508	... .
		(* 29-26)(* 29-28)	1	... .	... .	651 6096	... .
T-894K	Left	(* 29-15)	1	... .	... .	651 2939	... .
		(* 29-26)(* 29-27)	1	... .	... .	448 6509	... .
		(* 29-26)(* 29-28)	1	... .	... .	651 6097	... .
	Right	(* 29-15)	1	... .	... .	651 2938	... .
		(* 29-26)(* 29-27)	1	... .	... .	448 6508	... .
		(* 29-26)(* 29-28)	1	... .	... .	651 6096	... .
T-894W	Left	(* 29-26)(* 29-27)	1	... .	... .	448 6509	... .
		(* 29-28)	1	... .	... .	651 6097	... .
	Right	(* 29-26)(* 29-27)	1	... .	... .	448 6508	... .
		(* 29-28)	1	... .	... .	651 6096	... .
T-895E	Left	(* 29-26)(* 29-27)	1	... .	... .	448 6511	... .
		(* 29-28)	1	... .	... .	651 6099	... .
	Right	(* 29-26)(* 29-27)	1	... .	... .	448 6510	... .
		(* 29-28)	1	... .	... .	651 6098	... .
T-895K	Left	(* 29-26)(* 29-27)	1	... .	... .	448 6511	... .
		(* 29-28)	1	... .	... .	651 6099	... .
	Right	(* 29-26)(* 29-27)	1	... .	... .	448 6510	... .
		(* 29-28)	1	... .	... .	651 6098	... .
T-895V	Left	(* 29-27)	1	... .	... .	448 6498	... .
		(* 29-28)	1	... .	... .	651 3037	... .
	Right	(* 29-27)	1	... .	... .	448 6499	... .
		(* 29-28)	1	... .	... .	651 3036	... .
T-896C	Left	(* 29-27)	1	... .	... .	448 6501	... .
		(* 29-28)	1	... .	... .	651 3039	... .
	Right	(* 29-27)	1	... .	... .	448 6500	... .
		(* 29-28)	1	... .	... .	651 3038	... .
T-896E	Left	(* 29-26)(* 29-27)	1	... .	... .	448 6513	... .
		(* 29-28)	1	... .	... .	651 6101	... .
	Right	(* 29-26)(* 29-27)	1	... .	... .	448 6512	... .
		(* 29-28)	1	... .	... .	651 6100	... .
T-896K	Left	(* 29-26)(* 29-27)	1	... .	... .	448 6513	... .
		(* 29-28)	1	... .	... .	651 6101	... .
	Right	(* 29-26)(* 29-27)	1	... .	... .	448 6512	... .
		(* 29-28)	1	... .	... .	651 6100	... .

SEATS - SOFT TRIM

Trim No.			Per Car	06-17	09-19-39	79-89	
T-896V	Left	(* 29-27)	1	... .	... .	448 6501	... .
		(* 29-28)	1	... .	... .	651 3039	... .
	Right	(* 29-27)	1	... .	... .	448 6500	... .
		(* 29-28)	1	... .	... .	651 3038	... .
T-896W	Left	(* 29-26)(* 29-27)	1	... .	... .	448 6513	... .
		(* 29-28)	1	... .	... .	651 6101	... .
	Right	(* 29-26)(* 29-27)	1	... .	... .	448 6512	... .
		(* 29-28)	1	... .	... .	651 6100	... .
T-899C	Left	(* 29-27)	1	... .	... .	448 6503	... .
		(* 29-28)	1	... .	... .	651 3043	... .
	Right	(* 29-27)	1	... .	... .	448 6502	... .
		(* 29-28)	1	... .	... .	651 3042	... .
T-899E	Left	(* 29-15)	1	... .	... .	651 2945	... .
		(* 29-26)(* 29-27)	1	... .	... .	448 6515	... .
		(* 29-26)(* 29-28)	1	... .	... .	651 6103	... .
	Right	(* 29-15)	1	... .	... .	651 2944	... .
		(* 29-26)(* 29-27)	1	... .	... .	448 6514	... .
		(* 29-26)(* 29-28)	1	... .	... .	651 6102	... .
T-899K	Left	(* 29-15)	1	... .	... .	651 2945	... .
		(* 29-26)(* 29-27)	1	... .	... .	448 6515	... .
		(* 29-26)(* 29-28)	1	... .	... .	651 6103	... .
	Right	(* 29-15)	1	... .	... .	651 2944	... .
		(* 29-26)(* 29-27)	1	... .	... .	448 6514	... .
		(* 29-26)(* 29-28)	1	... .	... .	651 6102	... .
T-899W	Left	(* 29-26)(* 29-27)	1	... .	... .	448 6515	... .
		(* 29-28)	1	... .	... .	651 6103	... .
	Right	(* 29-26)(* 29-27)	1	... .	... .	448 6514	... .
		(* 29-28)	1	... .	... .	651 6102	... .
T-000	Left		1	... .	448 9287	... .	... .
	Right		1	... .	448 9286	... .	... .
T-923	Left		1	363 0313	... .	... .	... .
	Right		1	363 0312	... .	... .	... .
T-928	Left		1	362 5173	... .	... .	... .
	Right		1	362 5172	... .	... .	... .
T-931	Left		1	... .	361 9153	... .	... .
	Right		1	... .	361 9152	... .	... .
T-932	Left		1	... .	361 9161	... .	... .
	Right		1	... .	361 9160	... .	... .
T-935	Left		1	... .	361 9155	... .	... .
	Right		1	... .	361 9154	... .	... .
T-936	Left		1	... .	361 9157	... .	... .
	Right		1	... .	361 9156	... .	... .
T-941	Left		1	... .	362 5187	... .	... .
	Right		1	... .	362 5186	... .	... .
T-943	Left		1	... .	362 5189	... .	... .
	Right		1	... .	362 5188	... .	... .
T-944	Left		1	... .	362 5191	... .	... .
	Right		1	... .	362 5190	... .	... .
T-945	Left		1	... .	362 5193	... .	... .
	Right		1	... .	362 5192	... .	... .
T-951	Left		1	... .	652 0877	... .	... .
	Right		1	... .	652 0876	... .	... .
T-953	Left		1	... .	652 0879	... .	... .
	Right		1	... .	652 0878	... .	... .
T-956	Left		1	... .	652 0881	... .	... .
	Right		1	... .	652 0880	... .	... .
T-957	Left		1	... .	652 0883	... .	... .
	Right		1	... .	652 0882	... .	... .
T-961	Left		1	... .	... .	363 0303	... .
	Right		1	... .	... .	363 0302	... .

SEATS - SOFT TRIM

Trim No.			Per Car	06-17	09-19-39	79-89	
T-962	Left		1	... .	... .	363 0323	... .
	Right		1	... .	... .	363 0322	... .
T-963	Left		1	... .	... .	363 0305	... .
	Right		1	... .	... .	363 0304	... .
T-965	Left		1	... .	... .	363 0307	... .
	Right		1	... .	... .	363 0306	... .
T-966	Left		1	... .	... .	363 0309	... .
	Right		1	... .	... .	363 0308	... .
T-968	Left		1	... .	... .	363 0311	... .
	Right		1	... .	... .	363 0310	... .
T-972	Left		1	... .	652 0899	... .	... .
	Right		1	... .	652 0898	... .	... .
T-973	Left		1	... .	652 0901	... .	... .
	Right		1	... .	652 0900	... .	... .
T-975	Left		1	... .	652 0903	... .	... .
	Right		1	... .	652 0902	... .	... .
T-976	Left		1	... .	652 0905	... .	... .
	Right		1	... .	652 0904	... .	... .
T-977	Left		1	... .	652 0907	... .	... .
	Right		1	... .	652 0906	... .	... .
T-979	Left		1	... .	652 0909	... .	... .
	Right		1	... .	652 0908	... .	... .
T-991A	Left		1	... .	... .	652 0923	... .
	Right		1	... .	... .	652 0922	... .
T-991B	Left		1	... .	... .	652 0923	... .
	Right		1	... .	... .	652 0922	... .
T-991C	Left		1	... .	... .	652 0923	... .
	Right		1	... .	... .	652 0922	... .
T-991D	Left		1	... .	... .	652 0923	... .
	Right		1	... .	... .	652 0922	... .
T-991F	Left		1	... .	... .	652 0937	... .
	Right		1	... .	... .	652 0936	... .
T-991N	Left		1	... .	... .	652 0937	... .
	Right		1	... .	... .	652 0936	... .
T-992	Left		1	... .	... .	652 0947	... .
	Right		1	... .	... .	652 0946	... .
T-993A	Left		1	... .	... .	652 0925	... .
	Right		1	... .	... .	652 0924	... .
T-993B	Left		1	... .	... .	652 0925	... .
	Right		1	... .	... .	652 0924	... .
T-993C	Left		1	... .	... .	652 0925	... .
	Right		1	... .	... .	652 0924	... .
T-993D	Left		1	... .	... .	652 0925	... .
	Right		1	... .	... .	652 0924	... .
T-993E	Left		1	... .	... .	652 0939	... .
	Right		1	... .	... .	652 0938	... .
T-993F	Left		1	... .	... .	652 0939	... .
	Right		1	... .	... .	652 0938	... .
T-993M	Left		1	... .	... .	652 0939	... .
	Right		1	... .	... .	652 0938	... .
T-993N	Left		1	... .	... .	652 0939	... .
	Right		1	... .	... .	652 0927	... .
T-995B	Left		1	... .	... .	652 0926	... .
	Right		1	... .	... .	652 0927	... .
T-995D	Left		1	... .	... .	652 0926	... .
	Right		1	... .	... .	652 0941	... .
T-995F	Left		1	... .	... .	652 0940	... .
	Right		1	... .	... .	652 0941	... .
T-995N	Left		1	... .	... .	652 0940	... .
	Right		1	... .	... .		

Printed in U.S.A.

SEATS - SOFT TRIM

Trim No.		Per Car	06-17	09-19-39	79-89	
T-996A	Left	1	... .	... .	652 0929	... .
	Right	1	... .	... .	652 0928	... .
T-996B	Left	1	... .	... .	652 0929	... .
	Right	1	... .	... .	652 0928	... .
T-996C	Left	1	... .	... .	652 0929	... .
	Right	1	... .	... .	652 0928	... .
T-996D	Left	1	... .	... .	652 0929	... .
	Right	1	... .	... .	652 0928	... .
T-996E	Left	1	... .	... .	652 0943	... .
	Right	1	... .	... .	652 0942	... .
T-996F	Left	1	... .	... .	652 0943	... .
	Right	1	... .	... .	652 0942	... .
T-996M	Left	1	... .	... .	652 0943	... .
	Right	1	... .	... .	652 0942	... .
T-996N	Left	1	... .	... .	652 0943	... .
	Right	1	... .	... .	652 0942	... .
T-997A	Left	1	... .	... .	652 0931	... .
	Right	1	... .	... .	652 0930	... .
T-997B	Left	1	... .	... .	652 0931	... .
	Right	1	... .	... .	652 0930	... .
T-997C	Left	1	... .	... .	652 0931	... .
	Right	1	... .	... .	652 0930	... .
T-997D	Left	1	... .	... .	652 0931	... .
	Right	1	... .	... .	652 0930	... .
T-997E	Left	1	... .	... .	652 0945	... .
	Right	1	... .	... .	652 0944	... .
T-997M	Left	1	... .	... .	652 0945	... .
	Right	1	... .	... .	652 0944	... .
T-999	Left	1	... .	... .	652 0949	... .
	Right	1	... .	... .	652 0948	... .

1970 MODELS

Trim No.		Per Car	06-19-39-46 -79-89
T-001	Left	1	363 7629
	Right	1	363 7628
T-008	Left	1	363 7623
	Right	1	363 7622
T-011	Left	1	363 7629
	Right	1	363 7628
T-013	Left	1	363 7631
	Right	1	363 7630
T-014	Left	1	363 7625
	Right	1	363 7624
T-015	Left	1	363 7633
	Right	1	363 7632
T-021A	Left	1	362 7025
	Right	1	362 7024
T-021B	Left	1	362 7025
	Right	1	362 7024
T-021G	Left	1	363 9599
	Right	1	363 9598
T-023	Left	1	362 7027
	Right	1	362 7026
T-024	Left	1	363 9595
	Right	1	363 9594
T-025	Left	1	363 9597
	Right	1	363 9596

SEATS - SOFT TRIM

Trim No.		Per Car	06-19-39-46 -79-89
T-031	Left	1	363 4233
	Right	1	363 4232
T-033	Left	1	363 4235
	Right	1	363 4234
T-035	Left	1	363 4239
	Right	1	363 4238
T-036	Left	1	363 4237
	Right	1	363 4236
T-041	Left	1	362 7033
	Right	1	362 7032
T-043A	Left	1	362 7035
	Right	1	362 7034
T-043B	Left	1	362 7035
	Right	1	362 7034
T-043C	Left	1	362 7035
	Right	1	362 7034
T-043D	Left	1	362 7035
	Right	1	362 7034
T-043V	Left	1	362 9471
	Right	1	362 9470
T-044A	Left	1	362 7037
	Right	1	362 7036
T-044B	Left	1	362 7037
	Right	1	362 7036
T-044C	Left	1	362 7037
	Right	1	362 7036
T-044D	Left	1	362 7037
	Right	1	362 7036
T-044V	Left	1	362 9473
	Right	1	362 9472
T-045	Left	1	362 7039
	Right	1	362 7038
T-051	Left	1	652 3761
	Right	1	652 3760
T-053	Left	1	652 3763
	Right	1	652 3762
T-054	Left	1	652 3765
	Right	1	652 3764
T-056	Left	1	652 3767
	Right	1	652 3766
T-061E	Left	1	363 0889
	Right	1	363 0888
T-061F	Left	1	363 5389
	Right	1	363 5388
T-061J	Left	1	363 0597
	Right	1	363 0596
T-061L	Left	1	363 5389
	Right	1	363 5388
T-063E	Left	1	363 0891
	Right	1	363 0890
T-063F	Left	1	363 5391
	Right	1	363 5390
T-063J	Left	1	363 0599
	Right	1	363 0598
T-064E	Left	1	363 0893
	Right	1	363 0892
T-064F	Left	1	363 5393
	Right	1	363 5392
T-064J	Left	1	363 0601
	Right	1	363 0600
T-065E	Left	1	363 0895
	Right	1	363 0894
T-065F	Left	1	363 5395
	Right	1	363 5394

SEATS - SOFT TRIM

Trim No.			Per Car	06-19-39-46 -79-89
T-065J	Left		1	363 0603
	Right		1	363 0602
T-065L	Left		1	363 5395
	Right		1	363 5394
T-066E	Left		1	363 0897
	Right		1	363 0896
T-066F	Left		1	363 5397
	Right		1	363 5396
T-066J	Left		1	363 0605
	Right		1	363 0604
T-066L	Left		1	363 5397
	Right		1	363 5396
T-071	Left		1	652 3769
	Right		1	652 3768
T-073	Left		1	652 3773
	Right		1	652 3772
T-074	Left		1	652 3775
	Right		1	652 3774
T-075	Left		1	652 3777
	Right		1	652 3776
T-076	Left		1	652 3779
	Right		1	652 3778
T-091	Left	(DPL)	1	652 3781
		(SST)	1	652 3793
	Right	(DPL)	1	652 3780
		(SST)	1	652 3792
T-093	Left	(DPL)	1	652 3785
		(SST)	1	652 3797
	Right	(DPL)	1	652 3784
		(SST)	1	652 3796
T-094	Left	(DPL)	1	652 3787
		(SST)	1	652 3799
	Right	(DPL)	1	652 3786
		(SST)	1	652 3798
T-095	Left	(DPL)	1	652 3789
		(SST)	1	652 3801
	Right	(DPL)	1	652 3788
		(SST)	1	652 3800
T-096	Left	(DPL)	1	652 3791
		(SST)	1	652 3803
	Right	(DPL)	1	652 3790
		(SST)	1	652 3802

1971 MODELS

Trim No.			Per Car	06-19-46 -79-89
T-101	Left		1	364 2241
	Right		1	364 2240
T-103	Left	Except "A" Trim	1	364 2243
	Right	Except "A" Trim	1	364 2242
T-103A	Left		1	364 2241
	Right		1	364 2240
T-104A	Left		1	364 2241
	Right		1	364 2240
T-108	Left		1	364 2241
	Right		1	364 2240
T-111	Left		1	364 2241
	Right		1	364 2240
T-113	Left		1	364 2243
	Right		1	364 2242
T-114	Left		1	364 2245
	Right		1	364 2244
T-115	Left		1	364 2247
	Right		1	364 2246

SEATS - SOFT TRIM

Trim No.			Per Car	06-19-46 -79-89
T-121	Left		1	364 2291
	Right		1	364 2290
T-123	Left		1	364 2293
	Right		1	364 2292
T-124	Left		1	364 2295
	Right		1	364 2294
T-128	Left		1	364 2291
	Right		1	364 2290
T-141	Left		1	363 8531
	Right		1	363 8530
T-141V	Left		1	363 8551
	Right		1	363 8550
T-143	Left		1	363 8533
	Right		1	363 8532
T-143V	Left		1	365 2507
	Right		1	365 2506
T-144	Left		1	363 8535
	Right		1	363 8534
T-144V	Left		1	365 2509
	Right		1	365 2508
T-145D	Left		1	363 8537
	Right		1	363 8536
T-145V	Left		1	363 8553
	Right		1	363 8552
T-151	Left		1	652 6365
	Right		1	652 6364
T-153	Left		1	652 6367
	Right		1	652 6366
T-154	Left		1	652 6369
	Right		1	652 6368
T-161	Left		1	363 8443
	Right		1	363 8442
T-163	Left		1	363 8445
	Right		1	363 8444
T-164	Left		1	363 8447
	Right		1	363 8446
T-165	Left		1	363 8449
	Right		1	363 8448
T-168	Left		1	363 8443
	Right		1	363 8442
T-171V	Left		1	652 6371
	Right		1	652 6370
T-173V	Left		1	652 6373
	Right		1	652 6372
T-174V	Left		1	652 6375
	Right		1	652 6374
T-175V	Left		1	652 6377
	Right		1	652 6376
T-176V	Left		1	652 6371
	Right		1	652 6370
T-191	Left	(SST)	1	652 6379
		(Brougham)	1	652 6387
	Right	(SST)	1	652 6378
		(Brougham)	1	652 6386
T-193	Left	(SST)	1	652 6381
		(Brougham)	1	652 6389
	Right	(SST)	1	652 6380
		(Brougham)	1	652 6388
T-194	Left	(SST)	1	652 6383
		(Brougham)	1	652 6391
	Right	(SST)	1	652 6382
		(Brougham)	1	652 6390
T-195	Left	(SST)	1	652 6385
		(Brougham)	1	652 6393
	Right	(SST)	1	652 6384
		(Brougham)	1	652 6392

Printed in U.S.A.

SEATS - SOFT TRIM

Trim No.			Per Car	06-19-46 -79-89
T-196	Left	(SST)	1	652 6379
		(Brougham)	1	652 6387
	Right	(SST)	1	652 6378
		(Brougham)	1	652 6386

1972 MODELS

Trim No.			Per Car	06-19-46 -79-89
T-201	Left		1	365 2475
	Right		1	365 2474
T-203	Left		1	365 2477
	Right		1	365 2476
T-206	Left		1	365 2485
	Right		1	365 2484
T-208	Left		1	365 2475
	Right		1	365 2474
T-211	Left		1	365 2475
	Right		1	365 2474
T-213	Left		1	365 2477
	Right		1	365 2476
T-215	Left		1	365 2475
	Right		1	365 2474
T-216	Left		1	365 2485
	Right		1	365 2484
T-218	Left		1	365 2475
	Right		1	365 2474
T-221	Left		1	365 2441
	Right		1	365 2440
T-223	Left		1	365 2443
	Right		1	365 2442
T-224	Left		1	365 2445
	Right		1	365 2444
T-226	Left		1	365 2457
	Right		1	365 2456
T-241	Left	Except "V" Trim	1	365 2441
	Right	Except "V" Trim	1	365 2440
T-241V	Left		1	365 5611
	Right		1	365 5610
T-243	Left	Except "V" Trim	1	365 2443
	Right	Except "V" Trim	1	365 2442
T-243V	Left		1	365 5613
	Right		1	365 5612
T-244	Left	Except "V" Trim	1	365 2445
	Right	Except "V" Trim	1	365 2444
T-244V	Left		1	365 5615
	Right		1	365 5614
T-245	Left		1	365 2441
	Right		1	365 2440
T-246	Left	Except "V" Trim	1	365 2457
	Right	Except "V" Trim	1	365 2456
T-246V	Left		1	365 5619
	Right		1	365 5618
T-248	Left		1	365 2441
	Right		1	365 2440
T-261	Left		1	365 6183
	Right		1	365 6182
T-263	Left		1	365 4265
	Right		1	365 4264
T-264	Left		1	365 6185
	Right		1	365 6184
T-265	Left		1	365 6183
	Right		1	365 6182

SEATS - SOFT TRIM

Trim No.			Per Car	06-19-46 -79-89
T-266	Left		1	365 4269
	Right		1	365 4268
T-268	Left		1	365 6183
	Right		1	365 6182
T-271	Left		1	364 7965
	Right		1	364 7964
T-273	Left		1	364 7967
	Right		1	364 7966
T-274	Left		1	364 7969
	Right		1	364 7968
T-276	Left		1	364 7971
	Right		1	364 7970
T-291	Left	(SST)	1	364 7989
		(Brougham)	1	364 8005
	Right	(SST)	1	364 7988
		(Brougham)	1	364 8004
T-293	Left	(SST)	1	364 7991
		(Brougham)	1	364 8007
	Right	(SST)	1	364 7990
		(Brougham)	1	364 8006
T-294	Left	(SST)	1	364 7993
		(Brougham)	1	364 8009
	Right	(SST)	1	364 7992
		(Brougham)	1	364 8008
T-296	Left	(SST)	1	364 7995
		(Brougham)	1	364 8011
	Right	(SST)	1	364 7994
		(Brougham)	1	364 8010

29.052-2 ATTACHING PARTS, Panel To Body

CLIP, Wire	68	79	23.013	2	400 1928
FASTENER, Clip	68	39	.....	4	400 3555
FASTENER, Wire	67/68	06-09	.....	10	400 1911
FASTENER, Wire	67	07	.....	2	400 1911
FASTENER, Wire	69	06-09	29.070	6	400 3580
FASTENER, Wire	67	17-87	.....	6	400 1911
FASTENER, Wire	68	17-19-89	.....	6	400 1911
FASTENER, Wire	69	19-89	29.070	2	400 3580
FASTENER, Wire	68	79	.....	6	400 3588
FASTENER, Wire (Sealed)	70/	06-46	.....	16	400 3580
FASTENER, Wire (Sealed)	70	06 (Except "V" Trims)	.....	14	400 3681
FASTENER, Wire (Sealed)	70	06 ("V" Trims)	.....	16	400 4047
FASTENER, Wire (Sealed)	70/	19-89	.....	4	400 4047
FASTENER, Wire (Sealed)	70	30-70	.....	6	400 4047
RETAINER	67/	16-19-59-86-89	.....	2	359 1024
SCREW	71	19-89 (Upper-#8-18 x 5/8")...(Incl. Washer)	.....	2	400 4315 NA
SCREW, Tapping	72	01 (Upper Rear To Body)	.....	2	400 1776
SCREW, Tapping	67	16-19-59-86-89 (#8-18 x 9/16) ..... ***(Use 400 1776)***	29.070	4	400 1957
SCREW, Tapping	67	16-19-59-86-89 (#8-15 x 3/4) ..... ***(Use 448 9492)***	17.654	4	G162402
SCREW, Tapping	68/	19-89 (Lower)(#8-15 x 3/4) ..... ***(Use 448 9492)***	17.654	2	G162402
SCREW, Tapping	71	70 (To Uniside-#8-18 x 2)	.....	2	400 3762
SCREW, Tapping	72	70 (To Uniside)	.....	2	G9420721 NA
SCREW, Tapping	71/	70 (To Window Regulator Panel-#8-18 x 1/2)	.....	2	400 2812
SCREW, Trim	69	39	.....	10	400 3582
SCREW, Trim	68/70	79 (#8-18 x 5/8)	.....	2	400 2151
SCREW, Trim	68	79 (#8-15 x 1/2)	.....	4	400 2293

Printed in U.S.A.

SEATS - SOFT TRIM

29.052–3 PANEL, Rear Quarter Lower Trim (Plastic)

70/71	(Black)(Left) 05	1	362	7055
70/71	(Black)(Right) 05	1	362	7054
70	(Blue)(Left) 05	1	362	7057
70	(Blue)(Right) 05	1	362	7056
70	(Green)(Left) 05	1	362	7059
70	(Green)(Right) 05	1	362	7058
70	(Red)(Left) 05	1	362	7061
70	(Red)(Right) 05	1	362	7060
71	(Blue)(Left) 05	1	364	0067
71	(Blue)(Right) 05	1	364	0066
71	(Green)(Left) 05	1	364	0069
71	(Green)(Right) 05	1	364	0068
71	(Red)(Left) 05	1	364	0071
71	(Red)(Right) 05	1	364	0070
72	(Black)(Left) 05	1	365	3537
72	(Black)(Right) 05	1	365	3536
72	(Blue)(Left) 05	1	365	3531
72	(Blue)(Right) 05	1	365	3530
72	(Green)(Left) 05	1	365	3533
72	(Green)(Right) 05	1	365	3532
72	(Tan)(Left) 05	1	365	3539
72	(Tan)(Right) 05	1	365	3538

29.052–4 ATTACHING PARTS, Rear Quarter Lower Trim

SCREW, Tapping	70	05	12.128	4	400 2032
SCREW, Tapping	71/	05	26.074	2	400 3899

29.052–5 PANEL, Rear Quarter Side Extension Trim

Trim No.		Per Car	30
T-831	Left	1	361 8795
	Right	1	361 8794
T-832	Left	1	361 8797
	Right	1	361 8796
T-835	Left	1	361 8803
	Right	1	361 8802
T-931	Left	1	362 3855
	Right	1	362 3854
T-932	Left	1	362 3855
	Right	1	362 3854
T-935	Left	1	362 3857
	Right	1	362 3856
T-936	Left	1	362 3859
	Right	1	362 3858
T-031	Left	1	362 9617
	Right	1	362 9616
T-033	Left	1	362 9619
	Right	1	362 9618
T-035	Left	1	362 3857
	Right	1	362 3856
T-036	Left	1	362 9621
	Right	1	362 9620

29.052–6 ATTACHING PARTS, Panel To Body

SCREW, Tapping	68/70	39 (Rear-1-3/4" Long)	17.655	2	G168528 NA
SCREW, Tapping	68/70	39 (Front-1/2" Long)	17.660	4	G161860
SCREW, Tapping	68/70	39 (Front Top-5/8" Long)		2	400 3617
SCREW, Tapping	68/70	39 (At Spacer-2-1/4" Long) ***(Use 400 2196)***		2	400 2037

SEATS - SOFT TRIM

29.052–7 PANEL, Rear Side Quarter And Rear Trim (Upper)(Four Piece Type)(For Three Piece Type Refer To Groups 29.052–10 And 29.052–12)

1970 MODELS

Trim No.			Per Car	40
T-001	Left	Short	1	448 9012
	Right	Long	1	448 9020
T-008	Left	Short	1	448 9012
	Right	Long	1	448 9020
T-011	Left	Short	1	448 9012
	Right	Long	1	448 9020
T-013	Left	Short	1	448 9013
	Right	Long	1	448 9021
T-014	Left	Short	1	448 9014
	Right	Long	1	448 9022
T-015	Left	Short	1	448 9015
	Right	Long	1	448 9023

29.052–8 PANEL, Rear Side Quarter And Rear Trim (Lower)(Four Piece Type)(For Three Piece Type Refer To Groups 29.052–10 And 29.052–12)

1970 MODELS

Trim No.			Per Car	40
T-001	Left	Short	1	448 9016
	Right	Long	1	448 9024
T-008	Left	Short	1	448 9016
	Right	Long	1	448 9024
T-011	Left	Short	1	448 9016
	Right	Long	1	448 9024
T-013	Left	Short	1	448 9017
	Right	Long	1	448 9025
T-014	Left	Short	1	448 9018
	Right	Long	1	448 9026
T-015	Left	Short	1	448 9019
	Right	Long	1	448 9027

29.052–9 ATTACHING PARTS, Panel To Body

SCREW, Tapping..... 70 40..... 29.060 AR 400 1776

29.052–10 PANEL, Quarter Side Trim (Rear Corners Only)(Three Piece Type)

Trim No.			Per Car	40
T-001	Left		1	365 0197
	Right		1	365 0196
T-008	Left		1	365 0197
	Right		1	365 0196
T-011	Left		1	365 0197
	Right		1	365 0196
T-013	Left		1	365 0191
	Right		1	365 0190
T-014	Left		1	365 0195
	Right		1	365 0194
T-015	Left		1	365 0193
	Right		1	365 0192
T-101	Left		1	365 0197
	Right		1	365 0196
T-103	Left	Except "A" Trim	1	365 0199
	Right	Except "A" Trim	1	365 0198
T-103A	Left		1	365 0197
	Right		1	365 0196
T-104A	Left		1	365 0197
	Right		1	365 0196

Printed in U.S.A.

SEATS - SOFT TRIM

Trim No.			Per Car	40
T-108	Left		1	365 0197
	Right		1	365 0196
T-111	Left		1	365 0197
	Right		1	365 0196
T-113	Left		1	365 0199
	Right		1	365 0198
T-114	Left		1	365 0601
	Right		1	365 0600
T-115	Left		1	365 0603
	Right		1	365 0602
T-201	Left	(* 29-138)	1	365 4215
		(* 29-139)	1	366 2121
	Right	(* 29-138)	1	365 4214
		(* 29-139)	1	366 2120
T-203	Left	(* 29-138)	1	365 4209
		(* 29-139)	1	366 2123
	Right	(* 29-138)	1	365 4208
		(* 29-139)	1	366 2122
T-206	Left	(* 29-138)	1	365 4213
		(* 29-139)	1	366 2127
	Right	(* 29-138)	1	365 4212
		(* 29-139)	1	366 2126
T-208	Left	(* 29-138)	1	365 4215
		(* 29-139)	1	366 2121
	Right	(* 29-138)	1	365 4214
		(* 29-139)	1	366 2120
T-211	Left	(* 29-138)	1	365 4215
		(* 29-139)	1	366 2121
	Right	(* 29-138)	1	365 4214
		(* 29-139)	1	366 2120
T-213	Left	(* 29-138)	1	365 4209
		(* 29-139)	1	366 2123
	Right	(* 29-138)	1	365 4208
		(* 29-139)	1	366 2122
T-215	Left	(* 29-138)	1	365 4215
		(* 29-139)	1	366 2121
	Right	(* 29-138)	1	365 4214
		(* 29-139)	1	366 2120
T-216	Left	(* 29-138)	1	365 4213
		(* 29-139)	1	366 2127
	Right	(* 29-138)	1	365 4212
		(* 29-139)	1	366 2126
T-218	Left	(* 29-138)	1	365 4215
		(* 29-139)	1	366 2121
	Right	(* 29-138)	1	365 4214
		(* 29-139)	1	366 2120

29.052-11 ATTACHING PARTS, Quarter Side Trim Panel To Body (Three Piece Type)

SCREW, Tapping..... 70/ 40...(Incl. Washer) ..... 29.070 AR 400 1776

29.052-12 PANEL, Quarter Side Trim (Rear-Center)(Three Piece Type)

Trim No.	Per Car	40
T-001	1	365 0260
T-008	1	365 0260
T-011	1	365 0260
T-013	1	365 0261
T-014	1	365 0263
T-015	1	365 0262
T-101	1	365 0260
T-103	1	364 2774
T-108	1	365 0260

SEATS - SOFT TRIM

Trim No.		Per Car	40
T-111		1	365 0260
T-113		1	364 2774
T-114		1	364 2775
T-115		1	364 2776
T-201	(* 29-138)	1	365 4219
	(* 29-139)	1	366 2128
T-203	(* 29-138)	1	365 4216
	(* 29-139)	1	366 2129
T-206	(* 29-138)	1	365 4218
	(* 29-139)	1	366 2131
T-208		1	366 2128
T-211	(* 29-138)	1	365 4219
	(* 29-139)	1	366 2128
T-213	(* 29-138)	1	365 4216
	(* 29-139)	1	366 2129
T-215	(* 29-138)	1	365 4219
	(* 29-139)	1	366 2128
T-216	(* 29-138)	1	365 4218
	(* 29-139)	1	366 2131
T-218		1	366 2128
T-221G		1	366 2128

29.052–13 ATTACHING PARTS, Quarter Side Trim Panel To Body (Rear-Center)

SCREW, Tapping.....	70/	40 (8-15 x 1/2)	.....	1	400 0073	
SCREW, Tapping.....	70/	40 (8-18 x 3/4)	29.292	2	400 3095	
SCREW, Tapping.....	72	40 (8-18 x 1/2-High Low Type Thread)	.....	1	400 4480	
SCREW, Tapping	70/	40 (8-18 x 9/16)...(Incl. Washer)	29.070	AR	400 1776	
RING (Snap Rivet).....	70/	40.....	.....	1	400 4128	
NUT, Spring.....	70/	40.....	17.422	1	G445109	NA

29.052–14 SPACER, Quarter Side Trim Panel (Corner Panel To Center Panel-* 29-19 NC)

70/	(Left) 40.....	.....	1	365 0187
70/	(Right) 40.....	.....	1	365 0186

29.052–15 ATTACHING PARTS, Spacer To Body

SCREW, Tapping.....	70/71	40 (8-18 x 9/16)...(Incl. Washer)... ***(Use 400 1776)***	29.070	2	400 1957
SCREW, Tapping.....	70/71	40 (8-18 x 1/2)	26.074	2	400 3899
SCREW, Tapping.....	71/	40 (8-18 x 9/16)...(Incl. Washer).....	29.070	AR	400 1776
SCREW, Tapping.....	71/	40 (10-16 x 1/2)...(Incl. Washer)	15.320	2	400 1701
SCREW, Tapping.....	72	40 (10-16 x 3/4)...(Incl. Washer).....	17.671	2	400 0774

29.053–1 CARPET, Rear Quarter Side Trim Panel

Trim No.			Per Car	59	89 (Except "W" Trim)		
T-791	Left	.....	1	680 0449	680 0385	... .	... .
	Right	.....	1	680 0448	680 0384	... .	... .
T-793	Left	.....	1	680 0451	680 0387	... .	... .
	Right	.....	1	680 0450	680 0386	... .	... .
T-794	Left	.....	1	... .	680 0389	... .	... .
	Right	.....	1	... .	680 0388	... .	... .
T-795	Left	(* 29-27).....	1	680 0453	680 0391	... .	... .
		(* 29-29).....	1	650 6446	650 6449	... .	... .
	Right	(* 29-27).....	1	680 0452	680 0390	... .	... .
		(* 29-29).....	1	650 6446	650 6448	... .	... .
T-796	Left	.....	1	... .	680 0393	... .	... .
	Right	.....	1	... .	680 0392	... .	... .
T-797	Left	.....	1	... .	680 0395	... .	... .
	Right	.....	1	... .	680 0394	... .	... .
T-798	Left	.....	1	... .	680 0385	... .	... .
	Right	.....	1	... .	680 0384	... .	... .
T-799	Left	.....	1	680 0455	680 0397	... .	... .
	Right	.....	1	680 0454	680 0396	... .	... .

Printed in U.S.A.

SEATS - SOFT TRIM

29.054–1 PANEL, Rear Quarter Support Trim (* 29-18)(Less Mouldings, Ash Tray And Light)

1967 - 1968 MODELS

Trim No.		Per Car	07-17-87
T-741	Left	1	357 3987
	Right	1	357 3986
T-743	Left	1	448 4859
	Right	1	448 4858
T-745	Left	1	448 4861
	Right	1	448 4860
T-748	Left	1	357 3999
	Right	1	357 3998
T-749	Left	1	448 4865
	Right	1	448 4864
T-771	Left	1	448 4845
	Right	1	448 4844
T-773	Left	1	448 4847
	Right	1	448 4846
T-775	Left	1	448 4849
	Right	1	448 4848
T-776	Left	1	448 4851
	Right	1	448 4850
T-778	Left	1	448 4853
	Right	1	448 4852
T-779	Left	1	448 4855
	Right	1	448 4854
T-791	Left	1	448 4845
	Right	1	448 4844
T-793	Left	1	448 4847
	Right	1	448 4846
T-795	Left	1	448 4849
	Right	1	448 4848
T-796	Left	1	448 4851
	Right	1	448 4850
T-798	Left	1	448 4853
	Right	1	448 4852
T-799	Left	1	448 4855
	Right	1	448 4854
T-851	Left	1	448 4845
	Right	1	448 4844
T-853	Left	1	448 5383
	Right	1	448 5382
T-855	Left	1	448 4849
	Right	1	448 4848
T-871	Left	1	448 4845
	Right	1	448 4844
T-873	Left	1	448 5383
	Right	1	448 5382
T-874	Left	1	448 5385
	Right	1	448 5384
T-875	Left	1	448 4849
	Right	1	448 4848
T-876	Left	1	448 5387
	Right	1	448 5386
T-879	Left	1	448 5389
	Right	1	448 5388

29.054–2 ATTACHING PARTS, Trim Panel To Body

SCREW, Tapping	67/68	07-17-87 (10-12 × 5/8)	17.660	2	G161901
SCREW, Tapping	67/68	07-17-87 (8-18 × 25/32)	29.019	4	439 5412
SCREW, Tapping	67/68	07-17-87 (8-18 × 1)	29.470	2	400 0471
NUT, Spring	67/68	07-17-87	17.422	2	G445109

SEATS - SOFT TRIM

29.054–3 BUTTON, Rear Quarter Support Trim Panel Courtesy Light Hole

Trim No.	Per Car	17
T-851	2	361 2447
T-853	2	361 2448
T-855	2	361 2449

29.056–1 ARMREST, Rear Quarter Side

1967 Thru 1969 MODELS

Trim No.			Per Car	06-09-16-19 -59-86-89
T-723			2	357 7727
T-728		Off White	2	357 7733
		Black	2	357 7726
T-729			2	357 7732
T-741			2	357 7726
T-743			2	357 7727
T-744			2	357 7728
T-745			2	357 7729
T-747			2	357 7731
T-748			2	357 7733
T-749			2	357 7732
T-753			2	357 7727
T-758			2	357 7733
T-759			2	357 7732
T-771			2	357 7726
T-773			2	357 7727
T-774			2	357 7728
T-775			2	357 7729
T-776			2	357 7730
T-777			2	357 7731
T-778			2	357 7733
T-779			2	357 7732
T-781			2	357 7726
T-783			2	357 7727
T-787			2	357 7731
T-789			2	357 7732
T-791			2	357 7726
T-793			2	357 7727
T-794			2	357 7728
T-795			2	357 7729
T-796			2	357 7730
T-797			2	357 7731
T-798			2	357 7733
T-799			2	357 7732
T-828	Left	Black	1	360 7241
		White	1	360 7251
	Right	Black	1	360 7240
		White	1	360 7250
T-843	Left		1	360 7243
	Right		1	360 7242
T-844	Left		1	360 7245
	Right		1	360 7244
T-845	Left		1	360 7247
	Right		1	360 7246
T-848	Left		1	360 7241
	Right		1	360 7240

SEATS - SOFT TRIM

Trim No.		Per Car	06-09-16-19 -59-86-89
T-851	Left	1	360 7241
	Right	1	360 7240
T-853	Left	1	360 7243
	Right	1	360 7242
T-855	Left	1	360 7247
	Right	1	360 7246
T-871	Left	1	360 7241
	Right	1	360 7240
T-873	Left	1	360 7243
	Right	1	360 7242
T-874	Left	1	360 7245
	Right	1	360 7244
T-875	Left	1	360 7247
	Right	1	360 7246
T-876	Left	1	360 7249
	Right	1	360 7248
T-879	Left	1	360 7253
	Right	1	360 7252
T-881	Left	1	360 7241
	Right	1	360 7240
T-883	Left	1	360 7243
	Right	1	360 7242
T-885	Left	1	360 7247
	Right	1	360 7246
T-891	Left	1	360 7241
	Right	1	360 7240
T-893	Left	1	360 7243
	Right	1	360 7242
T-894	Left	1	360 7245
	Right	1	360 7244
T-895	Left	1	360 7247
	Right	1	360 7246
T-896	Left	1	360 7249
	Right	1	360 7248
T-899	Left	1	360 7253
	Right	1	360 7252
T-000	Left	1	362 0359
	Right	1	362 0358
T-923		2	361 9647
T-928		2	361 9650
T-941		2	361 9646
T-943		2	361 9647
T-944		2	361 9648
T-945		2	361 9649
T-951	Left	1	362 0359
	Right	1	362 0358
T-953	Left	1	362 0361
	Right	1	362 0360
T-956	Left	1	362 0363
	Right	1	362 0362
T-957	Left	1	362 0365
	Right	1	362 0364
T-972	Left	1	362 5373
	Right	1	362 5372
T-973	Left	1	362 0361
	Right	1	362 0360
T-975	Left	1	362 0995
	Right	1	362 0994
T-976	Left	1	362 0363
	Right	1	362 0362

SEATS - SOFT TRIM

Trim No.		Per Car	06-09-16-19 -59-86-89
T-977	Left	1	362 0365
	Right	1	362 0364
T-979	Left	1	362 0367
	Right	1	362 0366
T-991	Left	1	362 0359
	Right	1	362 0358
T-992	Left	1	362 5373
	Right	1	362 5372
T-993	Left	1	362 0361
	Right	1	362 0360
T-995	Left	1	362 0995
	Right	1	362 0994
T-996	Left	1	362 0363
	Right	1	362 0362
T-997	Left	1	362 0365
	Right	1	362 0364
T-999	Left	1	362 0367
	Right	1	362 0366

1970 MODELS

Trim No.		Per Car	06-19-79-89
T-041		2	362 9236
T-043		2	362 9237
T-044		2	362 9238
T-045		1	361 9649
T-051	Left	1	360 7241
	Right	1	360 7240
T-053	Left	1	362 9291
	Right	1	362 9290
T-054	Left	1	362 9293
	Right	1	362 9292
T-056	Left	1	362 9295
	Right	1	362 9294
T-061E	Left	1	360 7241
	Right	1	360 7240
T-061L	Left	1	360 7241
	Right	1	360 7240
T-063E	Left	1	362 9291
	Right	1	362 9290
T-064E	Left	1	362 9293
	Right	1	362 9292
T-065E	Left	1	362 0995
	Right	1	362 0994
T-065L	Left	1	362 0995
	Right	1	362 0994
T-066E	Left	1	362 9295
	Right	1	362 9294
T-066L	Left	1	362 9295
	Right	1	362 9294
T-071	Left	1	360 7241
	Right	1	360 7240
T-073	Left	1	362 9291
	Right	1	362 9290
T-074	Left	1	362 9293
	Right	1	362 9292

Printed in U.S.A.

SEATS - SOFT TRIM

Trim No.			Per Car	06-19-79-89
T-075	Left		1	362 0995
	Right		1	362 0994
T-076	Left		1	362 9295
	Right		1	362 9294
T-091	Left		1	360 7241
	Right		1	360 7240
T-093	Left		1	362 9291
	Right		1	362 9290
T-094	Left		1	362 9293
	Right		1	362 9292
T-095	Left		1	362 0995
	Right		1	362 0994
T-096	Left		1	362 9295
	Right		1	362 9294

1971 - 1972 MODELS

Trim No.			Per Car	06-19-89
T-141			2	364 8462
T-143			2	364 8463
T-144			2	364 8464
T-145			2	364 8465
T-151	Left		1	360 7241
	Right		1	360 7240
T-171	Left		1	360 7241
	Right		1	360 7240
T-173	Left		1	362 2181
	Right		1	362 2180
T-174	Left		1	362 2183
	Right		1	362 2182
T-175	Left		1	362 2185
	Right		1	362 2184
T-176	Left		1	360 7241
	Right		1	360 7240
T-191	Left		1	360 7241
	Right		1	360 7240
T-193	Left		1	362 2181
	Right		1	362 2180
T-194	Left		1	362 2183
	Right		1	362 2182
T-195	Left		1	362 2185
	Right		1	362 2184
T-196	Left		1	360 7241
	Right		1	360 7240
T-206		Less Bright Stripe	2	365 3248
T-221		Less Bright Stripe	2	364 3926
T-223		Less Bright Stripe	2	365 3245
T-226		Less Bright Stripe	2	365 3248
T-241		With Bright Stripe	2	364 8462
T-243		With Bright Stripe	2	365 3240
T-244		With Bright Stripe	2	365 3241
T-246		With Bright Stripe	2	365 3243
T-271			2	364 8462
T-273			2	365 3240
T-274			2	365 3241
T-276			2	365 3243
T-291			2	364 8462
T-293			2	365 3240
T-294			2	365 3241
T-296			2	365 3243

SEATS - SOFT TRIM

29.056–2 PLUG, Rear Quarter Armrest Screw Hole

1968 - 1969 MODELS

Trim No.	Per Car	06-09-19-89
T-828	4	360 6001
T-843	4	360 6002
T-844	4	360 6003
T-845	4	360 6004
T-848	4	360 6001
T-851	4	360 6001
T-853	4	360 6002
T-855	4	360 6005
T-871	4	360 6001
T-873	4	360 6002
T-874	4	360 6003
T-875	4	360 6004
T-876	4	360 6005
T-879	4	360 6006
T-881	4	360 6001
T-883	4	360 6002
T-885	4	360 6004
T-891	4	360 6001
T-893	4	360 6002
T-894	4	360 6003
T-895	4	360 6004
T-896	4	360 6005
T-899	4	360 6006
T-000	4	360 6001
T-951	4	360 6001
T-953 (* 29-19)	4	360 6001
T-956	4	362 0384
T-957	4	362 0385
T-972	4	362 5368
T-973 (* 29-19)	4	360 6001
T-975	4	362 0988
T-976	4	362 0384
T-977	4	362 0385
T-979	4	362 0386

1970 MODELS

Trim No.	Per Car	10
T-051	4	360 6001
T-053 (* 29-19)	4	360 6001
T-054 (* 29-19)	4	360 6001
T-056 (* 29-19)	4	360 6001

29.056–3 ATTACHING PARTS, Rear Quarter Armrest To Body

SCREW, Tapping	67/70	06-09-19-89		4	G447124
SCREW, Tapping	68/69	06-09		4	G161739 NA
SCREW, Tapping	71/	06 (#14 x 3-1/4")		4	400 3768
SCREW, Tapping	68/71	19-89 (To Rear Quarter Trim Panel)		4	G161739 NA
SCREW, Tapping	72	19-89 (#14 x 2-3/4")		4	400 4502
SCREW, Tapping	70	79		4	G161739 NA
SCREW, Self-Drilling	70	06 (1/4" x 2")		4	400 3670
NUT, Speed	67	06-09		4	400 1750
NUT, Speed	68	06-09		4	400 2075
NUT, Speed	69	06-09		4	400 3615
NUT, Speed	71/	06	12.075	4	400 4058
NUT, Speed	67/71	19-89		4	400 2075
NUT, Speed	72	19-89		4	400 4058
NUT, Speed	70	79		4	400 2075
NUT, Speed (Raised)	70	06		4	400 0568

Printed in U.S.A.

SEATS - SOFT TRIM

29.056–4 ATTACHING PARTS, Retainer To Armrest

NUT, Speed	67/	06-09-19-89	.....	4	400	2083	

29.056–5 SPACER, Rear Quarter Armrest

70/	01-46	.....	4	362	6551		

29.056–6 BRACKET, Rear Quarter Armrest Attachment

70/	*06 (SST)(Fleet)*	.....	2	363	5722		

29.056–7 ATTACHING PARTS, Armrest Attachment Bracket To Body Lock Pillar

SCREW, Tapping	70/	06	17,669	6	400	1270	NA

29.060–1 PANEL, Rear Quarter Roof Extension Trim (Less Courtesy Light)(* 29-19)

1967 Thru 1969 MODELS

Trim No.		Per Car	05-06-15-85	09-16-39-86	19-79-89	
T-723	Left	1	358 1471	... .	... .	... .
	Right	1	358 1470	... .	... .	... .
T-728	Left	1	358 1469	... .	... .	... .
	Right	1	358 1468	... .	... .	... .
T-729	Left	1	358 1479	... .	... .	... .
	Right	1	358 1478	... .	... .	... .
T-741	Left	1	358 1469	351 9129	... .	... .
	Right	1	358 1468	351 9128	... .	... .
T-743	Left	1	358 1471	358 1451	... .	... .
	Right	1	358 1470	358 1450	... .	... .
T-744	Left	1	358 1473	356 3217	... .	... .
	Right	1	358 1472	356 3216	... .	... .
T-745	Left	1	358 1475	358 1455	... .	... .
	Right	1	358 1474	358 1454	... .	... .
T-747	Left	1	358 1477	358 1457	... .	... .
	Right	1	358 1476	358 1456	... .	... .
T-748	Left	1	358 1469	351 9129	... .	... .
	Right	1	358 1468	351 9128	... .	... .
T-749	Left	1	358 1479	358 1459	... .	... .
	Right	1	358 1478	358 1458	... .	... .
T-753	Left	1	357 8369	357 9507	... .	... .
	Right	1	357 8368	357 9506	... .	... .
T-758	Left	1	357 8367	357 9505	... .	... .
	Right	1	357 8366	357 9504	... .	... .
T-759	Left	1	357 8407	357 9511	... .	... .
	Right	1	357 8406	357 9510	... .	... .
T-771	Left	1	357 8367	... .	357 9397	... .
	Right	1	357 8366	... .	357 9396	... .
T-773	Left	1	357 8369	... .	357 9399	... .
	Right	1	357 8368	... .	357 9398	... .
T-774	Left	1	357 8371	... .	357 9401	... .
	Right	1	357 8370	... .	357 9400	... .
T-775	Left	1	... .	... .	357 9403	... .
	Right	1	... .	... .	357 9402	... .
T-776	Left	1	357 8375	... .	357 9405	... .
	Right	1	357 8374	... .	357 9404	... .
T-777	Left	1	357 8405	... .	357 9407	... .
	Right	1	357 8404	... .	357 9406	... .
T-778	Left	1	357 8367	... .	357 9397	... .
	Right	1	357 8366	... .	357 9396	... .
T-779	Left	1	357 8407	... .	357 9409	... .
	Right	1	357 8406	... .	357 9408	... .

SEATS - SOFT TRIM

Trim No.			Per Car	05-06-15-85	09-16-39-86	19-79-89	
T-781	Left		1	357 8367	357 9505	... .	... .
	Right		1	357 8366	357 9504	... .	... .
T-783	Left		1	357 8369	357 9507	... .	... .
	Right		1	357 8368	357 9506	... .	... .
T-787	Left		1	357 8405	357 9509	... .	... .
	Right		1	357 8404	357 9508	... .	... .
T-789	Left		1	357 8407	357 9511	... .	... .
	Right		1	357 8406	357 9510	... .	... .
T-791	Left		1	357 8367	... .	357 9397	... .
	Right		1	357 8366	... .	357 9396	... .
T-793	Left		1	357 8369	... .	357 9399	... .
	Right		1	357 8368	... .	357 9398	... .
T-794	Left		1	357 8371	... .	357 9401	... .
	Right		1	357 8370	... .	357 9400	... .
T-795	Left		1	... .	... .	357 9403	... .
	Right		1	... .	... .	357 9402	... .
T-796	Left		1	357 8375	... .	357 9405	... .
	Right		1	357 8374	... .	357 9404	... .
T-797	Left		1	357 8405	... .	357 9407	... .
	Right		1	357 8404	... .	357 9406	... .
T-798	Left		1	357 8367	... .	357 9397	... .
	Right		1	357 8366	... .	357 9396	... .
T-799	Left		1	357 8407	... .	357 9409	... .
	Right		1	357 8406	... .	357 9408	... .
T-828	Left	(* 29-20)	1	360 6177	... .	... .	... .
		(* 29-21)	1	362 4759	... .	... .	... .
	Right	(* 29-20)	1	360 6176	... .	... .	... .
		(* 29-21)	1	362 4758	... .	... .	... .
T-831	Left		1	... .	360 7487	360 4345	... .
	Right		1	... .	360 7486	360 4344	... .
T-832	Left		1	... .	360 7489	360 4357	... .
	Right		1	... .	360 7488	360 4356	... .
T-835	Left		1	... .	360 7475	360 4351	... .
	Right		1	... .	360 7474	360 4350	... .
T-838	Left		1	... .	... .	360 4345	... .
	Right		1	... .	... .	360 4344	... .
T-843	Left	(* 29-20)	1	360 6179	360 4985	... .	... .
		(* 29-21)	1	362 4761	... .	... .	... .
	Right	(* 29-20)	1	360 6178	360 4984	... .	... .
		(* 29-21)	1	362 4760	... .	... .	... .
T-844	Left	(* 29-20)	1	360 6181	360 4987	... .	... .
		(* 29-21)	1	362 4763	... .	... .	... .
	Right	(* 29-20)	1	360 6180	360 4986	... .	... .
		(* 29-21)	1	362 4762	... .	... .	... .
T-845	Left	(* 29-20)	1	360 6183	359 9343	... .	... .
		(* 29-21)	1	362 4765	... .	... .	... .
	Right	(* 29-20)	1	360 6182	359 9342	... .	... .
		(* 29-21)	1	362 4764	... .	... .	... .
T-848	Left	(* 29-20)	1	360 6177	359 9341	... .	... .
		(* 29-21)	1	362 4759	... .	... .	. . ....
	Right	(* 29-20)	1	360 6176	359 9340	... .	... .
		(* 29-21)	1	362 4758	... .	... .	... .
T-851	Left		1	357 8367	... .	357 9505	... .
	Right		1	357 8366	... .	357 9504	... .
T-853	Left		1	360 5379	... .	360 5675	... .
	Right		1	360 5378	... .	360 5674	... .
T-855	Left		1	360 5383	... .	360 5679	... .
	Right		1	360 5382	... .	360 5678	... .

SEATS - SOFT TRIM

Trim No.		Per Car	05-06-15-85	09-16-39-86	19-79-89	
T-871	Left	1	357 8367	... .	357 9397	... .
	Right	1	357 8366	... .	357 9396	... .
T-873	Left	1	360 5379	... .	360 5661	... .
	Right	1	360 5378	... .	360 5660	... .
T-874	Left	1	360 5381	... .	360 5663	... .
	Right	1	360 5380	... .	360 5662	... .
T-875	Left	1	360 5383	... .	357 9403	... .
	Right	1	360 5382	... .	357 9402	... .
T-876	Left	1	360 5385	... .	360 5667	... .
	Right	1	360 5384	... .	360 5666	... .
T-879	Left	1	360 5389	... .	360 5671	... .
	Right	1	360 5388	... .	360 5670	... .
T-881	Left	1	357 8367	... .	357 9505	... .
	Right	1	357 8366	... .	357 9504	... .
T-883	Left	1	360 5379	... .	360 5675	... .
	Right	1	360 5378	... .	360 5674	... .
T-885	Left	1	360 5383	... .	360 5679	... .
	Right	1	360 5382	... .	360 5678	... .
T-891	Left	1	357 8367	... .	357 9397	... .
	Right	1	357 8366	... .	357 9396	... .
T-893	Left	1	360 5379	... .	360 5661	... .
	Right	1	360 5378	... .	360 5660	... .
T-894	Left	1	360 5381	... .	360 5663	... .
	Right	1	360 5380	... .	360 5662	... .
T-895	Left	1	360 5383	... .	357 9403	... .
	Right	1	360 5382	... .	357 9402	... .
T-896	Left	1	360 5385	... .	360 5667	... .
	Right	1	360 5384	... .	360 5666	... .
T-899	Left	1	360 5389	... .	360 5671	... .
	Right	1	360 5388	... .	360 5670	... .
T-000	Left	1	... .	... .	362 0529	... .
	Right	1	... .	... .	362 0528	... .
T-923	Left	1	362 3843	... .	... .	... .
	Right	1	362 3842	... .	... .	... .
T-928	Left	1	362 3841	... .	... .	... .
	Right	1	362 3840	... .	... .	... .
T-931	Left	1	... .	362 4147	... .	... .
	Right	1	... .	362 4146	... .	... .
T-932	Left	1	... .	362 4147	... .	... .
	Right	1	... .	362 4146	... .	... .
T-935	Left	1	... .	363 5303	... .	... .
	Right	1	... .	363 5302	... .	... .
T-936	Left	1	... .	362 4149	... .	... .
	Right	1	... .	362 4148	... .	... .
T-941	Left	1	362 3841	362 3821	... .	... .
	Right	1	362 3840	362 3820	... .	... .
T-943	Left	1	362 3843	362 3823	... .	... .
	Right	1	362 3842	362 3822	... .	... .
T-944	Left	1	362 3845	362 3825	... .	... .
	Right	1	362 3844	362 3824	... .	... .
T-945	Left	1	363 0731	362 3827	... .	... .
	Right	1	363 0730	362 3826	... .	... .
T-951	Left	1	362 0509	... .	362 0529	... .
	Right	1	362 0508	... .	362 0528	... .
T-953	Left	1	362 0511	... .	362 0531	... .
	Right	1	362 0510	... .	362 0530	... .
T-956	Left	1	362 0513	... .	362 0533	... .
	Right	1	362 0512	... .	362 0532	... .
T-957	Left	1	362 0515	... .	362 0535	... .
	Right	1	362 0514	... .	362 0534	... .

Printed in U.S.A.

SEATS - SOFT TRIM

Trim No.		Per Car	05-06-15-85	09-16-39-86	19-79-89
T-961	Left	1	... .	... .	362 3965
	Right	1	... .	... .	362 3964
T-962	Left	1	... .	... .	362 3965
	Right	1	... .	... .	362 3964
T-963	Left	1	... .	... .	362 3967
	Right	1	... .	... .	362 3966
T-965	Left	1	... .	... .	363 0325
	Right	1	... .	... .	363 0324
T-966	Left	1	... .	... .	362 3969
	Right	1	... .	... .	362 3968
T-968	Left	1	... .	... .	362 3965
	Right	1	... .	... .	362 3964
T-972	Left	1	362 0509	... .	362 0519
	Right	1	362 0508	... .	362 0518
T-973	Left	1	362 0511	... .	362 0521
	Right	1	362 0510	... .	362 0520
T-975	Left	1	... .	... .	362 1001
	Right	1	... .	... .	362 1000
T-976	Left	1	362 0513	... .	362 0523
	Right	1	362 0512	... .	362 0522
T-977	Left	1	362 0515	... .	362 0525
	Right	1	362 0514	... .	362 0524
T-979	Left	1	... .	... .	362 0525
	Right	1	... .	... .	362 0524
T-981	Left	1	362 0509	... .	... .
	Right	1	362 0508	... .	... .
T-983	Left	1	362 0511	... .	... .
	Right	1	362 0510	... .	... .
T-986	Left	1	362 0513	... .	... .
	Right	1	362 0512	... .	... .
T-987	Left	1	362 0515	... .	... .
	Right	1	362 0514	... .	... .
T-991	Left	1	362 0509	... .	362 0519
	Right	1	362 0508	... .	362 0518
T-992	Left	1	362 0509	... .	362 0519
	Right	1	362 0508	... .	362 0518
T-993	Left	1	362 0511	... .	362 0521
	Right	1	362 0510	... .	362 0520
T-995	Left	1	... .	... .	362 1001
	Right	1	... .	... .	362 1000
T-996	Left	1	362 0513	... .	362 0523
	Right	1	362 0512	... .	362 0522
T-997	Left	1	362 0515	... .	362 0525
	Right	1	362 0514	... .	362 0524
T-999	Left	1	... .	... .	362 0525
	Right	1	... .	... .	362 0524

1970 Thru 1972 MODELS

Trim No.		Per Car	05-06 15-85	19-39-46 -79-89
T-001	Left	1	... .	363 7711
	Right	1	... .	363 7710
T-008	Left	1	... .	363 7711
	Right	1	... .	363 7710
T-011	Left	1	... .	363 7711
	Right	1	... .	363 7710
T-013	Left	1	... .	363 7713
	Right	1	... .	363 7712

SEATS - SOFT TRIM

Trim No.		Per Car	05-06-15-85	19-39-46 -79-89
T-014	Left	1	... .	363 7715
	Right	1	... ...	363 7714
T-015	Left	1	... .	363 7717
	Right	1	... .	363 7716
T-021	Left	1	362 7339	... .
	Right	1	362 7338	... .
T-023	Left	1	362 7341	... .
	Right	1	362 7340	... .
T-024	Left	1	362 7343	... .
	Right	1	362 7342	... .
T-025	Left	1	362 7345	... .
	Right	1	362 7344	... .
T-031	Left	1	... .	363 5327
	Right	1	... .	363 5326
T-033	Left	1	... .	362 9745
	Right	1	... .	362 9746
T-035	Left	1	... .	363 5303
	Right	1	... .	363 5302
T-036	Left	1	... .	362 9747
	Right	1	... .	362 9746
T-041	Left	1	362 7339	... .
	Right	1	362 7338	... .
T-043	Left	1	362 7341	... .
	Right	1	362 7340	... .
T-044	Left	1	362 7343	... .
	Right	1	362 7342	... .
T-045	Left	1	362 7345	... .
	Right	1	362 7344	... .
T-051	Left	1	362 6333	362 6299
	Right	1	362 6332	362 6298
T-053	Left	1	362 6335	362 6301
	Right	1	362 6334	362 6300
T-054	Left	1	362 6337	362 6303
	Right	1	362 6336	362 6302
T-056	Left	1	362 6339	362 6305
	Right	1	362 6338	362 6304
T-061	Left	1	... .	362 9743
	Right	1	... .	362 9742
T-063	Left	1	... .	362 9735
	Right	1	... .	362 9734
T-064	Left	1	... .	362 9737
	Right	1	... .	362 9736
T-065	Left	1	... .	362 9741
	Right	1	... .	362 9740
T-066	Left	1	... .	362 9739
	Right	1	... .	362 9738
T-071	Left	1	362 6333	362 6299
	Right	1	362 6332	362 6298
T-073	Left	1	362 6335	362 6301
	Right	1	362 6334	362 6300
T-074	Left	1	362 6337	362 6303
	Right	1	362 6336	362 6302
T-075	Left	1	362 6371	362 6329
	Right	1	362 6370	362 6328
T-076	Left	1	362 6339	362 6305
	Right	1	362 6338	362 6304
T-081	Left	1	362 6333	... .
	Right	1	362 6332	... .

SEATS - SOFT TRIM

Trim No.		Per Car	05-06-15-85	19-39-46 -79-89
T-083	Left	1	362 6335	... .
	Right	1	362 6334	... .
T-084	Left	1	362 6337	... .
	Right	1	362 6336	... .
T-086	Left	1	362 6339	... .
	Right	1	362 6338	... .
T-091	Left	1	362 6333	362 6299
	Right	1	362 6332	362 6298
T-093	Left	1	362 6335	362 6301
	Right	1	362 6334	362 6300
T-094	Left	1	362 6337	362 6303
	Right	1	362 6336	362 6302
T-095	Left	1	362 6371	362 6329
	Right	1	362 6370	362 6328
T-096	Left	1	362 6339	362 6305
	Right	1	362 6338	362 6304
T-101	Left	1	... .	363 7711
	Right	1	... .	363 7710
T-103	Left	1	... .	364 9581
	Right	1	... .	364 9580
T-108	Left	1	... .	363 7711
	Right	1	... .	363 7710
T-111	Left	1	... .	363 7711
	Right	1	... .	363 7710
T-113	Left	1	... .	364 9581
	Right	1	... .	364 9580
T-114	Left	1	... .	364 9583
	Right	1	... .	364 9582
T-115	Left	1	... .	364 9585
	Right	1	... .	364 9584
T-121	Left	1	362 7339	... .
	Right	1	362 7338	... .
T-123	Left	1	364 2113	... .
	Right	1	364 2112	... .
T-124	Left	1	364 2115	... .
	Right	1	364 2114	... .
T-128	Left	1	362 7339	... .
	Right	1	362 7338	... .
T-141	Left	1	362 7339	... .
	Right	1	362 7338	... .
T-143	Left	1	364 2113	... .
	Right	1	364 2112	... .
T-144	Left	1	364 2115	... .
	Right	1	364 2114	... .
T-145	Left	1	364 2117	... .
	Right	1	364 2116	... .
T-151	Left	1	362 6333	362 6299
	Right	1	362 6332	362 6298
T-153	Left	1	364 2781	364 2811
	Right	1	364 2780	364 2810
T-154	Left	1	364 2783	364 2813
	Right	1	364 2782	364 2812
T-161	Left	1	... .	364 0139
	Right	1	... .	364 0138
T-163	Left	1	... .	364 0141
	Right	1	... .	364 0140
T-164	Left	1	... .	364 0143
	Right	1	... .	364 0142
T-165	Left	1	... .	364 0145
	Right	1	... .	364 0144
T-168	Left	1	... .	364 0139
	Right	1	... .	364 0138
T-171	Left	1	362 6333	362 6299
	Right	1	362 6332	362 6298

SEATS - SOFT TRIM

Trim No.		Per Car	05-06-15-85	19-39-46 -79-89
T-173	Left	1	364 2781	364 2811
	Right	1	364 2780	364 2810
T-174	Left	1	364 2783	364 2813
	Right	1	364 2782	364 2812
T-175	Left	1	364 2785	364 2815
	Right	1	364 2784	364 2814
T-176	Left	1	362 6333	362 6299
	Right	1	362 6332	362 6298
T-181	Left	1	362 6333	362 6299
	Right	1	362 6332	362 6298
T-183	Left	1	364 2781	364 2811
	Right	1	364 2780	364 2810
T-184	Left	1	364 2783	364 2813
	Right	1	364 2782	364 2812
T-186	Left	1	362 6333	362 6299
	Right	1	362 6332	362 6298
T-191	Left	1	362 6333	362 6299
	Right	1	362 6332	362 6298
T-193	Left	1	364 2781	364 2811
	Right	1	364 2780	364 2810
T-194	Left	1	364 2783	364 2813
	Right	1	364 2782	364 2812
T-195	Left	1	364 2785	364 2815
	Right	1	364 2784	364 2814
T-196	Left	1	362 6333	362 6299
	Right	1	362 6332	362 6298
T-241	Left	1	365 3547	... .
	Right	1	365 3546	... .
T-243	Left	1	365 3541	... .
	Right	1	365 3540	... .
T-244	Left	1	365 3543	... .
	Right	1	365 3542	... .
T-245	Left	1	365 3547	... .
	Right	1	365 3546	... .
T-246	Left	1	365 3549	... .
	Right	1	365 3548	... .
T-248	Left	1	365 3547	... .
	Right	1	365 3546	... .
T-261	Left	1	... .	365 3833
	Right	1	... .	365 3832
T-263	Left	1	... .	365 3827
	Right	1	... .	365 3826
T-264	Left	1	... .	365 3829
	Right	1	... .	365 3828
T-265	Left	1	... .	365 3833
	Right	1	... .	365 3832
T-266	Left	1	... .	365 3835
	Right	1	... .	365 3834
T-268	Left	1	... .	365 3833
	Right	1	... .	365 3832
T-271	Left	1	365 5081	365 5021
	Right	1	365 5080	365 5020
T-273	Left	1	365 5083	365 5023
	Right	1	365 5082	365 5022
T-274	Left	1	365 5085	365 5025
	Right	1	365 5084	365 5024
T-276	Left	1	365 5087	365 5027
	Right	1	365 5086	365 5026
T-291	Left	1	365 5081	365 5021
	Right	1	365 5080	365 5020
T-293	Left	1	365 5083	365 5023
	Right	1	365 5082	365 5022
T-294	Left	1	365 5085	365 5025
	Right	1	365 5084	365 5024
T-296	Left	1	365 5087	365 5027
	Right	1	365 5086	365 5026

SEATS - SOFT TRIM

29.060–2 ATTACHING PARTS, Trim Panel To Body

RETAINER (Left)	67/69	15-85 (* 29-19)	.....	1	357 9895	NC
RETAINER (Left)	70/	15-85 (* 29-19)	.....	1	362 1849	NC
RETAINER (Left)	67/69	16-19-86-89 (* 29-19)	.....	1	357 8917	NC
RETAINER (Left)	68/69	39 (* 29-19)	.....	1	360 7345	NC
RETAINER (Left)	70	39 (* 29-19)	.....	1	362 9831	NC
RETAINER (Right)	67/69	15-85 (* 29-19)	.....	1	357 9894	NC
RETAINER (Right)	70/	15-85 (* 29-19)	.....	1	362 1848	NC
RETAINER (Right)	67/69	16-19-86-89 (* 29-19)	.....	1	357 8916	NC
RETAINER (Right)	68/69	39 (* 29-19)	.....	1	360 7344	NC
RETAINER (Right)	70	39 (* 29-19)	.....	1	362 9830	NC
FASTENER	67	05-06	29.070	6	400 0375	
FASTENER	67/69	16-19-79-86-89	.....	4	400 2211	
FASTENER	70	46 ***(Use 400 3749)***	.....	12	400 3774	
FASTENER	71	46	29.052	12	400 3749	
FASTENER	70/71	79 (51/64" Long-Wire)	.....	4	400 4022	
FASTENER	71/	79 (3/4" Long-Metal)	.....	4	400 2211	
SCREW, Tapping	70	01 (8-15 x 3/4-Pan Head)	17.660	6	G161871	
SCREW, Tapping	70	01 (8-15 x 3/4-Oval Head)	17.655	2	G168496	
SCREW, Tapping	70/	01 (8-15 x 7/8)	17.655	6	G168499	NA
SCREW, Tapping	70/	01 (8-18 x 1/2)	26.074	8	400 3899	
SCREW, Tapping	71/	01 (8-18 x 3/4)	.....	8	400 4114	
SCREW, Tapping	67/69	09	26.001	6	400 0026	
SCREW, Tapping	67/	15-85	.....	4	400 1776	
SCREW, Tapping	70/	19-89	26.001	6	400 0026	
SCREW, Tapping	68/	79 ***(Use 400 2192)***	29.010	6	400 2099	
SCREW, Tapping	68/69	79	20.280	4	400 1724	
SCREW, Tapping	68/70	79	17.655	2	G145419	NA
SCREW, Tapping	68/70	79	29.052	4	400 2293	
SCREW, Tapping	68/70	79 (8-15 x 1-3/4)	17.655	2	G168528	NA
SCREW, Tapping	71/	79	26.001	4	400 0026	
CLIP	68/70	39	27.022	4	400 0322	

29.060–3 PLUG, Rear Quarter Upper Trim Panel Shoulder Harness Bolt Hole (Less Shoulder Harness)

68	39-79	.....	2	400 3829	

29.060–4 RETAINER, Rear Quarter Roof Extension Trim Panel (Metal) (* 29-19 NL)

67/68	(Left) 05-06	.....	1	360 6195	
67/69	(Left) 09	.....	1	352 0843	
67/68	(Right) 05-06	.....	1	360 6194	
67/69	(Right) 09	.....	1	352 0842	

29.060–5 ATTACHING PARTS, Retainer To Body

SCREW, Tapping	67/69	09	17.669	8	G457002	NA

29.062–1 PANEL, Rear Quarter Roof Side Trim (* 29-22)

Trim No.			Per Car	59						
T-791	Left	.....	1	358 0743	... .	... .	... .			
	Right	.....	1	358 0742	... .	... .	... .			
T-793	Left	.....	1	358 0745	... .	... .	... .			
	Right	.....	1	358 0744	... .	... .	... .			
T-795	Left	.....	1	358 0747	... .	... .	... .			
	Right	.....	1	358 0746	... .	... .	... .			
T-799	Left	.....	1	358 0749	... .	... .	... .			
	Right	.....	1	358 0748	... .	... .	... .			

29.062–2 ATTACHING PARTS, Trim Panel To Roof Panel

SCREW, Tapping	67	59	29.070	2	400 0273	

SEATS - SOFT TRIM

29.062–3 ATTACHING PARTS, Trim Panel To Shelf Extension Trim Panel

SCREW, Tapping.....	67	59.....	29.019	4	439 5412		
NUT, Spring.....	67	59.....	17.422	4	G445109 NA		

29.062–4 RETAINER, Rear Quarter Roof Side Trim

Trim No.		Per Car	59			
T-791	Left	1	357 8793	... .	... .	... .
	Right	1	357 8792	... .	... .	... .
T-793	Left	1	357 8795	... .	... .	... .
	Right	1	357 8794	... .	... .	... .
T-795	Left	1	357 8797	... .	... .	... .
	Right	1	357 8796	... .	... .	... .
T-799	Left	1	357 8799	... .	... .	.. ....
	Right	1	357 8798	... .	... .	... .

29.070–1 PANEL, Front Door Trim (* 29-23)

Trim No.		Per Car	05-08	06-07-09		
T-723	Left	1	358 3957	358 3981	... .	... .
	Right	1	358 3956	358 3980	... .	... .
T-728	Left	1	358 3959	358 3983	... .	... .
	Right	1	358 3958	358 3982	... .	... .
T-729	Left	1	358 3961	358 3985	... .	... .
	Right	1	358 3960	358 3984	... .	... .
T-741	Left	1	359 2353	359 2355	... .	... .
	Right	1	359 2352	359 2354	... .	... .
T-743	Left	1	358 3965	358 3989	... .	... .
	Right	1	358 3964	358 3988	... .	... .
T-744	Left	1	358 3967	358 3991	... .	... .
	Right	1	358 3966	358 3990	... .	... .
T-745	Left	1	358 3969	358 3993	... .	... .
	Right	1	358 3968	358 3992	... .	... .
T-747	Left	1	358 3971	358 3995	... .	... .
	Right	1	358 3970	358 3994	... .	... .
T-748	Left	1	... .	358 3983	... .	... .
	Right	1	... .	358 3982	... .	... .
T-749	Left	1	358 3975	358 3999	... .	... .
	Right	1	358 3974	358 3998	... .	... .

Trim No.		Per Car	59 (LER): 18 ("S" Trim)	59 (WER)	15-85-88 (LER): 18 (Except "S" Trim)	15-18-85-88 (WER)
T-753	Left	1	... .	... .	650 4543	650 4543
	Right	1	... .	... .	650 4542	650 4542
T-758	Left	1	... .	... .	650 4545	650 4545
	Right	1	... .	... .	650 4544	650 4544
T-759	Left	1	... .	... .	650 4547	650 4547
	Right	1	... .	... .	650 4546	650 4546
T-771	Left	1	650 6367	... .	650 4549	650 4561
	Right	1	650 6366	... .	650 4548	650 4560

Printed in U.S.A.

SEATS - SOFT TRIM

Trim No.			Per Car	59 (LER): 18 ("S" Trim)	59 (WER)	15-85-88 (LER): 18 (Except "S" Trim)	15-18-85-88 (WER)
T-773	Left		1	650 4551	... .	650 4551	650 4563
	Right		1	650 4550	... .	650 4550	650 4562
T-774	Left		1	... .	... .	650 4553	650 4565
	Right		1	... .	... .	650 4552	650 4564
T-776	Left		1	... .	... .	650 4555	650 4567
	Right		1	... .	... .	650 4554	650 4566
T-777	Left		1	... .	... .	650 4557	650 4569
	Right		1	... .	... .	650 4556	650 4568
T-779	Left		1	650 6369	... .	650 4559	650 4571
	Right		1	650 6368	... .	650 4558	650 4570
T-781	Left		1	... .	... .	650 4573	... .
	Right		1	... .	... .	650 4572	... .
T-783	Left		1	... .	... .	650 4575	... .
	Right		1	... .	... .	650 4574	... .
T-787	Left		1	... .	... .	650 4577	... .
	Right		1	... .	... .	650 4576	... .
T-789	Left		1	... .	... .	650 4579	... .
	Right		1	... .	... .	650 4578	... .
T-791	Left	(* 29-12)	1	448 4455	448 4463	448 4471	448 4483
		(* 29-13)	1	448 4423	448 4439	... .	... .
	Right	(* 29-12)	1	448 4454	448 4462	448 4470	448 4482
		(* 29-13)	1	448 4422	448 4438	... .	... .
T-793	Left	(* 29-12)	1	448 4457	... .	448 4473	448 4485
		(* 29-13)	1	448 4425	448 4441	... .	... .
	Right	(* 29-12)	1	448 4456	... .	448 4472	448 4484
		(* 29-13)	1	448 4424	448 4440	... .	... .
T-794	Left		1	... .	... .	448 4475	448 4487
	Right		1	... .	... .	448 4474	448 4486
T-795	Left	(* 29-12)	1	448 4459	... .	... .	... .
		(* 29-13)(* 29-27)	1	448 4429	448 4445	... .	... .
		(* 29-29)	1	650 6439	650 6439	... .	... .
	Right	(* 29-12)	1	448 4458	... .	... .	... .
		(* 29-13)(* 29-27)	1	448 4428	448 4444	... .	... .
		(* 29-29)	1	650 6438	650 6438	... .	... .
T-796	Left		1	... .	... .	448 4477	448 4489
	Right		1	... .	... .	448 4476	448 4488
T-797	Left		1	... .	... .	448 4479	448 4491
	Right		1	... .	... .	448 4478	448 4490
T-799	Left	(* 29-12)	1	448 4461	... .	448 4481	448 4493
		(* 29-13)	1	448 4437	448 4453	... .	... .
	Right	(* 29-12)	1	448 4460	... .	448 4480	448 4492
		(* 29-13)	1	448 4436	448 4452	... .	... .

SEATS - SOFT TRIM

Trim No.			Per Car	16-86: 17-19 -87-89 (LER- Except "W" Trim)	17-19-87-89 (WER-Except "W" Trim)	19-89 (LER-"W" Trim)	19-89 (WER-"W" Trim)
T-753	Left		1	650 4941	... .	... .	... .
	Right		1	650 4940	... .	... .	... .
T-758	Left		1	650 4943	... .	... .	... .
	Right		1	650 4942	... .	... .	... .
T-759	Left		1	650 4945	... .	... .	... .
	Right		1	650 4944	... .	... .	... .
T-771	Left		1	650 4947	650 4963	650 4979	650 4989
	Right		1	650 4946	650 4962	650 4978	650 4988
T-773	Left		1	650 4949	650 4965	650 4981	650 4991
	Right		1	650 4948	650 4964	650 4980	650 4990
T-774	Left		1	650 4951	650 4967	... .	... .
	Right		1	650 4950	650 4966	... .	... .
T-775	Left		1	650 4953	650 4969	650 4983	650 4993
	Right		1	650 4952	650 4968	650 4982	650 4992
T-776	Left		1	650 4955	650 4971	650 4985	650 4995
	Right		1	650 4954	650 4970	650 4984	650 4994
T-777	Left		1	650 4957	650 4973	... .	... .
	Right		1	650 4956	650 4972	... .	... .
T-778	Left		1	650 4959	650 4975	... .	... .
	Right		1	650 4958	650 4974	... .	... .
T-779	Left		1	650 4961	650 4977	650 4987	650 4997
	Right		1	650 4960	650 4976	650 4986	650 4996
T-781	Left		1	650 4999	... .	... .	... .
	Right		1	650 4998	... .	... .	... .
T-783	Left	(* 29-24)	1	650 5001	... .	... .	... .
		(* 29-25)	1	650 6047	... .	... .	... .
	Right	(* 29-24)	1	650 5000	... .	... .	... .
		(* 29-25)	1	650 6046	... .	... .	... .
T-787	Left	(* 29-24)	1	650 5003	... .	... .	... .
		(* 29-25)	1	650 6049	... .	... .	... .
	Right	(* 29-24)	1	650 5002	... .	... .	... .
		(* 29-25)	1	650 6048	... .	... .	... .
T-789	Left	(* 29-24)	1	650 5005	... .	... .	... .
		(* 29-25)	1	650 6051	... .	... .	... .
	Right	(* 29-24)	1	650 5004	... .	... .	... .
		(* 29-25)	1	650 6050	... .	... .	... .
T-791	Left		1	448 4423	448 4439	448 4507	448 4517
	Right		1	448 4422	448 4438	448 4506	448 4516
T-793	Left		1	448 4425	448 4441	448 4509	448 4519
	Right		1	448 4424	448 4440	448 4508	448 4518
T-794	Left		1	448 4427	448 4443	... .	... .
	Right		1	448 4426	448 4442	... .	... .
T-795	Left	(* 29-27)	1	448 4429	448 4445	448 4511	448 4521
		(* 29-29)	1	650 6439	650 6439	... .	... .
	Right	(* 29-27)	1	448 4428	448 4444	448 4510	448 4520
		(* 29-29)	1	650 6438	650 6438	.. ....	... .
T-796	Left		1	448 4431	448 4447	448 4513	448 4523
	Right		1	448 4430	448 4446	448 4512	448 4522
T-797	Left		1	448 4433	448 4449	... .	... .
	Right		1	448 4432	448 4448	... .	... .
T-798	Left		1	448 4435	448 4451	... .	... .
	Right		1	448 4434	448 4450	... .	... .
T-799	Left		1	448 4437	448 4453	448 4515	448 4525
	Right		1	448 4436	448 4452	448 4514	448 4524

SEATS - SOFT TRIM

1968 MODELS

Trim No.			Per Car	05-08-15-18 -39-85-88	06-09-79: 17-19-89 (LER)	17-19-89 (WER)	
T-828	Left		1	359 9093	359 9031	... .	... .
	Right		1	359 9092	359 9030	... .	... .
T-831A	Left		1	362 3133	... .	... .	... .
	Right		1	362 3132	... .	... .	... .
T-831D	Left		1	... .	359 8755	... .	... .
	Right		1	... .	359 8754	... .	... .
T-831E	Left		1	... .	359 8755	... .	... .
	Right		1	... .	359 8754	... .	... .
T-831J	Left		1	... .	359 2561	... .	... .
	Right		1	... .	359 2560	... .	... .
T-832	Left		1	... .	359 8871	... .	... .
	Left		1	362 3135	... .	... .	... .
	Right		1	... .	359 8870	... .	... .
	Right		1	362 3134	... .	... .	... .
T-835	Left		1	... .	359 8869	... .	... .
	Left		1	362 4351	... .	... .	... .
	Right		1	... .	359 8868	... .	... .
	Right		1	362 4350	... .	... .	... .
T-838	Left		1	... .	362 3087	... .	... .
	Right		1	... .	362 3086	... .	... .
T-843	Left		1	448 6683	448 6691	... .	... .
	Right		1	448 6682	448 6690	... .	... .
T-844	Left	(* 29-90)	1	448 6685	448 6692	... .	... .
		(* 29-91)	1	448 6849	... .	... .	... .
	Right	(* 29-90)	1	448 6684	448 6693	... .	... .
		(* 29-91)	1	448 6848	... .	... .	... .
T-845	Left		1	448 6687	448 6694	... .	... .
	Right		1	448 6686	448 6695	... .	... .
T-848	Left		1	448 6681	448 6689	... .	... .
	Right		1	448 6680	448 6688	... .	... .
T-851	Left		1	651 3325	651 3465	... .	... .
	Right		1	651 3324	651 3464	... .	... .
T-853	Left		1	651 3327	651 3467	... .	... .
	Right		1	651 3326	651 3466	... .	... .
T-855	Left		1	651 3329	651 3469	... .	... .
	Right		1	651 3328	651 3468	... .	... .
T-871C	Left		1	651 3333	651 3097	651 3097	... .
	Right		1	651 3332	651 3096	651 3096	... .
T-871E	Left	(* 29-15)	1	... .	651 3473	651 3927	... .
		(* 29-16)	1	... .	651 6201	651 6213	... .
		(* 29-17)	1	... .	651 6459	651 6467	... .
	Right	(* 29-15)	1	... .	651 3472	651 3926	... .
		(* 29-16)	1	... .	651 6200	651 6212	... .
		(* 29-17)	1	... .	651 6458	651 6466	... .
T-871K	Left	(* 29-15)	1	... .	651 3473	651 3927	... .
		(* 29-16)	1	... .	651 6201	651 6213	... .
		(* 29-17)	1	... .	651 6459	651 6467	... .
	Right	(* 29-15)	1	... .	651 3472	651 3926	... .
		(* 29-16)	1	... .	651 6200	651 6212	... .
		(* 29-17)	1	... .	651 6458	651 6466	... .
T-871V	Left		1	651 3333	651 3097	651 3097	... .
	Right		1	651 3332	651 3096	651 3096	... .
T-871W	Left	(* 29-15)	1	... .	651 3487	... .	... .
		(* 29-16)	1	... .	651 6201	651 6213	... .
		(* 29-17)	1	... .	651 6459	651 6467	... .
	Right	(* 29-15)	1	... .	651 3486	... .	... .
		(* 29-16)	1	... .	651 6200	651 6212	... .
		(* 29-17)	1	... .	651 6458	651 6466	... .

SEATS - SOFT TRIM

Trim No.			Per Car	05-08-15-18 -39-85-88	06-09-79: 17-19-89 (LER)	17-19-89 (WER)	
T-873C	Left	.....	1	651 3335	651 3099	651 3099	... .
	Right	.....	1	651 3334	651 3098	651 3098	... .
T-873E	Left	(* 29-15).....	1	... .	651 3475	... .	... .
		(* 29-16).....	1	... .	651 6203	651 6215	... .
		(* 29-17).....	1	.. ....	448 6295	448 6299	... .
	Right	(* 29-15).....	1	... .	651 3474	... .	... .
		(* 29-16).....	1	... .	651 6202	651 6214	... .
		(* 29-17).....	1	... .	448 6294	448 6298	... .
T-873K	Left	(* 29-15).....	1	... .	651 3475	... .	... .
		(* 29-17).....	1	... .	651 6203	651 6215	... .
		(* 29-16).....	1	... .	448 6295	448 6299	... .
	Right	(* 29-15).....	1	... .	651 3474	... .	... .
		(* 29-17).....	1	... .	651 6202	651 6214	... .
		(* 29-16).....	1	... .	448 6294	448 6298	... .
T-873V	Left	.....	1	651 3335	651 3099	651 3099	... .
	Right	.....	1	651 3334	651 3098	651 3098	... .
T-873W	Left	.....	1	... .	651 6203	651 6215	... .
	Right	.....	1	... .	651 6202	651 6214	... .
T-874C	Left	.....	1	651 3337	651 3101	651 3101	... .
	Right	.....	1	651 3336	651 3100	651 3100	... .
T-874E	Left	(* 29-16).....	1	... .	448 6297	448 6301	... .
		(* 29-17).....	1	... .	651 6205	651 6217	... .
	Right	(* 29-16).....	1	... .	448 6296	448 6300	... .
		(* 29-17).....	1	... .	651 6204	651 6216	... .
T-874K	Left	(* 29-16).....	1	... .	448 6297	448 6301	... .
		(* 29-17).....	1	... .	651 6205	651 6217	... .
	Right	(* 29-16).....	1	... .	448 6296	448 6300	... .
		(* 29-17).....	1	... .	651 6204	651 6216	... .
T-874W	Left	.....	1	... .	651 6205	651 6217	... .
	Right	.....	1	... .	651 6204	651 6216	... .
T-875E	Left	(* 29-16).....	1	... .	651 6207	651 6219	... .
		(* 29-17).....	1	... .	651 6461	651 6469	... .
	Right	(* 29-16).....	1	... .	651 6206	651 6218	... .
		(* 29-17).....	1	... .	651 6460	651 6468	... .
T-875K	Left	(* 29-16).....	1	... .	651 6207	651 6219	... .
		(* 29-17).....	1	... .	651 6461	651 6469	... .
	Right	(* 29-16).....	1	... .	651 6206	651 6218	... .
		(* 29-17).....	1	... .	651 6460	651 6468	... .
T-875V	Left	.....	1	651 3331	651 3103	651 3103	... .
	Right	.....	1	651 3330	651 3102	651 3102	... .
T-875W	Left	(* 29-16).....	1	651 6207	651 6219	... .	... .
		(* 29-17).....	1	... .	651 6461	651 6469	... .
	Right	(* 29-16).....	1	... .	651 6206	651 6218	... .
		(* 29-17).....	1	... .	651 6460	651 6468	... .
T-876C	Left	.....	1	651 3339	651 3105	651 3105	... .
	Right	.....	1	651 3338	651 3104	651 3104	... .
T-876E	Left	(* 29-16).....	1	... .	651 6209	651 6221	... .
		(* 29-17).....	1	... .	651 6463	651 6471	... .
	Right	(* 29-16).....	1	... .	651 6208	651 6220	... .
		(* 29-17).....	1	... .	651 6462	651 6470	... .
T-876K	Left	(* 29-16).....	1	... .	651 6209	651 6221	... .
		(* 29-17).....	1	... .	651 6463	651 6471	... .
	Right	(* 29-16).....	1	... .	651 6208	651 6220	... .
		(* 29-17).....	1	... .	651 6462	651 6470	... .
T-876V	Left	.....	1	651 3339	651 3105	651 3105	... .
	Right	.....	1	651 3338	651 3104	651 3104	... .
T-876W	Left	(* 29-16).....	1	... .	651 6209	651 6221	... .
		(* 29-17).....	1	... .	651 6463	651 6471	... .
	Right	(* 29-16).....	1	... .	651 6208	651 6220	... .
		(* 29-17).....	1	... .	651 6462	651 6470	... .

SEATS - SOFT TRIM

Trim No.			Per Car	05-08-15-18 -39-85-88	06-09-79: 17-19-89 (LER)	17-19-89 (WER)	
T-879C	Left	.....	1	651 3341	651 3107	651 3107	... .
	Right	.....	1	651 3340	651 3106	651 3106	... .
T-879E	Left	(* 29-16).....	1	... .	651 6211	651 6223	... .
		(* 29-17).....	1	... .	651 6465	651 6473	... .
	Right	(* 29-16).....	1	... .	651 6210	651 6222	... .
		(* 29-17).....	1	... .	651 6464	651 6472	... .
T-879K	Left	(* 29-16).....	1	... .	651 6211	651 6223	... .
		(* 29-17).....	1	... .	651 6465	651 6473	... .
	Right	(* 29-16).....	1	... .	651 6210	651 6222	... .
		(* 29-17).....	1	... .	651 6464	651 6472	... .
T-879W	Left	(* 29-15).....	1	... .	651 3497	651 3509	... .
		(* 29-16).....	1	... .	651 6211	651 6223	... .
		(* 29-17).....	1	... .	651 6465	651 6473	... .
	Right	(* 29-15).....	1	... .	651 3496	651 3508	... .
		(* 29-16).....	1	... .	651 6210	651 6222	... .
		(* 29-17).....	1	... .	651 6464	651 6472	... .
T-881	Left	.....	1	651 3343	651 3511	... .	... .
	Right	.....	1	651 3342	651 3510	... .	... .
T-883	Left	.....	1	651 3345	651 3513	... .	... .
	Right	.....	1	651 3344	651 3512	... .	... .
T-885	Left	.....	1	651 3347	651 3515	... .	... .
	Right	.....	1	651 3346	651 3514	... .	... .
T-891C	Left	.....	1	448 6349	448 6373	448 6923	... .
		(* 29-28).....	1	651 3351	651 3703	651 3715	... .
	Right	(* 29-27).....	1	448 6348	448 6372	448 6922	... .
		(* 29-28).....	1	651 3350	651 3702	651 3714	... .
T-891E	Left	(* 29-15).....	1	... .	651 3775	651 3775	... .
		(* 29-26)(* 29-27).....	1	448 6361	448 6385	448 6385	... .
		(* 29-26)(* 29-28).....	1	... .	651 6225	651 6225	... .
	Right	(* 29-15).....	1	... .	651 3774	651 3774	... .
		(* 29-26)(* 29-27).....	1	448 6360	448 6384	448 6384	... .
		(* 29-26)(* 29-28).....	1	... .	651 6224	651 6224	... .
T-891K	Left	(* 29-15).....	1	... .	651 3775	651 3775	... .
		(* 29-26)(* 29-27).....	1	448 6361	448 6385	448 6385	... .
		(* 29-26)(* 29-28).....	1	... .	651 6225	651 6225	... .
		(* 29-28).....	1	651 6141	... .	... .	... .
	Right	(* 29-15).....	1	... .	651 3774	651 3774	... .
		(* 29-26)(* 29-27).....	1	448 6360	448 6384	448 6384	... .
		(* 29-26)(* 29-28).....	1	... .	651 6224	651 6224	... .
		(* 29-28).....	1	651 6140	... .	... .	... .
T-891V	Left	(* 29-26)(* 29-27).....	1	448 6349	448 6373	448 6373	... .
		(* 29-28).....	1	651 3351	651 3703	651 3715	... .
	Right	(* 29-26)(* 29-27).....	1	448 6348	448 6372	448 6372	... .
		(* 29-28).....	1	651 3350	651 3702	651 3714	... .
T-891W	Left	(* 29-15).....	1	651 3727	... .	... .	... .
		(* 29-26)(* 29-27).....	1	... .	448 6385	448 6385	... .
		(* 29-26)(* 29-28).....	1	651 6141	... .	... .	... .
		(* 29-28).....	1	... .	651 6225	651 6225	... .
	Right	(* 29-15).....	1	651 3726	... .	... .	... .
		(* 29-26)(* 29-27).....	1	... .	448 6384	448 6384	... .
		(* 29-26)(* 29-28).....	1	651 6140	... .	... .	... .
		(* 29-28).....	1	... .	651 6224	651 6224	... .
T-893C	Left	(* 29-27).....	1	448 6351	448 6375	448 6924	... .
		(* 29-28).....	1	651 3353	651 3705	651 3717	... .
	Right	(* 29-27).....	1	448 6350	448 6374	448 6374	... .
		(* 29-28).....	1	651 3352	651 3704	651 3716	... .
T-893E	Left	(* 29-27).....	1	... .	448 6387	448 6387	... .
		(* 29-28).....	1	... .	651 6227	651 6227	... .
	Right	(* 29-27).....	1	... .	448 6386	448 6386	... .
		(* 29-28).....	1	... .	651 6226	651 6226	... .

SEATS - SOFT TRIM

Trim No.			Per Car	05-08-15-18 -39-85-88	06-09-79: 17-19-89 (LER)	17-19-89 (WER)	
T-893K	Left	(* 29-15)	1	651 3523	... .	... .	... .
		(* 29-26)(* 29-27)	1	448 6363	... .	... .	... .
		(* 29-26)(* 29-28)	1	651 6143	... .	... .	... .
		(* 29-28)	1	... .	651 6227	651 6227	... .
	Right	(* 29-15)	1	651 3522	... .	... .	... .
		(* 29-26)(* 29-27)	1	448 6362	... .	... .	... .
		(* 29-26)(* 29-28)	1	651 6142	... .	... .	... .
		(* 29-28)	1	... .	651 6226	651 6226	... .
T-893V	Left	(* 29-27)	1	448 6351	448 6375	448 6924	... .
		(* 29-28)	1	651 3353	651 3705	651 3717	... .
	Right	(* 29-27)	1	448 6350	448 6374	448 6374	... .
		(* 29-28)	1	651 3352	651 3704	651 3716	... .
T-893W	Left	(* 29-15)	1	651 3729	651 3549	651 3549	... .
		(* 29-26)(* 29-27)	1	448 6363	448 6387	448 6387	... .
		(* 29-26)(* 29-28)	1	651 6143	651 6227	651 6227	... .
	Right	(* 29-15)	1	651 3728	651 3548	651 3548	... .
		(* 29-26)(* 29-27)	1	448 6362	448 6386	448 6386	... .
		(* 29-26)(* 29-28)	1	651 6142	651 6226	651 6226	... .
T-894C	Left	(* 29-27)	1	448 6353	448 6377	448 6925	... .
		(* 29-28)	1	651 3355	651 3707	651 3719	... .
	Right	(* 29-27)	1	448 6352	448 6376	448 6376	... .
		(* 29-28)	1	651 3354	651 3706	651 3718	... .
T-894E	Left	(* 29-15)	1	... .	651 3779	651 3779	... .
		(* 29-26)(* 29-27)	1	... .	448 6389	448 6389	... .
		(* 29-26)(* 29-28)	1	... .	651 6229	651 6229	... .
	Right	(* 29-15)	1	... .	651 3778	651 3778	... .
		(* 29-26)(* 29-27)	1	... .	448 6388	448 6388	... .
		(* 29-26)(* 29-28)	1	... .	651 6228	651 6228	... .
T-894K	Left	(* 29-15)	1	651 3525	651 3779	651 3779	... .
		(* 29-26)(* 29-27)	1	448 6365	448 6389	448 6389	... .
		(* 29-26)(* 29-28)	1	651 6145	651 6229	651 6229	... .
	Right	(* 29-15)	1	651 3524	651 3778	651 3778	... .
		(* 29-26)(* 29-27)	1	448 6364	448 6388	448 6388	... .
		(* 29-26)(* 29-28)	1	651 6144	651 6228	651 6228	... .
T-894W	Left	(* 29-27)	1	448 6365	448 6389	448 6389	... .
		(* 29-28)	1	651 6145	651 6229	651 6229	... .
	Right	(* 29-27)	1	448 6364	448 6388	448 6388	... .
		(* 29-28)	1	651 6144	651 6228	651 6228	... .
T-895E	Left	(* 29-27)	1	... .	448 6391	448 6391	... .
		(* 29-28)	1	... .	651 6231	651 6231	... .
	Right	(* 29-27)	1	... .	448 6390	448 6390	... .
		(* 29-28)	1	... .	651 6230	651 6230	... .
T-895K	Left	(* 29-27)	1	448 6367	448 6391	448 6391	... .
		(* 29-28)	1	651 6147	651 6231	651 6231	... .
	Right	(* 29-27)	1	448 6366	448 6390	448 6390	... .
		(* 29-28)	1	651 6146	651 6230	651 6230	... .
T-895V	Left	(* 29-27)	1	448 6355	448 6379	448 6926	... .
		(* 29-28)	1	651 3349	651 3709	651 3721	... .
	Right	(* 29-27)	1	448 6354	448 6378	448 6378	... .
		(* 29-28)	1	651 3348	651 3708	651 3720	... .
T-896C	Left	(* 29-27)	1	448 6357	448 6381	448 6381	... .
		(* 29-28)	1	651 3357	651 3711	651 3723	... .
	Right	(* 29-27)	1	448 6356	448 6380	448 6380	... .
		(* 29-28)	1	651 3356	651 3710	651 3722	... .
T-896E	Left	(* 29-27)	1	... .	448 6393	448 6393	... .
		(* 29-28)	1	... .	651 6233	651 6233	... .
	Right	(* 29-27)	1	... .	448 6392	448 6392	... .
		(* 29-28)	1	... .	651 6232	651 6232	... .
T-896K	Left	(* 29-27)	1	448 6369	448 6393	448 6393	... .
		(* 29-28)	1	651 6149	651 6233	651 6233	... .
	Right	(* 29-27)	1	448 6368	448 6392	448 6392	... .
		(* 29-28)	1	651 6148	651 6232	651 6232	... .

SEATS - SOFT TRIM

Trim No.			Per Car	05-08-15-18 -39-85-88	06-09-79: 17-19-89 (LER)	17-19-89 (WER)	
T-896V	Left	(* 29-27)	1	448 6357	448 6381	448 6381	... .
		(* 29-28)	1	651 3357	651 3711	651 3723	... .
	Right	(* 29-27)	1	448 6356	448 6380	448 6380	... .
		(* 29-28)	1	651 3356	651 3710	651 3722	... .
T-896W	Left	(* 29-27)	1	448 6369	448 6393	448 6393	... .
		(* 29-28)	1	651 6149	651 6233	651 6233	... .
	Right	(* 29-27)	1	448 6368	448 6392	448 6392	... .
		(* 29-28)	1	651 6148	651 6232	651 6232	... .
T-899C	Left	(* 29-27)	1	448 6359	448 6383	448 6928	... .
		(* 29-28)	1	651 3359	651 3713	651 3725	... .
	Right	(* 29-27)	1	448 6358	448 6382	448 6927	... .
		(* 29-28)	1	651 3358	651 3712	651 3724	... .
T-899E	Left	(* 29-15)	1	... .	651 3785	651 3785	... .
		(* 29-26)(* 29-27)	1	448 6371	448 6395	448 6395	... .
		(* 29-26)(* 29-28)	1	... .	651 6235	651 6235	... .
	Right	(* 29-15)	1	.. ...	651 3784	651 3784	... .
		(* 29-26)(* 29-27)	1	448 6370	448 6394	448 6394	... .
		(* 29-26)(* 29-28)	1	.. ....	651 6234	651 6234	... .
T-899K	Left	(* 29-15)	1	... .	651 3785	651 3785	.. ....
		(* 29-26)(* 29-27)	1	448 6371	448 6395	448 6395	... .
		(* 29-26)(* 29-28)	1	... .	651 6235	651 6235	... .
		(* 29-28)	1	651 6151	... .	... .	... .
	Right	(* 29-15)	1	... .	651 3784	651 3784	... .
		(* 29-26)(* 29-27)	1	448 6370	448 6394	448 6394	... .
		(* 29-26)(* 29-28)	1	... .	651 6234	651 6234	... .
		(* 29-28)	1	651 6150	... .	... .	... .
T-899W	Left	(* 29-15)	1	651 3749	... .	... .	... .
		(* 29-26)(* 29-27)	1	448 6371	448 6395	448 6395	... .
		(* 29-26)(* 29-28)	1	651 6151	... .	... .	... .
		(* 29-28)	1	... .	651 6235	651 6235	... .
	Right	(* 29-15)	1	651 3748	... .	... .	... .
		(* 29-26)(* 29-27)	1	448 6370	448 6394	448 6394	... .
		(* 29-26)(* 29-28)	1	651 6150	... .	... .	... .
		(* 29-28)	1	... .	651 6234	651 6234	... .

Trim No.			Per Car	05-08-15-18 -85-88	06-09-19-39 -79-89		
T-000	Left		1	... .	448 9285	... .	... .
	Right		1	... .	448 9284	... .	... .
T-921F	Left		1	363 5961	... .	... .	... .
	Right		1	363 5960	... .	... .	... .
T-921G	Left	(05)	1	362 5227	... .	... .	... .
	Right	(05)	1	362 5226	... .	... .	... .
T-921G	Left	(08)	1	362 5305	... .	... .	... .
	Right	(08)	1	362 5304	... .	... .	... .
T-923	Left		1	363 0317	363 0315	... .	... .
	Right		1	363 0316	363 0314	... .	... .
T-928	Left		1	362 5227	362 5169	... .	... .
	Right		1	362 5226	362 5168	... .	... .
T-931	Left		1	... .	363 0287	... .	... .
	Right		1	... .	363 0286	... .	... .
T-932	Left		1	... .	363 0297	... .	... .
	Right		1	... .	363 0296	... .	... .
T-935	Left		1	... .	363 0291	... .	... .
	Right		1	... .	363 0290	... .	... .
T-936	Left		1	... .	363 0295	... .	... .
	Right		1	... .	363 0294	... .	... .

Printed in U.S.A.

SEATS - SOFT TRIM

Trim No.		Per Car	05-08-15-18 -85-88	06-09-19-39 -79-89		
T-941	Left	1	362 5305	362 5177	... .	... .
	Right	1	362 5304	362 5176	... .	... .
T-943	Left	1	362 5307	362 5179	... .	... .
	Right	1	362 5306	362 5178	... .	... .
T-944	Left	1	362 5309	362 5181	... .	... .
	Right	1	362 5308	362 5180	... .	... .
T-945	Left	1	362 5311	362 5183	... .	... .
	Right	1	362 5310	362 5182	... .	... .
T-951	Left	1	652 0991	652 1095	... .	... .
	Right	1	652 0990	652 1094	... .	... .
T-953	Left	1	652 0993	652 1097	... .	... .
	Right	1	652 0992	652 1096	... .	... .
T-956	Left	1	652 0997	652 1101	... .	... .
	Right	1	652 0996	652 1100	... .	... .
T-957	Left	1	652 0999	652 1103	... .	... .
	Right	1	652 0998	652 1102	... .	... .
T-961E	Left	1	... .	363 0287	... .	... .
	Right	1	... .	363 0286	... .	... .
T-961F	Left	1	... .	363 0287	... .	... .
	Right	1	... .	363 0286	... .	... .
T-961J	Left	1	... .	363 0299	... .	... .
	Right	1	... .	363 0298	... .	... .
T-961K	Left	1	... .	363 0287	... .	... .
	Right	1	... .	363 0286	... .	... .
T-962	Left	1	... .	363 0297	... .	... .
	Right	1	... .	363 0296	... .	... .
T-963	Left	1	... .	363 0289	... .	... .
	Right	1	... .	363 0288	... .	... .
T-965	Left	1	... .	363 0291	... .	... .
	Right	1	... .	363 0290	... .	... .
T-966	Left	1	... .	363 0293	... .	... .
	Right	1	... .	363 0292	... .	... .
T-968	Left	1	... .	363 0301	... .	... .
	Right	1	... .	363 0300	... .	... .
T-972	Left	1	652 1001	652 1105	... .	... .
	Right	1	652 1000	652 1104	... .	... .
T-973	Left	1	652 1003	652 1107	... .	... .
	Right	1	652 1002	652 1106	... .	... .
T-975	Left	1	... .	652 1109	... .	... .
	Right	1	... .	652 1108	... .	... .
T-976	Left	1	652 1007	652 1111	... .	... .
	Right	1	652 1006	652 1110	... .	... .
T-977	Left	1	652 1009	652 1113	... .	... .
	Right	1	652 1008	652 1112	... .	... .
T-979	Left	1	... .	652 1115	... .	... .
	Right	1	... .	652 1114	... .	... .
T-981	Left	1	652 1029	... .	... .	... .
	Right	1	652 1028	... .	... .	... .
T-983	Left	1	652 1031	... .	... .	... .
	Right	1	652 1030	... .	... .	... .
T-986	Left	1	652 1035	... .	... .	... .
	Right	1	652 1034	... .	... .	... .
T-987	Left	1	652 1037	... .	... .	... .
	Right	1	652 1036	... .	... .	... .
T-991A	Left	1	652 1039	652 1143	... .	... .
	Right	1	652 1038	652 1142	... .	... .
T-991B	Left	1	652 1039	652 1143	... .	... .
	Right	1	652 1038	652 1142	... .	... .

SEATS - SOFT TRIM

Trim No.		Per Car	05-08-15-18 -85-88	06-09-19-39 -79-89		
T-991C	Left	1	652 1039	652 1143	... .	... .
	Right	1	652 1038	652 1142	... .	... .
T-991D	Left	1	652 1039	652 1143	... .	... .
	Right	1	652 1038	652 1142	... .	... .
T-991F	Left	1	... .	652 1291	... .	... .
	Right	1	... .	652 1290	... .	... .
T-991N	Left	1	652 1067	652 1291	... .	... .
	Right	1	652 1066	652 1290	... .	... .
T-992E	Left	1	... .	652 1293	... .	... .
	Right	1	... .	652 1292	... .	... .
T-992M	Left	1	652 1069	652 1293	... .	... .
	Right	1	652 1068	652 1292	... .	... .
T-992V	Left	1	652 2221	... .	... .	... .
	Right	1	652 2220	... .	... .	... .
T-993A	Left	1	652 1041	652 1145	... .	... .
	Right	1	652 1040	652 1144	... .	... .
T-993B	Left	1	652 1041	652 1145	... .	... .
	Right	1	652 1040	652 1144	... .	... .
T-993C	Left	1	652 1041	652 1145	... .	... .
	Right	1	652 1040	652 1144	... .	... .
T-993D	Left	1	652 1041	652 1145	... .	... .
	Right	1	652 1040	652 1144	... .	... .
T-993E	Left	1	... .	652 1295	... .	... .
	Right	1	... .	652 1294	... .	... .
T-993F	Left	1	... .	652 1295	... .	... .
	Right	1	... .	652 1294	... .	... .
T-993M	Left	1	652 1071	652 1295	... .	... .
	Right	1	652 1070	652 1294	... .	... .
T-993N	Left	1	652 1071	652 1295	... .	... .
	Right	1	652 1070	652 1294	... .	... .
T-993V	Left	1	652 2223	... .	... .	... .
	Right	1	652 2222	... .	... .	... .
T-995B	Left	1	... .	652 1147	... .	... .
	Right	1	... .	652 1146	... .	... .
T-995D	Left	1	... .	652 1147	... .	... .
	Right	1	... .	652 1146	... .	... .
T-995F	Left	1	... .	652 1297	... .	... .
	Right	1	... .	652 1296	... .	... .
T-995N	Left	1	... .	652 1297	... .	... .
	Right	1	... .	652 1296	... .	... .
T-996A	Left	1	652 1045	652 1149	... .	... .
	Right	1	652 1044	652 1148	... .	... .
T-996B	Left	1	652 1045	652 1149	... .	... .
	Right	1	652 1044	652 1148	... .	... .
T-996C	Left	1	652 1045	652 1149	... .	... .
	Right	1	652 1044	652 1148	... .	... .
T-996D	Left	1	652 1045	652 1149	... .	... .
	Right	1	652 1044	652 1148	... .	... .
T-996E	Left	1	... .	652 1299	... .	... .
	Right	1	... .	652 1298	... .	... .
T-996F	Left	1	... .	652 1299	... .	... .
	Right	1	... .	652 1298	... .	... .
T-996M	Left	1	652 1073	652 1299	... .	... .
	Right	1	652 1072	652 1298	... .	... .
T-996N	Left	1	652 1073	652 1299	... .	... .
	Right	1	652 1072	652 1298	... .	... .
T-997A	Left	1	652 1047	652 1151	... .	... .
	Right	1	652 1046	652 1150	... .	... .

Printed in U.S.A.

SEATS - SOFT TRIM

Trim No.			Per Car	05-08-15-18 -85-88	06-09-19-39 -79-89		
T-997B	Left		1	652 1047	652 1151	... .	... .
	Right		1	652 1046	652 1150	... .	... .
T-997C	Left		1	652 1047	652 1151	... .	... .
	Right		1	652 1046	652 1150	... .	... .
T-997D	Left		1	652 1047	652 1151	... .	... .
	Right		1	652 1046	652 1150	... .	... .
T-997E	Left		1	... .	652 1301	... .	... .
	Right		1	... .	652 1300	... .	... .
T-997M	Left		1	652 1075	652 1301	... .	... .
	Right		1	652 1074	652 1300	... .	... .
T-999	Left		1	... .	652 1303	... .	... .
	Right		1	... .	652 1302	... .	... .

1970 MODELS

Trim No.			Per Car	05-15-18 -85-88	06-19-39-46 -79-89
T-001	Left		1	... .	362 7369
	Right		1	... .	362 7368
T-008	Left		1	... .	363 7921
	Right		1	... .	363 7920
T-011	Left		1	... .	362 7377
	Right		1	... .	362 7376
T-013	Left		1	... .	362 7379
	Right		1	... .	362 7378
T-014	Left		1	... .	362 7381
	Right		1	... .	362 7380
T-015	Left		1	... .	362 7383
	Right		1	... .	362 7382
T-021A	Left		1	362 7491	363 7921
	Right		1	362 7490	363 7920
T-021B	Left		1	362 7491	363 7921
	Right		1	362 7490	363 7920
T-021G	Left		1	362 7581	362 7369
	Right		1	362 7580	362 7368
T-023	Left		1	362 7493	362 7371
	Right		1	362 7492	362 7370
T-024	Left		1	363 9681	363 7929
	Right		1	363 9680	363 7928
T-025	Left		1	363 9683	363 7925
	Right		1	363 9682	363 7924
T-031	Left	(LRM)	1	... .	363 5403
		(WRM)	1	... .	363 5402
	Right		1	... .	363 5401
T-033	Left	(LRM)	1	... .	363 5406
		(WRM)	1	... .	363 5405
	Right		1	... .	363 5404
T-035	Left	(LRM)	1	... .	363 5412
		(WRM)	1	... .	363 5411
	Right		1	... .	363 5410
T-036	Left	(LRM)	1	... .	363 5415
		(WRM)	1	... .	363 5414
	Right		1	... .	363 5413
T-041	Left		1	362 8067	362 7377
	Right		1	362 8066	362 7376
T-043	Left	(Except "V" Trims)	1	362 8069	362 7379
	Right	(Except "V" Trims)	1	362 8068	362 7378
T-043v	Left	(LRM)	1	362 6205	362 6241
		(WRM)	1	362 6307	362 6233
	Right		1	362 6204	362 6240

SEATS - SOFT TRIM

Trim No.			Per Car	05-15-18 -85-88	06-19-39-46 -79-89
T-044	Left	(Except "V" Trims)	1	362 8071	362 7381
	Right	(Except "V" Trims)	1	362 8070	362 7380
T-044V	Left	(LRM)	1	362 6207	362 6243
		(WRM)	1	362 6309	362 6235
	Right		1	362 6206	362 6242
T-045	Left		1	362 8073	362 7383
	Right		1	362 8072	362 7382
T-051	Left		1	652 3805	652 3899
	Right		1	652 3804	652 3898
T-051P	Left		1	448 8489	... .
	Right		1	448 8488	... .
T-051V	Left		1	448 8489	... .
	Right		1	448 8488	... .
T-053	Left		1	652 3807	652 3901
	Right		1	652 3806	652 3900
T-054	Left		1	652 3809	652 3903
	Right		1	652 3808	652 3902
T-056	Left		1	652 3811	652 3905
	Right		1	652 3810	652 3904
T-061E	Left	(LRM)	1	... .	363 5305
		(WRM)	1	... .	363 5306
	Right		1	... .	363 5304
T-061F	Left	(LRM)	1	... .	363 5403
		(WRM)	1	... .	363 5402
	Right		1	... .	363 5401
T-061J	Left	(LRM)	1	... .	363 0607
		(WRM)	1	... .	364 1434
	Right		1	... .	363 0606
T-061L	Left	(LRM)	1	... .	363 5403
		(WRM)	1	... .	363 5402
	Right		1	... .	363 5401
T-063E	Left	(LRM)	1	... .	363 5308
		(WRM)	1	... .	363 5309
	Right		1	... .	363 5307
T-063F	Left	(LRM)	1	... .	363 5406
		(WRM)	1	... .	363 5405
	Right		1	... .	363 5404
T-063J	Left	(LRM)	1	... .	363 0609
		(WRM)	1	... .	364 1435
	Right		1	... .	363 0608
T-064E	Left	(LRM)	1	... .	363 5311
		(WRM)	1	... .	363 5312
	Right		1	... .	363 5310
T-064F	Left	(LRM)	1	... .	363 5409
		(WRM)	1	... .	363 5408
	Right		1	... .	363 5407
T-064J	Left	(LRM)	1	... .	363 0611
		(WRM)	1	... .	364 1436
	Right		1	... .	363 0610
T-065E	Left	(LRM)	1	... .	363 5314
		(WRM)	1	... .	363 5315
	Right		1	... .	363 5313
T-065F	Left	(LRM)	1	... .	363 5412
		(WRM)	1	... .	363 5411
	Right		1	... .	363 5410
T-065J	Left	(LRM)	1	... .	363 0613
		(WRM)	1	... .	364 1437
	Right		1	... .	363 0612

Printed in U.S.A.

SEATS - SOFT TRIM

Trim No.			Per Car	05-15-18 -85-88	06-19-39-46 -79-89
T-065L	Left	(LRM)	1	... .	363 5412
		(WRM)	1	... .	363 5411
	Right		1	... .	363 5410
T-066E	Left	(LRM)	1	... .	363 5317
		(WRM)	1	... .	363 5318
	Right		1	... .	363 5316
T-066F	Left	(LRM)	1	... .	363 5415
		(WRM)	1	... .	363 5414
	Right		1	... .	363 5413
T-066J	Left	(LRM)	1	... .	363 0615
		(WRM)	1	... .	364 1438
	Right		1	... .	363 0614
T-066L	Left	(LRM)	1	... .	363 5415
		(WRM)	1	... .	363 5414
	Right		1	... .	363 5413
T-071	Left		1	652 3813	652 3907
	Right		1	652 3812	652 3906
T-073	Left		1	652 3817	652 3911
	Right		1	652 3816	652 3910
T-074	Left		1	652 3819	652 3913
	Right		1	652 3818	652 3912
T-075	Left		1	652 3815	652 3915
	Right		1	652 3814	652 3914
T-076	Left		1	652 3821	652 3917
	Right		1	652 3820	652 3916
T-081	Left		1	652 3823	... .
	Right		1	652 3822	... .
T-083	Left		1	652 3825	... .
	Right		1	652 3824	... .
T-084	Left		1	652 3827	... .
	Right		1	652 3826	... .
T-086	Left		1	652 3829	... .
	Right		1	652 3828	... .
T-091	Left	(DPL)	1	652 3831	652 3919
		(SST-Except "V" Trims-LER)	1	652 3841	... .
		(SST-Except "V" Trims-WER)	1	652 3851	... .
		(SST-"V" Trims-LER)	1	652 3861	... .
		(SST-"V" Trims-WER)	1	652 3865	... .
		(SST-LER)	1	... .	652 3931
		(SST-WER)	1	... .	652 3943
	Right	(DPL)	1	652 3830	652 3918
		(SST-Except "V" Trims-LER)	1	652 3840	... .
		(SST-Except "V" Trims-WER)	1	652 3850	... .
		(SST-"V" Trims-LER)	1	652 3860	... .
		(SST-"V" Trims-WER)	1	652 3864	... .
		(SST-LER)	1	... .	652 3930
		(SST-WER)	1	... .	652 3942
T-093	Left	(DPL)	1	652 3835	652 3923
		(SST-Except "V" Trims-LER)	1	652 3845	... .
		(SST-Except "V" Trims-WER)	1	652 3855	... .
		(SST-"V" Trims-LER)	1	652 3863	... .
		(SST-"V" Trims-WER)	1	652 3867	... .
		(SST-LER)	1	... .	652 3935
		(SST-WER)	1	... .	652 3947
	Right	(DPL)	1	652 3834	652 3922
		(SST-Except "V" Trims-LER)	1	652 3844	... .
		(SST-Except "V" Trims-WER)	1	652 3854	... .
		(SST-"V" Trims-LER)	1	652 3862	... .
		(SST-"V" Trims-WER)	1	652 3866	... .
		(SST-LER)	1	... .	652 3934
		(SST-WER)	1	... .	652 3946

SEATS - SOFT TRIM

Trim No.			Per Car	05-15-18 -85-88	06-19-39-46 -79-89
T-094	Left	(DPL)	1	652 3837	652 3925
		(SST-LER)	1	652 3847	652 3937
		(SST-WER)	1	652 3857	652 3949
	Right	(DPL)	1	652 3836	652 3924
		(SST-LER)	1	652 3846	652 3936
		(SST-WER)	1	652 3856	652 3948
T-095	Left	(DPL)	1	652 3833	652 3927
		(SST-LER)	1	652 3843	652 3939
		(SST-WER)	1	652 3853	652 3951
	Right	(DPL)	1	652 3832	652 3926
		(SST-LER)	1	652 3842	652 3938
		(SST-WER)	1	652 3852	652 3950
T-096	Left	(DPL)	1	652 3839	652 3929
		(SST-LER)	1	652 3849	652 3941
		(SST-WER)	1	652 3859	652 3953
	Right	(DPL)	1	652 3838	652 3928
		(SST-LER)	1	652 3848	652 3940
		(SST-WER)	1	652 3858	652 3952

1971 MODELS

Trim No.			Per Car	05-08-15-18 -85-88	06-19-46 -79-89
T-101	Left		1	... .	363 8571
	Right		1	... .	363 8570
T-103	Left	Except "A" Trim	1	... .	363 8573
	Right	Except "A" Trim	1	... .	363 8572
T-103A	Left		1	... .	363 8571
	Right		1	... .	363 8570
T-104A	Left		1	... .	363 8571
	Right		1	... .	363 8570
T-108	Left		1	... .	363 8571
	Right		1	... .	363 8570
T-111	Left		1	... .	363 8587
	Right		1	... .	363 8586
T-113	Left		1	... .	363 8589
	Right		1	... .	363 8588
T-114	Left		1	... .	363 8591
	Right		1	... .	363 8590
T-115	Left		1	... .	363 8593
	Right		1	... .	363 8592
T-121	Left		1	363 8851	363 8571
	Right		1	363 8850	363 8570
T-123	Left		1	363 8853	363 8573
	Right		1	363 8852	363 8572
T-124	Left		1	363 8855	363 8575
	Right		1	363 8854	363 8574
T-128	Left		1	363 8851	363 8571
	Right		1	363 8850	363 8570
T-141	Left	Except "V" Trim	1	363 8861	363 8587
	Right	Except "V" Trim	1	363 8860	363 8586
T-141V	Left	(LRM)	1	363 9067	363 8629
		(WRM)	1	363 9071	363 8633
	Right		1	363 9066	363 8628
T-143	Left	Except "V" Trim	1	363 8863	363 8589
	Right	Except "V" Trim	1	363 8862	363 8588
T-143V	Left	(LRM)	1	365 2531	365 2521
		(WRM)	1	365 2535	365 2525
	Right		1	365 2530	365 2520
T-144	Left	Except "V" Trim	1	363 8865	363 8591
	Right	Except "V" Trim	1	363 8864	363 8590
T-144V	Left	(LRM)	1	365 2533	365 2523
		(WRM)	1	365 2537	365 2527
	Right		1	365 2532	365 2522
T-145	Left	Except "V" Trim	1	363 8867	363 8593
	Right	Except "V" Trim	1	363 8866	363 8592

Printed in U.S.A.

SEATS - SOFT TRIM

Trim No.			Per Car	05-08-15-18 -85-88	06-19-46 -79-89
T-145V	Left	(LRM)	1	363 9069	363 8631
		(WRM)	1	363 9073	363 8635
	Right		1	363 9068	363 8630
T-151	Left		1	652 6399	652 6437
	Right		1	652 6398	652 6436
T-153	Left		1	652 6401	652 6439
	Right		1	652 6400	652 6438
T-154	Left		1	652 6403	... .
	Right		1	652 6402	... .
T-161	Left	Upper	1	... .	364 9353
		Lower	1	... .	364 3671
	Right	Upper	1	... .	364 9352
		Lower	1	... .	364 3670
T-163	Left	Upper	1	... .	364 9355
		Lower	1	... .	364 3673
	Right	Upper	1	... .	364 9354
		Lower	1	... .	364 3672
T-164	Left		1	... .	364 9357
		Lower	1	... .	364 3675
	Right	Upper	1	... .	364 9356
		Lower	1	... .	364 3674
T-165	Left	Upper	1	... .	364 9359
		Lower	1	... .	364 3677
	Right	Upper	1	... .	364 9358
		Lower	1	... .	364 3676
T-168	Left	Upper	1	... .	364 9353
		Lower	1	... .	364 3671
	Right	Upper	1	... .	364 9352
		Lower	1	... .	364 3670
T-171	Left		1	652 6405	652 6443
	Right		1	652 6404	652 6442
T-173	Left		1	652 6407	652 6445
	Right		1	652 6406	652 6444
T-174	Left		1	652 6409	652 6447
	Right		1	652 6408	652 6446
T-175	Left		1	652 6411	652 6449
	Right		1	652 6410	652 6448
T-176	Left		1	652 6405	652 6443
	Right		1	652 6404	652 6442
T-181	Left		1	652 6399	... .
	Right		1	652 6398	... .
T-183	Left		1	652 6401	... .
	Right		1	652 6400	... .
T-184	Left		1	652 6403	... .
	Right		1	652 6402	... .
T-186	Left		1	652 6399	... .
	Right		1	652 6398	... .
T-191	Left	(SST)	1	652 6413	652 6451
		(Brougham-LER)	1	652 6421	652 6459
		(Brougham-WER-LRM)	1	652 8346	652 8354
		(Brougham-WER-WRM)	1	652 8350	652 8358
	Right	(SST)	1	652 6412	652 6450
		(Brougham-LER)	1	652 6420	652 6458
		(Brougham-WER)	1	652 6428	652 6466
T-191V	Left	(Brougham-LER)	1	652 8463	652 8503
		(Brougham-WER-LRM)	1	652 8468	652 8508
		(Brougham-WER-WRM)	1	652 8470	652 8510
	Right	(Brougham-LER)	1	652 8462	652 8502
		(Brougham-WER)	1	652 8466	652 8506
T-193	Left	(SST)	1	652 6415	652 6453
		(Brougham-LER)	1	652 6423	652 6461
		(Brougham-WER-LRM)	1	652 8347	652 8355
		(Brougham-WER-WRM)	1	652 8351	652 8359
	Right	(SST)	1	652 6414	652 6452
		(Brougham-LER)	1	652 6422	652 6460
		(Brougham-WER)	1	652 6430	652 6468

SEATS - SOFT TRIM

Trim No.			Per Car	05-08-15-18 -85-88	06-19-46 -79-89
T-193V	Left	(Brougham-LER)	1	652 8465	652 8505
		(Brougham-WER-LRM)	1	652 8469	652 8509
		(Brougham-WER-WRM)	1	652 8471	652 8511
	Right	(Brougham-LER)	1	652 8464	652 8504
		(Brougham-WER)	1	652 8467	652 8507
T-194	Left	(SST)	1	652 6417	652 6455
		(Brougham-LER)	1	652 6425	652 6463
		(Brougham-WER-LRM)	1	652 8348	652 8356
		(Brougham-WER-WRM)	1	652 8352	652 8360
	Right	(SST)	1	652 6416	652 6454
		(Brougham-LER)	1	652 6424	652 6462
		(Brougham-WER)	1	652 6432	652 6470
T-195	Left	(SST)	1	652 6419	652 6457
		(Brougham-LER)	1	652 6427	652 6465
		(Brougham-WER-LRM)	1	652 8349	652 8357
		(Brougham-WER-WRM)	1	652 8353	652 8361
	Right	(SST)	1	652 6418	652 6456
		(Brougham-LER)	1	652 6426	652 6464
		(Brougham-WER)	1	652 6434	652 6472
T-196	Left	(SST)	1	652 6413	652 6451
		(Brougham-LER)	1	652 6421	652 6459
		(Brougham-WER-LRM)	1	652 8346	652 8354
		(Brougham-WER-WRM)	1	652 8350	652 8358
	Right	(SST)	1	652 6412	652 6450
		(Brougham-LER)	1	652 6420	652 6458
		(Brougham-WER)	1	652 6428	652 6466

1972 MODELS

Trim No.			Per Car	05-08-15-18 -85-88	06-19-46 -79-89
T-201	Left		1	... .	365 2463
	Right		1	... .	365 2462
T-203	Left		1	... .	365 2465
	Right		1	... .	365 2464
T-206	Left		1	... .	365 2473
	Right		1	... .	365 2472
T-208	Left		1	... .	365 2463
	Right		1	... .	365 2462
T-211	Left		1	... .	365 2463
	Right		1	... .	365 2462
T-213	Left		1	... .	365 2465
	Right		1	... .	365 2464
T-215	Left		1	... .	365 2463
	Right		1	... .	365 2462
T-216	Left		1	... .	365 2473
	Right		1	... .	365 2472
T-218	Left		1	... .	365 2463
	Right		1	... .	365 2462
T-221	Left		1	365 3735	365 2421
	Right		1	365 3734	365 2420
T-223	Left		1	365 3737	365 2423
	Right		1	365 3736	365 2422
T-224	Left		1	365 3739	365 2425
	Right		1	365 3738	365 2424
T-226	Left		1	365 3745	365 2435
	Right		1	365 3744	365 2434
T-241	Left	Except "V" Trim	1	365 3735	365 2421
	Right	Except "V" Trim	1	365 3734	365 2420

SEATS - SOFT TRIM

Trim No.			Per Car	05-08-15-18 -85-88	06-19-46 -79-89
T-241V	Left	(LRM)	1	365 4189	365 4081
		(WRM)	1	365 4196	365 4088
	Right		1	365 4188	365 4080
T-243	Left	Except "V" Trim	1	365 3737	365 2423
	Right	Except "V" Trim	1	365 3736	365 2422
T-243V	Left	(LRM)	1	365 4205	365 4087
		(WRM)	1	365 4194	365 4091
	Right		1	365 4204	365 4086
T-244	Left	Except "V" And "W" Trims	1	365 3739	365 2425
	Right	Except "V" And "W" Trims	1	365 3738	365 2424
T-244W	Left	(LRM)	1	365 6207	... .
		(WRM)	1	365 6209	... .
	Right		1	365 6206	... .
T-244V	Left	(LRM)	1	365 4207	365 4099
		(WRM)	1	365 4195	365 4092
	Right		1	365 4206	365 4098
T-246	Left	Except "V" Trim	1	365 3745	365 2435
	Right	Except "V" Trim	1	365 3744	365 2434
T-246V	Left	(LRM)	1	365 4193	365 4085
		(WRM)	1	365 4198	365 4090
	Right		1	365 4192	365 4084
T-261	Left	Upper	1	... .	364 9353
		Lower	1	... .	365 3977
	Right	Upper	1	... .	364 9352
		Lower	1	... .	365 3976
T-261W	Left	Upper	1	... .	364 9353
		Lower	1	... .	365 3977
	Right	Upper	1	... .	364 9352
		Lower	1	... .	365 3976
T-263	Left	Upper	1	... .	365 3951
		Lower	1	... .	365 3981
	Right	Upper	1	... .	365 3950
		Lower	1	... .	365 3980
T-264	Left	Upper	1	... .	365 3953
		Lower	1	... .	365 3983
	Right	Upper	1	... .	365 3952
		Lower	1	... .	365 3982
T-265	Left	Upper	1	... .	364 9353
		Lower	1	... .	365 3977
	Right	Upper	1	... .	364 9352
		Lower	1	... .	365 3976
T-266	Left	Upper	1	... .	365 3957
		Lower	1	... .	365 1849
	Right	Upper	1	... .	365 3956
		Lower	1	... .	365 1848
T-268	Left	Upper	1	... .	364 9353
		Lower	1	... .	365 3977
	Right	Upper	1	... .	364 9352
		Lower	1	... .	365 3976
T-271	Left		1	364 7323	364 7387
	Right		1	364 7322	364 7386
T-273	Left		1	364 7325	364 7389
	Right		1	364 7324	364 7388
T-274	Left		1	364 7327	364 7391
	Right		1	364 7326	364 7390
T-276	Left		1	364 7329	364 7393
	Right		1	364 7328	364 7392
T-291	Left	(SST)	1	364 7346	364 7411
		(Brougham-LER)	1	364 7357	364 7425
		(Brougham-WER)	1	364 7369	365 5343
	Right	(SST)	1	364 7346	364 7410
		(Brougham-LER)	1	364 7356	364 7424
		(Brougham-WER)	1	364 7368	365 5342

SEATS - SOFT TRIM

Trim No.			Per Car	05-08-15-18 -85-88	06-19-46 -79-89
T-293	Left	(SST)	1	364 7349	364 7413
		(Brougham-LER)	1	364 7359	364 7427
		(Brougham-WER)	1	364 7371	365 5345
	Right	(SST)	1	364 7348	364 7412
		(Brougham-LER)	1	364 7358	364 7426
		(Brougham-WER)	1	364 7370	365 5344
T-294	Left	(SST)	1	364 7351	364 7415
		(Brougham-LER)	1	364 7361	364 7429
		(Brougham-WER)	1	364 7373	365 5347
	Right	(SST)	1	364 7350	364 7414
		(Brougham-LER)	1	364 7360	364 7428
		(Brougham-WER)	1	364 7372	365 5346
T-296	Left	(SST)	1	364 7353	364 7417
		(Brougham-LER)	1	364 7363	364 7431
		(Brougham-WER)	1	364 7375	365 5349
	Right	(SST)	1	364 7352	364 7416
		(Brougham-LER)	1	364 7362	364 7430
		(Brougham-WER)	1	364 7374	365 5348

29.070–2 ATTACHING PARTS, Trim Panel To Door

FASTENER, Wire	67/68	01	29.052	18	400 1911
FASTENER, Wire	67/68	10-80	29.052	6	400 1911
FASTENER, Wire	68	39-79	29.052	18	400 1911
FASTENER, Wire	71/	70 (To Upper And Lower Panels)	29.052	AR	400 4047
FASTENER, Wire (Sealed)	69	01 (Brown)	.....	20	400 3580
FASTENER, Wire (Sealed)	70/	01-40	.....	AR	400 3580
FASTENER, Wire (Sealed)	70/	10-80	29.052	AR	400 4047
FASTENER, Wire (Sealed)	70/	30-70 (Black)	29.052	10	400 3681
FASTENER, Wire (Sealed)	70	30-70 (Brown)		10	400 3580
FASTENER, Hook (Sealed)	70	01 ("V" Trims)	29.052	18	400 4047
FASTENER, Hook (Sealed)	70	30-70 (Black-Bottom Hook Is 21/32" Long)	29.052	10	400 4047
SCREW, Tapping	68	01-30-70 ***(Use 400 1776)***	.....	6	400 1957
SCREW, Tapping	70/	01-10-40-80	.....	6	400 1776
SCREW, Tapping	67/69	10-80 (9/16" Long) ***(Use 400 1776)***	.....	6	400 1957
SCREW, Tapping	67/71	10-80 (Panel Extension To Inner Panel-5/8" Long)	.....	2	400 2151
SCREW, Tapping	72	10-80 (Panel Extension To Inner Panel) ***(Use 400 1776)***	.....	2	400 4315
SCREW, Tapping	69	30-70	.....	8	400 1957
SCREW, Tapping	70	30-70	.....	8	400 1776
SCREW, Tapping	71/	70	.....	14	400 4150
SCREW, Tapping	71/	80 (Below Overlay)	.....	2	400 1776
SCREW, Tapping	72	70 (Rear-Upper To Door)	.....	2	400 2151

29.070–3 LITTER BAG, Front Door Trim Panel

Trim No.	Per Car	01-10-40 -70-80
T-201	2	364 8112
T-203	2	364 8113
T-206	2	364 8115
T-211	2	364 8112
T-213	2	364 8113
T-215	2	364 8112
T-216	2	364 8115
T-221	2	364 8112
T-223	2	364 8113
T-224	2	364 8114
T-226	2	364 8115
T-241	2	364 8112
T-243	2	364 8113
T-244	2	364 8114
T-246	2	364 8115
T-261	2	364 8112
T-263	2	364 8113
T-264	2	364 8114

Printed in U.S.A.

SEATS - SOFT TRIM

Trim No.	Per Car	01-10-40 -70-80
T-265	2	364 8112
T-266	2	364 8115
T-268	2	364 8112
T-271	2	364 8112
T-273	2	364 8113
T-274	2	364 8114
T-276	2	364 8115
T-281	2	364 8112
T-291	2	364 8112
T-293	2	364 8113
T-294	2	364 8114
T-296	2	364 8115

29.070–4 ATTACHING PARTS, Litter Bag To Front Door Trim Panel

TURN BUTTON..... 72	.....	4	400 4449
PLATE 72	.....	4	400 4450

29.071–1 PANEL, Rear Door Trim (* 29-23)

1967 MODELS

Trim No.		Per Car	05-08	15-18 (LER- Except "S" Trim) :85-88	15-18 (WER)	18 (LER- "S" Trim)
T-723	Left	1	358 4009	... .	... .	... .
	Richt	1	358 4008	... .	... .	... .
T-728	Left	1	358 4011	... .	... .	... .
	Right	1	358 4010	... .	... .	... .
T-729	Left	1	358 4013	... .	... .	... .
	Right	1	358 4012	... .	... .	... .
T-741	Left	1	359 2357	... .	... .	... .
	Right	1	359 2356	... .	... .	... .
T-743	Left	1	358 4017	... .	... .	... .
	Right	1	358 4016	... .	... .	... .
T-744	Left	1	358 4019	... .	... .	... .
	Right	1	358 4018	... .	... .	... .
T-745	Left	1	358 4021	... .	... .	... .
	Right	1	358 4020	... .	... .	... .
T-747	Left	1	358 4023	... .	... .	... .
	Right	1	358 4022	... .	... .	... .
T-749	Left	1	358 4025	... .	... .	... .
	Right	1	358 4024	... .	... .	... .
T-753	Left	1	... .	650 4717	650 4717	... .
	Right	1	... .	650 4716	650 4716	... .
T-758	Left	1	... .	650 4719	650 4719	... .
	Right	1	... .	650 4718	650 4718	... .
T-759	Left	1	... .	650 4721	650 4721	... .
	Right	1	... .	650 4720	650 4720	... .
T-771	Left	1	... .	650 4723	650 4735	650 6391
	Right	1	... .	650 4722	650 4734	650 6390
T-773	Left	1	... .	650 4725	650 4737	650 4737
	Right	1	... .	650 4724	650 4736	650 4736
T-774	Left	1	... .	650 4727	650 4739	... .
	Right	1	... .	650 4726	650 4738	... .
T-776	Left	1	... .	650 4729	650 4741	... .
	Right	1	... .	650 4728	650 4740	... .
T-777	Left	1	... .	650 4731	650 4743	... .
	Right	1	... .	650 4730	650 4742	... .
T-779	Left	1	... .	650 4733	650 4745	650 6393
	Right	1	... .	650 4732	650 4744	650 6392

Printed in U.S.A.

SEATS - SOFT TRIM

Trim No.		Per Car	05-08	15-18 (LER-Except "S" Trim) :85-88	15-18 (WER)	18 (LER-"S" Trim)
T-781	Left	1	... .	650 4747	... .	... .
	Right	1	... .	650 4746	... .	... .
T-783	Left	1	... .	650 4749	... .	... .
	Right	1	... .	650 4748	... .	... .
T-787	Left	1	... .	650 4751	... .	... .
	Right	1	... .	650 4750	... .	... .
T-789	Left	1	... .	650 4753	... .	... .
	Right	1	... .	650 4752	... .	... .
T-791	Left	1	... .	448 4553	... .	... .
	Right	1	... .	448 4552	... .	... .
T-793	Left	1	... .	448 4555	... .	... .
	Right	1	... .	448 4554	... .	... .
T-794	Left	1	... .	448 4557	... .	... .
	Right	1	... .	448 4556	... .	... .
T-796	Left	1	... .	448 4559	... .	... .
	Right	1	... .	448 4558	... .	... .
T-797	Left	1	... .	448 4561	... .	... .
	Right	1	... .	448 4560	... .	... .
T-799	Left	1	... .	448 4563	... .	... .
	Right	1	... .	448 4562	... .	... .

1968 MODELS

Trim No.		Per Car	05-08-15-18	85-88 (LER)	85-88 (WER)	
T-828	Left	1	630 0211	... .	... .	... .
	Right	1	630 0210	... .	... .	... .
T-843	Left	1	448 6699	... .	... .	... .
	Right	1	448 6698	... .	... .	... .
T-844	Left (* 29-90)	1	448 6701	... .	... .	... .
	(* 29-91)	1	448 6851	... .	... .	... .
	Right (* 29-90)	1	448 6700	... .	... .	... .
	(* 29-91)	1	448 6850	... .	... .	... .
T-845	Left	1	448 6703	... .	... .	... .
	Right	1	448 6702	... .	... .	... .
T-848	Left	1	448 6697	... .	... .	... .
	Right	1	448 6696	... .	... .	... .
T-851	Left	1	651 3233	651 3233	651 3233	... .
	Right	1	651 3232	651 3232	651 3232	... .
T-853	Left	1	651 3235	... .	... .	... .
	Right	1	651 3234	... .	... .	... .
T-855	Left	1	651 3237	... .	... .	... .
	Right	1	651 3236	... .	... .	... .

SEATS - SOFT TRIM

Trim No.			Per Car	05-08-15-18	85-88 (LER)	85-88 (WER)	
T-871	Left		1	651 3233	... .	... .	... .
	Right		1	651 3232	... .	... .	... .
T-873	Left		1	651 3243	... .	... .	... .
	Right		1	651 3242	... .	... .	... .
T-874	Left		1	651 3245	... .	... .	... .
	Right		1	651 3244	... .	... .	... .
T-875	Left		1	651 3237	... .	... .	... .
	Right		1	651 3236	... .	... .	... .
T-876	Left		1	651 3247	... .	... .	... .
	Right		1	651 3246	... .	... .	... .
T-879	Left		1	651 3249	... .	... .	... .
	Right		1	651 3248	... .	... .	... .
T-881	Left		1	... .	651 3251	651 3251	... .
	Right		1	... .	651 3250	651 3250	... .
T-883	Left		1	... .	651 3253	651 3253	... .
	Right		1	... .	651 3252	651 3252	... .
T-885	Left		1	... .	651 3255	651 3255	... .
	Right		1	... .	651 3254	651 3254	... .
T-891C	Left	(* 29-27)	1	... .	448 6325	448 6325	... .
		(* 29-28)	1	... .	651 3259	651 3259	... .
	Right	(* 29-27)	1	... .	448 6324	448 6324	... .
		(* 29-28)	1	... .	651 3258	651 3258	... .
T-891K	Left	(* 29-27)	1	... .	448 6337	448 6337	... .
		(* 29-28)	1	... .	651 6273	651 6273	... .
	Right	(* 29-27)	1	... .	448 6336	448 6336	... .
		(* 29-28)	1	... .	651 6272	651 6272	... .
T-891V	Left	(* 29-27)	1	... .	448 6325	448 6325	... .
		(* 29-28)	1	... .	651 3259	651 3259	... .
	Right	(* 29-27)	1	... .	448 6324	448 6324	... .
		(* 29-28)	1	... .	651 3258	651 3258	... .
T-891W	Left	(* 29-15)	1	... .	... .	651 3847	... .
		(* 29-26)(* 29-27)	1	... .	448 6337	448 6337	... .
		(* 29-26)(* 29-28)	1	... .	651 6273	651 6273	... .
	Right	(* 29-15)	1	... .	... .	651 3846	... .
		(* 29-26)(* 29-27)	1	... .	448 6336	448 6336	... .
		(* 29-26)(* 29-28)	1	... .	651 6272	651 6272	... .
T-893C	Left	(* 29-27)	1	... .	448 6327	448 6327	... .
		(* 29-28)	1	... .	651 3261	651 3261	... .
	Right	(* 29-27)	1	... .	448 6326	448 6326	... .
		(* 29-28)	1	... .	651 3260	651 3260	... .
T-893K	Left	(* 29-15)	1	... .	651 3837	... .	... .
		(* 29-26)(* 29-27)	1	... .	448 6339	448 6339	... .
		(* 29-26)(* 29-28)	1	... .	651 6275	651 6275	... .
	Right	(* 29-15)	1	... .	651 3836	... .	... .
		(* 29-26)(* 29-27)	1	... .	448 6338	448 6338	... .
		(* 29-26)(* 29-28)	1	... .	651 6274	651 6274	... .
T-893V	Left	(* 29-26)(* 29-27)	1	... .	448 6327	448 6327	... .
		(* 29-28)	1	... .	651 3261	651 3261	... .
	Right	(* 29-26)(* 29-27)	1	... .	448 6326	448 6326	... .
		(* 29-28)	1	... .	651 3260	651 3260	... .

SEATS - SOFT TRIM

Trim No.			Per Car	05-08-15-18	85-88 (LER)	85-88 (WER)	
T-893W	Left	(* 29-15)	1	... .	... .	651 3849	... .
		(* 29-26)(* 29-27)	1	... .	448 6339	448 6339	... .
		(* 29-26)(* 29-28)	1	... .	651 6275	651 6275	... .
	Right	(* 29-15)	1	... .	... .	651 3848	... .
		(* 29-26)(* 29-27)	1	... .	448 6338	448 6338	... .
		(* 29-26)(* 29-28)	1	... .	651 6274	651 6274	... .
T-894C	Left	(* 29-27)	1	... .	448 6329	448 6329	... .
		(* 29-28)	1	... .	651 3263	651 3263	... .
	Right	(* 29-27)	1	... .	448 6328	448 6328	... .
		(* 29-28)	1	... .	651 3262	651 3262	... .
T-894K	Left	(* 29-15)	1	... .	... .	651 3863	... .
		(* 29-26)(* 29-27)	1	... .	448 6341	448 6341	... .
		(* 29-26)(* 29-28)	1	... .	651 6277	651 6277	... .
	Right	(* 29-15)	1	... .	... .	651 3862	... .
		(* 29-26)(* 29-27)	1	... .	448 6340	448 6340	... .
		(* 29-26)(* 29-28)	1	... .	651 6276	651 6276	... .
T-894W	Left	(* 29-27)	1	... .	448 6341	448 6341	... .
		(* 29-28)	1	... .	651 6277	651 6277	... .
		(* 29-27)	1	... .	448 6340	448 6340	... .
		(* 29-28)	1	... .	651 6276	651 6276	... .
T-895K	Left	(* 29-27)	1	... .	448 6343	448 6343	... .
		(* 29-28)	1	... .	651 6279	651 6279	... .
	Right	(* 29-27)	1	... .	448 6342	448 6342	... .
		(* 29-28)	1	... .	651 6278	651 6278	... .
T-895V	Left	(* 29-27)	1	... .	448 6331	448 6331	... .
		(* 29-28)	1	... .	651 3257	651 3257	... .
	Right	(* 29-27)	1	... .	448 6330	448 6330	... .
		(* 29-28)	1	... .	651 3256	651 3256	... .
T-896C	Left	(* 29-27)	1	... .	448 6333	448 6333	... .
		(* 29-28)	1	... .	651 3265	651 3265	... .
	Right	(* 29-27)	1	... .	448 6332	448 6332	... .
		(* 29-28)	1	... .	651 3264	651 3264	... .
T-896K	Left	(* 29-27)	1	... .	448 6345	448 6345	... .
		(* 29-28)	1	... .	651 6281	651 6281	... .
	Right	(* 29-27)	1	... .	448 6344	448 6344	... .
		(* 29-28)	1	... .	651 6280	651 6280	... .
T-896V	Left	(* 29-27)	1	... .	448 6333	448 6333	... .
		(* 29-28)	1	... .	651 3265	651 3265	... .
	Right	(* 29-27)	1	... .	448 6332	448 6332	... .
		(* 29-28)	1	... .	651 3264	651 3264	... .
T-896W	Left	(* 29-27)	1	... .	448 6345	448 6345	... .
		(* 29-28)	1	... .	651 6281	651 6281	... .
	Right	(* 29-27)	1	... .	448 6344	448 6344	... .
		(* 29-28)	1	... .	651 6280	651 6280	... .
T-899C	Left	(* 29-27)	1	... .	448 6335	448 6335	... .
		(* 29-28)	1	... .	651 3267	651 3267	... .
	Right	(* 29-27)	1	... .	448 6334	448 6334	... .
		(* 29-28)	1	... .	651 3266	651 3266	... .
T-899K	Left	(* 29-27)	1	... .	448 6347	448 6347	... .
		(* 29-28)	1	... .	651 6283	651 6283	... .
	Right	(* 29-27)	1	... .	448 6346	448 6346	... .
		(* 29-28)	1	... .	651 6282	651 6282	... .
T-899W	Left	(* 29-15)	1	... .	... .	651 3857	... .
		(* 29-26)(* 29-27)	1	... .	448 6347	448 6347	... .
		(* 29-26)(* 29-28)	1	... .	651 6283	651 6283	... .
	Right	(* 29-15)	1	... .	... .	651 3856	... .
		(* 29-26)(* 29-27)	1	... .	448 6346	448 6346	... .
		(* 29-26)(* 29-28)	1	... .	651 6282	651 6282	... .

SEATS - SOFT TRIM

1969 MODELS

Trim No.			Per Car	05-08-15-18 -85-88			
T-921F	Left		1	363 5963			
	Right		1	363 5962			
T-921G	Left	(05)	1	362 5331			
		(08)	1	362 5317			
	Right	(05)	1	362 5330			
		(08)	1	362 5316			
T-923	Left		1	363 0319			
	Right		1	363 0318			
T-928	Left		1	362 5331			
	Right		1	362 5330			
T-941	Left		1	362 5317			
	Right		1	362 5316			
T-943	Left		1	362 5319			
	Right		1	362 5318			
T-944	Left		1	362 5321			
	Right		1	362 5320			
T-945	Left		1	362 5323			
	Right		1	362 5322			
T-951	Left		1	652 1435			
	Right		1	652 1434			
T-953	Left		1	652 1437			
	Right		1	652 1436			
T-956	Left		1	652 1441			
	Right		1	652 1440			
T-957	Left		1	652 1443			
	Right		1	652 1442			
T-972	Left		1	652 1445			
	Right		1	652 1444			
T-973	Left		1	652 1447			
	Right		1	652 1446			
T-976	Left		1	652 1451			
	Right		1	652 1450			
T-977	Left		1	652 1453			
	Right		1	652 1452			
T-981	Left		1	652 1473			
	Right		1	652 1472			
T-983	Left		1	652 1475			
	Right		1	652 1474			
T-986	Left		1	652 1479			
	Right		1	652 1478			
T-987	Left		1	652 1481			
	Right		1	652 1480			
T-991A	Left		1	652 1483			
	Right		1	652 1482			
T-991B	Left		1	652 1483			
	Right		1	652 1482			
T-991C	Left		1	652 1483			
	Right		1	652 1482			
T-991D	Left		1	652 1483			
	Right		1	652 1482			
T-991N	Left		1	652 1661			
	Right		1	652 1660			
T-992	Left		1	652 1663			
	Right		1	652 1662			
T-993A	Left		1	652 1485			
	Right		1	652 1484			
T-993B	Left		1	652 1485			
	Right		1	652 1484			

SEATS - SOFT TRIM

Trim No.			Per Car	05-08-15-18 -85-88			
T-993C	Left		1	652 1485	... .	... .	... .
	Right		1	652 1484	... .	... .	... .
T-993D	Left		1	652 1485	... .	... .	... .
	Right		1	652 1484	... .	... .	... .
T-993M	Left		1	652 1665	... .	... .	... .
	Right		1	652 1664	... .	... .	... .
T-993N	Left		1	652 1665	... .	... .	... .
	Right		1	652 1664	... .	... .	... .
T-993V	Left		1	652 1665	... .	... .	... .
	Right		1	652 1664	... .	... .	... .
T-996A	Left		1	652 1489	... .	... .	... .
	Right		1	652 1488	... .	... .	... .
T-996B	Left		1	652 1489	... .	... .	... .
	Right		1	652 1488	... .	... .	... .
T-996C	Left		1	652 1489	... .	... .	... .
	Right		1	652 1488	... .	... .	... .
T-996D	Left		1	652 1489	... .	... .	... .
	Right		1	652 1488	... .	... .	... .
T-996M	Left		1	652 1667	... .	... .	... .
	Right		1	652 1666	... .	... .	... .
T-996N	Left		1	652 1667	... .	... .	... .
	Right		1	652 1666	... .	... .	... .
T-997A	Left		1	652 1491	... .	... .	... .
	Right		1	652 1490	... .	... .	... .
T-997B	Left		1	652 1491	... .	... .	... .
	Right		1	652 1490	... .	... .	... .
T-997C	Left		1	652 1491	... .	... .	... .
	Right		1	652 1490	... .	... .	... .
T-997D	Left		1	652 1491	... .	... .	... .
	Right		1	652 1490	... .	... .	... .
T-997M	Left		1	652 1669	... .	... .	... .
	Right		1	652 1668	... .	... .	... .

1970 MODELS

Trim No.			Per Car	05-15-85	18-88
T-021A	Left		1	362 7505	... .
	Right		1	362 7504	... .
T-021B	Left		1	362 7505	... .
	Right		1	362 7504	... .
T-021G	Left		1	362 7537	... .
	Right		1	362 7536	... .
T-023	Left		1	362 7507	... .
	Right		1	362 7506	... .
T-024	Left		1	363 9687	... .
	Right		1	363 9686	... .
T-025	Left		1	363 9689	... .
	Right		1	363 9688	... .
T-041	Left		1	362 7519	... .
	Right		1	362 7518	... .
T-043	Left	(Except "V" Trims)	1	362 7521	... .
	Right	(Except "V" Trims)	1	362 7520	... .
T-043V	Left		1	362 6317	... .
	Right		1	362 6316	... .
T-044	Left	(Except "V" Trims)	1	362 7523	... .
	Right	(Except "V" Trims)	1	362 7522	... .
T-044V	Left		1	362 6319	... .
	Right		1	362 6318	... .

SEATS - SOFT TRIM

Trim No.			Per Car	05-15-85	18-88
T-045	Left		1	362 7525	... .
	Right		1	362 7524	... .
T-051	Left	(Except "P" And "V" Trims)	1	652 4215	652 4265
	Right	(Except "P" And "V" Trims)	1	652 4214	652 4264
T-051P	Left		1	448 8491	... .
	Right		1	448 8490	... .
T-051V	Left		1	448 8491	... .
	Right		1	448 8490	... .
T-053	Left		1	652 4217	652 4267
	Right		1	652 4216	652 4266
T-054	Left		1	652 4219	652 4269
	Right		1	652 4218	652 4268
T-056	Left		1	652 4221	652 4271
	Right		1	652 4220	652 4270
T-071	Left		1	652 4223	652 4273
	Right		1	652 4222	652 4272
T-073	Left		1	652 4227	652 4277
	Right		1	652 4226	652 4276
T-074	Left		1	652 4229	652 4279
	Right		1	652 4228	652 4278
T-075	Left		1	652 4225	652 4275
	Right		1	652 4224	652 4274
T-076	Left		1	652 4231	652 4281
	Right		1	652 4230	652 4280
T-081	Left		1	652 4233	... .
	Right		1	652 4232	... .
T-083	Left		1	652 4235	... .
	Right		1	652 4234	... .
T-084	Left		1	652 4237	... .
	Right		1	652 4236	... .
T-086	Left		1	652 4239	... .
	Right		1	652 4238	... .
T-091	Left	(DPL)	1	652 4241	652 4283
		(SST-Except Custom)	1	652 4251	... .
		(SST-Custom)	1	652 4261	... .
		(SST)	1	... .	652 4293
	Right	(DPL)	1	652 4240	652 4282
		(SST-Except Custom)	1	652 4250	... .
		(SST-Custom)	1	652 4260	... .
		(SST)	1	... .	652 4292
T-093	Left	(DPL)	1	652 4245	652 4287
		(SST-Except Custom)	1	652 4255	... .
		(SST-Custom)	1	652 4263	... .
		(SST)	1	... .	652 4297
	Right	(DPL)	1	652 4244	652 4286
		(SST-Except Custom)	1	652 4254	... .
		(SST-Custom)	1	652 4262	... .
		(SST)	1	... .	652 4296
T-094	Left	(DPL)	1	652 4247	652 4289
		(SST)	1	652 4257	652 4299
	Right	(DPL)	1	652 4246	652 4288
		(SST)	1	652 4256	652 4298
T-095	Left	(DPL)	1	652 4243	652 4285
		(SST)	1	652 4253	652 4295
	Right	(DPL)	1	652 4242	652 4284
		(SST)	1	652 4252	652 4294
T-096	Left	(DPL)	1	652 4249	652 4291
		(SST)	1	652 4259	652 4301
	Right	(DPL)	1	652 4248	652 4290
		(SST)	1	652 4258	652 4300

SEATS - SOFT TRIM

1971 MODELS

Trim No.			Per Car	05-08-15-85	18-88
T-121	Left		1	363 9103	... .
	Right		1	363 9102	... .
T-123	Left		1	363 9105	... .
	Right		1	363 9104	... .
T-124	Left		1	363 9107	... .
	Right		1	363 9106	... .
T-128	Left		1	363 9103	... .
	Right		1	363 9102	... .
T-141	Left	Except "V" Trim	1	363 9113	... .
	Right	Except "V" Trim	1	363 9112	... .
T-141V	Left		1	363 9987	... .
	Right		1	363 9986	... .
T-143	Left	Except "V" Trim	1	363 9115	... .
	Right	Except "V" Trim	1	363 9114	... .
T-143V	Left		1	365 2513	... .
	Right		1	365 2512	... .
T-144	Left	Except "V" Trim	1	363 9117	... .
	Right	Except "V" Trim	1	363 9116	... .
T-144V	Left		1	365 2515	... .
	Right		1	365 2514	... .
T-145	Left	Except "V" Trim	1	363 9119	... .
	Right	Except "V" Trim	1	363 9118	... .
T-145V	Left		1	363 9989	... .
	Right		1	363 9988	... .
T-151	Left		1	652 6475	652 6505
	Right		1	652 6474	652 6504
T-153	Left		1	652 6477	652 6507
	Right		1	652 6476	652 6506
T-154	Left		1	652 6479	652 6509
	Right		1	652 6478	652 6508
T-171	Left		1	652 6481	652 6511
	Right		1	652 6480	652 6510
T-173	Left		1	652 6483	652 6513
	Right		1	652 6482	652 6512
T-174	Left		1	652 6485	652 6515
	Right		1	652 6484	652 6514
T-175	Left		1	652 6487	652 6517
	Right		1	652 6486	652 6516
T-176	Left		1	652 6481	652 6511
	Right		1	652 6480	652 6510
T-181	Left		1	652 6475	... .
	Right		1	652 6474	... .
T-183	Left		1	652 6477	... .
	Right		1	652 6476	... .
T-184	Left		1	652 6479	... .
	Right		1	652 6478	... .
T-186	Left		1	652 6475	... .
	Right		1	652 6474	... .
T-191	Left	(SST)	1	652 6489	652 6519
		(Brougham)	1	652 6497	652 6527
	Right	(SST)	1	652 6488	652 6518
		(Brougham)	1	652 6496	652 6526
T-191V	Left	(Brougham)	1	652 8473	... .
	Right	(Brougham)	1	652 8472	... .
T-193	Left	(SST)	1	652 6491	652 6521
		(Brougham)	1	652 6499	652 6529
	Right	(SST)	1	652 6490	652 6520
		(Brougham)	1	652 6498	652 6528
T-193V	Left	(Brougham)	1	652 8475	... .
	Right	(Brougham)	1	652 8474	... .

SEATS - SOFT TRIM

Trim No.			Per Car	05-08-15-85	18-88
T-194	Left	(SST)	1	652 6493	652 6523
		(Brougham)	1	652 6501	652 6531
	Right	(SST)	1	652 6492	652 6522
		(Brougham)	1	652 6500	652 6530
T-195	Left	(SST)	1	652 6495	652 6525
		(Brougham)	1	652 6503	652 6533
	Right	(SST)	1	652 6494	652 6524
		(Brougham)	1	652 6502	652 6532
T-196	Left	(SST)	1	652 6489	652 6519
		(Brougham)	1	652 6497	652 6527
	Right	(SST)	1	652 6488	652 6518
		(Brougham)	1	652 6496	652 6526

1972 MODELS

Trim No.			Per Car	05-08-15-85	18-88
T-221	Left		1	365 4101	... .
	Right		1	365 4100	... .
T-223	Left		1	365 4103	... .
	Right		1	365 4102	... .
T-224	Left		1	365 4105	... .
	Right		1	365 4104	... .
T-226	Left		1	365 4109	... .
	Right		1	365 4108	... .
T-241	Left	Except "V" Trim	1	365 4101	... .
	Right	Except "V" Trim	1	365 4100	... .
T-241V	Left		1	365 5521	... .
	Right		1	365 5520	... .
T-243	Left	Except "V" Trim	1	365 4103	... .
	Right	Except "V" Trim	1	365 4102	... .
T-243V	Left		1	365 5523	... .
	Right		1	365 5522	... .
T-244	Left	Except "V" And "W" Trims	1	365 4105	... .
	Right	Except "V" And "W" Trims	1	365 4104	... .
T-244W	Left		1	365 6213	... .
	Right		1	365 6212	... .
T-244V	Left		1	365 5525	... .
	Right		1	365 5524	... .
T-246	Left	Except "V" Trim	1	365 4109	... .
	Right	Except "V" Trim	1	365 4108	... .
T-246V	Left		1	365 5533	... .
	Right		1	365 5532	... .
T-248	Left	Except "V" Trims	1	365 4101	... .
	Right	Except "V" Trims	1	365 4100	... .
T-248V	Left		1	365 5521	... .
	Right		1	365 5520	... .
T-271	Left		1	365 5441	364 7445
	Right		1	365 5440	364 7444
T-273	Left		1	365 5443	364 7447
	Right		1	365 5442	364 7446
T-274	Left		1	365 5445	364 7449
	Right		1	365 5444	364 7448
T-276	Left		1	365 5447	364 7451
	Right		1	365 5446	364 7450
T-291	Left	(SST)	1	364 7477	365 5243
		(Brougham)	1	364 7493	365 5537
	Right	(SST)	1	364 7476	365 5242
		(Brougham)	1	364 7492	365 5536

SEATS - SOFT TRIM

Trim No.			Per Car	05-08-15-85	18-88
T-293	Left	(SST)	1	364 7479	365 5245
		(Brougham)	1	364 7495	365 5539
	Right	(SST)	1	364 7478	365 5244
		(Brougham)	1	364 7494	365 5538
T-294	Left	(SST)	1	364 7481	365 5247
		(Brougham)	1	364 7497	365 5541
	Right	(SST)	1	364 7480	365 5246
		(Brougham)	1	364 7496	365 5540
T-296	Left	(SST)	1	364 7483	365 5249
		(Brougham)	1	364 7499	365 5543
	Right	(SST)	1	364 7482	365 5248
		(Brougham)	1	364 7498	365 5542

29.071–2 ATTACHING PARTS, Trim Panel To Door

FASTENER, Wire	67/68		29.052	14	400 1911
FASTENER, Wire	69		29.070	12	400 3580
FASTENER, Wire (Sealed)	70	05 (Except "V" Trims)	29.052	14	400 3681
FASTENER, Wire (Sealed)	70	05 ("V" Trims)	29.052	18	400 4047
FASTENER, Wire (Sealed)	71/	05-08	29.052	10	400 3580
FASTENER, Wire (Sealed)	70/	15-18-85-88	29.052	6	400 4047
CLIP, Wire (Snap-In)	70/	05-08	.....	6	400 3749
SCREW, Tapping	70/	05-08-15-18-85-88	29.070	6	400 1776
SCREW, Tapping	67/69	15-18-85-88 ***(Use 400 1776)***	29.070	6	400 1957
SCREW, Tapping	72	10-80 (Panel Extension To Inner Panel-Front)	.....	2	400 4315
SCREW, Tapping	71/	80 (Below Overlay)	.....	2	400 1776

29.072 CARPET, Door

Trim No.			Per Car	59-87-89	85-88		
T-791	Left	Front	1	680 0367	680 0399	... .	... .
		Rear	1	... .	680 0413	... .	... .
	Right	Front	1	680 0366	680 0398	... .	... .
		Rear	1	... .	680 0412	... .	... .
T-793	Left	Front	1	680 0369	680 0401	... .	... .
		Rear	1	... .	680 0415	... .	... .
	Right	Front	1	680 0368	680 0400	... .	... .
		Rear	1	... .	680 0414	... .	... .
T-794	Left	Front	1	680 0371	680 0403	... .	... .
		Rear	1	... .	680 0417	... .	... .
	Right	Front	1	680 0370	680 0402	... .	... .
		Rear	1	... .	680 0416	... .	... .
T-795	Left	(* 29-30)	1	680 0373	... .	... .	... .
		(* 29-32)	1	650 6437	... .	... .	... .
	Right	(* 29-30)	1	680 0372	... .	... .	... .
		(* 29-32)	1	650 6436	... .	... .	... .
T-796	Left	Front	1	680 0375	680 0407	... .	... .
		Rear	1	... .	680 0421	... .	... .
	Right	Front	1	680 0374	680 0406	... .	... .
		Rear	1	... .	680 0420	... .	... .
T-797	Left	Front	1	680 0377	680 0409	... .	... .
		Rear	1	... .	680 0423	... .	... .
	Right	Front	1	680 0376	680 0408	... .	... .
		Rear	1	... .	680 0422	... .	... .
T-798	Left		1	680 0367	... .	... .	... .
	Right		1	680 0366	... .	... .	... .

SEATS - SOFT TRIM

Trim No.				Per Car	59-87-89	85-88		
T-799	Left	Front		1	680 0379	680 0411	... .	... .
		Rear		1	... .	680 0425	... .	... .
	Right	Front		1	680 0378	680 0410	... .	... .
		Rear		1	... .	680 0424	... .	... .
T-891	Left	Front	(* 29-30)	1	680 0367	680 0399	... .	... .
			(* 29-31)	1	651 6773	651 6763	... .	... .
		Rear	(* 29-30)	1	... .	680 0413	... .	... .
			(* 29-31)	1	... .	651 6783	... .	... .
	Right	Front	(* 29-30)	1	680 0366	680 0398	... .	... .
			(* 29-31)	1	651 6772	651 6762	... .	... .
		Rear	(* 29-30)	1	... .	680 0412	... .	... .
			(* 29-31)	1	... .	651 6782	... .	... .
T-893	Left	Front	(* 29-30)	1	680 1081	680 1065	... .	... .
			(* 29-31)	1	651 6775	651 6765	... .	... .
		Rear	(* 29-30)	1	... .	680 1073	... .	... .
			(* 29-31)	1	... .	651 6785	... .	... .
	Right	Front	(* 29-30)	1	680 1080	680 1064	... .	... .
			(* 29-31)	1	651 6774	651 6764	... .	... .
		Rear	(* 29-30)	1	... .	680 1072	... .	... .
			(* 29-31)	1	... .	651 6784	... .	... .
T-894	Left	Front	(* 29-30)	1	680 1083	680 1067	... .	... .
			(* 29-31)	1	651 6777	651 6767	... .	... .
		Rear	(* 29-30)	1	... .	680 1075	... .	... .
			(* 29-31)	1	... .	651 6787	... .	... .
	Right	Front	(* 29-30)	1	680 1082	680 1066	... .	... .
			(* 29-31)	1	651 6776	651 6766	... .	... .
		Rear	(* 29-30)	1	... .	680 1074	... .	... .
			(* 29-31)	1	... .	651 6786	... .	... .
T-895	Left	Front	(* 29-30)	1	680 0373	680 0405	... .	... .
			(* 29-31)	1	652 1595	652 1575	... .	... .
		Rear	(* 29-30)	1	... .	680 0419	... .	... .
			(* 29-31)	1	... .	652 1585	... .	... .
	Right	Front	(* 29-30)	1	680 0372	680 0404	... .	... .
			(* 29-31)	1	652 1594	652 1574	... .	... .
		Rear	(* 29-30)	1	... .	680 0418	... .	... .
			(* 29-31)	1	... .	652 1584	... .	... .
T-896	Left	Front	(* 29-30)	1	680 1085	680 1069	... .	... .
			(* 29-31)	1	651 6779	651 6769	... .	... .
		Rear	(* 29-30)	1	... .	680 1077	... .	... .
			(* 29-31)	1	... .	651 6789	... .	... .
	Right	Front	(* 29-30)	1	680 1084	680 1068	... .	... .
			(* 29-31)	1	651 6778	651 6768	... .	... .
		Rear	(* 29-30)	1	... .	680 1076	... .	... .
			(* 29-31)	1	... .	651 6788	... .	... .
T-899	Left	Front	(* 29-30)	1	680 1087	680 1071	... .	... .
			(* 29-31)	1	651 6781	651 6771	... .	... .
		Rear	(* 29-30)	1	... .	680 1079	... .	... .
			(* 29-31)	1	... .	651 6791	... .	... .
	Right	Front	(* 29-30)	1	680 1086	680 1070	... .	... .
			(* 29-31)	1	651 6780	651 6770	... .	... .
		Rear	(* 29-30)	1	... .	680 1078	... .	... .
			(* 29-31)	1	... .	651 6790	... .	... .

29.073 SHIELD, Armrest Ash Receiver

68	01-19-89	.....	2	361	2891
68/	15-18-85-88	.....	2	360	7712
69/70	19-89	.....	2	361	2891

Printed in U.S.A.

SEATS - SOFT TRIM

29.074 HOUSING, Door Remote Handle

1970 Thru 1972 MODELS

Trim No.	Per Car	05-08	06-46
T-001	2	... .	362 8107
T-008	2	... .	362 8108
T-011	2	... .	362 8107
T-013	2	... .	362 8104
T-014	2	... .	362 8105
T-015	2	... .	362 8106
T-021A	4	362 8108	... .
	2	... .	362 8108
T-021B	4	362 8108	... .
	2	... .	362 8108
T-021G	4	362 8107	... .
	2	... .	362 8107
T-023	4	362 8104	... .
	2	... .	362 8104
T-024	4	362 8105	... .
	2	... .	362 8105
T-025	4	362 8106	... .
	2	... .	362 8106
T-041	4	362 8107	... .
	2	... .	362 8107
T-043	4	362 8104	... .
	2	... .	362 8104
T-044	4	362 8105	... .
	2	... .	362 8105
T-045	4	362 8106	... .
	2	... .	362 8106
T-101	2	... .	364 3716
T-103 Except "A" Trim	2	... .	364 3717
T-103A	2	... .	364 3716
T-104A	2	... .	364 3716
T-108	2	... .	364 3716
T-111	2	... .	364 7760
T-113	2	... .	364 7761
T-114	2	... .	364 7762
T-115	4	364 3716	364 7763
T-121	2	... .	... .
	4	364 3717	364 3716
T-123	2	... .	... .
	4	364 3718	364 3717
T-124	2	... .	... .
	4	364 3716	364 3718
T-128	4	364 7760	... .
T-141	2	... .	... .
	4	364 7761	364 7760
T-143	2	... .	... .
	4	364 7762	364 7761
T-144	2	... .	... .
	4	364 7763	364 7762
T-145	2	... .	... .
	2	... .	364 7763
T-201	4	364 3712	364 3712
	2	... .	... .
T-203			365 3294

SEATS - SOFT TRIM

Trim No.	Per Car	05-08	06-46
T-206	2	... .	365 3296
	4	365 3296	... .
T-211	2	... .	364 7764
T-213	2	... .	365 3303
T-215	2	... .	364 7764
T-216	2	... .	365 3306
T-221	4	364 3712	... .
T-223	4	365 3294	... .
	2	... .	365 3294
T-226	2	... .	365 3296
	4	365 3296	... .
T-241	4	364 7764	... .
	2	... .	364 7764
T-243	4	365 3303	... .
	2	... .	365 3303
T-244	4	365 3304	... .
	2	... .	365 3304
T-245	4	364 7764	... .
	2	... .	364 7764
T-246	4	365 3306	... .
	2	... .	365 3306

29.075–1 ARMREST, Door

1967 MODELS

Trim No.		Per Car	05-08-15 -85-88: 18 (Except "S" Trim)	06-07-09-16 17-19-59-86 -87-89	18 ("S" Trim)	
T-723	Front	2	357 9991	357 9991	... .	... .
	Rear	2	358 0062	... .	... .	... .
T-728	Front	2	357 9990	357 9990	... .	... .
	Rear	2	358 0061	... .	... .	... .
T-729	Front	2	357 9995	357 9995	... .	... .
	Rear	2	358 0070	... .	... .	... .
T-741	Front	2	357 9990	357 9990	... .	... .
	Rear	2	358 0061	... .	... .	... .
T-743	Front	2	357 9991	357 9991	... .	... .
	Rear	2	358 0062	... .	... .	... .
T-744	Front	2	357 9992	357 9992	... .	... .
	Rear	2	358 0064	... .	... .	... .
T-745	Front	2	357 9993	357 9993	... .	... .
	Rear	2	358 0066	... .	... .	... .
T-747	Front	2	357 9994	357 9994	... .	... .
	Rear	2	358 0068	... .	... .	... .
T-748	Front	2	... .	357 9988	... .	... .
T-749	Front	2	357 9995	357 9995	... .	... .
	Rear	2	358 0070	... .	... .	... .
T-753	Front	2	357 9991	357 9991	... .	... .
	Rear	2	358 0062	... .	... .	... .
T-758	Front	2	357 9990	357 9990	... .	... .
	Rear	2	358 0061	... .	... .	... .
T-759	Front	2	357 9995	357 9995	... .	... .
	Rear	2	358 0070	... .	... .	... .
T-771	Front	2	358 0002	358 0002	358 0008	... .
	Rear	2	358 0022	... .	358 0028	... .
T-773	Front	2	358 0004	358 0004	358 0004	... .
	Rear	2	358 0024	... .	358 0024	... .
T-774	Front	2	358 0006	358 0006	... .	... .
	Rear	2	358 0026	... .	... .	... .

SEATS - SOFT TRIM

Trim No.			Per Car	05-08-15 -85-88: 18 (Except "S" Trim)	06-07-09-16 17-19-59-86 -87-89	18 ("S" Trim)	
T-775	Front		2	358 0008	358 0008	... .	... .
T-776	Front		2	358 0010	358 0010	... .	... .
	Rear		2	358 0030	... .	... .	... .
T-777	Front		2	358 0012	358 0012	... .	... .
	Rear		2	358 0032	... .	... .	... .
T-778	Front		2	358 0015	358 0015	... .	... .
T-779	Front		2	358 0014	358 0014	358 0014	... .
	Rear		2	358 0034	... .	358 0034	... .
T-781	Front		2	358 0002	358 0002	... .	... .
	Rear		2	358 0022	... .	... .	... .
T-783	Front		2	358 0004	358 0004	... .	... .
	Rear		2	358 0024	... .	... .	... .
T-787	Front		2	358 0012	358 0012	... .	... .
	Rear		2	358 0032	... .	... .	... .
T-789	Front		2	358 0014	358 0014	... .	... .
	Rear		2	358 0034	... .	... .	... .
T-791	Front		2	358 0002	358 0002	... .	... .
	Rear		2	358 0022	... .	... .	... .
T-793	Front		2	358 0004	358 0004	... .	... .
	Rear		2	358 0024	... .	... .	... .
T-794	Front		2	358 0006	358 0006	... .	... .
	Rear		2	358 0026	... .	... .	... .
T-795	Front		2	358 0008	358 0008	... .	... .
T-796	Front		2	358 0010	358 0010	... .	... .
	Rear		2	358 0030	... .	... .	... .
T-797	Front		2	358 0012	358 0012	... .	... .
	Rear		2	358 0032	... .	... .	... .
T-798	Front		2	358 0015	358 0015	... .	... .
T-799	Front		2	358 0014	358 0014	... .	... .
	Rear		2	358 0034	... .	... .	... .

1968 - 1969 MODELS

Trim No.			Per Car	05-08-15-18 -85-88	06-09-17-19 39-79-89		
T-828	Left	Front-Black (* 29-33)	1	360 5781	360 5781	... .	... .
		Front (* 29-34)	1	360 7241	360 7241	... .	... .
		Rear	1	360 7241	... .	... .	... .
		White	2	360 7251	360 7251	... .	... .
	Right	Front-Black (* 29-33)	1	360 5780	360 5780	... .	... .
		Front (* 29-34)	1	360 7240	360 7240	... .	... .
		Rear	1	360 7240	... .	... .	... .
		White	2	360 7250	360 7250	... .	... .
T-831	Left		1	... .	360 7673	... .	... .
	Right		1	... .	360 7672	... .	... .
T-832	Left		1	... .	360 7685	... .	... .
	Right		1	... .	360 7684	... .	... .
T-835	Left		1	... .	360 7679	... .	... .
	Right		1	... .	360 7678	... .	... .
T-838	Left	Black	1	... .	360 7673	... .	... .
		White	1	... .	360 7687	... .	... .
	Right	Black	1	... .	360 7672	... .	... .
		White	1	... ...	360 7686	... .	... .
T-843	Left	Front (* 29-33)	1	360 5783	360 5783	... .	... .
		Front (* 29-34)	1	360 7243	360 7243	... .	... .
		Rear	1	360 7243	... .	... .	... .
	Right	Front (* 29-33)	1	360 5782	360 5782	... .	... .
		Front (* 29-34)	1	360 7242	360 7242	... .	... .
		Rear	1	360 7242	... .	... .	... .

SEATS - SOFT TRIM

Trim No.			Per Car	05-08-15-18 -85-88	06-09-17-19 39-79-89		
T-844	Left	Front (* 29-33)	1	360 5785	360 5785	... .	... .
		Front (* 29-34)	1	360 7245	360 7245	... .	... .
		Rear	1	360 7245	... .	... .	... .
	Right	Front (* 29-33)	1	360 5784	360 5784	... .	... .
		Front (* 29-34)	1	360 7244	360 7244	... .	... .
		Rear	1	360 7244	... .	... .	... .
T-845	Left	Front (* 29-33)	1	360 5787	360 5787	... .	... .
		Front (* 29-34)	1	360 7247	360 7247	... .	... .
		Rear	1	360 7247	... .	... .	... .
	Right	Front (* 29-33)	1	360 5786	360 5786	... .	... .
		Front (* 29-34)	1	360 7246	360 7246	... .	... .
		Rear	1	360 7246	... .	... .	... .
T-848	Left	Front (* 29-33)	1	360 5781	360 5781	... .	... .
		Front (* 29-34)	1	360 7241	360 7241	... .	... .
		Rear	1	360 7241	... .	... .	... .
	Right	Front (* 29-33)	1	360 5780	360 5780	... .	... .
		Front (* 29-34)	1	360 7240	360 7240	... .	... .
		Rear	1	360 7240	... .	... .	... .
T-851	Left	Front	1	360 5781	360 5781	... .	... .
		Rear	1	360 7277	... .	... .	... .
	Right	Front	1	360 5780	360 5780	... .	... .
		Rear	1	360 7276	... .	... .	... .
T-853	Left	Front	1	360 5783	360 5783	... .	... .
		Rear	1	360 7279	... .	... .	... .
	Right	Front	1	360 5782	360 5782	... .	... .
		Rear	1	360 7278	... .	... .	... .
T-855	Left	Front	1	360 5787	360 5787	... .	... .
		Rear	1	360 7283	... .	... .	... .
	Right	Front	1	360 5786	360 5786	... .	... .
		Rear	1	360 7282	... .	... .	... .
T-871	Left	Front	1	360 5781	360 5781	... .	... .
		Rear	1	360 7277	... .	... .	... .
	Right	Front	1	360 5780	360 5780	... .	... .
		Rear	1	360 7276	... .	... .	... .
T-873	Left	Front	1	360 5783	360 5783	... .	... .
		Rear	1	360 7279	... .	... .	... .
	Right	Front	1	360 5782	360 5782	... .	... .
		Rear	1	360 7278	... .	... .	... .
T-874	Left	Front	1	360 5785	360 5785	... .	... .
		Rear	1	360 7281	... .	... .	... .
	Right	Front	1	360 5784	360 5784	... .	... .
		Rear	1	360 7280	... .	... .	... .
T-875	Left	Front	1	360 5787	360 5787	... .	... .
		Rear	1	360 7283	... .	... .	... .
	Right	Front	1	360 5786	360 5786	... .	... .
		Rear	1	360 7282	... .	... .	... .
T-876	Left	Front	1	360 5789	360 5789	... .	... .
		Rear	1	360 7285	... .	... .	... .
	Right	Front	1	360 5788	360 5788	... .	... .
		Rear	1	360 7284	... .	... .	... .
T-879	Left	Front	1	360 5793	360 5793	... .	... .
		Rear	1	360 7289	... .	... .	... .
	Right	Front	1	360 5792	360 5792	... .	... .
		Rear	1	360 7288	... .	... .	... .
T-881	Left	Front	1	360 5781	360 5781	... .	... .
		Rear	1	360 7277	... .	... .	... .
	Right	Front	1	360 5780	360 5780	... .	... .
		Rear	1	360 7276	... .	... .	... .
T-883	Left	Front	1	360 5783	360 5783	... .	... .
		Rear	1	360 7279	... .	... .	... .
T-883	Right	Front	1	360 5782	360 5782	... .	... .
		Rear	1	360 7278	... .	... .	... .
T-885	Left	Front	1	360 5787	360 5787	... .	... .
		Rear	1	360 7283	... .	... .	... .
	Right	Front	1	360 5786	360 5786	... .	... .
		Rear	1	360 7282	... .	... .	... .

SEATS - SOFT TRIM

Trim No.			Per Car	05-08-15-18 -85-88	06-09-17-19 39-79-89		
T-891	Left	Front	1	360 5781	360 5781	... .	... .
		Rear	1	360 7277	... .	... .	... .
	Right	Front	1	360 5780	360 5780	... .	... .
		Rear	1	360 7276	... .	... .	... .
T-893	Left	Front	1	360 5783	360 5783	... .	... .
		Rear	1	360 7279	... .	... .	... .
	Right	Front	1	360 5782	360 5782	... .	... .
		Rear	1	360 7278	... .	... .	... .
T-894	Left	Front	1	360 5785	360 5785	... .	... .
		Rear	1	360 7281	... .	... .	... .
	Right	Front	1	360 5784	360 5784	... .	... .
		Rear	1	360 7280	... .	... .	... .
T-895	Left	Front	1	360 5787	360 5787	... .	... .
		Rear	1	360 7283	... .	... .	... .
	Right	Front	1	360 5786	360 5786	... .	... .
		Rear	1	360 7282	... .	... .	... .
T-896	Left	Front	1	360 5789	360 5789	... .	... .
		Rear	1	360 7285	... .	... .	... .
	Right	Front	1	360 5788	360 5788	... .	... .
		Rear	1	360 7284	... .	... .	... .
T-899	Left	Front	1	360 5793	360 5793	... .	... .
		Rear	1	360 7289	... .	... .	... .
	Right	Front	1	360 5792	360 5792	... .	... .
		Rear	1	360 7288	... .	... .	... .
T-000	Left		1	... .	362 0395	... .	... .
	Right		1	... .	362 0394	... .	... .
T-923			4	361 9647	... .	... .	... .
			2	... .	361 9647	... .	... .
T-928			4	361 9650	... .	... .	... .
			2	... .	361 9650	... .	... .
T-931	Left		1	... .	362 4099	... .	... .
	Right		1	... .	362 4098	... .	... .
T-932	Left		1	... .	362 5359	... .	... .
	Right		1	... .	362 5358	... .	... .
T-935	Left		1	... .	363 0623	... .	... .
	Right		1	... .	363 0622	... .	... .
T-936	Left		1	... .	362 5361	... .	... .
	Right		1	... .	362 5360	... .	... .
T-941	Left		4	361 9646	... .	... .	... .
	Right		2	... .	361 9646	... .	... .
T-943	Left		4	361 9647	... .	... .	... .
	Right		2	... .	361 9647	... .	... .
T-944	Left		4	361 9648	... .	... .	... .
	Right		2	... .	361 9648	... .	... .
T-945	Left		4	361 9649	... .	... .	... .
	Right		2	... .	361 9649	... .	... .
T-951	Left		2	362 0395	... .	... .	... .
			1	... .	362 0395	... .	... .
	Right		2	362 0394	... .	... .	... .
			1	... .	362 0394	... .	... .
T-953	Left		2	362 0397	... .	... .	... .
			1	... .	362 0397	... .	... .
	Right		2	362 0396	... .	... .	... .
			1	... .	362 0396	... .	... .
T-956	Left		2	362 0401	... .	... .	... .
			1	... .	362 0401	... .	... .
	Right		2	362 0400	... .	... .	... .
			1	... .	362 0400	... .	... .
T-957	Left		2	362 0403	... .	... .	... .
			1	... .	362 0403	... .	... .
	Right		2	362 0402	... .	... .	... .
			1	... .	362 0402	... .	... .

Printed in U.S.A.

SEATS - SOFT TRIM

Trim No.		Per Car	05-08-15-18 -85-88	06-09-17-19 39-79-89		
T-961	Left	1	... .	362 4099	... .	... .
	Right	1	... .	362 4098	... .	... .
T-962	Left	1	... .	362 5359	... .	... .
	Right	1	... .	362 5358	... .	... .
T-963	Left	1	... .	362 4101	... .	... .
	Right	1	... .	362 4100	... .	... .
T-965	Left	1	... .	363 0623	... .	... .
	Right	1	... .	363 0622	... .	... .
T-966	Left	1	... .	362 4103	... .	... .
	Right	1	... .	362 4102	... .	... .
T-968	Left	1	... .	363 0733	... .	... .
	Right	1	... .	363 0732	... .	... .
T-972	Left	2	362 5377	... .	... .	... .
		1	... .	362 5377	... .	... .
	Right	2	362 5376	... .	... .	... .
		1	... .	362 5376	... .	... .
T-973	Left	2	362 0397	... .	... .	... .
		1	... .	362 0397	... .	... .
	Right	2	362 0396	... .	... .	... .
		1	... .	362 0396	... .	... .
T-975	Left	1	... .	362 1323	... .	... .
	Right	1	... .	362 1322	... .	... .
T-976	Left	2	362 0401	... .	... .	... .
		1	... .	362 0401	... .	... .
	Right	2	362 0400	... .	... .	... .
		1	... .	362 0400	... .	... .
T-977	Left	2	362 0403	... .	... .	... .
		1	... .	362 0403	... .	... .
	Right	2	362 0402	... .	... .	... .
		1	... .	362 0402	... .	... .
T-979	Left	1	... .	362 0403	... .	... .
	Right	1	... .	362 0402	... .	... .
T-981	Left	2	362 0395	... .	... .	... .
	Right	2	362 0394	... .	... .	... .
T-983	Left	2	362 0397	... .	... .	... .
	Right	2	362 0396	... .	... .	... .
T-986	Left	2	362 0401	... .	... .	... .
	Right	2	362 0400	... .	... .	... .
T-987	Left	2	362 0403	... .	... .	... .
	Right	2	362 0402	... .	... .	... .
T-991	Left	2	362 0395	... .	... .	... .
		1	... .	362 0395	... .	... .
	Right	2	362 0394	... .	... .	... .
		1	... .	362 0394	... .	... .
T-992	Left	2	362 5377	... .	... .	... .
		1	... .	362 5377	... .	... .
	Right	2	362 5376	... .	... .	... .
		1	... .	362 5376	... .	... .
T-993	Left	2	362 0397	... .	... .	... .
		1	... .	362 0397	... .	... .
	Right	2	362 0396	... .	... .	... .
		1	... .	362 0396	... .	... .
T-995	Left	1	... .	362 1323	... .	... .
	Right	1	... .	362 1322	... .	... .
T-996	Left	2	362 0401	... .	... .	... .
		1	... .	362 0401	... .	... .
	Right	2	362 0400	... .	... .	... .
		1	... .	362 0400	... .	... .
T-997	Left	2	362 0403	... .	... .	... .
		1	... .	362 0403	... .	... .
	Right	2	362 0402	... .	... .	... .
		1	... .	362 0402	... .	... .
T-999	Left	1	... .	362 0405	... .	... .
	Right	1	... .	362 0404	... .	... .

SEATS - SOFT TRIM

1970 MODELS

Trim No.			Per Car	05-08-15-18 -85-88	06-19-39-46 -79-89
T-001			2	... .	362 9236
T-008			2	... .	361 9650
T-011			2	... .	362 9236
T-013			2	... .	362 9237
T-014			2	... .	362 9238
T-015			2	... .	361 9649
T-021		Off White	4	361 9650	... .
			2	... .	361 9650
T-021		Black	4	362 9236	... .
			2	... .	362 9236
T-023			4	362 9237	... .
			2	... .	362 9237
T-024			4	362 9238	... .
			2	... .	362 9238
T-025			4	361 9649	... .
			2	... .	361 9649
T-031	Left		1	... .	360 7277
	Right		1	... .	360 7276
T-033	Left		1	... .	362 9267
	Right		1	... .	362 9266
T-035	Left		1	... .	362 1323
	Right		1	... .	362 1322
T-036	Left		1	... .	362 9271
	Right		1	... .	362 9270
T-041			4	362 9236	... .
			2	... .	362 9236
T-043			4	362 9237	... .
			2	... .	362 9237
T-044			4	362 9238	... .
			2	... .	362 9238
T-045			4	361 9649	... .
			2	... .	361 9649
T-051	Left		2	360 7277	... .
			1	... .	360 7277
	Right		2	360 7276	... .
			1	... .	360 7276
T-053	Left		2	362 9267	... .
			1	... .	362 9267
	Right		2	362 9266	... .
			1	... .	362 9266
T-054	Left		2	362 9269	... .
			1	... .	362 9269
	Right		2	362 9268	... .
			1	... .	362 9268
T-056	Left		2	362 9271	... .
			1	... .	362 9271
	Right		2	362 9270	... .
			1	... .	362 9270
T-061	Left		1	... .	360 7277
	Right		1	... .	360 7276
T-063	Left		1	... .	362 9267
	Right		1	... .	362 9266
T-064	Left		1	... .	362 9269
	Right		1	... .	362 9268
T-065	Left		1	... .	362 1323
	Right		1	... .	362 1322

SEATS - SOFT TRIM

Trim No.		Per Car	05-08-15-18 -85-88	06-19-39-46 -79-89
T-066	Left	1	... .	362 9271
	Right	1	... .	362 9270
T-071	Left	2	360 7277	... .
		1	... .	360 7277
	Right	2	360 7276	... .
		1	... .	360 7276
T-073	Left	2	362 9267	... .
		1	... .	362 9267
	Right	2	362 9266	... .
		1	... .	362 9266
T-074	Left	2	362 9269	... .
		1	... .	362 9269
	Right	2	362 9268	... .
		1	... .	362 9268
T-075	Left	2	362 1323	... .
		1	... .	362 1323
	Right	2	362 1322	... .
		1	... .	362 1322
T-076	Left	2	362 9271	... .
		1	... .	362 9271
	Right	2	362 9270	... .
		1	... .	362 9270
T-081	Left	2	360 7277	... .
	Right	2	360 7276	... .
T-083	Left	2	362 9267	... .
	Right	2	362 9266	... .
T-084	Left	2	362 9269	... .
	Right	2	362 9268	... .
T-086	Left	2	362 9271	... .
	Right	2	362 9270	... .
T-091	Left	2	360 7277	... .
		1	... .	360 7277
	Right	2	360 7276	... .
		1	... .	360 7276
T-093	Left	2	362 9267	... .
		1	... .	362 9267
	Right	2	362 9266	... .
		1	... .	362 9266
T-094	Left	2	362 9269	... .
		1	... .	362 9269
	Right	2	362 9268	... .
		1	... .	362 9268
T-095	Left	2	362 1323	... .
		1	... .	362 1323
	Right	2	362 1322	... .
		1	... .	362 1322
T-096	Left	2	362 9271	... .
		1	... .	362 9271
	Right	2	362 9270	... .
		1	... .	362 9270

1971 MODELS

Trim No.		Per Car	05-08-15-18 -85-88	06-19-46 -79-89
T-101		2	... .	364 3926
T-103	Except "A" Trim	1	... .	364 3927
T-103A		2	... .	364 3926
T-104A		2	... .	364 3926
T-108		2	... .	364 3926
T-111		2	... .	364 8462
T-113		2	... .	364 8463
T-114		2	... .	364 8464
T-115		2	... .	364 8465

SEATS - SOFT TRIM

Trim No.		Per Car	05-08-15-18 -85-88	06-19-46 -79-89
T-121		4	364 3926	... .
T-123		2	... .	364 3926
T-124		4	364 3927	... .
T-128		2	... .	364 3927
T-141		4	364 3928	... .
T-143		2	... .	364 3928
T-144		4	364 3926	... .
T-145		4	364 8462	... .
T-151	Left	2	... .	364 8462
	Right	4	364 8463	... .
T-153	Left	2	... .	364 8463
	Right	4	364 8464	... .
T-154	Left	2	... .	364 8464
	Right	4	364 8465	... .
T-161	Left	2	... .	364 8465
	Right	2	360 7277	... .
T-163	Left	1	... .	360 7277
	Right	2	360 7276	... .
T-164	Left	1	... .	360 7276
	Right	2	362 2175	... .
T-165	Left	1	... .	362 2175
	Right	2	362 2174	... .
T-168	Left	1	... .	362 2174
	Right	2	362 2177	... .
T-171	Left	1	... .	362 2177
	Right	2	362 2176	... .
T-173	Left	1	... .	362 2176
	Right	1	... .	364 3761
T-174	Left	1	... .	364 3760
	Right	1	... .	364 3763
T-175	Left	1	... .	364 3762
	Right	1	... .	364 3765
T-176	Left	1	... .	364 3764
	Right	1	... .	364 3767
		1	... .	364 3766
		1	... .	364 3761
		1	... .	364 3760
		2	360 7277	... .
		1	... .	360 7277
		2	360 7276	... .
		1	... .	360 7276
		2	362 2175	... .
		1	... .	362 2175
		2	362 2174	... .
		1	... .	362 2174
		2	362 2177	... .
		1	... .	362 2177
		2	362 2176	... .
		1	... .	362 2176
		2	362 2179	... .
		1	... .	362 2179
		2	362 2178	... .
		1	... .	362 2178
		2	360 7277	... .
		1	... .	360 7277
		2	360 7276	... .
		1	... .	360 7276

SEATS - SOFT TRIM

Trim No.		Per Car	05-08-15-18 -85-88	06-19-46 -79-89
T-181	Left	2	360 7277	... .
	Right	2	360 7276	... .
T-183	Left	2	362 2175	... .
	Right	2	362 2174	... .
T-184	Left	2	362 2177	... .
	Right	2	362 2176	... .
T-186	Left	1	360 7277	... .
	Right	1	360 7276	... .
T-191	Left	2	360 7277	... .
		1	... .	360 7277
	Right	2	360 7276	... .
		1	... .	360 7276
T-193	Left	2	362 2175	... .
		1	... .	362 2175
	Right	2	362 2174	... .
		1	... .	362 2174
T-194	Left	2	362 2177	... .
		1	... .	362 2177
	Right	2	362 2176	... .
		1	... .	362 2176
T-195	Left	2	362 2179	... .
		1	... .	362 2179
	Right	2	362 2178	... .
		1	... .	362 2178
T-196	Left	2	360 7277	... .
		1	... .	360 7277
	Right	2	360 7276	... .
		1	... .	360 7276

1972 MODELS

Trim No.		Per Car	05-08-15-18 -85-88	06-19-46 -79-89
T-201		2	... .	364 3926
T-203		2	... .	365 3245
T-206		2	... .	365 3248
T-211		2	... .	364 8462
T-213		2	... .	365 3240
T-214		2	... .	365 3241
T-215		2	... .	364 8462
T-216		2	... .	365 3243
T-218		2	... .	364 8462
T-221		4	364 3926	... .
		2	... .	364 3926
T-223		4	365 3245	... .
		2	... .	365 3245
T-226		4	365 3248	... .
		2	... .	365 3248
T-241		4	364 8462	... .
		2	... .	364 8462
T-243		4	365 3240	... .
		2	... .	365 3240
T-244		4	365 3241	... .
		2	... .	365 3241
T-246		4	365 3243	... .
		2	... .	365 3243
T-248		4	364 8462	... .
		2	... .	364 8462
T-261	Left	1	... .	364 3761
	Right	1	... .	364 3760
T-263	Left	1	... .	365 3991
	Right	1	... .	365 3990

SEATS - SOFT TRIM

Trim No.		Per Car	05-08-15-18 -85-88	06-19-46 -79-89
T-264	Left	1	... .	365 3993
	Right	1	... .	365 3992
T-265	Left	1	... .	364 3761
	Right	1	... .	364 3760
T-266	Left	1	... .	365 3997
	Right	1	... .	365 3996
T-268	Left	1	... .	364 3761
	Right	1	... .	364 3760
T-271	Left	2	366 1587	... .
		1	... .	366 1587
	Right	2	366 1586	... .
		1	... .	366 1586
T-273	Left	2	366 1589	... .
		1	... .	366 1589
	Right	2	366 1588	... .
		1	... .	366 1588
T-274	Left	2	366 1591	... .
		1	... .	366 1591
	Right	2	366 1590	... .
		1	... .	366 1590
T-276	Left	2	366 1593	... .
		1	... .	366 1593
	Right	2	366 1592	... .
		1	... .	366 1592
T-281	Left	2	366 1587	... .
		1	... .	366 1587
	Right	2	366 1586	... .
		1	... .	366 1586
T-283	Left	2	366 1589	... .
		1	... .	366 1589
	Right	2	366 1588	... .
		1	... .	366 1588
T-284	Left	2	366 1591	... .
		1	... .	366 1591
	Right	2	366 1590	... .
		1	... .	366 1590
T-291	Left	2	366 1587	... .
		1	... .	366 1587
	Right	2	366 1586	... .
		1	... .	366 1586
T-293	Left	2	366 1589	... .
		1	... .	366 1589
	Right	2	366 1588	... .
		1	... .	366 1588
T-294	Left	2	366 1591	... .
		1	... .	366 1591
	Right	2	366 1590	... .
		1	... .	366 1590
T-296	Left	2	366 1593	... .
		1	... .	366 1593
	Right	2	366 1592	... .
		1	... .	366 1592

SEATS - SOFT TRIM

29.075–2 ATTACHING PARTS, Armrest To Door

SCREW, Tapping.....	67/	(14-10 x 2-7/16)	17.666	8	G447124
SCREW, Tapping.....	68	(14-10 x 2-1/8)	17.666	8	G455699 NA
SCREW, Tapping.....	68/	(14-10 x 1-1/2)	17.666	4	G161739 NA
SCREW, Tapping.....	71/	01 (14-10 x 3/8)	.....	AR	400 3768
SCREW, Tapping.....	72	10-80.....	.....	AR	400 3768
SCREW, Shoulder	72	70 (Armrest To Upper Door Panel)(Tan)	.....	2	400 4548
SCREW, Shoulder	72	70 (Armrest To Upper Door Panel)(Green).....	.....	2	400 4549
SCREW, Shoulder	72	70 (Armrest To Upper Door Panel)(Blue).....	.....	2	400 4550
SCREW, Shoulder	72	70 (Armrest To Upper Door Panel)(Black).....	.....	2	400 4551
NUT (Push-On)	71/	70 (Armrest To Panel)	29.056	6	400 2083
NUT, Speed (Flat)	67/68	.....	29.075	8	400 1750
NUT, Speed (Flat)	69/	(Has Hole On Flat Surface)	29.075	4	400 1750
NUT, Speed (Raised)...	68	01.....	29.075	2	400 0135
NUT, Speed (Raised)...	69	01.....	29.056	2	400 3615
NUT, Speed (Raised) ..	70/	01-40.....	.....	AR	400 0568
NUT, Speed	71	10-70-80 (Has Hole On Raised Surface)	.....	2	400 0135

29.075–2a ATTACHING PARTS, Retainer To Armrest

NUT, Speed (Push-On)..	67/	.....	29.056	AR	400 2083

29.075–2b BEZEL, Door Armrest (Incl. Medallion)

Trim No.		Per Car	01-40
T-101	Gremlin Medallion	2	364 9595
T-103	Gremlin Medallion (Except "A" Trim).....	2	364 9596
T-103A	Gremlin Medallion.....	2	364 9595
T-104A	Gremlin Medallion	2	364 9595
T-108	Gremlin Medallion	2	364 9595
T-111	Gremlin Medallion	2	364 9601
T-113	Gremlin Medallion	2	364 9602
T-114	Gremlin Medallion	2	364 9603
T-115	Gremlin Medallion	2	364 9604
T-121	Hornet Medallion	AR	364 9592
T-123	Hornet Medallion	AR	364 9593
T-124	Hornet Medallion	AR	364 9594
T-128	Hornet Medallion	2	364 9592
T-141	Hornet Medallion	AR	364 9597
T-143	Hornet Medallion	AR	364 9598
T-144	Hornet Medallion	AR	364 9599
T-145	Hornet Medallion	AR	364 9600
T-201	Gremlin Medallion	2	364 9595
T-203	Gremlin Medallion	2	365 3349
T-206	Gremlin Medallion	2	365 3351
T-211	Gremlin Medallion	2	364 9601
T-215	Gremlin Medallion	2	364 9601
T-213	Gremlin Medallion	2	365 3335
T-216	Gremlin Medallion	2	365 3338
T-241	Hornet Medallion	2	364 9597
T-243	Hornet Medallion	2	365 3330
T-244	Hornet Medallion (Except "W" Trim).....	2	365 3331
T-244W	Honet Medallion (Gucci).....	2	365 3334
T-246	Hornet Medallion	2	365 3333

29.075–2c ATTACHING PARTS, Bezel To Door Inner Panel

SCREW, Tapping.....	71/	01-40.....	17.660	AR	G9414723 NA

SEATS - SOFT TRIM

29.075-3 PLUG, Door Armrest Screw Hole

1968 MODELS

Trim No.	Per Car	01-10-30-70 -80
T-828	8	360 6001
T-831	4	360 6001
T-832	4	360 6007
T-835	4	360 6004
T-838	4	360 6001
T-843	8	360 6002
T-844	8	360 6003
T-845	8	360 6004
T-848	8	360 6001
T-851	8	360 6001
T-853	8	360 6002
T-855	8	360 6005
T-871	8	360 6001
T-873	8	360 6002
T-874	8	360 6003
T-875	8	360 6004
T-876	8	360 6005
T-879	8	360 6006
T-881	8	360 6001
T-883	8	360 6002
T-885	8	360 6004
T-891	8	360 6001
T-893	8	360 6002
T-894	8	360 6003
T-895	8	360 6004
T-896	8	360 6005
T-899	8	360 6006

1969 MODELS (* 29-19)

Description		Per Car	10-30-70-80
PLUG	Charcoal	AR	362 0382
	Avocado	AR	362 0385
	Beige	AR	362 0384
	Off White	AR	362 0387
	Platinum	AR	362 5368
	Red	AR	362 0988
	Saddle	AR	362 0989
	Yellow	AR	362 0386

1970 MODELS (* 29-19 NC)

PLUG ..... 70/ 10-30-70-80 ..... AR 360 6001

1971 - 1972 MODELS

Trim No.	Per Car	01-40
T-101	4	364 3154
T-103 Except "A" Trim	4	364 3155
T-103A	4	364 3154
T-104A	4	364 3154
T-108	4	364 3154
T-121	4	364 3154
T-123	4	364 3155
T-124	4	364 3156
T-128	4	364 3154
T-201	4	364 3154
T-203	4	365 3249

T-206	4	365 3252
T-211	4	364 3154
T-221	4	364 3154
T-223	4	365 3249
T-226	4	365 3252
T-241	4	364 3154

29.075–3a PLUG, Rear Door Armrest

T-271	Left	1	366 1899
	Right	1	366 1898
T-273	Left	1	366 1893
	Right	1	366 1892
T-274	Left	1	366 1895
	Right	1	366 1894
T-276	Left	1	366 1897
	Right	1	366 1896
T-281	Left	1	366 1899
	Right	1	366 1898
T-283	Left	1	366 1893
	Right	1	366 1892
T-284	Left	1	366 1895
	Right	1	366 1894
T-291	Left	1	366 1899
	Right	1	366 1898
T-293	Left	1	366 1893
	Right	1	366 1892
T-294	Left	1	366 1895
	Right	1	366 1894
T-296	Left	1	366 1897
	Right	1	366 1896

29.075–4 FILLER, Armrest To Door

68	01-10-80	.....	2	361 3100
69/	10-80	.....	2	361 3100
70	30-70	.....	2	361 3100

29.075–5 PLUG, Front Door Armrest Remote Control Handle Opening

68	(Black) 01	.....	2	360 4365
68	(Blue) 01 ***(Use 360 4365)***	.....	1	360 4366
68	(Green) 01 ***(Use 360 4365)***	.....	1	360 4367
68	(Red) 01 ***(Use 360 4365)***	.....	1	360 4368

29.075–6 DOOR, Armrest Flo-Thru Vent Shut-Off

68/69	(Left) 30-70	.....	1	360 7689
68/69	(Right) 30-70	.....	1	360 7688

29.075–7 ATTACHING PARTS, Door To Door Panel

SCREW, Machine	68/69	30-70	17.614	4	G132750

29.075–8 SPRING, Armrest Flo-Thru Vent Shut-Off

68/69	30-70	.....	4	360 7710

29.075–8a ATTACHING PARTS, Spring To Vent Shut-Off Door

SCREW, Machine	68/69	30-70	17.614	4	G132750 NA

29.075–9 DAMPER, Front Door Flo-Thru Vent (On Inner Panel - Behind Armrest)

68/69	30-70	.....	2	360 2321

29.075–10 ATTACHING PARTS, Damper To Armrest Mounting Plate

FASTENER	68/69	30-70	15.365	4	400 1588

SEATS - SOFT TRIM

29.075–11 PLATE, Door Armrest Mounting

68/69	30–70	.....	2	360 2322

29.075–12 ATTACHING PARTS, Plate To Door Panel

SCREW, Tapping	68/69	30–70	23.330	8	400 2268
NUT, Speed	68/	30–70	.....	2	400 0135

29.075–13 SPACER, Door Armrest

70	05 (3/4" Long)	29.056	8	362 6551
70	06 (3/4" Long)	29.056	4	362 6551
70	40 (3/4" Long)	29.056	4	362 6551
71	01–46 (Front Door–At Rear–3/4" Long)	29.056	2	362 6551
71	01–46 (Front Door–At Rear–13/32" Long)	.....	2	365 1589
72	01–46 (Front Door–At Rear–13/32" Long)	.....	2	365 1589
72	01–46 (Front Door–At Rear–9/32" Long)	.....	2	366 1594

29.075–14 CUP, Armrest Retainer (Plastic)

71/	70	.....	2	364 2060

29.075–15 ATTACHING PARTS, Armrest Retainer Cup To Panel

SCREW, Tapping	71	70 (Used Without Nut)	.....	4	400 3766
SCREW, Tapping	71	70 (Used With Spring Nut)	.....	4	400 4364
SCREW, Tapping	72	70	.....	4	439 5412
NUT, Spring	71/	70	17.426	4	G445435

29.076–1 STRAP, Rear Door Pull

68	05–08	.....	2	360 4413
69	(Blue) 05–08	.....	2	363 0285
69	(Charcoal) 05–08	.....	2	362 3651

29.076–2 CAP, Rear Door Pull Strap

68/69	05–08	.....	2	360 4428

29.076–3 ATTACHING PARTS, Strap And Cap To Door Panel

SCREW, Tapping	68	05–08	17.654	2	G162500 NA
SCREW, Tapping	69	05–08	17.654	4	G162507 NA

29.100 SEAT ASSEMBLY, Trimmed Front (Order Component Parts)(* 29-35)

29.101 BACK ASSEMBLY, Trimmed Front Seat (Order Component Parts)(* 29-35)

29.103–1 FRAME ASSEMBLY, Front Seat Bottom (Incl. Spring)(* 29-35)

67	01 (WRS–Except Heavy Duty)	.....	1	358 4479
67	05–08 (WFS–Except Heavy Duty) ..... ***(Use 448 4814)***	.....	1	358 2536
68/69	05–08 (WFS–Except Heavy Duty)	.....	1	360 6050
70/71	05–08 (WFS–Except Heavy Duty–* 29–134) ..... ***(Use 366 1146)***	.....	1	362 7545
71	05–08 (WFS–* 29–135)	.....	1	366 1146
72	05–08 (WFS)	.....	1	366 1690
67	06–09 (WNRS–Except Heavy Duty)	.....	1	353 1816
68/69	06–09 (WNRS–Except Heavy Duty)	.....	1	360 6052
70/71	06–46 (WNRS–Except Heavy Duty–* 29–134)	.....	1	362 7731
71	06–46 (WNRS–* 29–135)	.....	1	366 1148
72	06–46 (WNRS)	.....	1	366 1691

SEATS - SOFT TRIM

67	15-18-85-88 (WFS-Except Heavy Duty)	.....	1	357 3823
68/	15-18-85-88 (WFS-Except Heavy Duty)	.....	1	360 6054
67	16-19-59-85-86-88-89 (WNRS-Except Heavy Duty)	.....	1	353 1815
68/	17-19-89 (WNRS-Except Heavy Duty)	.....	1	360 5841
67	***05-08 (Heavy Duty-WFS)***	.....	1	351 8408
68/69	***05-08 (Heavy Duty-WFS)***	.....	1	360 6051
67	***06 (Heavy Duty-WNRS)***	.....	1	351 8409
68/69	***06-09 (Heavy Duty-WNRS)***	.....	1	360 6053
70/71	***05-08 (Heavy Duty-WFS)***	.....	1	362 7544
70/71	***06 (Heavy Duty-WNRS)***	.....	1	362 7730
67	***15-18-85-88 (Heavy Duty-WFS)***	.....	1	351 8887
68/	***15-18-85-88 (Heavy Duty-WFS)***	.....	1	360 6055
67	***16-85-86-88 (Heavy Duty-WNRS)***	.....	1	351 8843
68/	***17-19-89 (Heavy Duty-WNRS)***	.....	1	360 5843
67	(Left) 01 (WIRS)	.....	1	358 4481
68	(Left) 01 (WIRS)	.....	1	359 8749
69	(Left) 01 (WIRS)	.....	1	360 5847
67	(Left) 01-10 (WBS)	.....	1	650 5951
70	(Left) 01 (WIRS)	.....	1	362 7733
71	(Left) 01 (WIRS-* 29-134)	.....	1	363 8743
71	(Left) 01 (WIRS-* 29-135)	.....	1	366 1151
72	(Left) 01 (WIRS)	.....	1	366 1151
72	(Left) 06-46 (WBS)	.....	1	365 1065
67	(Left) 10-50-80 (WIRS)	.....	1	358 9497
68	(Left) 10-80 (WIRS) ***(Use 360 5851)***	.....	1	359 0139
69/71	(Left) 10-80 (WIRS)	.....	1	360 5851
72	(Left) 10-80 (WIRS)...(Less Bolster Wire)	.....	1	364 7731
68/69	(Left) 17-19 (WBS)	.....	1	651 0387
70	(Left) 19-89 (WBS)...(Less Bolster Wire) ***(Use 362 2571)***	.....	1	363 4535
71/	(Left) 19-89 (WBS)...(Less Bolster Wire)	.....	1	362 2571
68/69	(Left) 39-79 (WRBS)...(Less Bolster Wire)	.....	1	360 4381
70/71	(Left) 39-79	.....	1	362 7959
70/71	(Left) 46 (WBS)	.....	1	363 9947
67	(Left) 50-80 (WBS)	.....	1	650 5953
68/69	(Left) 79 (WNBS)...(Less Bolster Wire)	.....	1	360 6417
72	(Left) 79	.....	1	365 1063
68/69	(Left) 89 (WBS)	.....	1	651 0389
67	(Right) 01 (WIRS)	.....	1	358 4480
68	(Right) 01 (WIRS)	.....	1	359 8748
69	(Right) 01 (WIRS)	.....	1	360 5846
70	(Right) 01 (WIRS)	.....	1	362 7732
71	(Right) 01 (WIRS-* 29-134)	.....	1	363 8742
71	(Right) 01 (WIRS-* 29-135)	.....	1	366 1150
72	(Right) 01 (WIRS)	.....	1	366 1150
67	(Right) 01-10 (WBS)	.....	1	650 5950
72	(Right) 06-46 (WBS)	.....	1	365 1064
67	(Right) 10-50-80 (WIRS)	.....	1	358 9496
68	(Right) 10-80 (WIRS) ***(Use 360 5850)***	.....	1	359 0138
69/71	(Right) 10-80 (WIRS)	.....	1	360 5850
72	(Right) 10-80 (WIRS)...(Less Bolster Wire)	.....	1	364 7730
68/69	(Right) 17-19 (WBS) ***(Ref. Pr. List)***	.....	1	651 0386
70	(Right) 19-89 (WBS)...(Less Bolster Wire)	.....	1	363 4534
71/	(Right) 19-89 (WBS)...(Less Bolster Wire)	.....	1	362 2570
70/71	(Right) 46 (WBS)	.....	1	363 9946
67	(Right) 50-80 (WBS)	.....	1	650 5952
68/69	(Right) 39-79 (WRBS)...(Less Bolster Wire)	.....	1	360 4380
70/71	(Right) 39-79	.....	1	362 7958
68/69	(Right) 79 (WNBS)...(Less Bolster Wire)	.....	1	360 6416
72	(Right) 79	.....	1	365 1062
68/69	(Right) 89 (WBS)	.....	1	651 0388

29.103-2 WIRE, Front Seat Cushion Spring Bolster

70/	06-46 (WBS)	.....	4	362 7771
68/70	19 (WBS)	.....	2	358 9759
70/	19-89 (WBS)	.....	2	362 2105
68/69	39-79	.....	2	362 3168
70/	39-79	.....	4	362 7771
72	79 ("N" Trim)	.....	2	362 2105
68/70	89 (WBS)	.....	2	358 9760
72	80 (W RS-"V" Trims)	.....	2	364 7239

Printed in U.S.A.

SEATS - SOFT TRIM

29.103–3 ATTACHING PARTS, Bolster Wire To Seat Spring

HOG RING	68/	19-89 (WBS)(5/16")	30.025	AR	400 2198
HOG RING	68/69	(3/4")	30.025	18	436 3256
CLIP	71/	19-89 (WBS)	.....	4	365 1588
CLIP	72	80 (WIRS-"V" Trims)	.....	4	365 1588

29.103–3a WIRE, Front Seat Cushion Elements Reinforcement (Right Side)

72	WBS	.....	1	366 2741

29.103–3b ATTACHING PARTS, Reinforcement Wire To Cushion Elements

CLIP	72	WBS	.....	4	365 1588

29.103–4 ARM, Bottom Frame Outer Hinge Adjusting

67/69	(Left)(WRS)(WIRS)(WRBS)	.....	1	358 9385
67/69	(Right)(WRS)(WIRS)(WRBS)	.....	1	358 9384
70	(Left) 01 (WIRS)	.....	1	358 9385
70/71	(Left) 10-80 (WIRS)	.....	1	358 9385
70	(Right) 01 (WIRS)	.....	1	358 9384
70/71	(Right 10-80 (WIRS)	.....	1	358 9384

29.103–5 ATTACHING PARTS, Arm To Bottom Frame Bracket

SCREW, Shoulder	67/69	(WRS)(WIRS)(WRBS)	.....	2	400 1324
WASHER (Nylon)	67/69	(WRS)(WIRS)(WRBS)	.....	2	351 8643
WASHER (Steel)	67/69	(WRS)(WIRS)(WRBS)	.....	2	400 1527
SCREW, Shoulder	70	01 (WIRS)	.....	2	400 1324
SCREW, Shoulder	70/71	10-80 (WIRS)	.....	2	400 1324
WASHER (Nylon)	70	01 (WIRS)	.....	2	351 8643
WASHER (Nylon)	70/71	10-80 (WIRS)	.....	2	351 8643
WASHER (Steel)	70	01 (WIRS)	.....	2	400 1527
WASHER (Steel)	70/71	10-80 (WIRS)	.....	2	400 1527

29.103–6 SPRING, Bottom Frame Outer Hinge Adjusting Arm

67/69	(Left)(WRS)(WIRS)(WRBS)	.....	1	353 2227
70	(Left) 01 (WIRS)	.....	1	353 2227
70/71	(Left) 10-80 (WIRS)	.....	1	353 2227
67/69	(Right)(WRS)(WIRS)(WRBS)	.....	1	353 2226
70	(Right) 01 (WIRS)	.....	1	353 2226
70/71	(Right) 10-80 (WIRS)	.....	1	353 2226

29.103–7 BRACKET, Bottom Frame Outer Hinge Back Stop

67	(Left) 05-08-15-18-85-88 (WRS)(WIRS)(WBS)	.....	1	351 8869
68	(Left)(WIRS)(WRBS) ***(Use 361 3523)***	.....	1	360 6009
69	(Left)(WIRS)(WRBS)	.....	1	361 3523
70/71	(Left) 10-80 (WIRS)	.....	1	361 3523
67	(Right) 05-08-15-18-85-88 (WRS)(WIRS)(WBS)	.....	1	351 8868
68	(Right)(WIRS)(WRBS) ***(Use 361 3522)***	.....	1	360 6008
69	(Right)(WIRS)(WRBS)	.....	1	361 3522
70/71	(Right) 10-80 (WIRS)	.....	1	361 3522

29.103–8 ATTACHING PARTS, Stop Bracket To Bottom Frame Outer Bracket

BOLT, Shoulder	68/69	(WIRS)(WRBS)	.....	4	400 1367
BOLT, Shoulder	67	05-08-15-18-85-88 (WRS)(WIRS)(WBS)	.....	4	400 1367
BOLT, Shoulder	70/71	10-80 (WIRS)	.....	4	400 1367
WASHER, Internal Tooth	68/69	(WIRS)(WRBS)	.....	4	400 1397
WASHER, Internal Tooth	67	05-08-15-18-85-88 (WRS)(WIRS)(WBS)	.....	4	400 1397
WASHER, Internal Tooth	70/71	10-80 (WIRS)	.....	4	400 1397

SEATS - SOFT TRIM

29.103–9 BUSHING, Bottom Frame Inner Hinge

67/69	(WIRS)(WRBS)	.....	2	352 0465
70/	01-10-80 (I. D. 3/8")	.....	2	352 0465
72	01 (WIRS)	.....	2	352 0465
71/	(WBS-I. D. 7/16")	.....	2	365 5808

29.103–10 STRIKER, Bottom Frame

67	06-07-09-16-19-86-89 (WNRS)	.....	2	351 9992

29.103–11 ATTACHING PARTS, Striker To Bottom Frame

SCREW, Tapping	67	06-07-09-16-86-89 (WNRS)	17.660	4	G179061

29.103–12 SPRING, Front Seat Cushion Coil (No. 11 Gauge-5" High)

67/69	(LBS)	.....	AR	448 9663
70/71	10-80 (LBS)	.....	AR	448 9663

29.103–13 CLIP, Seat Cushion Spring Reinforcement

67/	"C"	29.106	AR	348 8056
67/	"U"	29.106	AR	447 8809
67/	"Loop"	.....	AR	448 5413

29.103–14 COVER, Bottom Frame Center Post

1967 Thru 1969 MODELS

(T-723)(WNRS)	.....	1	358 0268
(T-723)(WRS)	.....	1	358 0277
(T-728)(WNRS)	.....	1	353 2258
(T-728)(WRS)	.....	1	353 2255
(T-729)(WNRS)	.....	1	358 0274
(T-729)(WRS)	.....	1	358 0283
(T-741)(WNRS)	.....	1	353 2240
(T-741)(WRS)	.....	1	353 2249
(T-743)(WNRS)	.....	1	358 0268
(T-743)(WRS)	.....	1	358 0277
(T-744)(WNRS)	.....	1	356 4270
(T-744)(WRS)	.....	1	356 4264
(T-745)(WNRS)	.....	1	358 0270
(T-745)(WRS)	.....	1	358 0279
(T-747)(WNRS)	.....	1	353 2245
(T-747)(WRS)	.....	1	353 2254
(T-748)(WNRS)	.....	1	353 2258
(T-748)(WRS)	.....	1	353 2255
(T-749)(WNRS)	.....	1	358 0274
(T-749)(WRS)	.....	1	358 0283
(T-753)(WNRS)	.....	1	358 0268
(T-758)(WNRS)	.....	1	353 2258
(T-759)(WNRS)	.....	1	358 0274
(T-771)(WNRS)	.....	1	353 2240
(T-773)(WNRS)	.....	1	358 0268
(T-774)(WNRS)	.....	1	356 4270
(T-775)(WNRS)	.....	1	358 0270
(T-776)(WNRS)	.....	1	358 0271
(T-777)(WNRS)	.....	1	353 2245
(T-778)(WNRS)	.....	1	353 2258
(T-779)(WNRS)	.....	1	358 0274
(T-781)(WNRS)	.....	1	353 2240
(T-783)(WNRS)	.....	1	358 0268
(T-787)(WNRS)	.....	1	353 2245
(T-789)(WNRS)	.....	1	358 0274

SEATS - SOFT TRIM

(T-791)(WNRS)	.....	1	353 2240
(T-793)(WNRS)	.....	1	358 0268
(T-794)(WNRS)	.....	1	356 4270
(T-795)(WNRS)	.....	1	358 0270
(T-796)(WNRS)	.....	1	358 0271
(T-797)(WNRS)	.....	1	353 2245
(T-798)(WNRS)	.....	1	353 2258
(T-799)(WNRS)	.....	1	358 0274
(T-828)(WNRS)	.....	1	353 2258
(T-843)(WNRS)	.....	1	360 5068
(T-844)(WNRS)	.....	1	360 5069
(T-845)(WNRS)	.....	1	358 0270
(T-848)(WNRS)	.....	1	353 2240
(T-851)(WNRS)	.....	1	353 2240
(T-853)(WNRS)	.....	1	360 5068
(T-855)(WNRS)	.....	1	358 0270
(T-871)(WNRS)	.....	1	353 2240
(T-873)(WNRS)	.....	1	360 5068
(T-874)(WNRS)	.....	1	360 5069
(T-875)(WNRS)	.....	1	358 0270
(T-876)(WNRS)	.....	1	360 5071
(T-879)(WNRS)	.....	1	360 5073
(T-881)(WNRS)	.....	1	353 2240
(T-883)(WNRS)	.....	1	360 5068
(T-885)(WNRS)	.....	1	358 0270
(T-891)(WNRS)	.....	1	353 2240
(T-893)(WNRS)	.....	1	360 5068
(T-894)(WNRS)	.....	1	360 5069
(T-895)(WNRS)	.....	1	358 0270
(T-896)(WNRS)	.....	1	360 5071
(T-899)(WNRS)	.....	1	360 5073
(T-923)(WNRS)	.....	1	362 0577
(T-928)(WNRS)	.....	1	353 2258
(T-941)(WNRS)	.....	1	362 0576
(T-943)(WNRS)	.....	1	362 0577
(T-944)(WNRS)	.....	1	362 0578
(T-945)(WNRS)	.....	1	362 0579
(T-951)(WNRS)	.....	1	362 0576
(T-953)(WNRS)	.....	1	362 0577
(T-956)(WNRS)	.....	1	362 0580
(T-957)(WNRS)	.....	1	362 0581
(T-972)(WNRS)	.....	1	362 5090
(T-973)(WNRS)	.....	1	362 0577
(T-975)(WNRS)	.....	1	362 0579
(T-976)(WNRS)	.....	1	362 0580
(T-977)(WNRS)	.....	1	362 0581
(T-979)(WNRS)	.....	1	362 0582
(T-991)(WNRS)	.....	1	362 0576
(T-993)(WNRS)	.....	1	362 0577
(T-995)(WNRS)	.....	1	362 0579
(T-996)(WNRS)	.....	1	362 0580
(T-997)(WNRS)	.....	1	362 0581

1970 Thru 1972 MODELS (* 29-19 NC)

70/71	(Black) 06-46 (WNRS)	.....	1	362 8726
72	(Black) 06-46 (WNRS)	.....	1	365 3559
70/71	(Black) 19-89 (WNRS)	.....	1	353 2240
72	(Black) 19-89 (WNRS)	.....	1	365 5360
70	(Parchment) 06-46 (WNRS)	.....	1	362 8731
70	(Red) 19-89 (WNRS)	.....	1	362 0579

SEATS - SOFT TRIM

29.103–15 CAP, Bottom Frame Center Post Cover

1967 Thru 1969 MODELS

(T-723)(WNRS)	.....	1	358 0286
(T-728)(WNRS)	.....	1	353 3708
(T-729)(WNRS)	.....	1	358 0292
(T-741)(WNRS)	.....	1	353 3701
(T-743)(WNRS)	.....	1	358 0286
(T-744)(WNRS)	.....	1	356 4276
(T-745)(WNRS)	.....	1	358 0288
(T-747)(WNRS)	.....	1	353 3706
(T-748)(WNRS)	.....	1	353 3708
(T-749)(WNRS)	.....	1	358 0292
(T-753)(WNRS)	.....	1	358 0286
(T-758)(WNRS)	.....	1	353 3708
(T-759)(WNRS)	.....	1	358 0292
(T-771)(WNRS)	.....	1	353 3701
(T-773)(WNRS)	.....	1	358 0286
(T-774)(WNRS)	.....	1	356 4276
(T-775)(WNRS)	.....	1	358 0288
(T-776)(WNRS)	.....	1	358 0289
(T-777)(WNRS)	.....	1	353 3706
(T-778)(WNRS)	.....	1	353 3708
(T-779)(WNRS)	.....	1	358 0292
(T-781)(WNRS)	.....	1	353 3701
(T-783)(WNRS)	.....	1	358 0286
(T-787)(WNRS)	.....	1	353 3706
(T-789)(WNRS)	.....	1	358 0292
(T-791)(WNRS)	.....	1	353 3701
(T-793)(WNRS)	.....	1	358 0286
(T-794)(WNRS)	.....	1	356 4276
(T-795)(WNRS)	.....	1	358 0288
(T-796)(WNRS)	.....	1	358 0289
(T-797)(WNRS)	.....	1	353 3706
(T-798)(WNRS)	.....	1	353 3708
(T-799)(WNRS)	.....	1	358 0292
(T-828)(WNRS)	.....	1	353 3708
(T-843)(WNRS)	.....	1	360 5075
(T-844)(WNRS)	.....	1	360 5076
(T-845)(WNRS)	.....	1	358 0288
(T-848)(WNRS)	.....	1	353 3701
(T-851)(WNRS)	.....	1	353 3701
(T-853)(WNRS)	.....	1	360 5075
(T-855)(WNRS)	.....	1	360 5076
(T-871)(WNRS)	.....	1	353 3701
(T-873)(WNRS)	.....	1	360 5075
(T-874)(WNRS)	.....	1	360 5076
(T-875)(WNRS)	.....	1	358 0288
(T-876)(WNRS)	.....	1	360 5078
(T-879)(WNRS)	.....	1	360 5080
(T-881)(WNRS)	.....	1	357 3701
(T-883)(WNRS)	.....	1	360 5075
(T-885)(WNRS)	.....	1	358 0288
(T-891)(WNRS)	.....	1	353 3701
(T-893)(WNRS)	.....	1	360 5075
(T-894)(WNRS)	.....	1	360 5076
(T-895)(WNRS)	.....	1	358 0288
(T-896)(WNRS)	.....	1	360 5078
(T-899)(WNRS)	.....	1	360 5080
(T-923)(WNRS)	.....	1	362 0555
(T-928)(WNRS)	.....	1	353 3708
(T-941)(WNRS)	.....	1	362 0554
(T-943)(WNRS)	.....	1	362 0555
(T-944)(WNRS)	.....	1	362 0556
(T-945)(WNRS)	.....	1	362 0557
(T-951)(WNRS)	.....	1	362 0554

SEATS - SOFT TRIM

(T-953)(WNRS)	.....	1	362 0555
(T-956)(WNRS)	.....	1	362 0558
(T-957)(WNRS)	.....	1	362 0557
(T-972)(WNRS)	.....	1	362 5091
(T-973)(WNRS)	.....	1	362 0555
(T-975)(WNRS)	.....	1	362 0557
(T-976)(WNRS)	.....	1	362 0558
(T-977)(WNRS)	.....	1	362 0559
(T-979)(WNRS)	.....	1	362 0560
(T-991)(WNRS)	.....	1	362 0554
(T-993)(WNRS)	.....	1	362 0555
(T-995)(WNRS)	.....	1	362 0557
(T-996)(WNRS)	.....	1	362 0558
(T-997)(WNRS)	.....	1	362 0559

1970 MODELS

Trim No.	Per Car	06-19-46-89 (WNRS)
T-001	1	353 3701
T-008	1	353 3708
T-011	1	353 3701
T-013	1	362 9328
T-014	1	362 9329
T-015	1	362 0557
T-021A	1	353 3708
T-021B	1	353 3708
T-021G	1	353 3701
T-023	1	362 9328
T-024	1	362 9329
T-025	1	362 0557
T-041	1	353 3701
T-043	1	362 9328
T-044	1	362 9329
T-045	1	362 0557
T-051	1	353 3701
T-053	1	362 9328
T-054	1	362 9329
T-056	1	362 9330
T-071	1	353 3701
T-073	1	362 9328
T-074	1	362 9329
T-075	1	362 0557
T-076	1	362 9330
T-091	1	353 3701
T-093	1	362 9328
T-094	1	362 9329
T-095	1	362 0557
T-096	1	362 9330

1971 - 1972 MODELS

71	01-40 (WNRS)	.....	1	353 3701 NC
72	06-19-46-89 (WNRS)	.....	1	365 5425 NC

SEATS - SOFT TRIM

Trim No.	Per Car	19-89 (WNRS)
T-151	1	353 3701
T-153	1	364 2186
T-154	1	364 2187
T-171	1	353 3701
T-173	1	364 2186
T-174	1	364 2187
T-175	1	364 2188
T-191	1	353 3701
T-193	1	364 2186
T-194	1	364 2187
T-195	1	364 2188

29.103–16 COVER, Front Seat Bottom Frame Inner Hinge Bracket (Except 1967 Thru 1969 WBS)

68/69	(Left)(WIRS)	.....	1	361 8115
70/71	(Left)(WBS)	.....	1	363 8609
72	(Left)(WBS)	.....	1	366 1229
70	(Left) 01 (WIRS)	.....	1	362 9415
71/	(Left) 01 (WIRS)	.....	1	363 9945
70/71	(Left) 10-80 (WIRS)	.....	1	361 8115
72	(Left) 10-80 (WIRS)	.....	1	365 4469
68/69	(Right)(WIRS)	.....	1	361 8114
70/71	(Right)(WBS)	.....	1	363 8608
72	(Right)(WBS)	.....	1	366 1228
70	(Right) 01 (WIRS)	.....	1	362 9414
71/	(Right) 01 (WIRS)	.....	1	363 9944
70/71	(Right) 10-80 (WIRS)	.....	1	361 8114
72	(Right) 10-80 (WIRS)	.....	1	365 4468

1967 Thru 1969 MODELS (WBS)

Trim No.		Per Car	1967 01-10-50-80 (WBS-Except "W" Trim)	1967 19-89 ("W" Trim)	1968-69 10-30-70-80 (WRBS)	
T-741	Left	1	353 2353	... .	... .	... .
	Right	1	353 2352	... .	... .	... .
T-743	Left	1	357 7649	... .	... .	... .
	Right	1	357 7648	... .	... .	... .
T-745	Left	1	357 7653	... .	... .	... .
	Right	1	357 7652	... .	... .	... .
T-748	Left	1	353 2365	... .	... .	... .
	Right	1	353 2364	... .	... .	... .
T-749	Left	1	357 7659	... .	... .	... .
	Right	1	357 7658	... .	... .	... .
T-771	Left	1	353 2353	353 2353	... .	... .
	Right	1	353 2352	353 2352	... .	... .
T-773	Left	1	357 7649	357 8287	... .	... .
	Right	1	357 7648	357 8286	... .	... .
T-775	Left	1	357 7653	357 7653	... .	... .
	Right	1	357 7652	357 7652	... .	... .
T-776	Left	1	357 7655	357 7655	... .	... .
	Right	1	357 7654	357 7654	... .	... .
T-778	Left	1	353 2365	... .	... .	... .
	Right	1	353 2364	... .	... .	... .
T-779	Left	1	357 7659	357 8289	... .	... .
	Right	1	357 7658	357 8288	... .	... .
T-791	Left	1	353 2353	353 2353	... .	... .
	Right	1	353 2352	353 2352	... .	... .
T-793	Left	1	357 7649	357 8287	... .	... .
	Right	1	357 7648	357 8286	... .	... .

Printed in U.S.A.

SEATS - SOFT TRIM

Trim No.			Per Car	1967 01-10-50-80 (WBS-Except "W" Trim)	1967 19-89 ("W" Trim)	1968-69 10-30-70-80 (WRBS)	
T-795	Left		1	357 7653	357 7653	... .	... .
	Right		1	357 7652	357 7652	... .	... .
T-796	Left		1	357 7655	357 7655	... .	... .
	Right		1	357 7654	357 7654	... .	... .
T-798	Left		1	353 2365	... .	... .	... .
	Right		1	353 2364	... .	... .	... .
T-799	Left		1	357 7659	357 8289	... .	... .
	Right		1	357 7658	357 8288	... .	... .
T-831	Left		1	... .	... .	353 2353	... .
	Right		1	... .	... .	353 2352	... .
T-832	Left		1	... .	... .	362 3159	... .
	Right		1	... .	... .	362 3158	... .
T-835	Left		1	... .	... .	357 7653	... .
	Right		1	... .	... .	357 7652	... .
T-838	Left		1	... .	... .	353 2353	... .
	Right		1	... .	... .	353 2352	... .
T-871	Left		1	... .	... .	353 2353	... .
	Right		1	... .	... .	353 2352	... .
T-873	Left		1	... .	... .	360 5083	... .
	Right		1	... .	... .	360 5082	... .
T-874	Left		1	... .	... .	360 5085	... .
	Right		1	... .	... .	360 5084	... .
T-875	Left		1	... .	... .	357 7653	... .
	Right		1	... .	... .	357 7652	... .
T-876	Left		1	... .	... .	360 5089	... .
	Right		1	... .	... .	360 5088	... .
T-879	Left		1	... .	... .	360 5093	... .
	Right		1	... .	... .	360 5092	... .
T-891	Left		1	... .	... .	353 2353	... .
	Right		1	... .	... .	353 2352	... .
T-893	Left		1	... .	... .	353 5083	... .
	Right		1	... .	... .	353 5082	... .
T-894	Left		1	... .	... .	360 5085	... .
	Right		1	... .	... .	360 5084	... .
T-895	Left		1	... .	... .	357 7653	... .
	Right		1	... .	... .	357 7652	... .
T-896	Left		1	... .	... .	360 5089	... .
	Right		1	... .	... .	360 5088	... .
T-899	Left		1	... .	... .	360 5093	... .
	Right		1	... .	... .	360 5092	... .
T-931	Left		1	... .	... .	362 0595	... .
	Right		1	... .	... .	362 0594	... .
T-932	Left		1	... .	... .	362 5381	... .
	Right		1	... .	... .	362 5380	... .
T-935	Left		1	... .	... .	362 0599	... .
	Right		1	... .	... .	362 0598	... .
T-936	Left		1	... .	... .	362 5379	... .
	Right		1	... .	... .	362 5378	... .
T-961	Left		1	... .	... .	362 0595	... .
	Right		1	... .	... .	362 0594	... .
T-962	Left		1	... .	... .	362 5381	... .
	Right		1	... .	... .	362 5380	... .
T-963	Left		1	... .	... .	362 0597	... .
	Right		1	... .	... .	362 0596	... .
T-965	Left		1	... .	... .	362 0599	... .
	Right		1	... .	... .	362 0598	... .
T-966	Left	Beige	1	... .	... .	362 0601	... .
		Saddle	1	... .	... .	362 5379	... .
	Right	Beige	1	... .	... .	362 0600	... .
		Saddle	1	... .	... .	362 5378	... .

SEATS - SOFT TRIM

Trim No.		Per Car	1967 01-10-50-80 (WBS-Except "W" Trim)	1967 19-89 ("W" Trim)	1968-69 10-30-70-80 (WRBS)	
T-968	Left	1	... .	... .	362 0595	... .
	Right	1	... .	... .	362 0594	... .
T-972	Left	1	... .	... .	362 5381	... .
	Right	1	... .	... .	362 5380	... .
T-973	Left	1	... .	... .	362 0597	... .
	Right	1	... .	... .	362 0596	... .
T-975	Left	1	... .	... .	362 0599	... .
	Right	1	... .	... .	362 0598	... .
T-979	Left	1	... .	... .	362 0603	... .
	Right	1	... .	... .	362 0602	... .
T-991	Left	1	... .	... .	362 0595	... .
	Right	1	... .	... .	362 0594	... .
T-992	Left	1	... .	... .	362 5381	... .
	Right	1	... .	... .	362 5380	... .
T-993	Left	1	... .	... .	362 0597	... .
	Right	1	... .	... .	362 0596	... .
T-995	Left	1	... .	... .	362 0599	... .
	Right	1	... .	... .	362 0598	... .
T-996	Left	1	... .	... .	362 0601	... .
	Right	1	... .	... .	362 0600	... .
T-997	Left	1	... .	... .	362 5383	... .
	Right	1	... .	... .	362 5382	... .
T-999	Left	1	... .	... .	362 0603	... .
	Right	1	... .	... .	362 0602	... .

29.103–17 ATTACHING PARTS, Cover To Inner Hinge Bracket

SCREW, Tapping.....	67/69	(WBS).....	29.120	2	400 0575
NUT, Push	67/69	(WBS).....	29.105	2	400 0155
SCREW, Machine.....	70	(WNBS)	25.054	2	400 0658
FASTENER, Drive	70/	(WNBS)	.....	2	400 3115

29.103–18 COVER, Front Seat Bottom Frame Outer Hinge Bracket Edge

69/70	(LBS)(Stormstrip).....	.....	2	362 8688
71/	(WIRS)(Plastic)	.....	2	362 2583
71/	06-40 (WNRS).....	.....	2	362 2584

29.103–19 COVER, Front Seat Bottom Frame Outer Hinge Bracket

70/71	(WBS).....	.....	2	363 8624
72	(WBS).....	.....	2	366 1227

29.103–20 ATTACHING PARTS, Outer Hinge Cover To Frame

FASTENER	70/	(WBS).....	.....	4	400 3115

SEATS - SOFT TRIM

29.104 UPHOLSTERY, Front Seat Back (Cover Assembly)

1967 MODELS

Trim No.		Per Car	01-10-80 (WFS)	01-10-50-80 (WNRS)	01-10-50-80 (WRS)(WIRS)	01-10-50-80 (WBS)
T-723B	Full	1	358 3659	... .	... .	... .
	Left	1	... .	358 3673	358 3709	... .
	Right	1	... .	358 3672	358 3708	... .
T-723C	Full	1	358 3658	... .	... .	... .
	Left	1	... .	358 3671	358 3707	... .
	Right	1	... .	358 3670	358 3706	... .
T-723M	Full	1	362 3076	... .	... .	... .
	Left	1	... .	362 3079	362 3081	... .
	Right	1	... .	362 3078	362 3080	... .
T-728B	Full	1	358 3661	... .	... .	... .
	Left	1	... .	358 3677	358 3713	... .
	Right	1	... .	358 3676	358 3712	... .
T-728C	Full	1	358 3660	... .	... .	... .
	Left	1	... .	358 3675	358 3711	... .
	Right	1	... .	358 3674	358 3710	... .
T-728M	Full	1	359 9788	... .	... .	... .
	Left	1	... .	359 9785	359 9787	... .
	Right	1	... .	359 9784	359 9786	... .
T-728V	Full	1	358 3662	... .	... .	... .
	Left	1	... .	358 3679	358 3715	... .
	Right	1	... .	358 3678	358 3714	... .
T-729B	Full	1	358 3664	... .	... .	... .
	Left	1	... .	358 3683	358 3719	... .
	Right	1	... .	358 3682	358 3718	... .
T-729C	Full	1	358 3663	... .	... .	... .
	Left	1	... .	358 3681	358 3717	... .
	Right	1	... .	358 3680	358 3716	... .
T-741B	Full	1	359 1958	... .	... .	... .
	Left	1	... .	359 1955	359 1957	... .
	Right	1	... .	359 1954	359 1956	... .
T-741D	Left	1	... .	... .	... .	358 3753
	Right	1	... .	... .	... .	358 3752
T-741E	Left	1	... .	... .	... .	358 3755
	Right	1	... .	... .	... .	358 3754
T-743B	Full	1	359 1959	... .	... .	... .
	Left	1	... .	358 4369	358 3725	... .
	Right	1	... .	358 4368	358 3724	... .
T-743C	Full	1	358 3665	... .	... .	... .
	Left	1	... .	358 3687	358 3723	... .
	Right	1	... .	358 3686	358 3722	... .
T-743D	Left	1	... .	... .	... .	358 3757
	Right	1	... .	... .	... .	358 3756
T-743E	Left	1	... .	... .	... .	358 3759
	Right	1	... .	... .	... .	358 3758
T-744C	Full	1	358 3666	... .	... .	... .
	Left	1	... .	358 3691	358 3729	... .
	Right	1	... .	358 3690	358 3728	... .
T-745B	Left	1	... .	358 3697	358 3739	... .
	Right	1	... .	358 3696	358 3738	... .
T-745C	Full	1	358 3667	... .	... .	... .
	Left	1	... .	358 3695	358 3735	... .
	Right	1	... .	358 3694	358 3734	... .
T-745D	Left	1	... .	... .	... .	358 3765
	Right	1	... .	... .	... .	358 3764
T-745E	Left	1	... .	... .	... .	358 3767
	Right	1	... .	... .	... .	358 3766

SEATS - SOFT TRIM

Trim No.		Per Car	01-10-80 (WFS)	01-10-50-80 (WNRS)	01-10-50-80 (WRS)(WIRS)	01-10-50-80 (WBS)
T-747C	Full	1	358 3668	... .	... .	... .
	Left	1	... .	358 3699	358 3741	... .
	Right	1	... .	358 3698	358 3740	... .
T-748B	Left	1	... .	358 3701	358 3745	... .
	Right	1	... .	358 3700	358 3744	... .
T-748E	Left	1	... .	... .	... .	358 3769
	Right	1	... .	... .	... .	358 3768
T-749B	Full	1	359 1960	... .	... .	... .
	Left	1	... .	358 4377	358 3749	... .
	Right	1	... .	358 4376	358 3748	... .
T-749C	Full	1	358 3669	... .	... .	... .
	Left	1	... .	358 3703	358 3747	... .
	Right	1	... .	358 3702	358 3746	... .
T-749D	Left	1	... .	... .	... .	358 3771
	Right	1	... .	... .	... .	358 3770
T-749E	Left	1	... .	... .	... .	358 3773
	Right	1	... .	... .	... .	358 3772
T-753B	Full	1	650 3755	... .	... .	... .
	Left	1	... .	650 3767	650 3863	... .
	Right	1	... .	650 3766	650 3862	... .
T-753C	Full	1	650 3752	... .	... .	... .
	Left	1	... .	650 3761	650 3857	... .
	Right	1	... .	650 3760	650 3856	... .
T-758B	Full	1	650 3756	... .	... .	... .
	Left	1	... .	650 3769	650 3865	... .
	Right	1	... .	650 3768	650 3864	... .
T-758C	Full	1	650 3753	... .	... .	... .
	Left	1	... .	650 3763	650 3859	... .
	Right	1	... .	650 3762	650 3858	... .
T-758V	Full	1	650 3751	... .	... .	... .
	Left	1	... .	650 3759	650 3855	... .
	Right	1	... .	650 3758	650 3854	... .
T-759B	Full	1	650 3757	... .	... .	... .
	Left	1	... .	650 3771	650 3867	... .
	Right	1	... .	650 3770	650 3866	... .
T-759C	Full	1	650 3754	... .	... .	... .
	Left	1	... .	650 3765	650 3861	... .
	Right	1	... .	650 3764	650 3860	... .
T-771B	Full	1	650 3778	... .	... .	... .
	Left	1	... .	650 3795	650 3881	... .
	Right	1	... .	650 3794	650 3880	... .
T-771C	Full	1	650 3772	... .	... .	... .
	Left	1	... .	650 3783	650 3869	... .
	Right	1	... .	650 3782	650 3868	... .
T-771D	Left	1	... .	... .	... .	650 4189
	Right	1	... .	... .	... .	650 4188
T-771E	Left	1	... .	... .	... .	650 4199
	Right	1	... .	... .	... .	650 4198
T-771S	Left	1	... .	... .	650 6325	... .
	Right	1	... .	... .	650 6324	... .
T-771W	Left	1	... .	... .	... .	650 4211
	Right	1	... .	... .	... .	650 4210
T-773B	Full	1	650 3779	... .	... .	... .
	Left	1	... .	650 3797	650 3883	... .
	Right	1	... .	650 3796	650 3882	... .
T-773C	Full	1	650 3773	... .	... .	... .
	Left	1	... .	650 3785	650 3871	... .
	Right	1	... .	650 3784	650 3870	... .
T-773D	Left	1	... .	... .	... .	650 4191
	Right	1	... .	... .	... .	650 4190

SEATS - SOFT TRIM

Trim No.		Per Car	01-10-80 (WFS)	01-10-50-80 (WNRS)	01-10-50-80 (WRS)(WIRS)	01-10-50-80 (WBS)
T-773E	Left	1	... .	... .	... .	650 4201
	Right	1	... .	... .	... .	650 4200
T-773S	Left	1	... .	... .	650 6327	... .
	Right	1	... .	... .	650 6326	... .
T-773W	Left	1	... .	... .	... .	650 4213
	Right	1	... .	... .	... .	650 4212
T-774C	Full	1	650 3774	... .	... .	... .
	Left	1	... .	650 3787	650 3873	... .
	Right	1	... .	650 3786	650 3872	... .
T-775B	Left	1	... .	650 3799	650 3885	... .
	Right	1	... .	650 3798	650 3884	... .
T-775D	Left	1	... .	... .	... .	650 4193
	Right	1	... .	... .	... .	650 4192
T-775E	Left	1	... .	... .	... .	650 4203
	Right	1	... .	... .	... .	650 4202
T-775W	Left	1	... .	... .	... .	650 4215
	Right	1	... .	... .	... .	650 4214
T-776B	Left	1	... .	650 3801	650 3887	... .
	Right	1	... .	650 3800	650 3886	... .
T-776C	Full	1	650 3775	... .	... .	... .
	Left	1	... .	650 3789	650 3875	... .
	Right	1	... .	650 3788	650 3874	... .
T-776D	Left	1	... .	... .	... .	650 4195
	Right	1	... .	... .	... .	650 4194
T-776E	Left	1	... .	... .	... .	650 4205
	Right	1	... .	... .	... .	650 4204
T-776W	Left	1	... .	... .	... .	650 4217
	Right	1	... .	... .	... .	650 4216
T-777C	Full	1	650 3776	... .	... .	... .
	Left	1	... .	650 3791	650 3877	... .
	Right	1	... .	650 3790	650 3876	... .
T-778B	Left	1	... .	650 3803	650 3889	... .
	Right	1	... .	650 3802	650 3888	... .
T-778E	Left	1	... .	... .	... .	650 4207
	Right	1	... .	... .	... .	650 4206
T-779B	Full	1	650 3780	... .	... .	... .
	Left	1	... .	650 3805	650 3891	... .
	Right	1	... .	650 3804	650 3890	... .
T-779C	Full	1	650 3777	... .	... .	... .
	Left	1	... .	650 3793	650 3879	... .
	Right	1	... .	650 3792	650 3878	... .
T-779D	Left	1	... .	... .	... .	650 4197
	Right	1	... .	... .	... .	650 4196
T-779E	Left	1	... .	... .	... .	650 4209
	Right	1	... .	... .	... .	650 4208
T-779S	Left	1	... .	... .	650 6329	... .
	Right	1	... .	... .	650 6328	... .
T-779W	Left	1	... .	... .	... .	650 4219
	Right	1	... .	... .	... .	650 4218
T-781B	Full	1	650 3810	... .	... .	... .
	Left	1	... .	650 3823	650 3403	... .
	Right	1	... .	650 3822	650 3402	... .
T-781C	Full	1	650 3806	... .	... .	... .
	Left	1	... .	650 3815	650 3395	... .
	Right	1	... .	650 3814	650 3394	... .
T-783B	Full	1	650 3811	... .	... .	... .
	Left	1	... .	650 3825	650 3405	... .
	Right	1	... .	650 3824	650 3404	... .
T-783C	Full	1	650 3807	... .	... .	... .
	Left	1	... .	650 3817	650 3397	... .
	Right	1	... .	650 3816	650 3396	... .

SEATS - SOFT TRIM

Trim No.		Per Car	01-10-80 (WFS)	01-10-50-80 (WNRS)	01-10-50-80 (WRS)(WIRS)	01-10-50-80 (WBS)
T-787C	Full	1	650 3808	... .	... .	... .
	Left	1	... .	650 3819	650 3399	... .
	Right	1	... .	650 3818	650 3398	... .
T-789B	Full	1	650 3812	... .	... .	... .
	Left	1	... .	650 3827	650 3407	... .
	Right	1	... .	650 3826	650 3406	... .
T-789C	Full	1	650 3809	... .	... .	... .
	Left	1	... .	650 3821	650 3401	... .
	Right	1	... .	650 3820	650 3400	... .
T-791B	Left	1	... .	650 3843	650 4105	... .
	Right	1	... .	650 3842	650 4104	... .
T-791C	Left	1	... .	650 3829	650 4091	... .
	Right	1	... .	650 3828	650 4090	... .
T-791E	Left	1	... .	... .	... .	650 4355
	Right	1	... .	... .	... .	650 4354
T-791K	Left	1	... .	... .	... .	650 4367
	Right	1	... .	... .	... .	650 4366
T-791L	Left	1	... .	... .	... .	650 4355
	Right	1	... .	... .	... .	650 4354
T-791W	Left	1	... .	... .	... .	650 4377
	Right	1	... .	... .	... .	650 4376
T-793B	Left	1	... .	650 3845	650 4107	... .
	Right	1	... .	650 3844	650 4106	... .
T-793C	Left	1	... .	650 3831	650 4093	... .
	Right	1	... .	650 3830	650 4092	... .
T-793E	Left	1	... .	... .	... .	650 4357
	Right	1	... .	... .	... .	650 4356
T-793K	Left	1	... .	... .	... .	650 4369
	Right	1	... .	... .	... .	650 4368
T-793L	Left	1	... .	... .	... .	650 4357
	Right	1	... .	... .	... .	650 4356
T-793W	Left	1	... .	... .	... .	650 4379
	Right	1	... .	... .	... .	650 4378
T-794C	Left	1	... .	650 3833	650 4095	... .
	Right	1	... .	650 3832	650 4094	... .
T-795B	Left	1	... .	650 3847	650 4109	... .
	Right	1	... .	650 3846	650 4108	... .
T-795C	Left	1	... .	650 3835	650 4097	... .
	Right	1	... .	650 3834	650 4096	... .
T-795E	Left	1	... .	... .	... .	650 4359
	Right	1	... .	... .	... .	650 4358
T-795K	Left	1	... .	... .	... .	650 4371
	Right	1	... .	... .	... .	650 4370
T-795L	Left	1	... .	... .	... .	650 4359
	Right	1	... .	... .	... .	650 4358
T-795W	Left	1	... .	... .	... .	650 4381
	Right	1	... .	... .	... .	650 4380
T-796B	Left	1	... .	650 3849	650 4111	... .
	Right	1	... .	650 3848	650 4110	... .
T-796C	Left	1	... .	650 3837	650 4099	... .
	Right	1	... .	650 3836	650 4098	... .
T-796E	Left	1	... .	... .	... .	650 4361
	Right	1	... .	... .	... .	650 4360
T-796K	Left	1	... .	... .	... .	650 4373
	Right	1	... .	... .	... .	650 4372
T-796L	Left	1	... .	... .	... .	650 4361
	Right	1	... .	... .	... .	650 4360
T-796W	Left	1	... .	... .	... .	650 4383
	Right	1	... .	... .	... .	650 4382

SEATS - SOFT TRIM

Trim No.			Per Car	01-10-80 (WFS)	01-10-50-80 (WNRS)	01-10-50-80 (WRS)(WIRS)	01-10-50-80 (WBS)
T-797C	Left		1	... .	650 3839	650 4101	... .
	Right		1	... .	650 3838	650 4100	... .
T-798B	Left		1	... .	650 3851	650 4113	... .
	Right		1	... .	650 3850	650 4112	... .
T-798E	Left		1	... .	... .	... .	650 4363
	Right		1	... .	... .	... .	650 4362
T-798L	Left		1	... .	... .	... .	650 4363
	Right		1	... .	... .	... .	650 4362
T-799B	Left		1	... .	650 3853	650 4115	... .
	Right		1	... .	650 3852	650 4114	... .
T-799C	Left		1	... .	650 3841	650 4103	... .
	Right		1	... .	650 3840	650 4102	... .
T-799E	Left		1	... .	... .	... .	650 4365
	Right		1	... .	... .	... .	650 4364
T-799K	Left		1	... .	... .	... .	650 4375
	Right		1	... .	... .	... .	650 4374
T-799L	Left		1	... .	... .	... .	650 4365
	Right		1	... .	... .	... .	650 4364
T-799W	Left		1	... .	... .	... .	650 4385
	Right		1	... .	... .	... .	650 4384

1968 - 1969 MODELS

Trim No.			Per Car	01-10-80 (WFS)	01-10-80 (WNRS)	01-10-70-80 (WIRS)(WNBS)	10-30-70-80 (WRBS)
T-828B	Full	(* 29-36)	1	359 8371	... .	... .	... .
		(* 29-37)	1	359 9834	... .	... .	... .
	Left	(* 29-36)	1	... .	359 8391	... .	... .
		(* 29-37)	1	... .	359 9847	... .	... .
	Right	(* 29-36)	1	... .	359 8390	... .	... .
		(* 29-37)	1	... .	359 9846	... .	... .
T-828C	Full	(* 29-36)	1	359 8370	... .	... .	... .
		(* 29-37)	1	359 9833	... .	... .	... .
	Left	(* 29-36)	1	... .	359 8389	... .	... .
		(* 29-37)	1	... .	359 9845	... .	... .
	Right	(* 29-36)	1	... .	359 8388	... .	... .
		(* 29-37)	1	... .	359 9844	... .	... .
T-828F	Full	(* 29-36)	1	359 8372	... .	... .	... .
		(* 29-37)	1	359 9835	... .	... .	... .
	Left	(* 29-36)	1	... .	359 8393	359 8965	... .
		(* 29-37)	1	... .	359 9849	359 9879	... .
	Right	(* 29-36)	1	... .	359 8392	359 8964	... .
		(* 29-37)	1	... .	359 9848	359 9878	... .
T-828M	Left	(* 29-36)	1	... .	... .	359 8447	... .
		(* 29-37)	1	... .	... .	359 9865	... .
	Right	(* 29-36)	1	... .	... .	359 8446	... .
		(* 29-37)	1	... .	... .	359 9864	... .
T-828MR	Left		1	... .	... .	448 6823	... .
	Right		1	... .	... .	448 6822	... .
T-828N	Left	(* 29-36)	1	... .	... .	359 8449	... .
		(* 29-37)	1	... .	... .	359 9867	... .
	Right	(* 29-36)	1	... .	... .	359 8448	... .
		(* 29-37)	1	... .	... .	359 9866	... .
T-828R	Full		1	362 4683	... .	... .	... .
	Left		1	... .	362 4685	... .	... .
	Right		1	... .	362 4684	... .	... .
T-831A	Left	(* 29-40)	1	... .	... .	... .	359 8135
		(* 29-41)	1	... .	... .	... .	362 4379
	Right	(* 29-40)	1	... .	... .	... .	359 8134
		(* 29-41)	1	... .	... .	... .	362 4378

SEATS - SOFT TRIM

Trim No.			Per Car	01-10-80 (WFS)	01-10-80 (WNRS)	01-10-70-80 (WIRS)(WNBS)	10-30-70-80 (WRBS)
T-831D	Left	(* 29-40)	1	... .	... .	... .	359 8133
		(* 29-41)	1	... .	... .	... .	362 4377
	Right	(* 29-40)	1	... .	... .	... .	359 8132
		(* 29-41)	1	... .	... .	... .	362 4376
T-831E	Left	(* 29-40)	1	... .	... .	... .	359 8135
		(* 29-41)	1	... .	... .	... .	362 4379
	Right	(* 29-40)	1	... .	... .	... .	359 8134
		(* 29-41)	1	... .	... .	... .	362 4378
T-831J		(* 29-40)	2	... .	... .	359 9312	... .
		(* 29-41)	2	... .	... .	362 4380	... .
T-832A	Left	(* 29-40)	1	... .	... .	... .	359 8885
		(* 29-41)	1	... .	... .	... .	362 4389
	Right	(* 29-40)	1	... .	... .	... .	359 8884
		(* 29-41)	1	... .	... .	... .	362 4388
T-832D	Left	(* 29-40)	1	... .	... .	... .	359 8883
		(* 29-41)	1	... .	... .	... .	362 4387
	Right	(* 29-40)	1	... .	... .	... .	359 8882
		(* 29-41)	1	... .	... .	... .	362 4386
T-832E	Left	(* 29-40)	1	... .	... .	... .	359 8885
		(* 29-41)	1	... .	... .	... .	362 4389
	Right	(* 29-40)	1	... .	... .	... .	359 8884
		(* 29-41)	1	... .	... .	... .	362 4388
T-835A	Left	(* 29-40)	1	... .	... .	... .	359 8145
		(* 29-41)	1	... .	... .	... .	362 4385
	Right	(* 29-40)	1	... .	... .	... .	359 8144
		(* 29-41)	1	... .	... .	... .	362 4384
T-835D	Left	(* 29-40)	1	... .	... .	... .	359 8881
		(* 29-41)	1	... .	... .	... .	362 4383
	Right	(* 29-40)	1	... .	... .	... .	359 8880
		(* 29-41)	1	... .	... .	... .	362 4382
T-835E	Left	(* 29-40)	1	... .	... .	... .	359 8145
		(* 29-41)	1	... .	... .	... .	362 4385
	Right	(* 29-40)	1	... .	... .	... .	359 8144
		(* 29-41)	1	... .	... .	... .	362 4384
T-838J		(* 29-40)	2	... .	... .	362 3094	... .
		(* 29-41)	2	... .	... .	362 4381	... .
T-843B	Full	(* 29-36)	1	359 8377	... .	... .	... .
		(* 29-37)	1	359 9839	... .	... .	... .
	Left	(* 29-36)	1	... .	359 8403	359 8453	... .
		(* 29-37)	1	... .	359 9857	359 9871	... .
	Right	(* 29-36)	1	... .	359 8402	359 8452	... .
		(* 29-37)	1	... .	359 9856	359 9870	... .
T-843C	Full	(* 29-36)	1	359 8376	... .	... .	... .
		(* 29-37)	1	359 9838	... .	... .	... .
	Left	(* 29-36)	1	... .	359 8401	359 8451	... .
		(* 29-37)	1	... .	359 9855	359 9869	... .
	Right	(* 29-36)	1	... .	359 8400	359 8450	... .
		(* 29-37)	1	... .	359 9854	359 9868	... .
T-844B	Full	(* 29-36)	1	359 8920	... .	... .	... .
		(* 29-37)	1	359 9841	... .	... .	... .
	Left	(* 29-36)	1	... .	359 8407	359 8457	... .
		(* 29-37)	1	... .	359 9861	359 9875	... .
	Right	(* 29-36)	1	... .	359 8406	359 8456	... .
		(* 29-37)	1	... .	359 9860	359 9874	... .
T-844C	Full	(* 29-36)	1	359 8378	... .	... .	... .
		(* 29-37)	1	359 9840	... .	... .	... .
	Left	(* 29-36)	1	... .	359 8405	359 8455	... .
		(* 29-37)	1	... .	359 9859	359 9873	... .
	Right	(* 29-36)	1	... .	359 8404	359 8454	... .
		(* 29-37)	1	... .	359 9858	359 9872	... .

SEATS - SOFT TRIM

Trim No.			Per Car	01-10-80 (WFS)	01-10-80 (WNRS)	01-10-70-80 (WIRS)(WNBS)	10-30-70-80 (WRBS)
T-845B	Full	(* 29-36)	1	359 8921	... .	... .	... .
		(* 29-37)(* 29-38)	1	359 9842	... .	... .	... .
		(* 29-39)	1	362 4015	... .	... .	... .
	Left	(* 29-36)	1	... .	359 8409	359 8459	... .
		(* 29-37)(* 29-38)	1	... .	359 9863	359 9877	... .
		(* 29-39)	1	... .	362 4011	362 4013	... .
	Right	(* 29-36)	1	... .	359 8408	359 8458	... .
		(* 29-37)(* 29-38)	1	... .	359 9862	359 9876	... .
		(* 29-39)	1	... .	362 4010	362 4012	... .
T-845C	Full	(* 29-36)	1	359 8922	... .	... .	... .
		(* 29-37)	1	359 9843	... .	... .	... .
	Left	(* 29-36)	1	... .	359 8925	359 8927	... .
		(* 29-37)	1	... .	359 9883	359 9881	... .
	Right	(* 29-36)	1	... .	359 8924	359 8926	... .
		(* 29-37)	1	... .	359 9882	359 9880	... .
T-848B	Full	(* 29-36)	1	359 8375	... .	... .	... .
		(* 29-37)	1	359 9837	... .	... .	... .
	Left	(* 29-36)	1	... .	359 8399	359 8449	... .
		(* 29-37)	1	... .	359 9853	359 9867	... .
	Right	(* 29-36)	1	... .	359 8398	359 8448	... .
		(* 29-37)	1	... .	359 9852	359 9866	... .
T-848C	Full	(* 29-36)	1	359 8374	... .	... .	... .
		(* 29-37)	1	359 9836	... .	... .	... .
	Left	(* 29-36)	1	... .	359 8397	359 8447	... .
		(* 29-37)	1	... .	359 9851	359 9865	... .
	Right	(* 29-36)	1	... .	359 8396	359 8446	... .
		(* 29-37)	1	... .	359 9850	359 9864	... .
T-848CR	Left	.....	1	... .	... .	448 6823	... .
	Right	.....	1	... .	... .	448 6822	... .
T-851C	Full	(* 29-36)	1	651 0402	... .	... .	... .
		(* 29-37)	1	651 4494	... .	... .	... .
	Left	(* 29-36)	1	... .	651 0411	651 0425	... .
		(* 29-37)	1	... .	651 4503	651 4516	... .
	Right	(* 29-36)	1	... .	651 0410	651 0424	... .
		(* 29-37)	1	... .	651 4502	651 4517	... .
T-851C-L	Full	.....	1	361 3526	... .	... .	... .
T-851F	Full	(* 29-36)	1	651 0401	... .	... .	... .
		(* 29-37)	1	651 4493	... .	... .	... .
	Left	(* 29-36)	1	... .	651 0409	651 0423	... .
		(* 29-37)	1	... .	651 4501	651 4515	... .
	Right	(* 29-36)	1	... .	651 0408	651 0422	... .
		(* 29-37)	1	... .	651 4500	651 4514	... .
T-851V	Full	(* 29-36)	1	651 0405	... .	... .	... .
		(* 29-37)	1	651 4497	... .	... .	... .
	Left	(* 29-36)	1	... .	651 0417	651 0431	... .
		(* 29-37)	1	... .	651 4509	651 4523	... .
	Right	(* 29-36)	1	... .	651 0416	651 0430	... .
		(* 29-37)	1	... .	651 4508	651 4522	... .
T-853C	Full	(* 29-36)	1	651 0403	... .	... .	... .
		(* 29-37)	1	651 4495	... .	... .	... .
	Left	(* 29-36)	1	... .	651 0413	651 0427	... .
		(* 29-37)	1	... .	651 4505	651 4519	... .
	Right	(* 29-36)	1	... .	651 0412	651 0426	... .
		(* 29-37)	1	... .	651 4504	651 4518	... .
T-853C-D	Full	.....	1	361 3518	... .	... .	... .
T-853V	Full	(* 29-36)	1	651 0406	... .	... .	... .
		(* 29-37)	1	651 4498	... .	... .	... .
	Left	(* 29-36)	1	... .	651 0419	651 0433	... .
		(* 29-37)	1	... .	651 4511	651 4525	... .
	Right	(* 29-36)	1	... .	651 0418	651 0432	... .
		(* 29-37)	1	... .	651 4510	651 4524	... .

SEATS - SOFT TRIM

Trim No.			Per Car	01-10-80 (WFS)	01-10-80 (WNRS)	01-10-70-80 (WIRS)(WNBS)	10-30-70-80 (WRBS)
T-855C	Full	(* 29-36)	1	651 0404	... .	... .	... .
		(* 29-37)	1	651 4496	... .	... .	... .
	Left	(* 29-36)	1	... .	651 0415	651 0429	... .
		(* 29-37)	1	... .	651 4507	651 4521	... .
	Right	(* 29-36)	1	... .	651 0414	651 0428	... .
		(* 29-37)	1	... .	651 4506	651 4520	... .
T-855V	Full	(* 29-36)	1	651 0407	... .	... .	... .
		(* 29-37)	1	651 4499	... .	... .	... .
	Left	(* 29-36)	1	... .	651 0421	651 0435	... .
		(* 29-37)	1	... .	651 4513	651 4527	... .
	Right	(* 29-36)	1	... .	651 0420	651 0434	... .
		(* 29-37)	1	... .	651 4512	651 4526	... .
T-871C	Full	(* 29-36)	1	651 0436	... .	... .	... .
		(* 29-37)	1	651 4528	... .	... .	... .
	Left	(* 29-36)	1	... .	651 0445	651 0465	... .
		(* 29-37)	1	... .	651 4539	651 4557	... .
	Right	(* 29-36)	1	... .	651 0444	651 0464	... .
		(* 29-37)	1	... .	651 4538	651 4556	... .
T-871E	Left	(* 29-36)	1	... .	... .	... .	651 0499
		(* 29-37)	1	... .	... .	... .	651 4597
	Right	(* 29-36)	1	... .	... .	... .	651 0498
		(* 29-37)	1	... .	... .	... .	651 4596
T-871K	Left	(* 29-36)	1	... .	... .	651 0513	... .
		(* 29-37)	1	... .	... .	651 4585	... .
	Right	(* 29-36)	1	... .	... .	651 0512	... .
		(* 29-37)	1	... .	... .	651 4584	... .
T-871V	Full	(* 29-36)	1	651 0441	... .	... .	... .
		(* 29-37)	1	651 4533	... .	... .	... .
	Left	(* 29-36)	1	... .	651 0455	651 0475	... .
		(* 29-37)	1	... .	651 4549	651 4567	... .
	Right	(* 29-36)	1	... .	651 0454	651 0474	... .
		(* 29-37)	1	... .	651 4548	651 4566	... .
T-871W	Left	(* 29-36)	1	... .	... .	651 0489	... .
		(* 29-37)	1	... .	... .	651 4575	... .
	Right	(* 29-36)	1	... .	... .	651 0488	... .
		(* 29-37)	1	... .	... .	651 4574	... .
T-873C	Full	(* 29-36)	1	651 0437	... .	... .	... .
		(* 29-37)	1	651 4529	... .	... .	... .
	Left	(* 29-36)	1	... .	651 0447	651 0467	... .
		(* 29-37)	1	... .	651 4541	651 4559	... .
	Right	(* 29-36)	1	... .	651 0446	651 0466	... .
		(* 29-37)	1	... .	651 4540	651 4558	... .
T-873E	Left	(* 29-36)	1	... .	... .	... .	651 0501
		(* 29-37)	1	... .	... .	... .	651 4599
	Right	(* 29-36)	1	... .	... .	... .	651 0500
		(* 29-37)	1	... .	... .	... .	651 4598
T-873K	Left	(* 29-36)	1	... .	... .	651 0515	... .
		(* 29-37)	1	... .	... .	651 4587	... .
	Right	(* 29-36)	1	... .	... .	651 0514	... .
		(* 29-37)	1	... .	... .	651 4586	... .
T-873V	Full	(* 29-36)	1	651 0442	... .	... .	... .
		(* 29-37)	1	651 4534	... .	... .	... .
	Left	(* 29-36)	1	... .	651 0457	651 0477	... .
		(* 29-37)	1	... .	651 4551	651 4569	... .
	Right	(* 29-36)	1	... .	651 0456	651 0476	... .
		(* 29-37)	1	... .	651 4550	651 4568	... .
T-873W	Left	(* 29-36)	1	... .	... .	651 0491	... .
		(* 29-37)	1	... .	... .	651 4577	... .
	Right	(* 29-36)	1	... .	... .	651 0490	... .
		(* 29-37)	1	... .	... .	651 4576	... .

SEATS - SOFT TRIM

Trim No.			Per Car	01-10-80 (WFS)	01-10-80 (WNRS)	01-10-70-80 (WIRS)(WNBS)	10-30-70-80 (WRBS)
T-874C	Full	(* 29-36)	1	651 0438	... .	... .	... .
		(* 29-37)	1	651 4530	... .	... .	... .
	Left	(* 29-36)	1	... .	651 0449	651 0469	... .
		(* 29-37)	1	... .	651 4543	651 4561	... .
	Right	(* 29-36)	1	... .	651 0448	651 0468	... .
		(* 29-37)	1	... .	651 4542	651 4560	... .
T-874C-D	Left		1	... .	... .	361 3515	... .
	Right		1	... .	... .	361 3514	... .
T-874E	Left	(* 29-36)	1	... .	... .	... .	651 0503
		(* 29-37)	1	... .	... .	... .	651 4601
	Right	(* 29-36)	1	... .	... .	... .	651 0502
		(* 29-37)	1	... .	... .	... .	651 4600
T-874K	Left	(* 29-36)	1	... .	... .	651 0517	... .
		(* 29-37)	1	... .	... .	651 4589	... .
	Right	(* 29-36)	1	... .	... .	651 0516	... .
		(* 29-37)	1	... .	... .	651 4588	... .
T-874W	Left	(* 29-36)	1	... .	... .	651 0493	... .
		(* 29-37)	1	... .	... .	651 4579	... .
	Right	(* 29-36)	1	... .	... .	651 0492	... .
		(* 29-37)	1	... .	... .	651 4578	... .
T-875E	Left	(* 29-36)	1	... .	... .	... .	651 0505
		(* 29-37)	1	... .	... .	... .	651 4603
	Right	(* 29-36)	1	... .	... .	... .	651 0504
		(* 29-37)	1	... .	... .	... .	651 4602
T-875K	Left	(* 29-36)	1	... .	... .	651 0519	... .
		(* 29-37)	1	... .	... .	651 4591	... .
	Right	(* 29-36)	1	... .	... .	651 0518	... .
		(* 29-37)	1	... .	... .	651 4590	... .
T-875V	Full	(* 29-36)	1	651 0443	... .	... .	... .
		(* 29-37)	1	651 4535	... .	... .	... .
	Left	(* 29-36)	1	... .	651 0459	651 0481	... .
		(* 29-37)	1	... .	651 4553	651 4571	... .
	Right	(* 29-36)	1	... .	651 0458	651 0480	... .
		(* 29-37)	1	... .	651 4552	651 4570	... .
T-876C	Full	(* 29-36)	1	651 0439	... .	... .	... .
		(* 29-37)	1	651 4531	... .	... .	... .
		(* 29-36)	1	... .	651 0451	651 0471	... .
		(* 29-37)	1	... .	651 4545	651 4563	... .
	Right	(* 29-36)	1	... .	651 0450	651 0470	... .
		(* 29-37)	1	... .	651 4544	651 4562	... .
T-876E	Left	(* 29-36)	1	... .	... .	... .	651 0507
		(* 29-37)	1	... .	... .	... .	651 4605
	Right	(* 29-36)	1	... .	... .	... .	651 0506
		(* 29-37)	1	... .	... .	... .	651 4604
T-876K	Left	(* 29-36)	1	... .	... .	651 0521	... .
		(* 29-37)	1	... .	... .	651 4593	... .
	Right	(* 29-36)	1	... .	... .	651 0520	... .
		(* 29-37)	1	... .	... .	651 4592	... .
T-876V	Full	(* 29-36)	1	651 0528	... .	... .	... .
		(* 29-37)	1	651 4536	... .	... .	... .
	Left	(* 29-36)	1	... .	651 0461	651 0483	... .
		(* 29-37)	1	... .	651 4555	651 4573	... .
	Right	(* 29-36)	1	... .	651 0460	651 0482	... .
		(* 29-37)	1	... .	651 4554	651 4572	... .
T-876W	Left	(* 29-36)	1	... .	... .	651 0495	... .
		(* 29-37)	1	... .	... .	651 4581	... .
	Right	(* 29-36)	1	... .	... .	651 0494	... .
		(* 29-37)	1	... .	... .	651 4580	... .

SEATS - SOFT TRIM

Trim No.			Per Car	01-10-80 (WFS)	01-10-80 (WNRS)	01-10-70-80 (WIRS)(WNBS)	10-30-70-80 (WRBS)
T-879C	Full	(* 29-36)	1	651 0440	... .	... .	... .
		(* 29-37)	1	651 4532	... .	... .	... .
	Left	(* 29-36)	1	... .	651 0453	651 0473	... .
		(* 29-37)	1	... .	651 4547	651 4565	... .
	Right	(* 29-36)	1	... .	651 0452	651 0472	... .
		(* 29-37)	1	... .	651 4546	651 4564	... .
T-879E	Left	(* 29-36)	1	... .	... .	... .	651 0511
		(* 29-37)	1	... .	... .	... .	651 4607
	Right	(* 29-36)	1	... .	... .	... .	651 0510
		(* 29-37)	1	... .	... .	... .	651 4606
T-879K	Left	(* 29-36)	1	... .	... .	651 0523	... .
		(* 29-37)	1	... .	... .	651 4595	... .
	Right	(* 29-36)	1	... .	... .	651 0522	... .
		(* 29-37)	1	... .	... .	651 4594	... .
T-879W	Left	(* 29-36)	1	... .	... .	651 0497	... .
		(* 29-37)	1	... .	... .	651 4583	... .
	Right	(* 29-36)	1	... .	... .	651 0496	... .
		(* 29-37)	1	... .	... .	651 4582	... .
T-881C	Full	(* 29-36)	1	651 0525	... .	... .	... .
		(* 29-37)	1	651 4609	... .	... .	... .
	Left	(* 29-36)	1	... .	651 0533	651 0547	... .
		(* 29-37)	1	... .	651 4613	651 4619	... .
	Right	(* 29-36)	1	... .	651 0532	651 0546	... .
		(* 29-37)	1	... .	651 4612	651 4618	... .
T-881V	Full	(* 29-36)	1	651 0405	... .	... .	... .
		(* 29-37)	1	651 4497	... .	... .	... .
	Left	(* 29-36)	1	... .	651 0417	651 0431	... .
		(* 29-37)	1	... .	651 4509	651 4523	... .
	Right	(* 29-36)	1	... .	651 0416	651 0430	... .
		(* 29-37)	1	... .	651 4508	651 4522	... .
T-883C	Full	(* 29-36)	1	651 0526	... .	... .	... .
		(* 29-37)	1	651 4610	... .	... .	... .
	Left	(* 29-36)	1	... .	651 0535	651 0549	... .
		(* 29-37)	1	... .	651 4615	651 4621	... .
	Right	(* 29-36)	1	... .	651 0534	651 0548	... .
		(* 29-37)	1	... .	651 4614	651 4620	... .
T-883V	Full	(* 29-36)	1	651 0406	... .	... .	... .
		(* 29-37)	1	651 4498	... .	... .	... .
	Left	(* 29-36)	1	... .	651 0419	651 0433	... .
		(* 29-37)	1	... .	651 4511	651 4525	... .
	Right	(* 29-36)	1	... .	651 0418	651 0432	... .
		(* 29-37)	1	... .	651 4510	651 4524	... .
T-885C	Full	(* 29-36)	1	651 0527	... .	... .	... .
		(* 29-37)	1	651 4611	... .	... .	... .
	Left	(* 29-36)	1	... .	651 0537	651 0551	... .
		(* 29-37)	1	... .	651 4617	651 4623	... .
	Right	(* 29-36)	1	... .	651 0536	651 0550	... .
		(* 29-37)	1	... .	651 4616	651 4622	... .
T-885V	Full	(* 29-36)	1	651 0407	... .	... .	... .
		(* 29-37)	1	651 4499	... .	... .	... .
	Left	(* 29-36)	1	... .	651 0421	651 0435	... .
		(* 29-37)	1	... .	651 4513	651 4527	... .
	Right	(* 29-36)	1	... .	651 0420	651 0434	... .
		(* 29-37)	1	... .	651 4512	651 4526	... .
T-891C	Full	(* 29-36)	1	651 2498	... .	... .	... .
		(* 29-37)	1	651 4624	... .	... .	... .
	Left	(* 29-36)	1	... .	651 0561	651 0581	... .
		(* 29-37)	1	... .	651 4635	651 4653	... .
	Right	(* 29-36)	1	... .	651 0560	651 0580	... .
		(* 29-37)	1	... .	651 4634	651 4652	... .

Printed in U.S.A.

SEATS - SOFT TRIM

Trim No.			Per Car	01-10-80 (WFS)	01-10-80 (WNRS)	01-10-70-80 (WIRS)(WNBS)	10-30-70-80 (WRBS)
T-891C-D	Full		1	448 6786	... .	... .	... .
	Left		1	... .	448 6783	448 6791	... .
	Right		1	... .	448 6782	448 6790	... .
T-891E	Left	(* 29-36)	1	... .	... .	... .	651 0615
		(* 29-37)	1	... .	... .	... .	651 4685
	Right	(* 29-36)	1	... .	... .	... .	651 0614
		(* 29-37)	1	... .	... .	... .	651 4684
T-891K	Left	(* 29-36)	1	... .	... .	651 0591	... .
		(* 29-37)	1	... .	... .	651 4663	... .
	Right	(* 29-36)	1	... .	... .	651 0590	... .
		(* 29-37)	1	... .	... .	651 4662	... .
T-891V	Full	(* 29-36)	1	651 2503	... .	... .	... .
		(* 29-37)	1	651 4629	... .	... .	... .
	Left	(* 29-36)	1	... .	651 0571	651 0591	... .
		(* 29-37)	1	... .	651 4645	651 4663	... .
	Right	(* 29-36)	1	... .	651 0570	651 0590	... .
		(* 29-37)	1	... .	651 4644	651 4662	... .
T-891W	Left	(* 29-36)	1	... .	... .	651 0605	... .
		(* 29-37)	1	... .	... .	651 4675	... .
	Right	(* 29-36)	1	... .	... .	651 0604	... .
		(* 29-37)	1	... .	... .	651 4674	... .
T-893C	Full	(* 29-36)	1	651 2499	... .	... .	... .
		(* 29-37)	1	651 4625	... .	... .	... .
	Left	(* 29-36)	1	... .	651 0563	... .	... .
		(* 29-37)	1	... .	651 4637	651 4655	... .
	Right	(* 29-36)	1	... .	651 0562	... .	... .
		(* 29-37)	1	... .	651 4636	651 4654	... .
T-893C-D	Full		1	448 6787	... .	... .	... .
	Left		1	... .	... .	448 6793	... .
	Right		1	... .	... .	448 6792	... .
T-893E	Left	(* 29-36)	1	... .	... .	... .	651 0617
		(* 29-37)	1	... .	... .	... .	651 4687
	Right	(* 29-36)	1	... .	... .	... .	651 0616
		(* 29-37)	1	... .	... .	... .	651 4686
T-893K	Left	(* 29-36)	1	... .	... .	651 0593	... .
		(* 29-37)	1	... .	... .	651 4665	... .
	Right	(* 29-36)	1	... .	... .	651 0592	... .
		(* 29-37)	1	... .	... .	651 4664	... .
T-893V	Full	(* 29-36)	1	651 2504	... .	... .	... .
		(* 29-37)	1	651 4630	... .	... .	... .
	Left	(* 29-36)	1	... .	651 0573	651 0593	... .
		(* 29-37)	1	... .	651 4647	651 4665	... .
	Right	(* 29-36)	1	... .	651 0572	651 0592	... .
		(* 29-37)	1	... .	651 4646	651 4664	... .
T-893W	Left	(* 29-36)	1	... .	... .	651 0607	... .
		(* 29-37)	1	... .	... .	651 4677	... .
	Right	(* 29-36)	1	... .	... .	651 0606	... .
		(* 29-37)	1	... .	... .	651 4676	... .
T-894C	Full	(* 29-36)	1	651 2500	... .	... .	... .
		(* 29-37)	1	651 4626	... .	... .	... .
	Left	(* 29-36)	1	... .	651 0565	651 0585	... .
		(* 29-37)	1	... .	651 4639	651 4657	... .
	Right	(* 29-36)	1	... .	651 0564	651 0584	... .
		(* 29-37)	1	... .	651 4638	651 4656	... .
T-894C-D	Left		1	... .	... .	448 6795	... .
	Right		1	... .	... .	448 6794	... .
T-894E	Left	(* 29-36)	1	... .	... .	... .	651 0619
		(* 29-37)	1	... .	... .	... .	651 4689
	Right	(* 29-36)	1	... .	... .	... .	651 0618
		(* 29-37)	1	... .	... .	... .	651 4688

SEATS - SOFT TRIM

Trim No.			Per Car	01-10-80 (WFS)	01-10-80 (WNRS)	01-10-70-80 (WIRS)(WNBS)	10-30-70-80 (WRBS)
T-894K	Left	(* 29-36)	1	... .	... .	651 0595	... .
		(* 29-37)	1	... .	... .	651 4667	... .
	Right	(* 29-36)	1	... .	... .	651 0594	... .
		(* 29-37)	1	... .	... .	651 4666	... .
T-894W	Left	(* 29-36)	1	... .	... .	651 0609	... .
		(* 29-37)	1	... .	... .	651 4679	... .
	Right	(* 29-36)	1	... .	... .	651 0608	... .
		(* 29-37)	1	... .	... .	651 4678	... .
T-895E	Left	(* 29-36)	1	... .	... .	... .	651 0621
		(* 29-37)	1	... .	... .	... .	651 4691
	Right	(* 29-36)	1	... .	... .	... .	651 0620
		(* 29-37)	1	... .	... .	... .	651 4690
T-895K	Left	(* 29-36)	1	... .	... .	651 0597	... .
		(* 29-37)	1	... .	... .	651 4669	... .
	Right	(* 29-36)	1	... .	... .	651 0596	... .
		(* 29-37)	1	... .	... .	651 4668	... .
T-895V	Full	(* 29-36)	1	651 2505	... .	... .	... .
		(* 29-37)	1	651 4631	... .	... .	... .
	Left	(* 29-36)	1	... .	651 0575	651 0597	... .
		(* 29-37)	1	... .	651 4649	651 4669	... .
	Right	(* 29-36)	1	... .	651 0574	651 0596	... .
		(* 29-37)	1	... .	651 4648	651 4668	... .
T-896C	Full	(* 29-36)	1	651 2501	... .	... .	... .
		(* 29-37)	1	651 4627	... .	... .	... .
	Left	(* 29-36)	1	... .	651 0567	651 0587	... .
		(* 29-37)	1	... .	651 4641	651 4659	... .
	Right	(* 29-36)	1	... .	651 0566	651 0586	... .
		(* 29-37)	1	... .	651 4640	651 4658	... .
T-896C-D	Full	.....	1	448 6788	... .	... .	... .
	Left	.....	1	... .	448 6785	448 6797	... .
	Right	.....	1	... .	448 6784	448 6796	... .
T-896E	Left	(* 29-36)	1	... .	... .	... .	651 0623
		(* 29-37)	1	... .	... .	... .	651 4693
	Right	(* 29-36)	1	... .	... .	... .	651 0622
		(* 29-37)	1	... .	... .	... .	651 4692
T-896K	Left	(* 29-36)	1	... .	... .	651 0599	... .
		(* 29-37)	1	... .	... .	651 4671	... .
	Right	(* 29-36)	1	... .	... .	651 0598	... .
		(* 29-37)	1	... .	... .	651 4670	... .
T-896V	Full	(* 29-36)	1	651 2506	... .	... .	... .
		(* 29-37)	1	651 4632	... .	... .	... .
	Left	(* 29-36)	1	... .	651 2507	651 0599	... .
		(* 29-37)	1	... .	651 4651	651 4671	... .
	Right	(* 29-36)	1	... .	651 2506	651 0598	... .
		(* 29-37)	1	... .	651 4650	651 4670	... .
T-896W	Left	(* 29-36)	1	... .	... .	651 0611	... .
		(* 29-37)	1	... .	... .	651 4681	... .
	Right	(* 29-36)	1	... .	... .	651 0610	... .
		(* 29-37)	1	... .	... .	651 4680	... .
T-899C	Full	(* 29-36)	1	651 2502	... .	... .	... .
		(* 29-37)	1	651 4628	... .	... .	... .
	Left	(* 29-36)	1	... .	651 0569	651 0589	... .
		(* 29-37)	1	... .	651 4643	651 4661	... .
	Right	(* 29-36)	1	... .	651 0568	651 0588	... .
		(* 29-37)	1	... .	651 4642	651 4660	... .
T-899C-D	Left	.....	1	... .	... .	448 6799	... .
	Right	.....	1	... .	... .	448 6798	... .
T-899E	Left	(* 29-36)	1	... .	... .	... .	651 0627
		(* 29-37)	1	... .	... .	... .	651 4695
	Right	(* 29-36)	1	... .	... .	... .	651 0626
		(* 29-37)	1	... .	... .	... .	651 4694

SEATS - SOFT TRIM

Trim No.			Per Car	01-10-80 (WFS)	01-10-80 (WNRS)	01-10-70-80 (WIRS)(WNBS)	10-30-70-80 (WRBS)
T-899K	Left	(* 29-36)	1	... .	... .	651 0603	... .
		(* 29-37)	1	... .	... .	651 4673	... .
	Right	(* 29-36)	1	... .	... .	651 0602	... .
		(* 29-37)	1	... .	... .	651 4672	... .
T-899W	Left	(* 29-36)	1	... .	... .	651 0613	... .
		(* 29-37)	1	... .	... .	651 4683	... .
		(* 29-36)	1	... .	... .	651 0612	... .
		(* 29-37)	1	... .	... .	651 4682	... .
T-000	Left		1	... .	448 9281	... .	... .
	Right		1	... .	448 9280	... .	... .
T-921F			1	363 5956	... .	... .	... .
T-921G	(05)		1	363 5091	... .	... .	... .
T-921G	(08)		1	363 5094	... .	... .	... .
T-923A	Full		1	363 0201	... .	... .	... .
	Left		1	... .	363 0209	... .	... .
	Right		1	... .	363 0208	... .	... .
T-923B	Full		1	363 0206	... .	... .	... .
	Left		1	... .	363 0211	... .	... .
	Right		1	... .	363 0210	... .	... .
T-923C	Left		1	... .	... .	363 0213	... .
	Right		1	... .	... .	363 0212	... .
T-923D	Left		1	... .	... .	363 0215	... .
	Right		1	... .	... .	363 0214	... .
T-928A	Full		1	363 0196	... .	... .	... .
	Left		1	... .	363 0193	... .	... .
	Right		1	... .	363 0192	... .	... .
T-928B	Full		1	362 3218	... .	... .	... .
	Left		1	... .	362 3229	... .	... .
	Right		1	... .	362 3228	... .	... .
T-928C	Left		1	... .	... .	363 0195	... .
	Right		1	... .	... .	363 0194	... .
T-928D	Left		1	... .	... .	362 3249	... .
	Right		1	... .	... .	362 3248	... .
T-928G	Full		1	362 3219	... .	... .	... .
	Left		1	... .	362 3231	... .	... .
	Right		1	... .	362 3230	... .	... .
T-928H	Left		1	... .	... .	362 3245	... .
	Right		1	... .	... .	362 3244	... .
T-928R	Full		1	362 3217	... .	... .	... .
	Left		1	... .	362 3227	... .	... .
	Right		1	... .	362 3226	... .	... .
T-928S	Left		1	... .	... .	362 3247	... .
	Right		1	... .	... .	362 3246	... .
T-931F	Left		1	... .	... .	... .	363 0575
	Right		1	... .	... .	... .	363 0574
T-931L	Left		1	... .	... .	... .	362 4583
	Right		1	... .	... .	... .	362 4582
T-932F	Left		1	... .	... .	... .	362 4581
	Right		1	... .	... .	... .	362 4580
T-935F	Left		1	... .	... .	... .	363 0577
	Right		1	... .	... .	... .	363 0576
T-936F	Left		1	... .	... .	... .	362 4577
	Right		1	... .	... .	... .	362 4576
T-936L	Left		1	... .	... .	... .	362 4579
	Right		1	... .	... .	... .	362 4578
T-941A	Full		1	362 3224	... .	... .	... .
	Left		1	... .	362 3241	... .	... .
	Right		1	... .	362 3240	... .	... .

SEATS - SOFT TRIM

Trim No.		Per Car	01-10-80 (WFS)	01-10-80 (WNRS)	01-10-70-80 (WIRS)(WNBS)	10-30-70-80 (WRBS)
T-941B	Full	1	362 3220	... .	... .	... .
	Left	1	... .	362 3233	... .	... .
	Right	1	... .	362 3232	... .	... .
T-941C	Left	1	... .	... .	362 3259	... .
	Right	1	... .	... .	362 3258	... .
T-941D	Left	1	... .	... .	362 3251	... .
	Right	1	... .	... .	362 3250	... .
T-941K	Full	1	448 6891	... .	... .	... .
T-943A	Full	1	362 3221	... .	... .	... .
	Left	1	... .	362 3235	... .	... .
	Right	1	... .	362 3234	... .	... .
T-943B	Full	1	362 4441	... .	... .	... .
	Left	1	... .	362 4449	... .	... .
	Right	1	... .	362 4448	... .	... .
T-943C	Left	1	... .	... .	362 3253	... .
	Right	1	... .	... .	362 3252	... .
T-943D	Left	1	... .	... .	362 4505	... .
	Right	1	... .	... .	362 4504	... .
T-944A	Full	1	362 3222	... .	... .	... .
	Left	1	... .	362 3237	... .	... .
	Right	1	... .	362 3236	... .	... .
T-944B	Full	1	362 4512	... .	... .	... .
T-944C	Left	1	... .	... .	362 3255	... .
	Right	1	... .	... .	362 3254	... .
T-944D	Left	1	... .	... .	362 4507	... .
	Right	1	... .	... .	362 4506	... .
T-945A	Left	1	... .	362 4511	... .	... .
	Right	1	... .	362 4510	... .	... .
T-945B	Full	1	362 3223	... .	... .	... .
	Left	1	... .	362 3239	... .	... .
	Right	1	... .	362 3238	... .	... .
T-945C	Left	1	... .	... .	362 4509	... .
	Right	1	... .	... .	362 4508	... .
T-945D	Left	1	... .	... .	362 3257	... .
	Right	1	... .	... .	362 3256	... .
T-951B	Full	1	651 9976	... .	... .	... .
	Left	1	... .	651 9989	... .	... .
	Right	1	... .	651 9988	... .	... .
T-951D	Left	1	... .	... .	652 0003	... .
	Right	1	... .	... .	652 0002	... .
T-951G	Full	1	651 9972	... .	... .	... .
	Left	1	... .	651 9981	... .	... .
	Right	1	... .	651 9980	... .	... .
T-951H	Left	1	... .	... .	651 9995	... .
	Right	1	... .	... .	651 9994	... .
T-953A	Full	1	651 9973	... .	... .	... .
	Left	1	... .	651 9983	... .	... .
	Right	1	... .	651 9982	... .	... .
T-953B	Full	1	652 1975	... .	... .	... .
	Left	1	... .	652 1977	... .	... .
	Right	1	... .	652 1976	... .	... .
T-953C	Left	1	... .	... .	651 9997	... .
	Right	1	... .	... .	651 9996	... .
T-953D	Left	1	... .	... .	652 1981	... .
	Right	1	... .	... .	652 1980	... .
T-956A	Full	1	651 9974	... .	... .	... .
	Left	1	... .	651 9985	... .	... .
	Right	1	... .	651 9984	... .	... .

SEATS - SOFT TRIM

Trim No.			Per Car	01-10-80 (WFS)	01-10-80 (WNRS)	01-10-70-80 (WIRS)(WNBS)	10-30-70-80 (WRBS)
T-956B	Full		1	651 9978			
	Left		1		651 9993		
	Right		1		651 9992		
T-956C	Left		1			651 9999	
	Right		1			651 9998	
T-956D	Left		1			652 0007	
	Right		1			652 0006	
T-957A	Full		1	651 9975			
	Left		1		651 9987		
	Right		1		651 9986		
T-957B	Full		1	652 1974			
	Left		1		652 1979		
	Right		1		652 1978		
T-957C	Left		1			652 0001	
	Right		1			652 0000	
T-957D	Left		1			652 1983	
	Right		1			652 1982	
T-961E	Left	(* 29-103)	1				362 3335
		(* 29-104)	1				363 5333
	Right	(* 29-103)	1				362 3334
		(* 29-104)	1				363 5332
T-961F	Left		1				362 3337
	Right		1				362 3336
T-961J	Left		1			362 3341	
	Right		1			362 3340	
T-961K	Left		1			448 6895	
	Right		1			448 6896	
T-962E	Left	(* 29-103)	1				363 0331
		(* 29-104)	1				363 5367
	Right	(* 29-103)	1				363 0330
		(* 29-104)	1				363 5366
T-962F	Left		1				363 0329
	Right		1				363 0328
T-963E	Left		1				362 3353
	Right		1				362 3352
T-963F	Left		1				362 3355
	Right		1				362 3354
T-965E	Left		1				362 4585
	Right		1				362 4584
T-965F	Left		1				362 3349
	Right		1				362 3348
T-966E	Left		1				362 3343
	Right		1				362 3342
T-966F	Left		1				362 3345
	Right		1				362 3344
T-968J	Left		1			362 3357	
	Right		1			362 3356	
T-972A	Full		1	652 1994			
	Left		1		652 1991		
	Right		1		652 1990		
T-972B	Full		1	652 1995			
	Left		1		652 1993		
	Right		1		652 1992		
T-972C	Left		1			652 1985	
	Right		1			652 1984	
T-972D	Left		1			652 1987	
	Right		1			652 1986	
T-972E	Left		1				652 1999
	Right		1				652 1998
T-972F	Left		1				652 2003
	Right		1				652 2002

SEATS - SOFT TRIM

Trim No.		Per Car	01-10-80 (WFS)	01-10-80 (WNRS)	01-10-70-80 (WIRS)(WNBS)	10-30-70-80 (WRBS)
T-973A	Full	1	652 1405	... .	... .	... .
	Left	1	... .	652 1417	... .	... .
	Right	1	... .	652 1416	... .	... .
T-973B	Full	1	652 1409	... .	... .	... .
	Left	1	... .	652 1425	... .	... .
	Right	1	... .	652 1424	... .	... .
T-973C	Left	1	... .	... .	652 0011	... .
	Right	1	... .	... .	652 0010	... .
T-973D	Left	1	... .	... .	652 0019	... .
	Right	1	... .	... .	652 0018	... .
T-973E	Left	1	... .	... .	... .	652 2001
	Right	1	... .	... .	... .	652 2000
T-975B	Left	1	... .	652 1427	... .	... .
	Right	1	... .	652 1426	... .	... .
T-975D	Left	1	... .	... .	652 0021	... .
	Right	1	... .	... .	652 0020	... .
T-975F	Left	1	... .	... .	... .	652 0033
	Right	1	... .	... .	... .	652 0032
T-976A	Full	1	652 1406	... .	... .	... .
	Left	1	... .	652 1419	... .	... .
	Right	1	... .	652 1418	... .	... .
T-976B	Full	1	652 1411	... .	... .	... .
	Left	1	... .	652 1429	... .	... .
	Right	1	... .	652 1428	... .	... .
T-976C	Left	1	... .	... .	652 0013	... .
	Right	1	... .	... .	652 0012	... .
T-976D	Left	1	... .	... .	652 0023	... .
	Right	1	... .	... .	652 0022	... .
T-977A	Full	1	652 1407	... .	... .	... .
	Left	1	... .	652 1421	... .	... .
	Right	1	... .	652 1420	... .	... .
T-977B	Full	1	652 1996	... .	... .	... .
T-977C	Left	1	... .	... .	652 0015	... .
	Right	1	... .	... .	652 0014	... .
T-977D	Left	1	... .	... .	652 1989	... .
	Right	1	... .	... .	652 1988	... .
T-979B	Left	1	... .	... .	652 1433	... .
	Right	1	... .	... .	652 1432	... .
T-979D	Left	1	... .	... .	652 0025	... .
	Right	1	... .	... .	652 0024	... .
T-979F	Left	1	... .	... .	... .	652 0037
	Right	1	... .	... .	... .	652 0036
T-981B	Full	1	651 9976	... .	... .	... .
T-981D	Left	1	... .	... .	652 0003	... .
	Right	1	... .	... .	652 0002	... .
T-983A	Full	1	652 0040	... .	... .	... .
T-983C	Left	1	... .	... .	652 0051	... .
	Right	1	... .	... .	652 0050	... .
T-983D	Left	1	... .	... .	652 1981	... .
	Right	1	... .	... .	652 1980	... .
T-986A	Full	1	652 0041	... .	... .	... .
T-986C	Left	1	... .	... .	652 0053	... .
	Right	1	... .	... .	652 0052	... .
T-986D	Left	1	... .	... .	652 0007	... .
	Right	1	... .	... .	652 0006	... .
T-987A	Full	1	652 0042	... .	... .	... .
T-987C	Left	1	... .	... .	652 0055	... .
	Right	1	... .	... .	652 0054	... .
T-987D	Left	1	... .	... .	652 1983	... .
	Right	1	... .	... .	652 1982	... .

Printed in U.S.A.

SEATS - SOFT TRIM

Trim No.		Per Car	01-10-80 (WFS)	01-10-80 (WNRS)	01-10-70-80 (WIRS)(WNBS)	10-30-70-80 (WRBS)
T-991A	Full	1	652 0056	... .	... .	... .
	Left	1	... .	652 0067	... .	... .
	Right	1	... .	652 0066	... .	... .
T-991B	Full	1	652 0060	... .	... .	... .
	Left	1	... .	652 0075	... .	... .
	Right	1	... .	652 0074	... .	... .
T-991C	Left	1	... .	... .	652 0087	... .
	Right	1	... .	... .	652 0086	... .
T-991D	Left	1	... .	... .	652 0095	... .
	Right	1	... .	... .	652 0094	... .
T-991F	Left	1	... .	... .	... .	652 0127
	Right	1	... .	... .	... .	652 0126
T-991N	Left	1	... .	... .	652 0115	... .
	Right	1	... .	... .	652 0114	... .
T-992E	Left	1	... .	... .	... .	652 2015
	Right	1	... .	... .	... .	652 2014
T-992M	Left	1	... .	... .	652 2009	... .
	Right	1	... .	... .	652 2008	... .
T-992V	Left	1	... .	... .	652 2011	... .
	Right	1	... .	... .	652 2010	... .
T-993A	Full	1	652 0057	... .	... .	... .
	Left	1	... .	652 0069	... .	... .
	Right	1	... .	652 0068	... .	... .
T-993B	Full	1	652 0061	... .	... .	... .
	Left	1	... .	652 0077	... .	... .
	Right	1	... .	652 0076	... .	... .
T-993C	Left	1	... .	... .	652 0089	... .
	Right	1	... .	... .	652 0088	... .
T-993D	Left	1	... .	... .	652 0097	... .
	Right	1	... .	... .	652 0096	... .
T-993E	Left	1	... .	... .	... .	652 2017
	Right	1	... .	... .	... .	652 2016
T-993F	Left	1	... .	... .	... .	652 0129
	Right	1	... .	... .	... .	652 0128
T-993M	Left	1	... .	... .	652 0109	... .
	Right	1	... .	... .	652 0108	... .
T-993N	Left	1	... .	... .	652 0117	... .
	Right	1	... .	... .	652 0116	... .
T-993V	Left	1	... .	... .	652 2013	... .
	Right	1	... .	... .	652 2012	... .
T-995B	Left	1	... .	652 0079	... .	... .
	Right	1	... .	652 0078	... .	... .
T-995D	Left	1	... .	... .	652 0099	... .
	Right	1	... .	... .	652 0098	... .
T-995F	Left	1	... .	... .	... .	652 0131
	Right	1	... .	... .	... .	652 0130
T-995N	Left	1	... .	... .	652 0119	... .
	Right	1	... .	... .	652 0118	... .
T-996A	Full	1	652 0058	... .	... .	... .
	Left	1	... .	652 0071	... .	... .
	Right	1	... .	652 0070	... .	... .
T-996B	Full	1	652 0063	... .	... .	... .
	Left	1	... .	652 0081	... .	... .
	Right	1	... .	652 0080	... .	... .
T-996C	Left	1	... .	... .	652 0091	... .
	Right	1	... .	... .	652 0090	... .

SEATS - SOFT TRIM

Trim No.		Per Car	01-10-80 (WFS)	01-10-80 (WNRS)	01-10-70-80 (WIRS)(WNBS)	10-30-70-80 (WRBS)
T-996D	Left	1	... .	... .	652 0101	... .
	Right	1	... .	... .	652 0100	... .
T-996E	Left	1	... .	... .	... .	652 2019
	Right	1	... .	... .	... .	652 2018
T-996F	Left	1	... .	... .	... .	652 0133
	Right	1	... .	... .	... .	652 0132
T-996M	Left	1	... .	... .	652 0111	... .
	Right	1	... .	... .	652 0110	... .
T-996N	Left	1	... .	... .	652 0121	... .
	Right	1	652 0059	... .	652 0120	... .
T-997A	Full	1	... .	652 0073	... .	... .
	Left	1	... .	652 0072	... .	... .
	Right	1	652 1997	... .	... .	... .
T-997B	Full	1	... .	652 2005	... .	... .
	Left	1	... .	652 2004	... .	... .
	Right	1	... .	... .	652 0093	... .
T-997C	Left	1	... .	... .	652 0092	... .
	Right	1	... .	... .	652 2007	... .
T-997D	Left	1	... .	... .	652 2006	... .
	Right	1	... .	... .	... .	652 2021
T-997E	Left	1	... .	... .	... .	652 2020
	Right	1	... .	... .	652 0113	... .
T-997M	Left	1	... .	... .	652 0112	... .
	Right	1	... .	... .	... .	652 0135
T-999F	Left	1	... .	... .	... .	652 0134
	Right	1	... .	... .	652 0123	... .
T-999N	Left	1	... .	... .	652 0122	... .
	Right					

1970 MODELS

Trim No.		Per Car	01-10-30-40 -70-80
T-001B	Left	1	364 1269
	Right	1	364 1268
T-008B	Left	1	364 1295
	Right	1	364 1294
T-011B	Left	1	363 5563
	Right	1	363 5562
T-011F		2	364 1452
T-011FD		2	363 0448
T-013B	Left	1	363 5565
	Right	1	363 5564
T-013F		2	364 1453
T-013FD		2	363 0454
T-014B	Left	1	364 1297
	Right	1	364 1296
T-014F		2	364 1451
T-014FD		2	363 0568
T-015B	Left	1	363 5549
	Right	1	363 5548
T-015F		2	364 1450
T-015FD		2	363 0456
T-021A	Full	1	363 0532
	Left	1	363 0521
	Right	1	363 0520
T-021B	Full	1	363 0434
	Left	1	363 0381
	Right	1	363 0380
T-021G	Full	1	363 0435
	Left	1	363 0383
	Right	1	363 0382

SEATS - SOFT TRIM

Trim No.		Per Car	01-10-30-40 -70-80
T-023A	Full	1	363 0533
	Left	1	363 0523
	Right	1	363 0522
T-023B	Full	1	363 0534
	Left	1	363 0525
	Right	1	363 0524
T-024A	Full	1	363 5839
	Left	1	363 5847
	Right	1	363 5846
T-024B	Full	1	363 5840
	Left	1	363 5849
	Right	1	363 5848
T-025A	Full	1	363 5841
	Left	1	363 5851
	Right	1	363 5850
T-025B	Full	1	363 5842
	Left	1	363 5853
	Right	1	363 5852
T-031F		2	363 0448
T-031L		2	363 0874
T-033F		2	363 0454
T-035F		2	363 0456
T-035L		2	363 5492
T-036F		2	363 0462
T-036L		2	363 0876
T-041A	Full	1	363 0436
	Left	1	363 0385
	Right	1	363 0384
T-041B	Full	1	363 0437
	Left	1	363 0387
	Right	1	363 0386
T-041C	Left	1	363 0403
	Right	1	363 0402
T-041D	Left	1	363 0405
	Right	1	363 0404
T-043A	Full	1	363 0438
	Left	1	363 0389
	Right	1	363 0388
T-043B	Full	1	363 0439
	Left	1	363 0391
	Right	1	363 0390
T-043C	Left	1	363 0407
	Right	1	363 0406
T-043D	Left	1	363 0409
	Right	1	363 0408
T-043V	Left	1	363 5937
	Right	1	363 5936
T-044A	Full	1	363 0440
	Left	1	363 0393
	Right	1	363 0392
T-044B	Full	1	363 5838
	Left	1	363 5845
	Right	1	363 5844
T-044C	Left	1	363 0411
	Right	1	363 0410
T-044D	Left	1	363 5855
	Right	1	363 5854
T-044V	Left	1	363 5939
	Right	1	363 5938

SEATS - SOFT TRIM

Trim No.		Per Car	01-10-30-40 -70-80
T-045A	Full	1	363 0806
	Left	1	363 0803
	Right	1	363 0802
T-045C	Left	1	363 0805
	Right	1	363 0804
T-051B	Full	1	652 5298
	Left	1	652 5311
	Right	1	652 5310
T-051D	Left	1	652 5327
	Right	1	652 5326
T-051F		2	652 5382
T-051G	Full	1	652 5294
	Left	1	652 5303
	Right	1	652 5302
T-051H	Left	1	652 5319
	Right	1	652 5318
T-051P		1	448 8481
T-051V		1	448 8482
T-053A	Full	1	652 5295
	Left	1	652 5305
	Right	1	652 5304
T-053A-D	Full	1	448 9336
T-053B	Full	1	652 5299
	Left	1	652 5313
	Right	1	652 5312
T-053C	Left	1	652 5321
	Right	1	652 5320
T-053D	Left	1	652 5329
	Right	1	652 5328
T-053F		2	652 6104
T-054A	Full	1	652 5296
	Left	1	652 5307
	Right	1	652 5306
T-054B	Full	1	652 5300
	Left	1	652 5315
	Right	1	652 5314
T-054B-D	Full	1	448 9337
T-054C	Left	1	652 5323
	Right	1	652 5322
T-054D	Left	1	652 5331
	Right	1	652 5330
T-056A	Full	1	652 5297
	Left	1	652 5309
	Right	1	652 5308
T-056B	Full	1	652 5301
	Left	1	652 5317
	Right	1	652 5316
T-056C	Left	1	652 5325
	Right	1	652 5324
T-056D	Left	1	652 5333
	Right	1	652 5332
T-056F		2	652 5386
T-061E		2	363 0450
T-061F		2	363 0448
T-061J		2	363 0444
T-061L		2	363 0874
T-063E		2	363 0452
T-063F		2	363 0454
T-063J		2	363 0696

Printed in U.S.A.

SEATS - SOFT TRIM

Trim No.		Per Car	01-10-30-40 -70-80
T-064E		2	363 0566
T-064F		2	363 0568
T-064J		2	363 0718
T-064JC		2	363 0568
T-065E		2	363 0458
T-065F		2	363 0456
T-065J		2	363 0698
T-065L		2	363 5492
T-066E		2	363 0460
T-066F		2	363 0462
T-066J		2	363 0720
T-066L		2	363 0876
T-071A	Full	1	652 5352
	Left	1	652 5361
	Right	1	652 5360
T-071B	Full	1	652 5356
	Left	1	652 5369
	Right	1	652 5368
T-071C	Left	1	652 5335
	Right	1	652 5334
T-071D	Left	1	652 5343
	Right	1	652 5342
T-071E		2	652 5378
T-071F		2	652 5382
T-071S	Left	1	652 8213
	Right	1	652 8212
T-073A	Full	1	652 5353
	Left	1	652 5363
	Right	1	652 5362
T-073B	Full	1	652 5357
	Left	1	652 5371
	Right	1	652 5370
T-073C	Left	1	652 5337
	Right	1	652 5336
T-073D	Left	1	652 5345
	Right	1	652 5344
T-073E		2	652 5380
T-073F		2	652 6104
T-073S	Left	1	652 8215
	Right	1	652 8214
T-074A	Full	1	652 5354
	Left	1	652 5365
	Right	1	652 5364
T-074B	Full	1	652 5358
	Left	1	652 5373
	Right	1	652 5372
T-074C	Left	1	652 5339
	Right	1	652 5338
T-074D	Left	1	652 5347
	Right	1	652 5346
T-074S	Left	1	652 8217
	Right	1	652 8216
T-075B	Full	1	652 6102
	Left	1	652 5375
	Right	1	652 5374
T-075D	Left	1	652 5349
	Right	1	652 5348
T-075F		2	652 5384

Printed in U.S.A.

SEATS - SOFT TRIM

Trim No.		Per Car	01-10-30-40 -70-80
T-076A	Full	1	652 5355
	Left	1	652 5367
	Right	1	652 5366
T-076B	Full	1	652 5359
	Left	1	652 5377
	Right	1	652 5376
T-076C	Left	1	652 5341
	Right	1	652 5340
T-076D	Left	1	652 5351
	Right	1	652 5350
T-076F		2	652 5386
T-076S	Left	1	652 8219
	Right	1	652 8218
T-081B	Full	1	652 5391
T-081D	Left	1	652 5399
	Right	1	652 5398
T-083A	Full	1	652 5388
T-083C	Left	1	652 5393
	Right	1	652 5392
T-083D	Left	1	652 5401
	Right	1	652 5400
T-084A	Full	1	652 5389
T-084C	Left	1	652 5395
	Right	1	652 5394
T-084D	Left	1	652 5403
	Right	1	652 5402
T-086A	Full	1	652 5390
T-086C	Left	1	652 5397
	Right	1	652 5396
T-086D	Left	1	652 5405
	Right	1	652 5404
T-091A	Full	1	652 5406
	Left	1	652 5415
	Right	1	652 5414
T-091B	Full	1	652 5410
	Left	1	652 5423
	Right	1	652 5422
T-091C	Left	1	652 5433
	Right	1	652 5432
T-091D	Left	1	652 5441
	Right	1	652 5440
T-091E		2	652 5472
T-091F		2	652 5480
T-091M	Left	1	652 5451
	Right	1	652 5450
T-091N	Left	1	652 5459
	Right	1	652 5458
T-091S	Left	1	652 8213
	Right	1	652 8212
T-091V	Left	1	652 5469
	Right	1	652 5468
T-093A	Full	1	652 5407
	Left	1	652 5417
	Right	1	652 5416
T-093B	Full	1	652 5411
	Left	1	652 5425
	Richt	1	652 5424

SEATS - SOFT TRIM

Trim No.		Per Car	01-10-30-40 -70-80
T-093C	Left	1	652 5435
	Right	1	652 5434
T-093D	Left	1	652 5443
	Right	1	652 5442
T-093E		2	652 5474
T-093F		2	652 5482
T-093M	Left	1	652 5453
	Right	1	652 5452
T-093N	Left	1	652 5461
	Right	1	652 5460
T-093S	Left	1	652 8215
	Right	1	652 8214
T-093V	Left	1	652 5471
	Right	1	652 5470
T-094A	Full	1	652 5408
	Left	1	652 5419
	Right	1	652 5418
T-094B	Full	1	652 5412
	Left	1	652 5427
	Right	1	652 5426
T-094C	Left	1	652 5437
	Right	1	652 5436
T-094D	Left	1	652 5445
	Right	1	652 5444
T-094E		2	652 5476
T-094F		2	652 5484
T-094M	Left	1	652 5455
	Right	1	652 5454
T-094N	Right	1	652 5463
	Right	1	652 5462
T-094S	Left	1	652 8217
	Right	1	652 8216
T-095B	Full	1	652 6103
	Left	1	652 5429
	Right	1	652 5428
T-095D	Left	1	652 5447
	Right	1	652 5446
T-095F		2	652 5486
T-095N	Left	1	652 5465
	Right	1	652 5464
T-096A	Full	1	652 5409
	Left	1	652 5421
	Right	1	652 5420
T-096B	Full	1	652 5413
	Left	1	652 5431
	Right	1	652 5430
T-096C	Left	1	652 5439
	Right	1	652 5438
T-096D	Left	1	652 5449
	Right	1	652 5448
T-096E		2	652 5478
T-096F		2	652 5488
T-096M	Left	1	652 5457
	Right	1	652 5456
T-096N	Left	1	652 5467
	Right	1	652 5466
T-096S	Left	1	652 8219
	Right	1	652 8218

Printed in U.S.A.

SEATS - SOFT TRIM

1971 MODELS

Trim No.		Per Car	01-10-40 -70-80
T-101B	Left	1	364 1667
	Right	1	364 1666
T-103A	Left	1	365 1915
	Right	1	365 1914
T-103B	Left	1	364 1669
	Right	1	364 1668
T-104A	Left	1	365 1917
	Right	1	365 1916
T-108B	Left	1	365 1435
	Right	1	365 1434
T-111B	Left	1	364 1671
	Right	1	364 1670
T-111S		2	364 1643
T-113B	Left	1	364 1673
	Right	1	364 1672
T-113S		2	364 1644
T-114B	Left	1	364 1675
	Right	1	364 1674
T-114S		2	364 1645
T-115B	Left	1	364 1677
	Right	1	364 1676
T-115S		2	364 1646
T-121A	Full	1	364 1630
	Left	1	364 1649
	Right	1	364 1648
T-121AX	Full	1	366 1060
	Left	1	366 1065
	Right	1	366 1064
T-121B	Full	1	364 1715
	Left	1	364 1717
	Right	1	364 1716
T-121G	Full	1	364 1631
	Left	1	364 1651
	Right	1	364 1650
T-123A	Full	1	364 1632
	Left	1	364 1653
	Right	1	364 1652
T-123AX	Full	1	366 1061
	Left	1	366 1067
	Right	1	366 1066
T-123B	Full	1	364 1633
	Left	1	364 1655
	Right	1	364 1654
T-124A	Full	1	364 1634
	Left	1	364 1657
	Right	1	364 1656
T-124B	Full	1	364 1635
	Left	1	364 1659
	Right	1	364 1658
T-128B	Full	1	365 1431
	Left	1	365 1433
	Right	1	365 1432
T-141A	Full	1	364 1636
	Left	1	364 1661
	Right	1	364 1660
T-141B		1	364 1637
T-141C	Left	1	364 1679
	Right	1	364 1678
T-141D	Left	1	364 1681
	Right	1	364 1680
T-141V	Left	1	364 1781
	Right	1	364 1780

SEATS - SOFT TRIM

Trim No.		Per Car	01-10-40 -70-80
T-143A	Full	1	364 1638
	Left	1	364 1663
	Right	1	364 1662
T-143B		1	364 1639
T-143C	Left	1	364 1683
	Right	1	364 1682
T-143D	Left	1	364 1685
	Right	1	364 1684
T-143V	Left	1	365 0537
	Right	1	365 0536
T-144A	Full	1	364 1640
	Left	1	364 1665
	Right	1	364 1664
T-144B		1	364 1641
T-144C	Left	1	364 1687
	Right	1	364 1686
T-144D	Left	1	364 1689
	Right	1	364 1688
T-144V	Left	1	365 0539
	Right	1	365 0538
T-145B		1	364 1642
T-145D	Left	1	364 1691
	Right	1	364 1690
T-145V	Left	1	364 1783
	Right	1	364 1782
T-151A	Full	1	652 7487
	Left	1	652 7497
	Right	1	652 7496
T-151B	Full	1	652 7490
	Left	1	652 7503
	Right	1	652 7502
T-151C	Left	1	652 7509
	Right	1	652 7508
T-151D	Left	1	652 7517
	Right	1	652 7516
T-151G	Full	1	652 7486
	Left	1	652 7495
	Right	1	652 7494
T-151H	Left	1	652 7515
	Right	1	652 7514
T-153A	Full	1	652 7488
	Left	1	652 7498
	Right	1	652 7499
T-153B	Full	1	652 7491
	Left	1	652 7505
	Right	1	652 7504
T-153C	Left	1	652 7511
	Right	1	652 7510
T-153D	Left	1	652 7519
	Right	1	652 7518
T-154A	Full	1	652 7489
	Left	1	652 7501
	Right	1	652 7500
T-154B	Full	1	652 7492
	Left	1	652 7507
	Right	1	652 7506
T-154C	Left	1	652 7513
	Right	1	652 7512
T-154D	Left	1	652 7521
	Right	1	652 7520
T-161J		2	364 1360
T-161JX		2	365 1793
T-161L		2	365 0888
T-161R		2	364 1362
T-161S		2	364 1643
T-161SX		2	365 1792

Printed in U.S.A.

SEATS - SOFT TRIM

Trim No.		Per Car	01-10-40 -70-80
T-163J		2	364 1368
T-163JX		2	365 1794
T-163R		2	364 1370
T-163S		2	364 1644
T-164J		2	364 1374
T-164R		2	364 1376
T-164S		2	364 1645
T-165J		2	364 1380
T-165JX		2	365 1795
T-165L		2	364 1386
T-165R		2	364 1382
T-165S		1	364 1646
T-168S		1	365 1462
T-171A	Full	1	652 7538
	Left	1	652 7547
	Right	1	652 7546
T-171B	Full	1	652 7542
	Left	1	652 7555
	Right	1	652 7554
T-171C	Left	1	652 7523
	Right	1	652 7522
T-171D	Left	1	652 7531
	Right	1	652 7530
T-171G	Full	1	652 7486
	Left	1	652 7495
	Right	1	652 7494
T-171H	Left	1	652 7515
	Right	1	652 7514
T-171S		2	652 7644
T-171V	Left	1	652 8427
	Right	1	652 8426
T-173A	Full	1	652 7539
	Left	1	652 7549
	Right	1	652 7548
T-173B	Full	1	652 7543
	Left	1	652 7557
	Right	1	652 7556
T-173C	Left	1	652 7525
	Right	1	652 7524
T-173D	Left	1	652 7533
	Right	1	652 7532
T-173S		2	652 7646
T-173V	Left	1	652 8531
	Right	1	652 8530
T-174A	Full	1	652 7540
	Left	1	652 7551
	Right	1	652 7550
T-174B	Full	1	652 7544
	Left	1	652 7559
	Right	1	652 7558
T-174C	Left	1	652 7527
	Right	1	652 7526
T-174D	Left	1	652 7535
	Right	1	652 7534
T-174S		2	652 7648
T-174V	Left	1	652 8533
	Right	1	652 8532
T-175A	Full	1	652 7541
	Left	1	652 7553
	Right	1	652 7552
T-175B	Full	1	652 7545
	Left	1	652 7561
	Right	1	652 7560
T-175C	Left	1	652 7529
	Right	1	652 7528
T-175D	Left	1	652 7537
	Right	1	652 7536

Printed in U.S.A.

SEATS - SOFT TRIM

Trim No.		Per Car	01-10-40 -70-80
T-175S			
T-175V	Left	2	652 7650
	Right	1	652 8429
T-176D	Left	1	652 8428
	Right		
T-181A		1	652 9511
T-181B		1	652 9510
T-181C	Left	1	652 7570
	Right	1	652 7490
T-183A		1	652 7575
T-183B		1	652 7574
T-183C	Left	1	652 7571
	Right	1	652 7491
T-184A		1	652 7577
T-184B		1	652 7576
T-184C	Left	1	652 7572
	Right	1	652 7492
T-186D	Left	1	652 7579
	Right	1	652 7578
T-191A	Full	1	652 9511
	Left	1	652 9510
	Right	1	652 7580
T-191B	Full	1	652 7589
	Left	1	652 7588
	Right	1	652 7584
T-191C	Left	1	652 7597
	Right	1	652 7596
T-191D	Left	1	652 7605
	Right	1	652 7604
T-191M	Left	1	652 7613
	Right	1	652 7612
T-191N	Left	1	652 7621
	Right	1	652 7620
T-191R		1	652 7629
T-191S		1	652 7628
T-191V	Left	2	652 7636
	Right	2	652 7644
T-193A	Full	1	652 8431
	Left	1	652 8430
T-193B	Full	1	652 7581
	Left	1	652 7591
	Right	1	652 7585
T-193C	Left	1	652 7599
	Right	1	652 7598
T-193D	Left	1	652 7607
	Right	1	652 7606
	Right	1	652 7615
T-193M	Left	1	652 7614
	Right	1	652 7590
T-193N	Left	1	652 7623
	Right	1	652 7622
T-193R		1	652 7631
T-193S		1	652 7630
T-193V	Left	2	652 7638
	Right	1	652 7646
T-194A	Full	1	652 8433
	Left	1	652 8432
	Right	1	652 7582
T-194B	Full	1	652 7593
	Left	1	652 7592
	Right	1	652 7586
T-194C	Left	1	652 7601
	Right	1	652 7600
T-194D	Left	1	652 7609
	Right	1	652 7608
		1	652 7617
		1	652 7616

Printed in U.S.A.

SEATS - SOFT TRIM

Trim No.		Per Car	01-10-40 70-80
T-194M	Left	1	652 7625
	Right	1	652 7624
T-194N	Left	1	652 7633
	Right	1	652 7632
T-194R		2	652 7640
T-194S		2	652 7648
T-195A	Full	1	652 7583
	Left	1	652 7595
	Right	1	652 7594
T-195B	Full	1	652 7587
	Left	1	652 7603
	Right	1	652 7602
T-195C	Left	1	652 7611
	Right	1	652 7610
T-195D	Left	1	652 7619
	Right	1	652 7618
T-195M	Left	1	652 7627
	Right	1	652 7626
T-195N	Left	1	652 7635
	Right	1	652 7634
T-195R		2	652 7642
T-195S		2	652 7650
T-196D	Left	1	652 9511
	Right	1	652 9510
T-196N	Left	1	652 9511
	Right	1	652 9510

1972 MODELS

Trim No.		Per Car	01-10-40 70-80
T-201A	Left	1	366 2893
	Right	1	366 2892
T-201B	Left	1	365 0695
	Right	1	365 0694
T-203A	Left	1	366 2895
	Right	1	366 2894
T-203B	Left	1	365 0697
	Right	1	365 0696
T-206A	Left	1	366 2897
	Right	1	366 2896
T-206B	Left	1	365 1103
	Right	1	365 1102
T-208B	Left	1	366 8551
	Right	1	366 8550
T-211B	Left	1	365 0699
	Right	1	365 0698
T-211S		2	365 0809
T-213B	Left	1	365 0701
	Right	1	365 0700
T-213S		2	365 0812
T-215B	Left	1	365 0705
	Right	1	365 0704
T-215S		2	365 0816
T-216B	Left	1	365 1105
	Right	1	365 1104
T-216S		2	365 1080
T-218B	Left	1	366 8553
	Right	1	366 8552
T-218S		2	366 8214
T-221G	Full	1	365 0661
	Left	1	365 0679
	Right	1	365 0678

SEATS - SOFT TRIM

Trim No.			Per Car	01-10-40 70-80
T-241A	Full		1	365 0666
	Left		1	365 0689
	Right		1	365 0688
T-241B	Full		1	365 0667
	Left		1	366 1875
	Right		1	366 1874
T-241C	Left		1	365 0707
	Right		1	365 0706
T-241D	Left		1	365 0709
	Right		1	365 0708
T-241S			2	365 0809
T-241V	Left		1	365 0721
	Right		1	365 0720
T-243A	Full		1	365 0668
	Left		1	365 0691
	Right		1	365 0690
T-243B	Full		1	365 0669
	Left		1	366 1877
	Right		1	366 1876
T-243C	Left		1	365 0711
	Right		1	365 0710
T-243D	Left		1	365 0713
	Right		1	365 0712
T-243S			2	365 0812
T-243V	Left		1	365 0723
	Right		1	365 0722
T-244A	Full		1	365 0670
	Left		1	365 0693
	Right		1	365 0692
T-244B	Full		1	365 0671
	Left		1	366 1879
	Right		1	366 1878
T-244C	Left		1	365 0715
	Right		1	365 0714
T-244D	Left		1	365 0717
	Right		1	365 0716
T-244V	Left		1	365 0725
	Right		1	365 0724
T-244W	Left		1	365 1817
	Right		1	365 1816
T-245S			2	365 0816
T-246A	Full		1	365 1707
	Left		1	365 1713
	Right		1	365 1712
T-246B	Full		1	365 1706
	Left		1	366 1881
	Right		1	366 1880
T-246C	Left		1	365 1717
	Right		1	365 1716
T-246D	Left		1	365 1715
	Right		1	365 1714
T-246S			2	365 1080
T-246V	Left		1	365 1719
	Right		1	365 1718
T-248B	Full		1	366 8545
	Left		1	366 8547
	Right		1	366 8546
T-248D	Left		1	366 8549
	Right		1	366 8548
T-261R		(* 29-146)	2	366 1574
		(* 29-147)	2	366 8987
T-261S			2	365 0809
T-261W	Left		1	366 2901
	Right		1	366 2900

Printed in U.S.A.

SEATS - SOFT TRIM

Trim No.			Per Car	01-10-40 70-80
T-263R			2	366 1575
T-263S			2	365 0812
T-264R			2	366 1576
T-264S			2	365 0814
T-265S			2	365 0816
T-266R			2	366 1577
T-266S			2	365 1080
T-268S			2	366 8214
T-271A	Full		1	652 9038
	Left		1	652 9047
	Right		1	652 9046
T-271B	Full		1	652 9042
	Left		1	652 9437
	Right		1	652 9436
T-271D	Left	(* 29-136)	1	652 9129
		(* 29-137)	1	653 0191
	Right	(* 29-136)	1	652 9128
		(* 29-137)	1	653 0190
T-271G	Full		1	652 7486
	Left		1	652 7495
	Right		1	652 7494
T-271H	Left	(* 29-136)	1	653 0105
		(* 29-137)	1	653 0199
	Right	(* 29-136)	1	653 0104
		(* 29-137)	1	653 0198
T-271S			2	652 9144
T-271V	Left	(* 29-136)	1	652 9063
		(* 29-137)	1	653 0201
	Right	(* 29-136)	1	652 9062
		(* 29-137)	1	653 0200
T-271Z			1	812 1986
T-273A	Full		1	652 9039
	Left		1	652 9049
	Right		1	652 9048
T-273B			1	652 9043
T-273D	Left	(* 29-136)	1	652 9131
		(* 29-137)	1	653 0193
	Right	(* 29-136)	1	652 9130
		(* 29-137)	1	653 0192
T-273S			2	652 9146
T-273V	Left	(* 29-136)	1	652 9065
		(* 29-137)	1	653 0203
	Right	(* 29-136)	1	652 9064
		(* 29-137)	1	653 0202
T-273Z			1	812 1987
T-274A	Full		1	652 9040
	Left		1	652 9051
	Right		1	652 9050
T-274B			1	652 9044
T-274D	Left	(* 29-136)	1	652 9133
		(* 29-137)	1	653 0195
	Right	(* 29-136)	1	652 9132
		(* 29-137)	1	653 0194
T-274S			2	652 9148
T-274V	Left	(* 29-136)	1	652 9067
		(* 29-137)	1	653 0205
	Right	(* 29-136)	1	652 9066
		(* 29-137)	1	653 0204
T-274Z			1	812 1988
T-276A	Full		1	652 9041
	Left		1	652 9053
	Right		1	652 9052
T-276B			1	652 9045
T-276D	Left	(* 29-136)	1	652 9135
	Right	(* 29-136)	1	652 9134

Printed in U.S.A.

SEATS - SOFT TRIM

Trim No.			Per Car	01-10-40 70-80
T-276S			2	652 9150
T-276V	Left	(* 29-136)	1	652 9069
		(* 29-137)	1	653 0207
	Right	(* 29-136)	1	652 9068
		(* 29-137)	1	653 0206
T-276Z			1	812 1989
T-291A	Full		1	652 9088
	Left		1	652 9097
	Right		1	652 9096
T-291B			1	652 9092
T-291C	Left	(* 29-136)	1	652 9105
		(* 29-137)	1	653 0199
	Right	(* 29-136)	1	652 9104
		(* 29-137)	1	653 0198
T-291D	Left	(* 29-136)	1	652 9129
		(* 29-137)	1	653 0191
	Right	(* 29-136)	1	652 9128
		(* 29-137)	1	653 0190
T-291E	Full		1	653 0044
	Left		1	653 0037
	Right		1	653 0036
T-291F			1	653 0048
T-291N	Left	(* 29-136)	1	652 9129
		(* 29-137)	1	653 0191
	Right	(* 29-136)	1	652 9128
		(* 29-137)	1	653 0190
T-291S			2	652 9144
T-291V	Left	(* 29-136)	1	652 9137
		(* 29-137)	1	653 0217
	Right	(* 29-136)	1	652 9136
		(* 29-137)	1	653 0216
T-291Z			1	812 1990
T-293A	Full		1	652 9089
	Left		1	652 9099
	Right		1	652 9098
T-293B			1	652 9093
T-293C	Left	(* 29-136)	1	652 9107
		(* 29-137)	1	653 0211
	Right	(* 29-136)	1	652 9106
		(* 29-137)	1	653 0210
T-293D	Left	(* 29-136)	1	652 9131
		(* 29-137)	1	653 0193
	Right	(* 29-136)	1	652 9130
		(* 29-137)	1	653 0192
T-293E	Full		1	653 0045
	Left		1	653 0039
	Right		1	653 0038
T-293F			1	653 0049
T-293N	Left	(* 29-136)	1	652 9131
		(* 29-137)	1	653 0193
	Right	(* 29-136)	1	652 9130
		(* 29-137)	1	653 0192
T-293S			2	652 9146
T-293V	Left	(* 29-136)	1	652 9139
		(* 29-137)	1	653 0219
	Right	(* 29-136)	1	652 9138
		(* 29-137)	1	653 0218
T-293Z			1	812 1991
T-294A	Full		1	652 9090
	Left		1	652 9101
	Right		1	652 9100
T-294B			1	652 9094

SEATS - SOFT TRIM

Trim No.			Per Car	01-10-40 70-80
T-294C	Left	(* 29-136)	1	652 9109
		(* 29-137)	1	653 0213
	Right	(* 29-136)	1	652 9108
		(* 29-137)	1	653 0212
T-294D	Left	(* 29-136)	1	652 9133
		(* 29-137)	1	653 0195
	Right	(* 29-136)	1	652 9132
		(* 29-137)	1	653 0194
T-294E	Full		1	653 0046
	Left		1	653 0041
	Right		1	653 0040
T-294F			1	653 0050
T-294N	Left	(* 29-136)	1	652 9133
		(* 29-137)	1	653 0195
	Right	(* 29-136)	1	652 9132
		(* 29-137)	1	653 0194
T-294S			2	652 9148
T-294V	Left	(* 29-136)	1	652 9141
		(* 29-137)	1	653 0221
	Right	(* 29-136)	1	652 9140
		(* 29-137)	1	653 0220
T-294Z			1	812 1992
T-296A	Full		1	652 9091
	Left		1	652 9103
	Right		1	652 9102
T-296B			1	652 9095
T-296C	Left	(* 29-136)	1	652 9111
		(* 29-137)	1	653 0215
	Right	(* 29-136)	1	652 9110
		(* 29-137)	1	653 0214
T-296D	Left	(* 29-136)	1	652 9135
		(* 29-137)	1	653 0197
	Right	(* 29-136)	1	652 9134
		(* 29-137)	1	653 0196
T-296E	Full		1	653 0047
	Left		1	653 0043
	Right		1	653 0042
T-296F			1	653 0051
T-296N	Left	(* 29-136)	1	652 9135
		(* 29-137)	1	653 0197
	Right	(* 29-136)	1	652 9134
		(* 29-137)	1	653 0196
T-296S			2	652 9150
T-296V	Left	(* 29-136)	1	652 9143
		(* 29-137)	1	653 0223
	Right	(* 29-136)	1	652 9142
		(* 29-137)	1	653 0222
T-296Z			1	812 1993

29.105–1 FRAME ASSEMBLY, Non-Reclining Front Seat Back (Incl. Spring)(* 29-35)

67	05-08 (WFS-Except Heavy Duty)		1	351 8426
68	05-08 (WFS-Except Heavy Duty)		1	360 7004
69	05-08 (WFS-Except Heavy Duty)		1	360 5974
70/	05-08 (WFS-Except Heavy Duty)...(Less Bolster Wire)		1	362 7557
67	15-18-85-88 (WFS-Except Heavy Duty)		1	351 8841
68	15-18-85-88 (WFS-Except Heavy Duty)		1	360 6642
69/70	15-18-85-88 (WFS-Except Heavy Duty)		1	360 6058
71/	15-18-85-88 (WFS)		1	362 2502
67	***05-08 (Heavy Duty-WFS)***		1	351 8427
68	***05-08 (Heavy Duty-WFS)***		1	360 7005
69	***05-08 (Heavy Duty-WFS)***		1	360 5975
70/	***05-08 (Heavy Duty-WFS)***		1	362 7556
67	***15-18 (Heavy Duty-WFS)***		1	351 8757
68	***15-18-85-88 (Heavy Duty-WFS)***		1	360 6643
69/70	***15-18-85-88 (Heavy Duty-WFS)***		1	360 6059

SEATS - SOFT TRIM

67	(Left) 06-07-09 (WNRS-Except Heavy Duty)	.....	1	351 8429
68	(Left) 06-09 (WNRS-Except Heavy Duty)	.....	1	360 7095
69	(Left) 06-09 (WNRS-Except Heavy Duty)	.....	1	360 5977
70	(Left) 06 (WNRS-Except Heavy Duty)	.....	1	362 7555
71/	(Left) 06 (WNRS)...(Incl. Pad)	.....	1	363 7725
67	(Left) 16-19-80 (WNRS-Except Heavy Duty)	.....	1	351 8845
68	(Left) 17-19-89 (WNRS-Except Heavy Duty)	.....	1	360 7423
69/70	(Left) 19-89 (WNRS-Except Heavy Duty)	.....	1	360 5861
71/	(Left) 19-89 (WNRS)	.....	1	362 2499
70/	(Left) 40 (WNRS)...(Incl. Pad)	.....	1	363 7725
68	(Left) 79 (WNBS)(* 29-48)...(Less Bolster Wire)	.....	1	360 6419
68	(Left) 79 (WNBS)(* 29-49)...(Less Bolster Wire)	.....	1	361 8555
69	(Left) 79 (WNBS) ...(Less Bolster Wire)	.....	1	361 8555
70	(Left) WNBS (* 29-124) ***(Ord. 364 9319, 364 9341)***	.....	1	362 7957
70	(Left) WNBS (* 29-125) ***(Use 362 2573)***	.....	1	364 9319
71/	(Left) WNBS	.....	1	362 2573
67	***(Left) 06 (Heavy Duty-WNRS)***	.....	1	351 8431
68	***(Left) 06-09 (Heavy Duty-WNRS)***	.....	1	360 7097
69	***(Left) 06-09 (Heavy Duty-WNRS)***	.....	1	360 5979
70	***(Left) 06 (Heavy Duty-WNRS)***	.....	1	362 7553
67	***(Left) 16-85-86-88 (Heavy Duty-WNRS)***	.....	1	351 8759
68	***(Left) 17-19-89 (Heavy Duty-WNRS)***	.....	1	360 7425
69/70	***(Left) 19-89 (Heavy Duty-WNRS)*** ***(Use 360 5861)***	.....	1	360 5865
67	(Right) 06-07-09 (WNRS-Except Heavy Duty)	.....	1	351 8428
68	(Right) 06-09 (WNRS-Except Heavy Duty)	.....	1	360 7094
69	(Right) 06-09 (WNRS-Except Heavy Duty)	.....	1	360 5976
70	(Right) 06 (WNRS-Except Heavy Duty)	.....	1	362 7554
71/	(Right) 06 (WNRS)...(Incl. Pad)	.....	1	363 7724
67	(Right) 16-19-59-80 (WNRS-Except Heavy Duty)	.....	1	351 8844
68	(Right) 17-19-89 (WNRS-Except Heavy Duty)	.....	1	360 7422
69/70	(Right) 19-89 (WNRS-Except Heavy Duty)	.....	1	360 5860
71/	(Right) 19-89 (WNRS)	.....	1	362 2498
70/	(Right) 40 (WNRS)...(Incl. Pad)	.....	1	363 7724
68	(Right) 79 (WNBS)(* 29-48)...(Less Bolster Wire)	.....	1	360 6418
68	(Right) 79 (WNBS)(* 29-49)...(Less Bolster Wire)	.....	1	361 8554
69	(Right) 79 (WNBS) ...(Less Bolster Wire)	.....	1	361 8554
70	(Right)(WNBS)(* 29-124)	.....	1	362 7956
70	(Right)(WNBS)(* 29-125)	.....	1	364 9318
71/	(Right)(WNBS)	.....	1	362 2572
67	***(Right) 06 (Heavy Duty-WNRS)***	.....	1	351 8430
68	***(Right) 06-09 (Heavy Duty-WNRS)***	.....	1	360 7096
69	***(Right) 06-09 (Heavy Duty-WNRS)***	.....	1	360 5978
70	***(Right) 06 (Heavy Duty-WNRS)***	.....	1	362 7552
67	***(Right) 16-85-86-88 (Heavy Duty-WNRS)***	.....	1	351 8758
68	***(Right) 17-19-89 (Heavy Duty-WNRS)*** ***(Ord. 360 7422)***	.....	1	360 7424
69/70	***(Right) 19-89 (Heavy Duty-WNRS)*** ***(Use 360 5860)***	.....	1	360 5864

29.105-2 FRAME ASSEMBLY, Reclining Front Seat Back (Incl. Spring)(* 29-35)

67	(Left) 01 (WRS)(WIRS)	.....	1	351 8433
67	(Left) 01 (WBS)	.....	1	624 8657
71/	(Left) 01 (WIRS)	.....	1	363 8749
68	(Left) 05-08 (WIRS)	.....	1	360 7495
69	(Left) 05-08 (WIRS)(* 29-95)	.....	1	360 5981
69	(Left) 05-08 (WIRS)(* 29-96)	.....	1	362 5993
70	(Left) 05 (WIRS)	.....	1	362 7543
68	(Left) 06-09 (WIRS)	.....	1	360 7497
69	(Left) 06-09 (WIRS)(* 29-95)	.....	1	360 5983
69	(Left) 06-09 (WIRS)(* 29-96)	.....	1	362 5995
70	(Left) 06 (WIRS)	.....	1	362 7541
67	(Left) 10 (WIRS-Except WBW, WMW, WWW)	.....	1	351 8861
67	(Left) 10 (WIRS-WBW)(WIRS-WMW)(WIRS-WWW)	.....	1	357 8865
67	(Left) 10 (WBS)	.....	1	650 5939
72	(Left) 10-80 (WIRS)...(Less Pad)	.....	1	364 8881

68	(Left) 15-18-85-88 (WIRS)	.....	1	360	6655
69	(Left) 15-18-85-88 (WIRS)(* 29-95)	.....	1	360	6061
69	(Left) 15-18-85-88 (WIRS)(* 29-96)	.....	1	362	5989
70	(Left) 15-18-85-88 (WIRS)	.....	1	362	5989
71	(Left) 15-18-85-88 (WIRS)	.....	1	362	2497
68	(Left) 17-19-89 (WIRS)	.....	1	360	6653
68	(Left) 17-19 (WBS)(* 29-44)	.....	1	651	0321
68	(Left) 17-19 (WBS)(* 29-45)	.....	1	651	6423
69	(Left) 19-89 (WIRS)(* 29-95)	.....	1	360	5869
69	(Left) 19-89 (WIRS)(* 29-96)	.....	1	362	5991
70	(Left) 19-89 (WIRS)	.....	1	362	5991
71	(Left) 19-89 (WIRS)	.....	1	362	2495
69	(Left) 19 (WBS)(* 29-95)...(Incl. Bolster Wire)	.....	1	651	6423
69	(Left) 19 (WBS)(* 29-96)...(Less Bolster Wire)	.....	1	362	1429
68	(Left) 39-79 (WRBS)(* 29-48)...(Less Bolster Wire)	.....	1	360	4395
68	(Left) 39-79 (WRBS)(* 29-49)...(Less Bolster Wire) ***(Use 363 0785)***	.....	1	361	8553
69	(Left) 39-79 (WRBS)(* 29-95)...(Less Bolster Wire) ***(Use 363 0785)***	.....	1	361	8553
69	(Left) 39-79 (WRBS)(* 29-96)...(Less Bolster Wire)	.....	1	363	0785
67	(Left) 50-80 (WIRS)	.....	1	357	8865
67	(Left) 50-80 (WBS)	.....	1	650	5971
68	(Left) 89 (WBS)	.....	1	651	0323
68	(Left) 89 (WBS)	.....	1	651	6425
69	(Left) 89 (WBS)(* 29-95)...(Incl. Bolster Wire)	.....	1	651	6425
69	(Left) 89 (WBS)(* 29-96)...(Less Bolster Wire)	.....	1	362	1429
67	(Right) 01 (WRS)(WIRS)	.....	1	351	8432
67	(Right) 01 (WBS)	.....	1	624	8656
71/	(Right) 01 (WIRS)	.....	1	363	8748
68	(Right) 05-08 (WIRS)	.....	1	360	7494
69	(Right) 05-08 (WIRS)(* 29-95)	.....	1	360	5980
69	(Right) 05-08 (WIRS)(* 29-96)	.....	1	362	5992
70	(Right) 05 (WIRS)	.....	1	362	7542
68	(Right) 06-09 (WIRS)	.....	1	360	7496
69	(Right) 06-09 (WIRS)(* 29-95)	.....	1	360	5982
69	(Right) 06-09 (WIRS)(* 29-96)	.....	1	362	5994
70	(Right) 06 (WIRS)	.....	1	362	7540
67	(Right) 10 (WIRS-Except WBW, WMW, WWW)	.....	1	351	8860
67	(Right) 10 (WIRS-WBW)(WIRS-WMW)(WIRS-WWW)	.....	1	357	8864
67	(Right) 10 (WBS)	.....	1	650	5938
72	(Right) 10-80 (WIRS)...(Less Pad)	.....	1	364	8880
68	(Right) 15-18-85-88 (WIRS)	.....	1	360	6654
69	(Right) 15-18-85-88 (WIRS-* 29-95)	.....	1	360	6060
69	(Right) 15-18-85-88 (WIRS-* 29-96)	.....	1	362	5988
70	(Right) 15-18-85-88 (WIRS)	.....	1	362	5988
71	(Right) 15-18-85-88 (WIRS)	.....	1	362	2496
68	(Right) 17-19-89 (WIRS)	.....	1	360	6652
68	(Right) 17-19 (WBS-* 29-44)	.....	1	651	0320
68	(Right) 17-19 (WBS-* 29-45)	.....	1	651	6422
69	(Right) 19-89 (WIRS-* 29-95)	.....	1	360	5868
69	(Right) 19-89 (WIRS-* 29-96)	.....	1	362	5990
71	(Right) 19-89 (WIRS)	.....	1	362	2494
70	(Right) 19-89 (WIRS)	.....	1	362	5990
69	(Right) 19 (WBS)...(Incl. Bolster Wire)	.....	1	651	6422
69	(Right) 19 (WBS-* 29-96)...(Less Bolster Wire)	.....	1	362	1428
68	(Right) 39-79 (WRBS-* 29-48)...(Less Bolster Wire)	.....	1	360	4394
68	(Right) 39-79 (WRBS-* 29-49)...(Less Bolster Wire)	.....	1	361	8552
69	(Right) 39-79 (WRBS-* 29-95)...(Less Bolster Wire)	.....	1	361	8552
69	(Right) 39-79 (WRBS-* 29-96)...(Less Bolster Wire)	.....	1	363	0784
67	(Right) 50-80 (WIRS)	.....	1	357	8864
67	(Right) 50-80 (WBS)	.....	1	650	5970
68	(Right) 89 (WBS-* 29-44)	.....	1	651	0322
68	(Right) 89 (WBS-* 29-45)	.....	1	651	6424
69	(Right) 89 (WBS-* 29-95)...(Incl. Bolster Wire)	.....	1	651	6424
69	(Right) 89 (WBS-* 29-96)...(Less Bolster Wire)	.....	1	362	1428

29.105-3 ATTACHING PARTS, Back Center Hinge To Bottom Frame

PIN, Locking	67	01-10-50-80	29.162	2	400	0407
Pin, Locking	68/	01-10-80 (WNRS)	29.162	2	400	0407
CAP (Push Nut)	67	WBS	.....	2	400	0155

Printed in U.S.A.

SEATS - SOFT TRIM

29.105–4 ATTACHING PARTS, Back Frame To Bottom Frame

SCREW, Hexagon Head	68/69	15-18-85-88 (WFS)	17.038	2	G180149	
SCREW, Machine	67	05-08 (WFS-* 29-42)	.....	2	400 0678	
SCREW, Machine	69	05-08-15-18-85-88 (WFS)	.....	2	400 3890	
SCREW, Machine	70/	06-46 (WNRS)	.....	2	362 8420	
SCREW, Machine	70/	15-18-85-88 (WFS)	.....	2	400 3890	
SCREW, Pan Head	70/	05-08 (WFS)	.....	4	362 8823	
SCREW, Tapping	67	05-08-10-50-80 (WFS)(WNRS)(* 29-43)***(Use 400 3060)***	23.017	2	400 1962	
SCREW, Tapping	68	15-18-85-88 (WFS) ***(Use 400 3060)***	23.017	2	400 1962	
CAP, Push On	69	01 (WFS)(WNRS)	.....	2	400 1540	
BOLT, Hexagon Head	68	05-08 (WFS)	17.038	2	G122279	NA
BOLT, Hexagon	70	05 (WFS)	.....	4	400 1793	
PIN, Locking	67/	(WFS)(WNRS)	.....	2	400 0407	
WASHER, Plain	69/71	10-80 (WFS)(WNRS)(3/8-13/32 I. D. -1-1/8 O. D.)	17.814	2	G274517	NA
WASHER, Plain	71/	10-80 (13/32 I. D. -11/16 O. D.)	17.814	2	400 1102	
WASHER, Plain	69/	15-18-85-88 (WFS)(1/8-15-32 I. D. -1 O. D.)	17.814	2	400 1120	
WASHER (Nylon)	72	WBS	23.104	2	361 3467	

29.105–5 WIRE, Front Seat Back Spring Bolster

71/	01 (21-7/8" Long)	29.114	2	352 7864	
70/	01 (48" Long)	29.113	2	362 7407	
70/	01-30-40-70 (WBS)	.....	2	362 7770	
72	10 (WIRS-"V" Trims)	29.114	2	352 7864	
69	19 (WBS)	.....	2	361 2899	
68/69	39-79	.....	2	362 3166	
72	79 ("W" Trims)	.....	2	366 6272	
69/70	85-88 (DPL-WFS)	.....	1	362 1476	
71	85-88 (SST-WFS)	.....	2	362 1476	
69/70	80 (DPL-WNRS)(DPL-WIRS)	.....	2	362 1477	
71	80 (SST-WIRS)(SST-WNRS)	.....	2	362 1477	
69	89 (WBS-* 29-95)	.....	2	361 7595	
69	89 (WBS-* 29-96)	.....	2	361 2899	

29.105–6 ATTACHING PARTS, Bolster Wire To Spring

HOG RING	69	19-89 (WBS)	30.025	AR	400 2198	
HOG RING	68/	39-79	30.025	AR	436 3256	
HOG RING	70/	40-80	30.025	AR	436 3256	
CLIP	72	79 ("W" Trims)	.....	4	365 1588	

29.105–7 BOLT, Seat Back Lock

67	06-07-09-16-19-59-86-89 (WNRS)	.....	2	351 9991	

29.105–8 ATTACHING PARTS, Back Lock Bolt To Back Frame

NUT, Hexagon	67	06-07-09-16-19-59-86-89 (WNRS)	17.406	2	G120368	

29.105–9 BRACKET ASSEMBLY, Left Front Seat Back Hinge

67/69	(Inner)(WRS)(WIRS)(WRBS)	.....	1	353 2229
70/71	(Inner) 10-80 (WIRS)	.....	1	353 2229
67	(Outer)(WRS)(WIRS)(WBS)	.....	1	353 2235
68	(Outer) 05-08-15-18-85-88 (WIRS)	.....	1	360 6047
69	(Outer) 05-08 (WIRS)	.....	1	360 5967
69	(Outer) 05-08-15-18-85-88 (WIRS)(* 29-95)	.....	1	360 5967
69	(Outer) 05-08-15-18-85-88 (WIRS)(* 29-96)	.....	1	362 5677
68	(Outer) 06-09-17-19-79-89 (WIRS)(WRBS)	.....	1	360 6013
69	(Outer) 06-09-19-39-79-89 (WIRS)(WRBS)(* 29-95)	.....	1	360 6013
69	(Outer) 06-09-19-39-79-89 (WIRS)(WRBS)(* 29-96)	.....	1	362 5675
70/	(Outer) 15-18-85-88 (WIRS)	.....	1	362 5677
70/71	(Outer) 19-89 (WIRS)	.....	1	362 5675

SEATS - SOFT TRIM

29.105–10 BRACKET ASSEMBLY, Right Front Seat Back Hinge

67/69	(Inner)(WRS)(WIRS)(WRBS)	1		353 2228
70/71	(Inner) 10–80 (WIRS)	1		353 2228
67	(Outer)(WRS)(WIRS)(WBS)	1		353 2234
68	(Outer) 05–08–15–18–85–88 (WIRS)	1		360 6046
69	(Outer) 05–08–15–18–85–88 (WIRS)(* 29–95)	1		360 5966
69	(Outer) 05–08–15–18–85–88 (WIRS)(* 29–96)	1		362 5676
68	(Outer) 06–09–17–19–79–89 (WIRS)(WRBS)	1		360 6012
69	(Outer) 06–09–19–39–79–89 (WIRS)(WRBS)(* 29–95)	1		360 6012
69	(Outer) 06–09–19–39–79–89 (WIRS)(WRBS)(* 29–96)	1		362 5674
70/71	(Outer) 15–18–85–88 (WIRS)	1		362 5676
70/71	(Outer) 19–89 (WIRS)	1		362 5674

29.105–10a BRACKET, Front Seat Back Forward Tilt Lock

70	(Left)(Outer) 19–39–46–79–89 (WBS)(* 29–122)	1		363 7823
70	(Left)(Outer) 19–39–46–79–89 (WBS)(* 29–123)	1		364 9343
71/	(Left)(Outer) 19–46–79–89 (WBS)	1		364 9343
70	(Right)(Outer) 19–39–46–79–89 (WBS)(* 29–122)	1		363 7822
70	(Right)(Outer) 19–39–46–79–89 (WBS)(* 29–123)	1		364 9342
71/	(Right)(Outer) 19–46–79–89 (WBS)	1		364 9342

29.105–11 LOCK, Front Seat Back Forward Tilt

68/69	06–09–17–19–79–89 (WNRS)(WNBS)...(Incl. Latch, Knob, Housing And Spring)	2		360 5986
70/	19–89 (WNRS)...(Incl. Latch, Knob, Housing And Spring)	2		360 5986
70	(Left)(WNBS)(4–1/2"–Cast Type) ***(Ord. 363 7823, 363 4583, 363 4295)***	1		362 7979
70/	(Left)(WNBS)(3–3/4"–Welded Type)	1		363 4583
70	(Right)(WNBS)(4–1/2"–Cast Type) ***(Ord. 363 7822, 363 4295, 363 4582)***	1		362 7978
70/	(Right)(WNBS)(3–3/4"–Welded Type)	1		363 4582

29.105–11a ATTACHING PARTS, Lock To Back Frame

SCREW, Machine	68	06–09–17–19–79–89	17.610	4	400 1237
SCREW, Machine	69	06–09–19–79–89		4	400 3896
SCREW, Machine	70/	19–89 (WNRS)		4	400 3896

29.105–11b ROD, Control And Pivot Arm Front Seat Back Forward Tilt Lock

70	06 (WNRS)(WIRS)	2		362 8534
70/	(WNBS)	2		363 7812

29.105–12 ATTACHING PARTS, Rod, Control And Pivot Arm Forward Tilt Lock

NUT	70	06 (WNRS)		2	400 2036
RING, Retainer	70/	06–46 (WNRS)		2	400 3715
RING, Retainer	70/	(WNBS)		2	400 3715

29.105–13 SHIM, Front Seat Back Forward Tilt Lock (19/32")

68/69	06–09–17–19–79–89 (WNRS)(WNBS)	AR		362 3953
70/	19–89 (WNRS)	AR		362 3953

29.105–14 SPRING, Front Seat Back Forward Tilt Lock Tension

68/69	06–09–17–19–79–89 (WNRS)(WNBS)	2		360 7236
71/	06 (WNRS)	2		362 7983
70/	19–89 (WNRS)	2		360 7236
70/	40 (WNRS)	2		362 7983
70/	WNBS	2		362 7980
68/69	(Left-Side) 06–09–17–19–79–89 (WIRS)(WRBS)	1		360 5994
70	(Left) 06 (WIRS)	1		362 8003
70/	(Left-Side) 19–89 (WIRS)	1		360 5995
68/69	(Right-Side) 06–09–17–19–79–89 (WIRS)(WRBS)	1		360 5995
70/	(Right-Side) 19–89 (WIRS)	1		360 5994
70	(Right) 06 (WIRS)	1		362 8002

Printed In U.S.A.

SEATS - SOFT TRIM

29. 105–15 PIN, Front Seat Back Forward Tilt Lock Stop

70/	06–46 (WNRS)	.....	2	362 7981

29. 105–16 SCREW, Front Seat Back Forward Tilt Lock

68	06–09–17–19–79–89 (WNRS)(WNBS)	.....	2	360 5989
69	06–09–19–79–89 (WNRS)(WNBS)	.....	2	360 8930
70/	06–46 (WNRS)	.....	2	362 8420
70/	19–89 (WNRS)	.....	2	360 8930

29. 105–17 PAWL, Front Seat Back Forward Tilt Lock

70	06 (WNRS)	.....	2	362 7976
71/	06 (WNRS)	.....	2	363 8668
70/	40 (WNRS)	.....	2	363 8668
68	(Left) 06–09–17–19–79–89 (WIRS)(WRBS)...(Incl. Knob) ***(Use 360 6287)***	.....	1	360 7507
69	(Left) 06–09–19–39–79–89 (WIRS)(WBS)...(Incl. Knob)	.....	1	360 6286
70/	(Left) 19–89 (WIRS)	.....	1	360 6286
68	(Right) 06–09–17–19–79–89 (WIRS)(WRBS)...(Incl. Knob) ***(Use 360 6286)***	.....	1	360 7506
69	(Right) 06–09–19–39–79–89 (WIRS)(WBS)...(Incl. Knob)	.....	1	360 6287
70/	(Right) 19–89 (WIRS)	.....	1	360 6287

29. 105–17a WIRE, Front Seat Back Forward Tilt Control

70	06 (WIRS)	.....	2	362 8774
70/	(WNBS)	.....	2	363 7810
70	(Left) 06 (WNRS)	.....	1	362 8773
71/	(Left) 06 (WNRS)	.....	1	363 8675
70/	(Left) 40 (WNRS)	.....	1	363 8675
70	(Right) 06 (WNRS)	.....	1	362 8772
71/	(Right) 06 (WNRS)	.....	1	363 8674
70/	(Right) 40 (WNRS)	.....	1	363 8674

29. 105–18 PIN, Front Seat Back Forward Tilt Lock Clevis

68	06–09–17–19–39–79–89 (WIRS)(WRBS)	.....	2	360 5993
69	06–09–19–39–79–89 (WIRS)(WRBS)(* 29–95)	.....	2	360 5993
69	06–09–19–39–79–89 (WIRS)(WRBS)(* 29–96)	.....	2	362 5527
70	06 (WIRS)	.....	2	362 8000
70/71	19–89 (WIRS)	.....	2	362 5527

29. 105–19 ATTACHING PARTS, Pawl To Back Frame

WASHER, Plain	68/69	06–09–17–19–79–89	10.339	2	400 1775	
WASHER, Plain	70	01–40 (WNRS–11/16" O.D.)	1.067	2	400 3938	
WASHER, Plain	71/	06–46 (WNRS–13/16" O.D.)	17.814	2	400 1303	
WASHER, Wave	68/69	06–09–17–19–79–89	25.030	2	400 0324	
WASHER, Wave	70	01 (WNRS)(WIRS)	23.121	2	400 0043	
WASHER, Wave	70/	19–89 (WIRS)	.....	2	400 0324	
WASHER (Nylon)	70/	01–40 (WNRS)	.....	2	362 9604	
PIN, Cotter	68	06–09–17–19–79–89	17.460	2	G107762	NA
PIN, Self-Locking	69	06–09–19–39–79–89	29.162	2	400 0407	
PIN, Self-Locking	70/	06–46 (WNRS)	.....	2	400 0406	
PIN, Self-Locking	70/	19–89 (WIRS)	29.162	2	400 0407	

29. 105–19a NUT, Front Seat Back Forward Tilt Control

70	06 (WNRS)(WIRS)	17.428	2	320 9552	

29. 105–19b ATTACHING PARTS, Front Cushion Outer Hinge Bracket Forward Tilt

BOLT	70/	WNBS (3/8"–16)	.....	2	363 4294

29. 105–19c ATTACHING PARTS, Front Seat Back Outer Hinge Bracket

BOLT	70	WNBS (7/16"–14 × 57/64")	.....	2	363 4295
BOLT	70/	WNBS (7/16"–14 × 3/4")	.....	2	364 9341
WASHER (Nylon)	72	WNBS	.....	2	361 3467

Printed in U.S.A.

SEATS - SOFT TRIM

29.105–20 HANDLE, Seat Back Adjusting (Reclining Mechanism)

68	01-10-80 (* 29-47)	.....	2	360 2828
69	01-30-70 (* 29-47)	.....	2	360 2828
69	01-30-70 (* 29-46)	.....	2	359 5986
70	01 (WIRS)	.....	2	360 2828
71/	01 (WIRS-4-1/2" Long)	.....	2	363 8739
72	01-10-80 (WIRS-5-13/16" Long)	.....	2	364 8925
68	10-80 (* 29-46)	.....	2	359 5986
69/71	10-80	.....	2	360 2828
68	30-70	.....	2	360 7656
69	30-70 (* 29-94)	.....	2	360 7656
67	(Left) 01-10-50-80	.....	1	353 1139
68	(Left)(* 29-18)	.....	1	353 1139
68	(Right)(* 29-18)	.....	1	353 1138
67	(Right) 01-10-50-80	.....	1	353 1138

29.105–21 ATTACHING PARTS, Handle To Bottom Frame

SCREW, Machine.....	67/	(5/8" Long)	.....	2	400 0826
SCREW, Machine.....	68/69	(15/16" Long)	.....	2	400 2135
WASHER (Nylon)	68/69	10-80 (WIRS-1-7/8" O. D.)	23.104	2	357 6417
WASHER (Nylon)	69	10-80 (WIRS-2-1/32" O. D.)	23.104	2	361 3467
WASHER, Lock	69	30-70 (WBS)	17.820	2	G131096 NA
WASHER, Lock	69	10 (Except SST)	17.820	2	G131096 NA
WASHER, Lock	70/71	01-10-80 (WIRS)	17.820	2	G131096 NA
***WASHER, Lock	***69***	***80 (Fleet)***	17.820	2	G131096 NA
WASHER (Nylon)	70/71	01-10-80 (WIRS)	23.104	2	361 3467

29.105–21a HANDLE, Front Seat Back Forward Tilt Release

70	06 (WIRS)(WNRS)	.....	2	362 8766
70/	WBS	.....	2	363 7819

29.105–21b ATTACHING PARTS, Front Seat Back Forward Tilt Release Handle

SCREW, Machine	70	06 (WNRS)(WIRS)	17.593	2	G168641
SCREW, Machine	70/	WBS	17.655	2	G274547

29.105–22 HOUSING, Forward Tilt Lock Release Button (WNRS)

Trim No.		Per Car	01-46
T-001		2	364 3468
T-008		2	364 3472
T-011		2	364 3468
T-013		2	364 3469
T-014		2	364 3470
T-015		2	364 3471
T-101		2	364 3468
T-103	Blue	2	364 3473
	Black	2	364 3468
T-104		2	364 3468
T-108		2	364 3468
T-111		2	364 3468
T-113		2	364 3473
T-114		2	364 3474
T-115		2	364 3475
T-121		2	364 3468
T-123		2	364 3473
T-124		2	364 3474
T-128		2	364 3468
T-141		2	364 3468
T-143		2	364 3473
T-144		2	364 3474
T-201		2	364 3468
T-203		2	365 3600
T-206		2	365 3603

SEATS - SOFT TRIM

Trim No.	Per Car	01-46
T-208	2	364 3468
T-211	2	364 3468
T-213	2	365 3600
T-215	2	364 3468
T-216	2	365 3603
T-218	2	364 3468
T-221	2	364 3468
T-241	2	364 3468
T-243	2	365 3600
T-244	2	365 3601
T-246	2	365 3603
T-248	2	364 3468

29.105–23 BUTTON, Forward Tilt Lock Release

71/	06 (WNRS)	2	363 7990
70/	40 (WNRS)	2	363 7990

29.105–24 SPRING, Forward Tilt Lock Release

71/	06 (WNRS)	2	363 7997
70/	40 (WNRS)	2	363 7997

29.105–25 GUIDE, Forward Tilt Lock Release

71/	06 (WNRS)	2	363 7996
70/	40 (WNRS)	2	363 7996

29.106–1 INSULATION, Front Seat Back Spring

67	01 (WFS)	1	359 8021
69	01 (WFS)	1	361 8370
67	10-80 (WFS)	1	359 7290
69	10-80 (WFS)	1	362 5985
69	10-80 (WNRS-* 29-98)(WIRS-* 29-98)	2	362 5986
70/	10 (WFS)	1	362 5985
70/71	10 (WNRS)(WIRS)	2	362 5986
72	10 (WNRS)	2	362 5986
70	80 (WFS-Except DPL)	1	362 5985
70	80 (WNRS-Except DPL And SST)	2	362 5986
71	80 (WFS-DPL)	1	362 5985
69	(Left) 01 (WNRS)(WIRS)	1	359 8027
69	(Left) 01 (WNRS-* 29-97)(WIRS-* 29-97) ***(Use 362 5986)***	1	361 8373
67	(Left) 10-50-80 (WNRS)(WIRS)	1	359 7289
69	(Left) 10-80 (WNRS)(WIRS)	1	361 8387
67	(Right) 01 (WNRS)(WIRS)	1	359 8026
69	(Right) 01 (WNRS)(WIRS)	1	361 8372
67	(Right) 10-80 (WNRS)(WIRS)	1	359 7288
69	(Right) 10-80 (WNRS)(WIRS)	1	361 8386

29.106–2 ATTACHING PARTS, Insulation To Spring

RETAINER, Clip 67/		AR	400 2133

29.107–1 DRUM ASSEMBLY KIT, Front Seat Reclining (Incl. Backing Plate, Ring And Shuttle Gear)

67/70	(Left)	1	448 2997
71	(Left) 10-80	1	448 2997
67/70	(Right)	1	448 2996
71	(Right) 10-80	1	448 2996

29.107–1a RECLINING ASSEMBLY, Front Seat (Infinite Reclining Type)

71/	(Left) 01	1	448 9457
72	(Left) 10-80	1	448 9457
71/	(Right) 01	1	448 9456
72	(Right) 10-80	1	448 9456

SEATS - SOFT TRIM

29.107–2 ATTACHING PARTS, Backing Plate To Seat Bottom Frame Outer Hinge Bracket

BOLT, Hexagon	71	10-80 (WIRS)(1/4"-28 x 5/16")	29.105	2	400 1386
BOLT, Hexagon	67/69	(WRS)(WIRS)(WRBS)(1/4"-28 x 5/16")	29.105	2	400 1386
BOLT, Hexagon	70	(WIRS)(1/4"-28 x 5/16")	29.105	2	400 1386
BOLT, Hexagon	67	05-08-15-18-85-88 (WRS)(WIRS)(WRBS) (10-32 x 5/16")	29.105	2	400 1387
BOLT, Hexagon	68/69	(WIRS)(WRBS)(10-32 x 5/16")	29.105	4	400 1387
BOLT, Hexagon	67	05-07-09-16-17-19-59-89 (WRS)(WIRS)(WBS) (10-32 x 5/16")	29.105	6	400 1387
BOLT, Hexagon	70/71	(WIRS)(10-32 x 5/16)	.....	6	400 1387
SCREW, Machine.....	67	05-08-15-18-85-88 (WRS)(WIRS)(WBS)(10-32 x 9/16).	29.105	4	400 1367
SCREW, Machine.....	68	(WIRS)(WRB S)(10-32 x 9/16).....	29.105	4	400 1367
WASHER, Plain.....	67/71	(WRS)(WIRS)(WRBS)(3/8-13/32 I. D. -1-1/8 O. D.) ...	17.814	2	G274517 NA
WASHER, Plain.....	68/69	01-30-70 (WIRS)(WRBS) (13/32 I. D. -11/16 O. D. x 1/16)	17.814	2	400 1102
WASHER, Plain.....	70	01 (WIRS)	17.814	2	400 1102

29.107–2a ATTACHING PARTS, Cup (Housing) To Seat Bottom Frame Outer Hinge Bracket

SCREW, Machine.....	71/	01 (WIRS)	.....	6	363 8737
SCREW, Machine.....	72	10-80 (WIRS)	.....	6	363 8737

29.107–3 ATTACHING PARTS, Backing Plate Stud To Seat Back Outer Hinge Bracket

WASHER, Spring	67/69	(WIRS)(WRS)(WRBS)	.....	2	400 0898
WASHER, Spring	70/71	(WIRS)	.....	2	400 0898
NUT, Hexagon	67/69	(WRS)(WIRS)(WRBS)	.....	2	400 1390
NUT, Hexagon.....	70/71	(WIRS)	.....	2	400 1390

29.107–4 ATTACHING PARTS, Reclining Mechanism To Seat Back Outer Hinge Bracket

SCREW, Machine.....	71/	01 (WIRS)	29.105	6	400 1386
SCREW, Machine.....	72	10-80 (WIRS)	29.105	6	400 1386

29.108–1 PAD, Front Seat Back (One Piece)

67	01 (WFS)	.....	1	350 2654
68	01 (WFS-* 29-50)	.....	1	360 6526
68	01 (WFS-* 29-51)	.....	1	360 7145
67	01 (WNRS)(WRS)(WIRS)	.....	2	350 2656
69	01 (WNRS)(WIRS)	.....	2	361 8367
70	01 (WNRS)(WIRS)	.....	2	362 7901
71/	01 (WIRS)	.....	2	362 7901
67	01 (WBS)	.....	2	357 8438
69	05-08 (WFS)	.....	1	361 8366
70/	05-08 (WFS)	.....	1	362 7900
70/	06-39-46-79 (Except T-261W)	.....	2	362 7962
72	79 (T-261W)	.....	1	362 8034
67	10 (WFS)	.....	1	345 8626
68	10 (WFS-* 29-50)	.....	1	360 6527
68	10 (WFS-* 29-51)	.....	1	360 7143
67	10 (WNRS)(WIRS)	.....	2	345 8627
69/70	10 (WNRS-* 29-120)(WIRS-Except "S" Trims-* 29-120).....	.....	2	361 8380
70	10 (WNRS-* 29-121)(WIRS-Except "S" Trims-* 29-121).....	.....	2	362 6366
71	10 (WIRS)	.....	2	362 6366
67	10 (WBS)	.....	2	358 0392
68	10 (WBS-* 29-50)	.....	2	360 7816
68	10 (WBS-* 29-51)	.....	2	360 7312
69/70	15-18 (WFS-* 29-120)	.....	1	361 8379
70	15-18 (WFS-* 29-121)	.....	1	362 6364
71/	15-18 (WFS)	.....	1	362 6364
71/	19 (WNRS)	.....	2	362 6366
69	19 (WBS)	.....	2	360 7312
70/	19-89 (WBS)	.....	2	362 8034
69	39-79.....	.....	2	360 7450
67	50-80 (WNRS).....	.....	2	345 8627
67	50-80 (WBS)	.....	2	358 0394
68	70 (* 29-52)	.....	2	360 6422
68	70 (* 29-53)	.....	2	360 7450

SEATS - SOFT TRIM

67	80 (WFS)	1	345	8626
67	80 (WIRS-"V" Trims)	2	345	8627
68	80 (WBS-* 29-50)	2	360	6524
68	80 (WBS-* 29-51)	2	360	5906
69/70	85 (WFS-Except DPL-* 29-120)	1	361	8379
70	85 (WFS-Except DPL-* 29-121)	1	362	6364
70	85-88 (WFS-DPL)	1	362	1609
71	85 (WFS-DPL)	1	362	6364
71	85-88 (WFS-SST)	1	362	1609
72	85-88 (WFS)	1	362	1609
69/70	85 (WIRS-Except DPL And SST-* 29-120)	1	361	8380
70	85 (WIRS-Except DPL And SST-* 29-121)	2	362	6366
69	89 (WBS)	2	361	9198
68	(Left) 01 (WNRS-* 29-50)(WIRS-* 29-50)	1	360	4261
68	(Left) 01 (WNRS-* 29-51)(WIRS-* 29-51)	1	360	7147
68	(Left) 10-80 (WNRS-* 29-50)(WIRS-* 29-50)	1	360	6713
68	(Left) 10-80 (WNRS-* 29-51)(WIRS-* 29-51)	1	360	4755
72	(Left) 10 (WIRS)...(Incl. Spring)	1	364	8893
70	(Left) 15-19 (WIRS-"S" Trims)	1	362	1611
67	(Left) 50 (WIRS)	1	357	8867
67	(Left) 80 (WIRS-Except "V" Trims)	1	357	8867
72	(Left) 80 (WIRS-Except "V" Trims)...(Incl. Spring)	1	364	8893
72	(Left) 80 (WIRS-"V" Trims)...(Incl. Spring)	1	364	8917
69	(Left) 85-88 (WIRS-SST-Except "V" Trims)	1	361	9711
70	(Left) 85-88 (WIRS-DPL)(WIRS-SST)	1	362	1611
71	(Left) 85-88 (WIRS-SST)(WIRS-Brougham)	1	362	1611
69	(Left) 89 (WIRS-SST)	1	361	9711
70	(Left) 89 (WNRS-DPL)(WIRS-DPL)	1	362	1611
71	(Left) 89 (WNRS)(WIRS)	1	362	1611
72	(Left) 89 (WNRS)	1	362	1611
68	(Right) 01 (WNRS-* 29-50)(WIRS-* 29-50)	1	360	4260
68	(Right) 01 (WNRS-* 29-53)(WIRS-* 29-53)	1	360	7146
68	(Right) 10-80 (WNRS-* 29-50)(WIRS-* 29-50)	1	360	6712
68	(Right) 10-80 (WNRS-* 29-51)(WIRS-* 29-51)	1	360	4754
72	(Right) 10 (WIRS)...(Incl. Spring)	1	364	8892
70	(Right) 15-19 (WIRS-"S" Trim)	1	362	1610
67	(Right) 50 (WIRS)	1	357	8866
67	(Right) 80 (WIRS-Except "V" Trims)	1	357	8866
72	(Right) 80 (WIRS-Except "V" Trims)...(Incl. Spring)	1	364	8892
72	(Right) 80 (WIRS-"V" Trims)...(Incl. Spring)	1	364	8916
69	(Right) 85-88 (WIRS-SST-Except "V" Trim)	1	361	9710
71	(Right) 85-88 (WIRS-SST)(WIRS-Brougham)	1	362	1610
70	(Right) 85-88 (WIRS-DPL)(WIRS-SST)	1	362	1610
69	(Right) 89 (WIRS-SST)	1	361	9710
70	(Right) 89 (WNRS-DPL)(WIRS-DPL)	1	362	1610
71	(Right) 89 (WNRS)(WIRS)	1	362	1610
72	(Right) 89 (WNRS)	1	362	1610

29.108-2 PAD, Front Seat Back Upper (Two Piece)

69	85-88 (WFS-DPL) ***(Use 362 1425)***	1	361	8378
69	(Left) 85-88 (WIRS-DPL)	1	361	8383
69	(Left) 85 (WIRS-SST-"V" Trim)	1	361	8383
69	(Left) 89 (WNRS-DPL)(WIRS-DPL)	1	361	8383
69	(Right) 85-88 (WIRS-DPL)	1	361	8382
69	(Right) 85 (WIRS-SST-"V" Trim)	1	361	8382
69	(Right) 89 (WNRS-DPL)(WIRS-DPL)	1	361	8382

29.108-3 PAD, Front Seat Back Lower (Two Piece)

69	85-88 (WFS-DPL) ***(Use 362 1425)***	1	361	8377
69	(Left) 85-88 (WIRS-DPL)	1	361	8539
69	(Left) 85 (WIRS-SST-"V" Trim)	1	361	8539
69	(Left) 89 (WNRS-DPL)(WIRS-DPL)	1	361	8539
69	(Right) 85-88 (WIRS-DPL)	1	361	8538
69	(Right) 85 (WIRS-SST-"V" Trim)	1	361	8538
69	(Right) 89 (WNRS-DPL)(WIRS-DPL)	1	361	8538

Printed in U.S.A.

SEATS - SOFT TRIM

29.108–4 PAD, Front Seat Back Upper Extension

67	01–10 (WBS)	.....	2	359 7613
69/70	15–18 (WFS)	.....	1	361 8375
69/70	15–18 (WIRS–Except "S" Trim)	.....	2	361 8376
69/70	19 (WNRS)(WIRS–Except "S" Trim)	.....	2	361 8376
69/70	85 (WFS–Except DPL)	.....	1	361 8375
69/70	85 (WIRS–Except DPL And SST)	.....	2	361 8376

29.108–5 SUPPORT, Front Seat Back Pad

67	(WBS)	.....	2	352 8278
70/	(WBS)	.....	2	362 7966
70	(WNRS)	.....	2	362 7966
68/71	10–80 (LFS)	.....	2	352 8278
68/71	10–80 (WFS)	.....	2	361 2015
68/69	30–70	.....	2	360 6420
67	50–80 (WIRS–Except "V" Trims)	.....	2	352 8278
72	80 (WFS)	.....	1	361 2015
72	80 (WNRS)	.....	2	352 8278

29.108–6 FILLER, Front Seat Back Side

69	80 (WBS–3" x 21")	.....	4	362 1475

29.108–7 ATTACHING PARTS, Filler And Pad To Spring

HOG RING	69	(5/16") 80 (WBS)	30.025	AR	400 2198
HOG RING	69/	(3/4") 10–80	30.025	AR	436 3256

29.109–1 PAD, Front Seat Back Frame Side Tube

68	01–10–80 (WFS–14" Long)(WNRS–14" Long)	.....	2	360 5118
68	01–10–80 (WFS–12" Long)(WNRS–12" Long)(WIRS–12" Long)	.....	2	360 7801
68	01–10–80 (WIRS–11" Long) ***(Use 360 7801)***	.....	4	360 4842
68	10–80 (WBS–16" Long)(* 29–54)	.....	2	360 4886
70	15–19 (WIRS–16" Long)	.....	4	360 7800
68/70	80 (WFS–DPL–12" Long)	.....	2	360 7801
71/	85–88 (WFS–SST)	.....	2	360 7801
68/70	80 (WNRS–DPL–12" Long)	.....	4	360 7801
71/	89 (WNRS)	.....	4	360 7801
68/70	80 (WIRS–DPL–16" Long)(WIRS–SST–16" Long)	.....	4	360 7800
71	80 (WIRS–SST)(WIRS–Brougham)	.....	4	360 7800
68/69	(Inner) 10–80 (WBS–16" Long)(* 29–55)	.....	4	360 7602
68/69	(Outer) 10–80 (WBS–16" Long)	.....	4	360 7603

29.109–2 PAD, Front Seat Back Frame Upper Crash

68	05–08 (WFS)	.....	1	360 7834
69	05–08 (WFS)	.....	1	361 8363
69	01 (WNRS)(WIRS)	.....	2	361 8364
68	15–18–85–88 (WFS)	.....	1	360 7515
68/69	10–30–70–80 (WBS)	.....	2	360 6018
69/70	85–88 (WFS–DPL)	.....	1	360 7316
71/	85–88 (WFS–SST)	.....	1	360 7316
68	(Left) 06–09	.....	1	360 7833
68	(Left) 10–80 (WNRS)(WIRS)	.....	1	360 7517
70	(Left) 15–19 (WIRS–"S" Trim)	.....	1	360 7355
69/70	(Left) 80 (WNRS)(WIRS–DPL)(WIRS–SST)	.....	1	360 7355
71	(Left) 80 (WNRS)(WIRS–SST And Brougham)	.....	1	360 7355
72	(Left) 89 (WNRS)	.....	1	360 7355
68	(Right) 06–09	.....	1	360 7832
68	(Right) 10–80 (WNRS)(WIRS)	.....	1	360 7516
70	(Right) 15–19 (WIRS–"S" Trim)	.....	1	360 7354
69/70	(Right) 80 (WNRS)(WIRS–DPL)(WIRS–SST)	.....	1	360 7354
71	(Right) 80 (WNRS)(WIRS–SST And Brougham)	.....	1	360 7354
72	(Right) 89 (WNRS)	.....	1	360 7354

SEATS - SOFT TRIM

29.110 SUPPORT, Front Seat Back (Bed Brackets)

67/68	15-18-85-88 (WRS)(WIRS)(WBS)	2	357 8172	

29.111–1 RAGBOARD, Front Seat Back Upper Trim

68	01 (WFS)(* 29-56)	1	360 6499	
67	01-10 (WBS)	2	359 7609	
68	01 (WFS)(* 29-57)	1	360 7547	
68	01 (WNRS)(WIRS)(* 29-56)	2	360 7438	
68	01 (WNRS)(WIRS)(* 29-57)	2	360 7546	
67	10-50-80 (WIRS)	2	358 1694	
68	10-80 (WFS)(* 29-56)	2	360 6528	
68	10-80 (WFS)(* 29-57)	1	361 7504	
68	10-80 (WNRS)(WIRS)(* 29-56)	2	358 1694	
68	10-80 (WNRS)(WIRS)(* 29-57)	2	361 7505	
68	10-80 (WBS)	2	360 5186	
67	50-80 (WBS)	2	358 1690	

29.111–2 ATTACHING PARTS, Board To Back Frame

FASTENER	67	(WIRS)(WBS)	*(Use 400 1911)*	4	400 1669
FASTENER	68	01		4	400 2211
FASTENER	68	10-80 (WBS)		4	400 2211
FASTENER	68	10-80 (LBS)		4	400 1669

29.112–1 RAGBOARD, Front Seat Back Kickpad Panel (Incl. Brackets)

67	10-50 (WIRS)	2	358 0298
67	01-10-50-80 (WBS)	2	358 0340
67	80 (WIRS-Except "V" Trim)	2	358 0298

29.112–2 PANEL, Front Seat Back Kickpad Trim

1968 MODELS

Trim No.			Per Car	01-10-80 (WFS)	01-10-80 (WNRS)	01-10-80 (WIRS): 70	10-80 (WRBS)
T-828		Black	1	359 8686			
		Off White	1	359 8637			
	Left	Black	1		359 9761	359 9771	
	Right	Black	1		359 9760	359 9770	
	Left	Off White	1		359 9769	359 9779	
	Right	Off White	1		359 9768	359 9778	
T-831			2			359 8887	
T-832			2			359 9143	
T-835			2			359 8742	
T-838			2			362 3096	
T-843			1	359 8687			
	Left		1		359 9763	359 9773	
	Right		1		359 9762	359 9772	
T-844			1	359 8688			
	Left		1		359 9765	359 9775	
	Right		1		359 9764	359 9774	
T-845			1	359 8280			
	Left		1		359 9767	359 9777	
	Right		1		359 9766	359 9776	
T-848			1	359 8637			
	Left		1		359 9769	359 9779	
	Right		1		359 9768	359 9778	
T-851	Full		1	651 3586			
	Left		1		651 3571	651 3627	
	Right		1		651 3570	651 3626	
T-853	Full		1	651 3588			
	Left		1		651 3575	651 3631	
	Right		1		651 3574	651 3630	

Printed in U.S.A.

SEATS - SOFT TRIM

Trim No.		Per Car	01-10-80 (WFS)	01-10-80 (WNRS)	01-10-80 (WIRS): 70	10-80 (WRBS)
T-855	Full	1	651 3587	... .	... .	... .
	Left	1	... .	651 3581	651 3637	... .
	Right	1	... .	651 3580	651 3636	... .
T-871	(* 29-58)	2	... .	... .	... .	651 3644
	(* 29-59)	2	... .	... .	... .	651 6482
T-873	Full	1	651 3586	... .	... .	... .
	Left	1	... .	651 3571	651 3627	... .
	Right	1	... .	651 3570	651 3626	... .
	(* 29-58)	2	... .	... .	... .	651 3646
	(* 29-59)	2	... .	... .	... .	651 6483
T-874	Full	1	651 3588	... .	... .	... .
	Left	1	... .	651 3575	651 3631	... .
	Right	1	... .	651 3574	651 3630	... .
	(* 29-58)	2	... .	... .	... .	651 3650
	(* 29-59)	2	... .	... .	... .	651 6484
T-875	Full	1	651 3590	... .	... .	... .
	Left	1	... .	651 3579	651 3635	... .
	Richt	1	... .	651 3578	651 3634	... .
	(* 29-58)	2	... .	... .	... .	651 3654
	(* 29-59)	2	... .	... .	... .	651 6485
T-876	Full	1	651 3587	... .	... .	... .
	Left	1	... .	651 3581	651 3637	... .
	Right	1	... .	651 3580	651 3636	... .
	(* 29-58)	2	... .	... .	... .	651 3656
	(* 29-59)	2	... .	... .	... .	651 6486
T-879	Full	1	651 3591	... .	... .	... .
	Left	1	... .	651 3583	651 3639	... .
	Right	1	... .	651 3582	651 3638	... .
	(* 29-58)	2	... .	... .	... .	651 3660
	(* 29-59)	2	... .	... .	... .	651 6487
T-881	Full	1	651 3592	... .	... .	... .
	Left	1	... .	651 3585	651 3643	... .
	Right	1	... .	651 3584	651 3642	... .
T-883	Full	1	651 3586	... .	... .	... .
	Left	1	... .	651 3571	651 3627	... .
	Right	1	... .	651 3570	651 3626	... .
T-885	Full	1	651 3588	... .	... .	... .
	Left	1	... .	651 3575	651 3631	... .
	Right	1	... .	651 3574	651 3630	... .
T-891	(* 29-58)	2	651 3587	... .	... .	... .
	(* 29-59)	2	... .	651 3581	651 3637	... .
T-893	Full	1	... .	651 3580	651 3636	... .
	Left	1	651 3586	... .	... .	651 3644
	Right	1	... .	651 3571	651 3627	651 6482
	(* 29-58)	2	... .	651 3570	651 3626	... .
	(* 29-59)	2	... .	... .	... .	... .
T-894	Full	1	651 3588	... .	... .	651 3646
	Left	1	... .	651 3575	651 3631	651 6483
	Right	1	... .	651 3574	651 3630	... .
	(* 29-58)	2	... .	... .	... .	... .
	(* 29-59)	2	... .	... .	... .	651 3650
	Full	1	651 .3590	... .	... .	651 6484
	Left	1	... .	651 3579	651 3635	... .
	Right	1	... .	651 3578	651 3634	... .

SEATS - SOFT TRIM

Trim No.			Per Car	01-10-80 (WFS)	01-10-80 (WNRS)	01-10-80 (WIRS): 70	10-80 (WRBS)
T-895		(* 29-58)	2	... .	... .	... .	651 3654
		(* 29-59)	2	... .	... .	... .	651 6485
	Full		1	651 3587	... .	... .	... .
	Left		1	... .	651 3581	651 3637	... .
	Right		1	... .	651 3580	651 3636	... .
T-896		(* 29-58)	2	... .	... .	... .	651 3656
		(* 29-59)	2	... .	... .	... .	651 6486
	Full		1	651 3591	... .	... .	... .
	Left		1	... .	651 3583	651 3639	... .
	Right		1	... .	651 3582	651 3638	... .
T-899		(* 29-58)	2	... .	... .	... .	651 3660
		(* 29-59)	2	... .	... .	... .	651 6487
	Full		1	651 3592	... .	... .	... .
	Left		1	... .	651 3585	651 3643	... .
	Right		1	... .	651 3584	651 3642	... .

1969 MODELS

Trim No.			Per Car	85-88 (WFS)	89 (WNRS)	80 (WIRS)	19-39-79-89 (WBS)
T-931			2	... .	... .	... .	362 4720
T-932			2	... .	... .	... .	362 4725
T-935			2	... .	... .	... .	362 4722
T-936			2	... .	... .	... .	362 4724
T-961			2	... .	... .	... .	362 4720
T-962			2	... .	... .	... .	362 4725
T-963			2	... .	... .	... .	362 4721
T-965			2	... .	... .	... .	362 4722
T-966			2	... .	... .	... .	362 4723
T-968			2	... .	... .	... .	362 4726
T-972			2	... .	... .	... .	652 2023
T-973			2	... .	... .	... .	652 0169
T-975			2	... .	... .	... .	652 2209
T-979			2	... .	... .	... .	652 0171
T-991			2	... .	... .	... .	652 0168
	Full		1	652 0138	... .	... .	... .
	Left		1	... .	652 0145	652 0157	... .
	Right		1	... .	652 0144	652 0156	... .
T-992			2	... .	... .	... .	652 2023
	Left		1	... .	... .	652 2153	... .
	Right		1	... .	... .	652 2152	... .
T-993			2	... .	... .	... .	652 0169
	Full		1	652 0139	... .	... .	... .
	Left		1	... .	652 0147	652 0159	... .
	Right		1	... .	652 0146	652 0158	... .
T-995			2	... .	... .	... .	652 2209
	Left		1	... .	652 2211	652 2213	... .
	Right		1	... .	652 2210	652 2212	... .
T-996			2	... .	... .	... .	652 0170
	Full		1	652 0141	... .	... .	... .
	Left		1	... .	652 0151	652 0163	... .
	Right		1	... .	652 0150	652 0162	... .
T-997			2	... .	... .	... .	652 2022
	Full		1	652 0140	... .	... .	... .
	Left		1	... .	652 0149	652 0161	... .
	Right		1	... .	652 0148	652 0160	... .
T-999			2	... .	... .	... .	652 0171
	Left		1	... .	... .	652 0165	... .
	Right		1	... .	... .	652 0164	... .

Printed in U.S.A.

SEATS - SOFT TRIM

1970 Thru 1972 (Less Woodgrain Insert - Listed In Group 29.117)

Trim No.			Per Car	85-88 (WFS); 89 (WNRS)	10-80 (WIRS)	19-39-46-79 89 (WBS)
T-011F	Left		1	... .	... .	362 8451
	Right		1	... .	... .	362 8450
T-013F	Left		1	... .	... .	364 3499
	Right		1	... .	... .	364 3498
T-014F	Left		1	... .	... .	364 3501
	Right		1	... .	... .	364 3500
T-015F	Left		1	... .	... .	362 8457
	Right		1	... .	... .	362 8456
T-031	Left		1	... .	... .	362 8451
	Right		1	... .	... .	362 8450
T-033	Left	(* 29-118)	1	... .	... .	362 8453
		(* 29-119)	1	... .	... .	364 3499
	Right	(* 29-118)	1	... .	... .	362 8452
		(* 29-119)	1	... .	... .	364 3498
T-035	Left		1	... .	... .	362 8457
	Right		1	... .	... .	362 8456
T-036	Left		1	... .	... .	362 8459
	Right		1	... .	... .	362 8458
T-051	Left		1	... .	... .	362 8451
	Right		1	... .	... .	362 8450
T-053	Left	(* 29-118)	1	... .	... .	362 8453
		(* 29-119)	1	... .	.. ....	364 3499
	Right	(* 29-118)	1	... .	... .	362 8452
		(* 29-119)	1	... .	... .	364 3498
T-056	Left		1	... .	... .	362 8459
	Right		1	... .	... .	362 8458
T-061	Left		1	... .	... .	362 8451
	Right		1	... .	... .	362 8450
T-063	Left	(* 29-118)	1	... .	... .	362 8453
		(* 29-119)	1	... .	... .	364 3499
	Right	(* 29-118)	1	... .	... .	362 8452
		(* 29-119)	1	... .	... ...	364 3498
T-064	Left	(* 29-118)	1	... .	... .	362 8455
		(* 29-119)	1	... .	... .	364 3501
	Right	(* 29-118)	1	... .	... .	362 8454
		(* 29-119)	1	... .	... .	364 3500
T-065	Left		1	... .	... .	362 8457
	Right		1	... .	... .	362 8456
T-066	Left		1	... .	... .	362 8459
	Right		1	... .	... .	362 8458
T-071	Left		1	... .	652 5507	362 8451
	Right		1	... .	652 5506	362 8450
T-073	Left	(* 29-118)	1	... .	... .	362 8453
		(* 29-119)	1	... .	652 5511	364 3499
	Right	(* 29-118)	1	... .	... .	362 8452
		(* 29-119)	1	... .	652 5510	364 3498
T-074	Left		1	... .	652 5513	... .
	Right		1	... .	652 5512	... .
T-075	Left		1	... .	... .	362 8457
	Right		1	... .	... .	362 8456
T-076	Left		1	... .	652 5525	362 8459
	Right		1	... .	652 5524	362 8458
T-091			1	652 5490	... .	... .
	Left		1	652 5497	652 5507	362 8451
	Right		1	652 5496	652 5506	362 8450
T-093			1	652 5492	... .	... .
	Left	(* 29-118)	1	652 5501	652 5511	362 8453
		(* 29-119)	1	... .	... .	364 3499
	Right	(* 29-118)	1	652 5500	652 5510	362 8452
		(* 29-119)	1	... .	... .	364 3498

Printed in U.S.A.

SEATS - SOFT TRIM

Trim No.			Per Car	85-88 (WFS): 89 (WNRS)	10-80 (WIRS)	19-39-46-79 89 (WBS)
T-094			1	652 5493	... .	... .
	Left	(* 29-118)	1	652 5503	652 5513	362 8455
		(* 29-119)	1	... .	... .	364 3501
	Right	(* 29-118)	1	652 5502	652 5512	362 8454
		(* 29-119)	1	... .	... .	364 3500
T-095			1	652 6043	... .	... .
	Left		1	652 6045	652 6047	362 8457
	Right		1	652 6044	652 6046	362 8456
T-096			1	652 5494	... .	... .
	Left		1	652 5505	652 5525	362 8459
	Right		1	652 5504	652 5524	362 8458
T-111S	Left		1	... .	... .	362 8451
	Right		1	... .	... .	362 8450
T-113S	Left		1	... .	... .	364 2471
	Right		1	... .	... .	364 2470
T-114S	Left		1	... .	... .	364 2473
	Right		1	... .	... .	364 2472
T-115S	Left		1	... .	... .	364 2475
	Right		1	... .	... .	364 2474
T-161	Left		1	... .	... .	362 8451
	Right		1	... .	... .	362 8450
T-163	Left		1	... .	... .	364 2471
	Right		1	... .	... .	364 2470
T-164	Left		1	... .	... .	364 2473
	Right		1	... .	... .	364 2472
T-165	Left		1	... .	... .	364 2475
	Right		1	... .	... .	364 2474
T-168	Left		1	... .	... .	362 8451
	Right		1	... .	... .	362 8450
T-171	Left		1	... .	364 3601	362 8451
	Right		1	... .	364 3600	362 8450
T-173	Left		1	... .	364 3603	364 2471
	Right		1	... .	364 3602	364 2470
T-174	Left		1	... .	364 3605	364 2473
	Right		1	... .	364 3604	364 2472
T-175	Left		1	... .	364 3607	364 2475
	Right		1	... .	364 3606	364 2474
T-176	Left		1	... .	653 1467	... .
	Right		1	... .	653 1466	... .
T-186	Left		1	... .	653 1467	... .
	Right		1	... .	653 1466	... .
T-191			1	652 7652	... .	... .
	Left	(SST)	1	652 7657	652 7665	... .
		(Brougham)	1	... .	364 3601	362 8451
	Right	(SST)	1	652 7656	652 7664	... .
		(Brougham)	1	... .	364 3600	362 8450
T-193			1	652 7653	... .	... .
	Left	(SST)	1	652 7659	652 7667	... .
		(Brougham)	1	... .	364 3603	364 2471
	Right	(SST)	1	652 7658	652 7666	... .
		(Brougham)	1	... .	364 3602	364 2470
T-194			1	652 7654	... .	... .
	Left	(SST)	1	652 7661	652 7669	... .
		(Brougham)	1	... .	364 3605	364 2473
	Right	(SST)	1	652 7660	652 7668	... .
		(Brougham)	1	... .	364 3604	364 2472
T-195			1	652 7655	... .	... .
	Left	(SST)	1	652 7663	652 7671	... .
		(Brougham)	1	... .	364 3607	364 2475
	Right	(SST)	1	652 7662	652 7670	... .
		(Brougham)	1	... .	364 3606	364 2474
T-196	Left		1	... .	653 1467	... .
	Right		1	... .	653 1466	... .

SEATS - SOFT TRIM

Trim No.		Per Car	85-88 (WFS): 89 (WNRS)	10-80 (WIRS)	06-19-39-46 79-89 (WBS)
T-211	Left	1	... .	... .	365 3659
	Right	1	... .	... .	365 3658
T-213	Left	1	... .	... .	365 3651
	Right	1	... .	... .	365 3650
T-215	Left	1	... .	... .	365 3659
	Right	1	... .	... .	365 3658
T-216	Left	1	... .	... .	365 3657
	Right	1	... .	... .	365 3656
T-218	Left	1	... .	... .	365 3659
	Right	1	... .	... .	365 3658
T-241	Left	1	... .	... .	365 3659
	Right	1	... .	... .	365 3658
T-243	Left	1	... .	... .	365 3651
	Right	1	... .	... .	365 3650
T-245	Left	1	... .	... .	365 3659
	Right	1	... .	... .	365 3658
T-246	Left	1	... .	... .	365 3657
	Right	1	... .	... .	365 3656
T-248	Left	1	... .	... .	365 3659
	Right	1	... .	... .	365 3658
T-261	Left	1	... .	... .	365 3659
	Right	1	... .	... .	365 3658
T-263	Left	1	... .	... .	365 3651
	Right	1	... .	... .	365 3650
T-264	Left	1	... .	... .	365 3653
	Right	1	... .	... .	365 3652
T-265	Left	1	... .	... .	365 3659
	Right	1	... .	... .	365 3658
T-266	Left	1	... .	... .	365 3657
	Right	1	... .	... .	365 3656
T-268	Left	1	... .	... .	365 3659
	Right	1	... .	... .	365 3658
T-271	Left	1	... .	365 5321	365 3659
	Right	1	... .	365 5320	365 3658
T-273	Left	1	... .	365 5323	365 3651
	Right	1	... .	365 5322	365 3650
T-274	Left	1	... .	365 5325	365 3653
	Right	1	... .	365 5324	365 3652
T-276	Left	1	... .	365 5327	365 3657
	Right	1	... .	365 5326	365 3656
T-291	Full	1	652 9930	... .	... .
	Left	1	652 9929	365 5321	365 3659
	Right	1	652 9928	365 5320	365 3658
T-293	Full	1	652 9892	... .	... .
	Left	1	652 9896	365 5323	365 3651
	Right	1	652 9897	365 5322	365 3650
T-294	Full	1	652 9893	... .	... .
	Left	1	652 9898	365 5325	365 3653
	Right	1	652 9899	365 5324	365 3652
T-296	Full	1	652 9894	... .	... .
	Left	1	652 9901	365 5327	365 3657
	Right	1	652 9900	365 5326	365 3656

29.112-3 UPHOLSTERY, Front Seat Back Kickpad Panel

Trim No.	Per Car	01 (WBS): 10-50-80 (WIRS)	10-50-80 (WBS-Except "W" Trim)	10-80 (WBS-"W" Trim)	
T-741	2	359 2445	... .	... .	... .
T-743	2	359 2498	... .	... .	... .
T-745	2	359 2499	... .	... .	... .
T-748	2	359 2521	... .	... .	... .
T-749	2	359 2522	... .	... .	... .
T-771	2	448 4765	359 2445	... .	... .
T-773	2	448 4768	359 2498	448 4922	... .

SEATS - SOFT TRIM

Trim No.	Per Car	01 (WBS): 10-50-80 (WIRS)	10-50-80 (WBS-Except "W" Trim)	10-80 (WBS-"W" Trim)	
T-775	2	... .	359 2499	... .	... .
T-776	2	... .	448 4778	... .	... .
T-778	2	... .	359 2521	... .	... .
T-779	2	448 4769	359 2522	448 4923	... .
T-781	2	448 4765	... .	... .	... .
T-783	2	448 4768	... .	... .	... .
T-787	2	448 4769	... .	... .	... .
T-789	2	448 4770	... .	... .	... .
T-791	2	448 4765	448 4775	... .	... .
T-793	2	448 4768	448 4776	448 4922	... .
T-794	2	448 4771	... .	... .	... .
T-795	2	448 4772	448 4777	... .	... .
T-796	2	448 4773	448 4778	... .	... .
T-797	2	448 4769	... .	... .	... .
T-798	2	448 4774	448 4779	... .	... .
T-799	2	448 4770	448 4780	448 4923	... .

29.112-4 ATTACHING PARTS, Kickpad Panel To Back

CLIP	67	(WIRS)(WBS)	.....	4	358 0359
FASTENER	68		29.070	14	400 1911
FASTENER	72	10-80 (WIRS-61/64" Long)	.....	2	366 3709
FASTENER, Drive	72	10-80 (WIRS-5/8" Long)	29.103	2	400 3115
FASTENER	69	30-70	29.070	14	400 1911
FASTENER	69	89 (WBS)	29.070	14	400 1911
SCREW, Tapping	70/71	WBS (Side)	29.060	4	400 1776
SCREW, Tapping	70/71	WBS (Bottom-5/8" Long)	20.080	AR	400 0013
SCREW, Tapping	72	10-80 (WIRS-23/32" Long)	.....	6	439 5412
SCREW, Tapping	72	01-40-70 (WBS-9/16" Long)	29.060	4	400 1776
SCREW, Tapping	71	10-80 (WIRS-3/4" Long)	23.215	4	400 3642
SCREW, Tapping	72	10-70-80 (WIRS-1/2" Long)(WBS-1/2" Long)	.....	6	400 4171
SCREW, Tapping	71	80 (WBS-1/2" Long)(WIRS-1/2" Long)	29.070	4	400 0273
HOG RING	67/	10-80 (WFS)(WNRS)	30.025	AR	436 3256
BRACKET	71	10-80 (WIRS)	.....	6	363 9926

29.113 WIRE, Seat Upholstery (Straight)(* 29-143)

70/	(16" Long) WBS	.....	2	347 6225
67/69	(17-1/2" Long) WBS ***(Use 341 2615)***	.....	2	342 6818
67	(20-1/2" Long) WBS	.....	4	346 5425
68/69	(20-1/2" Long) 01 (WNRS)(WIRS)	.....	4	346 5425
67/69	(22-1/2" Long)(WNRS)(WRS)(WIRS)	.....	6	342 6862
68/	(23-7/8" Long) WNRS ***(Use 359 7415)***	.....	AR	345 7621
67/	(23-7/8" Long) 10-50-80 (WNRS)(WIRS) ***(Use 359 7415)***	.....	AR	345 7621
67/	(39" Long)(WFS)(WNRS)	.....	1	345 0846
67/69	(48-3/4" Long) 01 (WFS)(WNRS)(WRS)	.....	2	343 1232
71/	(50-1/2" Long) 10-80 (WFS)(WNRS)	.....	1	355 7474
67/70	(51" Long) 01-10-50-80 (WFS)(WNRS)	.....	1	346 5305
67/	(55" Long) 15-18-85-88 (WFS) ***(Use 359 7415)***	.....	AR	357 3815
67/	(57" Long) 10-30-70-80	.....	1	359 7415

29.114 WIRE, Seat Upholstery (Corrugated)(* 29-143)

70	(8" Long) 80 (DPL)	.....	2	352 7862
69/	(15" Long)	.....	AR	362 1468
67	(16" Long) 01 (WBS)	.....	AR	347 6225
67/	(21-7/8" Long)	.....	2	352 7864
69	(24-1/2" Long) 80 (WNRS-DPL)(WIRS-DPL)	.....	2	362 1471
71	(24-1/2" Long) 80 (WNRS-SST)(WIRS-SST)	.....	2	362 1471
69	(49-5/8" Long) 80 (WFS-DPL)	.....	2	362 1470
71/	(49-5/8" Long) 01	.....	1	362 1470
71	(49-5/8" Long) 80 (WFS-SST)	.....	1	362 1470
69	(52-1/4" Long) 88	.....	1	362 1474
69	(57-1/2" Long) 85	.....	1	362 1472
69/	(56-3/4" Long) 89	.....	1	362 1473

Printed in U.S.A.

SEATS - SOFT TRIM

29.115–1 MOULDING, Left Front Seat Back (* 29-35)

67	(Inner) 01 (WIRS)	.....	1	358 0361
67	(Inner)(WBS)	.....	1	358 0361
67	(Outer) 01 (WIRS)	.....	1	358 0363
67	(Outer)(WBS)	.....	1	358 0363
67	(Chrome)(Inner) 10-50-80 (WIRS)	.....	1	358 0353
67	(Chrome)(Outer) 10-50-80 (WIRS)	.....	1	358 0333
(T-781)(Inner)(WIRS)		.....	1	358 0345
(T-781)(Outer)(WIRS)		.....	1	358 0325
(T-783)(Inner)(WIRS)		.....	1	358 0347
(T-783)(Outer)(WIRS)		.....	1	358 0327
(T-787)(Inner)(WIRS)		.....	1	358 0349
(T-787)(Outer)(WIRS)		.....	1	358 0329
(T-789)(Inner)(WIRS)		.....	1	358 0351
(T-789)(Outer)(WIRS)		.....	1	358 0331

29.115–2 MOULDING, Right Front Seat Back (* 29-35)

67	(Inner) 01 (WIRS)	.....	1	358 0360
67	(Inner) 01-10-50-80 (WBS)	.....	1	358 0360
67	(Outer) 01 (WIRS)	.....	1	358 0362
67	(Outer) 01-10-50-80 (WBS)(WIRS)	.....	1	358 0362
67	(Chrome)(Inner) 10-50-80 (WIRS)	.....	1	358 0352
67	(Chrome)(Outer) 10-50-80 (WIRS)	.....	1	358 0332
(T-781)(Inner)(WIRS)		.....	1	358 0344
(T-781)(Outer)(WIRS)		.....	1	358 0324
(T-783)(Inner)(WIRS)		.....	1	358 0346
(T-783)(Outer)(WIRS)		.....	1	358 0326
(T-787)(Inner)(WIRS)		.....	1	358 0348
(T-787)(Outer)(WIRS)		.....	1	358 0328
(T-789)(Inner)(WIRS)		.....	1	358 0350
(T-789)(Outer)(WIRS)		.....	1	358 0330

29.115–3 MOULDING, Front Seat Back

67	(Left) 10-50-80 (WNRS)(WFS)	.....	1	355 7477
67	(Right) 10-50-80 (WNRS)(WFS)	.....	1	355 7476

29.115–4 ATTACHING PARTS, Moulding To Back Frame

SCREW, Tapping.....	67	10-50-80 (WFS)(WNRS).....	17.655	4	G168584 NA
SCREW, Tapping.....	67	(WRS)(WIRS)(WBS).....	17.655	8	G168590 NA

29.116 MOULDING, Front Seat Back Kickpanel

67	10-50-80 (WIRS)	.....	2	358 0578
67	50-80 (WBS)	.....	2	358 0580
70/	(WBS)(Outer Edge)	29.112	2	362 8464

29.117 INSERT, Front Seat Back Kickpanel (Wood Grain)

70	89 (WBS)	.....	2	363 7773
71/	89 (WBS)	.....	2	363 7774

29.118 MOULDING, Front Seat Back Kickpanel Insert

70/	89 (WBS)	.....	2	363 7784

SEATS - SOFT TRIM

29. 120–1 PANEL, Front Seat Sidewing Trim (* 29-35)

1967 Thru 1969 MODELS

67	(Chrome)(Left) 01 (WFS)(WNRS)	.....	1	358 3393
67	(Chrome)(Left) 01 (WRS)(WIRS)(WBS)	.....	1	357 8285
68	(Chrome)(Left) 01 (WIRS)	.....	1	360 5181
69	(Chrome)(Left) 01 (440-WIRS)(Rouge-WIRS)	.....	1	360 5181
69	(Chrome)(Left) 01 (Rambler-WIRS)	.....	1	360 7631
67	(Chrome)(Left) 10-50-80 (WFS)(WNRS)	.....	1	353 2119
67	(Chrome)(Left) 10-50-80 (WIRS) ***(Use 448 6871)***	.....	1	358 0311
67	(Chrome)(Left) 10-50-80 (WBS)	.....	1	357 8285
68	(Chrome)(Left) 10-80 (WIRS)	.....	1	360 5183
69	(Chrome)(Left) 10-80 (WIRS)(* 29-99)	.....	1	360 5183
69	(Chrome)(Left) 10-80 (WIRS)(* 29-100) ***(Use 360 5183)***	.....	1	361 9321
68	(Chrome)(Left) 10-80 (WBS)	.....	1	360 5181
69	(Chrome)(Left) 10-80 (WBS)(* 29-99)	.....	1	360 5181
69	(Chrome)(Left) 10-80 (WBS)(* 29-100)	.....	1	361 9323
68/69	(Chrome)(Left) 39-79 (WRBS)	.....	1	360 7631
67	(Chrome)(Right) 01 (WFS)(WNRS)	.....	1	358 3392
67	(Chrome)(Right) 01 (WRS)(WIRS)(WBS)	.....	1	357 8284
68	(Chrome)(Right) 01 (WIRS)	.....	1	360 5180
69	(Chrome)(Right) 01 (440-WIRS)(Rouge-WIRS)	.....	1	360 5180
69	(Chrome)(Right) 01 (Rambler-WIRS)	.....	1	360 7630
67	(Chrome)(Right) 10-50-80 (WFS)(WNRS)	.....	1	353 2118
67	(Chrome)(Right) 10-50-80 (WIRS) ***(Use 448 6870)***	.....	1	358 0310
67	(Chrome)(Right) 10-50-80 (WBS)	.....	1	357 8284
68	(Chrome)(Right) 10-80 (WIRS)	.....	1	360 5182
69	(Chrome)(Right) 10-80 (WIRS)(* 29-99)	.....	1	360 5182
69	(Chrome)(Right) 10-80 (WIRS)(* 29-100) ***(Use 360 5182)***	.....	1	361 9320
68	(Chrome)(Right) 10-80 (WBS)	.....	1	360 5180
69	(Chrome)(Right) 10-80 (WBS)(* 29-99)	.....	1	360 5180
69	(Chrome)(Right) 10-80 (WBS)(* 29-100)	.....	1	361 9322
68/69	(Chrome)(Right) 39-79 (WRBS)	.....	1	360 7630
(T-723)(Left)(WFS)(WNRS)		.....	1	358 0365
(T-723)(Right)(WFS)(WNRS)		.....	1	358 0364
(T-723)(Left)(WRS)		.....	1	358 0401
(T-723)(Right)(WRS)		.....	1	358 0400
(T-728)(Left)(WFS)(WNRS)		.....	1	353 2745
(T-728)(Right)(WFS)(WNRS)		.....	1	353 2744
(T-728)(Left)(WRS)		.....	1	351 8783
(T-728)(Right)(WRS)		.....	1	351 8782
(T-729)(Left)(WFS)(WNRS)		.....	1	358 0375
(T-729)(Right)(WFS)(WNRS)		.....	1	358 0374
(T-729)(Left)(WRS)		.....	1	358 0403
(T-729)(Right)(WRS		.....	1	358 0402
(T-753)(Left)(WFS)(WNRS)		.....	1	358 0365
(T-753)(Right)(WFS)(WNRS)		.....	1	358 0364
(T-753)(Left)(WIRS)		.....	1	358 0401
(T-753)(Right)(WIRS)		.....	1	358 0400
(T-758)(Left)(WFS)(WNRS)		.....	1	353 2745
(T-758)(Right)(WFS)(WNRS)		.....	1	353 2744
(T-758)(Left)(WIRS)		.....	1	351 8783
(T-758)(Right)(WIRS)		.....	1	351 8782
(T-759)(Left)(WFS)(WNRS)		.....	1	358 0375
(T-759)(Right)(WFS)(WNRS)		.....	1	358 0374
(T-759)(Left)(WIRS)		.....	1	358 0403
(T-759)(Right)(WIRS)		.....	1	358 0402
(T-781)(Left)(WFS)(WNRS)		.....	1	353 2743
(T-781)(Right)(WFS)(WNRS)		.....	1	353 2742
(T-781)(Left)(WIRS)		.....	1	358 0303
(T-781)(Right)(WIRS)		.....	1	358 0302

Printed in U.S.A.

SEATS - SOFT TRIM

(T-783)(Left)(WFS)(WNRS)	1	358 0365
(T-783)(Right)(WFS)(WNRS)	1	358 0364
(T-783)(Left)(WIRS)	1	358 0305
(T-783)(Right)(WIRS)	1	358 0304
(T-787)(Left)(WFS)(WNRS)	1	358 0371
(T-787)(Right)(WFS)(WNRS)	1	358 0370
(T-787)(Left)(WIRS)	1	358 0307
(T-787)(Right)(WIRS)	1	358 0306
(T-789)(Left)(WFS)(WNRS)	1	358 0375
(T-789)(Right)(WFS)(WNRS)	1	358 0374
(T-789)(Left)(WIRS)	1	358 0309
(T-789)(Right)(WIRS)	1	358 0308
(T-828)(Left)(WFS)(WNRS)	1	360 5927
(T-828)(Right)(WFS)(WNRS)	1	360 5926
(T-831J)(Left-Inner)(WNBS)	1	360 7761
(T-831J)(Right-Inner)(WNBS)	1	360 7760
(T-831J)(Left-Outer)(WNBS)	1	360 7643
(T-831J)(Right-Outer)(WNBS)	1	360 7642
(T-838J)(Left-Inner)(WNBS)	1	360 7761
(T-838J)(Right-Inner)(WNBS)	1	360 7760
(T-838J)(Left-Outer)(WNBS)	1	360 7643
(T-838J)(Right-Outer)(WNBS)	1	360 7642
(T-843)(Left)(WFS)(WNRS)	1	360 5921
(T-843)(Right)(WFS)(WNRS)	1	360 5920
(T-844)(Left)(WFS)(WNRS)	1	360 5923
(T-844)(Right)(WFS)(WNRS)	1	360 5922
(T-845)(Left)(WFS)(WNRS)	1	360 5931
(T-845)(Right)(WFS)(WNRS)	1	360 5930
(T-848)(Left)(WFS)(WNRS)	1	360 5927
(T-848)(Right)(WFS)(WNRS)	1	360 5296
(T-851)(Left)(WFS)(WNRS)	1	360 5925
(T-851)(Right)(WFS)(WNRS)	1	360 5924
(T-851)(Left)(WIRS)	1	360 7617
(T-851)(Right)(WIRS)	1	360 7616
(T-853)(Left)(WFS)(WNRS)	1	360 5921
(T-853)(Right)(WFS)(WNRS)	1	360 5920
(T-853)(Left)(WIRS)	1	360 7619
(T-853)(Left)(WIRS)	1	360 7618
(T-855)(Left)(WFS)(WNRS)	1	360 5931
(T-855)(Right)(WFS)(WNRS)	1	360 5930
(T-855)(Left)(WIRS)	1	361 2167
(T-855)(Right)(WIRS)	1	361 2166
(T-871)(Left)(WFS)(WNRS)	1	360 5925
(T-871)(Right)(WFS)(WNRS)	1	360 5924
(T-873)(Left)(WFS)(WNRS)	1	360 5921
(T-873)(Right)(WFS)(WNRS)	1	360 5920
(T-874)(Left)(WFS)(WNRS)	1	360 5923
(T-874)(Right)(WFS)(WNRS)	1	360 5922
(T-875)(Left)(WFS)(WNRS)	1	360 5931
(T-875)(Right)(WFS)(WNRS)	1	360 5930
(T-876)(Left)(WFS)(WNRS)	1	360 5943
(T-876)(Right)(WFS)(WNRS)	1	360 5942
(T-879)(Left)(WFS)(WNRS)	1	360 5929
(T-879)(Right)(WFS)(WNRS)	1	360 5928
(T-881)(Left)(WFS)(WNRS)	1	360 5925
(T-881)(Right)(WFS)(WNRS)	1	360 5924
(T-883)(Left)(WFS)(WNRS)	1	360 5921
(T-883)(Right)(WFS)(WNRS)	1	360 5920
(T-885)(Left)(WFS)(WNRS)	1	360 5931
(T-885)(Right)(WFS)(WNRS)	1	360 5930
(T-891)(Left)(WFS)(WNRS)	1	360 5925
(T-891)(Right)(WFS)(WNRS)	1	360 5924
(T-893)(Left)(WFS)(WNRS)	1	360 5921
(T-893)(Right)(WFS)(WNRS)	1	360 5920

Printed in U.S.A.

SEATS - SOFT TRIM

(T-894)(Left)(WFS)(WNRS)	.....	1	360 5923
(T-894)(Right)(WFS)(WNRS)	.....	1	360 5922
(T-895)(Left)(WFS)(WNRS)	.....	1	360 5931
(T-895)(Right)(WFS)(WNRS)	.....	1	360 5930
(T-896)(Left)(WFS)(WNRS)	.....	1	360 5943
(T-896)(Right)(WFS)(WNRS)	.....	1	360 5942
(T-899)(Left)(WFS)(WNRS)	.....	1	360 5929
(T-899)(Right)(WFS)(WNRS)	.....	1	360 5928
(T-941)(Left)(WFS)(WNRS)	.....	1	362 0563
(T-941)(Right)(WFS)(WNRS)	.....	1	362 0562
(T-943)(Left)(WFS)(WNRS)	.....	1	362 0565
(T-943)(Right)(WFS)(WNRS)	.....	1	362 0564
(T-944)(Left)(WFS)(WNRS)	.....	1	362 0567
(T-944)(Right)(WFS)(WNRS)	.....	1	362 0566
(T-945)(Left)(WFS)(WNRS)	.....	1	362 0569
(T-945)(Right)(WFS)(WNRS)	.....	1	362 0568
(T-951)(Left)(WIRS)	.....	1	362 0585
(T-951)(Right)(WIRS)	.....	1	362 0584
(T-951)(Left)(WFS)(WNRS)	.....	1	362 0563
(T-951)(Right)(WFS)(WNRS)	.....	1	362 0562
(T-953)(Left)(WFS)(WNRS)	.....	1	362 0565
(T-953)(Right)(WFS)(WNRS)	.....	1	362 0564
(T-953)(Left)(WIRS)	.....	1	362 0587
(T-953)(Right)(WIRS)	.....	1	362 0586
(T-956)(Left)(WFS)(WNRS)(Beige)	.....	1	362 0571
(T-956)(Right)(WFS)(WNRS)(Beige)	.....	1	362 0570
(T-956)(Left)(WFS)(WNRS)(Brown)	.....	1	448 8069
(T-956)(Right)(WFS)(WNRS)(Brown)	.....	1	448 8068
(T-956)(Left)(WIRS)	.....	1	362 0591
(T-956)(Right)(WIRS)	.....	1	362 0590
(T-957)(Left)(WFS)(WNRS)	.....	1	362 0573
(T-957)(Right)(WFS)(WNRS)	.....	1	362 0572
(T-957)(Left)(WIRS)	.....	1	362 0593
(T-957)(Right)(WIRS)	.....	1	362 0592
(T-961J)(Left-Outer)(* 29-101)	.....	1	362 3665
(T-961J)(Right-Outer)(* 29-101)	.....	1	362 3664
(T-961J)(Left-Inner)(* 29-101)	.....	1	362 3603
(T-961J)(Left-Inner)(* 29-102)	.....	1	448 6901
(T-961J)(Left-Outer)(* 29-102)	.....	1	363 0815
(T-961J)(Right-Inner)(* 29-101)	.....	1	362 3602
(T-961J)(Right-Inner)(* 29-102)	.....	1	448 6900
(T-961J)(Right-Outer)(* 29-102)	.....	1	363 0814
(T-968J)(Left-Outer)(* 29-101)	.....	1	362 3663
(T-968J)(Left-Outer)(* 29-102)	.....	1	363 0813
(T-968J)(Right-Outer)(* 29-101)	.....	1	362 3662
(T-968J)(Right-Outer)(* 29-102)	.....	1	363 0812
(T-968J)(Left-Inner)(* 29-101)	.....	1	362 3601
(T-968J)(Left-Inner)(* 29-102)	.....	1	448 6903
(T-968J)(Right-Inner)(* 29-101)	.....	1	362 3600
(T-968J)(Right-Inner)(* 29-102)	.....	1	448 6902
(T-972)(Left)(WFS)(WNRS)	.....	1	362 5017
(T-972)(Right)(WFS)(WNRS)	.....	1	362 5016
(T-973)(Left)(WFS)(WNRS)	.....	1	362 0565
(T-973)(Right)(WFS)(WNRS)	.....	1	362 0564
(T-975)(Left)(WNRS)	.....	1	362 0569
(T-975)(Right)(WNRS)	.....	1	362 0568
(T-976)(Left)(WFS)(WNRS)(Beige)	.....	1	362 0571
(T-976)(Right)(WFS)(WNRS)(Beige)	.....	1	362 0570
(T-976)(Left)(WFS)(WNRS)(Brown)	.....	1	448 8069
(T-976)(Right)(WFS)(WNRS)(Brown)	.....	1	448 8068
(T-977)(Left)(WFS)(WNRS)	.....	1	362 0573
(T-977)(Right)(WFS)(WNRS)	.....	1	362 0572

Printed in U.S.A.

SEATS - SOFT TRIM

(T-979)(Left)(WNRS)	1	362 0575	
(T-979)(Right)(WNRS)	1	362 0574	
(T-981)(Left)(WFS)	1	362 0563	
(T-981)(Right)(WFS)	1	362 0562	
(T-983)(Left)(WFS)	1	362 0565	
(T-983)(Right)(WFS)	1	362 0564	
(T-986)(Left)(WFS)(Beige)	1	362 0571	
(T-986)(Right)(WFS)(Beige)	1	362 0570	
(T-986)(Left)(WFS)(Brown)	1	448 8069	
(T-986)(Right)(WFS)(Brown)	1	448 8068	
(T-987)(Left)(WFS)	1	362 0573	
(T-987)(Right)(WFS)	1	362 0572	
(T-991)(Left)(WFS)(WNRS)	1	362 0563	
(T-991)(Right)(WFS)(WNRS)	1	362 0562	
(T-993)(Left)(WFS)(WNRS)	1	362 0565	
(T-993)(Right)(WFS)(WNRS)	1	362 0564	
(T-995)(Left)(WNRS)	1	362 0569	
(T-995)(Right)(WNRS)	1	362 0568	
(T-996)(Left)(WFS)(WNRS)(Beige)	1	362 0571	
(T-996)(Right)(WFS)(WNRS)(Beige)	1	362 0570	
(T-996)(Left)(WFS)(WNRS)(Brown)	1	448 8069	
(T-996)(Right)(WFS)(WNRS)(Brown)	1	448 8068	
(T-997)(Left)(WFS)(WNRS)	1	362 0573	
(T-997)(Right)(WFS)(WNRS)	1	362 0572	

1970 Thru 1972 MODELS (Seat Options Not Listed Below Are Listed By Trim No.)

70	(Chrome)(Left) 01 (WIRS)	1	360 7631
70/71	(Chrome)(Left) 10-80 (WIRS)	1	360 5183
70	(Chrome)(Right) 01 (WIRS)	1	360 7630
70/71	(Chrome)(Right) 10-80 (WIRS)	1	360 5182
70/71	(Black)(Left) 01-40 (WNRS)	1	363 9327 NC
70/71	(Black)(Right) 01-40 (WNRS)	1	363 9326 NC
70	(Parchment)(Left) 01-40 (WNRS)	1	363 9325
70	(Parchment)(Right) 01-40 (WNRS)	1	363 9324
72	(Left) 01-40 (WNRS)	1	365 1761 NC
70	(Left) 40 (WBS-5" Long)	1	362 7187 NC
70	(Left) 70 (WBS-Except SST)	1	362 7187 NC
72	(Right) 01-40 (WNRS)	1	365 1760 NC
70	(Right) 40 (WBS-5" Long)	1	362 7186 NC
70	(Right) 70 (WBS-Except SST)	1	362 7186 NC

Trim No.			Per Car	01-10-30-40 -70-80
T-001F	Left	(20" Long)	1	362 8471
	Right	(20" Long)	1	362 8470
T-008F	Left	(20" Long)	1	362 8471
	Right	(20" Long)	1	362 8470
T-011F	Left	(20" Long)	1	362 8471
	Right	(20" Long)	1	362 8470
T-013F	Left	(20" Long)	1	364 3507
	Right	(20" Long)	1	364 3506
T-014F	Left	(20" Long)	1	364 3509
	Right	(20" Long)	1	364 3508
T-015F	Left	(20" Long)	1	362 8477
	Right	(20" Long)	1	362 8476
T-021A	Left	(WNRS)	1	363 9325
	Right	(WNRS)	1	363 9324
T-021B	Left	(WNRS)	1	363 9325
	Right	(WNRS)	1	363 9324
T-021G	Left	(WNRS)	1	363 9327
	Right	(WNRS)	1	363 9326

SEATS - SOFT TRIM

Trim No.			Per Car	01-10-30-40 -70-80
T-023	Left	(WNRS-* 29-19 NC)	1	363 9327
	Right	(WNRS-* 29-19 NC)	1	363 9326
T-024	Left	(WNRS-* 29-19 NC)	1	363 9327
	Right	(WNRS-* 29-19 NC)	1	363 9326
T-025	Left	(WNRS-* 29-19 NC)	1	363 9327
	Right	(WNRS-* 29-19 NC)	1	363 9326
T-031	Left		1	362 8471
	Right		1	362 8470
T-033	Left	(WBS-* 29-118)	1	362 8473
		(WBS-* 29-119)	1	364 3507
	Right	(WBS-* 29-118)	1	362 8472
		(WBS-* 29-119)	1	364 3506
T-035	Left		1	362 8477
	Right		1	362 8476
T-036	Left		1	362 8479
	Right		1	362 8478
T-041	Left	(WNRS-* 29-19 NC)	1	363 9327
	Right	(WNRS-* 29-19 NC)	1	363 9326
T-043	Left	(WNRS-* 29-19 NC)	1	363 9327
	Right	(WNRS-* 29-19 NC)	1	363 9326
T-044	Left	(WNRS-* 29-19 NC)	1	363 9327
	Right	(WNRS-* 29-19 NC)	1	363 9326
T-045	Left	(WNRS-* 29-19 NC)	1	363 9327
	Right	(WNRS-* 29-19 NC)	1	363 9326
T-051	Left	(WFS)(WNRS)	1	360 5925
		(WIRS)	1	360 7617
		(WBS)	1	362 8471
	Right	(WFS)(WNRS)	1	360 5924
		(WIRS)	1	360 7616
		(WBS)	1	362 8470
T-053	Left	(WFS)(WNRS)	1	363 7951
		(WIRS)	1	362 9449
		(WBS-* 29-118)	1	362 8473
		(WBS-* 29-119)	1	364 3507
	Right	(WFS)(WNRS)	1	363 7950
		(WIRS)	1	362 9448
		(WBS-* 29-118)	1	362 8472
		(WBS-* 29-119)	1	364 3506
T-054	Left	(WFS)(WNRS)	1	363 7953
		(WBS-* 29-118)	1	362 8475
		(WBS-* 29-119)	1	364 3509
		(WIRS)	1	362 9451
	Right	(WFS)(WNRS)	1	363 7952
		(WIRS)	1	362 9450
		(WBS-* 29-118)	1	362 8474
		(WBS-* 29-119)	1	364 3508
T-056	Left	(WFS)(WNRS)	1	363 7955
		(WIRS)	1	362 9453
		(WBS)	1	362 8479
	Right	(WFS)(WNRS)	1	363 7954
		(WIRS)	1	362 9452
		(WBS)	1	362 8478
T-061	Left	(WBS-SST)	1	362 8471
	Right	(WBS-SST)	1	362 8470
T-063	Left	(WBS-SST-* 29-118)	1	362 8473
		(WBS-SST-* 29-119)	1	364 3507
	Right	(WBS-SST-* 29-118)	1	362 8472
		(WBS-SST-* 29-119)	1	364 3506
T-064	Left	(WBS-SST-* 29-118)	1	362 8475
		(WBS-SST-* 29-119)	1	364 3509
	Right	(WBS-SST-* 29-118)	1	362 8474
		(WBS-SST-* 29-119)	1	364 3508

SEATS - SOFT TRIM

Trim No.			Per Car	01-10-30-40 -70-80
T-065	Left	(WBS-SST)	1	362 8477
	Right	(WBS-SST)	1	362 8476
T-066	Left	(WBS-SST)	1	362 8479
	Right	(WBS-SST)	1	362 8478
T-071	Left	(WFS)(WNRS)	1	360 5925
		(WBS)	1	362 8471
	Right	(WFS)(WNRS)	1	360 5924
		(WBS)	1	362 8470
T-073	Left	(WFS)(WNRS)	1	363 7951
		(WBS)	1	362 8473
	Right	(WFS)(WNRS)	1	363 7950
		(WBS)	1	362 8472
T-074	Left	(WFS)(WNRS)	1	363 7953
	Right	(WFS)(WNRS)	1	363 7952
T-075	Left	(WFS)(WNRS)	1	362 0569
		(WBS)	1	362 8477
	Right	(WFS)(WNRS)	1	362 0568
		(WBS)	1	362 8476
T-076	Left	(WFS)(WNRS)	1	363 7955
		(WBS)	1	362 8479
	Right	(WFS)(WNRS)	1	363 7954
		(WBS)	1	362 8478
T-081	Left	(WFS)	1	360 5925
	Right	(WFS)	1	360 5924
T-083	Left	(WFS)	1	363 7951
	Right	(WFS)	1	363 7950
T-084	Left	(WFS)	1	363 7953
	Right	(WFS)	1	363 7952
T-086	Left	(WFS)	1	363 7955
	Right	(WFS)	1	360 5925
T-091	Left	(WFS)(WNRS)	1	360 5925
		(WBS)	1	362 8471
	Right	(WFS)(WNRS)	1	360 5924
		(WBS)	1	362 8470
T-093	Left	(WFS)(WNRS)	1	363 7951
		(WBS)	1	362 8473
	Right	(WFS)(WNRS)	1	363 7950
		(WBS)	1	362 8472
T-094	Left	(WFS)(WNRS)	1	363 7953
		(WBS-* 29-118)	1	362 8475
		(WBS-* 29-119)	1	364 3509
	Right	(WFS)(WNRS)	1	363 7952
		(WBS-* 29-118)	1	362 8474
		(WBS-* 29-119)	1	364 3508
T-095	Left	(WFS)(WNRS)	1	362 0569
		(WBS)	1	362 8477
	Right	(WFS)(WNRS)	1	362 0568
		(WBS)	1	362 8476
T-096	Left	(WFS)(WNRS)	1	363 7955
		(WBS)	1	362 8479
	Right	(WFS)(WNRS)	1	363 7954
		(WBS)	1	362 8478
T-111S	Left		1	362 7187
	Right		1	362 7186
T-113S	Left		1	364 9169
	Right		1	364 9168
T-114S	Left		1	364 9171
	Right		1	364 9170
T-115S	Left		1	364 9173
	Right		1	364 9172
T-121	Left	(WIRS)	1	364 3773
	Right	(WIRS)	1	364 3772
T-123	Left	(WIRS)	1	364 3775
	Right	(WIRS)	1	364 3774
T-124	Left	(WIRS)	1	364 3777
	Right	(WIRS)	1	364 3776

SEATS - SOFT TRIM

Trim No.			Per Car	01-10-30-40 -70-80
T-141	Left	(WIRS)	1	364 3773
	Right	(WIRS)	1	364 3772
T-143	Left	(WIRS)	1	364 3775
	Right	(WIRS)	1	364 3774
T-144	Left	(WIRS)	1	364 3777
	Right	(WIRS)	1	364 3776
T-145	Left	(WIRS)	1	364 3779
	Right	(WIRS)	1	364 3778
T-151	Left	(WFS)(WNRS)	1	360 5925
		(WIRS)	1	360 7617
	Right	(WFS)(WNRS)	1	360 5924
		(WIRS)	1	360 7616
T-153	Left	(WFS)(WNRS)	1	364 8721
		(WIRS)	1	364 3635
	Right	(WFS)(WNRS)	1	364 8720
		(WIRS)	1	364 3634
T-154	Left	(WFS)(WNRS)	1	364 8723
		(WIRS)	1	364 3637
	Right	(WFS)(WNRS)	1	364 8722
		(WIRS)	1	364 3636
T-161	Left		1	362 7187
	Right		1	362 7186
T-163	Left		1	364 9169
	Right		1	364 9168
T-164	Left		1	364 9171
	Right		1	364 9170
T-165	Left		1	364 9173
	Right		1	364 9172
T-168	Left		1	362 7187
	Right		1	362 7186
T-171	Left	(WFS)(WNRS)	1	360 5925
		(WBS)	1	362 7187
	Right	(WFS)(WNRS)	1	360 5924
		(WBS)	1	362 7186
T-173	Left	(WFS)(WNRS)	1	364 8721
		(WBS)	1	364 9169
	Right	(WFS)(WNRS)	1	364 8720
		(WBS)	1	364 9168
T-174	Left	(WFS)(WNRS)	1	364 8723
		(WBS)	1	364 9171
	Right	(WFS)(WNRS)	1	364 8722
		(WBS)	1	364 9170
T-175	Left	(WFS)(WNRS)	1	364 8725
		(WBS)	1	364 9173
	Right	(WFS)(WNRS)	1	364 8724
		(WBS)	1	364 9172
T-181	Left	(WFS)(WNRS)	1	360 5925
		(WIRS)	1	360 7617
	Right	(WFS)(WNRS)	1	360 5924
		(WIRS)	1	360 7616
T-183	Left	(WFS)(WNRS)	1	364 8721
		(WIRS)	1	364 3635
	Right	(WFS)(WNRS)	1	364 8720
		(WIRS)	1	364 3634
T-184	Left	(WFS)(WNRS)	1	364 8723
		(WIRS)	1	364 3637
	Right	(WFS)(WNRS)	1	364 8722
		(WIRS)	1	364 3636

SEATS - SOFT TRIM

Trim No.			Per Car	01-10-30 40-70-80
T-191	Left	(WFS)(WNRS)	1	360 5925
		(WBS)	1	362 7187
	Right	(WFS)(WNRS)	1	360 5924
		(WBS)	1	362 7186
T-193	Left	(WFS)(WNRS)	1	364 8721
		(WBS)	1	364 9169
	Right	(WFS)(WNRS)	1	364 8722
		(WBS)	1	364 9168
T-194	Left	(WFS)(WNRS)	1	364 8723
		(WBS)	1	364 9171
	Right	(WFS)(WNRS)	1	364 8722
		(WBS)	1	364 9170
T-195	Left	(WFS)(WNRS)	1	364 8725
		(WBS)	1	364 9173
	Right	(WFS)(WNRS)	1	364 8724
		(WBS)	1	364 9172
T-211	Left	(WBS)	1	365 3635
	Right	(WBS)	1	365 3634
T-213	Left	(WBS)	1	365 3627
	Right	(WBS)	1	365 3626
T-215	Left	(WBS)	1	365 3635
	Right	(WBS)	1	365 3634
T-216	Left	(WBS)	1	365 3633
	Right	(WBS)	1	365 3632
T-218	Left	(WBS)	1	365 3635
	Right	(WBS)	1	365 3634
T-241	Left	(WIRS)	1	366 1233
		(WBS)	1	365 3635
	Right	(WIRS)	1	366 1232
		(WBS)	1	365 3634
T-243	Left	(WIRS)	1	365 3589
		(WBS)	1	365 3627
	Right	(WIRS)	1	365 3588
		(WBS)	1	365 3626
T-244	Left	(WIRS)	1	365 3591
	Right	(WIRS)	1	365 3590
T-245	Left	(WBS)	1	365 3635
	Right	(WBS)	1	365 3634
T-246	Left	(WIRS)	1	365 3595
		(WBS)	1	365 3633
	Right	(WIRS)	1	365 3594
		(WBS)	1	365 3632
T-248	Left	(WIRS)	1	366 1233
		(WBS)	1	365 3635
	Right	(WIRS)	1	366 1232
		(WBS)	1	365 3634
T-261	Left		1	365 3635
	Right		1	365 3634
T-263	Left		1	365 3627
	Right		1	365 3626
T-264	Left		1	365 3629
	Right		1	365 3628
T-265	Left		1	365 3635
	Right		1	365 3634
T-266	Left		1	365 3633
	Right		1	365 3632
T-268	Left		1	365 3635
	Right		1	365 3634
T-271	Left	(WFS)(WNRS)	1	365 5455
		(WIRS)	1	365 3909
		(WBS)	1	365 3635
	Right	(WFS)(WNRS)	1	365 5454
		(WIRS)	1	365 3908
		(WBS)	1	365 3634

SEATS - SOFT TRIM

Trim No.			Per Car	01-10-30 40-70-80
T-273	Left	(WFS)(WNRS)	1	365 5457
		(WIRS)	1	365 3911
		(WBS)	1	365 3627
	Right	(WFS)(WNRS)	1	365 5456
		(WIRS)	1	365 3910
		(WBS)	1	365 3626
T-274	Left	(WFS)(WNRS)	1	365 5459
		(WIRS)	1	365 3913
		(WBS)	1	365 3629
	Right	(WFS)(WNRS)	1	365 5458
		(WIRS)	1	365 3912
		(WBS)	1	365 3628
T-276	Left	(WFS)(WNRS)	1	365 5461
		(WIRS)	1	365 3917
		(WBS)	1	365 3633
	Right	(WFS)(WNRS)	1	365 5460
		(WIRS)	1	365 3916
		(WBS)	1	365 3632
T-291	Left	(WFS)(WNRS)	1	365 5455
		(WIRS)	1	365 3909
		(WBS)	1	365 3635
	Right	(WFS)(WNRS)	1	365 5454
		(WIRS)	1	365 3908
		(WBS)	1	365 3634
T-293	Left	(WFS)(WNRS)	1	365 5457
		(WIRS)	1	365 3911
		(WBS)	1	365 3627
	Right	(WFS)(WNRS)	1	365 5456
		(WIRS)	1	365 3910
		(WBS)	1	365 3626
T-294	Left	(WFS)(WNRS)	1	365 5459
		(WIRS)	1	365 3913
		(WBS)	1	365 3629
	Right	(WFS)(WNRS)	1	365 5458
		(WIRS)	1	365 3912
		(WBS)	1	365 3628
T-296	Left	(WFS)(WNRS)	1	365 5461
		(WIRS)	1	365 3917
		(WBS)	1	365 3633
	Right	(WFS)(WNRS)	1	365 5460
		(WIRS)	1	365 3916
		(WBS)	1	365 3632

29. 120-2 ATTACHING PARTS, Panel To Frame

FASTENER	68/69	(WFS)(WNRS)(WNBS)	.....	AR	400 2296	
SCREW, Machine	69	70 (WNBS)	17.598	2	G159592	NA
SCREW, Machine	71/	(10-24 x 51/64) 01 (WIRS)	.....	2	400 3773	
SCREW, Machine	71/	(10-32 x 13/32) 01-10-80 (WIRS)	.....	2	400 3751	
SCREW, Tapping	70/	(9/16" Long)(WBS)	29.060	2	400 1776	
SCREW, Tapping	68/69	(5/8" Long)(WIRS)(WRBS)	.....	2	400 0575	
SCREW, Tapping	70/	(5/8" Long) 01-10-80 (WIRS)	.....	2	400 0575	
SCREW, Tapping	67	(7/8" Long) 01 (WRS)(WIRS)(WBS)	.....	4	400 2072	
SCREW, Tapping	67/69	(7/8" Long)(WIRS)	.....	4	400 2072	
SCREW, Tapping	68/69	(7/8" Long) 39-79 (WRBS)	.....	2	400 2072	
SCREW, Tapping	70/71	(7/8" Long) 10-80 (WIRS)	.....	2	400 2072	
SCREW, Tapping	67	(1" Long) 01 (WRS)	.....	4	400 1463	
SCREW, Tapping	67	(1" Long) 10-50-80 (WIRS)(WBS)	.....	4	400 1463	
SCREW, Tapping	69/70	(10-24 x 7/16) 01-10-80 (WIRS)(WBS)	23.006	2	400 0651	
SCREW, Tapping	68/69	(10-12 x 3/4) 01-10-80 (WIRS)(WBS)	.....	4	G161904	
SCREW, Tapping	69/	(10-24 x 3/4) 10-80 (WFS)(WNRS)(WIRS) ***(Use G161909)***	23.045	2	400 0640	
SCREW, Tapping	70/71	(10-12 x 3/4) 10-80 (WIRS)	.....	4	G161904	
SCREW, Tapping	71/	(10-24 x 5/8) 10-80 (WIRS)	.....	2	400 0575	

Printed in U.S.A.

SCREW, Tapping.....	70/	(10-24 x 1) 06-46 (WNRS)	17.655	2	G9425232 NA
SCREW, Tapping.....	67/69	(10-24 x 5/8)(WFS)(WNRS).....	.....	2	400 0575
SCREW, Tapping.....	70/	WNBS	.....	6	400 2456
CAP, Pushnut (Chrome).	67/68	01-10-50-80 (WFS)(WNRS).....	.....	2	400 1529
CAP, Pushnut (Black)..	68/69	01 (WFS)(WNRS).....	.....	2	400 1540
NUT, Tee.....	69	70 (WNRS).....	.....	2	400 3859

29.120-3 MOULDING, Front Seat Sidewing Panel

70	(Left) WNBS (20" Long).....	.....	1	362 8481
70/	(Left) WNBS (5" Long).....	.....	1	363 8281
70	(Right) WNBS (20" Long).....	.....	1	362 8480
70/	(Right) WNBS (5" Long).....	.....	1	363 8280

29.120-4 OVERLAY, Front Seat Sidewing Panel (Cover)

71/	01 (WIRS)	.....	2	363 8734
72	10-80 (WIRS)	.....	2	364 8924

29.129-1 EXTENSION KIT, Front Seat Slide Adjuster (* 29-35)

67	(WFS)(WNRS)(WRS)	.....	1	448 0916
68/	(WFS)(WNRS)	.....	1	812 0279
67	(WIRS)(WBS)	.....	2	448 0916
68/	(WIRS)(WBS)	.....	2	812 0279

29.129-2 BRACKET, Front Seat Slide Adjuster Extension (* 29-35)

67	(WFS)(WNRS)(WRS)	.....	1	448 0917
68/	(WFS)(WNRS)	.....	2	812 0278
67	(WIRS)(WBS)	.....	2	448 0917
68/	(WIRS)(WBS)	.....	4	812 0278

29.129-3 ATTACHING PARTS, Seat Adjuster To Extension Bracket

SCREW, Machine.....	67	.....	23.008	AR	400 0033
SCREW, Machine.....	68/	(5/16"-18 x 1/2")	17.604	AR	G153931 NA
SCREW, Machine.....	68/	(5/16"-24 x 3/4")	17.586	AR	G191903 NA
WASHER, Lock	68/	.....	17.820	AR	G120214

29.129-4 SPACER KIT, Front Seat Bottom Frame (* 29-35)

69	01-10-80 (WFS)(WNRS).....	.....	1	448 7152
69	01-10-80 (WIRS)(WBS)	.....	2	448 7152
70	10-80 (WFS)(WNRS).....	.....	1	448 7152
70	10-80 (WIRS)(WBS)	.....	2	448 7152

29.129-5 ATTACHING PARTS, Spacer Kit

SCREW, Tapping.....	69	01-10-80.....	29.105	AR	400 1962
WASHER, Plain.....	69	01-10-80.....	17.814	AR	400 1120
SCREW, Tapping.....	70	10-80.....	29.105	AR	400 1962
WASHER, Plain.....	70	10-80.....	17.814	AR	400 1120

29.131-1 SLIDE, Front Seat Adjusting (* 29-35)

67	(Left) LHD (WFS)(WNRS)(WRS)	.....	1	357 7937
68	(Left) 01-10-80 (LHD-WFS-* 29-60)(LHD-WNRS-* 29-60).....	.....	1	357 7937
68	(Left) 01-10-80 (LHD-WFS-* 29-61)(LHD-WNRS-* 29-61).....	.....	1	360 7491
69	(Left) 01-10-80 (LHD-WFS)(LHD-WNRS).....	.....	1	360 7491
70	(Left) 01-40 (LHD-WFS)(LHD-WNRS)...(Less Front Stud).....	.....	1	362 7574
70/	(Left) 01-40 (LHD-WFS-* 29-140)(LHD-WNRS-* 29-140)...(Incl. Front Stud) ..	.....	1	448 8700
72	(Left) 01-40 (LHD-WFS-* 29-141)(LHD-WNRS-* 29-141)..... ***(Use 364 8242)***	.....	1	366 1913
70/	(Left) 10-80 (LHD-WFS-* 29-140)(LHD-WNRS-* 29-140).....	.....	1	362 7793
72	(Left) 10-80 (LHD-WFS-* 29-141)(LHD-WNRS-* 29-141).....	.....	1	366 1906
68/69	(Left) 30-70...(Incl. Adjusting Handle).....	.....	2	360 4458
70/	(Left) 30-70 (* 29-140)...(Incl. Front Stud).....	.....	2	448 8702
72	(Left) 70 (* 29-141)	.....	2	366 1912
67	(Left-Inrer)(WIRS)(WBS).....	.....	1	357 7938

SEATS - SOFT TRIM

68	(Left-Inner) 01-10-80 (WIRS-* 29-60)(WBS-* 29-60)	.....	1	357	7938
68	(Left-Inner) 01-10-80 (WIRS-* 29-61)(WBS-* 29-61)	.....	1	360	7492
69	(Left-Inner) 01-10-80 (WIRS)(WBS)	.....	1	360	7492
70	(Left-Inner) 01 (WIRS)...(Less Front Stud)	.....	1	362	7738
70/	(Left-Inner) 01 (WIRS-* 29-140)...(Incl. Front Stud)	.....	1	448	8698
72	(Left-Inner) 01-40 (WIRS-* 29-141)(WBS-* 29-141)	.....	1	364	8246
70/	(Left-Inner) 10-80 (WIRS-* 29-140)(WBS-* 29-140)	.....	1	360	7492
72	(Left-Inner) 10-80 (WIRS-* 29-141)(WBS-* 29-141)	.....	1	366	1907
70/	(Left-Inner) 40 (WBS-* 29-140)	.....	1	448	8698
67	(Left-Outer)(WIRS)(WBS)	.....	1	357	7935
68	(Left-Outer) 01-10-80 (WIRS-* 29-60)(WBS-* 29-60)	.....	1	357	7935
68	(Left-Outer) 01-10-80 (WIRS-* 29-61)(WBS-* 29-61)	.....	1	360	7518
69	(Left-Outer) 01-10-80 (WIRS)(WBS)	.....	1	360	7518
72	(Left-Outer) 10-80 (WIRS-* 29-141)(WBS-* 29-141)	.....	1	366	1906
70	(Left-Outer) 01 (WIRS)...(Less Front Stud)	.....	1	362	7574
70/	(Left-Outer) 01 (WIRS-* 29-140)...(Incl. Front Stud)	.....	1	448	8700
72	(Left-Outer) 01-40 (WIRS-* 29-141)(WBS-* 29-141)	.....	1	364	8242
70/	(Left-Outer) 10-80 (WIRS-* 29-140)(WBS-* 29-140)	.....	1	362	7794
70/	(Left-Outer) 40 (WBS-* 29-140)(WNRS-* 29-140)	.....	1	448	8700
67	***(Left) 01-10-80 (RHD-WFS)(RHD-WNRS)(RHD-WRS)***	.....	1	357	7939
68	***(Left) 01-10-80 (RHD-WFS-* 29-60)(RHD-WNRS-* 29-60)***	.....	1	357	7939
68	***(Left) 01-10-80 (RHD-WFS-* 29-61)(RHD-WNRS-* 29-61)***	.....	1	360	7493
69	***(Left) 01-10-80 (RHD-WFS)(RHD-WNRS)***	.....	1	360	7493
70	***(Left) 10-80 (RHD-WFS)(RHD-WNRS)***	.....	1	360	7493
67	(Right)(LHD-WFS)(LHD-WNRS)(LHD-WRS)	.....	1	357	7938
68	(Right) 01-10-80 (LHD-WFS-* 29-60)(LHD-WNRS-* 29-60)	.....	1	357	7938
68	(Right) 01-10-80 (LHD-WFS-* 29-61)(LHD-WNRS-* 29-61)	.....	1	360	7492
69	(Right) 01-10-80 (LHD-WFS)(LHD-WNRS)	.....	1	360	7492
70	(Right) 01-40 (LHD-WFS)(LHD-WNRS)...(Less Front Stud)	.....	1	362	7575
70/	(Right) 01-40 (LHD-WFS-* 29-140)(LHD-WNRS-* 29-140)...(Incl. Front Stud)	.....	1	448	8701
72	(Right) 01-40 (LHD-WFS-* 29-141)(LHD-WNRS-* 29-141) ***(Use 364 8243)***	.....	1	366	1914
70/	(Right) 10-80 (LHD-WFS-* 29-140)(LHD-WNRS-* 29-140)	.....	1	360	7492
72	(Right) 10-80 (LHD-WFS-* 29-141)(LHD-WNRS-* 29-141)	.....	1	366	1907
68/69	(Right) 30-70	.....	2	360	4460
70/	(Right) 30-70 (* 29-140)	.....	2	448	8703
72	(Right) 79 (* 29-141)	.....	2	366	1911
67	(Right-Inner)(WIRS)(WBS)	.....	1	357	7939
68	(Right-Inner) 01-10-80 (WIRS-* 29-60)(WBS-* 29-60)	.....	1	357	7939
68	(Right-Inner) 01-10-80 (WIRS-* 29-61)(WBS-* 29-61)	.....	1	360	7518
69	(Right-Inner) 01-10-80 (WIRS)(WBS)	.....	1	360	7518
70	(Right-Inner) 01 (WIRS)...(Less Front Stud)	.....	1	362	7739
70/	(Right-Inner) 01 (WIRS-* 29-140)...(Incl. Front Stud)	.....	1	448	8699
72	(Right-Inner) 01-40 (WIRS-* 29-141)(WBS-* 29-141)	.....	1	364	8247
70/	(Right-Inner) 10-80 (WIRS-* 29-140)(WBS-* 29-140)	.....	1	360	7493
72	(Right-Inner) 10-80 (WIRS-* 29-141)(WBS-* 29-141)	.....	1	366	1906
70/	(Right-Inner) 40 (WBS-* 29-140)	.....	1	448	8699
67	(Right-Outer)(WIRS)(WBS)	.....	1	357	7934
68	(Right-Outer) 01-10-80 (WIRS-* 29-60)(WBS-* 29-60)	.....	1	357	7934
68	(Right-Outer) 01-10-80 (WIRS-* 29-61)(WBS-* 29-61)	.....	1	360	7492
69	(Right-Outer) 01-10-80 (WIRS)(WBS)	.....	1	360	7492
70	(Right-Outer) 01 (WIRS)...(Less Front Stud)	.....	1	362	7575
70/	(Right-Outer) 01 (WIRS-* 29-140)...(Incl. Front Stud)	.....	1	448	8701
72	(Right-Outer) 01-40 (WIRS-* 29-141)(WBS-* 29-141)	.....	1	364	8243
70/	(Right-Outer) 10-80 (WIRS-* 29-140)(WBS-* 29-140)	.....	1	362	7795
72	(Right-Outer) 10-80 (WIRS-* 29-141)(WBS-* 29-141)	.....	1	366	1907
70/	(Right-Outer) 40 (WBS-* 29-140)(WNRS-* 29-140)	.....	1	448	8701
67	***(Right) 01-10-80 (RHD-WFS)(RHD-WNRS)(RHD-WRS)***	.....	1	357	7936
68	***(Right) 01-10-80 (RHD-WFS-* 29-60)(RHD-WNRS-* 29-60)***	.....	1	357	7936
68	***(Right) 01-10-80 (RHD-WFS-* 29-61)(RHD-WNRS-* 29-61)***	.....	1	360	7490
69	***(Right) 01-10-80 (RHD-WFS)(RHD-WNRS)***	.....	1	360	7490
70	***(Right) 10-80 (RHD-WFS)(RHD-WNRS)***	.....	1	362	7792

29.131-2 ATTACHING PARTS, Seat Adjuster To Floor

SCREW, Tapping.....	67/69	(WFS)(WNRS)(WRS)	.....	4	400	1933
SCREW, Tapping.....	67/69	(5/16-18 x 3/4)(WIRS)(WBS)	.....	8	400	1933
SCREW, Tapping.....	68/69	(5/16-18 x 7/8)(WBS-Front)	.....	4	400	3517
SCREW, Tapping.....	68/69	(5/16-18 x 1-1/8)(WBS-Rear)	23.015	8	400	2070

SEATS - SOFT TRIM

SCREW, Tapping.....	70	(5/16-18 x 7/8) 01 (WFS)(WNRS)	.....	2	400 3517
SCREW, Tapping.....	70	(5/16-18 x 7/8) 01 (WIRS)	.....	4	400 3517
SCREW, Tapping.....	70/	(5/16-18 x 7/8) 30-70	.....	4	400 3517
SCREW, Tapping.....	70/	(5/16-18 x 3/4) 10-80 (WFS)(WNRS)	.....	4	400 1933
SCREW, Tapping.....	70/	(5/16-18 x 3/4)(WIRS)(WBS)	.....	8	400 1933
NUT, Hexagon.....	70	01-40 (WFS)(WNRS)(WBS).....	12.035	4	400 0596
NUT, Hexagon.....	70	01 (WIRS)	12.035	6	400 0596
NUT, Hexagon.....	71/	(5/16" x 18).....	12.035	AR	400 1845
NUT, Hexagon.....	70	30-70.....	12.035	8	400 0596
WASHER, Plain.....	70/	01-40.....	17.814	6	400 1098
SPACER, Plate.....	70/	(1-1/4" Long) 01-30-40-70	.....	4	400 4097

29.131-3 ATTACHING PARTS, Seat Adjuster To Bottom Frame

NUT, Hexagon.....	67/	(WFS)(WNRS)(WRS)(5/16"-24).....	28.018	4	400 2085
NUT, Hexagon.....	67/	(WIRS)(WBS)(5/16"-24)	28.018	8	400 2085
NUT, Hexagon.....	72	(5/16"-18)	.....	AR	400 1845
WASHER, Plain (Spacer)	72	01-40 (WNRS)(WIRS)	17.814	AR	400 1161

29.131-4 STOP, Front Seat Adjusting Slide

67/68	01 (W4ST-LIRS).....	.....	1	359 2413
67/68	01 (W4ST-WIRS)(W4ST-WBS)	.....	2	359 2413
67/68	10-50-80 (W4ST)(WFC).....	.....	2	359 2413

29.131-5 ATTACHING PARTS, Stop To Floor

SCREW, Tapping.....	67/68	01 (W4ST-LIRS).....	.....	1	400 1814
SCREW, Tapping.....	67/68	01 (W4ST-WIRS)(W4ST-WBS).....	.....	2	400 1814
SCREW, Tapping.....	67/68	10-50-80 (W4ST)(WFC).....	.....	2	400 1814

29.131-6 SPRING, Front Seat Slide Adjuster Latch Locking (* 29-35)

67/69	.....	.....	AR	447 8806
70/	(2-51/64" Long)	.....	AR	362 5887
72	(2" Long)	.....	AR	364 7952
72	(3-9/16" Long)	.....	AR	366 8565

29.133-1 WIRE, Front Seat Adjusting Slide Latch (* 29-35)

67	(WFS)(WNRS)(WRS)	.....	1	353 5057
68	01-10-80 (WFS-* 29-60)(WNRS-* 29-60)	.....	1	353 5057
68	10-80 (WFS-* 29-61)(WNRS-* 29-61)	.....	1	360 4467
68	01 (WFS-* 29-61)(WNRS-* 29-61)	.....	1	362 3501
67	(WIRS)(WBS)	.....	2	353 5056
68	01-10-80 (WIRS-* 29-60)(WBS-* 29-60)	.....	2	353 5056
68	(WIRS-* 29-61)(WBS-* 29-61).....	.....	2	360 4464
69	01 (WFS)(WNRS).....	.....	1	362 3501
70/	01 (WFS)(WNRS)(38-13/64" Long)	.....	1	363 5954
72	01-40 (WFS)(WNRS)(37-3/8" Long).....	.....	1	366 1716
69/	10-80 (WFS)(WNRS).....	.....	1	360 4467
69/	(WIRS)(WBS)	.....	2	360 4464
70/71	40 (WNRS-38-3/4" Long)	.....	1	364 0178
72	40 (WNRS-38-13/64" Long)	.....	1	363 5954

29.133-1a ATTACHING PARTS, Wire To Seat Spring

HOG RING	67/	.....	30.025	AR	436 3256

29.133-2 KNOB, Front Seat Adjusting Slide Handle (* 29-35)

67/68	.....	.....	AR	356 3500

29.133-3 ATTACHING PARTS, Knob To Handle Shaft

PIN, Spring	67/68	.....	17.472	AR	G455532

29.133-4 COVER, Front Seat Adjusting Slide Handle

69/	.....	.....	.....	AR	360 5494

Printed in U.S.A.

SEATS - SOFT TRIM

29.133-5 CLIP, Front Seat Adjusting Slide Latch Wire Guide

68/69	10-80 (WFS)(WNRS)	.....	1	348 3579

29.138 SPRING, Front Seat Adjusting Slide (* 29-35)

67		.....	2	342 2358
68	(* 29-60) 01-10-80	.....	2	342 2358
68	(* 29-61)	.....	2	360 4466
69/		.....	AR	360 4466

29.141 ARMREST ASSEMBLY, Trimmed Front Seat Back Center (Order Component Parts)

29.142-1 FRAME ASSEMBLY, Front Seat Back Center Armrest (Board)

67/70	(WBS)	.....	1	352 0490
71/	10-70-80 (WBS)	.....	1	364 0501

29.142-2 ATTACHING PARTS, Armrest To Support

PIN, Pivot	67/	(WBS)	.....	2	400 1402

29.142-3 BRACKET, Front Seat Back Center Armrest

67/	(WBS)	.....	1	352 0493

29.142-4 BAR, Front Seat Back Center Armrest Lock

67/	(WBS)	.....	1	352 0495

29.142-5 RETAINER, Front Seat Back Center Armrest Hook

67/	(WBS)	.....	1	352 0496

29.142-6 WASHER, Front Seat Back Center Armrest Lock

67/68	01-10-50-80 (WBS)	.....	2	352 0497

29.142-7 STUD, Front Seat Back Center Armrest Weld

67/	(WBS)	.....	4	400 0865

29.142-8 NUT, Front Seat Back Center Armrest Jam

67/	(WBS)	17.412	1	G114503 NA

29.143-1 SUPPORT, Front Seat Back Armrest Hinge

67	(Left) 01 (WBS-WFC)	.....	1	350 9681
67	(Left) 10-50-80 (WBS-WFC)	.....	1	317 4125
68/71	(Left) 10-80 (WBS-WFC)	.....	1	360 5859
71	(Left) 70 (WCA-WFC)	.....	1	364 3093
67	(Right) 01 (WBS-WFC)	.....	1	350 9680
67	(Right) 10-50-80 (WBS-WFC)	.....	1	357 4124
68/71	(Right) 10-80 (WBS-WFC)	.....	1	360 5858
71	(Right) 70 (WCA-WFC)	.....	1	364 3092

29.143-2 ATTACHING PARTS, Support To Floor Pan

STUD, Shoulder	67/69	01-10-50-80 (WBS-WFC)	27.290	2	400 0874
STUD, Shoulder	70/71	10-80 (WBS-WFC)	27.290	2	400 0874
NUT, Stamped	67/69	01-10-50-80 (WBS-WFC)	17.426	2	G441262 NA
NUT, Stamped	70/71	10-80 (WBS-WFC)	17.426	2	G441262 NA
SPACER	71	70	.....	2	364 3999

29.143-3 ATTACHING PARTS, Support To Console

SCREW, Tapping	71	70	17.592	2	G157441 NA
NUT	71	70	17.412	2	G271171 NA

Printed in U.S.A.

SEATS - SOFT TRIM

29.144 PAD, Front Seat Center Armrest

67/	(33-1/2" Long)	1	352 9282	
68/	(6-41/64" Long)	1	360 5862	

29.145 COVER, Front Seat Center Armrest Support Bracket

1967 MODELS

Trim No.			Per Car	01-10-50-80 (WFC)	01-10-50-80 (WCC)			
T-741		Lower	2	352 0641				
	Left		1		351 9083			
		Upper	1	351 9065				
	Right		1		351 9082			
		Upper	1	351 9064				
T-743		Lower	2	357 7686				
	Left		1		358 0423			
		Upper	1	358 0335				
	Right		1		358 0422			
		Upper	1	358 0334				
T-745		Lower	2	357 7688				
	Left		1		358 0415			
		Upper	1	358 0253				
	Right		1		358 0414			
		Upper	1	358 0252				
T-748		Lower	2	352 0641				
	Left		1		353 8331			
	Right		1		353 8330			
		Upper	1	354 1809				
		Upper	1	354 1808				
T-749		Lower	2	357 7689				
	Left		1		358 0425			
	Right		1		358 0424			
		Upper	1	358 0337				
		Upper	1	358 0336				
T-771		Lower	2	352 0641				
	Left		1		351 9083			
		Upper	1	357 8467				
	Right		1		351 9082			
		Upper	1	357 8466				
T-773		Lower	2	357 7686				
	Left		1		358 0423			
		Upper	1	358 0753				
	Right		1		358 0422			
		Upper	1	358 0752				
T-775		Lower	2	357 7688				
	Left		1		358 0415			
		Upper	1	357 8473				
	Right		1		358 0414			
		Upper	1	357 8472				
T-776		Lower	2	359 8020				
	Left		1		358 0417			
		Upper	1	357 8475				
	Right		1		358 0416			
		Upper	1	357 8474				

Printed in U.S.A.

SEATS - SOFT TRIM

Trim No.			Per Car	01-10-50-80 (WFC)	01-10-50-80 (WCC)			
T-778		Lower	2	352 0641	... .	... .	... .	... .
	Left		1	... .	353 8331	... .	... .	... .
		Upper	1	357 8477	... .	... .	... .	... .
	Right		1	... .	353 8330	... .	... .	... .
		Upper	1	357 8476	... .	... .	... .	... .
T-779		Lower	2	357 7689	... .	... .	... .	... .
	Left		1	... .	358 0425	... .	... .	... .
		Upper	1	358 0755	... .	... .	... .	... .
	Right		1	... .	358 0424	... .	... .	... .
		Upper	1	358 0754	... .	... .	... .	... .
T-991		Lower	2	352 0641	... .	... .	... .	... .
	Left		1	... .	351 9083	... .	... .	... .
		Upper	1	357 8467	... .	... .	... .	... .
	Right		1	... .	351 9082	... .	... .	... .
		Upper	1	357 8466	... .	... .	... .	... .
T-793		Lower	2	357 7686	... .	... .	... .	... .
	Left		1	... .	358 0423	... .	... .	... .
		Upper	1	358 0753	... .	... .	... .	... .
	Right		1	... .	358 0422	... .	... .	... .
		Upper	1	358 0752	... .	... .	... .	... .
T-795		Lower	2	357 7688	... .	... .	... .	... .
	Left		1	... .	358 0415	... .	... .	... .
		Upper	1	357 8473	... .	... .	... .	... .
	Right		1	... .	358 0414	... .	... .	... .
		Upper	1	357 8472	... .	... .	... .	... .
T-796		Lower	2	359 8020	... .	... .	... .	... .
	Left		1	... .	358 0417	... .	... .	... .
		Upper	1	357 8475	... .	... .	... .	... .
	Right		1	... .	358 0416	... .	... .	... .
		Upper	1	357 8474	... .	... .	... .	... .
T-798		Lower	2	352 0641	... .	... .	... .	... .
	Left		1	... .	353 8331	... .	... .	... .
		Upper	1	357 8477	... .	... .	... .	... .
	Right		1	... .	353 8330	... .	... .	... .
		Upper	1	357 8476	... .	... .	... .	... .
T-799		Lower	2	357 7689	... .	... .	... .	... .
	Left		1	... .	358 0425	... .	... .	... .
		Upper	1	357 8479	... .	... .	... .	... .
	Right		1	... .	358 0424	... .	... .	... .
		Upper	1	357 8478	... .	... .	... .	... .

1968 MODELS

Trim No.			Per Car	10-80 (WFC)	10-80 (WCC)			
T-871		Lower	2	352 0641	... .	... .	... .	... .
	Left		1	... .	351 9083	... .	... .	... .
		Upper	1	357 8467	... .	... .	... .	... .
	Right		1	... .	351 9082	... .	... .	... .
		Upper	1	357 8466	... .	... .	... .	... .
T-873		Lower	2	319 0001	... .	... .	... .	... .
	Left		1	... .	360 5105	... .	... .	... .
		Upper	1	319 0045	... .	... .	... .	... .
	Right		1	... .	360 5104	... .	... .	... .
		Upper	1	319 0044	... .	... .	... .	... .
T-874		Lower	2	319 0002	... .	... .	... .	... .
	Left		1	... .	360 5107	... .	... .	... .
		Upper	1	319 0047	... .	... .	... .	... .
	Right		1	... .	360 5106	... .	... .	... .
		Upper	1	319 0046	... .	... .	... .	... .

SEATS - SOFT TRIM

Trim No.			Per Car	10-80 (WFC)	10-80 (WCC)		
T-875		Lower	2	357 7688	... .	... .	... .
	Left		1	... .	358 0415	... .	... .
		Upper	1	357 8473	... .	... .	... .
	Right		1	... .	358 0414	... .	... .
		Upper	1	357 8472	... .	... .	... .
T-876		Lower	2	319 0004	... .	... .	... .
	Left		1	... .	360 5111	... .	... .
		Upper	1	319 0049	... .	... .	... .
	Right		1	... .	360 5110	... .	... .
		Upper	1	319 0048	... .	... .	... .
T-879		Lower	2	319 0003	... .	... .	... .
	Left		1	... .	360 5115	... .	... .
		Upper	1	319 0051	... .	... .	... .
	Right		1	... .	360 5114	... .	... .
		Upper	1	319 0050	... .	... .	... .
T-891		Lower	2	352 0641	... .	... .	... .
	Left		1	... .	351 9083	... .	... .
		Upper	1	357 8467	... .	... .	... .
	Right		1	... .	351 9082	... .	... .
		Upper	1	357 8466	... .	... .	... .
T-893		Lower	2	319 0001	... .	... .	... .
	Left		1	... .	360 5105	... .	... .
		Upper	1	319 0045	... .	... .	... .
	Right		1	... .	360 5104	... .	... .
		Upper	1	319 0044	... .	... .	... .
T-894		Lower	2	319 0002	... .	... .	... .
	Left		1	... .	360 5107	... .	... .
		Upper	1	319 0047	... .	... .	... .
	Right		1	... .	360 5106	... .	... .
		Upper	1	319 0046	... .	... .	... .
T-895		Lower	2	357 7688	... .	... .	... .
	Left		1	... .	358 0415	... .	... .
		Upper	1	357 8473	... .	... .	... .
	Right		1	... .	358 0414	... .	... .
		Upper	1	357 8472	... .	... .	... .
T-896		Lower	2	319 0004	... .	... .	... .
	Left		1	... .	360 5111	... .	... .
		Upper	1	319 0049	... .	... .	... .
	Right		1	... .	360 5110	... .	... .
		Upper	1	319 0048	... .	... .	... .
T-899		Lower	2	319 0003	... .	... .	... .
	Left		1	... .	360 5115	... .	... .
		Upper	1	319 0051	... .	... .	... .
	Right		1	... .	360 5114	... .	... .
		Upper	1	319 0050	... .	... .	... .

1969 MODELS (* 29-19 NC)

Trim No.			Per Car	10-80 (WFC-WCA)	10-30-70-80 (WCC-WCA)		
T-931	Left		1	... .	362 5451	... .	... .
	Right		1	... .	362 5450	... .	... .
T-932	Left		1	... .	362 5457	... .	... .
	Right		1	... .	362 5456	... .	... .
T-935	Left		1	... .	362 5239	... .	... .
	Right		1	... .	362 5238	... .	... .
T-936	Left		1	... .	362 5459	... .	... .
	Right		1	... .	362 5458	... .	... .
T-961	Left		1	... .	362 5451	... .	... .
	Right		1	... .	362 5450	... .	... .
T-962	Left		1	... .	362 5457	... .	... .
	Right		1	... .	362 5456	... .	... .

SEATS - SOFT TRIM

Trim No.			Per Car	10-80 (WFC-WCA)	10-30-70-80 (WCC-WCA)		
T-963	Left		1	... .	362 5239	... .	... .
	Right		1	... .	362 5238	... .	... .
T-965	Left		1	... .	362 5239	... .	... .
	Right		1	... .	362 5238	... .	... .
T-966	Left		1	... .	362 5239	... .	... .
	Right		1	... .	362 5238	... .	... .
T-968	Left		1	... .	362 5239	... .	... .
	Right		1	... .	362 5238	... .	... .
T-972		Lower	2	362 4116	... .	... .	... .
	Left		1	362 4105	... .	... .	... .
		Upper	1	... .	362 5447	... .	... .
	Right		1	362 4104	... .	... .	... .
		Upper	1	... .	362 5446	... .	... .
T-973		Lower	2	362 4116	... .	... .	... .
	Left		1	362 4107	... .	... .	... .
		Upper	1	... .	362 0607	... .	... .
	Right		1	362 4106	... .	... .	... .
		Upper	1	... .	362 0606	... .	... .
T-975		Lower	2	362 4116	... .	... .	... .
	Left		1	319 4747	... .	... .	... .
		Upper	1	... .	362 0985	... .	... .
	Right		1	319 4746	... .	... .	... .
		Upper	1	... .	362 0984	... .	... .
T-979		Lower	2	362 4116	... .	... .	... .
	Left		1	362 4111	... .	... .	... .
		Upper	1	... .	362 0613	... .	... .
	Right		1	362 4112	... .	... .	... .
		Upper	1	... .	362 0612	... .	... .
T-991		Lower	2	362 4116	... .	... .	... .
	Left		1	362 4105	... .	... .	... .
		Upper	1	... .	362 0605	... .	... .
	Right		1	362 4104	... .	... .	... .
		Upper	1	... .	362 0604	... .	... .
T-992		Lower	2	362 4116	... .	... .	... .
	Left		1	362 5389	... .	... .	... .
		Upper	1	... .	362 5447	... .	... .
	Right		1	362 5388	... .	... .	... .
		Upper	1	... .	362 5446	... .	... .
T-993		Lower	2	362 4116	... .	... .	... .
	Left		1	362 4107	... .	... .	... .
		Upper	1	... .	362 0607	... .	... .
	Right		1	362 4106	... .	... .	... .
		Upper	1	... .	362 0606	... .	... .
T-995		Lower	2	362 4116	... .	... .	... .
	Left		1	319 4747	... .	... .	... .
		Upper	1	... .	362 0985	... .	... .
	Right		1	319 4746	... .	... .	... .
		Upper	1	... .	362 0984	... .	... .
T-996		Lower	2	362 4116	... .	... .	... .
	Left		1	362 4109	... .	... .	... .
		Upper	1	... .	362 0611	... .	... .
	Right		1	362 4108	... .	... .	... .
		Upper	1	... .	362 0610	... .	... .
T-997		Lower	2	362 4116	... .	... .	... .
	Left		1	362 5387	... .	... .	... .
		Upper	1	... .	362 5449	... .	... .
	Right		1	362 5386	... .	... .	... .
		Upper	1	... .	362 5448	... .	... .
T-999		Lower	2	362 4116	... .	... .	... .
	Left		1	362 4111	... .	... .	... .
		Upper	1	... .	362 0613	... .	... .
	Right		1	362 4110	... .	... .	... .
		Upper	1	... .	362 0612	... .	... .

SEATS - SOFT TRIM

1970 - 1971 MODELS (* 29-19 NC)

Trim No.			Per Car	10-70-80 (WFC-WCA)	10-30-70-80 (WCC-WCA)
T-031	Left		1	... .	362 5233
	Right		1	... .	362 5232
T-033	Left		1	... .	362 5233
	Right		1	... .	362 5232
T-035	Left		1	... .	362 5233
	Right		1	... .	362 5232
T-036	Left		1	... .	362 9409
	Right		1	... .	362 9408
T-051	Left		1	... .	351 9083
	Right		1	... .	351 9082
T-061	Left		1	... .	362 5233
	Right		1	... .	362 5232
T-063	Left		1	... .	362 5233
	Right		1	... .	362 5232
T-064	Left		1	... .	362 5233
	Right		1	... .	362 5232
T-065	Left		1	... .	362 5233
	Right		1	... .	362 5232
T-066	Left		1	... .	362 9409
	Right		1	... .	362 9408
T-071		Lower	2	352 0641	... .
	Left		1	357 8467	... .
		Upper	1	... .	351 9083
	Right		1	357 8466	... .
		Upper	1	... .	351 9082
T-073		Lower	2	352 0641	... .
	Left		1	362 9381	... .
		Upper	1	... .	351 9083
	Right		1	362 9380	... .
		Upper	1	... .	351 9082
T-075		Lower	2	352 0641	... .
	Left		1	319 4747	... .
		Upper	1	... .	351 9083
	Right		1	319 4746	... .
		Upper	1	... .	351 9082
T-076		Lower	2	352 0641	... .
	Left		1	362 9385	... .
		Upper	1	... .	362 9403
	Right		1	362 9384	... .
		Upper	1	... .	362 9402
T-091		Lower	2	352 0641	... .
	Left		1	357 8467	... .
		Upper	1	... .	351 9083
	Right		1	357 8466	... .
		Upper	1	... .	351 9082
T-093		Lower	2	352 0641	... .
	Left		1	362 9381	... .
		Upper	1	... .	351 9083
	Right		1	362 9380	... .
		Upper	1	... .	351 9082
T-094		Lower	2	352 0641	... .
	Left		1	362 9383	... .
		Upper	1	... .	351 9083
	Right		1	362 9382	... .
		Upper	1	... .	351 9082

SEATS - SOFT TRIM

Trim No.			Per Car	10-70-80 (WFC-WCA)	10-30-70-80 (WCC-WCA)
T-095		Lower	2	352 0641	... .
	Left		1	319 4747	... .
		Upper	1	... .	351 9083
	Right		1	319 4746	... .
		Upper	1	... .	351 9082
T-096		Lower	2	352 0641	... .
	Left		1	362 9385	... .
		Upper	1	... .	362 9403
	Right		1	362 9384	... .
		Upper	1	... .	362 9402
T-161	Left		1	364 8481	362 5233
	Right		1	364 8480	362 5232
T-163	Left		1	364 8483	362 5233
	Right		1	364 8482	362 5232
T-164	Left		1	364 8485	362 5233
	Right		1	364 8484	362 5232
T-165	Left		1	364 8487	362 5233
	Right		1	364 8486	362 5232
T-168	Left		1	364 8481	362 5233
	Right		1	364 8480	362 5232
T-171		Lower	2	352 0641	... .
	Left		1	357 8467	... .
		Upper	1	... .	351 9083
	Right		1	357 8466	... .
		Upper	1	... .	351 9082
T-173		Lower	2	352 0641	... .
	Left		1	364 1849	... .
		Upper	1	... .	351 9083
	Right		1	364 1848	... .
		Upper	1	... .	351 9082
T-174		Lower	2	352 0641	... .
	Left		1	364 1851	... .
		Upper	1	... .	351 9083
	Right		1	364 1850	... .
		Upper	1	... .	351 9082
T-175		Lower	2	352 0641	... .
	Left		1	364 1853	... .
		Upper	1	... .	351 9083
	Right		1	364 1852	... .
		Upper	1	... .	351 9082
T-191		Lower	2	352 0641	... .
	Left		1	357 8467	... .
		Upper	1	... .	351 9083
	Right		1	357 8466	... .
		Upper	1	... .	351 9082
T-193		Lower	2	352 0641	... .
	Left		1	364 1849	... .
		Upper	1	... .	351 9083
	Right		1	364 1848	... .
		Upper	1	... .	351 9082
T-194		Lower	2	352 0641	... .
	Left		1	364 1851	... .
		Upper	1	... .	351 9083
	Right		1	364 1850	... .
		Upper	1	... .	351 9082
T-195		Lower	2	352 0641	... .
	Left		1	364 1853	... .
		Upper	1	... .	351 9083
	Right		1	364 1852	... .
		Upper	1	... .	351 9082

1972 MODELS (* 29-19 NC)

72	(Left) 19-89 (WCC-WCA)	.....	1	351 9083
72	(Left) 79 (WCC-WCA)	.....	1	362 5233
72	(Right) 19-89 (WCC-WCA)	.....	1	351 9082
72	(Right) 79 (WCC-WCA)	.....	1	362 5232

29.145-2 PROTECTOR, Front Seat Armrest Upholstery

67/	WCA	.....	2	352 0016

29.146 UPHOLSTERY, Front Seat Center Armrest

1967 MODELS

Trim No.	Per Car	01-10-50-80 (WBS-Except "W" Trim)	19-89 ("W" Trim)		
T-741	1	358 4809	... .	... .	... .
T-743	1	358 4810	... .	... .	... .
T-745	1	358 4812	... .	... .	... .
T-748	1	358 4814	... .	... .	... .
T-749	1	358 4815	... .	... .	... .
T-771	1	650 5709	650 5709	... .	... .
T-773	1	650 5710	650 5711	... .	... .
T-775	1	650 5712	650 5712	... .	... .
T-776	1	650 5713	650 5713	... .	... .
T-778	1	650 5714	... .	... .	... .
T-779	1	650 5715	650 5716	... .	... .
T-791	1	650 5709	650 5709	... .	... .
T-793	1	650 5710	650 5711	... .	... .
T-795	1	650 5712	650 5712	... .	... .
T-796	1	650 5713	650 5713	... .	... .
T-798	1	650 5714	... .	... .	... .
T-799	1	650 5715	650 5716	... .	... .

1968 MODELS

Trim No.	Per Car	10-80 (WBS)			
T-871	1	650 5709	... .	... .	... .
T-873	1	651 2728	... .	... .	... .
T-874	1	651 2730	... .	... .	... .
T-875	1	650 5712	... .	... .	... .
T-876	1	651 2732	... .	... .	... .
T-879	1	651 2733	... .	... .	... .
T-891	1	650 5709	... .	... .	... .
T-893	1	651 2728	... .	... .	... .
T-894	1	651 2730	... .	... .	... .
T-895	1	650 5712	... .	... .	... .
T-896	1	651 2732	... .	... .	... .
T-899	1	651 2733	... .	... .	... .

1969 MODELS

Trim No.	Per Car	(WCA)			
T-931	1	448 8812	... .	... .	... .
T-932	1	630 3288	... .	... .	... .
T-935	1	650 5712	... .	... .	... .
T-936	1	630 3290	... .	... .	... .
T-961	1	448 8812	... .	... .	... .
T-962	1	630 3288	... .	... .	... .
T-963	1	652 0184	... .	... .	... .
T-965	1	650 5712	... .	... .	... .
T-966	1	630 3289	... .	... .	... .

SEATS - SOFT TRIM

Trim No.	Per Car	(WCA)
T-968	1	652 0187
T-972	1	652 2028
T-973	1	652 0184
T-975	1	650 5712
T-979	1	652 0186
T-991	1	652 0183
T-992	1	652 2028
T-993	1	652 0184
T-995	1	650 5712
T-996	1	652 0185
T-997	1	652 2029
T-999	1	652 0186

1970 MODELS

Trim No.	Per Car	10-30-70-80 (WCA)
T-031	1	363 0664
T-033	1	363 0665
T-035	1	363 0668
T-036	1	363 0669
T-051 Except Red, White And Blue Option	1	652 4372
T-051 With Red, White And Blue Option	1	652 6322
T-053	1	652 4374
T-056	1	652 4376
T-061	1	363 0664
T-063	1	363 0665
T-064	1	363 0667
T-065	1	363 0668
T-066	1	363 0669
T-071	1	652 4372
T-073	1	652 4374
T-075	1	652 3028
T-076	1	652 4376
T-091	1	652 4372
T-093	1	652 4374
T-094	1	652 4375
T-095	1	652 3028
T-096	1	652 4376

1971 - 1972 MODELS

Trim No.	Per Car	10-70-80 (WCA)
T-161	1	365 0610
T-163	1	365 0611
T-164	1	365 0612
T-165	1	365 0613
T-168	1	365 0610
T-171	1	652 7680
T-173	1	652 7681
T-174	1	652 7682
T-175	1	652 7683
T-191	1	652 7680
T-193	1	652 7681
T-194	1	652 7682
T-195	1	652 7683
T-261	1	366 1225
T-263	1	365 0818
T-264	1	365 0819
T-265	1	366 1225
T-266	1	365 1082
T-268	1	366 8413
T-271	1	652 9925
T-273	1	653 1438

Printed in U.S.A.

SEATS - SOFT TRIM

Trim No.	Per Car	10-70-80 (WCA)
T-274	1	653 1439
T-276	1	653 1440
T-291	1	652 9925
T-293	1	653 1438
T-294	1	653 1439
T-296	1	653 1440

29.148 PILLOW, Seat

Trim No.	Per Car	19-89 ("W" Trim)			
T-771W	2	357 9291	... .	... .	... .
T-773W	2	357 9292	... .	... .	... .
T-775W	2	357 9293	... .	... .	... .
T-776W	2	357 9294	... .	... .	... .
T-779W	2	357 9295	... .	... .	... .
T-791W	2	357 9296	... .	... .	... .
T-793W	2	357 9297	... .	... .	... .
T-795W	2	357 9298	... .	... .	... .
T-796W	2	357 9299	... .	... .	... .
T-799W	2	357 9300	... .	... .	... .

29.150 CUSHION ASSEMBLY, Trimmed Front Seat (Order Component Parts)(* 29-35)

29.151 CUSHION ASSEMBLY, Trimmed Front Seat Center (Order Component Parts)

29.152 UPHOLSTERY, Front Seat Cushion (Cover)

1967 MODELS

Trim No.		Per Car	01-10-50-80 (WFS)(WNRS)	01 (WRS)	01-10-50-80 (WIRS)(WBS)	
T-723B		1	358 3561	358 3573	... .	... .
T-723C		1	358 3560	358 3572	... .	... .
T-723M		1	362 3074	362 3075	... .	... .
T-728B		1	358 3563	358 3575	... .	... .
T-728C		1	358 3562	358 3574	... .	... .
T-728M		1	359 9782	359 9783	... .	... .
T-728V		1	358 3564	358 3576	... .	... .
T-729B		1	358 3566	358 3578	... .	... .
T-729C		1	358 3565	358 3577	... .	... .
T-741B	Full	1	359 2106	359 2107	... .	... .
	Left	1	... .	... .	359 2111	... .
	Right	1	... .	... .	359 2110	... .
T-741D	Left	1	... .	... .	359 2427	... .
	Right	1	... .	... .	359 2426	... .
T-741E	Left	1	... .	... .	359 2429	... .
	Right	1	... .	... .	359 2428	... .
T-743B	Full	1	359 2109	358 3581	... .	... .
	Left	1	... .	... .	358 3621	... .
	Right	1	... .	... .	358 3620	... .
T-743C	Full	1	358 3567	358 3580	... .	... .
	Left	1	... .	... .	358 3619	... .
	Right	1	... .	... .	358 3618	... .
T-743D	Left	1	... .	... .	359 2431	... .
	Right	1	... .	... .	359 2430	... .
T-743E	Left	1	... .	... .	359 2433	... .
	Right	1	... .	... .	359 2432	... .
T-744C	Full	1	358 3568	358 3583	... .	... .
	Left	1	... .	... .	358 3625	... .
	Right	1	... .	... .	358 3624	... .

SEATS - SOFT TRIM

Trim No.		Per Car	01-10-50-80 (WFS)(WNRS)	01 (WRS)	01-10-50-80 (WIRS)(WBS)	
T-745B	Full	1	358 3608	358 3588	... .	... .
	Left	1	... .	... .	358 3635	... .
	Right	1	... .	... .	358 3634	... .
T-745C	Full	1	358 3569	358 3586	... .	... .
	Left	1	... .	... .	358 3631	... .
	Right	1	... .	... .	358 3630	... .
T-745D	Left	1	... .	... .	359 2435	... .
	Right	1	... .	... .	359 2434	... .
T-745E	Left	1	... .	... .	359 2437	... .
	Right	1	... .	... .	359 2436	... .
T-747C	Full	1	358 3570	358 3589	... .	... .
	Left	1	... .	... .	358 3637	... .
	Right	1	... .	... .	358 3636	... .
T-748B	Full	1	358 3610	358 3591	... .	... .
	Left	1	... .	... .	358 3641	... .
	Right	1	... .	... .	358 3640	... .
T-748E	Left	1	... .	... .	359 2439	... .
	Right	1	... .	... .	359 2438	... .
T-749B	Full	1	359 2112	358 3593	... .	... .
	Left	1	... .	... .	358 3645	... .
	Right	1	... .	... .	358 3644	... .
T-749C	Full	1	358 3571	358 3592	... .	... .
	Left	1	... .	... .	358 3643	... .
	Right	1	... .	... .	358 3642	... .
T-749D	Left	1	... .	... .	359 2441	... .
	Right	1	... .	... .	359 2440	... .
T-749E	Left	1	... .	... .	359 2443	... .
	Right	1	... .	... .	359 2442	... .
T-753B	Full	1	650 1816	... .	... .	... .
	Left	1	... .	... .	650 1859	... .
	Right	1	... .	... .	650 1858	... .
T-753C	Full	1	650 1813	... .	... .	... .
	Left	1	... .	... .	650 1853	... .
	Right	1	... .	... .	650 1852	... .
T-758B	Full	1	650 1817	... .	... .	... .
	Left	1	... .	... .	650 1861	... .
	Right	1	... .	... .	650 1860	... .
T-758C	Full	1	650 1814	... .	... .	... .
	Left	1	... .	... .	650 1855	... .
	Right	1	... .	... .	650 1854	... .
T-758V	Full	1	650 1812	... .	... .	... .
	Left	1	... .	... .	650 2067	... .
	Right	1	... .	... .	650 2066	... .
T-759B	Full	1	650 1818	... .	... .	... .
	Left	1	... .	... .	650 1863	... .
	Right	1	... .	... .	650 1862	... .
T-759C	Full	1	650 1815	... .	... .	... .
	Left	1	... .	... .	650 1857	... .
	Right	1	... .	... .	650 1856	... .
T-771B	Full	1	650 1825	... .	... .	... .
	Left	1	... .	... .	650 1877	... .
	Right	1	... .	... .	650 1876	... .
T-771C	Full	1	650 1819	... .	... .	... .
	Left	1	... .	... .	650 1865	... .
	Right	1	... .	... .	650 1864	... .
T-771D		2	... .	... .	650 6184	... .
T-771E		2	... .	... .	650 6189	... .
T-771S	Left	1	... .	... .	650 6311	... .
	Right	1	... .	... .	650 6310	... .
T-771W		2	... .	... .	650 6195	... .
T-773B	Full	1	650 1826	... .	... .	... .
	Left	1	... .	... .	650 1879	... .
	Right	1	... .	... .	650 1878	... .
T-773C	Full	1	650 1820	... .	... .	... .
	Left	1	... .	... .	650 1867	... .
	Right	1	... .	... .	650 1866	... .

SEATS - SOFT TRIM

Trim No.		Per Car	01-10-50-80 (WFS)(WNRS)	01 (WRS)	01-10-50-80 (WIRS)(WBS)	
T-773D		2	... .	... .	650 6185	... .
T-773E		2	... .	... .	650 6190	... .
T-773S	Left	1	... .	... .	650 6313	... .
	Right	1	... .	... .	650 6312	... .
T-773W		2	... .	... .	650 6196	... .
T-774C	Full	1	650 1821	... .	... .	... .
	Left	1	... .	... .	650 1869	... .
	Right	1	... .	... .	650 1868	... .
T-775B	Full	1	650 1827	... .	... .	... .
	Left	1	... .	... .	650 1881	... .
	Right	1	... .	... .	650 1880	... .
T-775D		2	... .	... .	650 6186	... .
T-775E		2	... .	... .	650 6191	... .
T-775W		2	... .	... .	650 6197	... .
T-776B	Full	1	650 1828	... .	... .	... .
	Left	1	... .	... .	650 1883	... .
	Right	1	... .	... .	650 1882	... .
T-776C	Full	1	650 1822	... .	... .	... .
	Left	1	... .	... .	650 1871	... .
	Right	1	... .	... .	650 1870	... .
T-776D		2	... .	... .	650 6187	... .
T-776E		2	... .	... .	650 6192	... .
T-776W		2	... .	... .	650 6198	... .
T-777C	Full	1	650 1823	... .	... .	... .
	Left	1	... .	... .	650 1873	... .
	Right	1	... .	... .	650 1872	... .
T-778B	Full	1	650 1829	... .	... .	... .
	Left	1	... .	... .	650 1885	... .
	Right	1	... .	... .	650 1884	... .
T-778E		2	... .	... .	650 6193	... .
T-779B	Full	1	650 1830	... .	... .	... .
	Left	1	... .	... .	650 1887	... .
	Right	1	... .	... .	650 1886	... .
T-779C	Full	1	650 1824	... .	... .	... .
	Left	1	... .	... .	650 1875	... .
	Right	1	... .	... .	650 1874	... .
T-779D		2	... .	... .	650 6188	... .
T-779E		2	... .	... .	650 6194	... .
T-779S	Left	1	... .	... .	650 6315	... .
	Right	1	... .	... .	650 6314	... .
T-779W		2	... .	... .	650 6199	... .
T-781B	Full	1	650 1835	... .	... .	... .
	Left	1	... .	... .	650 1897	... .
	Right	1	... .	... .	650 1896	... .
T-781C	Full	1	650 1831	... .	... .	... .
	Left	1	... .	... .	650 1889	... .
	Right	1	... .	... .	650 1888	... .
T-783B	Full	1	650 1836	... .	... .	... .
	Left	1	... .	... .	650 1899	... .
	Right	1	... .	... .	650 1898	... .
T-783C	Full	1	650 1832	... .	... .	... .
	Left	1	... .	... .	650 1891	... .
	Right	1	... .	... .	650 1890	... .
T-787C	Full	1	650 1833	... .	... .	... .
	Left	1	... .	... .	650 1893	... .
	Right	1	... .	... .	650 1892	... .
T-789B	Full	1	650 1837	... .	... .	... .
	Left	1	... .	... .	650 1901	... .
	Right	1	... .	... .	650 1900	... .
T-789C	Full	1	650 1834	... .	... .	... .
	Left	1	... .	... .	650 1895	... .
	Right	1	... .	... .	650 1894	... .

SEATS - SOFT TRIM

Trim No.		Per Car	01-10-50-80 (WFS)(WNRS)	01 (WRS)	01-10-50-80 (WIRS)(WBS)	
T-791B	Full	1	650 1845	... .	... .	... .
	Left	1	... .	... .	650 1917	... .
	Right	1	... .	... .	650 1916	... .
T-791C	Full	1	650 1838	... .	... .	... .
	Left	1	... .	... .	650 1903	... .
	Right	1	... .	... .	650 1902	... .
T-791E	Left	1	... .	... .	650 1973	... .
	Right	1	... .	... .	650 1972	... .
T-791K	Left	1	... .	... .	650 1963	... .
	Right	1	... .	... .	650 1962	... .
T-791L	Left	1	... .	... .	650 1973	... .
	Right	1	... .	... .	650 1972	... .
T-791W	Left	1	... .	... .	650 1985	... .
	Right	1	... .	... .	650 1984	... .
T-793B	Full	1	650 1846	... .	... .	... .
	Left	1	... .	... .	650 1919	... .
	Right	1	... .	... .	650 1918	... .
T-793C	Full	1	650 1839	... .	... .	... .
	Left	1	... .	... .	650 1905	... .
	Right	1	... .	... .	650 1904	... .
T-793E	Left	1	... .	... .	650 1975	... .
	Right	1	... .	... .	650 1974	... .
T-793K	Left	1	... .	... .	650 1965	... .
	Right	1	... .	... .	650 1964	... .
T-793L	Left	1	... .	... .	650 1975	... .
	Right	1	... .	... .	650 1974	... .
T-793W	Left	1	... .	... .	650 1987	... .
	Right	1	... .	... .	650 1986	... .
T-794C	Full	1	650 1840	... .	... .	... .
	Left	1	... .	... .	650 1907	... .
	Right	1	... .	... .	650 1906	... .
T-795B	Full	1	650 1847	... .	... .	... .
	Left	1	... .	... .	650 1921	... .
	Right	1	... .	... .	650 1920	... .
T-795C	Full	1	650 1841	... .	... .	... .
	Left	1	... .	... .	650 1909	... .
	Right	1	... .	... .	650 1908	... .
T-795E	Left	1	... .	... .	650 1977	... .
	Right	1	... .	... .	650 1976	... .
T-795K	Left	1	... .	... .	650 1967	... .
	Right	1	... .	... .	650 1966	... .
T-795L	Left	1	... .	... .	650 1977	... .
	Right	1	... .	... .	650 1976	... .
T-795W	Left	1	... .	... .	650 1989	... .
	Right	1	... .	... .	650 1988	... .
T-796B	Full	1	650 1848	... .	... .	... .
	Left	1	... .	... .	650 1923	... .
	Right	1	... .	... .	650 1922	... .
T-796C	Full	1	650 1842	... .	... .	... .
	Left	1	... .	... .	650 1911	... .
	Right	1	... .	... .	650 1910	... .
T-796E	Left	1	... .	... .	650 1979	... .
	Right	1	... .	... .	650 1978	... .
T-796K	Left	1	... .	... .	650 1969	... .
	Right	1	... .	... .	650 1968	... .
T-796L	Left	1	... .	... .	650 1979	... .
	Right	1	... .	... .	650 1978	... .
T-796W	Left	1	... .	... .	650 1991	... .
	Right	1	... .	... .	650 1990	... .

SEATS - SOFT TRIM

Trim No.		Per Car	01-10-50-80 (WFS)(WNRS)	01 (WRS)	01-10-50-80 (WIRS)(WBS)	
T-797C	Full	1	650 1843	... .	... .	... .
	Left	1	... .	... .	650 1913	... .
	Right	1	... .	... .	650 1912	... .
T-798B	Full	1	650 1849	... .	... .	... .
	Left	1	... .	... .	650 1925	... .
	Right	1	... .	... .	650 1924	... .
T-798E	Left	1	... .	... .	650 1981	... .
	Right	1	... .	... .	650 1980	... .
T-798L	Left	1	... .	... .	650 1981	... .
	Right	1	... .	... .	650 1980	... .
T-799B	Full	1	650 1850	... .	... .	... .
	Left	1	... .	... .	650 1927	... .
	Right	1	... .	... .	650 1926	... .
T-799C	Full	1	650 1844	... .	... .	... .
	Left	1	... .	... .	650 1915	... .
	Right	1	... .	... .	650 1914	... .
T-799E	Left	1	... .	... .	650 1983	... .
	Right	1	... .	... .	650 1982	... .
T-799K	Left	1	... .	... .	650 1971	... .
	Right	1	... .	... .	650 1970	... .
T-799L	Left	1	... .	... .	650 1983	... .
	Right	1	... .	... .	650 1982	... .
T-799W	Left	1	... .	... .	650 1993	... .
	Right	1	... .	... .	650 1992	... .

1968 MODELS

Trim No.		Per Car	01-10-80 (WFS)	01-10-80 (WNRS)	01-10-30 -70-80 (WIRS)(WBS)	
T-828B		1	359 8291	359 8305	... .	... .
T-828C		1	359 8290	359 8304	... .	... .
T-828F	Full	1	359 8292	359 8306	... .	... .
	Left	1	... .	... .	359 8963	... .
	Right	1	... .	... .	359 8962	... .
T-828M	Left	1	... .	... .	359 8335	... .
	Right	1	... .	... .	359 8334	... .
T-828MR	Left	1	... .	... .	448 6821	... .
	Right	1	... .	... .	448 6820	... .
T-828N	Left	1	... .	... .	359 8337	... .
	Right	1	... .	... .	359 8336	... .
T-828R		1	362 4682	362 4682	... .	... .
T-831A		2	... .	... .	359 8112	... .
T-831D		2	... .	... .	359 8110	... .
T-831E		2	... .	... .	359 8112	... .
T-831J		2	... .	... .	359 9304	... .
T-832A		2	... .	... .	359 8876	... .
T-832D		2	... .	... .	359 8874	... .
T-832E		2	... .	... .	359 8876	... .
T-835A		2	... .	... .	359 8122	... .
T-835D		2	... .	... .	359 8872	... .
T-835E		2	... .	... .	359 8122	... .
T-838J		2	... .	... .	362 3088	... .
T-843B	Full	1	359 8297	359 8311	... .	... .
	Left	1	... .	... .	359 8341	... .
	Right	1	... .	... .	359 8340	... .
T-843C	Full	1	359 8296	359 8310	... .	... .
	Left	1	... .	... .	359 8339	... .
	Right	1	... .	... .	359 8338	... .

SEATS - SOFT TRIM

Trim No.			Per Car	01-10-80 (WFS)	01-10-80 (WNRS)	01-10-30 -70-80 (WIRS)(WBS)	
T-844B	Full		1	359 8914	359 8313	... .	... .
	Left		1	... .	... .	359 8345	... .
	Right		1	... .	... .	359 8344	... .
T-844C	Full		1	359 8298	359 8312	... .	... .
	Left		1	... .	... .	359 8343	... .
	Right		1	... .	... .	359 8342	... .
T-845B	Full	(* 29-38)	1	359 8915	359 8314	... .	... .
		(* 29-39)	1	362 4014	362 4014	... .	... .
	Left	(* 29-38)	1	... .	... .	359 8347	... .
		(* 29-39)	1	... .	... .	362 4009	... .
	Right	(* 29-38)	1	... .	... .	359 8346	... .
		(* 29-39)	1	... .	... .	362 4008	... .
T-845C	Full		1	359 8916	359 8917	... .	... .
	Left		1	... .	... .	359 8919	... .
	Right		1	... .	... .	359 8918	... .
T-848B	Full		1	359 8295	359 8309	... .	... .
	Left		1	... .	... .	359 8337	... .
	Right		1	... .	... .	359 8336	... .
T-848C	Full		1	359 8294	358 8294	... .	... .
	Left		1	... .	... .	359 8335	... .
	Right		1	... .	... .	359 8334	... .
T-848CR	Left		1	... .	... .	448 6821	... .
	Right		1	... .	... .	448 6820	... .
T-851C	Full		1	651 0946	651 0946	... .	... .
	Left		1	... .	... .	651 0955	... .
	Right		1	... .	... .	651 0954	... .
T-851C-L	Full		1	361 3527	... .	... .	... .
T-851F	Full		1	651 0945	651 0945	... .	... .
	Left		1	... .	... .	651 0953	... .
	Right		1	... .	... .	651 0952	... .
T-851V	Full		1	651 0949	651 0949	... .	... .
	Left		1	... .	... .	651 0961	... .
	Right		1	... .	... .	651 0960	... .
T-853C	Full		1	651 0947	651 0947	... .	... .
	Left		1	... .	... .	651 0957	... .
	Right		1	... .	... .	651 0956	... .
T-853C-D	Full		1	361 3519	... .	... .	... .
T-853V	Full		1	651 0950	651 0950	... .	... .
	Left		1	... .	... .	651 0963	... .
	Right		1	... .	... .	651 0962	... .
T-855C	Full		1	651 0948	651 0948	... .	... .
	Left		1	... .	... .	651 0959	... .
	Right		1	... .	... .	651 0958	... .
T-855V	Full		1	651 0951	651 0951	... .	... .
	Left		1	... .	... .	651 0965	... .
	Right		1	... .	... .	651 0964	... .
T-871C	Full		1	651 0966	651 0966	... .	... .
	Left		1	... .	... .	651 0977	... .
	Right		1	... .	... .	651 0976	... .
T-871E			2	... .	... .	651 1010	... .
T-871K	Left		1	... .	... .	651 1025	... .
	Right		1	... .	... .	651 1024	... .
T-871V	Full		1	651 0971	651 0971	... .	... .
	Left		1	... .	... .	651 0987	... .
	Right		1	... .	... .	651 0986	... .
T-871W	Left		1	... .	... .	651 1001	... .
	Right		1	... .	... .	651 1000	... .
T-873C	Full		1	651 0967	651 0967	... .	... .
	Left		1	... .	... .	651 0979	... .
	Right		1	... .	... .	651 0978	... .

SEATS - SOFT TRIM

Trim No.		Per Car	01-10-80 (WFS)	01-10-80 (WNRS)	01-10-30 -70-80 (WIRS)(WBS)	
T-873E		2	... .	... .	651 1012	... .
T-873K	Left	1	... .	... .	651 1027	... .
	Right	1	... .	... .	651 1026	... .
T-873V	Full	1	651 0972	651 0972	... .	... .
	Left	1	... .	... .	651 0989	... .
	Right	1	... .	... .	651 0988	... .
T-873W	Left	1	... .	... .	651 1003	... .
	Right	1	... .	... .	651 1002	... .
T-874C	Full	1	651 0968	651 0968	... .	... .
	Left	1	... .	... .	651 0981	... .
	Right	1	... .	... .	651 0980	... .
T-874C-D	Left	1	... .	... .	361 3513	... .
	Right	1	... .	... .	361 3512	... .
T-874E		2	... .	... .	651 1014	... .
T-874K	Left	1	... .	... .	651 1029	... .
	Right	1	... .	... .	651 1028	... .
T-874W	Left	1	... .	... .	651 1005	... .
	Right	1	... .	... .	651 1004	... .
T-875E		2	... .	... .	651 1016	... .
T-875K	Left	1	... .	... .	651 1031	... .
	Right	1	... .	... .	651 1030	... .
T-875V	Full	1	651 0973	651 0973	... .	... .
	Left	1	... .	... .	651 0993	... .
	Right	1	... .	... .	651 0992	... .
T-876C	Full	1	651 0969	651 0969	... .	... .
	Left	1	... .	... .	651 0983	... .
	Right	1	... .	... .	651 0982	... .
T-876E		2	... .	... .	651 1018	... .
T-876K	Left	1	... .	... .	651 1033	... .
	Right	1	... .	... .	651 1032	... .
T-876V	Full	1	651 0974	651 0974	... .	... .
	Left	1	... .	... .	651 0995	... .
	Right	1	... .	... .	651 0996	... .
T-876W	Left	1	... .	... .	651 1007	... .
	Right	1	... .	... .	651 1006	... .
T-879C	Full	1	651 0970	651 0970	... .	... .
	Left	1	... .	... .	651 0985	... .
	Right	1	... .	... .	651 0984	... .
T-879E		2	... .	... .	651 1022	... .
T-879K	Left	1	... .	... .	651 1035	... .
	Right	1	... .	... .	651 1034	... .
T-879W	Left	1	... .	... .	651 1009	... .
	Right	1	... .	... .	651 1008	... .
T-881C	Full	1	651 1037	651 1037	... .	... .
	Left	1	... .	... .	651 1045	... .
	Right	1	... .	... .	651 1044	... .
T-881V	Full	1	651 0949	651 0949	... .	... .
	Left	1	... .	... .	651 0961	... .
	Right	1	... .	... .	651 0960	... .
T-883C	Ful	1	651 1038	651 1038	... .	... .
	Lef-	1	... .	... .	651 1047	... .
	Right	1	... .	... .	651 1046	... .
T-883V	Full	1	651 0950	651 0950	... .	... .
	Left	1	... .	... .	651 0963	... .
	Right	1	... .	... .	651 0962	... .
T-885C	Full	1	651 1039	651 1039	... .	... .
	Left	1	... .	... .	651 1049	... .
	Right	1	... .	... .	651 1048	... .

SEATS - SOFT TRIM

Trim No.		Per Car	01-10-80 (WFS)	01-10-80 (WNRS)	01-10-30 -70-80 (WIRS)(WBS)	
T-885V	Full	1	651 0951	651 0951	... .	... .
	Left	1	... .	... .	651 0965	... .
	Right	1	... .	... .	651 0964	... .
T-891C	Full	1	651 1058	651 1058	... .	... .
	Left	1	... .	... .	651 1069	... .
	Right	1	... .	... .	651 1068	... .
T-891C-D	Full	1	448 6769	448 6769	... .	... .
	Left	1	... .	... .	448 6773	... .
	Right	1	... .	... .	448 6772	... .
T-891E		2	... .	... .	651 1102	... .
T-891K	Left	1	... .	... .	651 1079	... .
	Right	1	... .	... .	651 1078	... .
T-891V	Full	1	651 1063	651 1063	... .	... .
	Left	1	... .	... .	651 1079	... .
	Right	1	... .	... .	651 1078	... .
T-891W	Left	1	... .	... .	651 1117	... .
	Right	1	... .	... .	651 1116	... .
T-893C	Full	1	651 1059	651 1059	... .	... .
	Left	1	... .	... .	651 1071	... .
	Right	1	... .	... .	651 1070	... .
T-893C-D	Full	1	448 6770	... .	... .	... .
	Left	1	... .	... .	448 6775	... .
	Right	1	... .	... .	448 6774	... .
T-893E		2	... .	... .	651 1104	... .
T-893K	Left	1	... .	... .	651 1081	... .
	Right	1	... .	... .	651 1080	... .
T-893V	Full	1	651 1064	651 1064	... .	... .
	Left	1	... .	... .	651 1081	... .
	Right	1	... .	... .	651 1080	... .
T-893W	Left	1	... .	... .	651 1119	... .
	Right	1	... .	... .	651 1118	... .
T-894C	Full	1	651 1060	651 1060	... .	... .
	Left	1	... .	... .	651 1073	... .
	Right	1	... .	... .	651 1072	... .
T-894C-D	Left	1	... .	... .	448 6777	... .
	Right	1	... .	... .	448 6776	... .
T-894E		2	... .	... .	651 1106	... .
T-894K	Left	1	... .	... .	651 1083	... .
	Right	1	... .	... .	651 1082	... .
T-894W	Left	1	... .	... .	651 1121	... .
	Right	1	... .	... .	651 1120	... .
T-895E		2	... .	... .	651 1108	... .
T-895K	Left	1	... .	... .	651 1085	... .
	Right	1	... .	... .	651 1084	... .
T-895V	Full	1	651 1065	651 1065	... .	... .
	Left	1	... .	... .	651 1085	... .
	Right	1	... .	... .	651 1084	... .
T-896C	Full	1	651 1061	651 1061	... .	... .
	Left	1	... .	... .	651 1075	... .
	Right	1	... .	... .	651 1074	... .
T-896C-D	Full	1	448 6771	... .	... .	... .
	Left	1	... .	... .	448 6778	... .
	Right	1	... .	... .	448 6779	... .
T-896E		2	... .	... .	651 1110	... .
T-896K	Left	1	... .	... .	651 1087	... .
	Right	1	... .	... .	651 1086	... .
T-896V	Full	1	651 1066	651 1066	... .	... .
	Left	1	... .	... .	651 1087	... .
	Right	1	... .	... .	651 1086	... .

Printed in U.S.A.

SEATS - SOFT TRIM

Trim No.		Per Car	01-10-80 (WFS)	01-10-80 (WNRS)	01-10-30 -70-80 (WIRS)(WBS)	
T-896W	Left	1	... .	... .	651 1123	... .
	Right	1	... .	... .	651 1122	... .
T-899C	Full	1	651 1062	651 1062	... .	... .
	Left	1	... .	... .	651 1077	... .
	Right	1	... .	... .	651 1076	... .
T-899C-D	Left	1	... .	... .	448 6780	... .
	Right	1	... .	... .	448 6781	... .
T-899E		2	... .	... .	651 1114	... .
T-899K	Left	1	... .	... .	651 1091	... .
	Right	1	... .	... .	651 1090	... .
T-899W	Left	1	... .	... .	651 1125	... .
	Right	1	... .	... .	651 1124	... .

1969 MODELS

Trim No.		Per Car	01-10-80 (WFS)(WNRS)	01-10-30 -70-80 (WIRS)(WBS)		
T-000		1	448 9278	... .	... .	... .
T-921F		1	363 5955	... .	... .	... .
T-921G	(05)	1	363 5002	... .	... .	... .
T-921G	(08)	1	363 5005	... .	... .	... .
T-923A		1	363 0199	... .	... .	... .
T-923B		1	363 0200	... .	... .	... .
T-923C	Left	1	... .	363 0203	... .	... .
	Right	1	... .	363 0202	... .	... .
T-923D	Left	1	... .	363 0205	... .	... .
	Right	1	... .	363 0204	... .	... .
T-928A		1	363 0161	... .	... .	... .
T-928B		1	362 3180	... .	... .	... .
T-928C	Left	1	... .	363 0191	... .	... .
	Right	1	... .	363 0190	... .	... .
T-928D	Left	1	362 3203	... .	... .	... .
	Right	1	... .	362 3202	... .	... .
T-928H	Left	1	... .	362 3199	... .	... .
	Right	1	... .	362 3198	... .	... .
T-928R		1	362 3179	... .	... .	... .
T-928S	Left	1	... .	362 3201	... .	... .
	Right	1	... .	362 3200	... .	... .
T-931F		2	... .	363 0565	... .	... .
T-931L		2	... .	362 4565	... .	... .
T-932F		2	... .	362 4569	... .	... .
T-935F		2	... .	363 0578	... .	... .
T-936F		2	... .	362 4566	... .	... .
T-936L		2	... .	362 4567	... .	... .
T-941A		1	362 3186	... .	... .	... .
T-941B		1	362 3182	... .	... .	... .
T-941C	Left	1	... .	362 3213	... .	... .
	Right	1	... .	362 3212	... .	... .
T-941D	Left	1	... .	362 3205	... .	... .
	Right	1	... .	362 3204	... .	... .
T-941K		1	448 6885	... .	... .	... .
T-943A		1	362 3183	... .	... .	... .
T-943B		1	362 4438	... .	... .	... .
T-943C	Left	1	... .	362 3207	... .	... .
	Right	1	... .	362 3206	... .	... .
T-943D	Left	1	... .	362 4443	... .	... .
	Right	1	... .	362 4442	... .	... .

SEATS - SOFT TRIM

Trim No.			Per Car	01-10-80 (WFS)(WNRS)	01-10-30 -70-80 (WIRS)(WBS)		
T-944A			1	362 3184	... .	... .	... .
T-944B			1	362 4439	... .	... .	... .
T-944C	Left		1	... .	362 3209	... .	... .
	Right		1	... .	362 3208	... .	... .
T-944D	Left		1	... .	362 4445	... .	... .
	Right		1	... .	362 4444	... .	... .
T-945A			1	362 4440	... .	... .	... .
T-945B			1	362 3185	... .	... .	... .
T-945C	Left		1	... .	362 4447	... .	... .
	Right		1	... .	362 4446	... .	... .
T-945D	Left		1	... .	362 3211	... .	... .
	Right		1	... .	362 3210	... .	... .
T-951B			1	651 9546	... .	... .	... .
T-951D	Left		1	... .	651 9559	... .	... .
	Right		1	... .	651 9558	... .	... .
T-951G			1	651 9542	... .	... .	... .
T-951H	Left		1	... .	651 9551	... .	... .
	Right		1	... .	651 9550	... .	... .
T-953A			1	651 9543	... .	... .	... .
T-953B			1	652 1858	... .	... .	... .
T-953C	Left		1	... .	651 9553	... .	... .
	Right		1	... .	651 9552	... .	... .
T-953D	Left		1	... .	652 1861	... .	... .
	Right		1	... .	652 1860	... .	... .
T-956A			1	651 9544	... .	... .	... .
T-956B			1	651 9548	... .	... .	... .
T-956C	Left		1	... .	651 9555	... .	... .
	Right		1	... .	651 9554	... .	... .
T-956D	Left		1	... .	651 9563	... .	... .
	Right		1	... .	651 9562	... .	... .
T-957A			1	651 9545	... .	... .	... .
T-957B			1	652 1859	... .	... .	... .
T-957C	Left		1	... .	651 9557	... .	... .
	Right		1	... .	651 9556	... .	... .
T-957D	Left		1	... .	652 1863	... .	... .
	Right		1	... .	652 1862	... .	... .
T-961E		(* 29-103)	2	... .	362 3376	... .	... .
		(* 29-104)	2	... .	363 5328	... .	... .
T-961F			2	... .	362 3377	... .	... .
T-961J			2	... .	362 3379	... .	... .
T-961K			2	... .	448 6894	... .	... .
T-962E		(* 29-103)	2	... .	363 0326	... .	... .
		(* 29-104)	2	... .	363 5364	... .	... .
T-962F			2	... .	363 0327	... .	... .
T-963E			2	... .	362 3385	... .	... .
T-963F			2	... .	362 3386	... .	... .
T-965E			2	... .	362 4568	... .	... .
T-965F			2	... .	362 3384	... .	... .
T-966E			2	... .	362 3380	... .	... .
T-966F			2	... .	362 3381	... .	... .
T-968J			2	... .	362 3387	... .	... .
T-972A			1	652 1870	... .	... .	... .
T-972B			1	652 1871	... .	... .	... .
T-972C	Left		1	... .	652 1865	... .	... .
	Right		1	... .	652 1864	... .	... .
T-972D	Left		1	... .	652 1867	... .	... .
	Right		1	... .	652 1866	... .	... .
T-972E			2	... .	652 1874	... .	
T-972F			2	... .	652 1878	... .	... .

Printed in U.S.A.

SEATS - SOFT TRIM

Trim No.		Per Car	01-10-80 (WFS)(WNRS)	01-10-30 -70-80 (WIRS)(WBS)		
T-973A		1	652 1333	... .	... .	... .
T-973B		1	652 1337	... .	... .	... .
T-973C	Left	1	... .	651 9567	... .	... .
	Right	1	... .	651 9566	... .	... .
T-973D	Left	1	... .	651 9575	... .	... .
	Right	1	... .	651 9574	... .	... .
T-973E		2	... .	652 1876	... .	... .
T-975B		1	652 1338	... .	... .	... .
T-975D	Left	1	... .	651 9577	... .	... .
	Right	1	651 9576	... .	... .	... .
T-975F		2	... .	651 9588	... .	... .
T-976A		1	652 1334	... .	... .	... .
T-976B		1	652 1339	... .	... .	... .
T-976C	Left	1	... .	651 9569	... .	... .
	Right	1	... .	651 9568	... .	... .
T-976D	Left	1	... .	651 9579	... .	... .
	Right	1	... .	651 9578	... .	... .
T-977A		1	652 1335	... .	... .	... .
T-977B		1	652 1872	... .	... .	... .
T-977C	Left	1	... .	651 9571	... .	... .
	Right	1	... .	651 9570	... .	... .
T-977D	Left	1	... .	652 1869	... .	... .
	Right	1	... .	652 1868	... .	... .
T-979B		1	652 1341	... .	... .	... .
T-979D	Left	1	... .	651 9581	... .	... .
	Right	1	... .	651 9580	... .	... .
T-979F		2	... .	651 9592	... .	... .
T-981B		1	651 9546	... .	... .	... .
T-981D	Left	1	... .	651 9559	... .	... .
	Right	1	... .	651 9558	... .	... .
T-983A		1	651 9596	... .	... .	... .
T-983C	Left	1	... .	651 9601	... .	... .
	Right	1	... .	651 9600	... .	... .
T-983D	Left	1	... .	652 1861	... .	... .
	Right	1	... .	652 1860	... .	... .
T-986A		1	651 9597	... .	... .	... .
T-986C	Left	1	... .	651 9603	... .	... .
	Right	1	... .	651 9602	... .	... .
T-986D	Left	1	... .	651 9563	... .	... .
	Right	1	... .	651 9562	... .	... .
T-987A		1	651 9598	... .	... .	... .
T-987C	Left	1	... .	651 9605	... .	... .
	Right	1	... .	651 9604	... .	... .
T-987D	Left	1	... .	652 1863	... .	... .
	Right	1	... .	652 1862	... .	... .
T-991A		1	651 9606	... .	... .	... .
T-991B		1	651 9610	... .	... .	... .
T-991C	Left	1	... .	651 9617	... .	... .
	Right	1	... .	651 9616	... .	... .
T-991D	Left	1	... .	651 9625	... .	... .
	Right	1	... .	651 9624	... .	... .
T-991F		2	... .	651 9656	... .	... .
T-991N	Left	1	... .	651 9645	... .	... .
	Right	1	... .	651 9644	... .	... .
T-992E		2	... .	652 1890	... .	... .
T-992M	Left	1	... .	652 1885	... .	... .
	Right	1	... .	652 1884	... .	... .
T-992V	Left	1	... .	652 1887	... .	... .
	Right	1	... .	652 1886	... .	... .

SEATS - SOFT TRIM

Trim No.		Per Car	01-10-80 (WFS)(WNRS)	01-10-30 -70-80 (WIRS)(WBS)		
T-993A		1	651 9607	... .	... .	... .
T-993B		1	651 9611	... .	... .	... .
T-993C	Left	1	... .	651 9619	... .	... .
	Right	1	... .	651 9618	... .	... .
T-993D	Left	1	... .	651 9627	... .	... .
	Right	1	... .	651 9626	... .	... .
T-993E		2	... .	652 1892	... .	... .
T-993F		2	... .	651 9658	... .	... .
T-993M	Left	1	... .	651 9639	... .	... .
	Right	1	... .	651 9638	... .	... .
T-993N	Left	1	... .	651 9647	... .	... .
	Right	1	... .	651 9646	... .	... .
T-993V	Left	1	... .	652 1889	... .	... .
	Right	1	... .	652 1888		
T-995B		1	651 9612	... .	... .	... .
T-995D	Left	1	... .	651 9629	... .	... .
	Right	1	... .	651 9628	... .	... .
T-995F		2	... .	651 9660	... .	... .
T-995N	Left	1	... .	651 9649	... .	... .
	Right	1	... .	651 9648	... .	... .
T-996A		1	651 9608	... .	... .	... .
T-996B		1	651 9613	... .	... .	... .
T-996C	Left	1	... .	651 9621	... .	... .
	Right	1	... .	651 9620	... .	... .
T-996D	Left	1	... .	651 9631	... .	... .
	Right	1	... .	651 9630	... .	... .
T-996E		2	... .	652 1894	... .	... .
T-996F		2	... .	651 9662	... .	... .
T-996M	Left	1	... .	651 9641	... .	... .
	Right	1	... .	651 9640	... .	... .
T-996N	Left	1	... .	651 9651	... .	... .
	Right	1	... .	651 9650	... .	... .
T-997A		1	651 9609	... .	... .	... .
T-997B		1	652 1880	... .	... .	... .
T-997C	Left	1	... .	651 9623	... .	... .
	Right	1	... .	651 9622	... .	... .
T-997D	Left	1	... .	652 1883	... .	... .
	Right	1	... .	652 1882	... .	... .
T-997E		2	... .	652 1896	... .	... .
T-997M	Left	1	... .	651 9643	... .	... .
	Right	1	... .	651 9642	... .	... .
T-999F		2	... .	651 9664	... .	... .
T-999N	Left	1	... .	651 9653	... .	... .
	Right	1	... .	651 9652	... .	... .

Printed in U.S.A.

SEATS - SOFT TRIM

1970 MODELS

Trim No.		Per Car	05	06-10-30-40 -70-80
T-001B		1	... .	364 1263
T-008B		1	... .	364 1287
T-011B		1	... .	363 5560
T-011F	Left	1	... .	364 1447
	Right	1	... .	364 1446
T-011FD	Left	1	... .	364 1195
	Right	1	... .	364 1194
T-013B		1	... .	363 5561
T-013F	Left	1	... .	364 1449
	Right	1	... .	364 1448
T-013FD	Left	1	... .	364 1207
	Right	1	... .	364 1206
T-014B		1	... .	364 1288
T-014F	Left	1	... .	364 1445
	Right	1	... .	364 1444
T-014FD	Left	1	... .	364 1213
	Right	1	... .	364 1212
T-015B		1	... .	363 5546
T-015F	Left	1	... .	364 1443
	Right	1	... .	364 1442
T-015FD	Left	1	... .	364 1209
	Right	1	... .	364 1208
T-021A		1	363 0511	363 5904
T-021B		1	363 0352	363 5902
T-021G		1	363 0353	363 5903
T-023A		1	363 0512	363 5905
T-023B		1	363 0513	363 5906
T-024A		1	363 5832	363 5914
T-024B		1	363 5833	363 5915
T-025A		1	363 5834	363 5916
T-025B		1	363 5835	363 5917
T-031F	Left	1	... .	364 1195
	Right	1	... .	364 1194
T-031L	Left	1	... .	364 1199
	Right	1	... .	364 1198
T-033F	Left	1	... .	364 1207
	Right	1	... .	364 1206
T-035F	Left	1	... .	364 1209
	Right	1	... .	364 1208
T-035L	Left	1	... .	364 1221
	Right	1	... .	364 1220
T-036F	Left	1	... .	364 1219
	Right	1	... .	364 1218
T-036L	Left	1	... .	364 1215
	Right	1	... .	364 1214
T-041A		1	363 0354	363 5907
T-041B		1	363 0355	363 5908
T-041C	Left	1	363 0367	363 0367
	Right	1	363 0366	363 0366
T-041D	Left	1	363 0369	363 0369
	Right	1	363 0368	363 0368
T-043A		1	363 0356	363 5909
T-043B		1	363 0357	363 5910
T-043C	Left	1	363 0371	363 0371
	Right	1	363 0370	363 0370
T-043D	Left	1	363 0373	363 0373
	Right	1	363 0372	363 0372
T-043V	Left	1	363 5933	363 5933
	Right	1	363 5932	363 5932
T-044A		1	363 0358	363 5911
T-044B		1	363 5831	363 5912

Printed in U.S.A.

SEATS - SOFT TRIM

Trim No.		Per Car	05	06-10-30-40 -70-80
T-044C	Left	1	363 0375	363 0375
	Right	1	363 0374	363 0374
T-044D	Left	1	363 5837	363 5837
	Right	1	363 5836	363 5836
T-044V	Left	1	363 5935	363 5935
	Right	1	363 5934	363 5934
T-045A		1	363 0799	363 5913
T-045C	Left	1	363 0801	363 0801
	Right	1	363 0800	363 0800
T-051B		1	... .	652 4828
T-051D	Left	1	... .	652 4841
	Right	1	... .	652 4840
T-051F	Left	1	... .	652 6245
	Right	1	... .	652 6244
T-051G		1	... .	652 4824
T-051H	Left	1	... .	652 4833
	Right	1	... .	652 4832
T-051P		1	... .	448 8479
T-051V		1	... .	448 8480
T-053A		1	... .	652 4825
T-053A-D		1	... .	448 9334
T-053B		1	... .	652 4829
T-053C	Left	1	... .	652 4835
	Right	1	... .	652 4834
T-053D	Left	1	... .	652 4843
	Right	1	... .	652 4842
T-053F	Left	1	... .	652 6247
	Right	1	... .	652 6246
T-054A		1	... .	652 4826
T-054B		1	... .	652 4830
T-054B-D		1	... .	448 9335
T-054C	Left	1	... .	652 4837
	Right	1	... .	652 4836
T-054D	Left	1	... .	652 4845
	Right	1	... .	652 4844
T-056A		1	... .	652 4827
T-056B		1	... .	652 4831
T-056C	Left	1	... .	652 4839
	Right	1	... .	652 4838
T-056D	Left	1	... .	652 4847
	Right	1	... .	652 4846
T-056F	Left	1	... .	652 6251
	Right	1	... .	652 6250
T-061E	Left	1	... .	364 1197
	Right	1	... .	364 1196
T-061F	Left	1	... .	364 1195
	Right	1	... .	364 1194
T-061J	Left	1	... .	364 1185
	Right	1	... .	364 1184
T-061L	Left	1	... .	364 1199
	Right	1	... .	364 1198
T-063E	Left	1	... .	364 1205
	Right	1	... .	364 1204
T-063F	Left	1	... .	364 1207
	Right	1	... .	364 1206
T-063J	Left	1	... .	364 1187
	Right	1	... .	364 1186
T-064E	Left	1	... .	364 1203
	Right	1	... .	364 1202
T-064F	Left	1	... .	364 1213
	Right	1	... .	364 1212

SEATS - SOFT TRIM

Trim No.		Per Car	05	06-10-30-40 -70-80
T-064J	Left	1	... .	364 1191
	Right	1	... .	364 1190
T-064JC	Left	1	... .	364 1213
	Right	1	... .	364 1212
T-065E	Left	1	... .	364 1211
	Right	1	... .	364 1210
T-065F	Left	1	... .	364 1209
	Right	1	... .	364 1208
T-065J	Left	1	... .	364 1189
	Right	1	... .	364 1188
T-065L	Left	1	... .	364 1221
	Right	1	... .	364 1220
T-066E	Left	1	... .	364 1217
	Right	1	... .	364 1216
T-066F	Left	1	... .	364 1219
	Right	1	... .	364 1218
T-066J	Left	1	... .	364 1193
	Right	1	... .	364 1192
T-066L	Left	1	... .	364 1215
	Right	1	... .	364 1214
T-071A		1	... .	652 4866
T-071B		1	... .	652 4870
T-071C	Left	1	... .	652 4849
	Right	1	... .	652 4848
T-071D	Left	1	... .	652 4857
	Right	1	... .	652 4856
T-071E	Left	1	... .	652 6241
	Right	1	... .	652 6240
T-071F	Left	1	... .	652 6245
	Right	1	... .	652 6244
T-071S	Left	1	... .	652 8197
	Right	1	... .	652 8196
T-073A		1	... .	652 4867
T-073B		1	... .	652 4871
T-073C	Left	1	... .	652 4851
	Right	1	... .	652 4850
T-073D	Left	1	... .	652 4859
	Right	1	... .	652 4858
T-073E	Left	1	... .	652 6243
	Right	1	... .	652 6242
T-073F	Left	1	... .	652 6247
	Right	1	... .	652 6246
T-073S	Left	1	... .	652 8199
	Right	1	... .	652 8198
T-074A		1	... .	652 4868
T-074B		1	... .	652 4872
T-074C	Left	1	... .	652 4853
	Right	1	... .	652 4852
T-074D	Left	1	... .	652 4861
	Right	1	... .	652 4860
T-074S	Left	1	... .	652 8201
	Right	1	... .	652 8200
T-075B		1	... .	652 4873
T-075D	Left	1	... .	652 4863
	Right	1	... .	652 4862
T-075F	Left	1	... .	652 6249
	Right	1	... .	652 6248
T-076A		1	... .	652 4869
T-076B		1	... .	652 4874

SEATS - SOFT TRIM

Trim No.		Per Car	05	06-10-30-40 -70-80
T-076C	Left	1	... .	652 4855
	Right	1	... .	652 4854
T-076D	Left	1	... .	652 4865
	Right	1	... .	652 4864
T-076F	Left	1	... .	652 6251
	Right	1	... .	652 6250
T-076S	Left	1	... .	652 8203
	Right	1	... .	652 8202
T-081B		1	... .	652 4883
T-081D	Left	1	... .	652 4891
	Right	1	... .	652 4890
T-083A		1	... .	652 4880
T-083C	Left	1	... .	652 4885
	Right	1	... .	652 4884
T-083D	Left	1	... .	652 4893
	Right	1	... .	652 4892
T-084A		1	... .	652 4881
T-084C	Left	1	... .	652 4887
	Right	1	... .	652 4886
T-084D	Left	1	... .	652 4895
	Right	1	... .	652 4896
T-086A		1	... .	652 4882
T-086C	Left	1	... .	652 4889
	Right	1	... .	652 4888
T-086D	Left	1	... .	652 4897
	Right	1	... .	652 4896
T-091A		1	... .	652 4898
T-091B		1	... .	652 4902
T-091C	Left	1	... .	652 4909
	Right	1	... .	652 4908
T-091D	Left	1	... .	652 4917
	Right	1	... .	652 4916
T-091E	Left	1	... .	652 6253
	Right	1	... .	652 6252
T-091F	Left	1	... ...	652 6261
	Right	1	... .	652 6260
T-091M	Left	1	... .	652 4927
	Right	1	... .	652 4926
T-091N	Left	1	... .	652 4935
	Right	1	... .	652 4934
T-091S	Left	1	... .	652 8197
	Right	1	... .	652 8196
T-091V	Left	1	... .	652 4945
	Right	1	... .	652 4944
T-093A		1	... .	652 4899
T-093B		1	... .	652 4903
T-093C	Left	1	... .	652 4911
	Right	1	... .	652 4910
T-093D	Left	1	... .	652 4919
	Right	1	... .	652 4918
T-093E	Left	1	... .	652 6255
	Right	1	... .	652 6254
T-093F	Left	1	... .	652 6263
	Right	1	... .	652 6262
T-093M	Left	1	... .	652 4929
	Right	1	... .	652 4928
T-093N	Left	1	... .	652 4937
	Right	1	... .	652 4936
T-093S	Left	1	... .	652 8199
	Right	1	... .	652 8198

Printed in U.S.A.

SEATS - SOFT TRIM

Trim No.		Per Car	05	06-10-30-40 -70-80
T-093V	Left	1	... .	652 4947
	Right	1	... .	652 4946
T-094A		1	... .	652 4900
T-094B		1	... .	652 4904
T-094C	Left	1	... .	652 4913
	Right	1	... .	652 4912
T-094D	Left	1	... .	652 4921
	Right	1	... .	652 4920
T-094E	Left	1	... .	652 6257
	Right	1	... .	652 6256
T-094F	Left	1	... .	652 6265
	Right	1	... .	652 6264
T-094M	Left	1	... .	652 4931
	Right	1	... .	652 4930
T-094N	Left	1	... .	652 4939
	Right	1	... .	652 4938
T-094S	Left	1	... .	652 8201
	Right	1	... .	652 8200
T-095B		1	... .	652 4905
T-095D	Left	1	... .	652 4923
	Right	1	... .	652 4922
T-095F	Left	1	... .	652 6267
	Right	1	... .	652 6266
T-095N	Left	1	... .	652 4941
	Right	1	... .	652 4940
T-096A		1	... .	652 4901
T-096B		1	... .	652 4906
T-096C	Left	1	... .	652 4915
	Right	1	... .	652 4914
T-096D	Left	1	... .	652 4925
	Right	1	... .	652 4924
T-096E	Left	1	... .	652 6259
	Right	1	... .	652 6258
T-096F	Left	1	... .	652 6269
	Right	1	... .	652 6268
T-096M	Left	1	... .	652 4933
	Right	1	... .	652 4932
T-096N	Left	1	... .	652 4943
	Right	1	... .	652 4942
T-096S	Left	1	... .	652 8203
	Right	1	... .	652 8202

1971 MODELS

Trim No.		Per Car	05-08	06-10-40 -70-80
T-101B		1	... .	364 1598
T-103A		1	... .	365 1912
T-103B		1	... .	364 1599
T-104A		1	... .	365 1913
T-108B		1	... .	365 1430
T-111B		1	... .	364 1600
T-111S	Left	1	... .	364 1623
	Right	1	... .	364 1622
T-113B		1	... .	364 1601
T-113S	Left	1	... .	364 1625
	Right	1	... .	364 1624
T-114B		1	... .	364 1602
T-114S	Left	1	... .	364 1627
	Right	1	... .	364 1626
T-115B		1	... .	364 1603

SEATS - SOFT TRIM

Trim No.		Per Car	05-08	06-10-40 -70-80
T-115S	Left	1	... .	364 1629
	Right	1	... .	364 1628
T-121A		1	364 1576	364 1589
T-121AX		1	366 1054	366 1057
T-121B		1	364 1647	364 1714
T-121G		1	364 1577	364 1590
T-123A		1	364 1578	364 1591
T-123AX		1	366 1055	366 1058
T-123B		1	364 1579	364 1592
T-124A		1	364 1580	364 1593
T-124B		1	364 1581	364 1594
T-128B		1	365 1428	365 1429
T-141A		1	364 1582	364 1595
T-141B		1	364 1583	... .
T-141C	Left	1	... .	364 1605
	Right	1	... .	364 1604
T-141D	Left	1	364 1607	364 1607
	Right	1	364 1606	364 1606
T-141V	Left	1	364 1619	364 1619
	Right	1	364 1618	364 1618
T-143A		1	364 1584	364 1596
T-143B		1	364 1585	... .
T-143C	Left	1	... .	364 1609
	Right	1	... .	364 1608
T-143D	Left	1	364 1611	364 1611
	Right	1	364 1610	364 1610
T-143V	Left	1	365 0533	365 0533
	Right	1	365 0532	365 0532
T-144A		1	364 1586	364 1597
T-144B		1	364 1587	... .
T-144C	Left	1	... .	364 1613
	Right	1	... .	364 1612
T-144D	Left	1	364 1615	364 1615
	Right	1	364 1614	364 1614
T-144V	Left	1	365 0535	365 0535
	Right	1	365 0534	365 0534
T-145B		1	364 1588	... .
T-145D	Left	1	364 1617	364 1617
	Right	1	364 1616	364 1616
T-145V	Left	1	364 1621	364 1621
	Right	1	364 1620	364 1620
T-151A		1	... .	652 7081
T-151B		1	... .	652 7084
T-151C	Left	1	... .	652 7091
	Right	1	... .	652 7090
T-151D	Left	1	... .	652 7097
	Right	1	... .	652 7096
T-151G		1	... .	652 7080
T-151H	Left	1	... .	652 7089
	Right	1	... .	652 7088
T-153A		1	... .	652 7082
T-153B		1	... .	652 7085
T-153C	Left	1	... .	652 7093
	Right	1	... .	652 7092
T-153D	Left	1	... .	652 7099
	Right	1	... .	652 7098
T-154A		1	... .	652 7083
T-154B		1	... .	652 7086
T-154C	Left	1	... .	652 7095
	Right	1	... .	652 7094

SEATS - SOFT TRIM

Trim No.		Per Car	05-08	06-10-40 -70-80
T-154D	Left	1	... .	652 7101
	Right	1	... .	652 7100
T-161J	Left	1	... .	364 1325
	Right	1	... .	364 1324
T-161JX	Left	1	... .	365 1807
	Right	1	... .	365 1806
T-161L	Left	1	... .	365 0887
	Right	1	... .	365 0886
T-161R	Left	1	... .	364 1327
	Right	1	... .	364 1326
T-161S	Left	1	... .	364 1623
	Right	1	... .	364 1622
T-161SX	Left	1	... .	365 1805
	Right	1	... .	365 1804
T-163J	Left	1	... .	364 1333
	Right	1	... .	364 1332
T-163JX	Left	1	... .	365 1809
	Right	1	... .	365 1808
T-163R	Left	1	... .	364 1335
	Right	1	... .	364 1334
T-163S	Left	1	... .	364 1625
	Right	1	... .	364 1624
T-164J	Left	1	... .	364 1339
	Right	1	... .	364 1338
T-164R	Left	1	... .	364 1341
	Right	1	... .	364 1340
T-164S	Left	1	... .	364 1627
	Right	1	... .	364 1626
T-165J	Left	1	... .	364 1345
	Right	1	... .	364 1344
T-165JX	Left	1	... .	365 1811
	Right	1	... .	365 1810
T-165L	Left	1	... .	364 1351
	Right	1	... .	364 1350
T-165R	Left	1	... .	364 1347
	Right	1	... .	364 1346
T-165S	Left	1	... .	364 1629
	Right	1	... .	364 1628
T-168S	Left	1	... .	365 1461
	Right	1	... .	365 1460
T-171A		1	... .	652 7102
T-171B		1	... .	652 7106
T-171C	Left	1	... .	652 7111
	Right	1	... .	652 7110
T-171D	Left	1	... .	652 7119
	Right	1	... .	652 7118
T-171G		1	... .	652 7080
T-171H	Left	1	... .	652 7089
	Right	1	... .	652 7088
T-171S	Left	1	... .	652 8379
	Right	1	... .	652 8378
T-171V	Left	1	... .	652 8407
	Right	1	... .	652 8406
T-173A		1	... .	652 7103
T-173B		1	... .	652 7107
T-173C	Left	1	... .	652 7113
	Right	1	... .	652 7112
T-173D	Left	1	... .	652 7121
	Right	1	... .	652 7120
T-173S	Left	1	... .	652 8381
	Right	1	... .	652 8380
T-173V	Left	1	... .	652 8523
	Right	1	... .	652 8522
T-174A		1	... .	652 7104
T-174B		1	... .	652 7108
T-174C	Left	1	... .	652 7115
	Right	1	... .	652 7114

Printed in U.S.A.

SEATS - SOFT TRIM

Trim No.		Per Car	05-08	06-10-40 -70-80
T-174D	Left	1	... .	652 7123
	Right	1	... .	652 7122
T-174S	Left	1	... .	652 8383
	Right	1	... .	652 8382
T-174V	Left	1	... .	652 8525
	Right	1	... .	652 8524
T-175A		1	... .	652 7105
T-175B		1	... .	652 7109
T-175C	Left	1	... .	652 7117
	Right	1	... .	652 7116
T-175D	Left	1	... .	652 7125
	Right	1	... .	652 7124
T-175S	Left	1	... .	652 8385
	Right	1	... .	652 8384
T-175V	Left	1	... .	652 8409
	Right	1	... .	652 8408
T-176D	Left	1	... .	652 9467
	Right	1	... .	652 9466
T-181A		1	... .	652 7131
T-181B		1	... .	652 7084
T-181C	Left	1	... .	652 7139
	Right	1	... .	652 7138
T-183A		1	... .	652 7132
T-183B		1	... .	652 7085
T-183C	Left	1	... .	652 7141
	Right	1	... .	652 7140
T-184A		1	... .	652 7133
T-184B		1	... .	652 7086
T-184C	Left	1	... .	652 7143
	Right	1	... .	652 7142
T-186D	Left	1	... .	652 9467
	Right	1	... .	652 9466
T-191A		1	... .	652 7144
T-191B		1	... .	652 7148
T-191C	Left	1	... .	652 7153
	Right	1	... .	652 7152
T-191D	Left	1	... .	652 7161
	Right	1	... ...	652 7160
T-191M	Left	1	... .	652 7173
	Right	1	... .	652 7172
T-191N	Left	1	... .	652 7161
	Right	1	... .	652 7160
T-191R	Left	1	... .	652 8371
	Right	1	... .	652 8370
T-191S	Left	1	... .	652 8379
	Right	1	... .	652 8378
T-191V	Left	1	... .	652 8411
	Right	1	... .	652 8410
T-193A		1	... .	652 7145
T-193B		1	... .	652 7149
T-193C	Left	1	... .	652 7155
	Right	1	... .	652 7154
T-193D	Left	1	... .	652 7163
	Right	1	... .	652 7162
T-193M	Left	1	... .	652 7175
	Right	1	... .	652 7174
T-193N	Left	1	... .	652 7163
	Right	1	... .	652 7162
T-193R	Left	1	... .	652 8373
	Right	1	... .	652 8372
T-193S	Left	1	... .	652 8381
	Right	1	... .	652 8380
T-193V	Left	1	... .	652 8413
	Right	1	... .	652 8412
T-194A		1	... .	652 7146
T-194B		1	... .	652 7150

SEATS - SOFT TRIM

Trim No.		Per Car	05-08	06-10-40 -70-80
T-194C	Left	1	... .	652 7157
	Right	1	... .	652 7156
T-194D	Left	1	... .	652 7165
	Right	1	... .	652 7164
T-194M	Left	1	... .	652 7177
	Right	1	... .	652 7176
T-194N	Left	1	... .	652 7165
	Right	1	... .	652 7164
T-194R	Left	1	... .	652 8375
	Right	1	... .	652 8374
T-194S	Left	1	... .	652 8383
	Right	1	... .	652 8382
T-195A		1	... .	652 7147
T-195B		1	... .	652 7151
T-195C	Left	1	... .	652 7159
	Right	1	... .	652 7158
T-195D	Left	1	... .	652 7167
	Richt	1	... .	652 7166
T-195M	Left	1	... .	652 7179
	Richt	1	... .	652 7178
T-195N	Left	1	... .	652 7167
	Richt	1	... .	652 7166
T-195R	Left	1	... .	652 8377
	Right	1	... .	652 8376
T-195S	Left	1	... .	652 8385
	Right	1	... .	652 8384
T-196D	Left	1	... .	652 9467
	Right	1	... .	652 9466
T-196N	Left	1	... .	652 9467
	Right	1	... .	652 9466

1972 MODELS

Trim No.		Per Car	05-08	06-10-40 -70-80
T-201A		1	... .	366 2888
T-201B		1	... .	365 0653
T-203A		1	... .	366 2889
T-203B		1	... .	365 0654
T-206A		1	... .	366 2890
T-206B		1	... .	365 1125
T-208B		1	... .	366 8541
T-211B		1	... .	365 0655
T-211S		2	... .	365 0796
T-213B		1	... .	365 0656
T-213S		2	... .	365 0802
T-215B		1	... .	365 0658
T-215S		2	... .	365 0858
T-216B		1	... .	365 1092
T-216S		2	... .	365 1074
T-218B		1	... .	366 8544
T-218S		2	... .	366 8213
T-221G		1	365 0632	365 0646
T-241A		1	365 0637	365 0650
T-241B		1	365 0638	366 1870
T-241C	Left	1	365 0587	365 0587
	Right	1	365 0586	365 0586
T-241D	Left	1	365 0589	365 0589
	Right	1	365 0588	365 0588
T-241S		2	... .	365 0796
T-241V	Left	1	365 0615	365 0615
	Right	1	365 0614	365 0614
T-243A		1	365 0639	365 0651
T-243B		1	365 0640	366 1871

Printed in U.S.A.

SEATS - SOFT TRIM

Trim No.			Per Car	05-08	06-10-40 -70-80
T-243C	Left		1	365 0591	365 0591
	Right		1	365 0590	365 0590
T-243D	Left		1	365 0593	365 0593
	Right		1	365 0592	365 0592
T-243S			2	... .	365 0802
T-243V	Left		1	365 0617	365 0617
	Right		1	365 0616	365 0616
T-244A			1	365 0641	365 0652
T-244B			1	365 0642	366 1872
T-244C	Left		1	365 0595	365 0595
	Right		1	365 0594	365 0594
T-244D	Left		1	365 0597	365 0597
	Right		1	365 0596	365 0596
T-244V	Left		1	365 0619	365 0619
	Right		1	365 0618	365 0618
T-244W	Left		1	365 1815	... .
	Right		1	365 1814	... .
T-245S			2	... .	365 0858
T-246A			1	365 1696	365 1697
T-246B			1	365 1695	366 1873
T-246C	Left		1	365 1701	365 1701
	Right		1	365 1700	365 1700
T-246D	Left		1	365 1699	365 1699
	Right		1	365 1698	365 1698
T-246S			2	... .	365 1074
T-246V	Left		1	365 1703	365 1703
	Right		1	365 1702	365 1702
T-248B			1	366 8539	366 8540
T-248D	Left		1	366 8543	366 8543
	Right		1	366 8542	366 8542
T-248S			2	... .	366 8213
T-261R		(* 29-146)	2	... .	366 1570
		(* 29-147)	2	... .	366 8986
T-261S			2	... .	365 0796
T-261W			2	... .	366 1929
T-263R			2	... .	366 1571
T-263S			2	... .	365 0802
T-264R			2	... .	366 1572
T-264S			2	... .	365 0854
T-265S			2	... .	365 0858
T-266R			2	... .	366 1573
T-266S			2	... .	365 1074
T-268S			2	... .	366 8213
T-271A			1	... .	652 8826
T-271B			1	... .	652 8830
T-271D	Left		1	... .	652 8901
	Right		1	... .	652 8900
T-271G			1	... .	652 7080
T-271H	Left		1	... .	653 0093
	Right		1	... .	653 0092
T-271S			2	... .	652 8916
T-271V	Left		1	... .	652 8843
	Right		1	... .	652 8842
T-271Z			1	... .	812 1994
T-273A			1	... .	652 8827
T-273B			1	... .	652 8831
T-273D	Left		1	... .	652 8903
	Right		1	... .	652 8902
T-273S			2	... .	652 8918
T-273V	Left		1	... .	652 8845
	Right		1	... .	652 8844
T-273Z			1	... .	812 1995
T-274A			1	... .	652 8828
T-274B			1	... .	652 8832

SEATS - SOFT TRIM

Trim No.		Per Car	05-08	06-10-40 -70-80
T-274D	Left	1	... .	652 8905
	Right	1	... .	652 8904
T-274S		2	... .	652 8920
T-274V	Left	1	... .	652 8847
	Right	1	... .	652 8846
T-274Z		1	... .	812 1996
T-276A		1	... .	652 8829
T-276B		1	... .	652 8833
T-276D	Left	1	... .	652 8907
	Right	1	... .	652 8906
T-276S		2	... .	652 8922
T-276V	Left	1	... .	652 8849
	Right	1	... .	652 8848
T-276Z		1	... .	812 1997
T-291A		1	... .	652 8868
T-291B		1	... .	652 8872
T-291C	Left	1	... .	652 8877
	Right	1	... .	652 8876
T-291D	Left	1	... .	652 8901
	Right	1	... .	652 8900
T-291E		1	... .	653 0012
T-291F		1	... .	653 0016
T-291N	Left	1	... .	652 8901
	Right	1	... .	652 8900
T-291S		2	... .	652 8916
T-291V	Left	1	... .	652 8909
	Right	1	... .	652 8908
T-291Z		1	... .	812 1998
T-293A		1	... .	652 8869
T-293B		1	... .	652 8873
T-293C	Left	1	... .	652 8879
	Right	1	... .	652 8878
T-293D	Left	1	... .	652 8903
	Right	1	... .	652 8902
T-293E		1	... .	653 0013
T-293F		1	... .	653 0017
T-293N	Left	1	... .	652 8903
	Right	1	... .	652 8902
T-293S		2	... .	652 8918
T-293V	Left	1	... .	652 8911
	Right	1	... .	652 8910
T-293Z		1	... .	812 1999
T-294A		1	... .	652 8870
T-294B		1	... .	652 8874
T-294C	Left	1	... .	652 8881
	Right	1	... .	652 8880
T-294D	Left	1	... .	652 8905
	Right	1	... .	652 8904
T-294E		1	... .	653 0014
T-294F		1	... .	653 0018
T-294N	Left	1	... .	652 8905
	Right	1	... .	652 8904
T-294S		2	... .	652 8920
T-294V	Left	1	... .	652 8913
	Right	1	... .	652 8912
T-294Z		1	... .	812 2000
T-296A		1	... .	652 8871
T-296B		1	... .	652 8875
T-296C	Left	1	... .	652 8883
	Right	1	... .	652 8882

SEATS - SOFT TRIM

Trim No.		Per Car	05-08	06-10-40 -70-80
T-296D	Left	1	... .	652 8907
	Right	1	... .	652 8906
T-296E		1	... .	653 0015
T-296F		1	... .	653 0019
T-296N	Left	1	... .	652 8907
	Right	1	... .	652 8906
T-296S		2	... .	652 8922
T-296V	Left	1	... .	652 8915
	Right	1	... .	652 8914
T-296Z		1	... .	812 2001

29.157–1 FRAME, Front Seat Center Cushion

67	(WBS-WCC)...(Incl. Spring)	.....	1	352 0528
68/	10-80 (WBS-WCC)...(Incl. Spring)	.....	1	360 5891
69/	30-70 (WCC)	.....	1	362 5094

29.157–2 BOARD, Front Seat Center Cushion

69/	30-70	.....	1	362 5093

29.157–3 ATTACHING PARTS, Board To Frame

SCREW, Tapping.....	69/	30-70...(Less Washer)	.....	4	400 3621
SCREW, Tapping.....	72	70...(Incl. Washer)	29.158	4	400 3931

29.158–1 BRACKET, Front Seat Center Cushion Mounting Front

67	01 (WBS-WCC)	.....	1	355 2446
67/	10-50-80 (WBS-WCC)	.....	1	357 4416
69/	39-79 (WCC)	.....	1	361 4918

29.158–2 BRACKET, Front Seat Center Cushion Mounting Rear

67	01 (WBS-WCC)	.....	1	355 2447
67/	10-50-80 (WBS-WCC)	.....	1	357 4420
69/	39-79 (WCC)	.....	1	361 4919

29.158–3 ATTACHING PARTS, Bracket To Cushion Frame

SCREW, Self Tapping...	67	(WBS-WCC)	.....	4	400 2152
SCREW, Tapping.....	68/	10-80 (WBS-WCC)	29.131	4	400 1933
SCREW, Tapping.....	69/	30-70 (WBS-WCC)	.....	4	400 3931

29.159–1 PAD, Front Seat Center Cushion

67	01-10-50-80 (WCC)	.....	1	350 8163
68/	10-80 (WCC)	.....	1	350 8163
68/	30-70 (WCC)	.....	1	362 5095

29.159–2 SUPPORT, Front Seat Center Cushion Pad

67	(WCC)	.....	1	351 9278
68/	10-80 (WCC)	.....	1	351 9278

29.159–3 PROTECTOR, Front Seat Center Cushion Pad

67	(WCC)	.....	1	352 9289
68/	10-80 (WCC)	.....	1	352 9289

29.159–4 FILLER, Front Seat Center Cushion

68/	30-70 (WCC)	.....	1	362 5096

SEATS - SOFT TRIM

29.160 COVER, Front Seat Center Cushion Bracket (* 29-19)

1967 MODELS

Trim No.			Per Car	01-10-30-50 -70-80 (WCC)			
T-741		Front	2	350 9967	... .	... .	... .
	Left	Rear	1	351 9115	... .	... .	... .
	Right	Rear	1	351 9114	... .	... .	... .
T-743		Front	2	357 7674	... .	... .	... .
	Left	Rear	1	357 7663	... .	... .	... .
	Right	Rear	1	357 7662	... .	... .	... .
T-745		Front	2	357 7676	... .	... .	... .
	Left	Rear	1	357 7667	... .	... .	... .
	Right	Rear	1	357 7666	... .	... .	... .
T-748		Front	2	350 9967	... .	... .	... .
	Left	Rear	1	351 9115	... .	... .	... .
	Right	Rear	1	351 9114	... .	... .	... .
T-749		Front	2	357 7677	... .	... .	... .
	Left	Rear	1	357 7669	... .	... .	... .
	Right	Rear	1	357 7668	... .	... .	... .
T-771	Rear		2	351 9114	... .	... .	... .
T-773	Rear		2	357 7662	... .	... .	... .
T-775	Rear		2	357 7666	... .	... .	... .
T-776	Rear		2	357 7670	... .	... .	... .
T-778	Rear		2	351 9114	... .	... .	... .
T-779	Rear		2	357 7668	... .	... .	... .
T-791	Rear		2	357 9114	... .	... .	... .
T-793	Rear		2	357 7662	... .	... .	... .
T-795	Rear		2	357 7666	... .	... .	... .
T-796	Rear		2	357 7670	... .	... .	... .
T-798	Rear		2	351 9114	... .	... .	... .
T-799	Rear		2	357 7668	... .	... .	... .

1969 MODELS

Trim No.			Per Car	30-70 (WCC)			
T-931	Left		1	362 4817	... .	... .	... .
	Right		1	362 4816	... .	... .	... .
T-932	Left		1	362 4827	... .	... .	... .
	Right		1	362 4826	... .	... .	... .
T-935	Left		1	362 4819	... .	... .	... .
	Right		1	362 4818	... .	... .	... .
T-936	Left		1	362 4829	... .	... .	... .
	Right		1	362 4828	... .	... .	... .
T-961	Left		1	362 4817	... .	... .	... .
	Right		1	362 4816	... .	... .	... .
T-962	Left		1	362 4827	... .	... .	... .
	Right		1	362 4826	... .	... .	... .
T-963	Left		1	362 4819	... .	... .	... .
	Right		1	362 4818	... .	... .	... .
T-965	Left		1	362 4819	... .	... .	... .
	Right		1	362 4818	... .	... .	... .
T-966	Left		1	362 4819	... .	... .	... .
	Right		1	362 4818	... .	... .	... .
T-968	Left		1	362 4819	... .	... .	... .
	Right		1	362 4818	... .	... .	... .

Printed in U.S.A.

SEATS - SOFT TRIM

1970 MODELS (* 29-19 NC)

Trim No.		Per Car	30-70 (WCC)
T-031	Left	1	351 9115
	Right	1	351 9114
T-033	Left	1	351 9115
	Right	1	351 9114
T-035	Left	1	351 9115
	Right	1	351 9114
T-036	Left	1	362 9441
	Right	1	362 9440
T-061	Left	1	351 9115
	Right	1	351 9114
T-063	Left	1	351 9115
	Right	1	351 9114
T-064	Left	1	351 9115
	Right	1	351 9114
T-065	Left	1	351 9115
	Right	1	351 9114
T-066	Left	1	362 9441
	Right	1	362 9440

1971 - 1972 MODELS

71/	(Left) 70 (WCA-WCC)	1	351 9115 NC
71/	(Right) 70 (WCA-WCC)	1	351 9114 NC

29.161 UPHOLSTERY, Front Seat Center Cushion (Cover)

1967 MODELS

Trim No.	Per Car	01-10-50-80 (WCC-Except "W" Trim)	19-89 ("W" Trim)		
T-741	1	358 4823	... .	... .	... .
T-743	1	358 4824	... .	... .	... .
T-745	1	358 4826	... .	... .	... .
T-748	1	358 4828	... .	... .	... .
T-749	1	358 4829	... .	... .	... .
T-771	1	650 5732	650 5732	... .	... .
T-773	1	650 5733	650 5734	... .	... .
T-775	1	650 5735	650 5735	... .	... .
T-776	1	650 5736	650 5736	... .	... .
T-778	1	650 5737	... .	... .	... .
T-779	1	650 5738	650 5739	... .	... .
T-791	1	650 5732	650 5732	... .	... .
T-793	1	650 5733	650 5734	... .	... .
T-795	1	650 5735	650 5735	... .	... .
T-796	1	650 5736	650 5736	... .	... .
T-798	1	650 5737	... .	... .	... .
T-799	1	650 5738	650 5739	... .	... .

SEATS - SOFT TRIM

1968 MODELS

Trim No.	Per Car	10-80 (WBS-WCC)
T-871	1	650 5732
T-873	1	651 2716
T-874	1	651 2718
T-875	1	650 5735
T-876	1	651 2720
T-879	1	651 2721
T-891	1	650 5732
T-893	1	651 2716
T-894	1	651 2718
T-895	1	650 5735
T-896	1	651 2720
T-899	1	651 2721

1969 MODELS

Trim No.	Per Car	10-30-70-80 (WCC)
T-931	1	630 3298
T-932	1	630 3299
T-935	1	630 3301
T-936	1	630 3304
T-961	1	630 3298
T-962	1	630 3299
T-963	1	630 3300
T-965	1	630 3301
T-966	1	630 3302
T-968	1	630 3303
T-972	1	652 2042
T-973	1	652 0194
T-975	1	650 5735

Trim No.	Per Car	10-30-70-80 (WCC)
T-979	1	652 0196
T-991	1	652 0193
T-992	1	652 2042
T-993	1	652 0194
T-995	1	650 5735
T-996	1	652 0195
T-997	1	652 2043
T-999	1	652 0196

1970 Thru 1972 MODELS

Trim No.	Per Car	10-30-70-80 (WCA-WCC)
T-031	1	363 0670
T-033	1	363 0671
T-035	1	363 0674
T-036	1	363 0675
T-051	1	652 4392
T-061	1	363 0670
T-063	1	363 0671

Printed in U.S.A.

SEATS - SOFT TRIM

Trim No.	Per Car	10-30-70-80 (WCA-WCC)
T-064	1	363 0673
T-065	1	363 0674
T-066	1	363 0675
T-071	1	652 4392
T-073	1	652 4394
T-075	1	652 3570
T-076	1	652 4396
T-091	1	652 4392
T-093	1	652 4394
T-094	1	652 4395
T-095	1	652 3570
T-096	1	652 4396
T-161	1	364 1876
T-163	1	364 1877
T-164	1	364 1878
T-165	1	364 1879
T-168	1	364 1876
T-171	1	652 7905
T-173	1	652 7906
T-174	1	652 7907
T-175	1	652 7908
T-191	1	652 7905
T-193	1	652 7906
T-194	1	652 7907
T-195	1	652 7908
T-261	1	366 1226
T-263	1	365 0821
T-264	1	365 0822
T-265	1	366 1226
T-266	1	365 1083
T-268	1	366 8415
T-271	1	652 9927
T-273	1	653 1444
T-274	1	653 1445
T-276	1	653 1446
T-291	1	652 9927
T-293	1	653 1444
T-294	1	653 1445
T-296	1	653 1446

29.168–1 PAD, Front Seat Cushion (Foam Rubber)

67/69	01 (WFS)(WNRS)(WRS)	1	350	2513
70/	01-40 (WFS-2")(WNRS-2")	1	362	7551
71/	01-40 (WFS-1-1/2")(WNRS-1-1/2")	1	363	8457
67/69	01 (WIRS)	2	350	2514
70	01 (WIRS)	2	362	7539
71/	01 (WIRS)	2	363	8458
67	01 (WBS)	2	357	8436
70/	01-30-40-70 (WBS-Except T-261W)	2	362	7968
72	79 (T-261W)	1	363	8966
67/	10-80 (WFS-1-1/2" Thick)(WNRS-1-1/2" Thick)	1	349	7432
67/	10-80 (WFS-2" Thick)(WNRS-2" Thick)	1	348	6584
67/71	10-80 (WIRS-1-1/2" Thick)	2	349	7430
67/71	10-80 (WIRS-2" Thick)	2	349	7431
67/69	10 (WBS)	2	358	0264
72	10-80 (WIRS-31-1/4" x 25")	2	349	7430
70	10-80 (WBS)	2	362	8190
71/	10-80 (WBS)	2	363	8966
68/69	30-70	2	360	4388
67/69	50-80 (WBS)	2	358	0266
72	80 (WIRS-25-23/64" x 21-3/8")	2	364	7602

29.168–2 PAD, Front Seat Cushion (Jute)

67/68	01–10–50–80 (LBS)	.....	2	361	3072

29.168–3 SUPPORT, Front Seat Cushion Pad

67/69	01 (WFS)(WNRS)(WRS)	.....	1	350	2651
70/	01–40 (WFS)(WNRS)	.....	1	362	7548
67/69	01 (WIRS)	.....	2	350	2652
70/	01 (WIRS)	.....	2	362	7549
67	01 (WBS)	.....	1	348	3054
68/69	30–70	.....	2	360	4390
67/	10–80 (WFS)(WNFS)	.....	1	345	8646
67/	10–80 (WIRS)	.....	2	345	8647
67/69	10–50–80 (WBS)	.....	2	348	3054
70/	(WBS)	.....	2	362	7972

29.168–4 PROTECTOR, Front Seat Cushion Edge

67/69	01–10–50–80 (WFS)(WNRS)(WRS)	.....	1	345	8643
70/	01–40 (WFS)(WNRS)	.....	1	362	7528
67/69	01 (WIRS)	.....	2	350	1845
70/	01 (WIRS)	.....	2	362	7547
67	01 (WBS)	.....	2	349	7849
70/	10–80 (WFS)(WNRS)	.....	1	345	8643
67/	10–50–80 (WIRS)	.....	2	345	8649
67/69	10 (WBS)	.....	2	349	7849
68/69	30–70	.....	2	349	7849
67/69	50–80 (WBS)	.....	2	359	7056
70/	(WBS)	.....	2	362	7530

29.170–1 HEADREST ASSEMBLY, Front Seat Back (Complete-Less Upholstery)(* 29-62)

67	LBS (* 29–64)...(Incl. Casing, Spacer And Screws) ..... ***(Ref. Pr. List)***	15.197	2	899	2150
67	LBS (* 29–64)...(Less Casing And Screws)	.....	2	650	5663
68	LBS (* 29–64)...(Incl. Casing, Spacer And Screws) ..... ***(Ref. Pr. List)***	15.197	2	899	2355
68	LBS (* 29–65)...(Incl. Casing, Spacer And Screws)	15.197	2	899	2358
68	LBS (* 29–64)...(Less Casing And Screws)	.....	2	448	5690
68	LBS (* 29–65)...(Less Casing And Screws)	.....	2	360	7608
67/68	01–10–80 (WBS–* 29–64)...(Incl. Casing, Spacer And Screws)	15.197	2	899	2277
67/68	01–10–30–70–80 (WBS–* 29–65)...(Incl. Casing, Spacer And Screws) ..... ***(Ord. Component Parts)***	15.197	2	899	2328
67/68	01–10–80 (WBS–* 29–64)...(Less Casing And Screws)	.....	2	358	1580
67/68	01–10–30–70–80 (WBS–* 29–65)...(Less Casing And Screws)	.....	2	360	4316
69/70	01–10–80...(Less Casing, Screws And Clip)	.....	2	361	9318
71	01–10–80...(Less Casing And Screws)	.....	2	362	2557
72	01	.....	2	362	2557
72	10–80 (WFS)(WNRS)	.....	2	362	2557
72	10–80 (WIRS)	.....	2	364	7048
69	30–70 (* 29–92)...(Less Casing And Screws)	.....	2	360	4316
69	30–70 (* 29–93)...(Less Casing And Screws)	.....	2	361	9318

Printed in U.S.A.

SEATS - SOFT TRIM

29.171 HEADREST ASSEMBLY, Front Seat Back (Incl. Cover, Pad And Post) (Less Casing And Screws)(* 29-63)

1967 MODELS

Trim No.	Per Car	01-10-50-80 (WBS-Except "W" Trim)	19-89 ("W" Trim)		
T-741 ..... 15.197	2	357 9001	... .	... .	... .
T-743 ..... 15.197	2	357 9002	... .	... .	... .
T-745 ..... 15.197	2	357 9004	... .	... .	... .
T-748 ..... 15.197	2	357 9006	... .	... .	... .
T-749 ..... 15.197	2	357 9007	... .	... .	... .
T-771 ..... 15.197	2	357 9001	357 9001	... .	... .
T-773 ..... 15.197	2	357 9002	357 9003	... .	... .
T-775 ..... 15.197	2	357 9004	357 9004	... .	... .
T-776 ..... 15.197	2	357 9005	357 9005	... .	... .
T-778 ..... 15.197	2	357 9006	... .	... .	... .
T-779 ..... 15.197	2	357 9007	359 7430	... .	... .
T-791 ..... 15.197	2	357 9001	357 9001	... .	... .
T-793 ..... 15.197	2	357 9002	357 9003	... .	... .
T-795 ..... 15.197	2	357 9004	357 9004	... .	... .
T-796 ..... 15.197	2	357 9005	357 9005	... .	... .
T-798 ..... 15.197	2	357 9006	... .	... .	... .
T-799 ..... 15.197	2	357 9007	359 7430	... .	... .

29.172–1 UPHOLSTERY, Front Seat Back Headrest

1967 MODELS (Incl. Zipper)

Trim No.	Per Car	01-10-50-80 (WNRS)(WRS)	01-10-50-80 (WBS-Except "W" Trim)	19-89 ("W" Trim)	
T-723 ..... 15.197	2	899 2152	... .	... .	... .
T-728 ..... 15.197	2	899 2157	... .	... .	... .
T-729 ..... 15.197	2	899 2158	... .	... .	... .
T-741 ..... 15.197	2	899 2151	899 2278	... .	... .
T-743 ..... 15.197	2	899 2152	899 2279	... .	... .
T-744 ..... 15.197	2	899 2153	... .	... .	... .
T-745 ..... 15.197	2	899 2154	899 2281	... .	... .
T-747 ..... 15.197	2	899 2156	... .	... .	... .
T-748 ..... 15.197	2	899 2157	899 2283	... .	... .
T-749 ..... 15.197	2	899 2158	899 2284	... .	... .
T-753 ..... 15.197	2	899 2152	... .	... .	... .
T-758 ..... 15.197	2	899 2157	... .	... .	... .
T-759 ..... 15.197	2	899 2158	... .	... .	... .
T-771 ..... 15.197	2	899 2151	899 2278	899 2278	... .
T-773 ..... 15.197	2	899 2152	899 2279	899 2280	... .
T-775 ..... 15.197	2	899 2154	899 2281	899 2281	... .
T-776 ..... 15.197	2	899 2155	899 2282	899 2282	... .
T-777 ..... 15.197	2	899 2156	... .	... .	... .
T-778 ..... 15.197	2	899 2157	899 2283	899 2283	... .
T-779 ..... 15.197	2	899 2158	899 2284	899 2285	... .
T-781 ..... 15.197	2	899 2151	... .	... .	... .
T-783 ..... 15.197	2	899 2152	... .	... .	... .
T-787 ..... 15.197	2	899 2156	... .	... .	... .
T-789 ..... 15.197	2	899 2158	... .	... .	... .
T-791 ..... 15.197	2	899 2151	899 2278	899 2278	... .
T-793 ..... 15.197	2	899 2152	899 2279	899 2280	... .
T-794 ..... 15.197	2	899 2153	... .	... .	... .
T-795 ..... 15.197	2	899 2154	899 2281	899 2281	... .
T-796 ..... 15.197	2	899 2155	899 2282	899 2282	... .
T-797 ..... 15.197	2	899 2156	... .	... .	... .
T-798 ..... 15.197	2	899 2157	899 2283	... .	... .
T-799 ..... 15.197	2	899 2158	899 2284	899 2285	... .

Printed in U.S.A.

SEATS - SOFT TRIM

1968 MODELS (Incl. Zipper)

Trim No.			Per Car	01-10-80 (WNRS)(WIRS)	10-80 (WBS)	30-70	
T-828	(* 29-64)	15.197	2	899 2157	... .	... .	... .
	(* 29-65)		2	361 3426	... .	... .	... .
T-831		15.197	2	... .	... .	899 2329	... .
T-832		15.197	2	... .	... .	899 2331	... .
T-835		15.197	2	... .	... .	899 2330	... .
T-838			2	... .	... .	359 9965	... .
T-843	(* 29-64)	15.197	2	899 2320	... .	... .	... .
	(* 29-65)	15.197	2	899 2360	... .	... .	... .
T-844	(* 29-64)	15.197	2	899 2321	... .	... .	... .
	(* 29-65)	15.197	2	899 2361	... .	... .	... .
T-845	(* 29-64)	15.197	2	899 2154	... .	... .	... .
	(* 29-65)	15.197	2	899 2362	... .	... .	... .
T-848	(* 29-64)	15.197	2	899 2157	... .	... .	... .
	(* 29-65)		2	361 3426	... .	... .	... .
T-851	(* 29-64)	15.197	2	899 2151	... .	... .	... .
	(* 29-65)	15.197	2	899 2359	... .	... .	... .
T-853	(* 29-64)	15.197	2	899 2320	... .	... .	... .
	(* 29-65)	15.197	2	899 2360	... .	... .	... .
T-855	(* 29-64)	15.197	2	899 2154	... .	... .	... .
	(* 29-65)	15.197	2	899 2362	... .	... .	... .
T-871	(* 29-64)	15.197	2	899 2151	899 2278	... .	... .
	(* 29-65)	15.197	2	899 2359	899 2329	... .	... .
T-873	(* 29-64)	15.197	2	899 2320	899 2324	... .	... .
	(* 29-65)	15.197	2	899 2360	899 2365	... .	... .
T-874	(* 29-64)	15.197	2	899 2321	899 2325	... .	... .
	(* 29-65)	15.197	2	899 2361	899 2366	... .	... .
T-875	(* 29-64)	15.197	2	899 2154	899 2281	... .	... .
	(* 29-65)	15.197	2	899 2362	899 2330	... .	... .
T-876	(* 29-64)	15.197	2	899 2322	899 2326	... .	... .
	(* 29-65)	15.197	2	899 2363	899 2367	... .	... .
T-879	(* 29-64)	15.197	2	899 2323	899 2327	... .	... .
	(* 29-65)	15.197	2	899 2364	899 2368	... .	... .
T-881	(* 29-64)	15.197	2	899 2151	... .	... .	... .
	(* 29-65)	15.197	2	899 2359	... .	... .	... .
T-883	(* 29-64)	15.197	2	899 2320	... .	... .	... .
	(* 29-65)	15.197	2	899 2360	... .	... .	... .
T-885	(* 29-64)	15.197	2	899 2154	... .	... .	... .
	(* 29-65)	15.197	2	899 2362	... .	... .	... .
T-891	(* 29-64)	15.197	2	899 2151	899 2278	... .	... .
	(* 29-65)	15.197	2	899 2359	899 2329	... .	... .
T-893	(* 29-64)	15.197	2	899 2320	899 2324	... .	... .
	(* 29-65)	15.197	2	899 2360	899 2365	... .	... .
T-894	(* 29-64)	15.197	2	899 2321	899 2325	... .	... .
	(* 29-65)	15.197	2	899 2361	899 2366	... .	... .
T-895	(* 29-64)	15.197	2	899 2154	899 2281	... .	... .
	(* 29-65)	15.197	2	899 2362	899 2330	... .	... .
T-896	(* 29-64)	15.197	2	899 2322	899 2326	... .	... .
	(* 29-65)	15.197	2	899 2363	899 2367	... .	... .
T-899	(* 29-64)	15.197	2	899 2323	899 2327	... .	... .
	(* 29-65)	15.197	2	899 2364	899 2368	... .	... .

SEATS - SOFT TRIM

1969 MODELS

Trim No.		Per Car	01-10-30-70 -80			
T-000		2	652 2681	... .	... .	... .
T-923		2	362 4874	... .	... .	... .
T-928		2	362 4872	... .	... .	... .
T-931F	(* 29-92)	2	362 4558	... .	... .	... .
	(* 29-93)	2	362 4873	... .	... .	... .
T-931L	(* 29-93)	2	363 0741	... .	... .	... .
T-932	(* 29-92)	2	362 4563	... .	... .	... .
	(* 29-92)	2	363 0745	... .	... .	... .
T-935	(* 29-92)	2	362 4560	... .	... .	... .
	(* 29-93)	2	362 4576	... .	... .	... .
T-936F	(* 29-92)	2	362 4562	... .	... .	... .
	(* 29-93)	2	363 0743	... .	... .	... .
T-936L	(* 29-93)	2	363 0744	... .	... .	... .
T-941	(Except SC/RAMBLER)	2	362 4873	... .	... .	... .
	(SC/RAMBLER)	2	363 5626	... .	... .	... .
T-943		2	362 4874	... .	... .	... .
T-944		2	362 4875	... .	... .	... .
T-945		2	362 4876	... .	... .	... .
T-951		2	652 2195	... .	... .	... .
T-953		2	652 2197	... .	... .	... .
T-956		2	652 2199	... .	... .	... .
T-957		2	652 2200	... .	... .	... .
T-961	(* 29-92)	2	362 4558	... .	... .	... .
	(* 29-93)	2	362 4873	... .	... .	... .
T-962	(* 29-92)	2	362 4563	... .	... .	... .
	(* 29-93)	2	363 0745	... .	... .	... .
T-963	(* 29-92)	2	362 4559	... .	... .	... .
	(* 29-93)	2	362 4874	... .	... .	... .
T-965	(* 29-92)	2	362 4560	... .	... .	... .
	(* 29-93)	2	362 4876	... .	... .	... .
T-966	(* 29-92)	2	362 4561	... .	... .	... .
	(* 29-93)	2	363 0742	... .	... .	... .
T-968	(* 29-92)	2	362 4564	... .	... .	... .
	(* 29-93)	2	362 4872	... .	... .	... .
T-972		2	652 2196	... .	... .	... .
T-973		2	652 2197	... .	... .	... .
T-975		2	652 2198	... .	... .	... .
T-976		2	652 2199	... .	... .	... .
T-977		2	652 2200	... .	... .	... .
T-979		2	652 2201	... .	... .	... .
T-981		2	652 2195	... .	... .	... .
T-983		2	652 2197	... .	... .	... .
T-986		2	652 2199	... .	... .	... .
T-987		2	652 2200	... .	... .	... .
T-991		2	652 2195	... .	... .	... .
T-992	(* 29-111)	2	652 2196	... .	... .	... .
	(* 29-112)	2	652 5667	... .	... .	... .
T-993	(* 29-111)	2	652 2197	... .	... .	... .
	(* 29-112)	2	652 5668	... .	... .	... .
T-995		2	652 2198	... .	... .	... .
T-996		2	652 2199	... .	... .	... .
T-997		2	652 2200	... .	... .	... .
T-999		2	652 2201	... .	... .	... .

Printed in U.S.A.

SEATS - SOFT TRIM

1970 Thru 1972 MODELS

Trim No.		Per Car	01-10-30 -70-80
T-021A		2	363 5637
T-021B		2	363 5637
T-021G		2	363 5416
T-023		2	363 5417
T-024		2	363 5418
T-025		2	363 0866
T-041		2	363 5416
T-043		2	363 5417
T-044		2	363 5418
T-045		2	363 0866
T-051	Black	2	652 5519
	Platinum	2	652 2681
T-053		2	652 5521
T-054		2	652 5522
T-056		2	652 5523
T-071		2	652 5519
T-073		2	652 5521
T-074		2	652 5522
T-075		2	652 6051
T-076		2	652 5523
T-081		2	652 5519
T-083		2	652 5521
T-084		2	652 5522
T-086		2	652 5523
T-091	(* 29-111)	2	652 5519
	(* 29-112)	2	652 6052
T-093	(* 29-111)	2	652 5521
	(* 29-112)	2	652 6053
T-094		2	652 5522
T-095		2	652 6051
T-096		2	652 5523
T-121		2	652 8176
T-123		2	652 8177
T-124		2	652 8178
T-128		2	630 7901
T-141		2	652 8176
T-143		2	652 8177
T-144		2	652 8178
T-145		2	652 8179
T-151		2	652 8176
T-153		2	652 8177
T-154		2	652 8178
T-171		2	652 8176
T-173		2	652 8177
T-174		2	652 8178
T-175		2	652 8179
T-176		2	653 1465
T-181		2	652 8176
T-183		2	652 8177
T-184		2	652 8178
T-186		2	653 1465
T-191	(Except "V" Trims)	2	652 8176
T-191V		2	652 8460
T-193	(Except "V" Trims)	2	652 8177
T-193V		2	652 8461
T-194		2	652 8178
T-195		2	652 8179
T-196		2	653 1465
T-221G		2	652 9922
T-241		2	652 9922
T-243		2	653 1461
T-244		2	653 1462
T-246		2	653 1463
T-248		2	652 9922

SEATS - SOFT TRIM

Trim No.		Per Car	01-10-30 -70-80
T-271	(WFS)(WNRS)	2	652 9922
	(WIRS-* 29-144)	2	652 9934
	(WIRS-* 29-145)	2	653 2479
T-273	(WFS)(WNRS)	2	653 1461
	(WIRS-* 29-144)	2	653 1455
	(WIRS-* 29-145)	2	653 2480
T-274	(WFS)(WNRS)	2	653 1462
	(WIRS-* 29-144)	2	653 1456
	(WIRS-* 29-145)	2	653 2481
T-276	(WFS)(WNRS)	2	653 1463
	(WIRS-* 29-144)	2	653 1457
	(WIRS-* 29-145)	2	653 2482
T-291	(WFS)(WNRS)	2	652 9922
	(WIRS-* 29-144)	2	652 9934
	(WIRS-* 29-145)	2	653 2479
T-293	(WFS)(WNRS)	2	653 1461
	(WIRS-* 29-144)	2	653 1455
	(WIRS-* 29-145)	2	653 2480
T-294	(WFS)(WNRS)	2	653 1462
	(WIRS-* 29-144)	2	653 1456
	(WIRS-* 29-145)	2	653 2481
T-296	(WFS)(WNRS)	2	653 1463
	(WIRS-* 29-144)	2	653 1457
	(WIRS-* 29-145)	2	653 2482

29.172-1a ATTACHING PARTS, Upholstery To Headrest Frame And Pad Assembly

RETAINER	72		29.170	2	365 4221
WASHER	72		29.170	4	364 7227

29.172-2 ZIPPER, Front Seat Back Headrest

67	(23-1/2" Long) LBS	.....	2	351 8478
67/68	(13-1/8" Long) WBS ***(Use 358 1345)***	.....	2	361 2164
67/68	(12-1/2" Long)	.....	2	358 1345
68	(13" Long) 10-80	.....	2	361 3419
69	(11" Long)	.....	2	362 5784

29.173-1 CASING, Front Seat Back Headrest (Incl. Top Plate)

69/70		27.034	2	360 5391
67	(WNRS)(WIRS)(WRS)	27.034	2	346 2818
71	LBS...(Incl. Stop Release And Knob)	.....	2	364 9312
67/68	01-10-50-80 (WBS-* 29-64)	27.034	2	357 8997
68	01-10-80 (WNRS-* 20-64)(WIRS-* 29-64)	27.034	2	360 4642
68	01-10-80 (WNRS-* 29-65)(WIRS-* 29-65)	27.034	2	360 7784
72	01 (WFS)(WIRS)...(Incl. Stop Release And Knob)	.....	2	364 9312
68	10-30-70-80 (WBS-* 29-65) ***(Use 360 5391)***	27.034	2	360 4486
72	10-80 (WFS)(WNRS)...(Incl. Stop Release And Knob)	.....	2	364 9312

29.173-1a KNOB, Front Seat Back Headrest Casing Stop And Release Clip Button

71	LBS	.....	2	364 9310
72	01 (LBS)	.....	2	364 9310
72	01 (WFS)(WIRS)	.....	2	364 9310

29.173-2 ATTACHING PARTS, Casing To Seat Back

SCREW, Tapping	67	(WNRS)(WRS)	17.655	4	G168496
SCREW, Tapping	67	50-80 (WIRS)	17.655	4	G148095
SCREW, Tapping	67/68	01-10-50-80 (WBS)	17.655	4	G163462 NA
SCREW, Tapping	68	01-10-80 (LBS)	25.054	4	400 0658
SCREW, Tapping	68/69	30-70	25.054	4	400 0658
SCREW, Tapping	69	10 (WBS)	3.303	4	400 1993
SCREW, Tapping	69/70	80 (DPL And SST)	3.303	4	400 1993

WASHER, Plain	68	01	17.814	4	400 0481
WASHER, Plain	69	10 (WBS)	17.814	4	400 0481
WASHER, Plain	69	30-70	17.814	4	400 0481
WASHER, Plain	69/70	80 (DPL And SST)	17.814	4	400 0481
NUT, Expansion	67/68	01-10-50-80 (WBS)	.....	4	400 2219
CLIP (Steel)	69/70	01-10 (LBS)	.....	2	361 9653
CLIP (Steel)	72	01 (WFS)(WIRS)	.....	2	361 9653
CLIP (Steel)	72	10-80 (WFS)(WNRS)	.....	2	361 9653
CLIP (Steel)	69/70	80 (Except DPL And SST)	.....	2	361 9653
CLIP (Steel)	71	LBS	.....	2	361 9653

29.173-3 SPACER, Front Seat Back Headrest

67	50-80 (WIRS)	27.034	2	357 9205

29.173-4 COVER, Front Seat Back Headrest Casing Plate

1968 - 1969 MODELS

(T-828)	27.034	2	360 6998
(T-831)	27.034	2	360 6993
(T-832)	27.034	2	360 7003
(T-835)	27.034	2	360 6996
(T-838)(Black)	27.034	2	360 6993
(T-838)(Off White)	27.034	2	360 6998
(T-843)	27.034	2	360 6994
(T-844)	27.034	2	360 6995
(T-845)	27.034	2	360 6996
(T-848)	27.034	2	360 6998
(T-851)	27.034	2	360 6993
(T-853)	27.034	2	360 6994
(T-855)	27.034	2	360 6996
(T-871)	27.034	2	360 6993
(T-873)	27.034	2	360 6994
(T-874)	27.034	2	360 6995
(T-875)	27.034	2	360 6996
(T-876)	27.034	2	360 6997
(T-879)	27.034	2	360 6999
(T-881)	27.034	2	360 6993
(T-883)	27.034	2	360 6994
(T-885)	27.034	2	360 6996
(T-891)	27.034	2	360 6993
(T-893)	27.034	2	360 6994
(T-894)	27.034	2	360 6995
(T-895)	27.034	2	360 6996
(T-896)	27.034	2	360 6997
(T-899)	27.034	2	360 6999
(T-923)	27.034	2	361 7359
(T-928)	27.034	2	360 6998
(T-931)	27.034	2	361 7358
(T-932)	27.034	2	361 7364
(T-935)	27.034	2	362 1321
(T-936)	27.034	2	362 5092
(T-941)	27.034	2	361 7358
(T-943)	27.034	2	361 7359
(T-944)	27.034	2	361 7360
(T-945)	27.034	2	362 1321
(T-951)	27.034	2	361 7358
(T-953)	27.034	2	361 7359
(T-956)	27.034	2	361 7361
(T-957)	27.034	2	361 7362
(T-961)	27.034	2	361 7358
(T-962)	27.034	2	361 7364
(T-963)	27.034	2	361 7359
(T-965)	27.034	2	362 1321
(T-966)	27.034	2	361 7361
(T-968)	27.034	2	360 6998

SEATS - SOFT TRIM

(T-972)	27.034	2	361 7364
(T-973)	27.034	2	361 7359
(T-975)	27.034	2	362 1321
(T-976)	27.034	2	361 7361
(T-977)	27.034	2	361 7362
(T-979)	27.034	2	361 7363
(T-981)	27.034	2	361 7358
(T-983)	27.034	2	361 7359
(T-986)	27.034	2	361 7361
(T-987)	27.034	2	361 7362
(T-991)	27.034	2	361 7358
(T-993)	27.034	2	361 7359
(T-995)	27.034	2	362 1321
(T-996)	27.034	2	361 7361
(T-997)	27.034	2	361 7362
(T-999)	27.034	2	361 7363

1970 MODELS

Trim No.		Per Car	01-10-80
T-021A	27.034	2	360 6998
T-021B	27.034	2	360 6998
T-021G	27.034	2	360 6993
T-023	27.034	2	362 9335
T-024	27.034	2	362 9336
T-025	27.034	2	362 1321
T-041	27.034	2	360 6993
T-043	27.034	2	362 9335
T-044	27.034	2	362 9336
T-045	27.034	2	362 1321
T-051	27.034	2	360 6993
T-053	27.034	2	362 9335
T-054	27.034	2	362 9336
T-056	27.034	2	362 9337
T-071	27.034	2	360 6993
T-073	27.034	2	362 9335
T-074	27.034	2	362 9336
T-075	27.034	2	362 1321
T-076	27.034	2	362 9337
T-081	27.034	2	360 6993
T-083	27.034	2	362 9335
T-084	27.034	2	362 9336
T-086	27.034	2	362 9337
T-091	27.034	2	360 6993
T-093	27.034	2	362 9335
T-094	27.034	2	362 9336
T-095	27.034	2	362 1321
T-096	27.034	2	362 9337

SEATS - SOFT TRIM

1971 - 1972 MODELS

Trim No.		Per Car	01-10-80
T-121		2	363 8105
T-123		2	363 8106
T-124		2	363 8107
T-128		2	363 8105
T-141		2	363 8105
T-143		2	363 8106
T-144		2	363 8107
T-145		2	363 8108
T-151		2	363 8105
T-153		2	363 8106
T-154		2	363 8107
T-171		2	363 8105
T-173		2	363 8106
T-174		2	363 8107
T-175		2	363 8108
T-176		2	363 8105
T-181		2	363 8105
T-183		2	363 8106
T-184		2	363 8107
T-186		2	363 8105
T-191		2	363 8105
T-193		2	363 8106
T-194		2	363 8107
T-195		2	363 8108
T-196		2	363 8105
T-221G		2	363 8105
T-241		2	363 8105
T-243		2	365 3550
T-244		2	365 3551
T-246		2	365 3553
T-248		2	363 8105
T-271	(WFS)(WNRS)	2	363 8105
T-273	(WFS)(WNRS)	2	365 3550
T-274	(WFS)(WNRS)	2	365 3551
T-276	(WFS)(WNRS)	2	365 3553
T-291	(WFS)(WNRS)	2	363 8105
T-293	(WFS)(WNRS)	2	365 3550
T-294	(WFS)(WNRS)	2	365 3551
T-296	(WFS)(WNRS)	2	365 3553

29. 173–5 GUIDE, Front Seat Back Headrest Post (Nylon)

72	10-80 (WIRS-Upper)		4	364 8326
72	10-80 (WIRS-Lower)		4	364 8327

29. 173–6 LOCK, Front Seat Back Spring Headrest Mounting Panel (Steel)

72	10-80 (WIRS)		4	364 7311

29. 173–7 ATTACHING PARTS, Lock To Headrest Mounting Panel

SCREW, Tapping..... 72	10-80 (WIRS)		8	400 2457

29. 174–1 POST ASSEMBLY, Front Seat Back Headrest (Incl. Frame And Friction Catch)

67	LBS	27.030	2	351 8470
68	01-10-80 (LBS-* 29-64)	27.030	2	360 7714

SEATS - SOFT TRIM

29.174–2 CATCH, Front Seat Back Headrest Post Friction

67/	27.030	2	344	2174

29.174–3 CLIP, Front Seat Back Headrest Post Friction

70/71	01-10-80 (LBS)	.....	2	362 6115
72	01	.....	2	362 6115
72	10-80 (WFS)(WNRS)	.....	2	362 6115

29.176–1 PAD, Front Seat Back Headrest Front

67/68	01-10-50-80 (LBS)(* 29-64)	.....	2	351 8476

29.176–2 PAD, Front Seat Back Headrest Rear

67/68	01-10-50-80 (LBS)(* 29-64)	.....	2	351 8477

29.180 CUSHION ASSEMBLY, Trimmed Rear Seat (Order Component Parts)

29.182 UPHOLSTERY. Rear Seat Cushion

1967 - 1968 MODELS

Trim No.	Per Car	05-06-08-15 -18-85-88	07-17-87	09-16-19-59 -86-89	79
T-723B	1	358 4379	... .	... .	... .
T-723C	1	358 4378	... .	... .	... .
T-723M	1	362 3077	... .	... .	... .
T-728B	1	358 4381	... .	... .	... .
T-728C	1	358 4380	... .	... .	... .
T-728M	1	359 9789	... .	... .	... .
T-728V	1	358 4382	... .	... .	... .
T-729B	1	358 4384	... .	... .	... .
T-729C	1	358 4383	... .	... .	... .
T-741B	1	359 8006	358 4394	358 4401	... .
T-741D	1	... .	... .	358 4400	... .
T-741E	1	... .	358 4394	358 4401	... .
T-743B	1	358 4386	358 4395	358 4404	... .
T-743C	1	358 4385	... .	358 4402	... .
T-743D	1	... .	... .	359 8007	... .
T-743E	1	... .	358 4395	358 4404	... .
T-744C	1	358 4387	... .	358 4405	... .
T-745B	1	... .	358 4397	358 4410	... .
T-745C	1	358 4389	... .	358 4408	... .
T-745D	1	... .	... .	359 8008	... .
T-745E	1	... .	358 4397	358 4410	... .
T-747C	1	358 4391	... .	358 4411	... .
T-748	1	... .	358 4398	358 4413	... .
T-749B	1	358 4478	358 4399	358 4416	... .
T-749C	1	358 4393	... .	358 4414	... .
T-749D	1	... .	... .	359 8009	... .
T-749E	1	... .	358 4399	358 4416	... .
T-753B	1	650 2157	... .	650 2160	... .
T-753C	1	650 2151	... .	650 2154	... .
T-758B	1	650 2158	... .	650 2161	... .
T-758C	1	650 2152	... .	650 2155	... .
T-758V	1	650 2015	... .	650 2150	... .
T-759B	1	650 2159	... .	650 2162	... .
T-759C	1	650 2153	... .	650 2156	... .
T-771B	1	650 2175	650 2178	650 2184	... .
T-771C	1	650 2163	... .	650 2169	... .
T-771D	1	... .	... .	650 2190	... .
T-771E	1	650 2195	650 2199	650 2205	... .
T-771S	1	650 6344	... .	... .	... .
T-771W	1	... .	... .	650 2211	... .
T-773B	1	650 2176	650 2179	650 2185	... .
T-773C	1	650 2164	... .	650 2170	... .

SEATS - SOFT TRIM

Trim No.	Per Car	05-06-08-15 -18-85-88	07-17-87	09-16-19-59 -86-89	79
T-773D	1	... .	... .	650 2191	... .
T-773E	1	650 2196	650 2200	650 2206	... .
T-773S	1	650 6345	... .	... .	... .
T-773W	1	... .	... .	650 2212	... .
T-774C	1	650 2165	... .	650 2171	... .
T-775B	1	... .	650 2180	650 2186	... .
T-775D	1	... .	... .	650 2192	... .
T-775E	1	... .	650 2201	650 2207	... .
T-775W	1	... .	... .	650 2213	... .
T-776B	1	... .	650 2181	650 2187	... .
T-776C	1	650 2166	... .	650 2172	... .
T-776D	1	... .	... .	650 2193	... .
T-776E	1	650 2197	650 2202	650 2208	... .
T-776W	1	... .	... .	650 2214	... .
T-777C	1	650 2167	... .	650 2173	... .
T-778B	1	... .	650 2182	650 2188	... .
T-778E	1	... .	650 2203	650 2209	... .
T-779B	1	650 2177	650 2183	650 2189	... .
T-779C	1	650 2168	... .	650 2174	... .
T-779D	1	... .	... .	650 2194	... .
T-779E	1	650 2198	650 2204	650 2210	... .
T-779S	1	650 6346	... .	... .	... .
T-779W	1	... .	... .	650 2215	... .
T-781B	1	650 2224	... .	650 2227	... .
T-781C	1	650 2216	... .	650 2220	... .
T-783B	1	650 2225	... .	650 2228	... .
T-783C	1	650 2217	... .	650 2221	... .
T-787C	1	650 2218	... .	650 2222	... .
T-789B	1	650 2226	... .	650 2229	... .
T-789C	1	650 2219	... .	650 2223	... .
T-791B	1	650 2243	650 2246	650 2252	... .
T-791C	1	650 2230	... .	650 2236	... .
T-791E	1	650 2263	650 2267	... .	... .
T-791K	1	... .	... .	650 2258	... .
T-791L	1	... .	... .	650 2279	... .
T-791W	1	... .	... .	650 2285	... .
T-793B	1	650 2244	650 2247	650 2253	... .
T-793C	1	650 2231	... .	650 2237	... .
T-793E	1	650 2264	650 2268	... .	... .
T-793K	1	... .	... .	650 2259	... .
T-793L	1	... .	... .	650 2280	... .
T-793W	1	... .	... .	650 2286	... .
T-794C	1	650 2232	... .	650 2238	... .
T-795B	1	... .	650 2248	650 2254	... .
T-795C	1	... .	... .	650 2239	... .
T-795E	1	... .	650 2269	... .	... .
T-795K	1	... .	... .	650 2260	... .
T-795L	1	... .	... .	650 2281	... .
T-795W	1	... .	... .	650 2287	... .
T-796B	1	... .	650 2249	650 2255	... .
T-796C	1	650 2233	... .	650 2240	... .
T-796E	1	650 2265	650 2270	... .	... .
T-796K	1	... .	... .	650 2261	... .
T-796L	1	... .	... .	650 2282	... .
T-796W	1	... .	... .	650 2288	... .
T-797C	1	650 2234	... .	650 2241	... .
T-798B	1	... .	650 2250	650 2256	... .
T-798E	1	... .	650 2271	... .	... .
T-798L	1	... .	... .	650 2283	... .
T-799B	1	650 2245	650 2251	650 2257	... .
T-799C	1	650 2235	... .	650 2242	... .
T-799E	1	650 2266	650 2272	... .	... .
T-799K	1	... .	... .	650 2262	... .
T-799L	1	... .	... .	650 2284	... .
T-799W	1	... .	... .	650 2289	... .

SEATS - SOFT TRIM

Trim No.	Per Car	05-06-08-15 -18-85-88	07-17-87	09-16-19-59 -86-89	79
T-828B	1	359 8512	... .	... .	... .
T-828C	1	359 8511	... .	... .	... .
T-828F	1	359 8513	... .	... .	... .
T-828M	1	359 8515	... .	... .	... .
T-828MR	1	448 6819	... .	... .	... .
T-828N	1	359 8516	... .	... .	... .
T-828R	1	362 4686	... .	... .	... .
T-831D	1	... .	... .	... .	359 8154
T-831E	1	... .	... .	... .	359 8155
T-831J	1	... .	... .	... .	359 9311
T-832D	1	... .	... .	... .	359 8890
T-832E	1	... .	... .	... .	359 8891
T-835D	1	... .	... .	... .	359 8889
T-835E	1	... .	... .	... .	359 8160
T-838J	1	... .	... .	... .	362 3097
T-843B	1	359 8518	... .	359 8532	... .
T-843C	1	359 8517	... .	359 8531	... .
T-844B	1	359 8923	... .	359 8535	... .
T-844C	1	359 8519	... .	359 8534	... .
T-845B (* 29-38)	1	359 8929	... .	359 8537	... .
(* 29-39)	1	362 4016	... .	362 4017	... .
T-845C	1	359 8928	... .	359 8930	... .
T-848B	1	359 8516	... .	359 8529	... .
T-848C	1	359 8515	... .	359 8528	... .
T-848CR	1	448 6819	... .	... .	... .
T-851C	1	651 2229	... .	651 2236	... .
T-851C-L	1	361 3528	... .	... .	... .
T-851F	1	651 2228	... .	651 2235	... .
T-851V	1	651 2232	651 3963	651 2239	... .
T-853C	1	651 2230	... .	651 2237	... .
T-853C-D	1	361 3524	... .	... .	... .
T-853V	1	651 2233	651 3964	651 2240	... .
T-855C	1	651 2231	... .	651 2238	... .
T-855V	1	651 2234	651 3965	651 2241	... .
T-871C	1	651 2242	... .	651 2257	... .
T-871E	1	... .	651 2250	651 2312	... .
T-871K	1	... .	651 2250	651 2312	... .
T-871V	1	651 2247	... .	651 2262	... .
T-871W	1	... .	... .	651 2269	... .
T-873C	1	651 2243	... .	651 2258	... .
T-873E	1	... .	651 2251	651 2321	... .
T-873K	1	... .	651 2251	651 2321	... .
T-873V	1	651 2248	... .	651 2263	... .
T-873W	1	... .	... .	651 2270	
T-874C	1	651 2244	... .	651 2259	... .
T-874C-D	1	361 3516	... .	... .	... .
T-874E	1	... .	651 2252	651 2324	... .
T-874K	1	... .	651 2252	651 2324	... .
T-874W	1	... .	... .	651 2271	... .
T-875E	1	... .	651 2253	651 2336	... .
T-875K	1	... .	651 2253	651 2336	... .
T-875V	1	651 2249	... .	651 2265	... .
T-876C	1	651 2245	... .	651 2260	... .
T-876E	1	... .	651 2254	651 2343	... .
T-876K	1	... .	651 2254	651 2343	... .
T-876V	1	651 2268	... .	651 2266	... .
T-876W	1	... .	... .	651 2273	... .
T-879C	1	651 2246	... .	651 2261	... .
T-879E	1	... .	351 2256	651 2285	... .
T-879K	1	... .	351 2256	651 2285	... .

SEATS - SOFT TRIM

Trim No.	Per Car	05-06-08-15 -18-85-88	07-17-87	09-16-19-59 -86-89	79
T-879W	1	... .	... .	651 2274	... .
T-881C	1	651 2275	... .	651 2282	... .
T-881V	1	651 2232	... .	651 2239	... .
T-883C	1	651 2276	... .	651 2283	... .
T-883V	1	651 2233	... .	651 2240	... .
T-885C	1	651 2277	... .	651 2284	... .
T-885V	1	651 2234	... .	651 2241	... .
T-891C	1	651 2289	... .	651 2314	... .
T-891C-D	1	448 6800	... .	448 6805	... .
T-891E	1	... .	... .	651 2331	... .
T-891K	1	651 2294	... .	651 2319	... .
T-891V	1	651 2294	... .	651 2319	... .
T-891W	1	651 2338	... .	651 2326	... .
T-893C	1	651 2290	... .	651 2315	... .
T-893C-D	1	448 6801	... .	... .	... .
T-893E	1	... .	... .	651 2332	... .
T-893K	1	651 2295	... .	651 2320	... .
T-893V	1	651 2295	... .	651 2320	... .
T-893W	1	651 2339	... .	651 2327	... .
T-894C	1	651 2291	... .	651 2316	... .
T-894C-D	1	448 6802	... .	448 6806	... .
T-894E	1	... .	... .	651 2333	... .
T-894K	1	651 2298	... .	651 2305	... .
T-894W	1	651 2340	... .	651 2328	... .
T-895E	1	... .	... .	651 2334	... .
T-895K	1	651 2296	... .	651 2322	... .
T-895V	1	651 2296	... .	651 2322	... .
T-896C	1	651 2292	... .	651 2317	... .
T-896C-D	1	448 6803	... .	448 6807	... .
T-896E	1	... .	... .	651 2335	... .
T-896K	1	651 2297	... .	651 2323	... .
T-896V	1	651 2297	... .	651 2323	... .
T-896W	1	651 2341	... .	651 2329	... .
T-899C	1	651 2293	... .	651 2318	... .
T-899C-D	1	448 6804	... .	448 6808	... .
T-899E	1	... .	... .	651 2337	... .
T-899K	1	651 2299	... .	651 2325	... .
T-899W	1	651 2342	... .	651 2330	... .

1969 MODELS

Trim No.	Per Car	05-06-08-15 -18-85-88	09-19-79-89		
T-000	1	... .	448 9279	... .	... .
T-921F	1	363 5957	... .	... .	... .
T-921G (05)	1	363 5108	... .	... .	... .
T-921G (08)	1	363 5112	... .	... .	... .
T-923A	1	363 0207	... .	... .	... .
T-923B	1	363 0216	... .	... .	... .
T-923C	1	363 0207	... .	... .	... .
T-923D	1	363 0216	... .	... .	... .
T-928A	1	363 0197	... .	... .	... .
T-928B	1	362 3263	... .	... .	... .
T-928C	1	363 0197	... .	... .	... .
T-928D	1	362 3263	... .	... .	... .
T-928G	1	362 3264	... .	... .	... .
T-928H	1	362 3264	... .	... .	... .
T-928R	1	362 3262	... .	... .	... .
T-928S	1	362 3262	... .	... .	... .

SEATS - SOFT TRIM

Trim No.	Per Car	05-06-08-15 -18-85-88	09-19-79-89	... .	... .
T-941A	1	362 3272	362 3284	... .	... .
T-941B	1	362 3268	362 3280	... .	... .
T-941C	1	362 3272	362 3284	... .	... .
T-941D	1	362 3268	362 3280	... .	... .
T-941K	1	448 6892	... .	... .	... .
T-943A	1	362 3269	362 3281	... .	... .
T-943B	1	362 4513	362 4517	... .	... .
T-943C	1	362 3269	362 3281	... .	... .
T-943D	1	362 4513	362 4517	... .	... .
T-944A	1	362 3270	362 3282	... .	... .
T-944B	1	362 4515	... .	... .	... .
T-944C	1	362 3270	362 3282	... .	... .
T-944D	1	362 4515	... .	... .	... .
T-945A	1	... .	362 4518	... .	... .
T-945B	1	362 3271	362 3283	... .	... .
T-945C	1	... .	362 4518	... .	... .
T-945D	1	362 3271	362 3283	... .	... .
T-951B	1	652 0381	652 0391	... .	... .
T-951D	1	652 0381	652 0391	... .	... .
T-951G	1	652 0377	652 0387	... .	... .
T-951H	1	652 0377	652 0387	... .	... .
T-953A	1	652 0378	652 0388	... .	... .
T-953B	1	652 2078	652 2080	... .	... .
T-953C	1	652 0378	652 0388	... .	... .
T-953D	1	652 2078	652 2080	... .	... .
T-956A	1	652 0379	652 0389	... .	... .
T-956B	1	652 0383	652 0393	... .	... .
T-956C	1	652 0379	652 0389	... .	... .
T-956D	1	652 0383	652 0393	... .	... .
T-957A	1	652 0380	652 0390	... .	... .
T-957B	1	652 2079	652 2081	... .	... .
T-957C	1	652 0380	652 0390	... .	... .
T-957D	1	652 2079	652 2081	... .	... .
T-961E (* 29-103)	1	... .	362 3358	... .	... .
(* 29-104)	1	... .	363 5340	... .	... .
T-961F	1	... .	362 3359	... .	... .
T-961J	1	... .	362 3360	... .	... .
T-961K	1	... .	448 6897	... .	... .
T-962E (* 29-103)	1	... .	363 0332	... .	... .
(* 29-104)	1	... .	363 5365	... .	... .
T-962F	1	... .	363 0333	... .	... .
T-963E	1	... .	362 3364	... .	... .
T-963F	1	... .	362 3365	... .	... .
T-965E	1	... .	362 4586	... .	... .
T-965F	1	... .	362 3363	... .	... .
T-966E	1	... .	362 3361	... .	... .
T-966F	1	... .	362 3362	... .	... .
T-968J	1	... .	362 3366	... .	... .
T-972A	1	652 2084	652 2085	... .	... .
T-972B	1	652 2082	652 2086	... .	... .
T-972C	1	652 2084	652 2085	... .	... .
T-972D	1	652 2082	652 2086	... .	... .
T-972E	1	652 2084	652 2085	... .	... .
T-972F	1	652 2082	652 2086	... .	... .
T-973A	1	652 0395	652 0411	... .	... .
T-973B	1	652 0399	652 0415	... .	... .
T-973C	1	652 0395	652 0411	... .	... .
T-973D	1	652 0399	652 0415	... .	... .
T-973E	1	652 0395	652 0411	... .	... .

Printed in U.S.A.

SEATS - SOFT TRIM

Trim No.	Per Car	05-06-08-15 -18-85-88	09-19-79-89		
T-975	1	... .	652 0416	... .	... .
T-976A	1	652 0396	652 0412	... .	... .
T-976B	1	652 0401	652 0417	... .	... .
T-976C	1	652 0396	652 0412	... .	... .
T-976D	1	652 0401	652 0417	... .	... .
T-977A	1	652 0397	652 0413	... .	... .
T-977B	1	652 2083	... .	... .	... .
T-977C	1	652 0397	652 0413	... .	... .
T-977D	1	652 2083	... .	... .	... .
T-979	1	... .	652 0418	... .	... .
T-981	1	652 0381	... .	... .	... .
T-983A	1	652 0420	... .	... .	... .
T-983C	1	652 0420	... .	... .	... .
T-983D	1	652 2078	... .	... .	... .
T-986A	1	652 0421	... .	... .	... .
T-986C	1	652 0421	... .	... .	... .
T-986D	1	652 0383	... .	... .	... .
T-987A	1	652 0422	... .	... .	... .
T-987C	1	652 0422	... .	... .	... .
T-987D	1	652 2079	... .	... .	... .
T-991A	1	652 0426	652 0436	... .	... .
T-991B	1	652 0430	652 0440	... .	... .
T-991C	1	652 0426	652 0436	... .	... .
T-991D	1	652 0430	652 0440	... .	... .
T-991F	1	... .	652 0460	... .	... .
T-991N	1	652 0450	652 0460	... .	... .
T-992E	1	... .	652 2090	... .	... .
T-992M	1	652 2089	652 2090	... .	... .
T-992V	1	652 2091	... .	... .	... .
T-993A	1	652 0427	652 0437	... .	... .
T-993B	1	652 0431	652 0441	... .	... .
T-993C	1	652 0427	652 0437	... .	... .
T-993D	1	652 0431	652 0441	... .	... .
T-993E	1	652 0447	652 0457	... .	... .
T-993F	1	... .	652 0461	... .	... .
T-993M	1	652 0447	652 0457	... .	... .
T-993N	1	652 5908	652 0461	... .	... .
T-993V	1	652 2092	... .	... .	... .
T-995B	1	... .	652 0442	... .	... .
T-995D	1	... .	652 0442	... .	... .
T-995F	1	... .	652 0462	... .	... .
T-995N	1	... .	652 0462	... .	... .
T-996A	1	652 0428	652 0438	... .	... .
T-996B	1	652 0433	652 0443	... .	... .
T-996C	1	652 0428	652 0438	... .	... .
T-996-D	1	652 0433	652 0443	... .	... .
T-996E	1	652 0448	652 0458	... .	... .
T-996F	1	... .	652 0463	... .	... .
T-996M	1	652 0448	652 0458	... .	... .
T-996N	1	652 0453	652 0463	... .	... .
T-997A	1	652 0429	652 0439	... .	... .
T-997B	1	652 2087	652 2088	... .	... .
T-997C	1	652 0429	652 0439	... .	... .
T-997D	1	652 2087	652 2088	... .	... .
T-997E	1	... .	652 0459	... .	... .
T-997M	1	652 0449	652 0459	... .	... .
T-999	1	... .	652 0464	... .	... .

SEATS - SOFT TRIM

1970 MODELS

Trim No.	Per Car	05-06-15-18 -85-88	19-46-79-89
T-001	1	... .	364 1280
T-008	1	... .	364 1291
T-011B	1	... .	363 5552
T-011F	1	... .	363 5552
T-011FD	1	... .	365 0957
T-013B	1	... .	363 5553
T-013F	1	... .	363 5553
T-013FD	1	... .	365 0958
T-014B	1	... .	364 1290
T-014F	1	... .	364 1290
T-014FD	1	... .	365 0959
T-015B	1	... .	363 5554
T-015F	1	... .	363 5554
T-015FD	1	... .	365 0960
T-021A	1	363 0555	... .
T-021B	1	363 0416	... .
T-021G	1	363 0417	... .
T-023A	1	363 0556	... .
T-023B	1	363 0557	... .
T-024A	1	363 5857	... .
T-024B	1	363 5858	... .
T-025A	1	363 5859	... .
T-025B	1	363 5860	... .
T-041A	1	363 0418	... .
T-041B	1	363 0419	... .
T-041C	1	363 0418	... .
T-041D	1	363 0419	... .
T-043A	1	363 0420	... .
T-043B	1	363 0421	... .
T-043C	1	363 0420	... .
T-043D	1	363 0421	... .
T-043V	1	363 5940	... .
T-044A	1	363 0422	... .
T-044B	1	363 5856	... .
T-044C	1	363 0422	... .
T-044D	1	363 5856	... .
T-044V	1	363 5941	... .
T-045A	1	363 0807	... .
T-045C	1	363 0807	... .
T-051B	1	652 5697	652 5705
T-051D	1	652 5697	652 5705
T-051F	1	... .	652 5721
T-051G	1	652 5693	652 5701
T-051H	1	652 5693	652 5701
T-051P	1	448 8483	... .
T-051V	1	448 8484	... .
T-053A	1	652 5694	652 5702
T-053A-D	1	448 9338	... .
T-053B	1	652 5698	652 5706
T-053C	1	652 5694	652 5702
T-053D	1	652 5698	652 5706
T-053F	1	... .	652 5722
T-054A	1	652 5695	652 5703
T-054B	1	652 5699	652 5707
T-054B-D	1	448 9339	... .
T-054C	1	652 5695	652 5703
T-054D	1	652 5699	652 5707
T-056A	1	652 5696	652 5704
T-056B	1	652 5700	652 5708
T-056C	1	652 5696	652 5704

SEATS - SOFT TRIM

Trim No.	Per Car	05-06-15-18 -85-88	19-46-79-89
T-056D	1	652 5700	652 5708
T-056F	1	... .	652 5725
T-061E	1	... .	363 0484
T-061F	1	... .	363 5880
T-061J	1	... .	363 0485
T-061L	1	... .	363 0878
T-063E	1	... .	363 0486
T-063F	1	... .	363 5881
T-063J	1	... .	363 0487
T-064E	1	... .	363 0579
T-064F	1	... .	363 5884
T-064J	1	... .	363 0580
T-064JC	1	... .	363 5884
T-065E	1	... .	363 0488
T-065F	1	... .	363 5882
T-065J	1	... .	363 0489
T-065L	1	... .	363 5575
T-066E	1	... .	363 0490
T-066F	1	... .	363 5883
T-066J	1	... .	363 0491
T-066L	1	... .	363 0879
T-071A	1	652 5709	652 5717
T-071B	1	652 5713	652 5721
T-071C	1	652 5709	652 5717
T-071D	1	652 5713	652 5721
T-071E	1	... .	652 5717
T-071F	1	... .	652 5721
T-071S	1	652 8228	652 8232
T-073A	1	652 5710	652 5718
T-073B	1	652 5714	652 5722
T-073C	1	652 5710	652 5718
T-073D	1	652 5714	652 5722
T-073E	1	... .	652 5718
T-073F	1	... .	652 5722
T-073S	1	652 8229	652 8233
T-074A	1	652 5711	652 5719
T-074B	1	652 5715	652 5723
T-074C	1	652 5711	652 5719
T-074D	1	652 5715	652 5723
T-074S	1	652 8230	652 8234
T-075B	1	652 6123	652 5724
T-075D	1	652 6123	652 5724
T-075F	1	... .	652 5724
T-076A	1	652 5712	652 5720
T-076B	1	652 5716	652 5725
T-076C	1	652 5712	652 5720
T-076D	1	652 5716	652 5725
T-076F	1	... .	652 5725
T-076S	1	652 8231	652 8235
T-081B	1	652 5729	... .
T-081D	1	652 5729	... .
T-083A	1	652 5726	... .
T-083C	1	652 5726	... .
T-083D	1	652 5730	... .
T-084A	1	652 5727	... .
T-084C	1	652 5727	... .
T-084D	1	652 5731	... .
T-086A	1	652 5728	... .
T-086C	1	652 5728	... .
T-086D	1	652 5732	... .
T-091A	1	652 5733	652 5741
T-091B	1	652 5737	652 5745
T-091C	1	652 5733	652 5741
T-091D	1	652 5737	652 5745

SEATS - SOFT TRIM

Trim No.	Per Car	05-06-15-18 -85-88	19-46-79-89
T-091E	1	... .	652 5759
T-091F	1	... .	652 5763
T-091M	1	652 5750	652 5759
T-091N	1	652 5754	652 5763
T-091S	1	652 8228	652 8232
T-091V	1	652 5756	... .
T-093A	1	652 5734	652 5742
T-093B	1	652 5738	652 5746
T-093C	1	652 5734	652 5742
T-093D	1	652 5738	652 5746
T-093E	1	... .	652 5760
T-093F	1	... .	652 5764
T-093M	1	652 5751	652 5760
T-093N	1	652 5758	652 5764
T-093S	1	652 8229	652 8233
T-093V	1	652 5757	... .
T-094A	1	652 5735	652 5743
T-094B	1	652 5739	652 5747
T-094C	1	652 5735	652 5743
T-094D	1	652 5739	652 5747
T-094E	1	... .	652 5761
T-094F	1	... .	652 5765
T-094M	1	652 5752	652 5761
T-094N	1	652 6125	652 5765
T-094S	1	652 8230	652 8234
T-095B	1	652 6124	652 5748
T-095D	1	652 6124	652 5748
T-095N	1	652 6126	652 5766
T-095F	1	... .	652 5766
T-096A	1	652 5736	652 5744
T-096B	1	652 5740	652 5749
T-096C	1	652 5736	652 5744
T-096D	1	652 5740	652 5749
T-096E	1	... .	652 5762
T-096F	1	... .	652 5767
T-096M	1	652 5753	652 5762
T-096N	1	652 5755	652 5767
T-096S	1	652 8231	652 8235

1971 MODELS

Trim No.	Per Car	05-06-08-15 18-85-88	19-46-79-89
T-101B	1	... .	364 1734
T-103A	1	... .	365 1918
T-103B	1	... .	364 1735
T-104A	1	... .	365 1919
T-108B	1	... .	365 1437
T-111B	1	... .	364 1736
T-111S	1	... .	364 1736
T-113B	1	... .	364 1737
T-113S	1	... .	364 1737
T-114B	1	... .	364 1738
T-114S	1	... .	364 1738
T-115B	1	... .	364 1739
T-115S	1	... .	364 1739
T-121A	1	364 1718	... .
T-121AX	1	366 1070	... .
T-121B	1	364 1719	... .
T-121G	1	364 1720	... .
T-123A	1	364 1721	... .
T-123AX	1	366 1071	... .

Printed in U.S.A.

SEATS - SOFT TRIM

Trim No.	Per Car	05-06-08-15 18-85-88	19-46-79-89
T-123B	1	364 1722	... .
T-124A	1	364 1723	... .
T-124B	1	364 1724	... .
T-128B	1	365 1436	... .
T-141A	1	364 1725	... .
T-141B	1	364 1726	... .
T-141C	1	364 1725	... .
T-141D	1	364 1726	... .
T-141V	1	364 1732	... .
T-143A	1	364 1727	... .
T-143B	1	364 1728	... .
T-143C	1	364 1727	... .
T-143D	1	364 1728	... .
T-143V	1	365 0531	... .
T-144A	1	364 1729	... .
T-144B	1	364 1730	... .
T-144C	1	364 1729	... .
T-144D	1	364 1730	... .
T-144V	1	365 0540	... .
T-145B	1	364 1731	... .
T-145D	1	364 1731	... .
T-145V	1	364 1733	... .
T-151A	1	652 7710	652 7717
T-151B	1	652 7713	652 7720
T-151C	1	652 7710	652 7717
T-151D	1	652 7713	... .
T-151G	1	652 7709	652 7716
T-151H	1	652 7709	... .
T-153A	1	652 7711	652 7718
T-153B	1	652 7714	652 7721
T-153C	1	652 7711	652 7718
T-153D	1	652 7714	... .
T-154A	1	652 7712	652 7719
T-154B	1	652 7715	652 7722
T-154C	1	652 7712	652 7719
T-154D	1	652 7715	... .
T-161J	1	... .	364 1396
T-161JX	1	... .	365 1797
T-161L	1	... .	364 1399
T-161R	1	... .	364 1397
T-161S	1	... .	364 1398
T-161SX	1	... .	365 1796
T-163J	1	... .	364 1400
T-163JX	1	... .	365 1798
T-163R	1	... .	364 1401
T-163S	1	... .	364 1402
T-164J	1	... .	364 1403
T-164R	1	... .	364 1404
T-164S	1	... .	364 1405
T-165J	1	... .	364 1406
T-165JX	1	... .	365 1799
T-165L	1	... .	364 1409
T-165R	1	... .	364 1407
T-165S	1	... .	364 1408
T-168S	1	... .	365 1464
T-171A	1	652 7723	652 7731
T-171B	1	652 7727	652 7735
T-171C	1	652 7723	... .
T-171D	1	652 7727	652 7735
T-171G	1	652 7709	652 7716
T-171S	1	... .	652 7755
T-171V	1	... .	652 8440

Printed in U.S.A.

SEATS - SOFT TRIM

Trim No.	Per Car	05-06-08-15 18-85-88	19-46-79-89
T-173A	1	652 7724	652 7732
T-173B	1	652 7728	652 7736
T-173C	1	652 7724	... .
T-173D	1	652 7728	652 7736
T-173S	1	... .	652 7756
T-173V	1	... .	652 8536
T-174A	1	652 7725	652 7733
T-174B	1	652 7729	652 7737
T-174C	1	652 7725	... .
T-174D	1	652 7729	652 7737
T-174S	1	... .	652 7757
T-174V	1	... .	652 8537
T-175A	1	652 7726	652 7734
T-175B	1	652 7730	652 7738
T-175C	1	652 7726	... .
T-175D	1	652 7730	652 7738
T-175S	1	... .	652 7758
T-175V	1	... .	652 8441
T-176D	1	652 9528	652 9530
T-181A	1	652 7740	... .
T-181B	1	652 7713	... .
T-181C	1	652 7740	... .
T-183A	1	652 7741	... .
T-183B	1	652 7714	... .
T-183C	1	652 7741	... .
T-184A	1	652 7742	... .
T-184B	1	652 7715	... .
T-184C	1	652 7742	... .
T-186D	1	652 9528	... .
T-191A	1	652 7743	652 7751
T-191B	1	652 7747	652 7755
T-191C	1	652 7743	652 7751
T-191D	1	652 7747	652 7755
T-191M	1	652 7759	652 7767
T-191N	1	652 7747	652 7755
T-191R	1	652 7759	652 7767
T-191S	1	... .	652 7755
T-191V	1	652 8442	652 8444
T-193A	1	652 7744	652 7752
T-193B	1	652 7748	652 7756
T-193C	1	652 7744	652 7752
T-193D	1	652 7748	652 7756
T-193M	1	652 7760	652 7768
T-193N	1	652 7748	652 7756
T-193S	1	... .	652 7756
T-193V	1	652 8443	652 8445
T-194A	1	652 7745	652 7753
T-194B	1	652 7749	652 7757
T-194C	1	652 7745	652 7753
T-194D	1	652 7749	652 7757
T-194M	1	652 7761	652 7769
T-194N	1	652 7749	652 7757
T-194S	1	... .	652 7757
T-195A	1	652 7746	652 7754
T-195B	1	652 7750	652 7758
T-195C	1	652 7746	652 7754
T-195D	1	652 7750	652 7758
T-194R	1	652 7761	652 7769
T-195M	1	652 7762	652 7770
T-195N	1	652 7750	652 7758
T-195R	1	652 7762	652 7770
T-195S	1	... .	652 7758
T-196D	1	652 9528	652 9530
T-196N	1	652 9528	652 9530

Printed in U.S.A.

SEATS - SOFT TRIM

1972 MODELS

Trim No.		Per Car	05-06-08-15 18-85-88	19-46-79-89
T-201A		1	... .	366 2590
T-201B	(LSBW)	1	... .	365 0750
	(WSBW)	1	... .	366 2028
T-203A		1	... .	366 2591
T-203B	(LSBW)	1	... .	365 0751
	(WSBW)	1	... .	366 2029
T-206A		1	... .	366 2592
T-206B	(LSBW)	1	... .	365 1110
	(WSBW)	1	... .	366 2030
T-208B		1	... .	366 8555
T-211	(LSBW)	1	... .	365 0752
	(WSBW)	1	... .	366 2031
T-213	(LSBW)	1	... .	365 0753
	(WSBW)	1	... .	366 2032
T-215	(LSBW)	1	... .	365 0755
	(WSBW)	1	... .	366 2033
T-216	(LSBW)	1	... .	365 1111
	(WSBW)	1	... .	366 2034
T-218		1	... .	366 8556
T-221G		1	366 1994	366 2875
T-241A	(LSBW)	1	365 0739	... .
	(WSBW)	1	366 2001	... .
T-241B	(LSBW)	1	365 0740	... .
	(WSBW)	1	366 2002	... .
T-241C	(LSBW)	1	365 0739	... .
	(WSBW)	1	366 2001	... .
T-241D	(LSBW)	1	365 0740	... .
	(WSBW)	1	366 2002	... .
T-241S	(LSBW)	1	366 1934	... .
	(WSBW)	1	366 2035	... .
T-241V	(LSBW)	1	365 0746	... .
	(WSBW)	1	366 2009	... .
T-243A	(LSBW)	1	365 0741	... .
	(WSBW)	1	366 2003	... .
T-243B	(LSBW)	1	365 0742	... .
	(WSBW)	1	366 2004	... .
T-243C	(LSBW)	1	365 0741	... .
	(WSBW)	1	366 2003	... .
T-243D	(LSBW)	1	365 0742	... .
	(WSBW)	1	366 2004	... .
T-243S	(LSBW)	1	366 1935	... .
	(WSBW)	1	366 2036	... .
T-243V	(LSBW)	1	365 0747	... .
	(WSBW)	1	366 2010	... .
T-244A	(LSBW)	1	365 0743	... .
	(WSBW)	1	366 2005	... .
T-244B	(LSBW)	1	365 0744	... .
	(WSBW)	1	366 2006	... .
T-244C	(LSBW)	1	365 0743	... .
	(WSBW)	1	366 2005	... .
T-244D	(LSBW)	1	365 0744	... .
	(WSBW)	1	366 2006	... .
T-244V	(LSBW)	1	365 0748	... .
	(WSBW)	1	366 2011	... .
T-244W	(LSBW)	1	365 1813	... .
	(WSBW)	1	366 2013	... .
T-245S	(LSBW)	1	366 1936	... .
	(WSBW)	1	366 2038	... .
T-246A	(LSBW)	1	365 1723	... .
	(WSBW)	1	366 2008	... .
T-246B	(LSBW)	1	365 1722	... .
	(WSBW)	1	366 2007	... .
T-246C	(LSBW)	1	365 1723	... .
	(WSBW)	1	366 2008	... .

Printed in U.S.A.

SEATS - SOFT TRIM

Trim No.			Per Car	05-06-08-15 18-85-88	19-46-79-89
T-246D		(LSBW)	1	365 1722	... .
		(WSBW)	1	366 2007	... .
T-246S		(LSBW)	1	366 1937	... .
		(WSBW)	1	366 2037	... .
T-246V		(LSBW)	1	365 1724	... .
		(WSBW)	1	366 2012	... .
T-248B			1	366 8554	... .
T-248D			1	366 8554	... .
T-248S			1	366 8557	... .
T-261R		(* 29-146)	1	... .	366 1578
		(* 29-147)	1	... .	366 8988
T-261S			1	... .	365 0829
T-261W			1	... .	366 1931
T-263R			1	... .	366 1579
T-263S			1	... .	365 0832
T-264R			1	... .	366 1580
T-264S			1	... .	365 0834
T-265S			1	... .	365 0836
T-266R			1	... .	366 1581
T-266S			1	... .	365 1119
T-268S			1	... .	366 8215
T-271A		(LSBW)	1	652 9284	652 9288
		(WSBW)	1	653 1926	653 1943
T-271B		(LSBW)	1	652 9304	652 9312
	(15)(19)	(WSBW)	1	653 1934	653 1951
	(18)	(WSBW)	1	630 9530	... .
T-271D		(LSBW)	1	652 9354	652 9362
	(15)(19)	(WSBW)	1	653 1939	653 1953
	(18)	(WSBW)	1	630 9535	... .
T-271G		(LSBW)	1	652 7709	652 7716
		(WSBW) Except Station Wagon And Taxi	1	653 1938	653 1952
		(WSBW) Station Wagon	1	630 9534	... .
		(WSBW) Taxi	1	653 2255	... .
T-271H		(LSBW)	1	652 7709	652 7716
		(WSBW) Except Station Wagon	1	653 1938	653 1952
		(WSBW) Station Wagon	1	630 9534	... .
T-271S		(LSBW)	1	... .	652 9362
		(WSBW)	1	... .	653 1953
T-271V		(LSBW)	1	652 9292	652 9300
	(15)(19)	(WSBW)	1	653 1930	653 1947
	(18)	(WSBW)	1	630 9526	... .
T-271Z			1	812 2002	... .
T-273A		(LSBW)	1	652 9285	652 9289
		(WSBW)	1	653 1927	653 1944
T-273B		(LSBW)	1	652 9305	... .
	(15)	(WSBW)	1	653 1935	... .
	(18)	(WSBW)	1	630 9531	... .
T-273D		(LSBW)	1	652 9355	652 9363
	(15)(19)	(WSBW)	1	653 1940	653 1954
	(18)	(WSBW)	1	630 9536	... .
T-273S		(LSBW)	1	... .	652 9363
		(WSBW)	1	... .	653 1954
T-273V		(LSBW)	1	652 9293	652 9301
	(15)(19)	(WSBW)	1	653 1931	653 1948
	(18)	(WSBW)	1	630 9527	... .
T-273Z			1	812 2003	... .
T-274A		(LSBW)	1	652 9286	652 9290
		(WSBW)	1	653 1928	653 1945
T-274B		(LSBW)	1	652 9306	... .
	(15)	(WSBW)	1	653 1936	... .
	(18)	(WSBW)	1	630 9532	... .
T-274D		(LSBW)	1	652 9356	652 9364
	(15)(19)	(WSBW)	1	653 1941	653 1955
	(18)	(WSBW)	1	630 9537	... .
T-274S		(LSBW)	1	... .	652 9364
		(WSBW)	1	... .	653 1955

SEATS - SOFT TRIM

Trim No.			Per Car	05-06-08-15 18-85-88	19-46-79-89
T-274V		(LSBW)	1	652 9294	652 9302
	(15)(19)	(WSBW)	1	653 1932	653 1949
	(18)	(WSBW)	1	630 9528	... .
T-274Z			1	812 2004	... .
T-276A		(LSBW)	1	652 9287	652 9291
		(WSBW)	1	653 1929	653 1946
T-276B		(LSBW)	1	652 9307	... .
	(15)	(WSBW)	1	653 1937	... .
	(18)	(WSBW)	1	630 9533	... .
T-276D		(LSBW)	1	652 9357	652 9365
	(18)	(WSBW)	1	630 9538	... .
T-276S		(LSBW)	1	... .	652 9365
		(WSBW)	1	... .	653 1956
T-276V		(LSBW)	1	652 9295	652 9303
	(15)(19)	(WSBW)	1	653 1933	653 1950
	(18)	(WSBW)	1	630 9529	... .
T-276Z			1	812 2005	... .
T-291A		(LSBW)	1	652 9320	652 9324
		(WSBW)	1	653 1960	653 1968
T-291B		(LSBW)	1	652 9328	... .
	(85)	(WSBW)	1	653 1964	... .
	(88)	(WSBW)	1	630 9539	... .
T-291C	(85)(89)	(LSBW)	1	652 9320	652 9324
	(85)(89)	(WSBW)	1	653 1960	653 1968
T-291D		(LSBW)	1	652 9354	652 9362
	(85)(89)	(WSBW)	1	653 1939	653 1953
	(88)	(WSBW)	1	630 9535	... .
T-291E		(LSBW)	1	652 9334	652 9338
		(WSBW)	1	653 1972	653 1980
T-291F			1	652 9354	... .
T-291N		(LSBW)	1	652 9354	652 9362
	(85)(89)	(WSBW)	1	653 1939	653 1953
	(88)	(WSBW)	1	630 9535	... .
T-291S		(LSBW)	1	... .	652 9362
		(WSBW)	1	... .	653 1953
T-291V		(LSBW)	1	652 9342	652 9350
	(85)(89)	(WSBW)	1	653 1976	653 1984
	(88)	(WSBW)	1	630 9548	... .
T-291Z			1	812 2006	... .
T-293A		(LSBW)	1	652 9321	652 9325
		(WSBW)	1	653 1961	653 1969
T-293B		(LSBW)	1	652 9330	... .
	(85)	(WSBW)	1	653 1965	... .
	(88)	(WSBW)	1	630 9540	... .
T-293C	(85)(89)	(LSBW)	1	652 9321	652 9325
	(85)(89)	(WSBW)	1	653 1961	653 1969
T-293D		(LSBW)	1	652 9355	652 9363
	(85)(89)	(WSBW)	1	653 1940	653 1954
	(88)	(WSBW)	1	630 9536	... .
T-293E		(LSBW)	1	652 9335	652 9339
		(WSBW)	1	653 1973	653 1981
T-293F			1	652 9355	... .
T-293N		(LSBW)	1	652 9355	652 9363
	(85)(89)	(WBSW)	1	653 1940	653 1954
	(88)	(WSBW)	1	630 9536	... .
T-293S		(LSBW)	1	... .	652 9363
		(WSBW)	1	... .	653 1954
T-293V		(LSBW)	1	652 9343	652 9351
	(85)(89)	(WSBW)	1	653 1977	653 1985
	(88)	(WSBW)	1	630 9549	... .
T-293Z			1	812 2007	... .
T-294A		(LSBW)	1	652 9322	652 9326
		(WSBW)	1	653 1962	653 1970

SEATS - SOFT TRIM

Trim No.			Per Car	05-06-08-15 18-85-88	19-46-79-89
T-294B		(LSBW)	1	652 9331	... .
	(85)	(WSBW)	1	653 1966	... .
	(88)	(WSBW)	1	630 9541	... .
T-294C		(LSBW)	1	652 9322	652 9326
		(WSBW)	1	653 1962	653 1970
T-294D		(LSBW)	1	652 9356	652 9364
	(85)(89)	(WSBW)	1	653 1941	653 1955
	(88)	(WSBW)	1	630 9537	... .
T-294E		(LSBW)	1	652 9336	652 9340
		(WSBW)	1	653 1974	653 1982
T-294F			1	652 9356	... .
T-294N		(LSBW)	1	652 9356	652 9364
	(85)(89)	(WSBW)	1	653 1941	653 1955
	(88)	(WSBW)	1	630 9357	... .
T-294S		(LSBW)	1	... .	652 9364
		(WSBW)	1	... .	653 1955
T-294V		(LSBW)	1	652 9344	652 9352
	(85)(89)	(WBSW)	1	653 1978	653 1986
	(88)	(WSBW)	1	630 9550	... .
T-294Z			1	812 2008	... .
T-296A		(LSBW)	1	652 9323	652 9327
		(WSBW)	1	653 1963	653 1971
T-296B		(LSBW)	1	652 9332	... .
	(85)	(WSBW)	1	653 1967	... .
	(88)	(WSBW)	1	630 9542	... .
T-296C		(LSBW)	1	652 9323	652 9327
		(WSBW)	1	653 1963	653 1971
T-296D		(LSBW)	1	652 9357	652 9365
	(85)(89)	(WSBW)	1	653 1942	653 1956
	(88)	(WSBW)	1	630 9538	... .
T-296E		(LSBW)	1	652 9337	652 9341
		(WSBW)	1	653 1975	653 1983
T-296F			1	652 9357	... .
T-296N		(LSBW)	1	652 9357	652 9365
	(85)(89)	(WSBW)	1	653 1942	653 1956
	(88)	(WSBW)	1	630 9538	... .
T-296S		(LSBW)	1	... .	652 9365
		(WSBW)	1	... .	653 1956
T-296V		(LSBW)	1	652 9345	652 9353
	(85)(89)	(WSBW)	1	653 1979	653 1987
	(88)	(WSBW)	1	630 9551	... .
T-296Z			1	812 2009	... .

29.192-1 SPRING, Rear Seat Cushion

67	05-06-08 (Except Heavy Duty)	1	356 2373
67	07	1	356 2374
68/69	05-06-08	1	360 5044
67/69	09	1	356 2372
70/	01 (LSBW)	1	363 7788
72	01 (WSBW)	1	366 3760
67/	15 (LSBW-Except Heavy Duty And Taxi)	1	358 0478
72	15-85 (WSBW-Except Taxi)	1	366 3761
67	16-19-86 (Except Heavy Duty)	1	358 0480
67/68	17	1	358 0479
67/	18 (LSBW-Except Heavy Duty)	1	358 0470
72	18-88 (WSBW)	1	366 3763
68/	19 (LSBW-Except Heavy Duty)	1	358 0480
72	19-89 (WSBW)	1	366 3762
70/	40	1	363 7736
67/68	59-89 (LBS-Except Heavy Duty)	1	358 0480
67/68	59-89 (WBS)	1	650 5937

Printed in U.S.A.

68/	79	.....	1	360 4490
67/	85 (LBS-LSBW-Except Heavy Duty)	.....	1	358 0478
67	85 (WBS)	.....	1	650 5941
67	87 (LBS)	.....	1	358 0479
67	87 (WBS)	.....	1	650 5933
67/	88 (LBS-LSBW-Except Heavy Duty)	.....	1	358 0470
67	88 (WBS)	.....	1	650 5940
69/	89 (LSBW-Except Heavy Duty)	.....	1	358 0480
72	***15 (Taxi)***	.....	1	365 6999
67/	***15-85 (Heavy Duty-LSBW)***	.....	1	358 0474
67/69	***16-19-86 (Heavy Duty)***	.....	1	358 0473
67/	***18 (Heavy Duty-LSBW)***	.....	1	358 0717
70/	***19-89 (Heavy Duty-LSBW)***	.....	1	358 0473
67/68	***88 (Heavy Duty-LBS)***	.....	1	358 0717
69/	***88 (Heavy Duty-LSBW)***	.....	1	358 0717
68	***89 (Heavy Duty-LBS)***	.....	1	358 0473
69	***89 (Heavy Duty)***	.....	1	358 0473

29.192–1a ATTACHING PARTS, Spring To Floor Pan

WASHER, Plain	71/	40	29.222	4	400 1176
SCREW, Tapping.....	71/	40 (10-16 × 3/4")	17.671	4	400 0774
SCREW, Tapping.....	72	40 (10-24 × 3/4")	.....	2	400 4630
***SCREW, Tapping.....	***67/***	***15-19-85-89 (Heavy Duty)***	20.280	2	400 1724

29.192–2 RETAINER, Rear Seat Cushion

67/	(Left) 18-88	.....	1	358 0609
67/	(Right) 18-88	.....	1	358 0608

29.192–3 PLATE, Rear Seat Cushion Retainer

67/	18-88	.....	2	358 0610

29.192–4 ATTACHING PARTS, Plate To Floor Pan

SCREW, Tapping.....	67/69	18-88 (#8-18 × 1/2)	20.280	4	400 1724
SCREW, Tapping.....	69/	18-88 (#8-32 × 1/2)	3.303	4	400 1629

29.192–5 CLIP, Rear Seat Cushion Spring Reinforcement

67/	"C"		29.106	AR	348 8056
67/	"U"		29.106	AR	447 8809

29.192–6 WIRE, Rear Seat Cushion Bolster

72	80 (Brougham)	.....	1	364 7236

29.192–7 ATTACHING PARTS, Bolster Wire To Spring

CLIP, Wire.....	72	80 (Brougham)	29.103	2	365 1588
HOG RING	72	80 (Brougham)	30.025	2	436 3265

29.194 PAD, Rear Seat Cushion Cotton

67	05-06-08	.....	1	350 2657
68/69	05-06-08	.....	1	359 9309
67	07	.....	1	350 2658
67	09	.....	1	350 2659
68/69	09	.....	1	359 9310
70/	01	.....	1	362 7571

SEATS - SOFT TRIM

67	15-18-85-88	.....	1	358 0482
67	16-86	.....	1	358 0379
68/69	15-18-85-88	.....	1	361 2536
68	17	.....	1	361 2372
68/69	19-89	.....	1	361 2537
68/	79 (Except T-261W)	.....	1	360 6525
72	79 (T-261W)	.....	1	365 3566

29.198–1 PAD, Rear Seat Cushion Foam

67	09	.....	1	350 8950
70	01	.....	1	362 9356
67	15-18-85-88 (LBS-1-1/2" Thick)	.....	1	350 9974
67	15-18-85-88 (LBS-2" Thick)	.....	1	350 8679
67	15-18 (WBS)	.....	1	350 9974
70/	15-18 (2" Thick)	.....	1	350 8679
70/	15-18 (1-1/2" Thick)	.....	1	350 9974
67	16-86 (LBS)	.....	1	358 0378
67	17-87 (LBS)	.....	1	358 0484
67/68	17 (WBS)	.....	1	358 0487
67	19	.....	1	358 0485
68	19-89	.....	1	358 0489
70/	19-89 (2" Thick)	.....	1	358 0378
70/	19 (1-1/2" Thick)	.....	1	358 0485
70/	40 (1-1/2" Thick)	.....	1	363 7737
70/	40 (2" Thick)	.....	1	363 7738
67	59-89 (LBS)	.....	1	358 0485
67	59-89 (WBS)	.....	1	358 0489
67	85-88 (WBS)	.....	1	358 0528
69/71	85-88 (1-1/2" Thick)	.....	1	350 9974
70/71	85-88 (2" Thick)	.....	1	350 8679
72	85-88 (Except "V" Trims)	.....	1	350 9974
72	85-88 ("V" Trims)	.....	1	364 7194
67	87 (WBS)	.....	1	358 0487
69/71	89 (1-1/2" Thick)	.....	1	358 0485
72	89 (Except "V" Trims)	.....	1	358 0485
72	89 ("V" Trims)	.....	1	364 7195

29.198–2 SUPPORT, Rear Seat Cushion Pad

67	09	.....	1	350 2166
70	01	.....	1	362 9357
67	15-16-18-85-86-88	.....	1	350 2687
70/	15-18-85-88	.....	1	350 2687
67/68	17-87	.....	1	350 2698
67/68	19-59-89	.....	1	358 0491
70/	19-89	.....	1	350 2698
70/	40	.....	1	363 7735
69	85-88	.....	1	350 2687
69	89	.....	1	350 2698

29.198–3 PROTECTOR, Rear Seat Cushion Edge

67	09	.....	1	350 1769
70	01	.....	2	362 9358
67	15-18-85-88	.....	1	359 7420
70/	15-18-85-88	.....	1	359 7420
67/68	16-19-59-86-89	.....	1	359 7425
67/68	17-87	.....	1	353 1388
70/	19-89	.....	2	359 7425
70/	40	.....	2	363 7739
69	85-88	.....	2	359 7420
69	89	.....	2	359 7425

SEATS - SOFT TRIM

29.199 PROTECTOR, Rear Seat Cushion Front Facing

67 07 ..... 2 350 7473

29.210 BACK ASSEMBLY, Trimmed Rear Seat (Order Component Parts)

29.212 UPHOLSTERY, Rear Seat Back (Cover)

1967 - 1968 MODELS

Trim No.	Per Car	05-06-15-85	07-17-59-87	09-16-19-79 -86-89	08-18-88
T-723B	1	358 4418	... .	... .	358 4441
T-723C	1	358 4417	... .	... .	358 4440
T-723M	1	362 3082	... .	... .	362 3083
T-728B	1	358 4420	... .	... .	358 4443
T-728C	1	358 4419	... .	... .	358 4442
T-728M	1	359 9790	... .	... .	359 9791
T-728V	1	358 4421	... .	... .	358 4444
T-729B	1	358 4423	... .	... .	358 4446
T-729C	1	358 4422	... .	... .	358 4445
T-741B	1	359 8010	358 4434	358 4458	359 8011
T-741D	1	... .	... .	358 4457	... .
T-741E	1	... .	358 4434	358 4458	359 8011
T-743B	1	358 4425	358 4435	358 4461	358 4448
T-743C	1	358 4424	... .	358 4459	358 4447
T-743D	1	... .	... .	358 4462	... .
T-743E	1	358 4425	358 4435	358 4461	358 4448
T-744C	1	358 4426	... .	358 4463	358 4449
T-745B	1	... .	358 4437	358 4469	... .
T-745C	1	358 4428	... .	358 4467	358 4451
T-745D	1	... .	... .	358 4470	... .
T-745E	1	... .	358 4437	358 4469	... .
T-747C	1	358 4430	... .	358 4471	358 4453
T-748	1	... .	358 4438	358 4473	... .
T-749B	1	358 4433	358 4439	358 4476	358 4456
T-749C	1	358 4432	... .	358 4474	358 4455
T-749D	1	... .	... .	358 4477	... .
T-749E	1	... .	358 4439	358 4476	358 4456
T-753B	1	650 3050	... .	650 3053	650 3056
T-753C	1	650 3041	... .	650 3044	650 3047
T-758B	1	650 3051	... .	650 3054	650 3057
T-758C	1	650 3042	... .	650 3045	650 3048
T-758V	1	650 3038	... .	650 3039	650 3040
T-759B	1	650 3052	... .	650 3055	650 3058
T-759C	1	650 3043	... .	650 3046	650 3049
T-771B	1	650 3077	650 3091	650 3083	650 3080
T-771C	1	650 3059	... .	650 3071	650 3065
T-771D	1	... .	... .	650 3117	... .
T-771E	1	650 3103	650 3097	650 3111	650 3107
T-771S	1	... .	... .	... .	650 6352
T-771W	1	... .	... .	650 3122	... .
T-773B	1	650 3078	650 3092	650 3084	650 3081
T-773C	1	650 3060	... .	650 3072	650 3066
T-773D	1	... .	... .	650 3118	... .
T-773E	1	650 3104	650 3098	650 3112	650 3108
T-773S	1	... .	... .	... .	650 6353
T-773W	1	... .	... .	650 3123	... .
T-774C	1	650 3061	... .	650 3073	650 3067
T-775B	1	... .	650 3093	650 3085	... .
T-775D	1	... .	... .	650 3119	... .
T-775E	1	... .	650 3099	650 3113	... .
T-775W	1	... .	... .	650 3124	... .
T-776B	1	... .	650 3094	650 3086	... .
T-776C	1	650 3062	... .	650 3074	650 3068
T-776D	1	... .	... .	650 3120	... .

SEATS - SOFT TRIM

Trim No.			Per Car	05-06-15-85	07-17-59-87	09-16-19-79 -86-89	08-18-88
T-776E			1	... .	650 3100	650 3114	... .
T-776W			1	... .	... .	650 3125	... .
T-777C			1	650 3063	... .	650 3075	650 3069
T-778B			1	... .	650 3095	650 3087	... .
T-778E			1	... .	650 3101	650 3115	... .
T-779B			1	650 3079	650 3096	650 3088	650 3082
T-779C			1	650 3064	... .	650 3076	650 3070
T-779D			1	... .	... .	650 3121	... .
T-779E			1	650 3106	650 3102	650 3116	650 3110
T-779S			1	... .	... .	... .	650 6354
T-779W			1	... .	... .	650 3126	... .
T-781B			1	650 3139	... .	650 3142	650 3145
T-781C			1	650 3127	... .	650 3131	650 3135
T-783B			1	650 3140	... .	650 3143	650 3146
T-783C			1	650 3128	... .	650 3132	650 3136
T-787C			1	650 3129	... .	650 3133	650 3137
T-789B			1	650 3141	... .	650 3144	650 3147
T-789C			1	650 3130	... .	650 3134	650 3138
T-791B		Except Marlin	1	650 3166	650 3230	650 3172	650 3169
		Marlin	1	... .	650 5870	... .	... .
T-791C			1	650 3148	650 3243	650 3160	650 3154
T-791E			1	650 3178	650 3236	... .	650 3182
T-791K	Left		1	... .	650 3247	650 3193	... .
	Right		1	... .	650 3246	650 3192	... .
T-791L	Left		1	... .	650 3255	650 3203	... .
	Right		1	... .	650 3254	650 3202	... .
T-791W	Left		1	... .	... .	650 3215	... .
	Right		1	... .	... .	650 3214	... .
T-793B		Except Marlin	1	650 3167	650 3231	650 3173	650 3170
		Marlin	1	... .	650 5871	... .	... .
T-793C			1	650 3149	650 3243	650 3161	650 3155
T-793E			1	650 3179	650 3237	... .	650 3183
T-793K	Left		1	... .	650 3249	650 3195	... .
	Right		1	... .	650 3248	650 3194	... .
T-793L	Left		1	... .	650 3257	650 3205	... .
	Right		1	... .	650 3256	650 3204	... .
T-793W	Left		1	... .	... .	650 3217	... .
	Right		1	... .	... .	650 3216	... .
T-794C			1	650 3150	... .	650 3162	650 3156
T-795B			1	... .	650 3232	650 3174	... .
T-795C			1	... .	650 3244	... .	... .
T-795E			1	... .	650 3238	... .	... .
T-795K	Left		1	... .	650 3251	650 3197	... .
	Right		1	... .	650 3250	650 3196	... .
T-795L	Left		1	... .	650 3259	650 3207	... .
	Right		1	... .	650 3258	650 3206	... .
T-795W	Left		1	... .	... .	650 3219	... .
	Right		1	... .	... .	650 3218	... .
T-796B			1	... .	650 3233	650 3175	... .
T-796C			1	650 3151	... .	650 3163	650 3157
T-796E			1	650 3180	650 3239	... .	650 3184
T-796K	Left		1	... .	... .	650 3199	... .
	Right		1	... .	... .	650 3198	... .
T-796L	Left		1	... .	... .	650 3209	... .
	Right		1	... .	... .	650 3208	... .
T-796W	Left		1	... .	... .	650 3221	... .
	Right		1	... .	... .	650 3220	... .
T-797C			1	650 3152	... .	650 3164	650 3158
T-798B			1	... .	650 3234	650 3176	... .
T-798E			1	... .	650 3240	... .	... .

SEATS - SOFT TRIM

Trim No.			Per Car	05-06-15-85	07-17-59-87	09-16-19-79 -86-89	08-18-88
T-798L	Left		1	... .	... .	650 3211	... .
	Right		1	... .	... .	650 3210	... .
T-799B		Except Marlin	1	650 3168	650 3235	650 3177	650 3171
		Marlin	1	... .	650 5872	... .	... .
T-799C			1	650 3153	650 3245	650 3165	650 3159
T-799E			1	650 3181	650 3241	... .	650 3185
T-799K	Left		1	... .	650 3253	650 3201	... .
	Right		1	... .	650 3252	650 3200	... .
T-799L	Left		1	... .	650 3261	650 3213	... .
	Right		1	... .	650 3260	650 3212	... .
T-799W	Left		1	... .	... .	650 3223	... .
	Right		1	... .	... .	650 3222	... .
T-828B			1	359 8548	... .	... .	... .
T-828C			1	359 8547	... .	... .	... .
T-828F			1	359 8549	... .	... .	... .
T-828M			1	359 8551	... .	... .	... .
T-828CR			1	448 6824	... .	... .	... .
T-828N			1	359 8552	... .	... .	... .
T-828R			1	362 4687	... .	... .	... .
T-831D			1	... .	... .	359 8165	... .
T-831E			1	... .	... .	359 8166	... .
T-831J			1	... .	... .	359 9314	... .
T-832D			1	... .	... .	359 8896	... .
T-832E			1	... .	... .	359 8897	... .
T-835D			1	... .	... .	359 8895	... .
T-835E			1	... .	... .	359 8171	... .
T-838J			1	... .	... .	362 3098	... .
T-843B			1	359 8554	... .	359 8576	359 8568
T-843C			1	359 8553	... .	359 8575	... .
T-844B			1	359 8931	... .	359 8579	359 8935
T-844C			1	359 8555	... .	359 8578	... .
T-845B		(* 29-38)	1	359 8933	... .	359 8581	359 8936
		(* 29-39)	1	362 4018	... .	362 4020	362 4019
T-845C			1	359 8932	... .	359 8934	... .
T-848B			1	359 8552	... .	359 8573	359 8566
T-848C			1	359 8551	... .	359 8572	... .
T-848MR			1	448 6824	... .	... .	... .
T-851C			1	651 1791	... .	651 1798	651 1805
T-851C-L			1	361 3529	... .	... .	... .
T-851F			1	651 1790	... .	651 1797	651 1804
T-851V			1	651 1794	651 3969	651 1801	651 1808
T-853C			1	651 1792	... .	651 1799	651 1806
T-853C-D			1	361 3525	... .	... .	... .
T-853V			1	651 1795	651 3970	651 1802	651 1809
T-855C			1	651 1793	... .	651 1800	651 1807
T-855V			1	651 1796	651 3971	651 1803	651 1810
T-871C			1	651 1811	... .	651 1834	651 1826
T-871E			1	... .	651 1819	651 1846	... .
T-871K			1	... .	651 1819	651 1846	... .
T-871V			1	651 1816	... .	651 1839	651 1831
T-871W			1	... .	... .	651 1850	... .
T-873C			1	651 1812	... .	651 1835	651 1827
T-873E			1	... .	651 1820	651 1847	... .
T-873K			1	... .	651 1820	651 1847	... .
T-873V			1	651 1817	... .	651 1840	651 1832
T-873W			1	... .	... .	651 1851	... .
T-874C			1	651 1813	... .	651 1836	651 1828
T-874C-D			1	361 3517	... .	... .	... .
T-874E			1	... .	651 1821	651 1841	... .
T-874K			1	... .	651 1821	651 1841	... .

SEATS - SOFT TRIM

Trim No.	Per Car	05-06-15-85	07-17-59-87	09-16-19-79 -86-89	08-18-88
T-874W	1	... .	... .	651 1855	... .
T-875E	1	... .	651 1822	651 1848	... .
T-875K	1	... .	651 1822	651 1848	... .
T-875V	1	651 1818	... .	651 1842	651 1833
T-876C	1	651 1814	... .	651 1837	651 1829
T-876E	1	... .	651 1823	651 1844	... .
T-876K	1	... .	651 1823	651 1844	... .
T-876V	1	651 1824	... .	651 1843	651 1849
T-876W	1	... .	... .	651 1862	... .
T-879C	1	651 1815	... .	651 1838	651 1830
T-879E	1	... .	651 1825	651 1845	... .
T-879K	1	... .	651 1825	651 1845	... .
T-879W	1	... .	... .	651 1869	... .
T-881C	1	651 1852	... .	651 1859	... .
T-881V	1	651 1794	... .	651 1801	... .
T-883C	1	651 1853	... .	651 1860	... .
T-883V	1	651 1795	... .	651 1802	... .
T-885C	1	651 1854	... .	651 1861	... .
T-885V	1	651 1796	... .	651 1803	... .
T-891C	1	651 1873	... .	651 1909	651 1898
T-891C-D	1	448 6809	... .	448 6815	... .
T-891E	1	... .	... .	651 1924	... .
T-891K	1	651 1878	... .	651 1914	... .
T-891V	1	651 1878	... .	651 1914	651 1903
T-891W	1	651 1919	... .	651 1896	... .
T-893C	1	651 1874	... .	651 1910	651 1899
T-893C-D	1	448 6810	... .	... .	... .
T-893E	1	... .	... .	651 1925	... .
T-893K	1	651 1879	... .	651 1915	... .
T-893V	1	651 1879	... .	651 1915	651 1904
T-893W	1	651 1920	... .	651 1907	... .
T-894C	1	651 1875	... .	651 1911	651 1900
T-894C-D	1	448 6811	... .	448 6816	... .
T-894E	1	... .	... .	651 1926	... .
T-894K	1	651 1880	... .	651 1889	... .
T-894W	1	651 1921	... .	651 1908	... .
T-895E	1	... .	... .	651 1927	... .
T-895K	1	651 1881	... .	651 1916	... .
T-895V	1	651 1881	... .	651 1916	651 1905
T-896C	1	651 1876	... .	651 1912	651 1901
T-896C-D	1	448 6812	... .	448 6817	448 6814
T-896E	1	... .	... .	651 1928	... .
T-896K	1	651 1882	... .	651 1917	... .
T-896V	1	651 1882	... .	651 1917	651 1906
T-896W	1	651 1922	... .	651 1930	... .
T-899C	1	651 1877	... .	651 1913	651 1902
T-899C-D	1	448 6813	... .	448 6818	... .
T-899E	1	... .	... .	651 1929	... .
T-899K	1	651 1883	... .	651 1918	... .
T-899W	1	651 1923	... .	651 1067	... .

1969 MODELS

Trim No.		Per Car	05-06-15-85	08-18-88	09-19-79-89	
T-000		1	... .	... .	448 9282	... .
T-921F	(05)	1	363 5958	... .	... .	... .
	(08)	1	363 5959	... .	... .	... .
T-921G	(05)	1	363 5127	... .	... .	... .
	(08)	1	363 5136	... .	... .	... .

Printed in U.S.A.

SEATS - SOFT TRIM

Trim No.	Per Car	05-06-15-85	08-18-88	09-19-79-89	
T-923A	1	363 0217	... .	... .	... .
T-923B	1	363 0218	... .	... .	... .
T-923C	1	363 0217	... .	... .	... .
T-923D	1	363 0218	... .	... .	... .
T-928A	1	363 0198	... .	... .	... .
T-928B	1	362 3293	... .	... .	... .
T-928C	1	363 0198	... .	... .	... .
T-928D	1	362 3293	... .	... .	... .
T-928G	1	362 3294	... .	... .	... .
T-928H	1	362 3294	... .	... .	... .
T-928R	1	362 3292	... .	... .	... .
T-928S	1	362 3292	... .	... .	... .
T-941A	1	362 3302	... .	362 3326	... .
T-941B	1	362 3298	362 3310	362 3322	... .
T-941C	1	362 3302	... .	362 3326	... .
T-941D	1	362 3298	362 3310	362 3322	... .
T-941K	1	448 6893	... .	... .	... .
T-943A	1	362 3299	... .	362 3323	... .
T-943B	1	362 4521	362 4523	362 4527	... .
T-943C	1	362 3299	... .	362 3323	... .
T-943D	1	362 4521	362 4523	362 4527	... .
T-944	1	362 3300	362 4524	362 3324	... .
T-945A	1	... .	... .	362 4528	... .
T-945B	1	362 3301	... .	362 3325	... .
T-945C	1	... .	... .	362 4528	... .
T-945D	1	362 3301	... .	362 3325	... .
T-951B	1	652 0663	652 0677	652 0670	... .
T-951D	1	652 0663	652 0677	652 0670	... .
T-951G	1	652 0659	652 0673	652 0666	... .
T-951H	1	652 0659	652 0673	652 0666	... .
T-953A	1	652 0660	... .	652 0667	... .
T-953B	1	652 2127	652 2131	652 2129	... .
T-953C	1	652 0660	652 0674	652 0667	... .
T-953D	1	652 2127	652 2131	652 2129	... .
T-956A	1	652 0661	... .	652 0668	... .
T-956B	1	... .	652 0679	652 0672	... .
T-956C	1	652 0661	... .	652 0675	... .
T-956D	1	652 0665	652 0679	652 0672	... .
T-957A	1	652 0662	... .	652 0669	... .
T-957B	1	... .	652 2132	652 2130	... .
T-957C	1	652 0662	652 0676	652 0669	... .
T-957D	1	652 2128	652 2132	652 2130	... .
T-961E (* 29-103)	1	... .	... .	362 3367	... .
(* 29-104)	1	... .	... .	363 5344	... .
T-961F	1	... .	... .	362 3368	... .
T-961J	1	... .	... .	362 3369	... .
T-961K	1	... .	... .	448 6898	... .
T-962E (* 29-103)	1	... .	... .	363 0335	... .
(* 29-104)	1	... .	... .	363 5368	... .
T-962F	1	... .	... .	363 0334	... .
T-963E	1	... .	... .	362 3373	... .
T-963F	1	... .	... .	362 3374	... .
T-965E	1	... .	... .	362 4587	... .
T-965F	1	... .	... .	362 3372	... .
T-966E	1	... .	... .	362 3370	... .
T-966F	1	... .	... .	362 3371	... .
T-968J	1	... .	... .	362 3375	... .

SEATS - SOFT TRIM

Trim No.	Per Car	05-06-15-85	08-18-88	09-19-79-89	
T-972A	1	652 2133	... .	652 2139	... .
T-972B	1	652 2134	652 2137	652 2140	... .
T-972C	1	652 2133	652 2136	652 2139	... .
T-972D	1	652 2134	652 2137	652 2140	... .
T-972E	1	... .	... .	652 2139	... .
T-972F	1	... .	... .	652 2140	... .
T-973A	1	652 0684	... .	652 0716	... .
T-973B	1	... .	652 0710	652 0720	... .
T-973C	1	652 0684	652 0706	652 0716	... .
T-973D	1	652 0688	652 0710	652 0720	... .
T-973E	1	... .	... .	652 0716	... .
T-975	1	... .	... .	652 0721	... .
T-976A	1	652 0685	... .	652 0717	... .
T-976B	1	... .	652 0712	652 0722	... .
T-976C	1	652 0685	652 0707	652 0717	... .
T-976D	1	652 0690	652 0712	652 0722	... .
T-977A	1	652 0686	... .	652 0718	... .
T-977B	1	... .	652 2138	... .	... .
T-977C	1	652 0686	652 0708	652 0718	... .
T-977D	1	652 2135	652 2138	... .	... .
T-979	1	... .	... .	652 0723	... .
T-981B	1	652 0663	... .	... .	... .
T-981D	1	652 0663	... .	... .	... .
T-981G	1	652 0659	... .	... .	... .
T-981H	1	652 0659	... .	... .	... .
T-983A	1	652 0731	... .	... .	... .
T-983C	1	652 0731	... .	... .	... .
T-983D	1	652 2127	... .	... .	... .
T-986A	1	652 0732	... .	... .	... .
T-986C	1	652 0732	... .	... .	... .
T-986D	1	652 0665	... .	... .	... .
T-987A	1	652 0733	... .	... .	... .
T-987C	1	652 0733	... .	... .	... .
T-987D	1	652 2128	... .	... .	... .
T-991A	1	652 0737	... .	652 0773	... .
T-991B	1	... .	652 0767	652 0777	... .
T-991C	1	652 0737	652 0763	652 0773	... .
T-991D	1	652 0741	652 0767	652 0777	... .
T-991F	1	... .	... .	652 0751	... .
T-991N	1	652 0787	652 2175	652 0751	... .
T-992E	1	... .	... .	652 2147	... .
T-992M	1	652 2144	... .	652 2147	... .
T-992V	1	652 2145	... .	... .	... .
T-993A	1	652 0738	... .	652 0774	... .
T-993B	1	... .	652 0768	652 0778	... .
T-993C	1	652 0738	652 0764	652 0774	... .
T-993D	1	652 0742	652 0768	652 0778	... .
T-993E	1	... .	... .	652 0748	... .
T-993F	1	... .	... .	652 0752	... .
T-993M	1	652 0784	652 2172	652 0748	... .
T-993N	1	... .	652 5910	652 0752	... .
T-993V	1	652 2146	... .	... .	... .
T-995B	1	... .	... .	652 0779	... .
T-995D	1	... .	... .	652 0779	... .
T-995F	1	... .	... .	652 0753	... .
T-995N	1	... .	... .	652 0753	... .
T-996A	1	652 0739	... .	652 0775	... .
T-996B	1	... .	652 0770	652 0780	... .
T-996C	1	652 0739	652 0765	652 0775	... .
T-996D	1	652 0744	652 0770	652 0780	... .

SEATS - SOFT TRIM

Trim No.	Per Car	05-06-15-85	08-18-88	09-19-79-89	
T-996E	1	... .	... .	652 0749	... .
T-996F	1	... .	... .	652 0754	... .
T-996M	1	652 0785	652 2173	652 0749	... .
T-996N	1	652 0790	652 2176	652 0754	... .
T-997A	1	652 0740	... .	652 0776	... .
T-997B	1	... .	652 2142	652 2143	... .
T-997C	1	652 0740	652 0766	652 0776	... .
T-997D	1	652 2141	652 2142	652 2143	... .
T-997E	1	... .	... .	652 0750	... .
T-997M	1	652 0786	652 2174	652 0750	... .
T-999	1	... .	... .	652 0755	... .

1970 MODELS

Trim No.	Per Car	05-06-15-85	18-88	19-46-79-89
T-001	1	... .	... .	364 1282
T-008	1	... .	... .	364 1293
T-011B	1	... .	... .	363 5556
T-011F	1	... .	... .	363 5556
T-011FD	1	... .	... .	365 0965
T-013B	1	... .	... .	363 5557
T-013F	1	... .	... .	363 5557
T-013FD	1	... .	... .	365 0966
T-014B	1	... .	... .	364 1292
T-014F	1	... .	... .	364 1292
T-014FD	1	... .	... .	365 0967
T-015B	1	... .	... .	363 5558
T-015F	1	... .	... .	363 5558
T-015FD	1	... .	... .	365 0968
T-021A	1	363 0558	... .	... .
T-021B	1	363 0425	... .	... .
T-021G	1	363 0426	... .	... .
T-023A	1	363 0559	... .	... .
T-023B	1	363 0560	... .	... .
T-024A	1	363 5862	... .	... .
T-024B	1	363 5863	... .	... .
T-025A	1	363 5864	... .	... .
T-025B	1	363 5865	... .	... .
T-041A	1	363 0427	... .	... .
T-041B	1	363 0428	... .	... .
T-041C	1	363 0427	... .	... .
T-041D	1	363 0428	... .	... .
T-043A	1	363 0429	... .	... .
T-043B	1	363 0430	... .	... .
T-043C	1	363 0429	... .	... .
T-043D	1	363 0430	... .	... .
T-043V	1	363 5942	... .	... .
T-044A	1	363 0431	... .	... .
T-044B	1	363 5861	... .	... .
T-044C	1	363 0431	... .	... .
T-044D	1	363 5861	... .	... .
T-044V	1	363 5943	... .	... .
T-045A	1	363 0808	... .	... .
T-045C	1	363 0808	... .	... .
T-051B	1	652 5939	652 5947	652 5955
T-051D	1	652 5939	652 5947	652 5955
T-051F	1	... .	... .	652 5979
T-051G	1	652 5935	652 5943	652 5951
T-051H	1	652 5935	652 5943	652 5951
T-051P	1	448 8485	... .	... .
T-051V	1	448 8486	... .	... .
T-053A	1	652 5936	... .	652 5952
T-053A-D	1	448 9340	... .	... .
T-053B	1	652 5940	652 5948	652 5956

SEATS - SOFT TRIM

Trim No.	Per Car	05-06-15-85	18-88	19-46-79-89
T-053C	1	652 5936	652 5944	652 5952
T-053D	1	652 5940	652 5948	652 5956
T-053F	1	... .	... .	652 5980
T-054A	1	652 5937	... .	652 5953
T-054B	1	652 5941	652 5949	652 5957
T-054B-D	1	448 9341	... .	... .
T-054C	1	652 5937	652 5945	652 5953
T-054D	1	652 5941	652 5949	652 5957
T-056A	1	652 5938	... .	652 5954
T-056B	1	652 5942	652 5950	652 5958
T-056C	1	652 5938	652 5946	652 5954
T-056D	1	652 5942	652 5950	652 5958
T-056F	1	... .	... .	652 5983
T-061E	1	... .	... .	363 0474
T-061F	1	.. ....	... .	363 5885
T-061J	1	... .	... .	363 0475
T-061L	1	... .	... .	363 0880
T-063E	1	... .	... .	363 0476
T-063F	1	... .	... .	363 5886
T-063J	1	... .	... .	363 0477
T-064E	1	... .	... .	363 0581
T-064F	1	... .	... .	363 5889
T-064J	1	... .	... .	363 0582
T-064JC	1	... .	... .	363 5889
T-065E	1	... .	... .	363 0478
T-065F	1	... .	... .	363 5887
T-065J	1	... .	... .	363 0479
T-065L	1	... .	... .	363 5496
T-066E	1	... .	... .	363 0480
T-066F	1	... .	... .	363 5888
T-066J	1	... .	... .	363 0481
T-066L	1	... .	... .	363 0881
T-071A	1	652 5959	... .	652 5975
T-071B	1	652 5963	652 5971	652 5979
T-071C	1	652 5959	652 5967	652 5975
T-071D	1	652 5963	652 5971	652 5979
T-071E	1	... .	... .	652 5975
T-071F	1	... .	... .	652 5979
T-071S	1	652 8244	... .	652 8248
T-073A	1	652 5960	... .	652 5976
T-073B	1	652 5964	652 5972	652 5980
T-073C	1	652 5960	652 5968	652 5976
T-073D	1	652 5964	652 5972	652 5980
T-073E	1	... .	... .	652 5976
T-073F	1	... .	... .	652 5980
T-073S	1	652 8245	... .	652 8249
T-074A	1	652 5961	... .	652 5977
T-074B	1	652 5965	652 5973	652 5981
T-074C	1	652 5961	652 5969	652 5977
T-074D	1	652 5965	652 5973	652 5981
T-074S	1	652 8246	... .	652 8250
T-075B	1	... .	652 6150	652 5982
T-075D	1	652 6149	652 6150	652 5982
T-075F	1	... .	... .	652 5982
T-076A	1	652 5962	... .	652 5978
T-076B	1	652 5966	652 5974	652 5983
T-076C	1	652 5962	652 5970	652 5978
T-076D	1	652 5966	652 5974	652 5983

SEATS - SOFT TRIM

Trim No.	Per Car	05-06-15-85	18-88	19-46-79-89
T-076F	1	... .	... .	652 5983
T-076S	1	652 8247	... .	652 8251
T-081B	1	652 5987	... .	... .
T-081D	1	652 5987	... .	... .
T-083A	1	652 5984	... .	... .
T-083C	1	652 5984	... .	... .
T-083D	1	652 5988	... .	... .
T-084A	1	652 5985	... .	... .
T-084C	1	652 5985	... .	... .
T-084D	1	652 5989	... .	... .
T-086A	1	652 5986	... .	... .
T-086C	1	652 5986	... .	... .
T-086D	1	652 5990	... .	... .
T-091A	1	652 5991	... .	652 6007
T-091B	1	652 5995	652 6003	652 6011
T-091C	1	652 5991	652 5999	652 6007
T-091D	1	652 5995	652 6003	652 6011
T-091E	1	... .	... .	652 6034
T-091F	1	... .	... .	652 6038
T-091M	1	652 6019	652 6027	652 6034
T-091N	1	652 6023	652 6031	652 6038
T-091S	1	652 8244	... .	652 8248
T-091V	1	652 6025	... .	... .
T-093A	1	652 5992	... .	652 6008
T-093B	1	652 5996	652 6004	652 6012
T-093C	1	652 5992	652 6000	652 6008
T-093D	1	652 5996	652 6004	652 6012
T-093E	1	... .	... .	652 6035
T-093F	1	... .	... .	652 6039
T-093M	1	652 6020	652 6028	652 6035
T-093N	1	652 6153	652 6032	652 6039
T-093S	1	652 8245	... .	652 8249
T-093V	1	652 6026	... .	... .
T-094A	1	652 5993	... .	652 6009
T-094B	1	652 5997	652 6005	652 6013
T-094C	1	652 5993	652 6001	652 6009
T-094D	1	652 5997	652 6005	652 6013
T-094E	1	... .	... .	652 6036
T-094F	1	... .	... .	652 6040
T-094M	1	652 6021	652 6029	652 6036
T-094N	1	652 6154	652 6156	652 6040
T-094S	1	652 8246	... .	652 8250
T-095B	1	... .	652 6152	652 6014
T-095D	1	652 6151	652 6152	652 6014
T-095F	1	... .	... .	652 6041
T-095N	1	652 6155	652 6157	652 6041
T-096A	1	652 5994	... .	652 6010
T-096B	1	652 5998	652 6006	652 6015
T-096C	1	652 5994	652 6002	652 6010
T-096D	1	652 5998	652 6006	652 6015
T-096E	1	... .	... .	652 6037
T-096F	1	... .	... .	652 6042
T-096M	1	652 6022	652 6030	652 6037
T-096N	1	652 6024	652 6033	652 6042
T-096S	1	652 8247	... .	652 8251

SEATS - SOFT TRIM

1971 MODELS

Trim No.	Per Car	05-06-15-85	08-18-88	19-46-79-89
T-101B	1	... .	... .	364 1708
T-103A	1	... .	... .	365 1920
T-104A	1	... .	... .	365 1921
T-103B	1	... .	... .	364 1709
T-108B	1	... .	... .	365 1439
T-111B	1	... .	... .	364 1710
T-111S	1	... .	... .	364 1710
T-113B	1	... .	... .	364 1711
T-113S	1	... .	... .	364 1711
T-114B	1	... .	... .	364 1712
T-114S	1	... .	... .	364 1712
T-115B	1	... .	... .	364 1713
T-115S	1	... .	... .	364 1713
T-121A	1	364 1692	... .	... .
T-121AX	1	366 1073	... .	... .
T-121B	1	364 1693	... .	... .
T-121G	1	364 1694	... .	... .
T-123A	1	364 1695	... .	... .
T-123AX	1	366 1074	... .	... .
T-123B	1	364 1696	... .	... .
T-124A	1	364 1697	... .	... .
T-124B	1	364 1698	... .	... .
T-128B	1	365 1438	... .	... .
T-141A	1	364 1699	... .	... .
T-141B	1	364 1700	364 1788	... .
T-141C	1	364 1699	... .	... .
T-141D	1	364 1700	364 1788	... .
T-141V	1	364 1706	365 0882	... .
T-143A	1	364 1701	... .	... .
T-143B	1	364 1702	364 1789	... .
T-143C	1	364 1701	... .	... .
T-143D	1	364 1702	364 1789	... .
T-143V	1	365 0541	365 0881	... .
T-144A	1	364 1703	... .	... .
T-144B	1	364 1704	364 1790	... .
T-144C	1	364 1703	... .	... .
T-144D	1	364 1704	364 1790	... .
T-144V	1	365 0542	365 0884	... .
T-145B	1	364 1705	364 1791	... .
T-145D	1	364 1705	364 1791	... .
T-145V	1	364 1707	365 0883	... .
T-151A	1	652 8059	... .	652 8070
T-151B	1	652 8062	652 8066	652 8073
T-151C	1	652 8059	... .	652 8070
T-151D	1	... .	652 8066	... .
T-151G	1	652 8058	652 8065	652 8069
T-151H	1	... .	652 8065	... .
T-153A	1	652 8060	... .	652 8071
T-153B	1	652 8063	652 8067	652 8074
T-153C	1	652 8060	... .	652 8071
T-153D	1	... .	652 8067	... .
T-154A	1	652 8061	... .	652 8072
T-154B	1	652 8064	652 8068	652 8075
T-154C	1	652 8061	... .	652 8072
T-154D	1	... .	652 8068	... .
T-161J	1	... .	... .	364 1414
T-161JX	1	... .	... .	365 1801
T-161L	1	... .	... .	364 1417
T-161R	1	... .	... .	364 1415
T-161S	1	... .	... .	364 1416
T-161SX	1	... .	... .	365 1800
T-163J	1	... .	... .	364 1418

SEATS - SOFT TRIM

Trim No.	Per Car	05-06-15-85	08-18-88	19-46-79-89
T-163JX	1	... .	... .	365 1802
T-163R	1	... .	... .	364 1419
T-163S	1	... .	... .	364 1420
T-164J	1	... .	... .	364 1421
T-164R	1	... .	... .	364 1422
T-164S	1	... .	... .	364 1423
T-165J	1	... .	... .	364 1424
T-165JX	1	... .	... .	365 1803
T-165L	1	... .	... .	364 1427
T-165R	1	... .	... .	364 1425
T-165S	1	... .	... .	364 1426
T-168S	1	... .	... .	365 1463
T-171A	1	652 8076	... .	652 8091
T-171B	1	... .	652 8087	652 8095
T-171C	1	652 8076	652 8083	... .
T-171D	1	652 8080	652 8087	652 8095
T-171G	1	652 8058	652 8065	652 8069
T-171H	1	... .	652 8065	... .
T-171S	1	... .	... .	652 8145
T-171V	1	... .	... .	652 8452
T-173A	1	652 8077	... .	652 8092
T-173B	1	... .	652 8088	652 8096
T-173C	1	652 8077	652 8084	... .
T-173D	1	652 8081	652 8088	652 8096
T-173S	1	... .	... .	652 8146
T-173V	1	... .	... .	652 8540
T-174A	1	652 8078	... .	652 8093
T-174B	1	... .	652 8089	652 8097
T-174C	1	652 8078	652 8085	... .
T-174D	1	652 8082	652 8089	652 8097
T-174S	1	... .	... .	652 8147
T-174V	1	... .	... .	652 8541
T-175A	1	652 8079	... .	652 8094
T-175B	1	... .	652 8090	652 8098
T-175C	1	652 8079	652 8086	... .
T-175D	1	... .	652 8090	652 8098
T-175S	1	... .	... .	652 8148
T-175V	1	... .	... .	652 8453
T-176D	1	652 9546	652 9547	652 9548
T-181A	1	652 8099	... .	... .
T-181B	1	652 8062	... .	... .
T-181C	1	652 8099	... .	... .
T-183A	1	652 8100	... .	... .
T-183B	1	652 8063	... .	... .
T-183C	1	652 8100	... .	... .
T-184A	1	652 8101	... .	... .
T-184B	1	652 8064	... .	... .
T-184C	1	652 8101	... .	... .
T-186D	1	652 9546	... .	... .
T-191A	1	652 8102	... .	652 8117
T-191B	1	652 8106	652 8109	652 8121
T-191C	1	652 8102	652 8113	652 8117
T-191D	1	652 8106	652 8109	652 8121
T-191M	1	652 8125	652 8133	652 8141
T-191N	1	652 8129	652 8137	652 8145
T-191R	1	... .	... .	652 8141
T-191S	1	... .	... .	652 8145
T-191V	1	652 8454	... .	652 8456
T-193A	1	652 8103	... .	652 8118
T-193B	1	652 8107	652 8110	652 8122
T-193C	1	652 8103	652 8114	652 8118
T-193D	1	652 8107	652 8110	652 8122
T-193M	1	652 8126	652 8134	652 8142
T-193N	1	652 8130	652 8138	652 8146
T-193R	1	... .	... .	652 8142
T-193S	1	... .	... .	652 8146

SEATS - SOFT TRIM

Trim No.	Per Car	05-06-15-85	08-18-88	19-46-79-89
T-193V	1	652 8455	... .	652 8457
T-194A	1	652 8104	... .	652 8119
T-194B	1	652 8108	652 8111	652 8123
T-194C	1	652 8104	652 8115	652 8119
T-194D	1	652 8108	652 8111	652 8123
T-194M	1	652 8127	652 8135	652 8143
T-194N	1	652 8131	652 8139	652 8147
T-194R	1	... .	... .	652 8143
T-194S	1	... .	... .	652 8151
T-195A	1	652 8105	... .	652 8120
T-195B	1	... .	652 8112	652 8124
T-195C	1	652 8105	652 8116	652 8120
T-195D	1	... .	652 8112	652 8124
T-195M	1	652 8128	652 8136	652 8144
T-195N	1	652 8132	652 8140	652 8148
T-195R	1	... .	... .	652 8144
T-195S	1	... .	... .	652 8152
T-196D	1	652 9546	652 9547	652 9548
T-196N	1	652 9546	652 9547	652 9548

1972 MODELS

Trim No.	Per Car	05-06-15-85	08-18-88	19-46-79-89
T-201A	1	... .	... .	366 2593
T-201B	1	... .	... .	365 0778
T-203A	1	... .	... .	366 2594
T-203B	1	... .	... .	365 0779
T-206A	1	... .	... .	366 2595
T-206B	1	... .	... .	365 1115
T-208B	1	... .	... .	366 8560
T-211	1	... .	... .	365 0780
T-213	1	... .	... .	365 0781
T-215	1	... .	... .	365 0783
T-216	1	... .	... .	365 1116
T-218	1	... .	... .	366 8561
T-221G	1	365 0758	... .	366 2876
T-241A	1	365 0763	... .	... .
T-241B	1	365 0764	... .	... .
T-241C	1	365 0763	... .	... .
T-241D	1	365 0764	365 0774	... .
T-241S	1	366 1938	... .	... .
T-241V	1	365 0770	365 1754	... .
T-243A	1	365 0765	... .	... .
T-243B	1	365 0766	365 0775	... .
T-243C	1	365 0765	... .	... .
T-243D	1	365 0766	365 0775	... .
T-243S	1	366 1939	... .	... .
T-243V	1	365 0771	365 1755	... .
T-244A	1	365 0767	... .	... .
T-244B	1	365 0768	365 0776	... .
T-244C	1	365 0767	... .	... .
T-244D	1	365 0768	365 0776	... .
T-244V	1	365 0772	365 1756	... .
T-244W	1	... .	365 1818	... .
T-245S	1	366 1940	... .	... .
T-246A	1	365 1734	... .	... .
T-246B	1	365 1732	365 1733	... .
T-246C	1	365 1734	... .	... .
T-246D	1	365 1732	365 1733	... .
T-246S	1	366 1941	... .	... .
T-246V	1	365 1735	365 1757	... .
T-248B	1	366 8558	366 8559	... .
T-248D	1	366 8558	366 8559	... .
T-248S	1	366 8562	... .	... .

Printed in U.S.A.

SEATS - SOFT TRIM

Trim No.	Per Car	05-06-15-85	08-18-88	19-46-79-89
T-261R (* 29-146)	1	... .	... .	366 1582
(* 29-147)	1	... .	... .	366 8989
T-261S	1	... .	... .	365 0843
T-261W	1	... .	... .	366 1932
T-263R	1	... .	... .	366 1583
T-263S	1	... .	... .	365 0846
T-264R	1	... .	... .	366 1584
T-264S	1	... .	... .	365 0848
T-265S	1	... .	... .	365 0850
T-266R	1	... .	... .	366 1585
T-266S	1	... .	... .	365 1123
T-268S	1	... .	... .	366 8216
T-271A	1	652 9699	... .	652 9703
T-271B	1	652 9719	652 9723	652 9727
T-271D	1	652 9769	652 9773	652 9777
T-271G	1	652 8058	652 8065	652 8069
T-271H	1	652 8058	652 8065	652 8069
T-271S	1	... .	... .	652 9777
T-271V	1	652 9707	652 9711	652 9715
T-271Z	1	812 2010	... .	... .
T-273A	1	652 9700	... .	652 9704
T-273B	1	653 1784	652 9724	... .
T-273D	1	652 9770	652 9774	652 9778
T-273S	1	... .	... .	652 9779
T-273V	1	652 9708	652 9712	652 9716
T-273Z	1	812 2011	... .	... .
T-274A	1	652 9701	... .	652 9705
T-274B	1	653 1785	652 9725	... .
T-274D	1	652 9771	652 9775	652 9779
T-274S	1	... .	... .	652 9779
T-274V	1	652 9709	652 9713	652 9717
T-274Z	1	812 2012	... .	... .
T-276A	1	652 9702	... .	652 9706
T-276B	1	653 1786	652 9726	... .
T-276D	1	652 9772	652 9776	652 9780
T-276S	1	... .	... .	652 9780
T-276V	1	652 9710	652 9714	652 9718
T-276Z	1	812 2013	... .	... .
T-291A	1	652 9735	... .	652 9739
T-291B	1	653 1789	652 9743	... .
T-291C	1	652 9735	... .	652 9739
T-291D	1	652 9769	652 9773	652 9777
T-291E	1	652 9749	... .	652 9753
T-291F	1	... .	652 9773	... .
T-291N	1	652 9769	652 9773	652 9777
T-291S	1	... .	... .	652 9777
T-291V	1	652 9757	652 9761	652 9765
T-291Z	1	812 2014	... .	... .
T-293A	1	652 9736	... .	652 9740
T-293B	1	653 1790	652 9744	... .
T-293C	1	652 9736	... .	652 9740
T-293D	1	652 9770	652 9774	652 9778
T-293E	1	652 9750	... .	652 9754
T-293F	1	... .	... .	652 9778
T-293N	1	652 9770	652 9774	652 9778
T-293S	1	... .	... .	652 9778
T-293V	1	652 9758	652 9762	652 9766
T-293Z	1	812 2016	... .	... .
T-294A	1	652 9737	... .	652 9741
T-294B	1	653 1791	652 9745	... .
T-294C	1	652 9737	... .	652 9741
T-294D	1	652 9771	652 9775	652 9779
T-294E	1	652 9751	... .	652 9755
T-294F	1	... .	652 9775	... .
T-294N	1	652 9771	652 9775	652 9779
T-294S	1	... .	... .	652 9779
T-294V	1	652 9759	652 9763	652 9767
T-294Z	1	812 2017	... .	... .

Printed in U.S.A.

SEATS - SOFT TRIM

Trim No.	Per Car	05-06-15-85	08-18-88	19-46-79-89
T-296A	1	652 9738	... .	652 9742
T-296B	1	653 0138	652 9746	... .
T-296C	1	652 9738	... .	652 9742
T-296D	1	652 9772	652 9776	652 9780
T-296E	1	652 9752	... .	652 9756
T-296F	1	... .	652 9776	... .
T-296N	1	652 9772	652 9776	652 9780
T-296S	1	... .	652 9780	... .
T-296V	1	652 9760	652 9764	652 9768
T-296Z	1	812 2017	... .	... .

29.214–1 PANEL, Rear Seat Back (Metal)(For Board Frame Refer To Group 29.220–1)

71	08–40	.....	1	364 3571
70	40	.....	1	363 8813

29.214–1a ATTACHING PARTS, Panel To Pivot Pin

PIN, Locking	70	46 (Used With Folding Back)	29.140	1	400 0406

29.214–1b ATTACHING PARTS, Panel To Back Spring (Frame)

SCREW, Tapping	70	46	12.168	4	400 2731

29.214–1c BRACKET, Rear Seat Back Pivot (On Rear Seat Back)

72	(Left) 46 (Used With Folding Back)	.....	1	364 7245
72	(Right) 46 (Used With Folding Back)	.....	1	364 7244

29.214–1d ATTACHING PARTS, Bracket To Frame

SCREW, Machine	72	46 (Used With Folding Back)	.....	4	G446680

29.214–2 COVER, Rear Seat Back Pivot

Trim No.	Per Car	40
T-001	1	364 0234
T-008	1	364 0234
T-011	1	364 0234
T-013	1	364 0235
T-014	1	364 0237
T-015	1	364 0236
T-201	2	364 7247
T-203	2	364 7248
T-206	2	364 7249
T-208	2	364 7247
T-211	2	364 7247
T-213	2	364 7248
T-215	2	364 7247
T-216	2	364 7249
T-218	2	364 7247
T-221G	2	364 7247

29.214–3 ROD, Rear Seat Back Locking

70/71	08–40	.....	1	363 8694
72	08	.....	1	364 7258
72	46 (Used With Folding Back)	.....	1	364 7257

29.214–3a SLEEVE, Rear Seat Back Locking Rod

72	08	.....	3	364 7253
72	46 (Used With Folding Back)	.....	1	364 7253

29.214–3b SPRING, Rear Seat Back Locking Rod Return

72	08–46 (Used With Folding Back)	.....	1	364 7259

Printed in U.S.A.

29.214–4 COVER, Rear Seat Back Locking Rod (Handle)

70/	08–40	AR	AR	363 8697

29.214–5 BRACKET, Rear Seat Back Locking Rod Mounting

70/71	(Left) 08–40		1	362 9503
70/71	(Right) 08–40		1	362 9502

29.214–6 ATTACHING PARTS, Bracket To Frame

SCREW, Tapping	70	40 (1" Long)	29.470	4	400 0471
SCREW, Machine	71	08–40 (1/2" Long)	17.598	4	G454542 NA

29.214–7 BUMPER, Rear Seat Back Retainer Latch

71/	08–40		2	363 6974
70	40 (Square Type)		2	363 6558

29.215–1 PANEL, Rear Seat Back Upper Trim

67 07 "AMERICAN" Model

T–741		1	357 7600
T–743		1	357 7601
T–745		1	357 7603
T–748		1	357 7600
T–749		1	357 7604

67-68 17 "REBEL" And 87 "AMBASSADOR" Models

67/68		1	650 3781

29.215–2 ATTACHING PARTS, Panel To Back Frame

SCREW, Tapping	67	07–87	17.666	7	G161645 NA
SCREW, Tapping	67/68	17	17.666	7	G161645 NA

29.216 COVER, Rear Seat Back Center Armrest Strainer

Trim No.			Per Car	59 (WBS)
T–791	Left		1	650 5757
	Right		1	650 5756
T–793	Left		1	650 5759
	Right		1	650 5758
T–795	Left		1	650 5761
	Right		1	650 5760
T–796	Right		1	650 5763
	Right		1	650 5762

29.217–1 LOOP, Rear Seat Back Latch Retainer (On Rear Wheelhouse)

67/69	(Left) 08		1	350 2547
67/69	(Right) 08		1	350 2546
67/	18–88		2	358 0541

29.217–2 ATTACHING PARTS, Loop To Wheelhouse Panel

SCREW, Tapping	67/69	08	17.660	4	G163309 NA
SCREW, Tapping	67/68	18–88	25.054	4	400 0658
SCREW, Tapping	69/	18–88 (#10–12 × 5/8) ***(Use 318 9013)***	17.671	4	400 0478
SCREW, Tapping	72	18–88 (1/4 × 14 × 5/8)	17.671	4	400 1040

Printed in U.S.A.

SEATS - SOFT TRIM

29.217–3 BRACKET, Rear Seat Back Pivot Pin (On Rear Wheelhouse)

72	46	29.226	2	364 7242	
71/	(Left) 08...(Incl. Back Bracket)	29.226	1	363 2965	
70	(Left) 40	.....	1	362 9577	
71/	(Right) 08...(Incl. Back Bracket)	29.226	1	363 2964	
70	(Right) 40	.....	1	362 9576	

29.217–3a ATTACHING PARTS, Back Half Of Pivot Pin Bracket To Back

SCREW, Machine.....	71/	(5/16"-18 x 1/2") 08-46	17.598	4	G160679	NA
SCREW, Machine.....	72	(1/4"-20 x 3/4") 08-46	17.616	4	G446680	

29.217–4 SPACER, Rubber (Rear Seat Back Pivot)

70	40	12.001	2	400 0256	

29.219–1 RETAINER, Rear Seat Back Latch (On Rear Seat Back)

67	(Left) 08	.....	1	348 8841	
67	(Left) 18-88	.....	1	358 0537	
68	(Left) 08-18-88 (* 29-66)	.....	1	358 0537	
68	(Left) 08-18-88 (* 29-67)	.....	1	348 8841	
69	(Left) 08-18-88	.....	1	348 8841	
70/	(Left) 18-88	.....	1	348 8841	
67/69	(Right) 08-18-88	.....	1	348 8840	
70/	(Right) 18-88	.....	1	348 8840	

29.219–1a RETAINER, Rear Seat Back Latch (On Rear Wheelhouse)

71/	(Left) 08	29.214	1	361 6077	
70	(Left) 40	.....	1	363 8699	
71/	(Left) 40	.....	1	363 3781	
71/	(Right) 08	29.214	1	361 6076	
70	(Right) 40	.....	1	363 8698	
71/	(Right) 40	.....	1	363 3780	

29.219–1b BRACKET, Rear Seat Back Latch Retainer (On Rear Wheelhouse)

71/	08	.....	2	363 2142	

29.219–1c ATTACHING PARTS, Retainer Bracket To Wheelhouse

SCREW, Tapping.....	71	08	25.054	4	400 0658	
SCREW, Tapping.....	72	08	.....	4	400 4452	

29.219–2 ATTACHING PARTS, Latch Retainer To Back

REINFORCEMENT	67/69	08-18-88	.....	2	348 3251	
REINFORCEMENT.....	70/	18-88	.....	2	348 3251	
SCREW, Machine.....	67/69	08-18-88	17.616	4	G155363	NA
SCREW, Machine.....	70/	18-88	17.616	2	G155366	NA

29.219–2a BRACKET, Rear Seat Back Latch Rod Mounting

72	08	.....	3	365 6036	
72	46 (With Folding Back)	.....	1	365 6036	

29.219–2b ATTACHING PARTS, Bracket To Seat Frame

SCREW, Machine.....	72	08-46	.....	AR	G446680	NA

29.219–3 BUMPER, Rear Seat Back Footman Loop Stop

67/68	08-18-88 (9/32 Head)	29.219	2	347 1768	
67/69	08-18-88 (5/32 Head)	20.450	2	400 0313	
70/	18-88 (5/32 Head)	20.450	2	400 0313	

SEATS - SOFT TRIM

29.220–1 FRAME ASSEMBLY, Rear Seat Back (Board)(For Metal Panel On Models 08-46 Refer To Group 29.214–1)

67/69	08...(Incl. Plates)	.....	1	350 2530	
72	08...(Incl. Tee Nuts)	.....	1	365 6316	
67	18-88...(Incl. Tee Nuts)	.....	1	680 0445	
68/	18-88...(Less Tee Nuts)	.....	1	361 1816	
72	46 (With Folding Back)...(Incl. Tee Nuts)	.....	1	365 6317	

29.220–1a NUT, Rear Seat Back Frame Tee

72	08-18-46-88 (Type "G"-Three Prong)	17.438	AR	G9409727	NA
72	18-88 (Type "G"-10-24)	.....	10	G453824	

29.220–1b ATTACHING PARTS, Frame To Pivot Pin

NUT, Push	72	46 (With Folding Back)	.....	2	400 4470	

29.220–2 PLATE, Rear Seat Back Hinge Fastening

67/69	08	.....	2	343 9346	

29.220–3 ATTACHING PARTS, Hinge Plate To Frame

NAIL, Countersunk	67/69	08	17.374	4	G116330	NA
SCREW, Tapping	70	40	12.168	4	400 2731	
PIN, Locking	70	40 (Left Side)	29.140	1	400 0406	

29.220–4 REINFORCEMENT, Rear Seat Back Frame

68/69	(Left) 08-18-88	.....	1	361 3508	
70/	(Left) 18-88	.....	1	361 3508	
68/69	(Right) 08-18-88	.....	1	360 7073	
70/	(Right) 18-88	.....	1	360 7073	

29.220–5 ATTACHING PARTS, Reinforcement To Back Frame

SCREW, Machine	68/69	08-18-88	17.586	2	G156265	NA
SCREW, Machine	70/	18-88	17.586	2	G156270	NA

29.220–6 SPACER, Rear Seat Back Frame Reinforcement

68/69	08-18-88	.....	4	342 1102	
70/	18-88	.....	4	342 1102	

29.220–7 NUT, Rear Seat Back Extension Frame Hinge Tee

67/	18-88	17.438	10	G453824	

29.220–8 NUT, Rear Seat Back Frame Side Arm Bracket Tee

67/	18-88	17.438	8	G9409727	NA

Printed in U.S.A.

SEATS - SOFT TRIM

29.221–1 HINGE, Rear Seat Back

67/69	08	.....	2	350 1169	

29.221–2 ATTACHING PARTS, Back Hinge To Body Hinge

RIVET, Tubular	67/69	08	.....	2	400 0432
WASHER, Plain.....	67/69	08	17.814	2	G446152 NA

29.221–3 ATTACHING PARTS, Hinge To Back Frame

SCREW, Tapping.....	67/69	08	17.660	4	G162002 NA

29.222–1 SPRING, Rear Seat Back

67	05-06	.....	1	350 2125
68/69	05-06	.....	1	360 5052
70/	05-06	.....	1	363 7789
67	07	.....	1	350 2128
67/69	08	.....	1	350 2127
71	08	29.220	1	363 8995
72	08	.....	1	364 7899
67/69	09	.....	1	351 8193
67/	15 (Except Heavy Duty)	.....	1	358 0500
67	16-19-86 (Except Heavy Duty)	.....	1	358 0499
67/68	17	.....	1	358 0501
67/	18 (Except Heavy Duty)	.....	1	358 0495
68/69	19	.....	1	358 0499
70/	19-89 (Except Heavy Duty)	.....	1	362 2023
70/71	40	29.220	1	363 7742
67	59 (LBS)	.....	1	357 8389
68/	79 (LSBW)	.....	1	360 4499
72	79 (WSBW)	.....	1	366 3764
67	85 (WBS)	.....	1	650 5935
67/68	85 (LBS-Except Heavy Duty)	.....	1	358 0500
69/	85 (Except Heavy Duty)	.....	1	358 0500
67	87 (WBS)	.....	1	650 5936
67	87 (LBS)	.....	1	358 0501
67	88 (WBS)	.....	1	650 5934
67/	88 (LBS-Except Heavy Duty)	.....	1	358 0495
68	89 (WBS)	.....	1	651 0396
67/68	89 (LBS-Except Heavy Duty)	.....	1	358 0499
69	89 (Except Heavy Duty)	.....	1	358 0499
67	***05-06 (Police Cars)***	.....	1	359 8029
67/	***15 (Heavy Duty)***	.....	1	357 9039
67	***16 (Heavy Duty)***	.....	1	357 9038
67/	***18-88 (Heavy Duty)***	.....	1	358 0496
68/69	***19 (Heavy Duty)***	.....	1	357 9038
70/	***19-89 (Heavy Duty)***	.....	1	362 2024
67/	***85 (Heavy Duty-LBS)***	.....	1	357 9039
67	***86 (Heavy Duty-LBS)***	.....	1	357 9038
68/69	***89 (Heavy Duty-LBS)***	.....	1	357 9038
67	(Left) 59 (WBS)	.....	1	357 8391
67	(Left) 89 (DPL)	.....	1	358 0505
67	(Right) 59 (WBS)	.....	1	357 8390
67	(Right) 89 (DPL)	.....	1	358 0504

SEATS - SOFT TRIM

29.222–2 ATTACHING PARTS, Rear Back To Shelf Panel

SCREW, Machine	67	07	17.598	2	G455344	NA
SCREW, Tapping	70/	05-06-15-19-79-85-89 (#10-16 x 3/4")	17.671	2	400 0774	
SCREW, Tapping	72	05-06-15-19-79-85-89 (#10-24 x 3/4")	.....	2	400 4630	
SCREW, Tapping	67/69	15-16-17-19-79-85-86-87	17.671	2	400 0774	
SCREW, Tapping	67	59-89 (LBS)	17.671	2	400 0774	
SCREW, Tapping	67	59-89 (WBS)	17.671	4	400 0774	
SCREW, Tapping	68/69	89	17.671	4	400 0774	
STUD	67/69	05-06-09	.....	3	434 7962	
NUT, Hexagon	67/69	05-06-09	.....	3	400 1458	
WASHER, Plain	67/69	15-16-17-19-59-79-85-86-87-89	.....	AR	400 1176	
WASHER, Plain	70/	05-06-15-19-79-85-89	.....	2	400 1176	

29.222–3 WIRE, Rear Seat Back Spring Bolster

69/70	85 (DPL)	29.113	1	362 1480
71	85 (SST)	29.113	1	362 1480
72	85 (Brougham-"V" Trims)	.....	2	364 7233
69/70	88 (DPL)	29.113	1	362 1479
71	88 (SST)	29.113	1	362 1479
72	(Lower) 88 (Brougham-"V" Trims)	.....	1	364 7235
72	(Upper) 88 (Brougham-"V" Trims)	.....	1	364 7229
69	89 (DPL)	29.113	1	362 1478
70	89 (DPL)	.....	1	362 2026
71	89 (SST)	29.113	1	362 2026
72	89 (Brougham-"V" Trims)	.....	2	364 7234

29.222–4 ATTACHING PARTS, Bolster Wire To Spring

CLIP, Wire	72	80	.....	4	365 1588
HOG RING	67/	80	30.025	AR	436 3256

29.224–1 PAD, Rear Seat Back (One Piece)

70	01 ***(Use 362 9613)***	.....	1	362 7569
67	05-06	.....	1	350 2660
68	05-06-09	.....	1	350 2662
69	05-06-09	.....	1	350 2662
71/	05-06	.....	1	362 9613
67	07	.....	1	350 2663
67/69	08	.....	1	350 2661
71/	08	.....	1	363 8997
67	09	.....	1	350 2662
67	15	.....	1	358 0890
68/70	15-19 (Except "S" Trims)	.....	1	358 0511
70	15 ("S" Trims)	.....	1	362 1612
71/	15 (Cotton Pad)	.....	1	358 0511
72	15 (Foam Pad)	.....	1	362 1612
67	16-19	.....	1	358 0511
67/68	17	.....	1	358 0512
67/68	18-88	.....	1	358 0508
69/	18 (Cotton Pad)	.....	1	358 0508
72	18 (Foam Pad)	.....	1	362 1613
70	19 ("S" Trims)	.....	1	362 2027
72	19 (Cotton Pad)	.....	1	358 0511
71	19 (Except "S" And "V" Trims)	.....	1	358 0511
71	19 ("S" And "V" Trims)	.....	1	362 2027
72	19 (Foam Pad)	.....	1	362 2027
70/71	46	.....	1	363 7741
72	46	.....	1	365 6038
67	(Full) 59 (LBS)	.....	1	358 2583
67	(Left) 59 (WBS)	.....	1	357 8393
67	(Right) 59 (WBS)	.....	1	357 8392
68/	79 (Except T-261W)	.....	1	360 4501
72	79 (T-261W)	.....	1	365 3567
67	85 (LBS)	.....	1	358 0890
67	(Full) 85 (WBS)	.....	1	358 0514

SEATS - SOFT TRIM

68	85	1	358 0511	
69/70	85 (Except DPL And SST)	1	358 0511	
69	85 (SST-Except "V" Trims)	1	361 9821	
70	85 (DPL And SST)	1	362 1612	
71	85 (Except SST And Brougham)	1	358 0511	
71	85 (SST And Brougham)	1	362 1612	
72	85 (Except Brougham "V" Trims)	1	362 1612	
72	85 (Brougham "V" Trims)	1	364 7191	
67	86 (LBS)	1	358 0511	
67	87 (LBS)	1	358 0512	
67	(Full) 87 (WBS)	1	358 0515	
67	(Full) 88 (WBS)	1	358 0509	
69	88 (SST)	1	361 9676	
70/71	88	1	362 1613	
72	88 (Except Brougham "V" Trims)	1	362 1613	
72	88 (Brougham "V" Trims)	1	364 7193	
67	(Left) 89 (WBS)	1	358 0519	
67	(Right) 89 (WBS)	1	358 0518	
67/68	89 (LBS)	1	358 0511	
68	89 (WBS)	1	358 0514	
69	89 (SST)	1	361 9822	
70	89	1	362 1608	
71	89 (SST And Brougham)	1	362 2027	
72	89 (Except Brougham "V" Trims)	1	362 2027	
72	89 (Brougham "V" Trims)	1	364 7192	

29.224–2 PAD, Rear Seat Back Upper (Two Piece)

69	85 (DPL)(SST-"V" Trims)	1	361 9813	
69	88 (DPL)	1	361 9816	
69	89 (DPL)	1	361 9819	

29.224–3 PAD, Rear Seat Back Lower (Two Piece)

69	85 (DPL)(SST-"V" Trims)	1	361 9814	
69	88 (DPL)	1	361 9817	
69	89 (DPL)	1	361 9820	

29.224–4 SUPPORT, Rear Seat Back Pad

70/	10-80	1	352 9220	
70/71	40	1	363 7744	
67	59 (LBS)	1	352 9220	
67	59 (WBS)	2	352 9222	
67	85-87-89 (990)	1	352 9220	
69	85-89	1	352 9220	
67	88 (WBS)	1	352 9221	
69	88	1	352 9221	
67	89 (DPL)	2	352 9222	
68	89 (WBS)	1	352 9220	

29.225–1 BRACKET, Rear Seat Back Side Arm Upper

67/	18-88	2	358 0586	

29.225–2 BRACKET, Rear Seat Back Side Arm Lower

67/	(Left) 18-88	1	358 0589	
67/	(Right) 18-88	1	358 0588	

29.225–3 ATTACHING PARTS, Side Arm Bracket To Frame

SCREW, Wood	67	18-88	17.686	8	G156258
SCREW, Machine	68/69	18-88	17.586	8	G9417535 NA
SCREW, Machine	70/	18-88	17.586	8	G443878 NA

SEATS - SOFT TRIM

29.226–1 ARM, Rear Seat Back Side (Incl. Brackets)

71	(Left) 40	.....	1	363 3793	
67/	(Left) 18–88	.....	1	358 0599	
71	(Right) 40	.....	1	363 3792	
67/	(Right) 18–88	.....	1	358 0598	

29.226–1a BRACKET, Rear Seat Back Side Arm (On Rear Wheelhouse)

71	(Left) 46	.....	1	363 3783	
71	(Right) 46	.....	1	363 3782	

29.226–2 ATTACHING PARTS, Side Arm To Upper Frame Bracket

SCREW, Shoulder	67/ 18–88	.....	4	400 1944	
WASHER, Plain.....	67/ 18–88	.....	4	400 2086	

29.226–3 ATTACHING PARTS, Side Arm Bracket To Floor

SCREW, Tapping.....	67/ 18–88	29.131	4	400 1933	
SCREW, Tapping.....	71 40	29.131	4	400 1933	

29.226–3a ATTACHING PARTS, Side Arm To Wheelhouse Bracket

SCREW, Shoulder	71 40	.....	2	363 8872	
WASHER, Lock	71 40	17.824	2	G138538	NA

29.226–4 SPRING, Rear Seat Back Side Arm To Rear Cushion Tension

67/	18–88	29.138	2	342 2358	

29.227–1 FRAME, Rear Seat Back Extension (Incl. Tee Nuts)

67/	18–88	.....	1	680 0446	

29.227–2 NUT, Rear Seat Back Extension Frame Tee

67/	18–88	17.438	19	G453824	

29.228–1 MOULDING, Rear Seat Back Frame Extension

67/	18–88	.....	1	358 0592	

29.228–2 ATTACHING PARTS, Moulding To Extension Frame

SCREW, Machine.....	67/ 18–88	29.229	9	400 3104	

29.229–1 HINGE, Rear Seat Back Frame Extension

67/	18–88	.....	1	358 0593	

29.229–2 ATTACHING PARTS, Hinge To Extension Frame

SCREW, Machine.....	67/ 18–88	.....	20	400 3104	

29.230 ARMREST ASSEMBLY, Trimmed Rear Seat Back Center (Order Component Parts)

SEATS - SOFT TRIM

29.231 UPHOLSTERY, Rear Seat Back Center Armrest

Trim No.	Per Car	59 (WBS)	89 (DPL- Except "W" Trim)	89 (DPL- "W" Trim)	
T-791	1	650 5790	650 5782	650 5782	... .
T-793	1	650 5791	650 5783	650 5784	... .
T-795	1	650 5792	650 5785	650 5785	... .
T-796	1	... .	650 5786	... .	... .
T-798	1	... .	650 5787	... .	... .
T-799	1	650 5793	650 5788	650 5789	... .

29.232–1 ARM, Rear Seat Back Center Armrest (Incl. Plate)

67	59-89	.....	1	358 2684	

29.232–2 ATTACHING PARTS, Arm To Center Armrest Frame Support

BOLT, Shoulder	67	59-89	.....	4	437 8665
WASHER, Spring	67	59-89	.....	4	400 0324
NUT, Stamped	67	59-89	17.428	4	G273295

29.232–3 ATTACHING PARTS, Arm Plate To Armrest Frame Tee Nut

SCREW, Machine.....	67	59-89	17.629	3	G9411968 NA

29.233 SUPPORT, Rear Seat Back Center Armrest

67	59 (WBS)	.....	2	357 4067
67	89 (DPL)	.....	2	357 5189

29.234–1 FRAME ASSEMBLY, Rear Seat Back Center Armrest

67	59 (WBS)	.....	1	353 1409
67	89 (DPL)	.....	1	350 2924

29.234–2 NUT, Rear Seat Back Center Armrest Frame Tee

67	59-89	17.438	3	G453824

29.236 SPRING, Rear Seat Back Center Armrest

67	59 (WBS)	.....	1	353 1405
67	89 (DPL)	.....	1	358 0503

29.237 PAD, Rear Seat Back Center Armrest

Description		Per Car	59 (WBS)	89 (DPL)		
PAD	2" x 5"	1	351 9279	351 9279	... .	... .
	36" x 8"	1	353 1407	... .	... .	... .
	34-3/4" x 8"	1	... .	358 0521	... .	... .

29.245–1 FLAP, Rear Seat Back Center Armrest

Trim No.	Per Car	59 (WBS)	89 (DPL- Except "W" Trim)	89 (DPL- "W" Trim)	
T-791	1	650 5774	650 5766	650 5766	... .
T-793	1	650 5775	650 5767	650 5768	... .
T-795	1	650 5776	650 5769	650 5769	... .
T-796	1	... .	650 5770	650 5770	... .
T-798	1	... .	650 5771	... .	... .
T-799	1	650 5777	650 5772	650 5773	... .

SEATS - SOFT TRIM

29.245–2 ATTACHING PARTS, Flap To Body

SCREW, Tapping.....	67	59.....	.....	2	400 0273

29.248–1 MEDALLION, Rear Seat Back

67	89 (DPL).....	.....	1	352 0551

29.248–2 ATTACHING PARTS, Medallion To Rear Shelf Panel

SCREW, Tapping.....	67	89 (DPL).....	17.660	4	G161860

29.248–3 MOULDING, Rear Shelf Panel

67	59.....	27.300	1	351 7807

29.249–1 MOULDING, Rear Seat Back Medallion

67	89 (DPL).....	.....	1	358 0338

29.249–2 ATTACHING PARTS, Moulding To Rear Shelf Panel

NUT, Stamped.....	67	89 (DPL)..... ***(Use 320 9540)***	17.428	2	G9415250

29.250 BACK ASSEMBLY, Trimmed Third Seat (Order Component Parts)

29.252 UPHOLSTERY, Third Seat Back (Cover)

1967 Thru 1969 MODELS

Trim No.	Per Car	18-88 (W3S)			
T-771	1	650 5812	... .	... .	... .
T-773	1	650 5813	... .	... .	... .
T-774	1	650 5814	... .	... .	... .
T-776	1	650 5815	... .	... .	... .
T-777	1	650 5816	... .	... .	... .
T-779	1	650 5817	... .	... .	... .
T-781	1	650 5812	... .	... .	... .
T-783	1	650 5813	... .	... .	... .
T-787	1	650 5816	... .	... .	... .
T-789	1	650 5817	... .	... .	... .
T-791	1	650 5812	... .	... .	... .
T-793	1	650 5813	... .	... .	... .
T-794	1	650 5814	... .	... .	... .
T-796	1	650 5815	... .	... .	... .
T-797	1	650 5816	... .	... .	... .
T-799	1	650 5817	... .	... .	... .
T-871	1	650 5812	... .	... .	... .
T-873	1	651 2785	... .	... .	... .
T-874	1	651 2786	... .	... .	... .
T-875	1	651 3945	... .	... .	... .
T-876	1	651 2787	... .	... .	... .
T-879	1	651 2788	... .	... .	... .
T-891	1	650 5812	... .	... .	... .
T-893	1	651 2785	... .	... .	... .
T-894	1	651 2786	... .	... .	... .
T-895	1	651 3945	... .	... .	... .
T-896	1	651 2787	... .	... .	... .
T-899	1	651 2788	... .	... .	... .
T-972	1	652 2158	... .	... .	... .
T-973	1	652 0864	... .	... .	... .
T-976	1	652 0865	... .	... .	... .
T-977	1	652 0866	... .	... .	... .
T-991	1	652 0863	... .	... .	... .
T-993	1	652 0864	... .	... .	... .
T-996	1	652 0865	... .	... .	... .
T-997	1	652 0866	... .	... .	... .

SEATS - SOFT TRIM

1970 Thru 1972 MODELS

Trim No.	Per Car	18-88 (W3S)
T-071	1	652 4669
T-073	1	652 4671
T-074	1	652 4672
T-075	1	652 6169
T-076	1	652 4673
T-091	1	652 4669
T-093	1	652 4671
T-094	1	652 4672
T-095	1	652 6169
T-096	1	652 4673
T-171	1	652 8165
T-173	1	652 8166
T-174	1	652 8167
T-175	1	652 8168
T-176	1	652 9566
T-191	1	652 8165
T-193	1	652 8166
T-194	1	652 8167
T-195	1	652 8168
T-196	1	652 9566
T-271	1	652 9933
T-273	1	652 9885
T-274	1	652 9886
T-276	1	652 9887
T-291	1	652 9933
T-293	1	652 9885
T-294	1	652 9886
T-296	1	652 9887

29.256 PAD, Third Seat Back

67/ 18-88 (W3S)	.....	1	358 0559	

29.258-1 FRAME ASSEMBLY, Third Seat Back (Incl. Plates)

67 18-88 (* 29-68) *(Use 650 6066)*	.....	1	650 5537	
67 18-88 (* 29-69)	.....	1	650 6066	
68/ 18-88	.....	1	650 6066	

29.258-2 NUT, Third Seat Back Frame Tee

67/ 18-88 (Type B-2 Hole Base-8-32)	17.438	4	G442494	NA

29.258-3 ATTACHING PARTS, Tee Nut To Back Frame

NAIL, Countersunk..... 67/ 18-88	17.374	8	G116630	NA

29.258-4 PLATE, Third Seat Back Hinge Fastening

67/ 18-88	.....	2	345 1907	

29.258-5 ATTACHING PARTS, Hinge Plate To Frame

NAIL, Countersunk..... 67/ 18-88	17.374	8	G116630	NA

29.258–6 PLATE, Third Seat Back Support Fastening

67/	18–88	.....	2	348 3145	

29.258–7 ATTACHING PARTS, Support Plate To Frame

NAIL, Countersunk.....	67/	18–88	17.374	4	G116630	NA

29.260–1 HINGE, Third Seat Back

67/	18–88	.....	2	358 0613	

29.260–2 ATTACHING PARTS, Hinge To Frame

SCREW, Tapping.....	67/	18–88	.....	4	400 3105

29.260–3 ATTACHING PARTS, Hinge To Body

SCREW, Machine.....	67/	18–88	23.006	4	400 0318

29.261–1 SUPPORT, Third Seat Back

67/	(Left) 18–88	.....	1	358 1167	
67/	(Right) 18–88	.....	1	358 1166	

29.261–2 ATTACHING PARTS, Support To Frame

SCREW, Tapping.....	67/	18–88	29.260	4	400 3105	
WASHER, Plain.....	67/	18–88	28.027	2	346 0092	

29.261–3 ATTACHING PARTS, Support To Body

NUT, Push.....	67/	18–88	29.105	2	400 0155

29.264–1 HANDLE, Third Seat Back

67/	18–88	.....	1	344 9685	

29.264–2 ATTACHING PARTS, Handle To Back Retainer

SCREW, Machine.....	67/	18–88	17.592	2	G157070	NA

29.264–3 RETAINER, Third Seat Back Handle

67/	18–88	.....	1	344 4014	

29.264–4 ATTACHING PARTS, Retainer To Back Frame

SCREW, Tapping.....	67/71	18–88	29.120	2	400 2456	
SCREW, Tapping.....	72	18–88	29.120	2	448 9487	

29.266–1 MOULDING, Third Seat Back Top

67/	18–88	.....	2	355 6898	

SEATS - SOFT TRIM

29.266–2 MOULDING, Third Seat Back (Side)

67	18-88 (* 29-70)	.....	2	355 6900	
67	18-88 (* 29-71)	.....	2	358 9906	
68/	18-88	.....	2	358 9906	

29.266–3 ATTACHING PARTS, Side Moulding To Back Frame

SCREW, Machine.....	67/69	18-88	17.592	4	G156798	NA
SCREW, Machine.....	70/	18-88	15.592	4	G156818	NA

29.266–4 ATTACHING PARTS, Top Moulding To Back Frame

SCREW, Tapping.....	67/69	18-88 ***(Use 448 9492)***	17.654	12	G162402	
SCREW, Tapping.....	70/	18-88	7.014	12	400 2809	

29.270 CUSHION ASSEMBLY, Trimmed Third Seat (Order Component Parts)

29.272 UPHOLSTERY, Third Seat Cushion

1967 Thru 1969 MODELS

Trim No.	Per Car	18-88 (W3S)			
T-771	1	650 5833	... .	... .	... .
T-773	1	650 5834	... .	... .	... .
T-774	1	650 5835	... .	... .	... .
T-776	1	650 5836	... .	... .	... .
T-777	1	650 5837	... .	... .	... .
T-779	1	650 5838	... .	... .	... .
T-781	1	650 5833	... .	... .	... .
T-783	1	650 5834	... .	... .	... .
T-787	1	650 5837	... .	... .	... .
T-789	1	650 5838	... .	... .	... .
T-791	1	650 5833	... .	... .	... .
T-793	1	650 5834	... .	... .	... .
T-794	1	650 5835	... .	... .	... .
T-796	1	650 5836	... .	... .	... .
T-797	1	650 5837	... .	... .	... .
T-799	1	650 5838	... .	... .	... .
T-871	1	650 5833	... .	... .	... .
T-873	1	651 2797	... .	... .	... .
T-874	1	651 2798	... .	... .	... .
T-875	1	651 3940	... .	... .	... .
T-876	1	651 2799	... .	... .	... .
T-879	1	651 2800	... .	... .	... .
T-891	1	650 5833	... .	... .	... .
T-893	1	651 2797	... .	... .	... .
T-894	1	651 2798	... .	... .	... .
T-895	1	651 3940	... .	... .	... .
T-896	1	651 2799	... .	... .	... .
T-899	1	651 2800	... .	... .	... .
T-972	1	652 2156	... .	... .	... .
T-973	1	652 0844	... .	... .	... .
T-976	1	652 0845	... .	... .	... .
T-977	1	652 0846	... .	... .	... .
T-991	1	652 0843	... .	... .	... .
T-993	1	652 0844	... .	... .	... .
T-996	1	652 0845	... .	... .	... .
T-997	1	652 0846	... .	... .	... .

SEATS - SOFT TRIM

1970 Thru 1972 MODELS

Trim No.	Per Car	18-88 (W3S)
T-071	1	652 4554
T-073	1	652 4556
T-074	1	652 4557
T-075	1	652 6165
T-076	1	652 4558
T-091	1	652 4554
T-093	1	652 4556
T-094	1	652 4557
T-095	1	652 6165
T-096	1	652 4558
T-171	1	652 8157
T-173	1	652 8158
T-174	1	652 8159
T-175	1	652 8160
T-176	1	652 9564
T-191	1	652 8157
T-193	1	652 8158
T-194	1	652 8159
T-195	1	652 8160
T-196	1	652 9564
T-271	1	652 9932
T-273	1	652 9877
T-274	1	652 9878
T-276	1	652 9879
T-291	1	652 9932
T-293	1	652 9877
T-294	1	652 9878
T-296	1	652 9879

29.276 PAD, Third Seat Cushion

67/	18-88 (W3S)	.....	1	358 0549

29.278–1 FRAME ASSEMBLY, Third Seat Cushion

67/	18-88...(Incl. Plates)	.....	1	650 5830
67/	18-88...(Less Plates)	.....	1	358 0544

29.278–2 PLATE, Third Seat Cushion Hinge Fastenings

67/	18-88	29.258	2	345 1907

29.278–3 ATTACHING PARTS, Hinge Plate To Cushion Frame

NAIL, Countersunk..... 67/	18-88	17.374	4	G116631 NA

29.278–4 PLATE, Third Seat Cushion Moulding Fastening

67/	18-88	29.258	3	349 0766

29.278–5 ATTACHING PARTS, Moulding Plate To Cushion Frame

NAIL, Countersunk..... 67/	18-88	17.374	6	G116631 NA

SEATS - SOFT TRIM

29.279–1 MOULDING, Third Seat Cushion Support

67/	18-88...(Incl. Pull Strap)	.....		1	358 0551	

29.279–2 ATTACHING PARTS, Moulding To Cushion Frame Support

SCREW, Tapping.....	67/	18-88	.....	6	400 2839	

29.279–3 STRAP, Third Seat Cushion Pull

67/	18-88	.....	1	358 0221		

29.279–4 ATTACHING PARTS, Strap To Moulding

WASHER, Plain.....	67/	18-88	17.814	2	G131014	NA
RIVET, Tubular	67/	18-88	17.558	2	G135725	NA

29.279–5 MOULDING, Third Seat Cushion

67/	18-88	.....	1	355 6898		

29.279–6 ATTACHING PARTS, Moulding To Cushion Frame

SCREW, Tapping.....	67/69	18-88 ***(Use 448 9492)***	17.654	6	G162402	
SCREW, Tapping.....	70/	18-88	7.014	6	400 2809	

29.279–7 BUMPER, Third Seat Cushion Moulding

67/	18-88	20.450	4	400 0313		

29.280–1 HINGE, Third Seat Cushion

67/	18-88	.....	2	358 0546		

29.280–2 ATTACHING PARTS, Hinge To Cushion Frame

SCREW, Machine.....	67/69	18-88	17.660	4	G162033	NA
SCREW, Tapping.....	70/	18-88	29.260	4	400 3105	
NUT, Push.....	67/	18-88	29.105	2	400 0155	

29.294–1 MAT, Front Floor (Rubber)

1967 - 1968 MODELS

Description	Per Car	01 (LHD)	01 (RHD)	10-80 (LHD)	10-80 (RHD)
MAT	1	350 1701	359 8024	357 8335	357 8340

1969 - 1970 MODELS

Trim No.	Per Car	01-40 (LHD)	01 (RHD)	10-80 (LHD)	10-80 (RHD)
T-921	1	362 4681	... .	... .	... .
T-923	1	362 4681	352 2278	... .	... .
T-928	1	362 4681	352 2278	... .	... .
T-951	1	... .	... .	362 1374	357 8340
T-953	1	... .	... .	362 8127	357 8340
T-956	1	... .	... .	362 8128	357 8340
T-957	1	... .	... .	362 8129	357 8340

SEATS - SOFT TRIM

Trim No.	Per Car	01-40 (LHD)	01 (RHD)	10-80 (LHD)	10-80 (RHD)
T-001	1	362 6935	... .	... .	... .
T-008	1	362 6935	... .	... .	... .
T-021	1	362 6935	362 6938	... .	... .
T-023	1	362 6983	362 6938	... .	... .
T-024	1	362 6993	362 6938	... .	... .
T-025	1	362 6994	362 6938	... .	... .
T-051	1	... .	... .	362 1374	357 8340
T-053	1	... .	... .	362 9872	357 8340
T-054	1	... .	... .	362 9873	357 8340
T-056	1	... .	... .	362 9874	357 8340

1970 Thru 1972 MODELS

71/	(Black) 01-40	.....	1	362 6935
71	(Blue) 01-40	.....	1	364 2006
72	(Blue) 01-40	.....	1	365 2996
71	(Green) 01	.....	1	364 2007
72	(Tan) 01-40	.....	1	365 2995
71	(Black) 10-80	.....	1	362 1374
71	(Blue) 10-80	.....	1	362 2152
71	(Green) 10-80	.....	1	362 2153
72	***(Black) 10-80 (Fleet)***	.....	1	362 1374

29.294-2 ATTACHING PARTS, Mat To Body

FASTENER, Plastic ...	67/	.....	.....	AR	400 1934
SCREW, Tapping.....	67/69	01	29.470	2	400 0471
SCREW, Tapping.....	67	10-80 (3/4" Long)	29.019	4	439 5412
SCREW, Tapping.....	67/69	10-80 (9/16" Long) ..... ***(Use 400 1776)***	29.070	3	400 1957
SCREW, Tapping.....	69/71	(Zinc Coated-3/4" Long)	.....	3	400 3095
SCREW, Tapping.....	72	(Zinc Coated-1/2" Long)	.....	3	400 1776

29.294-3 CARPET, Front Floor

1967 - 1968 MODELS

Trim No.	Per Car	01-10-80 (LHD-LCV):79	07-17-39-87 (LHD)	01-10-80 (RHD-LCV)	07-17-87 (RHD)
T-723 (W4ST-Black)	1	359 4330	... .	... .	... .
T-728 (W4ST-Black)	1	358 4330	... .	... .	... .
T-729 (W4ST-Black)	1	358 4330	... .	... .	... .
T-741	1	358 4330	359 2136	359 2321	359 2139
T-743	1	358 3523	358 3533	358 3543	358 3555
T-744	1	358 3524	... .	358 3544	... .
T-745	1	358 3525	358 3535	358 3545	358 3557
T-747	1	358 3526	... .	358 3546	... .
T-748	1	358 4330	359 2136	359 2321	359 2139
T-749	1	358 3527	358 3537	358 3547	358 3559
T-771	1	448 4736	448 4743	448 4748	448 4755
T-773	1	448 4737	448 4744	448 4749	448 4756
T-774	1	448 4738	... .	448 4750	... .
T-775 (* 29-72)	1	448 4739	448 4745	448 4751	448 4757
(* 29-74)	1	650 6469	650 6470	... .	... .
T-776	1	448 4740	448 4746	448 4752	448 4758
T-777	1	448 4741	... .	448 4753	... .
T-778	1	448 4736	448 4743	448 4748	448 4755
T-779	1	448 4742	448 4747	448 4754	448 4759
T-781 (* 29-72)	1	448 4736	448 4743	448 4748	448 4755
(* 29-74)	1	650 6468	... .	... .	... .
T-783	1	448 4737	448 4744	448 4749	448 4756
T-787	1	448 4741	... .	448 4750	... .
T-789	1	448 4742	448 4747	448 4754	448 4759
T-791	1	448 4736	448 4743	448 4748	448 4755

SEATS - SOFT TRIM

Trim No.			Per Car	01-10-80 (LHD-LCV): 79	07-17-39-87 (LHD)	01-10-80 (RHD-LCV)	07-17-87 (RHD)
T-793			1	448 4737	448 4744	448 4749	448 4756
T-794			1	448 4738	... .	448 4750	... .
T-795		(* 29-72)	1	448 4739	448 4745	448 4751	448 4757
		(* 29-74)	1	650 6469	650 6470	... .	... .
T-796			1	448 4740	448 4746	448 4752	448 4758
T-797			1	448 4741	... .	448 4753	... .
T-798			1	448 4736	448 4743	448 4748	448 4755
T-799			1	448 4742	448 4747	448 4754	448 4759
T-828	(W4ST)	(* 29-72)	1	358 0951	... .	... .	... .
		(* 29-73)	1	362 4709	... .	... .	... .
T-831	(L4ST)	(* 29-72)	1	360 4136	360 4136	... .	... .
	(L4ST)	(* 29-73)	1	362 4769	362 4769	... .	... .
	(L4ST)	(* 29-75)	1	362 5275	362 5275	... .	... .
	(W4ST)	(* 29-75)	1	363 5803	363 5803	... .	... .
T-832		(* 29-72)	1	360 4143	360 4143	... .	... .
		(* 29-73)	1	362 4783	362 4783	... .	... .
		(* 29-75)	1	362 5277	362 5277	... .	... .
T-835		(* 29-72)	1	360 4139	360 4139	... .	... .
		(* 29-73)	1	362 4781	362 4781	... .	... .
		(* 29-75)	1	362 5276	362 5276	... .	... .
T-838		(* 29-72)	1	360 4136	... .	... .	... .
		(* 29-73)	1	362 4769	... .	... .	... .
T-843		(* 29-72)	1	360 4574	... .	360 4592	... .
		(* 29-73)	1	362 4710	... .	362 4728	... .
T-844		(* 29-72)	1	360 4575	... .	360 4593	... .
		(* 29-73)	1	362 4711	... .	362 4729	... .
T-845		(* 29-72)	1	358 0948	... .	358 0966	... .
		(* 29-73)	1	362 4712	... .	362 4294	... .
T-848		(* 29-72)	1	358 0951	... .	359 2320	... .
		(* 29-73)	1	362 4709	... .	362 4727	... .
T-851	(W4ST)	(* 29-72)	1	680 0900	680 0270	680 0908	680 0287
		(* 29-73)	1	651 6655	651 6665	651 6660	651 6670
T-853		Blue	1	680 0982	... .	... .	... .
	(W4ST)	Black (* 29-72)	1	680 0900	680 0270	680 0908	680 0287
		(* 29-73)	1	651 6655	651 6665	651 6660	651 6670
T-855		Red	1	680 0903	... .	... .	... .
	(W4ST)	Black (* 29-72)	1	680 0900	680 0270	680 0908	680 0287
		(* 29-73)	1	651 6655	651 6665	651 6660	651 6670
T-871		(* 29-72)	1	680 0900	680 0270	680 0908	680 0287
		(* 29-73)	1	651 6655	651 6665	651 6660	651 6670
T-873		(* 29-72)	1	680 0982	680 0986	680 0990	680 0994
		(* 29-73)	1	651 6656	651 6666	651 6661	651 6671
T-874		(* 29-72)	1	680 0983	680 0987	680 0991	680 0995
		(* 29-73)	1	651 6657	651 6667	651 6662	651 6672
T-875		(* 29-72)	1	680 0903	680 0273	680 0911	680 0290
		(* 29-73)	1	652 1617	652 1627	652 1622	652 1632
		(* 29-74)	1	650 6469	... .	... .	... .
T-876		(* 29-72)	1	680 0984	680 0988	680 0992	680 0996
		(* 29-73)	1	651 6658	651 6668	651 6663	651 6673
T-879		(* 29-72)	1	680 0985	680 0989	680 0993	680 0997
		(* 29-73)	1	651 6659	651 6669	651 6664	651 6674
T-881		(* 29-72)	1	680 0900	680 0270	680 0908	... .
		(* 29-73)	1	651 6655	... .	651 6660	... .
T-883		(* 29-72)	1	680 0982	680 0986	680 0990	... .
		(* 29-73)	1	651 6656	... .	651 6661	... .
T-885		(* 29-72)	1	680 0903	... .	680 0911	... .
		(* 29-73)	1	652 1617	... .	651 1622	... .
		(* 29-74)	1	650 6469	... .	... .	... .
T-891		(* 29-72)	1	680 0900	... .	680 0908	... .
		(* 29-73)	1	651 6655	... .	651 6660	... .
T-893		(* 29-72)	1	680 0982	... .	680 0990	... .
		(* 29-73)	1	651 6656	... .	651 6661	... .

SEATS - SOFT TRIM

Trim No.			Per Car	01-10-80 (LHD-LCV): 79	07-17-39-87 (LHD)	01-10-80 (RHD-LCV)	07-17-87 (RHD)
T-894		(* 29-72)	1	680 0983	... .	680 0991	... .
		(* 29-73)	1	651 6657	... .	651 6662	... .
T-895		(* 29-72)	1	680 0903	... .	680 0911	... .
		(* 29-73)	1	652 1617	... .	652 1622	... .
T-896		(* 29-72)	1	680 0984	... .	680 0992	... .
		(* 29-73)	1	651 6658	... .	651 6663	... .
T-899		(* 29-72)	1	680 0985	... .	680 0993	... .
		(* 29-73)	1	651 6659	... .	651 6664	... .

1969 MODELS

Trim No.			Per Car	01-10-80 (LHD)	01-10-80 (RHD)	30-70	
T-000			1	652 2217	... .	... .	... .
T-921G			1	362 4709	... .	... .	... .
T-923	(W4ST)		1	362 4253	362 4291	... .	... .
T-928	(W4ST)		1	362 4709	362 4727	... .	... .
T-931	(L4ST)		1	... .	... .	362 4956	... .
	(W4ST)		1	... .	... .	363 5803	... .
T-932		(L4ST)	1	... .	... .	362 4956	... .
		(W4ST)	1	... .	... .	363 5803	... .
T-935		(L4ST)	1	... .	... .	362 4957	... .
		(W4ST)	1	... .	... .	363 5804	... .
T-936		(L4ST)	1	... .	... .	362 4958	... .
		(W4ST)	1	... .	... .	363 0823	... .
T-941			1	362 4709	362 4727	... .	... .
T-943			1	362 4253	362 4291	... .	... .
T-944			1	362 4254	362 4292	... .	... .
T-945			1	362 4256	362 4294	... .	... .
T-951	(W4ST)	Black	1	652 2217	651 6660	... .	... .
T-953	(W4ST)	Black	1	652 2217	651 6660	... .	... .
	(W4ST)	Blue	1	652 1617	652 1621	... .	... .
T-956	(W4ST)	Black	1	652 2217	651 6660	... .	... .
	(W4ST)	Brown	1	652 1618	652 1623	... .	... .
T-957	(W4ST)	Black	1	652 2217	651 6660	... .	... .
	(W4ST)	Avocado	1	652 1619	652 1624	... .	... .
T-961		(L4ST)	1	... .	... .	362 4956	... .
		(W4ST)	1	... .	... .	363 5803	... .
T-962		(L4ST)	1	... .	... .	362 4956	... .
		(W4ST)	1	... .	... .	363 5803	... .
T-963		(L4ST)	1	... .	... .	363 0230	... .
		(W4ST)	1	... .	... .	363 0824	... .
T-965		(L4ST)	1	... .	... .	362 4957	... .
		(W4ST)	1	... .	... .	363 5804	... .
T-966		(L4ST)	1	... .	... .	362 4958	... .
		(W4ST)	1	... .	... .	363 0823	... .
T-968		(L4ST)	1	... .	... .	362 4956	... .
		(W4ST)	1	... .	... .	363 5803	... .
T-972			1	652 2217	651 6660	... .	... .
T-973			1	652 1616	652 1621	... .	... .
T-975			1	652 2178	652 2218	... .	... .
T-976			1	652 1618	652 1623	... .	... .
T-977			1	652 1619	652 1624	... .	... .
T-979			1	652 1619	652 1624	... .	... .
T-981			1	652 2217	651 6660	... .	... .
T-983			1	652 1616	651 1621	... .	... .
T-986			1	652 1618	652 1623	... .	
T-987			1	652 1619	652 1624	... .	... .
T-991			1	652 2217	651 6660	... .	... .
T-992			1	652 2217	651 6660	... .	... .
T-993			1	652 1616	652 1621	... .	... .
T-995			1	652 2178	652 2218	... .	... .
T-996			1	652 1618	652 1623	... .	... .
T-997			1	652 1619	652 1624	... .	... .
T-999			1	652 1619	652 1624	... .	... .

SEATS - SOFT TRIM

1970 MODELS

Trim No.		Per Car	(RHD)	(LHD)
T-011		1	... .	363 4881
T-013		1	... .	363 4882
T-014		1	... .	363 4883
T-015		1	... .	363 4884
T-031	(L4ST)	1	... .	363 5805
	(W4ST)	1	... .	363 5803
T-033	(L4ST)	1	... .	362 9704
	(W4ST)	1	... .	362 9710
T-035	(L4ST)	1	... .	363 5806
	(W4ST)	1	... .	363 5804
T-036	(L4ST)	1	... .	362 9706
	(W4ST)	1	... .	362 9712
T-041		1	... .	363 4881
T-043		1	... .	363 4882
T-044		1	... .	363 4883
T-045		1	... .	363 4884
T-051	(MACHINE)	1	... .	363 9761
T-053	(MACHINE)	1	... .	363 9762
T-056	(MACHINE)	1	... .	363 9765
T-061	(L4ST)	1	... .	363 5805
	(W4ST)	1	... .	363 5803
T-063	(L4ST)	1	... .	362 9704
	(W4ST)	1	... .	362 9710
T-064	(L4ST)	1	... .	362 9705
	(W4ST)	1	... .	362 9711
T-065	(L4ST)	1	... .	363 5806
	(W4ST)	1	... .	363 5804
T-066	(L4ST)	1	... .	362 9706
	(W4ST)	1	... .	362 9712
T-071		1	651 6660	363 9761
T-073		1	652 2791	363 9762
T-074		1	652 2792	363 9763
T-075		1	652 2218	363 9764
T-076		1	652 2793	363 9765
T-081		1	651 6660	363 9761
T-083		1	652 2791	363 9762
T-084		1	652 2792	363 9763
T-086		1	652 2793	363 9765
T-091		1	651 6660	363 9761
T-093		1	652 2791	363 9762
T-094		1	652 2792	363 9763
T-095		1	652 2218	363 9764
T-096		1	652 2793	363 9765

1971 MODELS

Trim No.		Per Car	(LHD)
T-111		1	363 4881
T-113		1	364 0987
T-114		1	364 0988
T-115		1	364 0989
T-141		1	363 4881
T-143		1	364 0987
T-144		1	364 0988
T-145		1	364 0989
T-161	(L4ST)	1	364 1167
	(W4ST)	1	364 1173
T-163	(L4ST)	1	364 0671
	(W4ST)	1	364 0664
T-164	(L4ST)	1	364 0672
	(W4ST)	1	364 0665

SEATS - SOFT TRIM

Trim No.		Per Car	(LHD)
T-165	(L4ST)	1	364 0673
	(W4ST)	1	364 0666
T-168	(L4ST)	1	364 1167
	(W4ST)	1	364 1173
T-171		1	363 9761
T-173		1	363 9767
T-174		1	363 9768
T-175		1	363 9769
T-176		1	363 9761
T-181		1	363 9761
T-183		1	363 9767
T-184		1	363 9768
T-186		1	363 9761
T-191		1	363 9761
T-193		1	363 9767
T-194		1	363 9768
T-195		1	363 9769
T-196		1	363 9761

1972 MODELS

Trim No.		Per Car	(LHD)
T-201		1	365 6095
T-203		1	365 2886
T-206		1	365 2889
T-211		1	365 6095
T-213		1	365 2886
T-215		1	365 6095
T-216		1	365 2889
T-218		1	365 6095
T-241		1	365 6095
T-243		1	365 2886
T-244		1	365 2887
T-245		1	365 6095
T-246		1	365 2889
T-248		1	365 6095
T-261	(L4ST)	1	365 2978
	(W4ST)	1	365 2990
T-263	(L4ST)	1	365 2974
	(W4ST)	1	365 2986
T-264	(L4ST)	1	365 2975
	(W4ST)	1	365 2987
T-265	(L4ST)	1	365 2978
	(W4ST)	1	365 2990
T-266	(L4ST)	1	365 2977
	(W4ST)	1	365 2989
T-268	(L4ST)	1	365 2978
	(W4ST)	1	365 2990
T-271		1	365 4582
T-273		1	365 4579
T-274		1	365 4580
T-276		1	365 4581
T-291		1	365 4582
T-293		1	365 4579
T-294		1	365 4580
T-296		1	365 4581

29.294–5 ATTACHING PARTS, Carpet To Floor Pan

CLIP	67/	01-30-40-70	.....	2	316	9685
FASTENER, Push-In	67/	(Plastic)	.....	3	400	1934
SCREW, Tapping	67/69	(3/4" Long)	29.019	5	439	5412
SCREW, Tapping	67/69	01 (1" Long)	29.470	5	400	0471
SCREW, Tapping	67/69	10-50-80 (9/16" Long) ***(Use 400 1776)***	29.070	5	400	1957
SCREW, Tapping	69/71	(Zinc-9/16" Long)	.....	AR	400	3095
SCREW, Tapping	72	(Zinc Coated-1/2" Long)	.....	AR	400	1776

SEATS - SOFT TRIM

29.294–6 PAD, Front Floor Carpet

70/71	01-40	1	362	6999
69	01 (LHD)	1	362	4718
67/68	05-06-08-09	1	350	1770
67	07	1	350	1772
69	10-80 (LHD)	1	362	1343
67/68	15-18-19-59-85-86-88-89	1	357	8355
67/68	17-87	1	357	8356
68/69	39-79	1	360	4174
69	***01 (RHD)***	1	350	1770
69/70	***10-80 (RHD)***	1	357	8355

29.294–7 PAD, Front Floor Carpet Center

67/69	(W4ST)	1	358	4117

29.294–8 CARPET, Front Floor Tunnel

1967 MODELS

Trim No.	Per Car	01 (WFC)
T-741	1	359 2325
T-743	1	357 8524
T-745	1	357 8525
T-748	1	359 2325
T-749	1	357 8526

1970 MODELS

Trim No.	Per Car	19 (Machine-W4ST)
T-051	1	652 6317
T-053	1	652 6318
T-056	1	652 6319

29.294–9 ATTACHING PARTS, Carpet To Floor Pan

SCREW, Tapping	70	19 (MACHINE-W4ST)	29.060	2	400	1776

29.296 CARPET, Console Compartment Bottom

1967 - 1968 MODELS

Trim No.	Per Car	01-10-50-80 (WFC)
T-741	1	359 2333
T-743	1	358 1027
T-745	1	358 1029
T-748	1	359 2333
T-749	1	358 1031
T-771	1	680 0917
T-773	1	680 0918
T-775	1	680 0920
T-776	1	680 0921
T-778	1	680 0917
T-779	1	680 0923
T-791	1	680 0917

SEATS - SOFT TRIM

Trim No.	Per Car	01-10-50-80 (WFC)
T-793	1	680 0918
T-795	1	680 0920
T-796	1	680 0921
T-798	1	680 0917
T-799	1	680 0923
T-871	1	359 2333
T-873	1	630 1653
T-874	1	630 1654
T-875	1	358 1029
T-876	1	630 1655
T-879	1	630 1656
T-891	1	359 2333
T-893	1	630 1653
T-894	1	630 1654
T-895	1	358 1029
T-896	1	630 1655
T-899	1	630 1656

1969 MODELS

69	10-80		1	680 0917

Trim No.	Per Car	30-70
T-931	1	362 9203
T-932	1	362 9203
T-935	1	362 9205
T-936	1	362 9206
T-961	1	362 9203
T-962	1	362 9203
T-963	1	362 9204
T-965	1	362 9205
T-966	1	362 9206
T-968	1	362 9203

1970 - 1972 MODELS

70/71	10-80		1	680 0917
70/71	10-80		1	362 9203
72	70		1	366 1466

29.302-1 MAT, Rear Floor (Rubber)

67/68	01 (Used Less Seat Belt Holes-* 29-60)		1	350 1706
67/68	01 (Used Less Seat Belt Holes-* 29-61)		1	362 4225
67/68	01 (Used With Seat Belt Holes-* 29-60)		1	352 3346
67/68	01 (Used With Seat Belt Holes-* 29-61)	***(Use 362 4225)***	1	362 4226
69	01 (Used Less Seat Belt Holes)		1	362 4225
69	01 (Used With Seat Belt Holes)	***(Use 362 4225)***	1	362 4226
70	01 (Black)		1	362 6950
70	01 (Blue)		1	362 6986
70	01 (Green)		1	362 6997
70	01 (Red)		1	362 6998
71/	05-06 (Black-LSBW)		1	362 6949
72	05-06 (Black-WSBW)		1	366 2188
71	05-06 (Blue)		1	364 2012
71	05-06 (Green)		1	364 2013

Printed in U.S.A.

SEATS - SOFT TRIM

67/68	10-80 (LCV-Used With Seat Belt Holes-* 29-60)	.....	1	357	8610
67/68	10-80 (LCV-Used With Seat Belt Holes-* 29-61)	.....	1	361	3411
69	10 (Black)	.....	1	361	3411
69	10 (Blue)	.....	1	362	8131
69	10 (Brown)	.....	1	362	8132
69	10 (Avocado)	.....	1	362	8133
70/71	10-80 (Black)	.....	1	361	3411
70	10-80 (Blue)	.....	1	362	9878
70	10-80 (Green)	.....	1	362	9879
70	10-80 (Brown)	.....	1	362	9880
71	10-80 (Blue)	.....	1	362	2154
71	10-80 (Green)	.....	1	362	2155
67/68	17 (Used With Seat Belt Holes-* 29-60)	.....	1	359	9245
67/68	17 (Used With Seat Belt Holes-* 29-61) ***(Use 359 9245)***	.....	1	361	3412
70/71	40 (Black-Used Less Rear Seat)	.....	1	363	7968
70/	40 (Black-LSBW-Used With Rear Seat)	.....	1	363	7609
72	40 (Black-WSBW-Used With Rear Seat)	.....	1	366	2182
71	40 (Blue-Used Less Rear Seat)	.....	1	364	3361
71	40 (Blue-Used With Rear Seat)	.....	1	364	3360
72	40 (Blue-LSBW)	.....	1	365	6168
72	40 (Blue-WSBW)	.....	1	366	2183
72	40 (Tan-LSBW)	.....	1	365	6169
72	40 (Tan-WSBW)	.....	1	366	2184
72	***01 (Fleet-Black)***	.....	1	362	6949
72	***10-80 (Fleet-Black)***	.....	1	366	1693

29.302–2 ATTACHING PARTS, Mat To Floor Pan

SCREW, Tapping	69/	(3/4" Long-Zinc Coated)	.....	AR	400 3095
SCREW, Tapping	67/68	10-80 (1/2" Long)	29.070	4	400 0273
SCREW, Tapping	67/69	01-10-80 (3/4" Long)	29.019	4	439 5412

29.302–3 CARPET, Rear Floor (One Piece)(Less Pad - Except On 68 10-70-80 Models) (Refer Group 29.302–4 For The "AMX" Two Piece Carpet)

1967 - 1968 MODELS

Trim No.		Per Car	01-10-50-80 (LCV)	07-17-39-87	79	
T-723	(W4ST-Black)	1	359 2329	... .	... .	... .
T-728	(W4ST-Black)	1	359 2329	... .	... .	... .
T-729	(W4ST-Black)	1	359 2329	... .	... .	... .
T-741		1	359 2329	359 2325	... .	... .
T-743		1	358 1840	358 1900	... .	... .
T-744		1	358 1841	... .	... .	... .
T-745		1	358 1842	358 1902	... .	... .
T-747		1	358 1843	... .	... .	... .
T-748		1	359 2329	359 2325	... .	... .
T-749		1	358 1844	358 1904	... .	... .
T-771		1	680 0246	680 0205	... .	... .
T-773		1	680 0247	680 0206	... .	... .
T-774		1	680 0248	... .	... .	... .
T-775	(* 29-72)	1	680 0249	680 0208	... .	... .
	(* 29-74)	1	650 6472	650 6473	... .	... .
T-776		1	680 0250	680 0209	... .	... .
T-777		1	680 0251	... .	... .	... .
T-778		1	680 0246	680 0205	... .	... .
T-779		1	680 0252	680 0210	... .	... .
T-781	(* 29-72)	1	680 0246	... .	... .	... .
	(* 29-74)	1	650 6471	... .	... .	... .
T-783		1	680 0247	... .	... .	... .
T-787		1	680 0251	... .	... .	... .
T-789		1	680 0252	... .	... .	... .
T-791		1	680 0246	680 0205	... .	... .
T-793		1	680 0247	680 0206	... .	... .
T-794		1	680 0248	... .	... .	... .
T-795	(* 29-72)	1	680 0249	680 0208	... .	... .
	(* 29-74)	1	650 6472	650 6473	... .	... .

SEATS - SOFT TRIM

Trim No.		Per Car	01-10-50-80 (LCV)	07-17-39-87	79	
T-796		1	680 0250	680 0209	... .	... .
T-797		1	680 0251	... .	... .	... .
T-798		1	680 0246	680 0205	... .	... .
T-799		1	680 0252	680 0210	... .	... .
T-828 (W4ST)	(* 29-72)	1	359 2329	... .	... .	... .
	(* 29-73)	1	362 4736	... .	... .	... .
T-831	(* 29-72)	1	... .	360 7351	360 4181	... .
	(* 29-73)	1	... .	362 4773	362 4757	... .
T-832	(* 29-72)	1	... .	360 7352	360 4189	... .
	(* 29-73)	1	... .	360 4207	362 4217	... .
T-835	(* 29-72)	1	... .	360 7353	360 4184	... .
	(* 29-73)	1	... .	362 4208	362 4218	... .
T-838	(* 29-72)	1	... .	... .	360 4181	... .
	(* 29-73)	1	... .	... .	362 4757	... .
T-843	(* 29-72)	1	359 2665	... .	... .	... .
	(* 29-73)	1	362 4737	... .	... .	... .
T-844	(* 29-72)	1	359 2666	... .	... .	... .
	(* 29-73)	1	362 4738	... .	... .	... .
T-845	(* 29-72)	1	358 1842	... .	... .	... .
	(* 29-73)	1	362 4054	... .	... .	... .
T-848	(* 29-72)	1	359 2329	... .	... .	... .
	(* 29-73)	1	362 4736	... .	... .	... .
T-851 (W4ST)	(* 29-72)	1	680 0237	680 0212	... .	... .
	(* 29-73)	1	651 6675	651 6680	... .	... .
T-853 (Blue)		1	680 0998	... .	... .	... .
	(* 29-73)	1	651 6676	... .	... .	... .
(W4ST-Black)	(* 29-72)	1	680 0237	680 0212	... .	... .
	(* 29-73)	1	651 6675	651 6680	... .	... .
T-855 (Red)	(* 29-72)	1	680 0240	... .	... .	... .
	(* 29-73)	1	652 1552	... .	... .	... .
(W4ST-Black)	(* 29-72)	1	680 0237	680 0212	... .	... .
	(* 29-73)	1	651 6675	651 6680	... .	... .
T-871	(* 29-72)	1	680 0237	680 0212	... .	... .
	(* 29-73)	1	651 6675	651 6680	... .	... .
T-873	(* 29-72)	1	680 0998	680 1002	... .	... .
	(* 29-73)	1	651 6676	651 6681	... .	... .
T-874	(* 29-72)	1	680 0999	680 1003	... .	... .
	(* 29-73)	1	651 6677	651 6682	... .	... .
T-875	(* 29-72)	1	680 0240	680 0215	... .	... .
	(* 29-73)	1	652 1552	652 1562	... .	... .
	(* 29-74)	1	651 6494	... .	... .	... .
T-876	(* 29-72)	1	680 1000	680 1004	... .	... .
	(* 29-73)	1	651 6678	651 6683	... .	... .
T-879	(* 29-72)	1	680 1001	680 1005		
	(* 29-73)	1	651 6679	651 6684	... .	... .
T-881	(* 29-72)	1	680 0237	... .	... .	... .
	(* 29-73)	1	651 6675	... .	... .	... .
T-883	(* 29-72)	1	680 0998	... .	... .	... .
	(* 29-73)	1	651 6676	... .	... .	... .
T-885	(* 29-72)	1	680 0240	... .	... .	... .
	(* 29-73)	1	652 1552	... .	... .	... .
	(* 29-74)	1	651 6494	... .	... .	... .
T-891	(* 29-72)	1	680 0237	... .	... .	... .
	(* 29-73)	1	651 6675	... .	... .	... .
T-893	(* 29-72)	1	680 0998	... .	... .	... .
	(* 29-73)	1	651 6676	... .	... .	... .
T-894	(* 29-72)	1	680 0999	... .	... .	... .
	(* 29-73)	1	651 6677	... .	... .	... .
T-895	(* 29-72)	1	680 0240	... .	... .	... .
	(* 29-73)	1	652 1552	... .	... .	... .
T-896	(* 29-72)	1	680 1000	... .	... .	... .
	(* 29-73)	1	651 6678	... .	... .	... .
T-899	(* 29-72)	1	680 1001	... .	... .	... .
	(* 29-73)	1	651 6679	... .	... .	... .

SEATS - SOFT TRIM

1969 MODELS

Trim No.	Per Car	01-10-30-70 -80			
T-000	1	651 6675	... .	... .	... .
T-921	1	362 4736	... .	... .	... .
T-923 (W4ST)	1	362 4052	... .	... .	... .
T-928 (W4ST)	1	362 4736	... .	... .	... .
T-932 (* 29-106)	1	361 7414	... .	... .	... .
T-931 (* 29-106)	1	361 7414	... .	... .	... .
T-935 (* 29-106)	1	361 7415	... .	... .	... .
T-936 (* 29-106)	1	361 7416	... .	... .	... .
T-941	1	362 4736	... .	... .	... .
T-943	1	362 4052	... .	... .	... .
T-944	1	362 4053	... .	... .	... .
T-945	1	362 4054	... .	... .	... .
T-951 (W4ST)	1	651 6675	... .	... .	... .
T-953 (W4ST)	1	651 6675	... .	... .	... .
T-956 (W4ST)	1	651 6675	... .	... .	... .
T-957 (W4ST)	1	651 6675	... .	... .	... .
T-961	1	362 4757	... .	... .	... .
T-962	1	362 4757	... .	... .	... .
T-963	1	362 4216	... .	... .	... .
T-965	1	362 4218	... .	... .	... .
T-966	1	362 4217	... .	... .	... .
T-968	1	362 4757	... .	... .	... .
T-972	1	651 6675	... .	... .	... .
T-973	1	652 1551	... .	... .	... .
T-975	1	652 1552	... .	... .	... .
T-976	1	652 1553	... .	... .	... .
T-977	1	652 1554	... .	... .	... .
T-979	1	652 1554	... .	... .	... .
T-981	1	651 6675	... .	... .	... .
T-983	1	652 1551	... .	... .	... .
T-986	1	652 1553	... .	... .	... .
T-987	1	652 1554	... .	... .	... .
T-991	1	651 6675	... .	... .	... .
T-992	1	651 6675	... .	... .	... .
T-993	1	652 1551	... .	... .	... .
T-995	1	652 1552	... .	... .	... .
T-996	1	652 1553	... .	... .	... .
T-997	1	652 1554	... .	... .	... .
T-999	1	652 1554	... .	... .	... .

Printed in U.S.A.

SEATS - SOFT TRIM

1970 Thru 1972 MODELS

Trim No.		Per Car	01-10-30-40 -70-80
T-011		1	363 8795
T-013		1	363 8796
T-014		1	363 8820
T-015		1	363 8797
T-031		1	361 7414
T-033		1	363 4548
T-035		1	361 7415
T-036		1	363 4549
T-041		1	363 5642
T-043		1	363 5643
T-044		1	363 5644
T-045		1	363 5645
T-051	(MACHINE)	1	362 1643
T-053	(MACHINE)	1	362 1655
T-056	(MACHINE)	1	362 1657
T-061		1	362 4757
T-063		1	362 9719
T-064		1	362 9720
T-065		1	362 4218
T-066		1	362 9721
T-071		1	362 1643
T-073		1	362 1655
T-074		1	362 1656
T-075		1	362 1645
T-076		1	362 1657
T-081		1	362 1643
T-083		1	362 1655
T-084		1	362 1656
T-086		1	362 1657
T-091		1	362 1643
T-093		1	362 1655
T-094		1	362 1656
T-095		1	362 1645
T-096		1	362 1657
T-111		1	363 8795
T-113		1	364 0600
T-114		1	364 0601
T-115		1	364 0602
T-141		1	363 5642
T-143		1	364 0934
T-144		1	364 0935
T-145		1	364 0936
T-161		1	362 4757
T-163		1	364 0680
T-164		1	364 0681
T-165		1	364 0682
T-168		1	362 4757
T-171		1	362 1643
T-173		1	362 2097
T-174		1	362 2098
T-175		1	362 2099
T-176		1	362 1643
T-181		1	362 1643
T-183		1	362 2097
T-184		1	362 2098
T-186		1	362 1643
T-191		1	362 1643
T-193		1	362 2097
T-194		1	362 2098
T-195		1	362 2099
T-196		1	362 1643
T-201	(LSBW)	1	366 1452
	(WSBW)...(Less Extension Carpet)	1	366 2170
	(WSBW)...(Incl. Extension Carpet)	1	366 8422

SEATS - SOFT TRIM

Trim No.		Per Car	01-10-30-40 -70-80
T-203	(LSBW)	1	365 2910
	(WSBW)...(Less Extension Carpet)	1	366 2171
	(WSBW)...(Incl. Extension Carpet)	1	366 8423
T-206	(LSBW)	1	365 2913
	(WSBW)...(Less Extension Carpet)	1	366 2172
	(WSBW)...(Incl. Extension Carpet)	1	366 8424
T-211	(LSBW)	1	366 1452
	(WSBW)...(Less Extension Carpet)	1	366 2170
	(WSBW)...(Incl. Extension Carpet)	1	366 8422
T-213	(LSBW)	1	365 2910
	(WSBW)...(Less Extension Carpet)	1	366 2171
	(WSBW)...(Incl. Extension Carpet)	1	366 8423
T-215	(LSBW)	1	366 1452
	(WSBW)...(Less Extension Carpet)	1	366 2170
	(WSBW)...(Incl. Extension Carpet)	1	366 8422
T-216	(LSBW)	1	365 2913
	(WSBW)...(Less Extension Carpet)	1	366 2172
	(WSBW)...(Incl. Extension Carpet)	1	366 8424
T-218	...(Less Extension Carpet)	1	366 2170
	...(Incl. Extension Carpet)	1	366 8422
T-241	(LSBW)	1	366 1456
	(WSBW)	1	366 2193
T-243	(LBSW)	1	365 0940
	(WSBW)	1	366 8428
T-244	(LSBW)	1	365 0941
	(WSBW)	1	366 8429
T-245	(LSBW)	1	366 1456
	(WSBW)	1	366 2193
T-246	(LSBW)	1	365 1741
	(WSBW)	1	366 8426
T-261		1	366 1454
T-263		1	365 0937
T-264		1	365 0938
T-265		1	366 1454
T-266		1	365 6355
T-268		1	366 1454
T-271		1	366 1451
T-273		1	365 1746
T-274		1	365 1747
T-276		1	365 1748
T-291		1	366 1451
T-293		1	365 1746
T-294		1	365 1747
T-296		1	365 1748

29.302-4 CARPET, Rear Floor (Two Piece - Cut Pile Type)(AMX)

1968 - 1969 MODELS

Trim No.		Per Car	39			
T-831	Front Section	1	363 0254	... .	... .	... .
	Rear Section	1	363 0263	... .	... .	... .
T-832	Front Section	1	363 0256	... .	... .	... .
	Rear Section	1	363 0265	... .	... .	... .
T-835	Front Section	1	363 0255	... .	... .	... .
	Rear Section	1	363 0264	... .	... .	... .
T-931	Front Section (* 29-105)	1	363 0257	... .	... .	... .
	Rear Section (* 29-105)	1	363 0266	... .	... .	... .
T-932	Front Section (* 29-105)	1	363 0257	... .	... .	... .
	Rear Section (* 29-105)	1	363 0266	... .	... .	... .
T-935	Front Section (* 29-105)	1	363 0258	... .	... .	... .
	Rear Section (* 29-105)	1	363 0267	... .	... .	... .
T-936	Front Section (* 29-105)	1	363 0259	... .	... .	... .
	Rear Section (* 29-105)	1	363 0268	... .	... .	... .

SEATS - SOFT TRIM

29.302–5 ATTACHING PARTS, Carpet To Floor Pan

SCREW, Tapping	67/69	01	29.019	8	439	5412
SCREW, Tapping	70/71	01 (3/4" Long)	.....	8	400	3095
SCREW, Tapping	72	01 (1/2" Long)	.....	8	400	1776
SCREW, Tapping	67/68	10-50-80	29.019	4	439	5412
SCREW, Tapping	67/69	10-50-80 (3/4" Long)	29.019	2	439	5412
SCREW, Tapping	67/69	10-50-80 (1/2" Long)	29.070	2	400	0273
SCREW, Tapping	69/71	10-80 (3/4" Long)	.....	2	400	3095
SCREW, Tapping	72	10-80 (1/2" Long)	.....	AR	400	1776
SCREW, Tapping	69	30-70	29.019	6	439	5412
SCREW, Tapping	70/71	30-70 (3/4" Long)	.....	6	400	3095
SCREW, Tapping	72	70 (1/2" Long)	.....	6	400	1776

29.302–6 CARPET, Rear Floor Side Sill

1967 Thru 1969 MODELS

Trim No.			Per Car	05-08-15-18 -85-88	05-08-15-18 (220)(550)		
T-723	Left		1	... .	359 7009	... .	... .
	Right		1	... .	359 7008	... .	... .
T-728	Left		1	... .	359 7009	... .	... .
	Right		1	... .	359 7008	... .	... .
T-729	Left		1	... .	359 7009	... .	... .
	Right		1	... .	359 7008	... .	... .
T-741	Left		1	359 7009	... .	... .	... .
	Right		1	359 7008	... .	... .	... .
T-743	Left		1	359 7011	... .	... .	... .
	Right		1	359 7010	... .	... .	... .
T-744	Left		1	359 7013	... .	... .	... .
	Right		1	359 7012	... .	... .	... .
T-745	Left		1	359 7015	... .	... .	... .
	Right		1	359 7014	... .	... .	... .
T-747	Left		1	359 7017	... .	... .	... .
	Right		1	359 7016	... .	... .	... .
T-748	Left		1	359 7009	... .	... .	... .
	Right		1	359 7008	... .	... .	... .
T-749	Left		1	359 7019	... .	... .	... .
	Right		1	359 7018	... .	... .	... .
T-771	Left		1	680 0381	... .	... .	... .
	Right		1	680 0380	... .	... .	... .
T-773	Left		1	680 0313	... .	... .	... .
	Right		1	680 0312	... .	... .	... .
T-774	Left		1	680 0383	... .	... .	... .
	Right		1	680 0382	... .	... .	... .
T-776	Left		1	680 0317	... .	... .	... .
	Right		1	680 0316	... .	... .	... .
T-777	Left		1	680 0319	... .	... .	... .
	Right		1	680 0318	... .	... .	... .
T-779	Left		1	680 0321	... .	... .	... .
	Right		1	680 0320	... .	... .	... .
T-781	Left		1	680 0381	... .	... .	... .
	Right		1	680 0380	... .	... .	... .
T-783	Left		1	680 0313	... .	... .	... .
	Right		1	680 0312	... .	... .	... .
T-787	Left		1	680 0319	... .	... .	... .
	Right		1	680 0318	... .	... .	... .
T-789	Left		1	680 0321	... .	... .	... .
	Right		1	680 0320	... .	... .	... .
T-791	Left		1	680 0381	... .	... .	... .
	Right		1	680 0380	... .	... .	... .
T-793	Left		1	680 0313	... .	... .	... .
	Right		1	680 0312	... .	... .	... .
T-794	Left		1	680 0383	... .	... .	... .
	Right		1	680 0382	... .	... .	... .
T-796	Left		1	680 0317	... .	... .	... .
	Right		1	680 0316	... .	... .	... .

SEATS - SOFT TRIM

Trim No.			Per Car	05-08-15-18 -85-88	05-08-15-18 (220)(550)		
T-797	Left		1	680 0319			
	Right		1	680 0318			
T-799	Left		1	680 0321			
	Right		1	680 0320			
T-828	Left	(* 29-72)	1		359 7009		
		(* 29-73)	1		651 6697		
	Right	(* 29-72)	1		359 7008		
		(* 29-73)	1		651 6696		
T-843	Left	(* 29-72)	1	680 1007			
		(* 29-73)	1	651 6699			
	Right	(* 29-72)	1	680 1006			
		(* 29-73)	1	651 6698			
T-844	Left	(* 29-72)	1	680 1009			
		(* 29-73)	1	651 6701			
	Right	(* 29-72)	1	680 1008			
		(* 29-73)	1	651 6700			
T-845	Left	(* 29-72)	1	359 7015			
		(* 29-73)	1	652 1505			
	Right	(* 29-72)	1	359 7014			
		(* 29-73)	1	652 1504			
T-848	Left	(* 29-72)	1	359 7009			
		(* 29-73)	1	651 6697			
	Right	(* 29-72)	1	359 7008			
		(* 29-73)	1	651 6696			
T-851	Left	(* 29-72)	1		680 0381		
		(* 29-73)	1		651 6697		
	Right	(* 29-72)	1		680 0380		
		(* 29-73)	1		651 6696		
T-853	Left	Blue	1	680 1007			
		Black (* 29-72)	1		680 0381		
		Black (* 29-73)	1		651 6697		
	Right	Blue	1	680 1006			
		Black (* 29-72)	1		680 0380		
		Black (* 29-73)	1		651 6696		
T-855	Left	(* 29-72)	1		680 0381		
		(* 29-73)	1		651 6697		
	Right	(* 29-72)	1		680 0380		
		(* 29-73)	1		651 6696		
T-871	Left	(* 29-72)	1	680 0381			
		(* 29-73)	1	651 6697			
	Right	(* 29-72)	1	680 0380			
		(* 29-73)	1	651 6696			
T-873	Left	(* 29-72)	1	680 1007			
		(* 29-73)	1	651 6699			
	Right	(* 29-72)	1	680 1006			
		(* 29-73)	1	651 6698			
T-874	Left	(* 29-72)	1	680 1009			
		(* 29-73)	1	651 6701			
	Right	(* 29-72)	1	680 1008			
		(* 29-73)	1	651 6700			
T-875	Left	(* 29-72)	1	680 0315			
		(* 29-73)	1	652 1505			
		(* 29-74)	1	651 6493			
	Right	(* 29-72)	1	680 0314			
		(* 29-73)	1	652 1504			
		(* 29-74)	1	651 6492			
T-876	Left	(* 29-72)	1	680 0381			
		(* 29-73)	1	651 6703			
	Right	(* 29-72)	1	680 0380			
		(* 29-73)	1	651 6702			
T-879	Left	(* 29-72)	1	680 1015			
		(* 29-73)	1	651 6705			
	Right	(* 29-72)	1	680 1014			
		(* 29-73)	1	651 6704			
T-881	Left	(* 29-72)	1	680 0381			
		(* 29-73)	1	651 6697			
	Right	(* 29-72)	1	680 0380			
		(* 29-73)	1	651 6696			

Printed in U.S.A.

SEATS - SOFT TRIM

Trim No.			Per Car	05-08-15-18 -85-88	05-08-15-18 (220)(550)		
T-883	Left	(* 29-72)	1	680 1007	... .	... .	... .
		(* 29-73)	1	651 6699	... .	... .	... .
	Right	(* 29-72)	1	680 1006	... .	... .	... .
		(* 29-73)	1	651 6698	... .	... .	... .
T-885	Left	(* 29-72)	1	680 0315	... .	... .	... .
		(* 29-73)	1	652 1505	... .	... .	... .
		(* 29-74)	1	651 6493	... .	... .	... .
	Right	(* 29-72)	1	680 0314	... .	... .	... .
		(* 29-73)	1	652 1504	... .	... .	... .
		(* 29-74)	1	651 6492	... .	... .	... .
T-891	Left	(* 29-72)	1	680 0381	... .	... .	... .
		(* 29-73)	1	651 6697	... .	... .	... .
	Right	(* 29-72)	1	680 0380	... .	... .	... .
		(* 29-73)	1	651 6696	... .	... .	... .
T-893	Left	(* 29-72)	1	680 1007	... .	... .	... .
		(* 29-73)	1	651 6699	... .	... .	... .
	Right	(* 29-72)	1	680 1006	... .	... .	... .
		(* 29-73)	1	651 6698	... .	... .	... .
T-894	Left	(* 29-72)	1	680 1009	... .	... .	... .
		(* 29-73)	1	651 6701	... .	... .	... .
	Right	(* 29-72)	1	680 1008	... .	... .	... .
		(* 29-73)	1	651 6700	... .	... .	... .
T-895	Left	(* 29-72)	1	680 0315	... .	... .	... .
		(* 29-73)	1	652 1505	... .	... .	... .
	Right	(* 29-72)	1	680 0314	... .	... .	... .
		(* 29-73)	1	652 1504	... .	... .	... .
T-896	Left	(* 29-72)	1	680 1013	... .	... .	... .
		(* 29-73)	1	651 6703	... .	... .	... .
	Right	(* 29-72)	1	680 1012	... .	... .	... .
		(* 29-73)	1	651 6702	... .	... .	... .
T-899	Left	(* 29-72)	1	680 1015	... .	... .	... .
		(* 29-73)	1	651 6705	... .	... .	... .
	Right	(* 29-72)	1	680 1014	... .	... .	... .
		(* 29-73)	1	651 6704	... .	... .	... .
T-921	Left		1	... .	651 6697	... .	... .
	Right		1	... .	651 6696	... .	... .
T-923	Left		1	... .	362 0659	... .	... .
	Right		1	... .	362 0658	... .	... .
T-928	Left		1	... .	651 6697	... .	... .
	Right		1	... .	651 6696	... .	... .
T-941	Left		1	651 6697	... .	... .	... .
	Right		1	651 6696	... .	... .	... .
T-943	Left		1	362 0659	... .	... .	... .
	Right		1	362 0658	... .	... .	... .
T-944	Left		1	362 0661	... .	... .	... .
	Right		1	362 0660	... .	... .	... .
T-945	Left		1	362 0663	... .	... .	... .
	Right		1	362 0662	... .	... .	... .
T-951	Left		1	... .	651 6697	... .	... .
	Right		1	... .	651 6696	... .	... .
T-953	Left	Black	1	... .	651 6697	... .	... .
		Blue	1	... .	652 1503	... .	... .
	Right	Black	1	... .	651 6696	... .	... .
		Blue	1	... .	652 1502	... .	... .
T-956	Left	Black	1	... .	651 6697	... .	... .
		Brown	1	... .	652 1507	... .	... .
	Right	Black	1	... .	651 6696	... .	... .
		Brown	1	... .	652 1506	... .	... .
T-957	Left	Black	1	... .	651 6697	... .	... .
		Avocado	1	... .	652 1509	... .	... .
	Right	Black	1	... .	651 6696	... .	... .
		Avocado	1	... .	652 1508	... .	... .

SEATS - SOFT TRIM

Trim No.		Per Car	05-08-15-18 -85-88	05-08-15-18 (220)(550)		
T-972	Left	1	651 6697	... .	... .	... .
	Right	1	651 6696	... .	... .	... .
T-973	Left	1	652 1503	... .	... .	... .
	Right	1	652 1502	... .	... .	... .
T-976	Left	1	652 1507	... .	... .	... .
	Right	1	652 1506	... .	... .	... .
T-977	Left	1	652 1509	... .	... .	... .
	Right	1	652 1508	... .	... .	... .
T-981	Left	1	651 6697	... .	... .	... .
	Right	1	651 6696	... .	... .	... .
T-983	Left	1	652 1503	... .	... .	... .
	Right	1	652 1502	... .	... .	... .
T-986	Left	1	652 1507	... .	... .	... .
	Right	1	652 1506	... .	... .	... .
T-987	Left	1	652 1509	... .	... .	... .
	Right	1	652 1508	... .	... .	... .
T-991	Left	1	651 6697	... .	... .	... .
	Right	1	651 6696	... .	... .	... .
T-992	Left	1	651 6697	... .	... .	... .
	Right	1	651 6696	... .	... .	... .
T-993	Left	1	652 1503	... .	... .	... .
	Right	1	652 1502	... .	... .	... .
T-996	Left	1	652 1507	... .	... .	... .
	Right	1	652 1506	... .	... .	... .
T-997	Left	1	652 1509	... .	... .	... .
	Right	1	652 1508	... .	... .	... .

1970 Thru 1972 MODELS

Trim No.		Per Car	01-10-80
T-041		2	362 6978
T-043		2	362 6979
T-044		2	362 6980
T-045		2	362 6981
T-051	(W4ST)	2	370 1154
T-053	(W4ST)	2	362 1648
T-054	(W4ST)	2	362 1649
T-056	(W4ST)	2	362 1651
T-071		2	370 1154
T-073		2	362 1648
T-074		2	362 1649
T-075		2	362 1650
T-076		2	362 1651
T-081		2	370 1154
T-083		2	362 1648
T-084		2	362 1649
T-086		2	362 1651
T-091		2	370 1154
T-093		2	362 1648
T-094		2	362 1649
T-095		2	362 1650
T-096		2	362 1651
T-141		2	362 6978
T-143		2	363 9615
T-144		2	363 9616
T-145		2	363 9617
T-171		2	370 1154
T-173		2	362 2100
T-174		2	362 2101
T-175		2	362 2102
T-176		2	370 1154
T-181		2	370 1154
T-183		2	362 2100
T-184		2	362 2101
T-186		2	370 1154

Printed in U.S.A.

SEATS - SOFT TRIM

Trim No.			Per Car	01-10-80
T-191			2	370 1154
T-193			2	362 2100
T-194			2	362 2101
T-195			2	362 2102
T-196			2	370 1154
T-241			2	366 1457
T-243			2	365 2916
T-244			2	365 2917
T-245			2	366 1457
T-246			2	365 2919
T-248			1	366 1457
T-271		(5-3/4" Wide)	2	652 9978
	Left	(9-1/8" Wide)	1	653 2405
	Right	(9-1/8" Wide)	1	653 2404
T-273		(5-3/4" Wide)	2	652 9433
	Left	(9-1/8" Wide)	1	653 2407
	Right	(9-1/8" Wide)	1	653 2406
T-274		(5-3/4" Wide)	2	652 9434
	Left	(9-1/8" Wide)	1	653 2409
	Right	(9-1/8" Wide)	1	653 2408
T-276		(5-3/4" Wide)	2	652 9435
	Left	(9-1/8" Wide)	1	653 2411
	Right	(9-1/8" Wide)	1	653 2410
T-291		(5-3/4" Wide)	2	652 9978
	Left	(9-1/8" Wide)	1	653 2405
	Right	(9-1/8" Wide)	1	653 2404
T-293		(5-3/4" Wide)	2	652 9433
	Left	(9-1/8" Wide)	1	653 2407
	Right	(9-1/8" Wide)	1	653 2406
T-294		(5-3/4" Wide)	2	652 9434
	Left	(9-1/8" Wide)	1	653 2409
	Right	(9-1/8" Wide)	1	653 2408
T-296		(5-3/4" Wide)	2	652 9435
	Left	(9-1/8" Wide)	1	653 2411
	Right	(9-1/8" Wide)	1	653 2410

29.302-7 ATTACHING PARTS, Carpet To Body

SCREW, Tapping.....	67/68	15-18-85-88 (1/2" Long)	29.070	2	400	0273
SCREW, Tapping.....	67/68	15-18-85-88 (3/4" Long)	29.019	2	439	5412
SCREW, Tapping.....	69/71	15-18-85-88 (3/4" Long)	.....	2	400	3095
SCREW, Tapping.....	72	15-18-85-88 (1/2" Long)	.....	2	400	1776

29.302-7a CARPET, Rear Floor Extension

Trim No.	Per Car	40
T-011	1	364 0195
T-013	1	364 0196
T-014	1	364 0179
T-015	1	364 0197
T-111	1	364 0195
T-113	1	364 0658
T-114	1	364 0659
T-115	1	364 0660
T-201	1	366 1458
T-203	1	365 2922
T-206	1	365 2925
T-211	1	366 1458
T-213	1	365 2922
T-215	1	366 1458
T-216	1	365 2925
T-218	1	366 1458

SEATS - SOFT TRIM

29.302–8 PAD, Rear Floor Carpet

67	01 (LCV)	.....	1	350 1774
68/69	01	.....	1	362 3994
70/	01	.....	1	362 7001
72	01 (WSBW)	.....	1	366 2197
67	07	.....	1	350 1776
67	10-50-80	.....	1	357 8357
68/	10-80	.....	1	357 8357
67/68	17-87	.....	1	357 8358
70/	40 (LSBW)	.....	1	363 7615
72	40 (WSBW)	.....	1	366 2180
68/	70	.....	1	360 4177
68/69	(Front) 30	.....	1	362 3677
68/69	(Rear) 30	.....	1	360 7548

29.302–9 PAD, Rear Floor Mat

67/	***80 (Post Office-8 x 4-1-1/4")***	.....	1	360 8637
67/	***80 (Post Office-58-3/4 x 18")***	.....	1	360 8636

29.302–10 RETAINER, Rear Floor Mat And Carpet

Description	Per Car	06
T-723	2	358 1036
T-728	2	356 3588
T-729	2	358 1040
T-741	2	356 3588
T-743	2	358 1036
T-744	2	356 3590
T-745	2	358 1038
T-747	2	358 1039
T-749	2	358 1040
T-828	2	356 3588
T-923	2	356 3588
T-928	2	356 3588

29.309–1 INSULATION, Dash

67/68	01 (LHD)	.....	1	359 2131
69	01 (LHD)	.....	1	363 0544
70	01 (LHD-LWH-LAC)(Heater Hole Cover)	.....	1	363 5363
72	01-40	.....	1	366 1476
67/68	10-50-80 (LHD)	.....	1	357 5606
69	10-80 (LHD)	.....	1	360 9110
70/	10-80 (LHD)	.....	1	360 9459
67/70	***10-80 (RHD)***	.....	1	357 5607
70/	(Left) 01-40 (LHD) ***(Use 363 5360)***	.....	1	363 5362
67/68	(Left) 30-70	.....	1	359 2615
69	(Left) 30-70	.....	1	353 0541
70	(Left) 30-70	.....	1	363 5385
71	(Left) 70	.....	1	364 1545
72	(Left) 70	.....	1	365 1750
67/69	***(Left) 01 (RHD)***	.....	1	352 2685
67/69	***(Left) 01 (RHD-Less Heater)***	.....	1	352 2764
70/	***(Left) 01 (RHD)***	.....	1	363 5718
70/	(Right) 01-40 (LHD) ***(Use 363 5360)***	.....	1	363 5361
67/68	(Right) 30-70	.....	1	359 2614
69	(Right) 30-70	.....	1	353 0540
70	(Right) 30-70	.....	1	363 5384
71/	(Right) 70	.....	1	364 1544
67/69	***(Right) 01 (RHD)***	.....	1	359 2382
70/	***(Right) 01 (RHD)***	.....	1	363 5719

29.309–2 ATTACHING PARTS, Insulation To Dash

FASTENER	67/	.....	29.294	3	400 1934

SEATS - SOFT TRIM

29.309–3 INSULATION, Toeboard

67/	01–40	.....	2	350 5903
67/68	10–50–80	.....	1	357 5608
69	10–80	.....	1	360 8997
70/	10–80	.....	1	360 9463
68	30–70	.....	1	359 9024
69/70	30–70	.....	1	363 0538
71/	70	.....	1	364 1183

29.309–4 INSULATION, Front Floor Pan Front

67/	01–40	.....	2	347 6334
68/70	30	.....	1	362 3393
67/69	50–80 (LCV)	.....	1	357 5562
67	87	.....	1	358 6595
70/	10–80 (With Carpets)	.....	1	360 9466

29.309–5 INSULATION, Front Floor Pan Center

67/	40	.....	1	350 5903

29.309–6 INSULATION, Cowl Ventilator

67/69	01	.....	1	358 2672
70/	(Left) 01–40	.....	1	363 5729
67/	(Left) 10–50–80 (LHD)	.....	1	358 6311
67/70	***(Left) 10-80 (RHD)***	.....	1	358 6776
68/70	(Left) 30–70	.....	1	359 9027
71/	(Left) 70	.....	1	365 0488
70/	(Right) 01–40	.....	1	363 5728
67/	(Right) 10–50–80 (LHD)	.....	1	358 6310
67/70	***(Right) 10-80 (RHD)***	.....	1	358 6775
68/70	(Right) 30–70	.....	1	359 9026
71/	(Right) 70	.....	1	365 0489
67/	(Center) 10–50–80 (LHD)	.....	1	358 6322
67/70	***(Center) 10-80 (RHD)***	.....	1	358 6777

29.309–6a INSULATION, Instrument Panel Support

71/	70	.....	1	365 0491

29.309–7 INSULATION, Under Front Seat

68/70	30	.....	1	362 3394
67/	(Left) 01–40	.....	1	350 5905
67/68	(Left) 50–80 (LCV)(* 29–60)	.....	1	357 5565
68/69	(Left) 80 (* 29–61)	.....	1	360 8779
67	(Left) 87	.....	1	358 6597
70/	(Left) 10–80 (With Carpets)	.....	1	360 9465
67/	(Right) 01–40	.....	1	350 5904
67/68	(Right) 50–80 (LCV)(* 29–60)	.....	1	357 5564
68/69	(Right) 80 (* 29–61)	.....	1	360 8778
67	(Right) 87	.....	1	358 6596
70/	(Right) 10–80 (With Carpets)	.....	1	360 9464

29.309–8 INSULATION, Under Rear Seat Back

72	01	.....	2	366 1444
67/68	17–18–87–88	.....	1	359 8096
69/	18–88	.....	1	359 8096

SEATS - SOFT TRIM

29.309–9 INSULATION, Rear Floor Pan

67	05-06-07-09	.....	1	352 3023
72	40	.....	1	366 1480
70/	(Left) 10-80 (With Carpets)	.....	1	358 6325
68/70	(Left) 30	.....	1	362 3399
67/69	(Left) 80 (LCV)	.....	1	358 6325
67	(Left) 87	.....	1	358 6599
70/	(Right) 10-80 (With Carpets)	.....	1	358 6324
68/70	(Right) 30	.....	1	362 3398
67/69	(Right) 80 (LCV)	.....	1	358 6324
67	(Right) 87	.....	1	358 6598

29.309–10 INSULATION, Rear Floor Tunnel

68/70	30	.....	1	362 3395

29.309–11 INSULATION, Rear Floor Footwell

68/70	(Left) 30	.....	1	362 3397
68/70	(Right) 30	.....	1	362 3396

29.309–12 INSULATION, Rear Wheelhouse Upper

68/70	(Left) 30	.....	1	362 3401
68/70	(Right) 30	.....	1	362 3400

29.309–13 INSULATION, Rear Wheelhouse Lower

68/70	(Left) 30	.....	1	362 3403
68/70	(Right) 30	.....	1	362 3402

29.309–14 INSULATION, Rear Axle

67/	10-80 (Except Station Wagon)	.....	1	359 8046

29.309–15 INSULATION, Rear Auxiliary Floor Pan Front

67/	18-88	.....	1	359 8098

29.309–16 INSULATION, Trunk Compartment Floor

67/68	17-87	.....	1	359 8099

29.310 INSULATION, Rear Quarter Panel Belt

67	15-16-19-85-86-89	.....	2	354 9201
67	59	.....	4	354 9201

29.313–1 INSULATION, Rear Shelf Panel (Plastic)

Trim No.	Per Car	59			
T-791	1	356 1630	... .	... .	... .
T-793	1	359 7361	... .	... .	... .
T-795	1	359 7362	... .	... .	... .
T-799	1	359 7363	... .	... .	... .

29.313–2 INSULATION, Rear Shelf Panel Front (Fiber Board)

67	59	.....	1	359 2425

Printed in U.S.A.

SEATS - SOFT TRIM

29.319 MAT, Rear Trunk Compartment Floor

67/68	01	*(Use 361 9870)*	.....	1	355 6011
69	01		.....	1	361 9870
70/	01		.....	1	363 9622
67/69	10-50-80 (LCV)		.....	1	359 2423
67/68	17-87		.....	1	359 2422
70/	10-80		.....	1	363 9620
70	30-70		.....	1	363 9621
68/69	39		.....	1	360 7421
68/69	70		.....	1	360 7420
71/	70		.....	1	364 8599

29.322–1 MAT, Rear Auxiliary Floor Storage Compartment

67/68	18-88 (L3S)		.....	1	357 8615
69/71	18 (L3S)		.....	1	357 8615
69/	88 (L3S)		.....	1	361 7707

29.322–2 ATTACHING PARTS, Mat To Compartment

SCREW, Tapping.....	69/71	88 (L3S)	.....	29.070	4	400 0273

29.335–1 INSULATION, Rear Seat Back

67/69	05-06-09	.....	1	350 2188
70/	05-06	.....	1	362 7572
67	15-16-19-85-86-89	.....	1	359 8015
68/	15-19-85-89	.....	1	359 8015
67	59	.....	1	359 2424
68/	79	.....	1	359 9447

29.335–2 ATTACHING PARTS, Insulation To Body

CLIP.....	68/	79	.....	12.022	2	400 0085

29.336–1 INSULATION, Rear Compartment

69/70	39	.....	1	362 3419

29.336–2 ATTACHING PARTS, Insulation Rear Compartment

CLIP, Wire.....	69/70	39	.....	12.022	3	400 0085

SEATS - SOFT TRIM

29.350 MATERIAL, Seat Cloth (Used On Seat Cushions And Backs)(* 29-76)

1967 Thru 1969 MODELS

Trim No.		Per Car	01-10-80			
T-723C		AR	358 0902			
T-723M		AR	358 0356			
T-728C		AR	358 0901			
T-728M		AR	358 0355			
T-729C		AR	358 0903			
T-741D		AR	358 1081			
T-743C	Backs Only	AR	358 0907			
	Cushions Only	AR	357 8009			
T-743D		AR	358 1082			
T-744C	Backs Only	AR	358 0908			
	Cushions Only	AR	357 8010			
T-745C	Backs Only	AR	358 0909			
	Cushions Only	AR	357 8011			
T-745D		AR	358 1084			
T-747C	Backs Only	AR	358 0910			
	Cushions Only	AR	357 8012			
T-749C	Backs Only	AR	358 0911			
	Cushions Only	AR	357 8013			
T-749D		AR	358 1086			
T-753C		AR	357 8002			
T-758C		AR	357 8001			
T-759C		AR	357 8003			
T-781C		AR	357 8041			
T-783C		AR	357 8036			
T-787C		AR	357 8039			
T-789C		AR	357 8040			
T-828C		AR	360 4506			
T-828M		AR	360 4511			
T-843C		AR	360 4512			
T-844C		AR	360 4513			
T-845C		AR	360 4514			
T-848C		AR	360 4511			
T-851C		AR	360 5231			
T-853C		AR	360 5232			
T-855C		AR	360 5234			
T-881C		AR	360 5256			
T-883C		AR	360 5257			
T-885C		AR	360 5259			
T-923		AR	361 7239			
T-928		AR	361 7238			
T-941		AR	361 7009			
T-943		AR	361 7007			
T-944		AR	361 7008			
T-945		AR	361 7010			
T-953		AR	361 7272			
T-956		AR	362 5008			
T-957		AR	361 7273			
T-983		AR	361 7291			
T-986		AR	362 5009			
T-987		AR	361 7292			

SEATS - SOFT TRIM

1970 MODELS

Trim No.	Per Car	01-10-80
T-021	AR	362 7611
T-023	AR	362 7612
T-024	AR	362 7613
T-025	AR	362 7614
T-041	AR	362 7616
T-043A	AR	362 7617
T-043C	AR	362 7617
T-043V	AR	363 9951
T-044A	AR	362 7618
T-044C	AR	362 7618
T-044V	AR	363 9952
T-045	AR	362 7619
T-053	AR	362 6002
T-054	AR	362 6003
T-056	AR	362 6004
T-083	AR	362 6013
T-084	AR	362 6014
T-086	AR	362 6015

1971 - 1972 MODELS

	Per Car	01-10-40-80
T-103A	AR	363 9951
T-104A	AR	363 9952
T-121A	AR	362 7611
T-121AX	AR	362 7616
T-123A	AR	363 8771
T-123AX	AR	362 7617
T-124	AR	363 8772
T-141A	AR	363 8766
T-141C	AR	363 8766
T-141V	AR	364 0956
T-143A	AR	363 8767
T-143C	AR	363 8767
T-143V	AR	364 0958
T-144A	AR	363 8768
T-144C	AR	363 8768
T-144V	AR	364 0959
T-145V	AR	364 0957
T-151A	AR	363 8426
T-151C	AR	363 8426
T-153A	AR	363 8427
T-153C	AR	363 8427
T-154A	AR	363 8428
T-154C	AR	363 8428
T-181A	AR	363 8007
T-181C	AR	363 8007
T-183A	AR	363 8008
T-183C	AR	363 8008
T-184A	AR	363 8009
T-184C	AR	363 8009
T-201A	AR	365 2201
T-203A	AR	365 2202
T-206A	AR	365 2214

SEATS - SOFT TRIM

29.355 MATERIAL, Genuine Leather (Order By The Square Foot)

Trim No.	Per Car	30-70
T-931L	AR	362 5037
T-936L	AR	362 5038
T-031L	AR	362 8180
T-035L	AR	362 8182
T-036L	AR	362 8181
T-061L	AR	362 8180
T-065L	AR	362 8182
T-066L	AR	362 8181
T-161L	AR	363 8135
T-165L	AR	362 8136

29.356–1 MATERIAL, Plain Vinyl (Used On Front Seat Cushion Tube And Bracket Cover)(54" Width)(* 29-76)

1967 Thru 1969 MODELS (For 1970 Thru 1972 - Use Material Listed In Group 29.356–5)

Trim No.	Per Car	01-10-30-50 -70-80
T-723	AR	357 8057
T-728	AR	357 8056
T-729 Dark Tan	AR	357 8063
Medium Tan	AR	357 8053
T-741	AR	357 8056
T-743	AR	357 8057
T-744	AR	357 8058
T-745	AR	357 8059
T-747	AR	357 8061
T-748	AR	357 8056
T-749 Dark Tan	AR	357 8063
Medium Tan	AR	357 8053
T-753	AR	357 8057
T-758	AR	357 8056
T-759	AR	357 8063
T-771	AR	357 8056
T-773	AR	357 8057
T-774	AR	357 8058
T-775	AR	357 8059
T-776	AR	357 8060
T-777	AR	357 8061
T-778	AR	357 8056
T-779	AR	357 8063
T-781	AR	357 8056
T-783	AR	357 8057
T-787	AR	357 8061
T-789	AR	357 8063
T-791	AR	357 8056
T-793	AR	357 8057
T-794	AR	357 8058
T-795	AR	357 8059
T-796	AR	357 8060
T-797	AR	357 8061
T-798	AR	357 8056
T-799 Dark Tan	AR	357 8063
Medium Tan	AR	357 8053
T-828	AR	358 1201
T-831	AR	358 1201
T-832	AR	360 6698

SEATS - SOFT TRIM

Trim No.		Per Car	01-10-30-50 -70-80			
T-835		AR	358 1206	... .	... .	... .
T-843		AR	360 6694	... .	... .	... .
T-844		AR	360 6695	... .	... .	... .
T-845		AR	360 6696	... .	... .	... .
T-848		AR	358 1201	... .	... .	... .
T-851		AR	358 1201	... .	... .	... .
T-853		AR	360 6694	... .	... .	... .
T-855		AR	358 1206	... .	... .	... .
T-871		AR	358 1201	... .	... .	... .
T-873		AR	360 6694	... .	... .	... .
T-874		AR	360 6695	... .	... .	... .
T-875		AR	358 1206	... .	... .	... .
T-876		AR	360 6696	... .	... .	... .
T-879		AR	360 6697	... .	... .	... .
T-881		AR	358 1201	... .	... .	... .
T-883		AR	360 6694	... .	... .	... .
T-885		AR	358 1206	... .	... .	... .
T-891		AR	358 1201	... .	... .	... .
T-893		AR	360 6694	... .	... .	... .
T-894		AR	360 6695	... .	... .	... .
T-895		AR	358 1206	... .	... .	... .
T-896		AR	360 6696	... .	... .	... .
T-899		AR	360 6697	... .	... .	... .
T-923		AR	361 8486	... .	... .	... .
T-928		AR	361 8485	... .	... .	... .
T-931		AR	362 5462	... .	... .	... .
T-932		AR	361 8491	... .	... .	... .
T-935		AR	358 1206	... .	... .	... .
T-936		AR	362 5463	... .	... .	... .
T-941		AR	362 5463	... .	... .	... .
T-943		AR	361 8486	... .	... .	... .
T-944		AR	361 8487	... .	... .	... .
T-945		AR	358 1206	... .	... .	... .
T-951	Charcoal	AR	361 8485	... .	... .	... .
	Platinum	AR	361 8491	... .	... .	... .
T-953		AR	361 8486	... .	... .	... .
T-956		AR	362 5463	... .	... .	... .
T-957		AR	361 8618	... .	... .	... .
T-961		AR	362 5462	... .	... .	... .
T-962	Platinum	AR	361 8491	... .	... .	... .
	Charcoal	AR	362 5462	... .	... .	... .
T-963		AR	361 8486	... .	... .	... .
T-965		AR	358 1206	... .	... .	... .
T-966	Saddle	AR	362 5463	... .	... .	... .
	Beige	AR	361 8618	... .	... .	... .
T-968		AR	358 1210	... .	... .	... .
T-972		AR	361 8491	... .	... .	... .
T-973		AR	361 8486	... .	... .	... .
T-975		AR	358 1206	... .	... .	... .
T-976		AR	361 8618	... .	... .	... .
T-977		AR	361 8489	... .	... .	... .
T-979		AR	361 8490	... .	... .	... .
T-981	Charcoal	AR	361 8485	... .	... .	... .
	Platinum	AR	361 8491	... .	... .	... .
T-983		AR	361 8486	... .	... .	... .
T-986		AR	361 8618	... .	... .	... .
T-987		AR	361 8489	... .	... .	... .

SEATS - SOFT TRIM

Trim No.		Per Car	01-10-30-50 -70-80			
T-991	Charcoal	AR	361 8485	... .	... .	... .
	Platinum	AR	361 8491	... .	... .	... .
T-993		AR	361 8486	... .	... .	... .
T-995		AR	358 1206	... .	... .	... .
T-996		AR	362 5463	... .	... .	... .
T-997		AR	361 8489	... .	... .	... .
T-999		AR	361 8490	... .	... .	... .

29.356–2 MATERIAL, Plain Vinyl (Used On Front Seat Back Kickpanel When Part Of Complete Upholstery Cover)

1969 MODELS (For 1970 Thru 1972 - Use Material Listed In Group 29.356–4)

Trim No.		Per Car	01-10-80			
T-923		AR	362 5663	... .	... .	... .
T-928	Charcoal	AR	362 5661	... .	... .	... .
	Off White	AR	362 5668	... .	... .	... .
T-941		AR	362 5661	... .	... .	... .
T-943		AR	362 5663	... .	... .	... .
T-944		AR	362 5664	... .	... .	... .
T-945		AR	362 5665	... .	... .	... .
T-951		AR	362 5661	... .	... .	... .
T-953		AR	362 5663	... .	... .	... .
T-956		AR	362 5666	... .	... .	... .
T-957		AR	362 5667	... .	... .	... .
T-972		AR	362 5662	... .	... .	... .
T-973		AR	362 5663	... .	... .	... .
T-975		AR	362 5665	... .	... .	... .
T-976		AR	362 5666	... .	... .	... .
T-977		AR	362 5667	... .	... .	... .
T-979		AR	362 5669	... .	... .	... .
T-981		AR	362 5661	... .	... .	... .
T-983		AR	362 5663	... .	... .	... .
T-986		AR	362 5666	... .	... .	... .
T-987		AR	362 5667	... .	... .	... .

29.356–3 MATERIAL, Pre-Lined Vinyl (Used On Front Seat Back Kickpanel When Part of Complete Upholstery Cover)(* 29-76)

1967 MODELS

Trim No.	Per Car	01-10 (LBS)	50-80 (WNRS)(WFS)		
T-723	AR	357 7800	... .	... .	... .
T-728	AR	356 4396	... .	... .	... .
T-729	AR	357 7806	... .	... .	... .
T-741	AR	356 4386	... .	... .	... .
T-743	AR	357 7800	... .	... .	... .
T-744	AR	356 4393	... .	... .	... .
T-745	AR	357 7802	... .	... .	... .
T-747	AR	357 7804	... .	... .	... .
T-748	AR	356 4396	... .	... .	... .
T-749	AR	357 7806	... .	... .	... .
T-753	AR	357 7800	... .	... .	... .
T-758	AR	356 4396	... .	... .	... .
T-759	AR	357 7806	... .	... .	... .
T-771	AR	356 4386	... .	... .	... .
T-773	AR	357 7800	... .	... .	... .
T-774	AR	356 4393	... .	... .	... .
T-775	AR	357 7802	... .	... .	... .
T-776	AR	357 7803	... .	... .	... .

SEATS - SOFT TRIM

Trim No.	Per Car	01-10 (LBS)	50-80 (WNRS)(WFS)		
T-777	AR	357 7804	... .	... .	... .
T-778	AR	356 4396	... .	... .	... .
T-779	AR	357 7806	... .	... .	... .
T-781	AR	... .	356 4386	... .	... .
T-783	AR	... .	357 7800	... .	... .
T-787	AR	... .	357 7804	... .	... .
T-789	AR	... .	357 7806	... .	... .
T-791	AR	... .	356 4386	... .	... .
T-793	AR	... .	357 7800	... .	... .
T-794	AR	... .	356 4393	... .	... .
T-795	AR	... .	357 7802	... .	... .
T-796	AR	... .	357 7803	... .	... .
T-797	AR	... .	357 7804	... .	... .
T-798	AR	... .	356 4396	... .	... .
T-799	AR	... .	357 7806	... .	... .

29.356-3a MATERIAL, Pre-Lined Vinyl (Used On Seat Cushion And Back)(* 29-76)

Trim No.	Per Car	01-10
T-121G	AR	364 8837
T-171G	AR	364 8837
T-171H	AR	364 8837
T-221G	AR	364 8837
T-271G	AR	364 8837
T-271H	AR	364 8837

29.356-4 MATERIAL, Plain Vinyl (31 Ounce)(Used On Cushion Facings Except Third Seat Cushion And Back Facings on Fleet Trims)(* 29-76)

1967 MODELS

Trim No.		Per Car	01-10-50-80 (Except "W" Trim)	19-89 ("W" Trim)		
T-723		AR	358 1763	... .	... .	... .
T-728	Off White	AR	358 1762	... .	... .	... .
	Black	AR	358 1761	... .	... .	... .
T-729		AR	358 1768	... .	... .	... .
T-741		AR	358 1761	... .	... .	... .
T-743		AR	358 1763	... .	... .	... .
T-744		AR	358 1764	... .	... .	... .
T-745		AR	358 1765	... .	... .	... .
T-747		AR	358 1748	... .	... .	... .
T-748		AR	358 1762	... .	... .	... .
T-749		AR	358 1768	... .	... .	... .
T-753		AR	358 1763	... .	... .	... .
T-758	Off White	AR	358 1762	... .	... .	... .
	Black	AR	358 1761	... .	... .	... .
T-759		AR	358 1768	... .	... .	... .
T-771		AR	358 1761	358 1761	... .	... .
T-773		AR	358 1763	358 1746	... .	... .
T-774		AR	358 1764	... .	... .	... .
T-775		AR	358 1765	358 1765	... .	... .
T-776		AR	358 1766	358 1766	... .	... .
T-777		AR	358 1748	... .	... .	... .
T-778		AR	358 1762	... .	... .	... .
T-779		AR	358 1768	358 1747	... .	... .
T-781		AR	358 1761	... .	... .	... .
T-783		AR	358 1763	... .	... .	... .
T-787		AR	358 1748	... .	... .	... .
T-789		AR	358 1768	... .	... .	... .
T-791		AR	358 1761	358 1761	... .	... .
T-793		AR	358 1763	358 1746	... .	... .

SEATS - SOFT TRIM

1968 - 1969 MODELS

Trim No.	Per Car	01-10-30-70 -80			
T-794	AR	358 1764	... .	... .	... .
T-795	AR	358 1765	358 1765	... .	... .
T-796	AR	358 1766	358 1766	... .	... .
T-797	AR	358 1748	... .	... .	... .
T-798	AR	358 1762	... .	... .	... .
T-799	AR	358 1768	358 1747	... .	... .
T-828	AR	358 1762	... .	... .	... .
T-831	AR	358 1761	... .	... .	... .
T-832	AR	360 4144	... .	... .	... .
T-835	AR	358 1765	... .	... .	... .
T-843	AR	360 4025	... .	... .	... .
T-844	AR	360 4026	... .	... .	... .
T-845	AR	358 1765	... .	... .	... .
T-848	AR	358 1762	... .	... .	... .
T-851	AR	358 1761	... .	... .	... .
T-853	AR	360 4025	... .	... .	... .
T-855	AR	358 1765	... .	... .	... .
T-871	AR	358 1761	... .	... .	... .
T-873	AR	360 4025	... .	... .	... .
T-874	AR	360 4026	... .	... .	... .
T-875	AR	358 1765	... .	... .	... .
T-876	AR	360 4028	... .	... .	... .
T-879	AR	360 4030	... .	... .	... .
T-881	AR	358 1761	... .	... .	... .
T-883	AR	360 4025	... .	... .	... .
T-885	AR	358 1765	... .	... .	... .
T-891	AR	358 1761	... .	... .	... .
T-893	AR	360 4025	... .	... .	... .
T-894	AR	360 4026	... .	... .	... .
T-895	AR	358 1765	... .	... .	... .
T-896	AR	360 4028	... .	... .	... .
T-899	AR	360 4030	... .	... .	... .
T-923	AR	361 8493	... .	... .	... .
T-928	AR	358 1762	... .	... .	... .
T-931	AR	362 5470	... .	... .	... .
T-932	AR	361 8498	... .	... .	... .
T-935	AR	358 1765	... .	... .	... .
T-936	AR	362 5471	... .	... .	... .
T-941	AR	361 8492	... .	... .	... .
T-943	AR	361 8493	... .	... .	... .
T-944	AR	361 8494	... .	... .	... .
T-945	AR	358 1765	... .	... .	... .
T-951	AR	361 8492	... .	... .	... .
T-953	AR	361 8493	... .	... .	... .
T-956	AR	361 8499	... .	... .	... .
T-957	AR	361 8496	... .	... .	... .
T-961	AR	362 5470	... .	... .	... .
T-962	AR	361 8498	... .	... .	... .
T-963	AR	361 8493	... .	... .	... .
T-965	AR	358 1765	... .	... .	... .
T-966	AR	361 8499	... .	... .	... .
T-968	AR	358 1762	... .	... .	... .
T-972	AR	361 8498	... .	... .	... .
T-973	AR	361 8493	... .	... .	... .
T-975	AR	358 1765	... .	... .	... .
T-976	AR	361 8499	... .	... .	... .
T-977	AR	361 8496	... .	... .	... .
T-979	AR	361 8496	... .	... .	... .
T-981	AR	361 8492	... .	... .	... .
T-983	AR	361 8493	... .	... .	... .
T-986	AR	361 8499	... .	... .	... .

Printed in U.S.A.

SEATS - SOFT TRIM

Trim No.	Per Car	01-10-30-70 -80	... .	... .	... .
T-987	AR	361 8496	... .	... .	... .
T-991	AR	361 8492	... .	... .	... .
T-992	AR	361 8498	... .	... .	... .
T-993	AR	361 8493	... .	... .	... .
T-995	AR	358 1765	... .	... .	... .
T-996	AR	361 8499	... .	... .	... .
T-997	AR	361 8496	... .	... .	... .
T-999	AR	361 8496	... .	... .	... .

1970 MODELS

Trim No.	Per Car	01-10-30-40 -70-80
T-001	AR	362 8158
T-008	AR	358 1762
T-011	AR	362 8158
T-013	AR	362 8176
T-014	AR	362 8177
T-015	AR	362 8160
T-021A	AR	358 1762
T-021B	AR	358 1762
T-021H	AR	362 8158
T-023	AR	362 8176
T-024	AR	362 8177
T-025	AR	362 8160
T-031	AR	362 8158
T-033	AR	362 8176
T-035	AR	362 8160
T-036	AR	362 8153
T-041	AR	362 8158
T-043	AR	362 8176
T-044	AR	362 8177
T-045	AR	362 8160
T-051	AR	362 8158
T-053	AR	362 8176
T-054	AR	362 8177
T-056	AR	362 8153
T-061	AR	362 8158
T-063	AR	362 8176
T-064	AR	362 8177
T-065	AR	362 8160
T-066	AR	362 8153
T-071	AR	362 8158
T-073	AR	362 8176
T-074	AR	362 8177
T-075	AR	362 8160
T-076	AR	362 8153
T-081	AR	362 8158
T-083	AR	362 8176
T-084	AR	362 8177
T-086	AR	362 8153
T-091	AR	362 8158
T-093	AR	362 8176
T-094	AR	362 8177
T-095	AR	362 8160
T-096	AR	362 8153

SEATS - SOFT TRIM

1971 MODELS

Trim No.		Per Car	01-10-40 -70-80
T-101		AR	363 9261
T-103	Blue	AR	363 9263
	Black	AR	363 9261
T-104	Black	AR	363 9261
T-108		AR	363 9262
T-111		AR	363 9261
T-113		AR	363 9263
T-114		AR	363 9264
T-121A		AR	363 9261
T-123A		AR	363 9263
T-124		AR	363 9264
T-128		AR	363 9262
T-141		AR	363 9261
T-143		AR	363 9263
T-144		AR	363 9264
T-145		AR	363 9266
T-151		AR	363 9261
T-153		AR	363 9263
T-154		AR	363 9264
T-161		AR	363 9281
T-163		AR	363 9283
T-164		AR	363 9284
T-165		AR	363 9286
T-168		AR	363 9282
T-171A		AR	363 9261
T-171B		AR	363 9261
T-171C		AR	363 9263
T-171S	(Front Cushion Facing)	AR	363 9263
	(Rear Cushion Facing)	AR	363 9263
T-171V		AR	363 9263
T-173A		AR	363 9263
T-173B		AR	363 9263
T-173C		AR	363 9263
T-173D		AR	363 9263
T-173S	(Front Cushion Facing)	AR	363 9263
	(Rear Cushion Facing)	AR	363 9263
T-173V		AR	363 9263
T-174A		AR	363 9263
T-174B		AR	363 9264
T-174C		AR	363 9264
T-174D		AR	363 9264
T-174S	(Front Cushion Facing)	AR	363 9264
	(Rear Cushion Facing)	AR	363 9284
T-174V		AR	363 9264
T-175A		AR	363 9264
T-175B		AR	363 9266
T-175C		AR	363 9266
T-175D		AR	363 9266
T-175S	(Front Cushion Facing)	AR	363 9266
	(Rear Cushion Facing)	AR	363 9286
T-175V		AR	363 9266
T-176		AR	363 9266
T-181		AR	363 9268
T-183		AR	363 9261
T-184		AR	363 9263
T-186		AR	363 9264
T-191A		AR	363 9268
T-191B		AR	363 9261
T-191C		AR	363 9261

Printed in U.S.A.

SEATS - SOFT TRIM

Trim No.		Per Car	01-10-40 -70-80
T-191M		AR	363 9261
T-191N		AR	363 9261
T-191R	(Front Cushion Facing)	AR	363 9281
	(Rear Cushion Facing)	AR	363 9261
T-191S	(Front Seat Facing)	AR	363 9281
	(Rear Cushion Facing)	AR	363 9261
T-191V		AR	363 9261
T-193A		AR	363 9263
T-193B		AR	363 9263
T-193C		AR	363 9263
T-193D		AR	363 9263
T-193M		AR	363 9263
T-193N		AR	363 9263
T-193R	(Front Cushion Facing)	AR	363 9283
	(Rear Cushion Facing)	AR	363 9263
T-193S	(Front Cushion Facing)	AR	363 9283
	(Rear Cushion Facing)	AR	363 9263
T-193V		AR	363 9263
T-194A		AR	363 9264
T-194B		AR	363 9264
T-194C		AR	363 9264
T-194D		AR	363 9264
T-194M		AR	363 9264
T-194N		AR	363 9264
T-194R	(Front Cushion Facing)	AR	363 9284
	(Rear Cushion Facing)	AR	363 9264
T-194S	(Front Cushion Facing)	AR	363 9284
	(Rear Cushion Facing)	AR	363 9264
T-195A		AR	363 9266
T-195B		AR	363 9266
T-195C		AR	363 9266
T-195D		AR	363 9266
T-195M		AR	363 9266
T-195N		AR	363 9286
T-195R	(Front Cushion Facing)	AR	363 9266
	(Rear Cushion Facing)	AR	363 9286
T-195S	(Front Cushion Facing)	AR	363 9266
	(Rear Cushion Facing)	AR	363 9268
T-196			

1972 MODELS

Trim No.		Per Car	01-10-40 -70-80
T-201		AR	365 2571
T-203		AR	365 2567
T-206		AR	365 2570
T-208		AR	363 9262
T-211		AR	365 2571
T-213		AR	365 2567
T-215		AR	365 2571
T-216		AR	365 2570
T-218		AR	363 9262
T-221G		AR	365 2571
T-241		AR	365 2571
T-243		AR	365 2567
T-244		AR	365 2568
T-245	Black	AR	365 2571
T-246		AR	365 2570
T-271		AR	365 2571
T-273		AR	365 2567
T-274		AR	365 2568
T-276		AR	365 2570
T-291		AR	365 2571
T-293		AR	365 2567
T-294		AR	365 2568
T-296		AR	365 2570

Printed in U.S.A.

SEATS - SOFT TRIM

29.356–5 MATERIAL, Plain Vinyl (32 Ounce)(Used On Cushion And Back Bolsters, Back, Headrest And Third Seat Cushion Facings)(* 29-76)

1967 MODELS

Trim No.	Per Car	01-10-50-80 (Except "W" Trim)	19-89 ("W" Trim)		
T-723	AR	357 8077	... .	... .	... .
T-728	AR	357 8082	... .	... .	... .
T-729	AR	357 8083	... .	... .	... .
T-741	AR	357 8076	... .	... .	... .
T-743	AR	357 8077	... .	... .	... .
T-744	AR	357 8078	... .	... .	... .
T-745	AR	357 8079	... .	... .	... .
T-747	AR	357 8087	... .	... .	... .
T-748	AR	357 8082	... .	... .	... .
T-749	AR	357 8083	... .	... .	... .
T-753	AR	357 8077	... .	... .	... .
T-758	AR	357 8082	... .	... .	... .
T-759	AR	357 8083	... .	... .	... .
T-771	AR	357 8076	357 8076	... .	... .
T-773	AR	357 8077	357 8084	... .	... .
T-774	AR	357 8078	... .	... .	... .
T-775	AR	357 8079	357 8079	... .	... .
T-776	AR	357 8080	357 8080	... .	... .
T-777	AR	357 8087	... .	... .	... .
T-778	AR	357 8082	... .	... .	... .
T-779	AR	357 8083	357 8086	... .	... .
T-781	AR	357 8076	... .	... .	... .
T-783	AR	357 8077	... .	... .	... .
T-787	AR	357 8087	... .	... .	... .
T-789	AR	357 8083	... .	... .	... .
T-791	AR	357 8076	357 8076	... .	... .
T-793	AR	357 8077	357 8084	... .	... .
T-794	AR	357 8078	... .	... .	... .
T-795	AR	357 8079	357 8079	... .	... .
T-796	AR	357 8080	357 8080	... .	... .
T-797	AR	357 8087	... .	... .	... .
T-798	AR	357 8082	... .	... .	... .
T-799	AR	357 8083	357 8086	... .	... .

1968 - 1969 MODELS

Trim No.	Per Car	01-10-30-70 -80			
T-828	AR	357 8076	... .	... .	... .
T-831	AR	357 8076	... .	... .	... .
T-832	AR	360 4040	... .	... .	... .
T-835	AR	357 8079	... .	... .	... .
T-843	AR	360 4033	... .	... .	... .
T-844	AR	360 4034	... .	... .	... .
T-845	AR	357 8079	... .	... .	... .
T-848 Off White	AR	357 8082	... .	... .	... .
Black	AR	357 8076	... .	... .	... .
T-851	AR	357 8076	... .	... .	... .
T-853	AR	360 4033	... .	... .	... .
T-855	AR	357 8079	... .	... .	... .

SEATS - SOFT TRIM

Trim No.	Per Car	01-10-30-70 -80			
T-871	AR	357 8076			
T-873	AR	360 4033			
T-874	AR	360 4034			
T-875	AR	357 8079			
T-876	AR	360 4036			
T-879	AR	360 4038			
T-881	AR	357 8076			
T-883	AR	360 4033			
T-885	AR	357 8079			
T-891	AR	357 8076			
T-893	AR	360 4033			
T-894	AR	360 4034			
T-895	AR	357 8079			
T-896	AR	360 4036			
T-899	AR	360 4038			
T-923	AR	361 8471			
T-928	AR	357 8082			
T-931	AR	362 5356			
T-932	AR	361 8476			
T-935	AR	357 8079			
T-936	AR	362 5355			
T-941	AR	361 8470			
T-943	AR	361 8471			
T-944	AR	361 8472			
T-945	AR	357 8079			
T-951	AR	361 8470			
T-953	AR	361 8471			
T-956	AR	361 8477			
T-957	AR	361 8474			
T-961	AR	362 5356			
T-962	AR	361 8476			
T-963	AR	361 8471			
T-965	AR	357 8079			
T-966	AR	362 5355			
T-968	AR	357 8082			
T-972	AR	361 8476			
T-973	AR	361 8471			
T-975	AR	357 8079			
T-976	AR	361 8477			
T-977	AR	361 8474			
T-979	AR	361 8475			
T-981	AR	361 8470			
T-983	AR	361 8471			
T-986	AR	361 8477			
T-987	AR	361 8474			
T-991	AR	361 8470			
T-992	AR	361 8476			
T-993	AR	361 8471			
T-995	AR	357 8079			
T-996	AR	361 8477			
T-997	AR	361 8474			
T-999	AR	361 8475			

1970 MODELS

Trim No.	Per Car	01-10-30-40 -70-80
T-001	AR	362 8150
T-011	AR	362 8150
T-013	AR	362 8171
T-014	AR	362 8172
T-015	AR	362 8161
T-021A	AR	357 8082
T-021B	AR	357 8082
T-021G	AR	362 8150

Printed in U.S.A.

SEATS - SOFT TRIM

Trim No.	Per Car	01-10-30 -70-80
T-023	AR	362 8171
T-024	AR	362 8172
T-025	AR	362 8161
T-031	AR	362 8150
T-033	AR	362 8171
T-035	AR	362 8161
T-036	AR	362 8151
T-041	AR	362 8150
T-043	AR	362 8171
T-044	AR	362 8172
T-045	AR	362 8161
T-051	AR	362 8150
T-053	AR	362 8171
T-054	AR	362 8172
T-056	AR	362 8151
T-061	AR	362 8150
T-063	AR	362 8171
T-064	AR	362 8172
T-065	AR	362 8161
T-066	AR	362 8151
T-071	AR	362 8150
T-073	AR	362 8171
T-074	AR	362 8172
T-075	AR	362 8161
T-076	AR	362 8151
T-081	AR	362 8150
T-083	AR	362 8171
T-084	AR	362 8172
T-086	AR	362 8151
T-091	AR	362 8150
T-093	AR	362 8171
T-094	AR	362 8172
T-095	AR	362 8161
T-096	AR	362 8151

SEATS - SOFT TRIM

1971 - 1972 MODELS

Trim No.		Per Car	01-10-40 -70-80
T-101B	(Front Seat Facing)	AR	364 0921
	(Rear Seat Facing)	AR	363 9281
T-103A		AR	363 9281
T-103B	(Front Seat Facing)	AR	364 0922
	(Rear Seat Facing)	AR	363 9283
T-104A		AR	363 9281
T-108	(Front Seat Facing)	AR	364 0924
	(Rear Seat Facing)	AR	383 9282
T-111		AR	363 9281
T-113		AR	363 9283
T-114		AR	363 9284
T-115		AR	363 9286
T-121		AR	363 9281
T-124		AR	363 9284
T-124		AR	363 9284
T-128	(Front Seat Facing)	AR	364 0924
	(Rear Seat Facing)	AR	363 9282
T-141		AR	363 9281
T-143		AR	363 9283
T-144		AR	363 9284
T-145		AR	363 9286
T-151A		AR	363 9281
T-151B		AR	363 9281
T-151C		AR	363 9281
T-151D		AR	363 9281
T-151G		AR	363 9261
T-151H		AR	363 9261
T-153		AR	363 9283
T-154		AR	363 9284
T-161		AR	363 9281
T-163		AR	363 9283
T-164		AR	363 9284
T-165		AR	363 9286
T-171		AR	363 9281
T-173		AR	363 9283
T-174		AR	363 9284
T-175		AR	363 9286
T-176		AR	363 9289
T-181		AR	363 9281
T-183		AR	363 9283
T-184		AR	363 9284
T-186		AR	363 9289
T-191		AR	363 9281
T-193		AR	363 9283
T-194		AR	363 9284
T-195		AR	363 9286
T-196		AR	363 9289
T-201		AR	365 2558
T-203		AR	365 2554
T-206		AR	365 2557
T-208		AR	363 9282
T-211		AR	365 2558
T-213		AR	365 2554
T-215		AR	365 2556
T-216		AR	363 9289
T-218		AR	363 9282
T-241		AR	365 2558
T-243		AR	365 2554
T-244		AR	365 2555
T-245		AR	365 2556
T-246	(LBS)	AR	365 2557
	(WBS)	AR	363 9289
T-248		AR	363 9282
T-261		AR	365 2558
T-263		AR	365 2554
T-264		AR	365 2555

Printed in U.S.A.

SEATS - SOFT TRIM

Trim No.		Per Car	01-10-40 -70-80
T-265		AR	365 2556
T-266	Tan	AR	365 2557
	Buff	AR	363 9289
T-268		AR	363 9282
T-271		AR	365 2558
T-273		AR	365 2554
T-274		AR	365 2555
T-276	Tan	AR	365 2557
	Buff	AR	363 9289
T-291		AR	365 2558
T-293		AR	365 2554
T-294		AR	365 2555
T-296	Tan	AR	365 2557
	Buff	AR	363 9289

29.356-6 MATERIAL, Embossed Vinyl (32 Ounce)(Used On Cushion And Back Center Panel)(* 29-76)

1967 Thru 1969 MODELS

Trim No.	Per Car	01: 10 (550) :80 (880)	70		
T-723B	AR	357 7848	... .	... .	... .
T-728B	AR	357 7847	... .	... .	... .
T-729B	AR	357 7854	... .	... .	... .
T-741B	AR	357 7847	... .	... .	... .
T-743B	AR	357 7848	... .	... .	... .
T-745B	AR	357 7850	... .	... .	... .
T-748B	AR	357 7853	... .	... .	... .
T-749B	AR	357 7854	... .	... .	... .
T-753B	AR	357 7848	... .	... .	... .
T-758B	AR	357 7847	... .	... .	... .
T-759B	AR	357 7854	... .	... .	... .
T-781B	AR	357 7847	... .	... .	... .
T-783B	AR	357 7848	... .	... .	... .
T-789B	AR	357 7854	... .	... .	... .
T-828B	AR	357 8198	... .	... .	... .
T-828N	AR	357 8198	... .	... .	... .
T-831J	AR	... .	360 4805	... .	... .
T-838J	AR	... .	360 4806	... .	... .
T-843B	AR	360 7452	... .	... .	... .
T-844B	AR	360 7453	... .	... .	... .
T-845B (* 29-38)	AR	360 7454	... .	... .	... .
(* 29-39)	AR	357 8194	... .	... .	... .
T-848B	AR	357 8198	... .	... .	... .
T-851V	AR	360 4049	... .	... .	... .
T-853V	AR	360 4067	... .	... .	... .
T-855V	AR	360 4044	... .	... .	... .
T-881V	AR	360 4049	... .	... .	... .
T-883V	AR	360 4067	... .	... .	... .
T-885V	AR	360 4044	... .	... .	... .
T-923	AR	362 5027	... .	... .	... .
T-928	AR	362 5000	... .	... .	... .
T-941	AR	362 5025	... .	... .	... .
T-943	AR	362 5027	... .	... .	... .
T-944	AR	362 5029	... .	... .	... .
T-945	AR	362 5026	... .	... .	... .
T-951	AR	362 5025	... .	... .	... .
T-953	AR	362 5027	... .	... .	... .
T-956	AR	362 5030	... .	... .	... .
T-957	AR	362 5031	... .	... .	... .
T-961J	AR	361 8085	... .	... .	... .
T-968J	AR	362 5000	... .	... .	... .
T-981	AR	362 5025	... .	... .	... .
T-983	AR	362 5027	... .	... .	... .
T-986	AR	362 5030	... .	... .	... .
T-987	AR	362 5031	... .	... .	... .

SEATS - SOFT TRIM

1970 Thru 1972 MODELS

Trim No.	Per Car	01-10-40 -70-80
T-001	AR	362 8434
T-008	AR	362 8432
T-021	AR	362 8432
T-023	AR	362 8433
T-024	AR	362 8550
T-025	AR	362 8549
T-041	AR	363 9206
T-043	AR	363 9207
T-044	AR	363 9208
T-045	AR	362 8114
T-051	AR	363 9206
T-053	AR	363 9207
T-054	AR	363 9208
T-056	AR	363 9209
T-061J	AR	363 9206
T-063J	AR	363 9207
T-064J	AR	363 9208
T-065J	AR	362 8114
T-066J	AR	363 9209
T-081	AR	363 9206
T-083	AR	363 9207
T-084	AR	363 9208
T-086	AR	363 9209
T-101B	AR	362 8434
T-103B	AR	364 0424
T-108B	AR	362 8432
T-121B	AR	364 9551
T-123B	AR	364 9552
T-124B	AR	364 9553
T-128B	AR	362 8432
T-151B	AR	363 9711
T-151D	AR	363 9711
T-153B	AR	363 9712
T-154	AR	363 9713
T-161J	AR	363 9716
T-163J	AR	363 9717
T-164J	AR	363 9718
T-165J	AR	363 9719
T-181	AR	363 9711
T-183	AR	363 9712
T-184	AR	363 9713
T-201	AR	365 4564
T-203	AR	365 4562
T-206	AR	365 4563
T-208	AR	365 4564

29.356–7 MATERIAL, Side Panel Vinyl (Wood Grain)(Used On Door And Quarter Trim Panel)(* 29-76)

68	80	AR	360	4675

SEATS - SOFT TRIM

29.358–1 STORMSTRIP, Door And Quarter Window (Used For Lengths From 104" To 128")(* 29-77)

1967 MODELS

Trim No.			Per Car	01-15-17-18 -19-59-85-87 -88-89	16-86		
T-723			AR	358 1788	... .	... .	... .
T-728			AR	349 1598	... .	... .	... .
T-729			AR	358 1792	... .	... .	... .
T-741			AR	349 1598	... .	... .	... .
T-743			AR	358 1788	... .	... .	... .
T-744			AR	357 1309	... .	... .	... .
T-745			AR	358 1790	... .	... .	... .
T-747			AR	358 1791	... .	... .	... .
T-748			AR	349 1598	... .	... .	... .
T-749			AR	358 1792	... .	... .	... .
T-753		(* 29-78)	AR	357 9921	... .	... .	... .
		(* 29-79)	AR	359 0339	... .	... .	... .
	Left	(* 29-78)	1	... .	357 9425	... .	... .
		(* 29-79)	1	... .	359 0485	... .	... .
	Right	(* 29-78)	1	... .	357 9424	... .	... .
		(* 29-79)	1	... .	359 0484	... .	... .
T-758		(* 29-78)	AR	357 9920	... .	... .	... .
		(* 29-79)	AR	359 0338	... .	... .	... .
	Left	(* 29-78)	1	... .	357 9423	... .	... .
		(* 29-79)	1	... .	359 0483	... .	... .
	Right	(* 29-78)	1	... .	357 9422	... .	... .
		(* 29-79)	1	... .	359 0482	... .	... .
T-759		(* 29-78)	AR	357 9923	... .	... .	... .
		(* 29-79)	AR	359 0341	... .	... .	... .
	Left	(* 29-78)	1	... .	357 9429	... .	... .
		(* 29-79)	1	... .	359 0489	... .	... .
	Right	(* 29-78)	1	... .	357 9428	... .	... .
		(* 29-79)	1	... .	359 0488	... .	... .
T-771		(* 29-78)	AR	357 9920	... .	... .	... .
		(* 29-79)	AR	359 0338	... .	... .	... .
T-773		(* 29-78)	AR	357 9921	... .	... .	... .
		(* 29-79)	AR	359 0339	... .	... .	... .
T-774		(* 29-78)	AR	358 1193	... .	... .	... .
		(* 29-79)	AR	359 0315	... .	... .	... .
T-775		(* 29-78)	AR	357 9922	... .	... .	... .
		(* 29-79)	AR	359 0340	... .	... .	... .
T-776		(* 29-78)	AR	358 1194	... .	... .	... .
		(* 29-79)	AR	359 0316	... .	... .	... .
T-777		(* 29-78)	AR	358 1195	... .	... .	... .
		(* 29-79)	AR	359 0317	... .	... .	... .
T-778		(* 29-78)	AR	357 9920	... .	... .	... .
		(* 29-79)	AR	359 0338	... .	... .	... .
T-779		(* 29-78)	AR	357 9923	... .	... .	... .
		(* 29-79)	AR	359 0341	... .	... .	... .
T-781		(* 29-78)	AR	357 9920	... .	... .	... .
		(* 29-79)	AR	359 0338	... .	... .	... .
	Left	(* 29-78)	1	... .	357 9423	... .	... .
		(* 29-79)	1	... .	359 0483	... .	... .
	Right	(* 29-78)	1	... .	357 9422	... .	... .
		(* 29-79)	1	... .	359 0482	... .	... .
T-783		(* 29-78)	AR	357 9921	... .	... .	... .
		(* 29-79)	AR	359 0339	... .	... .	... .
	Left	(* 29-78)	1	... .	357 9425	... .	... .
		(* 29-79)	1	... .	359 0485	... .	... .
	Right	(* 29-78)	1	... .	357 9424	... .	... .
		(* 29-79)	1	... .	359 0484	... .	... .

SEATS - SOFT TRIM

Trim No.			Per Car	01-15-17-18 -19-59-85-87 -88-89	16-86		
T-787		(* 29-78)	AR	358 1195	... .	... .	... .
		(* 29-79)	AR	359 0317	... .	... .	... .
	Left	(* 29-78)	1	... .	357 9427	... .	... .
		(* 29-79)	1	... .	359 0487	... .	... .
	Right	(* 29-78)	1	... .	357 9426	... .	... .
		(* 29-79)	1	... .	359 0486	... .	... .
T-789		(* 29-78)	AR	357 9923	... .	... .	... .
		(* 29-79)	AR	359 0341	... .	... .	... .
	Left	(* 29-78)	1	... .	357 9429	... .	... .
		(* 29-79)	1	... .	359 0489	... .	... .
	Right	(* 29-78)	1	... .	357 9428	... .	... .
		(* 29-79)	1	... .	359 0488	... .	... .
T-791		(* 29-78)	AR	357 9920	... .	... .	... .
		(* 29-79)	AR	359 0338	... .	... .	... .
T-793		(* 29-78)	AR	357 9921	... .	... .	... .
		(* 29-79)	AR	359 0339	... .	... .	... .
T-794		(* 29-78)	AR	358 1193	... .	... .	... .
		(* 29-79)	AR	359 0315	... .	... .	... .
T-795		(* 29-78)	AR	357 9922	... .	... .	... .
		(* 29-79)	AR	359 0340	... .	... .	... .
T-796		(* 29-78)	AR	358 1194	... .	... .	... .
		(* 29-79)	AR	359 0316	... .	... .	... .
T-797		(* 29-78)	AR	358 1195	... .	... .	... .
		(* 29-79)	AR	359 0317	... .	... .	... .
T-798		(* 29-78)	AR	357 9920	... .	... .	... .
		(* 29-79)	AR	359 0338	... .	... .	... .
T-799		(* 29-78)	AR	357 9923	... .	... .	... .
		(* 29-79)	AR	359 0341	... .	... .	... .

1968 - 1969 MODELS

Trim No.	Per Car	01-10-80			
T-828	AR	362 3011	... .	... .	... .
T-843	AR	359 0404	... .	... .	... .
T-844	AR	359 0405	... .	... .	... .
T-845	AR	361 2004	... .	... .	... .
T-848	AR	362 3011	... .	... .	... .
T-851	AR	359 0313	... .	... .	... .
T-853	AR	359 0404	... .	... .	... .
T-855	AR	361 2004	... .	... .	... .
T-871	AR	359 0313	... .	... .	... .
T-873	AR	359 0404	... .	... .	... .
T-874	AR	359 0405	... .	... .	... .
T-875	AR	361 2004	... .	... .	... .
T-876	AR	359 0406	... .	... .	... .
T-879	AR	359 0407	... .	... .	... .
T-881	AR	359 0313	... .	... .	... .
T-883	AR	359 0404	... .	... .	... .
T-885	AR	361 2004	... .	... .	... .
T-891	AR	359 0313	... .	... .	... .
T-893	AR	359 0404	... .	... .	... .
T-894	AR	359 0405	... .	... .	... .
T-895	AR	361 2004	... .	... .	... .
T-896	AR	359 0406	... .	... .	... .
T-899	AR	359 0407	... .	... .	... .
T-923	AR	362 5779	... .	... .	... .
T-928	AR	362 0726	... .	... .	... .

SEATS - SOFT TRIM

Trim No.	Per Car	01-10-80			
T-941	AR	362 0726			
T-943	AR	362 5779			
T-944	AR	362 0724			
T-945	AR	361 2004			
T-951	AR	362 0726			
T-953	AR	362 5779			
T-956	AR	362 0668			
T-957	AR	362 0669			
T-972	AR	362 0726			
T-973	AR	362 5779			
T-975	AR	361 2004			
T-976	AR	362 0668			
T-977	AR	362 0669			
T-979	AR	362 0669			
T-981	AR	362 0726			
T-983	AR	362 5779			
T-986	AR	362 0668			
T-987	AR	362 0669			
T-991	AR	362 0726			
T-992	AR	362 0726			
T-993	AR	362 5779			
T-995	AR	361 2004			
T-996	AR	362 0668			
T-997	AR	362 0669			
T-999	AR	362 0669			

1970 MODELS

Trim No.	Per Car	10-80
T-051	AR	362 1904
T-053	AR	362 1906
T-054	AR	362 1907
T-056	AR	362 1908
T-071	AR	362 1904
T-073	AR	362 1906
T-074	AR	362 1907
T-075	AR	362 6101
T-076	AR	362 1908
T-081	AR	362 1904
T-083	AR	362 1906
T-084	AR	362 1907
T-086	AR	362 1908
T-091	AR	362 1904
T-093	AR	362 1906
T-094	AR	362 1907
T-095	AR	362 6101
T-096	AR	362 1908

1971 MODELS

Trim No.	Per Car	10-80
T-151	AR	364 8676
T-153	AR	364 8677
T-154	AR	364 8678
T-171	AR	364 8676
T-173	AR	364 8677

Printed in U.S.A.

SEATS - SOFT TRIM

Trim No.	Per Car	10-80
T-174	AR	364 8678
T-175	AR	364 8679
T-176	AR	364 8676
T-181	AR	364 8676
T-183	AR	364 8677
T-184	AR	364 8678
T-186	AR	364 8676
T-191	AR	364 8676
T-193	AR	364 8677
T-194	AR	364 8678
T-195	AR	364 8679
T-196	AR	364 8676

1972 MODELS

Trim No.	Per Car	10-80
T-271	AR	364 8676
T-273	AR	365 4538
T-274	AR	365 4539
T-276	AR	365 4540
T-291	AR	364 8676
T-293	AR	365 4538
T-294	AR	365 4539
T-296	AR	365 4540

29.358–2 STORMSTRIP, Pillar And Quarter Window (Used For Lengths From 22-1/2" To 52")(* 29-77)

1967 MODELS

Trim No.			Per Car	06-07-09-17 -19-59-87-89	16-86		
T-723			AR	358 1313	... .	... .	... .
T-728			AR	349 1645	... .	... .	... .
T-729			AR	358 1317	... .	... .	... .
T-741			AR	349 1645	... .	... .	... .
T-743			AR	358 1313	... .	... .	... .
T-744			AR	357 1315	... .	... .	... .
T-745			AR	358 1315	... .	... .	... .
T-747			AR	358 1316	... .	... .	... .
T-748			AR	349 1645	... .	... .	... .
T-749			AR	358 1317	... .	... .	... .
T-753	Left	(* 29-78)	1	... .	357 9433	... .	... .
		(* 29-79)	1	... .	359 0493	... .	... .
	Right	(* 29-78)	1	... .	357 9432	... .	... .
		(* 29-79)	1	... .	359 0492	... .	... .
T-758	Left	(* 29-78)	1	... .	357 9431	... .	... .
		(* 29-79)	1	... .	359 0491	... .	... .
	Right	(* 29-78)	1	... .	357 9430	... .	... .
		(* 29-79)	1	... .	359 0490	... .	... .
T-759	Left	(* 29-78)	1	... .	357 9437	... .	... .
		(* 29-79)	1	... .	359 0497	... .	... .
	Right	(* 29-78)	1	... .	357 9436	... .	... .
		(* 29-79)	1	... .	359 0496	... .	... .
T-771		(* 29-78)	AR	357 9489	... .	... .	... .
		(* 29-79)	AR	359 0333	... .	... .	... .
T-773		(* 29-78)	AR	357 9490	... .	... .	... .
		(* 29-79)	AR	359 0334	... .	... .	... .
T-774		(* 29-78)	AR	357 9913	... .	... .	... .
		(* 29-79)	AR	359 0328	... .	... .	... .
T-775		(* 29-78)	AR	357 9491	... .	... .	... .
		(* 29-79)	AR	359 0335	... .	... .	... .
T-776		(* 29-78)	AR	357 9492	... .	... .	... .
		(* 29-79)	AR	359 0336	... .	... .	... .

SEATS - SOFT TRIM

Trim No.			Per Car	06-07-09-17 -19-59-87-89	16-86		
T-777		(* 29-78)	AR	357 9916	... .	... .	... .
		(* 29-79)	AR	359 0331	... .	... .	... .
T-778		(* 29-78)	AR	357 9489	... .	... .	... .
		(* 29-79)	AR	359 0333	... .	... .	... .
T-779		(* 29-78)	AR	357 9493	... .	... .	... .
		(* 29-79)	AR	359 0337	... .	... .	... .
T-781	Left	(* 29-78)	1	... .	357 9431	... .	... .
		(* 29-79)	1	... .	359 0491	... .	... .
	Right	(* 29-78)	1	... .	357 9430	... .	... .
		(* 29-79)	1	... .	359 0490	... .	... .
T-783	Left	(* 29-78)	1	... .	357 9433	... .	... .
		(* 29-79)	1	... .	359 0493	... .	... .
	Right	(* 29-78)	1	... .	357 9432	... .	... .
		(* 29-79)	1	... .	359 0492	... .	... .
T-787	Left	(* 29-78)	1	... .	357 9435	... .	... .
		(* 29-79)	1	... .	359 0495	... .	... .
	Right	(* 29-78)	1	... .	357 9434	... .	... .
		(* 29-79)	1	... .	359 0494	... .	... .
T-789	Left	(* 29-78)	1	... .	357 9437	... .	... .
		(* 29-79)	1	... .	359 0497	... .	... .
	Right	(* 29-78)	1	... .	357 9436	... .	... .
		(* 29-79)	1	... .	359 0496	... .	... .
T-791		(* 29-78)	AR	357 9489	... .	... .	... .
		(* 29-79)	AR	359 0333	... .	... .	... .
T-793		(* 29-78)	AR	357 9490	... .	... .	... .
		(* 29-79)	AR	359 0334	... .	... .	... .
T-794		(* 29-78)	AR	357 9913	... .	... .	... .
		(* 29-79)	AR	359 0328	... .	... .	... .
T-795		(* 29-78)	AR	357 9491	... .	... .	... .
		(* 29-79)	AR	359 0335	... .	... .	... .
T-796		(* 29-78)	AR	357 9492	... .	... .	... .
		(* 29-79)	AR	359 0336	... .	... .	... .
T-797		(* 29-78)	AR	357 9916	... .	... .	... .
		(* 29-79)	AR	359 0331	... .	... .	... .
T-798		(* 29-78)	AR	357 9489	... .	... .	... .
		(* 29-79)	AR	359 0333	... .	... .	... .
T-799		(* 29-78)	AR	357 9493	... .	... .	... .
		(* 29-79)	AR	359 0337	... .	... .	... .

1968 - 1969 MODELS

Trim No.			Per Car	06	09-17-19-89	39-79	
T-828			2	359 0333	... .	... .	... .
			2	... .	359 9372	... .	... .
T-831		48"	2	... .	... .	359 9369	... .
		24" (* 29-81)	2	... .	... .	362 3444	... .
	Left	24" (* 29-80)	1	... .	... .	360 7009	... .
	Right	24" (* 29-80)	1	... .	... .	360 7008	... .
T-832		48"	2	... .	... .	359 9371	... .
		24" (* 29-81)	2	... .	... .	362 3445	... .
	Left	24" (* 29-80)	1	... .	... .	360 7011	... .
	Right	24" (* 29-80)	1	... .	... .	360 7010	... .
T-835		48"	2	... .	... .	359 9370	... .
		24" (* 29-81)	2	... .	... .	362 3446	... .
	Left	24" (* 29-80)	1	... .	... .	360 7013	... .
	Right	24" (* 29-80)	1	... .	... .	360 7012	... .
T-838			2	... .	... .	359 9369	... .
		24" (* 29-81)	2	... .	... .	362 3444	... .
	Left	24" (* 29-80)	1	... .	... .	360 7009	... .
	Right	24" (* 29-80)	1	... .	... .	360 7008	... .
T-843			2	... .	359 0416	... .	... .
T-844			2	... .	359 0417	... .	... .
T-845			2	... .	359 0335	... .	... .
T-848			2	... .	359 0333	... .	... .

Printed in U.S.A.

SEATS - SOFT TRIM

Trim No.		Per Car	06	09-17-19-89	39-79	
T-851		2	... .	359 0333	... .	... .
T-853		2	... .	359 0416	... .	... .
T-855		2	... .	359 0335	... .	... .
T-871		2	... .	359 0333	... .	... .
T-873		2	... .	359 0416	... .	... .
T-874		2	... .	359 0417	... .	... .
T-875		2	... .	359 0335	... .	... .
T-876		2	... .	359 0418	... .	... .
T-879		2	... .	359 0419	... .	... .
T-881		2	... .	359 0333	... .	... .
T-883		2	... .	359 0416	... .	... .
T-885		2	... .	359 0335	... .	... .
T-891		2	... .	359 0333	... .	... .
T-893		2	... .	359 0416	... .	... .
T-894		2	... .	359 0417	... .	... .
T-895		2	... .	359 0335	... .	... .
T-896		2	... .	359 0418	... .	... .
T-899		2	... .	359 0419	... .	... .
T-923		2	362 5778	... .	... .	... .
T-928		2	362 0727	... .	... .	... .
T-931	24"	2	... .	... .	362 3973	... .
	48"	2	... .	... .	362 3970	... .
T-932	24"	2	... .	... .	362 3973	... .
	48"	2	... .	... .	362 3970	... .
T-935	24"	2	... .	... .	362 3446	... .
	48"	2	... .	... .	359 9370	... .
T-936	24"	2	... .	... .	362 3975	... .
	48"	2	... .	... .	362 3972	... .
T-941		1	... .	362 0727	... .	... .
T-943		1	... .	362 5778	... .	... .
T-944		2	... .	362 0730	... .	... .
T-945		1	... .	359 0335	... .	... .
T-951		1	... .	362 0727	... .	... .
T-953		1	... .	362 5778	... .	... .
T-956		2	... .	362 0676	... .	... .
T-957		2	... .	362 0677	... .	... .
T-961	24"	2	... .	... .	362 3973	... .
	48"	2	... .	... .	362 3970	... .
T-962	24"	2	... .	... .	362 3973	... .
	48"	2	... .	... .	362 3970	... .
T-963	24"	2	... .	... .	362 3974	... .
	48"	2	... .	... .	362 3971	... .
T-965	24"	2	... .	... .	362 3446	... .
	48"	2	... .	... .	359 9370	... .
T-966	24"	2	... .	... .	362 3975	... .
	48"	2	... .	... .	362 3972	... .
T-968	24"	2	... .	... .	362 3973	... .
	48"	2	... .	... .	362 3970	... .
T-972		1	... .	362 0727	... .	... .
T-973		1	... .	362 5778	... .	... .
T-975		1	... .	359 0335	... .	... .
T-976		2	... .	362 0676	... .	... .
T-977		2	... .	362 0677	... .	... .
T-979		2	... .	362 0677	... .	... .
T-991		1	... .	362 0727	... .	... .
T-992		1	... .	362 0727	... .	... .
T-993		1	... .	362 5778	... .	... .
T-995		1	... .	359 0335	... .	... .
T-996		2	... .	362 0676	... .	... .
T-997		2	... .	362 0677	... .	... .
T-999		2	... .	362 0677	... .	... .

SEATS - SOFT TRIM

1970 MODELS

Trim No.	Per Car	01-19-30-46 -70-89
T-001	AR	363 0842
T-008	AR	363 0842
T-011	AR	363 0842
T-013	AR	363 0843
T-014	AR	363 0844
T-015	AR	363 0845
T-021	AR	363 0842
T-023	AR	363 0843
T-024	AR	363 0844
T-025	AR	363 0845
T-031	AR	359 9369
T-033	AR	362 8951
T-035	AR	359 9370
T-036	AR	362 8953
T-041	AR	363 0842
T-043	AR	363 0843
T-044	AR	363 0844
T-045	AR	363 0845
T-051	AR	361 3212
T-053	AR	362 1925
T-054	AR	362 1926
T-056	AR	362 1927
T-061	AR	359 9369
T-063	AR	362 8951
T-064	AR	362 8952
T-065	AR	359 9370
T-066	AR	362 8953
T-071	AR	361 3212
T-073	AR	362 1925
T-074	AR	362 1926
T-075	AR	361 3218
T-076	AR	362 1927
T-091	AR	361 3212
T-093	AR	362 1925
T-094	AR	362 1926
T-095	AR	361 3218
T-096	AR	362 1927

1971 MODELS

Trim No.	Per Car	01-19-46 -79-89
T-101	AR	364 8698
T-103 Except "A" Trim	AR	364 8699
T-103A	AR	364 8698
T-104A	AR	364 8698
T-108	AR	364 8698
T-111	AR	364 8698
T-113	AR	364 8699
T-114	AR	364 8700
T-115	AR	364 8701
T-121	AR	364 8698
T-123	AR	364 8699
T-124	AR	364 8700
T-128	AR	364 8698
T-141	AR	364 8698
T-143	AR	364 8699
T-144	AR	364 8700
T-145	AR	364 8701

Printed in U.S.A.

SEATS - SOFT TRIM

Trim No.	Per Car	01-19-46 -79-89
T-151	AR	364 8698
T-153	AR	364 8699
T-154	AR	364 8700
T-171	AR	364 8698
T-173	AR	364 8699
T-174	AR	364 8700
T-175	AR	364 8701
T-176	AR	364 8698
T-181	AR	364 8698
T-183	AR	364 8699
T-184	AR	364 8700
T-191	AR	364 8698
T-193	AR	364 8699
T-194	AR	364 8700
T-195	AR	364 8701
T-196	AR	364 8698

1972 MODELS

Trim No.	Per Car	01-19-46 -79-89
T-201	AR	365 6075
T-203	AR	365 3285
T-206	AR	365 3288
T-208	AR	365 6075
T-211	AR	365 6075
T-213	AR	365 3285
T-215	AR	365 6075
T-216	AR	365 3288
T-218	AR	365 6075
T-221	AR	365 6075
T-223	AR	365 3285
T-224	AR	365 3286
T-226	AR	365 3288
T-241	AR	365 6075
T-243	AR	365 3285
T-244	AR	365 3286
T-246	AR	365 3288
T-248	AR	365 6075
T-271	AR	365 6075
T-273	AR	365 4553
T-274	AR	365 4554
T-276	AR	365 4555
T-291	AR	365 6075
T-293	AR	365 4553
T-294	AR	365 4554
T-296	AR	365 4555

29.358-3 ATTACHING PARTS, Stormstrip To Body

CLIP, Speed 67/	(* 29-78).....	.....	AR	400 2184

SEATS - SOFT TRIM

29.358–4 CAP, Lock Pillar Stormstrip Top Cover

1967 - 1968 MODELS

Trim No.		Per Car	07-09	17-19-59-87 -89	39-79	
T-741	Left	1	358 2375	... .	... .	... .
	Right	1	358 2374	... .	... .	... .
T-743	Left	1	358 1127	... .	... .	... .
	Right	1	358 1126	... .	... .	... .
T-744	Left	1	356 3579	... .	... .	... .
	Right	1	356 3578	... .	... .	... .
T-745	Left	1	358 1131	... .	... .	... .
	Right	1	358 1130	... .	... .	... .
T-747	Left	1	358 1133	... .	... .	... .
	Right	1	358 1132	... .	... .	... .
T-748	Left	1	358 2375	... .	... .	... .
	Right	1	358 2374	... .	... .	... .
T-749	Left	1	358 1135	... .	... .	... .
	Right	1	358 1134	... .	... .	... .
T-771	Left	1	... .	357 8733	... .	... .
	Right	1	... .	357 8732	... .	... .
T-773	Left	1	... .	357 8735	... .	... .
	Right	1	... .	357 8734	... .	... .
T-774	Left	1	... .	357 8737	... .	... .
	Right	1	... .	357 8736	... .	... .
T-775	Left	1	... .	357 8739	... .	... .
	Right	1	... .	357 8738	... .	... .
T-776	Left	1	... .	357 8741	... .	... .
	Right	1	... .	357 8740	... .	... .
T-777	Left	1	... .	357 8743	... .	... .
	Right	1	... .	357 8742	... .	... .
T-778	Left	1	... .	357 8733	... .	... .
	Right	1	... .	357 8732	... .	... .
T-779	Left	1	... .	357 8745	... .	... .
	Right	1	... .	357 8744	... .	... .
T-791	Left	1	... .	357 8733	... .	... .
	Right	1	... .	357 8732	... .	... .
T-793	Left	1	... .	357 8735	... .	... .
	Right	1	... .	357 8734	... .	... .
T-794	Left	1	... .	357 8737	... .	... .
	Right	1	... .	357 8736	... .	... .
T-795	Left	1	... .	357 8739	... .	... .
	Right	1	... .	357 8738	... .	... .
T-796	Left	1	... .	357 8741	... .	... .
	Right	1	... .	357 8740	... .	... .
T-797	Left	1	... .	357 8743	... .	... .
	Right	1	... .	357 8742	... .	... .
T-798	Left	1	... .	357 8733	... .	... .
	Right	1	... .	357 8732	... .	... .
T-799	Left	1	... .	357 8745	... .	... .
	Right	1	... .	357 8744	... .	... .
T-831	Left	1	... .	... .	362 3413	... .
	Right	1	... .	... .	362 3412	... .

SEATS - SOFT TRIM

Trim No.		Per Car	07-09	17-19-59-87 -89	39-79	
T-832	Left	1	... .	... .	362 3417	... .
	Right	1	... .	... .	362 3416	... .
T-835	Left	1	... .	... .	362 3415	... .
	Right	1	... .	... .	362 3414	... .
T-838	Left	1	... .	... .	362 3413	... .
	Right	1	... .	... .	362 3412	... .
T-843	Left	1	360 4705	... .	... .	... .
	Right	1	360 4704	... .	... .	... .
T-844	Left	1	360 4707	... .	... .	... .
	Right	1	360 4706	... .	... .	... .
T-845	Left	1	358 1131	... .	... .	... .
	Right	1	358 1130	... .	... .	... .
T-848	Left	1	358 2375	... .	... .	... .
	Right	1	358 2374	... .	... .	... .
T-851	Left	1	... .	357 8733	... .	... .
	Right	1	... .	357 8732	... .	... .
T-853	Left	1	... .	361 3089	... .	... .
	Right	1	... .	361 3088	... .	... .
T-855	Left	1	... .	357 8739	... .	... .
	Right	1	... .	357 8738	... .	... .
T-871	Left	1	... .	357 8733	... .	... .
	Right	1	... .	357 8732	... .	... .
T-873	Left	1	... .	361 3089	... .	... .
	Right	1	... .	361 3088	... .	... .
T-874	Left	1	... .	361 3091	... .	... .
	Right	1	... .	361 3090	... .	... .
T-875	Left	1	... .	357 8739	... .	... .
	Right	1	... .	357 8738	... .	... .
T-876	Left	1	... .	361 3093	... .	... .
	Right	1	... .	361 3092	... .	... .
T-879	Left	1	... .	361 3095	... .	... .
	Right	1	... .	361 3094	... .	... .
T-881	Left	1	... .	357 8733	... .	... .
	Right	1	... .	357 8732	... .	... .
T-883	Left	1	... .	361 3089	... .	... .
	Right	1	... .	361 3088	... .	... .
T-885	Left	1	.. ..	357 8739	... .	... .
	Right	1	... .	357 8738	... .	... .
T-891	Left	1	... .	357 8733	... .	... .
	Right	1	... .	357 8732	... .	... .
T-893	Left	1	... .	361 3089	... .	... .
	Right	1	... .	361 3088	... .	... .
T-894	Left	1	... .	361 3091	... .	... .
	Right	1	... .	361 3090	... .	... .
T-895	Left	1	... .	357 8739	... .	... .
	Right	1	... .	357 8738	... .	... .
T-896	Left	1	... .	361 3093	... .	... .
	Right	1	... .	361 3092	... .	... .
T-899	Left	1	... .	361 3095	... .	... .
	Right	1	... .	361 3094	... .	... .

1969 MODELS

T-931	Left	1	362 4001
	Right	1	362 4000
T-932	Left	1	362 4001
	Right	1	362 4000
T-935	Left	1	362 4007
	Right	1	362 4006

SEATS - SOFT TRIM

T-936	Left	.....	1	362 4005
	Right	.....	1	362 4004
T-941	Left	.....	1	362 3877
	Right	.....	1	362 3876
T-943	Left	.....	1	362 3877
	Right	.....	1	362 3876
T-944	Left	.....	1	362 3877
	Right	.....	1	362 3876
T-945	Left	.....	1	362 3877
	Right	.....	1	362 3876
T-961	Left	.....	1	362 4001
	Right	.....	1	362 4000
T-962	Left	.....	1	362 4001
	Right	.....	1	362 4000
T-963	Left	.....	1	362 4003
	Right	.....	1	362 4002
T-965	Left	.....	1	362 4007
	Right	.....	1	362 4006
T-966	Left	.....	1	362 4005
	Right	.....	1	362 4004
T-968	Left	.....	1	362 4001
	Right	.....	1	362 4000

1970 MODELS

Trim No.			Per Car	30-70
T-031	Left	.....	1	362 3413
	Right	.....	1	362 3412
T-033	Left	.....	1	362 9791
	Right	.....	1	362 9790
T-035	Left	.....	1	362 4007
	Right	.....	1	362 4006
T-036	Left	.....	1	362 9795
	Right	.....	1	362 9794
T-061	Left	.....	1	362 3413
	Right	.....	1	362 3412
T-063	Left	.....	1	362 9791
	Right	.....	1	362 9790
T-064	Left	.....	1	362 9793
	Right	.....	1	362 9792
T-065	Left	.....	1	362 4007
	Right	.....	1	362 4006
T-066	Left	.....	1	362 9795
	Right	.....	1	362 9794

29.358-5 ATTACHING PARTS, Cap To Lock Pillar

SCREW, Tapping.....	67/69	07-09 (6-18 x 1/2)	17.660	4	G161798 NA
SCREW, Tapping.....	67/69	07-09 (8-18 x 3/8)	17.669	4	G457002 NA
SCREW, Tapping.....	67/68	17-19-59-87-89 (Washer Head).....	23.198	4	400 1923
SCREW, Tapping.....	67/68	17-19-59-87-89 (Flat Head 6-18)	17.648	2	G161373 NA
SCREW, Tapping.....	67/68	17-19-59-87-89 (Flat Head 8-18)	29.052	2	400 1477
SCREW, Tapping.....	68/70	39-79.....	29.052	2	400 2151
WASHER, Plain.....	67/69	07-09.....	17.814	4	G446130 NA

SEATS - SOFT TRIM

29.365 MATERIAL, Seat Welt (Specify Length When Ordering)

1967 MODELS

Trim No.	Per Car	01-10-50-80 (Except "W" Trim)	10-80 ("W" Trim)		
T-723	AR	357 8175	... .	... .	... .
T-728	AR	356 4304	... .	... .	... .
T-729	AR	357 8181	... .	... .	... .
T-741	AR	356 4299	... .	... .	... .
T-743	AR	357 8175	... .	... .	... .
T-744	AR	356 4307	... .	... .	... .
T-745	AR	357 8177	... .	... .	... .
T-747	AR	357 8179	... .	... .	... .
T-748	AR	356 4304	... .	... .	... .
T-749	AR	357 8181	... .	... .	... .
T-753	AR	357 8175	... .	... .	... .
T-758	AR	356 4304	... .	... .	... .
T-759	AR	357 8181	... .	... .	... .
T-771	AR	356 4299	356 4299	... .	... .
T-773	AR	357 8175	357 8182	... .	... .
T-774	AR	356 4307	... .	... .	... .
T-775	AR	357 8177	357 8177	... .	... .
T-776	AR	357 8178	357 8178	... .	... .
T-777	AR	357 8179	... .	... .	... .
T-778	AR	356 4304	... .	... .	... .
T-779	AR	357 8181	357 8183	... .	... .
T-781	AR	356 4299	... .	... .	... .
T-783	AR	357 8175	... .	... .	... .
T-787	AR	357 8179	... .	... .	... .
T-789	AR	357 8181	... .	... .	... .
T-791	AR	356 4299	356 4299	... .	... .
T-793	AR	357 8175	357 8182	... .	... .
T-794	AR	356 4307	... .	... .	... .
T-795	AR	357 8177	357 8177	... .	... .
T-796	AR	357 8178	357 8178	... .	... .
T-797	AR	357 8179	... .	... .	... .
T-798	AR	356 4304	... .	... .	... .
T-799	AR	357 8181	357 8183	... .	... .

1968 - 1969 MODELS

Trim No.	Per Car	01-10-30-70 -80 (1/8" Dia.)	01-10-30-70 -80 (3/16" Dia.)		
T-828	AR	356 4304	... .	... .	... .
T-831	AR	356 4299	... .	... .	... .
T-832	AR	360 4563	... .	... .	... .
T-835	AR	357 8177	... .	... .	... .
T-843	AR	360 4555	... .	... .	... .
T-844	AR	360 4556	... .	... .	... .
T-845	AR	357 8177	... .	... .	... .
T-848	AR	356 4304	... .	... .	... .
T-851	AR	356 4299	... .	... .	... .
T-853	AR	360 4555	... .	... .	... .
T-855	AR	357 8177	... .	... .	... .
T-871	AR	356 4299	... .	... .	... .
T-873	AR	360 4555	... .	... .	... .

SEATS - SOFT TRIM

Trim No.	Per Car	01-10-30-70 -80 (1/8" Dia.)	01-10-30-70 -80 (3/16" Dia.)		
T-874	AR	360 4556	... .	... .	... .
T-875	AR	357 8177	... .	... .	... .
T-876	AR	360 4558	... .	... .	... .
T-879	AR	360 4560	... .	... .	... .
T-881	AR	356 4299	... .	... .	... .
T-883	AR	360 4555	... .	... .	... .
T-885	AR	357 8177	... .	... .	... .
T-891	AR	356 4299	... .	... .	... .
T-893	AR	360 4555	... .	... .	... .
T-894	AR	360 4556	... .	... .	... .
T-895	AR	357 8177	... .	... .	... .
T-896	AR	360 4558	... .	... .	... .
T-899	AR	360 4560	... .	... .	... .
T-923	AR	361 8501	363 4002	... .	... .
T-928	AR	361 8500	362 5041	... .	... .
T-931F	AR	361 8500	362 5041	... .	... .
T-931L	AR	... .	362 5041	... .	... .
T-932	AR	361 8506	363 4001	... .	... .
T-935	AR	357 8177	363 4004	... .	... .
T-936F	AR	361 8508	362 5042	... .	... .
T-936L	AR	... .	362 5042	... .	... .
T-941	AR	361 8500	362 5041	... .	... .
T-943	AR	361 8501	363 4002	... .	... .
T-944	AR	361 8502	363 4003	... .	... .
T-945	AR	357 8177	363 4004	... .	... .
T-951	AR	361 8500	362 5041	... .	... .
T-953	AR	361 8501	363 4002	... .	... .
T-956	AR	361 8507	363 4005	... .	... .
T-957	AR	361 8504	363 4006	... .	... .
T-961	AR	361 8500	362 5041	... .	... .
T-962	AR	361 8506	363 4001	... .	... .
T-963	AR	361 8501	363 4002	... .	... .
T-965	AR	357 8177	363 4004	... .	... .
T-966	AR	361 8507	363 4005	... .	... .
T-968	AR	356 4304	363 4007	... .	... .
T-972	AR	361 8506	363 4001	... .	... .
T-973	AR	361 8501	363 4002	... .	... .
T-975	AR	357 8177	363 4004	... .	... .
T-976	AR	361 8507	363 4005	... .	... .
T-977	AR	361 8504	363 4006	... .	... .
T-979	AR	361 8505	363 4008	... .	... .
T-981	AR	361 8500	362 5041	... .	... .
T-983	AR	361 8501	363 4002	... .	... .
T-986	AR	361 8507	363 4005	... .	... .
T-987	AR	361 8504	363 4006	... .	... .
T-991	AR	361 8500	362 5041	... .	... .
T-992	AR	361 8506	363 4001	... .	... .
T-993	AR	361 8501	363 4002	... .	... .
T-995	AR	357 8177	363 4004	... .	... .
T-996	AR	361 8507	363 4005	... .	... .
T-997	AR	361 8504	363 4006	... .	... .
T-999	AR	361 8505	363 4008	... .	... .

SEATS - SOFT TRIM

1970 MODELS

Trim No.	Per Car	01-10-30-40 -70-80 (1/8" Dia.)	01-10-30-40 -70-80 (3/16" Dia.)
T-001	AR	362 8819	363 4240
T-008	AR	362 8821	363 4019
T-011	AR	362 8819	363 4240
T-013	AR	362 8816	363 4242
T-014	AR	362 8817	363 4243
T-015	AR	362 8820	363 4016
T-021A	AR	362 8821	363 4019
T-021B	AR	362 8821	363 4019
T-021G	AR	... .	363 4240
T-023	AR	362 8816	363 4242
T-024	AR	362 8817	363 4243
T-025	AR	362 8820	363 4016
T-031F	AR	362 8819	363 4240
T-031L	AR	... .	362 8810
T-033F	AR	362 8816	363 4242
T-035F	AR	362 8820	363 4016
T-035L	AR	... .	362 4009
T-036F	AR	362 8818	363 4244
T-036L	AR	... .	362 8811
T-041	AR	362 8819	363 4240
T-043	AR	362 8816	363 4242
T-044	AR	362 8817	363 4243
T-045	AR	362 8820	363 4016
T-051	AR	362 8819	363 4240
T-053	AR	362 8816	363 4242
T-054	AR	362 8817	363 4243
T-056	AR	362 8818	363 4244
T-061E	AR	362 8819	363 4240
T-061F	AR	362 8819	363 4240
T-061J	AR	... .	362 8810
T-061L	AR	362 8816	363 4242
T-063	AR	362 8817	363 4243
T-064	AR	362 8820	363 4016
T-065E	AR	362 8820	363 4016
T-065F	AR	362 8820	363 4016
T-065J	AR	... .	362 4009
T-065L	AR	362 8818	363 4244
T-066E	AR	362 8818	363 4244
T-066F	AR	362 8818	363 4244
T-066J	AR	... .	362 8811
T-066L	AR	362 8819	363 4240
T-071	AR	362 8816	363 4242
T-073	AR	362 8817	363 4243
T-074	AR	362 8820	363 4016
T-075	AR	362 8818	363 4244
T-076	AR	362 8819	363 4240
T-081	AR	362 8816	363 4242
T-083	AR	362 8817	363 4243
T-084	AR	362 8818	363 4244
T-086	AR	362 8819	363 4240
T-091	AR	362 8816	363 4242
T-093	AR	362 8817	363 4243
T-094	AR	362 8820	363 4016
T-095	AR	362 8818	363 4244
T-096			

SEATS - SOFT TRIM

1971 - 1972 MODELS

Trim No.	Per Car	01-10-40 -70-80 (1/8" Dia.)	01-10-40 -70-80 (3/16" Dia.)
T-101	AR	... .	364 0508
T-103 Blue	AR	... .	364 0504
T-103 Black	AR	... .	364 0508
T-104	AR	... .	364 0508
T-108	AR	362 8821	363 4019
T-111	AR	364 0514	364 0508
T-113	AR	364 0510	364 0504
T-114	AR	364 0511	364 0505
T-115	AR	364 0512	364 0506
T-121	AR	364 0514	364 0508
T-123	AR	364 0510	364 0504
T-124	AR	364 0511	364 0505
T-128	AR	362 8821	363 4019
T-141	AR	364 0514	364 0508
T-143	AR	364 0510	364 0504
T-144	AR	364 0511	364 0505
T-145	AR	364 0512	364 0506
T-151	AR	364 0514	364 0508
T-153	AR	364 0510	364 0504
T-154	AR	364 0511	364 0505
T-161J	AR	364 0514	364 0508
T-161L	AR	... .	364 2400
T-161R	AR	364 0514	364 0508
T-161S	AR	364 0514	364 0508
T-163	AR	364 0510	364 0504
T-164	AR	364 0511	364 0505
T-165J	AR	364 0512	364 0506
T-165L	AR	... .	364 2401
T-165R	AR	364 0512	364 0506
T-165S	AR	364 0512	364 0506
T-168	AR	362 8821	363 4019
T-171	AR	364 0514	364 0508
T-173	AR	364 0510	364 0504
T-174	AR	364 0511	364 0505
T-175	AR	364 0512	364 0506
T-176	AR	... .	364 0509
T-181	AR	364 0514	364 0508
T-183	AR	364 0510	364 0504
T-184	AR	364 0511	364 0505
T-186	AR	... .	364 0509
T-191	AR	364 0514	364 0508
T-193	AR	364 0510	364 0504
T-194	AR	364 0511	364 0505
T-195	AR	364 0512	364 0506
T-196	AR	... .	364 0509
T-201	AR	364 0514	364 0508
T-203	AR	365 2812	365 2806
T-206	AR	365 2815	365 2809
T-208	AR	... .	363 4019
T-211	AR	365 0514	364 0508
T-213	AR	365 2812	365 2806
T-215	AR	365 0514	364 0508
T-216	AR	365 2815	365 2809
T-218	AR	362 8821	363 4019
T-221G	AR	364 0514	... .
T-241	AR	364 0514	364 0508
T-243	AR	365 2812	365 2806
T-244	AR	365 2813	365 2807
T-245	AR	364 0514	364 0508

SEATS - SOFT TRIM

Trim No.	Per Car	01-10-40 -70-80 (1/8" Dia.)	01-10-40 -70-80 (3/16" Dia.)
T-246	AR	365 2815	365 2809
T-248	AR	362 8821	363 4019
T-261	AR	364 0514	364 0508
T-263	AR	365 2812	365 2806
T-264	AR	365 2813	365 2807
T-265	AR	364 0514	364 0508
T-266	AR	365 2815	365 2809
T-268	AR	362 8821	363 4019
T-271	AR	364 0514	364 0508
T-273	AR	365 2812	365 2806
T-274	AR	365 2813	365 2807
T-276	AR	365 2815	365 2809
T-291	AR	364 0514	364 0508
T-293	AR	365 2812	365 2812
T-294	AR	365 2813	365 2807
T-296	AR	365 2815	365 2809

29.367–1 BUTTON, *Side Panel Trim*

1967 MODELS

Trim No.	Per Car	89 ("W" Trim)
T-791	26	357 8513
T-793	26	357 8514
T-795	26	357 8515
T-796	26	357 8516
T-799	26	357 8517

1969 MODELS

T-972	.....	16	362 1448
T-973	.....	16	362 1450
T-975	.....	16	362 1451
T-976	.....	16	362 1452
T-977	.....	16	362 1453
T-979	.....	16	362 1454
T-991	.....	22	362 1448
T-992	.....	22	362 1449
T-993	.....	22	362 1450
T-995	.....	22	362 1451
T-996	.....	22	362 1452
T-997	.....	22	362 1453
T-999	.....	22	362 1454

1970 MODELS

Trim No.		Per Car	10-80
T-071	27.070	28	362 2017
T-073	27.070	28	362 2018
T-074	27.070	28	362 2019
T-075	27.070	28	362. 2020
T-076	27.070	28	362 2021
T-091	27.070	30	362 2017
T-093	27.070	30	362 2018
T-094	27.070	30	362 2019
T-095	27.040	30	362 2020
T-096	27.070	30	362 2021

SEATS - SOFT TRIM

29.367–2 BUTTON, Seat Upholstery

Description	Per Car	50-80 (LBS)			
BUTTON	4	360 8150	... .	... .	... .

Trim No.	Per Car	59 (WBS): 80 (WBS-Except "W" Trim)	89 ("W" Trim)		
T-791	18	357 8497	... .	... .	... .
	40	... .	357 8497	... .	... .
T-793	18	357 8498	... .	... .	... .
	40	... .	357 8498	... .	... .
T-795	18	357 8499	... .	... .	... .
	40	... .	357 8499	... .	... .
T-796	18	357 8500	... .	... .	... .
	40	... .	357 8500	... .	... .
T-798	18	357 8502	... .	... .	... .
T-799	18	357 8501	... .	... .	... .
Dark Tan	40	... .	357 8501	... .	... .
Medium Tan	40	... .	357 8503	... .	... .

1968 MODELS

Trim No.	Per Car	80 (LBS)	80 (WBS)		
T-891	AR	360 4431	357 8497	... .	... .
T-893	AR	360 4432	360 6492	... .	... .
T-894	AR	360 4433	360 6493	... .	... .
T-895	AR	360 4434	357 8499	... .	... .
T-896	AR	360 4435	360 6494	... .	... .
T-899	AR	360 4437	360 6495	... .	... .

1969 MODELS

Trim No.	Per Car	10 (SST-LBS)	10 (SST-WBS): 80 (SST)		
T-972	8	361 9807	362 5392	... .	... .
T-973	8	361 9801	362 5393	... .	... .
T-975	8	361 9806	362 5394	... .	... .
T-976A	8	361 9823	... .	... .	... .
T-976B	8	361 9810	... .	... .	... .
T-976C	8	361 9823	... .	... .	... .
T-976D	8	361 9810	... .	... .	... .
T-977	8	361 9803	... .	... .	... .
T-979	8	361 9804	362 5398	... .	... .
T-991	40	... .	362 1456	... .	... .
T-992E	40	... .	362 1457	... .	... .
T-992M	40	... .	362 1457	... .	... .
T-992V	56	... .	362 1464	... .	... .
T-993E	40	... .	362 1458	... .	... .
T-993F	40	... .	362 1458	... .	... .
T-993M	40	... .	362 1458	... .	... .
T-993N	40	... .	362 1458	... .	... .
T-993V	56	... .	362 1465	... .	... .
T-995	40	... .	362 1459	... .	... .
T-996E	40	... .	362 1461	... .	... .
T-996F	40	... .	362 1460	... .	... .
T-996M	40	... .	362 1461	... .	... .
T-996N	40	... .	362 1460	... .	... .
T-997	40	... .	362 1462	... .	... .
T-999	40	... .	362 1463	... .	... .

Printed in U.S.A.

SEATS - SOFT TRIM

1970 MODELS

Trim No.			Per Car	10 (SST-LBS)	10 (SST-WBS): 80 (DPL)	80 (SST)
T-051	(19)	Front Back	12	... .	363 4174	... .
	(19)	Rear Back	12	... .	362 7717	... .
T-053	(19)	Front Back	12	... .	363 4176	... .
	(19)	Rear Back	12	... .	362 7718	... .
T-056	(19)	Front Back	12	... .	363 4178	... .
	(19)	Rear Back	12	... .	362 7721	... .
T-071	(15)(18)	Except "S" Trim	24	362 7717	... .	... .
	(15)(19)	"S" Trim	56	363 4174	... .	... .
	(19)	Front Back-Except "S" Trim	12	362 7717	363 4174	... .
	(19)	Rear Back-Except "S" Trim	12	362 7717	362 7717	... .
T-073	(15)(18)	Except "S" Trim	24	362 7718	... .	... .
	(15)(19)	"S" Trim	56	363 4176	... .	... .
	(19)	Front Back-Except "S" Trim	12	362 7718	363 4176	... .
	(19)	Rear Back-Except "S" Trim	12	362 7718	362 7718	... .
T-074		Except "S" Trim	24	362 7719	... .	... .
	(15)(19)	"S" Trim	56	363 4177	... .	... .
T-075	(15)(18)		24	362 7720	... .	... .
	(19)	Front Back	12	362 7720	363 4181	... .
	(19)	Rear Back	12	362 7720	362 7720	... .
T-076	(15)(18)	Except "S" Trim	24	362 7721	... .	... .
	(15)(19)	"S" Trim	56	363 4178	... .	... .
	(19)	Front Back-Except "S" Trim	12	362 7721	363 4178	... .
	(19)	Rear Back-Except "S" Trim	12	362 7721	362 7721	... .
T-091	(WFS)	Front Back	21	... .	363 4174	... .
	(WNRS)	Front Back	20	... ...	363 4174	... .
	(WIRS)	Front Back	20	... .	363 4174	... .
	(85)(89)	Rear Back	24	... .	363 4174	... .
	(88)	Rear Back	22	... .	363 4174	... .
T-091E			44	... .	... .	362 7722
T-091F			44	... .	... .	363 4174
T-091M		Front Back	26	... .	... .	362 7722
	(85)(89)	Rear Back	30	... .	... .	362 7722
	(88)	Rear Back	28	... .	... .	362 7722
T-091N		Front Back	26	... .	... .	363 4174
	(85)(89)	Rear Back	30	... .	... .	363 4174
	(88)	Rear Back	28	... .	... .	363 4174
T-091V			56	... .	... .	363 4179
T-093	(WFS)	Front Back	21	... .	363 4176	... .
	(WNRS)	Front Back	20	... .	363 4176	... .
	(WIRS)	Front Back	20	... .	363 4176	... .
	(85)(89)	Rear Back	24	... .	363 4176	... .
	(88)	Rear Back	22	... .	363 4176	... .
T-093E			44	... .	... .	362 7723
T-093F			44	... .	... .	363 4176
T-093M		Front Back	26	... .	... .	362 7723
	(85)(89)	Rear Back	30	... .	... .	362 7723
	(88)	Rear Back	28	... .	... .	362 7723
T-093N		Front Back	26	... .	... .	363 4176
	(85)(89)	Rear Back	30	... .	... .	363 4176
	(88)	Rear Back	28	... .	... .	363 4176
T-093V			56	... .	... .	363 4180
T-094E			44	... .	... .	362 7724
T-094F			44	... .	... .	363 4177
T-094M		Front Back	26	... .	... .	362 7724
	(85)(89)	Rear Back	30	... .	... .	362 7724
	(88)	Rear Back	28	... .	... .	362 7724

SEATS - SOFT TRIM

Trim No.			Per Car	10 (SST-LBS)	10 (SST-WBS): 80 (DPL)	80 (SST)
T-094N		Front Back	26	... .	... .	363 4177
	(85)(89)	Rear Back	30	... .	... .	363 4177
	(88)	Rear Back	28	... .	... .	363 4177
T-094	(WFS)	Front Back	21	... .	363 4177	... .
	(WNRS)	Front Back	20	... .	363 4177	... .
	(WIRS)	Front Back	20	... .	363 4177	... .
	(85)(89)	Rear Back	24	... .	363 4177	... .
	(88)	Rear Back	22	... .	363 4177	... .
T-095	(WFS)	Front Back	21	... .	363 4181	... .
	(WNRS)	Front Back	20	... .	363 4181	... .
	(WIRS)	Front Back	20	... .	363 4181	... .
	(85)(89)	Rear Back	24	... .	363 4181	... .
	(88)	Rear Back	22	... .	363 4181	... .
T-095F			44	... .	... .	363 4181
T-095N		Front Back	26	... .	... .	363 4181
	(85)(89)	Rear Back	30	... .	.. ....	363 4181
	(88)	Rear Back	28	... .	... .	363 4181
T-096	(WFS)	Front Back	21	... .	363 4178	... .
	(WNRS)	Front Back	20	... .	363 4178	... .
	(WIRS)	Front Back	24	... .	363 4178	... .
	(85)(89)	Rear Back	24	... .	363 4178	... .
	(88)	Rear Back	22	... .	363 4178	... .
T-096E			44	... .	... .	362 7725
T-096F			44	... .	... .	363 4178
T-096M		Front Back	26	... .	... .	362 7725
	(85)(89)	Rear Back	30	... .	... .	362 7725
	(88)	Rear Back	28	... .	... .	362 7725
T-096N		Front Back	26	... .	... .	363 4178
	(85)(89)	Rear Back	30	... .	... .	363 4178
	(88)	Rear Back	28	... .	... .	363 4178

1971 MODELS

Trim No.		Per Car	10 (LBS)	80 (LBS)	10-80 (WBS)
T-171	Except "V" And "S" Trim	AR	364 9450	... .	... .
	"V" And "S" Trim (* 29-126)	AR	365 3126	... .	365 3126
	"V" And "S" Trim (* 29-127)	AR	365 3810	... .	365 3810
T-173	Except "V" And "S" Trim	AR	364 9451	... .	... .
	"V" And "S" Trim (* 29-126)	AR	365 3127	... .	365 3127
	"V" And "S" Trim (* 29-127)	AR	365 3811	... .	365 3811
T-174	Except "V" And "S" Trim	AR	364 9452	... .	... .
	"V" And "S" Trim (* 29-126)	AR	365 3128	... .	365 3128
	"V" And "S" Trim (* 29-127)	AR	365 3812	... .	365 3812
T-175	Except "V" And "S" Trim	AR	364 9453	... .	... .
	"V" And "S" Trim (* 29-126)	AR	365 3129	... .	365 3129
	"V" And "S" Trim (* 29-127)	AR	365 3813	... .	365 3813
T-176		AR	365 3814	... .	... .
T-186		AR	... .	365 3814	... .
T-191	Except "V" Trim (* 29-126)	AR	... .	365 3126	365 3126
	Except "V" Trim (* 29-127)	AR	... .	365 3810	365 3810
T-191V		AR	... .	365 3121	... .
T-193	Except "V" Trim (* 29-126)	AR	... .	365 3127	365 3127
	Except "V" Trim (* 29-127)	AR	... .	365 3811	365 3811
T-193V		AR	... .	365 3122	... .
T-194	(* 29-126)	AR	... .	365 3128	365 3128
	(* 29-127)	AR	... .	365 3812	365 3812
T-195	(* 29-126)	AR	... .	365 3129	365 3129
	(* 29-127)	AR	... .	365 3813	365 3813
T-196		AR	... .	365 3814	... .

SEATS - SOFT TRIM

1972 MODELS

Trim No.		Per Car	10-80 (WIRS)	80 (WFS)(WNRS)	10-80 (WBS)
T-271		AR	... .	... .	365 5293
	Front Back	16	366 3186	... .	... .
	Rear Back	19	365 5293	... .	... .
T-273		AR	... .	... .	365 5290
	Front Back	16	366 3187	... .	... .
	Rear Back	19	365 5290	... .	... .
T-274		AR	... .	... .	365 5291
	Front Back	16	366 3188	... .	... .
	Rear Back	19	365 5291	... .	... .
T-276		AR	... .	... .	365 3814
	Front Back	16	366 3190	... .	... .
	Rear Back	19	365 3814	... .	... .
T-291A		12	... .	365 5293	... .
T-291B		12	... .	365 5293	... .
T-291C		6	366 3186	... .	... .
	Front Back	6	365 5293	... .	... .
	Rear Back	16	366 3186	... .	... .
T-291D		19	365 5293	... .	... .
	Front Back	36	... .	365 5295	... .
	Rear Back	34	... .	365 5293	... .
T-291E		16	366 3186	... .	... .
T-291F		19	365 5293	... .	... .
T-291N		29	... .	... .	365 5293
	Front Back	8	365 6193	... .	... .
	Rear Back	28	365 6121	... .	... .
T-291S		12	... .	365 5290	... .
T-291V		12	... .	365 5290	... .
	Front Cushion	6	366 3187	... .	... .
	Except Front Cushion	6	365 5290	... .	... .
T-293A		16	366 3187	... .	... .
T-293B		19	365 5290	... .	... .
T-293C		36	... .	365 5296	... .
	Front Back	34	... .	365 5290	... .
	Rear Back	16	366 3187	... .	... .
T-293D		19	365 5290	... .	... .
	Front Back	29	... .	... .	365 5290
	Rear Back	8	365 6194	... .	... .
T-293E		28	365 6122	... .	... .
T-293F		12	... .	365 5291	... .
T-293N		12	... .	365 5291	... .
	Front Back	6	366 3188	... .	... .
	Rear Back	6	365 5291	... .	... .
T-293S		16	366 3188	... .	... .
T-293V		19	365 5291	... .	... .
	Front Cushion	36	... .	365 5297	... .
	Except Front Cushion	34	... .	365 5291	... .
T-294A		16	366 3188	... .	... .
T-294B		19	365 5291	... .	... .
T-294C		29	... .	... .	365 5291
	Front Back	8	365 6195	... .	... .
	Rear Back	28	365 6123	... .	... .
T-294D		12	... .	365 5292	... .
	Front Back	12	... .	365 3814	... .
	Rear Back	6	366 3189	... .	... .
T-294E		6	365 5292	... .	... .
T-294F		16	366 3190	... .	... .
T-294N		19	365 3814	... .	... .
	Front Back	36	... .	365 5298	... .
	Rear Back	34	... .	365 5292	... .
T-294S		16	366 3189	... .	... .
T-294V		19	365 5290	... .	... .
	Front Cushion	29	... .	... .	365 3814
	Except Front Cushion	8	365 6196	... .	... .
T-296A		28	365 6124	... .	... .
T-296B					
T-296C					
	Front Back				
	Rear Back				
T-296D					
	Front Back				
	Rear Back				
T-296E					
T-296F					
T-296N					
	Front Back				
	Rear Back				
T-296S					
T-296V					
	Front Cushion				
	Except Front Cushion				

SEATS - SOFT TRIM

29.367–3 ATTACHING PARTS, Button To Seat

RETAINER	67	50–80 (LBS)		4	360 8151
RETAINER	68	80		56	400 1570
RETAINER	69	10		8	400 1570
RETAINER (Individual)	70/71	10 (LBS)		AR	400 1570
RETAINER (Individual)	72	80 ("V" Trims)		AR	364 7198
RETAINER (Multiple)	70	10 (WIRS–13 Slots)(Front Back)		2	362 1341
RETAINER (Multiple)	70	10 (WIRS–15 Slots)(Rear Back)		2	362 1342
RETAINER (Multiple)	70	10 (WBS–5 Slots)		2	362 1842
RETAINER (Multiple)	71	10–80 (Nylon)		AR	362 2528
RETAINER (Multiple)	72	10–80 (Except "V" Trims)		AR	364 7185
RETAINER (Individual)	71	10–80 (Nylon) ***(Use 364 7180)***		AR	362 2506
RETAINER (Snap Hook)	69			6	361 3504
RETAINER	69	80 (WBS–7 Slots)		2	362 0973
RETAINER	69	80 (LBS–10 Slots)		4	362 0974
RETAINER	69	85 (SST–"V" Trims–13 Slots)(Front Back)		2	362 1341
RETAINER	69	85–89 (SST–11 Slots)		2	362 0975
RETAINER	69	85 (SST–"V" Trims–15 Slots)(Rear Back)		2	362 1342
RETAINER (Multiple)	70	80 (DPL–WFS–11 Slots)		1	362 0975
RETAINER (Multiple)	70	80 (DPL–WFS–5 Slots)		2	362 1842
RETAINER (Multiple)	70	80 (DPL–WNRS–WIRS–5 Slots)		4	362 1842
RETAINER (Multiple)	70	80 (13 Slots)(Front Back)		2	362 1341
RETAINER (Multiple)	70	80 (SST–WBS–7 Slots)(Front Back)		2	362 0973
RETAINER (Multiple)	70	80 (DPL–12 Slots)(Rear Back Center)		1	362 1843
RETAINER (Multiple)	70	85–89 (DPL–6 Slots)(Rear Back Outer)		2	362 1844
RETAINER (Multiple)	70	88 (DPL–5 Slots)(Rear Back Outer)		2	362 1842
RETAINER (Multiple)	70	80 (15 Slots)(Rear Back)		2	362 1342
RETAINER (Multiple)	70	88 (13 Slots)(Rear Back)		1	362 1341
JIFFY JOIN	67	59–80 (WBS)		AR	359 7471
JIFFY JOIN	69	10 (WBS–3" Long)		8	361 7431
JIFFY JOIN	69	10 (WBS–4–5/8" Long)		8	361 7432
JIFFY JOIN	70	10 (WBS)		10	362 2125
JIFFY JOIN	71	10–80 (WBS)(Front Back–* 29–126) ***(Use 362 2561)***		4	362 2476
JIFFY JOIN	71	10–80 (WBS–* 29–127)		6	362 2561
JIFFY JOIN	72	10–80 (WBS)		10	362 2561
JIFFY JOIN	69	89 (WBS)		6	361 7387
JIFFY JOIN	70	80 (WBS)		4	362 2126
HOG RING	67/	10–80 (WBS)		AR	436 3256

29.420–1 MAT, Rear Auxiliary Floor (Rubber)

67/69	08		1	350 1711
67/68	18		1	358 1500
T–951			1	358 1500
T–953			1	362 8135
T–956			1	362 8136
T–957			1	362 8137

Printed in U.S.A.

SEATS - SOFT TRIM

1970 Thru 1972 MODELS

Trim No.	Per Car	10-40-80 (L3S)
T-001	1	364 2396
T-008	1	364 2396
T-051	1	358 1500
T-053	1	363 4481
T-054	1	363 4482
T-056	1	363 4483
T-101	1	364 1866
T-103	1	364 2397
T-104	1	364 1866
T-108	1	364 1866
T-151	1	358 1500
T-171	1	358 1500
T-201	1	364 1866
T-203	1	365 3002
T-206	1	365 3001
T-208	1	364 1866
T-271	1	358 1500
T-273	1	364 7205
T-274	1	364 7206
T-276	1	364 7207
T-291	1	358 1500

29.420-2 CARPET, Rear Auxiliary Floor (* 29-82)

1967 Thru 1969 MODELS

Trim No.	Per Car	08	18-88 (L3S)	18-88 (W3S)	
T-741	1	359 2323	... .	... .	... .
T-743	1	358 1018	... .	... .	... .
T-744	1	358 1019	... .	... .	... .
T-745	1	358 1020	... .	... .	... .
T-747	1	358 1021	... .	... .	... .
T-749	1	358 1022	... .	... .	... .
T-771	1	... .	680 0148	680 0132	... .
T-773	1	... .	680 0149	680 0133	... .
T-774	1	... .	680 0150	680 0134	... .
T-776	1	... .	680 0152	680 0136	... .
T-777	1	... .	680 0153	680 0137	... .
T-779	1	... .	680 0154	680 0138	... .
T-781	1	... .	680 0148	680 0132	... .
T-783	1	... .	680 0149	680 0133	... .
T-787	1	... .	680 0153	680 0137	... .
T-789	1	... .	680 0154	680 0138	... .
T-791	1	... .	680 0148	680 0132	... .
T-793	1	... .	680 0149	680 0133	... .
T-794	1	... .	680 0150	680 0134	... .
T-796	1	... .	680 0152	680 0136	... .
T-797	1	... .	680 0153	680 0137	... .
T-799	1	... .	680 0154	680 0138	... .
T-828 (W4ST) (* 29-72)	1	359 2323	... .	... .	... .
(* 29-73)	1	362 4743	... .	... .	... .
T-843 (* 29-72)	1	360 4643	... .	... .	... .
(* 29-73)	1	362 4744	... .	... .	... .
T-844 (* 29-72)	1	360 4644	... .	... .	... .
(* 29-73)	1	362 4745	... .	... .	... .
T-845 (* 29-72)	1	358 1020	... .	... .	... .
(* 29-73)	1	362 4314	... .	... .	... .
T-848 (* 29-72)	1	359 2323	... .	... .	... .
(* 29-73)	1	362 4743	... .	... .	... .

SEATS - SOFT TRIM

Trim No.			Per Car	08	18-88 (L3S)	18-88 (W3S)	
T-851 (W4ST)		(* 29-72)	1	... .	680 0148	... .	... .
		(* 29-73)	1	... .	651 6706	... .	... .
T-853		Blue	1	... .	680 1016	... .	... .
		(Black-W4ST)(* 29-72)	1	... .	680 0148	... .	... .
		(* 29-73)	1	... .	651 6706	... .	... .
T-855 (W4ST)		(* 29-72)	1	... .	680 0148	... .	... .
		(* 29-73)	1	... .	651 6706	... .	... .
T-871		(* 29-72)	1	... .	680 0148	680 0132	... .
		(* 29-73)	1	... .	651 6706	657 6716	... .
T-873		(* 29-72)	1	... .	680 1016	680 1026	... .
		(* 29-73)	1	... .	651 6707	651 6717	... .
T-874		(* 29-72)	1	... .	680 1017	680 1027	... .
		(* 29-73)	1	... .	651 6708	651 6718	... .
T-875		(* 29-72)	1	... .	680 0151	680 0135	... .
		(* 29-73)	1	... .	652 1512	652 1522	... .
T-876		(* 29-72)	1	... .	680 1019	680 1029	... .
		(* 29-73)	1	... .	651 6709	651 6719	... .
T-879		(* 29-72)	1	... .	680 1020	680 1030	... .
		(* 29-73)	1	... .	651 6710	651 6720	... .
T-891		(* 29-72)	1	... .	680 0148	680 0132	... .
		(* 29-73)	1	... .	651 6706	651 6716	... .
T-893		(* 29-72)	1	... .	680 1016	680 1026	... .
		(* 29-73)	1	... .	651 6707	651 6717	... .
T-894		(* 29-72)	1	... .	680 1017	680 1027	... .
		(* 29-73)	1	... .	651 6708	651 6718	... .
T-895		(* 29-72)	1	... .	680 0151	680 0135	... .
		(* 29-73)	1	... .	652 1512	652 1522	... .
T-896		(* 29-72)	1	... .	680 1019	680 1029	... .
		(* 29-73)	1	... .	651 6709	651 6719	... .
T-899		(* 29-72)	1	... .	680 1020	680 1030	... .
		(* 29-73)	1	... .	651 6710	651 6720	... .
T-921			1	362 4743	... .	... .	... .
T-941			1	362 4743	... .	... .	... .
T-943			1	362 4311	... .	... .	... .
T-944			1	362 4312	... .	... .	... .
T-951	(W4ST)	Black	1	... .	651 6706	... .	... .
T-953	(W4ST)	Black	1	... .	651 6706	... .	... .
		Blue	1	... .	652 1511	... .	... .
T-956	(W4ST)	Black	1	... .	651 6706	... .	... .
		Brown	1	... .	652 1513	... .	... .
T-957	(W4ST)	Black	1	... .	651 6706	... .	... .
		Avocado	1	... .	652 1514	... .	... .
T-972			1	... .	651 6706	651 6716	... .
T-973			1	... .	652 1511	652 1521	... .
T-976			1	... .	652 1513	652 1523	... .
T-977			1	... .	652 1514	652 1524	... .
T-991			1	... .	362 1335	651 6716	... .
T-993			1	... .	362 5345	652 1521	... .
T-996			1	... .	362 5346	652 1523	... .
T-997			1	... .	362 5347	652 1524	... .

SEATS - SOFT TRIM

1970 MODELS

	Per Car	46: 18-88 (L3S)	18-88 (W3S)
T-011	1	363 9811	... .
T-013	1	363 9812	... .
T-014	1	363 9816	... .
T-015	1	363 9813	... .
T-071	1	651 6706	651 6716
T-073	1	652 3009	652 3352
T-074	1	652 3010	652 3353
T-075	1	652 1512	652 1522
T-076	1	652 3011	652 3354
T-091	1	652 3020	651 6716
T-093	1	652 3022	652 3352
T-094	1	652 3023	652 3353
T-095	1	652 6117	652 1522
T-096	1	652 3024	652 3354

1971 - 1972 MODELS

Trim No.	Per Car	08-46	18-88 (L3S)	18-88 (W3S)
T-111	1	364 1749	... .	... .
T-113	1	364 0646	... .	... .
T-114	1	364 0647	... .	... .
T-115	1	364 0648	... .	... .
T-141	1	363 8822	... .	... .
T-143	1	363 8823	... .	... .
T-144	1	363 8824	... .	... .
T-145	1	363 8825	... .	... .
T-171	1	... .	651 6706	651 6716
T-173	1	... .	652 6305	652 6327
T-174	1	... .	652 6306	652 6328
T-175	1	... .	652 6307	652 6329
T-176	1	... .	651 6706	651 6716
T-191	1	... .	652 3020	651 6716
T-193	1	... .	652 6302	652 6327
T-194	1	... .	652 6303	652 6328
T-195	1	... .	652 6304	652 6329
T-196	1	... .	652 3020	651 6716
T-201	1	365 6020	... .	... .
T-203	1	365 2950	... .	... .
T-206	1	365 2953	... .	... .
T-211	1	365 6020	... .	... .
T-213	1	365 2950	... .	... .
T-215	1	365 6020	... .	... .
T-216	1	365 2953	... .	... .
T-218	1	365 6020	... .	... .
T-241 (With Snaps)	1	366 1459	... .	... .
T-241 (Less Snaps)	1	365 6395	... .	... .
T-243 (With Snaps)	1	365 2956	... .	... .
T-243 (Less Snaps)	1	365 6396	... .	... .
T-244 (With Snaps)	1	365 2957	... .	... .
T-244 (Less Snaps)	1	365 6397	... .	... .
T-246 (With Snaps)	1	365 2959	... .	... .
T-246 (Less Snaps)	1	365 6398	... .	... .
T-248	1	366 1459	... .	... .
T-271	1	... .	... .	652 9970
T-273	1	... .	... .	652 9821
T-274	1	... .	... .	652 9822
T-276	1	... .	... .	652 9823
T-291	1	... .	652 9968	652 9970
T-293	1	... .	652 9818	652 9821
T-294	1	... .	652 9819	652 9822
T-296	1	... .	652 9820	652 9823

Printed in U.S.A.

SEATS - SOFT TRIM

29.420–3 ATTACHING PARTS, Carpet To Floor Pan

SOCKET	67/69	08	17.270	9	G141998
SOCKET	71/	08	17.270	8	G141998
SOCKET	67/	18-88 (L3S)	17.270	7	G141998
BUTTON	67/69	08	17.270	9	G141994
BUTTON	71/	08	17.270	8	G141994
BUTTON	67/	18-88 (L3S)	17.270	7	G141994
STUD	71/	08	.....	8	321 098
STUD	67/	18-88 (L3S)	.....	AR	400 0364
SCREW, Tapping	67/	18-88 (W3S)	29.070	6	400 0273
RING, Snap	69/	88 (L3S)	17.271	2	G141989 NA

29.421 STRIP, Rear Auxiliary Floor Carpet Skid

67/68	18-88 (L3S-47-2/3" Long)	27.020	6	355 5120
67/70	88 (W3S-15-3/4" Long)	27.020	9	356 3370
71	88 (W3S-15-3/4" Long-* 29-128)	.....	9	356 3370
71/	88 (W3S-15-5/16" Long-* 29-129)	.....	9	364 7093
67/70	88 (W3S-10-59/64" Long)	27.020	1	356 3369
71	88 (W3S-10-59/64" Long-* 29-128)	.....	1	356 3369
71/	88 (W3S-10-59/64" Long-* 29-129)	.....	1	364 7092

29.423–1 CARPET, Rear Floor Well And Axle Housing (Less Pad)

1967 Thru 1969 MODELS

Trim No.		Per Car	18-88 (W3S)
T-771		1	680 0115
T-773		1	680 0116
T-774		1	680 0117
T-776		1	680 0119
T-777		1	680 0120
T-779		1	680 0121
T-781		1	680 0115
T-783		1	680 0116
T-787		1	680 0120
T-789		1	680 0121
T-791		1	680 0115
T-793		1	680 0116
T-794		1	680 0117
T-796		1	680 0119
T-797		1	680 0120
T-799		1	680 0121
T-871	(* 29-72)	1	680 0115
	(* 29-73)	1	651 6721
T-873	(* 29-72)	1	680 1031
	(* 29-73)	1	651 6722
T-874	(* 29-72)	1	680 1032
	(* 29-73)	1	651 6723
T-875	(* 29-72)	1	680 0118
	(* 29-73)	1	652 1527
T-876	(* 29-72)	1	680 1034
	(* 29-73)	1	651 6724
T-879	(* 29-72)	1	680 1035
	(* 29-73)	1	651 6725
T-891	(* 29-72)	1	680 0115
	(* 29-73)	1	651 6721
T-893	(* 29-72)	1	680 1031
	(* 29-73)	1	651 6722
T-894	(* 29-72)	1	680 1032
	(* 29-73)	1	651 6723

SEATS - SOFT TRIM

Trim No.		Per Car	18-88 (W3S)
T-895	(* 29-72)	1	680 0118
	(* 29-73)	1	652 1527
T-896	(* 29-72)	1	680 1034
	(* 29-73)	1	651 6724
T-899	(* 29-72)	1	680 1035
	(* 29-73)	1	651 6725
T-951		1	651 6721
T-953		1	652 1526
T-972		1	651 6721
T-973		1	652 1526
T-976		1	652 1528
T-977		1	652 1529
T-991		1	651 6721
T-993		1	652 1526
T-996		1	652 1528
T-997		1	652 1529

1970 Thru 1972 MODELS

Trim No.	Per Car	18-88 (W3S)
T-071	1	651 6721
T-073	1	652 3356
T-074	1	652 3357
T-075	1	652 1527
T-076	1	652 3358
T-091	1	651 6721
T-093	1	652 3356
T-094	1	652 3357
T-095	1	652 1527
T-096	1	652 3358
T-171	1	651 6721
T-173	1	362 2134
T-174	1	362 2135
T-175	1	362 2136
T-176	1	651 6721
T-191	1	651 6721
T-193	1	362 2134
T-194	1	362 2135
T-195	1	362 2136
T-196	1	651 6721
T-271	1	652 9969
T-273	1	652 9824
T-274	1	652 9825
T-276	1	652 9826
T-291	1	652 9969
T-293	1	652 9824
T-294	1	652 9825
T-296	1	652 9826

29.423-2 ATTACHING PARTS, Carpet To Floor Pan

SCREW, Tapping.....	67/	08-18-88 (W3S)	29.070	3	400 0273

29.423-3 PAD, Rear Floor Well Carpet

67/	18-88 (W3S)		.....	1	357 8540

SEATS - SOFT TRIM

29.425–1 MAT, Rear Seat Back Frame (Rubber)

67/69	08	.....	1	350 2533
67/	18-88 (Black)	.....	1	358 0886
69	18 (Blue)	.....	1	362 8139
69	18 (Brown)	.....	1	362 8140
69	18 (Avocado)	.....	1	362 8141
70	18 (Blue)	.....	1	363 4460
70	18 (Green)	.....	1	363 4461
70	18 (Brown)	.....	1	363 4462
72	18 (Blue)	.....	1	364 7222
72	18 (Green)	.....	1	364 7223
72	18 (Tan)	.....	1	364 7224
72	46 (Black)	.....	1	364 7263
72	46 (Blue)	.....	1	364 7265
72	46 (Tan)	.....	1	364 7266

29.425–2 CARPET, Rear Seat Back Frame

1967 Thru 1969 MODELS

Trim No.		Per Car	08-18-88			
T-741		1	359 2318	... .	... .	... .
T-743		1	358 1544	... .	... .	... .
T-744		1	358 1545	... .	... .	... .
T-745		1	358 1546	... .	... .	... .
T-747		1	358 1547	... .	... .	... .
T-749		1	358 1548	... .	... .	... .
T-771		1	680 0322	... .	... .	... .
T-773		1	680 0323	... .	... .	... .
T-774		1	680 0324	... .	... .	... .
T-776		1	680 0326	... .	... .	... .
T-777		1	680 0327	... .	... .	... .
T-779		1	680 0328	... .	... .	... .
T-781		1	680 0322	... .	... .	... .
T-783		1	680 0323	... .	... .	... .
T-787		1	680 0327	... .	... .	... .
T-789		1	680 0328	... .	... .	... .
T-791		1	680 0322	... .	... .	... .
T-793		1	680 0323	... .	... .	... .
T-794		1	680 0324	... .	... .	... .
T-796		1	680 0326	... .	... .	... .
T-797		1	680 0327	... .	... .	... .
T-799		1	680 0328	... .	... .	... .
T-828 (W4ST)	(* 29-72)	1	359 2318	... .	... .	... .
	(* 29-73)	1	362 4739	... .	... .	... .
T-843	(* 29-72)	1	360 5096	... .	... .	... .
	(* 29-73)	1	362 4740	... .	... .	... .
T-844	(* 29-72)	1	360 5097	... .	... .	... .
	(* 29-73)	1	362 4741	... .	... .	... .
T-845	(* 29-72)	1	358 1546	... .	... .	... .
	(* 29-73)	1	362 4131	... .	... .	... .
T-848	(* 29-72)	1	359 2318	... .	... .	... .
	(* 29-73)	1	362 4739	... .	... .	... .
T-851 (W4ST)	(* 29-72)	1	680 0322	... .	... .	... .
	(* 29-73)	1	651 6796	... .	... .	... .
T-853	Blue	1	680 1098	... .	... .	... .
	(Black-W4ST)(* 29-72)	1	680 0322	... .	... .	... .
	(* 29-73)	1	651 6796	... .	... .	... .

SEATS - SOFT TRIM

Trim No.		Per Car	08-18-88
T-855 (W4ST)	(* 29-72)	1	680 0322
	(* 29-73)	1	651 6796
T-871	(* 29-72)	1	680 0322
	(* 29-73)	1	651 6796
T-873	(* 29-72)	1	680 1098
	(* 29-73)	1	651 6797
T-874	(* 29-72)	1	680 1099
	(* 29-73)	1	651 6798
T-875	(* 29-72)	1	680 0335
	(* 29-73)	1	652 0795
T-876	(* 29-72)	1	680 1101
	(* 29-73)	1	651 6799
T-879	(* 29-72)	1	680 1102
	(* 29-73)	1	651 6800
T-891	(* 29-72)	1	680 0322
	(* 29-73)	1	651 6796
T-893	(* 29-72)	1	680 1098
	(* 29-73)	1	651 6797
T-894	(* 29-72)	1	680 1099
	(* 29-73)	1	651 6798
T-895	(* 29-72)	1	630 0335
	(* 29-73)	1	652 0795
T-896	(* 29-72)	1	680 1101
	(* 29-73)	1	651 6799
T-899	(* 29-72)	1	680 1102
	(* 29-73)	1	651 6800
T-921		1	362 4739
T-941		1	362 4739
T-943		1	362 4128
T-944		1	362 4129
T-951	(Black-W4ST)	1	651 6796
T-953	(Black-W4ST)	1	651 6796
	Blue	1	652 0794
T-956	(Black-W4ST)	1	651 6796
	Brown	1	652 0796
T-957	(Black-W4ST)	1	651 6796
	Avocado	1	652 0797
T-972		1	651 6796
T-973		1	652 0794
T-976		1	652 0796
T-977		1	652 0797
T-991		1	651 6796
T-993		1	652 0794
T-996		1	652 0796
T-997		1	652 0797

1970 Thru 1972 MODELS

Trim No.	Per Car	08-18-40-88
T-011	1	363 4653
T-013	1	363 4654
T-014	1	363 4655
T-015	1	363 4656
T-071	1	651 6796
T-073	1	652 3368
T-074	1	652 3369

SEATS - SOFT TRIM

Trim No.	Per Car	08-18-40-88
T-075	1	652 0795
T-076	1	652 3370
T-091	1	651 6796
T-093	1	652 3368
T-094	1	652 3369
T-095	1	652 0795
T-096	1	652 3370
T-111	1	364 3950
T-113	1	364 3951
T-114	1	364 3952
T-115	1	364 3953
T-141	1	364 3950
T-143	1	364 3951
T-144	1	364 3952
T-145	1	364 3953
T-171	1	651 6796
T-173	1	652 6336
T-174	1	652 6337
T-175	1	652 6338
T-176	1	651 6796
T-191	1	651 6796
T-193	1	652 6336
T-194	1	652 6337
T-195	1	652 6338
T-196	1	651 6796
T-201	1	364 7273
T-203	1	364 7277
T-206	1	364 7279
T-211	1	364 7273
T-213	1	364 7277
T-215	1	364 7273
T-216	1	364 7279
T-218	1	364 7273
T-241	1	364 7273
T-243	1	364 7277
T-244	1	364 7278
T-246	1	364 7279
T-248	1	364 7273
T-271	1	652 9976
T-273	1	652 9418
T-274	1	652 9419
T-276	1	652 9420
T-291	1	652 9976
T-293	1	652 9418
T-294	1	652 9419
T-296	1	652 9420

29.425–3 ATTACHING PARTS, Carpet To Panel

SCREW, Oval Head.....	70/	08–40.....	29.060	12	400 1776

29.426–1 MAT, Rear Seat Back Extension Frame (Top And Bottom)(Rubber)

67/	18-88 (Black).....	.....	2	358 0851
69	18 (Blue).....	.....	2	362 8147
69	18 (Brown).....	.....	2	362 8148
69	18 (Avocado).....	.....	2	362 8149
70	18 (Blue).....	.....	2	363 4465
70	18 (Green).....	.....	2	363 4466
70	18 (Brown).....	.....	2	363 4467
72	18 (Blue).....	.....	2	364 7212
72	18 (Green).....	.....	2	364 7213
72	18 (Tan).....	.....	2	364 7214

SEATS - SOFT TRIM

29.426–2 CARPET, Rear Seat Back Extension Frame (Top And Bottom)

1967 Thru 1969 MODELS

Trim No.		Per Car	18-88			
T-771		2	680 0336	... .	... .	... .
T-773		2	680 0337	... .	... .	... .
T-774		2	680 0338	... .	... .	... .
T-776		2	680 0340	... .	... .	... .
T-777		2	680 0341	... .	... .	... .
T-779		2	680 0342	... .	... .	... .
T-781		2	680 0336	... ...	... .	... .
T-783		2	680 0337	... .	... .	... .
T-787		2	680 0341	... .	... .	... .
T-789		2	680 0342	... .	... .	... .
T-791		2	680 0336	... .	... .	... .
T-793		2	680 0337	... .	... .	... .
T-794		2	680 0338	... .	... .	... .
T-796		2	680 0340	... .	... .	... .
T-797		2	680 0341	... .	... .	... .
T-799		2	680 0342	... .	... .	... .
T-851 (W4ST)	(* 29-72)	2	680 0336	... .	... .	... .
	(* 29-73)	2	651 6806	... .	... .	... .
T-853	Blue	2	680 1088	... .	... .	... .
	(Black-W4ST)(* 29-72)	2	680 0336	... .	... .	... .
	(* 29-73)	2	651 6806	... .	... .	... .
T-855 (W4ST)	(* 29-72)	2	680 0336	... .	... .	... .
	(* 29-73)	2	651 6806	... .	... .	... .
T-871	(* 29-72)	2	680 0336	... .	... .	... .
	(* 29-73)	2	651 6806	... .	... .	... .
T-873	(* 29-72)	2	680 1088	... .	... .	... .
	(* 29-73)	2	651 6807	... .	... .	... .
T-874	(* 29-72)	2	680 1089	... .	... .	... .
	(* 29-73)	2	651 6808	... .	... .	... .
T-875	(* 29-72)	2	680 0339	... .	... .	... .
	(* 29-73)	2	652 0805	... .	... .	... .
T-876	(* 29-72)	2	680 1091	... .	... .	... .
	(* 29-73)	2	651 6809	... .	... .	... .
T-879	(* 29-72)	2	680 1092	... .	... .	... .
	(* 29-73)	2	651 6810	... .	... .	... .
T-891	(* 29-72)	2	680 0336	... .	... .	... .
	(* 29-73)	2	651 6806	... .	... .	... .
T-893	(* 29-72)	2	680 1088	... .	... .	... .
	(* 29-73)	2	651 6807	... .	... .	... .
T-894	(* 29-72)	2	680 1089	... .	... .	... .
	(* 29-73)	2	651 6808	... .	... .	... .
T-895	(* 29-72)	2	680 0339	... .	... .	... .
	(* 29-73)	2	652 0805	... .	... .	... .
T-896	(* 29-72)	2	680 1091	... .	... .	... .
	(* 29-73)	2	651 6809	... .	... .	... .
T-899	(* 29-72)	2	680 1092	... .	... .	... .
	(* 29-73)	2	651 6810	... .	... .	... .
T-951	(Black-W4ST)	2	651 6806	... .	... .	... .
T-953	(Black-W4ST)	2	651 6806	... .	... .	... .
	Blue	2	652 0804	... .	... .	... .
T-956	(Black-W4ST)	2	651 6806	... .	... .	... .
	Brown	2	652 0806	... .	... .	... .
T-957	(Black-W4ST)	2	651 6806	... .	... .	... .
	Avocado	2	652 0807	... .	... .	... .
T-972		2	651 6806	... .	... .	... .
T-973		2	652 0804	... .	... .	... .
T-976		2	652 0806	... .	... .	... .
T-977		2	652 0807	... .	... .	... .
T-991		2	651 6806	... .	... .	... .
T-993		2	652 0804	... .	... .	... .
T-996		2	652 0806	... .	... .	... .
T-997		2	652 0807	... .	... .	... .

Printed in U.S.A.

SEATS - SOFT TRIM

1970 Thru 1972 MODELS

Trim No.	Per Car	18-88
T-071	2	651 6806
T-073	2	652 3376
T-074	2	652 3377
T-075	2	652 0805
T-076	2	652 3378
T-091	2	651 6806
T-093	2	652 3376
T-094	2	652 3377
T-095	2	652 0805
T-096	2	652 3378
T-171	2	651 6806
T-173	2	652 6333
T-174	2	652 6334
T-175	2	652 6335
T-176	2	651 6806
T-191	2	651 6806
T-193	2	652 6333
T-194	2	652 6334
T-195	2	652 6335
T-196	2	651 6806
T-271	2	652 9975
T-273	2	652 9430
T-274	2	652 9431
T-276	2	652 9432
T-291	2	652 9975
T-293	2	652 9430
T-294	2	652 9431
T-296	2	652 9432

29.427 CARPET, Third Seat Back Frame (* 29-82)

1967 Thru 1969 MODELS

Trim No.		Per Car	18-88 (W3S)
T-771	(* 29-83)	1	680 0082
	(* 29-84)	1	650 6067
T-773	(* 29-83)	1	680 0083
	(* 29-84)	1	650 6068
T-774	(* 29-83)	1	680 0084
	(* 29-84)	1	650 6069
T-776	(* 29-83)	1	680 0086
	(* 29-84)	1	650 6070

SEATS - SOFT TRIM

Trim No.		Per Car	18-88 (W3S)			
T-777	(* 29-83)	1	680 0087	... .	... .	... .
	(* 29-84)	1	650 6071	... .	... .	... .
T-779	(* 29-83)	1	680 0088	... .	... .	... .
	(* 29-84)	1	650 6072	... .	... .	... .
T-781	(* 29-83)	1	680 0082	... .	... .	... .
	(* 29-84)	1	650 6067	... .	... .	... .
T-783	(* 29-83)	1	680 0083	... .	... .	... .
	(* 29-84)	1	650 6068	... .	... .	... .
T-787	(* 29-83)	1	680 0087	... .	... .	... .
	(* 29-84)	1	650 6071	... .	... .	... .
T-789	(* 29-83)	1	680 0088	... .	... .	... .
	(* 29-84)	1	650 6072	... .	... .	... .
T-791	(* 29-83)	1	680 0082	... .	... .	... .
	(* 29-84)	1	650 6067	... .	... .	... .
T-793	(* 29-83)	1	680 0083	... .	... .	... .
	(* 29-84)	1	650 6068	... .	... .	... .
T-794	(* 29-83)	1	680 0084	... .	... .	... .
	(* 29-84)	1	650 6069	... .	... .	... .
T-796	(* 29-83)	1	680 0086	... .	... .	... .
	(* 29-84)	1	650 6070	... .	... .	... .
T-797	(* 29-83)	1	680 0087	... .	... .	... .
	(* 29-84)	1	650 6071	... .	... .	... .
T-799	(* 29-83)	1	680 0088	... .	... .	... .
	(* 29-84)	1	650 6072	... .	... .	... .
T-871	(* 29-72)	1	650 6067	... .	... .	... .
	(* 29-73)	1	651 6746	... .	... .	... .
T-873	(* 29-72)	1	680 1108	... .	... .	... .
	(* 29-73)	1	651 6747	... .	... .	... .
T-874	(* 29-72)	1	680 1109	... .	... .	... .
	(* 29-73)	1	651 6748	... .	... .	... .
T-875	(* 29-72)	1	651 3946	... .	... .	... .
	(* 29-73)	1	652 0821	... .	... .	... .
T-876	(* 29-72)	1	680 1111	... .	... .	... .
	(* 29-73)	1	651 6749	... .	... .	... .
T-879	(* 29-72)	1	680 1112	... .	... .	... .
	(* 29-73)	1	651 6750	... .	... .	... .
T-891	(* 29-72)	1	650 6067	... .	... .	... .
	(* 29-73)	1	651 6746	... .	... .	... .
T-893	(* 29-72)	1	680 1108	... .	... .	... .
	(* 29-73)	1	651 6747	... .	... .	... .
T-894	(* 29-72)	1	680 1109	... .	... .	... .
	(* 29-73)	1	651 6748	... .	... .	... .
T-895	(* 29-72)	1	651 3946	... .	... .	... .
	(* 29-73)	1	652 0821	... .	... .	... .
T-896	(* 29-72)	1	650 1111	... .	... .	... .
	(* 29-73)	1	651 6749	... .	... .	... .
T-899	(* 29-72)	1	680 1112	... .	... .	... .
	(* 29-73)	1	651 6750	... .	... .	... .
T-951		1	651 6746	... .	... .	... .
T-953		1	652 0820	... .	... .	... .
T-972		1	651 6746	... .	... .	... .
T-973		1	652 0820	... .	... .	... .
T-976		1	652 0822	... .	... .	... .
T-977		1	652 0823	... .	... .	... .
T-991		1	651 6746	... .	... .	... .
T-993		1	652 0820	... .	... .	... .
T-996		1	652 0822	... .	... .	... .
T-997		1	652 0823	... .	... .	... .

SEATS - SOFT TRIM

1970 Thru 1972 MODELS

Trim No.	Per Car	18-88 (W35)
T-071	1	651 6746
T-073	1	652 3380
T-074	1	652 3381
T-075	1	652 0821
T-076	1	652 3382
T-091	1	651 6746
T-093	1	652 3380
T-094	1	652 3381
T-095	1	652 0821
T-096	1	652 3382
T-171	1	651 6746
T-173	1	652 6346
T-174	1	652 6347
T-175	1	652 6348
T-176	1	651 6746
T-191	1	651 6746
T-193	1	652 6346
T-194	1	652 6347
T-195	1	652 6348
T-196	1	651 6746
T-271	1	652 9972
T-273	1	652 9424
T-274	1	652 9425
T-276	1	652 9426
T-291	1	652 9972
T-293	1	652 9424
T-294	1	652 9425
T-296	1	652 9426

29.432 CARPET, Third Seat Cushion Frame (* 29-82)

1967 Thru 1972 MODELS

Trim No.		Per Car	18-88 (W35)
T-771		1	680 0032
T-773		1	680 0033
T-774		1	680 0034
T-776		1	680 0036
T-777		1	680 0037
T-779		1	680 0038
T-781		1	680 0032
T-783		1	680 0033
T-787		1	680 0037
T-789		1	680 0038
T-791		1	680 0032
T-793		1	680 0033
T-794		1	680 0034
T-796		1	680 0036
T-797		1	680 0037
T-799		1	680 0038
T-871	(* 29-72)	1	680 0032
	(* 29-73)	1	651 6736
T-873	(* 29-72)	1	680 1103
	(* 29-73)	1	651 6737
T-874	(* 29-72)	1	680 1104
	(* 29-73)	1	651 6738
T-875	(* 29-72)	1	680 0035
	(* 29-73)	1	652 0810

SEATS - SOFT TRIM

Trim No.		Per Car	18-88 (W35)			
T-876	(* 29-72)	1	680 1106			
	(* 29-73)	1	651 6739			
T-879	(* 29-72)	1	680 1107			
	(* 29-73)	1	651 6740			
T-891	(* 29-72)	1	680 0032			
	(* 29-73)	1	651 6736			
T-893	(* 29-72)	1	680 1103			
	(* 29-73)	1	651 6737			
T-894	(* 29-72)	1	680 1104			
	(* 29-73)	1	651 6738			
T-895	(* 29-72)	1	680 0035			
	(* 29-73)	1	652 0810			
T-896	(* 29-72)	1	680 1106			
	(* 29-73)	1	651 6739			
T-899	(* 29-72)	1	680 1107			
	(* 29-73)	1	651 6740			
T-951		1	651 6736			
T-953		1	652 0809			
T-972		1	651 6736			
T-973		1	652 0809			
T-976		1	652 0811			
T-977		1	652 0812			
T-991		1	651 6736			
T-993		1	652 0809			
T-996		1	652 0811			
T-997		1	652 0812			
T-071		1	651 6736			
T-073		1	652 3388			
T-074		1	652 3389			
T-075		1	652 0810			
T-076		1	652 3390			
T-091		1	651 6736			
T-093		1	652 3388			
T-094		1	652 3389			
T-095		1	652 0810			
T-096		1	652 3390			
T-171		1	651 6736			
T-173		1	652 6349			
T-174		1	652 6350			
T-175		1	652 6351			
T-176		1	651 6736			
T-191		1	651 6736			
T-193		1	652 6349			
T-194		1	652 6350			
T-195		1	652 6351			
T-196		1	651 6736			
T-271		1	652 9974			
T-273		1	652 9421			
T-274		1	652 9422			
T-276		1	652 9423			
T-291		1	652 9974			
T-293		1	652 9421			
T-294		1	652 9422			
T-296		1	652 9423			

SEATS - SOFT TRIM

29.435–1 CARPET, Wheelhouse

1968 - 1969 MODELS

Trim No.			Per Car	39			
T-831	Left	(* 29-72)	1	361 7653	... .	... .	... .
		(* 29-73)	1	362 4891	... .	... .	... .
	Right	(* 29-72)	1	361 7652	... .	... .	... .
		(* 29-73)	1	362 4890	... .	... .	... .
T-832	Left	(* 29-72)	1	361 7655	... .	... .	... .
		(* 29-73)	1	362 4333	... .	... .	... .
	Right	(* 29-72)	1	361 7654	... .	... .	... .
		(* 29-73)	1	362 4332	... .	... .	... .
T-835	Left	(* 29-72)	1	361 9827	... .	... .	... .
		(* 29-73)	1	362 4335	... .	... .	... .
	Right	(* 29-72)	1	361 9826	... .	... .	... .
		(* 29-73)	1	362 4334	... .	... .	... .
T-931	Left		1	362 4891	... .	... .	... .
	Right		1	362 4890	... .	... .	... .
T-932	Left		1	362 4891	... .	... .	... .
	Right		1	362 4890	... .	... .	... .
T-935	Left		1	362 4335	... .	... .	... .
	Right		1	362 4334	... .	... .	... .
T-936	Left		1	362 4333	... .	... .	... .
	Right		1	362 4332	... .	... .	... .

1970 MODELS

Trim No.			Per Car	39
T-031	Left		1	362 4891
	Right		1	362 4890
T-033	Left		1	362 9811
	Right		1	362 9810
T-035	Left		1	362 4335
	Right		1	362 4334
T-036	Left		1	362 9813
	Right		1	362 9812

29.435–2 COVER, Wheelhouse (With Rear Seat)

Trim No.			Per Car	40
T-001	Left		1	363 9337
	Right		1	363 9336
T-008	Left		1	363 9337
	Right	Vinyl	1	363 9336
T-011	Left		1	363 9337
	Right		1	363 9336
T-013	Left		1	363 9339
	Right		1	363 9338
T-014	Left		1	364 0215
	Right		1	364 0214
T-015	Left		1	363 9341
	Right		1	363 9340
T-101	Left	Vinyl	1	364 0613
	Right	Vinyl	1	364 0612
T-103	Left	Vinyl	1	364 0607
	Right	Vinyl	1	364 0606
T-103A	Left		1	365 1007
	Right		1	365 1006
T-104A	Left		1	365 1007
	Right		1	365 1006

SEATS - SOFT TRIM

Trim No.			Per Car	40
T-108	Left	Vinyl	1	364 0613
	Right	Vinyl	1	364 0612
T-111	Left	Vinyl	1	364 0613
		Carpet	1	365 4927
	Right	Vinyl	1	364 0612
		Carpet	1	365 4926
T-113	Left	Vinyl	1	364 0607
		Carpet	1	365 4929
	Right	Vinyl	1	364 0606
		Carpet	1	365 4928
T-114	Left	Vinyl	1	364 0609
		Carpet	1	365 4931
	Right	Vinyl	1	364 0608
		Carpet	1	365 4930
T-115	Left	Vinyl	1	364 0611
		Carpet	1	365 4933
	Right	Vinyl	1	364 0610
		Carpet	1	365 4932
T-201	Left	Vinyl	1	365 6367
	Right	Vinyl	1	365 6366
T-201	Left	Carpet (Used With Special P-38 Package)	1	365 6867
	Right	Carpet (Used With Special P-38 Package)	1	365 6866
T-203	Left		1	365 1033
	Right		1	365 1032
T-206	Left		1	365 1405
	Right		1	365 1404
T-208	Left		1	365 6367
	Right		1	365 6366
T-211	Left		1	365 6867
	Right		1	365 6866
T-213	Left		1	365 6869
	Right		1	365 6868
T-215	Left		1	365 6867
	Right		1	365 6866
T-216	Left		1	365 6871
	Right		1	365 6870
T-218	Left		1	365 6867
	Right		1	365 6866

29.435-3 COVER, Wheelhouse (Less Rear Seat)

Trim No.			Per Car	40
T-001	Left		1	363 9395
	Right		1	363 9394
T-008	Left		1	363 9395
	Right		1	363 9394
T-101	Left	Vinyl	1	364 0635
	Right	Vinyl	1	364 0634
T-103	Left	Vinyl	1	364 0677
	Right	Vinyl	1	364 0676
T-108	Left	Vinyl	1	364 0635
	Right	Vinyl	1	364 0634

29.460-1 PANEL, Rear Compartment Side Trim

1967 - 1968 MODELS

Trim No.			Per Car	08	18-88 (L3S)	18-88 (W3S)	
T-723	Left		1	358 1215	... .	... .	... .
	Right		1	358 1214	... .	... .	... .
T-728	Left		1	350 1873	... .	... .	... .
	Right		1	350 1872	... .	... .	... .

SEATS - SOFT TRIM

Trim No.		Per Car	08	18-88 (L3S)	18-88 (W3S)	
T-729	Left	1	358 1223	... .	... .	... .
	Right	1	358 1222	... .	... .	... .
T-741	Left	1	350 1873	... .	... .	... .
	Right	1	350 1872	... .	... .	... .
T-743	Left	1	358 1215	... .	... .	... .
	Right	1	358 1214	... .	... .	... .
T-744	Left	1	356 3207	... .	... .	... .
	Right	1	356 3206	... .	... .	... .
T-745	Left	1	358 1219	... .	... .	... .
	Right	1	358 1218	... .	... .	... .
T-747	Left	1	354 0677	... .	... .	... .
	Right	1	354 0676	... .	... .	... .
T-749	Left	1	358 1223	... .	... .	... .
	Right	1	358 1222	... .	... .	... .
T-753	Left	1	... .	357 9023	357 9023	... .
	Right	1	... .	357 9022	357 9042	... .
T-758	Left	1	... .	357 9021	357 9021	... .
	Right	1	... .	357 9020	357 9041	... .
T-759	Left	1	... .	357 9031	357 9031	... .
	Right	1	... .	357 9030	357 9046	... .
T-771	Left	1	... .	357 9021	357 9021	... .
	Right	1	... .	357 9020	357 9041	... .
T-773	Left	1	... .	357 9023	357 9023	... .
	Right	1	... .	357 9022	357 9042	... .
T-774	Left	1	... .	357 9025	357 9025	... .
	Right	1	... .	357 9024	357 9043	... .
T-776	Left	1	... .	357 9033	357 9033	... .
	Right	1	... .	357 9032	357 9047	... .
T-777	Left	1	... .	357 9029	357 9029	... .
	Right	1	... .	357 9028	357 9045	... .
T-779	Left	1	... .	357 9031	357 9031	... .
	Right	1	... .	357 9030	357 9046	... .
T-781	Left	1	... .	357 9021	357 9021	... .
	Right	1	... .	357 9020	357 9041	... .
T-783	Left	1	... .	357 9023	357 9023	... .
	Right	1	... .	357 9022	357 9042	... .
T-787	Left	1	... .	357 9029	357 9029	... .
	Right	1	... .	357 9028	357 9045	... .
T-789	Left	1	... .	357 9031	357 9031	... .
	Right	1	... .	357 9030	357 9046	... .
T-791	Left	1	... .	357 9021	357 9021	... .
	Right	1	... .	357 9020	357 9041	... .
T-793	Left	1	... .	357 9023	357 9023	... .
	Right	1	... .	357 9022	357 9042	... .
T-794	Left	1	... .	357 9025	357 9025	... .
	Right	1	... .	357 9024	357 9043	... .
T-796	Left	1	... .	357 9033	357 9033	... .
	Right	1	... .	357 9032	357 9047	... .
T-797	Left	1	... .	357 9029	357 9029	... .
	Right	1	... .	357 9028	357 9045	... .
T-799	Left	1	... .	357 9031	357 9031	... .
	Right	1	... .	357 9030	357 9046	... .
T-843	Left	1	360 4721	... .	... .	... .
	Right	1	360 4720	... .	... .	... .
T-844	Left	1	360 4723	... .	... .	... .
	Right	1	360 4722	... .	... .	... .
T-845	Left	1	358 1219	... .	... .	... .
	Right	1	358 1218	... .	... .	... .
T-848	Left	1	350 1873	... .	... .	... .
	Right	1	350 1872	... .	... .	... .
T-851	Left	1	... .	357 9021	... .	... .
	Right	1	... .	357 9020	... .	... .

SEATS - SOFT TRIM

Trim No.		Per Car	08	18-88 (L35)	18-88 (W35)	
T-853	Left	1	... .	360 5421	... .	... .
	Right	1	... .	360 5420	... .	... .
T-855	Left	1	... .	357 9027	... .	... .
	Right	1	... .	357 9026	... .	... .
T-871	Left	1	... .	357 9021	357 9021	... .
	Right	1	... .	357 9020	357 9041	... .
T-873	Left	1	... .	360 5421	360 5421	... .
	Right	1	... .	360 5420	360 5434	... .
T-874	Left	1	... .	360 5423	360 5423	... .
	Right	1	... .	360 5422	360 5435	... .
T-875	Left	1	... .	357 9027	357 9027	... .
	Right	1	... .	357 9026	357 9044	... .
T-876	Left	1	... .	360 5427	360 5427	... .
	Right	1	... .	360 5426	360 5437	... .
T-879	Left	1	... .	360 5431	360 5431	... .
	Right	1	... .	360 5430	360 5439	... .
T-891	Left	1	... .	357 9021	357 9021	... .
	Right	1	... .	357 9020	357 9041	... .
T-893	Left	1	... .	360 5421	360 5421	... .
	Right	1	... .	360 5420	360 5434	... .
T-894	Left	1	... .	360 5423	360 5423	... .
	Right	1	... .	360 5422	360 5435	... .
T-895	Left	1	... .	357 9027	357 9027	... .
	Right	1	... .	357 9026	357 9044	... .
T-896	Left	1	... .	360 5427	360 5427	... .
	Right	1	... .	360 5426	360 5437	... .
T-899	Left	1	... .	360 5431	360 5431	... .
	Right	1	... .	360 5430	360 5439	... .

1969 MODELS

Trim No.		Per Car	08	18 (L35)	18 (W35)	88
T-941	Left	1	362 3867	... .	... .	... .
	Right	1	362 3866	... .	... .	... .
T-943	Left	1	362 3869	... .	... .	... .
	Right	1	362 3868	... .	... .	... .
T-944	Left	1	362 3871	... .	... .	... .
	Right	1	362 3870	... .	... .	... .
T-951	Left	1	... .	362 0447	... .	... .
	Right	1	... .	362 0446	... .	... .
T-953	Left	1	... .	362 0449	... .	... .
	Right	1	... .	362 0448	... .	... .
T-956	Left	1	... .	362 0453	... .	... .
	Right	1	... .	362 0452	... .	... .
T-957	Left	1	... .	362 0455	... .	... .
	Right	1	... .	362 0454	... .	... .
T-972	Left	1	... .	362 0447	362 0447	... .
	Right	1	... .	362 0446	362 0456	... .
T-973	Left	1	... .	362 0449	362 0449	... .
	Right	1	... .	362 0448	362 0457	... .
T-976	Left	1	... .	362 0453	362 0453	... .
	Right	1	... .	362 0452	362 0459	... .
T-977	Left	1	... .	362 0455	362 0455	... .
	Right	1	... .	362 0454	362 0460	... .
T-991	Left	1	... .	... .	... .	362 0447
	Right	1	... .	... .	... .	362 0456
T-993	Left	1	... .	... .	... .	362 0449
	Right	1	... .	... .	... .	362 0457
T-996	Left	1	... .	... .	... .	362 0453
	Right	1	... .	... .	... .	362 0459
T-997	Left	1	... .	... .	... .	362 0455
	Right	1	... .	... .	... .	362 0460

Printed in U.S.A.

SEATS - SOFT TRIM

1970 MODELS

Trim No.		Per Car	18 (L3S)	18 (W3S)	88
T-051	Left	1	357 9021	... .	... .
	Right	1	357 9020	... .	... .
T-053	Left	1	362 9759	... .	... .
	Right	1	362 9758	... .	... .
T-054	Left	1	362 9761	... .	... .
	Right	1	362 9760	... .	... .
T-056	Left	1	362 9763	... .	... .
	Right	1	362 9762	... .	... .
T-071	Left	1	357 9021	357 9021	... .
	Right	1	357 9020	357 9041	... .
T-073	Left	1	362 9759	362 9759	... .
	Right	1	362 9758	362 9752	... .
T-074	Left	1	362 9761	362 9761	... .
	Right	1	362 9760	362 9753	... .
T-075	Left	1	362 0451	362 0451	... .
	Right	1	362 0450	362 0458	... .
T-076	Left	1	362 9763	362 9763	... .
	Right	1	362 9762	362 9754	... .
T-091	Left	1	... .	... .	357 9021
	Right	1	... .	... .	357 9041
T-093	Left	1	... .	... .	362 9759
	Right	1	... .	... .	362 9752
T-094	Left	1	... .	... .	362 9761
	Right	1	... .	... .	362 9753
T-095	Left	1	... .	... .	362 0451
	Right	1	... .	... .	362 0458
T-096	Left	1	... .	... .	362 9763
	Right	1	... .	... .	362 9754

1971 MODELS

Trim No.		Per Car	08	18 (L3S)	18 (W3S): 88
T-141	Left	1	364 3939	... .	... .
	Right	1	364 3938	... .	... .
T-143	Left	1	364 3941	... .	... .
	Right	1	364 3940	... .	... .
T-144	Left	1	364 3943	... .	... .
	Right	1	364 3942	... .	... .
T-145	Left	1	364 3945	... .	... .
	Right	1	364 3944	... .	... .
T-151	Left	1	... .	357 9021	... .
	Right	1	... .	357 9020	... .
T-153	Left	1	... .	364 2971	... .
	Right	1	... .	364 2970	... .
T-154	Left	1	... .	364 2973	... .
	Right	1	... .	364 2972	... .
T-171	Left	1	... .	357 9021	357 9021
	Right	1	... .	357 9020	357 9041
T-173	Left	1	... .	364 2971	364 2971
	Right	1	... .	364 2970	364 2980
T-174	Left	1	... .	364 2973	364 2973
	Right	1	... .	364 2972	364 2981
T-175	Left	1	... .	364 2975	364 2975
	Right	1	... .	364 2974	364 2982

SEATS - SOFT TRIM

Trim No.		Per Car	08	18 (L3S)	18 (W3S):88
T-176	Left	1	... .	357 9021	357 9021
	Right	1	... .	357 9020	357 9041
T-191	Left	1	... .	... .	357 9021
	Right	1	... .	... .	357 9041
T-193	Left	1	... .	... .	364 2971
	Right	1	... .	... .	364 2980
T-194	Left	1	... .	... .	364 2973
	Right	1	... .	... .	364 2981
T-195	Left	1	... .	... .	364 2975
	Right	1	... .	... .	364 2982
T-196	Left	1	... .	... .	357 9021
	Right	1	... .	... .	357 9041

1972 MODELS

Trim No.		Per Car	08	18 (L3S)	18 (W3S): 88
T-241	Left	1	365 3316	... .	... .
	Right	1	365 3328	... .	... .
T-243	Left	1	365 3313	... .	... .
	Right	1	365 3325	... .	... .
T-244	Left	1	365 3314	... .	... .
	Right	1	365 3326	... .	... .
T-246	Left	1	365 3317	... .	... .
	Right	1	365 3329	... .	... .
T-248	Left	1	365 3316	... .	... .
	Right	1	365 3328	... .	... .
T-271	Left	1	... .	365 4653	365 4653
	Right	1	... .	365 4652	365 4664
T-273	Left	1	... .	365 4655	365 4655
	Right	1	... .	365 4654	365 4665
T-274	Left	1	... .	365 4657	365 4657
	Right	1	... .	365 4656	365 4666
T-276	Left	1	... .	365 4659	365 4659
	Right	1	... .	365 4658	365 4667
T-291	Left	1	... .	... .	365 4653
	Right	1	... .	... .	365 4664
T-293	Left	1	... .	... .	365 4655
	Right	1	... .	... .	365 4665
T-294	Left	1	... .	... .	365 4657
	Right	1	... .	... .	365 4666
T-296	Left	1	... .	... .	365 4659
	Right	1	... .	... .	365 4667

29.460-2 ATTACHING PARTS, Panel To Body

SCREW, Tapping.....	67/69	08.....	29.019	20	439 5412
SCREW, Tapping.....	71/	08.....	29.060	9	400 1776
SCREW, Tapping.....	67/69	18-88.....	***(Use 400 1776)***	29.070	12	400 1957
SCREW, Tapping.....	70/	18-88.....	29.060	AR	400 1776
CLIP	72	08 (3/4" Long)	29.060	6	400 2211

29.460-3 RETAINER, Rear Compartment Side Trim Panel Front (* 29-19 NC)

67/69	(Left) 08	.....	1	349 0507
67/68	(Left) 18-88	.....	1	357 9063
69	(Left) 18-88	.....	1	362 0123
70/71	(Left) 18-88	.....	1	362 9905
72	(Left) 18-88	.....	1	365 4671
67/69	(Right) 08	.....	1	349 0506
67/68	(Right) 18-88	.....	1	357 9062
69	(Right) 18-88	.....	1	362 0122
70/71	(Right) 18-88	.....	1	362 9904
72	(Right) 18-88	.....	1	365 4670

SEATS - SOFT TRIM

29.460–4 RETAINER, Rear Compartment Side Trim Panel Rear (* 29-19 NC)

71/	(Left) 08	1	363	2115
67/68	(Left) 18–88 *(Use 362 0135)*	1	357	9083
69	(Left) 18–88	1	362	0135
70/71	(Left) 18–88	1	362	9891
72	(Left) 18–88	1	365	4683
71/	(Right) 08	1	363	2114
67/68	(Right) 18–88 (L3S)	1	357	9082
69	(Right) 18 (L3S)	1	362	0134
70/71	(Right) 18 (L3S)	1	362	9890
72	(Right) 18 (L3S)	1	365	4682

29.460–5 ATTACHING PARTS, Retainer And Panel To Body

SCREW, Tapping	67/69	08	29.019	20	439	5412
SCREW, Tapping	67/69	18–88 (8–18 x 9/16–Chrome) *(Use 400 1776)*	29.070	AR	400	1957
SCREW, Tapping	67/71	18–88 (8–15 x 3/4)	17.655	AR	G168496	
SCREW, Tapping	70/	18–88 (8–15 x 9/16–Zinc)	29.060	8	400	1776
SCREW, Tapping	72	18–88 (8–18 x 3/4)	17.655	AR	448	9491

29.460–6 SUPPORT, Rear Compartment Side Trim Panel (Rear-Right)

71/	08	1	363	2116

29.460–7 EXTENSION, Rear Compartment Side Trim Panel (Rear)(On Left Side)

Trim No.	Per Car	08
T–141	1	363 9083
T–143	1	363 9084
T–144	1	363 9085
T–145	1	363 9086
T–241	1	365 3265
T–243	1	365 3262
T–244	1	365 3263
T–246	1	365 3266
T–248	1	365 3265

29.460–8 ATTACHING PARTS, Extension Rear Compartment Side Trim Panel (Rear)

SCREW, Tapping	71/	08 (#–18 x 3/4")...(Incl. Washer)	29.019	3	439	5412
SCREW, Tapping	71/	08 (To Floor Pan–#8–32 x 1/2")		2	400	4093
SCREW, Tapping	71/	08 (#8–18 x 1/2")	29.070	7	400	0273
SCREW, Tapping	72	08 (#8–15 x 9/16")	29.060	2	400	1776

29.460–9 CARGO NET

72	18–88 (Black Knit Material–12" x 53") *(Ord. 899 2863)*	1	365	6231

29.460–10 ATTACHING PARTS, Package Retainer

TURNBUTTON	72	18–88		4	400	4440
SCREW, Tapping	72	18–88		8	400	2653
NUT, Stamped	72	18–88 (W3S–To Spare Wheel Cover)		2	400	4443

29.461–1 COVER, Spare Wheel Trim

1967 - 1968 MODELS

Trim No.	Per Car	18-88 (W3S)					
T–771	1	357	9051	...	....	...	....
T–773	1	357	9052	...	....	...	....
T–774	1	357	9053	...	....	...	....
T–776	1	357	9057	...	....	...	....
T–777	1	357	9055	...	....	...	....
T–779	1	357	9056	...	....	...	....

SEATS - SOFT TRIM

Trim No.	Per Car	18-88 (W3S)			
T-781	1	357 9051	... .	... .	... .
T-783	1	357 9052	... .	... .	... .
T-787	1	357 9055	... .	... .	... .
T-789	1	357 9056	... .	... .	... .
T-791	1	357 9051	... .	... .	... .
T-793	1	357 9052	... .	... .	... .
T-794	1	357 9053	... .	... .	... .
T-796	1	357 9057	... .	... .	... .
T-797	1	357 9055	... .	... .	... .
T-799	1	357 9056	... .	... .	... .
T-871	1	357 9051	... .	... .	... .
T-873	1	318 9790	... .	... .	... .
T-874	1	318 9792	... .	... .	... .
T-875	1	318 9794	... .	... .	... .
T-876	1	318 9798	... .	... .	... .
T-879	1	318 9796	... .	... .	... .
T-891	1	357 9051	... .	... .	... .
T-893	1	318 9790	... .	... .	... .
T-894	1	318 9792	... .	... .	... .
T-895	1	318 9794	... .	... .	... .
T-896	1	318 9798	... .	... .	... .
T-899	1	318 9796	... .	... .	... .

1969 MODELS

Trim No.	Per Car	18 (W3S)	88		
T-951	1	... .	362 0544	... .	... .
T-953	1	... .	362 0545	... .	... .
T-972	1	362 0544	... .	... .	... .
T-973	1	362 0545	... .	... .	... .
T-976	1	362 0547	... .	... .	... .
T-977	1	362 0548	... .	... .	... .
T-991	1	... .	362 0544	... .	... .
T-993	1	... .	362 0545	... .	... .
T-996	1	... .	362 0547	... .	... .
T-997	1	... .	362 0548	... .	... .

1970 MODELS

Trim No.	Per Car	18 (W3S)	46-88
T-001	1	... .	363 9176
T-008	1	... .	363 9176
T-011	1	... .	363 9176
T-013	1	... .	363 9177
T-014	1	... .	363 9178
T-015	1	... .	363 9179
T-071	1	362 9504	... .
T-073	1	362 9505	... .
T-074	1	362 9506	... .
T-075	1	362 9509	... .
T-076	1	362 9507	... .
T-091	1	... .	362 9504
T-093	1	... .	362 9505
T-094	1	... .	362 9506
T-095	1	... .	362 9509
T-096	1	... .	362 9507

SEATS - SOFT TRIM

1971 - 1972 MODELS

Trim No.		Per Car	08-18 (W3S) 46-88
T-101	(Less Space Saver Tire)	1	363 9182
	(With Space Saver Tire)	1	364 9659
T-103A	(Less Space Saver Tire)	1	363 9182
	(With Space Saver Tire)	1	364 9659
T-103B	(Less Space Saver Tire)	1	363 9183
	(With Space Saver Tire)	1	364 9660
T-104	(Less Space Saver Tire)	1	363 9182
	(With Space Saver Tire)	1	364 9659
T-108	(Less Space Saver Tire)	1	363 9182
	(With Space Saver Tire)	1	364 9659
T-111	(Less Space Saver Tire)	1	363 9182
	(With Space Saver Tire)	1	364 9659
T-113	(Less Space Saver Tire)	1	363 9183
	(With Space Saver Tire)	1	364 9660
T-114	(Less Space Saver Tire)	1	363 9184
	(With Space Saver Tire)	1	364 9661
T-115	(Less Space Saver Tire)	1	363 9185
	(With Space Saver Tire)	1	364 9662
T-141		1	364 3920
T-143		1	364 3921
T-144		1	364 3922
T-145		1	364 3923
T-171		1	362 9504
T-173		1	364 3006
T-174		1	364 3007
T-175		1	364 3008
T-176		1	362 9504
T-191		1	362 9504
T-193		1	364 3006
T-194		1	364 3007
T-195		1	364 3008
T-196		1	362 9504
T-201	(Less Space Saver Tire)	1	365 3894
	(With Space Saver Tire)	1	365 3860
T-203	(Less Space Saver Tire)	1	365 3890
	(With Space Saver Tire)	1	365 3856
T-206	(Less Space Saver Tire)	1	365 3893
	(With Space Saver Tire)	1	365 1402
T-208	(Less Space Saver Tire)	1	365 3894
	(With Space Saver Tire)	1	365 3860
T-211	(Less Space Saver Tire)	1	365 3894
	(With Space Saver Tire)	1	365 3860
T-213	(Less Space Saver Tire)	1	365 3890
	(With Space Saver Tire)	1	365 3856
T-215	(Less Space Saver Tire)	1	365 3894
	(With Space Saver Tire)	1	365 3860
T-216	(Less Space Saver Tire)	1	365 3893
	(With Space Saver Tire)	1	365 1402
T-218	(Less Space Saver Tire)	1	365 3894
	(With Space Saver Tire)	1	365 3860
T-241		1	365 3359
T-243		1	365 3356
T-244		1	365 3357
T-246		1	365 3355
T-248		1	365 3359
T-271		1	365 4694
T-273		1	365 4696
T-274		1	365 4698
T-276		1	365 4700
T-291		1	365 4694
T-293		1	365 4696
T-294		1	365 4698
T-296		1	365 4700

SEATS - SOFT TRIM

29.461–1a ATTACHING PARTS, Spare Wheel Cover

SCREW, Tapping.....	71/	08 (To Rear Floor Pan)	29.060	3	400 1776
SCREW, Tapping.....	71/	08 (To Support)	29.019	3	439 5412
SCREW, Tapping.....	67/68	18–88 (W3S)	17.660	4	G163158 NA
SCREW, Tapping.....	69/	18 (W3S): 88	17.660	4	G163158 NA
BUTTON.....	70/	46.....	17.270	2	G141994
SOCKET	70/	46.....	17.270	2	G141998

29.461–1b RETAINER, Spare Wheel Cover

71/	08.....	.....	1	365 0363
67/68	18–88 (W3S)	.....	2	357 8585
69	18 (W3S): 88	.....	2	357 8585
70/71	18 (W3S): 88	.....	1	360 9519
72	18 (W3S): 88	.....	1	365 4720

29.461–1c ATTACHING PARTS, Spare Wheel Cover Retainer To Rail

SCREW, Tapping.....	70/	18 (W3S): 88	17.660	2	G163158 NA
SCREW, Tapping.....	71/	08.....	.....	2	400 1270 NA

29.461–2 KNOB, Spare Wheel Cover

71/	08.....	.....	1	363 8618

29.461–3 STUD, Spare Wheel Cover Ball

67/	18–88 (Upper).....	.....	1	400 2193
67/68	18–88 (Lower)	.....	2	400 2043
69/	18 (W3S): 88	.....	3	400 3079

29.461–4 ATTACHING PARTS, Stud To Cover

SCREW, Machine.....	67/68	18–88 (W3S–Lower)	17.610	2	G273808
SCREW, Machine.....	67/68	18–88 (W3S–Upper)	23.110	1	400 0717
SCREW, Machine.....	69/	18 (W3S–Lower)	17.610	3	G273808
SCREW, Machine.....	69/	88 (Lower)	17.610	3	G273808
SCREW, Machine.....	69/	18 (W3S–Lower)	23.110	1	400 0717
SCREW, Machine.....	69/	88 (Lower)	23.110	1	400 0717
WASHER, Plain.....	67/68	18–88 (W3S)	.....	1	400 1287
WASHER, Plain.....	69/	18 (W3S–Lower)	.....	1	400 1287
WASHER, Plain.....	69/	88 (Lower)	.....	1	400 1287

29.461–5 SPRING, Ball Stud Catch

67/68	18–88 (W3S–Lower)	.....	2	400 2044
67/68	18–88 (W3S–Upper)	.....	1	400 2194
69/	18 (W3S–Lower)	.....	2	400 2044
69/	88 (Lower)	.....	2	400 2044
69/	18 (W3S–Upper)	.....	2	400 2194
69/	88 (Upper).....	.....	2	400 2194

29.461–6 ATTACHING PARTS, Upper Spring Catch To Rail

SCREW, Tapping.....	67/68	18–88 (W3S)	17.669	2	G457002 NA
SCREW, Tapping.....	69/	18 (W3S)	17.669	2	G457002 NA
SCREW, Tapping.....	69/	88.....	17.669	2	G457002 NA

SEATS - SOFT TRIM

29.461–7 SUPPORT, Spare Tire Cover Panel

71/ 08 ..... 1 361 6057

29.462–1 PANEL, Rear Auxiliary Floor Well Side Trim

1967 Thru 1969 MODELS

Trim No.		Per Car	18-88 (W3S)
T-771	Left	1	680 0457
	Right	1	680 0456
T-773	Left	1	680 0459
	Right	1	680 0458
T-774	Left	1	680 0461
	Right	1	680 0460
T-776	Left	1	680 0463
	Right	1	680 0462
T-777	Left	1	680 0465
	Right	1	680 0464
T-779	Left	1	680 0467
	Right	1	680 0466
T-781	Left	1	680 0457
	Right	1	680 0456
T-783	Left	1	680 0459
	Right	1	680 0458
T-787	Left	1	680 0465
	Right	1	680 0464
T-789	Left	1	680 0467
	Right	1	680 0466
T-791	Left	1	680 0457
	Right	1	680 0456
T-793	Left	1	680 0459
	Right	1	680 0458
T-794	Left	1	680 0461
	Right	1	680 0460
T-796	Left	1	680 0463
	Right	1	680 0462
T-797	Left	1	680 0465
	Right	1	680 0464
T-799	Left	1	680 0467
	Right	1	680 0466
T-871	Left	1	680 0457
	Right	1	680 0456
T-873	Left	1	680 0471
	Right	1	680 0470
T-874	Left	1	680 0473
	Right	1	680 0472
T-875	Left	1	680 0475
	Right	1	680 0474
T-876	Left	1	680 0477
	Right	1	680 0476
T-879	Left	1	680 0491
	Right	1	680 0490
T-891	Left	1	680 0457
	Right	1	680 0456
T-893	Left	1	680 0471
	Right	1	680 0470
T-894	Left	1	680 0473
	Right	1	680 0472
T-895	Left	1	680 0475
	Right	1	680 0474

SEATS - SOFT TRIM

Trim No.		Per Car	18-88 (W35)
T-896	Left	1	680 0477
	Right	1	680 0476
T-899	Left	1	680 0491
	Right	1	680 0490
T-951	Left	1	652 1541
	Right	1	652 1540
T-953	Left	1	652 1543
	Right	1	652 1542
T-972	Left	1	652 1541
	Right	1	652 1540
T-973	Left	1	652 1543
	Right	1	652 1542
T-976	Left	1	652 2161
	Right	1	652 2160
T-977	Left	1	652 1549
	Right	1	652 1548

Trim No.		Per Car	18-88 (W35)
T-991	Left	1	652 1541
	Right	1	652 1540
T-993	Left	1	652 1543
	Right	1	652 1542
T-996	Left	1	652 2161
	Right	1	652 2160
T-997	Left	1	652 1549
	Right	1	652 1548

1970 Thru 1972 MODELS

Trim No.		Per Car	18-88 (W35)
T-071	Left	1	652 2689
	Right	1	652 2688
T-073	Left	1	652 2693
	Right	1	652 2692
T-074	Left	1	652 2695
	Right	1	652 2694
T-075	Left	1	652 6187
	Right	1	652 6186
T-076	Left	1	652 2697
	Right	1	652 2696
T-091	Left	1	652 2689
	Right	1	652 2688
T-093	Left	1	652 2693
	Right	1	652 2692
T-094	Left	1	652 2695
	Right	1	652 2694
T-095	Left	1	652 6187
	Right	1	652 6186
T-096	Left	1	652 2697
	Right	1	652 2696
T-171	Left	1	652 6357
	Right	1	652 6356
T-173	Left	1	652 6359
	Right	1	652 6358
T-174	Left	1	652 6361
	Right	1	652 6360
T-175	Left	1	652 6363
	Right	1	652 6362

SEATS - SOFT TRIM

Trim No.		Per Car	18-88 (W3S)
T-176	Left	1	652 6357
	Right	1	652 6356
T-191	Left	1	652 6357
	Right	1	652 6356
T-193	Left	1	652 6359
	Right	1	652 6358
T-194	Left	1	652 6361
	Right	1	652 6360
T-195	Left	1	652 6363
	Right	1	652 6362
T-196	Left	1	652 6357
	Right	1	652 6356
T-271	Left	1	652 9939
	Right	1	652 9938
T-273	Left	1	652 9847
	Right	1	365 9846
T-274	Left	1	652 9849
	Right	1	652 9848
T-276	Left	1	652 9851
	Right	1	652 9850
T-291	Left	1	652 9939
	Right	1	652 9938
T-293	Left	1	652 9847
	Right	1	652 9846
T-294	Left	1	652 9849
	Right	1	652 9848
T-296	Left	1	652 9851
	Right	1	652 9850

29.462-2 ATTACHING PARTS, Panel To Body

SCREW, Tapping.....	67/69	18-88 (W3S-Chrome)	***(Use 400 1776)***	29.070	12	400 1957
SCREW, Tapping.....	70/	18-88 (W3S-Zinc)		29.060	12	400 1776

SEATS - SOFT TRIM

29.464–1 CARPET, Rear Auxiliary Side Panel Top

1967 Thru 1969 MODELS

Trim No.			Per Car	18-88 (W35)
T-771	Left		1	680 0188
	Right		1	680 0172
T-773	Left		1	680 0189
	Right		1	680 0173
T-774	Left		1	680 0190
	Right		1	680 0174
T-776	Left		1	680 0192
	Right		1	680 0176
T-777	Left		1	680 0193
	Right		1	680 0177
T-779	Left		1	680 0194
	Right		1	680 0178
T-781	Left		1	680 0188
	Right		1	680 0172
T-783	Left		1	680 0189
	Right		1	680 0173
T-787	Left		1	680 0193
	Right		1	680 0177
T-789	Left		1	680 0194
	Right		1	680 0178
T-791	Left		1	680 0188
	Right		1	680 0172
T-793	Left		1	680 0189
	Right		1	680 0173
T-794	Left		1	680 0190
	Right		1	680 0174
T-796	Left		1	680 0192
	Right		1	680 0176
T-797	Left		1	680 0193
	Right		1	680 0177
T-799	Left		1	680 0194
	Right		1	680 0178
T-871	Left	(* 29-72)	1	680 0188
		(* 29-73)	1	651 6731
	Right	(* 29-72)	1	680 0172
		(* 29-73)	1	651 6726
T-873	Left	(* 29-72)	1	680 1041
		(* 29-73)	1	651 6732
	Right	(* 29-72)	1	680 1036
		(* 29-73)	1	651 6727
T-874	Left	(* 29-72)	1	680 1042
		(* 29-73)	1	651 6733
	Right	(* 29-72)	1	680 1037
		(* 29-73)	1	651 6728
T-875	Left	(* 29-72)	1	680 0191
		(* 29-73)	1	652 1537
	Right	(* 29-72)	1	680 0175
		(* 29-73)	1	652 1532
T-876	Left	(* 29-72)	1	680 1044
		(* 29-73)	1	651 6734
	Right	(* 29-72)	1	680 1039
		(* 29-73)	1	651 6729

SEATS - SOFT TRIM

Trim No.			Per Car	18-88 (W3S)
T-879	Left	(* 29-72)	1	680 1045
		(* 29-73)	1	651 6735
	Right	(* 29-72)	1	680 1040
		(* 29-73)	1	651 6730
T-891	Left	(* 29-72)	1	680 0188
		(* 29-73)	1	651 6731
	Right	(* 29-72)	1	680 0172
		(* 29-73)	1	651 6726
T-893	Left	(* 29-72)	1	680 1041
		(* 29-73)	1	651 6732
	Right	(* 29-72)	1	680 1036
		(* 29-73)	1	651 6727
T-894	Left	(* 29-72)	1	680 1042
		(* 29-73)	1	651 6733
	Right	(* 29-72)	1	680 1037
		(* 29-73)	1	651 6728
T-895	Left	(* 29-72)	1	680 0191
		(* 29-73)	1	652 1537
	Right	(* 29-72)	1	680 0175
		(* 29-73)	1	652 1532
T-896	Left	(* 29-72)	1	680 1044
		(* 29-73)	1	651 6734
	Right	(* 29-72)	1	680 1039
		(* 29-73)	1	651 6729
T-899	Left	(* 29-72)	1	680 1045
		(* 29-73)	1	651 6735
	Right	(* 29-72)	1	680 1040
		(* 29-73)	1	651 6730
T-951	Left		1	651 6731
	Right		1	651 6726
T-953	Left		1	651 1531
	Right		1	652 1536
T-972	Left		1	651 6731
	Right		1	651 6726
T-973	Left		1	652 1531
	Right		1	652 1536
T-976	Left		1	652 1533
	Right		1	652 1538
T-977	Left		1	652 1534
	Right		1	652 1539
T-991	Left		1	651 6731
	Right		1	651 6726
T-993	Left		1	652 1531
	Right		1	652 1536
T-996	Left		1	652 1533
	Right		1	652 1538
T-997	Left		1	652 1534
	Right		1	652 1539

1970 Thru 1972 MODELS

Trim No.		Per Car	18-88 (W3S)
T-071	Left	1	651 6731
	Right	1	651 6726
T-073	Left	1	652 3360
	Right	1	652 3364

SEATS - SOFT TRIM

Trim No.		Per Car	18-88 (W3S)
T-074	Left	1	652 3361
	Right	1	652 3365
T-075	Left	1	652 1532
	Right	1	652 1537
T-076	Left	1	652 3362
	Right	1	652 3366
T-091	Left	1	651 6731
	Right	1	651 6726
T-093	Left	1	652 3360
	Right	1	652 3364
T-094	Left	1	652 3361
	Right	1	652 3365
T-095	Left	1	652 1532
	Right	1	652 1537
T-096	Left	1	652 3362
	Right	1	652 3366
T-171	Left	1	651 6731
	Right	1	651 6726
T-173	Left	1	652 6308
	Right	1	652 6311
T-174	Left	1	652 6309
	Right	1	652 6312
T-175	Left	1	652 6310
	Right	1	652 6313
T-176	Left	1	651 6731
	Right	1	651 6726
T-191	Left	1	651 6731
	Right	1	651 6726
T-193	Left	1	652 6308
	Right	1	652 6311
T-194	Left	1	652 6309
	Right	1	652 6312
T-195	Left	1	652 6310
	Right	1	652 6313
T-196	Left	1	651 6731
	Right	1	651 6726
T-271	Left	1	652 9966
	Right	1	652 9967
T-273	Left	1	652 9827
	Right	1	652 9842
T-274	Left	1	652 9828
	Right	1	652 9843
T-276	Left	1	652 9829
	Right	1	652 9844
T-291	Left	1	652 9966
	Right	1	652 9967
T-293	Left	1	652 9827
	Right	1	652 9842
T-294	Left	1	652 9828
	Right	1	652 9843
T-296	Left	1	652 9829
	Right	1	652 9844

29.464-2 ATTACHING PARTS, Carpet To Side Panel Top

BUTTON	67/	18-88 (W3S)	17.270	7	G141994
SOCKET	67/	18-88 (W3S)	17.270	7	G141998
STUD	67/	18-88 (W3S)	28.085	7	400 0364
SCREW, Tapping	67/	18-88 (W3S)	29.070	4	400 0273

SEATS - SOFT TRIM

29.465–1 CARPET, Tailgate (* 29-86)

1967 Thru 1969 MODELS

Trim No.		Per Car	18-88
T-771S		1	680 0008
T-773S		1	680 0009
T-779S		1	680 0014
T-791		1	680 0008
T-793		1	680 0009
T-794		1	680 0010
T-796		1	680 0012
T-797		1	680 0013
T-799		1	680 0014
T-891	(* 29-72)	1	680 0008
	(* 29-73)	1	651 6817
T-893	(* 29-72)	1	680 1059
	(* 29-73)	1	651 6818
T-894	(* 29-72)	1	680 1060
	(* 29-73)	1	651 6819
T-895	(* 29-72)	1	680 0011
	(* 29-73)	1	652 1642
T-896	(* 29-72)	1	680 1062
	(* 29-73)	1	651 6820
T-899	(* 29-72)	1	680 1063
	(* 29-73)	1	651 6821
T-991	(* 29-109)	1	651 6817
	(* 29-110)	1	652 4610
T-993	(* 29-109)	1	652 1641
	(* 29-110)	1	652 4611
T-996	(* 29-109)	1	652 1643
	(* 29-110)	1	652 4612
T-997	(* 29-109)	1	652 1644
	(* 29-110)	1	652 4613

1970 Thru 1972 MODELS

Trim No.	Per Car	88
T-091	1	652 4610
T-093	1	652 3044
T-094	1	652 3045
T-095	1	652 6207
T-096	1	652 3046
T-191	1	652 6339
T-193	1	652 6340
T-194	1	652 6341
T-195	1	652 6342
T-196	1	652 6339
T-291	1	652 9977
T-293	1	652 9427
T-294	1	652 9428
T-296	1	652 9429

29.465–2 ATTACHING PARTS, Carpet To Tailgate Inner Panel

SCREW, Tapping.....	67/	88.....	.....	7	400 2159

SEATS - SOFT TRIM

29.466–1 PANEL, Rear Compartment And Shelf Trim (Incl. Carpet)

Trim No.	Per Car	39
T-831	1	362 4808
T-832	1	362 3619
T-835	1	362 3618
T-931	1	362 4808
T-932	1	362 4808
T-935	1	362 3618
T-936	1	362 3619
T-031	1	363 4525
T-033	1	363 4526
T-035	1	362 3618
T-036	1	363 4527

29.466–2 ATTACHING PARTS, Panel To Body

SCREW, Tapping..... 68/70 39.....	29.470	4	400 0471

29.470–1 BACKBOARD ASSEMBLY, Trimmed Rear Cargo Platform

67/69	05-06.....	.....	1	352 1014
67/	15-16-19-85-89.....	.....	1	680 0297
67	***85 (Post Office)***.....	.....	1	360 8577

29.470–2 ATTACHING PARTS, Backboard To Shelf Board

SCREW, Tapping..... 67/ 05-06-15-16-19-85-89.....	.....	4	400 0471

29.474 COVER, Rear Cargo Platform Backboard

67/69	05-06.....	.....	1	352 1015
67/	15-16-19-85-89.....	.....	1	359 5897
67	***85 (Post Office)***.....	.....	1	360 8543

29.478–1 BASEBOARD ASSEMBLY, Trimmed Rear Cargo Platform

67/69	05-06.....	.....	1	350 1598
67/	15-16-19-85-89.....	.....	1	680 0296

29.478–2 ATTACHING PARTS, Baseboard To Body

SCREW, Tapping..... 67/ 05-06-15-16-19-85-89.....	29.470	12	400 0471

29.482 COVER, Rear Cargo Platform Baseboard

67/69	05-06.....	.....	1	352 1016
67/	15-16-19-85-89.....	.....	1	359 5896
67	***85 (Post Office)***.....	.....	1	361 2691

29.488–1 RISER, Rear Cargo Platform Floor

67/69	(Front) 05-06	.....	1	350 2558
67/	(Front) 15-16-19-85-89	.....	1	680 0298
67/	(Side) 15-16-19-85-89	.....	2	680 0299
67/69	(Left) 05-06	.....	1	630 1997
67/69	(Right) 05-06	.....	1	630 1996

Printed in U.S.A.

SEATS - SOFT TRIM

29.488–2 ATTACHING PARTS, Riser To Floor

SCREW, Tapping.....	67/69	05-06.....	17.660	8	G161903
SCREW, Tapping.....	67/70	15-16-19-85-89.....	17.660	8	G443946
SCREW, Tapping.....	71/	15-85.....	17.660	8	812 0617 NA

29.488–3 BRACKET, Rear Cargo Platform Floor Riser

67/69	05-06.....	.....	2	348 8856
67/	15-16-19-85-89.....	.....	8	348 8856

29.488–4 ATTACHING PARTS, Bracket To Riser

SCREW, Tapping.....	67/69	05-06.....	17.660	8	G161903
SCREW, Tapping.....	67/70	15-16-19-85-89.....	17.660	8	G443946
SCREW, Tapping.....	71/	15-85.....	17.660	8	812 0617 NA

29.494 COVER, Rear Cargo Platform Wheelhouse

67/69	(Left) 05-06.....	.....	1	358 3833
67/70	(Left) 15-16-19-85-89.....	.....	1	650 5855
71/	(Left) 15-19-85.....	.....	1	652 8513
67/69	(Right) 05-06.....	.....	1	358 3832
67/70	(Right) 15-16-19-85-89.....	.....	1	650 5854
71/	(Right) 15-19-85.....	.....	1	652 8512
67	***85 (Post Office)***	.....	2	360 8580

BODY MISCELLANEOUS

GROUP NO. — DESCRIPTION — YEAR and MODEL	PAKS CODE	PRIMARY GROUP NO.	PER CAR	PART NO.	CODE
30.020–1 CEMENT					
67/ (Ec. 226-5 Oz. Tube)		.....	AR	499 0086	
67/ (Windshield Sealer)		.....	AR	320 0686	
67/ (Formed Headlining)(One Pint)		.....	AR	448 2998	
67/ (Vinyl Roof Covering)(One Quart)		.....	AR	448 3394	
67/ (DiNoc Overlay Repair)(One Pint)		.....	AR	448 5289	
67/ (Trim Panel Plastic Mouldings)(4 Oz. Can)		.....	AR	448 5926	
30.020–2 CAULK, Auto					
67/ (1-1/2 Lb. Spool)		.....	AR	447 5645	
30.025 RING, Hog					
67/ (1/2")(7/16" Opening)		.....	AR	400 0251	
67/ (5/16")		.....	AR	400 2198	
67/ (5/8")		.....	AR	433 5988	
67/ (3/4")		.....	AR	436 3256	
30.026 SEALER					
67/ (Metal Joint-Quart)		.....	AR	499 0282	
67/ (Vinyl Roof Covering)(Black)(12 Oz. Cartidge)		.....	AR	448 3395	
67/ (Vinyl Roof Covering)(Blue)(12 Oz. Cartridge)		.....	AR	448 5530	
67/ (Vinyl Roof Covering)(Off White)(12 Oz. Cartridge)		.....	AR	448 5533	
67/ (Vinyl Roof Covering)(White)(12 Oz. Cartridge)		.....	AR	448 5533	
30.035 LUBRIPLATE					
67/ (2 Oz. Tube)		15.260	AR	899 0685	
67/ (1 Lb. Can)		15.260	AR	899 1231	

PACKAGES - ASSEMBLIES - KITS - SETS

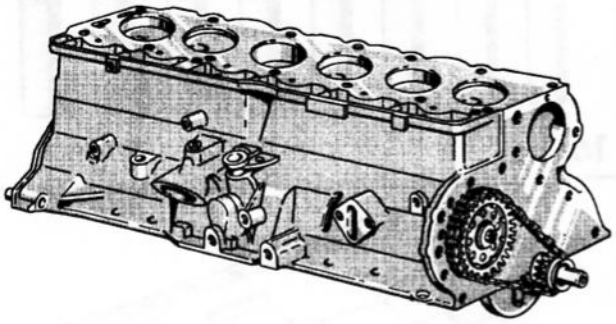

1

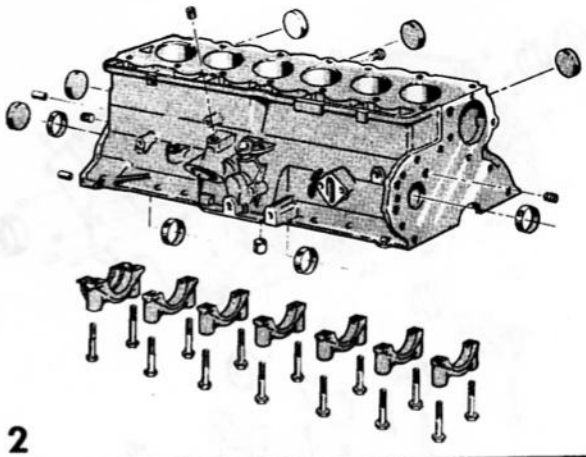

2



3

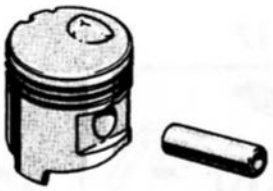

4

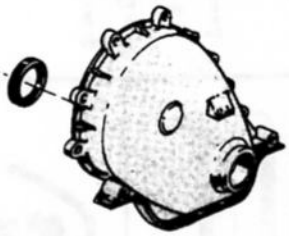

5



6



7

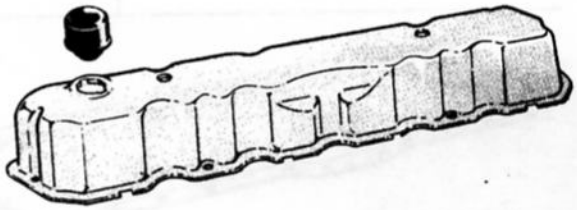

8

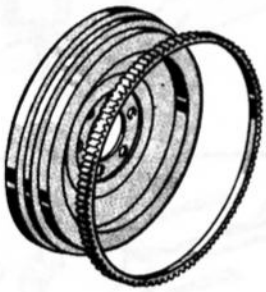

9

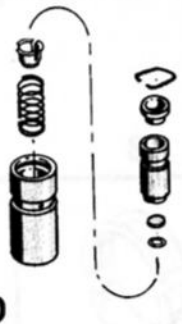

10



11



12



13

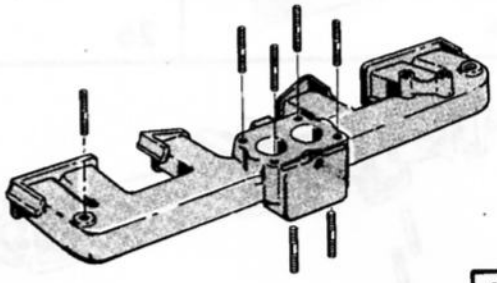

14

3700

Printed in U.S.A.

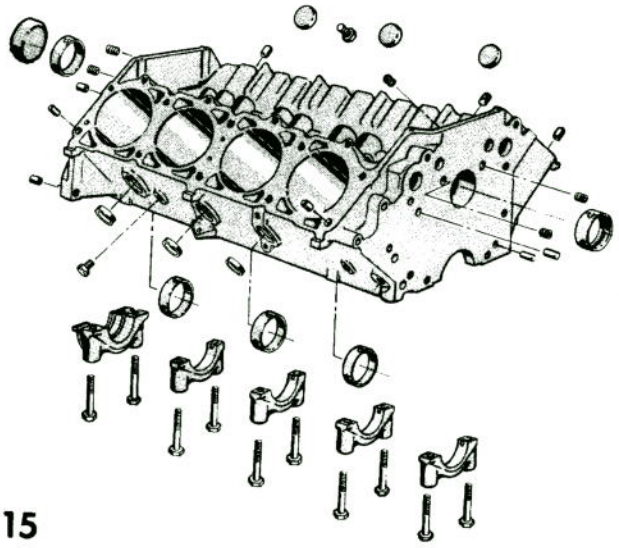
15


16

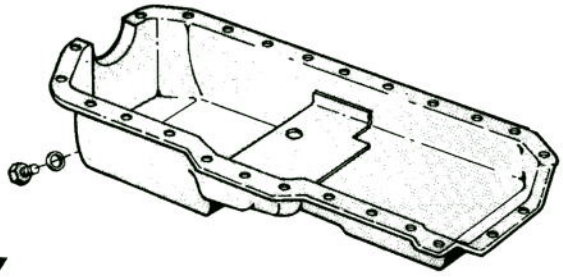
17


18

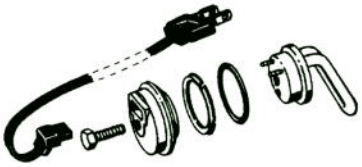
19


20

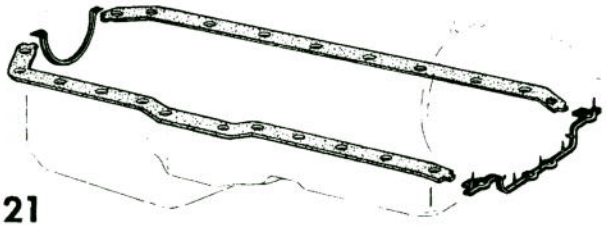
21

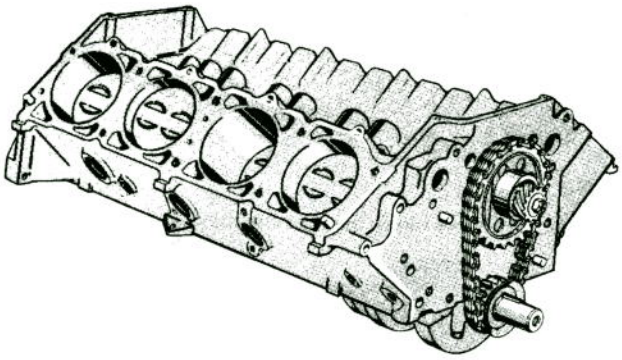
23

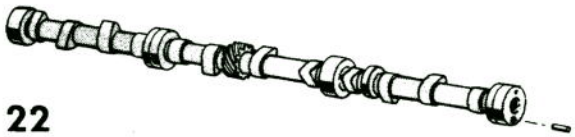
22

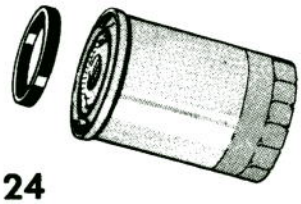
24


25


26

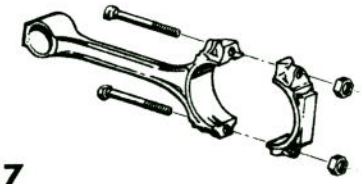
27

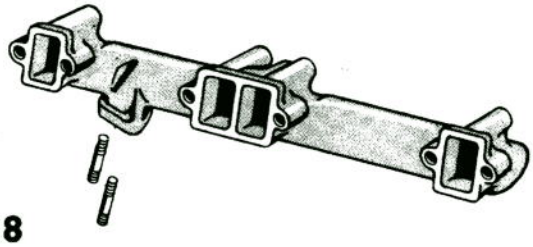
28

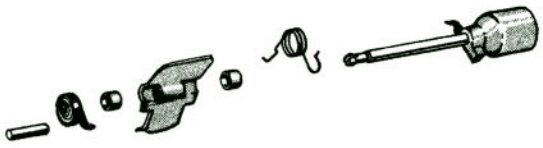
29

3701

Printed in U.S.A.

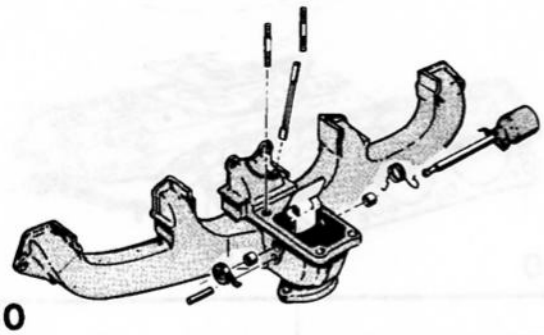

30

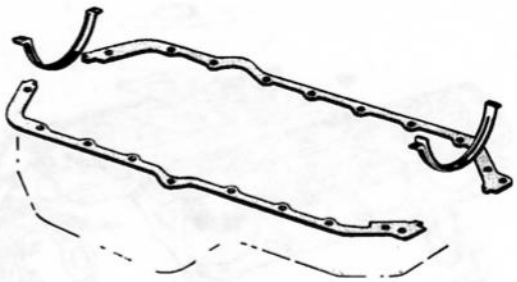

31

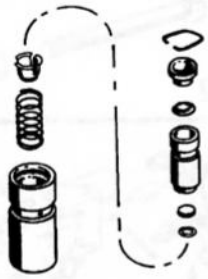

32

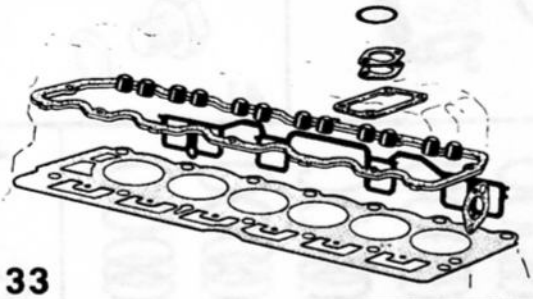

33

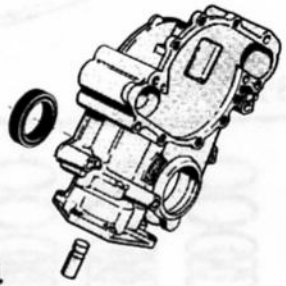

34

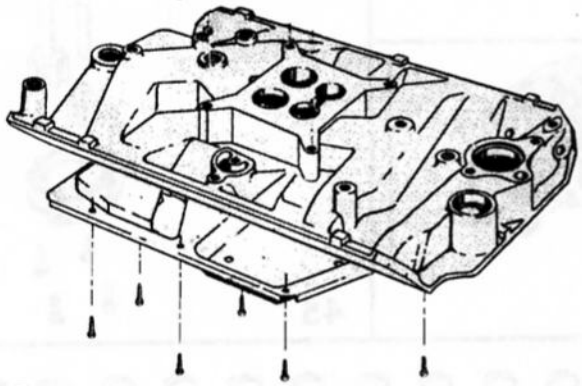

35

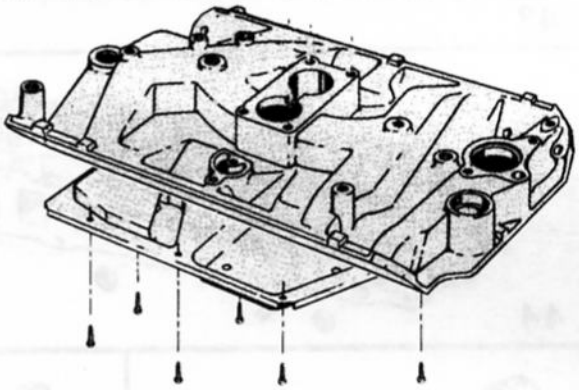

36

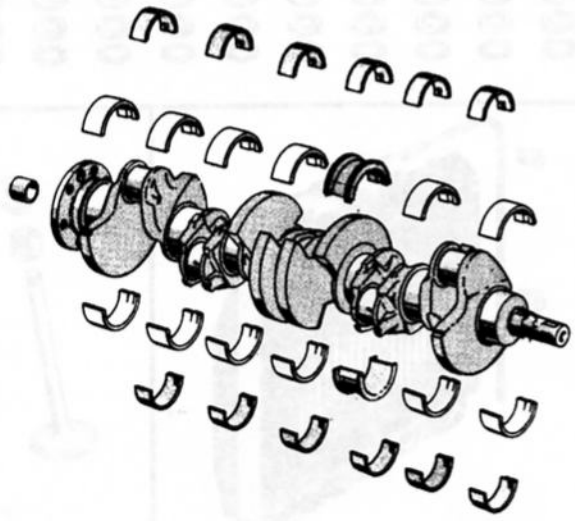

37

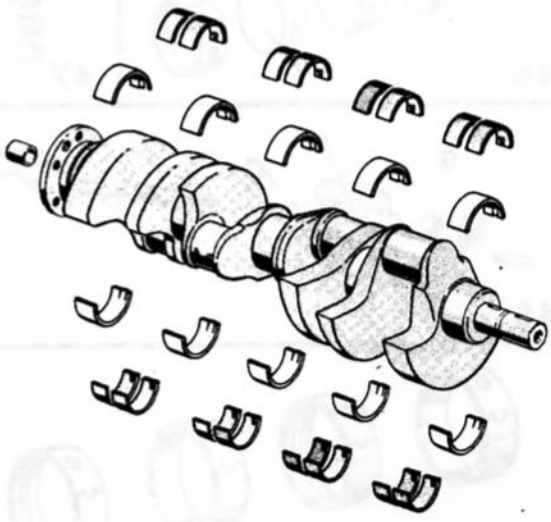

38

3702

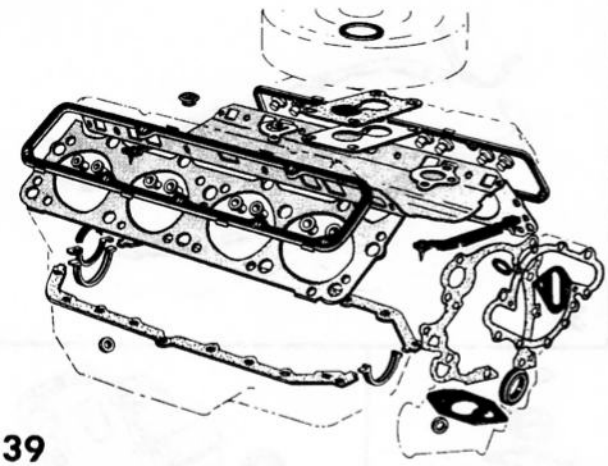

39

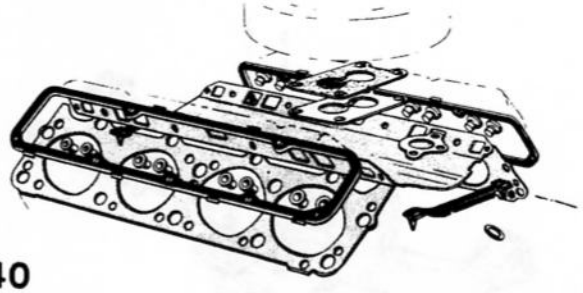

40

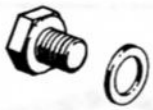

41



42



43

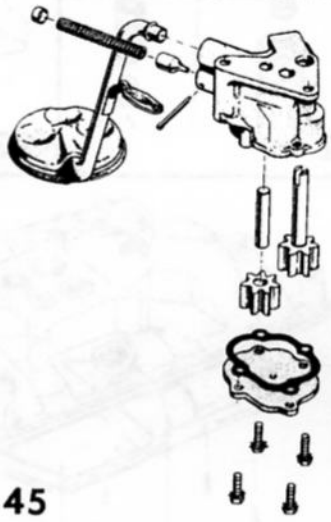

45

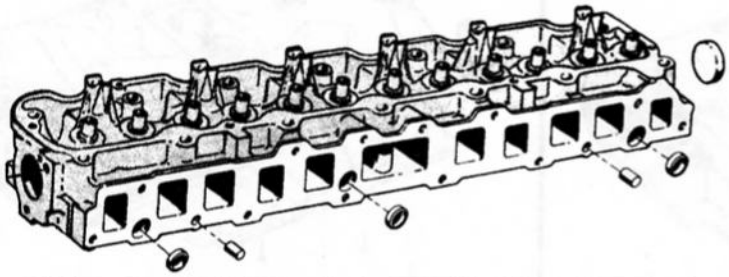

44



46



47

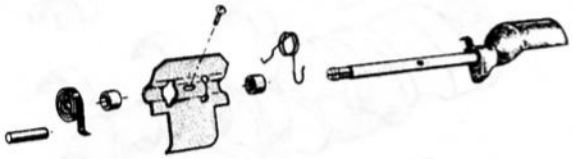

48

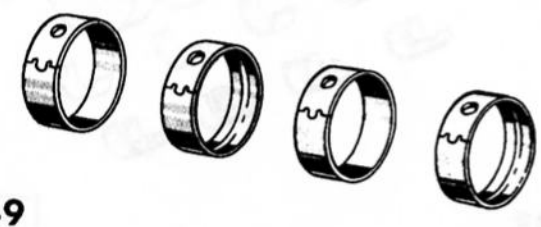

49

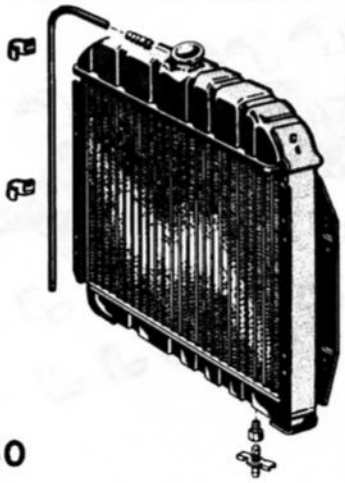

50



51

3703

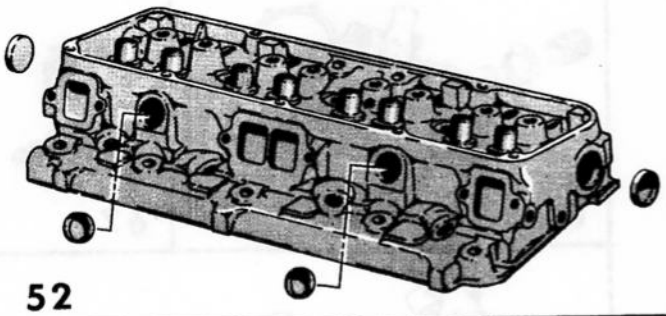

52

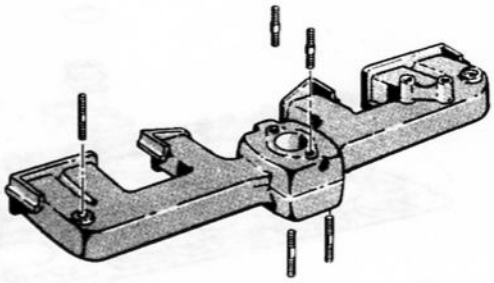

53

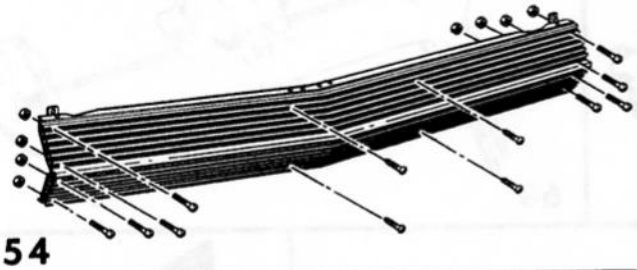

54



55



56

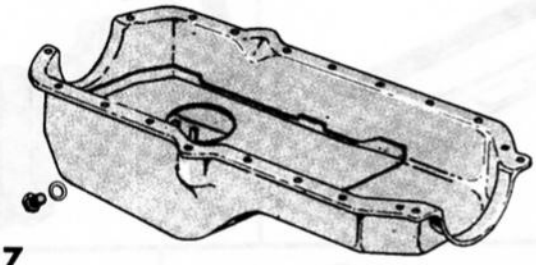

57

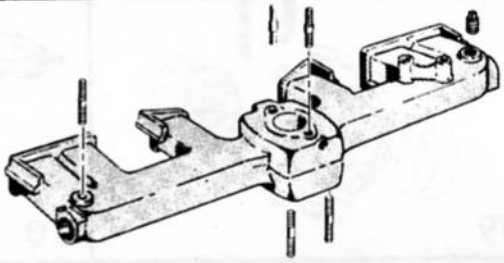

58



59

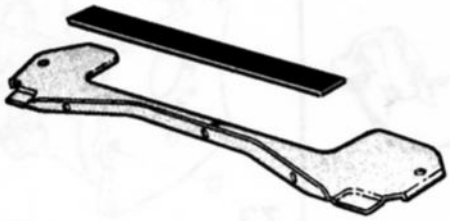

60

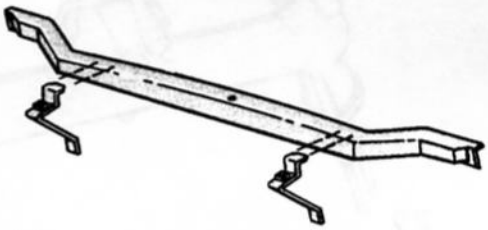

61



62

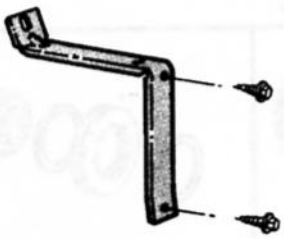

63

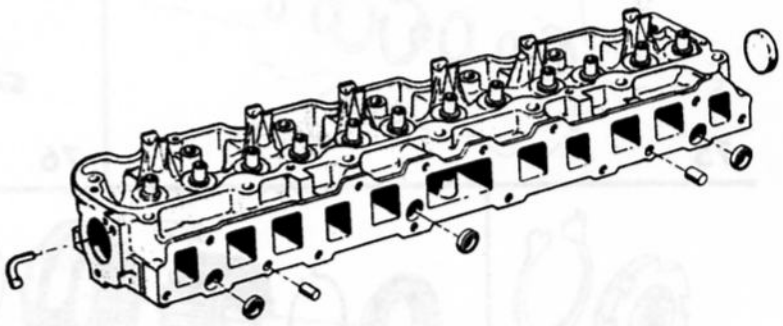

64

3704

Printed in U.S.A.

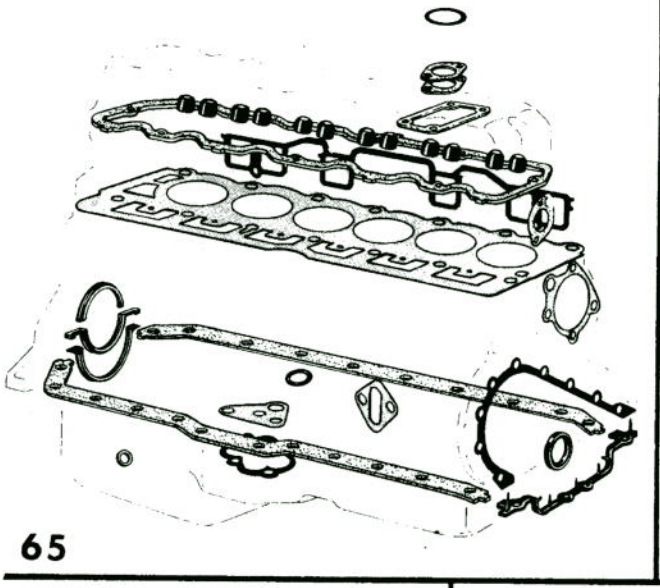
65

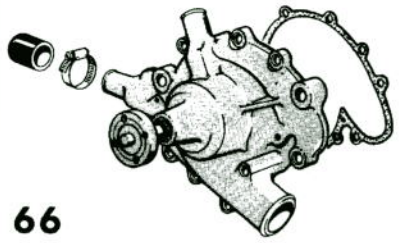
66


67

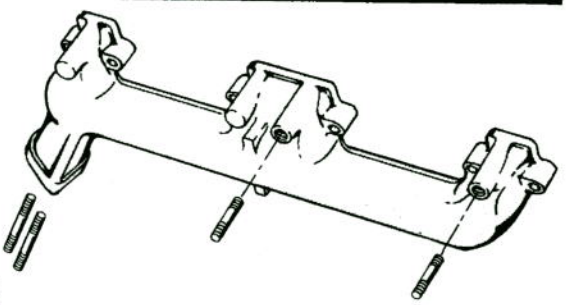
68

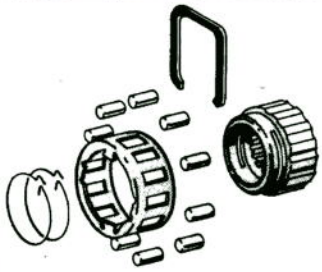
69

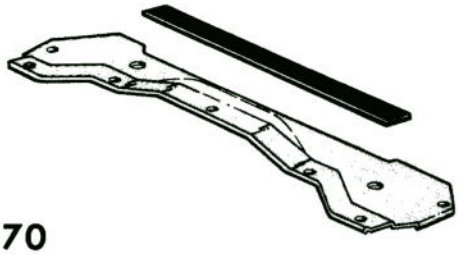
70

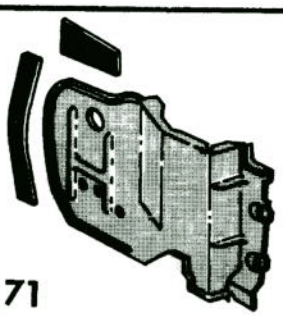
71

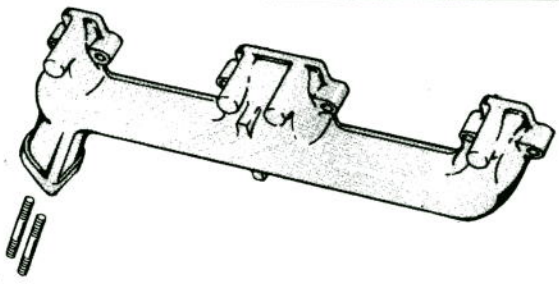
72

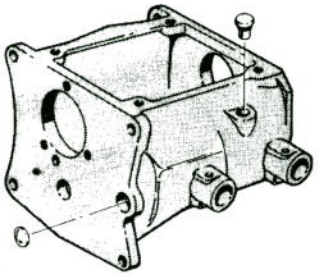
73

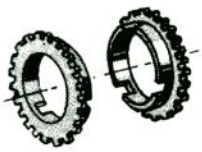
74


75

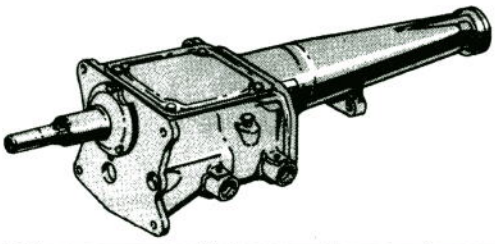
76


77

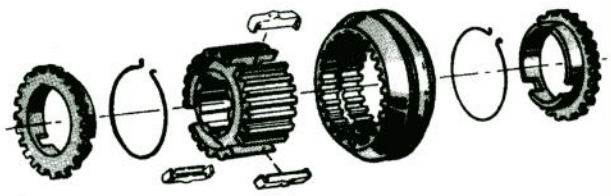
78

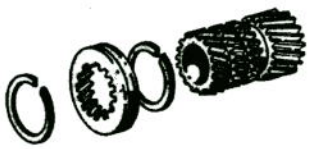
79

3705

Printed in U.S.A.

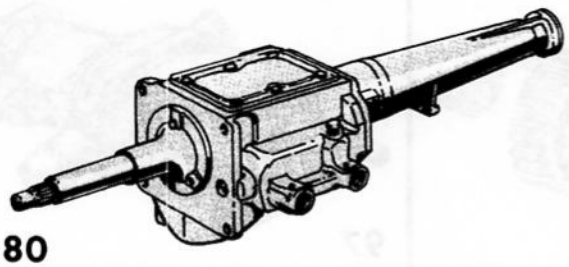
80

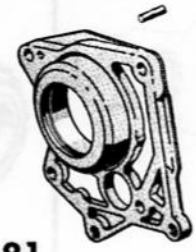
81

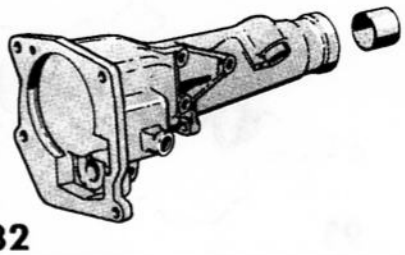
82

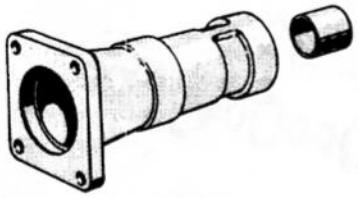
83

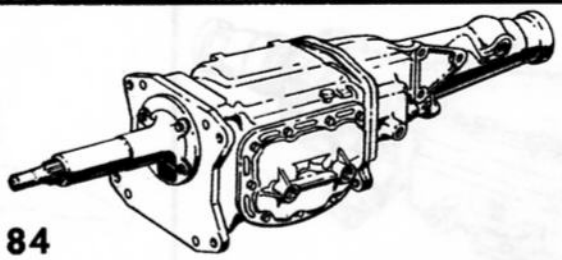
84


85

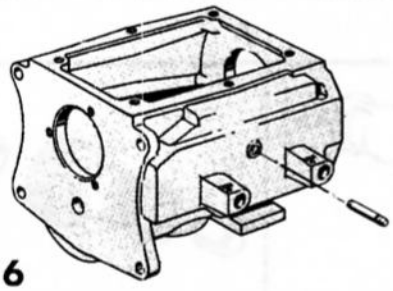
86

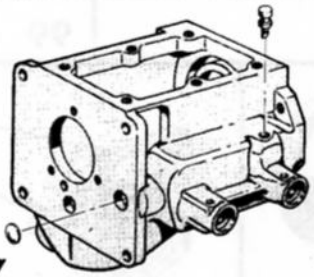
87

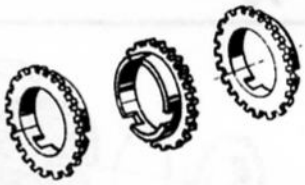
88

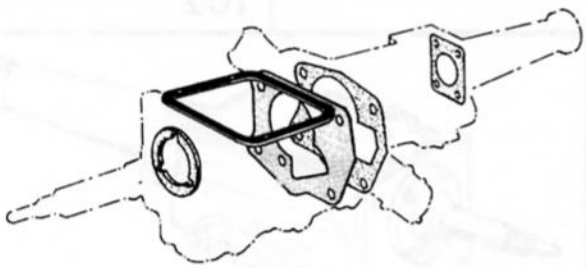
89

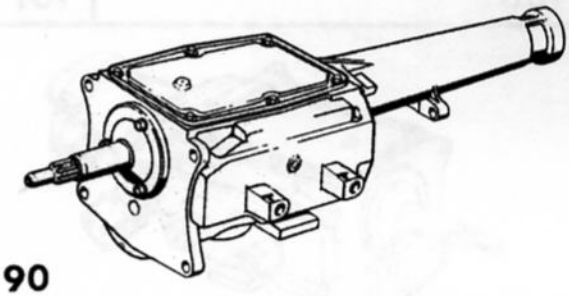
90

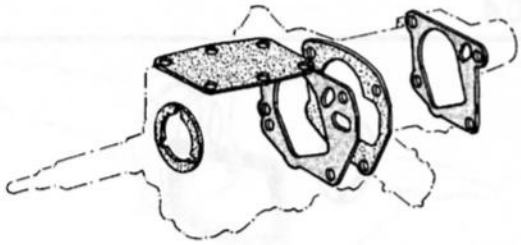
91

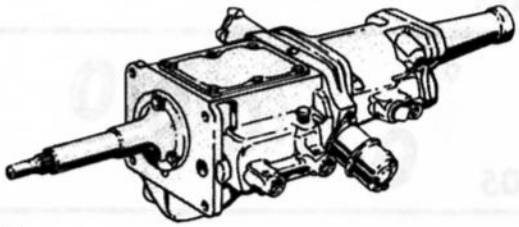
92

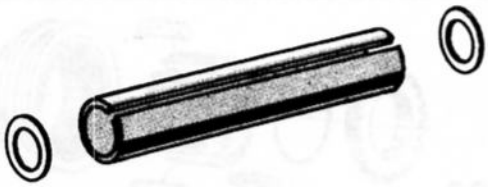
93


94

3706


95

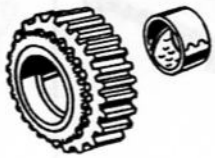
96

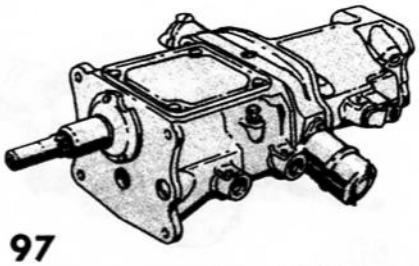
97

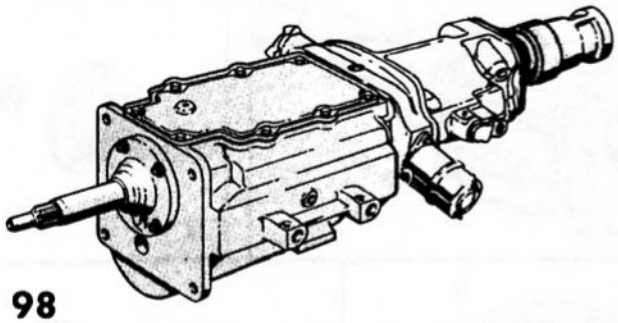
98


99

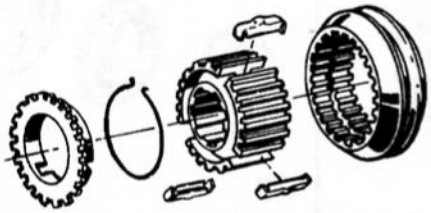
100

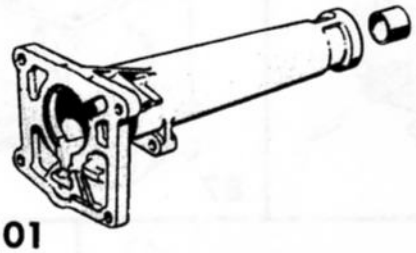
101

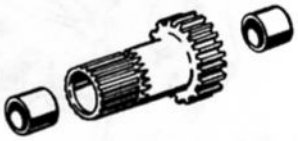
102

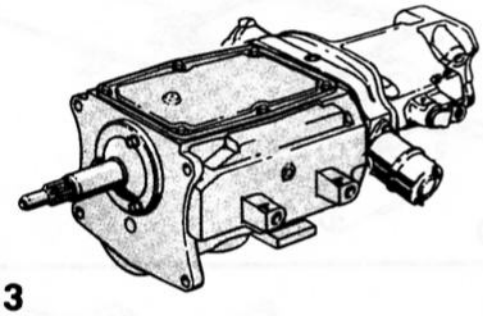
103

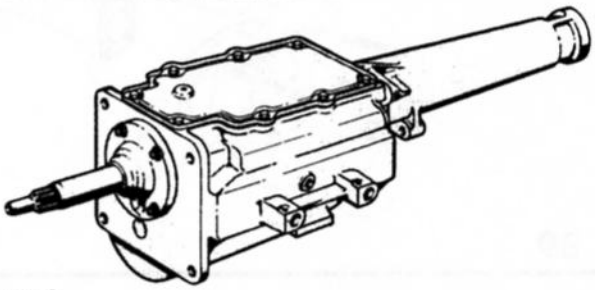
104


105

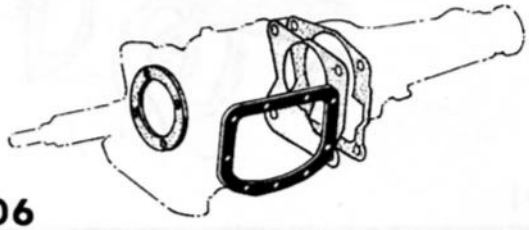
106

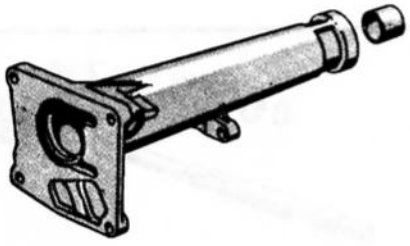
107

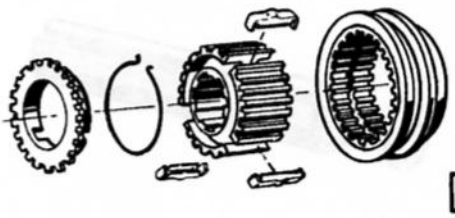
108

3707

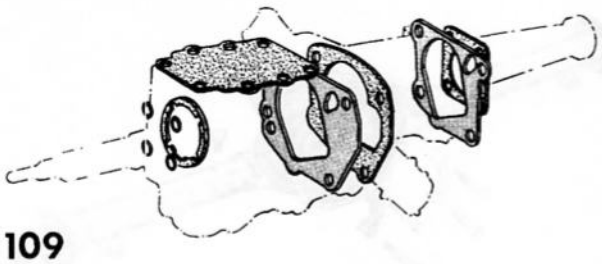

109

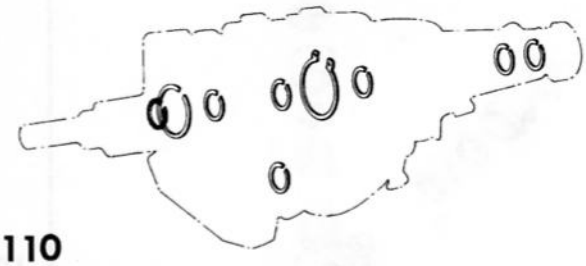

110

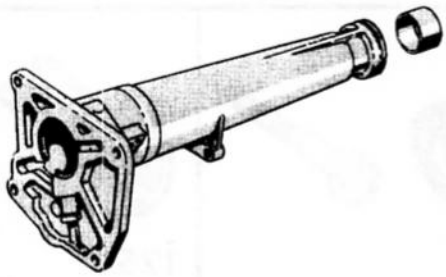

111

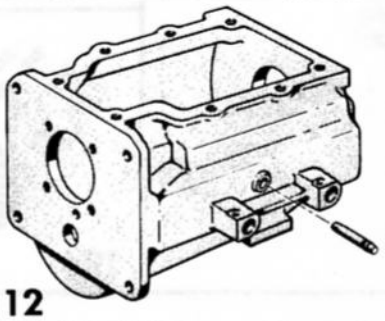

112

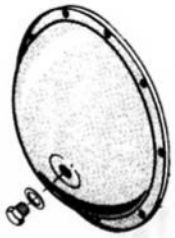

113

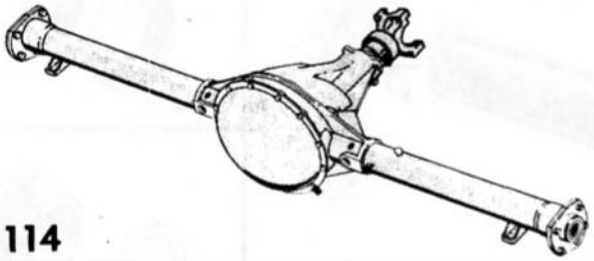

114

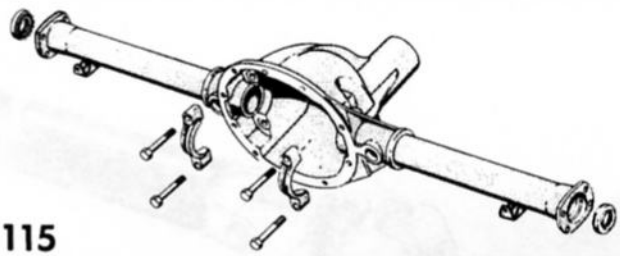

115

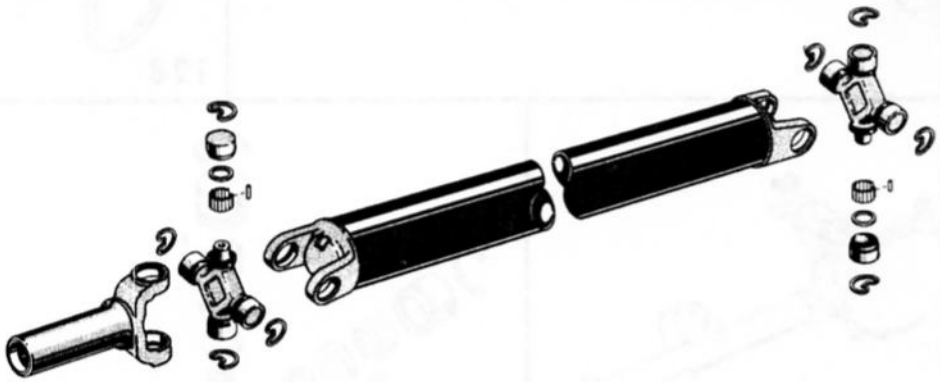

116

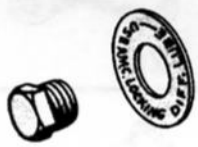

117



118



119

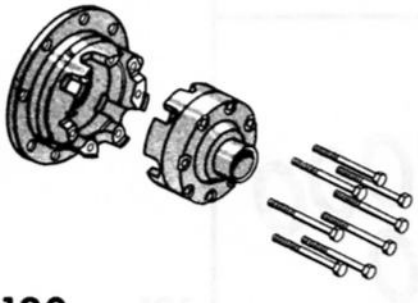

120



121

3708

Printed in U.S.A.

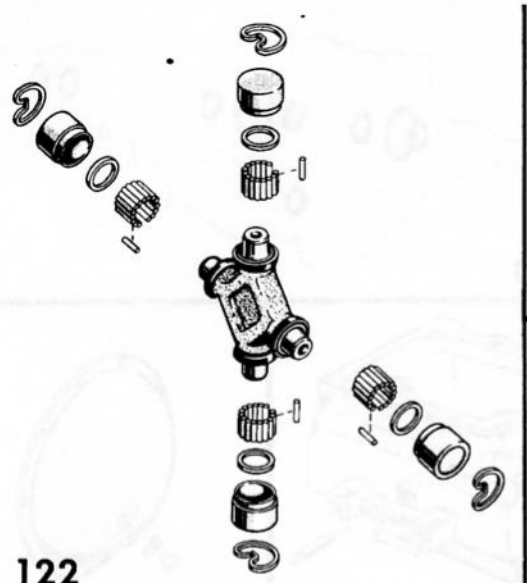

122

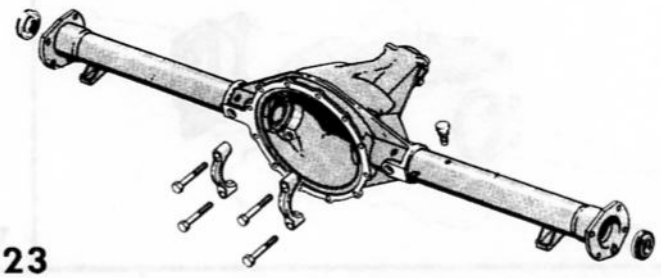

123

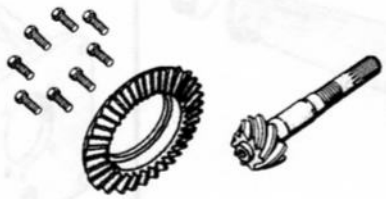

124

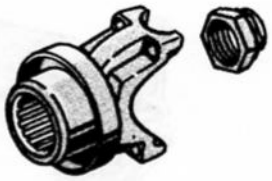

125

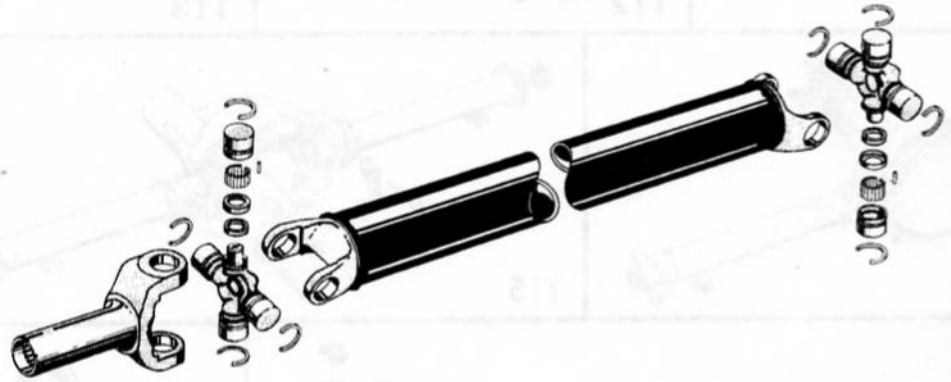

126

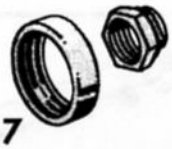

127

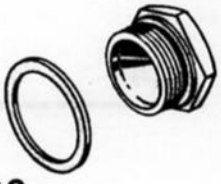

128

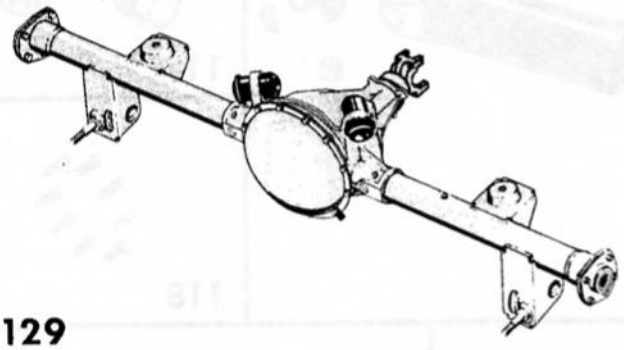

129



130



131

3709

Printed in U.S.A.

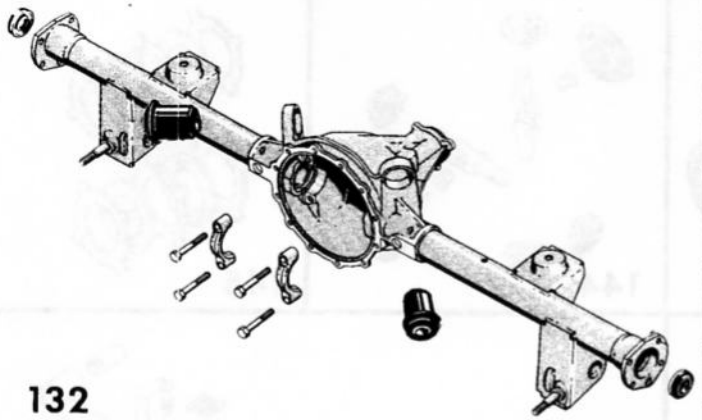

132

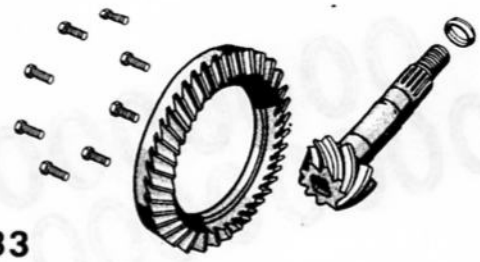

133

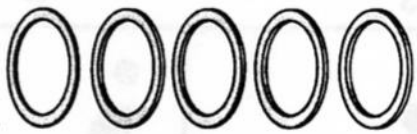

134

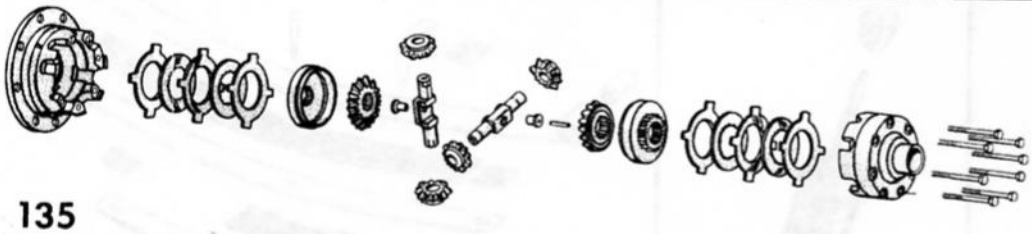

135



136

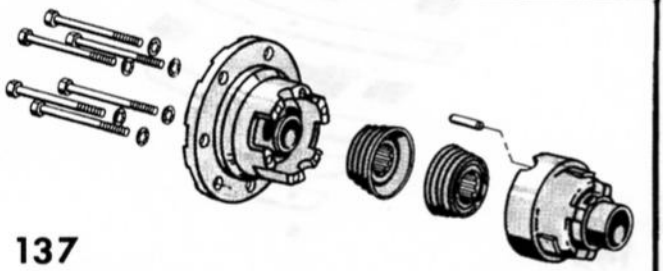

137

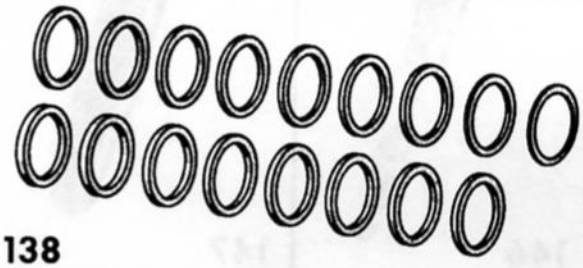

138

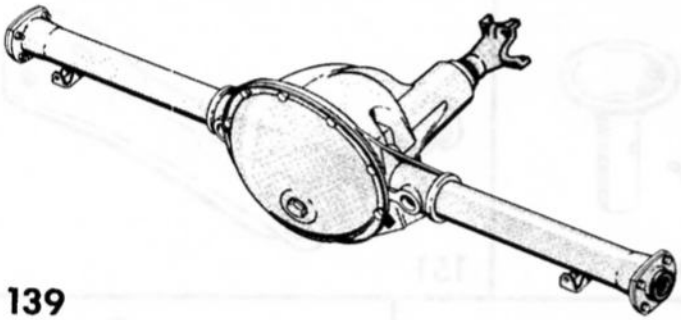

139

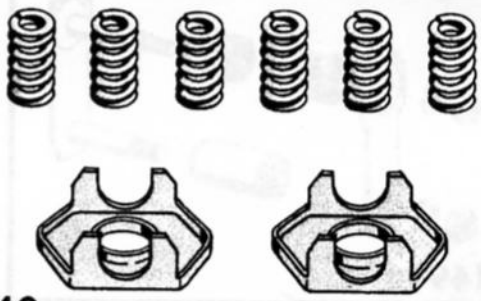

140



141

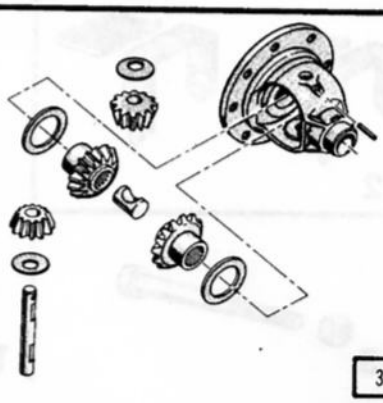

142

3710

Printed in U.S.A.



143



144



145



146



147

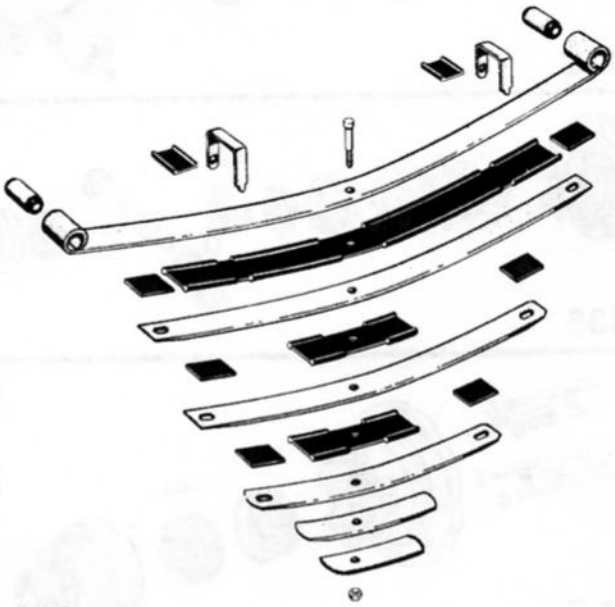

148

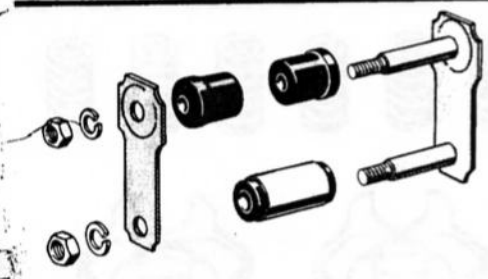

149



150

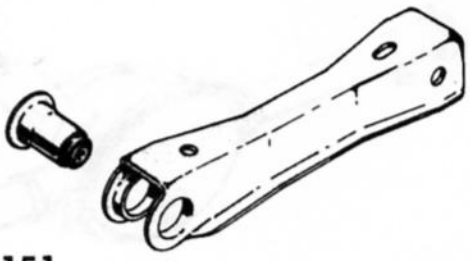

151

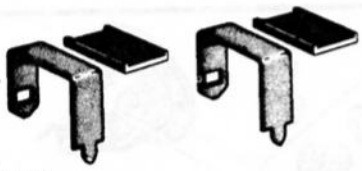

152



153

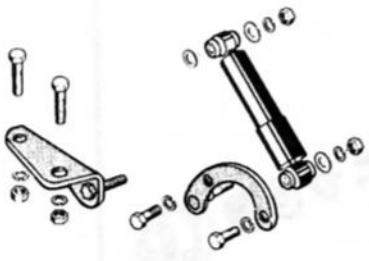

154



155

3711

Printed in U.S.A.

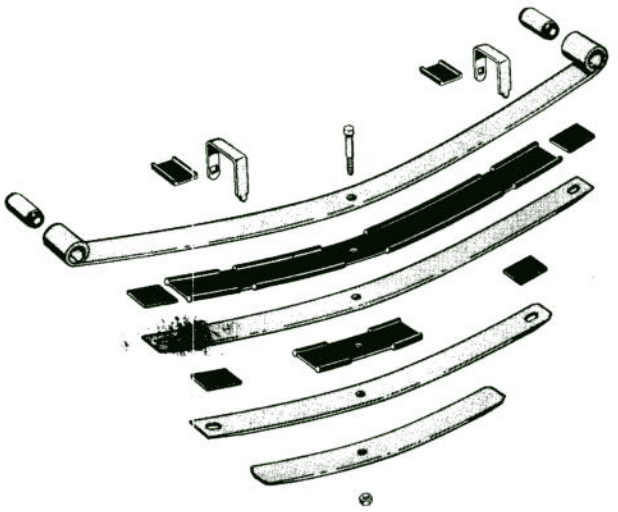
156

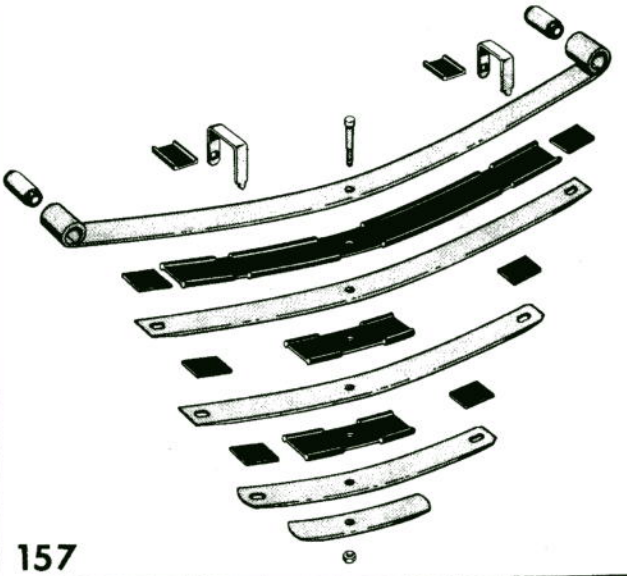
157

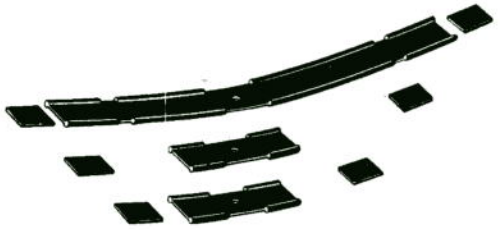
158


159

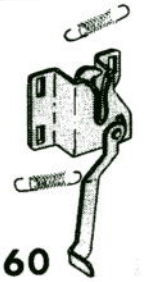
160

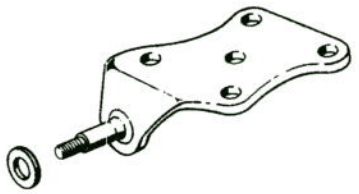
161

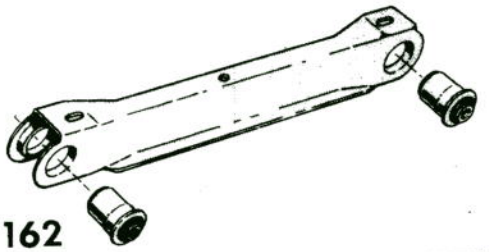
162

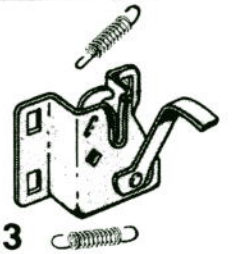
163

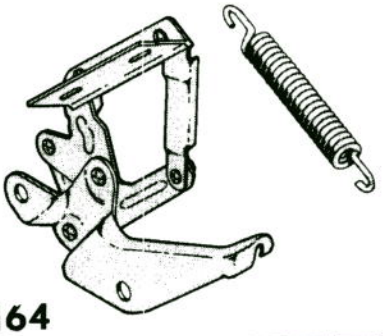
164

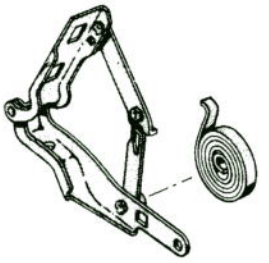
165

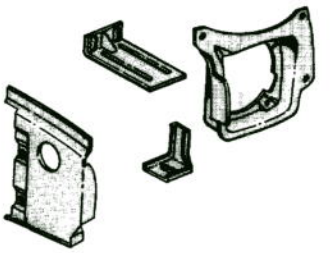
166


167


168

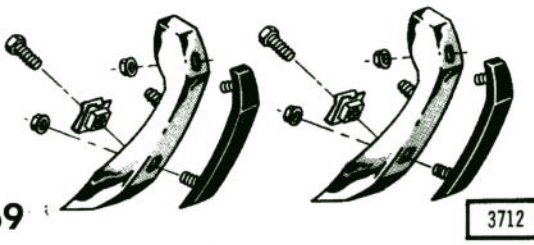
169

3712

Printed in U.S.A.

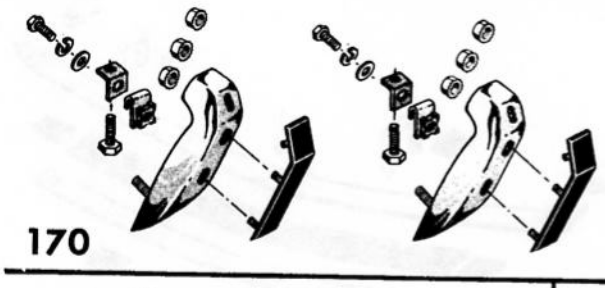
170

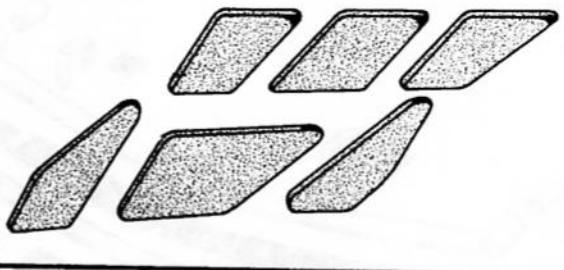
171

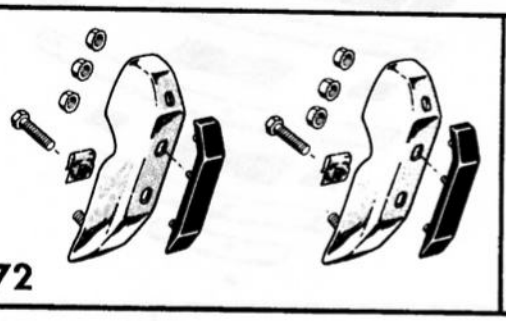
172


173

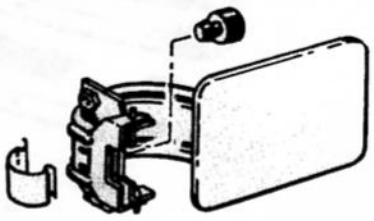
174

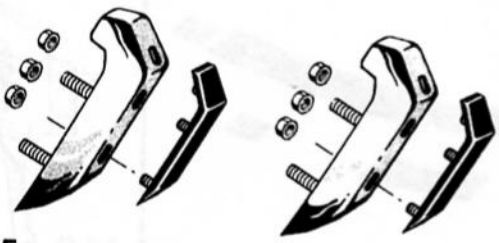
175

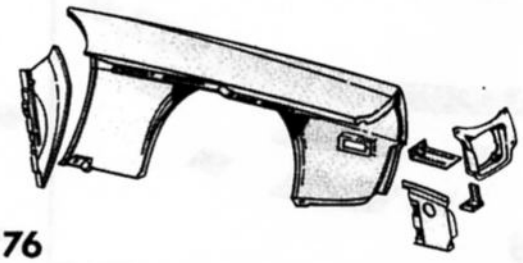
176

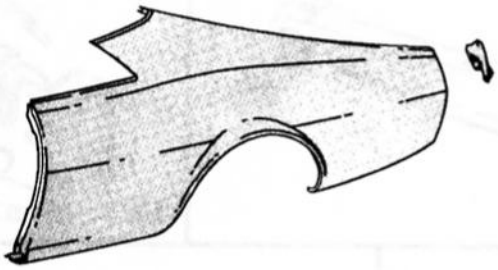
177


178

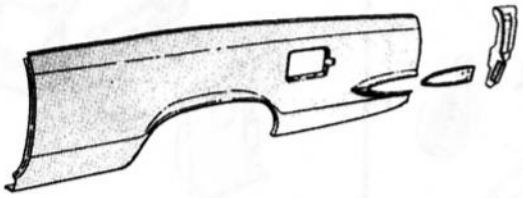
179

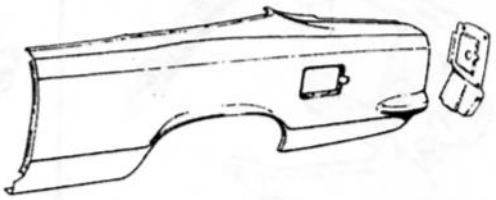
180

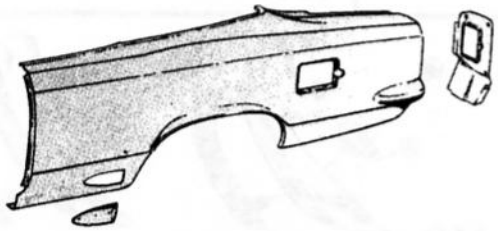
181

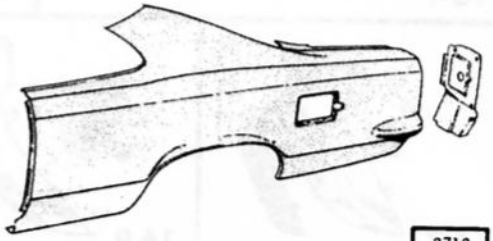
182

3713

Printed in U.S.A.

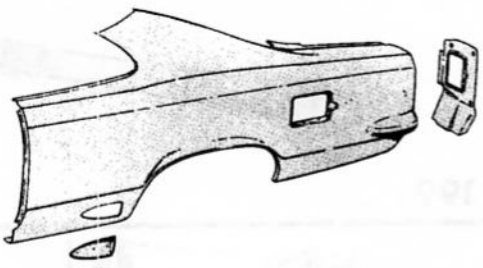

183

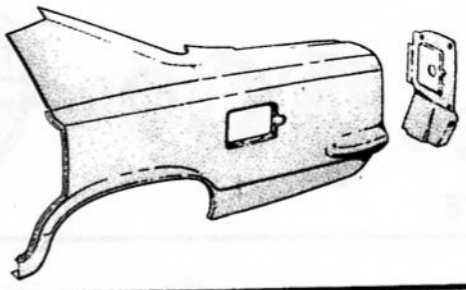

184

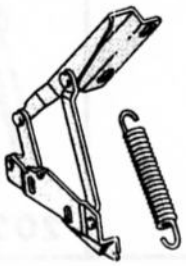

185

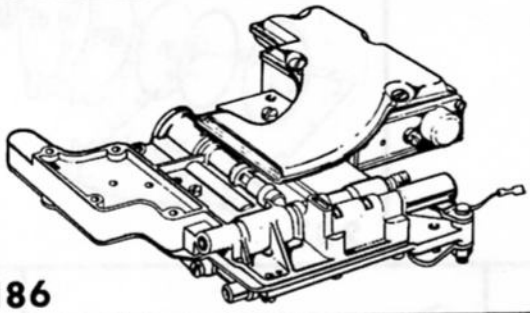

186

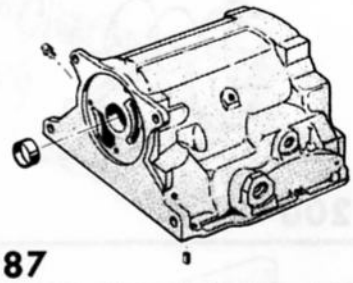

187

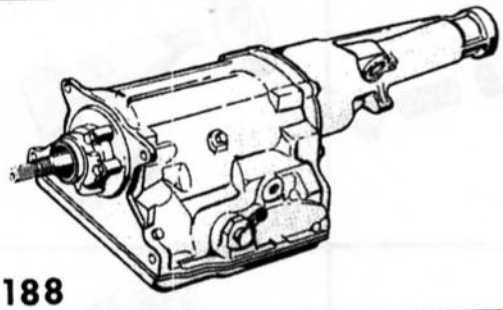

188

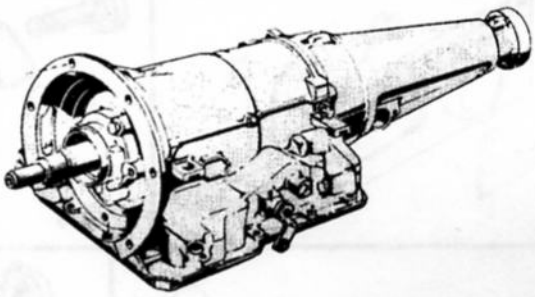

189



190

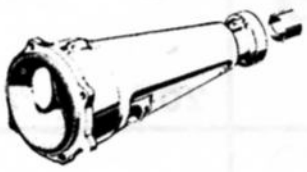

191

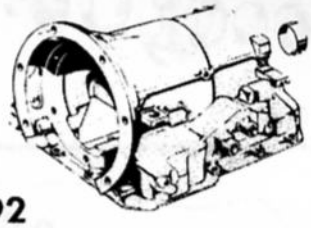

192

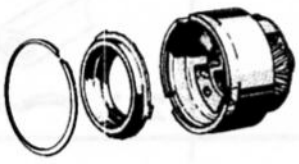

193



194

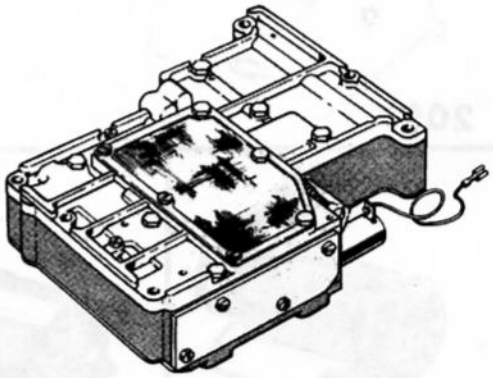

197

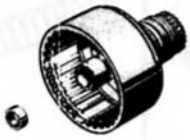

195



196

3714

Printed in U.S.A.

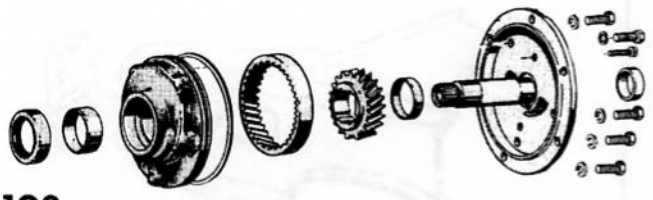

198



199

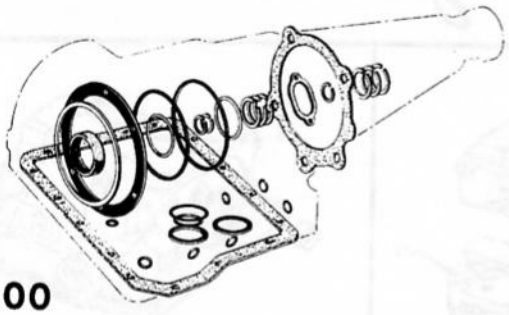

200

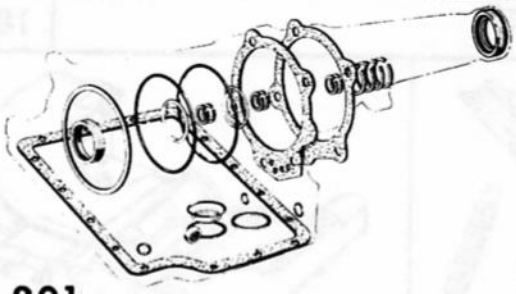

201



202

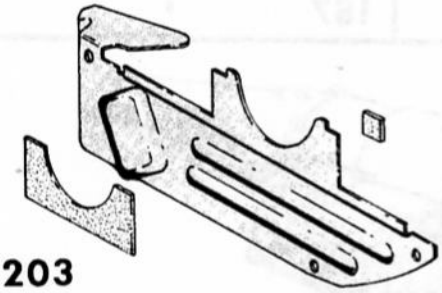

203

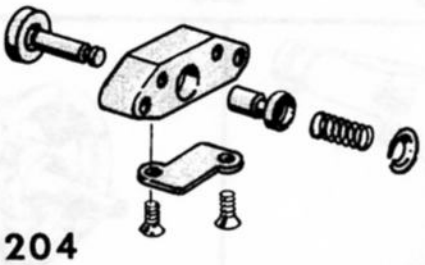

204

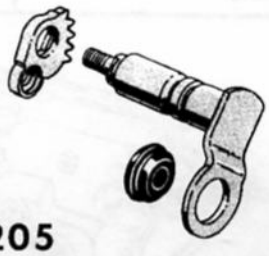

205



206

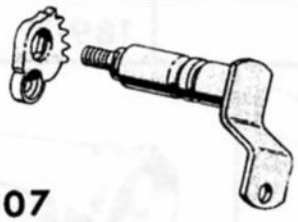

207



208



209

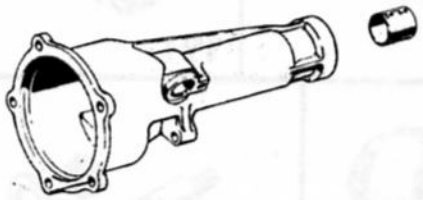

210

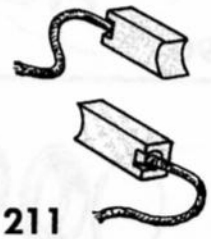

211

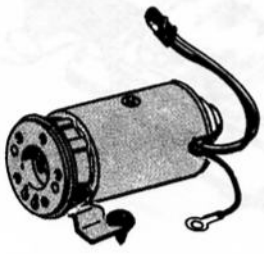

212

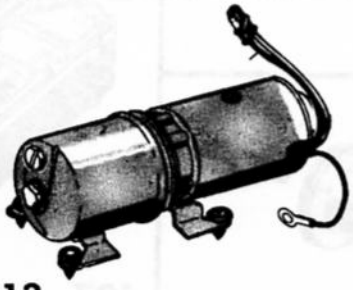

213

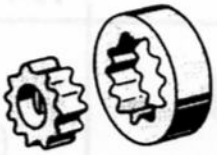

214



215

3715

Printed in U.S.A.

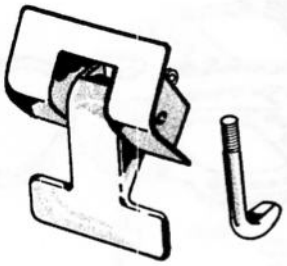
216


217


218

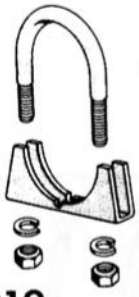
219

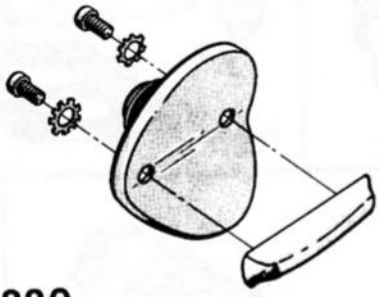
220

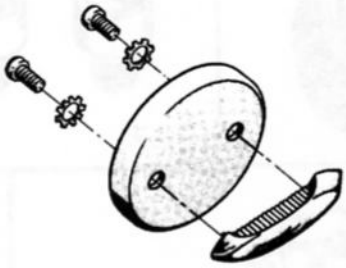
221

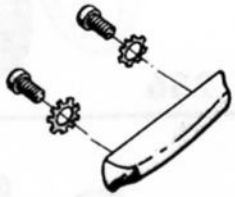
222


223

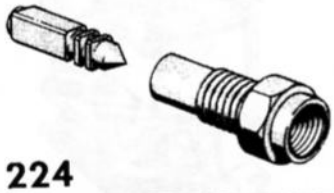
224

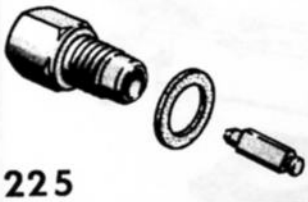
225

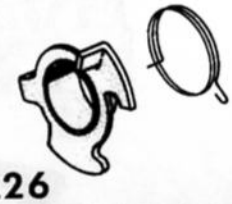
226

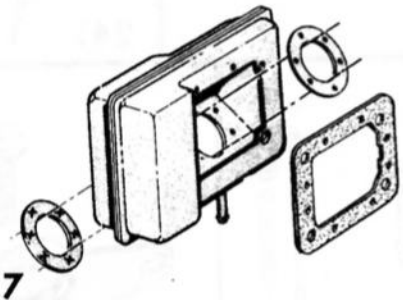
227

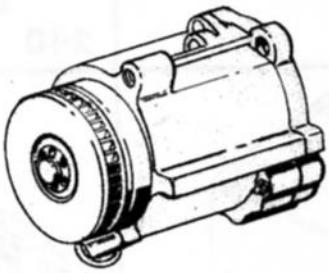
228

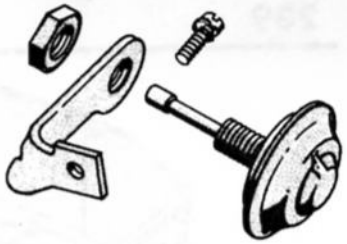
229


230

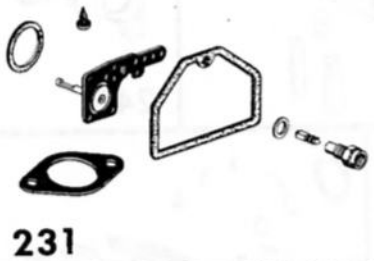
231


232


233

3716

Printed in U.S.A.

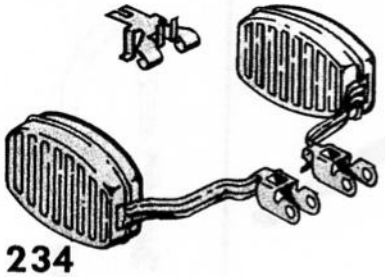
234


235


238


236

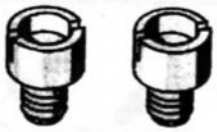
237

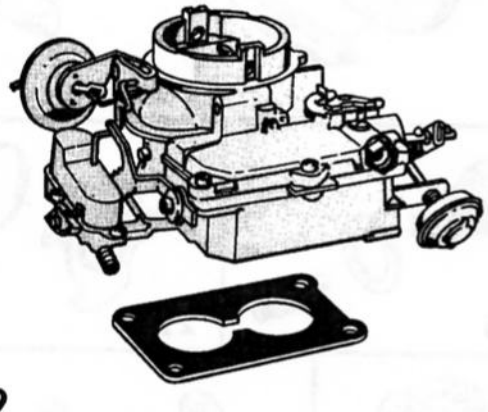
239


240


241

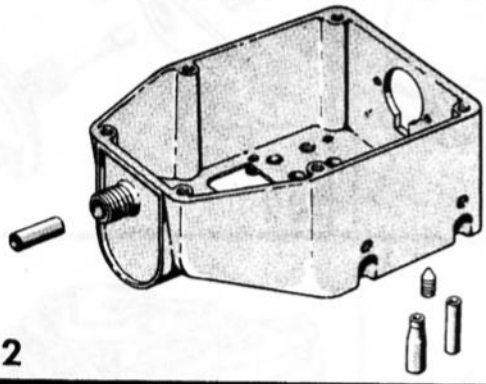
242

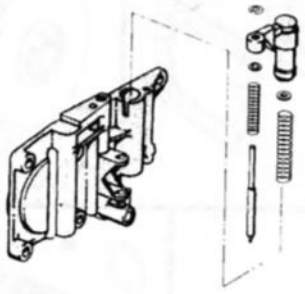
243

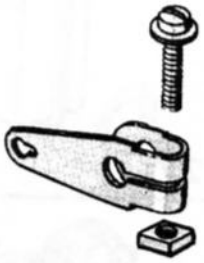
244

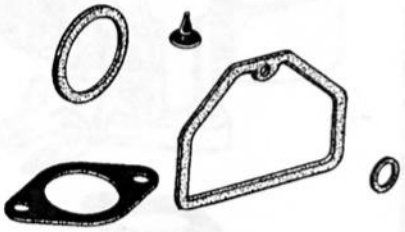
245


246


247

3717

Printed in U.S.A.

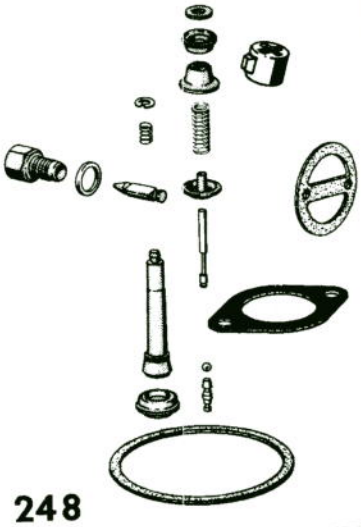

248

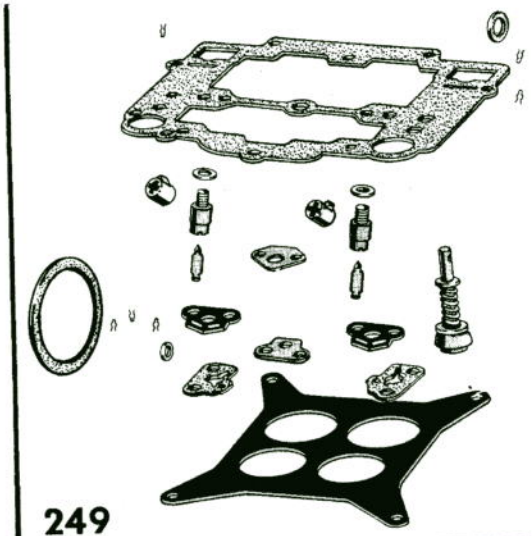

249

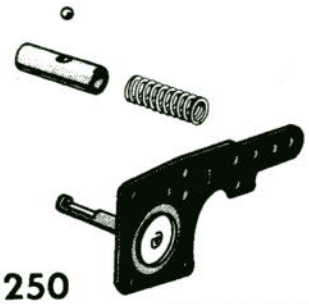

250



251

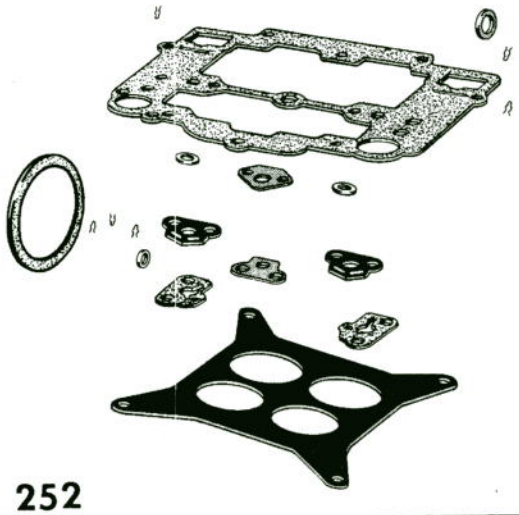

252



253



254

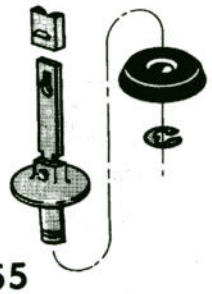

255

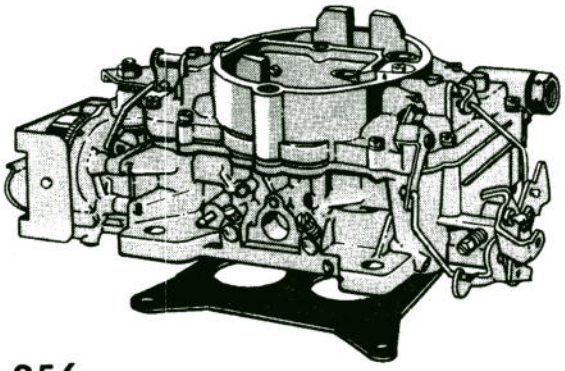

256



257



258

3718

Printed in U.S.A.

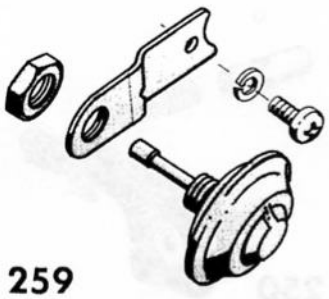
259


260

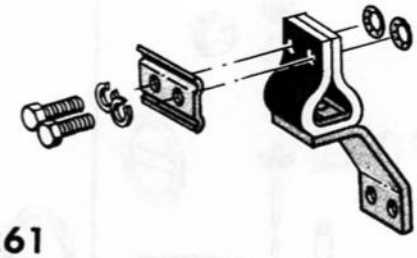
261

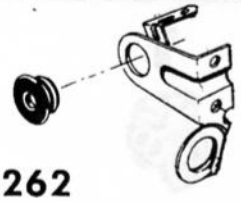
262


263


264


265

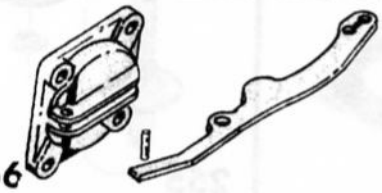
266


267

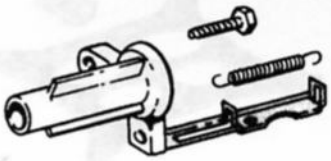
268

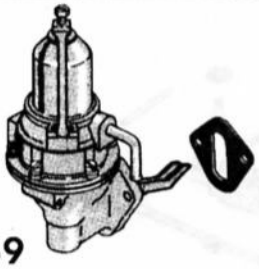
269


270


271

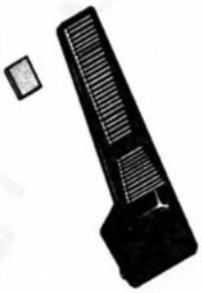
272


273

3719

Printed in U.S.A.

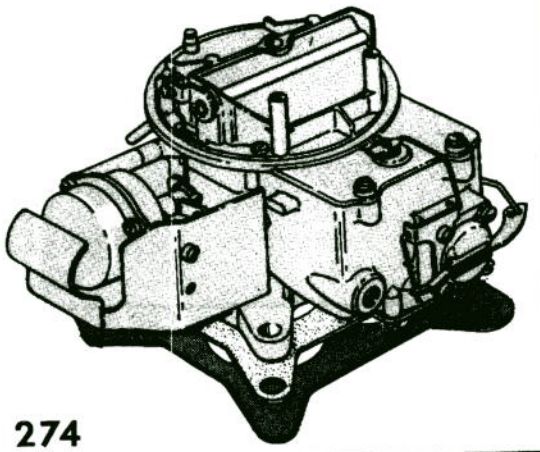

274

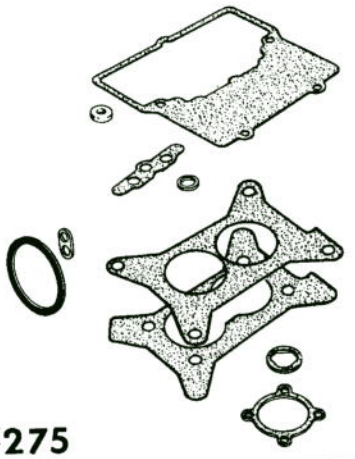

275

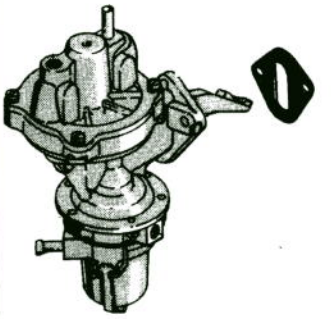

276

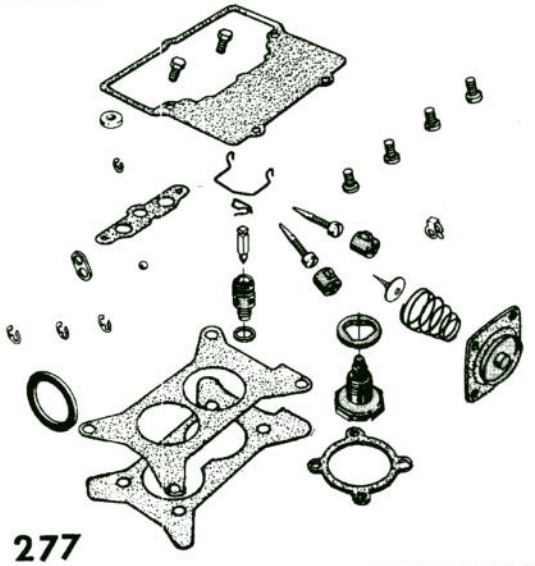

277

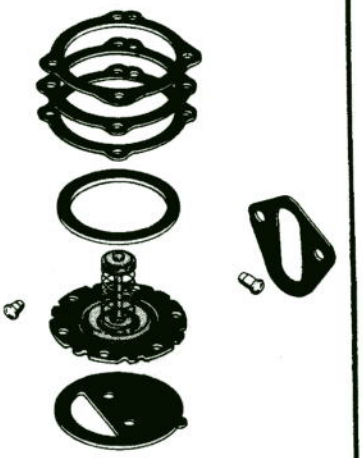

278



279

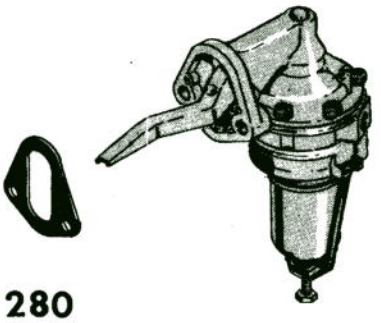

280

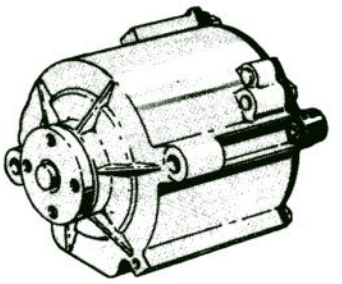

281

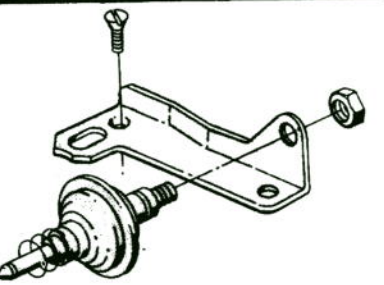

282

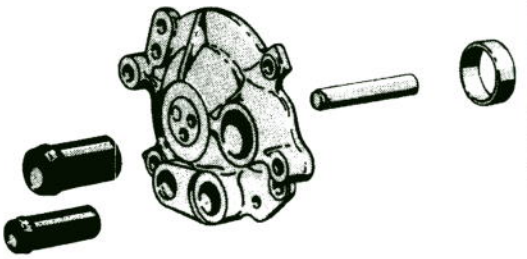

283

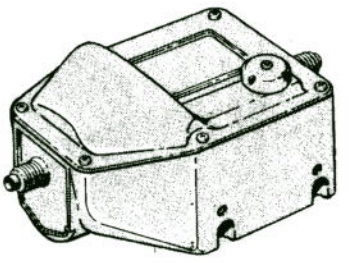

284

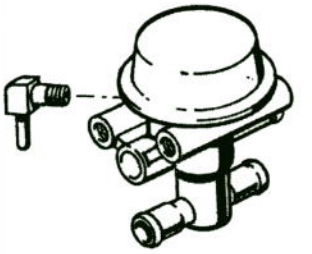

285

3720

Printed in U.S.A.

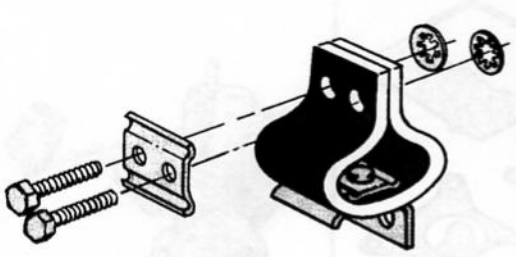

286

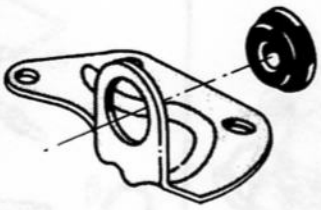

287

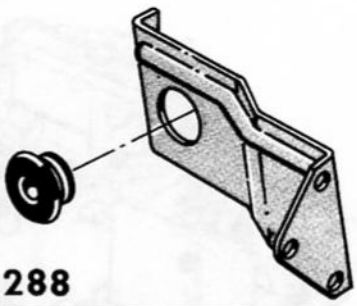

288

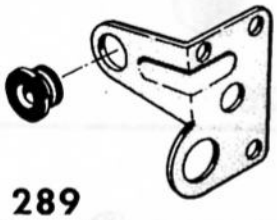

289



290

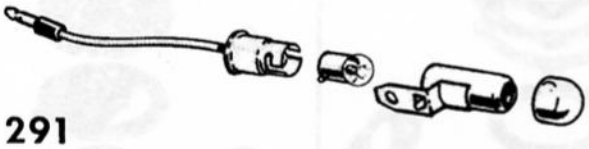

291



292



293

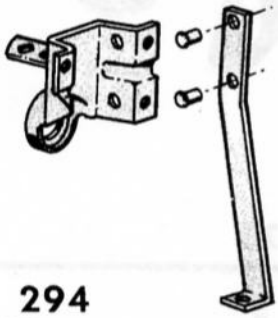

294

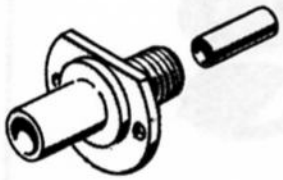

295



296



297



298

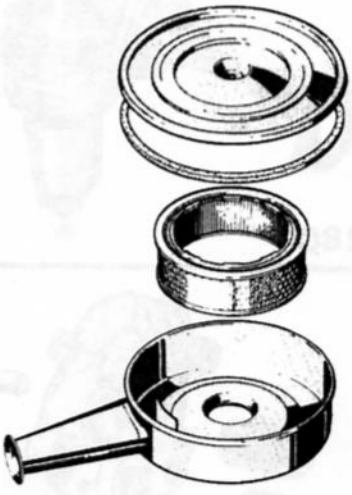

299

3721

Printed in U.S.A.

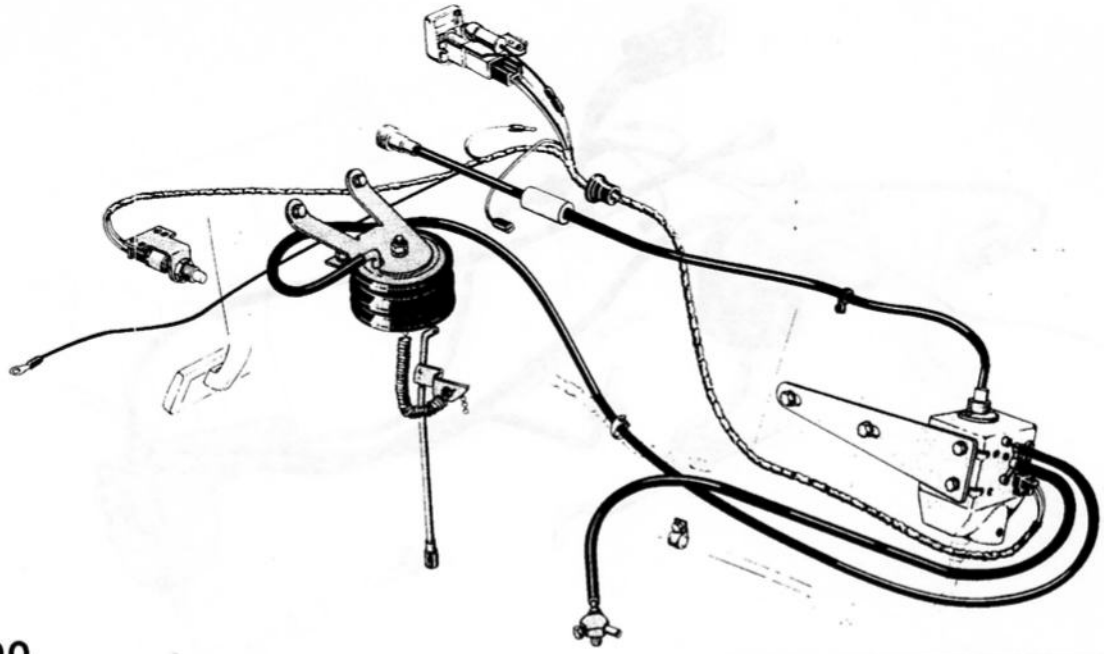

300

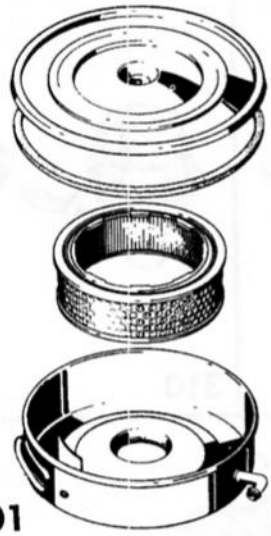

301



302



303



304



305

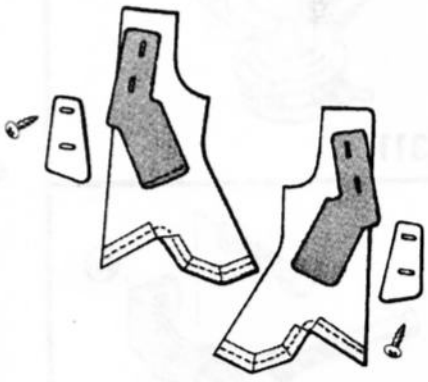

306

3722

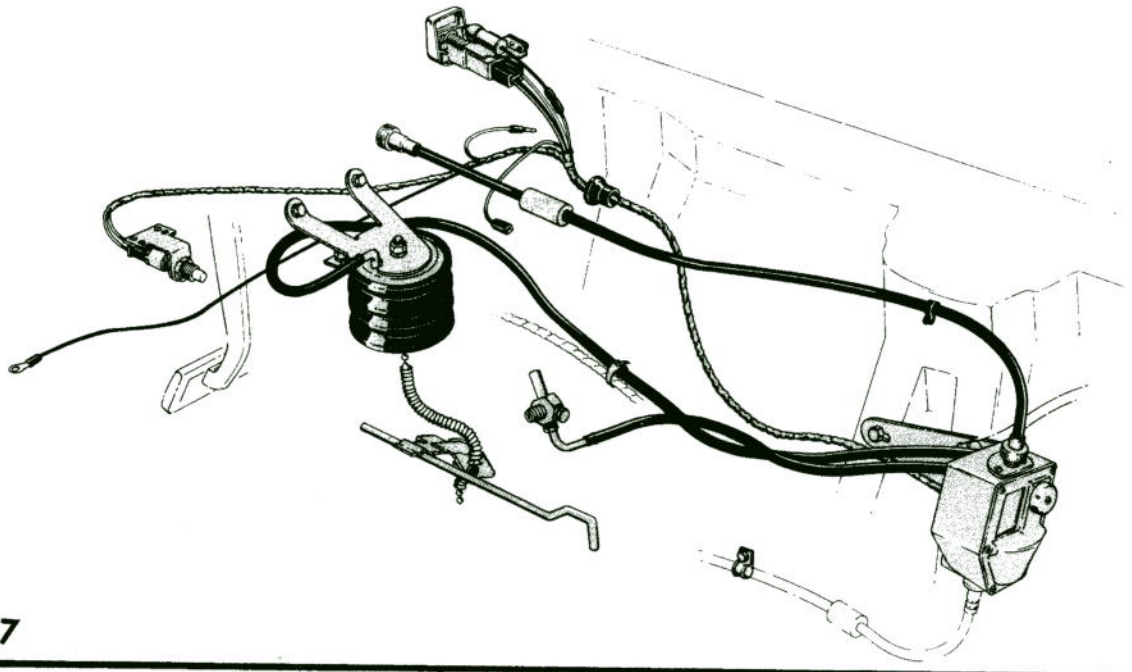

307

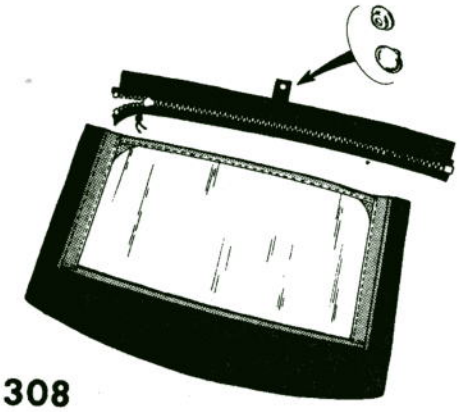

308

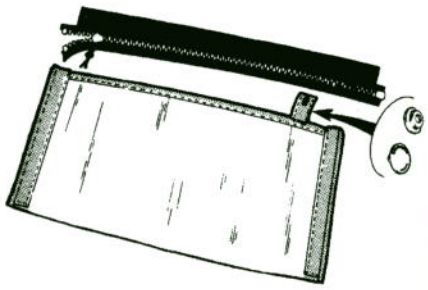

309

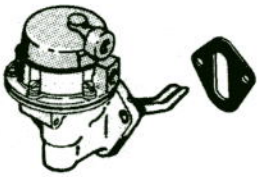

310

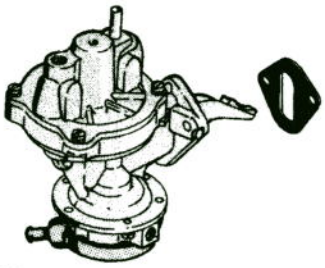

311

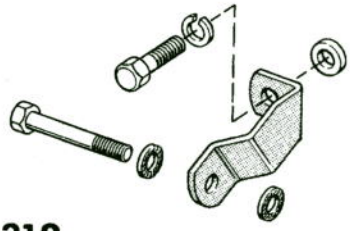

312

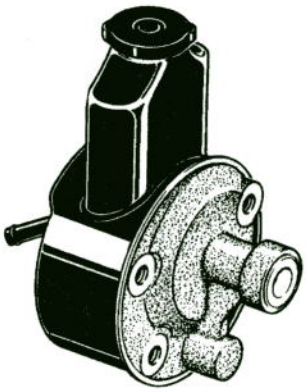

313

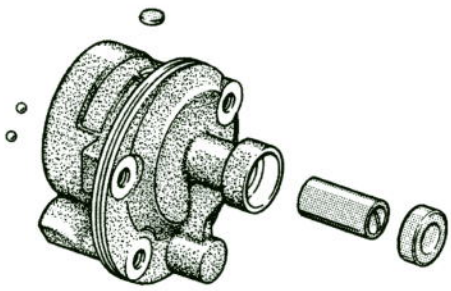

314



315

3723-A

Printed in U.S.A.


316

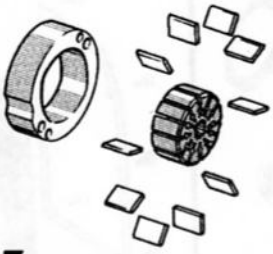
317


318


319

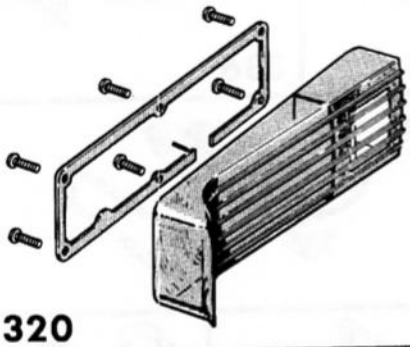
320

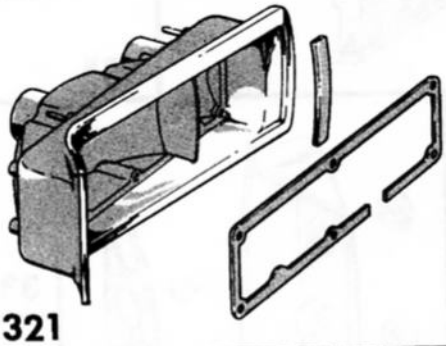
321


322


323

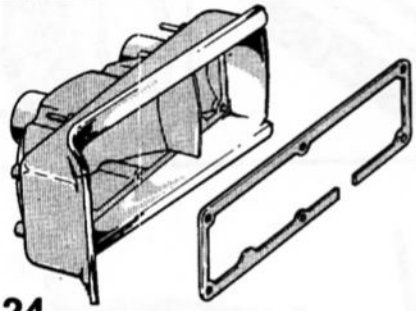
324

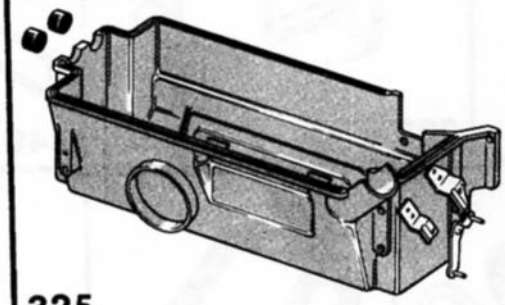
325


326

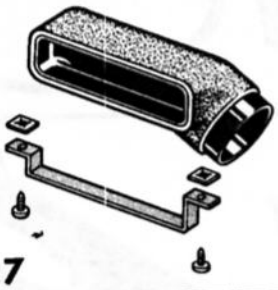
327


328

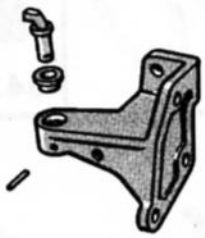
329


330

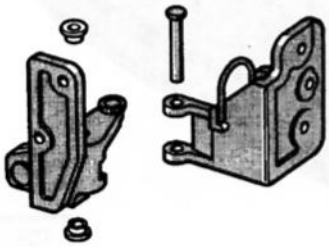
331


332

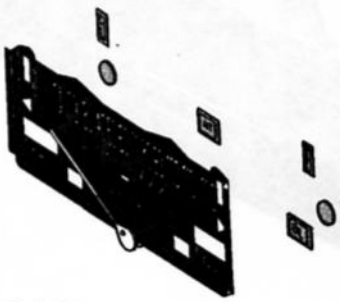
333

3724

Printed in U.S.A.

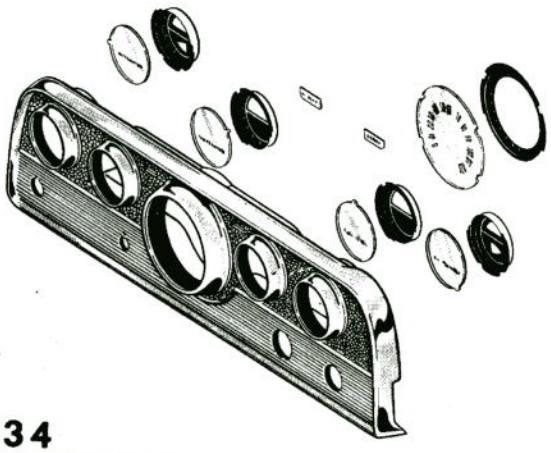
334

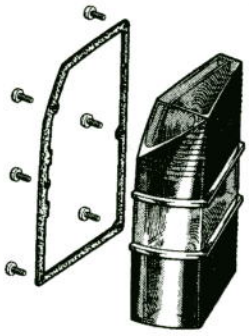
335

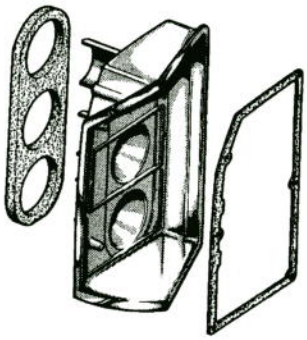
336

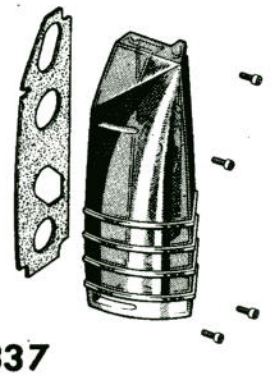
337

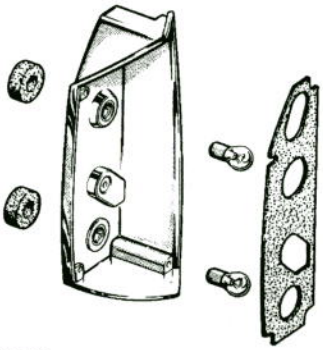
338

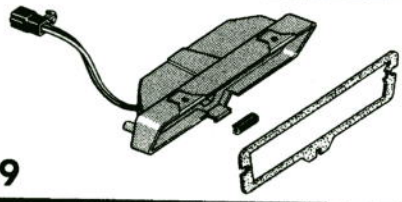
339

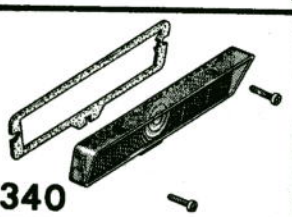
340

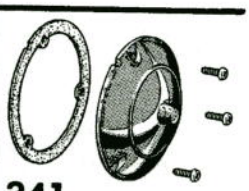
341


342


343

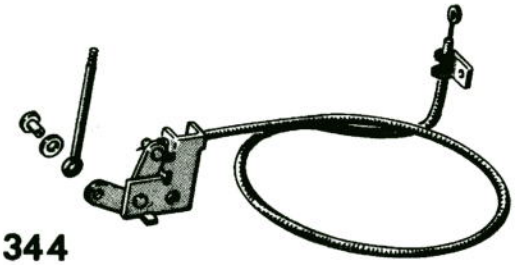
344

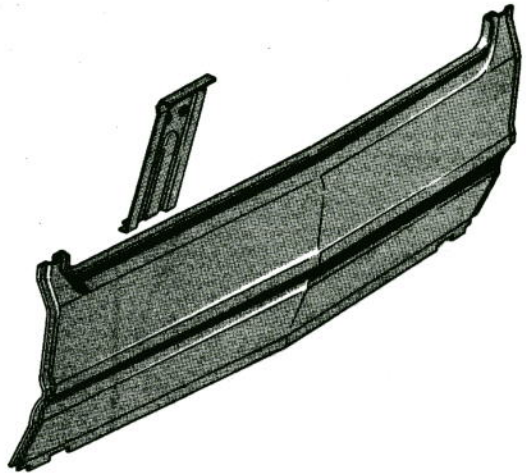
345

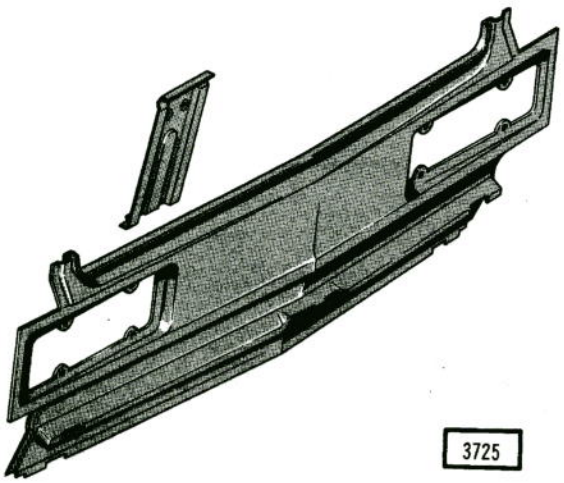
346

3725

Printed in U.S.A.

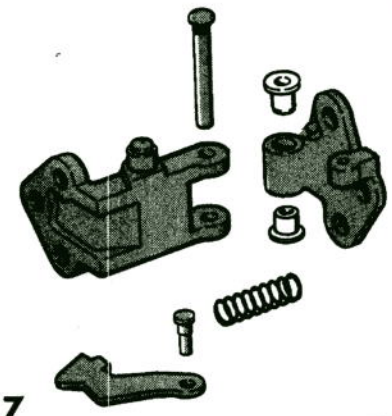

347

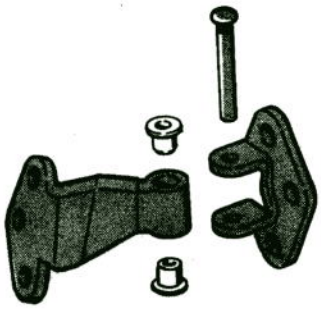

348

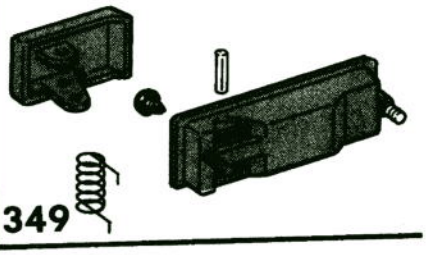

349

350

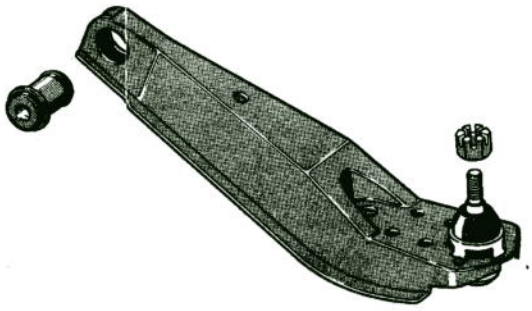

351



352



353



354



355



356

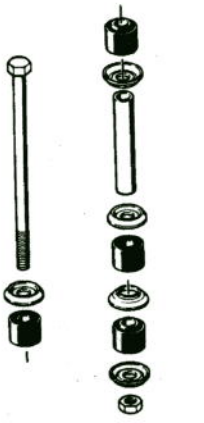

357

3726

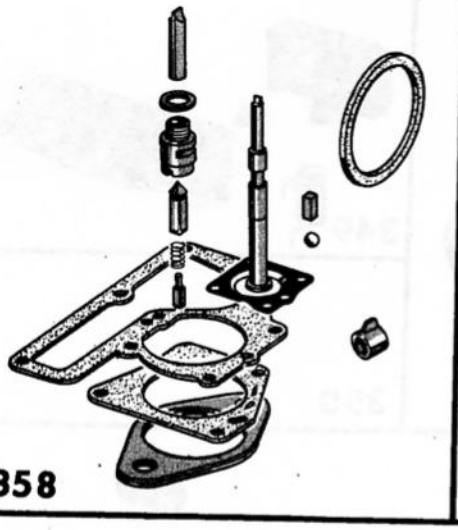
358

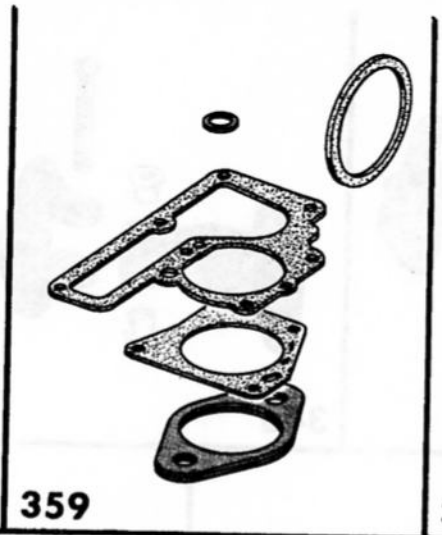
359

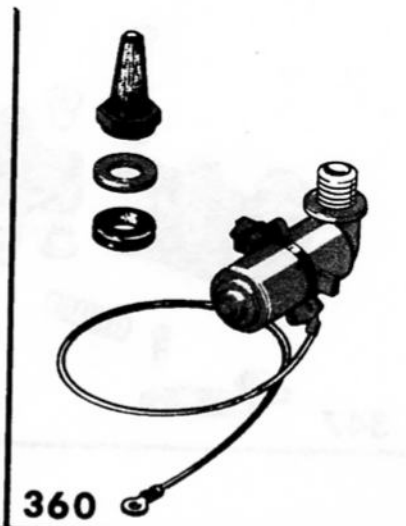
360

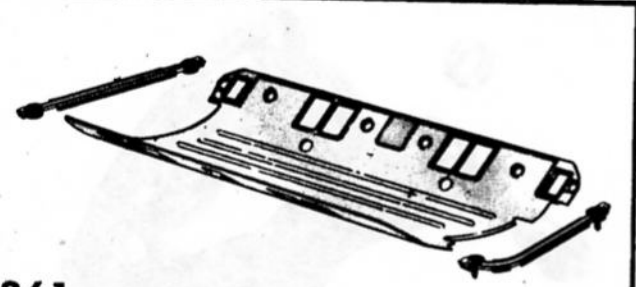
361

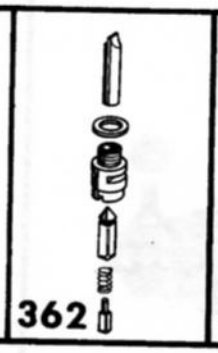
362


363

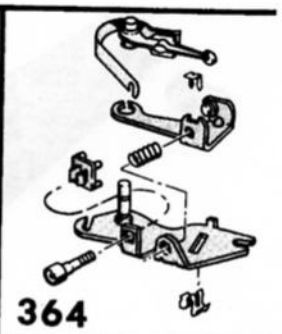
364

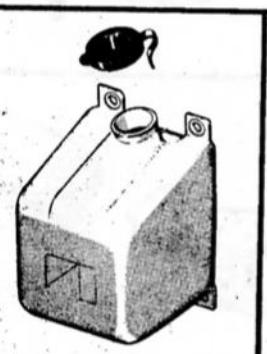


365


366


367


368

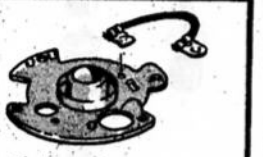
369


370

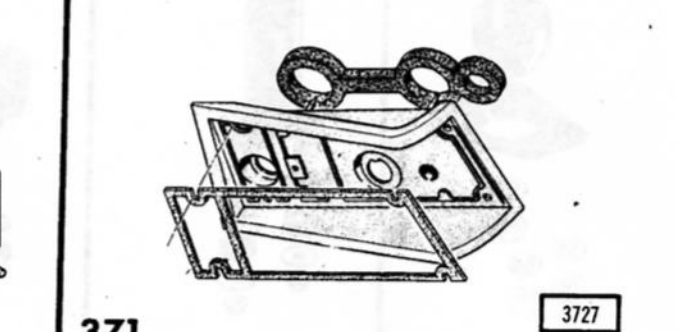
371

3727

Printed in U.S.A.